ORCHARD MEADOWS

SECOND ELECTION DISTRICT
HOWARD COUNTY, MARYLAND

GENERAL NOTES

1. SITE LOCATION: 1800' ± NORTH FROM THE INTERSECTION OF U.S. ROUTE 40 AND NORTH RIDGE ROAD
2. OWNER / APPLICANT: ORCHARD DEVELOPMENT CORPORATION, 5032 DORSEY HALL DRIVE, ELLICOTT CITY, MD 21042
3. TAX ACCOUNT NO.:
4. PROPERTY REFERENCE: TAX MAP 17 GRID 23 PARCEL 711
5. ZONING: R-A-15
   EXISTING USE: VACANT
   PROPOSED USE: APARTMENTS
   AREA OF SITE: 421,103.23 S.F. OR 9.6672 ACRES

   RESUBDIVISION OF PLAT NO. 9419
   PARCEL D-1: 2.9995 AC.
   PARCEL D-2: 1.7376 AC.
   PARCEL D-3: 3.0163 AC.
6. BOUNDARY INFORMATION SHOWN HEREON IS BASED ON A RECORD PLAT RECORDED AS PLAT NO. 9419. FIELD RUN SURVEY PERFORMED BY FISHER, COLLINS AND CARTER INC. DATED AUGUST 2006. FIELD RUN SURVEY WITH TWO FOOT INTERVALS PREPARED BY KCI TECHNOLOGIES, INC. DATED FEBRUARY 2011.
7. THERE ARE NO WETLANDS, STREAMS OR OTHER BODIES OF WATER LOCATED ON SITE. BASED ON A REPORT FROM ECO-SCIENCE PROFESSIONALS INC. DATED MARCH 15, 2007.
8. NO 100-YEAR FLOODPLAIN EXISTS ON THIS PROPERTY PER FEMA F.I.R.M. MAP NO. 24-0044-0017B DATED DECEMBER 4, 1 986. THE MAP INDICATES THAT THE PROPERTY SHOWN HEREON LIES WITHIN ZONE 'C', AREAS OF MINIMAL FLOODING.
9. FOREST CONSERVATION OBLIGATION OF 1.45 AC. OF AFFORESTATION FOR THIS PROJECT HAS BEEN MET BY A FEE-IN-LIEU PAYMENT OF $47,371.50 MADE TO THE HOWARD COUNTY FOREST CONSERVATION FUND PER F-11-087.
10. PARKING TABULATION
    (2) 48 UNIT APARTMENT BUILDINGS AND (2) 24 UNIT APARTMENT BUILDINGS = 144 APARTMENT UNITS

    MINIMUM PARKING REQUIREMENT: 2.0 SPACES PER UNIT (292 SPACES)

    D-1 PARCEL: 85 PARKING SPACES (INC. 4 HC SPACES)
    D-2 PARCEL: 48 PARKING SPACES (INC. 3 HC SPACES AND 5 SPACES FOR CLUBHOUSE)
    D-3 PARCEL: 127 PARKING SPACES (INC. 6 HC SPACES)
    ON-STREET PARKING: 32 PARKING SPACES

    TOTAL PARKING PROVIDED: 299 SPACES (INCLUDING 6 STANDARD HC ACCESSIBLE SPACES AND 1 VAN ACCESSIBLE SPACE)
11. THIS PLAN IS SUBJECT TO ADMINISTRATIVE ADJUSTMENT AA-11-002, APPROVED MARCH 14, 2011 TO ADJUST THE FOLLOWING ZONING REGULATIONS:

    SECTION 112.D(4)(a)(1)(a): TO ALLOW A FRONT SETBACK FROM A COLLECTOR PUBLIC ROW OF 27 FEET.
    SECTION 112.D(6)(d): TO ALLOW FOR REAR TO REAR SETBACK DISTANCE OF 50 FEET.

    THIS PLAN IS ALSO SUBJECT TO ALTERNATIVE COMPLIANCE REQUEST FOR HOWARD COUNTY DESIGN MANUAL VOLUME III SECTION 2.9.B.
12. APPROVAL OF THIS PLAN IS FOR EROSION & SEDIMENT CONTROL MEASURES ONLY. ALL COUNTY AND STATE REQUIREMENTS FOR DEVELOPMENT ON THIS SITE AND COMPLIANCE WITH APPLICABLE SUBDIVISION AND ZONING REGULATIONS WILL BE FURTHER REVIEWED UNDER THE APPROPRIATE SUBDIVISION AND/OR SITE DEVELOPMENT PLAN SUBMISSION.
13. ALL CONSTRUCTION SHALL BE IN ACCORDANCE WITH THE LATEST STANDARDS AND SPECIFICATIONS OF HOWARD COUNTY PLUS MSHA STANDARDS AND SPECIFICATIONS, IF APPLICABLE.
14. THE CONTRACTOR SHALL NOTIFY "MISS UTILITY" (800-257-7777) AT LEAST FIVE (5) WORKING DAYS PRIOR TO STARTING ANY WORK.
15. THE CONTRACTOR SHALL NOTIFY THE DEPARTMENT OF PUBLIC WORKS/ BUREAU OF ENGINEERING/CONSTRUCTION INSPECTION DIVISION AT (410) 313-1880 AT LEAST FIVE (5) WORKING DAYS PRIOR TO THE START OF WORK.
16. BOUNDARY AND TOPOGRAPHIC INFORMATION SHOWN IS BASED UPON SURVEYS CONDUCTED BY KCI TECHNOLOGIES, INC. IN JANUARY 2010 AND FISHER, COLLINS, CARTER, INC IN AUGUST 2006.
17. OBSTRUCTIONS SUCH AS PAVING, TREES, UNDERGROUND UTILITIES, ETC. SHOWN ON THESE DRAWINGS ARE FOR THE CONVENIENCE OF THE CONTRACTOR ONLY. KCI TECHNOLOGIES, INC. DOES NOT WARRANT OR GUARANTEE THE CORRECTNESS OR THE COMPLETENESS OF THE INFORMATION GIVEN. THE CONTRACTOR MUST VERIFY ALL SUCH INFORMATION TO HIS OWN SATISFACTION. IN THE EVENT THAT INFORMATION IS IN CONFLICT WITH INFORMATION OUTLINED, THE CONTRACTOR SHALL IMMEDIATELY BRING IT TO THE ATTENTION OF THE ARCHITECT PRIOR TO STARTING ANY WORK.
18. CONTRACTOR TO VERIFY LOCATION AND ELEVATION OF EXISTING UTILITIES SHOWN HEREON BEFORE STARTING ANY WORK ON THESE PLANS. CONTRACTOR AGREES TO BE FULLY RESPONSIBLE FOR THE COST OF ANY AND ALL DAMAGES WHICH OCCUR AS A RESULT OF A FAILURE TO EXACTLY LOCATE AND PRESERVE ANY AND ALL EXISTING UTILITIES TO REMAIN.
19. WATER AND SEWER ARE PUBLIC; CONNECTED TO PROJECT # 14-4711-D, 14-4711-DMW.
20. THIS SUBDIVISION IS SUBJECT TO SECTION 18.122B OF HOWARD COUNTY CODE. PUBLIC WATER AND/OR SEWER SERVICE HAS BEEN GRANTED UNDER THE TERMS AND PROVISIONS, THEREOF, EFFECTIVE 1-3-2012, ON WHICH DATE DEVELOPER AGREEMENT # 14-4711-D WAS FILED AND ACCEPTED.
21. CONTRACTOR SHALL REMOVE DRIVEWAY ENTRANCES, STRUCTURES, AND CONCRETE WALKS TO LIMITS INDICATED ON THE DRAWING.
22. CONTRACTOR SHALL NOT PROCEED WITH ANY DEMOLITION WORK UNTIL ALL UTILITY DISCONNECTIONS ARE COMPLETED AND VERIFIED IN WRITING.
23. BURNING OF COMBUSTIBLE MATERIALS FROM DEMOLISHED STRUCTURES WILL NOT BE PERMITTED ON SITE.
24. CONTRACTOR SHALL INSURE THAT ALL MATERIAL REMOVED FROM DEMOLISHED STRUCTURES ARE LEGALLY DISPOSED OF OFF-SITE.
25. EXISTING CONCRETE SIDEWALK SHALL BE REMOVED TO THE NEAREST JOINT. NO PATCHING SHALL BE PERMITTED.
26. IT SHALL BE DISTINCTLY UNDERSTOOD THAT FAILURE TO MENTION SPECIFICALLY ANY WORK WHICH WOULD NORMALLY BE REQUIRED TO COMPLETE THIS PROJECT SHALL NOT RELIEVE THE CONTRACTOR OF HIS RESPONSIBILITY TO COMPLETE SUCH WORK.
27. IT SHALL BE THE RESPONSIBILITY OF THE CONTRACTOR TO NOTIFY THE ENGINEER OF ANY DEVIATION FROM THIS PLAN PRIOR TO ANY CHANGE BEING MADE. ANY DEVIATION FROM THIS PLAN WITHOUT WRITTEN AUTHORIZATION FROM THE ENGINEER WILL BE THE RESPONSIBILITY OF THE CONTRACTOR.
28. SEE ARCHITECTURAL PLANS FOR ADDITIONAL BUILDING INFORMATION.
29. SEE MECHANICAL/ELECTRICAL/PLUMBING PLANS FOR ADDITIONAL MECHANICAL/ELECTRICAL/PLUMBING DEMOLITION AND CONSTRUCTION INFORMATION.
30. TRAFFIC CONTROL DEVICES, MARKINGS AND SIGNING SHALL BE IN ACCORDANCE WITH THE LATEST EDITION OF THE MANUAL OF UNIFORM TRAFFIC CONTROL DEVICES (MUTCD). ALL STREET AND REGULATORY SIGNS SHALL BE IN PLACE PRIOR TO THE PLACEMENT OF ANY ASPHALT.
31. ALL PLAN DIMENSIONS ARE TO THE FACE OF CURB UNLESS OTHERWISE NOTED.
32. CONTRACTOR TO ADJUST TOP OF CURB GRADES AS NECESSARY TO PROVIDE SMOOTH TRANSITION TO EXISTING.
33. SAW CUT EXISTING PAVEMENT AS NEEDED TO INSTALL NEW CONSTRUCTION.
34. THE CONTRACTOR SHALL NOTE THAT IN CASE OF A DISCREPANCY BETWEEN THE SCALED AND THE FIGURED DIMENSIONS SHOWN ON THESE PLANS, THE FIGURED DIMENSIONS SHALL GOVERN.
35. TRENCH BACKFILL IN GRASS AREAS SHALL BE COMPACTED TO A MINIMUM 90% OF MAXIMUM DRY DENSITY IN ACCORDANCE WITH A.A.S.H.T.O. VERIFY DESIGNATION T-180, METHOD C. TRENCH BACKFILL IN STRUCTURAL AND PAVEMENT AREAS SHALL BE PLACED IN EIGHT INCH LOOSE LIFTS AND COMPACTED TO AT LEAST 95% OF THE MODIFIED PROCTOR MAXIMUM DRY DENSITY (ASTM D-1557). IN PAVED AREAS, FILL BELOW THE TOP 12 INCHES SHOULD BE COMPACTED TO 97%.
36. CONTRACTOR SHALL ADJUST ALL EXISTING UTILITIES, I.E. MANHOLE FRAMES AND COVERS, ETC. WITHIN THE LIMITS OF THE CONTRACT TO PROPOSED GRADES AS REQUIRED.
37. THE CONTRACTOR SHALL MAINTAIN POSITIVE DRAINAGE AWAY FROM BUILDING STRUCTURES AT ALL TIMES.
38. CONTRACTOR SHALL COORDINATE ALL DISCONNECTIONS AND REMOVAL OF EXISTING GAS, ELECTRIC AND TELEPHONE SERVICES AND EQUIPMENT WITH BALTIMORE GAS & ELECTRIC AND VERIZON.
39. CONTRACTOR SHALL INSTALL SEDIMENT CONTROLS PRIOR TO BEGINNING ANY WORK AND MAINTAIN SEDIMENT CONTROLS THROUGHOUT THE ENTIRE DURATION OF DEMOLITION AND CONSTRUCTION ACTIVITIES.
40. ALL EXCAVATION SHALL BE BACKFILLED IN ACCORDANCE WITH THE PROJECT SPECIFICATIONS. IN THE EVENT THAT A PORTION OF A UTILITY IS TO BE REMOVED THE CONTRACTOR SHALL TERMINATE AND CAP TO THE LIMITS INDICATED IN ACCORDANCE WITH ALL STATE AND LOCAL REQUIREMENTS.
41. SHOULD THE CONTRACTOR DISCOVER DISCREPANCIES BETWEEN THE PLANS AND FIELD CONDITIONS, THE ENGINEER IS TO BE NOTIFIED IMMEDIATELY TO RESOLVE THE SITUATION. SHOULD THE CONTRACTOR MAKE FIELD CORRECTIONS OR ADJUSTMENTS WITHOUT NOTIFYING THE ENGINEER, THEN THE CONTRACTOR ASSUMES ALL RESPONSIBILITY FOR THOSE CHANGES.
42. STORMWATER MANAGEMENT QUANTITY AND QUALITY HAS BEEN PROVIDED IN ACCORDANCE WITH THE 2010 MARYLAND STORMWATER MANAGEMENT ORDINANCE AND REVISED 2010 STORMWATER MANAGEMENT DESIGN MANUAL. THERE ARE (7) PRACTICE M-6 MICRO BIORETENTION AREAS (3 EXISTING, 4 PROPOSED), ONE (1) PRACTICE F-1 SURFACE SAND FILTER (EXISTING), ONE (1) PRACTICE P-1 MICROPOOL EXTENDED DETENTION POND (EXISTING), AND TWENTY-FIVE (25) PRACTICE A-2 PERMEABLE CONCRETE AREAS PROPOSED FOR THIS SITE. ALL PRACTICES WILL BE PRIVATELY OWNED AND MAINTAINED IN THEIR ENTIRETY. DA NO. SDP-11-052
43. THE COORDINATES SHOWN HEREON ARE BASED UPON THE HOWARD COUNTY GEODETIC CONTROL WHICH IS BASED UPON THE MARYLAND STATE PLANE COORDINATE SYSTEM. HOWARD COUNTY MONUMENT NOS. 35C5 AND 35C5 WERE USED FOR THIS PROJECT.
44. ALL ELEVATIONS SHOWN ARE BASED ON THE U.S.C. AND G.S. MEAN SEA LEVEL DATUM, 1929.
45. ALL OUTDOOR LIGHTING SHALL COMPLY WITH THE REQUIREMENTS OF ZONING SECTION 134.
46. STREET LIGHT PLACEMENT AND THE TYPE OF FIXTURE AND POLE SHALL BE IN ACCORDANCE WITH THE HOWARD COUNTY DESIGN MANUAL. VOLUME III (1993) AND AS MODIFIED BY "GUIDELINES FOR STREET LIGHTS IN RESIDENTIAL DEVELOPMENTS (JUNE 1993)." A MINIMUM SPACING OF 20' SHALL BE MAINTAINED BETWEEN ANY STREET LIGHT AND ANY TREE.
47. ALL SIGN POSTS USED FOR TRAFFIC CONTROL SIGNS INSTALLED IN THE COUNTY RIGHT-OF-WAY SHALL BE MOUNTED ON A 2" GALVANIZED STEEL. PERFORATED, SQUARE TUBE SLEEVE (14 GAUGE) INSERTED INTO A 2-1/2" GALVANIZED STEEL, PERFORATED, SQUARE TUBE SLEEVE (12 GAUGE) - 3' LONG. A GALVANIZED STEEL POLE CAP SHALL BE MOUNTED ON TOP OF EACH POST.
48. THE EXISTING TOPOGRAPHY IS TAKEN FROM (FIELD RUN) SURVEY WITH (MAXIMUM TWO FOOT) CONTOUR INTERVALS PREPARED BY FISHER, COLLINS, AND CARTER DATED AUGUST 2006 AND SUPPLEMENTED BY KCI TECHNOLOGIES INC. (NOVEMBER, 2010)
49. THERE IS NO FLOODPLAIN ON THIS SITE.
50. THERE ARE NO WETLANDS ON THIS SITE.
51. THE TRAFFIC IMPACT STUDY WAS PREPARED BY LEE CUNNINGHAM, LTD. DATED MAY 2003 AND APPROVED WITH S03-16 ON MARCH 15, 2004.
52. ALL PROPOSED BUILDING WHC'S WILL BE METERED INSIDE BUILDINGS.
53. IN ACCORDANCE WITH ZONING SECTION 112, "AT LEAST 10 PERCENT OF THE DWELLINGS IN EACH R-A-15 DEVELOPMENT SHALL BE MODERATE INCOME HOUSING UNITS."
    A) TOTAL NUMBER OF "M.I.H.U." REQUIRED = 144 x 0.10 = 14.4 UNITS = 15 UNITS
    B) TOTAL NUMBER OF "M.I.H.U." PROVIDED = 15 UNITS
    THE MODERATE INCOME HOUSING UNIT (MIHU) AGREEMENT AND MIHU COVENENTS ARE RECORDED AT LIBER 13764 (13764) FOLIO 450 (443).
54. THIS PLAN IS SUBJECT TO WAVIER PETITION WP-08-023 APPROVED ON NOVEMBER 2, 2007 TO WAIVE SUBDIVISION SECTION 16.134(a)(1), TO NOT BE REQUIRED TO PROVIDE SIDEWALKS ALONG BOTH SIDES OF ALL ROADS. CONDITIONS OF THIS APPROVAL ARE TO ADD SIX ADDITIONAL SMALL SECTIONS OF SIDEWALK AS SHOWN ON "MARKED UP" SHEET 2 OF THE WP-08-023 EXHIBIT/PLAN.
55. THIS SITE DEVELOPMENT PLAN IS SUBJECT TO PRIOR DEPARTMENT OF PLANNING AND ZONING FILES AA-11-002, F-90-030, F-11-087, S-03-016, P-07-019, WP-08-023, WP-09-093, WP-11-126, ECP-11-035.
56. THIS PLAN IS SUBJECT TO WAVIER PETITION WP-09-093 APPROVED ON JULY 22, 2009 TO WAIVE SUBDIVISION SECTION 16.144(k)(3)(iii), REQUEST TO BE GRANTED A NINE (9) MONTH EXTENSION [BASED ON THE PROPOSED 122 UNITS AND SUBDIVISION SECTION 16.1106(d)] FROM THE PLAN PROCESSING EXTENSION PROVISION DATE 06/30/2010 OF "HB 921" TO SUBMIT THE REQUIRED FINAL RESUBDIVISION PLAT/PLAN (ON OR BEFORE 03/30/11), SUBJECT TO COMPLIANCE WITH THE FOLLOWING CONDITION OF APPROVAL:

    A. THE REQUIRED FINAL PLAT/PLAN FOR P-07-019 SHALL BE SUBMITTED FOR REVIEW PROCESSING ON OR BEFORE THE EXTENDED DEADLINE DATE OF 03/30/201, OR 9-07-019 (AND 5-03-016) SHALL BECOME NULL AND VOID, AND THIS PROJECT SHALL LOOSE ITS TENTATIVE HOUSING UNIT ALLOCATIONS, IN ACCORDANCE WITH SUBDIVISION SECTION 16.144(k)(3)(iii).
57. THIS PLAN IS SUBJECT TO WAVIER PETITION WP-11-126 APPROVED ON MARCH 2, 2011 TO WAIVE SUBDIVISION SECTION 16.144(k)(3)(iii), AND GRANTED A 180 DAY EXTENSION FROM PREVIOUS MILESTONE DATE OF 3/30/2011 (PER THE RECONSIDERATION OF WP-09-093) UNTIL 9/26/2011 TO SUBMIT THE REQUIRED FINAL RESUBDIVISION PLAT/PLAN. THE APPROVAL OF THIS WAIVER PETITION IS SUBJECT TO COMPLIANCE WITH THE FOLLOWING CONDITIONS OF APPROVAL:

    1. THE REQUIRED FINAL RESUBDIVISION PLAT/PLAN SHALL BE SUBMITTED TO THE DEPARTMENT OF PLANNING AND ZONING BY THE EXTENDED MILESTONE DATE OF 09/26/2011, OR PRELIMINARY PLAN P-07-019, SHALL BECOME NULL AND VOID, ALL PREVIOUS APPROVALS WILL BE RESCINDED, AND THIS PROJECT WILL LOSE ITS TENTATIVE ALLOCATIONS IN ACCORDANCE WITH SUBDIVISION SECTION 16.144.

    2. INDICATE THIS WAIVER PETITION FILE NUMBER, SECTION OF THE REGULATIONS, REQUEST, ACTION, CONDITION OF APPROVALS, AND APPROVAL DATE IN A DETAILED NOTE ADDED TO SHEET 1 OF ALL FUTURE PLAN AND PLAT SUBMISSIONS FOR THIS PROJECT.
58. THE LANDSCAPE SURETV AMOUNT OF $57,600.00 REQUIRED FOR THIS PLAN HAS BEEN POSTED AS A PART OF THE DEVELOPER'S AGREEMENT.

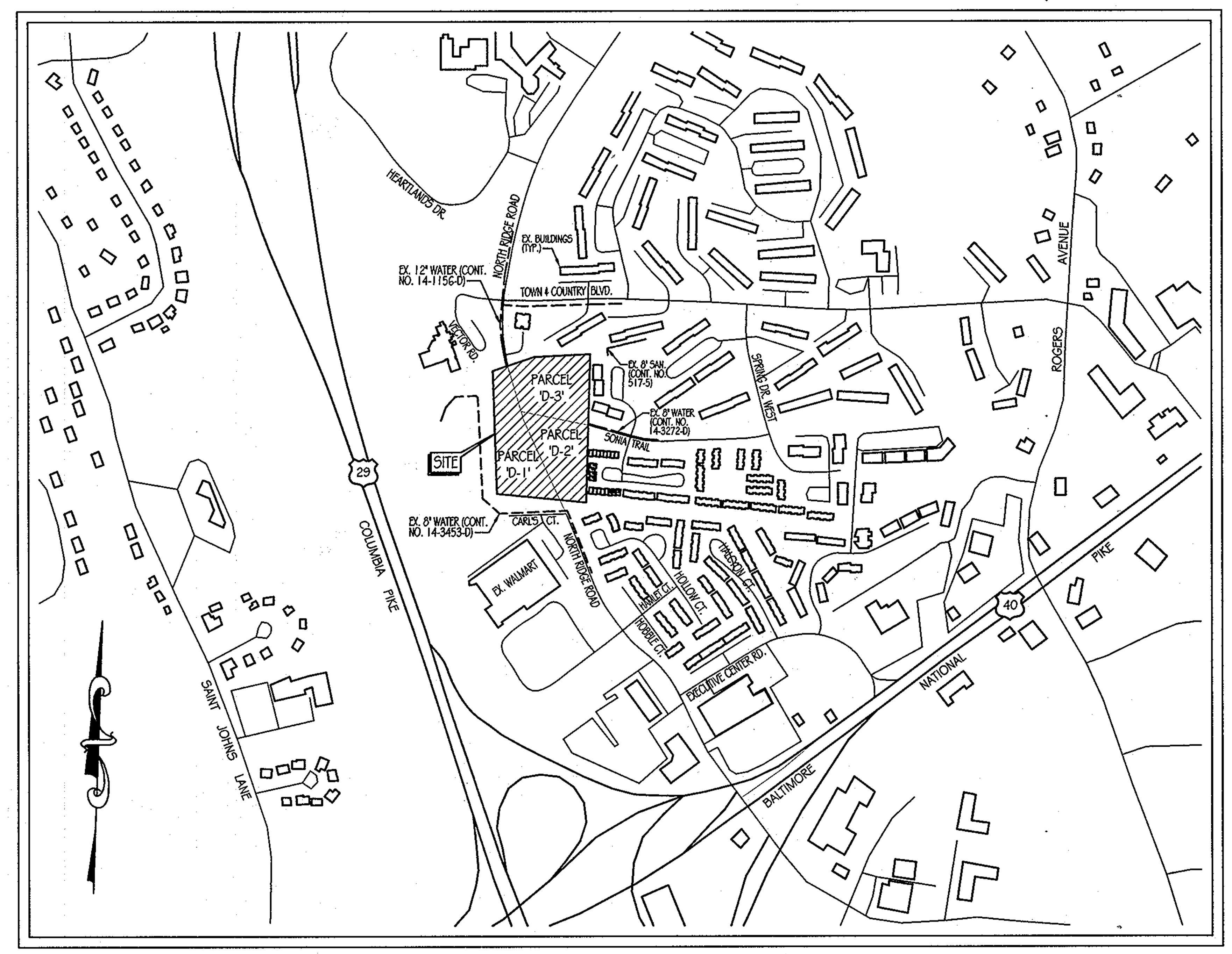

LOCATION MAP

SCALE: 1" = 100'

BENCHMARK DATA

THE HORIZONTAL AND VERTICAL DATUMS ARE BASED ON THE FOLLOWING HOWARD COUNTY GEODETIC SURVEY CONTROL POINTS
HORIZONTAL: NAD 83/07 VERTICAL: NAVD 29

CONTROL	NORTHING	EASTING	ELEV.
18G1	589985.015	1367750.237	407.740
24C2	588648.373	1366038.139	354.028

UNIT DENSITY

NO. OF UNITS ALLOWED (APARTMENTS): 15 D.U./NET ACRE=
15 X 9.667 AC. = 145 UNITS
TOTAL NO. OF UNITS PROPOSED = 144 UNITS

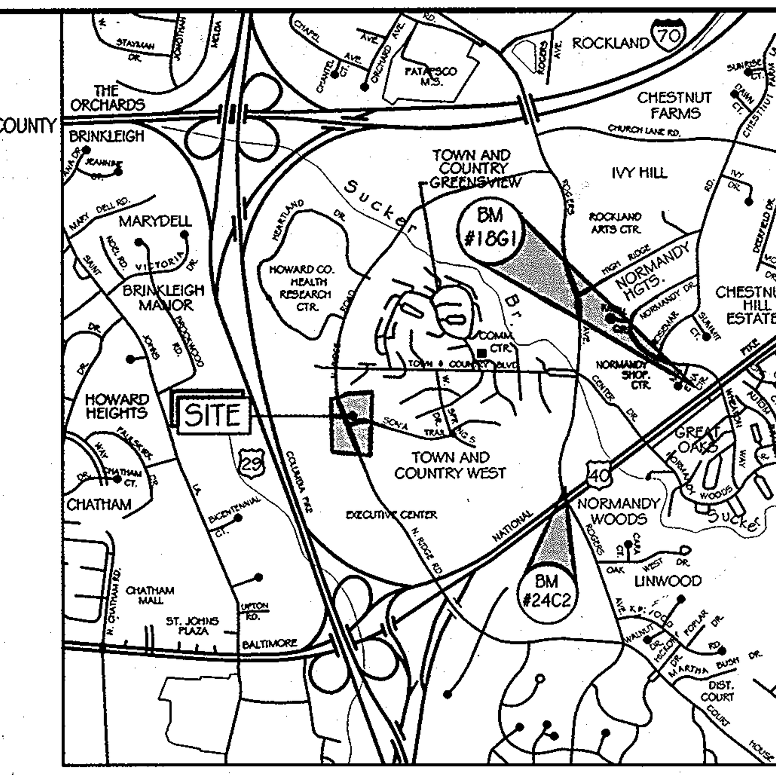

LOCATION MAP

SCALE: 1" = 2000'
ADC MAP COORDINATES: 12-7C

INDEX OF DRAWINGS

C-1 - COVER SHEET
C-2 - SITE AND GRADING PLAN
C-3 - PAVING, STRIPING AND SIGNAGE PLAN
C-4 - GEOMETRY PLAN
C-5 - SITE DETAIL SHEET
C-6 - SITE DETAIL SHEET
C-7 - UTILITY PLAN
C-8 - STORM DRAIN DRAINAGE AREA MAP
C-9 - STORM DRAIN PROFILE SHEET
C-10 - STORM DRAIN & UTILITY PROFILE SHEET
C-11 - SANITARY PROFILE SHEET
C-12 - EXISTING CONDITIONS SWM DRAINAGE AREA MAP
C-13 - DEVELOPED CONDITIONS SWM DRAINAGE AREA MAP
C-14 - STORMWATER MANAGEMENT PLAN
C-15 - STORMWATER MANAGEMENT FACILITY NO. 5
C-16 - STORMWATER MANAGEMENT FACILITY NO. 7
C-17 - STORMWATER MANAGEMENT FACILITY NO. 8
C-18 - STORMWATER MANAGEMENT FACILITY NO. 9
C-19 - A-2 PERMEABLE CONCRETE AREAS C3-A, C3-B & C3-C
C-20 - A-2 PERMEABLE CONCRETE AREAS C3-D, C3-E & C3-F
C-21 - A-2 PERMEABLE CONCRETE AREAS C3-G, C3-H & C3-I
C-22 - A-2 PERMEABLE CONCRETE AREAS C3-J, C3-K & C3-L
C-23 - A-2 PERMEABLE CONCRETE AREAS E7-C, E7-D & E7-F
C-24 - A-2 PERMEABLE CONCRETE AREAS E7-G & E7-H
C-25 - A-2 PERMEABLE CONCRETE DETAILS E2-A, E2-B, E2-C, E2-D, E2-E, E7-A E7-B & E7-E
C-26 - STORMWATER MANAGEMENT NOTES
C-27 - EROSION AND SEDIMENT CONTROL DRAINAGE AREA MAP
C-28 - EROSION AND SEDIMENT CONTROL PLAN
C-29 - EROSION AND SEDIMENT CONTROL DETAIL SHEET
C-30 - EROSION AND SEDIMENT CONTROL NOTES
C-31 - LANDSCAPE PLAN
C-32 - LANDSCAPE NOTES AND DETAILS
C-33 - BORING LOGS
C-34 - BORING LOGS
C-35 - RETAINING WALL LOCATION PLAN
C-36 - RETAINING WALL DETAILS
C-37 - RETAINING WALL #1 ELEVATION
C-38 - RETAINING WALL ELEVATIONS

OPEN SPACE TABULATION

PARCEL	GROSS TRACT AREA	OPEN SPACE REQUIRED (25%)	CREDITED OPEN SPACE PROVIDED
C-2	3.263 AC.	0.816 AC.	1.618 AC. (49.6%)
D	9.667 AC.	2.417 AC.	-
D-1	2.9995 AC.	-	1.162 AC. (38.7%)
D-2	1.7376 AC.	-	0.398 AC. (22.9%)
D-3	3.0163 AC.	-	0.680 AC. (22.5%)
TOTAL	11.016 AC.	3.233 AC.	3.858 AC. (35.0%)

RECREATIONAL OPEN SPACE TABULATION

RECREATIONAL OPEN SPACE REQUIRED ON PARCEL 'D' = 400 S.F. / UNIT = 400 S.F. x 144 UNITS = 57,600 S.F. (13.7% OF GROSS AREA)
RECREATIONAL OPEN SPACE REQUIRED ON PARCEL 'C-2' = 400 S.F. / UNIT = 400 S.F x 47 UNITS = 18,800 S.F.
TOTAL RECREATIONAL OPEN SPACE REQUIRED = 76,400 SQ.FT.
RECREATIONAL OPEN SPACE PROVIDED:
a. RECREATIONAL OPEN SPACE ON 'D-1' = 24, 570 SQ.FT. (18.8% OF GROSS AREA)
17,465 SQ.FT. STANDARD RECREATIONAL OPEN SPACE
1,421 SQ.FT. PAVED DOG WALK AT 5:1 RATIO = 7,105 SQ.FT. OPEN SPACE*
b. RECREATIONAL OPEN SPACE ON 'D-2' = 109,660 SQ.FT. (145% OF GROSS AREA)
2,433 SQ.FT. POOL AREA AT 20:1 RATIO = 48,660 SQ.FT. OPEN SPACE*
3, 050 SQ.FT. CLUBHOUSE AT 20:1 RATIO = 61,000 SQ.FT. OPEN SPACE*
c. RECREATIONAL OPEN SPACE ON 'D-3' = 0 SQ.FT. (0 % OF PARCEL 'D-3')
d. RECREATIONAL OPEN SPACE ON 'C-2' = 36, 239 SQ.FT.
TOTAL RECREATIONAL OPEN SPACE PROVIDED=170,469 SQ.FT. ON PARCELS 'D-1', 'D-2', 'D-3' AND 'C-2'

*RECREATIONAL OPEN SPACE ALLOWANCES PER HOWARD COUNTY DEPARTMENT OF LAND DEVELOPMENT

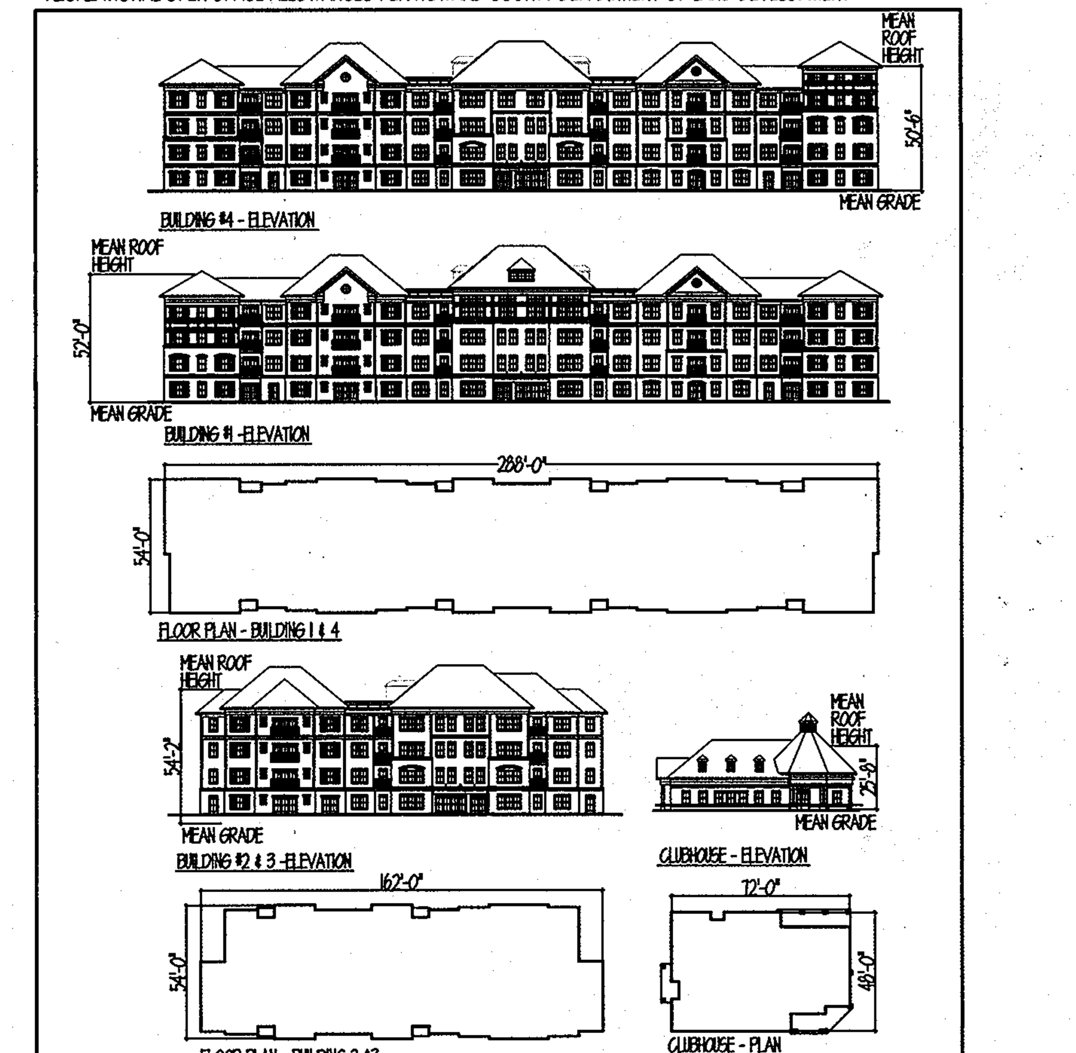

BUILDING ELEVATIONS

SCALE: NOT TO SCALE

STORMWATER MANAGEMENT APPROACH

THE "STORMWATER MANAGEMENT ACT OF 2007" REQUIRES THE IMPLEMENTATION OF ENVIRONMENTAL SITE DESIGN TO THE MAXIMUM EXTENT PRACTICAL. THESE ENVIRONMENTAL SITE DESIGN TECHNIQUES PROMOTE GROUNDWATER RECHARGE BY TARGETING RUNOFF CHARACTERISTICS TO MIMIC WOODS IN A GOOD CONDITION AFTER DEVELOPMENT OF THE SITE.

NATURAL RESOURCES:
THE EXISTING SITE IS CURRENTLY AN UNDEVELOPED MEADOW THAT LIES BETWEEN THREE UNCONNECTED PUBLIC ROADS. THE PROPOSED PROJECT WILL CONNECT THE PUBLIC ROADS AND ENHANCE PUBLIC SAFETY WITHIN THE COMMUNITY BY PROVIDING ALTERNATIVE ROUTES FOR EMERGENCY ACCESS. NO STEEP SLOPES, WETLANDS, FLOODPLAINS, STREAMS, ETC. WILL BE IMPACTED BY THIS PROJECT.

NATURAL FLOW PATTERNS:
RUNOFF FROM THE SITE IS CURRENTLY DISCHARGED AS SHEET FLOW AT FIVE DESIGN POINTS. EACH DESIGN POINT HAS BEEN ANALYZED TO DEMONSTRATE THAT NO ADVERSE AFFECT TO DOWNSTREAM PROPERTIES WILL OCCUR AS A RESULT OF THIS PROJECT. THE DRAINAGE AREA ADJUSTMENT BETWEEN THE SUCKER BRANCH AND HUDSON BRANCH WATERSHEDS IS LESS THAN ONE ACRE. SINCE 10 AND 100 YEAR QUANTITY MANAGEMENT ARE BEING PROVIDED IN ADDITION TO ESD FOR THE ENTIRE SITE THE DRAINAGE AREA ADJUSTMENT WILL HAVE NO ADVERSE IMPACT TO DOWNSTREAM PROPERTIES. CONFLUENCE OF THE SUCKER BRANCH AND HUDSON BRANCH OCCURS APPROXIMATELY 2 MILES DOWNSTREAM AT THE PATAPSCO RIVER.

SITE DESIGN:
ON-SITE SOILS APPEAR TO HAVE GOOD INFILTRATION CHARACTERISTICS, THEREFORE, ESD PRACTICES HAVE BEEN SELECTED TO PROMOTE GROUNDWATER RECHARGE AND MIMIC RUNOFF CHARACTERISTICS FOR WOODS IN THE SITE DEVELOPED CONDITION. A-2 PERMEABLE CONCRETE, MICRO-BIORETENTION AND SAND FILTER FACILITIES ARE BEING PROPOSED ACROSS THE SITE TO PROMOTE INFILTRATION OF RUNOFF. TWO QUANTITY MANAGEMENT FACILITIES WILL MAINTAIN EXISTING RUNOFF CHARACTERISTICS DURING 10 AND 100 YEAR STORM EVENTS.

A-2 PERMEABLE CONCRETE THAT ARE BEING PROPOSED IN FILL CONDITIONS WILL HAVE A PIPE CONVEYANCE SYSTEM THROUGH THE FILL TO THE UNDERLYING UNDISTURBED SOIL.

EROSION & SEDIMENT CONTROL:
A CONCEPTUAL EROSION & SEDIMENT CONTROL PLAN IS BEING PROVIDED TO DEMONSTRATE THAT SEDIMENT CONTROL PRACTICES WILL BE PROVIDED TO EFFECTIVELY TREAT SEDIMENT LADEN RUNOFF DURING CONSTRUCTION WITHOUT IMPACTING THE MICRO-SCALE FACILITIES THAT ARE BEING PROPOSED FOR PERMANENT RUNOFF TREATMENT.

ESD PLANNING TECHNIQUES:
ENVIRONMENTAL SITE DESIGN HAS BEEN APPLIED THROUGH THE APPLICATION OF A-2 PERMEABLE CONCRETE AND MICRO-BIORETENTION FACILITIES. BY LOCATING THESE MICROSCALE PRACTICES THROUGHOUT THE SITE, RUNOFF CONDITIONS FOR WOODS CAN BE MIMICKED IN THE DEVELOPED CONDITION. AS SHOWN ON THE PLAN, 85% OF THE REQUIRED ESD VOLUME IS BEING PROVIDED.

CONCLUSION:
THIS CONCEPT SUBMITTAL DEMONSTRATES THAT ENVIRONMENTAL SITE DESIGN HAS BEEN APPLIED TO THE MAXIMUM EXTENT PRACTICAL AT THIS TIME. UPON FURTHER SOILS INVESTIGATION OPPORTUNITIES MAY BE REVEALED TO PROVIDE ADDITIONAL WATER QUALITY STORAGE VOLUME. THE APPLICATION OF ESD PRACTICES SCATTERED THROUGHOUT THE SITE PROVIDES THE OPPORTUNITY FOR THE PROJECT TO MIMIC RUNOFF CONDITIONS FOR A WOODED AREA. AS THE PROJECT PROGRESSES TOWARD FINAL DESIGN ADDITIONAL INFORMATION WILL BE PROVIDED TO FURTHER SUPPORT THIS CONCLUSION.

PERMIT INFORMATION CHART

RESUBDIVISION NAME: ORCHARD MEADOWS	SECTION / AREA: N/A	LOT / PARCEL NO: D-1, D-2, & D-3			
PLAT NUMBER: 21796-97	GRID #: 23	ZONING: R-A-15	TAX MAP: 17	ELECTION DISTRICT: 2 ND	CENSUS: 602600
WATER CODE: F03			SEWER CODE: 1453600		

ADDRESS CHART

LOT/PARCEL #	STREET ADDRESS

PROFESSIONAL CERTIFICATION. I HEREBY CERTIFY THAT THESE DOCUMENTS WERE PREPARED OR APPROVED BY ME AND THAT I AM DULY LICENSED PROFESSIONAL ENGINEER UNDER THE LAWS OF THE STATE OF MARYLAND, LICENSE NO. 31089 EXPIRATION DATE: 11/12/12

APPROVED: DEPARTMENT OF PLANNING AND ZONING

CHIEF-DEVELOPMENT ENGINEERING DIVISION	DATE 1/24/12
CHIEF-BUREAU OF LAND DEVELOPMENT	DATE 2/03/12
DIRECTOR	DATE 2/3/12

GRAPHIC SCALE
100 0 50 100 200
1 INCH = 100 FEET

KCI TECHNOLOGIES
ENGINEERS
PLANNERS
SCIENTISTS
CONSTRUCTION MANAGERS
8161 MAPLE LAWN BOULEVARD
SUITE 150
FULTON, MD 20759
TELEPHONE: (410)792-8086
FAX: (410)792-7419

Orchard Development Corporation

CRP Opportunity Fund, L.P.

OWNER / DEVELOPER:
ORCHARD DEVELOPMENT CORPORATION
5032 DORSEY HALL DRIVE
ELLICOTT CITY, MD 21042
(410) 964-2334

OWNER:
WILDER BUILDING CORPORATION
3300 SONIA TRAIL
ELLICOTT CITY, MD 21043
(410)-461-2522

REVISIONS

NO.	DATE	DESCRIPTION	BY

DATE 11-18-2011
SCALE AS SHOWN
DESIGNED BY
DRAWN BY C.T.B.

COVER SHEET
ORCHARD MEADOWS
PARCELS D-1, D-2, D-3
SITE DEVELOPMENT PLAN
ZONING R-A-15, TAX MAP NO. 17, GRID NO. 23, PARCEL NO. 711
SECOND ELECTION DISTRICT HOWARD COUNTY, MARYLAND

SEAL: STATE OF MARYLAND RICHARD L. BUTT No. 031089 PROFESSIONAL ENGINEER 12-22-11

DRAWING NO. C - 1
SHEET 1 OF 38
KCI JOB NUMBER 27-101105

SDP-11-052

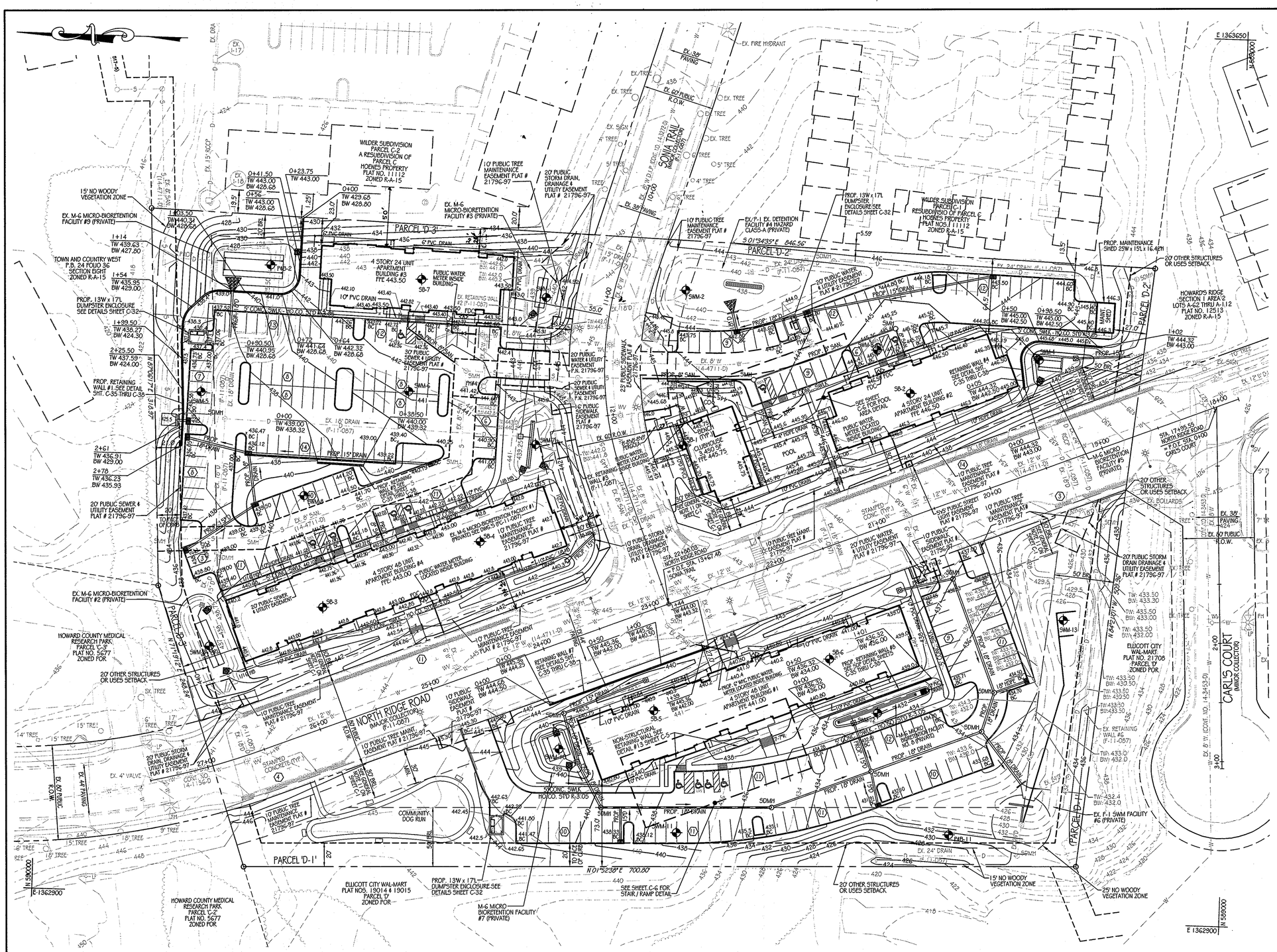

SITE AND GRADING PLAN

SCALE: 1" = 40'

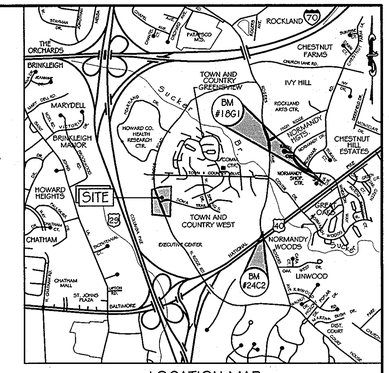

LOCATION MAP

SCALE: 1" = 2000'

ADC MAP COORDINATES: 12-7C

LEGEND

426	EX. INTERMEDIATE CONTOUR		PROPERTY LINE
430	EX. INDEX CONTOUR		RIGHT-OF-WAY LINE
EX. 8" W	EX. WATER	430	PROP. CONTOUR
EX. 15" RCCP	EX. STORM DRAIN		PROP. CURB
EX. 8" SAN.	EX. SANITARY	PROP. 6" WATER	PROP. WATER
X X	EX. FENCE	PROP. 8" SAN.	PROP. SANITARY
FH	EX. FIRE HYDRANT	PROP. 6" DRAIN	PROP. DRAIN
WV	EX. WATER VALVE		PROP. MANHOLE
GV	EV GAS VALVE		PROP. INLET
LP	EX. LIGHT POLE	FH	PROP. FIRE HYDRANT
	EX. TREE	WV	PROP. WATER VALVE
	EX. MAHOLE	CO	PROP. CLEANOUT
	EX. ELECTRIC BOX		PROP. PARKING
	EX. SIGN		PROP. PAVING
	SOIL BORING		

GENERAL NOTES

1. EXISTING CONTOURS ARE BASED ON FINAL ROAD CONSTRUCTION PLANS (F-11-087).
2. THE CONTRACTOR SHALL PROVIDE PRIVATE SUBSURFACE UTILITY LOCATION SERVICE, TO LOCATE AND MARK ANY AND ALL EXISTING UNDERGROUND UTILITIES, PRIOR TO THE START OF ANY CONSTRUCTION.
3. CONTRACTOR SHALL TEST PIT, AS REQUIRED, ALL EXISTING UTILITIES WITHIN THE LIMITS OF CONSTRUCTION TO DETERMINE THE EXACT LOCATION AND DEPTH. CONTRACTOR SHALL REPORT ANY DISCREPANCIES BETWEEN WHAT IS FOUND IN THE FIELD AND THAT INDICATED ON THE PLAN TO KCI TECHNOLOGIES, INC. ALL UTILITIES SHALL BE RETAINED UNLESS INDICATED OTHERWISE. DAMAGE TO EXISTING CONSTRUCTION AND UTILITIES TO REMAIN SHALL BE REPAIRED AS REQUIRED, TO THE OWNERS SATISFACTION, AT THE EXPENSE OF THE CONTRACTOR.
4. CONTRACTOR SHALL REMOVE AND REPLACE ALL DAMAGED CURB AND GUTTER, UTILITIES, SIDEWALKS, PAVEMENT, ETC., THAT ARE NOT INDICATED TO BE DEMOLISHED, AS REQUIRED FOR TIE-IN TO NEW CONSTRUCTION.
5. CONTRACTOR SHALL REPAIR AND MAINTAIN SEDIMENT CONTROL DEVICES UNTIL ALL AREAS WITHIN LIMITS OF CONSTRUCTION ARE STABILIZED. WITH THE APPROVAL OF INSPECTOR, ALL SEDIMENT CONTROL DEVICES SHALL BE REMOVED AND DISTURBED AREAS RESTORED AND STABILIZED.
6. CONTRACTOR SHALL BE RESPONSIBLE FOR ALL COST AND WORK REQUIRED TO ADJUST EXISTING AND PROPOSED UTILITIES AND APPURTENANCES TO FINISHED GRADES WITHIN THE LIMITS OF WORK.
7. OBSTRUCTIONS SHOWN ON THESE DRAWINGS ARE FOR THE CONVENIENCE OF THE CONTRACTOR ONLY. KCI TECHNOLOGIES DOES NOT WARRANT OR GUARANTEE THE CORRECTNESS OR THE COMPLETENESS OF THE INFORMATION GIVEN. THE CONTRACTOR MUST VERIFY SUCH INFORMATION TO HIS OWN SATISFACTION.
8. CONTRACTOR SHALL EXERCISE EXTREME CAUTION WHEN WORKING NEAR OR OVER EXISTING UTILITIES.
9. IT SHALL BE DISTINCTLY UNDERSTOOD THAT FAILURE TO MENTION SPECIFICALLY ANY WORK WHICH WOULD NORMALLY BE REQUIRED TO COMPLETE THIS PROJECT SHALL NOT RELIEVE THE CONTRACTOR OF HIS RESPONSIBILITY TO COMPLETE SUCH WORK.
10. IT SHALL BE THE RESPONSIBILITY OF THE CONTRACTOR TO NOTIFY THE ENGINEER OF ANY DEVIATION FROM THIS PLAN PRIOR TO ANY CHANGE BEING MADE. ANY DEVIATION FROM THIS PLAN WITHOUT WRITTEN AUTHORIZATION FROM THE ENGINEER WILL BE THE RESPONSIBILITY OF THE CONTRACTOR.
11. SHOULD THE CONTRACTOR DISCOVER DISCREPANCIES BETWEEN THE PLANS AND THE FIELD CONDITIONS, THE ENGINEER IS TO BE NOTIFIED IMMEDIATELY TO RESOLVE THE SITUATION. SHOULD THE CONTRACTOR MAKE FIELD CORRECTIONS OR ADJUSTMENTS WITHOUT NOTIFYING THE ENGINEER THEN THE CONTRACTOR ASSUMES ALL RESPONSIBILITY FOR THOSE CHANGES.
12. EXISTING CURB, GUTTER, AND SIDEWALK SHALL BE REMOVED TO THE NEAREST JOINT.
13. DIMENSIONS ARE TO FACE OF CURB UNLESS OTHERWISE NOTED.
14. ALL CONSTRUCTION SHALL FOLLOW LATEST HOWARD COUNTY DEPT. OF PUBLIC WORKS STANDARD SPECIFICATIONS & DETAILS OF CONSTRUCTION OR AS DETAILED ON THE DRAWINGS.
15. ALL PROPOSED SIDEWALKS TO BE CONSTRUCTED PER HOWARD COUNTY DESIGN MANUAL, VOLUME IV, STANDARD DETAIL R-3.05.

NOTE:
FOR UTILITY INFORMATION & CALLOUTS SEE SHEET C-7.

PROFESSIONAL CERTIFICATION. I HEREBY CERTIFY THAT THESE DOCUMENTS WERE PREPARED OR APPROVED BY ME AND THAT I AM DULY LICENSED PROFESSIONAL ENGINEER UNDER THE LAWS OF THE STATE OF MARYLAND, LICENSE NO. 31069
EXPIRATION DATE: 11/12/12

APPROVED: DEPARTMENT OF PLANNING AND ZONING

CHIEF-DEVELOPMENT ENGINEERING DIVISION	DATE 1/24/12
CHIEF-BUREAU OF LAND DEVELOPMENT	DATE 2/02/12
DIRECTOR	DATE 2/3/12

GRAPHIC SCALE
40 0 10 20 40 80
1 INCH = 40 FEET

KCI TECHNOLOGIES
ENGINEERS
PLANNERS
SCIENTISTS
CONSTRUCTION MANAGERS
8161 MAPLE LAWN BOULEVARD
SUITE 150
FULTON, MD 20759
TELEPHONE: (410)792-8086
FAX: (410)792-7419

OrchardDevelopment Corporation
CRP Opportunity Fund, L.P.

OWNER / DEVELOPER:
ORCHARD DEVELOPMENT CORPORATION
5032 DORSEY HALL DRIVE
ELLICOTT CITY, MD 21042
(410) 364-2334

OWNER:
WILDER BUILDING CORPORATION
3300 SOMA TRAIL
ELLICOTT CITY, MD 21043
(410)461-2522

REVISIONS

NO.	DATE	DESCRIPTION	BY

DATE	11-18-2011
SCALE	AS SHOWN
DESIGNED BY	
DRAWN BY	C.T.B.

SITE AND GRADING PLAN
ORCHARD MEADOWS
PARCELS D-1, D-2, D-3
SITE DEVELOPMENT PLAN
ZONING R-A-15, TAX MAP NO. 17, GRID NO. 23, PARCEL NO. 711
SECOND ELECTION DISTRICT — HOWARD COUNTY, MARYLAND

SEAL: STATE OF MARYLAND — RICHARD L. BAUD — No. 031069 — PROFESSIONAL ENGINEER

DRAWING NO. C - 2
SHEET 2 OF 38
KCI JOB NUMBER 27-101105

SDP-11-052

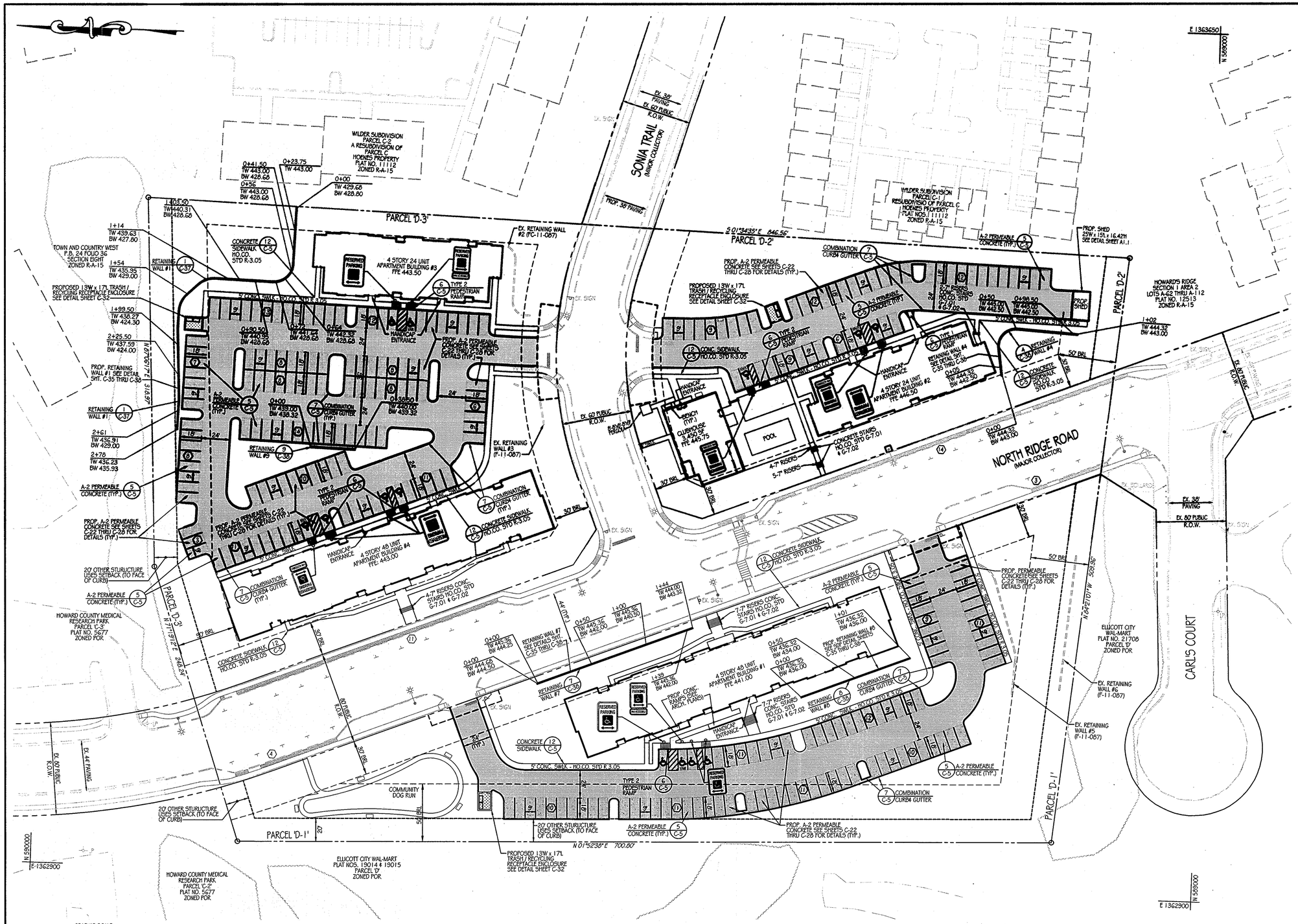

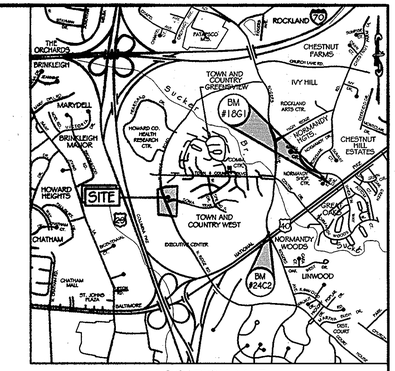

LOCATION MAP

SCALE: 1" = 2000'
ADC MAP COORDINATES: 12-7C

LEGEND

- PROPERTY LINE
- RIGHT-OF-WAY LINE
- EX. FENCE
- EX. LIGHT POLE
- EX. SIGN
- PROP. CURB
- PROP. LIGHT POLE
- PROP. SIGN
- APPROXIMATE LIMITS OF HEAVY DUTY PAVING
- APPROXIMATE LIMITS OF A-2 PERMEABLE CONCRETE
- APPROXIMATE LIMITS OF REINFORCED CONCRETE

GENERAL NOTES

1. ALL SIGNS SHALL BE MOUNTED ON A 2" SQUARE GALVANIZED METAL TUBE POSTS (14 GAUGE) INSERTED INTO A 2 1/2" SQUARE GALVANIZED METAL TUBE SLEEVE, 3' LONG (12 GAUGE). A GALVANIZED POLE CAP SHALL BE MOUNTED ON TOP.
2. ALL SIGN LOCATIONS ARE APPROXIMATE. EXACT LOCATIONS WILL BE FIELD MARKED BY TRAFFIC ENGINEER.
3. ALL MARKINGS WILL BE MARKED AND APPROVED BY TRAFFIC ENGINEER, PRIOR TO INSTALLATION.
4. THE "YIELD LINE" AND 3' WHITE SKIP MARKINGS SHALL BE HEAT APPLIED TAPE.
5. SINGLE SIGN ON POST - 5' TO BOTTOM OF SIGN: TWO SIGNS/PANELS - 4' TO BOTTOM OF SIGN: HEIGHT MEASURED FROM ROAD SURFACE, EXCEPT WHERE THERE ARE SIDEWALKS.
6. FOR REFERENCE REFER TO HOWARD COUNTY DETAILS T-7.02, T-7.03, W36-9, AND OM-3C.

PAVING, STRIPING AND SIGNAGE PLAN

SCALE: 1" = 40'

GRAPHIC SCALE
40 0 10 20 40 80
1 INCH = 40 FEET

PROFESSIONAL CERTIFICATION. I HEREBY CERTIFY THAT THESE DOCUMENTS WERE PREPARED OR APPROVED BY ME AND THAT I AM DULY LICENSED PROFESSIONAL ENGINEER UNDER THE LAWS OF THE STATE OF MARYLAND, LICENSE NO. 31089
EXPIRATION DATE: 11/12/12

APPROVED: DEPARTMENT OF PLANNING AND ZONING

CHIEF - DEVELOPMENT ENGINEERING DIVISION	1/24/12 DATE
CHIEF - BUREAU OF LAND DEVELOPMENT	2/02/12 DATE
DIRECTOR	2/3/12 DATE

KCI TECHNOLOGIES
ENGINEERS
PLANNERS
SCIENTISTS
CONSTRUCTION MANAGERS
8161 MAPLE LAWN BOULEVARD
SUITE 150
FULTON, MD 20759
TELEPHONE: (410)792-8086
FAX: (410)792-7419

OrchardDevelopment Corporation
CRP Opportunity Fund, L.P.

OWNER / DEVELOPER:
ORCHARD DEVELOPMENT CORPORATION
5032 DORSEY HALL DRIVE
ELLICOTT CITY, MD 21042
(410) 964-2334

OWNER:
WILDER BUILDING CORPORATION
3300 SONIA TRAIL
ELLICOTT CITY, MD 21043
(410)-461-2522

REVISIONS			
NO.	DATE	DESCRIPTION	BY

DATE	11-18-2011
SCALE	AS SHOWN
DESIGNED BY	
DRAWN BY	C.T.B.

PAVING, STRIPING AND SIGNAGE PLAN
ORCHARD MEADOWS
PARCELS D-1, D-2, D-3
SITE DEVELOPMENT PLAN
ZONING R-A-15, TAX MAP NO. 17, GRID NO. 23, PARCEL NO. 711
SECOND ELECTION DISTRICT — HOWARD COUNTY, MARYLAND

SEAL: STATE OF MARYLAND — RICHARD E. BUTT — No. 031089 — PROFESSIONAL ENGINEER — 12-22-11

DRAWING NO. C-3
SHEET 3 OF 38
KCI JOB NUMBER 27-101105

SDP-11-052

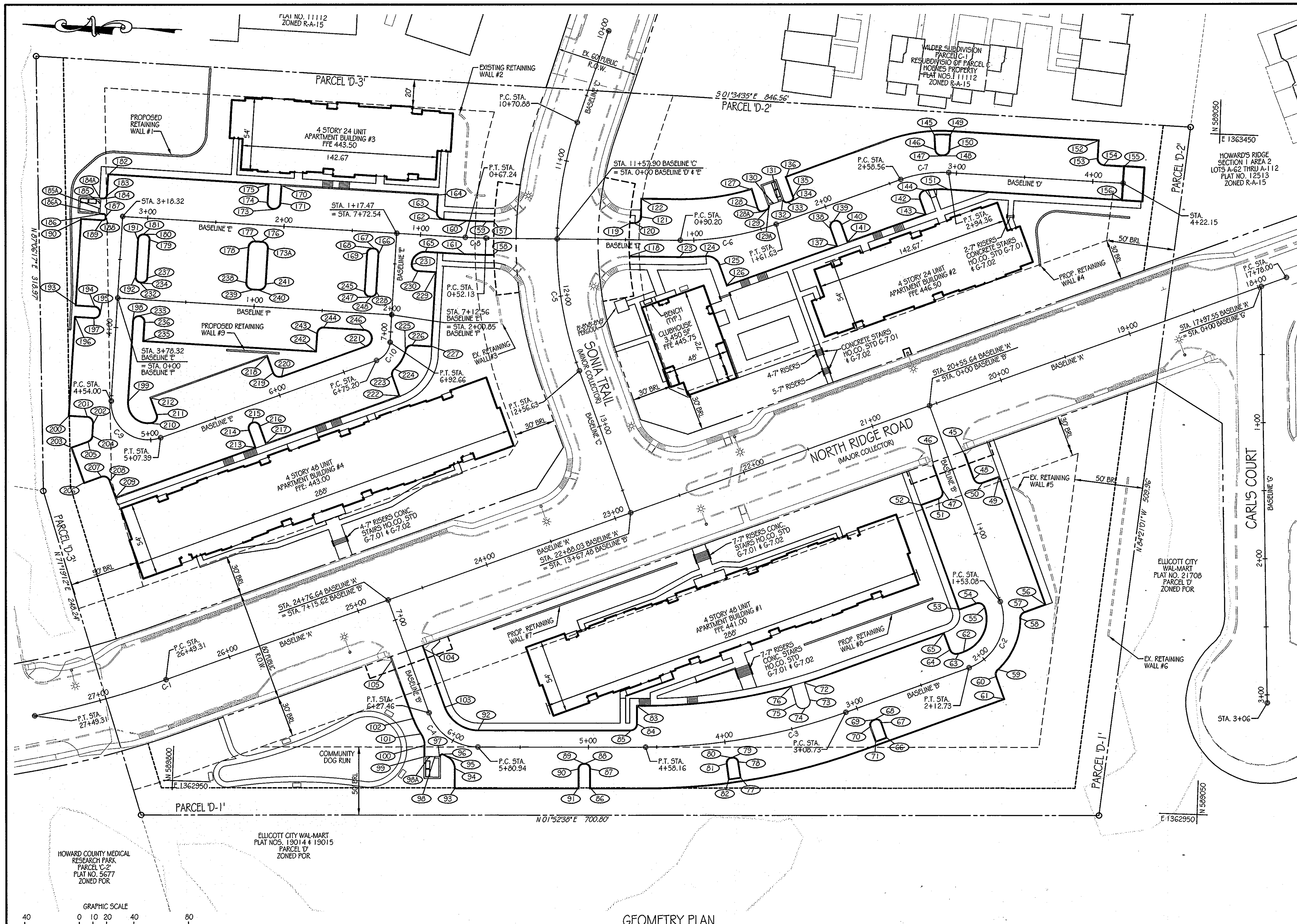

GEOMETRY PLAN

SCALE: 1" = 40'

LOCATION MAP

SCALE: 1" = 2000'
ADC MAP COORDINATES: 12-7C

ALIGNMENT "D" BASELINE DATA

NO.	STATION	NORTHING	EASTING	BEARING	LENGTH
132	1+72.29	589,368.0614	1,363,391.0027	S 21°46'19" E	15.02'
133	1+75.29	589,364.1536	1,363,389.3067	S 21°46'19" E	12.00'
134	1+77.16	589,362.0844	1,363,390.1332	S 21°46'19" E	12.00'
135	1+80.52	589,360.4104	1,363,394.0300	S 21°46'19" E	15.00'
136	1+80.52	589,365.9849	1,363,408.0144	S 21°46'19" E	30.05'
137	1+97.75	589,327.7377	1,363,358.6693	S 21°46'19" E	29.96'
138	1+97.75	589,332.7366	1,363,371.2097	S 21°46'19" E	16.46'
139	2+02.26	589,330.2228	1,363,377.0561	S 21°46'19" E	11.96'
140	2+06.76	589,324.37641	1,363,374.5423	S 21°46'19" E	16.46'
141	2+06.76	589,319.3775	1,363,362.0019	S 21°46'19" E	29.96'
142	2+68.87	589,267.9973	1,363,395.1438	S 10°04'43" E	17.76'
143	2+70.93	589,263.6425	1,363,384.2193	S 10°04'43" E	29.42'
144	2+75.03	589,264.3077	1,363,401.9032	S 10°04'43" E	12.00'
145	2+84.92	589,259.0375	1,363,442.9333	S 10°04'43" E	28.00'
146	2+84.92	589,258.1513	1,363,431.8495	S 10°04'43" E	16.88'
147	2+89.11	589,253.0064	1,363,427.2507	S 10°04'43" E	12.00'
148	2+90.00	589,251.9989	1,363,427.2780	S 10°04'43" E	12.00'
149	2+94.19	589,246.8050	1,363,443.2639	S 01°34'35" W	28.00'
150	2+94.19	589,247.1111	1,363,432.1392	S 01°34'35" W	16.87'
151	2+94.36	589,247.7007	1,363,403.2736	S 01°34'35" W	12.00'
152	4+02.15	589,138.7908	1,363,442.2922	S 01°34'35" W	30.00'
153	4+02.15	589,139.1485	1,363,429.2971	S 01°34'35" W	17.00'
154	4+07.15	589,134.2879	1,363,424.1615	S 01°34'35" W	12.00'
155	4+22.15	589,119.2936	1,363,423.7488	S 01°34'35" W	12.00'
156	4+22.15	589,119.8538	1,363,399.7579	S 01°34'35" W	12.00'

ALIGNMENT "E" BASELINE DATA

NO.	STATION	NORTHING	EASTING	BEARING	LENGTH
157	0+46.29	589,578.7381	1,363,367.7623	S 01°18'30" E	12.00'
158	0+46.42	589,578.3115	1,363,343.7658	S 01°18'30" E	12.00'
159	0+52.13	589,584.5737	1,363,367.6290	N 00°18'30" W	12.00'
160	0+67.24	589,599.0722	1,363,367.6629	N 00°18'30" W	12.00'
161	0+67.24	589,599.7324	1,363,343.6720	N 00°18'30" W	12.00'
162	0+84.38	589,616.2061	1,363,368.1345	N 01°34'35" E	12.00'
163	0+89.38	589,621.0666	1,363,373.2702	N 01°34'35" E	17.00'
164	0+89.38	589,620.7090	1,363,386.2652	N 01°34'35" E	30.00'
165	0+95.47	589,627.9526	1,363,344.4487	N 01°34'35" E	12.00'
166	1+29.47	589,662.0497	1,363,341.3856	N 01°34'35" E	16.00'
167	1+33.47	589,665.9382	1,363,345.4941	N 01°34'35" E	12.00'
168	1+34.47	589,666.9378	1,363,345.5216	N 01°34'35" E	12.00'
169	1+38.47	589,671.0463	1,363,341.6332	N 01°34'35" E	16.00'
170	2+03.38	589,732.6666	1,363,389.3465	N 01°34'35" E	30.00'
171	2+03.38	589,733.0242	1,363,376.3514	N 01°34'35" E	17.00'
173	2+08.38	589,740.1591	1,363,371.5459	N 01°34'35" E	12.00'
173A	2+10.47	589,743.0466	1,363,342.6144	N 01°34'35" E	17.00'
174	2+13.38	589,745.0197	1,363,376.6816	N 01°34'35" E	17.00'
175	2+13.38	589,744.6620	1,363,389.6766	N 01°34'35" E	30.00'
176	2+15.47	589,747.9071	1,363,347.7500	N 01°34'35" E	12.00'
177	2+20.32	589,752.7590	1,363,347.8836	N 01°34'35" E	12.00'
178	2+25.32	589,757.8947	1,363,343.0230	N 01°34'35" E	17.00'
179	2+97.32	589,829.8399	1,363,346.0035	N 01°34'35" E	16.00'
180	3+01.32	589,833.7284	1,363,350.1120	N 01°34'35" E	12.00'
181	3+02.32	589,834.7280	1,363,350.1395	N 01°34'35" E	12.00'
182	3+18.32	589,861.6178	1,363,392.8955	N 88°25'25" W	32.33'
183	3+18.32	589,862.0304	1,363,377.9011	N 88°25'25" W	19.24'
184	3+18.32	589,865.1118	1,363,374.9848	N 88°25'25" W	19.25'
184A	3+18.32	589,866.7779	1,363,375.0307	N 88°25'25" W	20.58'
185	3+18.32	589,866.8696	1,363,371.6986	N 88°25'25" W	18.84'
185A	3+18.32	589,866.9796	1,363,367.7001	N 88°25'25" W	17.36'
186	3+18.32	589,864.4005	1,363,364.2945	N 88°25'25" W	14.11'
186A	3+18.32	589,867.0714	1,363,364.3681	N 88°25'25" W	16.78'
187	3+18.32	589,862.4562	1,363,362.2409	N 88°25'25" W	12.05'
188	3+19.32	589,862.4148	1,363,360.9081	N 88°25'25" W	12.05'
189	3+22.32	589,865.4925	1,363,358.9893	N 88°25'25" W	15.00'
190	3+22.32	589,880.4905	1,363,359.4020	N 88°25'25" W	30.00'
191	3+34.32	589,838.8365	1,363,346.2511	N 88°25'25" W	12.00'
192	3+62.32	589,839.6068	1,363,318.2617	N 88°25'25" W	12.00'
193	3+85.32	589,882.2237	1,363,296.4258	N 88°25'25" W	30.00'
194	3+85.32	589,868.7288	1,363,296.0544	N 88°25'25" W	16.50'
195	3+89.82	589,864.3543	1,363,291.4323	N 88°25'25" W	12.00'
196	3+94.32	589,882.4713	1,363,287.4292	N 88°25'25" W	30.00'
197	3+94.32	589,868.9764	1,363,287.0578	N 88°25'25" W	16.50'
198	3+94.82	589,840.5010	1,363,285.7740	N 88°25'25" W	12.00'
199	4+54.00	589,842.1290	1,363,226.6181	N 88°25'25" W	12.00'
200	4+59.75	589,884.4521	1,363,215.4565	S 34°55'17" W	31.32'
201	4+61.37	589,871.4570	1,363,215.0988	S 34°55'17" W	18.69'

ALIGNMENT "E" BASELINE DATA

NO.	STATION	NORTHING	EASTING	BEARING	LENGTH
202	4+65.29	589,866.5965	1,363,209.9632	S 34°55'17" W	15.67'
203	4+70.03	589,881.6929	1,363,191.5388	S 34°55'17" W	37.64'
204	4+70.15	589,866.8512	1,363,200.7078	S 34°55'17" W	20.20'
205	4+71.23	589,869.9979	1,363,196.2008	S 34°55'17" W	25.32'
206	4+79.85	589,871.6951	1,363,166.4581	S 34°55'17" W	47.53'
207	4+82.74	589,859.6192	1,363,171.2719	S 34°55'17" W	36.82'
208	4+85.73	589,853.1231	1,363,168.4788	S 34°55'17" W	36.31'
209	4+89.20	589,848.3094	1,363,156.4028	S 34°55'17" W	45.94'
210	5+03.03	589,823.8927	1,363,211.5600	S 21°44'01" E	12.00'
211	5+10.79	589,820.3288	1,363,218.2933	S 21°44'01" E	17.13'
212	5+10.79	589,825.0944	1,363,230.2483	S 21°44'01" E	30.00'
213	5+69.88	589,747.9864	1,363,196.3942	S 21°44'01" E	30.00'
214	5+69.88	589,752.9853	1,363,208.9345	S 21°44'01" E	16.50'
215	5+74.38	589,750.4715	1,363,214.7810	S 21°44'01" E	12.00'
216	5+78.88	589,744.6251	1,363,212.2671	S 21°44'01" E	16.50'
217	5+78.88	589,739.6262	1,363,199.7268	S 21°44'01" E	30.00'
218	6+00.79	589,741.4919	1,363,263.5744	S 21°44'01" E	30.00'
219	6+00.79	589,736.6781	1,363,251.5985	S 21°44'01" E	17.00'
220	6+05.79	589,730.1821	1,363,248.7054	S 21°44'01" E	12.00'
221	6+71.62	589,669.0297	1,363,273.0823	S 21°44'01" E	12.00'
222	6+77.41	589,643.9478	1,363,237.8666	S 55°04'43" E	30.49'
223	6+78.51	589,649.5793	1,363,251.9940	S 55°04'43" E	15.53'
224	6+80.81	589,648.3539	1,363,257.4936	S 55°04'43" E	12.00'
225	6+89.91	589,640.4137	1,363,271.5514	S 55°04'43" E	12.00'
226	6+92.26	589,635.3865	1,363,275.5046	S 55°04'43" E	16.48'
227	6+92.38	589,621.8572	1,363,275.1323	S 55°04'43" E	30.01'
228	7+28.56	589,662.8201	1,363,313.3962	S 88°25'25" E	12.00'
229	7+45.44	589,620.3716	1,363,329.1118	S 88°25'25" E	30.00'
230	7+45.44	589,633.3667	1,363,329.4695	S 88°25'25" E	17.00'
231	7+50.44	589,638.2273	1,363,334.6051	S 88°25'25" E	12.00'

ALIGNMENT "F" BASELINE DATA

NO.	STATION	NORTHING	EASTING	BEARING	LENGTH
232	0+16.00	589,835.7184	1,363,314.1531	S 01°34'35" W	12.00'
233	0+16.50	589,835.8789	1,363,290.1485	S 01°34'35" W	12.00'
234	0+17.00	589,834.7188	1,363,314.1256	S 01°34'35" W	12.00'
235	0+21.00	589,831.8758	1,363,272.0315	S 01°34'35" W	30.00'
236	0+21.00	589,831.5044	1,363,285.5264	S 01°34'35" W	16.50'
237	0+21.00	589,830.6103	1,363,318.0141	S 01°34'35" W	16.00'
238	0+93.00	589,758.6100	1,363,317.0329	S 01°34'35" W	17.00'
239	0+98.00	589,753.7494	1,363,311.8972	S 01°34'35" W	12.00'
240	1+02.85	589,748.8975	1,363,311.7637	S 01°34'35" W	12.00'
241	1+07.85	589,743.7619	1,363,316.6242	S 01°34'35" W	17.00'
242	1+47.00	589,705.9235	1,363,268.5651	S 01°34'35" W	30.00'
243	1+47.00	589,705.5658	1,363,281.5601	S 01°34'35" W	17.00'
244	1+52.00	589,700.4302	1,363,286.4207	S 01°34'35" W	12.00'
245	1+79.85	589,671.8166	1,363,313.6438	S 01°34'35" W	16.00'
246	1+81.18	589,671.2578	1,363,285.6178	S 01°34'35" W	12.00'
247	1+83.85	589,667.9282	1,363,309.5353	S 01°34'35" W	12.00'
248	1+84.85	589,666.9286	1,363,309.5078	S 01°34'35" W	12.00'

BASELINE CURVE DATA

POINT #	FROM	TO	RADIUS	LENGTH	CHORD BEARING
C-1	26+49.31	27+49.31	650.00'	100.00'	N 17°19'34" W
C-2	1+53.08	2+12.73	38.00'	59.65'	N 66°45'38" W
C-3	3+08.73	4+58.16	430.00'	149.43'	N 11°49'57" W
C-4	5+80.94	6+27.46	38.00'	46.52'	N 33°11'41" E
C-5	10+70.88	12+56.63	275.00'	185.75'	S 87°37'02" W
C-6	0+90.20	1+61.63	200.00'	71.43'	S 11°32'21" E
C-7	2+58.56	2+94.36	88.00'	35.80'	S 10°04'43" E
C-8	0+52.13	0+67.24	300.00'	15.10'	N 00°18'30" W
C-9	4+54.00	5+07.39	27.00'	53.40'	S 34°55'17" W
C-10	6+75.20	6+92.66	15.00'	17.46'	S 55°04'43" E

LEGEND

PROPERTY LINE
RIGHT-OF-WAY LINE
EX. FENCE
EX. LIGHT POLE
EX. SIGN
PROP. CURB
PROP. SIDEWALK

ALIGNMENT "B" BASELINE DATA

NO.	STATION	NORTHING	EASTING	BEARING	LENGTH
45	0+42.00	589,229.0757	1,363,209.0867	S 68°15'59" W	12.00'
46	0+42.00	589,251.3697	1,363,200.1997	S 68°15'59" W	12.00'
47	0+62.00	589,243.9639	1,363,181.6214	S 68°15'59" W	12.00'
48	0+62.00	589,221.6699	1,363,190.5083	S 68°15'59" W	12.00'
49	0+67.00	589,203.0979	1,363,192.5290	S 68°15'59" W	30.00'
50	0+67.00	589,215.1738	1,363,187.7152	S 68°15'59" W	17.00'
51	0+67.00	589,246.7570	1,363,175.1253	S 68°15'59" W	17.00'
52	0+67.00	589,258.8329	1,363,170.3116	S 68°15'59" W	30.00'
53	1+48.00	589,228.8394	1,363,095.0694	S 68°15'59" W	30.00'
54	1+48.00	589,216.7635	1,363,099.8831	S 68°15'59" W	17.00'
55	1+53.08	589,210.2389	1,363,097.0183	S 68°15'59" W	12.00'
56	1+60.21	589,166.4413	1,363,100.5714	N 66°45'38" W	31.22'
57	1+62.33	589,181.3054	1,363,094.6409	N 66°45'38" W	15.58'
58	1+65.69	589,184.4469	1,363,089.7600	N 66°45'38" W	12.00'
59	1+97.78	589,199.4512	1,363,051.6244	N 66°45'38" W	12.00'
60	2+01.08	589,200.6001	1,363,046.1920	N 66°45'38" W	15.28'

ALIGNMENT "B" BASELINE DATA

NO.	STATION	NORTHING	EASTING	BEARING	LENGTH
61	2+03.91	589,194.2152	1,363,030.2186	N 66°45'38" W	31.88'
62	2+12.73	589,224.7403	1,363,063.2481	N 21°47'16" W	12.00'
63	2+16.71	589,228.4352	1,363,061.7712	N 21°47'16" W	12.00'
64	2+21.71	589,234.9339	1,363,064.5581	N 21°47'16" W	17.00'
65	2+21.71	589,239.7591	1,363,076.6295	N 21°47'16" W	30.00'
66	2+86.65	589,278.5284	1,362,998.6705	N 21°47'16" W	28.00'
67	2+86.65	589,282.9824	1,363,009.8133	N 21°47'16" W	16.00'
68	2+90.65	589,288.1814	1,363,012.0429	N 21°47'16" W	12.00'
69	2+91.52	589,288.9833	1,363,011.6971	N 21°47'16" W	12.00'
70	2+95.65	589,291.3395	1,363,006.4728	N 21°47'16" W	16.00'
71	2+95.65	589,286.8855	1,362,995.3300	N 21°47'16" W	28.00'
72	3+31.32	589,340.2616	1,363,037.0501	N 11°49'57" W	30.00'
73	3+31.32	589,336.0911	1,363,024.7670	N 11°49'57" W	17.03'
74	3+36.52	589,339.2736	1,363,018.4064	N 11°49'57" W	12.00'
75	3+42.06	589,345.9016	1,363,021.5697	N 11°49'57" W	17.03'
76	3+42.06	589,349.7686	1,363,033.9496	N 11°49'57" W	30.00'

ALIGNMENT "B" BASELINE DATA

NO.	STATION	NORTHING	EASTING	BEARING	LENGTH
77	3+92.31	589,384.3834	1,362,965.6470	N 11°49'57" W	28.00'
78	3+92.31	589,386.6045	1,362,977.4580	N 11°49'57" W	15.98'
79	3+96.17	589,391.2395	1,362,980.6563	N 11°49'57" W	12.00'
80	3+97.21	589,392.2947	1,363,980.4689	N 11°49'57" W	12.00'
81	4+01.07	589,395.5456	1,363,975.8706	N 11°49'57" W	15.98'
82	4+01.07	589,393.5654	1,363,964.0169	N 11°49'57" W	28.00'
83	4+64.16	589,461.9303	1,363,015.7752	N 01°52'38" W	30.00'
84	4+64.16	589,461.5045	1,363,002.7821	N 01°52'38" W	17.00'
85	4+64.16	589,466.3380	1,362,997.6210	N 01°52'38" W	12.00'
86	4+98.48	589,494.2594	1,362,954.6834	N 01°52'38" W	30.00'
87	4+98.48	589,494.7180	1,362,968.6759	N 01°52'38" W	16.00'
88	5+02.48	589,498.8469	1,362,972.5427	N 01°52'38" W	12.00'
89	5+03.49	589,499.8561	1,362,972.5086	N 01°52'38" W	12.00'
90	5+07.49	589,503.7229	1,362,968.3807	N 01°52'38" W	16.00'
91	5+07.49	589,503.2643	1,362,954.3882	N 01°52'38" W	30.00'
92	5+80.94	589,578.0542	1,362,993.9596	N 01°52'38" W	12.00'

ALIGNMENT "B" BASELINE DATA

NO.	STATION	NORTHING	EASTING	BEARING	LENGTH
93	5+90.00	589,593.2063	1,362,951.4404	N 33°11'41" E	31.98'
94	5+92.27	589,593.6710	1,362,965.6202	N 33°11'41" E	18.30'
95	5+98.35	589,599.5390	1,362,974.4014	N 33°11'41" E	12.00'
96	6+00.88	589,602.5210	1,362,975.8738	N 33°11'41" E	12.00'
97	6+02.12	589,605.4645	1,362,974.0454	N 33°11'41" E	15.03'
98	6+04.08	589,608.7960	1,362,973.9361	N 33°11'41" E	16.87'
98A	6+06.26	589,612.7939	1,362,973.8051	N 33°11'41" E	19.25'
99	6+07.93	589,616.1254	1,362,973.6958	N 33°11'41" E	21.37'
100	6+11.85	589,616.4006	1,362,982.0945	N 33°11'41" E	15.28'
101	6+17.90	589,619.2803	1,362,990.4514	N 33°11'41" E	12.00'
102	6+27.46	589,625.3517	1,363,001.4311	N 68°15'59" E	12.00'
103	6+27.46	589,603.0577	1,363,010.3181	N 68°15'59" E	12.00'
104	6+73.62	589,620.1494	1,363,053.1946	N 68°15'59" E	12.00'
105	6+73.62	589,642.4434	1,363,044.3076	N 68°15'59" E	12.00'

ALIGNMENT "D" BASELINE DATA

NO.	STATION	NORTHING	EASTING	BEARING	LENGTH
118	0+52.76	589,479.1611	1,363,346.0300	S 01°18'30" E	12.00'
119	0+52.94	589,479.5335	1,363,370.0278	S 01°18'30" E	12.00'
120	0+56.61	589,475.8618	1,363,370.1116	S 01°18'30" E	12.00'
121	0+61.61	589,470.9773	1,363,375.2245	S 01°18'30" E	17.00'
122	0+61.61	589,471.2741	1,363,388.2211	S 01°18'30" E	30.00'
123	0+90.21	589,441.7307	1,363,346.8848	S 01°18'30" E	12.00'
124	1+07.95	589,422.9653	1,363,348.1478	S 11°32'21" E	12.00'
125	1+16.74	589,412.5627	1,363,341.9129	S 11°32'21" E	19.57'
126	1+19.73	589,406.6956	1,363,327.1946	S 11°32'21" E	35.04'
127	1+51.86	589,391.3044	1,363,398.0638	S 11°32'21" E	30.00'
128	1+51.86	589,386.6540	1,363,384.5362	S 11°32'21" E	15.70'
128A	1+55.10	589,382.5776	1,363,382.0561	S 11°32'21" E	12.00'
129	1+58.38	589,379.6859	1,363,383.1298	S 11°32'21" E	12.00'
129A	1+61.63	589,377.9672	1,363,387.0463	S 11°32'21" E	15.02'
130	1+64.96	589,374.8716	1,363,388.2826	S 21°46'19" E	15.02'
131	1+68.96	589,371.1569	1,363,389.7663	S 21°46'19" E	15.02'

APPROVED: DEPARTMENT OF PLANNING AND ZONING

CHIEF-DEVELOPMENT ENGINEERING DIVISION — DATE 1/24/12
CHIEF-~~BUREAU~~ DIV. OF LAND DEVELOPMENT — DATE 2/02/12
DIRECTOR — DATE 2/3/12

KCI TECHNOLOGIES
ENGINEERS
PLANNERS
SCIENTISTS
CONSTRUCTION MANAGERS
8161 MAPLE LAWN BOULEVARD SUITE 150
FULTON, MD 20759
TELEPHONE: (410)792-8086
FAX: (410)792-7419

Orchard Development Corporation

CRP Opportunity Fund, L.P.

OWNER / DEVELOPER:
ORCHARD DEVELOPMENT CORPORATION
5032 DORSEY HALL DRIVE
ELLICOTT CITY, MD 21042
(410) 964-2334

OWNER:
WILDER BUILDING CORPORATION
3300 SONIA TRAIL
ELLICOTT CITY, MD 21043
(410)-461-2522

REVISIONS

NO.	DATE	DESCRIPTION	BY

DATE: 11-18-2011
SCALE: AS SHOWN
DESIGNED BY:
DRAWN BY: C.T.B.

PROFESSIONAL CERTIFICATION. I HEREBY CERTIFY THAT THESE DOCUMENTS WERE PREPARED OR APPROVED BY ME AND THAT I AM DULY LICENSED PROFESSIONAL ENGINEER UNDER THE LAWS OF THE STATE OF MARYLAND, LICENSE NO. 31089 EXPIRATION DATE: 11/12/12

SEAL: STATE OF MARYLAND RICHARD L. BUTT No. 031089 PROFESSIONAL ENGINEER

GEOMETRY PLAN
ORCHARD MEADOWS
PARCELS D-1, D-2, D-3
SITE DEVELOPMENT PLAN
ZONING R-A-15, TAX MAP NO. 17, GRID NO. 23, PARCEL NO. 711
SECOND ELECTION DISTRICT — HOWARD COUNTY, MARYLAND

DRAWING NO. C-4
SHEET 4 OF 38
KCI JOB NUMBER 27-101105

SDP-11-052

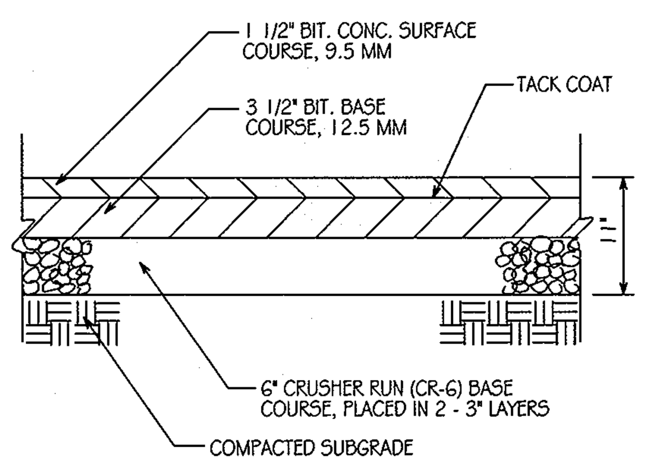

(1) PAVING DETAIL SCALE: N.T.S.

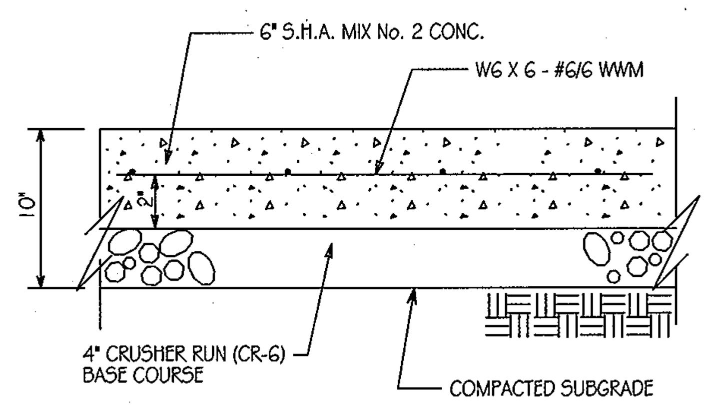

NOTE: 1. EXPANSION JOINTS SHALL BE AT THE LOCATIONS SHOWN ON THE PLANS.

2. MINIMUM 28 DAY COMPRESSION STRENGTH 4000psi.

(2) REINFORCED CONCRETE PAVING DETAIL (R-8.03) SCALE: N.T.S.

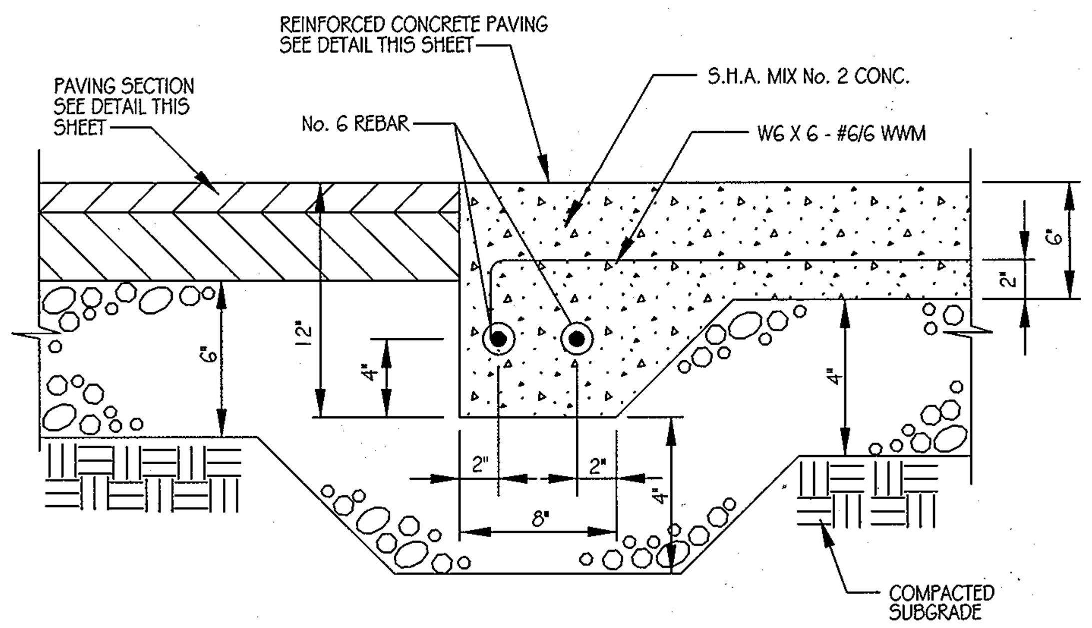

NOTE: MINIMUM 28 DAY COMPRESSION STRENGTH 4000psi.

(3) TIE IN FOR PAVING AND REINFORCED CONCRETE PAVING (R-8.03) SCALE: N.T.S.

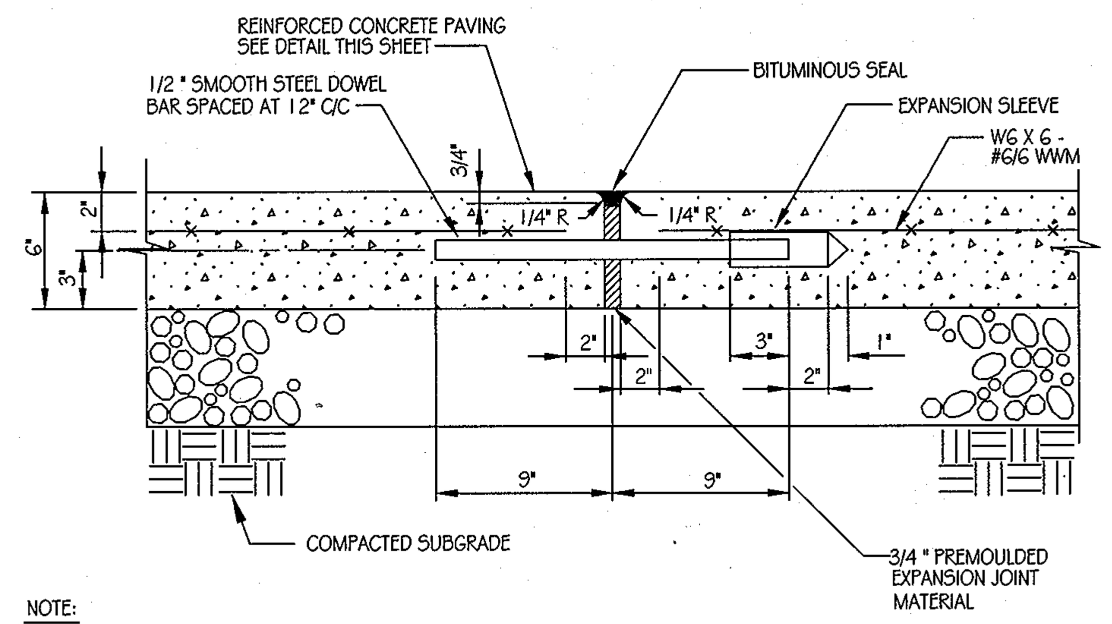

NOTE:

1. SMOOTH DOWELS SHALL BE PAINTED WITH APPROVED RED LEAD BEFORE DELIVERY AND FREE END SHALL BE GREASED BEFORE INSTALLATION.

(4) TIE IN AT EXPANSION JOINT SCALE: N.T.S.

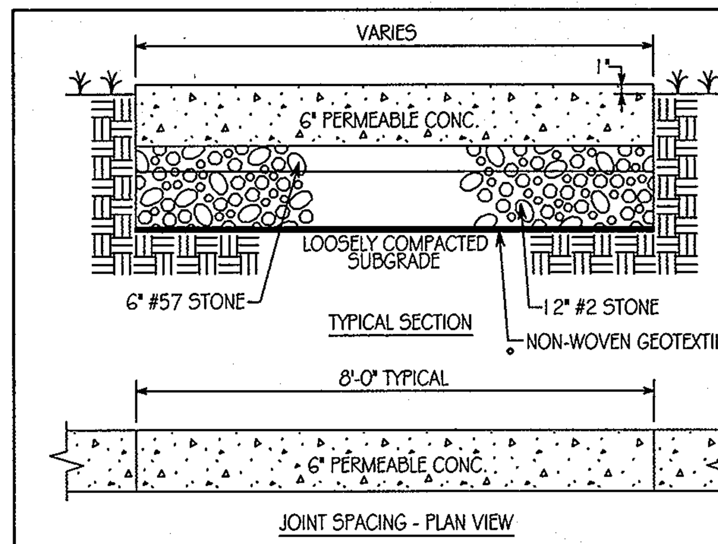

NOTES:

1. PERMEABLE CONCRETE MUST BE SUPPLIED AND INSTALLED BY NRMCA CERTIFIED TECHNICIANS.
2. JOINTS TO BE CUT IN FRESH PAVEMENT WITH A PERMEABLE CONCRETE JOINT CUTTING TOOL ONLY.
3. PERMEABLE CONCRETE MUST BE COVERED WITH 6 MIL PLASTIC, SECURELY FASTENED, FOR SEVEN (7) DAYS.

(5) A-2 PERMEABLE CONCRETE SCALE: N.T.S.

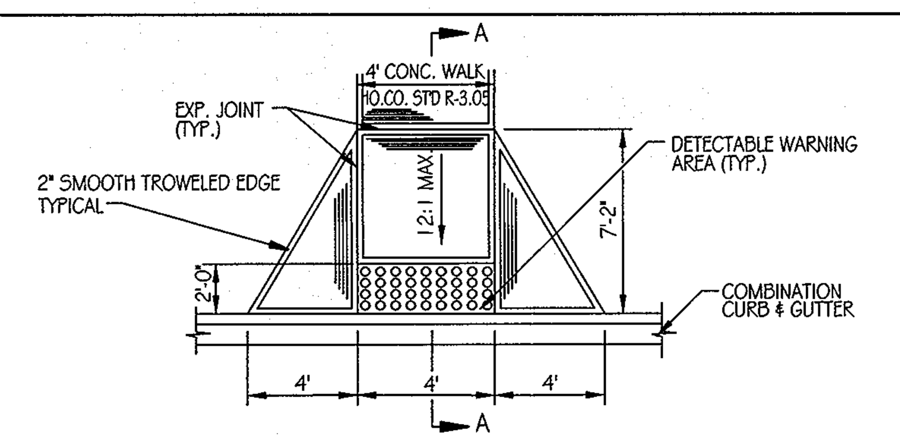

TYPE 1

PERPENDICULAR TO CURB
HO.CO. DETAIL R-4.05

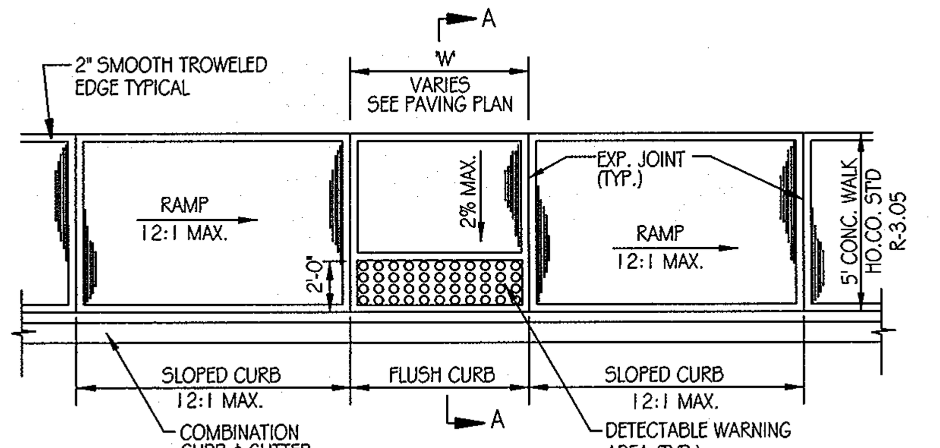

TYPE 2

PARALLEL TO CURB
HO.CO. DETAIL R-4.06

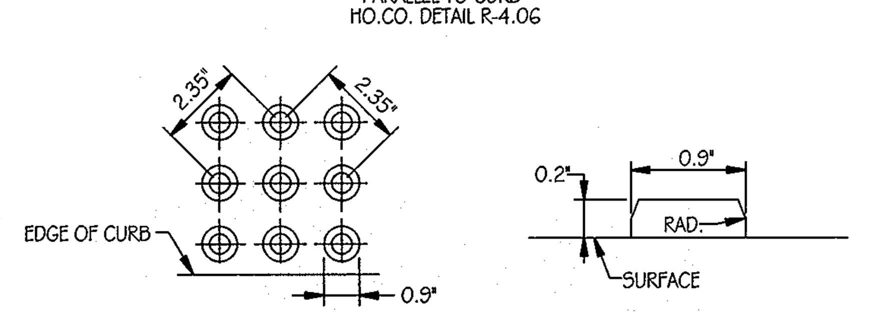

SQUARE PATTERN
PARALLEL ALIGNMENT

PROFILE VIEW
SINGLE TRUNCATED DOME

DETECTABLE WARNING DETAIL

NOTES:

1. SURFACE TEXTURE OF RAMPS SHALL BE COARSE BROOMING OR NON SKID SURFACE.
2. DETECTABLE WARNINGS SHALL BE SQUARE PATTERN. PARALLEL ALIGNMENT.
3. SEE DEPRESSED CURB AND GUTTER AT PEDESTRIAN RAMP DETAIL 9 FOR SECTION A-A.
4. SEE PAVING PLAN, SHEET C-3, FOR TYPE 1 RAMP TAPERED CURB LENGTHS.
5. A DETECTABLE WARNING IS A STANDARDIZED SURFACE FEATURE BUILT IN OR APPLIED TO WALKING SURFACES (OR OTHER ELEMENTS) TO WARN VISUALLY IMPAIRED PEOPLE OF HAZARDS ON A CIRCULATION PATH.
6. DETECTABLE WARNINGS SHALL CONSIST OF RAISED TRUNCATED DOMES WITH NOMINAL DIMENSIONS AS SHOWN AND SHALL CONTRAST VISUALLY WITH ADJOINING SURFACES, EITHER LIGHT-DARK OR DARK-LIGHT. THE MATERIAL USED TO PROVIDE CONTRAST SHALL BE INTEGRAL WITH THE WALKING SURFACE.
7. DETECTABLE WARNING AREAS SHALL EXTEND 24" BACK FROM THE REAR OF THE CURB WITHIN THE RAMP ITSELF. THEY SHALL NOT BE USED ELSEWHERE ON A PEDESTRIAN RAMP.
8. DETECTABLE WARNINGS MAY BE APPLIED USING BRICK OR BLOCK PAVERS OR EXTRUDED TINTED CONCRETE.
9. PAVERS MAY BE SPLAYED AS REQUIRED TO MATCH A CURVED CURB RADIUS.
10. COMMERCIAL PRODUCTS MAY VARY IN SPACING, DIMENSION AND CONFIGURATION OF DOMES. CERTIFICATION OF COMPLIANCE WITH CURRENT A.D.A.A.G. (AMERICANS WITH DISABILITIES ACT ACCESSIBILITY GUIDELINE REQUIREMENTS) SHALL BE REQUIRED OF ALL PRODUCTS BEFORE INSTALLATION.
11. MANUFACTURED PRODUCTS SHALL BE INSTALLED IN ACCORDANCE WITH MANUFACTURER'S INSTRUCTIONS.
12. SEE DETAIL 10 FOR SECTION A-A.

* FOR ADDITIONAL INFORMATION SEE H.C. STD DETAILS R-4.05 & R-4.06

(6) PEDESTRIAN RAMPS (R-4.05) (R-4.06) SCALE: N.T.S.

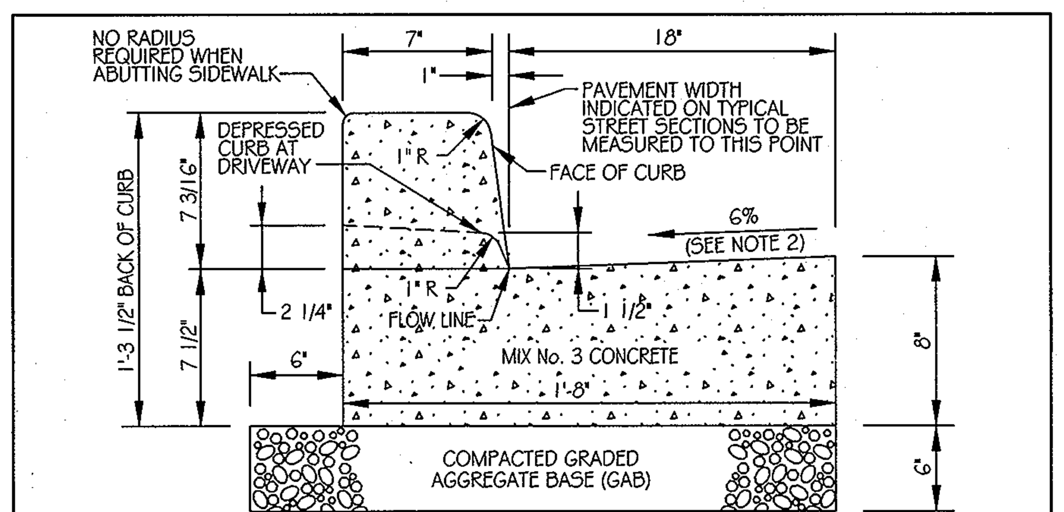

NOTES:

1. A REVERSE GUTTER PAN SHALL HAVE A GUTTER SLOPE OF 4.17% AWAY FROM THE FLOW LINE, AND SHALL NOT BE USED WHERE THIS DRAINAGE CREATES A HAZARDOUS CONDITION.
2. GUTTER PAN AT THE MEDIAN EDGE OF INTERMEDIATE ARTERIALS OR THE HIGH SIDE OF SUPER ELEVATED SECTIONS SHALL BE SLOPED AT THE SAME RATE AND IN THE SAME DIRECTION AS THE PAVEMENT CROSS SLOPE WHEN CURB IS LOCATED ON THE LOW SIDE OF SUPER ELEVATED SECTION AND THE RATE OF SUPER ELEVATION IS GREATER THAN 3% FOR MODIFIED CURB & GUTTER.
3. A MINIMUM OF TWO FEET OF STABILIZED EARTH, SHALL SUPPORT ENTIRE BACK OF CURB.
4. POSITIVE DRAINAGE SHALL BE PROVIDED BOTH BEHIND THE CURB AND ALONG THE GUTTER & FLOW LINE.

(7) COMBINATION CURB AND GUTTER (R-3.01) SCALE: N.T.S.

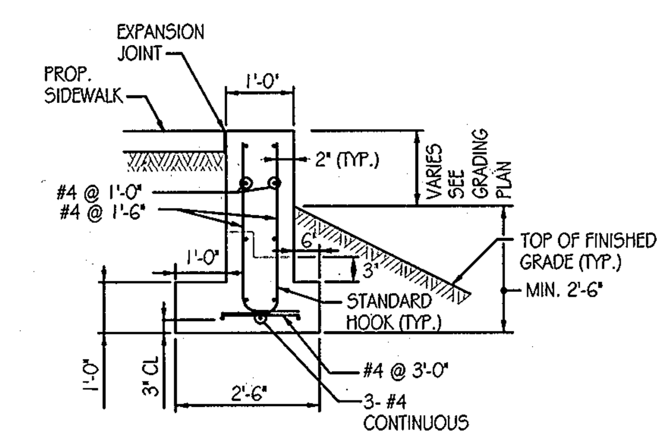

(13) NON-STRUCTURAL RETAINING WALL SCALE: N.T.S.

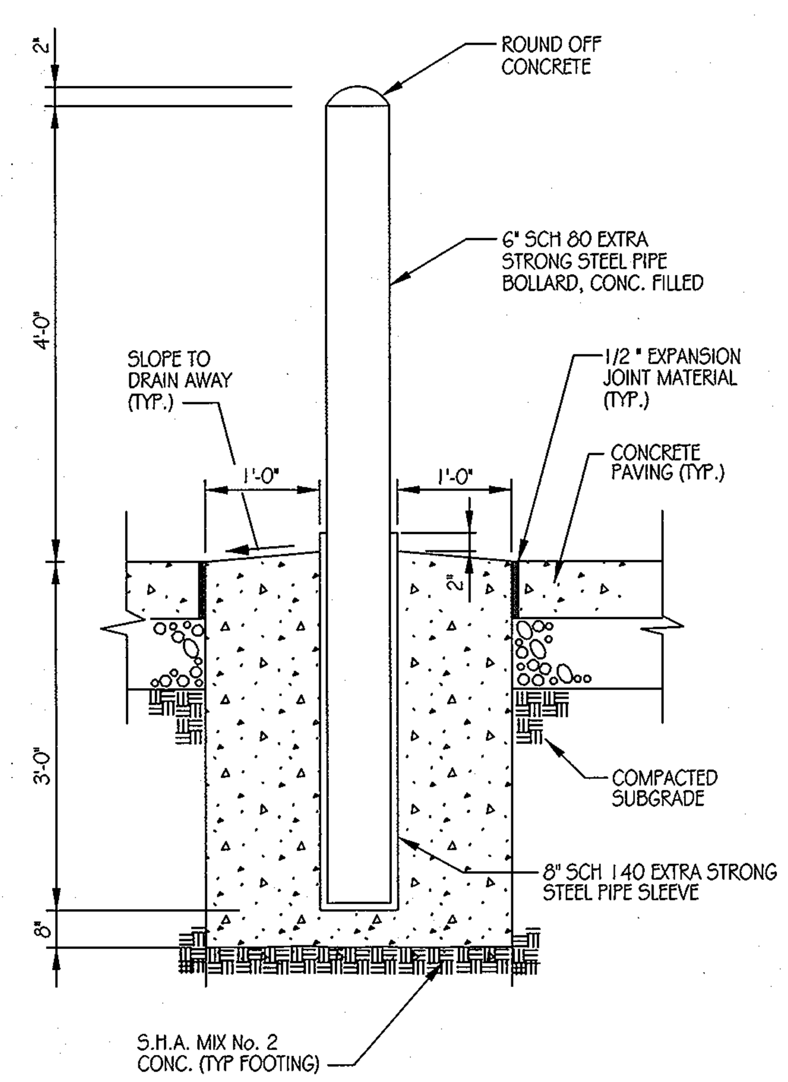

(11) PIPE BOLLARD SCALE: N.T.S.

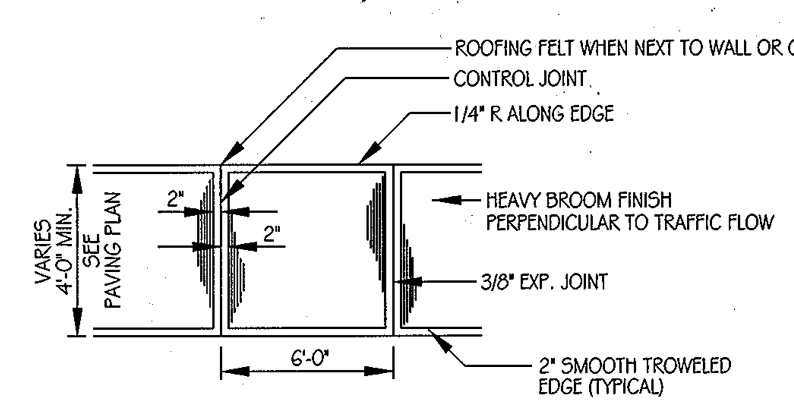

PROFILE

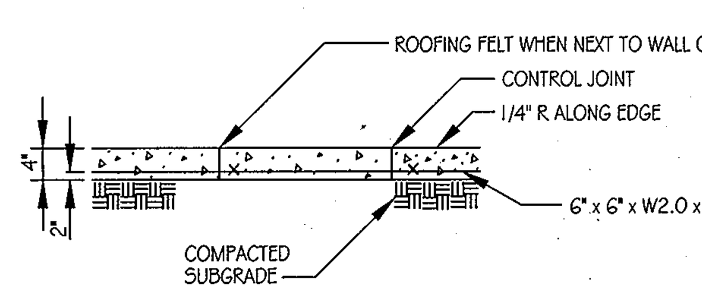

NOTE: PROVIDE 2% CROSS-SLOPE FOR POSITIVE DRAINAGE AS REQUIRED

SECTION

1. PROVIDE EXPANSION JOINTS 20' C.C. MAX. AND SCORE JOINTS 5' C.C. (UNLESS MANUFACTURED BY SUPERIOR FEATHERWEIGHT TOOLS (OR APPROVED EQUIVALENT) OTHERWISE NOTED). EXPANSION JOINTS SHALL BE ZIP STRIP CONTROL JOINTS WITH 1/2" PREMOLDED BITUMINOUS JOINT MATERIAL. ALL CONTROL JOINTS SHALL BE SEALED WITH A POLYURETHANE SEALANT.
2. WHEN SIDEWALK ABUTS CURB, SIDEWALK SHALL BE 1/4" ABOVE CURB WITH ROOFING FELT SATURATED ON BOTH SIDES WITH ASPHALTIC MATERIAL BETWEEN THEM. ROOFING PAPER SHALL NOT WEIGH LESS THAN 39.8 LBS. PER S.F.

* SEE STD. DETAIL R-3.05 FOR SIDEWALK ADJACENT TO CURB.

(12) CONCRETE SIDEWALK (R-3.05) SCALE: N.T.S.

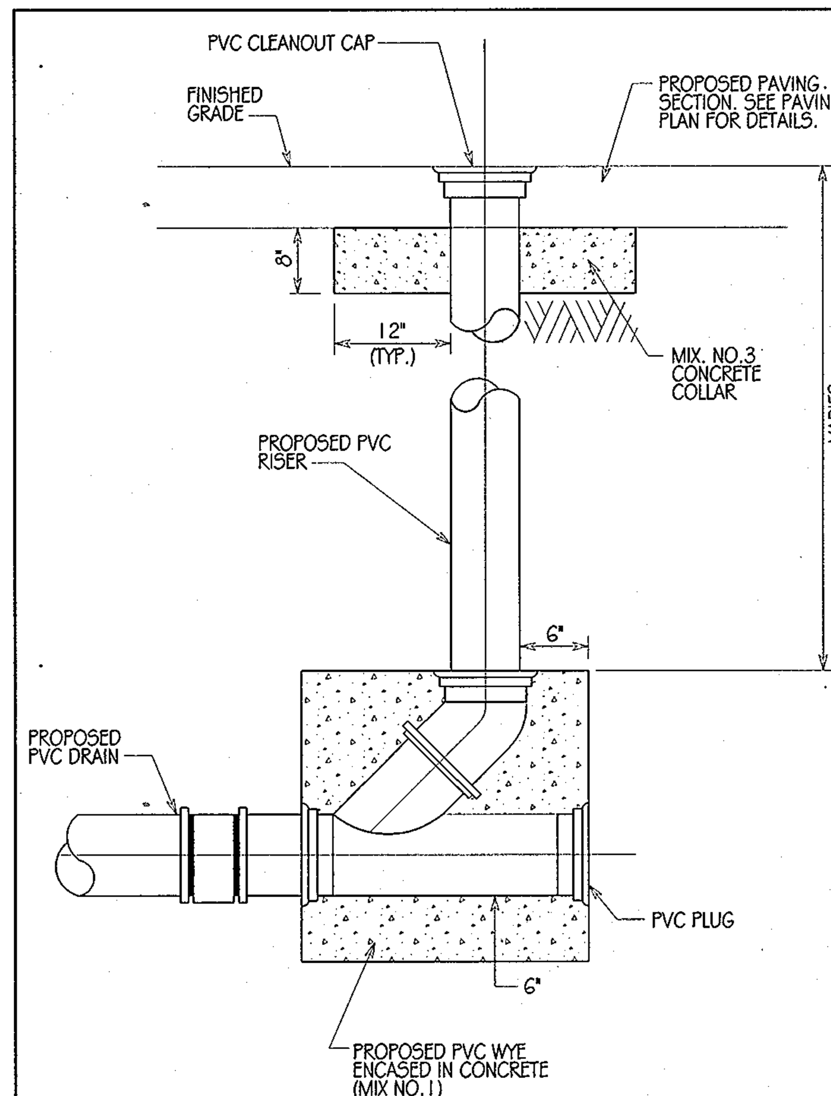

(9) CLEANOUT DETAIL (IMPERVIOUS AREAS)
SCALE: N.T.S.

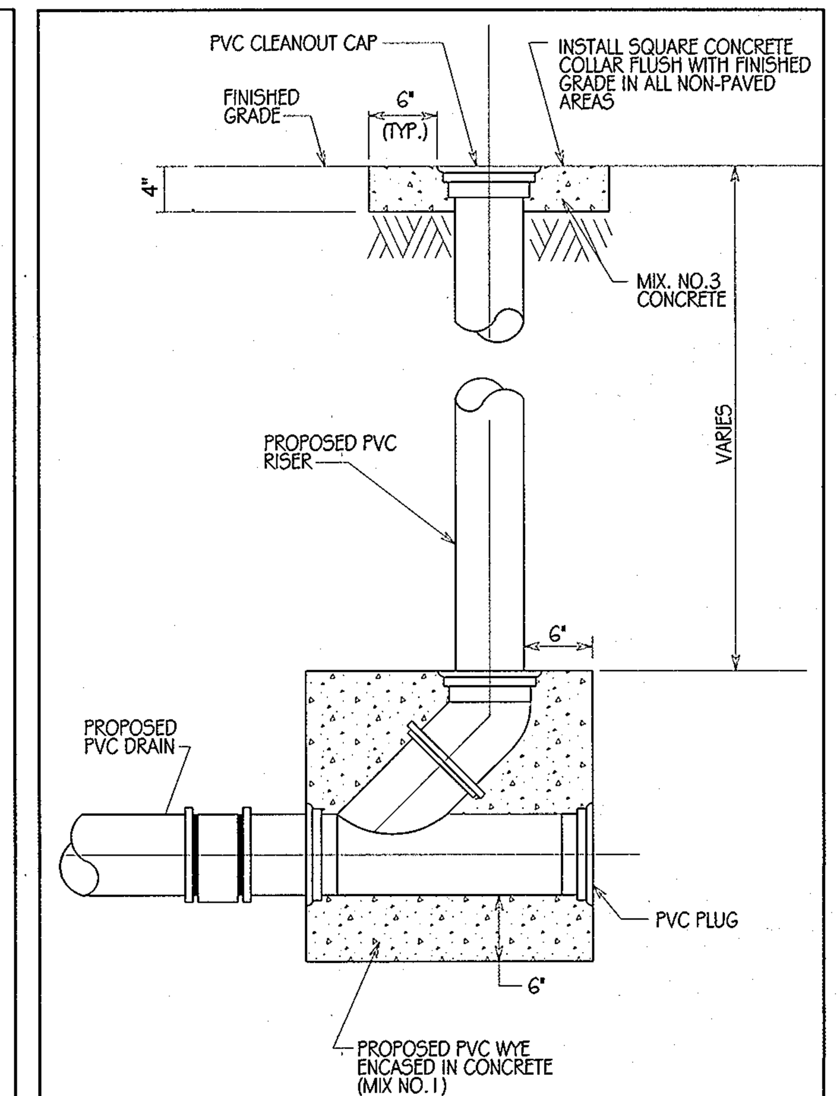

(10) CLEANOUT DETAIL (PERVIOUS AREAS)
SCALE: N.T.S.

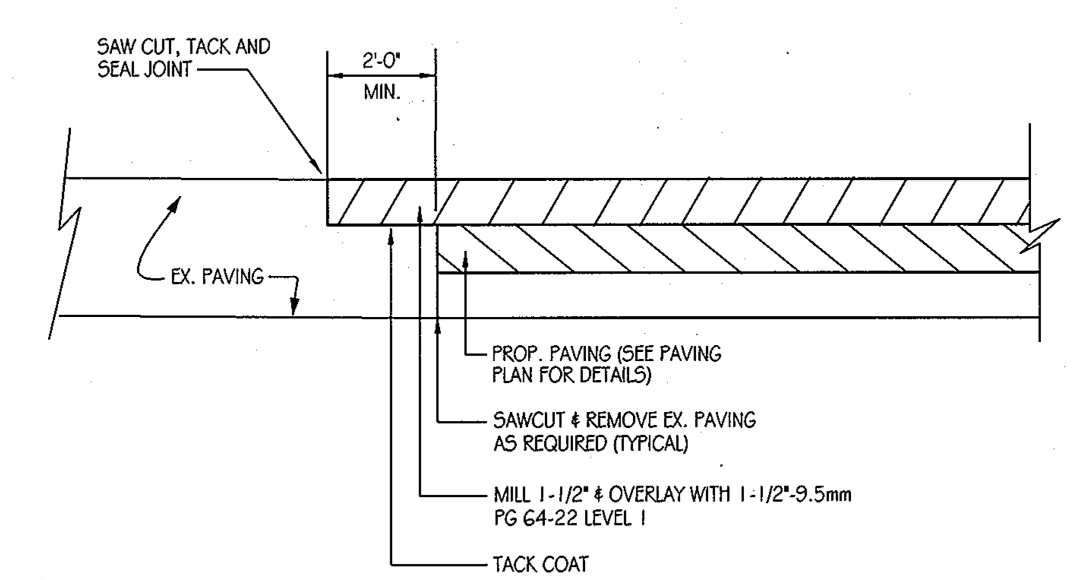

(8) PAVING TIE-IN DETAIL SCALE: N.T.S.

PROFESSIONAL CERTIFICATION. I HEREBY CERTIFY THAT THESE DOCUMENTS WERE PREPARED OR APPROVED BY ME AND THAT I AM DULY LICENSED PROFESSIONAL ENGINEER UNDER THE LAWS OF THE STATE OF MARYLAND, LICENSE NO. 31089 EXPIRATION DATE: 11/12/12

APPROVED: DEPARTMENT OF PLANNING AND ZONING

CHIEF-DEVELOPMENT ENGINEERING DIVISION	1/24/12 DATE
CHIEF-~~BUREAU~~ DIV. OF LAND DEVELOPMENT	2/03/12 DATE
DIRECTOR	2/3/12 DATE

KCI TECHNOLOGIES
ENGINEERS
PLANNERS
SCIENTISTS
CONSTRUCTION MANAGERS
8161 MAPLE LAWN BOULEVARD
SUITE 150
FULTON, MD 20759
TELEPHONE: (410)792-8086
FAX: (410)792-7419

Orchard Development Corporation

CRP Opportunity Fund, L.P.

OWNER / DEVELOPER:
ORCHARD DEVELOPMENT CORPORATION
5032 DORSEY HALL DRIVE
ELLICOTT CITY, MD 21042
(410) 964-2334

OWNER:
WILDER BUILDING CORPORATION
3300 SONIA TRAIL
ELLICOTT CITY, MD 21043
(410)-461-2522

REVISIONS

NO.	DATE	DESCRIPTION	BY

DATE 11-18-2011
SCALE AS SHOWN
DESIGNED BY
DRAWN BY C.T.B.

SITE DETAIL SHEET

ORCHARD MEADOWS

PARCELS D-1, D-2, D-3
SITE DEVELOPMENT PLAN
ZONING R-A-15, TAX MAP NO. 17, GRID NO. 23, PARCEL NO. 711

SECOND ELECTION DISTRICT HOWARD COUNTY, MARYLAND

SEAL: STATE OF MARYLAND RICHARD L. BUTT No. 031089 PROFESSIONAL ENGINEER

DRAWING NO. C - 5

SHEET 5 OF 38

KCI JOB NUMBER 27-101105

SDP-11-052

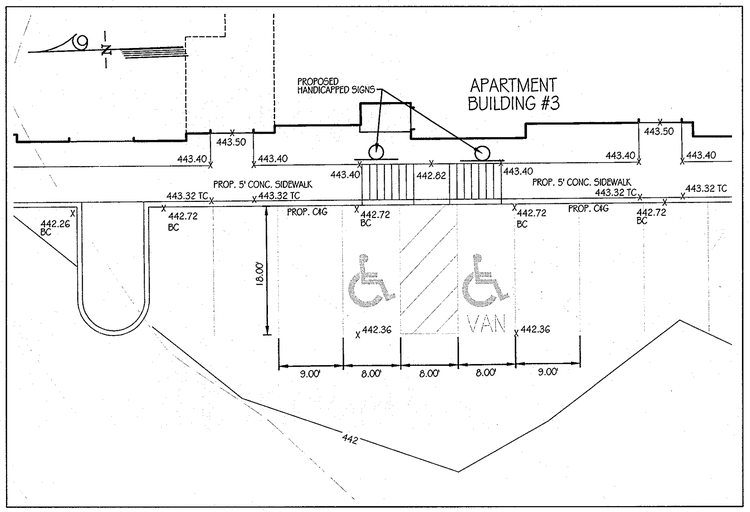

BUILDING #3 HC AREA

SCALE: 1" = 10'

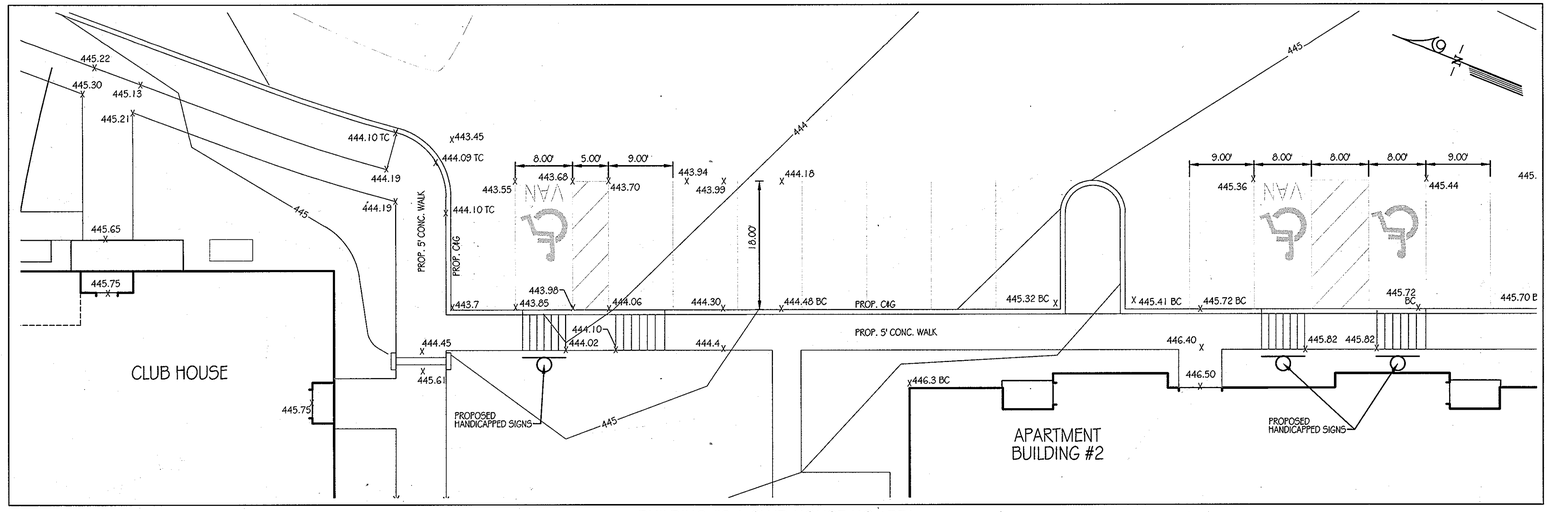

BUILDING #2 & CLUB HOUSE HC AREA

SCALE: 1" = 10'

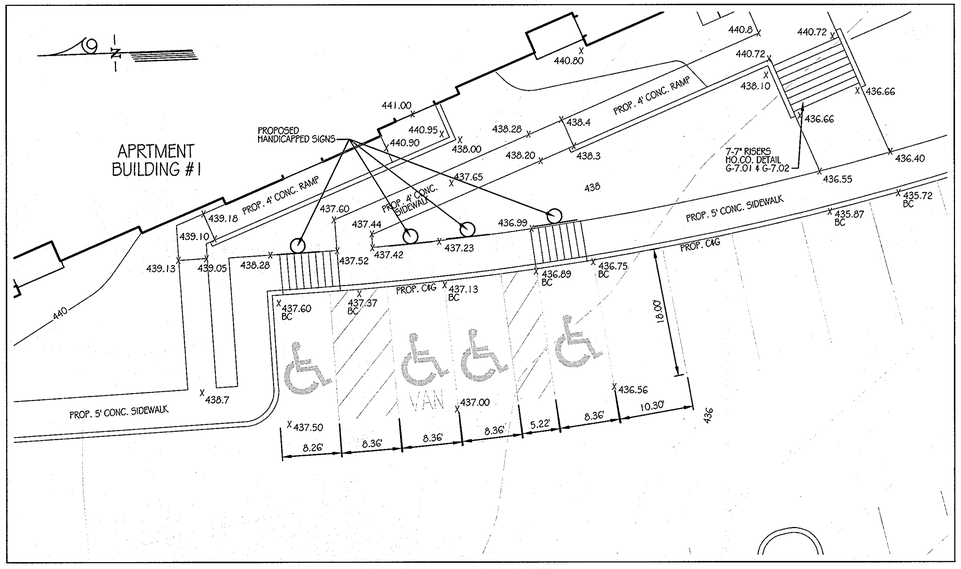

BUILDING #1 / RAMP DETAIL

SCALE: 1" = 10'

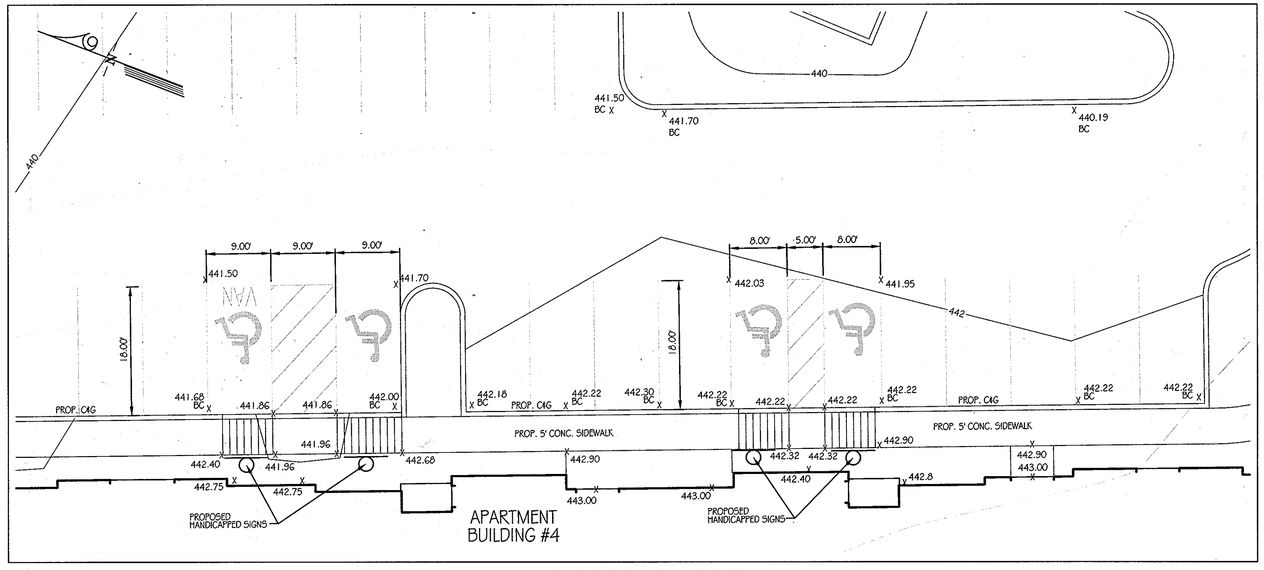

BUILDING #4 / RAMP DETAIL

SCALE: 1" = 10'

PROFESSIONAL CERTIFICATION. I HEREBY CERTIFY THAT THESE DOCUMENTS WERE PREPARED OR APPROVED BY ME AND THAT I AM DULY LICENSED PROFESSIONAL ENGINEER UNDER THE LAWS OF THE STATE OF MARYLAND, LICENSE NO. 31089
EXPIRATION DATE: 11/1/2012

APPROVED: DEPARTMENT OF PLANNING AND ZONING

CHIEF-DEVELOPMENT ENGINEERING DIVISION	DATE 1/24/12
CHIEF-BUREAU OF LAND DEVELOPMENT	DATE 2/03/12
DIRECTOR	DATE 2/3/12

KCI TECHNOLOGIES

Engineers
Planners
Scientists
Construction Managers

8161 Maple Lawn Boulevard
Suite 150
Fulton, MD 20759
Telephone: (410)792-8086
Fax: (410)792-7419

OrchardDevelopment Corporation

CRP Opportunity Fund, L.P.

OWNER / DEVELOPER:
ORCHARD DEVELOPMENT CORPORATION
5032 DORSEY HALL DRIVE
ELLICOTT CITY, MD 21042
(410) 964-2334

OWNER:
WILDER BUILDING CORPORATION
3300 SOMA TRAIL
ELLICOTT CITY, MD 21043
(410)461-2522

REVISIONS

NO.	DATE	DESCRIPTION	BY

DATE 11-18-2011
SCALE AS SHOWN
DESIGNED BY
DRAWN BY C.T.B.

SITE DETAIL SHEET

ORCHARD MEADOWS

PARCELS D-1, D-2, D-3
SITE DEVELOPMENT PLAN
ZONING R-A-15, TAX MAP NO. 17, GRID NO. 23, PARCEL NO. 711

SECOND ELECTION DISTRICT — HOWARD COUNTY, MARYLAND

SEAL: STATE OF MARYLAND — RICHARD L. BUTLER — No. 031089 — PROFESSIONAL ENGINEER

DRAWING NO. C-6

SHEET 6 OF 38

KCI JOB NUMBER 27-101105

SDP-11-052

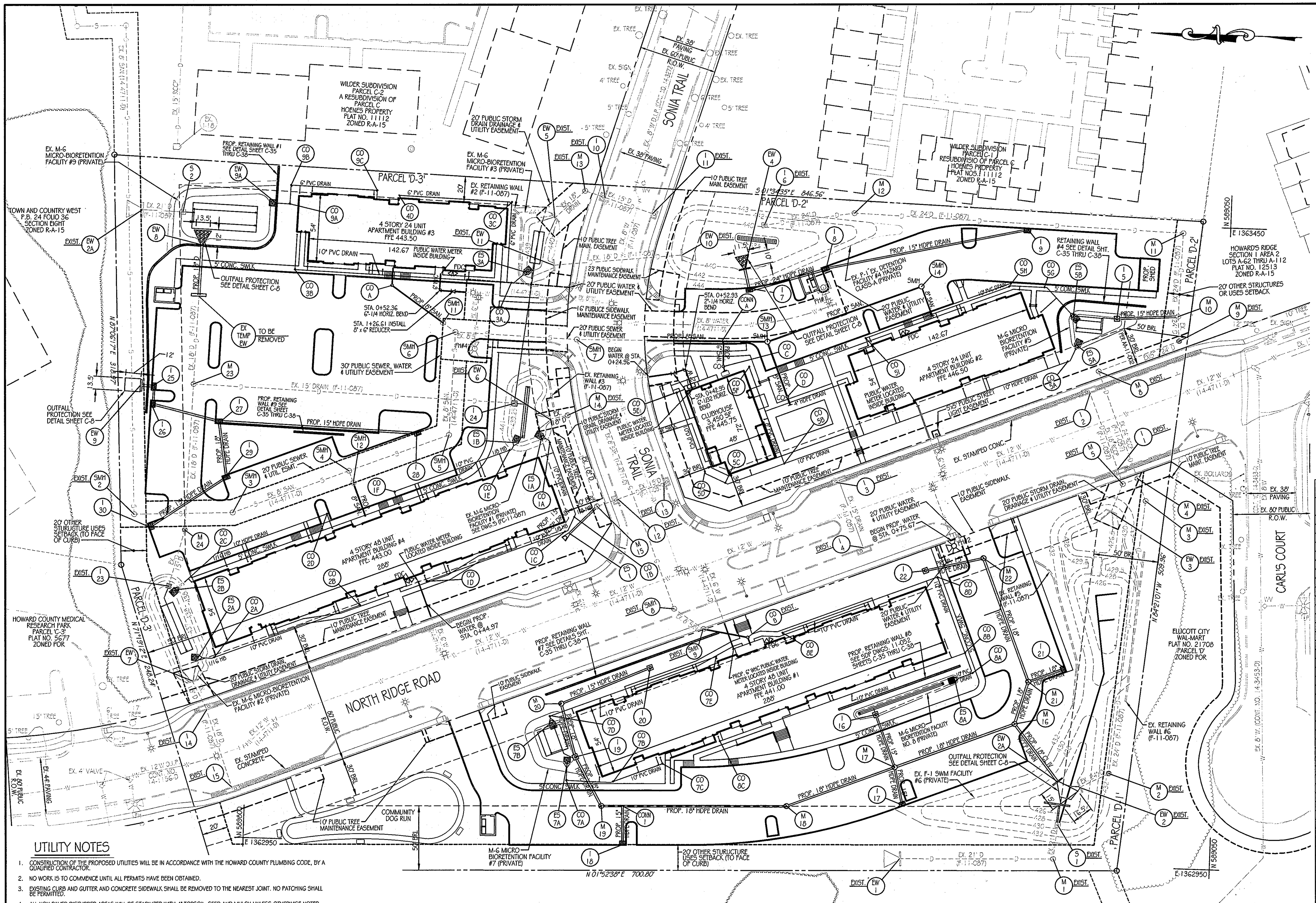

SANITARY SEWER STRUCTURE SCHEDULE

NO.	DESCRIPTION	TOP ELEV.	INV. IN	INV. OUT	REMARKS	COORDINATES NORTHING	EASTING
SMH-9	STD. MANHOLE	443.52	436.69 / 436.52	436.42	HOWARD CO. STD. DETAIL G-5.12	589,406.3616	1,363,349.3982
SMH-10	STD. MANHOLE	445.45	440.66	440.56	HOWARD CO. STD. DETAIL G-5.12	589,288.2866	1,363,396.3877
CO-A	CLEANOUT	442.82	435.45	434.20	HOWARD CO. STD. DETAIL S-2.22	589,723.6972	1,363,228.7463
CO-B	CLEANOUT	441.68	436.14	436.14	HOWARD CO. STD. DETAIL S-2.22	589,658.4849	1,363,355.5133
CO-C	CLEANOUT	442.82	438.12	435.12	HOWARD CO. STD. DETAIL S-2.22	589,699.0053	1,363,383.4182
CO-D	CLEANOUT	445.22	432.73	431.73	HOWARD CO. STD. DETAIL S-2.22	589,448.3823	1,363,124.1749
CO-E	CLEANOUT	440.63	434.48	433.38	HOWARD CO. STD. DETAIL S-2.22	589,413.9081	1,363,118.8887
CO-F	CLEANOUT	440.15	434.04	433.16	HOWARD CO. STD. DETAIL S-2.22	589,389.5391	1,363,307.1268
CO-G	CLEANOUT	445.10	441.50	440.00	HOWARD CO. STD. DETAIL S-2.22	589,406.3616	1,363,349.3982

LEGEND

- 428 — EX. INTERMEDIATE CONTOUR
- 430 — EX. INDEX CONTOUR
- EX. 8"W — EX. WATER
- EX. 15" DRAIN — EX. STORM DRAIN
- EX. 8" SAN. — EX. SANITARY
- X — EX. FENCE
- FH — EX. FIRE HYDRANT
- WV — EX. WATER VALVE
- GV — EV GAS VALVE
- LP — EX. LIGHT POLE
- EX. MAHOLE
- PROPERTY LINE
- RIGHT-OF-WAY LINE
- 430 — PROP. CONTOUR
- PROP. CURB
- PROP. 6" WATER — PROP. WATER
- PROP. 8" SAN. — PROP. SANITARY
- PROP. 8" DRAIN — PROP. DRAIN
- PROP. MANHOLE
- PROP. INLET
- FH — PROP. FIRE HYDRANT
- WV — PROP. WATER VALVE
- CO — PROP. CLEANOUT

STORM DRAIN PIPE SCHEDULE

PIPE SIZE	TYPE	LINEAR FEET OF PIPE
10"	PVC	3,202'
15"	RCCP CL IV	63'
15"	H.D.P.E	655'
18"	RCCP CL IV	112'
18"	H.D.P.E	812'

STORM DRAIN STRUCTURE SCHEDULE

NO.	DESCRIPTION	TOP ELEV.	INV. IN	INV. OUT	REMARKS	COORDINATES NORTHING	EASTING
M-16	STD. 4' MANHOLE	434.21	426.15 / 427.55	426.05	HOWARD CO. STD. DETAIL G-5.12	589,204.6978	1,363,058.3364
M-17	STD. 4' MANHOLE	432.36	427.25 / 427.40 / 427.40	427.15	HOWARD CO. STD. DETAIL G-5.12	589,296.6258	1,363,021.5906
M-18	STD. 4' MANHOLE	435.17	430.16	430.06	HOWARD CO. STD. DETAIL G-5.12	589,379.5086	1,362,988.4604
M-19	STD. 4' MANHOLE	439.66	433.13	433.03	HOWARD CO. STD. DETAIL G-5.12	589,523.1272	1,362,983.7534
M-20	STD. 4' MANHOLE	441.00	434.75	434.50	HOWARD CO. STD. DETAIL G-5.12	589,556.8584	1,363,062.3387
M-21	STD. 4' MANHOLE	434.60	429.70 / 431.00	429.60	HOWARD CO. STD. DETAIL G-5.12	589,195.1753	1,363,091.6366
M-22	STD. 4' MANHOLE	437.00	433.04	432.94	HOWARD CO. STD. DETAIL G-5.12	589,233.0564	1,363,186.6638
EW-4	TYPE 'C' ENDWALL	-	-	438.25	HOWARD CO. STD. DETAIL D-5.21	589,425.9553	1,363,405.9257
EW-8	TYPE 'C' ENDWALL	-	-	428.00	HOWARD CO. STD. DETAIL D-5.21	589,847.3393	1,363,409.9744
EW-9	TYPE 'C' ENDWALL	-	-	425.00	HOWARD CO. STD. DETAIL D-5.21	589,891.4489	1,363,298.9595
EW-2A	TYPE 'C' ENDWALL	-	-	424.30	HOWARD CO. STD. DETAIL D-5.21	589,894.6376	1,363,435.7226
CO-1A	CLEANOUT	441.10	439.62	439.62	DETAIL ON SHEET C-6	589,572.5423	1,363,265.1974
CO-1B	CLEANOUT	443.20	439.99	439.99	DETAIL ON SHEET C-6	589,551.5899	1,363,207.9603
CO-1C	CLEANOUT	443.00	440.07	440.07	DETAIL ON SHEET C-6	589,558.4306	1,363,196.4172
CO-1D	CLEANOUT	442.60	440.77	440.77	DETAIL ON SHEET C-6	589,664.5036	1,363,154.1337
CO-1E	CLEANOUT	441.00	439.35	439.35	DETAIL ON SHEET C-6	589,603.5187	1,363,258.2888
CO-1F	CLEANOUT	442.14	439.92	439.92	DETAIL ON SHEET C-6	589,691.9151	1,363,223.0517
CO-2A	CLEANOUT	439.90	438.4	437.15	DETAIL ON SHEET C-6	589,827.1120	1,363,089.4220
CO-2B	CLEANOUT	442.60	440.00	440.00	DETAIL ON SHEET C-6	589,715.3982	1,363,133.8799
CO-2C	CLEANOUT	439.50	437.25	437.25	DETAIL ON SHEET C-6	589,826.7898	1,363,170.7781
CO-2D	CLEANOUT	442.70	439.50	439.50	DETAIL ON SHEET C-6	589,743.3635	1,363,204.0340
CO-3A	CLEANOUT	442.90	439.10	439.10	DETAIL ON SHEET C-6	589,606.5742	1,363,388.5439
CO-3B	CLEANOUT	441.97	440.10	440.10	DETAIL ON SHEET C-6	589,774.6644	1,363,393.1701
CO-3C	CLEANOUT	441.00	439.42	439.42	DETAIL ON SHEET C-6	589,608.2499	1,363,451.3803
CO-4D	CLEANOUT	442.00	441.13	440.3	DETAIL ON SHEET C-6	589,695.9793	1,363,454.0023
CO-5A	CLEANOUT	441.25	439.10	439.10	DETAIL ON SHEET C-6	589,172.9533	1,363,341.7956
CO-5B	CLEANOUT	445.00	440.50 / 442.00	440.50	DETAIL ON SHEET C-6	589,390.1255	1,363,255.0419
CO-5C	CLEANOUT	444.60	440.79	440.79	DETAIL ON SHEET C-6	589,435.4145	1,363,238.4731
CO-5D	CLEANOUT	444.90	440.90	440.90	DETAIL ON SHEET C-6	589,451.4759	1,363,246.90513
CO-5E	CLEANOUT	445.70	443.70	443.70	DETAIL ON SHEET C-6	589,475.6521	1,363,307.5266
CO-5F	CLEANOUT	444.90	442.70	442.70	DETAIL ON SHEET C-6	589,419.8135	1,363,329.4842
CO-5G	CLEANOUT	445.00	441.00	441.00	DETAIL ON SHEET C-6	589,192.9721	1,363,398.9634
CO-5H	CLEANOUT	445.12	441.20	441.20	DETAIL ON SHEET C-6	589,220.4518	1,363,398.5656
CO-5I	CLEANOUT	445.66	443.50	441.80	DETAIL ON SHEET C-6	589,330.3055	1,396,354.7750
CO-7A	CLEANOUT	440.80	438.32	438.32	DETAIL ON SHEET C-6	589,551.0497	1,363,002.8913
CO-7B	CLEANOUT	440.10	438.54	438.54	DETAIL ON SHEET C-6	589,514.7389	1,363,003.1710
CO-7C	CLEANOUT	440.00	438.79	438.79	DETAIL ON SHEET C-6	589,476.7873	1,363,018.2994
CO-7D	CLEANOUT	440.90	438.38	438.38	DETAIL ON SHEET C-6	589,565.4702	1,363,052.3087
CO-7E	CLEANOUT	440.90	439.07	439.07	DETAIL ON SHEET C-6	589,438.0981	1,363,103.0825
CO-8A	CLEANOUT	439.95	434.00	432.00	DETAIL ON SHEET C-6	589,238.7849	1,363,096.8868
CO-8B	CLEANOUT	439.95	434.00 / 435.16	434.00	DETAIL ON SHEET C-6	589,244.9511	1,363,112.3304
CO-8C	CLEANOUT	438.15	436.37	436.37	DETAIL ON SHEET C-6	589,432.9077	1,363,037.4052
CO-8D	CLEANOUT	439.95	437.32	436.06	DETAIL ON SHEET C-6	589,268.3165	1,363,170.8505
CO-8E	CLEANOUT	440.80	439.00	439.00	DETAIL ON SHEET C-6	589,387.1931	1,363,123.4633
CO-9A	CLEANOUT	438.95	430.00	428.50	DETAIL ON SHEET C-6	589,780.1371	1,363,444.2018
CO-9B	CLEANOUT	434.00	432.00	430.50	DETAIL ON SHEET C-6	589,779.7464	1,363,458.8574
CO-9C	CLEANOUT	436.10	433.25	433.25	DETAIL ON SHEET C-6	589,712.8764	1,363,457.0108

UTILITY NOTES

1. CONSTRUCTION OF THE PROPOSED UTILITIES WILL BE IN ACCORDANCE WITH THE HOWARD COUNTY PLUMBING CODE, BY A QUALIFIED CONTRACTOR.
2. NO WORK IS TO COMMENCE UNTIL ALL PERMITS HAVE BEEN OBTAINED.
3. EXISTING CURB AND GUTTER AND CONCRETE SIDEWALK SHALL BE REMOVED TO THE NEAREST JOINT. NO PATCHING SHALL BE PERMITTED.
4. ALL NON-PAVED DISTURBED AREAS WILL BE STABILIZED WITH 4" TOPSOIL, SEED AND MULCH UNLESS OTHERWISE NOTED.
5. ALL CONSTRUCTION SHALL FOLLOW LATEST HOWARD COUNTY DEPT. OF PUBLIC WORKS STANDARD SPECIFICATIONS AND DETAILS OF CONSTRUCTION OR AS DETAILED ON THE DRAWINGS.
6. GRAVEL CRADLE IS REQUIRED UNDER ALL PIPE.
7. ALL BACKFILL SHALL BE MECHANICALLY TAMPED.
8. THE CONTRACTOR IS RESPONSIBLE FOR PERFORMING ALL WORK SHOWN ON THESE DRAWINGS UNLESS OTHERWISE NOTED.
9. ALL CHANNELS IN MANHOLES MUST BE CONSTRUCTED TO CONFORM AS CLOSE AS POSSIBLE TO THE STANDARD CHANNELS CALLED FOR IN THE PROFILES.
10. CLEANOUTS LOCATED IN PAVED AREAS SHALL HAVE COUNTERSUNK LIDS.
11. ALL SANITARY SEWER CONSTRUCTION SHALL BE DONE UNDER A PERMIT AND PLAN ISSUED BY THE HOWARD COUNTY DEPARTMENT OF PUBLIC WORKS, WATER AND WASTEWATER ENGINEERING DIVISION.
12. FOR UTILITY WORK OUTSIDE THE LOD SHOWN ON THIS PLAN, CONTRACTOR SHOULD OPEN ONLY THAT SECTION OF TRENCH THAT CAN BE BACKFILLED AND STABILIZED EACH DAY. IF TRENCH MUST REMAIN OPEN LONGER THAN ONE DAY, SILT FENCE SHALL BE PLACED BELOW (DOWNSLOPE) THE TRENCH.
13. PLACE ALL EXCAVATED MATERIAL ON UPHILL SIDE OF TRENCH.
14. ANY SEDIMENT CONTROLS DISTURBED BY UTILITY CONSTRUCTION ARE TO BE REPAIRED IMMEDIATELY.
15. SEE SHEETS C-9, C-10, C-11, C-12, C-13, C-14 & C-15 FOR UTILITY PROFILES.
16. CONTRACTOR TO COORDINATE WITH VERIZON FOR THE REMOVAL AND/OR RELOCATION OF EXISTING TELEPHONE LINE.
17. ALL WATER LINES SHALL HAVE A MINIMUM 3'-6" OF COVER

STORM DRAIN STRUCTURE SCHEDULE

NO.	DESCRIPTION	TOP ELEV.	INV. IN	INV. OUT	REMARKS	COORDINATES NORTHING	EASTING
ES-1	END SECTION	-	-	440.36	PVC END SECTION	589,554.8800	1,363,195.0347
ES-1A	END SECTION	-	-	439.25	PVC END SECTION	589,578.8288	1,363,269.7078
ES-1B	END SECTION	-	-	439.25	PVC END SECTION	589,599.2692	1,363,264.8403
ES-2A	END SECTION	-	-	437.00	PVC END SECTION	589,839.5746	1,363,088.9226
ES-2B	END SECTION	-	-	437.00	PVC END SECTION	589,858.3509	1,363,141.1607
ES-3A	END SECTION	-	-	440.00	PVC END SECTION	589,595.5540	1,363,397.1535
ES-5A	END SECTION	-	-	439.00	PVC END SECTION	589,165.9696	1,363,354.4513
ES-5B	END SECTION	-	-	439.00	PVC END SECTION	589,169.7810	1,363,377.0815
ES-7A	END SECTION	-	-	438.25	PVC END SECTION	589,550.8130	1,363,015.9145
ES-7B	END SECTION	-	-	438.25	PVC END SECTION	589,563.6672	1,363,047.6230
ES-8A	END SECTION	-	-	431.50	PVC END SECTION	589,252.2606	1,363,091.5063

STORM DRAIN STRUCTURE SCHEDULE

NO.	DESCRIPTION	TOP ELEV.	INV. IN	INV. OUT	REMARKS	COORDINATES NORTHING	EASTING
I-5	TYPE 'D' INLET	-	-	435.25	HOWARD CO. STD. DETAIL D-4.11	589,135.9345	1,363,376.4310
I-7	TYPE 'S' COMBO INLET	443.40	438.52	438.42	HOWARD CO. STD. DETAIL D-4.32	589,422.0089	1,363,390.6133
I-8	TYPE 'S' COMBO INLET	TC 444.40	439.07	438.97	HOWARD CO. STD. DETAIL D-4.32	589,363.4597	1,363,409.0210
I-9	TYPE 'S' COMBO INLET	444.10	-	440.23	HOWARD CO. STD. DETAIL D-4.32	589,207.6476	1,363,444.0703
I-16	TYPE 'D' INLET	432.10	428.00	427.75	HOWARD CO. STD. DETAIL D-4.11	589,312.5951	1,363,062.1228
I-17	TYPE 'S' COMBO INLET	T.C. 432.51	-	428.54	HOWARD CO. STD. DETAIL D-4.32	589,289.2432	1,362,992.2337
I-18	TYPE 'S' COMBO INLET	438.93	-	434.93	HOWARD CO. STD. DETAIL D-4.32	589,505.6185	1,362,954.3111
I-19	TYPE 'D' INLET	438.90	433.49	433.39	HOWARD CO. STD. DETAIL D-4.11	589,544.5200	1,363,021.3475
I-20	TYPE 'D' INLET	439.00	-	435.50	HOWARD CO. STD. DETAIL D-4.11	589,488.8497	1,363,092.7244

STORM DRAIN STRUCTURE SCHEDULE

NO.	DESCRIPTION	TOP ELEV.	INV. IN	INV. OUT	REMARKS	COORDINATES NORTHING	EASTING
I-21	TYPE 'S' COMBO INLET	435.10	-	431.50	HOWARD CO. STD. DETAIL D-4.32	589,167.3286	1,363,102.7974
I-22	TYPE 'D' INLET	437.00	-	433.50	HOWARD CO. STD. DETAIL D-4.11	589,277.8165	1,363,175.4912
I-25	TYPE 'S' COMBO INLET	436.50	427.25	425.75	HOWARD CO. STD. DETAIL D-4.32	589,882.1572	1,363,298.9250
I-26	TYPE 'S' COMBO INLET	436.65	431.65	428.65	HOWARD CO. STD. DETAIL D-4.32	589,882.5424	1,363,284.9302
I-27	TYPE 'S' COMBO INLET	T.C. 436.72	432.70 / 432.70	432.50	HOWARD CO. STD. DETAIL D-4.32	589,829.3767	1,363,271.9627
I-28	TYPE 'S' COMBO INLET	T.C. 440.79	-	436.50	HOWARD CO. STD. DETAIL D-4.32	589,675.9967	1,363,270.3051
I-29	TYPE 'S' COMBO INLET	440.10	434.91	434.66	HOWARD CO. STD. DETAIL D-4.32	589,822.6878	1,363,231.2076
I-30	TYPE 'S' COMBO INLET	438.84	-	435.26	HOWARD CO. STD. DETAIL D-4.32	589,880.7250	1,363,189.1108

GRAPHIC SCALE

40 0 10 20 40 80

1 INCH = 40 FEET

PROFESSIONAL CERTIFICATION. I HEREBY CERTIFY THAT THESE DOCUMENTS WERE PREPARED OR APPROVED BY ME AND THAT I AM DULY LICENSED PROFESSIONAL ENGINEER UNDER THE LAWS OF THE STATE OF MARYLAND, LICENSE NO. 31089 EXPIRATION DATE: 11/12/12

APPROVED: DEPARTMENT OF PLANNING AND ZONING

CHIEF-DEVELOPMENT ENGINEERING DIVISION — DATE 1/24/12

CHIEF-~~BUREAU~~ DIV. OF LAND DEVELOPMENT — DATE 2/02/12

DIRECTOR — DATE 2/3/12

KCI TECHNOLOGIES
ENGINEERS
PLANNERS
SCIENTISTS
CONSTRUCTION MANAGERS
8161 MAPLE LAWN BOULEVARD SUITE 150
FULTON, MD 20759
TELEPHONE: (410)792-8086
FAX: (410)792-7419

Orchard Development Corporation

CRP Opportunity Fund, L.P.

OWNER / DEVELOPER:
ORCHARD DEVELOPMENT CORPORATION
5032 DORSEY HALL DRIVE
ELLICOTT CITY, MD 21042
(410) 964-2334

OWNER:
WILDER BUILDING CORPORATION
3300 SONIA TRAIL
ELLICOTT CITY, MD 21043
(410)-461-2522

REVISIONS			
NO.	DATE	DESCRIPTION	BY

DATE 11-18-2011
SCALE AS SHOWN
DESIGNED BY
DRAWN BY C.T.B.

UTILITY PLAN
ORCHARD MEADOWS
PARCELS D-1, D-2, D-3
SITE DEVELOPMENT PLAN
ZONING R-A-15, TAX MAP NO. 17, GRID NO. 23, PARCEL NO. 711

SECOND ELECTION DISTRICT — HOWARD COUNTY, MARYLAND

SEAL: STATE OF MARYLAND RICHARD L. BUTT No. 031089 PROFESSIONAL ENGINEER

DRAWING NO. C - 7

KCI JOB NUMBER 27-101105

SDP-11-052

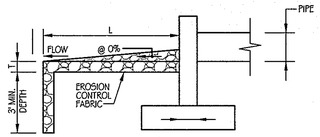

SECTION

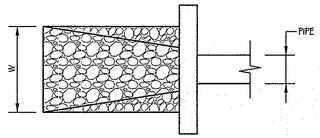

PLAN

STRUCTURE	D-50	LENGTH (L)	WIDTH (W)	THICKNESS (T)	SHA CLASS
EW-2A	9.5	15'	16.5'	1.58'	I
EW-4	9.5	10'	11.5'	1.58'	I
EW-8	9.5	12'	13.5'	1.58'	I
EW-9	9.5	12'	13.5'	1.58'	I
E5-1A	9.5	5'	5'	1.58'	I
E5-1B	9.5	5'	5'	1.58'	I
E5-2A	9.5	5'	5'	1.58'	I
E5-2B	9.5	5'	5'	1.58'	I
E5-3A	9.5	5'	5'	1.58'	I
E5-3B	9.5	5'	5'	1.58'	I
E5-5A	9.5	5'	5'	1.58'	I
E5-5B	9.5	5'	5'	1.58'	I
E5-7A	9.5	5'	5'	1.58'	I
E5-7B	9.5	5'	5'	1.58'	I
E5-8A	9.5	5'	5'	1.58'	I
EW-9A	9.5	5'	5'	1.58'	I

OUTFALL PROTECTION DETAIL

NOT TO SCALE

LEGEND

- PROPERTY LINE
- RIGHT-OF-WAY LINE
- 428 EX. INTERMEDIATE CONTOUR
- 430 EX. INDEX CONTOUR
- EX. STORM DRAIN
- EX. FENCE
- EX. TREE
- EX. MANHOLE
- EX. SIGN
- 430 PROP. CONTOUR
- PROP. CURB & GUTTER
- PROP. 8" DRAIN — PROP. STORM DRAIN
- PROP. MANHOLE
- PROP. INLET
- DRAINAGE AREA LINE

DRAINAGE AREA DATA

STRUCTURE NO.	AREA	'C'	% OF IMPERVIOUS
I-30	0.06	0.63	0.64%
I-29	0.11	0.78	0.87%
I-28	0.17	0.74	0.77%
I-27	0.60	0.71	0.75%
I-26	0.17	0.72	0.76%
I-25	0.32	0.67	0.69%
I-22	0.10	0.32	0.11%
I-21	0.17	0.76	0.83%
I-20	0.10	0.30	0.12%
I-19	0.29	0.68	0.63%
I-18	0.23	0.55	0.53%
I-17	0.65	0.71	0.73%
I-16	0.30	0.61	0.61%
I-9	0.46	0.44	0.67%
I-8	0.07	0.81	0.92%
I-7	0.32	0.66	0.36%

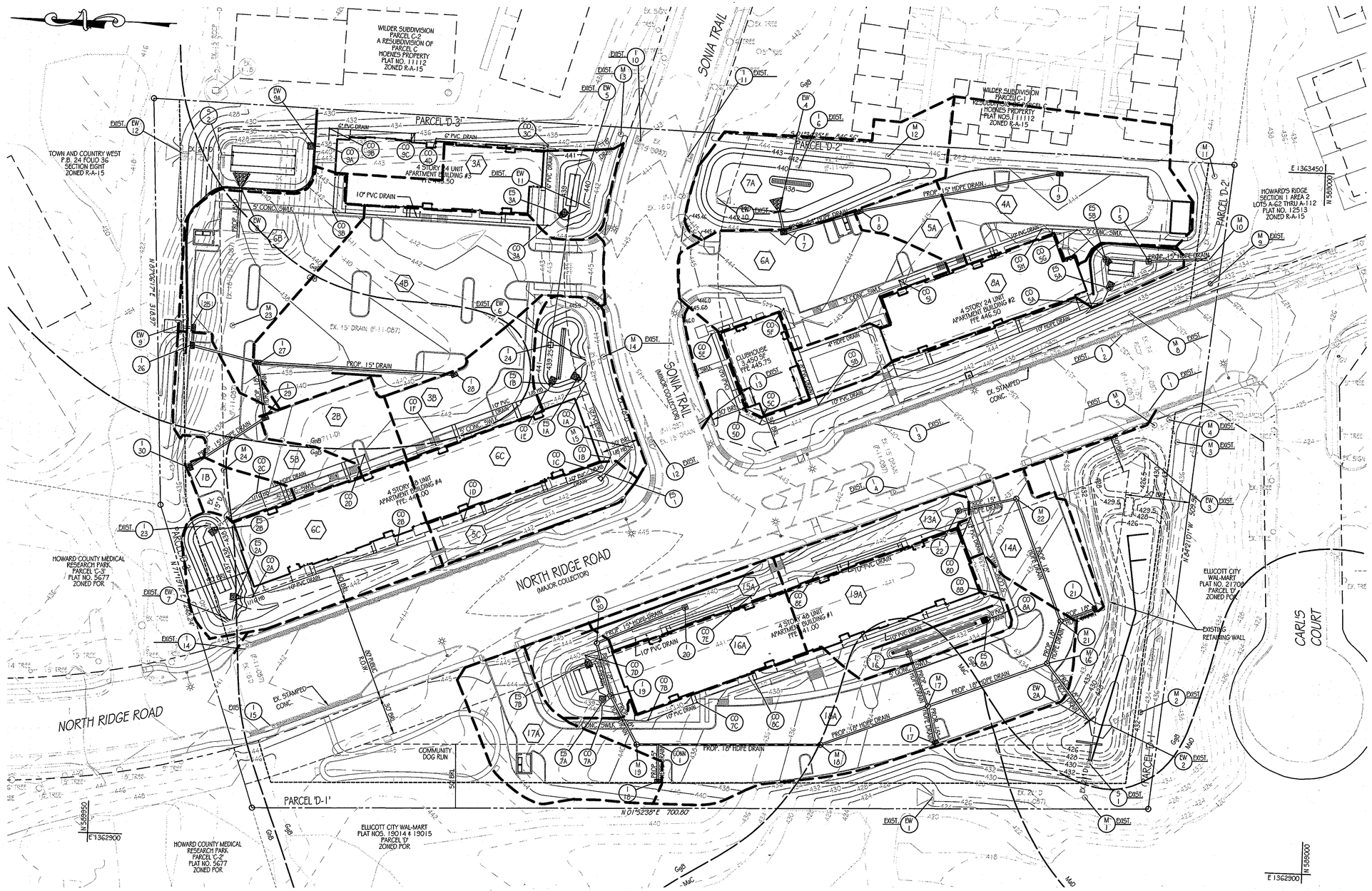

STORM DRAIN DRAINAGE AREA MAP

SCALE: 1" = 40'

GRAPHIC SCALE

40 0 10 20 40 80

1 INCH = 40 FEET

PROFESSIONAL CERTIFICATION. I HEREBY CERTIFY THAT THESE DOCUMENTS WERE PREPARED OR APPROVED BY ME AND THAT I AM DULY LICENSED PROFESSIONAL ENGINEER UNDER THE LAWS OF THE STATE OF MARYLAND, LICENSE NO. 31099. EXPIRATION DATE: 11/12/12

APPROVED: DEPARTMENT OF PLANNING AND ZONING

CHIEF, DEVELOPMENT ENGINEERING DIVISION — DATE 1/24/12

CHIEF, DIVISION OF LAND DEVELOPMENT — DATE 2/02/12

DIRECTOR — DATE 2/3/12

KCI TECHNOLOGIES

ENGINEERS
PLANNERS
SCIENTISTS
CONSTRUCTION MANAGERS

8161 MAPLE LAWN BOULEVARD
SUITE 150
FULTON, MD 20759
TELEPHONE: (410)792-9086
FAX: (410)792-7419

OrchardDevelopment Corporation

CRP Opportunity Fund, L.P.

OWNER / DEVELOPER:
ORCHARD DEVELOPMENT CORPORATION
5032 DORSEY HALL DRIVE
ELLICOTT CITY, MD 21042
(410) 964-2334

OWNER:
WILDER BUILDING CORPORATION
3300 SONIA TRAIL
ELLICOTT CITY, MD 21043
(410)-461-2522

REVISIONS			
NO.	DATE	DESCRIPTION	BY

DATE 11-18-2011
SCALE 1" = 40'
DESIGNED BY B.E.S.
DRAWN BY C.T.B.

STORM DRAIN DRAINAGE AREA MAP

ORCHARD MEADOWS

PARCELS D-1, D-2, D-3

SITE DEVELOPMENT PLAN

ZONING R-A-15, TAX MAP NO. 17, GRID NO. 23, PARCEL NO. 711

SECOND ELECTION DISTRICT — HOWARD COUNTY, MARYLAND

STATE OF MARYLAND — RICHARD L. ... — No. 31099 — PROFESSIONAL ENGINEER — 12-12-11

DRAWING NO. C-8

SHEET 8 OF 38

KCI JOB NUMBER 27-101105

SDP-11-052

PRIVATE STORM DRAIN

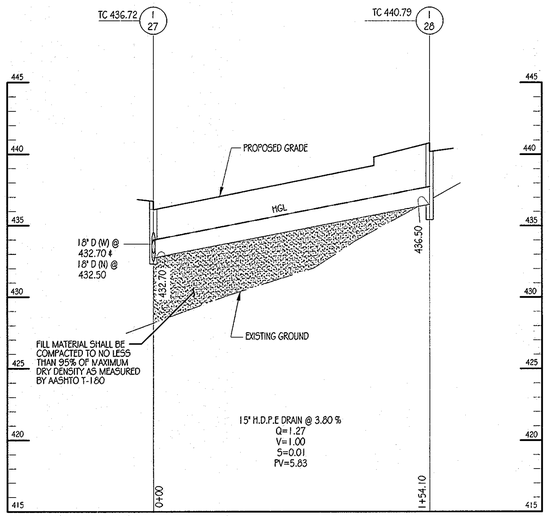

STORM DRAIN PROFILE

SCALE: HORIZ. 1" =40
VERT. 1"=5'

PRIVATE STORM DRAIN

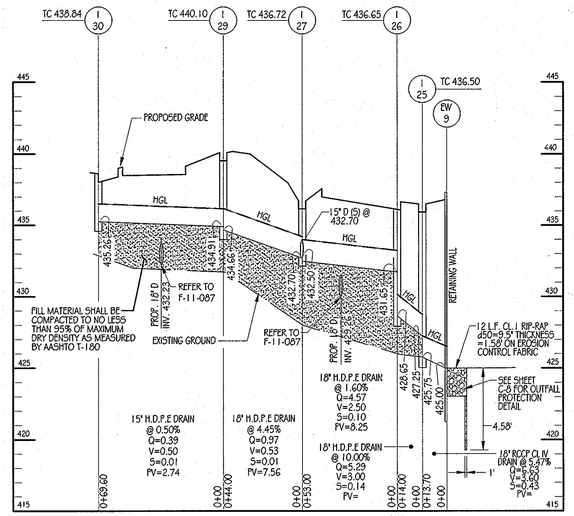

STORM DRAIN PROFILE

SCALE: HORIZ. 1" =40
VERT. 1"=5'

PRIVATE STORM DRAIN

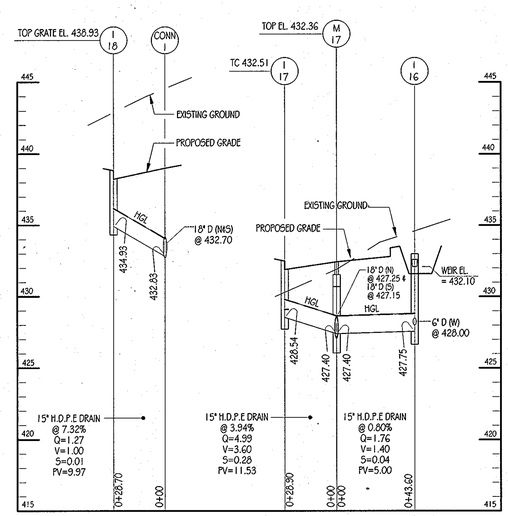

STORM DRAIN PROFILE

SCALE: HORIZ. 1" =40
VERT. 1"=5'

PRIVATE STORM DRAIN

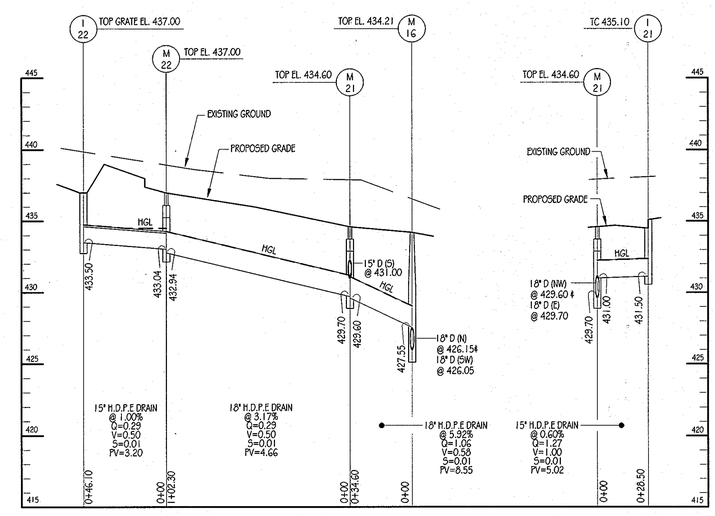

STORM DRAIN PROFILE

SCALE: HORIZ. 1" =40
VERT. 1"=5'

PRIVATE STORM DRAIN

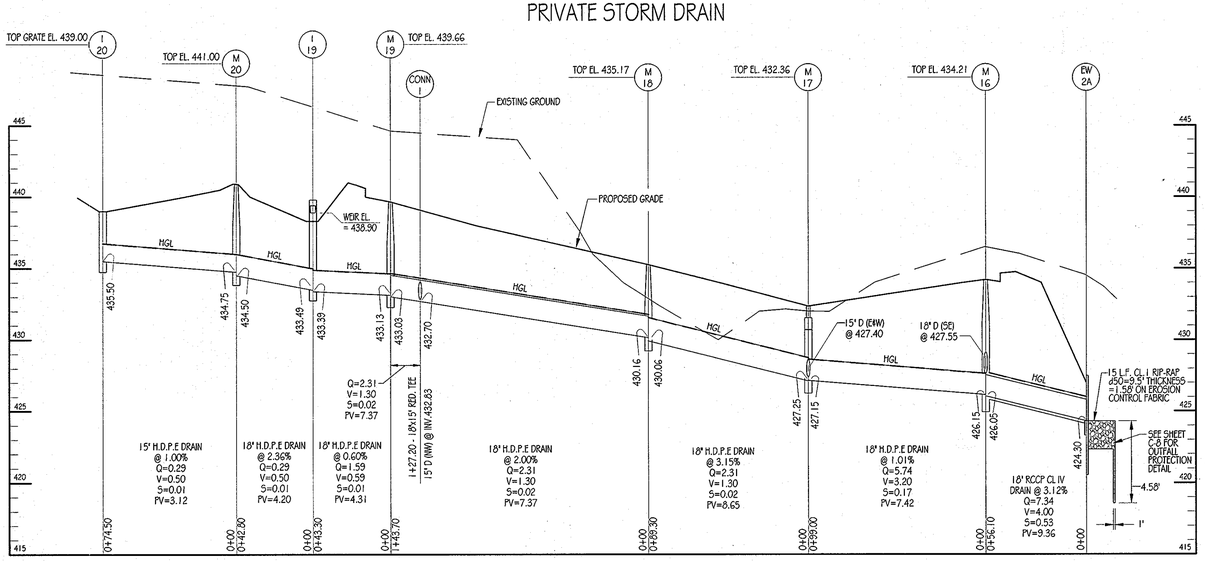

STORM DRAIN PROFILE

SCALE: HORIZ. 1" =40
VERT. 1"=5'

PRIVATE STORM DRAIN

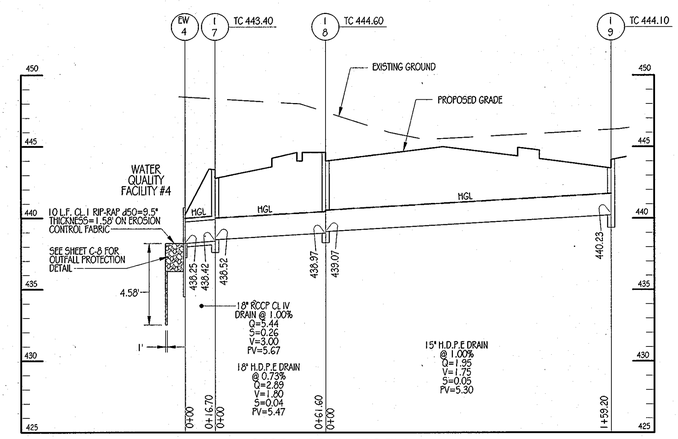

STORM DRAIN PROFILE

SCALE: HORIZ. 1" =40
VERT. 1"=5'

PRIVATE STORM DRAIN

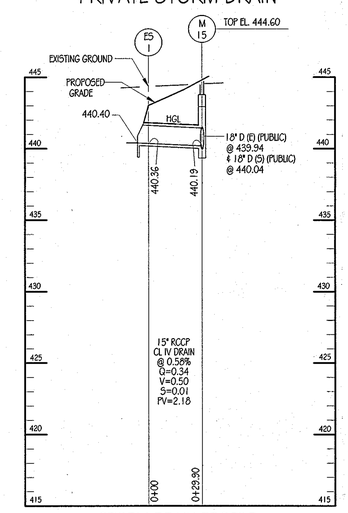

STORM DRAIN PROFILE

SCALE: HORIZ. 1" =40
VERT. 1"=5'

PROFESSIONAL CERTIFICATION. I HEREBY CERTIFY THAT THESE DOCUMENTS WERE PREPARED OR APPROVED BY ME AND THAT I AM DULY LICENSED PROFESSIONAL ENGINEER UNDER THE LAWS OF THE STATE OF MARYLAND, LICENSE NO. 31069
EXPIRATION DATE: 11/12/12

APPROVED: DEPARTMENT OF PLANNING AND ZONING

CHIEF-DEVELOPMENT ENGINEERING DIVISION	DATE 1/24/12
CHIEF-DIVISION OF LAND DEVELOPMENT	DATE 2/02/12
DIRECTOR	DATE 2/3/12

KCI TECHNOLOGIES
ENGINEERS
PLANNERS
SCIENTISTS
CONSTRUCTION MANAGERS
8161 MAPLE LAWN BOULEVARD
SUITE 150
FULTON, MD 20759
TELEPHONE: (410)792-9086
FAX: (410)792-7419

OrchardDevelopment Corporation

CRP Opportunity Fund, L.P.

OWNER/DEVELOPER:
ORCHARD DEVELOPMENT CORPORATION
5032 DORSEY HALL DRIVE
ELLICOTT CITY, MD 21042
(410) 964-2334

OWNER:
WILDER BUILDING CORPORATION
3300 SONIA TRAIL
ELLICOTT CITY, MD 21043
(410)461-2522

REVISIONS

NO.	DATE	DESCRIPTION	BY

DATE	11-18-2011
SCALE	AS SHOWN
DESIGNED BY	B.E.S.
DRAWN BY	C.T.B.

STORM DRAIN PROFILE SHEET

ORCHARD MEADOWS

PARCELS D-1, D-2, D-3
SITE DEVELOPMENT PLAN
ZONING R-A-15, TAX MAP NO. 17, GRID NO. 23, PARCEL NO. 711

SECOND ELECTION DISTRICT — HOWARD COUNTY, MARYLAND

SEAL: STATE OF MARYLAND — RICHARD L. BEVITT — No. 031069 — PROFESSIONAL ENGINEER

DRAWING NO. C-9

SHEET 9 OF 38

KCI JOB NUMBER 27-101105

SDP-11-052

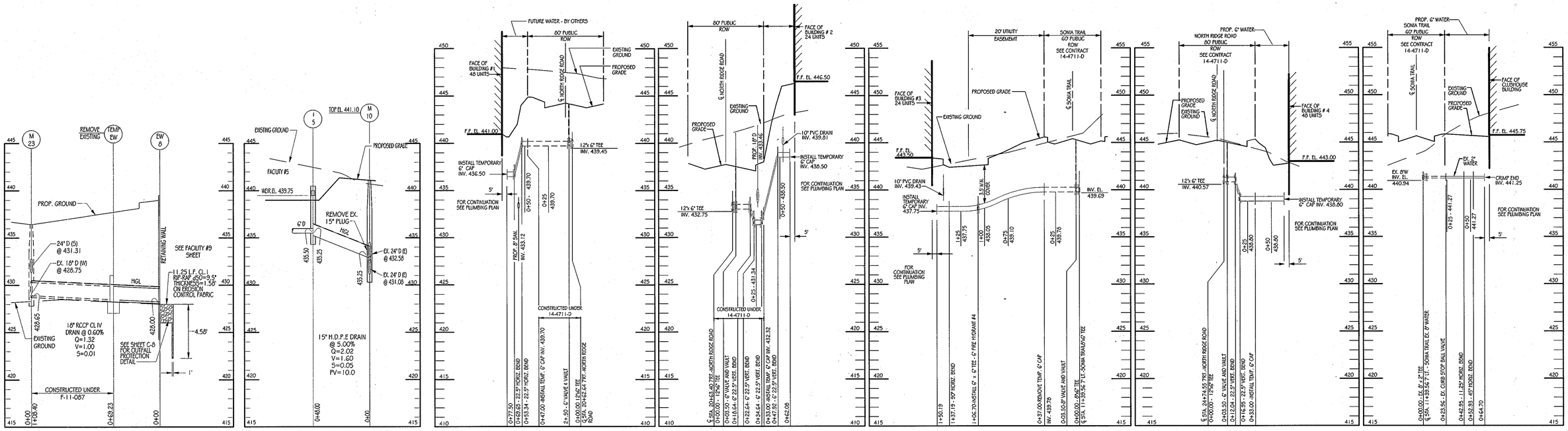

APPROVED: DEPARTMENT OF PLANNING AND ZONING

CHIEF, DEVELOPMENT ENGINEERING DIVISION	DATE 1/23/12
CHIEF, ~~BUREAU~~ DIV. OF LAND DEVELOPMENT	DATE 2/03/12
DIRECTOR	DATE 2/3/12

KCI TECHNOLOGIES

Engineers
Planners
Scientists
Construction Managers

8161 Maple Lawn Boulevard
Suite 150
Fulton, MD 20759
Telephone: (410) 792-8086
Fax: (410) 792-7419

OrchardDevelopment Corporation

CRP Opportunity Fund, L.P.

OWNER / DEVELOPER:
ORCHARD DEVELOPMENT CORPORATION
5232 DORSEY HALL DRIVE
ELLICOTT CITY, MD 21042
(410) 964-2334

OWNER:
WILDER BUILDING CORPORATION
3300 SONIA TRAIL
ELLICOTT CITY, MD 21043
(410) 461-2522

REVISIONS

NO.	DATE	DESCRIPTION	BY

DATE 11-18-2011
SCALE AS SHOWN
DESIGNED BY B.E.S.
DRAWN BY C.T.B.

STORM DRAIN & UTILITY PROFILE SHEET

ORCHARD MEADOWS

PARCELS D-1, D-2, D-3
SITE DEVELOPMENT PLAN
ZONING R-A-15, TAX MAP NO. 17, GRID NO. 23, PARCEL NO. 711
SECOND ELECTION DISTRICT — HOWARD COUNTY, MARYLAND

PROFESSIONAL CERTIFICATION. I HEREBY CERTIFY THAT THESE DOCUMENTS WERE PREPARED OR APPROVED BY ME AND THAT I AM DULY LICENSED PROFESSIONAL ENGINEER UNDER THE LAWS OF THE STATE OF MARYLAND, LICENSE NO. 31089
EXPIRATION DATE: 11/12/12

SEAL: STATE OF MARYLAND — RICHARD L. BOLLING — No. 031089 — PROFESSIONAL ENGINEER

DRAWING NO. C-10

SHEET 10 OF 38

KCI JOB NUMBER 27-101105

SDP-11-052

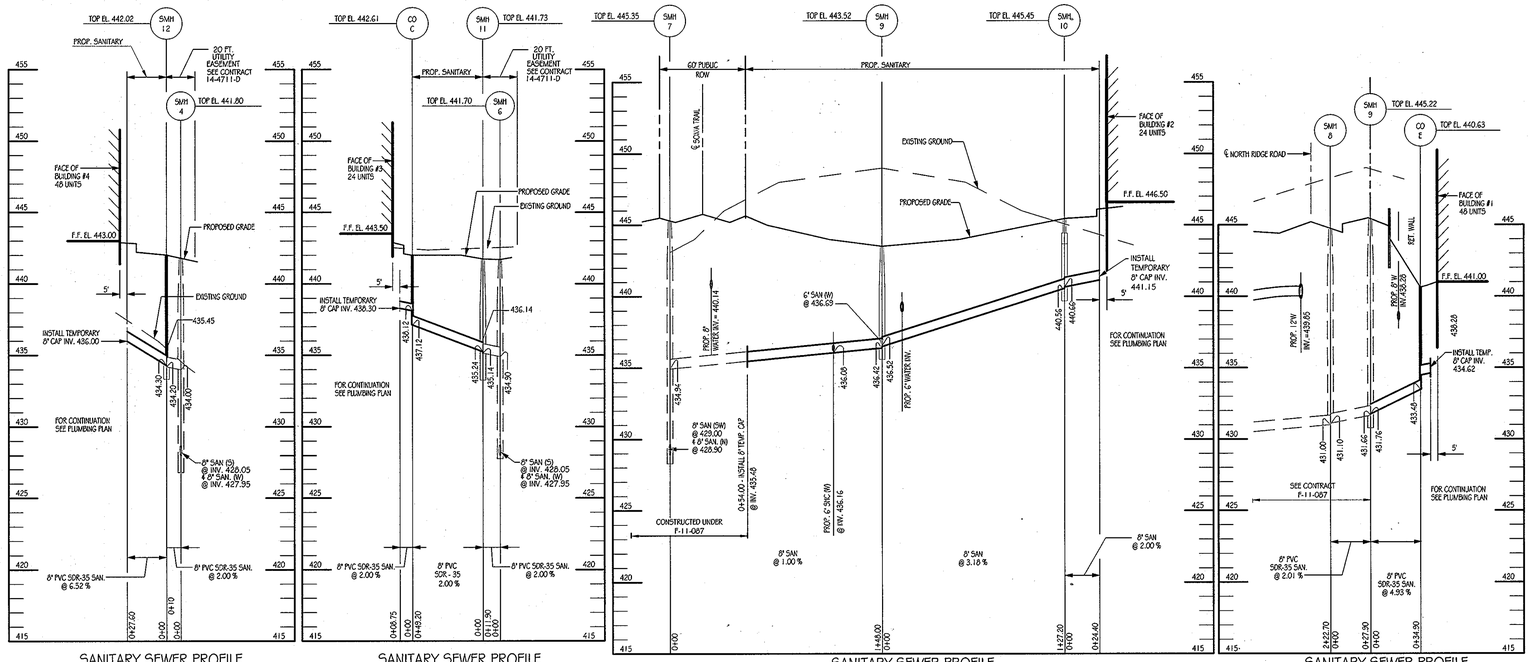

SANITARY SEWER PROFILE
SCALE: HORIZ. : 1" = 50'
VERT. : 1" = 5'

SANITARY SEWER PROFILE
SCALE: HORIZ. : 1" = 50'
VERT. : 1" = 5'

SANITARY SEWER PROFILE
SCALE: HORIZ. : 1" = 50'
VERT. : 1" = 5'

SANITARY SEWER PROFILE
SCALE: HORIZ. : 1" = 50'
VERT. : 1" = 5'

PROFESSIONAL CERTIFICATION. I HEREBY CERTIFY THAT THESE DOCUMENTS WERE PREPARED OR APPROVED BY ME AND THAT I AM DULY LICENSED PROFESSIONAL ENGINEER UNDER THE LAWS OF THE STATE OF MARYLAND, LICENSE NO. 31089
EXPIRATION DATE: 11/12/12

APPROVED: DEPARTMENT OF PLANNING AND ZONING

CHIEF-DEVELOPMENT ENGINEERING DIVISION	DATE 1/24/12
CHIEF-DIVISION OF LAND DEVELOPMENT	DATE 2/02/12
DIRECTOR	DATE 2/3/12

KCI TECHNOLOGIES
ENGINEERS
PLANNERS
SCIENTISTS
CONSTRUCTION MANAGERS
8161 MAPLE LAWN BOULEVARD
SUITE 150
FULTON, MD 20759
TELEPHONE: (410)792-8086
FAX: (410)792-7419

OrchardDevelopment Corporation
CRP Opportunity Fund, L.P.

OWNER / DEVELOPER:
ORCHARD DEVELOPMENT CORPORATION
5032 DORSEY HALL DRIVE
ELLICOTT CITY, MD 21042
(410) 964-2334

OWNER:
WILDER BUILDING CORPORATION
3300 SOUKA TRAIL
ELLICOTT CITY, MD 21043
(410)-461-2522

REVISIONS			
NO.	DATE	DESCRIPTION	BY

DATE	11-18-2011
SCALE	AS SHOWN
DESIGNED BY	
DRAWN BY	C.T.D.

SANITARY PROFILE SHEET

ORCHARD MEADOWS
PARCELS D-1, D-2, D-3
SITE DEVELOPMENT PLAN
ZONING R-A-15, TAX MAP NO. 17, GRID NO. 23, PARCEL NO. 711
SECOND ELECTION DISTRICT — HOWARD COUNTY, MARYLAND

SEAL: STATE OF MARYLAND — RICHARD L. DAVIS — No. 31089 — PROFESSIONAL ENGINEER — 12-22-11

DRAWING NO. C-11
SHEET 11 OF 38
KCI JOB NUMBER 27-101105

SDP-11-052

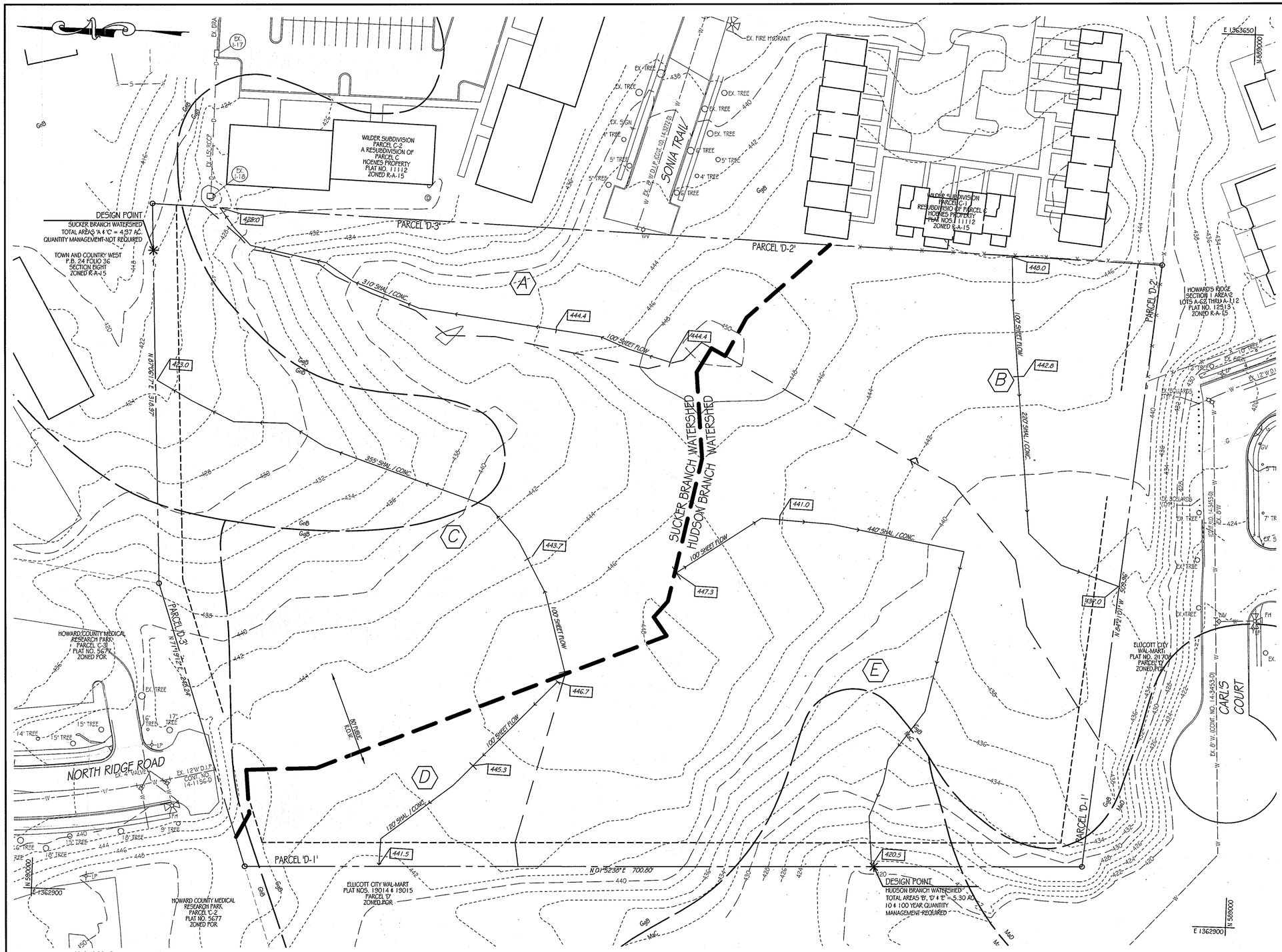

LEGEND

- PROPERTY LINE
- RIGHT-OF-WAY LINE
- 428 — EX. INTERMEDIATE CONTOUR
- 430 — EX. INDEX CONTOUR
- EX. 8"W — EX. WATER
- EX. 15" RCCP — EX. STORM DRAIN
- EX. 8" SAN. — EX. SANITARY
- X — EX. FENCE
- FH — EX. FIRE HYDRANT
- WV — EX. WATER VALVE
- GV — EV GAS VALVE
- LP — EX. LIGHT POLE
- EX. TREE
- EX. MAHOLE
- EX. ELECTRIC BOX
- EX. SIGN
- GaB — SOIL LINES
- WATERSHED BOUNDARY
- SUB-WATERSHED BOUNDARY

EXISTING CONDITION DRAINAGE AREA DISCHARGE SUMMARY

WATERSHED	AREA	ACRES	Tc	RCN	DISCHARGE (SEE TR20) Q_1	Q_{10}	Q_{100}
SUCKER BRANCH	A	0.85	0.19	58	0.06	1.27	2.81
	C	3.52	0.22	62	0.64	6.55	13.36
	SUCKER BRANCH WATERSHED =				0.70	7.81	16.13
HUDSON BRANCH	B	1.63	0.16	58	0.12	2.56	5.60
	D	0.61	0.29	58	0.03	0.83	1.86
	E	3.06	0.23	58	0.18	4.39	9.79
	HUDSON BRANCH WATERSHED =				0.32	7.63	16.97

SOILS TABLE

KEY	DESCRIPTION	HYDRIC (Y/N)	K-VALUE
GgB	Glenelg Loam , 0 to 8 percent slopes	N	0.20
GnB	Glenelg Loam, 8-15 percent slopes	N	N/A
GeB	Glenville-Baile Silt Loam, 0-8 percent slopes	PARTIALLY	0.37
MaC	Manor Loam 8-15 percent slopes	N	0.24
MaD	Manor Loam, 15-25 percent slopes	N	0.24

EXISTING STORMWATER MANAGEMENT DRAINAGE AREA MAP

SCALE: 1" = 40'

NOTE:
TOPOGRAPHY AS SHOWN HEREON SHOWS ORIGINAL GROUND PRIOR TO MASS GRADING TO OCCUR AS A PART OF F-11-087.

PROFESSIONAL CERTIFICATION. I HEREBY CERTIFY THAT THESE DOCUMENTS WERE PREPARED OR APPROVED BY ME AND THAT I AM DULY LICENSED PROFESSIONAL ENGINEER UNDER THE LAWS OF THE STATE OF MARYLAND, LICENSE NO. 31069
EXPIRATION DATE: 11/12/12

APPROVED: DEPARTMENT OF PLANNING AND ZONING

CHIEF-DEVELOPMENT ENGINEERING DIVISION	DATE 1/24/12
CHIEF-DIVISION OF LAND DEVELOPMENT	DATE 2/02/12
DIRECTOR	DATE 2/3/12

KCI TECHNOLOGIES
ENGINEERS
PLANNERS
SCIENTISTS
CONSTRUCTION MANAGERS
8161 MAPLE LAWN BOULEVARD
SUITE 150
FULTON, MD 20759
TELEPHONE: (410) 792-9086
FAX: (410) 792-7419

OrchardDevelopment Corporation

CRP Opportunity Fund, L.P.

OWNER / DEVELOPER:
ORCHARD DEVELOPMENT CORPORATION
5032 DORSEY HALL DRIVE
ELLICOTT CITY, MD 21042
(410) 964-2334

OWNER:
WILDER BUILDING CORPORATION
3300 SONIA TRAIL
ELLICOTT CITY, MD 21043
(410) 461-2522

REVISIONS

NO.	DATE	DESCRIPTION	BY

DATE 11-18-2011
SCALE 1" = 40'
DESIGNED BY S.V.M.
DRAWN BY C.T.B.

EXISTING STORMWATER MANAGEMENT DRAINAGE AREA MAP

ORCHARD MEADOWS

PARCELS D-1, D-2, D-3
SITE DEVELOPMENT PLAN
ZONING R-A-15, TAX MAP NO. 17, GRID NO. 23, PARCEL NO. 711

SECOND ELECTION DISTRICT — HOWARD COUNTY, MARYLAND

SEAL: STATE OF MARYLAND — RICHARD L. DOVEY — No. 031069 — PROFESSIONAL ENGINEER

DRAWING NO. C-12

SHEET 12 OF 38

KCI JOB NUMBER 27-101105

SDP-11-052

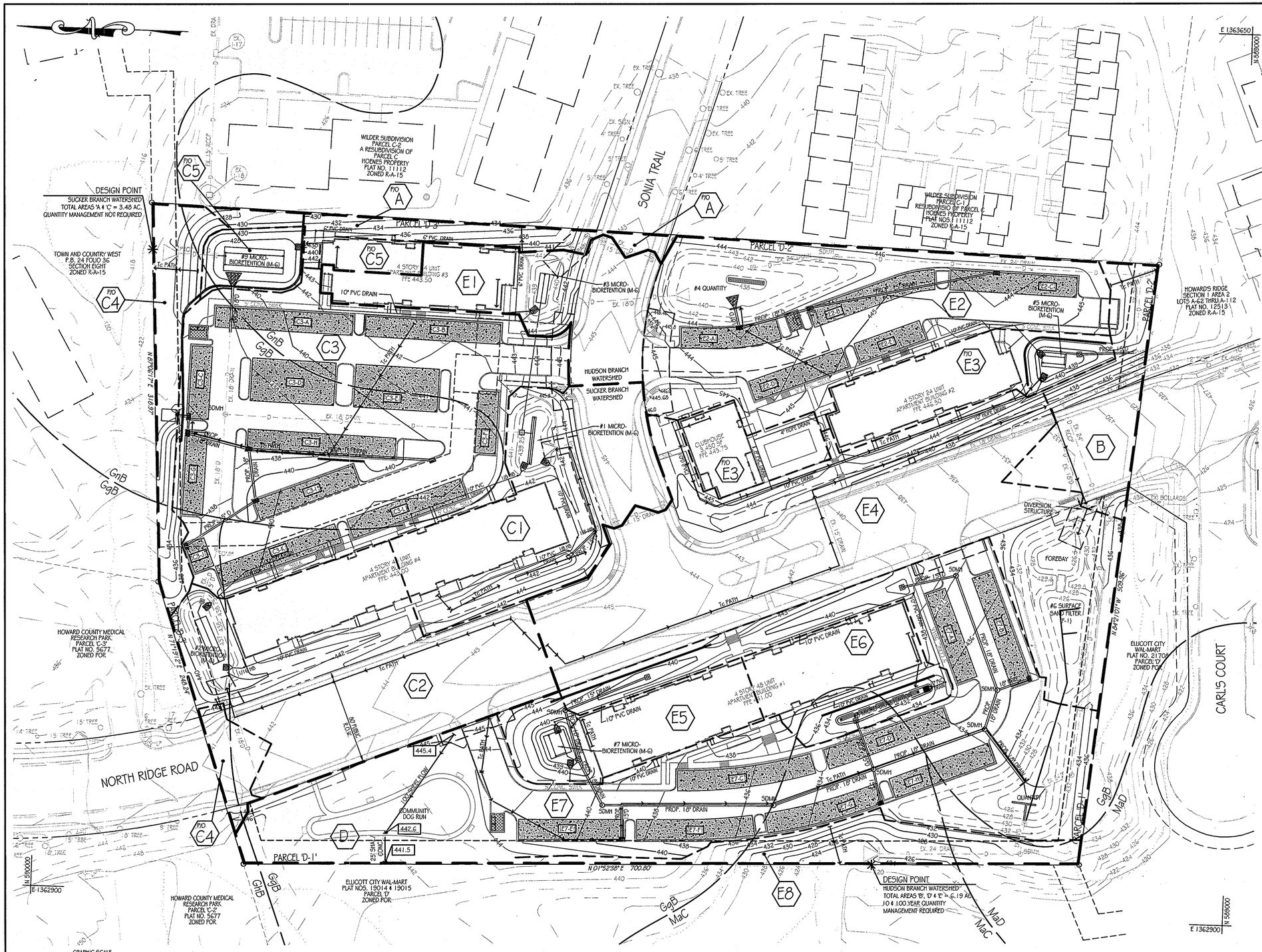

STORMWATER MANAGEMENT DRAINAGE AREA MAP

SCALE: 1" = 40'

LEGEND

EX. INTERMEDIATE CONTOUR	PROPERTY LINE
EX. INDEX CONTOUR	RIGHT-OF-WAY LINE
EX. WATER	PROP. CONTOUR
EX. STORM DRAIN	PROP. CURB
EX. SANITARY	PROP. WATER
EX. FENCE	PROP. SANITARY
EX. FIRE HYDRANT	PROP. DRAIN
EX. WATER VALVE	DRAINAGE AREA DESIGNATION
EV GAS VALVE	TC PATH
EX. LIGHT POLE	DRAINAGE AREA BOUNDARY
EX. TREE	WATERSHED BOUNDARY
EX. MAHOLE	PERMEABLE PAVEMENT (A-2)
EX. ELECTRIC BOX	
EX. SIGN	

PROPOSED CONDITION DRAINAGE AREA DISCHARGE SUMMARY

WATERSHED	AREA	ACRES	Tc	RCN	DISCHARGE (SEE TR20) Q_1	Q_{10}	Q_{100}
SUCKER BRANCH	A	0.17	0.10	62	0.05	0.42	0.86
	C-1	0.61	0.10	61	0.14	1.32	2.77
	C-2	0.92	0.10	73	0.77	3.25	5.67
	C-3	1.42	0.10	64	0.50	3.43	6.81
	C-4	0.22	0.10	73	0.17	0.70	1.21
	C-5	0.14	0.10	67	0.06	0.36	0.68
	C1, C2, & C5	1.67	-	-	0.96	4.93	9.12
	SUCKER BRANCH WATERSHED =				1.67	9.46	16.00
HUDSON BRANCH	B	0.30	0.10	77	0.38	1.34	2.23
	D	0.39	0.21	61	0.06	0.69	1.42
	E-1	0.40	0.10	89	0.67	1.92	3.01
	E-2	0.94	0.10	80	0.09	1.63	3.67
	E-3	0.41	0.10	91	0.74	2.02	3.11
	E-4	1.43	0.10	83	0.43	3.25	6.57
	E-5	0.29	0.10	84	0.13	0.82	1.60
	E-6	0.30	0.10	83	0.38	1.34	2.23
	E-7	1.50	0.10	81	0.14	2.50	5.63
	E-8	0.23	0.10	61	0.01	0.13	0.28
	HUDSON BRANCH WATERSHED =				1.85	5.26	7.24

STORMWATER MANAGEMENT SUMMARY TABLE

WATERSHED	Area	Facility	ESDv Target P_E	ESDv Target ESDv (C.F)	ESDv Provided P_E	ESDv Provided ESDv (C.F)	ESDv Treated ESDv (C.F)	ESDv Required ESDv (C.F)	Discharge (cfs) CPv (Q_1) Exist.	CPv (Q_1) Prop.	Q_{10} Exist.	Q_{10} Prop.	Q_{100} Exist.	Q_{100} Prop.
SUCKER BRANCH	A	-	-	-	-	-	-	-	-	-	-	-	-	-
	C-1	Micro-Bioretention Facility No. 1 (M-6)	0.49	557	0.86	975	1,300	-	-	-	-	-	-	-
	C-2	Micro-Bioretention Facility No. 2 (M-6)	0.38	885	0.61	1,422	1,896	-	-	-	-	-	-	-
	C-3	Permeable Concrete (A-2)	-	-	2.21	9,065	9,065	-	-	-	-	-	-	-
	C-4	-	-	-	-	-	-	-	-	-	-	-	-	-
	C1, C2, & C5	Micro-Bioretention Facility No. 9 (M-6)	0.46	1,678	0.81	2,961	3,9848	-	-	-	-	-	-	-
	Total Sucker Branch Watershed (Quantity Management Not Required) =					14,443	16,229	15,917	0.70	1.67	7.81	9.46	6.13	16.00
HUDSON BRANCH	B	-	-	-	-	-	-	-	-	-	-	-	-	-
	D	-	-	-	-	-	-	-	-	-	-	-	-	-
	E-1	Micro-Bioretention Facility No. 3 (M-6)	0.40	416	0.69	680	907	-	-	-	-	-	-	-
	E-2	Permeable Concrete (A-2)	-	-	2.50	4,267	4,267	-	-	-	-	-	-	-
	E-3	Micro-Bioretention Facility No. 5 (M-6)	0.46	514	0.70	819	1,092	-	-	-	-	-	-	-
	E-4	Surface Sand Filtr. Facility No. 6 (F-1)	-	-	1.77	5,410	7,213	-	-	-	-	-	-	-
	E-5	Micro-Bioretention Facility No. 7 (M-6)	0.46	499	1.60	1,023	1,364	-	-	-	-	-	-	-
	E-6	Micro-Bioretention Facility No. 8 (M-6)	0.46	308	0.77	492	656	-	-	-	-	-	-	-
	E-7	Permeable Concrete (A-2)	-	-	2.50	6,897	6,897	-	-	-	-	-	-	-
	E-8	-	-	-	-	-	-	-	-	-	-	-	-	-
	Total Hudson Branch Watershed (Quantity Management Required) =					19,588	22,396	21,234	0.32	1.85	7.63	5.26	6.97	7.24

SUMMARY: TO ACHIEVE ENVIRONMENTAL SITE DESIGN REQUIREMENTS, MICRO BIORETENTION AND PERMEABLE CONCRETE HAS BEEN USED ALONG WITH A SURFACE SAND FILTER. THE OUTFALLS FROM THE SYSTEM FLOW TO THE HUDSON BRANCH AND SUCKER BRANCH WATERSHED.

CONCLUSION: THE TREATED ESDv (38,625 C.F.) IS GREATER THAN THE REQUIRED (37,151 C.F.); THEREFORE, ENVIRONMENTAL SITE DESIGN HAS BEEN ACHIEVED.

DRAINAGE AREA SUMMARY TABLE

WATERSHED	AREA	ACRES	IMPERV. AREA	PERVIOUS AREA	WOODS	FACILITY
SUCKER BRANCH	A	0.17	0.004	0.165	0.000	-
	C-1	0.61	0.315	0.290	0.000	MICRO-BIORETENTION FACILITY NO. 1 (M-6)
	C-2	0.92	0.665	0.254	0.000	MICRO-BIORETENTION FACILITY NO. 2 (M-6)
	C-3	1.42	1.192	0.228	0.000	PERMEABLE PAVEMENT (A-2)
	C-4	0.22	0.018	0.203	0.000	-
	C1, C2, & C5	C5=0.14	C5=0.043	C5=0.100	C5=0	MICRO-BIORETENTION FACILITY NO. 9 (M-6)
		C1,2,45=1.67	1.023	0.644	C1,2,45=0	
	SUCKER BRANCH WATERSHED AREA = 3.48 AC.					
HUDSON BRANCH	B	0.30	0.128	0.169	0.000	-
	D	0.39	0.000	0.390	0.000	-
	E-1	0.40	0.297	0.098	0.000	MICRO-BIORETENTION FACILITY NO. 3 (M-6)
	E-2	0.94	0.495	0.447	0.000	PERMEABLE PAVEMENT (A-2)
	E-3	0.41	0.333	0.074	0.000	MICRO-BIORETENTION FACILITY NO. 5 (M-6)
	E-4	1.43	0.860	0.570	0.000	MICRO-BIORETENTION FACILITY NO. 6 (M-6)
	E-5	0.29	0.179	0.111	0.000	MICRO-BIORETENTION FACILITY NO. 7 (M-6)
	E-6	0.30	0.179	0.116	0.000	MICRO-BIORETENTION FACILITY NO. 8 (M-6)
	E-7	1.50	0.800	0.696	0.000	PERMEABLE PAVEMENT (A-2)
	E-8	0.23	0.000	0.232	0.000	-
	HUDSON BRANCH WATERSHED AREA = 6.19 AC.					

PROFESSIONAL CERTIFICATION. I HEREBY CERTIFY THAT THESE DOCUMENTS WERE PREPARED OR APPROVED BY ME AND THAT I AM DULY LICENSED PROFESSIONAL ENGINEER UNDER THE LAWS OF THE STATE OF MARYLAND, LICENSE NO. 31089
EXPIRATION DATE: 11/12/12

APPROVED: DEPARTMENT OF PLANNING AND ZONING

CHIEF-DEVELOPMENT ENGINEERING DIVISION	DATE 1/24/12
CHIEF-DIVISION OF LAND DEVELOPMENT	DATE 2/03/12
DIRECTOR	DATE 2/3/12

KCI TECHNOLOGIES
ENGINEERS
PLANNERS
SCIENTISTS
CONSTRUCTION MANAGERS
8161 MAPLE LAWN BOULEVARD
SUITE 150
FULTON, MD 20759
TELEPHONE: (410)792-9086
FAX: (410)792-7419

OrchardDevelopment Corporation

CRP Opportunity Fund, L.P.

OWNER/DEVELOPER:
ORCHARD DEVELOPMENT CORPORATION
5032 DORSEY HALL DRIVE
ELLICOTT CITY, MD 21042
(410) 964-2334

OWNER:
WILDER BUILDING CORPORATION
3300 SONIA TRAIL
ELLICOTT CITY, MD 21043
(410)461-2522

REVISIONS			
NO.	DATE	DESCRIPTION	BY

DATE 11-18-2011
SCALE 1" = 40'
DESIGNED BY S.V.M.
DRAWN BY C.T.B.

DEVELOPED CONDITION STORMWATER MANAGEMENT DRAINAGE AREA MAP

ORCHARD MEADOWS

PARCELS D-1, D-2, D-3
SITE DEVELOPMENT PLAN
ZONING R-A-15, TAX MAP NO. 17, GRID NO. 23, PARCEL NO. 711

SECOND ELECTION DISTRICT — HOWARD COUNTY, MARYLAND

SEAL: STATE OF MARYLAND — RICHARD L. SEM — No. 031089 — PROFESSIONAL ENGINEER

DRAWING NO. C-13

SHEET 13 OF 38

KCI JOB NUMBER 27-101105

SDP-11-052

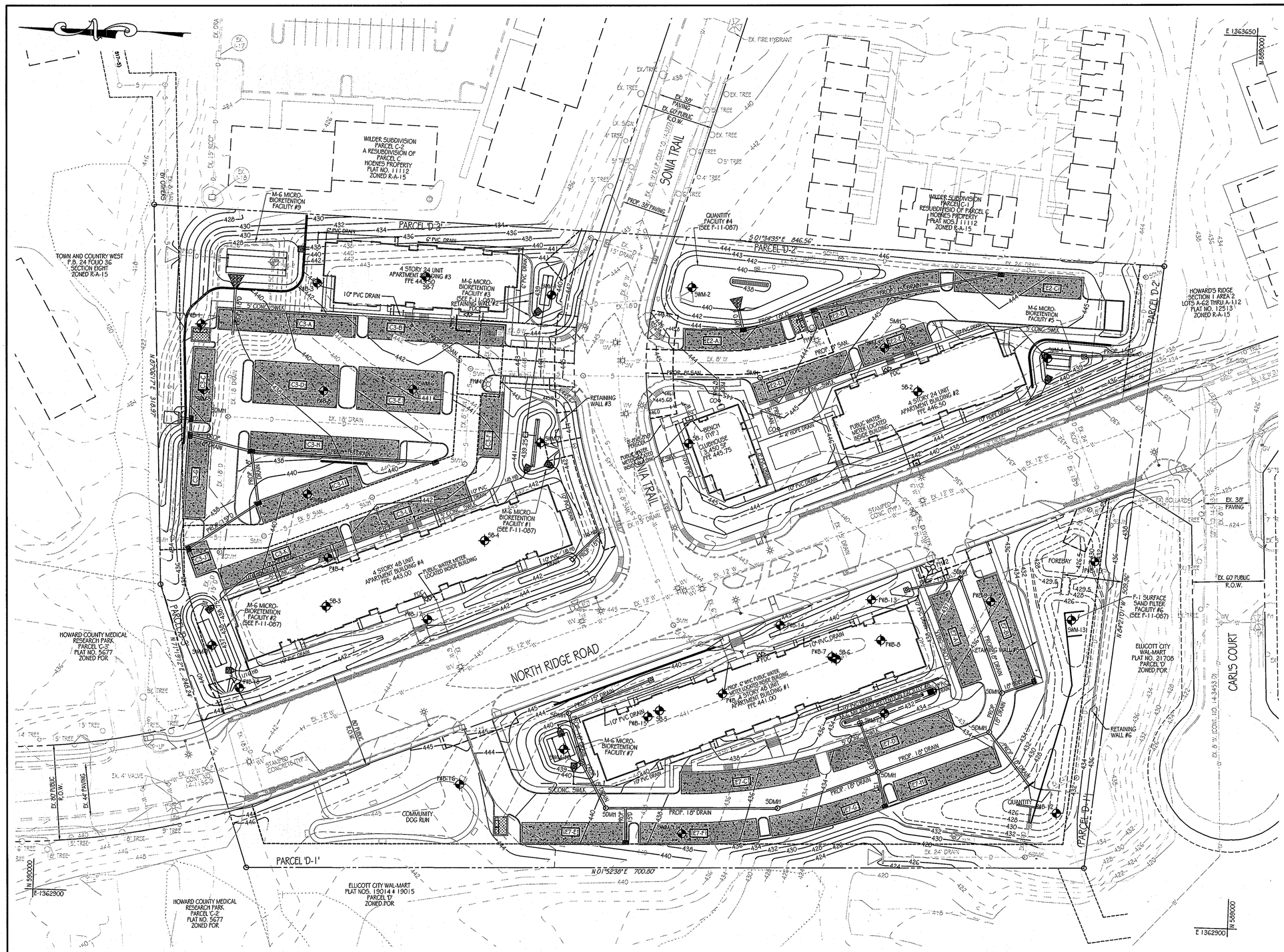

LEGEND

428	EX. INTERMEDIATE CONTOUR		PROPERTY LINE
430	EX. INDEX CONTOUR		RIGHT-OF-WAY LINE
EX. 6" W	EX. WATER	430	PROP. CONTOUR
EX. 15" RCP	EX. STORM DRAIN		PROP. CURB
EX. 8" SAN.	EX. SANITARY	PROP. 6" WATER	PROP. WATER
X X	EX. FENCE	PROP. 8" SAN.	PROP. SANITARY
FH	EX. FIRE HYDRANT	PROP. 15" DRAIN	PROP. DRAIN
WV	EX. WATER VALVE		PROP. MANHOLE
GV	EV GAS VALVE		PROP. INLET
LP	EX. LIGHT POLE	FH	PROP. FIRE HYDRANT
	EX. TREE	WV	PROP. WATER VALVE
	EX. MAHOLE	M	PROP. WATER METER
	EX. ELECTRIC BOX	CO	PROP. CLEANOUT
	EX. SIGN		SOIL BORINGS
	APPROXIMATE AREA OF PERMEABLE CONCRETE		

GRAPHIC SCALE

40 0 10 20 40 80

1 INCH = 40 FEET

STORMWATER MANAGEMENT PLAN

SCALE: 1" = 40'

NOTE:
ALL PERMEABLE CONCRETE AREA ARE TO BE CONSTRUCTED AS A PART OF THESE PLANS.

PROFESSIONAL CERTIFICATION. I HEREBY CERTIFY THAT THESE DOCUMENTS WERE PREPARED OR APPROVED BY ME AND THAT I AM DULY LICENSED PROFESSIONAL ENGINEER UNDER THE LAWS OF THE STATE OF MARYLAND, LICENSE NO. 31069
EXPIRATION DATE: 11/12/12

APPROVED: DEPARTMENT OF PLANNING AND ZONING

CHIEF-DEVELOPMENT ENGINEERING DIVISION	DATE 1/24/12
CHIEF-DIVISION OF LAND DEVELOPMENT	DATE 2/03/12
DIRECTOR	DATE 2/3/12

KCI TECHNOLOGIES
ENGINEERS
PLANNERS
SCIENTISTS
CONSTRUCTION MANAGERS
8161 MAPLE LAWN BOULEVARD
SUITE 150
FULTON, MD 20759
TELEPHONE: (410)792-8086
FAX: (410)792-7419

OrchardDevelopment Corporation

CRP Opportunity Fund, L.P.

OWNER / DEVELOPER:
ORCHARD DEVELOPMENT CORPORATION
5032 DORSEY HALL DRIVE
ELLICOTT CITY, MD 21042
(410) 964-2334

OWNER:
WILDER BUILDING CORPORATION
3300 SONIA TRAIL
ELLICOTT CITY, MD 21043
(410)-461-2522

REVISIONS			
NO.	DATE	DESCRIPTION	BY

DATE	11-18-2011
SCALE	1" = 40'
DESIGNED BY	S.V.M.
DRAWN BY	C.T.B.

STORMWATER MANAGEMENT PLAN

ORCHARD MEADOWS

PARCELS D-1, D-2, D-3
SITE DEVELOPMENT PLAN
ZONING R-A-15, TAX MAP NO. 17, GRID NO. 23, PARCEL NO. 711
SECOND ELECTION DISTRICT — HOWARD COUNTY, MARYLAND

SEAL: STATE OF MARYLAND — RICHARD L. BUTLER — No. 31069 — PROFESSIONAL ENGINEER

DRAWING NO. C-14

SHEET 14 OF 38

KCI JOB NUMBER 27-101105

SDP-11-052

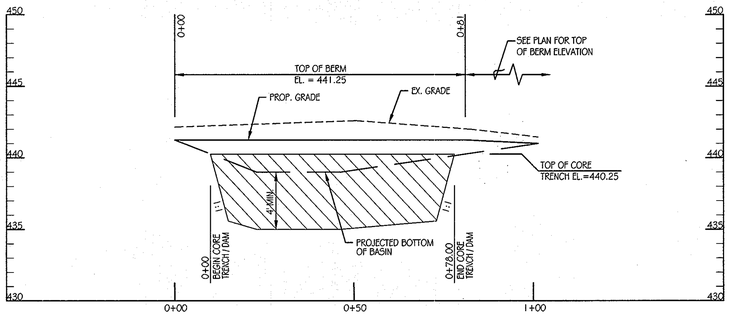

CENTERLINE OF DAM PROFILE

SCALE: 1" = 20' HORIZONTAL
1" = 5' VERTICAL

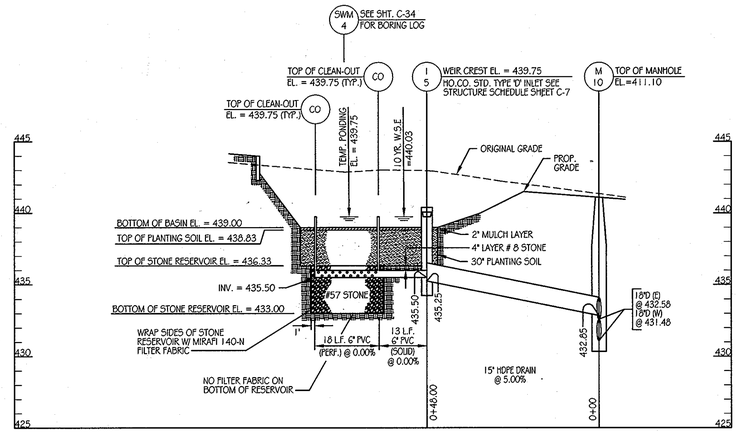

UNDERDRAIN PROFILE

SCALE: 1" = 20' HORIZONTAL
1" = 5' VERTICAL

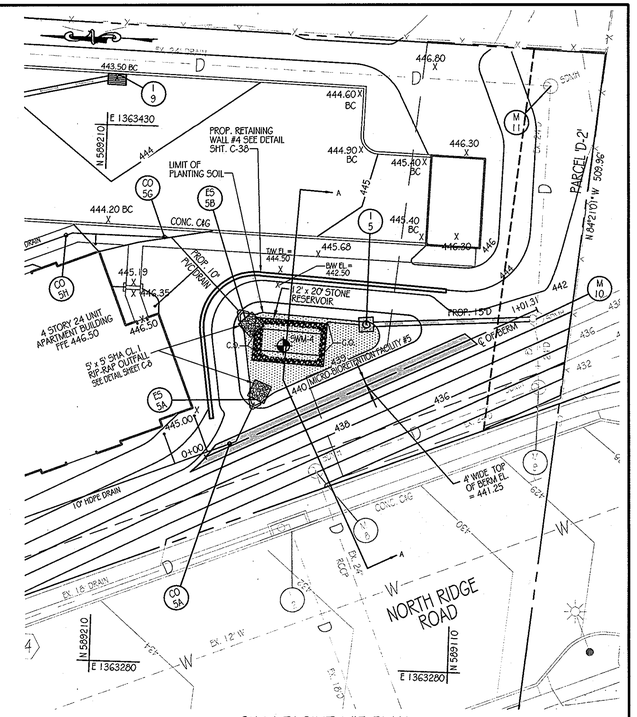

SWM FACILITY #5 PLAN

SCALE: 1" = 20'

INSPECTION SCHEDULE

1. THE DEVELOPER SHALL NOTIFY THE COUNTRY AT LEAST 48 HOURS BEFORE COMMENCING ANY WORK IN CONJUNCTION WITH THE STORMWATER MANAGEMENT PLAN AND UPON COMPLETION OF A PROJECT WHEN A FINAL INSPECTION WILL BE CONDUCTED.
2. AT A MINIMUM, REGULAR INSPECTIONS SHALL BE MADE AND DOCUMENTED AT THE FOLLOWING SPECIFIED STAGES OF CONSTRUCTION.
   - (A) DURING EXCAVATION TO SUBGRADE;
   - (B) DURING PLACEMENT AND BACKFILL OF UNDERDRAIN SYSTEM:
   - (C) DURING PLACEMENT OF GEOTEXTILES AND ALL FILTER MEDIA:
   - (D) DURING CONSTRUCTION OF APPURTENANT CONVEYANCE SYSTEMS SUCH AS DIVERSION STRUCTURES, PRE-FILTERS, FILTERS, OUTLETS AND FLOW DISTRIBUTION STRUCTURES; AND
   - (E) UPON COMPLETION OF FINAL GRADING AND ESTABLISHMENT OF PERMANENT STABILIZATION.
3. INSPECTIONS SHALL BE CONDUCTED BY THE DEPARTMENT OF PUBLIC WORKS OR ITS AUTHORIZED REPRESENTATIVE. WRITTEN INSPECTION REPORTS SHALL BE MADE OF THE PERIODIC INSPECTIONS NECESSARY DURING CONSTRUCTION OF STORMWATER MANAGEMENT SYSTEMS TO ENSURE COMPLIANCE WITH THE APPROVED PLANS.
4. WRITTEN INSPECTION REPORTS SHALL INCLUDE:
   - (A) DATE AND LOCATION OF THE INSPECTION;
   - (B) WHETHER CONSTRUCTION WAS IN COMPLIANCE WITH THE APPROVED STORMWATER MANAGEMENT PLAN;
   - (C) ANY VARIATIONS FROM THE APPROVED CONSTRUCTION SPECIFICATIONS; AND
   - (D) ANY VIOLATIONS THAT EXIST.
5. ONCE CONSTRUCTION IS COMPLETE, AN AS-BUILT PLAN CERTIFICATION SHALL BE SUBMITTED BY THE APPROPRIATE DESIGN PROFESSIONAL LICENSED IN THE STATE OF MARYLAND TO ENSURE THE CONSTRUCTED STORMWATER MANAGEMENT PRACTICE AND CONVEYANCE SYSTEMS COMPLY WITH THE SPECIFICATIONS CONTAINED IN THE APPROVED PLANS. AT A MINIMUM, AS-BUILT CERTIFICATION SHALL INCLUDE A SET OF DRAWINGS COMPARING THE APPROVED STORMWATER MANAGEMENT PLAN WITH WHAT WAS CONSTRUCTED.

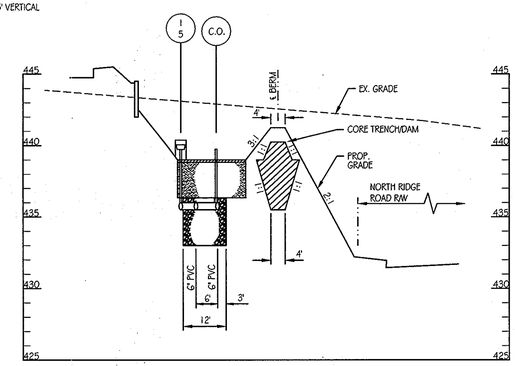

SECTION A-A

SCALE: 1" = 20' HORIZONTAL
1" = 5' VERTICAL

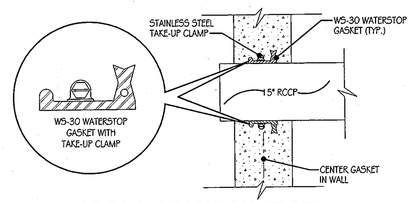

WS-30 WATERSTOP GASKET DETAIL

SCALE: NOT TO SCALE

LEGEND

- SOIL BORING
- 442 EX. CONTOURS
- 441 PROP. CONTOURS
- PROP. STORM DRAIN
- TOP OF BERM
- LIMIT OF PLANTING SOIL
- RIP-RAP OUTFALL
- STONE RESERVOIR
- SEED MIX #1
- SEED MIX #2

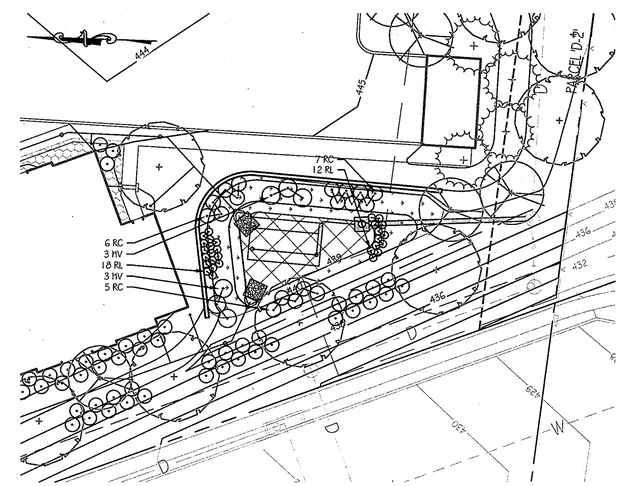

FACILITY #5 LANDSCAPE PLAN

SCALE: 1" = 20'

₵ BERM DATA

STATION	BEARING/ RADIUS	DISTANCE / ARC LENGTH	CHORD
0+00			
	N66°11'13"E	101.31'	
1+01.31			

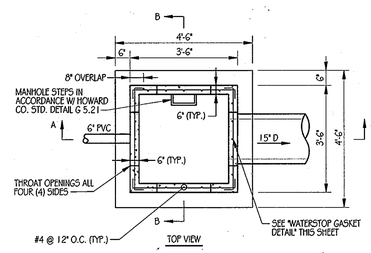

PRE-CAST CONCRETE AND PRE-FABRICATED STEEL STRUCTURE NOTES

1. THE CONTRACTOR IS RESPONSIBLE TO PROVIDE STRUCTURAL DESIGN COMPUTATIONS FOR FABRICATED CONCRETE AND STEEL COMPONENTS AS REQUIRED TO ENSURE THE STRUCTURAL INTEGRITY OF THE PRE-CAST CONCRETE RISER, IN CONFORMANCE WITH THE INFORMATION AND DIMENSIONAL CRITERIA ON THIS SHEET. SHOP DRAWINGS FOR THE PRE-CAST STRUCTURE (MEETING ASTM REQUIREMENTS), WITH THE SUPPORTING STRUCTURAL COMPUTATIONS SIGNED AND SEALED BY A MARYLAND REGISTERED PROFESSIONAL ENGINEER, MUST BE SUBMITTED TO THE ENGINEER, AND THE APPROVING AGENCY, FOR APPROVAL, PRIOR TO FABRICATION.
2. IF ANY STRUCTURE DIMENSIONS VARY FROM THOSE ORIGINALLY REVIEWED/ APPROVED, THEN THE HYDRAULICS, FLOTATION AND STRUCTURAL INTEGRITY WILL HAVE TO BE RE-ANALYZED.
3. ALL JOINTS AND CONNECTIONS SHALL BE WATERTIGHT. METHOD OF ACHIEVING A WATERTIGHT SEAL BETWEEN THE RISER STRUCTURE, AND ALL CONDUITS (I.E., BARREL AND LOW FLOW PIPES) SHALL BE APPROVED BY THE ENGINEER IN CHARGE, PRIOR TO FABRICATION.

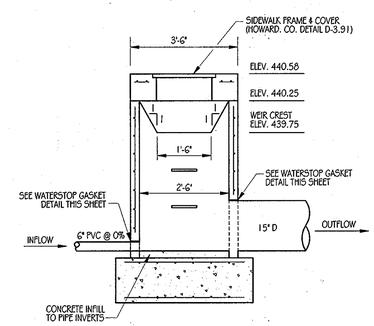

SECTION A-A

FRONT VIEW

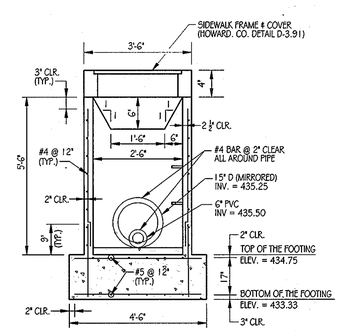

SECTION B-B

SIDE VIEW

RISER DETAIL 1-5

SCALE: NOT TO SCALE

PLANT SCHEDULE

KEY	QTY	BOTANICAL NAME / COMMON NAME	SIZE	ROOT	COMMENTS
HV	6	HAMAMELIS VIRGINIANA / WITCHHAZEL	3' - 4' HT.	CONT.	PLANT 5' O.C.
RC	18	RHODODENDRON CATAWBIENSE 'ROSEUM ELEGANS' / ROSEUM ELEGANS RHODODENDRON	30" - 36" HT.	CONT.	PLANT 4' O.C.
RL	30	RHODODENDRON LACINIATA / BLACK EYED SUSAN	18" - 24" HT.	CONT.	PLANT 2' O.C.
SWM-1		ERNMX-122 FACW WETLAND MEADOW SEED MIX	1/3 - 1/2 LB. PER 1000 SF		
SWM-2		ERNX-180 RAIN GARDEN MIX	1/3 - 1/2 LB. PER 1000 SF		

GRAPHIC SCALE
20 0 5 10 20 40
1 INCH = 20 FEET

PROFESSIONAL CERTIFICATION. I HEREBY CERTIFY THAT THESE DOCUMENTS WERE PREPARED OR APPROVED BY ME AND THAT I AM DULY LICENSED PROFESSIONAL ENGINEER UNDER THE LAWS OF THE STATE OF MARYLAND, LICENSE NO. 31069
EXPIRATION DATE: 11/12/12

AS-BUILT CERTIFICATION

I HEREBY CERTIFY THAT THE FACILITY SHOWN ON THE PLAN WAS CONSTRUCTED AS SHOWN ON THE "AS-BUILT" PLANS AND MEET THE APPROVED PLANS AND SPECIFICATIONS.

ENGINEER – _____ PE NO. _____

DATE _____

CERTIFY MEANS TO STATE OR DECLARE A PROFESSIONAL OPINION BASED UPON ON-SITE INSPECTIONS AND MATERIAL TESTS ARE THOSE INSPECTIONS AND TESTS DEEMED SUFFICIENT AND APPROPRIATE BY COMMONLY ACCEPTED ENGINEERING STANDARDS. CERTIFY DOES NOT MEAN OR IMPLY A GUARANTEE BY THE ENGINEER NOR DOES AN ENGINEER'S CERTIFICATION RELIEVE ANY OTHER PARTY FROM MEETING REQUIREMENTS IMPOSED BY CONTRACT, EMPLOYMENT, OR OTHER MEANS. INCLUDING MEETING COMMONLY ACCEPTED INDUSTRY PRACTICES.

BY THE DEVELOPER:

"I/WE CERTIFY THAT ALL DEVELOPMENT AND/OR CONSTRUCTION WILL BE DONE ACCORDING TO THESE PLANS, AND THAT ANY RESPONSIBLE PERSONNEL INVOLVED IN THE CONSTRUCTION PROJECT WILL HAVE A CERTIFICATE OF ATTENDANCE AT A DEPARTMENT OF THE ENVIRONMENT APPROVED TRAINING PROGRAM FOR THE CONTROL OF SEDIMENT AND EROSION BEFORE BEGINNING THE PROJECT. I SHALL ENGAGE A REGISTERED PROFESSIONAL ENGINEER TO SUPERVISE POND CONSTRUCTION AND PROVIDE THE HOWARD SOIL CONSERVATION DISTRICT WITH AN "AS-BUILT" PLAN OF THE POND WITHIN 30 DAYS OF COMPLETION. I ALSO AUTHORIZE PERIODIC ON-SITE INSPECTIONS BY THE HOWARD SOIL CONSERVATION DISTRICT."

DEVELOPER _____ DATE 1/11/12

APPROVED: DEPARTMENT OF PLANNING AND ZONING

CHIEF-DEVELOPMENT ENGINEERING DIVISION _____ DATE 1/24/12

CHIEF-DIVISION OF LAND DEVELOPMENT _____ DATE 2/03/12

DIRECTOR _____ DATE 2/03/12

OPERATION AND MAINTENANCE SCHEDULE FOR BIO-RETENTION AREAS (M-6)

1. THE OWNER SHALL MAINTAIN THE PLANT MATERIAL, MULCH LAYER AND SOIL LAYER ANNUALLY. MAINTENANCE OF MULCH AND SOIL IS LIMITED TO CORRECTING AREAS OF EROSION OR WASH OUT. ANY MULCH REPLACEMENT SHALL BE DONE IN THE SPRING. PLANT MATERIAL SHALL BE CHECKED FOR DISEASE AND INSECT INFESTATION AND MAINTENANCE WILL ADDRESS DEAD MATERIAL AND PRUNING. ACCEPTABLE REPLACEMENT PLANT MATERIAL IS LIMITED TO THE FOLLOWING: 2000 MARYLAND
2. STORMWATER DESIGN MANUAL VOLUME II, TABLE A.4.1 AND 2.

   THE OWNER SHALL PERFORM A PLANT IN THE SPRING AND IN THE FALL OF EACH YEAR. DURING THE INSPECTION, THE OWNER SHALL REMOVE DEAD AND DISEASED VEGETATION CONSIDERED BEYOND TREATMENT, REPLACE DEAD PLANT MATERIAL WITH ACCEPTABLE REPLACEMENT PLANT MATERIAL.
3. TREAT DISEASED TREES AND SHRUBS, AND REPLACE ALL DEFICIENT STAKES AND WIRES.

   THE OWNER SHALL INSPECT THE MULCH EACH SPRING. THE MULCH SHALL
4. BE REPLACED EVERY TWO TO THREE YEARS. THE PREVIOUS MULCH LAYER SHALL BE REMOVED BEFORE THE NEW LAYER IS APPLIED.

   THE OWNER SHALL CORRECT SOIL EROSION ON AN NEEDED BASIS. INSPECTIONS SHALL BE PERFORMED A MINIMUM OF ONCE PER MONTH AND AFTER EACH HEAVY STORM.

STORMWATER MANAGEMENT FACILITY SEQUENCE OF CONSTRUCTION

1. NOTIFY CERTIFYING ENGINEER FIVE (5) WORKING DAYS PRIOR TO BEGINNING STORM WATER MANAGEMENT FACILITY CONSTRUCTION.
2. NOTIFY HOWARD COUNTY AT LEAST 48 HOURS PRIOR TO DOING ANY WORK.
3. CLEAR, GRUB & INSTALL PERIMETER SEDIMENT CONTROL MEASURES AS SHOWN ON THE SEDIMENT CONTROL PLAN.
4. STORM DRAIN OUTFALL FROM I-5 TO EW-2 MUST BE INSTALLED PRIOR TO BEGINNING EXCAVATION OF FACILITY TO ELEVATION 439.00 SHALL NOT OCCUR UNTIL AREA DRAINING TO FACILITY IS PERMANENTLY STABILIZED. (1-DAY)
5. UPON STABILIZATION OF DRAINAGE AREA EXCAVATE FOR INSTALLATION OF STONE RESERVOIR AND PLANTING SOIL. (1-DAY)
6. INSTALL STONE RESERVOIR, UNDERDRAINS AND PLANTING SOIL. (2-DAYS)
7. FINE GRADE AND PERMANENTLY STABILIZE DISTURBED AREA. (1-DAY)

DESIGN SUMMARY

1. FACILITY NUMBER: 5
2. FACILITY TYPE: MICRO-BIORETENTION (M-6)
3. DRAINAGE AREA = 0.41 AC.
4. BOTTOM ELEVATION = 439.00
5. TOP OF DAM ELEVATION = 441.25
6. STORAGE VOLUME PROVIDED: 819 C.F.
7. WATER SURFACE ELEV.: 1 YEAR = 439.89
   10 YEAR = 440.03
8. DISCHARGE: 1 YEAR = 0.74 CFS
   10 YEAR = 2.02 CFS
9. RISER TYPE: TYPE 'D' INLET
10. BARREL TYPE: 15" RCCP
11. MAINTENANCE RESPONSIBILITY: THIS IS A PRIVATE FACILITY TO BE OWNED & MAINTAINED BY THE OWNER
12. THIS FACILITY IS EXEMPT FROM MD378 GUIDELINES IN THAT THE IMPOUNDED DESIGN HIGH WATER DEPTH IS LESS THAN 3 FEET AT THE EMBANKMENT.

KCI TECHNOLOGIES
ENGINEERS
PLANNERS
SCIENTISTS
CONSTRUCTION MANAGERS
8161 MAPLE LAWN BOULEVARD
SUITE 150
FULTON, MD 20759
TELEPHONE: (410)792-9086
FAX: (410)792-7419

OrchardDevelopment Corporation

CRP Opportunity Fund, L.P.

OWNER / DEVELOPER:
ORCHARD DEVELOPMENT CORPORATION
5052 DORSEY HALL DRIVE
ELLICOTT CITY, MD 21042
(410) 964-2334

OWNER:
WILDER BUILDING CORPORATION
3300 SONA TRAIL
ELLICOTT CITY, MD 21043
(410)461-2522

REVISIONS			
NO.	DATE	DESCRIPTION	BY

DATE 11-18-2011
SCALE 1" = 20'
DESIGNED BY S.V.M.
DRAWN BY C.T.B.

STORMWATER MANAGEMENT PLAN - FACILITY #5

ORCHARD MEADOWS

PARCELS D-1, D-2, D-3
SITE DEVELOPMENT PLAN
ZONING R-A-15, TAX MAP NO. 17, GRID NO. 23, PARCEL NO. 711
SECOND ELECTION DISTRICT — HOWARD COUNTY, MARYLAND

SEAL: STATE OF MARYLAND — RICHARD L. DAVID — No. 31069 — PROFESSIONAL ENGINEER

DRAWING NO. C-15
SHEET 15 OF 38
KCI JOB NUMBER 27-101105

SDP-11-052

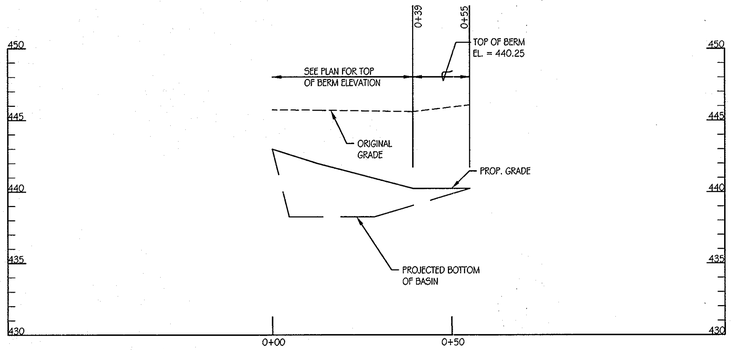

CENTERLINE OF DAM PROFILE

SCALE: 1" = 20' HORIZONTAL
1" = 5' VERTICAL

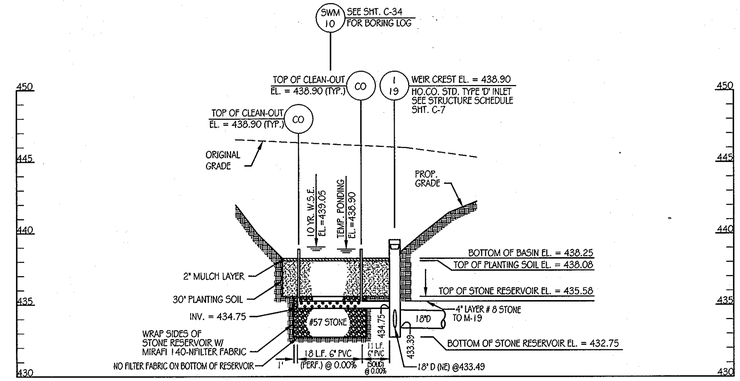

UNDERDRAIN PROFILE

SCALE: 1" = 20' HORIZONTAL
1" = 5' VERTICAL

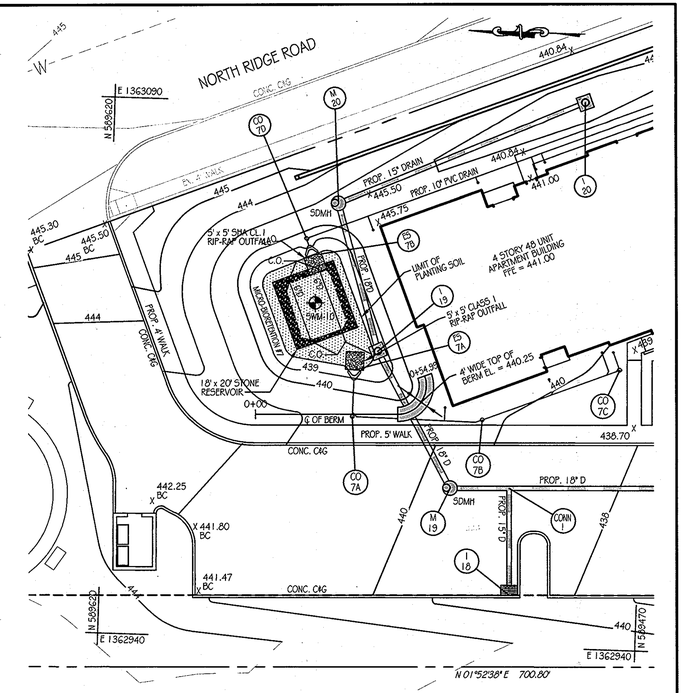

SWM FACILITY #7 PLAN

SCALE: 1" = 20'

PLANT SCHEDULE

KEY	QTY	BOTANICAL NAME / COMMON NAME	SIZE	ROOT	COMMENTS
MP	12	MYRICA PENNSYLANICA / BAYBERRY	30" - 36" HT.	CONT.	PLANT 4' O.C.
RL	20	RHODODENDRON LACINIATA / BLACK EYED SUSAN	18" - 24" HT.	CONT.	PLANT 2' O.C.
SWM-1		ERNMX-122 FACW WETLAND MEADOW SEED MIX	1/3 - 1/2 LB. PER 1000 SF		
SWM-2		ERNX-180 RAIN GARDEN MIX	1/3 - 1/2 LB. PER 1000 SF		

℄ BERM DATA

STATION	BEARING/ RADIUS	DISTANCE / ARC LENGTH	CHORD
0+00			
	S69°50'25"E	39.64'	
0+39.64			
	8.0'	15.35'	N35°11'50"E 13.10'
0+54.99			

LEGEND

- SOIL BORING
- 440 — EX. CONTOURS
- 441 — PROP. CONTOURS
- PROP. STORM DRAIN
- TOP OF BERM
- LIMIT OF PLANTING SOIL
- RIP-RAP OUTFALL
- STONE RESERVOIR
- SEED MIX #1
- SEED MIX #2

INSPECTION SCHEDULE

1. THE DEVELOPER SHALL NOTIFY THE COUNTRY AT LEAST 48 HOURS BEFORE COMMENCING ANY WORK IN CONJUNCTION WITH THE STORMWATER MANAGEMENT PLAN AND UPON COMPLETION OF A PROJECT WHEN A FINAL INSPECTION WILL BE CONDUCTED.
2. AT A MINIMUM, REGULAR INSPECTIONS SHALL BE MADE AND DOCUMENTED AT THE FOLLOWING SPECIFIED STAGES OF CONSTRUCTION.
   - (A) DURING EXCAVATION TO SUBGRADE;
   - (B) DURING PLACEMENT AND BACKFILL OF UNDERDRAIN SYSTEM:
   - (C) DURING PLACEMENT OF GEOTEXTILES AND ALL FILTER MEDIA:
   - (D) DURING CONSTRUCTION OF APPURTENANT CONVEYANCE SYSTEMS SUCH AS DIVERSION STRUCTURES, PRE-FILTERS, FILTERS, OUTLETS AND FLOW DISTRIBUTION STRUCTURES; AND
   - (E) UPON COMPLETION OF FINAL GRADING AND ESTABLISHMENT OF PERMANENT STABILIZATION.
3. INSPECTIONS SHALL BE CONDUCTED BY THE DEPARTMENT OF PUBLIC WORKS OR ITS AUTHORIZED REPRESENTATIVE. WRITTEN INSPECTION REPORTS SHALL BE MADE OF THE PERIODIC INSPECTIONS NECESSARY DURING CONSTRUCTION OF STORMWATER MANAGEMENT SYSTEMS TO ENSURE COMPLIANCE WITH THE APPROVED PLANS.
4. WRITTEN INSPECTION REPORTS SHALL INCLUDE:
   - (A) DATE AND LOCATION OF THE INSPECTION;
   - (B) WHETHER CONSTRUCTION WAS IN COMPLIANCE WITH THE APPROVED STORMWATER MANAGEMENT PLAN;
   - (C) ANY VARIATIONS FROM THE APPROVED CONSTRUCTION SPECIFICATIONS; AND
   - (D) ANY VIOLATIONS THAT EXIST.
5. ONCE CONSTRUCTION IS COMPLETE, AN AS-BUILT PLAN CERTIFICATION SHALL BE SUBMITTED BY THE APPROPRIATE DESIGN PROFESSIONAL LICENSED IN THE STATE OF MARYLAND TO ENSURE THE CONSTRUCTED STORMWATER MANAGEMENT PRACTICE AND CONVEYANCE SYSTEMS COMPLY WITH THE SPECIFICATIONS CONTAINED IN THE APPROVED PLANS. AT A MINIMUM, AS-BUILT CERTIFICATION SHALL INCLUDE A SET OF DRAWINGS COMPARING THE APPROVED STORMWATER MANAGEMENT PLAN WITH WHAT WAS CONSTRUCTED.

DESIGN SUMMARY

1. FACILITY NUMBER: 7
2. FACILITY TYPE: MICRO-BIORETENTION (M-6)
3. DRAINAGE AREA = 0.29 AC.
4. BOTTOM ELEVATION = 438.25
5. TOP OF DAM ELEVATION = 440.25
6. STORAGE VOLUME PROVIDED: 1,023 C.F.
7. WATER SURFACE ELEV.: 1 YEAR = 438.94
   10 YEAR = 439.05
8. DISCHARGE: 1 YEAR = 0.13 CFS
   10 YEAR = 0.82 CFS
9. RISER TYPE: TYPE 'D' INLET
10. BARREL TYPE: 18" RCCP
11. MAINTENANCE RESPONSIBILITY: THIS IS A PRIVATE FACILITY TO BE OWNED & MAINTAINED BY THE OWNER
12. THIS FACILITY IS EXEMPT FROM MD378 GUIDELINES IN THAT THE IMPOUNDED DESIGN HIGH WATER DEPTH IS LESS THAN 3 FEET AT THE EMBANKMENT.

OPERATION AND MAINTENANCE SCHEDULE FOR BIO-RETENTION AREAS (M-6)

1. THE OWNER SHALL MAINTAIN THE PLANT MATERIAL, MULCH LAYER AND SOIL LAYER ANNUALLY. MAINTENANCE OF MULCH AND SOIL IS LIMITED TO CORRECTING AREAS OF EROSION OR WASH OUT. ANY MULCH REPLACEMENT SHALL BE DONE IN THE SPRING. PLANT MATERIAL SHALL BE CHECKED FOR DISEASE AND INSECT INFESTATION AND MAINTENANCE WILL ADDRESS DEAD MATERIAL AND PRUNING. ACCEPTABLE REPLACEMENT PLANT MATERIAL IS LIMITED TO THE FOLLOWING: 2000 MARYLAND STORMWATER DESIGN MANUAL VOLUME II, TABLE A.4.1 AND 2.
2. THE OWNER SHALL PERFORM A PLANT IN THE SPRING AND IN THE FALL OF EACH YEAR. DURING THE INSPECTION, THE OWNER SHALL REMOVE DEAD AND DISEASED VEGETATION CONSIDERED BEYOND TREATMENT, REPLACE DEAD PLANT MATERIAL WITH ACCEPTABLE REPLACEMENT PLANT MATERIAL, TREAT DISEASED TREES AND SHRUBS, AND REPLACE ALL DEFICIENT STAKES AND WIRES.
3. THE OWNER SHALL INSPECT THE MULCH EACH SPRING. THE MULCH SHALL BE REPLACED EVERY TWO TO THREE YEARS. THE PREVIOUS MULCH LAYER SHALL BE REMOVED BEFORE THE NEW LAYER IS APPLIED.
4. THE OWNER SHALL CORRECT SOIL EROSION ON AN NEEDED BASIS. INSPECTIONS SHALL BE PERFORMED A MINIMUM OF ONCE PER MONTH AND AFTER EACH HEAVY STORM.

STORMWATER MANAGEMENT FACILITY SEQUENCE OF CONSTRUCTION

1. NOTIFY CERTIFYING ENGINEER FIVE (5) WORKING DAYS PRIOR TO BEGINNING STORM WATER MANAGEMENT FACILITY CONSTRUCTION.
2. NOTIFY HOWARD COUNTY AT LEAST 48 HOURS PRIOR TO DOING ANY WORK.
3. CLEAR, GRUB & INSTALL PERIMETER SEDIMENT CONTROL MEASURES AS SHOWN ON THE SEDIMENT CONTROL PLAN.
4. STORM DRAIN OUTFALL FROM I-19 TO EW-2A MUST BE INSTALLED PRIOR TO BEGINNING EXCAVATION OF FACILITY TO ELEVATION 438.25 SHALL NOT OCCUR UNTIL AREA DRAINING TO FACILITY IS PERMANENTLY STABILIZED. (1-DAY)
5. UPON STABILIZATION OF DRAINAGE AREA EXCAVATE FOR INSTALLATION OF STONE RESERVOIR AND PLANTING SOIL. (1-DAY)
6. INSTALL STONE RESERVOIR, UNDERDRAINS AND PLANTING SOIL. (2-DAYS)
7. FINE GRADE AND PERMANENTLY STABILIZE DISTURBED AREA. (1-DAY)

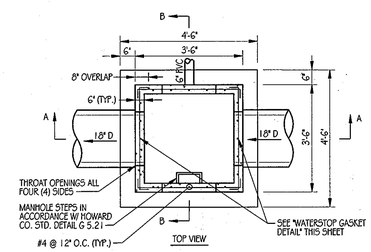

PRE-CAST CONCRETE AND PRE-FABRICATED STEEL STRUCTURE NOTES

1. THE CONTRACTOR IS RESPONSIBLE TO PROVIDE STRUCTURAL DESIGN COMPUTATIONS FOR FABRICATED CONCRETE AND STEEL COMPONENTS AS REQUIRED TO ENSURE THE STRUCTURAL INTEGRITY OF THE PRE-CAST CONCRETE RISER; IN CONFORMANCE WITH THE INFORMATION AND DIMENSIONAL CRITERIA ON THIS SHEET. SHOP DRAWINGS FOR THE PRE-CAST STRUCTURES (MEETING ASTM REQUIREMENTS), WITH THE SUPPORTING STRUCTURAL COMPUTATIONS (SIGNED AND SEALED BY A MARYLAND REGISTERED PROFESSIONAL ENGINEER), MUST BE SUBMITTED TO THE ENGINEER, AND THE APPROVING AGENCY, FOR APPROVAL, PRIOR TO FABRICATION.
2. IF ANY STRUCTURE DIMENSIONS VARY FROM THOSE ORIGINALLY REVIEWED/ APPROVED, THEN THE HYDRAULICS, FLOTATION AND STRUCTURAL INTEGRITY WILL HAVE TO BE RE-ANALYZED.
3. ALL JOINTS AND CONNECTIONS SHALL BE WATERTIGHT. METHOD OF ACHIEVING A WATERTIGHT SEAL BETWEEN THE RISER STRUCTURE, AND ALL CONDUITS (I. E. BARREL AND LOW FLOW PIPES) SHALL BE APPROVED BY THE ENGINEER IN CHARGE, PRIOR TO FABRICATION.

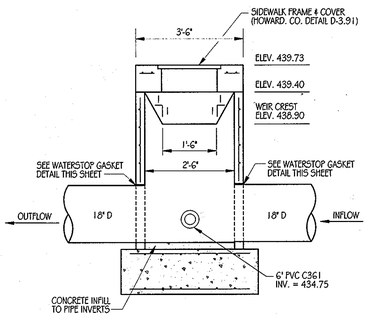

SECTION A-A
FRONT VIEW

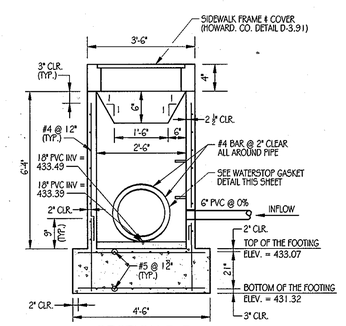

SECTION B-B
SIDE VIEW

RISER DETAIL I-19

SCALE: NOT TO SCALE

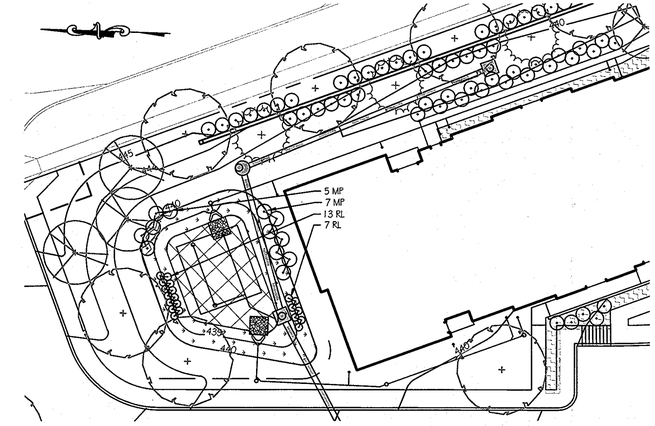

FACILITY #7 LANDSCAPE PLAN

SCALE: 1" = 20'

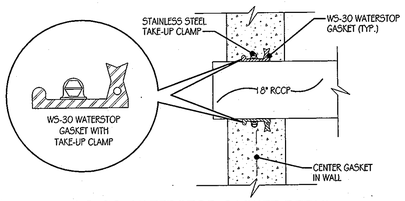

WS-30 WATERSTOP GASKET DETAIL

SCALE: NOT TO SCALE

GRAPHIC SCALE
20 0 5 10 20 40
1 INCH = 20 FEET

AS-BUILT CERTIFICATION

I HEREBY CERTIFY THAT THE FACILITY SHOWN ON THE PLAN WAS CONSTRUCTED AS SHOWN ON THE "AS-BUILT" PLANS AND MEET THE APPROVED PLANS AND SPECIFICATIONS.

ENGINEER – PE NO. _____

DATE _____

CERTIFY MEANS TO STATE OR DECLARE A PROFESSIONAL OPINION BASED UPON ON-SITE INSPECTIONS AND MATERIAL TESTS ARE THOSE INSPECTIONS AND TESTS DEEMED SUFFICIENT AND APPROPRIATE BY COMMONLY ACCEPTED ENGINEERING STANDARDS. CERTIFY DOES NOT MEAN OR IMPLY A GUARANTEE BY THE ENGINEER NOR DOES AN ENGINEER'S CERTIFICATION RELIEVE ANY OTHER PARTY FROM MEETING REQUIREMENTS IMPOSED BY CONTRACT, EMPLOYMENT, OR OTHER MEANS. INCLUDING MEETING COMMONLY ACCEPTED INDUSTRY PRACTICES.

BY THE DEVELOPER:

"I/WE CERTIFY THAT ALL DEVELOPMENT AND/OR CONSTRUCTION WILL BE DONE ACCORDING TO THESE PLANS, AND THAT ANY RESPONSIBLE PERSONNEL INVOLVED IN THE CONSTRUCTION PROJECT WILL HAVE A CERTIFICATE OF ATTENDANCE AT A DEPARTMENT OF THE ENVIRONMENT APPROVED TRAINING PROGRAM FOR THE CONTROL OF SEDIMENT AND EROSION BEFORE BEGINNING THE PROJECT. I SHALL ENGAGE A REGISTERED PROFESSIONAL ENGINEER TO SUPERVISE POND CONSTRUCTION AND PROVIDE THE HOWARD SOIL CONSERVATION DISTRICT WITH AN "AS-BUILT" PLAN OF THE POND WITHIN 30 DAYS OF COMPLETION. I ALSO AUTHORIZE PERIODIC ON-SITE INSPECTIONS BY THE HOWARD SOIL CONSERVATION DISTRICT."

DEVELOPER _____ DATE 1/11/12

APPROVED: DEPARTMENT OF PLANNING AND ZONING

CHIEF-DEVELOPMENT ENGINEERING DIVISION _____ DATE 1/24/12

CHIEF-DIVISION OF LAND DEVELOPMENT _____ DATE 2/02/12

DIRECTOR _____ DATE 2/3/12

PROFESSIONAL CERTIFICATION. I HEREBY CERTIFY THAT THESE DOCUMENTS WERE PREPARED OR APPROVED BY ME AND THAT I AM DULY LICENSED PROFESSIONAL ENGINEER UNDER THE LAWS OF THE STATE OF MARYLAND, LICENSE NO. 31069
EXPIRATION DATE: 11/12/12

KCI TECHNOLOGIES
ENGINEERS
PLANNERS
SCIENTISTS
CONSTRUCTION MANAGERS
8161 MAPLE LAWN BOULEVARD
SUITE 150
FULTON, MD 20759
TELEPHONE: (410)792-8086
FAX: (410)792-7419

OrchardDevelopment Corporation

CRP Opportunity Fund, L.P.

OWNER / DEVELOPER:
ORCHARD DEVELOPMENT CORPORATION
5032 DORSEY HALL DRIVE
ELLICOTT CITY, MD 21042
(410) 964-2334

OWNER:
WILDER BUILDING CORPORATION
3300 SOMA TRAIL
ELLICOTT CITY, MD 21043
(410)-461-2522

REVISIONS			
NO.	DATE	DESCRIPTION	BY

DATE 11-18-2011
SCALE 1" = 20'
DESIGNED BY S.V.M.
DRAWN BY C.T.B.

STORMWATER MANAGEMENT PLAN - FACILITY #7

ORCHARD MEADOWS

PARCELS D-1, D-2, D-3
SITE DEVELOPMENT PLAN
ZONING R-A-15, TAX MAP NO. 17, GRID NO. 23, PARCEL NO. 711
SECOND ELECTION DISTRICT — HOWARD COUNTY, MARYLAND

SEAL: STATE OF MARYLAND — RICHARD L. BUTLER — No. 031069 — PROFESSIONAL ENGINEER

DRAWING NO. C-16
SHEET 16 OF 38
KCI JOB NUMBER 27-101105

SDP-11-052

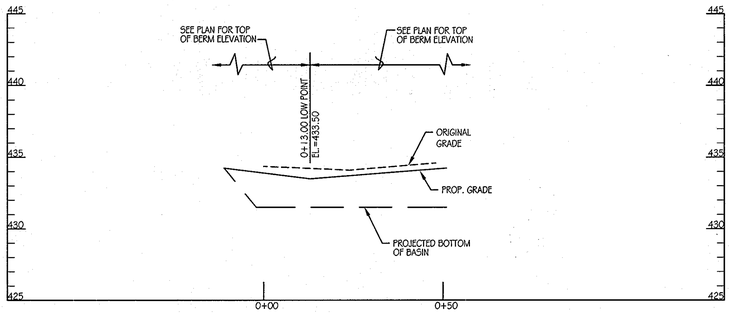

CENTERLINE OF DAM PROFILE

SCALE: 1" = 20' HORIZONTAL
1" = 5' VERTICAL

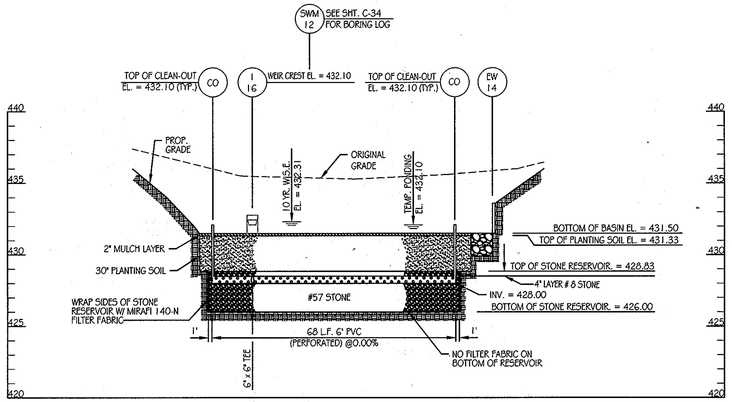

UNDERDRAIN PROFILE

SCALE: 1" = 20' HORIZONTAL
1" = 5' VERTICAL

INSPECTION SCHEDULE

1. THE DEVELOPER SHALL NOTIFY THE COUNTRY AT LEAST 48 HOURS BEFORE COMMENCING ANY WORK IN CONJUNCTION WITH THE STORMWATER MANAGEMENT PLAN AND UPON COMPLETION OF A PROJECT WHEN A FINAL INSPECTION WILL BE CONDUCTED.
2. AT A MINIMUM, REGULAR INSPECTIONS SHALL BE MADE AND DOCUMENTED AT THE FOLLOWING SPECIFIED STAGES OF CONSTRUCTION.
   - (A) DURING EXCAVATION TO SUBGRADE;
   - (B) DURING PLACEMENT AND BACKFILL OF UNDERDRAIN SYSTEM:
   - (C) DURING PLACEMENT OF GEOTEXTILES AND ALL FILTER MEDIA:
   - (D) DURING CONSTRUCTION OF APPURTENANT CONVEYANCE SYSTEMS SUCH AS DIVERSION STRUCTURES, PRE-FILTERS, FILTERS, OUTLETS AND FLOW DISTRIBUTION STRUCTURES; AND
   - (E) UPON COMPLETION OF FINAL GRADING AND ESTABLISHMENT OF PERMANENT STABILIZATION.
3. INSPECTIONS SHALL BE CONDUCTED BY THE DEPARTMENT OF PUBLIC WORKS OR ITS AUTHORIZED REPRESENTATIVE. WRITTEN INSPECTION REPORTS SHALL BE MADE OF THE PERIODIC INSPECTIONS NECESSARY DURING CONSTRUCTION OF STORMWATER MANAGEMENT SYSTEMS TO ENSURE COMPLIANCE WITH THE APPROVED PLANS.
4. WRITTEN INSPECTION REPORTS SHALL INCLUDE:
   - (A) DATE AND LOCATION OF THE INSPECTION;
   - (B) WHETHER CONSTRUCTION WAS IN COMPLIANCE WITH THE APPROVED STORMWATER MANAGEMENT PLAN;
   - (C) ANY VARIATIONS FROM THE APPROVED CONSTRUCTION SPECIFICATIONS; AND
   - (D) ANY VIOLATIONS THAT EXIST.
5. ONCE CONSTRUCTION IS COMPLETE, AN AS-BUILT PLAN CERTIFICATION SHALL BE SUBMITTED BY THE APPROPRIATE DESIGN PROFESSIONAL LICENSED IN THE STATE OF MARYLAND TO ENSURE THE CONSTRUCTED STORMWATER MANAGEMENT PRACTICE AND CONVEYANCE SYSTEMS COMPLY WITH THE SPECIFICATIONS CONTAINED IN THE APPROVED PLANS. AT A MINIMUM, AS-BUILT CERTIFICATION SHALL INCLUDE A SET OF DRAWINGS COMPARING THE APPROVED STORMWATER MANAGEMENT PLAN WITH WHAT WAS CONSTRUCTED.

DESIGN SUMMARY

1. FACILITY NUMBER: 8
2. FACILITY TYPE: MICRO-BIORETENTION (M-6)
3. DRAINAGE AREA = 0.30 AC.
4. BOTTOM ELEVATION = 431.50
5. TOP OF DAM ELEVATION = 433.50
6. STORAGE VOLUME PROVIDED: 492 C.F.
7. WATER SURFACE ELEV.: 1 YEAR = 432.19
   10 YEAR = 432.31
8. DISCHARGE: 1 YEAR = 0.38 CFS
   10 YEAR = 1.34 CFS
9. RISER TYPE: TYPE 'D' INLET
10. BARREL TYPE: 15" RCCP
11. MAINTENANCE RESPONSIBILITY: THIS IS A PRIVATE FACILITY TO BE OWNED & MAINTAINED BY THE OWNER
12. THIS FACILITY IS EXEMPT FROM MD378 GUIDELINES IN THAT THE IMPOUNDED DESIGN HIGH WATER DEPTH IS LESS THAN 3 FEET AT THE EMBANKMENT.

PLANT SCHEDULE

KEY	QTY	BOTANICAL NAME / COMMON NAME	SIZE	ROOT	COMMENTS
EP	21	EUPATORIUM PUPUREA 'LITTLE JOE / LITTLE JOE PYEWEED	18" - 24" HT.	CONT.	PLANT 2' O.C.
PV	6	PANICUM VIRGATUM 'HEAVY METAL' / HEAVY METAL SWITCHGRASS	3' - 4' HT.	CONT.	PLANT 5' O.C.
RC	16	RHODODENDRON CATAWBIENSE 'ROSEUM ELEGANS' / ROSEUM ELEGANS RHODODENDRON	30" - 36" HT.	CONT.	PLANT 4' O.C.
SWM-1		ERNMX-122 FACW WETLAND MEADOW SEED MIX	1/3 - 1/2 LB. PER 1000 SF		
SWM-2		ERNX-180 RAIN GARDEN MIX	1/3 - 1/2 LB. PER 1000 SF		

℄ BERM DATA

STATION	BEARING/ RADIUS	DISTANCE / ARC LENGTH	CHORD
0+00			
	N70°14'56"E	47.97'	
0+47.97			

LEGEND

- SOIL BORING
- 442 — EX. CONTOURS
- 441 — PROP. CONTOURS
- PROP. STORM DRAIN
- TOP OF BERM
- LIMIT OF PLANTING SOIL
- RIP-RAP OUTFALL
- STONE RESERVOIR
- SEED MIX #1
- SEED MIX #2

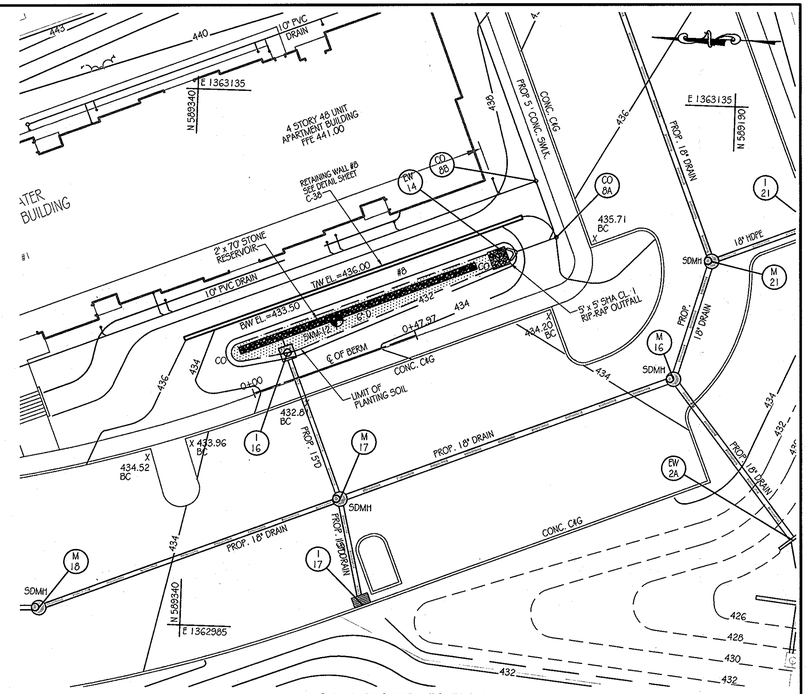

SWM FACILITY #8 PLAN

SCALE: 1" = 20'

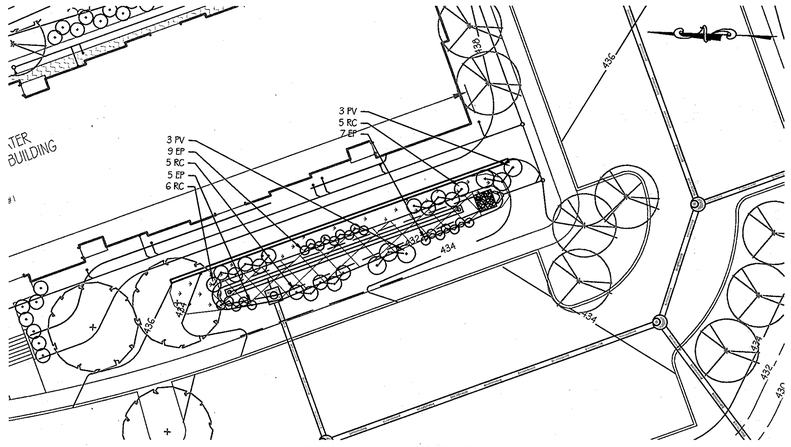

FACILITY #8 LANDSCAPE PLAN

SCALE: 1" = 20'

OPERATION AND MAINTENANCE SCHEDULE FOR BIO-RETENTION AREAS (M-6)

1. THE OWNER SHALL MAINTAIN THE PLANT MATERIAL, MULCH LAYER AND SOIL LAYER ANNUALLY. MAINTENANCE OF MULCH AND SOIL IS LIMITED TO CORRECTING AREAS OF EROSION OR WASH OUT. ANY MULCH REPLACEMENT SHALL BE DONE IN THE SPRING. PLANT MATERIAL SHALL BE CHECKED FOR DISEASE AND INSECT INFESTATION AND MAINTENANCE WILL ADDRESS DEAD MATERIAL AND PRUNING. ACCEPTABLE REPLACEMENT PLANT MATERIAL IS LIMITED TO THE FOLLOWING: 2000 MARYLAND STORMWATER DESIGN MANUAL VOLUME II, TABLE A.4.1 AND 2.
2. THE OWNER SHALL PERFORM A PLANT IN THE SPRING AND IN THE FALL OF EACH YEAR. DURING THE INSPECTION, THE OWNER SHALL REMOVE DEAD AND DISEASED VEGETATION CONSIDERED BEYOND TREATMENT, REPLACE DEAD PLANT MATERIAL WITH ACCEPTABLE REPLACEMENT PLANT MATERIAL, TREAT DISEASED TREES AND SHRUBS, AND REPLACE ALL DEFICIENT STAKES AND WIRES.
3. THE OWNER SHALL INSPECT THE MULCH EACH SPRING. THE MULCH SHALL BE REPLACED EVERY TWO TO THREE YEARS. THE PREVIOUS MULCH LAYER SHALL BE REMOVED BEFORE THE NEW LAYER IS APPLIED.
4. THE OWNER SHALL CORRECT SOIL EROSION ON AN NEEDED BASIS. INSPECTIONS SHALL BE PERFORMED A MINIMUM OF ONCE PER MONTH AND AFTER EACH HEAVY STORM.

STORMWATER MANAGEMENT FACILITY SEQUENCE OF CONSTRUCTION

1. NOTIFY CERTIFYING ENGINEER FIVE (5) WORKING DAYS PRIOR TO BEGINNING STORM WATER MANAGEMENT FACILITY CONSTRUCTION.
2. NOTIFY HOWARD COUNTY AT LEAST 48 HOURS PRIOR TO DOING ANY WORK.
3. CLEAR, GRUB & INSTALL PERIMETER SEDIMENT CONTROL MEASURES AS SHOWN ON THE SEDIMENT CONTROL PLAN.
4. STORM DRAIN OUTFALL FROM I-16 TO EW-2A MUST BE INSTALLED PRIOR TO BEGINNING EXCAVATION OF FACILITY TO ELEVATION 431.50 SHALL NOT OCCUR UNTIL AREA DRAINING TO FACILITY IS PERMANENTLY STABILIZED. (1-DAY)
5. UPON STABILIZATION OF DRAINAGE AREA EXCAVATE FOR INSTALLATION OF STONE RESERVOIR AND PLANTING SOIL. (1-DAY)
6. INSTALL STONE RESERVOIR, UNDERDRAINS AND PLANTING SOIL. (2-DAYS)
7. FINE GRADE AND PERMANENTLY STABILIZE DISTURBED AREA. (1-DAY)

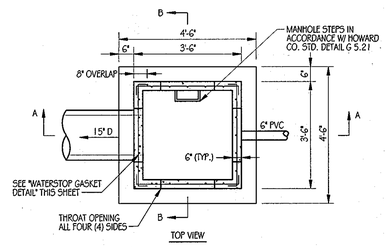

PRE-CAST CONCRETE AND PRE-FABRICATED STEEL STRUCTURE NOTES

1. THE CONTRACTOR IS RESPONSIBLE TO PROVIDE STRUCTURAL DESIGN COMPUTATIONS FOR FABRICATED CONCRETE AND STEEL COMPONENTS AS REQUIRED TO ENSURE THE STRUCTURAL INTEGRITY OF THE PRE-CAST CONCRETE RISER; IN CONFORMANCE WITH THE INFORMATION AND DIMENSIONAL CRITERIA ON THIS SHEET. SHOP DRAWINGS FOR THE PRE-CAST STRUCTURE (MEETING ASTM REQUIREMENTS), WITH THE SUPPORTING STRUCTURAL COMPUTATIONS (SIGNED AND SEALED BY A MARYLAND REGISTERED PROFESSIONAL ENGINEER), MUST BE SUBMITTED TO THE ENGINEER, AND THE APPROVING AGENCY, FOR APPROVAL, PRIOR TO FABRICATION.
2. IF ANY STRUCTURE DIMENSIONS VARY FROM THOSE ORIGINALLY REVIEWED/ APPROVED, THEN THE HYDRAULICS, FLOTATION AND STRUCTURAL INTEGRITY WILL HAVE TO BE RE-ANALYZED.
3. ALL JOINTS AND CONNECTIONS SHALL BE WATERTIGHT. METHOD OF ACHIEVING A WATERTIGHT SEAL BETWEEN THE RISER STRUCTURE AND ALL CONDUITS (I.E., BARREL AND LOW FLOW PIPES) SHALL BE APPROVED BY THE ENGINEER IN CHARGE, PRIOR TO FABRICATION.

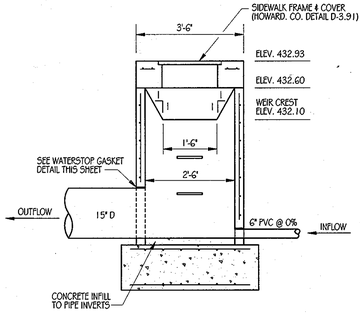

SECTION A-A
FRONT VIEW

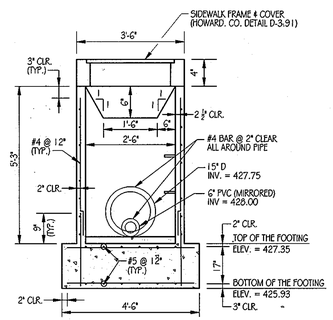

SECTION B-B
SIDE VIEW

RISER DETAIL I-16

SCALE: NOT TO SCALE

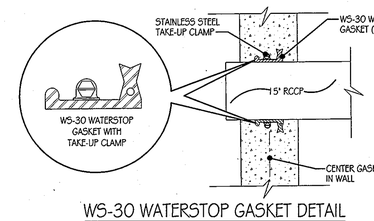

WS-30 WATERSTOP GASKET DETAIL

SCALE: NOT TO SCALE

GRAPHIC SCALE
20 0 5 10 20 40
1 INCH = 20 FEET

AS-BUILT CERTIFICATION

I HEREBY CERTIFY THAT THE FACILITY SHOWN ON THE PLAN WAS CONSTRUCTED AS SHOWN ON THE "AS-BUILT" PLANS AND MEET THE APPROVED PLANS AND SPECIFICATIONS.

ENGINEER – PE NO. _____

DATE _____

CERTIFY MEANS TO STATE OR DECLARE A PROFESSIONAL OPINION BASED UPON ON-SITE INSPECTIONS AND MATERIAL TESTS ARE THOSE INSPECTIONS AND TESTS DEEMED SUFFICIENT AND APPROPRIATE BY COMMONLY ACCEPTED ENGINEERING STANDARDS. CERTIFY DOES NOT MEAN OR IMPLY A GUARANTEE BY THE ENGINEER NOR DOES AN ENGINEER'S CERTIFICATION RELIEVE ANY OTHER PARTY FROM MEETING REQUIREMENTS IMPOSED BY CONTRACT, EMPLOYMENT, OR OTHER MEANS, INCLUDING MEETING COMMONLY ACCEPTED INDUSTRY PRACTICES.

BY THE DEVELOPER:

"I/WE CERTIFY THAT ALL DEVELOPMENT AND/OR CONSTRUCTION WILL BE DONE ACCORDING TO THESE PLANS, AND THAT ANY RESPONSIBLE PERSONNEL INVOLVED IN THE CONSTRUCTION PROJECT WILL HAVE A CERTIFICATE OF ATTENDANCE AT A DEPARTMENT OF THE ENVIRONMENT APPROVED TRAINING PROGRAM FOR THE CONTROL OF SEDIMENT AND EROSION BEFORE BEGINNING THE PROJECT. I SHALL ENGAGE A REGISTERED PROFESSIONAL ENGINEER TO SUPERVISE POND CONSTRUCTION AND PROVIDE THE HOWARD SOIL CONSERVATION DISTRICT WITH AN "AS-BUILT" PLAN OF THE POND WITHIN 30 DAYS OF COMPLETION. I ALSO AUTHORIZE PERIODIC ON-SITE INSPECTIONS BY THE HOWARD SOIL CONSERVATION DISTRICT."

DEVELOPER — DATE 1/11/12

APPROVED: DEPARTMENT OF PLANNING AND ZONING

CHIEF, DEVELOPMENT ENGINEERING DIVISION — DATE 1/24/12

CHIEF, DIVISION OF LAND DEVELOPMENT — DATE 2/02/12

DIRECTOR — DATE 2/3/12

KCI TECHNOLOGIES
ENGINEERS
PLANNERS
SCIENTISTS
CONSTRUCTION MANAGERS
8161 MAPLE LAWN BOULEVARD
SUITE 150
FULTON, MD 20759
TELEPHONE: (410)792-8086
FAX: (410)792-7419

OrchardDevelopment Corporation

CRP Opportunity Fund, L.P.

OWNER / DEVELOPER:
ORCHARD DEVELOPMENT CORPORATION
5032 DORSEY HALL DRIVE
ELLICOTT CITY, MD 21042
(410) 964-2334

OWNER:
WILDER BUILDING CORPORATION
3300 SONA TRAIL
ELLICOTT CITY, MD 21043
(410)461-2522

REVISIONS			
NO.	DATE	DESCRIPTION	BY

DATE 11-18-2011
SCALE 1" = 20'
DESIGNED BY S.V.M.
DRAWN BY C.T.B.

STORMWATER MANAGEMENT PLAN - FACILITY #8

ORCHARD MEADOWS

PARCELS D-1, D-2, D-3
SITE DEVELOPMENT PLAN
ZONING R-A-15, TAX MAP NO. 17, GRID NO. 23, PARCEL NO. 711
SECOND ELECTION DISTRICT — HOWARD COUNTY, MARYLAND

SEAL: STATE OF MARYLAND — RICHARD L. BOOTH — No. 031069 — PROFESSIONAL ENGINEER

PROFESSIONAL CERTIFICATION. I HEREBY CERTIFY THAT THESE DOCUMENTS WERE PREPARED OR APPROVED BY ME AND THAT I AM DULY LICENSED PROFESSIONAL ENGINEER UNDER THE LAWS OF THE STATE OF MARYLAND, LICENSE NO. 31069
EXPIRATION DATE: 11/12/12

DRAWING NO. C-17
SHEET 17 OF 38
KCI JOB NUMBER 27-101105

SDP-11-052

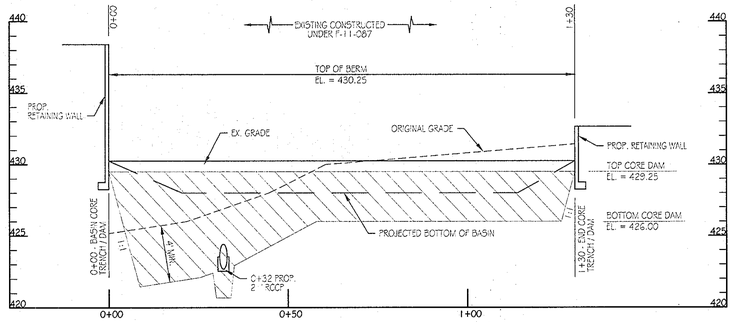

CENTERLINE OF DAM PROFILE

SCALE: 1" = 20' HORIZONTAL
1" = 5' VERTICAL

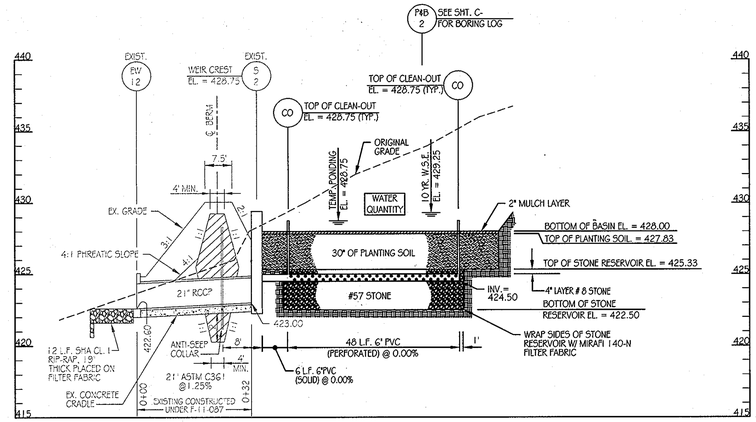

UNDERDRAIN PROFILE

SCALE: 1" = 20' HORIZONTAL
1" = 5' VERTICAL

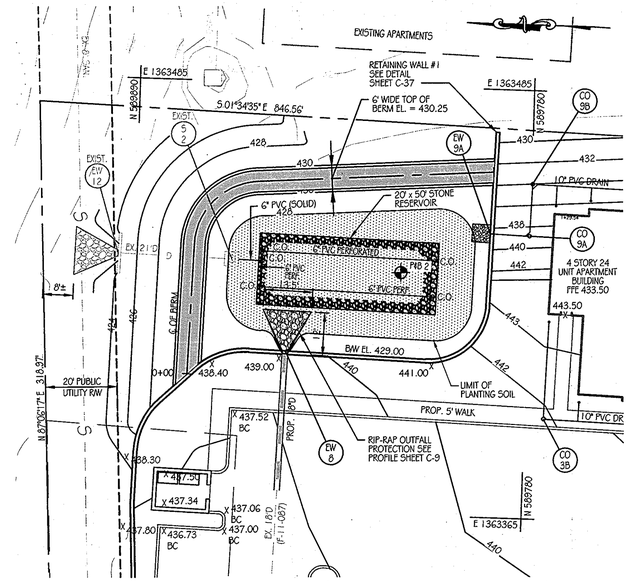

SWM FACILITY #9 PLAN

SCALE: 1" = 20'

INSPECTION SCHEDULE

1. THE DEVELOPER SHALL NOTIFY THE COUNTRY AT LEAST 48 HOURS BEFORE COMMENCING ANY WORK IN CONJUNCTION WITH THE STORMWATER MANAGEMENT PLAN AND UPON COMPLETION OF A PROJECT WHEN A FINAL INSPECTION WILL BE CONDUCTED.
2. AT A MINIMUM, REGULAR INSPECTIONS SHALL BE MADE AND DOCUMENTED AT THE FOLLOWING SPECIFIED STAGES OF CONSTRUCTION.
   - (A) DURING EXCAVATION TO SUBGRADE;
   - (B) DURING PLACEMENT AND BACKFILL OF UNDERDRAIN SYSTEM:
   - (C) DURING PLACEMENT OF GEOTEXTILES AND ALL FILTER MEDIA:
   - (D) DURING CONSTRUCTION OF APPURTENANT CONVEYANCE SYSTEMS SUCH AS DIVERSION STRUCTURES, PRE-FILTERS, FILTERS, OUTLETS AND FLOW DISTRIBUTION STRUCTURES; AND
   - (E) UPON COMPLETION OF FINAL GRADING AND ESTABLISHMENT OF PERMANENT STABILIZATION.
3. INSPECTIONS SHALL BE CONDUCTED BY THE DEPARTMENT OF PUBLIC WORKS OR ITS AUTHORIZED REPRESENTATIVE. WRITTEN INSPECTION REPORTS SHALL BE MADE OF THE PERIODIC INSPECTIONS NECESSARY DURING CONSTRUCTION OF STORMWATER MANAGEMENT SYSTEMS TO ENSURE COMPLIANCE WITH THE APPROVED PLANS.
4. WRITTEN INSPECTION REPORTS SHALL INCLUDE:
   - (A) DATE AND LOCATION OF THE INSPECTION;
   - (B) WHETHER CONSTRUCTION WAS IN COMPLIANCE WITH THE APPROVED STORMWATER MANAGEMENT PLAN;
   - (C) ANY VARIATIONS FROM THE APPROVED CONSTRUCTION SPECIFICATIONS; AND
   - (D) ANY VIOLATIONS THAT EXIST.
5. ONCE CONSTRUCTION IS COMPLETE, AN AS-BUILT PLAN CERTIFICATION SHALL BE SUBMITTED BY THE APPROPRIATE DESIGN PROFESSIONAL LICENSED IN THE STATE OF MARYLAND TO ENSURE THE CONSTRUCTED STORMWATER MANAGEMENT PRACTICE AND CONVEYANCE SYSTEMS COMPLY WITH THE SPECIFICATIONS CONTAINED IN THE APPROVED PLANS. AT A MINIMUM, AS-BUILT CERTIFICATION SHALL INCLUDE A SET OF DRAWINGS COMPARING THE APPROVED STORMWATER MANAGEMENT PLAN WITH WHAT WAS CONSTRUCTED.

DESIGN SUMMARY

1. FACILITY NUMBER: 9
2. FACILITY TYPE: MICRO-BIORETENTION (M-6)
3. DRAINAGE AREA = 1.67 AC.
4. BOTTOM ELEVATION = 428.00
5. TOP OF DAM ELEVATION = 430.25
6. STORAGE VOLUME PROVIDED: 2,961 C.F.
7. WATER SURFACE ELEV.: 1 YEAR = 428.92
   10 YEAR = 429.25
8. DISCHARGE: 1 YEAR = 0.96 CFS
   10 YEAR = 4.93 CFS
9. RISER TYPE: TYPE 'D' INLET
10. BARREL TYPE: 21" RCCP
11. MAINTENANCE RESPONSIBILITY: THIS IS A PRIVATE FACILITY TO BE OWNED & MAINTAINED BY THE OWNER
12. THIS FACILITY IS EXEMPT FROM MD378 GUIDELINES IN THAT THE IMPOUNDED DESIGN HIGH WATER DEPTH IS LESS THAN 3 FEET AT THE EMBANKMENT.

℄ BERM DATA

STATION	BEARING/ RADIUS	DISTANCE / ARC LENGTH	CHORD
0+00			
	N3°23'2"E	36.23'	
0+36.23			
	18.75'	27.65'	N45°37'51"E 25.21'
0+63.88			
	N87°52'40"E	65.66'	
1+29.54			

PLANT SCHEDULE

KEY	QTY	BOTANICAL NAME / COMMON NAME	SIZE	ROOT	COMMENTS
HV	14	HAMAMELIS VIRGINIANA / WITCHHAZEL	3'-4' HT.	CONT.	PLANT 5' O.C.
MP	25	MYRICA PENSYLVANICA / BAYBERRY	30" - 36" HT.	CONT.	PLANT 4' O.C.
RL	18	RUDBEKIA LACINIATA / TALL CONEFLOWER	18" - 24" HT.	CONT.	PLANT 2' O.C.

LEGEND

- SOIL BORING
- 442 — EX. CONTOURS
- 441 — PROP. CONTOURS
- PROP. STORM DRAIN
- TOP OF BERM
- LIMIT OF PLANTING SOIL
- RIP-RAP OUTFALL
- STONE RESERVOIR

OPERATION AND MAINTENANCE SCHEDULE FOR BIO-RETENTION AREAS (M-6)

1. THE OWNER SHALL MAINTAIN THE PLANT MATERIAL, MULCH LAYER AND SOIL LAYER ANNUALLY. MAINTENANCE OF MULCH AND SOIL IS LIMITED TO CORRECTING AREAS OF EROSION OR WASH OUT. ANY MULCH REPLACEMENT SHALL BE DONE IN THE SPRING. PLANT MATERIAL SHALL BE CHECKED FOR DISEASE AND INSECT INFESTATION AND MAINTENANCE WILL ADDRESS DEAD MATERIAL AND PRUNING. ACCEPTABLE REPLACEMENT PLANT MATERIAL IS LIMITED TO THE FOLLOWING: 2000 MARYLAND STORMWATER DESIGN MANUAL VOLUME II, TABLE A.4.1 AND 2.
2. THE OWNER SHALL PERFORM A PLANT IN THE SPRING AND IN THE FALL OF EACH YEAR. DURING THE INSPECTION, THE OWNER SHALL REMOVE DEAD AND DISEASED VEGETATION CONSIDERED BEYOND TREATMENT, REPLACE DEAD PLANT MATERIAL WITH ACCEPTABLE REPLACEMENT PLANT MATERIAL, TREAT DISEASED TREES AND SHRUBS, AND REPLACE ALL DEFICIENT STAKES AND WIRES.
3. THE OWNER SHALL INSPECT THE MULCH EACH SPRING. THE MULCH SHALL BE REPLACED EVERY TWO TO THREE YEARS. THE PREVIOUS MULCH LAYER SHALL BE REMOVED BEFORE THE NEW LAYER IS APPLIED.
4. THE OWNER SHALL CORRECT SOIL EROSION ON AN NEEDED BASIS. INSPECTIONS SHALL BE PERFORMED A MINIMUM OF ONCE PER MONTH AND AFTER EACH HEAVY STORM.

STORMWATER MANAGEMENT FACILITY SEQUENCE OF CONSTRUCTION

1. NOTIFY CERTIFYING ENGINEER FIVE (5) WORKING DAYS PRIOR TO BEGINNING STORM WATER MANAGEMENT FACILITY CONSTRUCTION.
2. NOTIFY HOWARD COUNTY AT LEAST 48 HOURS PRIOR TO DOING ANY WORK.
3. CLEAR, GRUB & INSTALL PERIMETER SEDIMENT CONTROL MEASURES AS SHOWN ON THE SEDIMENT CONTROL PLAN.
4. REFER TO SEDIMENT CONTROL PLAN C-37 FOR SEDIMENT BASIN CONSTRUCTION.
5. UPON STABILIZATION OF DRAINAGE AREA EXCAVATE FOR INSTALLATION OF STONE RESERVOIR AND PLANTING SOIL
6. INSTALL STONE RESERVOIR, UNDERDRAINS AND PLANTING SOIL.
7. FINE GRADE AND PERMANENTLY STABILIZE DISTURBED AREA.

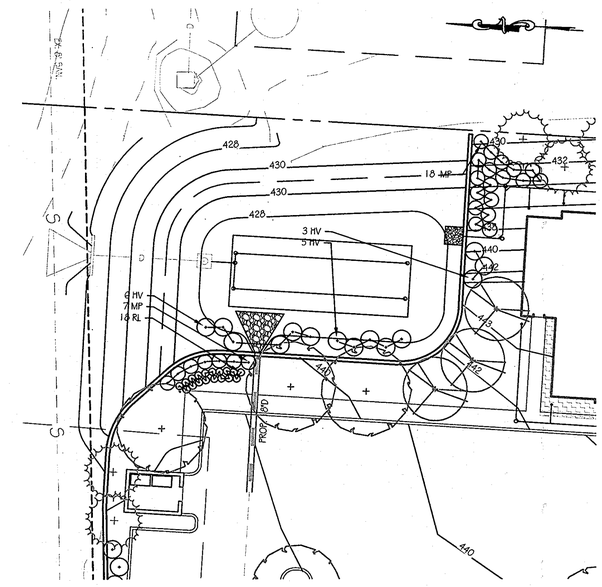

FACILITY #9 LANDSCAPE PLAN

SCALE: 1" = 20'

GRAPHIC SCALE
20 0 5 10 20 40
1 INCH = 20 FEET

PROFESSIONAL CERTIFICATION. I HEREBY CERTIFY THAT THESE DOCUMENTS WERE PREPARED OR APPROVED BY ME AND THAT I AM DULY LICENSED PROFESSIONAL ENGINEER UNDER THE LAWS OF THE STATE OF MARYLAND, LICENSE NO. 31089
EXPIRATION DATE: 11/12/12

AS-BUILT CERTIFICATION

I HEREBY CERTIFY THAT THE FACILITY SHOWN ON THE PLAN WAS CONSTRUCTED AS SHOWN ON THE "AS-BUILT" PLANS AND MEET THE APPROVED PLANS AND SPECIFICATIONS.

ENGINEER – _____ PE NO. _____

DATE _____

CERTIFY MEANS TO STATE OR DECLARE A PROFESSIONAL OPINION BASED UPON ON-SITE INSPECTIONS AND MATERIAL TESTS ARE THOSE INSPECTIONS AND TESTS DEEMED SUFFICIENT AND APPROPRIATE BY COMMONLY ACCEPTED ENGINEERING STANDARDS. CERTIFY DOES NOT MEAN OR IMPLY A GUARANTEE BY THE ENGINEER NOR DOES AN ENGINEER'S CERTIFICATION RELIEVE ANY OTHER PARTY FROM MEETING REQUIREMENTS IMPOSED BY CONTRACT, EMPLOYMENT, OR OTHER MEANS, INCLUDING MEETING COMMONLY ACCEPTED INDUSTRY PRACTICES.

BY THE DEVELOPER:

"I/WE CERTIFY THAT ALL DEVELOPMENT AND/OR CONSTRUCTION WILL BE DONE ACCORDING TO THESE PLANS, AND THAT ANY RESPONSIBLE PERSONNEL INVOLVED IN THE CONSTRUCTION PROJECT WILL HAVE A CERTIFICATE OF ATTENDANCE AT A DEPARTMENT OF THE ENVIRONMENT APPROVED TRAINING PROGRAM FOR THE CONTROL OF SEDIMENT AND EROSION BEFORE BEGINNING THE PROJECT. I SHALL ENGAGE A REGISTERED PROFESSIONAL ENGINEER TO SUPERVISE POND CONSTRUCTION AND PROVIDE THE HOWARD SOIL CONSERVATION DISTRICT WITH AN "AS-BUILT" PLAN OF THE POND WITHIN 30 DAYS OF COMPLETION. I ALSO AUTHORIZE PERIODIC ON-SITE INSPECTIONS BY THE HOWARD SOIL CONSERVATION DISTRICT."

DEVELOPER — DATE 1/11/12

APPROVED: DEPARTMENT OF PLANNING AND ZONING

CHIEF-DEVELOPMENT ENGINEERING DIVISION — DATE 1/24/12

CHIEF-~~BUREAU~~ DIV. OF LAND DEVELOPMENT — DATE 2/02/12

DIRECTOR — DATE 2/3/12

KCI TECHNOLOGIES
ENGINEERS
PLANNERS
SCIENTISTS
CONSTRUCTION MANAGERS
8161 MAPLE LAWN BOULEVARD
SUITE 150
FULTON, MD 20759
TELEPHONE: (410)792-8086
FAX: (410)792-7419

OrchardDevelopment Corporation

CRP Opportunity Fund, L.P.

OWNER/DEVELOPER:
ORCHARD DEVELOPMENT CORPORATION
5032 DORSEY HALL DRIVE
ELLICOTT CITY, MD 21042
(410) 964-2334

OWNER:
WILDER BUILDING CORPORATION
3300 SOMA TRAIL
ELLICOTT CITY, MD 21043
(410)-461-2522

REVISIONS

NO.	DATE	DESCRIPTION	BY

DATE 11-18-2011
SCALE 1" = 20'
DESIGNED BY S.V.M.
DRAWN BY C.T.B.

STORMWATER MANAGEMENT PLAN - FACILITY #9

ORCHARD MEADOWS

PARCELS D-1, D-2, D-3
SITE DEVELOPMENT PLAN
ZONING R-A-15, TAX MAP NO. 17, GRID NO. 23, PARCEL NO. 711
SECOND ELECTION DISTRICT — HOWARD COUNTY, MARYLAND

SEAL: STATE OF MARYLAND — RICHARD L. BAUER — No. 031089 — PROFESSIONAL ENGINEER

DRAWING NO. C-18
SHEET 18 OF 38
KCI JOB NUMBER 27-101105

SDP-11-052

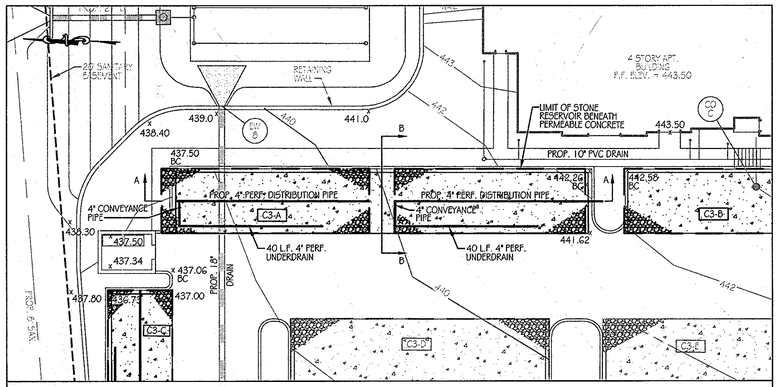

C3-A PLAN SCALE: 1" = 20'

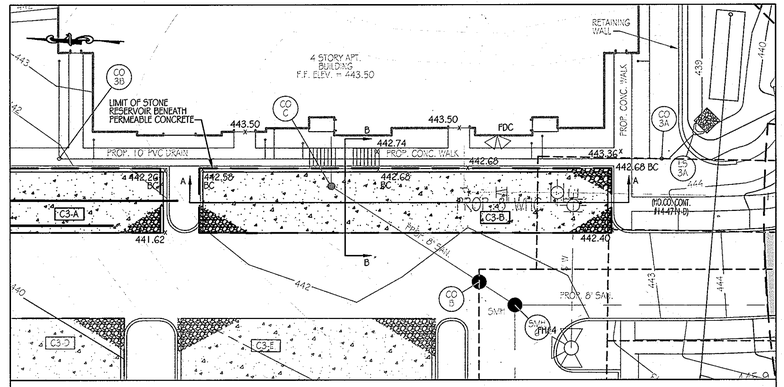

C3-B PLAN SCALE: 1" = 20'

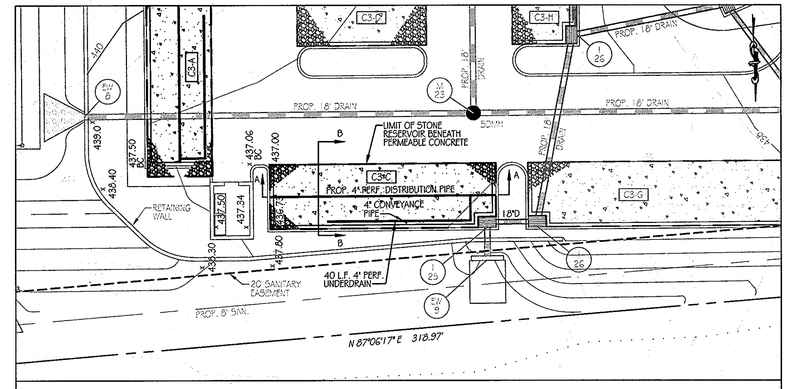

C3-C PLAN SCALE: 1" = 20'

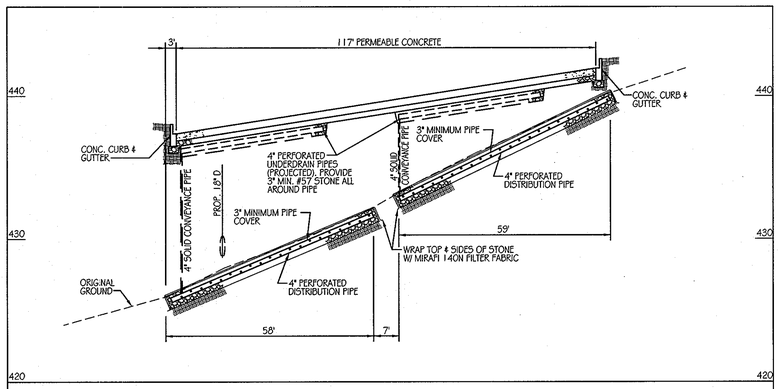

C3-A SECTION A-A SCALE: 1" = 20'

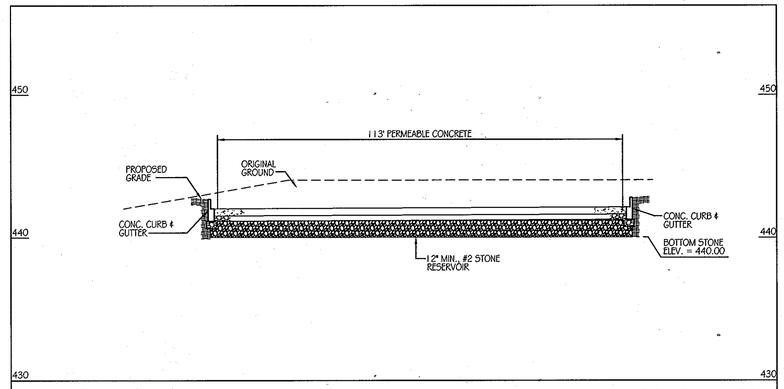

C3-B SECTION A-A SCALE: 1" = 20'

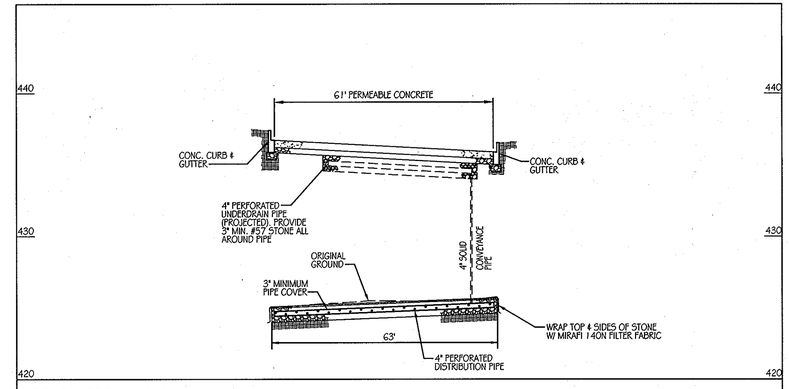

C3-C SECTION A-A SCALE: 1" = 20'

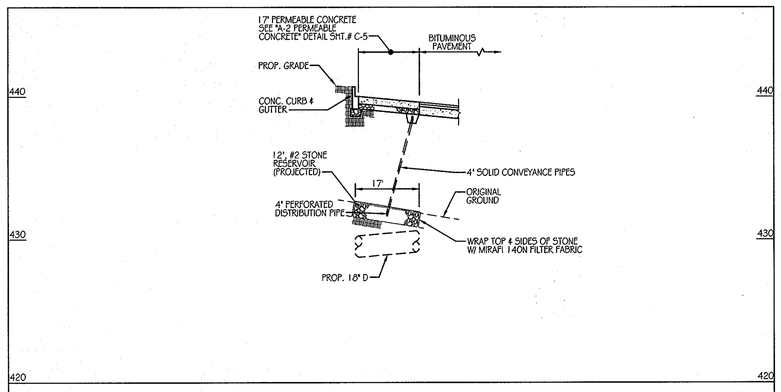

C3-A SECTION B-B SCALE: 1" = 20'

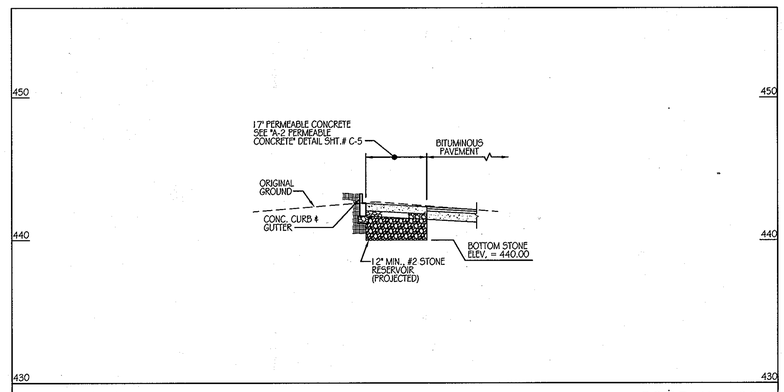

C3-B SECTION B-B SCALE: 1" = 20'

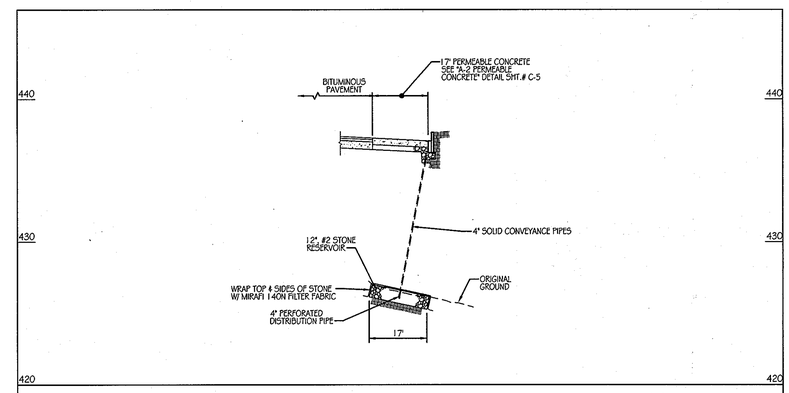

C3-C SECTION B-B SCALE: 1" = 20'

GRAPHIC SCALE

20 0 5 10 20 40

1 INCH = 20 FEET

PERFORATED PIPE NOTES

SCHEDULE 40 PVC OR SDR35:
PERFORATED PIPE SHALL COMPLY WITH AASHTO M278 OR ASTM F-758 HIGHWAY UNDERDRAIN SPECIFICATIONS.

WRAP PIPE WITH 1/4" MESH (OR SMALLER) GALVANIZED HARDWARE CLOTH.

HDPE:
4" PERFORATED PIPE SHALL HAVE 3 ROWS (@120°) OF 0.12" x 0.875" SLOTS THAT PROVIDE A MINIMUM OPEN AREA OF 1 SQ.IN. PER LINEAR FOOT OF PIPE.

PIPE SHALL BE PLACED WITH PERFORATIONS DOWN.

PIPE WITH SLOTTED PERFORATIONS IS NOT REQUIRED TO BE WRAPPED WITH HARDWARE CLOTH.

LEGEND

PERMEABLE CONCRETE AREA

STONE RESERVOIR AREA

PROFESSIONAL CERTIFICATION. I HEREBY CERTIFY THAT THESE DOCUMENTS WERE PREPARED OR APPROVED BY ME AND THAT I AM DULY LICENSED PROFESSIONAL ENGINEER UNDER THE LAWS OF THE STATE OF MARYLAND. LICENSE NO. 31089 EXPIRATION DATE: 11/12/12

APPROVED: DEPARTMENT OF PLANNING AND ZONING

CHIEF-DEVELOPMENT ENGINEERING DIVISION	DATE 1/24/12
CHIEF-~~BUREAU~~ DIV. OF LAND DEVELOPMENT	DATE 2/03/12
DIRECTOR	DATE 2/3/12

KCI TECHNOLOGIES
ENGINEERS
PLANNERS
SCIENTISTS
CONSTRUCTION MANAGERS
8161 MAPLE LAWN BOULEVARD
SUITE 150
FULTON, MD 20759
TELEPHONE: (410)792-8086
FAX: (410)792-7919

OrchardDevelopment Corporation

CRP Opportunity Fund, L.P.

OWNER / DEVELOPER:
ORCHARD DEVELOPMENT CORPORATION
5032 DORSEY HALL DRIVE
ELLICOTT CITY, MD 21042
(410) 964-2334

OWNER:
WALDER BUILDING CORPORATION
3300 SONIA TRAIL
ELLICOTT CITY, MD 21043
(410)-461-2522

REVISIONS

NO.	DATE	DESCRIPTION	BY

DATE	11-18-2011
SCALE	1" = 20'
DESIGNED BY	S.V.M
DRAWN BY	C.T.B.

A-2 PERMEABLE CONCRETE AREAS C3-A, C3-B & C3-C

ORCHARD MEADOWS

PARCELS D-1, D-2, D-3
SITE DEVELOPMENT PLAN
ZONING R-A-15, TAX MAP NO. 17, GRID NO. 23, PARCEL NO. 711

SECOND ELECTION DISTRICT HOWARD COUNTY, MARYLAND

SEAL: STATE OF MARYLAND — RICHARD L. BEVITT — No. 031089 — PROFESSIONAL ENGINEER

DRAWING NO. C-19

SHEET 19 OF 38

KCI JOB NUMBER 27-101105

SDP-11-052

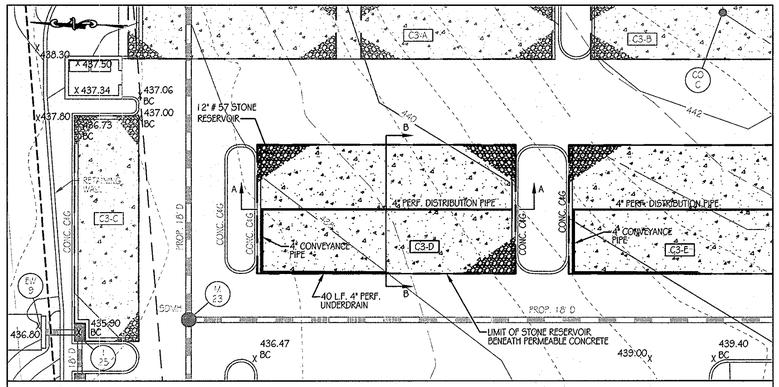

C3-D PLAN SCALE: 1" = 20'

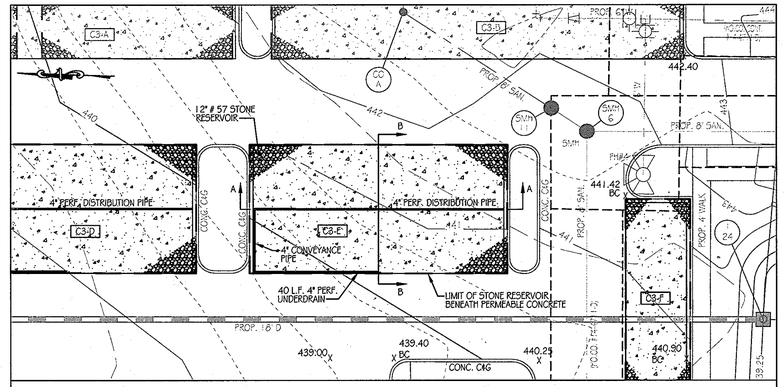

C3-E PLAN SCALE: 1" = 20'

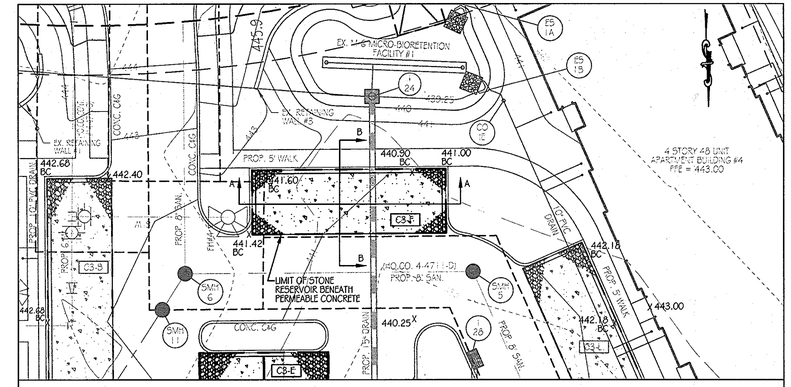

C3-F PLAN SCALE: 1" = 20'

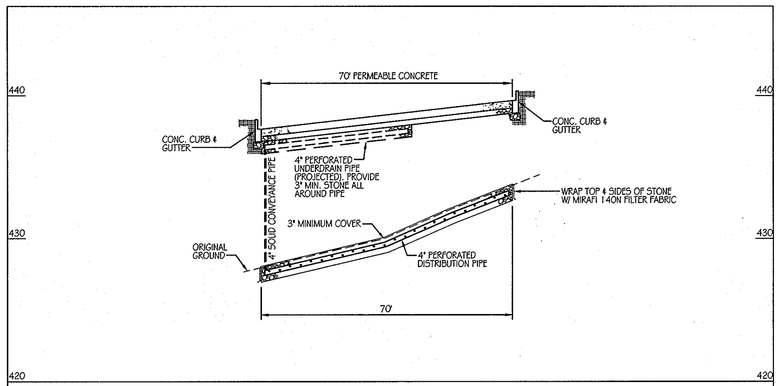

C3-D SECTION A-A SCALE: 1" = 20'

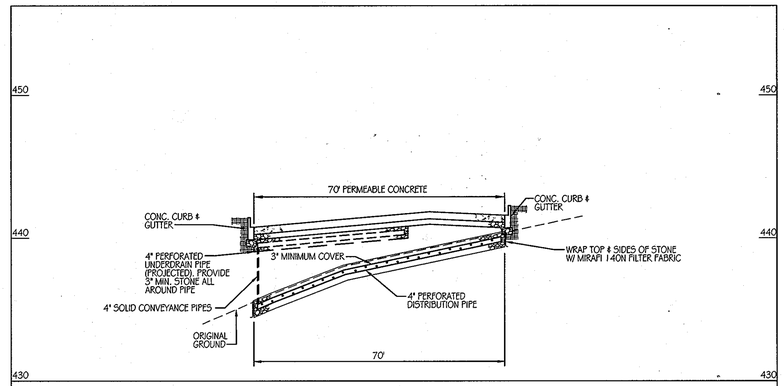

C3-E SECTION A-A SCALE: 1" = 20'

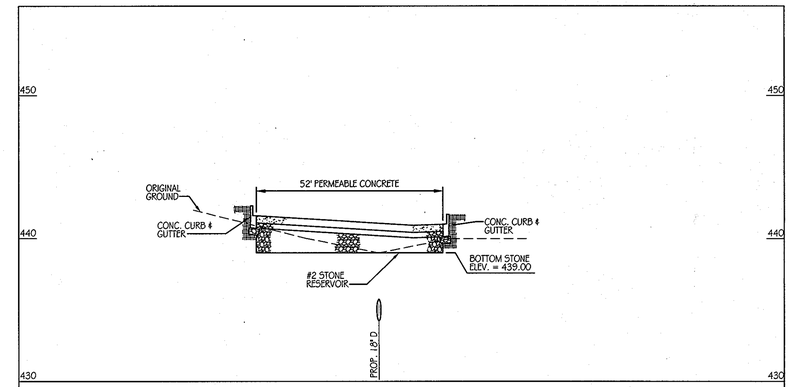

C3-F SECTION A-A SCALE: 1" = 20'

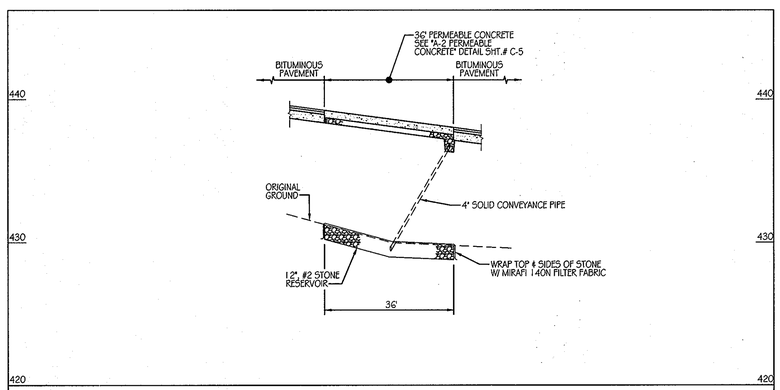

C3-D SECTION B-B SCALE: 1" = 20'

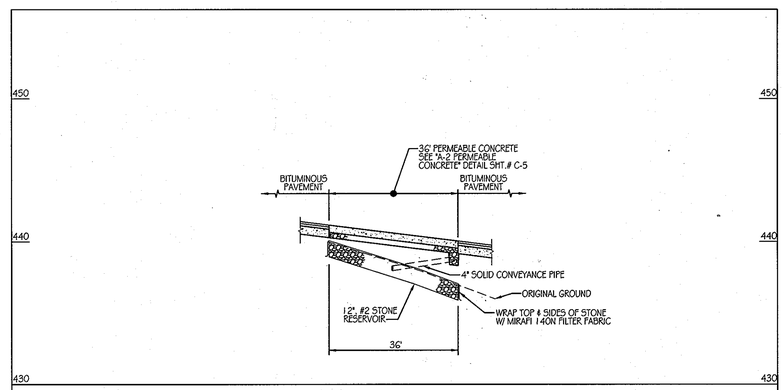

C3-E SECTION B-B SCALE: 1" = 20'

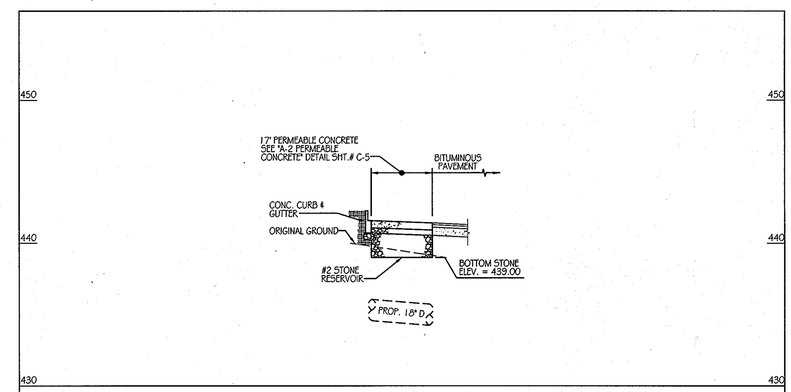

C3-F SECTION B-B SCALE: 1" = 20'

GRAPHIC SCALE

20 0 5 10 20 40

1 INCH = 20 FEET

PERFORATED PIPE NOTES

SCHEDULE 40 PVC OR SDR35:
PERFORATED PIPE SHALL COMPLY WITH AASHTO M278 OR ASTM F-758 HIGHWAY UNDERDRAIN SPECIFICATIONS.

WRAP PIPE WITH 1/4" MESH (OR SMALLER) GALVANIZED HARDWARE CLOTH.

HDPE:
4" PERFORATED PIPE SHALL HAVE 3 ROWS (@120°) OF 0.12" x 0.875" SLOTS THAT PROVIDE A MINIMUM OPEN AREA OF 1 SQ.IN. PER LINEAR FOOT OF PIPE.

PIPE SHALL BE PLACED WITH PERFORATIONS DOWN.

PIPE WITH SLOTTED PERFORATIONS IS NOT REQUIRED TO BE WRAPPED WITH HARDWARE CLOTH.

LEGEND

PERMEABLE CONCRETE AREA

STONE RESERVOIR AREA

PROFESSIONAL CERTIFICATION. I HEREBY CERTIFY THAT THESE DOCUMENTS WERE PREPARED OR APPROVED BY ME AND THAT I AM DULY LICENSED PROFESSIONAL ENGINEER UNDER THE LAWS OF THE STATE OF MARYLAND, LICENSE NO. 31069 EXPIRATION DATE: 11/12/12

APPROVED: DEPARTMENT OF PLANNING AND ZONING

CHIEF-DEVELOPMENT ENGINEERING DIVISION	DATE 1/24/12
CHIEF-DIVISION OF LAND DEVELOPMENT	DATE 2/02/12
DIRECTOR	DATE 2/3/12

KCI TECHNOLOGIES
ENGINEERS
PLANNERS
SCIENTISTS
CONSTRUCTION MANAGERS
8161 MAPLE LAWN BOULEVARD
SUITE 150
FULTON, MD 20759
TELEPHONE: (410)792-8086
FAX: (410)792-7419

OrchardDevelopment Corporation

CRP Opportunity Fund, L.P.

OWNER / DEVELOPER:
ORCHARD DEVELOPMENT CORPORATION
5032 DORSEY HALL DRIVE
ELLICOTT CITY, MD 21042
(410) 964-2334

OWNER:
WILDER BUILDING CORPORATION
3300 SOWA TRAIL
ELLICOTT CITY, MD 21043
(410)-461-2522

REVISIONS			
NO.	DATE	DESCRIPTION	BY

DATE 11-18-2011
SCALE 1" = 20'
DESIGNED BY S.V.M
DRAWN BY C.T.B.

A-2 PERMEABLE CONCRETE AREAS C3-D, C3-E, & C3-F

ORCHARD MEADOWS
PARCELS D-1, D-2, D-3
SITE DEVELOPMENT PLAN
ZONING R-A-15, TAX MAP NO. 17, GRID NO. 23, PARCEL NO. 711

SECOND ELECTION DISTRICT HOWARD COUNTY, MARYLAND

SEAL: STATE OF MARYLAND RICHARD L. BELL No. 031069 PROFESSIONAL ENGINEER

DRAWING NO. C - 20

SHEET 20 OF 38

KCI JOB NUMBER 27-101105

SDP-11-052

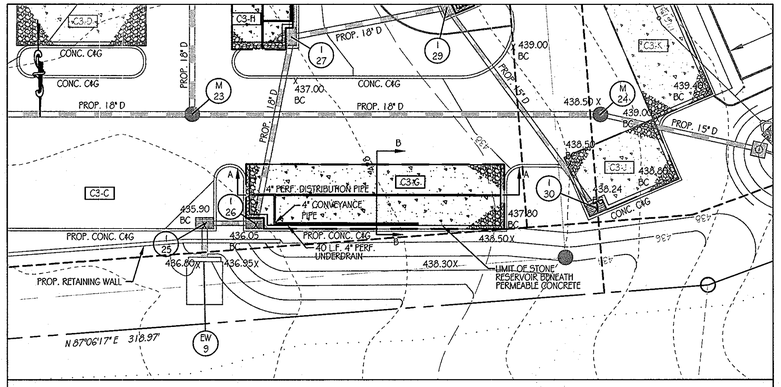

C3-G PLAN SCALE: 1" = 20'

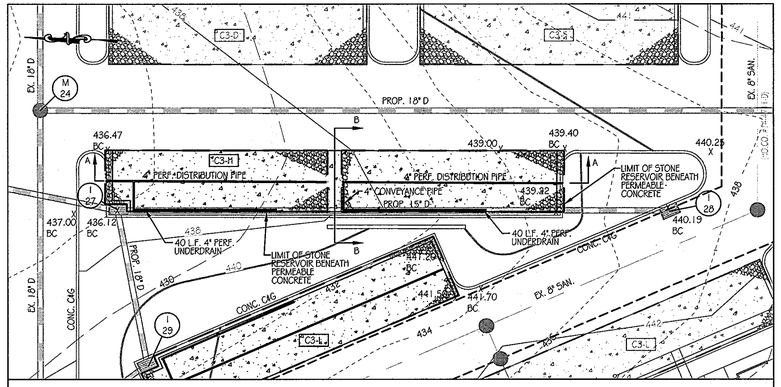

C3-H PLAN SCALE: 1" = 20'

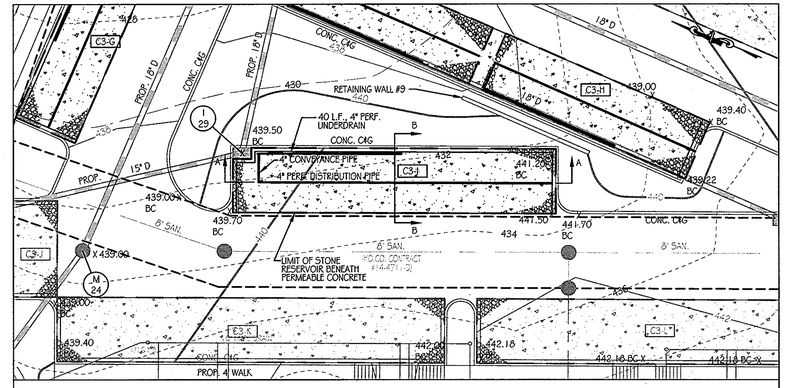

C3-I PLAN SCALE: 1" = 20'

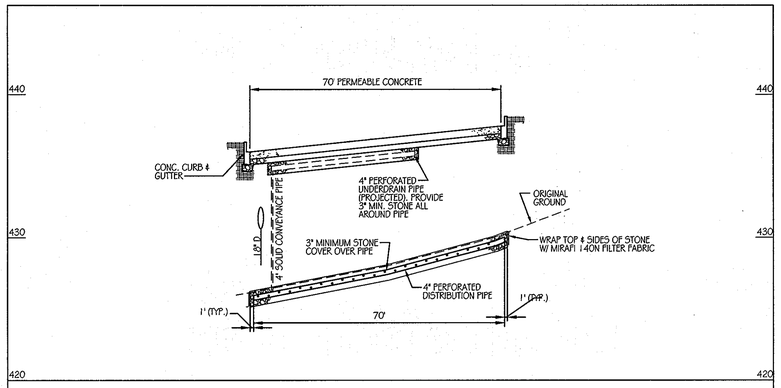

C3-G SECTION A-A SCALE: 1" = 20'

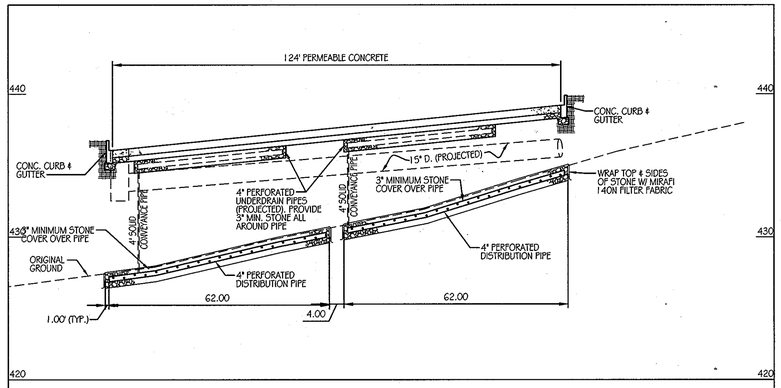

C3-H SECTION A-A SCALE: 1" = 20'

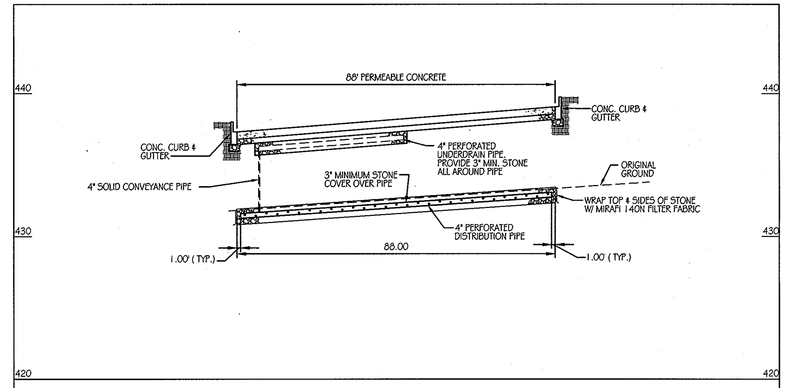

C3-I SECTION A-A SCALE: 1" = 20'

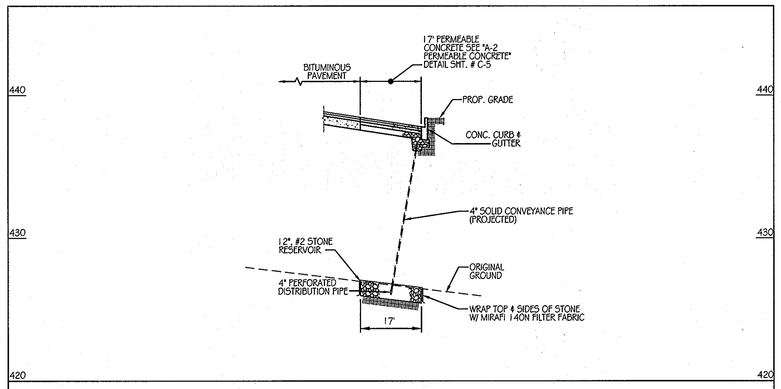

C3-G SECTION B-B SCALE: 1" = 20'

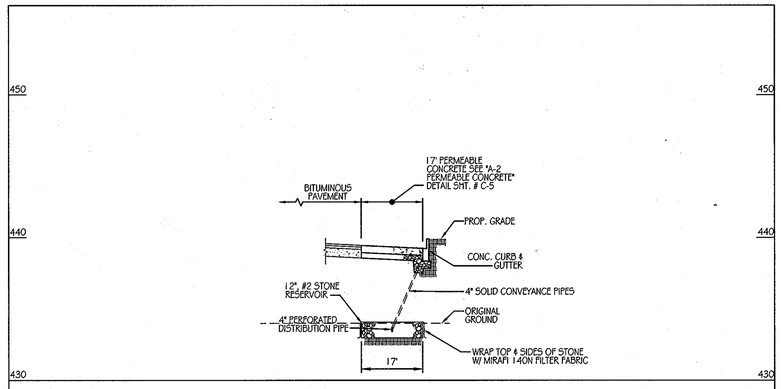

C3-H SECTION B-B SCALE: 1" = 20'

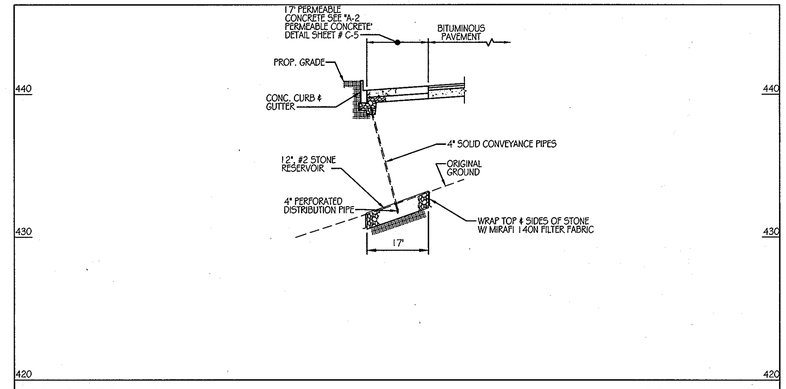

C3-I SECTION B-B SCALE: 1" = 20'

LEGEND

PERMEABLE CONCRETE AREA

STONE RESERVOIR AREA

GRAPHIC SCALE

20 0 5 10 20 40

1 INCH = 20 FEET

PERFORATED PIPE NOTES

SCHEDULE 40 PVC OR SDR35:
PERFORATED PIPE SHALL COMPLY WITH AASHTO M278 OR ASTM F-758 HIGHWAY UNDERDRAIN SPECIFICATIONS.

WRAP PIPE WITH 1/4" MESH (OR SMALLER) GALVANIZED HARDWARE CLOTH.

HDPE:
4" PERFORATED PIPE SHALL HAVE 3 ROWS (@120°) OF 0.12" x 0.875" SLOTS THAT PROVIDE A MINIMUM OPEN AREA OF 1 SQ.IN. PER LINEAR FOOT OF PIPE.

PIPE SHALL BE PLACED WITH PERFORATIONS DOWN.

PIPE WITH SLOTTED PERFORATIONS IS NOT REQUIRED TO BE WRAPPED WITH HARDWARE CLOTH.

APPROVED: DEPARTMENT OF PLANNING AND ZONING

CHIEF-DEVELOPMENT ENGINEERING DIVISION	DATE 1/24/12
CHIEF-BUREAU OF LAND DEVELOPMENT DIV.	DATE 2/02/12
DIRECTOR	DATE 2/3/12

KCI TECHNOLOGIES
ENGINEERS
PLANNERS
SCIENTISTS
CONSTRUCTION MANAGERS
8161 MAPLE LAWN BOULEVARD
SUITE 150
FULTON, MD 20759
TELEPHONE: (410)792-9086
FAX: (410)792-7419

OrchardDevelopment Corporation

CRP Opportunity Fund, L.P.

OWNER / DEVELOPER:
ORCHARD DEVELOPMENT CORPORATION
5032 DORSEY HALL DRIVE
ELLICOTT CITY, MD 21042
(410) 964-2334

OWNER:
WILDER BUILDING CORPORATION
3300 SONIA TRAIL
ELLICOTT CITY, MD 21043
(410)-461-2522

REVISIONS

NO.	DATE	DESCRIPTION	BY

DATE	11-18-2011
SCALE	1" = 20'
DESIGNED BY	S.V.M
DRAWN BY	C.T.B.

PROFESSIONAL CERTIFICATION. I HEREBY CERTIFY THAT THESE DOCUMENTS WERE PREPARED OR APPROVED BY ME AND THAT I AM DULY LICENSED PROFESSIONAL ENGINEER UNDER THE LAWS OF THE STATE OF MARYLAND, LICENSE NO. 31069
EXPIRATION DATE: 11/12/12

A-2 PERMEABLE CONCRETE AREAS C3-G, C3-H & C3-I

ORCHARD MEADOWS

PARCELS D-1, D-2, D-3
SITE DEVELOPMENT PLAN
ZONING R-A-15, TAX MAP NO. 17, GRID NO. 23, PARCEL NO. 711

SECOND ELECTION DISTRICT HOWARD COUNTY, MARYLAND

SEAL: STATE OF MARYLAND RICHARD L. TAYLOR No. 031069 PROFESSIONAL ENGINEER

DRAWING NO. C-21

SHEET 21 OF 38

KCI JOB NUMBER 27-101105

SDP-11-052

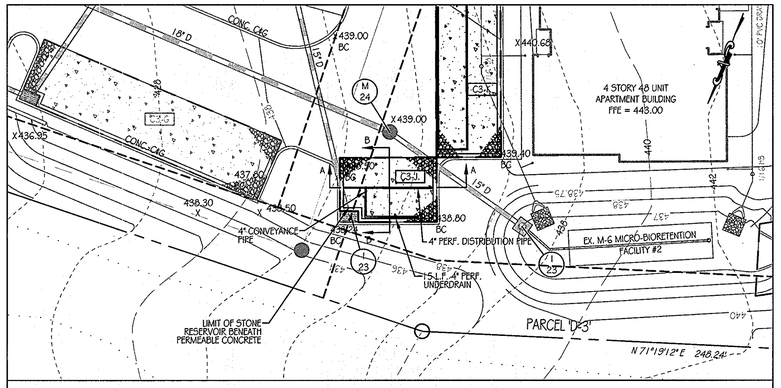

C3-J PLAN SCALE: 1" = 20'

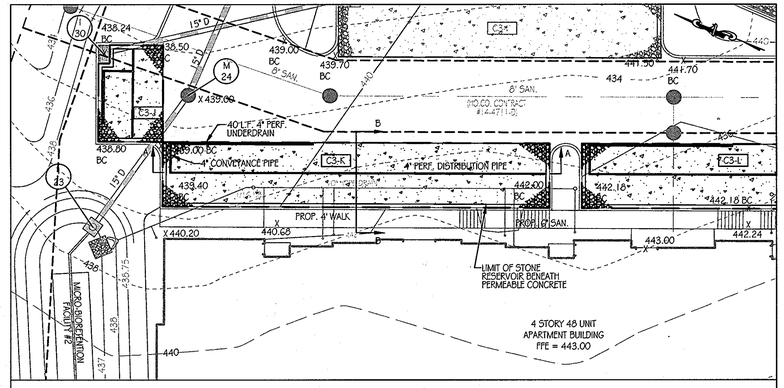

C3-K PLAN SCALE: 1" = 20'

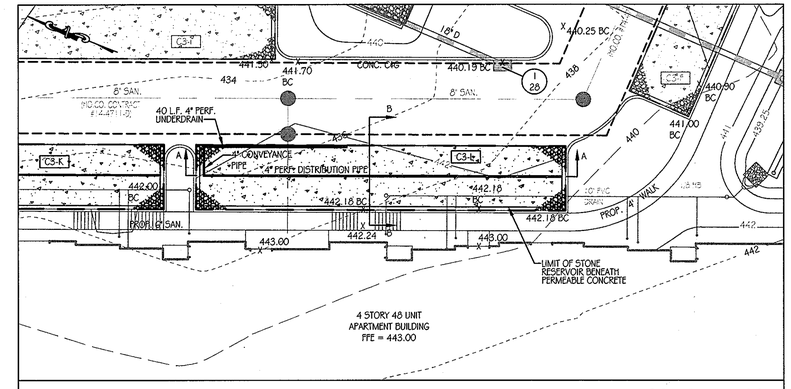

C3-L PLAN SCALE: 1" = 20'

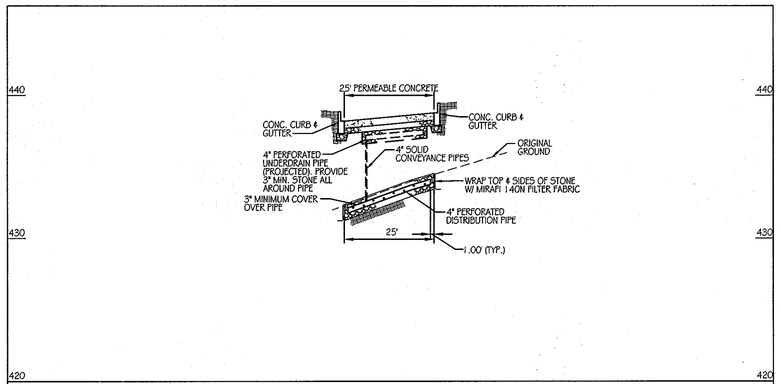

C3-J SECTION A-A SCALE: 1" = 20'

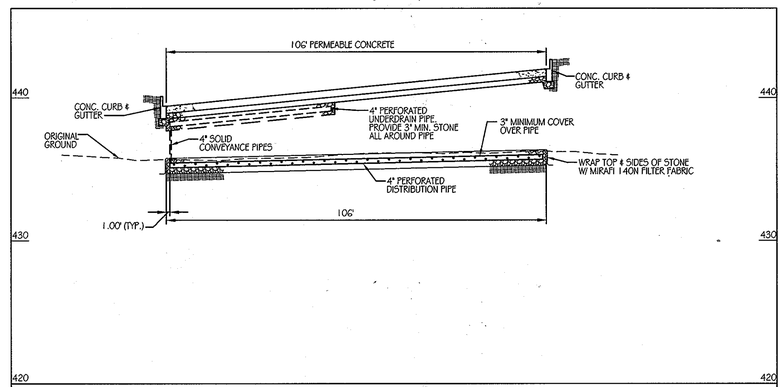

C3-K SECTION A-A SCALE: 1" = 20'

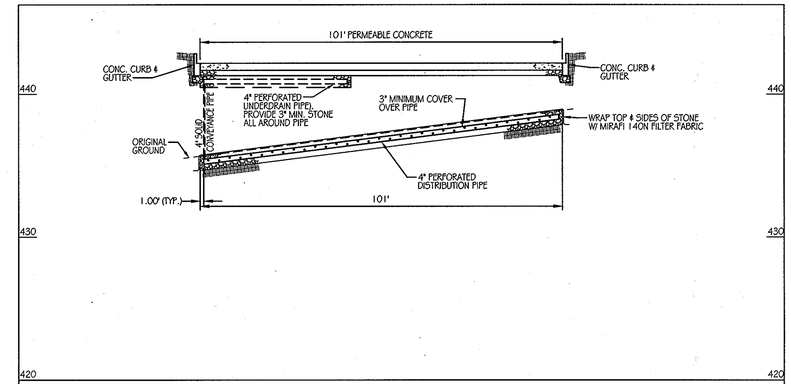

C3-L SECTION A-A SCALE: 1" = 20'

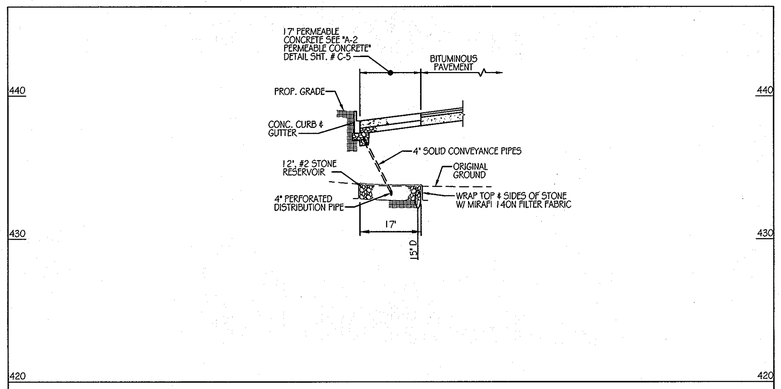

C3-J SECTION B-B SCALE: 1" = 20'

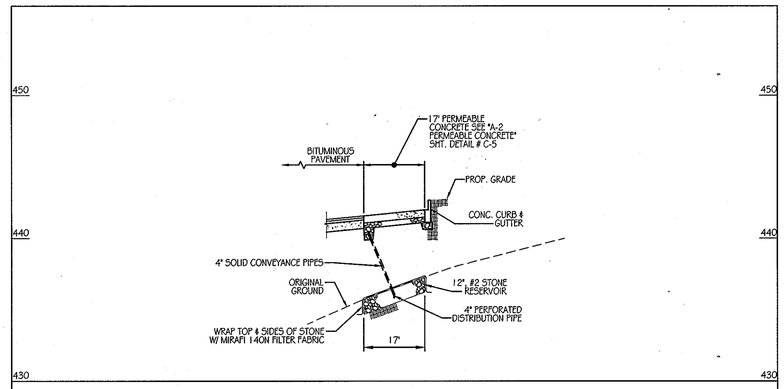

C3-K SECTION B-B SCALE: 1" = 20'

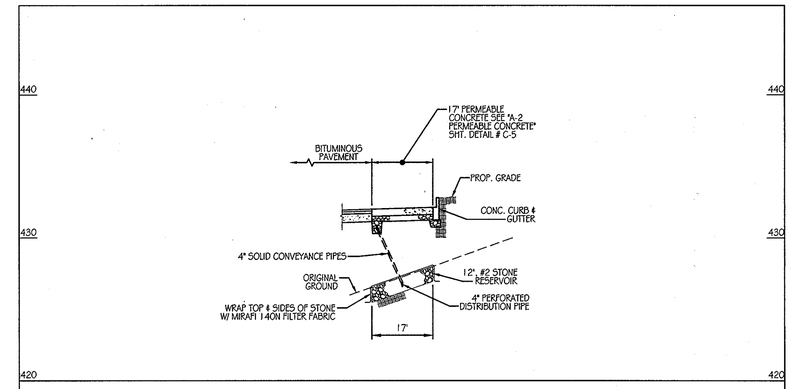

C3-L SECTION B-B SCALE: 1" = 20'

GRAPHIC SCALE

20 0 5 10 20 40

1 INCH = 20 FEET

LEGEND

PERMEABLE CONCRETE AREA

STONE RESERVOIR AREA

PERFORATED PIPE NOTES

SCHEDULE 40 PVC OR SDR35:
PERFORATED PIPE SHALL COMPLY WITH AASHTO M278 OR ASTM F-758 HIGHWAY UNDERDRAIN SPECIFICATIONS.

WRAP PIPE WITH 1/4" MESH (OR SMALLER) GALVANIZED HARDWARE CLOTH.

HDPE:
4" PERFORATED PIPE SHALL HAVE 3 ROWS (@120°) OF 0.12" x 0.875" SLOTS THAT PROVIDE A MINIMUM OPEN AREA OF 1 SQ.IN. PER LINEAR FOOT OF PIPE.

PIPE SHALL BE PLACED WITH PERFORATIONS DOWN.

PIPE WITH SLOTTED PERFORATIONS IS NOT REQUIRED TO BE WRAPPED WITH HARDWARE CLOTH.

APPROVED: DEPARTMENT OF PLANNING AND ZONING

CHIEF-DEVELOPMENT ENGINEERING DIVISION	DATE 1/24/12
CHIEF-~~BUREAU~~ DIV. OF LAND DEVELOPMENT	DATE 2/02/12
DIRECTOR	DATE 2/3/12

KCI TECHNOLOGIES
ENGINEERS
PLANNERS
SCIENTISTS
CONSTRUCTION MANAGERS
8161 MAPLE LAWN BOULEVARD
SUITE 150
FULTON, MD 20759
TELEPHONE: (410)792-9086
FAX: (410)792-7419

OrchardDevelopment Corporation

CRP Opportunity Fund, L.P.

OWNER / DEVELOPER:
ORCHARD DEVELOPMENT CORPORATION
5032 DORSEY HALL DRIVE
ELLICOTT CITY, MD 21042
(410) 964-2334

OWNER:
WILDER BUILDING CORPORATION
3300 SONIA TRAIL
ELLICOTT CITY, MD 21043
(410)-461-2522

REVISIONS

NO.	DATE	DESCRIPTION	BY

DATE 11-18-2011
SCALE 1" = 20'
DESIGNED BY S.V.M
DRAWN BY C.T.B.

A-2 PERMEABLE CONCRETE AREAS C3-J, C3-K & C3-L

ORCHARD MEADOWS

PARCELS D-1, D-2, D-3

SITE DEVELOPMENT PLAN

ZONING R-A-15, TAX MAP NO. 17, GRID NO. 23, PARCEL NO. 711

SECOND ELECTION DISTRICT HOWARD COUNTY, MARYLAND

PROFESSIONAL CERTIFICATION. I HEREBY CERTIFY THAT THESE DOCUMENTS WERE PREPARED OR APPROVED BY ME AND THAT I AM DULY LICENSED PROFESSIONAL ENGINEER UNDER THE LAWS OF THE STATE OF MARYLAND, LICENSE NO. 31069
EXPIRATION DATE: 11/12/12

SEAL: STATE OF MARYLAND RICHARD L. BLAND No. 031069 PROFESSIONAL ENGINEER 12-22-11

DRAWING NO. C - 22

SHEET 22 OF 38

KCI JOB NUMBER 27-101105

SDP-11-052

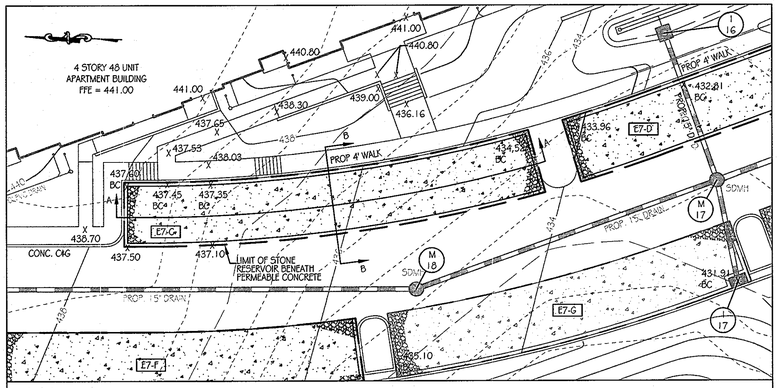

E7-C PLAN SCALE: 1" = 20'

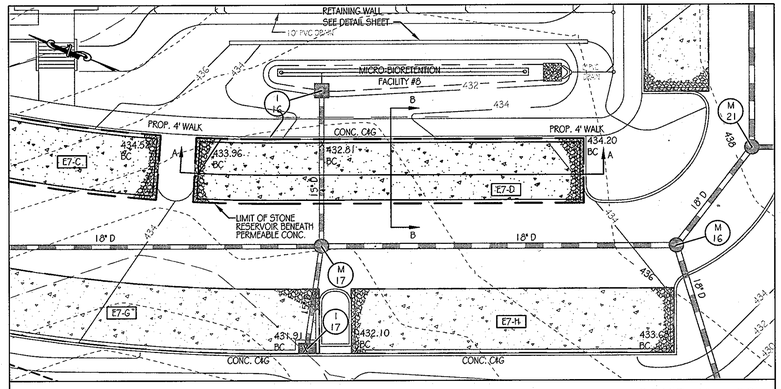

E7-D PLAN SCALE: 1" = 20'

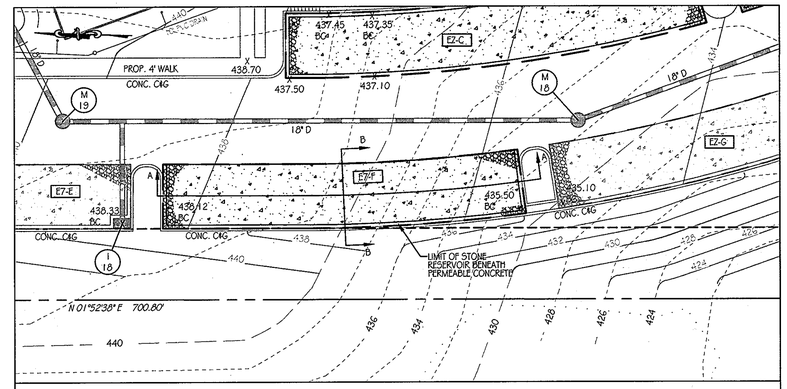

E7-F PLAN SCALE: 1" = 20'

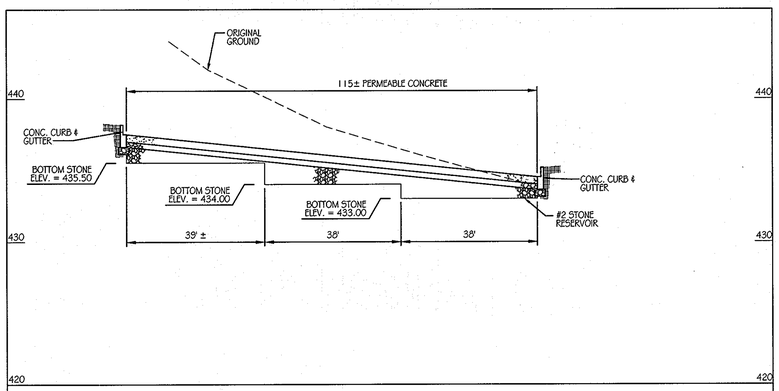

E7-C SECTION A-A SCALE: 1" = 20'

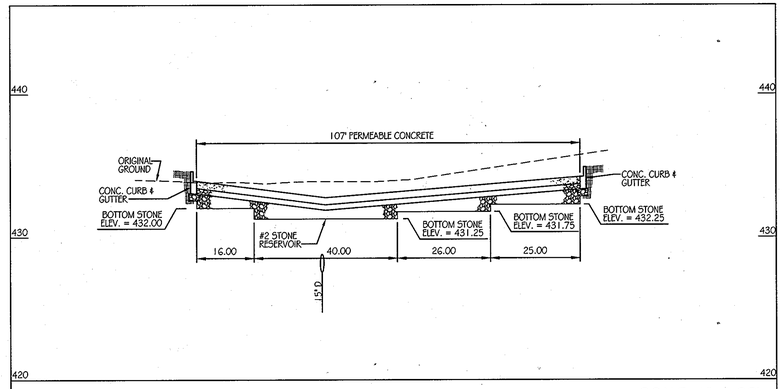

E7-D SECTION A-A SCALE: 1" = 20'

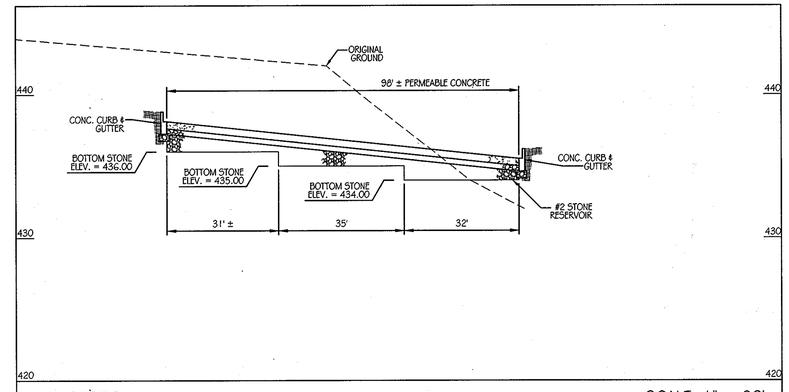

E7-F SECTION A-A SCALE: 1" = 20'

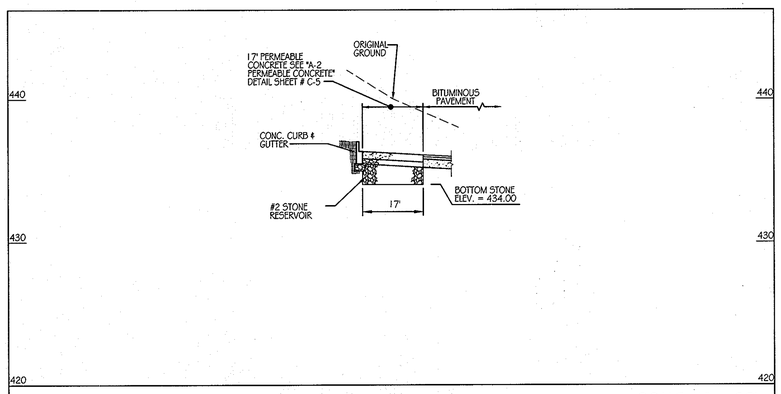

E7-C SECTION B-B SCALE: 1" = 20'

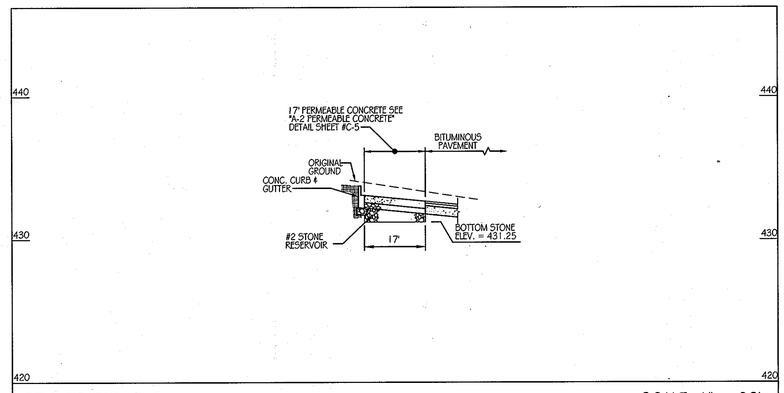

E7-D SECTION B-B SCALE: 1" = 20'

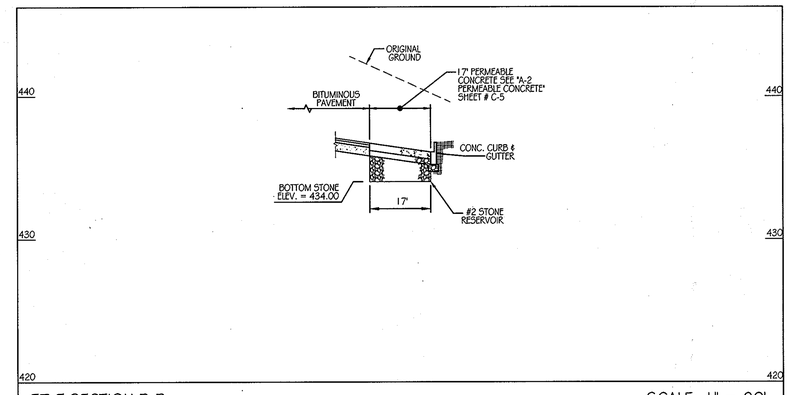

E7-F SECTION B-B SCALE: 1" = 20'

LEGEND

PERMEABLE CONCRETE AREA

STONE RESERVOIR AREA

GRAPHIC SCALE

20 0 5 10 20 40

1 INCH = 20 FEET

PERFORATED PIPE NOTES

SCHEDULE 40 PVC OR SDR35:
PERFORATED PIPE SHALL COMPLY WITH AASHTO M278 OR ASTM F-758 HIGHWAY UNDERDRAIN SPECIFICATIONS.

WRAP PIPE WITH 1/4" MESH (OR SMALLER) GALVANIZED HARDWARE CLOTH.

HDPE:
4" PERFORATED PIPE SHALL HAVE 3 ROWS (@120°) OF 0.12" x 0.875" SLOTS THAT PROVIDE A MINIMUM OPEN AREA OF 1 SQ.IN. PER LINEAR FOOT OF PIPE.

PIPE SHALL BE PLACED WITH PERFORATIONS DOWN.

PIPE WITH SLOTTED PERFORATIONS IS NOT REQUIRED TO BE WRAPPED WITH HARDWARE CLOTH.

APPROVED: DEPARTMENT OF PLANNING AND ZONING

CHIEF-DEVELOPMENT ENGINEERING DIVISION	DATE 1/24/12
CHIEF-~~BUREAU~~ DIV. OF LAND DEVELOPMENT	DATE 2/03/12
DIRECTOR	DATE 2/3/12

KCI TECHNOLOGIES
ENGINEERS
PLANNERS
SCIENTISTS
CONSTRUCTION MANAGERS
8161 MAPLE LAWN BOULEVARD
SUITE 150
FULTON, MD 20759
TELEPHONE: (410)792-8086
FAX: (410)792-7419

OrchardDevelopment Corporation

CRP Opportunity Fund, L.P.

OWNER / DEVELOPER:
ORCHARD DEVELOPMENT CORPORATION
5032 DORSEY HALL DRIVE
ELLICOTT CITY, MD 21042
(410) 964-2334

OWNER:
WILDER BUILDING CORPORATION
3300 SOWA TRAIL
ELLICOTT CITY, MD 21043
(410)-461-2522

REVISIONS

NO.	DATE	DESCRIPTION	BY

DATE 11-18-2011
SCALE 1" = 20'
DESIGNED BY S.V.M
DRAWN BY C.T.B.

A-2 PERMEABLE CONCRETE AREAS E7-C, E7-D & E7-F

ORCHARD MEADOWS

PARCELS D-1, D-2, D-3
SITE DEVELOPMENT PLAN
ZONING R-A-15, TAX MAP NO. 17, GRID NO. 23, PARCEL NO. 711
SECOND ELECTION DISTRICT HOWARD COUNTY, MARYLAND

PROFESSIONAL CERTIFICATION. I HEREBY CERTIFY THAT THESE DOCUMENTS WERE PREPARED OR APPROVED BY ME AND THAT I AM DULY LICENSED PROFESSIONAL ENGINEER UNDER THE LAWS OF THE STATE OF MARYLAND, LICENSE NO. 31069
EXPIRATION DATE: 11/12/12

SEAL: STATE OF MARYLAND RICHARD L. BUTLER No. 031069 PROFESSIONAL ENGINEER 12-2-2011

DRAWING NO. C - 23

SHEET 23 OF 38

KCI JOB NUMBER 27-101105

SDP-11-052

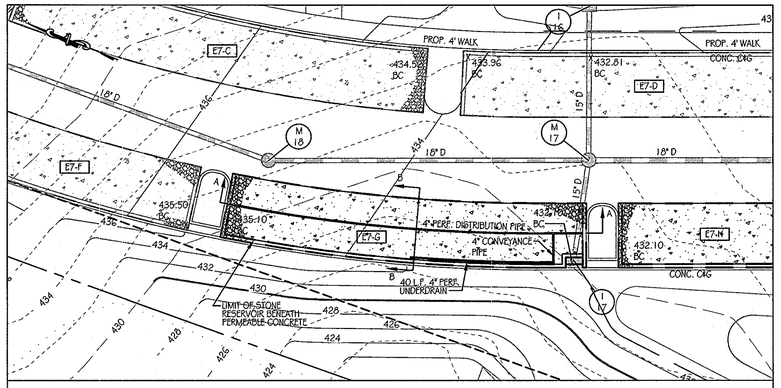

E7-G PLAN SCALE: 1" = 20'

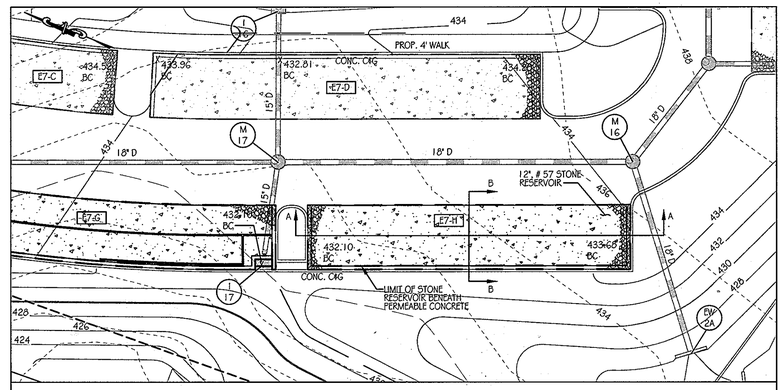

E7-H PLAN SCALE: 1" = 20'

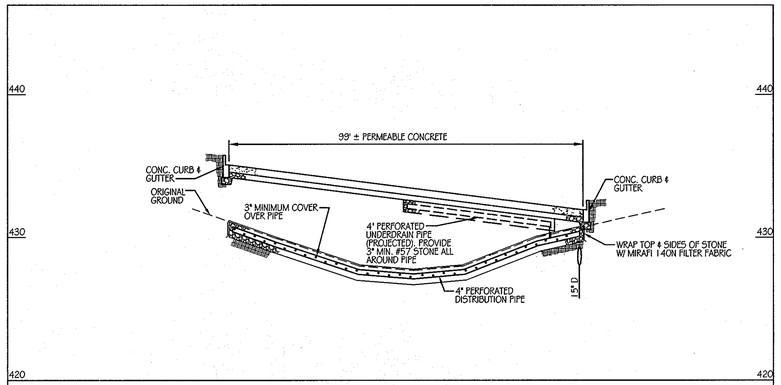

E7-G SECTION A-A SCALE: 1" = 20'

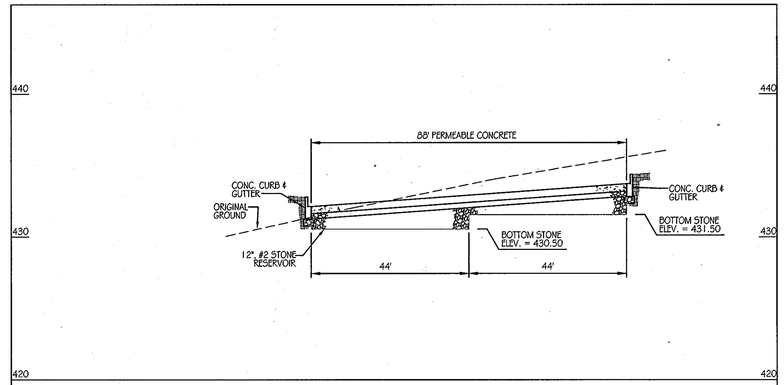

E7-H SECTION A-A SCALE: 1" = 20'

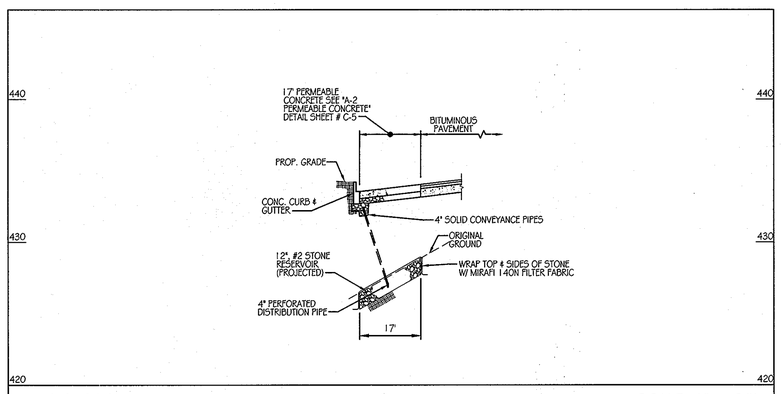

E7-G SECTION B-B SCALE: 1" = 20'

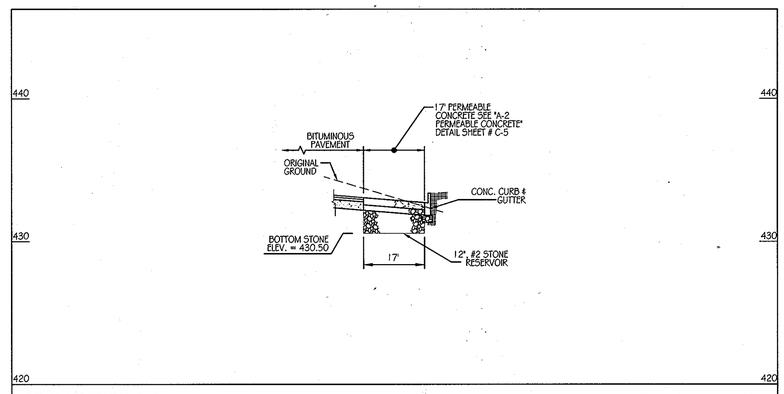

E7-H SECTION B-B SCALE: 1" = 20'

GRAPHIC SCALE

20 0 5 10 20 40

1 INCH = 20 FEET

PERFORATED PIPE NOTES

SCHEDULE 40 PVC OR SDR35:
PERFORATED PIPE SHALL COMPLY WITH AASHTO M278 OR ASTM F-758 HIGHWAY UNDERDRAIN SPECIFICATIONS.

WRAP PIPE WITH 1/4" MESH (OR SMALLER) GALVANIZED HARDWARE CLOTH.

HDPE:
4" PERFORATED PIPE SHALL HAVE 3 ROWS (@120°) OF 0.12" x 0.875" SLOTS THAT PROVIDE A MINIMUM OPEN AREA OF 1 SQ.IN. PER LINEAR FOOT OF PIPE.

PIPE SHALL BE PLACED WITH PERFORATIONS DOWN.

PIPE WITH SLOTTED PERFORATIONS IS NOT REQUIRED TO BE WRAPPED WITH HARDWARE CLOTH.

LEGEND

PERMEABLE CONCRETE AREA

STONE RESERVOIR AREA

PROFESSIONAL CERTIFICATION. I HEREBY CERTIFY THAT THESE DOCUMENTS WERE PREPARED OR APPROVED BY ME AND THAT I AM DULY LICENSED PROFESSIONAL ENGINEER UNDER THE LAWS OF THE STATE OF MARYLAND, LICENSE NO. 31089
EXPIRATION DATE: 11/12/12

APPROVED: DEPARTMENT OF PLANNING AND ZONING

CHIEF-DEVELOPMENT ENGINEERING DIVISION	DATE 1/24/12
CHIEF-DIVISION OF LAND DEVELOPMENT	DATE 2/03/12
DIRECTOR	DATE 2/3/12

KCI TECHNOLOGIES
ENGINEERS
PLANNERS
SCIENTISTS
CONSTRUCTION MANAGERS
8161 MAPLE LAWN BOULEVARD
SUITE 150
FULTON, MD 20759
TELEPHONE: (410)792-8086
FAX: (410)792-7419

Orchard Development Corporation

CRP Opportunity Fund, L.P.

OWNER / DEVELOPER:
ORCHARD DEVELOPMENT CORPORATION
5032 DORSEY HALL DRIVE
ELLICOTT CITY, MD 21042
(410) 964-2334

OWNER:
WILDER BUILDING CORPORATION
3300 SOWA TRAIL
ELLICOTT CITY, MD 21043
(410)461-2522

REVISIONS			
NO.	DATE	DESCRIPTION	BY

DATE	11-18-2011
SCALE	1" = 20'
DESIGNED BY	S.V.M
DRAWN BY	C.T.B.

A-2 PERMABLE CONCRETE AREAS E7-G & E7-H

ORCHARD MEADOWS

PARCELS D-1, D-2, D-3
SITE DEVELOPMENT PLAN
ZONING R-A-15, TAX MAP NO. 17, GRID NO. 23, PARCEL NO. 711

SECOND ELECTION DISTRICT HOWARD COUNTY, MARYLAND

SEAL: STATE OF MARYLAND — RICHARD LOVETT — No. 031089 — PROFESSIONAL ENGINEER — 11-22-11

DRAWING NO. C - 24

SHEET 24 OF 38

KCI JOB NUMBER 27-101105

SDP-11-052

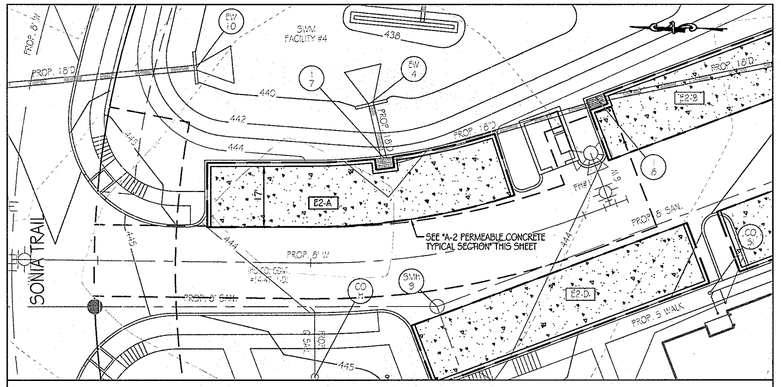

E2-A PLAN SCALE: 1" = 20'

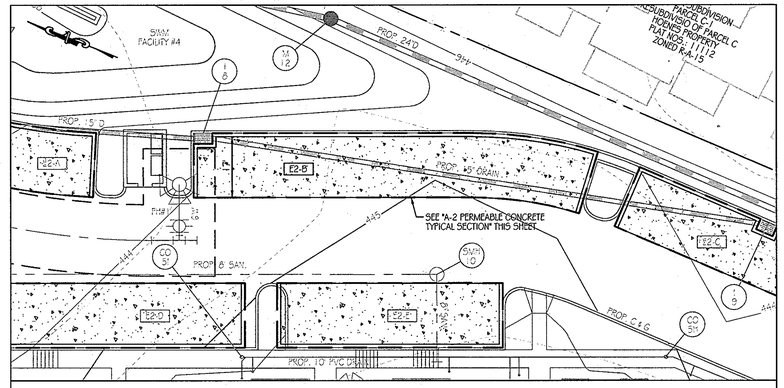

E2-B PLAN SCALE: 1" = 20'

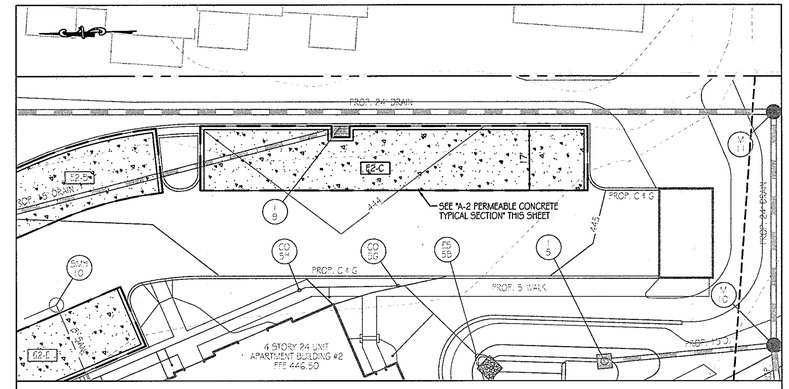

E2-C PLAN SCALE: 1" = 20'

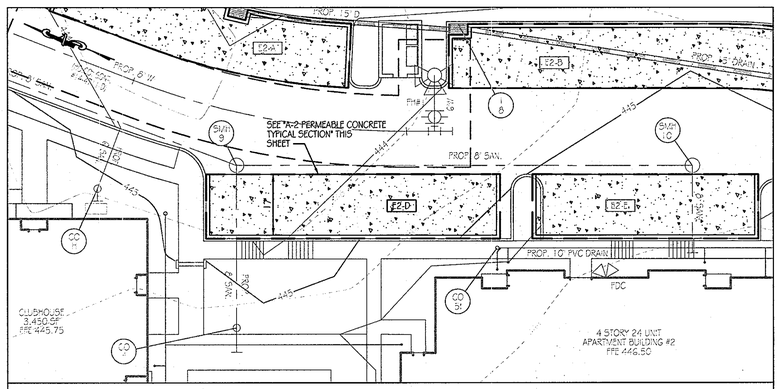

E2-D PLAN SCALE: 1" = 20'

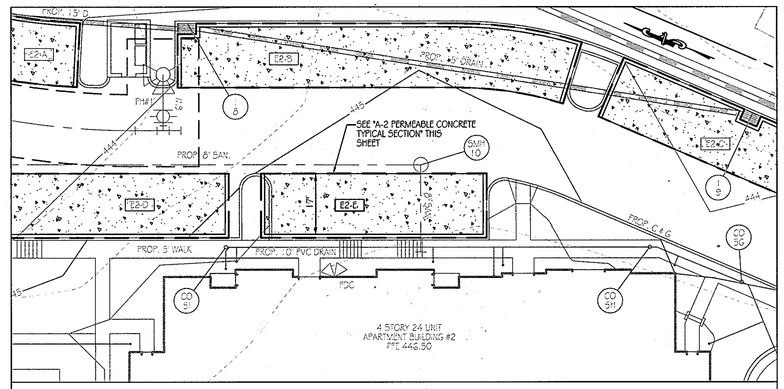

E2-E PLAN SCALE: 1" = 20'

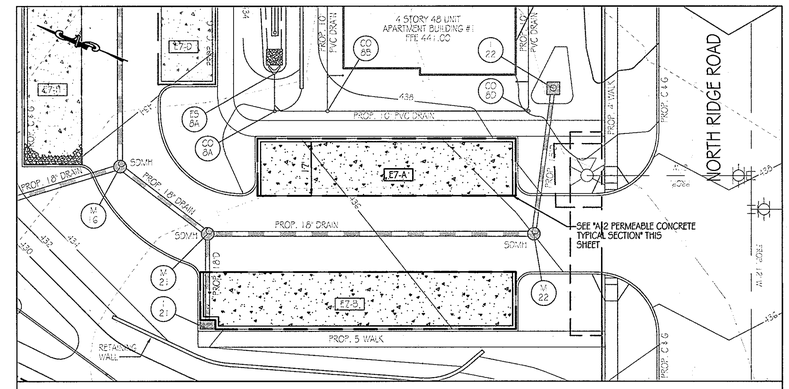

E7-A PLAN SCALE: 1" = 20'

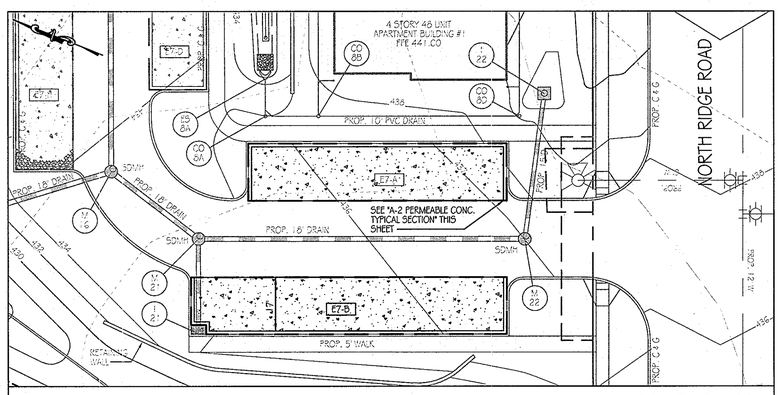

E7-B PLAN SCALE: 1" = 20'

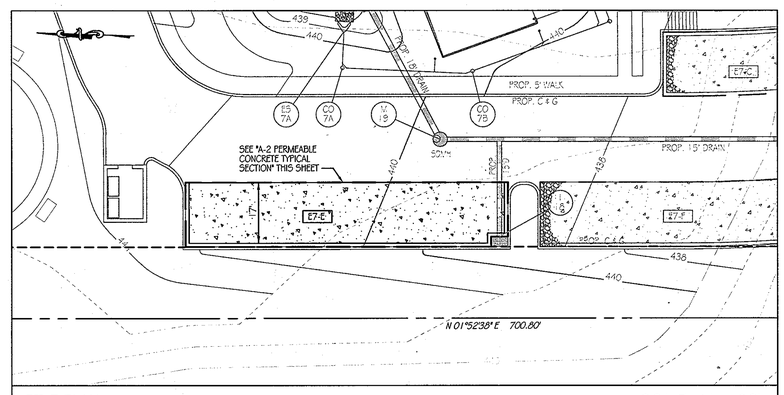

E7-E PLAN SCALE: 1" = 20'

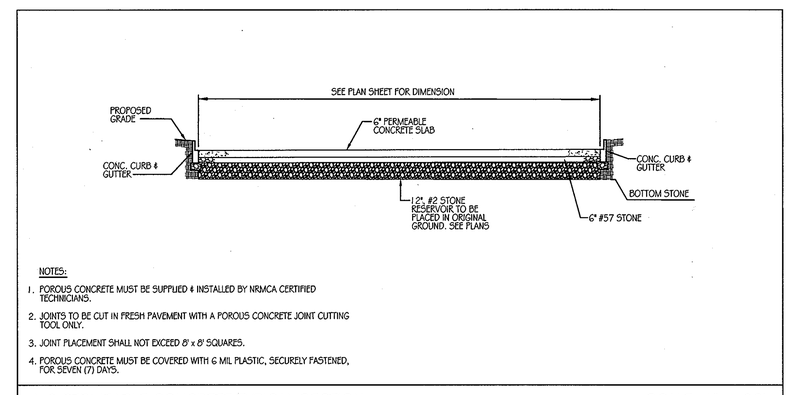

NOTES:

1. POROUS CONCRETE MUST BE SUPPLIED & INSTALLED BY NRMCA CERTIFIED TECHNICIANS.
2. JOINTS TO BE CUT IN FRESH PAVEMENT WITH A POROUS CONCRETE JOINT CUTTING TOOL ONLY.
3. JOINT PLACEMENT SHALL NOT EXCEED 8' x 8' SQUARES.
4. POROUS CONCRETE MUST BE COVERED WITH 6 MIL PLASTIC, SECURELY FASTENED, FOR SEVEN (7) DAYS.

A-2 PERMEABLE CONCRETE TYPICAL SECTION SCALE: 1" = 20'

LEGEND

PERMEABLE CONCRETE AREA

STONE RESERVOIR AREA

GRAPHIC SCALE

20 0 5 10 20 40

1 INCH = 20 FEET

PERFORATED PIPE NOTES

SCHEDULE 40 PVC OR SDR35:
PERFORATED PIPE SHALL COMPLY WITH AASHTO M278 OR ASTM F-758 HIGHWAY UNDERDRAIN SPECIFICATIONS.

WRAP PIPE WITH 1/4" MESH (OR SMALLER) GALVANIZED HARDWARE CLOTH.

HDPE:
4" PERFORATED PIPE SHALL HAVE 3 ROWS (@120°) OF 0.12" x 0.875" SLOTS THAT PROVIDE A MINIMUM OPEN AREA OF 1 SQ.IN. PER LINEAR FOOT OF PIPE.

PIPE SHALL BE PLACED WITH PERFORATIONS DOWN.

PIPE WITH SLOTTED PERFORATIONS IS NOT REQUIRED TO BE WRAPPED WITH HARDWARE CLOTH.

APPROVED: DEPARTMENT OF PLANNING AND ZONING

CHIEF-DEVELOPMENT ENGINEERING DIVISION	1/24/12 DATE
CHIEF-DIVISION OF LAND DEVELOPMENT	2/02/12 DATE
DIRECTOR	2/3/12 DATE

KCI TECHNOLOGIES

ENGINEERS
PLANNERS
SCIENTISTS
CONSTRUCTION MANAGERS

8161 MAPLE LAWN BOULEVARD
SUITE 150
FULTON, MD 20759
TELEPHONE: (410)792-8086
FAX: (410)792-7419

OrchardDevelopment Corporation

CRP Opportunity Fund, L.P.

OWNER / DEVELOPER:
ORCHARD DEVELOPMENT CORPORATION
5032 DORSEY HALL DRIVE
ELLICOTT CITY, MD 21042
(410) 964-2334

OWNER:
WILDER BUILDING CORPORATION
3300 SONTA TRAIL
ELLICOTT CITY, MD 21043
(410)-461-2522

REVISIONS			
NO.	DATE	DESCRIPTION	BY

DATE	11-16-2011
SCALE	1" = 20'
DESIGNED BY	S.V.M
DRAWN BY	C.T.B.

A-2 PERMEABLE CONCRETE DETAILS E2-A, E2-B, E2-C, E2-D, E2-E, E7-A, E7-B & E7-E

ORCHARD MEADOWS

PARCELS D-1, D-2, D-3
SITE DEVELOPMENT PLAN
ZONING R-A-15, TAX MAP NO. 17, GRID NO. 23, PARCEL NO. 711

SECOND ELECTION DISTRICT HOWARD COUNTY, MARYLAND

PROFESSIONAL CERTIFICATION. I HEREBY CERTIFY THAT THESE DOCUMENTS WERE PREPARED OR APPROVED BY ME AND THAT I AM DULY LICENSED PROFESSIONAL ENGINEER UNDER THE LAWS OF THE STATE OF MARYLAND, LICENSE NO. 31089
EXPIRATION DATE: 11/12/12

SEAL: STATE OF MARYLAND RICHARD L. PETT No. 031089 PROFESSIONAL ENGINEER

DRAWING NO. C - 25

SHEET 25 OF 38

KCI JOB NUMBER 27-101105

SDP-11-052

POND CONSTRUCTION SPECIFICATIONS

GENERAL

ALL STORMWATER MANAGEMENT FACILITIES SHALL BE CONSTRUCTED IN ACCORDANCE WITH HOWARD COUNTY "STANDARD SPECIFICATIONS AND THE N.R.C.S. MARYLAND "STANDARDS AND SPECIFICATIONS FOR PONDS" (MARYLAND CODE 378 POND - JANUARY 2000)

THESE SPECIFICATIONS ARE APPROPRIATE TO ALL PONDS SHOWN ON THESE PLANS. ALL REFERENCES TO ASTM AND AASHTO SPECIFICATIONS APPLY TO THE MOST RECENT VERSION.

SITE PREPARATION

AREAS DESIGNATED FOR BORROW AREAS, EMBANKMENT, AND STRUCTURAL WORKS SHALL BE CLEARED, GRUBBED AND STRIPPED OF TOPSOIL. ALL TREES, VEGETATION, ROOTS AND OTHER OBJECTIONABLE MATERIAL SHALL BE REMOVED. CHANNEL BANKS AND SHARP BREAKS SHALL BE SLOPED TO NO STEEPER THAT 1:1. ALL TREES SHALL BE CLEARED AND GRUBBED WITHIN 15 FEET OF THE TOE OF THE EMBANKMENT.

AREAS TO BE COVERED BY THE RESERVOIR WILL BE CLEARED OF ALL TREES, BRUSH, LOGS, FENCES, RUBBISH AND OTHER OBJECTIONABLE MATERIAL UNLESS OTHERWISE DESIGNATED ON THE PLANS. TREES, BRUSH, AND STUMPS SHALL BE CUT APPROXIMATELY LEVEL WITH THE GROUND SURFACE. FOR DRY STORMWATER MANAGEMENT PONDS, A MINIMUM OF A 25-FOOT RADIUS AROUND THE INLET STRUCTURE SHALL BE CLEARED.

ALL CLEARED AND GRUBBED MATERIAL SHALL BE DISPOSED OF OUTSIDE AND BELOW THE LIMITS OF THE DAM AND RESERVOIR AS DIRECTED BY THE OWNER OR HIS REPRESENTATIVE. WHEN SPECIFIED, A SUFFICIENT QUANTITY OF TOPSOIL WILL BE STOCKPILED IN A SUITABLE LOCATION FOR USE ON THE EMBANKMENT AND OTHER DESIGNATED AREAS.

EARTH FILL

MATERIAL - THE FILL MATERIAL SHALL BE TAKEN FROM APPROVED DESIGNATED BORROW AREAS. IT SHALL BE FREE OF ROOTS, STUMPS, WOOD, RUBBISH, STONES GREATER THAN 6", FROZEN OR OTHER OBJECTIONABLE MATERIALS. FILL MATERIAL FOR THE CENTER OF THE EMBANKMENT, AND CUTOFF TRENCH SHALL CONFORM TO UNIFIED SOIL CLASSIFICATION CH, OR CL AND MUST HAVE AT LEAST 30% PASSING THE #200 SIEVE. CONSIDERATION MAY BE GIVEN TO THE USE OF OTHER MATERIALS IN THE EMBANKMENT IF DESIGNED BY A GEOTECHNICAL ENGINEER. SUCH SPECIAL DESIGNS MUST HAVE CONSTRUCTION SUPERVISED BY A GEOTECHNICAL ENGINEER. MATERIALS USED IN THE OUTER SHELL OF THE EMBANKMENT MUST HAVE THE CAPABILITY TO SUPPORT VEGETATION OF THE QUALITY REQUIRED TO PREVENT EROSION OF THE EMBANKMENT. IF REQUIRED, CUTOFF TRENCH WILL BE SHOWN ON PLANS.

PLACEMENT - AREAS ON WHICH FILL IS TO BE PLACED SHALL BE SCARIFIED PRIOR TO PLACEMENT OF FILL. FILL MATERIALS SHALL BE PLACED IN MAXIMUM 8 INCH THICK (BEFORE COMPACTION) LAYERS WHICH ARE TO BE CONTINUOUS OVER THE ENTIRE LENGTH OF
THE FILL. THE MOST PERMEABLE BORROW MATERIAL SHALL BE PLACED IN THE DOWNSTREAM
PORTIONS OF THE EMBANKMENT. THE PRINCIPAL SPILLWAY MUST BE INSTALLED CONCURRENTLY WITH FILL PLACEMENT AND NOT EXCAVATED INTO THE EMBANKMENT.

COMPACTION - THE MOVEMENT OF THE HAULING AND SPREADING EQUIPMENT OVER THE FILL
SHALL BE CONTROLLED SO THAT THE ENTIRE SURFACE OF EACH LIFT SHALL BE TRAVERSED BY NOT LESS THAN ONE TREAD TRACK OF HEAVY EQUIPMENT OR COMPACTION SHALL BE ACHIEVED BY A MINIMUM OF FOUR COMPLETE PASSES OF A SHEEPSFOOT, RUBBER TIRED OR
VIBRATORY ROLLER. FILL MATERIAL SHALL CONTAIN SUFFICIENT MOISTURE SUCH THAT THE REQUIRED DEGREE OF COMPACTION WILL BE OBTAINED WITH THE EQUIPMENT USED. THE FILL MATERIAL SHALL CONTAIN SUFFICIENT MOISTURE SO THAT IF FORMED INTO A BALL IT WILL NOT CRUMBLE, YET NOT BE SO WET THAT WATER CAN BE SQUEEZED OUT.

THE MINIMUM REQUIRED DENSITY SHALL NOT BE LESS THE 95% OF MAXIMUM DRY DENSITY WITH A MOISTURE CONTENT WITHIN +/- 2% OF THE OPTIMUM. EACH LAYER OF FILL SHALL BE COMPACTED AS NECESSARY TO OBTAIN THAT DENSITY, AND IS TO BE CERTIFIED BY THE GEOTECHNICAL ENGINEER AT THE TIME OF CONSTRUCTION. ALL COMPACTION IS TO BE DETERMINED BY AASHTO METHOD T-99 (STANDARD PROCTOR).

CUT-OFF TRENCH - THE CUTOFF TRENCH (NOT REQUIRED UNLESS SHOWN ON PLANS) SHALL BE EXCAVATED INTO IMPERVIOUS MATERIAL ALONG OR PARALLEL TO THE CENTERLINE OF THE EMBANKMENT AS SHOWN ON THE PLANS.THE EQUIPMENT USED FOR EXCAVATION, WITH THE MINIMUM WIDTH BEING FOUR FEET, SHALL GOVERN THE BOTTOM WIDTH OF THE TRENCH. THE DEPTH SHALL BE AT LEAST FOUR FEET BELOW EXISTING GRADE OR AS SHOWN ON THE PLANS. THE SIDE SLOPES OF THE TRENCH SHALL BE 1 TO 1 OR FLATTER. THE BACKFILL SHALL BE COMPACTED WITH CONSTRUCTION EQUIPMENT, ROLLERS, OR HAND TAMPERS TO ASSURE MAXIMUM DENSITY AND MINIMUM PERMEABILITY.

EMBANKMENT CORE - THE CORE (NOT REQUIRED UNLESS SHOWN ON PLANS) SHALL BE PARALLEL TO THE CENTERLINE OF THE EMBANKMENTS SHOWN ON THE PLANS. THE TOP WIDTH OF THE CORE SHALL BE A MINIMUM OF FOUR FEET. THE HEIGHT SHALL EXTEND UP TO AT LEAST THE 10 YEAR WATER ELEVATION SHOWN ON THE PLANS. THE SIDE SLOPES SHALL BE 1 TO 1 OR FLATTER. THE CORE SHALL BE COMPACTED WITH CONSTRUCTION EQUIPMENT, ROLLERS, OR HAND TAMPERS TO ASSURE MAXIMUM DENSITY AND MINIMUM PERMEABILITY. IN ADDITION, THE CORE SHALL BE PLACED CONCURRENTLY WITH THE OUTER SHELL OF THE EMBANKMENT.

CORE DAM / TRENCH MATERIAL SHALL BE 'CL', 'SC', 'CH' OR 'GC' ONLY. CONTRACTOR SHALL ASSUME CORE DAM / TRENCH MATERIAL IS NOT AVAILABLE ON-SITE & MUST BE OBTAINED FROM AN OFF-SITE LOCATION.

STRUCTURE BACKFILL

BACKFILL ADJACENT TO PIPES OR STRUCTURES SHALL BE OF THE TYPE AND QUALITY CONFORMING TO THAT SPECIFIED FOR THE ADJOINING FILL MATERIAL. THE FILL SHALL BE PLACED IN HORIZONTAL LAYERS NOT TO EXCEED FOUR INCHES IN THICKNESS AND COMPACTED BY HAND TAMPERS OR OTHER MANUALLY DIRECTED COMPACTION EQUIPMENT. THE MATERIAL NEEDS TO FILL COMPLETELY ALL SPACES UNDER AND ADJACENT TO THE PIPE. AT NO TIME DURING THE BACKFILLING FOUR FEET, MEASURED HORIZONTALLY, TO ANY PART OF A STRUCTURE. UNDER NO STRUCTURE OR PIPE. UNLESS THERE IS A COMPACTED FILL OF 24" OR GRATER OVER THE STRUCTURE OR PIPE.

STRUCTURE BACKFILL MAY BE FLOWABLE FILL MEETING THE REQUIREMENTS OF MARYLAND DEPARTMENT OF TRANSPORTATION, STATE HIGHWAY ADMINISTRATION MODIFIED. THE MIXTURE SHALL HAVE A 100-200 PSI; 28 DAY UNCONFINED COMPRESSIVE STRENGTH. THE FLOWABLE FILL SHALL HAVE A MINIMUM PH OF 4.0 AND A MINIMUM RESISTIVELY OF 2,000 OHM-CM. MATERIAL SHALL BE PLACED SUCH THAT A MINIMUM OF 6" (MEASURED PERPENDICULAR TO THE OUTSIDE OF THE PIPE) OF FLOWABLE FILL SHALL BE UNDER (BEDDING), OVER AND, ON THE SIDES OF THE PIPE. IT ONLY NEEDS TO EXTEND UP TO THE SPRING LINE FOR RIGID CONDUITS. AVERAGE SLUMP OF THE FILL SHALL BE 7" TO ASSURE FLOWABILITY OF THE MATERIAL. ADEQUATE MEASURES SHALL BE TAKEN (SAND BAGS, ETC.) TO PREVENT FLOATING THE PIPE WHEN USING FLOWABLE FILL. ALL METAL PIPE SHALL BE BITUMINOUS COATED. ANY ADJOINING SOIL FILL SHALL BE PLACED IN HORIZONTAL LAYERS NOT TO EXCEED FOUR INCHES IN THICKNESS AND COMPACTED BY HAND TAMPERS OR OTHER MANUALLY DIRECTED COMPACTION EQUIPMENT. THE MATERIAL SHALL COMPLETELY FILL ALL VOIDS ADJACENT TO THE FLOWABLE FILL ZONE. AT NO TIME DURING THE BACKFILLING OPERATION SHALL DRIVEN EQUIPMENT BE ALLOWED TO OPERATE CLOSER THAN FOUR FEET, MEASURED HORIZONTALLY, TO ANY PART OF A STRUCTURE. UNDER NO CIRCUMSTANCES SHALL EQUIPMENT BE DRIVEN OVER ANY PART OF A STRUCTURE OR PIPE UNLESS THERE IS A COMPACTED FILL OF 24" OR GREATER OVER THE STRUCTURE OR PIPE. BACKFILL MATERIAL OUTSIDE THE STRUCTURAL BACKFILL (FLOWABLE FILL) ZONE SHALL BE OF THE TYPE AND QUALITY CONFORMING TO THAT SPECIFIED FOR THE CORE OF THE EMBANKMENT OR OTHER EMBANKMENT MATERIALS.

REMOVAL AND REPLACEMENT OF DEFECTIVE FILL

FILL PLACED AT DENSITIES LOWER THAN SPECIFIED MINIMUM DENSITY OR AT MOISTURE CONTENTS OUTSIDE THE SPECIFIED ACCEPTABLE RANGE OF MOISTURE CONTENT OR OTHERWISE NOT CONFORMING TO THE REQUIREMENTS OF THE SPECIFICATIONS SHALL BE REWORKED TO MEET THE REQUIREMENTS OR REMOVED AND REPLACED BY ACCEPTABLE FILL. THE BOTTOMS OF SUCH EXCAVATIONS SHALL BE FINISHED FLAT OR GENTLY CURVING AND AT THE SIDES OF SUCH EXCAVATIONSTHE ADJACENT SOUND FILL SHALL BE TRIMED TO A SLOPE NOT STEEPER THAN 3 FEET HORIZONTALLY TO 1 FOOT VERTICALLY EXTENDING FROM THE BOTTOM OF THE EXCAVATION TO THE FILL SURFACE.

PIPE CONDUITS

ALL PIPES SHALL BE CIRCULAR IN CROSS SECTION.

ALL PERFORATED PIPES SHALL HAVE A MINIMUM OF 1 1/2 SQUARE INCHES OF OPENING PER LINEAR FOOT OF PIPE.

REINFORCED CONCRETE PIPE

ALL OF THE FOLLOWING CRITERIA SHALL APPLY FOR REINFORCED CONCRETE PIPE.

1. MATERIALS - REINFORCED CONCRETE PIPE SHALL HAVE BELL AND SPIGOT JOINTS WITH RUBBER GASKETS AND SHALL EQUAL OR EXCEED ASTM C-361.

2. BEDDING - REINFORCED CONCRETE PIPE CONDUITS SHALL BE LAID IN A CONCRETE BEDDING/CRADLE IF NOTED ON PLANS. THIS BEDDING/CRADLE SHALL CONSIST OF HIGH SLUMP CONCRETE PLACED UNDER THE PIPE AND UP THE SIDES OF THE PIPE AT LEAST 50% OF ITS OUTSIDE DIAMETER WITH A MINIMUM THICKNESS OF 6 INCHES. WHERE A CONCRETE CRADLE IS NOT NEEDED FOR STRUCTURAL REASONS, FLOWABLE FILL MAY BE USED AS DESCRIBED IN THE "STRUCTURE BACKFILL" SECTION OF THIS STANDARD. GRAVEL BEDDING IS NOT PERMITTED.

3. LAYING PIPE - BELL AND SPIGOT PIPE SHALL BE PLACED WITH THE BELL END UPSTREAM. JOINTS SHALL BE MADE IN ACCORDANCE WITH RECOMMENDATIONS OF THE MANUFACTURER OF THE MATERIAL. AFTER THE JOINTS ARE SEALED FOR THE ENTIRE LINE, THE BEDDING SHALL BE PLACED SO THAT ALL SPACES UNDER THE PIPE ARE FILLED. CARE SHALL BE EXERCISED TO PREVENT ANY DEVIATION FROM THE ORIGINAL LINE AND GRADE OF THE PIPE. THE FIRST JOINT MUST BE LOCATED WITHIN 4 FEET FROM THE RISER.

4. BACKFILLING SHALL CONFORM TO "STRUCTURE BACKFILL".

5. CONNECTIONS - ALL CONNECTIONS (TO ANTI-SEEP COLLARS, RISER, ETC.) SHALL BE WATER TIGHT.

6. OTHER DETAILS (ANTI-SEEP COLLARS, VALVES, ETC.) SHALL BE AS SHOWN ON THE PLANS.

PLASTIC PIPE - THE FOLLOWING CRITERIA SHALL APPLY FOR PLASTIC PIPE:

1. MATERIAL - PVC PIPE SHALL BE PVC-1120 OR PVC-1220 CONFORMING TO ASTM D-1785 OR ASTM D-2241. CORRUGATED HIGH DENSITY POLYETHYLENE (HDPE) PIPE, COUPLINGS AND FITTINGS SHALL CONFORM TO THE FOLLOWING: 4"-10" INCH PIPE SHALL MEET THE REQUIREMENTS OF AASHTO M252 TYPE S, AND 12" THROUGH 24" INCH SHALL MEET THE REQUIREMENTS OF AASHTO M294 TYPE S.

2. JOINTS AND CONNECTIONS TO ANTI-SEEP COLLARS SHALL BE COMPLETELY WATERTIGHT.

3. BEDDING - THE PIPE SHALL BE FIRMLY AND UNIFORMLY BEDDED THROUGHOUT ITS ENTIRE LENGTH. WHERE ROCK OR SOFT, SPONGY OR OTHER UNSUITABLE SOIL IS ENCOUNTERED, ALL SUCH MATERIAL SHALL BE REMOVED AND REPLACED WITH SUITABLE EARTH COMPACTED TO PROVIDE ADEQUATE SUPPORT.

4. BACKFILLING SHALL CONFORM TO "STRUCTURE BACKFILL".

5. OTHER DETAILS (ANTI-SEEP COLLARS, VALVES, ETC.) SHALL BE AS SHOWN ON THE DRAWINGS.

CONCRETE

CONCRETE SHALL MEET THE REQUIREMENTS OF THE MARYLAND STATE HIGHWAY ADMINISTRATION (SHA) "SPECIFICATIONS FOR CONSTRUCTION AND MATERIALS", ARE THOSE DATED JANUARY, 2001;SECTION 420 AND 920, MIX NO. 3.

CAST IN PLACE CONCRETE STRUCTURES (ANTI-SEEP COLLAR)

1. SPECIFICATIONS: MARYLAND DEPARTMENT OF TRANSPORTATION, STATE HIGHWAY ADMINISTRATION STANDARD SPECIFICATIONS FOR CONSTRUCTION AND MATERIALS, LATEST EDITION.

AASHTO STANDARD SPECIFICATIONS FOR HIGHWAY BRIDGES, LATEST EDITION, FOR DESIGN. CONCRETE DESIGN BY THE "SERVICE LOAD DESIGN METHOD".

2. CONCRETE: SHALL MEET THE REQUIREMENTS OF THE MARYLAND DEPARTMENT OF TRANSPORTATION, STATE HIGHWAY ADMINISTRATION STANDARD SPECIFICATIONS FOR CONSTRUCTION AND MATERIALS, SECTION 420 AND 920, MIX NO. 3.

3. CONTRACTOR MAY ADD COLOR MIX (IF SPECIFIED ON PLAN) AT PLANT IN ACCORDANCE WITH MANUFACTURERS RECOMMENDATION "C-12 MESA BEIGE" AS MANUFACTURED BY L. M. SCOFIELD COMPANY 213) 723-5285.

CONTRACTOR SHALL SUPPLY MIX DESIGN FOR APPROVAL PRIOR TO APPLICATION. LOAD AND MIX TICKETS SHALL BE SUPPLIED FOR EACH TRUCK DELIVERY. NO PARTIAL FIELD MIXES SHALL BE ALLOWED.

ALL CONCRETE SHALL ATTAIN A MINIMUM COMPRESSIVE STRENGTH OF 3,500 PSI AT 28 DAYS. DESIGN FC = 1,200 PSI.

ALL CONSTRUCTION KEYS SHALL BE 3/4" UNLESS OTHERWISE NOTED.ALL CONSTRUCTION KEYS ARE SHOWN NOMINAL SIZE.

4. REINFORCING STEEL: REINFORCING STEEL SHALL CONFORM TO ASTM A-615, GRADE 60. WHERE NOT INDICATED, BAR LAP SPLICES SHALL BE IN ACCORDANCE WITH AASHTO SPECIFICATIONS. THE MINIMUM CONCRETE COVER SHALL BE 2 INCHES UNLESS OTHERWISE NOTED. DESIGN FS = 24,000 PSI.

5. FOUNDATION: PRESUMED SOIL BEARING CAPACITY = 2,500 PSF. THE ENGINEER MUST APPROVE ALL FOUNDATIONS PRIOR TO CONCRETE PLACEMENT. IF UNSUITABLE MATERIAL IS ENCOUNTERED, THE MATERIAL SHALL BE UNDERCUT AND BACKFILLED WITH STRUCTURAL BACKFILL.

6. STRUCTURAL BACKFILL: CAST-IN-PLACE CONCRETE STRUCTURES AND PIPE SHALL BE BACKFILLED WITH MATERIAL OF THE TYPE AND QUALITY CONFORMINGTO THAT SPECIFIED FOR THE ADJOINING FILL MATERIAL. STRUCTURAL FILL SHALL BE PLACED IN LOOSE LIFTS OF APPROXIMATELY 6 INCHES, AND COMPACTED TO 95 PERCENT OF THE STANDARD PROCTOR MAXIMUM DRY DENSITY IN ACCORDANCE WITH AASHTO T=180. THE STATIC WEIGHT OF EQUIPMENT USED ADJACENT TO WALLS SHALL NOT EXCEED 3,000 POUNDS. NO BACKFILL SHALL BE PLACED AGAINST THE CAST-IN-PLACE WALLS UNTIL THE CONCRETE HAS ATTAINED THE SPECIFIED 28 DAY STRENGTH.

PRE-CAST CONCRETE STRUCTURES

SHOP DRAWINGS FOR PRE-CAST STRUCTURES MEETING ASTM REQUIREMENTS FOR PRE-CAST STRUCTURES WITH SUPPORTING STRUCTURAL COMPUTATIONS (SIGNED AND SEALED BY A MARYLAND REGISTERED PROFESSIONAL ENGINEER) MUST BE SUBMITTED TO THE ENGINEER, AND THE APPROVING AGENCY (BALTIMORE COUNTY DEPARTMENT OF ENVIRONMENTAL PROTECTION AND RESOURCE MANAGEMENT) FOR APPROVAL PRIOR TO FABRICATION.

GABIONS

ALL GABIONS SHALL BE PVC COATED WOVEN WIRE BASKETS. STONE SIZE SHALL BE 4 INCHES TO 7 INCHES (CLASS IV GABIONS).

CARE OF WATER DURING CONSTRUCTION

ALL WORK ON PERMANENT STRUCTURES SHALL BE CARRIED OUT IN AREAS FREE FROM WATER. THE CONTRACTOR SHALL CONSTRUCT AND MAINTAIN ALL TEMPORARY DIKES, LEVEES, COFFERDAMS, DRAINAGE CHANNELS, AND STREAM DIVERSIONS NECESSARY TO PROTECT THE AREAS TO BE OCCUPIED BY THE PERMANENT WORKS. THE CONTRACTOR SHALL ALSO FURNISH, INSTALL, OPERATE, AND MAINTAIN ALL NECESSARY PUMPING AND OTHER EQUIPMENT REQUIRED FOR REMOVAL OR WATER FROM VARIOUS PARTS OF THE WORK AND FOR MAINTAINING THE EXCAVATIONS, FOUNDATION, AND OTHER PARTS OF THE WORK FREE FROM WATER AS REQUIRED BY THE ENGINEER FOR CONSTRUCTING EACH PART OF THE WORK. AFTER HAVING SERVED THEIR PURPOSE, ALL TEMPORARY PROTECTIVE WORKS SHALL BE REMOVED OR LEVELED AND GRADED TO THE EXTENT REQUIRED TO PREVENT OBSTRUCTION IN ANY DEGREE WHATSOEVER OF THE FLOW OF WATER TO THE SPILLWAY OR OUTLET WORKS AND SO AS NOT TO INTERFERE IN ANY WAY WITH THE OPERATION OR MAINTENANCE OF THE STRUCTURE. STREAM DIVERSIONS SHALL BE MAINTAINED UNTIL THE FULL FLOW CAN BE PASSED THROUGH THE PERMANENT WORKS. THE REMOVAL OF WATER FROM THE REQUIRED EXCAVATION AND THE FOUNDATION SHALL BE ACCOMPLISHED IN A MANNER AND TO THE EXTENT THAT WILL MAINTAIN STABILITY OF THE EXCAVATED SLOPES AND BOTTOM REQUIRED EXCAVATIONS AND WILL ALLOW SATISFACTORY PERFORMANCE OF ALL CONSTRUCTION OPERATIONS. DURING THE PLACING AND COMPACTING OF MATERIAL IN REQUIRED EXCAVATIONS, THE WATER LEVEL AT THE LOCATIONS BEING REFILLED SHALL BE MAINTAINED BELOW THE BOTTOM OF THE EXCAVATION AT SUCH LOCATIONS WHICH MAY REQUIRE DRAINING THE WATER SUMPS FROM WHICH THE WATER SHALL BE PUMPED.

STABILIZATION

ALL BORROW AREAS SHALL BE GRADED TO PROVIDE PROPER DRAINAGE AND LEFT IN A SIGHTLY CONDITION. ALL EXPOSED SURFACES OF THE EMBANKMENT, SPILLWAY, SPOIL AND BORROW AREAS, AND BERMS SHALL BE STABILIZED BY SEEDING, LIMING, FERTILIZING AND MULCHING IN ACCORDANCE WITH THE NATURAL RESOURCES CONSERVATION SERVICE STANDARDS AND SPECIFICATIONS FOR CRITICAL AREA PLANTING (MD-342) OR AS SHOWN ON THE ACCOMPANYING DRAWINGS.

EROSION AND SEDIMENT CONTROL

CONSTRUCTION OPERATIONS WILL BE CARRIED OUT IN SUCH A MANNER THAT EROSION WILL BE CONTROLLED AND WATER AND AIR POLLUTION MINIMIZED. STATE AND LOCAL LAWS CONCERNING POLLUTION ABATEMENT WILL BE FOLLOWED. CONSTRUCTION PLANS SHALL DETAIL EROSION AND SEDIMENT CONTROL MEASURES. ALL DISTURBED AREAS SHALL BE CONTROLLED BY AN EROSION AND SEDIMENT CONTROL PLAN WHICH HAS BEEN APPROVED BY THE HOWARD COUNTY SOIL CONSERVATION DISTRICT.

FILTER CLOTH

ALL FILTER CLOTH SHALL CONFORM TO THE 1994 MARYLAND STANDARDS AND SPECIFICATIONS FOR SOIL EROSION AND SEDIMENT CONTROL, OR THE LATEST EDITION.

CONSTRUCTION INSPECTION BY DESIGNATED ENGINEERS

THE CONSTRUCTION OF THE POND AND EMBANKMENT, AND CERTIFICATION THAT THE POND AND EMBANKMENT HAVE BEEN BUILT IN ACCORDANCE WITH THE PLANS SHALL BE UNDER THE SUPERVISION OF A REGISTERED PROFESSIONAL ENGINEER. THE ENGINEER SHALL BE NOTIFIED SUFFICIENTLY IN ADVANCE OF CONSTRUCTION IN ORDER THAT ARRANGEMENTS CAN BE MADE FOR (1) INSPECTION OF PIPE TRENCH AND BEDDING, (2) INSPECTION OF RISER AND ANTI-SEEP COLLARS AND (3) SUPERVISION OF EMBANKMENT CONSTRUCTION AND COMPACTION TESTING. THE ENGINEER SHALL DIRECT THE HANDLING OF WATER DURING CONSTRUCTION, MINOR CHANGES NOT AFFECTING THE INTEGRITY OF THE DAM IN ORDER TO COMPENSATE FOR UNUSUAL SOIL CONDITIONS, AND THE REMOVAL AND REPLACEMENT OF DEFECTIVE FILL.

PERFORATED PIPE

SCHEDULE 40 PVC OR SDR35:
PERFORATED PIPE SHALL COMPLY WITH AASHTO M278 OR ASTM F-758 HIGHWAY UNDERDRAIN SPECIFICATIONS.

WRAP PIPE WITH 1/4" MESH (OR SMALLER) GALVANIZED HARDWARE CLOTH.

HDPE:
4" & 6" PERFORATED PIPE SHALL HAVE 3 ROWS (@ 120 DEGREES) OF 0.12" x 0.875" SLOTS THAT PROVIDE A MINIMUM OPEN AREA OF 1 SQ.IN. PER LINEAR FOOT OF PIPE.

PIPE SHALL BE PLACED WITH PERFORATIONS DOWN.

PIPE WITH SLOTTED PERFORATIONS IS NOT REQUIRED TO BE WRAPPED WITH HARDWARE CLOTH.

OPERATION AND MAINTENANCE SCHEDULE FOR PRIVATELY OWNED AND MAINTAINED "A-2 PERMEABLE CONCRETE"

1. THE OWNER SHALL PERIODICALLY SWEEP (OR VACUUM POROUS CONCRETE PAVEMENT) THE PAVEMENT SURFACES TO REDUCE SEDIMENT ACCUMULATION AND ENSURE CONTINUED SURFACE POROSITY. SWEEPING SHOULD BE PERFORMED AT LEAST TWICE ANNUALLY WITH A COMMERCIAL CLEANING UNIT. WASHING OR COMPRESSED AIR UNITS SHOULD NOT BE USED TO PERFORM SURFACE CLEANING.

2. THE OWNER SHALL PERIODICALLY CLEAN DRAINAGE PIPES, INLETS, STONE EDGE DRAINS AND OTHER STRUCTURES WITHIN OR DRAINING TO THE SUBBASE.

3. THE OWNER SHALL USE DEICERS IN MODERATION. DEICERS SHOULD BE NON-TOXIC AND BE APPLIED EITHER AS CALCIUM MAGNESIUM ACETATE OR AS PRETREATED SALT.

4. THE OWNER SHALL ENSURE SNOW PLOWING IS PERFORMED CAREFULLY WITH BLADES SET ONE INCH ABOVE THE SURFACE. PLOWED SNOW PILES AND SNOW MELT SHOULD NOT BE DIRECTED TO PERMEABLE PAVEMENT.

PROFESSIONAL CERTIFICATION. I HEREBY CERTIFY THAT THESE DOCUMENTS WERE PREPARED OR APPROVED BY ME AND THAT I AM DULY LICENSED PROFESSIONAL ENGINEER UNDER THE LAWS OF THE STATE OF MARYLAND, LICENSE NO. 31089
EXPIRATION DATE: 11/12/12

APPROVED: DEPARTMENT OF PLANNING AND ZONING

CHIEF, DEVELOPMENT ENGINEERING DIVISION	DATE 1/24/12
CHIEF, DIVISION OF LAND DEVELOPMENT	DATE 2/02/12
DIRECTOR	DATE 2/3/12

KCI TECHNOLOGIES
ENGINEERS
PLANNERS
SCIENTISTS
CONSTRUCTION MANAGERS
8161 MAPLE LAWN BOULEVARD
SUITE 150
FULTON, MD 20759
TELEPHONE: (410)792-8086
FAX: (410)792-7419

OrchardDevelopment Corporation

CRP Opportunity Fund, L.P.

OWNER / DEVELOPER:
ORCHARD DEVELOPMENT CORPORATION
5032 DORSEY HALL DRIVE
ELLICOTT CITY, MD 21042
(410) 964-2334

OWNER:
WILDER BUILDING CORPORATION
3300 SOWA TRAIL
ELLICOTT CITY, MD 21043
(410)-461-2522

REVISIONS			
NO.	DATE	DESCRIPTION	BY

DATE 11-18-2011
SCALE AS SHOWN
DESIGNED BY S.V.M
DRAWN BY C.T.B.

STORMWATER MANAGEMENT NOTES

ORCHARD MEADOWS
PARCELS D-1, D-2, D-3
SITE DEVELOPMENT PLAN
ZONING R-A-15, TAX MAP NO. 17, GRID NO. 23, PARCEL NO. 711
SECOND ELECTION DISTRICT — HOWARD COUNTY, MARYLAND

SEAL: STATE OF MARYLAND — RICHARD L. LEWIS — No. 31089 — PROFESSIONAL ENGINEER

DRAWING NO. C - 26
SHEET 26 OF 38
KCI JOB NUMBER 27-101105

SDP-11-052

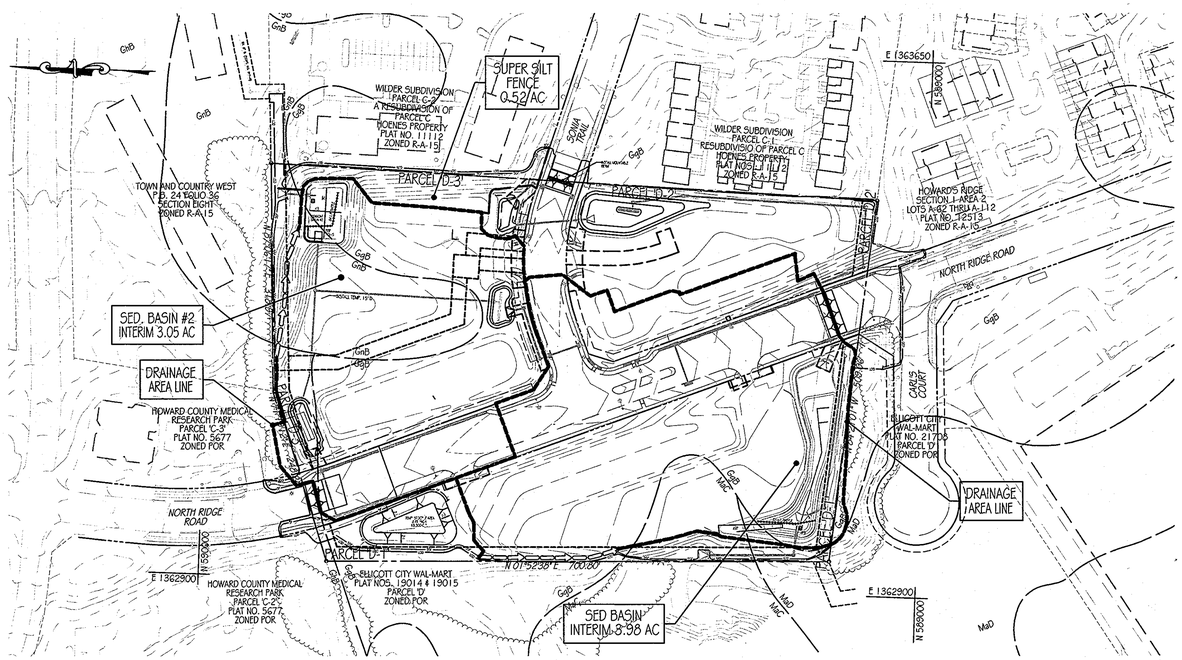

EXISTING CONDITIONS DRAINAGE AREA MAP

SCALE: 1" = 100'

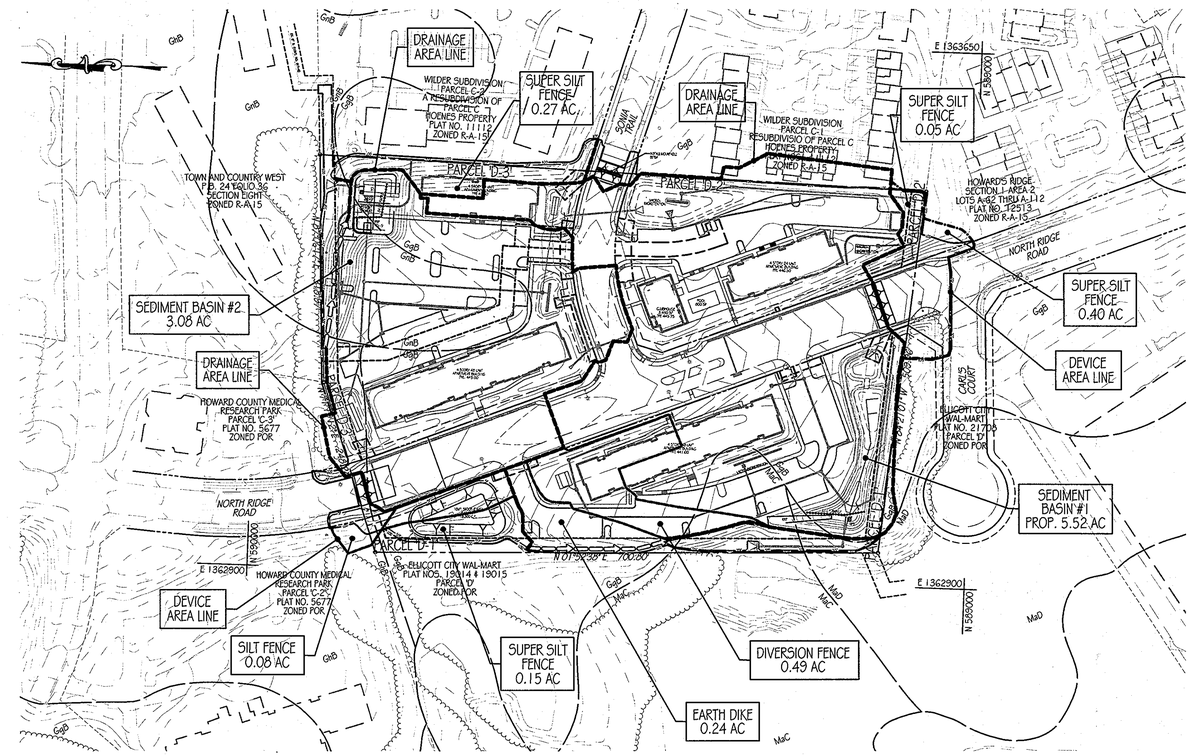

PROPOSED DRAINAGE AREA MAP

SCALE: 1" = 100'

THIS DEVELOPMENT PLAN IS APPROVED FOR SOIL EROSION AND SEDIMENT CONTROL BY THE HOWARD SOIL CONSERVATION DISTRICT.

HOWARD S.C.D. — DATE 1/18/12

BY THE ENGINEER:

"I CERTIFY THAT THIS PLAN FOR EROSION AND SEDIMENT CONTROL REPRESENTS A PRACTICAL AND WORKABLE PLAN BASED ON MY PERSONAL KNOWLEDGE OF THE SITE CONDITIONS, AND THAT IT WAS PREPARED IN ACCORDANCE WITH THE REQUIREMENTS OF THE HOWARD SOIL CONSERVATION DISTRICT."

SIGNATURE OF ENGINEER — DATE 12-22-2011

BY THE DEVELOPER:

"I/WE CERTIFY THAT ALL DEVELOPEMENT AND CONSTRUCTION WILL BE DONE ACCORDING TO THIS PLAN FOR SEDIMENT AND EROSION CONTROL, AND THAT ALL RESPONSIBLE PERSONNEL INVOLVED IN THE CONSTRUCTION PROJECT WILL HAVE A CERTIFICATE OF ATTENDANCE AT A DEPARTMENT OF THE ENVIRONMENT APPROVED TRAINING PROGRAM FOR THE CONTROL OF SEDIMENT AND EROSION BEFORE BEGINNING THE PROJECT. I ALSO AUTHORIZE PERIODIC ON-SITE INSPECTION BY THE HOWARD SOIL CONSERVATION DISTRICT."

SIGNATURE OF DEVELOPER — DATE 1/11/12

APPROVED: DEPARTMENT OF PLANNING AND ZONING

CHIEF-DEVELOPMENT ENGINEERING DIVISION — DATE 1/24/12

CHIEF-~~BUREAU~~ DIV. OF LAND DEVELOPMENT — DATE 2/02/12

DIRECTOR — DATE 2/3/12

GRAPHIC SCALE

100' 0 100' 200'

SCALE: 1" = 100'

KCI TECHNOLOGIES

ENGINEERS
PLANNERS
SCIENTISTS
CONSTRUCTION MANAGERS

8161 MAPLE LAWN BOULEVARD
SUITE 150
FULTON, MD 20759
TELEPHONE: (410)792-9086
FAX: (410)792-7419

OrchardDevelopment Corporation

CRP Opportunity Fund, L.P.

OWNER / DEVELOPER:

ORCHARD DEVELOPMENT CORPORATION
5032 DORSEY HALL DRIVE
ELLICOTT CITY, MD 21042
(410) 964-2334

OWNER:

WILDER BUILDING CORPORATION
3300 SONIA TRAIL
ELLICOTT CITY, MD 21043
(410)-461-2522

REVISIONS

NO.	DATE	DESCRIPTION	BY

DATE 11-18-2011

SCALE AS SHOWN

DESIGNED BY

DRAWN BY C.T.B.

EROSION & SEDIMENT CONTROL DRAINAGE AREA MAP

ORCHARD MEADOWS

PARCELS D-1, D-2, D-3

SITE DEVELOPMENT PLAN

ZONING R-A-15, TAX MAP NO. 17, GRID NO. 23, PARCEL NO. 711

SECOND ELECTION DISTRICT — HOWARD COUNTY, MARYLAND

PROFESSIONAL CERTIFICATION. I HEREBY CERTIFY THAT THESE DOCUMENTS WERE PREPARED OR APPROVED BY ME AND THAT I AM DULY LICENSED PROFESSIONAL ENGINEER UNDER THE LAWS OF THE STATE OF MARYLAND, LICENSE NO. 31099
EXPIRATION DATE: 11/12/12

SEAL: STATE OF MARYLAND — RICHARD L. BUTT — No. 031099 — PROFESSIONAL ENGINEER

DRAWING NO. C-27

SHEET 27 OF 38

KCI JOB NUMBER 27-101105

SDP-11-052

LEGEND

- PROPERTY LINE
- RIGHT-OF-WAY LINE
- 430 — PROPOSED CONTOUR
- 425 — EX. INTERMEDIATE CONTOUR
- 430 — EX. INDEX CONTOUR
- DRAINAGE AREA DIVIDE (BASINS)
- DRAINAGE AREA DEVICE (SEDIMENT CONTROL DEVICES)
- GnB / GgB — SOILS LINE

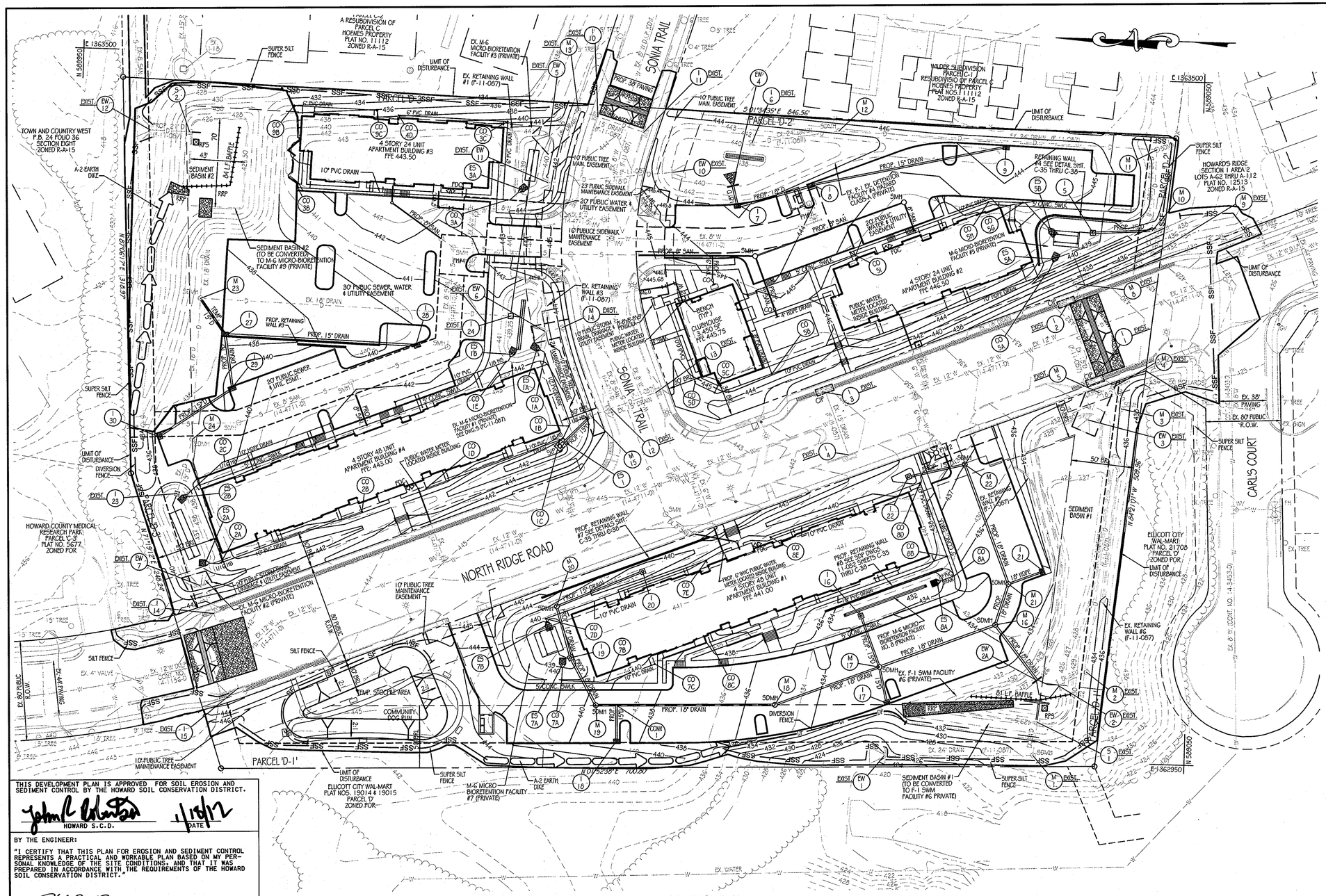

LEGEND

	PROPERTY LINE
	RIGHT-OF-WAY LINE
430	PROP. CONTOUR
	PROP. CURB
PROP. 6" WATER	PROP. WATER
PROP. 8" SAN.	PROP. SANITARY
PROP. 8" DRAIN	PROP. DRAIN
	PROP. MANHOLE
	PROP. INLET
FH	PROP. FIRE HYDRANT
WV	PROP. WATER METER
CO	PROP. CLEANOUT
SSF	SUPER SILT FENCE
SF	SILT FENCE
DF	DIVERSION FENCE
LOD	LIMIT OF DISTURBANCE
	EARTH DIKE
CIP	CURB INLET PROTECTION
SIP	STANDARD INLET PROTECTION

SEDIMENT CONTROL NOTES

1. A MINIMUM OF 48 HOURS NOTICE MUST BE GIVEN TO THE HOWARD COUNTY DEPARTMENT OF INSPECTIONS, LICENSES AND PERMITS, SEDIMENT CONTROL DIVISION PRIOR TO THE START OF ANY CONSTRUCTION (313-1855).
2. ALL VEGETATIVE AND STRUCTURAL PRACTICES ARE TO BE INSTALLED ACCORDING TO THE PROVISIONS OF THIS PLAN AND ARE TO BE IN CONFORMANCE WITH THE MOST CURRENT MARYLAND STANDARDS AND SPECIFICATIONS FOR SOIL EROSION AND SEDIMENT CONTROL AND REVISIONS THERETO.
3. FOLLOWING INITIAL SOIL DISTURBANCE OR RE-DISTURBANCE, PERMANENT OR TEMPORARY STABILIZATION SHALL BE COMPLETED WITHIN: A) 7 CALENDAR DAYS FOR ALL PERIMETER, SEDIMENT CONTROL STRUCTURES, DIKES, PERIMETER SLOPES AND ALL SLOPES GREATER THAN 3:1, B) 14 DAYS AS TO ALL OTHER DISTURBED OR GRADED AREAS ON THE PROJECT SITE.
4. ALL SEDIMENT TRAPS/BASINS SHOWN MUST BE FENCED AND WARNING SIGNS POSTED AROUND THEIR PERIMETER IN ACCORDANCE WITH VOL I, CHAPTER 12 OF THE HOWARD COUNTY DESIGN MANUAL, STORM DRAINAGE.
5. ALL DISTURBED AREAS MUST BE STABILIZED WITHIN THE TIME PERIOD SPECIFIED ABOVE IN ACCORDANCE WITH THE 1994 MARYLAND STANDARDS AND SPECIFICATIONS FOR SOIL EROSION AND SEDIMENT CONTROL FOR PERMANENT SEEDING (SEC. 51), SOD (SEC. 54), TEMPORARY SEEDING (SEC. 50) AND MULCHING (SEC. 52). TEMPORARY STABILIZATION WITH MULCH ALONE CAN ONLY BE DONE WHEN RECOMMENDED SEEDING DATES DO NOT ALLOW FOR PROPER GERMINATION AND ESTABLISHMENT OF GRASSES.
6. ALL SEDIMENT CONTROL STRUCTURES ARE TO REMAIN IN PLACE AND ARE TO BE MAINTAINED IN OPERATIVE CONDITION UNTIL PERMISSION FOR THEIR REMOVAL HAS BEEN OBTAINED FROM THE HOWARD COUNTY SEDIMENT CONTROL INSPECTOR.
7. ANY SEDIMENT CONTROL PRACTICE WHICH IS DISTURBED BY GRADING ACTIVITY FOR PLACEMENT OF UTILITIES MUST BE REPAIRED ON THE SAME DAY OF DISTURBANCE.
8. ADDITIONAL SEDIMENT CONTROL MUST BE PROVIDED, IF DEEMED NECESSARY BY THE HOWARD COUNTY SEDIMENT CONTROL INSPECTOR.
9. ON ALL SITES WITH DISTURBED AREAS IN EXCESS OF 2 ACRES, APPROVAL OF THE INSPECTION AGENCY SHALL BE REQUESTED UPON COMPLETION OF INSTALLATION OF PERIMETER EROSION AND SEDIMENT CONTROLS, BUT BEFORE PROCEEDING WITH ANY OTHER EARTH DISTURBANCE OR GRADING. OTHER BUILDING OR GRADING INSPECTION APPROVALS MAY NOT BE AUTHORIZED UNTIL THIS INITIAL APPROVAL BY THE INSPECTION AGENCY IS MADE.
10. TRENCHES FOR THE CONSTRUCTION OF UTILITIES IS LIMITED TO THREE PIPE LENGTHS OR THAT WHICH SHALL BE BACK-FILLEDAND STABILIZED BY THE END OF EACH WORK DAY, WHICHEVER IS SHORTER.

SEQUENCE OF CONSTRUCTION

1. PRIOR TO STARTING ANY WORK SHOWN FOR SITE DEVELOPMENT SEDIMENT CONTROL PLANS THE CONTRACTOR SHALL COORDINATE WITH THE HOWARD COUNTY INSPECTOR AT 410-313-1855 AND THE CONTRACTOR IN CHARGE OF THE FINAL PLANS FOR NORTH RIDGE ROAD AND SONIA TRAIL CONTRACT PLANS UNDER F-11-087 FOR THE CONTINUED USE OF PERIMETER SEDIMENT CONTROLS AND SEDIMENT BASIN NO. 1 AND NO. 3 DURING SITE DEVELOPMENT CONSTRUCTION.
2. BEGIN THE REMAINDER OF THE UTILITY AND STORM DRAIN INSTALLATION (PROVIDE INLET PROTECTION FOR I-2, I-3 & E5-1).

   NOTE: CONSTRUCT TEMPORARY 15" DRAIN FROM I-27 TO M-23 AND INSTALL TEMPORARY PLUG FOR 18" DRAIN NORTH OF I-27. CONSTRUCT TEMPORARY DRAIN FROM I-27 TO M-23 AND INSTALL PLUG FOR 18" NORTH OF I-27.
3. WHEN SUBGRADE FOR BUILDING PADS HAVE BEEN ESTABLISHED PROVIDE TEMPORARY STABILIZATION AND BEGIN BUILDING CONSTRUCTION.
4. CONCURRENTLY BEGIN INSTALLATION OF CURB & GUTTER PERMEABLE CONCRETE AND BASE COURSE FOR PAVED AREAS.

   NOTE: SEE PAVING PLAN FOR DELINEATION BETWEEN A-2 PERMEABLE CONCRETE AND BASE COURSE.
5. FINE GRADE AND INSTALL WALKS, POOL, LANDSCAPING. FLUSH STORM DRAINS AND INSTALL M-6 MICRO BIO- RETENTION FACILITIES 5, 7 & 8 (PRIVATE) AND PERMANENTLY STABILIZE.
6. WITH THE HOWARD COUNTY INSPECTOR'S APPROVAL BEGIN BASIN NO. 2 CONVERSION TO M-6 MICRO BIO-RETENTION FACILITY #9 (PRIVATE) REMOVE EARTH DIKE AND BEGIN INSTALLATION OF RETAINING WALL AND STORM DRAIN FROM EW-9 TO I-27 (PROVIDE CURB INLET PROTECTION FOR INLETS I-25 AND I-26) REMOVE TEMPORARY DRAIN FROM I-27 TO M-23 AND PLUG STRUCTURES AS REQUIRED.
7. REMOVE TEMPORARY ENDWALL FOR DRAIN FROM M-23 TO BASIN NO.2 AND INSTALL REMAINING PIPE TO EW-8.

   NOTE: SEE SITE GRADING PLAN SHEET C-2 FOR FINAL GRADES IN BASIN NO. 2.
8. CONCURRENTLY BEGIN SEDIMENT BASIN NO. 1 CONVERSION TO F-1 SWM FACILITY #6 (PRIVATE), INSTALL RETAINING WALLS, AND REMAINING WALK NORTH OF FACILITY.

   NOTES:

   A. ALL SEDIMENT SPOILS/ MATERIALS FROM STORM DRAIN FLUSHING AND SEDIMENT BASIN CONVERSIONS SHALL BE TAKEN TO A SITE WITH A APPROVED SEDIMENT AND EROSION CONTROL PLAN AND PERMIT.

   B. SEE SITE GRADING PLAN SHEET C-2 FOR FOR FINAL GRADES IN BASIN NO. 1.
9. UPON COMPLETION OF SEDIMENT BASIN CONVERSIONS AND WITH HOWARD COUNTY INSPECTOR'S APPROVAL REMOVE ANY REMAINING SEDIMENT CONTROLS AND STABILIZE ANY AREAS DISTURBED BY REMOVAL.

PROVIDE COPY OF HSCD LETTER OF APPROVAL FOR POND AS-BUILT INSPECTOR.

EROSION AND SEDIMENT CONTROL PLAN

SCALE: 1" = 40'

LIMIT OF DISTURBANCE = 433,576 SQ.FT. OR 9.54 ACRES

GRAPHIC SCALE

40 0 10 20 40 80

1 INCH = 40 FEET

THIS DEVELOPMENT PLAN IS APPROVED FOR SOIL EROSION AND SEDIMENT CONTROL BY THE HOWARD SOIL CONSERVATION DISTRICT.

HOWARD S.C.D. — DATE 1/18/12

BY THE ENGINEER:

"I CERTIFY THAT THIS PLAN FOR EROSION AND SEDIMENT CONTROL REPRESENTS A PRACTICAL AND WORKABLE PLAN BASED ON MY PERSONAL KNOWLEDGE OF THE SITE CONDITIONS. AND THAT IT WAS PREPARED IN ACCORDANCE WITH THE REQUIREMENTS OF THE HOWARD SOIL CONSERVATION DISTRICT."

SIGNATURE OF ENGINEER — DATE 12-22-2011

BY THE DEVELOPER:

"I/WE CERTIFY THAT ALL DEVELOPEMENT AND CONSTRUCTION WILL BE DONE ACCORDING TO THIS PLAN FOR SEDIMENT AND EROSION CONTROL. AND THAT ALL RESPONSIBLE PERSONNEL INVOLVED IN THE CONSTRUCTION PROJECT WILL HAVE A CERTIFICATE OF ATTENDANCE AT A DEPARTMENT OF THE ENVIRONMENT APPROVED TRAINING PROGRAM FOR THE CONTROL OF SEDIMENT AND EROSION BEFORE BEGINNING THE PROJECT. I ALSO AUTHORIZE PERIODIC ON-SITE INSPECTION BY THE HOWARD SOIL CONSERVATION DISTRICT."

SIGNATURE OF DEVELOPER — DATE 1/11/12

APPROVED: DEPARTMENT OF PLANNING AND ZONING

CHIEF-DEVELOPMENT ENGINEERING DIVISION — DATE 1/24/12

CHIEF-DIVISION OF LAND DEVELOPMENT — DATE 2/02/12

DIRECTOR — DATE 2/3/12

THIS DEVELOPMENT PLAN IS APPROVED FOR SOIL EROSION AND SEDIMENT CONTROL BY THE HOWARD SOIL CONSERVATION DISTRICT.

HOWARD S.C.D. — DATE

BY THE ENGINEER:

"I CERTIFY THAT THIS PLAN FOR EROSION AND SEDIMENT CONTROL REPRESENTS A PRACTICAL AND WORKABLE PLAN BASED ON MY PERSONAL KNOWLEDGE OF THE SITE CONDITIONS. AND THAT IT WAS PREPARED IN ACCORDANCE WITH THE REQUIREMENTS OF THE HOWARD SOIL CONSERVATION DISTRICT."

SIGNATURE OF ENGINEER — DATE

CONSULTANTS CERTIFICATION

"I CERTIFY THAT THIS CONCEPT EROSION & SEDIMENT CONTROL PLAN REPRESENTS ALL SIGNIFICANT NATURAL RESOURCES BASED UPON MY PERSONAL KNOWLEDGE OF THE SITE AND THAT THIS PLAN WAS PREPARED IN ACCORDANCE WITH THE REQUIREMENTS OF THE HOWARD SOIL CONSERVATION DISTRICT AND "STANDARDS & SPECIFICATIONS FOR SOIL EROSION & SEDIMENT CONTROL". I HAVE REVIEWED THIS CONCEPT EROSION & SEDIMENT CONTROL PLAN WITH THE OWNER/DEVELOPER.

SIGNATURE: — MD LICENSE #: 31089

PRINT NAME: RICHARD L. BUTT — DATE: 12-22-2011

ECP APPROVED

REVIEWER: DATE:

PROCEED TO DEVELOPMENT: YES (APPROVAL SUBJECT TO ADDRESSING COMMENTS ON THE NEXT PHASE)

NO (ADDRESS COMMENTS AND RESUBMIT PLANS)

PROFESSIONAL CERTIFICATION. I HEREBY CERTIFY THAT THESE DOCUMENTS WERE PREPARED OR APPROVED BY ME AND THAT I AM DULY LICENSED PROFESSIONAL ENGINEER UNDER THE LAWS OF THE STATE OF MARYLAND. LICENSE NO. 31089 EXPIRATION DATE: 11/12/12

KCI TECHNOLOGIES
ENGINEERS
PLANNERS
SCIENTISTS
CONSTRUCTION MANAGERS
8161 MAPLE LAWN BOULEVARD
SUITE 150
FULTON, MD 20759
TELEPHONE: (410)792-8086
FAX: (410)792-7419

OrchardDevelopment Corporation

CRP Opportunity Fund, L.P.

OWNER / DEVELOPER:
ORCHARD DEVELOPMENT CORPORATION
5032 DORSEY HALL DRIVE
ELLICOTT CITY, MD 21042
(410) 964-2334

OWNER:
WALDER BUILDING CORPORATION
3300 SONIA TRAIL
ELLICOTT CITY, MD 21043
(410)-461-2522

REVISIONS

NO.	DATE	DESCRIPTION	BY

DATE 11-18-2011

SCALE AS SHOWN

DESIGNED BY

DRAWN BY C.T.B.

EROSION AND SEDIMENT CONTROL PLAN

ORCHARD MEADOWS

PARCELS D-1, D-2, D-3
SITE DEVELOPMENT PLAN
ZONING R-A-15, TAX MAP NO. 17, GRID NO. 23, PARCEL NO. 711

SECOND ELECTION DISTRICT — HOWARD COUNTY, MARYLAND

SEAL: STATE OF MARYLAND — RICHARD L. BUTT — No. 031089 — PROFESSIONAL ENGINEER — 12-22-11

DRAWING NO. C-28

SHEET 28 OF 38

KCI JOB NUMBER 27-101105

SDP-11-052

DETAIL 1 – EARTH DIKE

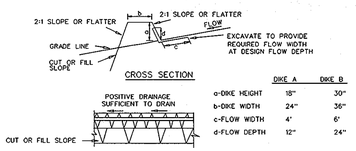

	DIKE A	DIKE B
a-DIKE HEIGHT	18"	30"
b-DIKE WIDTH	24"	36"
c-FLOW WIDTH	4'	6'
d-FLOW DEPTH	12"	24"

STANDARD SYMBOL A-2 B-3

FLOW CHANNEL STABILIZATION
GRADE 0.5% MIN. 10% MAX.

1. Seed and cover with straw mulch.
2. Seed and cover with Erosion Control Matting or line with sod.
3. 4" - 7" stone or recycled concrete equivalent pressed into the soil 7" minimum

Construction Specifications

1. All temporary earth dikes shall have uninterrupted positive grade to an outlet. Spot elevations may be necessary for grades less than 1%.

2. Runoff diverted from a disturbed area shall be conveyed to a sediment trapping device.

3. Runoff diverted from an undisturbed area shall outlet directly into an undisturbed, stabilized area at a non-erosive velocity.

4. All trees, brush, stumps, obstructions, and other objectional material shall be removed and disposed of so as not to interfere with the proper functioning of the dike.

5. The dike shall be excavated or shaped to line, grade and cross section as required to meet the criteria specified herein and be free of bank projections or other irregularities which will impede normal flow.

6. Fill shall be compacted by earth moving equipment.

7. All earth removed and not needed for construction shall be placed so that it will not interfere with the functioning of the dike.

8. Inspection and maintenance must be provided periodically and after each rain event.

U.S. DEPARTMENT OF AGRICULTURE SOIL CONSERVATION SERVICE	PAGE A - 1 - 6	MARYLAND DEPARTMENT OF ENVIRONMENT WATER MANAGEMENT ADMINISTRATION

DETAIL 5 – RIP-RAP INFLOW PROTECTION

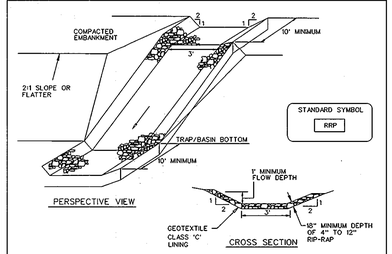

STANDARD SYMBOL RRP

Construction Specifications

1. Rip-rap lined inflow channels shall be 1' in depth, have a trapezoidal cross section with 2:1 or flatter side slopes and 3' (min.) bottom width. The channel shall be lined with 4" to 12" rip- rap to a depth of 18".

2. Filter cloth shall be installed under all rip-rap. Filter cloth shall be Geotextile Class C.

3. Entrance and exit sections shall be installed as shown on the detail section.

4. Rip-rap used for the lining may be recycled for permanent outlet protection if the basin is to be converted to a stormwater management facility.

5. Gabion Inflow Protection may be used in lieu of Rip-rap Inflow Protection.

6. Rip-rap should blend into existing ground.

7. Rip-rap Inflow Protection shall be used where the slope is between 4:1 and 10:1, for slopes flatter than 10:1 use Earth Dike or Temporary Swale lining criteria.

U.S. DEPARTMENT OF AGRICULTURE SOIL CONSERVATION SERVICE	PAGE B - 6 - 2	MARYLAND DEPARTMENT OF ENVIRONMENT WATER MANAGEMENT ADMINISTRATION

DETAIL 18 – SEDIMENT BASIN BAFFLES

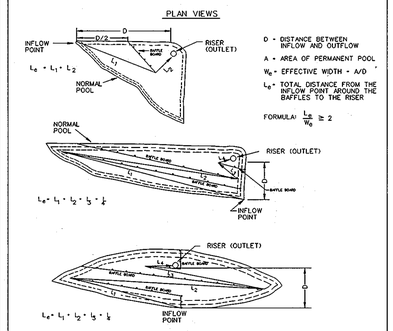

D - DISTANCE BETWEEN INFLOW AND OUTFLOW

A - AREA OF PERMANENT POOL

W_e - EFFECTIVE WIDTH - A/D

L_e - TOTAL DISTANCE FROM THE INFLOW POINT AROUND THE BAFFLES TO THE RISER

FORMULA: $\frac{L_e}{W_e} \geq 2$

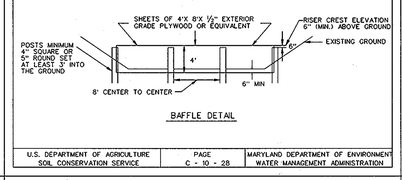

U.S. DEPARTMENT OF AGRICULTURE SOIL CONSERVATION SERVICE	PAGE C - 10 - 28	MARYLAND DEPARTMENT OF ENVIRONMENT WATER MANAGEMENT ADMINISTRATION

BASIN DRAWDOWN SCHEMATIC HORIZONTAL DRAW-DOWN DEVICE

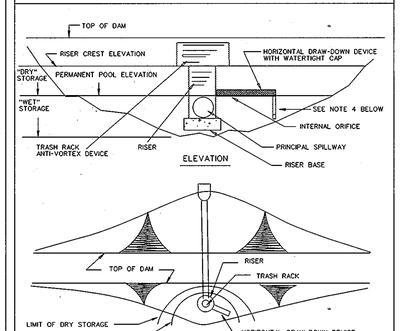

Construction Specifications

1. The total area of the perforations must be greater than 2 times the area of the internal orifice.

2. The perforated portion of the draw-down device shall be wrapped with ½" hardware cloth and geotextile fabric. The geotextile fabric shall meet the specifications for Geotextile Class E.

3. Provide support of draw-down device to prevent sagging and flotation. An acceptable preventative measure is to stake both sides of draw-down device with 1" steel angle, or 1" by 4" square or 2" round wooden posts set 3' minimum into the ground then joining them to the device by wrapping with 12 gauge minimum wire.

U.S. DEPARTMENT OF AGRICULTURE SOIL CONSERVATION SERVICE	PAGE C - 10 - 29	MARYLAND DEPARTMENT OF ENVIRONMENT WATER MANAGEMENT ADMINISTRATION

DETAIL 22 – SILT FENCE

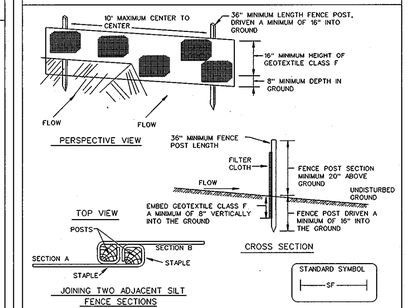

STANDARD SYMBOL SF

Construction Specifications

1. Fence posts shall be a minimum of 36" long driven 16" minimum into the ground. Wood posts shall be 1½" x 1½" square (minimum) cut, or 1¼" diameter (minimum) round and shall be of sound quality hardwood. Steel posts will be standard T or U section weighting not less than 1.00 pond per linear foot.

2. Geotextile shall be fastened securely to each fence post with wire ties or staples at top and mid-section and shall meet the following requirements for Geotextile Class F:

Tensile Strength	50 lbs/in (min.)	Test: MSMT 509
Tensile Modulus	20 lbs/in (min.)	Test: MSMT 509
Flow Rate	0.3 gal/ft / minute (max.)	Test: MSMT 322
Filtering Efficiency	75% (min.)	Test: MSMT 322

3. Where ends of geotextile fabric come together, they shall be overlapped, folded and stapled to prevent sediment bypass.

4. Silt Fence shall be inspected after each rainfall event and maintained when bulges occur or when sediment accumulation reached 50% of the fabric height.

U.S. DEPARTMENT OF AGRICULTURE SOIL CONSERVATION SERVICE	PAGE E - 15 - 3	MARYLAND DEPARTMENT OF ENVIRONMENT WATER MANAGEMENT ADMINISTRATION

DETAIL 20A – REMOVABLE PUMPING STATION

NOTE: THIS MEASURE MUST BE LOCATED WHERE IT WILL BE READILY ACCESSIBLE TO ALLOW FOR IT'S PRACTICLE USE.

STANDARD SYMBOL RPS

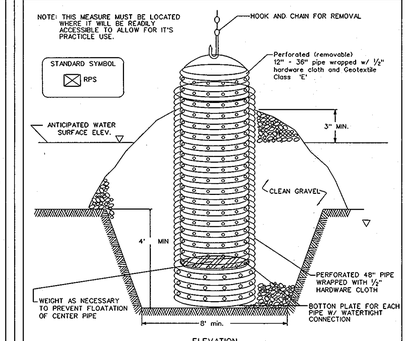

Construction Specifications

1. The outer pipe should be 48" dia. or shall, in any case, be at least 4" greater in diameter than the center pipe. The outer pipe shall be wrapped with ½" hardware cloth to prevent backfill material from entering the perforations.

2. After installing the outer pipe, backfill around outer pipe with 2" aggregate

3. The inside stand pipe (center pipe) should be constructed by perforating a corrugated or PVC pipe between 12" and 36" in diameter. The perforations shall be ½" X 6" slits or 1" diameter holes 6" on center. The center pipe shall be wrapped with ½" hardware cloth first, then wrapped again with Geotextile Class E.

4. The center pipe should extend 12" to 18" above the anticipated water surface elevation or riser crest elevation when dewatering a basin.

U.S. DEPARTMENT OF AGRICULTURE SOIL CONSERVATION SERVICE	PAGE D - 12 - 5	MARYLAND DEPARTMENT OF ENVIRONMENT WATER MANAGEMENT ADMINISTRATION

DETAIL 23A - STANDARD INLET PROTECTION

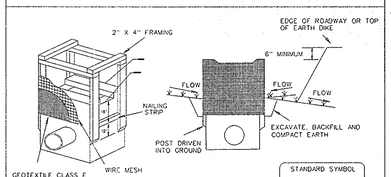

STANDARD SYMBOL SIP

MAX. DRAINAGE AREA - ¼ ACRE

Construction Specifications

1. Excavate completely around the inlet to a depth of 18" below the notch elevation.

2. Drive the 2" x 4" construction grade lumber posts 1' into the ground at each corner of the inlet. Place nail strips between the posts on the ends of the inlet. Assemble the top portion of the 2" x 4" frame using the overlap joint shown on Detail 23A. The top of the frame (weir) must be 6" below adjacent roadways where flooding and safety issues may arise.

3. Stretch the ½" x½" wire mesh tightly around the frame and fasten securely. The ends must meet and overlap at a post.

4. Stretch the Geotextile Class E tightly over the wire mesh with the geotextile extending from the top of the frame to 18" below the inlet notch elevation. Fasten the geotextile firmly to the frame. The ends of the geotextile must meet at a post, be overlapped and folded, then fastened down.

5. Backfill around the inlet in compacted 6" layers until the layer of earth is level with the notch elevation on the ends and top elevation on the sides.

6. If the inlet is not in a sump, construct a compacted earth dike across the ditch line directly below it. The top of the earth dike should be at east 6" higher than the top of the frame.

7. The structure must be inspected periodically and after each rain and the geotextile replaced when it becomes clogged.

U.S. DEPARTMENT OF AGRICULTURE SOIL CONSERVATION SERVICE	PAGE E - 16 - 5	MARYLAND DEPARTMENT OF ENVIRONMENT WATER MANAGEMENT ADMINISTRATION

DETAIL 24 – STABILIZED CONSTRUCTION ENTRANCE

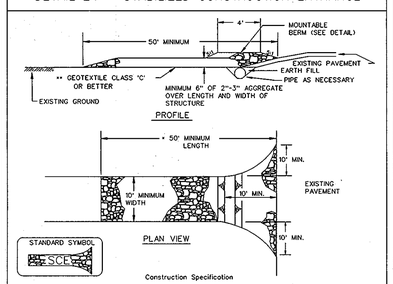

STANDARD SYMBOL SCE

Construction Specification

1. Length - minimum of 50' (*30' for single residence lot).

2. Width - 10' minimum, should be flared at the existing road to provide a turning radius.

3. Geotextile fabric (filter cloth) shall be placed over the existing ground prior to placing stone. **The plan approval authority may not require single family residences to use geotextile.

4. Stone - crushed aggregate (2" to 3") or reclaimed or recycled concrete equivalent shall be placed at least 6" deep over the length and width of the entrance.

5. Surface Water - all surface water flowing to or diverted toward construction entrances shall be piped through the entrance, maintaining positive drainage. Pipe installed through the stabilized construction entrance shall be protected with a mountable berm with 5:1 slopes and a minimum of 6" of stone over the pipe. Pipe has to be sized according to the drainage. When the SCE is located at a high spot and has no drainage to convey a pipe will not be necessary. Pipe should be sized according to the amount of runoff to be conveyed. A 6" minimum will be required.

6. Location - A stabilized construction entrance shall be located at every point where construction traffic enters or leaves a construction site. Vehicles leaving the site must travel over the entire length of the stabilized construction entrance.

U.S. DEPARTMENT OF AGRICULTURE SOIL CONSERVATION SERVICE	PAGE F - 17 - 3	MARYLAND DEPARTMENT OF ENVIRONMENT WATER MANAGEMENT ADMINISTRATION

DETAIL 30 – EROSION CONTROL MATTING

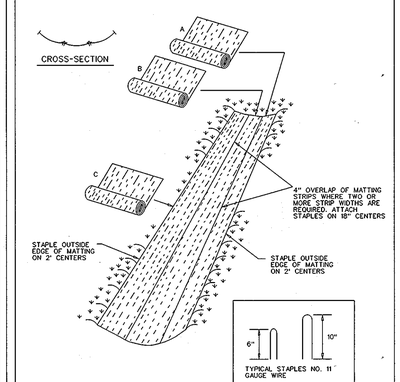

U.S. DEPARTMENT OF AGRICULTURE SOIL CONSERVATION SERVICE	PAGE G - 22 - 2	MARYLAND DEPARTMENT OF ENVIRONMENT WATER MANAGEMENT ADMINISTRATION

DETAIL 33 – SUPER SILT FENCE

NOTE: FENCE POST SPACING SHALL NOT EXCEED 10' CENTER TO CENTER

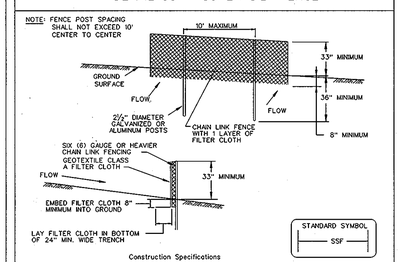

STANDARD SYMBOL SSF

Construction Specifications

1. Fencing shall be 42 inches in height and constructed in accordance with the latest Maryland State Highway (SHA) Details for Chain Link Fencing. The (SHA) specification for a 6 foot fence shall be used, substituting 42 inch fabric and 6 foot length posts.

2. The posts do not need to be set in concrete.

3. Chain link fence shall be fastened securely to the fence posts with wire ties or staples. The lower tension wire, brace and truss rods, drive anchors and post caps are not required except on the ends of the fence. The chain link fencing shall be six (6) guage or heavier.

4. Filter cloth shall be fastened securely to the chain link fence with ties spaced every 24" at the top and mid section.

5. Filter cloth shall be embedded a minimum of 8" into the ground.

6. When two sections of geotextile fabric adjoin each other, they shall be overlapped by 6" and folded.

7. Maintenance shall be performed as needed and silt buildups removed when "bulges" develop in the silt fence, or when silt reaches 50% of fence height

U.S. DEPARTMENT OF AGRICULTURE SOIL CONSERVATION SERVICE	MODIFIED	

SUPER FENCE DIVERSION

NOTE: FENCE POST SPACING SHALL NOT EXCEED 10' CENTER TO CENTER

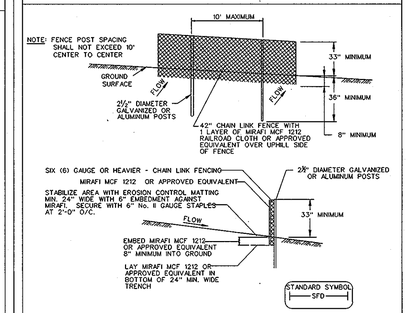

STANDARD SYMBOL SFD

Construction Specifications

1. Fencing shall be 42 inches in height and constructed in accordance with the latest Maryland State Highway (SHA) Details for Chain Link Fencing. The specification for a 6' fence shall be used, substituting 42" fabric and 6' length posts.

2. The posts do not need to be set in concrete.

3. Chain link fence shall be fastened securely to the fence posts with wire ties or staples. The lower tension wire, brace and truss rods, drive anchors and post caps are not required except on the ends of the fence. The chain link fencing shall be six (6) guage or heavier.

4. Mirafi MCF 1212 or approved equivalent shall be fastened securely to the chain link fence with ties spaced every 24" at the top and mid section.

5. Mirafi MCF 1212 or approved equal shall be embedded a minimum of 8" into the ground.

6. When two sections Mirafi MCF 1212 or approved equivalent adjoin each other, they shall be overlapped by 6" and folded.

7. Maintenance shall be performed as needed.

8. Maximum flow slope 10.0%

9. Maximum drainage area 5 acres.

U.S. DEPARTMENT OF AGRICULTURE SOIL CONSERVATION SERVICE	MODIFIED	

DETAIL 23C – CURB INLET PROTECTION (COG OR COS INLETS)

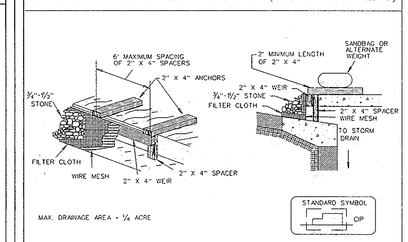

STANDARD SYMBOL CIP

MAX. DRAINAGE AREA - ¼ ACRE

1. Attach a continuous piece of wire mesh (30" minimum width by throat length plus 4') to the 2" x 4" weir (measuring throat length plus 2') as shown on the standard drawing.

2. Place a continuous piece of Geotextile Class E the same dimensions as the wire mesh over the wire mesh and securely attach it to the 2" x 4" weir.

3. Securely nail the 2" X 4" weir to a 9" long vertical spacer to be located between the weir and the inlet face (max. 4' apart).

4. Place the assembly against the inlet throat and nail (minimum 2' lengths of 2" x 4" to the top of the weir at spacer locations). These 2" x 4" anchors shall extend across the inlet top and be held in place by sandbags or alternate weight.

5. The assembly shall be placed so that the end spacers are a minimum 1' beyond both ends of the throat opening.

6. Form the ½" x ½" wire mesh and the geotextile fabric to the concrete gutter and against the face of the curb on both sides of the inlet. Place clean ¾" x ½" stone over the wire mesh and geotextile in such a manner to prevent water from entering the inlet under or around the geotextile.

7. This type of protection must be inspected frequently and the filter cloth and stone replaced when clogged with sediment.

8. Assure that storm flow does not bypass the inlet by installing a temporary earth or asphalt dike to direct the flow to the inlet.

U.S. DEPARTMENT OF AGRICULTURE SOIL CONSERVATION SERVICE	PAGE E - 16 - 58	MARYLAND DEPARTMENT OF ENVIRONMENT WATER MANAGEMENT ADMINISTRATION

STABILIZED CONSTRUCTION ENTRANCE

Construction Specification

1. Length - minimum of 50'(* 30' for single residence lot).

2. Width - 10' minimum, should be flared at the existing road to provide a turning radius.

3. Geotextile fabric (filter cloth) shall be placed over the existing ground prior to placing stone.** The plan approval authority may not require single family residences to use geotextile.

4. Stone - crushed aggregate (2" to 3"), or reclaimed or recycled concrete equivalent shall be placed at least 6" deep over the length and width of the entrance.

5. Surface Water - all surface water flowing to or diverted toward construction entrances shall be piped through the entrance, maintaining positive drainage. Pipe installed through the stabilized construction entrance shall be protected with a mountable berm with 5:1 slopes and a minimum of 6" of stone over the pipe. Pipe has to be sized according to the drainage. When the SCE is located at a high spot and has no drainage to convey a pipe will not be necessary. Pipe should be sized according to the amount of runoff to be conveyed. A 6" minimum will be required.

6. Location - A stabilized construction entrance shall be located at every point where construction traffic enters or leaves a construction site. Vehicles leaving the site must travel over the entire length of the stabilized construction entrance.

U.S. DEPARTMENT OF AGRICULTURE SOIL CONSERVATION SERVICE	PAGE F - 17 - 3A	MARYLAND DEPARTMENT OF ENVIRONMENT WATER MANAGEMENT ADMINISTRATION

BLAZE ORANGE PLASTIC MESH FENCE DETAIL

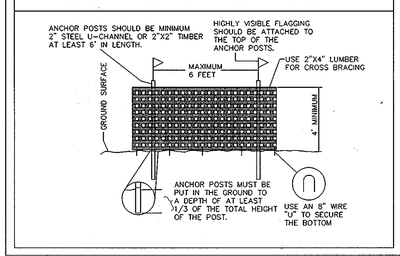

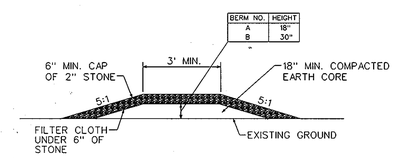

BERM NO.	HEIGHT
A	18"
B	30"

FILTER CLOTH SHALL BE GEOTEXTILE CLASS "C", OR BETTER

MOUNTABLE BERM DETAIL
NOT TO SCALE

THIS DEVELOPMENT PLAN IS APPROVED FOR SOIL EROSION AND SEDIMENT CONTROL BY THE HOWARD SOIL CONSERVATION DISTRICT.

HOWARD S.C.D. — DATE 1/18/12

BY THE ENGINEER:

"I CERTIFY THAT THIS PLAN FOR EROSION AND SEDIMENT CONTROL REPRESENTS A PRACTICAL AND WORKABLE PLAN BASED ON MY PERSONAL KNOWLEDGE OF THE SITE CONDITIONS. AND THAT IT WAS PREPARED IN ACCORDANCE WITH THE REQUIREMENTS OF THE HOWARD SOIL CONSERVATION DISTRICT."

SIGNATURE OF ENGINEER — DATE 12-22-2011

BY THE DEVELOPER:

"I/WE CERTIFY THAT ALL DEVELOPEMENT AND CONSTRUCTION WILL BE DONE ACCORDING TO THIS PLAN FOR SEDIMENT AND EROSION CONTROL, AND THAT ALL RESPONSIBLE PERSONNEL INVOLVED IN THE CONSTRUCTION PROJECT WILL HAVE A CERTIFICATE OF ATTENDANCE AT A DEPARTMENT OF THE ENVIRONMENT APPROVED TRAINING PROGRAM FOR THE CONTROL OF SEDIMENT AND EROSION BEFORE BEGINNING THE PROJECT. I ALSO AUTHORIZE PERIODIC ON-SITE INSPECTION BY THE HOWARD SOIL CONSERVATION DISTRICT."

SIGNATURE OF DEVELOPER — DATE 1/11/12

APPROVED: DEPARTMENT OF PLANNING AND ZONING

CHIEF-DEVELOPMENT ENGINEERING DIVISION	DATE 1/24/12
CHIEF-~~BUREAU~~ DIV. OF LAND DEVELOPMENT	DATE 2/2/12
DIRECTOR	DATE 2/3/12

PROFESSIONAL CERTIFICATION. I HEREBY CERTIFY THAT THESE DOCUMENTS WERE PREPARED OR APPROVED BY ME AND THAT I AM DULY LICENSED PROFESSIONAL ENGINEER UNDER THE LAWS OF THE STATE OF MARYLAND, LICENSE NO. 31099 EXPIRATION DATE: 11/12/12

KCI TECHNOLOGIES
ENGINEERS
PLANNERS
SCIENTISTS
CONSTRUCTION MANAGERS
8161 MAPLE LAWN BOULEVARD
SUITE 150
FULTON, MD 20759
TELEPHONE: (410)792-8086
FAX: (410)792-7419

Orchard Development Corporation

CRP Opportunity Fund, L.P.

OWNER/DEVELOPER:
ORCHARD DEVELOPMENT CORPORATION
5032 DORSEY HALL DRIVE
ELLICOTT CITY, MD 21042
(410) 964-2334

OWNER:
WILDER BUILDING CORPORATION
3300 SONIA TRAIL
ELLICOTT CITY, MD 21043
(410)461-2522

REVISIONS			
NO.	DATE	DESCRIPTION	BY

DATE 11-18-2011
SCALE AS SHOWN
DESIGNED BY
DRAWN BY C.T.B.

EROSION & SEDIMENT CONTROL DETAIL SHEET

ORCHARD MEADOWS

PARCELS D-1, D-2, D-3
SITE DEVELOPMENT PLAN
ZONING R-A-15, TAX MAP NO. 17, GRID NO. 23, PARCEL NO. 711

SECOND ELECTION DISTRICT — HOWARD COUNTY, MARYLAND

SEAL: STATE OF MARYLAND — RICHARD L. TAYLOR — No. 031099 — PROFESSIONAL ENGINEER — 12-22-11

DRAWING NO. C - 29

SHEET 29 OF 38

KCI JOB NUMBER 27-101105

SDP-11-052

HOWARD COUNTY SOIL CONSERVATION DISTRICT DETAILS AND SPECIFICATIONS FOR VEGETATIVE ESTABLISHMENT

FOLLOWING INITIAL SOIL DISTURBANCE OR REDISTURBANCE, PERMANENT OR TEMPORARY STABILIZATION SHALL BE COMPLETED WITHIN SEVEN CALENDAR DAYS FOR THE SURFACE OF ALL PERIMETER CONTROLS, DIKES, SWALES, DITCHES, PERIMETER SLOPES, AND ALL SLOPES GREATER THAN 3 HORIZONTAL TO 1 VERTICAL (3:1) AND FOURTEEN DAYS FOR ALL OTHER DISTURBED OR GRADED AREAS ON THE PROJECT SITE.

1. PERMANENT SEEDING:

   A. SOIL TESTS: LIME AND FERTILIZER WILL BE APPLIED PER SOIL TESTS RESULTS FOR SITES GREATER THAN 5 ACRES. SOIL TESTS WILL BE DONE AT COMPLETION OF ROUGH GRADING. RATES AND ANALYSES WILL BE PROVIDED TO THE GRADING INSPECTOR AS WELL AS THE CONTRACTOR.

      1. OCCURRENCE OF ACID SULFATE SOILS (GRAYISH BLACK COLOR) WILL REQUIRE COVERING WITH A MINIMUM OF 12 INCHES OF CLEAN SOIL WITH 6 INCHES MINIMUM CAPPING OF TOP SOIL. NO STOCKPILING OF MATERIAL IS ALLOWED. IF NEEDED, SOIL TESTS SHOULD BE DONE BEFORE AND AFTER A 6 WEEK INCUBATION PERIOD TO ALLOW OXIDATION OF SULFATES.

   B. SEEDBED PREPARATION: AREA TO BE SEEDED SHALL BE LOOSE AND FRIABLE TO A DEPTH OF AT LEAST 3 INCHES. THE TOP LAYER SHALL BE LOOSENED BY RAKING, DISKING OR OTHER ACCEPTABLE MEANS BEFORE SEEDING OCCURS. FOR SITES LESS THAN 5 ACRES, APPLY 100 POUNDS OF DOLOMITIC LIMESTONE AND 21 POUNDS OF 10-20-20 FERTILIZER PER 1,000 SQUARE FEET. HARROW OR DISK LIME AND FERTILIZER INTO THE SOIL TO A DEPTH OF AT LEAST 3 INCHES ON SLOPES FLATTER THAN 3:1.

   C. SEEDING: APPLY 5-6 POUNDS PER 1,000 SQUARE FEET OF TALL FESCUE BETWEEN FEBRUARY 1 AND APRIL 30 OR BETWEEN AUGUST 15 AND OCTOBER 31. APPLY SEED UNIFORMLY ON A MOIST FIRM SEEDBED WITH A CYCLONE SEEDING DRILL, CULTIPACKER SEEDER OR HYDROSEEDER (SLURRY INCLUDES SEEDS AND FERTILIZER, RECOMMENDED ON STEEP SLOPES ONLY). MAXIMUM SEED DEPTH SHOULD BE 1/4 INCH IN CLAYEY SOILS AND 1/2 INCH IN SANDY SOILS WHEN USING OTHER THAN THE HYDROSEEDER METHOD. IRRIGATE IF SOIL MOISTURE IS DEFICIENT TO SUPPORT ADEQUATE GROWTH UNTIL VEGETATION IS FIRMLY ESTABLISHED. IF OTHER SEED MIXES ARE TO BE USED, SELECT FROM TABLE 25, ENTITLED "PERMANENT SEEDING FOR LOW MAINTENANCE AREAS" FROM THE 1994 STANDARDS AND SPECIFICATIONS FOR SOIL EROSION AND SEDIMENT CONTROL. MIXES SUITABLE FOR THIS AREA ARE 1, 3, AND 5-7. MIXES 5-7 ARE SUITABLE IN NON-MOWABLE SITUATIONS.

   D. MULCHING: MULCH SHALL BE APPLIED TO ALL SEEDED AREAS IMMEDIATELY AFTER SEEDING. DURING THE TIME PERIODS WHEN SEEDING IS NOT PERMITTED, MULCH SHALL BE APPLIED IMMEDIATELY AFTER GRADING. MULCH SHALL BE UNROTTED, UNCHOPPED, SMALL GRAIN STRAW APPLIED AT A RATE OF 2 TONS PER ACRE OR 90 POUNDS PER 1,000 SQUARE FEET (2 BALES). IF A MULCH ANCHORING TOOL IS USED APPLY 2.5 TONS PER ACRE. MULCH MATERIALS SHALL BE RELATIVELY FREE OF ALL KINDS OF WEEDS AND SHALL BE COMPLETELY FREE OF PROHIBITED NOXIOUS WEEDS. SPREAD MULCH UNIFORMLY, MECHANICALLY OR BY HAND, TO A DEPTH OF 1-2 INCHES.

   E. SECURING STRAW MULCH: STRAW MULCH SHALL BE SECURED IMMEDIATELY FOLLOWING MULCH APPLICATION TO MINIMIZE MOVEMENT BY WIND OR WATER. THE FOLLOWING METHODS ARE PERMITTED:

      (I) USE A MULCH ANCHORING TOOL WHICH IS DESIGNED TO PUNCH AND ANCHOR MULCH INTO THE SOIL SURFACE TO A MINIMUM DEPTH OF 2 INCHES. THIS IS THE MOST EFFECTIVE METHOD FOR SECURING MULCH. HOWEVER, IT IS LIMITED TO RELATIVELY FLAT AREAS WHERE EQUIPMENT CAN OPERATE SAFELY.

      (II) WOOD CELLULOSE FIBER MAY BE USED FOR ANCHORING STRAW. APPLY THE FIBER BINDER AT A NET DRY WEIGHT OF 750 POUNDS PER ACRE. IF MIXED WITH WATER, USE 50 POUNDS OF WOOD CELLULOSE FIBER PER 100 GALLONS OF WATER.

      (III) LIQUID BINDERS MAY BE USED AND APPLIED HEAVIER AT THE EDGES WHERE WIND CATCHES MULCH, SUCH AS IN VALLEYS AND ON CRESTS OF SLOPES. THE REMAINDER OF THE AREA SHOULD APPEAR UNIFORM AFTER BINDER APPLICATION. BINDERS LISTED IN THE 1994 STANDARDS AND SPECIFICATIONS FOR SOIL EROSION AND SEDIMENT CONTROL OR APPROVED EQUAL SHALL BE APPLIED AT RATES RECOMMENDED BY THE MANUFACTURERS.

      (IV) LIGHTWEIGHT PLASTIC NETTING MAY BE USED TO SECURE MULCH. THE NETTING WILL BE STAPLED TO THE GROUND ACCORDING TO MANUFACTURERS RECOMMENDATIONS.

2. TEMPORARY SEEDING:

   LIME: 100 POUNDS OF DOLOMITIC LIMESTONE PER 1,000 SQUARE FEET.

   FERTILIZER: 15 POUNDS OF 10-10-10 PER 1,000 SQUARE FEET.

   SEED: PERENNIAL RYE - 0.92 POUNDS PER 1,000 SQUARE FEET (FEBRUARY 1 THROUGH APRIL 30 OF AUGUST 15 THROUGH NOVEMBER 1).

   MILLET - 0.92 POUNDS PER 1,000 SQUARE FEET (MAY 1 THROUGH AUGUST 15).

   MULCH: SAME AS 1 D AND E ABOVE.

3. NO FILLS MAY BE PLACED ON FROZEN GROUND. ALL FILL TO BE PLACED IN APPROXIMATELY HORIZONTAL LAYERS, EACH LAYER HAVING A LOOSE THICKNESS OF NOT MORE THAN 8 INCHES. ALL FILL IN ROADWAYS AND PARKING AREAS IS TO BE CLASSIFIED TYPE 2 AS PER ANNE ARUNDEL COUNTY CODE - ARTICLE 21, SECTION 2-308, AND COMPACTED TO 90% DENSITY. COMPACTION TO BE DETERMINED BY ASTM D-1557-66T (MODIFIED PROCTOR). ANY FILL WITHIN THE BUILDING AREA TO BE COMPACTED TO A MINIMUM OF 95% AS DETERMINED BY METHODS PREVIOUSLY MENTIONED. FILLS FOR POND EMBANKMENTS SHALL BE COMPACTED AS PER MD-378 CONSTRUCTION SPECIFICATIONS. ALL OTHER FILLS SHALL BE COMPACTED SUFFICIENTLY SO AS TO BE STABLE AND PREVENT EROSION AND SLIPPAGE.

4. PERMANENT SOD:

   INSTALLATION OF SOD SHOULD FOLLOW PERMANENT SEEDING DATES. PERMANENT SOD IS TO BE TALL FESCUE, STATE APPROVED SOD; LIME AND FERTILIZER PER PERMANENT SEEDING SPECIFICATIONS AND LIGHTLY IRRIGATE SOIL PRIOR TO LAYING SOD. SOD IS TO BE LAID ON THE CONTOUR WITH ALL ENDS TIGHTLY ABUTTING. JOINTS ARE TO BE STAGGERED BETWEEN ROWS. WATER AND ROLL OR TAMP SOD TO INSURE POSITIVE ROOT CONTACT WITH THE SOIL. ALL SLOPES STEEPER THAN 3:1, AS SHOWN, ARE TO BE PERMANENTLY SODDED OR PROTECTED WITH AN APPROVED EROSION CONTROL NETTING. ADDITIONAL WATERING FOR ESTABLISHMENT MAY BE REQUIRED. SOD IS NOT TO BE APPLIED ON FROZEN GROUND. SOD SHALL NOT BE HARVESTED OR TRANSPLANTED WHEN MOISTURE CONTENT (DRY OR WET) AND/OR EXTREME TEMPERATURE MAY ADVERSELY AFFECT ITS SURVIVAL. IN THE ABSENCE OF ADEQUATE RAINFALL, IRRIGATION SHOULD BE PERFORMED TO INSURE ESTABLISHED SOD.

5. MINING OPERATIONS:

   SEDIMENT CONTROL PLANS FOR MINING OPERATIONS MUST INCLUDE THE FOLLOWING SEEDING DATES AND MIXTURES:

   FOR SEEDING DATES OF:

   FEBRUARY 1 THROUGH APRIL 30 AND AUGUST 15 THROUGH OCTOBER 31, USE SEED MIXTURE OF TALL FESCUE AT THE RATE OF 2 POUNDS PER 1,000 SQUARE FEET AND SERICEA LESPEDEZA AT THE RATE OF 0.5 POUNDS PER 1,000 SQUARE FEET

   FOR SEEDING DATES OF MAY 1 THROUGH AUGUST 14, USE SEED MIXTURE OF TALL FESCUE AT THE RATE OF 2 POUNDS PER 1,000 SQUARE FEET AND WEEPING LOVEGRASS AT THE RATE OF 0.1 POUND PER 1,000 SQUARE FEET.

   NOTE: USE OF THIS INFORMATION DOES NOT PRECLUDE MEETING ALL OF THE REQUIREMENTS OF THE "1994 MARYLAND STANDARDS AND SPECIFICATIONS FOR SOIL EROSION AND SEDIMENT CONTROL".

21.0 STANDARD AND SPECIFICATIONS FOR TOPSOIL

DEFINITION

PLACEMENT OF TOPSOIL OVER A PREPARED SUBSOIL PRIOR TO ESTABLISHMENT OF PERMANENT VEGETATION.

PURPOSE

TO PROVIDE A SUITABLE SOIL MEDIUM FOR VEGETATIVE GROWTH. SOILS OF CONCERN HAVE LOW MOISTURE CONTENT, LOW NUTRIENT LEVELS, LOW PH, MATERIALS TOXIC TO PLANTS, AND/OR UNACCEPTABLE SOIL GRADATION.

CONDITIONS WHERE PRACTICE APPLIES

I. THIS PRACTICE IS LIMITED TO AREAS HAVING 2:1 OR FLATTER SLOPES WHERE:

   A. THE TEXTURE OF THE EXPOSED SUBSOIL/PARENT MATERIAL IS NOT ADEQUATE TO PRODUCE VEGETATIVE GROWTH.
   B. THE SOIL MATERIAL IS SO SHALLOW THAT THE ROOTING ZONE IS NOT DEEP ENOUGH TO SUPPORT PLANTS OR FURNISH CONTINUING SUPPLIES OF OF MOISTURE AND PLANT NUTRIENTS.
   C. THE ORIGINAL SOIL TO BE VEGETATED CONTAINS MATERIAL TOXIC TO PLANT GROWTH.
   D. THE SOIL IS SO ACIDIC THAT TREATMENT WITH LIMESTONE IS NOT FEASIBLE.

II. FOR THE PURPOSE OF THESE STANDARDS AND SPECIFICATIONS, AREAS HAVING SLOPES STEEPER THAN 2:1 REQUIRE SPECIAL CONSIDERATION AND DESIGN FOR ADEQUATE STABILIZATION. AREAS HAVING SLOPES STEEPER THAN 2:1 SHALL HAVE THE APPROPRIATE STABILIZATION SHOWN ON THE PLANS.

CONSTRUCTION AND MATERIAL SPECIFICATIONS

I. TOPSOIL SALVAGED FROM THE EXISTING SITE MAY BE USED PROVIDED THAT IT MEETS THE STANDARDS AS SET FORTH IN THESE SPECIFICATIONS. TYPICALLY, THE DEPTH OF TOPSOIL TO BE SALVAGED FOR A GIVEN SOIL TYPE CAN BE FOUND IN THE REPRESENTATIVE SOIL PROFILE SECTION IN THE SOIL SURVEY PUBLISHED BY USDA-SCS IN COOPERATION WITH MARYLAND AGRICULTURAL EXPERIMENTAL STATION.

II. TOPSOIL SPECIFICATIONS - SOIL TO BE USED AS TOPSOIL MUST MEET THE FOLLOWING:

   A. TOPSOIL SHALL BE A LOAM, SANDY LOAM, CLAY LOAM, SILT LOAM, SANDY CLAY LOAM, LOAMY SAND. OTHER SOILS MAY BE USED IF RECOMMENDED BY AN AGRONOMIST OR SOIL SCIENTIST AND APPROVED BY THE APPROPRIATE APPROVAL AUTHORITY. REGARDLESS, TOPSOIL SHALL NOT BE A MIXTURE OF CONTRASTING TEXTURED SUBSOILS AND SHALL CONTAIN LESS THAN 5% BY VOLUME OF CINDERS, STONES, SLAG, COARSE FRAGMENTS, GRAVEL, STICKS, ROOTS, TRASH, OR OTHER MATERIALS LARGER THAN 1 1/2" IN DIAMETER.
   B. TOPSOIL MUST BE FREE OF PLANTS OR PLANT PARTS SUCH AS BERMUDA GRASS, QUACKGRASS, JOHNSONGRASS, NUTSEDGE, POISON, IVY, THISTLE, OR OTHERS AS SPECIFIED.
   C. WHERE THE SUBSOIL IS EITHER HIGHLY ACIDIC OR COMPOSED OF HEAVY CLAYS, GROUND LIMESTONE SHALL BE SPREAD AT THE RATE OF 4-8 TONS/ACRE (200-400 POUNDS PER 1,00 SQUARE FEET) PRIOR TOT HE PLACEMENT OF TOPSOIL. LIME SHALL BE DISTURBED UNIFORMLY OVER DESIGNATE AREAS AND WORKED INTO THE SOIL IN CONJUNCTION WITH TILLAGE OPERATIONS AS DESCRIBED IN THE FOLLOWING PROCURES.

III. FOR SITES HAVING DISTURBED AREAS UNDER 5 ACRES:

   A. PLACE TOPSOIL (IF REQUIRED) AND APPLY SOIL AMENDMENTS AS SPECIFIED IN 20.0 VEGETATIVE STABILIZATION - SECTION I - VEGETATIVE STABILIZATION METHODS AND MATERIALS.

I(TYP.) FOR SITE HAVING DISTURBED AREAS OVER 5 ACRES:

   A. ON SOIL MEETING TOPSOIL SPECIFICATIONS, OBTAIN TEST RESULTS DICTATING FERTILIZER AND LIME AMENDMENTS REQUIRE TO BRING THE SOIL INTO COMPLIANCE WITH THE FOLLOWING:

I(TYP.) CONTINUED....

   1. PH FOR TOPSOIL SHALL BE BETWEEN 6.0 AND 7.5. IF THE TESTED SOIL DEMONSTRATES A PH OF LESS THAN 6.0, SUFFICIENT LIME SHALL BE PRESCRIBED TO RAISE THE PH TO 6.5 OR HIGHER.
   2. ORGANIC CONTENT OF TOPSOIL SHALL BE NOT LESS THAN 1.5 PERCENT BY WEIGHT.
   3. TOPSOIL HAVING SOLUBLE SALT CONTENT GREATER THAN 500 PARTS PER MILLION SHALL NOT BE USED.
   4. NO SOD OR SEED SHALL BE PLACED ON SOIL WHICH HAS BEEN TREATED WITH SOIL STERILANTS OR CHEMICALS USED FOR WEED CONTROL UNTIL SUFFICIENT TIME AS ELAPSED (14 DAYS MIN.) TO PERMIT DISSIPATION OF PHYTO-TOXIC MATERIALS.

NOTE: TOPSOIL SUBSTITUTES OR AMENDMENTS, AS RECOMMENDED BY A QUALIFIED AGRONOMIST OR SOIL SCIENTIST AND APPROVED BY THE APPROPRIATE APPROVAL AUTHORITY, MAY BE USED IN LIEU OF NATURAL TOPSOIL.

II. PLACE TOPSOIL (IF REQUIRED) AND APPLY SOIL AMENDMENTS AS SPECIFIED IN 20.0 VEGETATIVE STABILIZATION - SECTION I - VEGETATIVE STABILIZATION METHODS AND MATERIALS.

(TYP.) TOPSOIL APPLICATION

I. WHEN TOPSOILING, MAINTAIN NEEDED EROSION AND SEDIMENT CONTROL PRACTICES SUCH AS DIVERSIONS, GRADE STABILIZATION STRUCTURES, EARTH DIKES, SLOPE SILT FENCE AND SEDIMENT TRAPS AND BASINS.

II. GRADES ON THE AREAS TO BE TOPSOILED, WHICH HAVE BEEN PREVIOUSLY ESTABLISHED,"SHALL BE MAINTAINED, ALBEIT 4"-8" HIGHER IN ELEVATION.

III. TOPSOIL SHALL BE UNIFORMLY DISTURBED IN A 4"-8" LAYER AND LIGHTLY COMPACTED TO A MINIMUM THICKNESS OF 4". SPREADING SHALL BE PERFORMED IN SUCH A MANNER THAT SODDING OR SEEDING CAN PROCEED WITH A MINIMUM OF ADDITIONAL SOIL PREPARATION AND TILLAGE. ANY IRREGULARITIES IN THE SURFACE RESULTING FROM TOPSOILING OR OTHER OPERATIONS SHALL BE CORRECTED IN ORDER TO PREVENT THE FORMATION OF DEPRESSIONS OR WATER POCKETS.

IV. TOPSOIL SHALL NOT BE PLACED WHILE THE TOPSOIL OR SUBSOIL IS IN A FROZEN OR MUDDY CONDITION, WHEN THE SUBSOIL IS EXCESSIVELY WET OR IN A CONDITION THAT MY OTHERWISE BE DETRIMENTAL TO PROPER GRADING AND SEEDBED PREPARATION.

(TYP)I. ALTERNATIVE FOR PERMANENT SEEDING - INSTEAD OF APPLYING THE FULL AMOUNTS OF LIME AND COMMERCIAL FERTILIZER, COMPOSTED SLUDGE AND AMENDMENTS MAY BE APPLIED AS SPECIFIED BELOW:

I. COMPOSTED SLUDGE MATERIAL FOR USE AS A SOIL CONDITIONER FOR SITES HAVING DISTURBED AREAS OVER 5 ACRES SHALL BE TESTED TO PERSCRIBE AMENDMENTS AND FOR SITES HAVING DISTURBED AREAS UNDER 5 ACRES SHALL CONFORM TO THE FOLLOWING REQUIREMENTS:

   A. COMPOSTED SLUDGE SHALL BE SUPPLIED BY, OR ORIGINATE FROM, A PERSON OR PERSONS THAT ARE PERMITTED (AT THE TIME OF ACQUISITION OF THE COMPOST) BY THE MARYLAND DEPARTMENT OF THE ENVIRONMENTAL UNDER COMAR 26.04.06.
   B. COMPOSTED SLUDGE SHALL CONTAIN AT LEAST 1 PERCENT NITROGEN, 1.5 PERCENT PHOSPHORUS, AND 0.2 PERCENT POTASSIUM AND HAVE A PH OF 7.0 TO 8.0. IF COMPOST DOES NOT MEET THESE REQUIREMENTS, THE APPROPRIATE CONSTITUENTS MUST BE ADDED TO MEET THE REQUIREMENTS PRIOR TO USE.
   C. COMPOSTED SLUDGE SHALL BE APPLIED AT A RATE OF 1 TON / 1,000 SF.

II. COMPOSTED SLUDGE SHALL BE AMENDED WITH POTASSIUM FERTILIZER APPLIED AT THE RATE OF 4 LB. / 1,000 SF. AND 1/3 THE NORMAL LIME APPLICATION RATE.

SEDIMENT CONTROL NOTES

1. A MINIMUM OF 24 HOURS MUST BE GIVEN TO THE HOWARD COUNTY DEPARTMENT OF INSPECTION, LICENSES AND PERMITS, SEDIMENT CONTROL DIVISION PRIOR TO THE START OF ANY CONSTRUCTION, (313-1850).
2. ALL VEGETATIVE AND STRUCTURAL PRACTICES ARE TO BE INSTALLED ACCORDING TO THE PROVISIONS OF THIS PLAN AND ARE TO BE IN CONFORMANCE WITH THE MOST CURRENT "MARYLAND STANDARDS AND SPECIFICATION FOR SOIL EROSION AND SEDIMENT CONTROL", REVISIONS THERETO.
3. "FOLLOWING INITIAL SOIL DISTURBANCE OR REDISTURBANCE, PERMANENT OR TEMPORARY STABILIZATION SHALL BE COMPLETE WITHIN: A) 7 CALENDAR DAYS FOR ALL PERIMETER SEDIMENT CONTROL STRUCTURES, DIKES, PERIMETER SLOPES AND ALL SLOPES GREATER THAT 3:1, B) 14 DAYS AS TO ALL OTHER DISTURBED OR GRADED AREAS ON THE PROJECT SITE.
4. ALL SEDIMENT TRAPS/BASINS SHOWN MUST BE FENCED AND WARNING SIGNS POSTED AROUND THEIR PERIMETER IN ACCORDANCE WITH VOL. 1, CHAPTER 12, OF THE HOWARD COUNTY DESIGN MANUAL, STORM DRAINAGE.
5. ALL DISTURBED AREAS MUST BE STABILIZED WITHIN THE TIME PERIOD SPECIFIED ABOVE IN ACCORDANCE WITH THE 1994 MARYLAND STANDARDS AND SPECIFICATIONS FOR SOIL EROSION AND SEDIMENT CONTROL FOR PERMANENT SEEDINGS (SEC. 51) SOD (SEC. 54), TEMPORARY SEEDING (SEC. 50) AND MULCHING (SEC. 52). TEMPORARY STABILIZATION WITH MULCH ALONE CAN ONLY BE DONE WHEN RECOMMENDED SEEDING DATES DO NOT ALLOW FOR PROPER GERMINATION AND ESTABLISHMENT OF GRASSES.
6. ALL SEDIMENT CONTROL STRUCTURES ARE TO REMAIN IN PLACE AND ARE TO BE MAINTAINED IN OPERATIVE CONDITION UNTIL PERMISSION FOR THEIR REMOVAL HAS BEEN OBTAINED FROM THE HOWARD COUNTY SEDIMENT CONTROL INSPECTOR.
7. SITE ANALYSIS:

TOTAL AREA OF SITE	9.67	ACRES
AREA DISTURBED	9.39	ACRES
AREA TO BE ROOFED OR PAVED	5.51	ACRES
AREA TO BE VEGETATIVELY STABILIZED	4.48	ACRES
TOTAL CUT	1400	CY
TOTAL FILL	1250	CY
OFFSITE WASTE AREA LOCATION	SITE WITH APPROVED SED. CONTROL PLAN	

8. ANY SEDIMENT CONTROL PRACTICE WHICH IS DISTURBED BY GRADING ACTIVITY FOR PLACEMENT OF UTILITIES MUST BE REPAIRED ON THE SAME DAY OF DISTURBANCE.
9. ADDITIONAL SEDIMENT CONTROL MUST BE PROVIDED, IF DEEMED NECESSARY BY THE HOWARD COUNTY SEDIMENT CONTROL INSPECTOR.
10. ON ALL SITES WITH DISTURBED AREAS IN EXCESS OF 2 ACRES, APPROVAL OF THE INSPECTION AGENCY SHALL BE REQUESTED UPON COMPLETION OF INSTALLATION OF PERIMETER EROSION AND SEDIMENT CONTROLS, BUT BEFORE PROCEEDING WITH ANY OTHER EARTH DISTURBANCE OR GRADING, OTHER BUILDING OR GRADING INSPECTION APPROVALS MAY NOT BE AUTHORIZED UNTIL THE INITIAL APPROVAL BY THE INSPECTION AGENCY IS MADE.
11. TRENCHES FOR THE CONSTRUCTION OF UTILITIES IS LIMITED TO THREE PIPE LENGTHS ON THAT WHICH CAN BE BACK FILLED AND STABILIZED WITHIN ONE WORKING DAY, WHICHEVER IS SHORTER

THIS DEVELOPMENT PLAN IS APPROVED FOR SOIL EROSION AND SEDIMENT CONTROL BY THE HOWARD SOIL CONSERVATION DISTRICT.

HOWARD S.C.D. — DATE 1/4/12

BY THE ENGINEER:

"I CERTIFY THAT THIS PLAN FOR EROSION AND SEDIMENT CONTROL REPRESENTS A PRACTICAL AND WORKABLE PLAN BASED ON MY PERSONAL KNOWLEDGE OF THE SITE CONDITIONS. AND THAT IT WAS PREPARED IN ACCORDANCE WITH THE REQUIREMENTS OF THE HOWARD SOIL CONSERVATION DISTRICT."

SIGNATURE OF ENGINEER — DATE 12-22-2011

BY THE DEVELOPER:

"I/WE CERTIFY THAT ALL DEVELOPEMENT AND CONSTRUCTION WILL BE DONE ACCORDING TO THIS PLAN FOR SEDIMENT AND EROSION CONTROL, AND THAT ALL RESPONSIBLE PERSONNEL INVOLVED IN THE CONSTRUCTION PROJECT WILL HAVE A CERTIFICATE OF ATTENDANCE AT A DEPARTMENT OF THE ENVIRONMENT APPROVED TRAINING PROGRAM FOR THE CONTROL OF SEDIMENT AND EROSION BEFORE BEGINNING THE PROJECT. I ALSO AUTHORIZE PERIODIC ON-SITE INSPECTION BY THE HOWARD SOIL CONSERVATION DISTRICT."

SIGNATURE OF DEVELOPER — DATE 1/11/12

APPROVED: DEPARTMENT OF PLANNING AND ZONING

CHIEF-DEVELOPMENT ENGINEERING DIVISION	DATE 1/24/12
CHIEF-BUREAU OF LAND DEVELOPMENT	DATE 2/02/12
DIRECTOR	DATE 2/3/12

SIGNATURE OF DEVELOPER (APPLICANT) — DATE 1/11/12

PRINT NAME: L. SCOTT ARMIGER — TITLE: V.P.

ADDRESS: 5032 DORSEY HALL DR. ELLICOTT CITY 21042

TELEPHONE: 410-964-2334

THE DEVELOPER'S PLAN TO CONTROL SILT AND EROSION IS ADEQUATE TO CONTAIN THE SILT AND EROSION PROPERTY COVERED BY THE PLAN. I CERTIFY THAT THIS PLAN OF EROSION AND SEDIMENT CONTROL REPRESENTS A PRACTICAL AND WORKABLE PLAN BASED ON MY PERSONAL KNOWLEDGE OF THIS SITE, AND WAS PREPARED IN ACCORDANCE WITH THE REQUIREMENTS OF THE HOWARD COUNTY SOIL CONSERVATION DISTRICT PLAN SUBMITTAL GUIDELINES AND THE CURRENT MARYLAND STANDARDS AND SPECIFICATIONS FOR SEDIMENT AND EROSION CONTROL. I HAVE REVIEWED THIS EROSION AND SEDIMENT CONTROL PLAN WITH THE OWNER/DEVELOPER.

SIGNATURE: — MD. LICENSE NO. 31089 — DATE: 12-22-2011

PRINT NAME: RICHARD L. BUTT — FIRM NAME: KCI TECHNOLOGIES INC.

ADDRESS: 8161 MAPLE LAWN BOULEVARD FULTON, MD 20759

TELEPHONE: (410)792-8086 EXT. 3340

NOTE:
ALL VEGETATIVE AND STRUCTURAL PRACTICES ARE TO BE INSTALLED ACCORDING TO THE PROVISIONS OF THIS PLAN AND ARE TO BE IN CONFORMANCE WITH THE MOST CURRENT MARYLAND STANDARDS AND SPECIFICATIONS FOR SOIL EROSION AND SEDIMENT CONTROL, AND REVISIONS THERETO

PROFESSIONAL CERTIFICATION. I HEREBY CERTIFY THAT THESE DOCUMENTS WERE PREPARED OR APPROVED BY ME AND THAT I AM DULY LICENSED PROFESSIONAL ENGINEER UNDER THE LAWS OF THE STATE OF MARYLAND, LICENSE NO. 31089
EXPIRATION DATE: 11/12/12

KCI TECHNOLOGIES
ENGINEERS
PLANNERS
SCIENTISTS
CONSTRUCTION MANAGERS
8161 MAPLE LAWN BOULEVARD
SUITE 150
FULTON, MD 20759
TELEPHONE: (410)792-8086
FAX: (410)792-7419

OrchardDevelopment Corporation

CRP Opportunity Fund, L.P.

OWNER / DEVELOPER:
ORCHARD DEVELOPMENT CORPORATION
5032 DORSEY HALL DRIVE
ELLICOTT CITY, MD 21042
(410) 964-2334

OWNER:
WILDER BUILDING CORPORATION
3300 SONIA TRAIL
ELLICOTT CITY, MD 21043
(410)-461-2522

REVISIONS			
NO.	DATE	DESCRIPTION	BY

DATE 11-18-2011
SCALE AS SHOWN
DESIGNED BY
DRAWN BY C.T.B.

EROSION & SEDIMENT CONTROL NOTES

ORCHARD MEADOWS
PARCELS D-1, D-2, D-3
SITE DEVELOPMENT PLAN
ZONING R-A-15, TAX MAP NO. 17, GRID NO. 23, PARCEL NO. 711

SECOND ELECTION DISTRICT — HOWARD COUNTY, MARYLAND

SEAL: STATE OF MARYLAND — RICHARD L. BUTT — No. 031089 — PROFESSIONAL ENGINEER — 12-22-11

DRAWING NO. C-30

SHEET 30 OF 38

KCI JOB NUMBER 27-101105

SDP-11-052

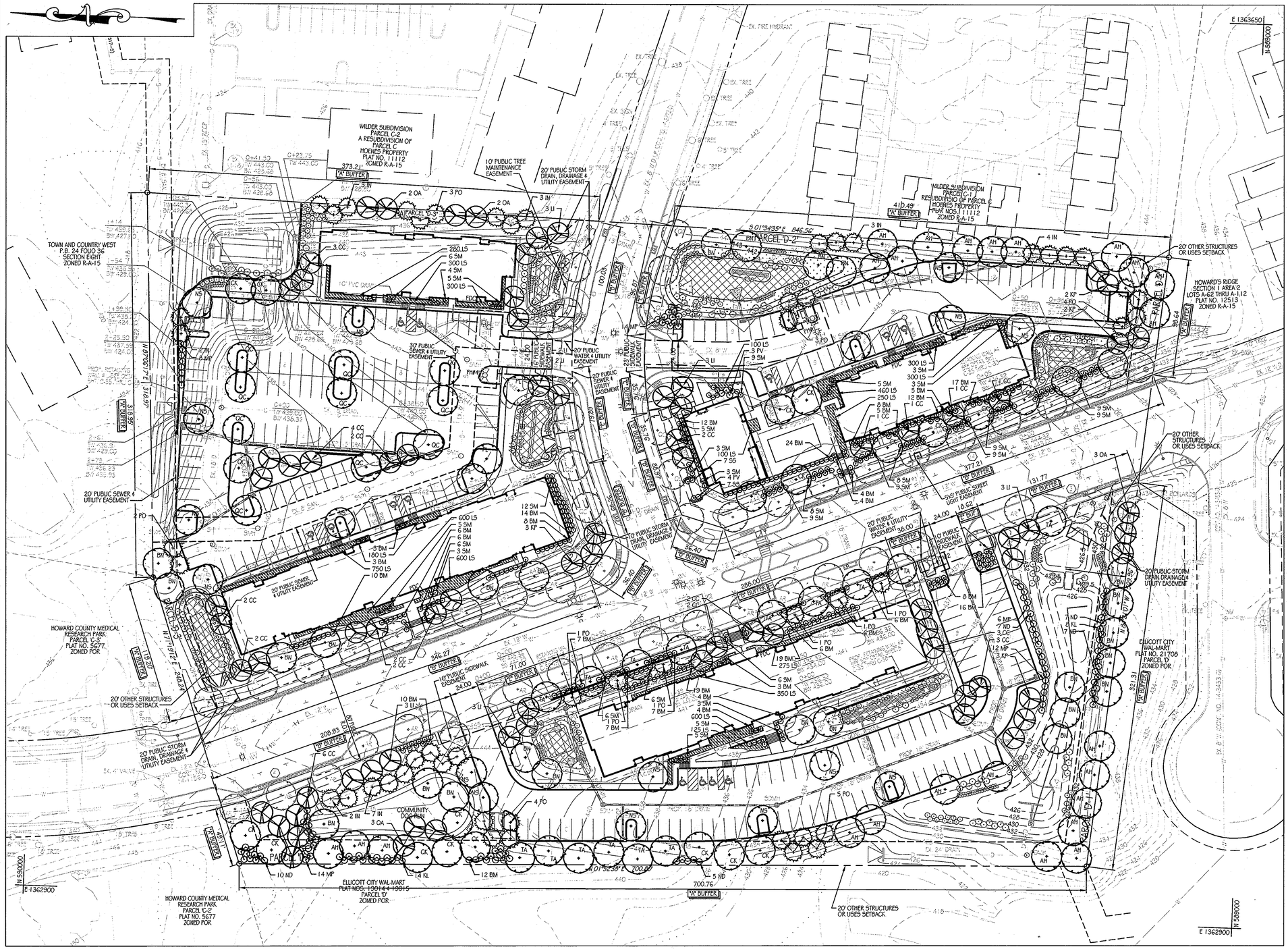

LANDSCAPE PLAN

SCALE: 1" = 40'

GRAPHIC SCALE

40 0 10 20 40 80

1 INCH = 40 FEET

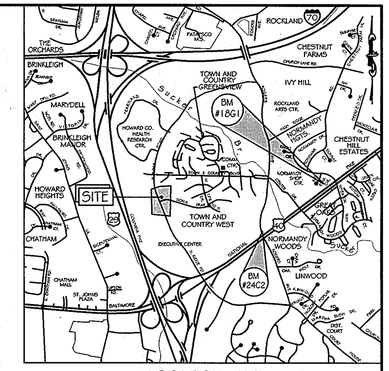

LOCATION MAP

SCALE: 1" = 2000'

ADC MAP COORDINATES: 12-7C

LEGEND

428	EX. INTERMEDIATE CONTOUR
430	EX. INDEX CONTOUR
EX. 8" W	EX. WATER
EX. 15" SCCP	EX. STORM DRAIN
EX. 8" SAN.	EX. SANITARY
X	EX. FENCE
FH	EX. FIRE HYDRANT
WV	EX. WATER VALVE
GV	EV GAS VALVE
LP	EX. LIGHT POLE
	EX. TREE
	EX. MANHOLE
	EX. ELECTRIC BOX
	EX. SIGN
	PROPERTY LINE
	RIGHT-OF-WAY LINE
430	PROP. CONTOUR
	PROP. CURB
PROP. 6" WATER	PROP. WATER
PROP. 8" SAN.	PROP. SANITARY
PROP. 8" DRAIN	PROP. DRAIN
	PROP. MANHOLE
	PROP. INLET
FH	PROP. FIRE HYDRANT
WV	PROP. WATER VALVE
M	PROP. WATER METER
CO	PROP. CLEANOUT
LP	PROP. LIGHT POLE
	MAJOR DECIDUOUS TREE
	ORNAMENTAL TREE
	EVERGREEN TREE
	SHRUBS
	GROUNDCOVER
	ORNAMENTAL BOULDERS
	MAJOR DECIDUOUS SHADE TREES PROVIDED BY F-11-067

NOTE: SEE SHEETS C-17 THROUGH C-27 FOR STORMWATER MANAGEMENT MICRO-BIORETENTION LANDSCAPE PLANS.

PROFESSIONAL CERTIFICATION: I HEREBY CERTIFY THAT THESE DOCUMENTS WERE PREPARED AND APPROVED BY ME AND THAT I AM A DULY LICENSED PROFESSIONAL LANDSCAPE ARCHITECT UNDER LAWS OF THE STATE OF MARYLAND. LICENSE NO.: 654
EXPIRATION DATE: 10-08-2011

APPROVED: DEPARTMENT OF PLANNING AND ZONING

CHIEF-DEVELOPMENT ENGINEERING DIVISION	DATE 1/24/12
CHIEF-BUREAU OF LAND DEVELOPMENT	DATE 2/02/12
DIRECTOR	DATE 2/3/12

KCI TECHNOLOGIES
ENGINEERS
PLANNERS
SCIENTISTS
CONSTRUCTION MANAGERS
8161 MAPLE LAWN BOULEVARD
SUITE 150
FULTON, MD 20759
TELEPHONE: (410)792-8086
FAX: (410)792-7419

OrchardDevelopment Corporation

CRP Opportunity Fund, L.P.

OWNER / DEVELOPER:
ORCHARD DEVELOPMENT CORPORATION
5032 DORSEY HALL DRIVE
ELLICOTT CITY, MD 21042
(410) 964-2334

OWNER:
WILDER BUILDING CORPORATION
3300 SONIA TRAIL
ELLICOTT CITY, MD 21043
(410)461-2522

REVISIONS			
NO.	DATE	DESCRIPTION	BY

DATE	11-18-2011
SCALE	AS SHOWN
DESIGNED BY	
DRAWN BY	C.T.B.

LANDSCAPE PLAN

ORCHARD MEADOWS

PARCELS D-1, D-2, D-3

SITE DEVELOPMENT PLAN

ZONING R-A-15, TAX MAP NO. 17, GRID NO. 23, PARCEL NO. 711

SECOND ELECTION DISTRICT — HOWARD COUNTY, MARYLAND

SEAL: STATE OF MARYLAND — RICHARD L. BEVITT — No. 031089 — PROFESSIONAL ENGINEER — 12-12-11

DRAWING NO. C-31

SHEET 31 OF 38

KCI JOB NUMBER 27-101105

SDP-11-052

GENERAL PLANTING NOTES

1. THIS PLAN IS FOR LANDSCAPE PURPOSES ONLY.
2. IT SHALL BE THE RESPONSIBILITY OF THE CONTRACTOR TO NOTIFY THE ENGINEER OR LANDSCAPE ARCHITECT OF ANY DEVIATION FROM THE PLANS PRIOR TO ANY CHANGE BEING MADE. ANY DEVIATION OF THIS PLAN WITHOUT WRITTEN AUTHORIZATION FROM THE ENGINEER OR LANDSCAPE ARCHITECT WILL BE THE RESPONSIBILITY OF THE CONTRACTOR.
3. SHOULD THE CONTRACTOR DISCOVER DISCREPANCIES BETWEEN THE PLANS AND FIELD CONDITIONS, THE ENGINEER OR LANDSCAPE ARCHITECT IS TO BE NOTIFIED IMMEDIATELY TO RESOLVE THE SITUATION. SHOULD THE CONTRACTOR MAKE FIELD CORRECTIONS OR ADJUSTMENTS WITHOUT WRITTEN PERMISSION OF THE ENGINEER OR LANDSCAPE ARCHITECT, THE CONTRACTOR ASSUMES ALL RESPONSIBILITY FOR THOSE CHANGES.
4. IF A CONFLICT EXISTS BETWEEN DRAWINGS (AND/OR SPECIFICATIONS), THE MORE STRINGENT AND MORE COSTLY REQUIREMENT SHALL APPLY. ITEMS SHOWN ON THE DRAWINGS, BUT NOT SPECIFIED, SHALL APPLY AND BE FURNISHED AND INSTALLED BY THE CONTRACTOR. IF ANY ITEM IS SHOWN ON THE DRAWINGS, BUT NOT INCLUDED IN THE SPECIFICATIONS, PROVIDE ITEM OF QUALITY LEVEL CONSISTENT WITH THE GENERAL QUALITY LEVEL OF THE CONTRACT REQUIREMENTS. BRING CONFLICTS BETWEEN THE DRAWINGS AND SPECIFICATIONS TO THE ATTENTION OF THE ENGINEER OR LANDSCAPE ARCHITECT IMMEDIATELY.
5. THE CONTRACTOR SHALL INSURE THAT HIS WORK DOES NOT INTERRUPT EXISTING OR PROPOSED DRAINAGE PATTERNS.
6. DURING PLANTING OPERATIONS, EXCESS WASTE MATERIALS SHALL BE REMOVED DAILY FROM THE SITE. THE CONTRACTOR SHALL DISPOSE OF STUMPS AND MAJOR ROOTS OF ALL PLANTS TO BE REMOVED. DEPRESSIONS CAUSED BY REMOVAL OPERATIONS SHALL BE REFILLED WITH FERTILE, FRIABLE SOIL REPLACED AND COMPACTED SO AS TO REESTABLISH PROPER GRADE FOR NEW PLANTING.
7. THE CONTRACTOR SHALL CONTACT "MISS UTILITY" FOR UNDERGROUND UTILITY LOCATIONS AT LEAST 72 HOURS PRIOR TO THE LANDSCAPE INSTALLATION.
8. THE CONTRACTOR SHALL NOTIFY THE FACILITY MANAGER, OR OWNER, A MINIMUM OF THREE WORKING DAYS PRIOR TO PLANTING AND CONSTRUCTION FOR AS-BUILT DRAWINGS FOR UNDERGROUND UTILITIES AND IRRIGATION SYSTEM LINES,VALVES, LATERALS AND DRIP TUBING.
9. THE CONTRACTOR IS ADVISED OF THE EXISTENCE OF UNDERGROUND UTILITIES ON THE SITE. THEIR EXACT LOCATION SHALL BE VERIFIED IN THE FIELD WITH THE OWNER OR GENERAL CONTRACTOR PRIOR TO THE COMMENCEMENT OF ANY DIGGING OPERATIONS. IN THE EVENT THEY ARE UNCOVERED, THE LANDSCAPE CONTRACTOR SHALL BE HELD RESPONSIBLE FOR ALL DAMAGE TO UTILITIES AND SUCH DAMAGE SHALL NOT RESULT IN ANY ADDITIONAL EXPENSES TO THE OWNER. HAND EXCAVATE TO FULL DEPTH OF INSTALLATION OR UNTIL UTILITY IS FOUND.
10. IF UTILITY LINES ARE ENCOUNTERED IN THE EXCAVATION OF TREE PITS, OTHER LOCATIONS FOR TREES SHALL BE MADE BY THE CONTRACTOR WITHOUT ADDITIONAL COMPENSATION. NO CHANGES OF LOCATION SHALL BE MADE WITHOUT APPROVAL OF THE LANDSCAPE ARCHITECT.
11. EVERY POSSIBLE SAFEGUARD SHALL BE TAKEN TO PROTECT BUILDING SURFACES, LIGHTING, TRELLISES, EQUIPMENT, AND FURNISHING. THE CONTRACTOR SHALL BE RESPONSIBLE FOR ANY DAMAGE OR INJURY TO PERSONNEL OR PROPERTY WHICH MAY OCCUR AS A CONSEQUENCE OF THE EXECUTION OF THE WORK.
12. THE CONTRACTOR SHALL STAKE ALL INDIVIDUAL SPECIMEN MATERIAL LOCATED ON THE SITE FOR REVIEW AND/OR ADJUSTMENT BY THE LANDSCAPE ARCHITECT PRIOR TO PLANTING. SHRUBS AND TREES SHALL BE STAKED WITH COLOR CODED WIRE SURVEY FLAGS. SURVEYOR GROUND PAINT SHALL BE USED TO MARK OUT GROUNDCOVER BEDS. ALL LOCATIONS ARE TO BE APPROVED BY THE LANDSCAPE ARCHITECT BEFORE PLANTING.
13. PLANTS SHALL CONFORM TO CURRENT "AMERICAN STANDARDS FOR NURSERY STOCK", PARTICULARLY WITH REGARD TO SIZE, GROWTH, SIZE OF BALL, AND DENSITY OF BRANCH STRUCTURE. PLANT MATERIAL SHALL BE TAGGED AT THE SOURCE BY THE LANDSCAPE ARCHITECT UNLESS THIS REQUIREMENT IS SPECIFICALLY WAVED. REFERENCE "ANSI Z60.1-2004" (OR MOST CURRENT DOCUMENT AVAILABLE AT WWW.ANLA.ORG).

TYPE 1 TREE SPECIFICATIONS, MAJOR TREES				
SPECIES EXCEPTIONS OR MODIFICATIONS MUST BE APPROVED				
CALIPER	MINIMUM NUMBER OF BRANCHES OFF OF MAIN STEM	HEIGHT RANGE	WIDTH	CLEARANCE FROM GROUND TO FIRST BRANCH
1 IN.	8	8-10 FT.	3 TO 4 FT.	3 FT.
2 IN.	16	12-14 FT.	5 TO 6 FT.	4 FT.
2.5 IN.	18	12-14 FT.	6 TO 8 FT.	5 FT.
3 IN.	36	14-16 FT.	6 TO 8 FT.	5 FT.
4 IN.	45	16-18 FT.	8 TO 10 FT.	5 FT.
5 IN.	SUBJECT TO REVIEW AT PLACE OF GROWTH, OR PHOTOGRAPH			

14. ALL PLANTS (B&B OR CONTAINER) SHALL BE PROPERLY IDENTIFIED BY WEATHER-PROOF LABELS, SECURELY ATTACHED BEFORE DELIVERY TO PROJECT SITE. LABELS SHALL IDENTIFY PLANTS BY NAME, SPECIES, AND SIZE. LABELS SHALL NOT BE REMOVED UNTIL THE FINAL INSPECTION BY THE LANDSCAPE ARCHITECT OR AGENT IN CHARGE. CONTAINERIZED GROUND COVER SHALL BE PROVIDED IN SPECIFIED SIZE CONTAINERS, FULL GROWTH TO AT LEAST CONTAINER SIZE WITH FULLY DEVELOPED, BUT NOT POT BOUND ROOT SYSTEMS AND FREE OF INSECT OR FUNGUS INFESTATIONS.
15. ANY MATERIAL AND/OR WORK MAY BY REJECTED BY THE LANDSCAPE ARCHITECT OR OWNER IF IT DOES NOT MEET THE REQUIREMENTS OF THESE NOTES AND THE PROJECT SCOPE AND SEQUENCE. ALL REJECTED MATERIALS SHALL BE REMOVED FROM THE SITE BY THE CONTRACTOR.
16. NO SUBSTITUTIONS SHALL BE MADE WITHOUT WRITTEN CONSENT OF THE LANDSCAPE ARCHITECT.
17. ALL SHRUB AND GROUNDCOVER BEDS SHALL BE PLANTED IN CONTINUOUS PREPARED PLANTING BEDS.
18. ALL SHRUB BEDS AND PERENNIALS SHALL BE MULCHED WITH SHREDDED AND FULLY COMPOSTED HARDWOOD MULCH FREE OF COLOR DYE AS DETAILED AND SPECIFIED EXCEPT WHERE NOTED ON PLANS.
19. INSTALLATION CONTRACTOR MAINTENANCE SHALL BEGIN AFTER EACH PLANT HAS BEEN INSTALLED AND SHALL CONTINUE UNTIL 90 DAYS AFTER FINAL ACCEPTANCE BY THE ARCHITECT OR OWNER REPRESENTATIVE. MAINTENANCE SHALL INCLUDE WATERING, PRUNING, WEEDING, FERTILIZING, MULCHING, REPLACEMENT OF SICK OR DEAD PLANTS, AND ANY OTHER CARE NECESSARY FOR THE PROPER GROWTH OF THE PLANT MATERIAL. THE CONTRACTOR MUST BE ABLE TO PROVIDE CONTINUOUS MAINTENANCE. FOR AN ADDITIONAL COST, FOR A PERIOD OF ONE YEAR AFTER THE DATE OF THE "CERTIFICATE OF SUBSTANTIAL COMPLETION," THE CONTRACTOR WILL BE RESPONSIBLE FOR ITEMS LOST BY THEFT, "ACTS OF GOD," VANDALISM OR ANY CONDITION AFFECTING THE LANDSCAPE PRODUCT NOT SPECIFICALLY RELATED TO THE OWNER OR OTHER SITE CONTRACTOR DAMAGE UP TO DATE OF THE ISSUANCE OF A "CERTIFICATE OF SUBSTANTIAL COMPLETION."
20. UPON COMPLETION OF ALL LANDSCAPING FOR EACH PHASE OF WORK, AN INSPECTION OF THE WORK SHALL BE HELD. THE CONTRACTOR SHALL NOTIFY THE LANDSCAPE ARCHITECT OR OWNER FOR SCHEDULING THE INSPECTION AT LEAST SEVEN (7) DAYS PRIOR TO THE ANTICIPATED INSPECTION DATE.
21. THE CONTRACTOR IS RESPONSIBLE FOR TESTING PROJECT SOILS. THE CONTRACTOR IS TO PROVIDE A CERTIFIED SOILS REPORT TO THE OWNER. THE CONTRACTOR SHALL NOT KNOWINGLY INSTALL PLANTS IN SOIL OR DRAINAGE CONDITIONS THAT ARE NOT CONDUCIVE TO PLANT SURVIVAL. THE CONTRACTOR SHALL VERIFY THAT THE SOILS ON SITE ARE ACCEPTABLE FOR THE PROPER GROWTH OF THE PROPOSED PLANT MATERIAL. THE CONTRACTOR SHALL SUBMIT RECOMMENDATIONS FOR SOIL TEXTURE MODIFICATIONS, SOIL PH MODIFIERS OR ADDITION OF MACRO AND MICRO NUTRIENTS WHICH MAY REQUIRE MODIFICATION OF THE SPECIFIED PLANTING MIX, SPECIFIED HEREIN.
22. QUICK SOIL TESTING AND PLANTING MIX DESIGN CAN BE PROVIDED BY A & L LABORATORIES (800-264-4522), 2790 WHITTEN ROAD, MEMPHIS, TN 38133. PROVIDE SOIL PLANTING MIX FROM SPECS AND ASK FOR COMMENTS FOR ALTERING MIX, IF APPROPRIATE. MULTIPLE SAMPLES MIGHT BE REQUIRED FOR LARGE JOBS WITH VARYING SOIL CONDITIONS. PROVIDE ONE REPORT FOR EACH 10,000 SF OF LANDSCAPE MINIMUM. SOIL SAMPLES SHALL BE TAKEN AT 1 INCH AND 6 INCH DEPTHS FROM AT LEAST 4 LOCATIONS. THESE SAMPLES SHOULD THEN BE MIXED AND SUBMITTED TO THE LAB AS A SINGLE SAMPLE.
23. PLANTING MIX - ADJUST AS RECOMMENDED BY THE SOIL LABORATORY.
    a. PLANTING MIX SHALL BE PREPARED AT APPROVED ON-SITE STAGING AREA USING APPROVED ON-SITE EXISTING SOIL. MIX MINIMUM QUANTITIES OF 20 CUBIC YARDS OR SUFFICIENT MIX FOR ENTIRE JOB IF LESS THEN 20 CUBIC YARDS IS REQUIRED.
    b. THOROUGHLY MIXED IN THE FOLLOWING PROPORTIONS FOR TREE AND SHRUB PLANTING MIX:
       0.5 CY EXISTING SOIL
       0.2 CY SHARP SAND
       0.3 CY WOOD RESIDUALS (MUST BE BROKEN DOWN BY AT LEAST TWO YEARS DECOMPOSITION)
       4.5 LBS TREBLE SUPERPHOSPHATE (0-46-0)
       5.0 LBS DOLOMITIC LIMESTONE (ELIMINATE FOR ACID LOVING PLANTS)
    c. FOR PLANTING BEDS, SHRUB AND GROUNDCOVER INCORPORATE THE FOLLOWING INGREDIENTS PER 20 SF AND INCORPORATE INTO TOP 8 INCHES OF EXISTING SOILS BY ROTOTILLING OR SIMILAR METHOD OF INCORPORATION.
       0.1 CY SHARP SAND
       0.2 CY ORGANIC MATERIAL
       4.5 LBS TREBLE SUPERPHOSPHATE (0-46-0)
       5.0 LBS DOLOMITE LIMESTONE (ELIMINATE FOR ACID LOVING PLANTS)
    d. IF SOIL TESTS RESULTS AND TESTING LAB RECOMMENDATIONS CONFLICT WITH THE SPECIFIED SOIL MIX THE CONTRACTOR SHALL BRING IT TO THE ATTENTION OF THE LANDSCAPE ARCHITECT FOR REVIEW, ALTERATION APPROVAL.
    e. THE LANDSCAPE CONSTRACTOR SHALL PROVIDE THE LANDSCAPE ARCHITECT / OWNER A 1 CF SAMPLE OF SPECIFIED MIXES AND LAB REPORTS PRIOR TO USE.
24. WARRANTY: ALL PLANT MATERIAL SHALL BE GUARANTEED FOR TWELVE MONTHS FROM THE DATE OF ACCEPTANCE IN WRITING BY THE OWNER OR BY ISSUANCE OF AN AIA STANDARD FORM "CERTIFICATE OF SUBSTANTIAL COMPLETION." THIS CERTIFICATE WILL BE ISSUED AFTER FINAL INSPECTION BY THE LANDSCAPE ARCHITECT. IF THE LANDSCAPE ARCHITECT IS SATISFIED THAT THE PROJECT IS SUBSTANTIALLY COMPLETE, THE CERTIFICATE WILL BE PREPARED WITH AN INSPECTION DATE AND CONDITIONS WHICH MUST BE SATISFIED IN A SPECIFIC PERIOD OF TIME (GENERALLY 30 DAYS). IF THESE CONDITIONS ARE NOT MET, THE CERTIFICATE MAY BE REVOKED AND A NEW INSPECTION WILL BE REQUIRED AND THE WARRANTY PERIOD SHALL BE EXTENDED ACCORDINGLY. OTHER INSPECTIONS MAY BE APPROPRIATE TO VERIFY COMPLIANCE WITH THE PUNCH LIST. THE LANDSCAPE CONTRACTOR SHALL BE RESPONSIBLE FOR A ONE-TIME REPLACEMENT ONLY. REPLACEMENTS SHALL BE OF THE SAME TYPE, SIZE AND QUALITY AS THE ORIGINAL SPECIES UNLESS OTHER WISE NEGOTIATED.
25. PERIMETER AND INTERNAL LANDSCAPING HAS BEEN PROVIDED PER THE LANDSCAPE PLAN SHEET. A LANDSCAPE SURETY SHALL BE POSTED WITH THE DEVELOPER'S AGREEMENT IN THE AMOUNT OF $57,600.00 FOR THE 116 SHADE TREES, 51 EVERGREEN TREES, 78 ORNAMENTAL TREES AND 387 SHRUBS.

MINIMUM LANDSCAPE MAINTENANCE REQUIREMENTS

1. LAWN AREAS SHALL BE MOWED TO A HEIGHT OF 2 TO 3 INCHES AND NOT ALLOWED TO REACH A HEIGHT OF 4 INCHES BEFORE MOWING.
2. ALL CURBS AND WALKS SHALL BE EDGED AS NEEDED.
3. ALL LAWN AREAS ADJACENT TO BUILDING FACES OR STRUCTURES SHALL BE TRIMMED.
4. A SLOW RELEASE NITROGEN BALANCED FERTILIZER WITH A 2-1-1 RATIO SHALL BE APPLIED AT A RATE OF 2 POUNDS OF NITROGEN PER 1000 SQUARE FEET IN SEPTEMBER, OCTOBER AND FEBRUARY.
5. LIME SHALL BE APPLIED AT THE RATE DETERMINED BY A SOILS REPORT.
6. IT IS RECOMMENDED THAT THE LAWN AREAS BE TREATED IN MID-MARCH TO EARLY APRIL WITH PRE-EMERGENT HERBICIDE (BETASAN) OR EQUAL APPLIED AT THE MANUFACTURER'S RECOMMENDED RATE.
7. A POST-EMERGENT HERBICIDE (TRIMEC) OR EQUAL IS RECOMMENDED TO BE SPRAYED ON LAWN AREAS IN THE LATE SPRING OR THE EARLY FALL. FOLLOW MANUFACTURER'S RATES AND RECOMMENDATIONS.
8. INSECTICIDES AND FUNGICIDES ARE RECOMMENDED FOR INSECT AND DISEASE CONTROL.
9. RE-SEED BARE AREAS OF LAWN AS NECESSARY. YEARLY AERATION IS RECOMMENDED.
10. ALL TRASH, LITTER, AND DEBRIS SHALL BE REMOVED FROM LAWN AREAS, PARKING LOTS, AND SHRUB BEDS AS NEEDED.
11. MULCH ALL SHRUB BEDS AND TREES YEARLY WITH 3 INCHES OF SHREDDED HARDWOOD BARK MULCH FREE OF COLOR DYE. BARK SHOULD BE PULLED AWAY FROM THE TRUNK / ROOT COLLAR.
12. MULCH ALL PERENNIAL, ORNAMENTAL GRASS AND ANNUAL BEDS YEARLY WITH 2 INCHES OF SHREDDED HARDWOOD BARK MULCH FREE OF COLOR DYE.
13. PERMIT SHRUBS AND TREES TO GROW AND ENLARGE TO THEIR DESIGN SIZE. CONSULT PROJECT LANDSCAPE ARCHITECT FOR DETAILS.
14. PRUNE TREES IN ACCORDANCE WITH LANDSCAPE SPECIFICATION GUIDELINES FOR BALTIMORE-WASHINGTON METROPOLITAN AREAS.
15. THE OWNER OF ANY PROPERTY ON WHICH LANDSCAPING HAS BEEN INSTALLED PURSUANT TO THIS CHAPTER SHALL MAINTAIN THE LANDSCAPING IN GOOD CONDITION IN PERPETUITY. A LANDSCAPE MAINTENANCE AGREEMENT SHALL BE REQUIRED. FAILURE TO REPLACE DEAD OR DYING PLS OR THE REMOVAL OF ANY INSTALLED PLS IS A VIOLATION OF THIS CHAPTER.
16. ACCEPTABLE PLANT SURVIVAL SHALL BE DEFINED AS NOT MORE THAN 1/3 MORTALITY. A 12 MONTH INSPECTION WILL BE PERFORMED BY THE COUNTY. NO INSPECTIONS SHALL BE FINALIZED FROM NOVEMBER 15T TO MARCH 15T.

SCHEDULE A
PERIMETER LANDSCAPE EDGE

CATEGORY	ADJACENT TO ROADWAYS	ADJACENT TO PERIMETER PROPERTIES	PARKING ADJACENT TO ROADWAYS
LANDSCAPE TYPE	B	A	E
LINEAR FEET OF ROADWAY FRONTAGE / PERIMETER	1,716 LF FRONTAGE	2,392 LF PERIMETER	340 LF FRONTAGE
CREDIT FOR EXISTING VEGETATION (YES, NO, LINEAR FEET) (DESCRIBE BELOW IF NEEDED)	NO	NO	NO
CREDIT FOR WALL, FENCE OR BERM (YES, NO, LINEAR FEET) (DESCRIBE BELOW IF NEEDED)	NO	YES, 290 LF	NO
NUMBER OF PLANTS REQUIRED SHADE TREES EVERGREEN TREES SHRUBS	 35 SHADE TREES 43 EVERGREEN TREES 0 SHRUBS	 40 SHADE TREES 0 EVERGREEN TREES 0 SHRUBS	 9 SHADE TREES 0 EVERGREEN TREES 85 SHRUBS
NUMBER OF PLANTS PROVIDED SHADE TREES EVERGREEN TREES OTHER TREES (2:1 SUBSTITUTION) SHRUBS (10:1 SUBSTITUTION) (DESCRIBE PLANT SUBSTITUTION CREDITS BELOW IF NEEDED)	 21 SHADE TREES 6 EVERGREEN TREES 38 OTHER TREES 328 SHRUBS	 29 SHADE TREES 18 EVERGREEN TREES 4 OTHER TREES 0 SHRUBS	 9 *SHADE TREES 0 EVERGREEN TREES 0 OTHER TREES 99 *SHRUBS

* LANDSCAPE BUFFER E WILL NOT BE ABLE TO BE ENTIRELY PLANTED TO FULL POTENTIAL WITHIN THE BUFFER E AREAS THEREFORE PLANTINGS HAVE BEEN LOCATED WITHIN OTHER AREAS ON THE SITE AS APPROPRIATE.

SCHEDULE B
PARKING LOT INTERNAL LANDSCAPING

NUMBER OF PARKING SPACES	299 SPACES
NUMBER OF TREES REQUIRED	30 TREES
NUMBER OF TREES PROVIDED SHADE TREES OTHER TREES (2:1 SUBSTITUTION)	 27 SHADE TREES 6 OTHER TREES

SCHEDULE C
RESIDENTIAL DEVELOPMENT INTERNAL LANDSCAPING

NUMBER OF DWELLING UNITS	144 UNITS
NUMBER OF TREES REQUIRED (1 DU SFA; 1.3 DU APTS)	48 SHADE TREES
NUMBER OF TREES PROVIDED SHADE TREES OTHER TREES (2:1 SUBSTITUTION)	 24 SHADE TREES 54 OTHER TREES

PLANT SCHEDULE

KEY	QTY	BOTANICAL NAME / COMMON NAME	SIZE	ROOT	COMMENTS
DECIDUOUS TREES					
AH	24	AESCULUS HIPPOCASTANUM 'BAUMANN' / BAUMANN HORSECHESTNUT	2 ½"-3" CAL. MIN	B&B	CENTRAL LEADER
BN	25	BETULA NIGRA 'HERITAGE' / HERITAGE RIVER BIRCH	2"-2½" CAL. MIN	B&B	3 STEM MIN. 5 STEM MAX
CK	21	CLADRASTIS KENTUKEA / YELLOWWOOD	2 ½"-3" CAL. MIN	B&B	CENTRAL LEADER
NS	17	NYSSA SYLVATICA / BLACK GUM	2 ½"-3" CAL. MIN	B&B	CENTRAL LEADER
PL	3	PLATANUS X ACERIFOLIA 'BLOODGOOD' / BLOODGOOD LONDON PLANE TREE	2 ½"-3" CAL. MIN	B&B	CENTRAL LEADER
QC	11	QUERCUS COCCINEA / SCARLET OAK	2 ½"-3" CAL. MIN	B&B	CENTRAL LEADER
TA	15	TILIA AMERICANA 'REDMOND' / REDMOND AMERICAN LINDEN	2 ½"-3" CAL. MIN	B&B	CENTRAL LEADER
ORNAMENTAL TREES					
CC	39	CERCIS CANADENSIS 'FOREST PANSY' / FOREST PANSY EASTERN REDBUD	1½"-2" CAL. MIN	B&B	CENTRAL LEADER
KP	10	KOELREUTERIA PANICULATA / GOLDENRAIN TREE	1½"-2" CAL. MIN	B&B	CENTRAL LEADER
LI	19	LAGERSTROEMIA INDICA 'NATCHEZ' / NATCHEZ CRAPEMYRTLE	1½"-2" CAL. MIN	B&B	3 STEM MIN. 5 STEM MAX
OA	10	OXYDENDRON ARBOREUM / SOURWOOD	1½"-2" CAL. MIN	B&B	CENTRAL LEADER
EVERGREEN TREES					
IN	24	ILEX 'NELLIE R. STEVENS' / NELLIE R. STEVENS HOLLY	5'-6' HT.	B&B	FULL TO GROUND
PO	27	PICEA OMORIKIA / SERBIAN SPRUCE	6'-8' HT.	B&B	SHEAR, FULL TO GROUND
SHRUBS, PERENNIALS AND ORNAMENTAL GRASSES					
BM	275	BUXUS MICROPHYLLA / LITTLE LEAF BOXWOOD	3' - 4' HT.	CONT.	PLANT 5' O.C.
KL	22	KALMIA LATIFOLIA / MOUNTAIN LAUREL	3' - 4' HT.	CONT.	PLANT 5' O.C.
LS	5870	LIRIOPE SPICATA / LILY TURF	6" - 12" HT.	CONT.	PLANT 12" O.C.
MP	54	MYRICA PENNSYLVANICA / NORTHERN BAYBERRY	30" - 36" HT	CONT.	PLANT 4' O.C.
ND	36	NANDINA DOMESTICA / HEAVENLY BAMBOO	3' - 4' HT.	CONT.	PLANT 5' O.C.
PV	7	PANICUM VIRGATUM 'HEAVY METAL' / HEAVY METAL SWITCHGRASS	3' - 4' HT.	CONT.	PLANT 5' O.C.
SM	173	SALVIA 'MAYNIGHT' / MAYNIGHT VIOLET SAGE	30" - 36" HT	CONT.	PLANT 4' O.C.
SS	14	SCHIZACHYRIUM SCOPARIUM 'THE BLUES' / LITTLE BLUE STEM	18" - 24" HT.	CONT.	PLANT 2' O.C.

F-11-087 PLANT SCHEDULE

KEY	QTY	BOTANICAL NAME / COMMON NAME	SIZE	ROOT	COMMENTS
DECIDUOUS TREES					
AR	38	ACER RUBRUM 'OCTOBER GLORY' / OCTOBER GLORY RED MAPLE	2 ½"-3" CAL. MIN	B&B	CENTRAL LEADER
QC	12	QUERCUS COCCINEA / SCARLET OAK	2 ½"-3" CAL. MIN	B&B	CENTRAL LEADER

NOTE: THE PLANT SCHEDULE ABOVE SHOWS PLANT MATERIAL INSTALLED PER PUBLIC PLANS F-11-087.

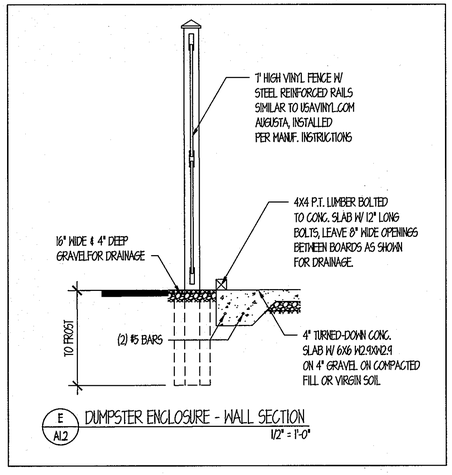

E / A12 DUMPSTER ENCLOSURE - WALL SECTION
1/2" = 1'-0"

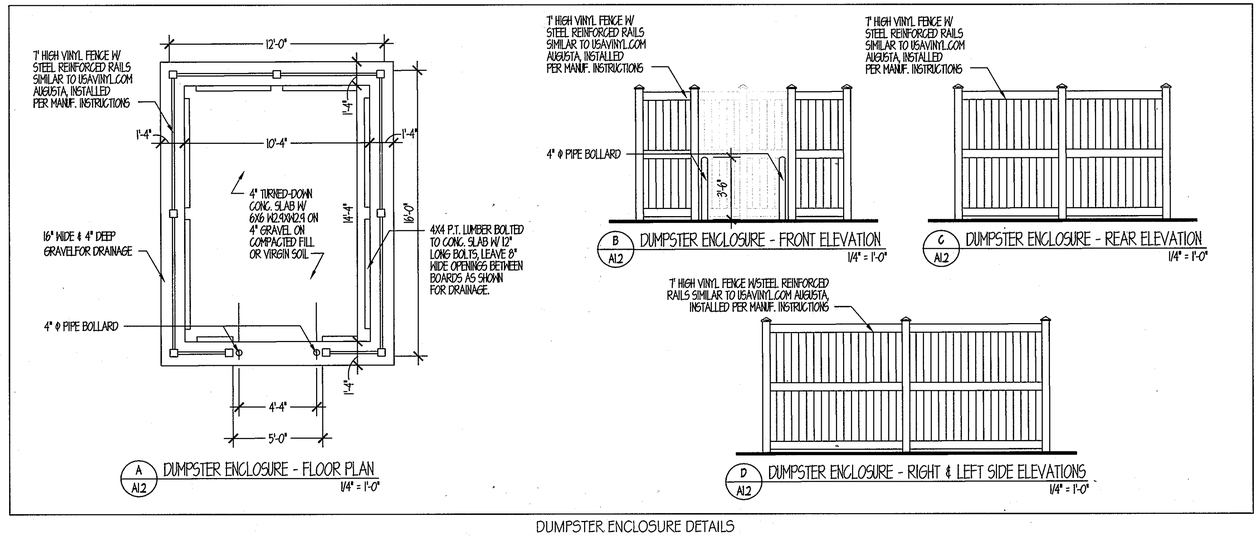

DUMPSTER ENCLOSURE DETAILS
1/4" = 1'-0"

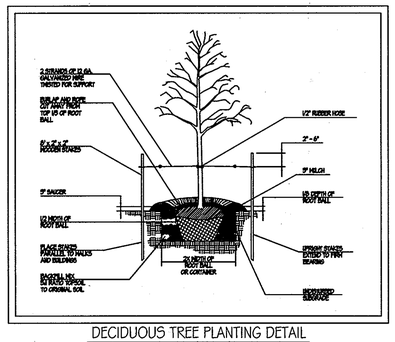

DECIDUOUS TREE PLANTING DETAIL
B & B
NOT TO SCALE

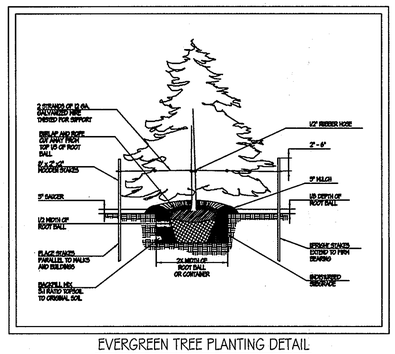

EVERGREEN TREE PLANTING DETAIL
B & B
NOT TO SCALE

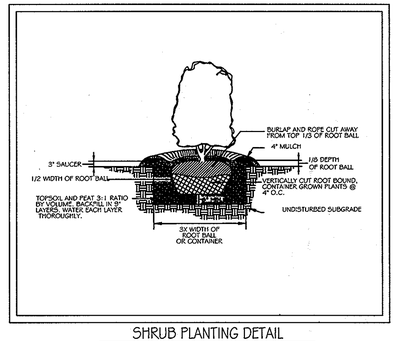

SHRUB PLANTING DETAIL
B & B
NOT TO SCALE

PROFESSIONAL CERTIFICATION: I HEREBY CERTIFY THAT THESE DOCUMENTS WERE PREPARED AND APPROVED BY ME AND THAT I AM A DULY LICENSED PROFESSIONAL LANDSCAPE ARCHITECT UNDER LAWS OF THE STATE OF MARYLAND. LICENSE NO.: 654
EXPIRATION DATE: 10-08-2011

APPROVED: DEPARTMENT OF PLANNING AND ZONING

CHIEF-DEVELOPMENT ENGINEERING DIVISION	1/24/12 DATE
CHIEF-BUREAU OF LAND DEVELOPMENT	2/2/12 DATE
DIRECTOR	2/3/12 DATE

KCI TECHNOLOGIES
ENGINEERS
PLANNERS
SCIENTISTS
CONSTRUCTION MANAGERS
8161 MAPLE LAWN BOULEVARD
SUITE 150
FULTON, MD 20759
TELEPHONE: (410)792-8086
FAX: (410)792-7419

OrchardDevelopment Corporation

CRP Opportunity Fund, L.P.

OWNER / DEVELOPER:
ORCHARD DEVELOPMENT CORPORATION
5032 DORSEY HALL DRIVE
ELLICOTT CITY, MD 21042
(410) 964-2334

OWNER:
WILDER BUILDING CORPORATION
3300 SONIA TRAIL
ELLICOTT CITY, MD 21043
(410)461-2522

REVISIONS

NO.	DATE	DESCRIPTION	BY

DATE 11-18-2011
SCALE AS SHOWN
DESIGNED BY
DRAWN BY C.T.B.

LANDSCAPE NOTES AND DETAILS
ORCHARD MEADOWS
PARCELS D-1, D-2, D-3
SITE DEVELOPMENT PLAN
ZONING R-A-15, TAX MAP NO. 17, GRID NO. 23, PARCEL NO. 711
SECOND ELECTION DISTRICT
HOWARD COUNTY, MARYLAND

SEAL: STATE OF MARYLAND RICHARD L. DUBIN NO. 031088 PROFESSIONAL ENGINEER

DRAWING NO. C-32
SHEET 32 OF 38
KCI JOB NUMBER 27-101105

SDP-11-052

TEST BORING LOG SB-01

KCI TECHNOLOGIES — PROJECT Orchard Meadows Development Project — PROJECT NO. 27101105 — SHEET 1 OF 1

Surface Elevation 445.3 (ft)

Driller: NADAL/FSD	Method: HSA	Casing Length: 18.5 ft	Date Begun: 4/14/2011
KCI Representative: RSE	Hammer Type: Automatic	Casing Diameter: 3.25"	Date Completed: 4/14/2011

Groundwater Levels (feet): 0 hour: DRY; 24 hours: ___

SOIL CLASSIFICATION AND REMARKS — SEE KEY SYMBOL SHEET FOR EXPLANATION OF SYMBOLS AND ABBREVIATIONS BELOW.

- 10" TOPSOIL
- Moist, brown, medium stiff, Sandy CLAY with mica, (CL)
- Moist, dark brown to gray, medium dense to dense, Silty SAND with mica (SM)
- Moist, dark brown to gray, medium dense to dense, Clayey SAND with mica (SC)

IDNET	N-COUNT	RQD/REC
S-1	2-2-3, N=5	REC=16
S-2	5-6-8, N=14	REC=17
S-3	8-12-15, N=27	REC=15
S-4	10-17-17, N=34	REC=14
S-5	6-10-14, N=24	REC=14
S-6	8-8-12, N=20	REC=18

Boring terminated at 20 ft. bgs

Notes:
1) We did not encounter ground water during or after completion of drilling
2) Borehole caved-in at 13 feet bgs
3) Bulk sample taken from 1-8 feet bgs

KCI-KOA ORCHARD MEADOWS BORING LOGS.GPJ GEOTECH TEMPLATE.GDT 5/3/11

TEST BORING LOG SB-02

KCI TECHNOLOGIES — PROJECT Orchard Meadows Development Project — PROJECT NO. 27101105 — SHEET 1 OF 1

Surface Elevation 443.1 (ft)

Driller: NADAL/FSD	Method: HSA	Casing Length: 18.5 ft	Date Begun: 4/14/2011
KCI Representative: RSE	Hammer Type: Automatic	Casing Diameter: 3.25"	Date Completed: 4/14/2011

Groundwater Levels (feet): 0 hour: DRY; 24 hours: ___

- 10" TOPSOIL
- Moist, brown, medium stiff, Sandy CLAY with mica, (CL)
- Moist, light to dark brown to gray, loose to medium dense, Silty SAND with mica, rock fragments (SM)

IDNET	N-COUNT	RQD/REC
S-1	2-2-3, N=5	REC=17
S-2	6-5-5, N=10	REC=11
S-3	5-5-6, N=11	REC=8
S-4	4-6-7, N=13	REC=14
S-5	4-4-5, N=9	REC=6
S-6	5-9-13, N=22	REC=15

Boring terminated at 20 ft. bgs

Notes:
1) We did not encounter ground water during or after completion of drilling
2) Borehole caved-in at 12 feet bgs

TEST BORING LOG SB-03

KCI TECHNOLOGIES — PROJECT Orchard Meadows Development Project — PROJECT NO. 27101105 — SHEET 1 OF 1

Surface Elevation 440.8 (ft)

Driller: NADAL/FSD	Method: HSA	Casing Length: 28.5 ft	Date Begun: 4/14/2011
KCI Representative: RSE	Hammer Type: Automatic	Casing Diameter: 3.25"	Date Completed: 4/14/2011

Groundwater Levels (feet): 0 hour: 10.2; 24 hours: ___

- 9" TOPSOIL
- Moist, brown to gray, loose, Silty to Clayey SAND with mica (SC-SM)
- Moist, gray, medium dense, Silty SAND with mica (SM)
- Moist, gray, medium dense, Silty SAND with mica, trace Gravel (SM)
- Moist, gray, very dense, Silty SAND with weathered rock (SM)

IDNET	N-COUNT	RQD/REC
S-1	4-3-4, N=7	REC=14
S-2	6-7-8, N=15	REC=16
S-3	6-8-10, N=18	REC=17
S-4	10-11-14, N=25	REC=16
S-5	50-50/5", N=100+	REC=9
S-6	30-50/3", N=100+	REC=7
S-7	50/5.5", N=100+	REC=5
S-8	50/2", N=100+	REC=2

Boring terminated at 30 ft. bgs

Notes:
1) We encountered ground water at 10.1 feet bgs at completion of drilling
2) Borehole caved-in at 17.7 feet bgs
3) Bulk sample taken from 1-8 feet bgs

TEST BORING LOG SB-04

KCI TECHNOLOGIES — PROJECT Orchard Meadows Development Project — PROJECT NO. 27101105 — SHEET 1 OF 1

Surface Elevation 442.0 (ft)

Driller: NADAL/FSD	Method: HSA	Casing Length: 23.5 ft	Date Begun: 4/14/2011
KCI Representative: RSE	Hammer Type: Automatic	Casing Diameter: 3.25"	Date Completed: 4/14/2011

Groundwater Levels (feet): 0 hour: 14.5'; 24 hours: ___

- 11" TOPSOIL
- Moist, brown, very loose, Silty to Clayey SAND with mica, (SC-SM)
- Moist, gray, loose to medium dense, Silty SAND with mica (SM)
- Moist, dark brown, very dense, Silty SAND with soft weathered rock and mica (SM)

IDNET	N-COUNT	RQD/REC
S-1	1-2-2, N=4	REC=10
S-2	2-2-4, N=6	REC=15
S-3	2-2-2, N=4	REC=17
S-4	2-3-6, N=9	REC=6
S-5	6-10-8, N=18	REC=16
S-6	16-22-26, N=48	REC=12
S-7	22-30-39, N=69	REC=8

Boring terminated at 25 ft. bgs

Notes:
1) We encountered ground water at 14.5 feet bgs at completion of drilling
2) Borehole caved-in at 18 feet bgs

TEST BORING LOG SB-05

KCI TECHNOLOGIES — PROJECT Orchard Meadows Development Project — PROJECT NO. 27101105 — SHEET 1 OF 1

Surface Elevation 447.8 (ft)

Driller: NADAL/FSD	Method: HSA	Casing Length: 13.5 ft	Date Begun: 4/13/2011
KCI Representative: RSE	Hammer Type: Automatic	Casing Diameter: 3.25"	Date Completed: 4/13/2011

Groundwater Levels (feet): 0 hour: 6.6; 24 hours: 6.2

- 9" TOPSOIL
- Moist, brown, loose, Clayey SAND with mica (SC)
- Moist, brown to gray, Silty to Clayey SAND with mica (SC-SM)
- Moist, gray to dark green, Silty SAND with mica and soft weathered rock (SM)

IDNET	N-COUNT
S-1	2-3-4, N=7
S-2	12-14-16, N=30
S-3	6-9-11, N=20
S-4	11-21-25, N=46
S-5	11-16-26, N=42

Boring terminated at 15 ft. bgs

Notes:
1) We encountered ground water at 6.6 feet bgs at completion of drilling and at 6.1 feet bgs 24-hours after drilling
2) Borehole caved-in at 9.4 feet bgs

LOG OF BORING No. B2

PROJECT: THE MEADOWS @ ELLICOTT CITY III — PROJECT NO.: 2007-56
CLIENT: FISHER, COLLINS & CARTER
PROJECT LOCATION: PARCELS D1 THRU D3
LOCATION: SAND FILTER #2 — ELEVATION: 434.69
DRILLER: PGS — LOGGED BY: TCS
DRILLING METHOD: AUGER PROBE — DATE: 7/20/07
DEPTH TO - WATER> INITIAL: DRY AFTER 24 HOURS: DRY CAVING> 6.8

TEST RESULTS: Plastic Limit — Liquid Limit; Water Content - ●; Penetration -

- Topsoil - 2 inches
- Brown and gray damp micaceous cf SAND, and silt, trace rock frags SM
- **POSSIBLE WEATHERED ROCK @ 9 FEET** Hard drilling 9 to 15 feet
- Boring terminated at 15 ft.

This information pertains only to this boring and should not be interpreted as being indicitive of the site.

PENNIMAN & BROWN, INC.
6252 FALLS ROAD
BALTIMORE, MD. 21209

Figure PAGE 1 of 1

LOG OF BORING No. B11

PROJECT: THE MEADOWS @ ELLICOTT CITY III — PROJECT NO.: 2007-56
CLIENT: FISHER, COLLINS & CARTER
PROJECT LOCATION: PARCELS D1 THRU D3
LOCATION: TRAP #1 — ELEVATION: 429.81
DRILLER: PGS — LOGGED BY: TCS
DRILLING METHOD: AUGER PROBE — DATE: 7/17/07
DEPTH TO - WATER> INITIAL: DRY AFTER 24 HOURS: DRY CAVING> 9.3

- Topsoil - 3 inches
- Brown damp to moist cf SAND, and silt, trace rock frags, trace mica SM
- **POSSIBLE WEATHERED ROCK** Brown and gray moist micaceous cf SAND, and silt SM Hard drilling 10 to 12 feet
- Boring terminated at 12 ft.

NOTE: Hole offset 15 feet up slope due to trees (+2 feet in elevation over staked location)

This information pertains only to this boring and should not be interpreted as being indicitive of the site.

PENNIMAN & BROWN, INC.
6252 FALLS ROAD
BALTIMORE, MD. 21209

Figure PAGE 1 of 1

TEST BORING LOG SWM-01

KCI TECHNOLOGIES — PROJECT Orchard Meadows Development Project — PROJECT NO. 27101105 — SHEET 1 OF 1

Surface Elevation 444.0 (ft)

Driller: NADAL/FSD	Method: HSA	Casing Length: 14 ft	Date Begun: 4/11/2011
KCI Representative: LSG	Hammer Type: Automatic	Casing Diameter: 3.25"	Date Completed: 4/11/2011

Groundwater Levels (feet): 0 hour: DRY; 24 hours: ___

- 6" TOPSOIL
- Moist, dark brown, loose, Silty SAND, little Mica (SM)
- Moist, dark brown, very loose, Clayey SAND (SC)
- Moist, brown, medium dense, micaceous Silty SAND (SM)
- Moist, dark brown, medium dense, micaceous Silty SAND (SM)
- Completely Weathered Rock: moist, organish brown, loose to medium dense, micaceous Silty SAND (SM)
- Moist, tanish brown, medium dense, micaceous Silty SAND, trace Rock fragements (SM)

IDNET	N-COUNT	RQD/REC
S-1	2-3-3-4, N=6	REC=20
S-2	7-1-3-5, N=4	REC=13
S-3	3-3-4-4, N=7	REC=21
S-4	4-5-6-8, N=11	REC=19
S-5	4-7-9-8, N=16	REC=16
S-6	5-7-9-9, N=16	REC=20
S-7	4-4-5-4, N=9	REC=24
S-8	4-5-6-8, N=11	REC=18

Boring terminated at 16 ft. bgs

Notes:
1) We did not encounter ground water in the boring.
2) Borehole caved-in at 9 feet bgs.

TEST BORING LOG SWM-02

KCI TECHNOLOGIES — PROJECT Orchard Meadows Development Project — PROJECT NO. 27101105 — SHEET 1 OF 1

Surface Elevation 448.5 (ft)

Driller: NADAL/FSD	Method: HSA	Casing Length: 24 ft	Date Begun: 4/11/2011
KCI Representative: LSG	Hammer Type: Automatic	Casing Diameter: 3.25"	Date Completed: 4/11/2011

Groundwater Levels (feet): 0 hour: DRY; 24 hours: ___

- 8" TOPSOIL
- Moist, dark brown, loose to very loose, Silty Clayey SAND, trace Mica and rock fragments. (SC-SM)
- Moist, brown, very soft, Sandy CLAY, trace Mica (CL)
- Moist, dark gray, soft, Sandy SILT to Sandy CLAY (CL-ML)
- Moist, brown, loose, Clayey Silty SAND (SC-SM)
- Moist, brownish orange, stiff, Micaceous Sandy SILT to Sandy CLAY (CL-ML)
- Moist, dark green, orange, and brown, loose to medium dense, Micaceous Silty SAND (SM)

IDNET	N-COUNT	RQD/REC
S-1	1-2-3-3, N=5	REC=15
S-2	2-1-2-2, N=3	REC=8
S-3	WOH-WOH-2-1, N=2	REC=15
S-4	2-1-2-2, N=3	REC=16
S-5	2-3-4-5, N=7	REC=2
S-6	4-5-5-6, N=10	REC=6
S-7	4-4-5-4, N=9	REC=24
S-8	3-3-5-5, N=8	REC=24
S-9	3-4-5-6, N=9	REC=24
S-10	7-5-6-6, N=11	REC=24
S-11	4-5-6-11, N=11	REC=24
S-12	4-9-13-13, N=22	REC=24
S-13	4-12-15-20, N=27	REC=18

Boring terminated at 26 ft. bgs

Notes:
1) We did not encounter ground water in the boring.
2) Borehole caved-in at 18 feet bgs.

TEST BORING LOG SWM-03

KCI TECHNOLOGIES — PROJECT Orchard Meadows Development Project — PROJECT NO. 27101105 — SHEET 1 OF 1

Surface Elevation 444.5 (ft)

Driller: NADAL/FSD	Method:	Casing Length: 8 ft	Date Begun: 4/11/2011
KCI Representative: LSG	Hammer Type:	Casing Diameter:	Date Completed: 4/11/2011

Groundwater Levels (feet): 0 hour: DRY; 24 hours: ___

- 7" Topsoil
- Moist, brown, medium dense, micaceous Silty SAND, trace Clay (CL)
- Moist, dark brown to light brown, loose, micaceous Silty SAND (SM)

IDNET	N-COUNT	RQD/REC
S-1	4-5-6-6, N=11	REC=18
S-2	2-2-3-3, N=5	REC=18
S-3	3-3-4-4, N=7	REC=18
S-4	4-5-9-10, N=14	REC=21
S-5	4-5-10-12, N=15	REC=21

Boring terminated at 10 ft. bgs

Notes:
1) We did not encounter ground water in the boring.
2) Borehole caved-in at 6 feet bgs.

APPROVED: DEPARTMENT OF PLANNING AND ZONING

CHIEF, DEVELOPMENT ENGINEERING DIVISION	DATE 1/24/12
CHIEF, DIVISION OF LAND DEVELOPMENT	DATE 2/03/12
DIRECTOR	DATE 2/3/12

KCI TECHNOLOGIES — ENGINEERS, PLANNERS, SCIENTISTS, CONSTRUCTION MANAGERS
8161 MAPLE LAWN BOULEVARD, SUITE 150, FULTON, MD 20759
TELEPHONE: (410)792-8086 FAX: (410)792-7419

Orchard Development Corporation — CRP Opportunity Fund, L.P.

OWNER / DEVELOPER: ORCHARD DEVELOPMENT CORPORATION, 5032 DORSEY HALL DRIVE, ELLICOTT CITY, MD 21042, (410) 964-2334

OWNER: WILDER BUILDING CORPORATION, 3300 SONIA TRAIL, ELLICOTT CITY, MD 21043, (410)-461-2522

NO.	DATE	REVISIONS DESCRIPTION	BY

DATE 11-18-2011 — SCALE N.T.S. — DESIGNED BY C.T.B. — DRAWN BY C.T.B.

BORING LOGS
ORCHARD MEADOWS
PARCELS D-1, D-2, D-3
SITE DEVELOPMENT PLAN
ZONING R-A-15, TAX MAP NO. 17, GRID NO. 23, PARCEL NO. 711
SECOND ELECTION DISTRICT — HOWARD COUNTY, MARYLAND

PROFESSIONAL CERTIFICATION. I HEREBY CERTIFY THAT THESE DOCUMENTS WERE PREPARED OR APPROVED BY ME AND THAT I AM DULY LICENSED PROFESSIONAL ENGINEER UNDER THE LAWS OF THE STATE OF MARYLAND, LICENSE NO. 31089 EXPIRATION DATE: 11/12/12

SEAL: STATE OF MARYLAND, RICHARD L. BUTT, No. 031089, PROFESSIONAL ENGINEER

DRAWING NO. C-33
SHEET 33 OF 38
KCI JOB NUMBER 27-101105

SDP-11-052

KCI TECHNOLOGIES — TEST BORING LOG SWM-04

PROJECT Orchard Meadows Development Project — PROJECT NO. 27101105 — SHEET 1 OF 1

Surface Elevation 443.5 (ft) | Driller: NADAL/FSD | Method: HSA | Casing Length: 14 ft | Date Begun: 4/11/2011 | KCI Representative: DPJ | Hammer Type: Automatic | Casing Diameter: 3.25" | Date Completed: 4/11/2011

Groundwater Levels (feet): 0 hour: DRY; 24 hours: ___

SOIL CLASSIFICATION AND REMARKS (SEE KEY SYMBOL SHEET FOR EXPLANATION OF SYMBOLS AND ABBREVIATIONS BELOW.)

- 8" Topsoil
- Moist, light brown, soft, micaceous Sandy Clayey SILT (ML)
- Moist, orangish brown, tan, loose, micaceous Silty SAND, trace Clay (SM)
- Moist, orange, loose to medium dense, medium to coarse, micaceous Silty SAND, trace Gravel (SM)
- Moist, orange, black mottled and gray below 14 feet, loose to medium dense, medium to coarse, micaceous Silty SAND (SM)

Boring terminated at 16 ft. bgs

IDNET	N-COUNT	N	REC
S-1	1-2-2-2	4	15
S-2	4-4-4-4	8	20
S-3	2-2-3-3	5	21
S-4	2-4-5-5	9	18
S-5	2-4-5-5	9	18
S-6	4-7-6-8	13	18
S-7	3-5-9-9	14	18
S-8	4-7-9-9	16	18

Notes:
1) We did not encounter ground water in the boring.
2) Borehole caved-in at 9.5 feet bgs.

TEST BORING LOG SWM-05

PROJECT Orchard Meadows Development Project — PROJECT NO. 27101105 — SHEET 1 OF 1

Surface Elevation 425.0 (ft) | Driller: NADAL/FSD | Method: HSA | Casing Length: 8 ft | Date Begun: 4/8/2011 | KCI Representative: DPC | Hammer Type: Automatic | Casing Diameter: 3.25" | Date Completed: 4/8/2011

Groundwater Levels (feet): 0 hour: 6; 24 hours: ___

- 5" TOPSOIL
- Moist, brown, soft, Sandy SILT, little Mica (ML)
- Moist, dark brown, loose, Micaceous, Silty SAND, trace Rock fragments (SM)

Boring terminated at 10 ft. bgs

IDNET	N-COUNT	N	REC
S-1	1-2-2-1	4	24
S-2	2-3-4-5	7	18
S-3	4-5-7-5	12	24
S-4	6-7-10-12	17	24
S-5	7-8-11-9	19	18

Notes:
1) Boring offset 5 feet West due to tree.
2) We encounter wet spoon at 3 feet bgs
3) We encountered ground water at 6 feet bgs at completion of drilling
4) We did not install infiltration pipe due to highground water levels
5) Borehole caved-in at 7.5 feet bgs.

TEST BORING LOG SWM-06

PROJECT Orchard Meadows Development Project — PROJECT NO. 27101105 — SHEET 1 OF 1

Surface Elevation 439.0 (ft) | Driller: NADAL/FSD | Method: HSA | Casing Length: 8 ft | Date Begun: 4/8/2011 | KCI Representative: DPC | Hammer Type: Automatic | Casing Diameter: 3.25" | Date Completed: 4/8/2011

Groundwater Levels (feet): 0 hour: ___; 24 hours: ___

- 4" TOPSOIL
- Dry, tan and brown, very dense, micaceous Silty SAND, trace Gravel (SM)
- Dry, tan, dense, Silty SAND, weather rock fragements, little mica (SM)
- Dry to moist, tan and white, medium dense, micaceous Silty SAND, trace Gravel (SM)

Boring terminated at 10 ft. bgs

IDNET	N-COUNT	N	REC
S-1	7-11-50-5	61	12
S-2	11-16-17-17	33	18
S-3	11-9-4-4	13	14
S-4	4-7-9-12	16	18
S-5	12-19-6-8	25	12

Notes:
1) We did not encounter ground water in the boring.
2) Borehole caved-in at 9 feet bgs.

TEST BORING LOG SWM-07

PROJECT Orchard Meadows Development Project — PROJECT NO. 27101105 — SHEET 1 OF 1

Surface Elevation 441.0 (ft) | Driller: NADAL/FSD | Method: HSA | Casing Length: 14 ft | Date Begun: 4/8/2011 | KCI Representative: DPC | Hammer Type: Automatic | Casing Diameter: 3.25" | Date Completed: 4/8/2011

Groundwater Levels (feet): 0 hour: DRY; 24 hours: ___

- 6" TOPSOIL
- Dry, brown, soft, SILT, little Sand and mica (ML)
- Moist, brown, loose, micaceous Silty SAND (SM)
- Moist to dry, brown and gray, loose to medium dense, micaceous Silty SAND (SM)
- Completely weather rock sampled as: Dry, gray, dense, micaceous Silty SAND (SM)

Boring terminated at 16 ft. bgs

IDNET	N-COUNT	N	REC
S-1	1-2-3-5	4	24
S-2	3-3-4-5	7	24
S-3	3-4-6-5	10	24
S-4	4-5-6-3	11	24
S-5	6-8-10-10	18	24
S-6	4-5-6-10	11	20
S-7	6-10-9-3	19	24
S-8	11-12-24-25	36	24

Notes:
1) We did not encounter ground water in the boring.
2) Borehole caved-in at 10.5 feet bgs.

TEST BORING LOG SWM-08

PROJECT Orchard Meadows Development Project — PROJECT NO. 27101105 — SHEET 1 OF 1

Surface Elevation 433.0 (ft) | Driller: NADAL/FSD | Method: HSA | Casing Length: 8 ft | Date Begun: 4/8/2011 | KCI Representative: DPC | Hammer Type: Automatic | Casing Diameter: 3.25" | Date Completed: 4/8/2011

Groundwater Levels (feet): 0 hour: 5; 24 hours: ___

- 5" TOPSOIL
- Moist, brown, loose, micaceous Silty SAND, trace Roots (SM)
- Moist, tan and light brown, loose, micaceous Silty SAND, trace Gravel (SM)
- Dry, tan and white, medium dense, micaceous Silty SAND, trace gravel and possible completely weather rock (SM)

Boring terminated at 10 ft. bgs

IDNET	N-COUNT	N	REC
S-1	1-2-3-3	5	24
S-2	3-4-3-4	7	24
S-3	4-4-6-8	10	24
S-4	7-9-11-11	20	18
S-5	5-6-8-10	14	24

Notes:
1) We encountered ground water at 5 feet bgs at completion of drilling
2) We did not install infiltration pipe due to shallow ground water
3) Borehole caved-in at 6.9 feet bgs.

TEST BORING LOG SWM-09

PROJECT Orchard Meadows Development Project — PROJECT NO. 27101105 — SHEET 1 OF 1

Surface Elevation 440.0 (ft) | Driller: NADAL/FSD | Method: HSA | Casing Length: 14 ft | Date Begun: 4/8/2011 | KCI Representative: DPC | Hammer Type: Automatic | Casing Diameter: 3.25" | Date Completed: 4/8/2011

Groundwater Levels (feet): 0 hour: DRY; 24 hours: ___

- 4" TOPSOIL
- Dry, brown, very loose, Silty SAND, trace mica (SM)
- Dry to moisrt, light brown, tan, gray and brown, loose to medium dense, Micaceous Silty SAND, trace Rock fragments (SM)

Boring terminated at 16 ft. bgs

IDNET	N-COUNT	N	REC
S-1	1-1-2-2	3	12
S-2	3-5-7-8	12	18
S-3	4-5-8-8	13	24
S-4	3-4-5-4	9	24
S-5	6-6-6-6	12	24
S-6	2-4-5-6	9	18
S-7	3-4-8-9	12	24
S-8	4-4-6-9	10	16

Notes:
1) We encounter wet spoon at 14 feet bgs
2) We did not encounter any ground water during or at completion of drilling
3) Borehole caved-in at 5 feet bgs.

TEST BORING LOG SWM-10

PROJECT Orchard Meadows Development Project — PROJECT NO. 27101105 — SHEET 1 OF 1

Surface Elevation 446.0 (ft) | Driller: NADAL/FSD | Method: HSA | Casing Length: 18 ft | Date Begun: 4/11/2011 | KCI Representative: LSG | Hammer Type: Automatic | Casing Diameter: 3.25" | Date Completed: 4/11/2011

Groundwater Levels (feet): 0 hour: ___; 24 hours: ___

- 8" Topsoil
- Moist, brown, very loose, Silty SAND, little mica (SM)
- Moist, greenish brown, gray and black, medium dense to very dense, micaceous Silty SAND, trace rock fragments below 8 feet bgs (SM)

Boring terminated at 19.2 ft. bgs

IDNET	N-COUNT	N	REC
S-1	1-1-2-3	3	18
S-2	8-10-11-10	21	24
S-3	8-11-15-19	26	18
S-4	11-18-21-24	39	24
S-5	18-15-18-21	33	18
S-6	21-50/5"	100	10
S-7	13-13-16-13	29	15
S-8	9-12-15-18	27	24
S-9	15-18-21-24	39	21
S-10	19-31-50/3"	81	15

Notes:
1) We did not encountered ground water in the boring.

TEST BORING LOG SWM-11

PROJECT Orchard Meadows Development Project — PROJECT NO. 27101105 — SHEET 1 OF 1

Surface Elevation 442.0 (ft) | Driller: NADAL/FSD | Method: HSA | Casing Length: 8 ft | Date Begun: 4/11/2011 | KCI Representative: DPJ | Hammer Type: Automatic | Casing Diameter: 3.25" | Date Completed: 4/11/2011

Groundwater Levels (feet): 0 hour: ___; 24 hours: ___

- 9" Topsoil
- Moist, brown, very loose, Silty SAND, trace mica (SM)
- Dry, gray and brown, dense, micaceous Silty SAND, trace rock fragments (SM)
- Completely Weathered Rock Sampled As: Moist, brown, dense, micaceous Silty SAND (SM)
- Completely Weathered Rock Sampled As: Moist, brown and black, very dense, medium to coarse, micaceous Silty SAND (SM)

Boring terminated at 8.04 ft. bgs

IDNET	N-COUNT	N	REC
S-1	1-2-2-3	4	17
S-2	9-12-21-25	32	24
S-3	18-18-18-21	36	20
S-4	9-7-50/4"	57	14
S-5	50/.5"	100	.5

Notes:
1) We did not encounter ground water in the boring.

TEST BORING LOG SWM-12

PROJECT Orchard Meadows Development Project — PROJECT NO. 27101105 — SHEET 1 OF 1

Surface Elevation 435.0 (ft) | Driller: NADAL/FSD | Method: HSA | Casing Length: 8 ft | Date Begun: 4/11/2011 | KCI Representative: DPJ | Hammer Type: Automatic | Casing Diameter: 3.25" | Date Completed: 4/11/2011

Groundwater Levels (feet): 0 hour: DRY; 24 hours: ___

- 8" Topsoil
- Fill Sampled As: Moist, dark brown, very loose, Silty SAND, trace mica [FILL] (SM)
- Fill Sampled As: Moist, dark brown, very loose, micaceous, Silty Clayey SAND, little roots, trace rock fragments (SC-SM)
- Moist, brown, loose, micaceous Silty SAND (SM)
- Completely Weathered Rock Sampled As: Moist, gray and white, very dense, medium to coarse, micaceous Silty SAND (SM)
- Completely Weathered Rock Sampled As: Moist, black, white, tan, and pink, very dense, micaceous Silty SAND (SM)

Boring terminated at 8.17 ft. bgs

IDNET	N-COUNT	N	REC
S-1	1-1-1-1	2	16
S-2	3-2-2-3	4	10
S-3	2-3-5-7	8	24
S-4	12-24-50/5"	74	14
S-5	50/2"	100	2

Notes:
1) Boring offset approximately 11 feet southwest of stake due to large tree.
2) We did not encounter groundwater in the boring.

TEST BORING LOG SWM-13

PROJECT Orchard Meadows Development Project — PROJECT NO. 27101105 — SHEET 1 OF 1

Surface Elevation 438.0 (ft) | Driller: NADAL/FSD | Method: HSA | Casing Length: 18 ft | Date Begun: 4/11/2011 | KCI Representative: LSG | Hammer Type: Automatic | Casing Diameter: 3.25" | Date Completed: 4/11/2011

Groundwater Levels (feet): 0 hour: ___; 24 hours: ___

- 10" Topsoil
- Moist, dark brown, tan, very loose to medium dense, micaceous Silty SAND (SM)
- Completely Weathered Rock Sampled As: Moist, dark brown and dark orange, loose to very dense, micaceous Silty SAND (SM)
- Completely Weathered Rock Sampled As: Dry, dark gray and brown, very dense, micaceous Silty SAND, trace Rock fragments (SM)

Boring terminated at 18.04 ft. bgs

IDNET	N-COUNT	N	REC
S-1	1-1-2-4	3	19
S-2	2-2-2-3	4	24
S-3	2-4-4-5	8	24
S-4	3-3-3-3	6	20
S-5	2-2-4-4	6	24
S-6	3-5-6-7	11	18
S-7	3-4-4-7	8	18
S-8	4-3-3-5	6	16
S-9	9-50/5"	100	11
S-10	50/.5"	100	5

Notes:
1) We did not encounter ground water in the boring.

APPROVED: DEPARTMENT OF PLANNING AND ZONING

CHIEF, DEVELOPMENT ENGINEERING DIVISION — DATE 1/24/12

CHIEF, DIV. OF LAND DEVELOPMENT — DATE 2/02/12

DIRECTOR — DATE 2/3/12

KCI TECHNOLOGIES — Engineers, Planners, Scientists, Construction Managers
8161 Maple Lawn Boulevard, Suite 150, Fulton, MD 20759
Telephone: (410)792-8086, Fax: (410)792-7419

Orchard Development Corporation — CRP Opportunity Fund, L.P.

OWNER / DEVELOPER: ORCHARD DEVELOPMENT CORPORATION, 5032 DORSEY HALL DRIVE, ELLICOTT CITY, MD 21042, (410) 964-2334

OWNER: WILDER BUILDING CORPORATION, 3300 SONIA TRAIL, ELLICOTT CITY, MD 21043, (410)-461-2522

REVISIONS NO.	DATE	DESCRIPTION	BY

DATE 11-18-2011 | SCALE AS SHOWN | DESIGNED BY | DRAWN BY C.T.B.

BORING LOGS
ORCHARD MEADOWS
PARCELS D-1, D-2, D-3
SITE DEVELOPMENT PLAN
ZONING R-A-15, TAX MAP NO. 17, GRID NO. 23, PARCEL NO. 711
SECOND ELECTION DISTRICT — HOWARD COUNTY, MARYLAND

PROFESSIONAL CERTIFICATION. I HEREBY CERTIFY THAT THESE DOCUMENTS WERE PREPARED OR APPROVED BY ME AND THAT I AM DULY LICENSED PROFESSIONAL ENGINEER UNDER THE LAWS OF THE STATE OF MARYLAND, LICENSE NO. 31089 EXPIRATION DATE: 11/12/12

SEAL: STATE OF MARYLAND — RICHARD D. BUTT — No. 031089 — PROFESSIONAL ENGINEER

DRAWING NO. C-34 — SHEET 34 OF 38 — KCI JOB NUMBER 27-101105

SDP-11-052

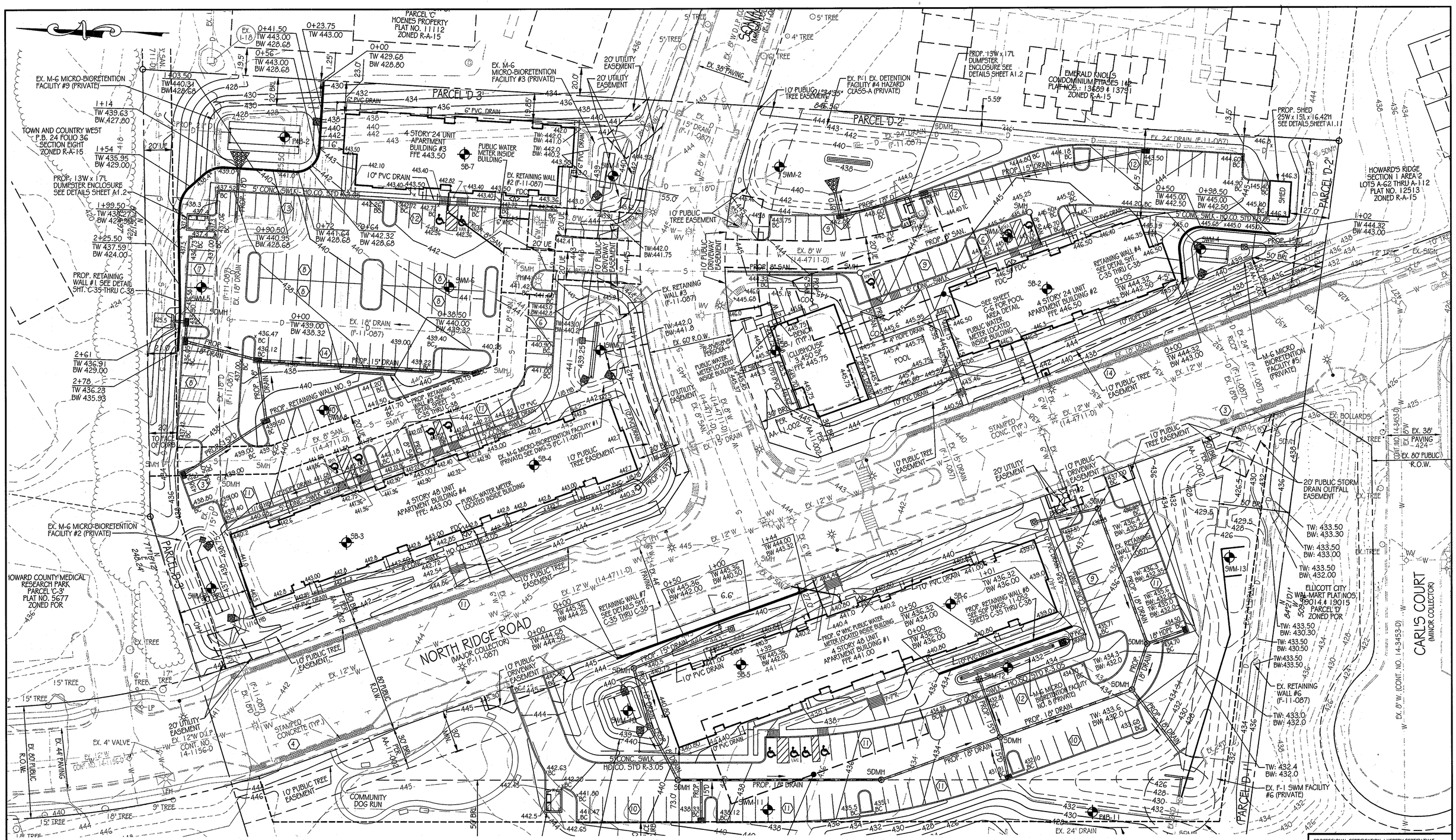

WALL LOCATION PLAN

1" = 30'

PROFESSIONAL CERTIFICATION. I HEREBY CERTIFY THAT THESE DOCUMENTS WERE PREPARED OR APPROVED BY ME AND THAT I AM DULY LICENSED PROFESSIONAL ENGINEER UNDER THE LAWS OF THE STATE OF MARYLAND, LICENSE NO. 14434
EXPIRATION DATE: 05/13/13

OrchardDevelopment Corporation
CRP Opportunity Fund, L.P.

OWNER / DEVELOPER:
ORCHARD DEVELOPMENT CORPORATION
5032 DORSEY HALL DRIVE
ELLICOTT CITY, MD 21042
(410) 964-2334

HILLIS-CARNES
ENGINEERING ASSOCIATES

APPROVED: DEPARTMENT OF PLANNING AND ZONING

CHIEF, DEVELOPMENT ENGINEERING DIVISION	DATE 1/24/12
CHIEF, DIVISION OF LAND DEVELOPMENT	DATE 2/02/12
DIRECTOR	DATE 2/3/12

REVISIONS

NO.	DATE	DESCRIPTION	BY

DATE 11/16/2011
SCALE AS SHOWN
DESIGNED BY RWS
DRAWN BY AM

RETAINING WALL LOCATION PLAN
ORCHARD MEADOWS

PARCELS 'D-1' THRU 'D-3'
SITE DEVELOPMENT PLAN

PREVIOUS FILE NO. P 07-019 AS "THE MEADOWS OF ELLICOTT CITY III PARCELS D-1 THRU D-3"
A SUBDIVISION OF "HOENES PROPERTY, PARCEL 'D' PLAT NO. 9419
ZONING R-A-15, TAX MAP NO. 17, GRID NO. 23, PARCEL NO. 711

SECOND ELECTION DISTRICT — HOWARD COUNTY, MARYLAND

SEAL: STATE OF MARYLAND — RICHARD W. SHUPERT — No. 14434 — PROFESSIONAL ENGINEER

DRAWING NO. C - 35

SHEET 35 OF 38

HCEA JOB NUMBER 11282-A

SDP-11-052

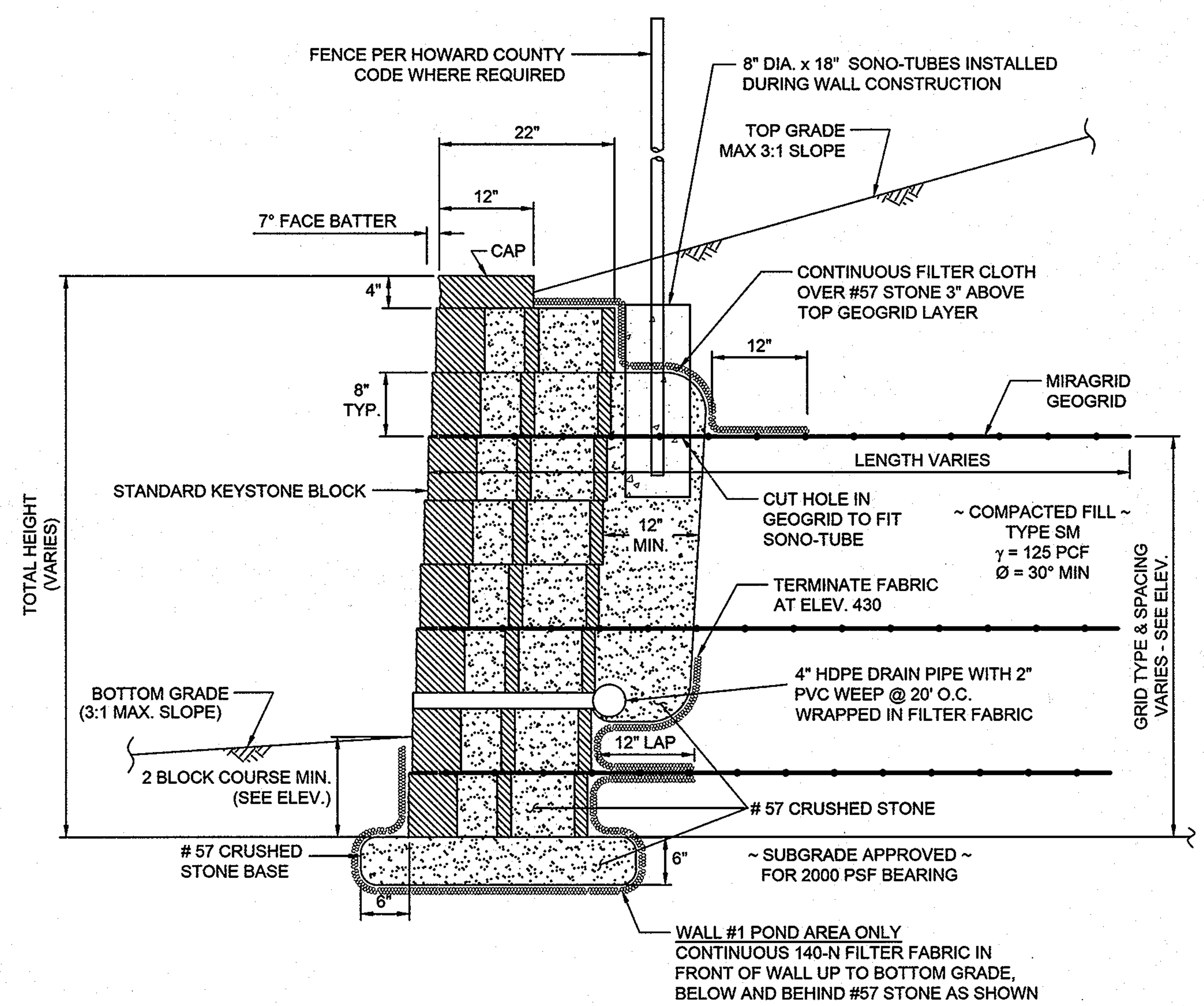

TYPICAL WALL SECTION
N.T.S.

NOTES:

1. No trees shall be planted within 10 feet of the top of the retaining wall.
2. Retaining walls shall only be constructed under the observation of a registered professional engineer and a (NICET, WACEL, or equiv.) certified soils technician.
3. One soil boring shall be required every one hundred feet along the entire length of the wall. Copies of all boring reports shall be provided to the Howard County Inspector Prior to the start of construction.
4. The required bearing pressure beneath the wall system shall be verified in the field by a certified soils technician. Testing documentation must be provided to the Howard County Inspector prior to start of construction. The required bearing test shall be the Dynamic Cone Penetrometer test ASTM STP-399.
5. The suitability of fill material shall be confirmed by the on-site soils technician. Each 8" lift must be compacted to a minimum 95% standard proctor density and the testing report shall be made available to the Howard County Inspector upon completion of construction.
6. Walls shall not be constructed on uncertified fill materials.
7. Walls shall not be constructed within a Howard Co. right-of-way or easement.

SPECIFICATIONS
KEYSTONE MODULAR CONCRETE BLOCK RETAINING WALL

PART 1: GENERAL

1.01 Description
A. Work shall consist of furnishing and construction of a KEYSTONE Retaining Wall System in accordance with these specifications and in reasonably close conformity with the lines, grades, design, and dimensions shown on the plans.
B. Work includes preparing foundation soil, furnishing and installing leveling pad, unit drainage fill and backfill to the lines and grades shown on the construction drawings.
C. Work includes furnishing and installing geogrid soil reinforcement of the type, size, location, and lengths designated on the construction drawings.

1.02 Delivery, Storage and Handling
A. Contractor shall check all materials upon delivery to assure that the proper type, grade, color, and certification has been received.
B. Contractor shall protect all materials from damage due to job site conditions and in accordance with manufacturer's recommendations. Damaged materials shall not be incorporated into the work.

PART 2: PRODUCTS

2.01 Modular Concrete Retaining Wall Units
A. Modular concrete units shall conform to the following architectural requirements:
face color - concrete gray - standard manufacturers' color may be specified by the Owner.
face finish - sculptured rock face in angular tri-planer configuration. Other face finishes will not be allowed without written approval of Owner.
bond configuration - running with bonds nominally located at midpoint vertically adjacent units, in both straight and curved alignments.
exposed surfaces of units shall be free of chips, cracks or other imperfections when viewed from a distance of 10 feet under diffused lighting.
B. Modular concrete materials shall conform to the requirements of ASTM C1372 - Standard Specifications for Segmental Retaining Wall Units.
C. Modular concrete units shall conform to the following structural and geometric requirements measured in accordance with appropriate references:
compressive strength = 3000 psi minimum;
absorption = 8 % maximum (6% in northern states) for standard weight aggregates;
dimensional tolerances = ± 1/8" from nominal unit dimensions not including rough split face, ±1/16" unit height - top and bottom planes;
unit size - 8" (H) x 18" (W) x 22" (D) minimum;
unit weight - 100 lbs/unit minimum for standard weight aggregates;
inter-unit shear strength - 1000 plf minimum at 2 psi normal pressure;
geogrid/unit peak connection strength - 1000 plf minimum at 2 psi normal force.
D. Modular concrete units shall conform to the following constructability requirements:
vertical setback = 1/8"± per course (near vertical) or 1"+ per course per the design;
alignment and grid positioning mechanism - fiberglass pins, two per unit minimum;
maximum horizontal gap between erected units shall be - 1/2 inch.

2.02 Shear Connectors
A. Shear connectors shall be 1/2 inch diameter thermoset isopthalic polyester resin-protruded fiberglass reinforcement rods or equivalent to provide connection between vertically and horizontally adjacent units. Strength of shear connectors between vertical adjacent units shall be applicable over a design temperature of 10 degrees F to + 100 degrees F.
B. Shear connectors shall be capable of holding the geogrid in the proper design position during grid pre-tensioning and backfilling.

2.03 Base Leveling Pad Material
A. Material shall consist of a compacted #57 crushed stone base as shown on the construction drawings.

2.04 Unit Drainage Fill
A. Unit drainage fill shall consist of #57crushed stone

2.05 Reinforced Backfill
A. Reinforced backfill shall type SM, be free of debris and meet the following gradation tested in accordance with ASTM D-422 and meet other properties shown on the plan:

Sieve Size	Percent Passing
2 inch	100-75
3/4 inch	100-75
No. 40	0-70
No. 200	0-35

Plasticity Index (PI) <10 and Liquid Limit <40 per ASTM D-4318.
B. Material can be site excavated soils where the above requirements can be met. Unsuitable soils for backfill (high plastic clays or organic soils) shall not be used in the reinforced soil mass.

2.06 Geogrid Soil Reinforcement

A. Geosynthetic reinforcement shall consist of geogrids manufactured specifically for soil reinforcement applications and shall be manufactured from high tenacity polyester yarn.

2.07 Drainage Pipe
A. The drainage pipe shall be perforated corrugated HDPE pipe manufactured in accordance with ASTM D-1248.

PART 3 EXECUTION

3.01 Excavation
A. Contractor shall excavate to the lines and grades shown on the construction drawings. Owner's representative shall be responsible for inspecting and approving the excavation prior to placement of leveling material or fill soils.

3.02 Base Leveling Pad
A. Leveling pad material shall be placed to the lines and grades shown on the construction drawings, to a minimum thickness of 6 inches and extend laterally a minimum of 6" in front and behind the modular wall unit.
B. Leveling pad shall be prepared to insure full contact to the base surface of the concrete units.

3.03 Modular Unit Installation
A. First course of units shall be placed on the leveling pad at the appropriate line and grade. Alignment and level shall be checked in all directions and insure that all units are in full contact with the base and properly seated.
B. Place the front of units side-by-side. Do not leave gaps between adjacent units. Layout of corners and curves shall be in accordance with manufacturer's recommendations.
C. Install shear/connecting devices per manufacturer's recommendations.
D. Place and compact drainage fill within and behind wall units. Place and compact backfill soil behind drainage fill. Follow wall erection and drainage fill closely with structure backfill.
E. Maximum stacked vertical height of wall units, prior to unit drainage fill and backfill placement and compaction, shall not exceed three courses.

3.04 Structural Geogrid Installation
A. Geogrid shall be oriented with the highest strength axis perpendicular to the wall alignment.
B. Geogrid reinforcement shall be placed at the strengths, lengths, and elevations shown on the construction design drawings or as directed by the Engineer.
C. The geogrid shall be laid horizontally on compacted backfill and attached to the modular wall units. Place the next course of modular concrete units over the geogrid. The geogrid shall be pulled taut, and anchored prior to backfill placement on the geogrid.
D. Geogrid reinforcements shall be continuous throughout their embedment lengths and placed side-by-side to provide 100% coverage at each level. Spliced connections between shorter pieces of geogrid or gaps between adjacent pieces of geogrid are not permitted.

3.05 Reinforced Backfill Placement
A. Reinforced backfill shall be placed, spread, and compacted in such a manner that minimizes the development of slack in the geogrid and installation damage.
B. Reinforced backfill shall be placed and compacted in lifts not to exceed 6 inches where hand compaction is used, or 8 - 10 inches where heavy compaction equipment is used. Lift thickness shall be decreased to achieve the required density as required.
C. Reinforced backfill shall be compacted to 95% of the maximum density as determined by ASTM D698. The moisture content of the backfill material prior to and during compaction shall be uniformly distributed throughout each layer and shall be + 3% to - 3% of optimum.
D. Only lightweight hand-operated equipment shall be allowed within 3 feet from the tail of the modular concrete unit.
E. Tracked construction equipment shall not be operated directly upon the geogrid reinforcement. A minimum fill thickness of 6 inches is required prior to operation of tracked vehicles over the geogrid. Tracked vehicle turning should be kept to a minimum to prevent tracks from displacing the fill and damaging the geogrid.
F. Rubber tired equipment may pass over geogrid reinforcement at slow speeds, less than 10 MPH. Sudden braking and sharp turning shall be avoided.
G. At the end of each day's operation, the Contractor shall slope the last lift of reinforced backfill away from the wall units to direct runoff away from wall face. The Contractor shall not allow surface runoff from adjacent areas to enter the wall construction site.

3.06 Cap Installation
A. Cap units shall be glued to underlying units with an all-weather adhesive recommended by the manufacturer.

3.07 Field Quality Control
A. The Owner shall engage inspection and testing services, including independent laboratories, to provide quality assurance and testing services during construction.
B. As a minimum, quality assurance testing should include foundation soil inspection, soil and backfill testing, verification of design parameters, and observation of construction for general compliance with design drawings and specifications.

PROFESSIONAL CERTIFICATION. I HEREBY CERTIFY THAT THESE DOCUMENTS WERE PREPARED OR APPROVED BY ME AND THAT I AM DULY LICENSED PROFESSIONAL ENGINEER UNDER THE LAWS OF THE STATE OF MARYLAND, LICENSE NO. 14434
EXPIRATION DATE: 05/13/13

OrchardDevelopment Corporation

CRP Opportunity Fund, L.P.

OWNER / DEVELOPER:
ORCHARD DEVELOPMENT CORPORATION
5032 DORSEY HALL DRIVE
ELLICOTT CITY, MD 21042
(410) 964-2334

HILLIS-CARNES
ENGINEERING ASSOCIATES

APPROVED: DEPARTMENT OF PLANNING AND ZONING
CHIEF, DEVELOPMENT ENGINEERING DIVISION — DATE 1/24/12
CHIEF, DIVISION OF LAND DEVELOPMENT — DATE 2/02/12
DIRECTOR — DATE 2/3/12

REVISIONS

NO.	DATE	DESCRIPTION	BY

DATE 11/18/2011
SCALE AS SHOWN
DESIGNED BY RWS
DRAWN BY AM

RETAINING WALL DETAILS
ORCHARD MEADOWS
PARCELS 'D-1' THRU 'D-3'
SITE DEVELOPMENT PLAN
PREVIOUS FILE NO. P 07-019 AS "THE MEADOWS OF ELLICOTT CITY III PARCELS D-1 THRU D-3"
A SUBDIVISION OF "HOENES PROPERTY", PARCEL 'D' PLAT NO. 9419
ZONING R-A-15, TAX MAP NO. 17, GRID NO. 23, PARCEL NO. 711
SECOND ELECTION DISTRICT — HOWARD COUNTY, MARYLAND

SEAL: STATE OF MARYLAND — RICHARD W. STREVIG — No. 14434 — PROFESSIONAL ENGINEER

DRAWING NO. C - 36
SHEET 36 OF 38
HCEA JOB NUMBER 11282-A

SDP-11-052

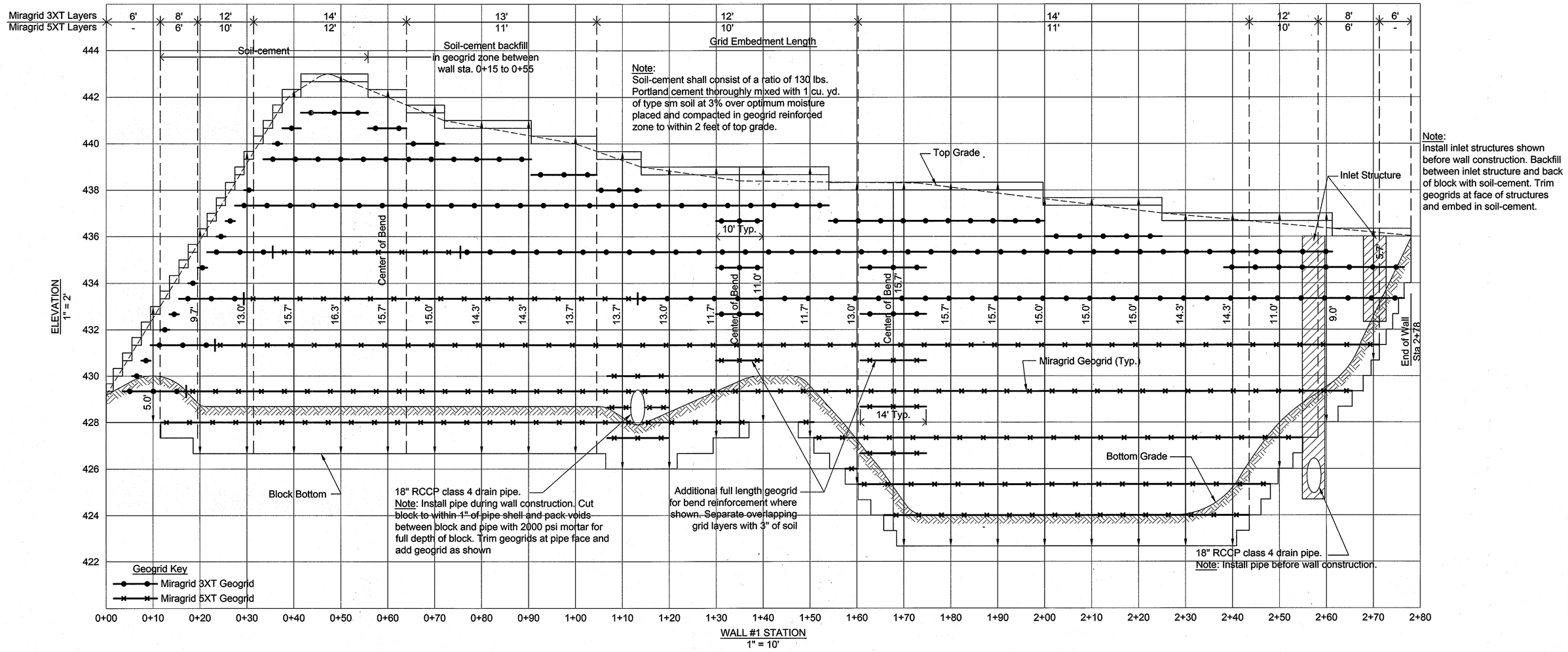

WALL #1 ELEVATION

PROFESSIONAL CERTIFICATION. I HEREBY CERTIFY THAT THESE DOCUMENTS WERE PREPARED OR APPROVED BY ME AND THAT I AM DULY LICENSED PROFESSIONAL ENGINEER UNDER THE LAWS OF THE STATE OF MARYLAND, LICENSE NO. 14434
EXPIRATION DATE: 05/13/13

OrchardDevelopment Corporation
CRP Opportunity Fund, L.P.

OWNER / DEVELOPER:
ORCHARD DEVELOPMENT CORPORATION
5032 DORSEY HALL DRIVE
ELLICOTT CITY, MD 21042
(410) 964-2334

HILLIS-CARNES
ENGINEERING ASSOCIATES

APPROVED: DEPARTMENT OF PLANNING AND ZONING
CHIEF, DEVELOPMENT ENGINEERING DIVISION — DATE 1/31/12
CHIEF, DIVISION OF LAND DEVELOPMENT — DATE 2/03/12
DIRECTOR — DATE 2/3/12

REVISIONS			
NO.	DATE	DESCRIPTION	BY

DATE 11/18/2011
SCALE AS SHOWN
DESIGNED BY RWS
DRAWN BY AM

RETAINING WALL #1 ELEVATION
ORCHARD MEADOWS
PARCELS 'D-1' THRU 'D-3'
SITE DEVELOPMENT PLAN
PREVIOUS FILE NO. F 07-019 AS "THE MEADOWS OF ELLICOTT CITY III PARCELS D-1 THRU D-3"
A SUBDIVISION OF "HOENES PROPERTY", PARCEL 'D' PLAT NO. 9419
ZONING R-A-15, TAX MAP NO. 17, GRID NO. 23, PARCEL NO. 711
SECOND ELECTION DISTRICT — HOWARD COUNTY, MARYLAND

SEAL: STATE OF MARYLAND — RICHARD W. STEVENS — No. 14434 — PROFESSIONAL ENGINEER

DRAWING NO. C - 37
SHEET 37 OF 38
HCEA JOB NUMBER 11282-A

SDP-11-052

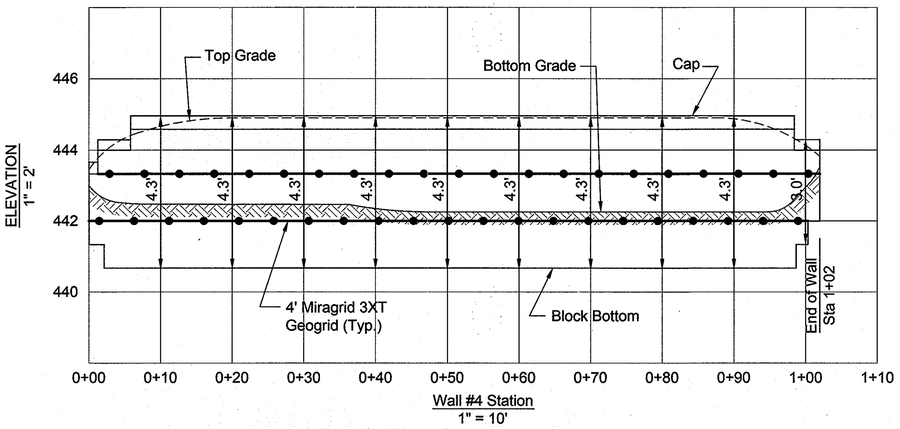

WALL #4 ELEVATION

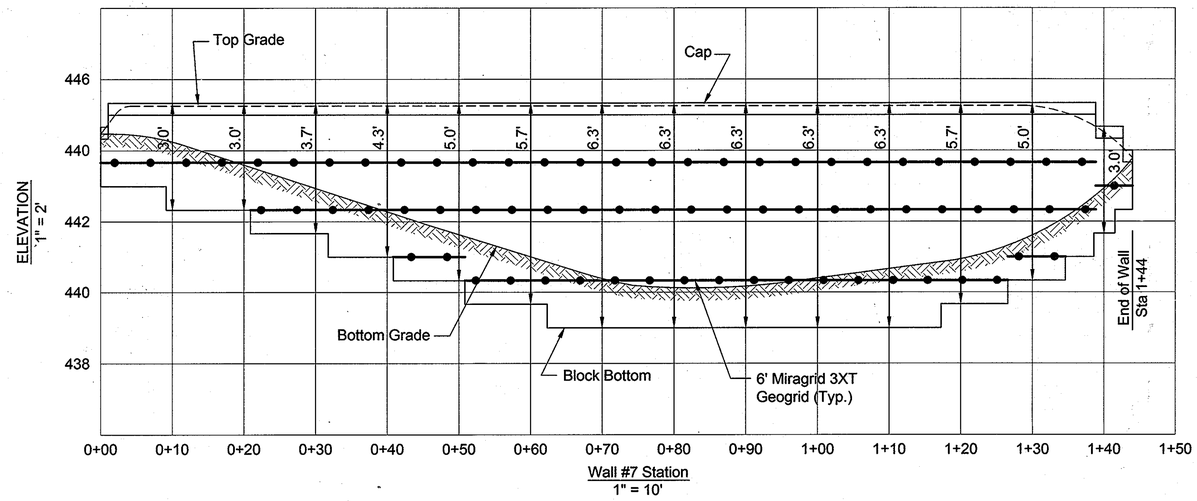

WALL #7 ELEVATION

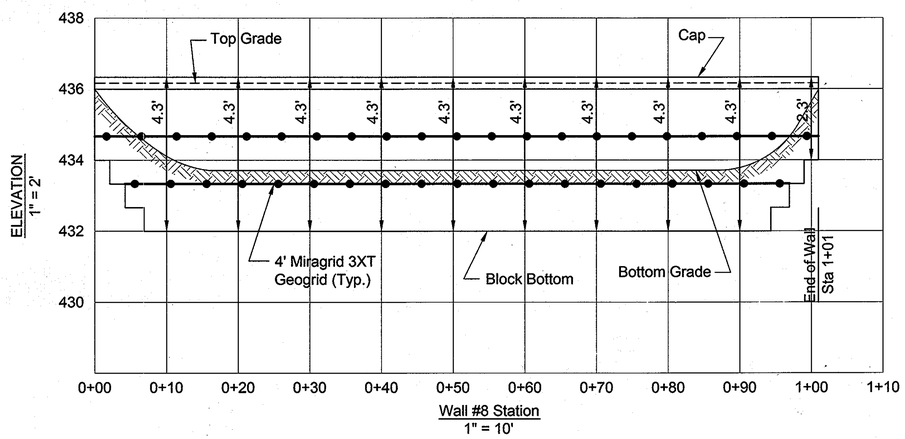

WALL #8 ELEVATION

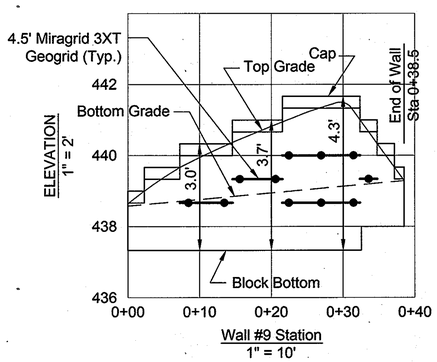

WALL #9 ELEVATION

PROFESSIONAL CERTIFICATION. I HEREBY CERTIFY THAT THESE DOCUMENTS WERE PREPARED OR APPROVED BY ME AND THAT I AM DULY LICENSED PROFESSIONAL ENGINEER UNDER THE LAWS OF THE STATE OF MARYLAND, LICENSE NO. 14434
EXPIRATION DATE: 05/13/13

OrchardDevelopment Corporation

CRP Opportunity Fund, L.P.

OWNER / DEVELOPER:
ORCHARD DEVELOPMENT CORPORATION
5032 DORSEY HALL DRIVE
ELLICOTT CITY, MD 21042
(410) 964-2334

HILLIS-CARNES
ENGINEERING ASSOCIATES
10975 Guilford Road, Suite A
(410) 880-4788
Annapolis Junction, MD
Fax: (410) 880-4098

APPROVED: DEPARTMENT OF PLANNING AND ZONING

CHIEF, DEVELOPMENT ENGINEERING DIVISION	DATE 1/24/12
CHIEF, DIVISION OF LAND DEVELOPMENT	DATE 2/02/12
DIRECTOR	DATE 2/3/12

REVISIONS

NO.	DATE	DESCRIPTION	BY

DATE 11/18/2011
SCALE AS SHOWN
DESIGNED BY RWS
DRAWN BY AM

RETAINING WALL ELEVATIONS
ORCHARD MEADOWS
PARCELS 'D-1' THRU 'D-3'
SITE DEVELOPMENT PLAN
PREVIOUS FILE NO. P 07-019 AS "THE MEADOWS OF ELLICOTT CITY III PARCELS D-1 THRU D-3"
A SUBDIVISION OF "MOONES PROPERTY", PARCEL 'D' PLAT NO. 3419
ZONING R-A-15, TAX MAP NO. 17, GRID NO. 23, PARCEL NO. 711
SECOND ELECTION DISTRICT — HOWARD COUNTY, MARYLAND

SEAL: STATE OF MARYLAND — RICHARD W. SWANSON — No. 14434 — PROFESSIONAL ENGINEER

DRAWING NO. C - 38
SHEET 38 OF 38
HCEA JOB NUMBER 11282-A

SDP-11-052