Site Development Plan for Emerson Parcel F (Revitz Property)

Howard County Maryland

General Notes

1. All construction shall be in accordance with the latest standards and specifications of Howard County plus MSHA standards and specifications if applicable.
2. The contractor shall notify the Department of Public Works/Bureau of Engineering/Construction Inspection Division at 410-313-1880 at least five (5) working days prior to the start of work.
3. The Contractor shall notify "Miss Utility" at 1-800-257-7777 at least 48 hours prior to any excavation work being done.
4. The Contractor shall test pit existing utilities as least five (5) days prior to the start of construction to verify their location and elevation. The Contractor shall notify the engineer immediately if the location is different than shown.
5. The Contractor shall coordinate the location of all water, sewer and drain house connections with the mechanical drawings.
6. Traffic control devices, markings and signing shall be in accordance with the latest edition of the Maryland Manual of Uniform Traffic Control Devices (MUTCD).
7. All paving markings shall be "Traffic white", unless otherwise noted.
8. All plan dimensions are to face of curb unless otherwise noted.
9. The existing topography is taken from field run survey with two foot contour intervals prepared by Shanaberger & Lane on January 24, 2005 and field verified by Daft McCune Walker, Inc in April 2010.
10. The courses and coordinates shown hereon are based upon the Howard County Geodetic Control which is based upon the Maryland State Plane Coordinate System. Howard County monument No's 47DA, 47E4, and 47G2 were used for this project.
11. The Contractor shall maintain a minimum of a 2.0 foot protective cover over all utilities during construction.
12. Refer to Architectural drawings for exact building dimensions.
13. There is no floodplain, wetlands, streams, buffers or 25% steep slopes located within the subject parcel.
14. Project background information:
    Tax Map: 47
    Zoning: PEC
    Election District: 6
    Subdivision Name: Revitz Property Parcel F-1
    Lot/Parcel: 165
    Total Parcel Area: ~~9.532 Acres~~ Existing 10.410 ~~Ac Proposed~~
    File Numbers: Plat #18684, 18685, F-07-055, S-99-12, PB 339 and ZB 979M, PB-359, F-02-111, SP-01-12, F-02-131, F-07-55, and F-08-93, F-08-207. F-11-019.
15. All outdoor lighting shall comply with the requirements of Zoning Section 134. All exterior light fixtures shall be oriented to direct light inward and downward on-site and away from all adjoining residential properties and public roads in accordance with Section 134 of the Howard County Zoning Regulations.
16. Handicap parking details and signage shall be in accordance with ADAAG (Americans with Disabilities Act Accessibility Guidelines) and COMAR (Code of Maryland Regulations) Section 5.02.02.
17. Any damage to the county owned right-of-way shall be corrected at the contractor's expense.
18. All sidewalks shall be cross sloped at 1/4 inch per foot.
19. Trench bedding for storm drainage structures shall be in accordance with Howard County Standard G2.01.
20. All inlets shall be constructed in accordance with Howard County standards or MSHA standards as specified on the structure.
21. All materials and construction shall be in strict accordance with the Howard County Design Manual, Volume IV.
22. Building setback restrictions from property lines and right-of-way lines of any public road shall be in accordance with the PEC Zoning Regulations and Record Plat.
23. All onsite driveways and parking areas to be privately maintained.
24. All curb radii are to be 5 feet unless otherwise labeled and all curbs are to be 6 inches in height.
25. All equipment and tools to be placed so as not to interfere with vehicular or pedestrian movement unless specified.
26. The contractor shall be responsible for any damage to existing property which may occur as a result of negligence during the execution of work.
27. All proposed handicap ramps shall be in accordance with current ADA standards.
28. This property is located within the Metropolitan District.
29. Electric, gas, cable, telephone and lighting lines are designed by others.
30. This plan has been prepared in accordance with the provisions of section 16.124 of the Howard County Code and Landscape Manual. Landscaping shall be provided in accordance with the Landscape Plan and financial surety shall be paid with the DPW, Developer's Agreement in the amount of $12,660.00 for 37 shade trees and 52 shrubs.
31. (From plat #15783) As a result of the Preliminary Equivalent Sketch Plan, SP-01-12, being submitted to the County for review prior to 11/15/01, on 04/14/01. This subdivision is subject to compliance with the fourth edition of the Subdivision and Land Development Regulations. In addition, because SP-01-12 did not obtain a signature approval prior to 11/01/01. This subdivision is subject to compliance with County Bill 50-2001, which amends the Zoning Regulations, and the amended Zoning Regulations which became effective on 01/08/02. This SDP is subject to the amended Fifth Edition of the Subdivision and Land Development Regulations and the development or construction on this property must comply with the setback and buffer regulations in effect at the time of submission of the SDP, waiver or grading and building permits.
32. The Forest Conservation requirements for this development were previously addressed under DPZ File #'s F-02-111 with 26.42 acres of retention and 5.20 acres of reforestation planting provided as part of the Revitz Property Plan.
33. An existing SWM pond, privately owned and maintained, designed and approved under F-02-11 meets the requirements for WQv and Cpv Management. Existing SWM pond is owned and maintained by the Emerson Community Association. Rev will be met as shown on the Stormwater Management plan with stone recharge trenches, which shall be owned and maintained by the owner.
34. The Declaration of Reciprocal Access Easement was recorded on December 20, 2006. Liber 10436 Folio 188.
35. The existing utilities shown within Sterling Drive are based on approved Water Drawings, Contract No. 24-4014-D and were field located by DMW, Inc on May 13, 2010.
36. Water and Sewer are public, Contract No. 24-4683-D.
37. The open space requirements for this development were previously addressed under DPZ file no. F-02-111, Plat #15783 recorded on January 27, 2003. A total of 40.275 of open space is provided on Parcels J, O, P, Q, R, I, K, L, M and N. No open space exists on Parcel 'F'.
38. No cemeteries or historic structures exist within the boundaries of the site.
39. The proposed building shall have an Automatic Fire Protection Sprinkler System (by others).
40. Street light placement and the type of fixture and poles shall be in accordance with the Howard County Design Manual, Volume III (2006), section 5.5A. A minimum of 20' shall be maintained between any street light and any tree.
41. All sign posts used for traffic control signs installed within the county right-of-way shall be mounted on a 2" galvanized steel, perforated, square tube post (14 gauge) installed into A 2-1/2" galvanized steel, perforated, tube sleeve (12 gauge) 3' long. A galvanized steel pole cap shall be mounted on top of each post.
42. Site deed reference : Deed 11479/1 Plat no. 15787, 21277 & 21278.
43. This site complies with the Howard County Green Building law set forth under Title 3, Subtitle 10 of the Howard County Code and section 3.1005(a) of the Code. Registration with the Green Building Council and the applicable LEED registration fee was paid on 12/18/2009. The LEED New Construction checklist was prepared, signed and dated by the project LEED accredited professional and was received by DPZ on June 2, 2010. The proposed building is tentatively certified by LEED with a Silver rating.
44. The Traffic Study for this project was prepared by Traffic Concepts, Inc. in May 2010 and approved on July 2, 2010.
45. The proposed project is in compliance with the APFO Study for the Revitz property prepared by Wells & Associates and Approved Feb. 1, 2002.
46. The subject property is zoned PEC per the Jan. 8, 2002 Comprehensive Zoning Plan.
47. No grading, removal of vegetative cover or trees, paving and new structures shall be permitted within the required wetlands, stream(s) or there buffers, forest conservation easement areas and 100 year floodplain.
48. The public water main contract number is: 24-4683-D.

Thu Sep 30 08:30:33 2010 P:\95054\95054.1\ENGR\95054SDP01.COV1

Sheet Index

SHEET	DESCRIPTION
1	COVER SHEET
2	SITE PLAN
3	GRADING AND UTILITY PLAN
4	SITE DETAILS
5	SITE DETAILS
6	SITE DETAILS
7	SITE DETAILS
8	EROSION & SEDIMENT CONTROL PLAN
9	EROSION & SEDIMENT CONTROL DRAINAGE AREA MAP AND DETAILS
10	EROSION & SEDIMENT CONTROL DETAILS
11	EROSION & SEDIMENT CONTROL DETAILS
12	STORM DRAIN DRAINAGE AREA & SOILS MAP
13	STORM DRAIN PROFILES
14	STORM DRAIN PROFILES
15	STORM DRAIN & SEWER PROFILES
16	LANDSCAPE PLAN
17	LANDSCAPE DETAILS
18	PHOTOMETRICS PLAN
19	SITE DETAILS
20	SITE DETAILS

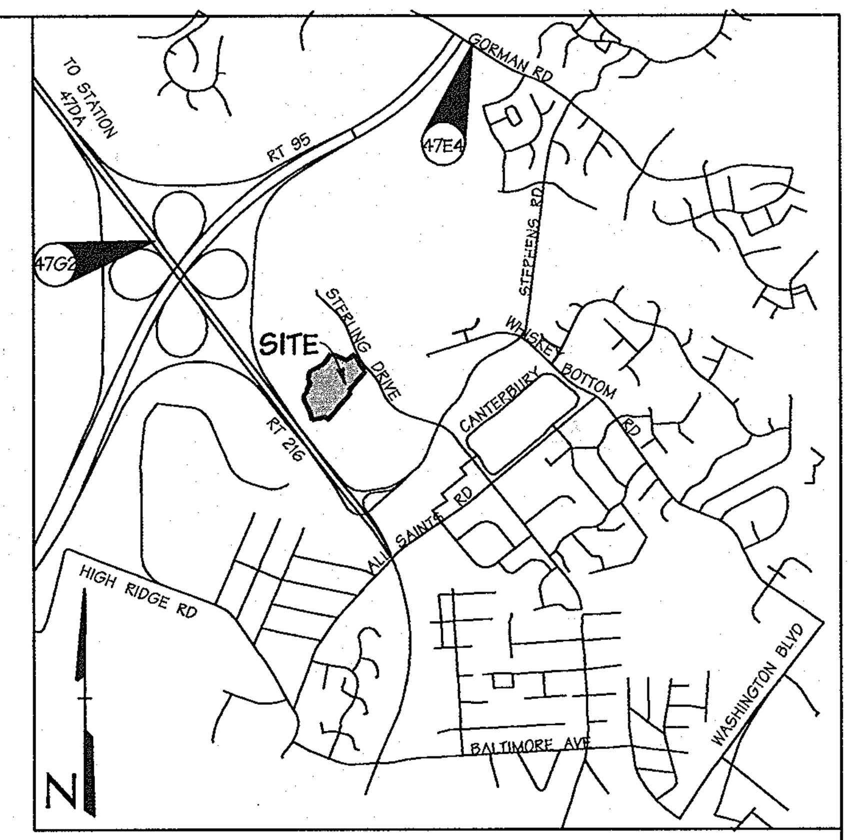

VICINITY MAP

Scale: 1"=2000'

HOWARD COUNTY ADC MAP NUMBER 5053, BLOCK H9

BENCHMARK

DESCRIPTION

COORDINATES IN MARYLAND NAD83(91) (HORIZONTAL) AND NGVD29 (VERTICAL) DATUMS.

47G2 NORTHING: 162440.1212
EASTING: 411853.9279
ELEVATION: 364.210ft.

47E4 NORTHING: 163326.2295
EASTING: 413136.2550
ELEVATION: 338.909ft.

47DA NORTHING: 163191.9104
EASTING: 411286.5759
ELEVATION: 96.2879ft.

AS-BUILT CERTIFICATION FOR PSWM

NOTE: THERE IS NO "AS-BUILT" INFORMATION PROVIDED ON THIS SHEET.

SIGNED [signature] 5/23/12 P.E.# 16928
MELVIN CHARLES

STATE OF MARYLAND — MELVIN CHARLES BEALL, JR. — No. 16928 REGISTERED — PROFESSIONAL ENGINEER

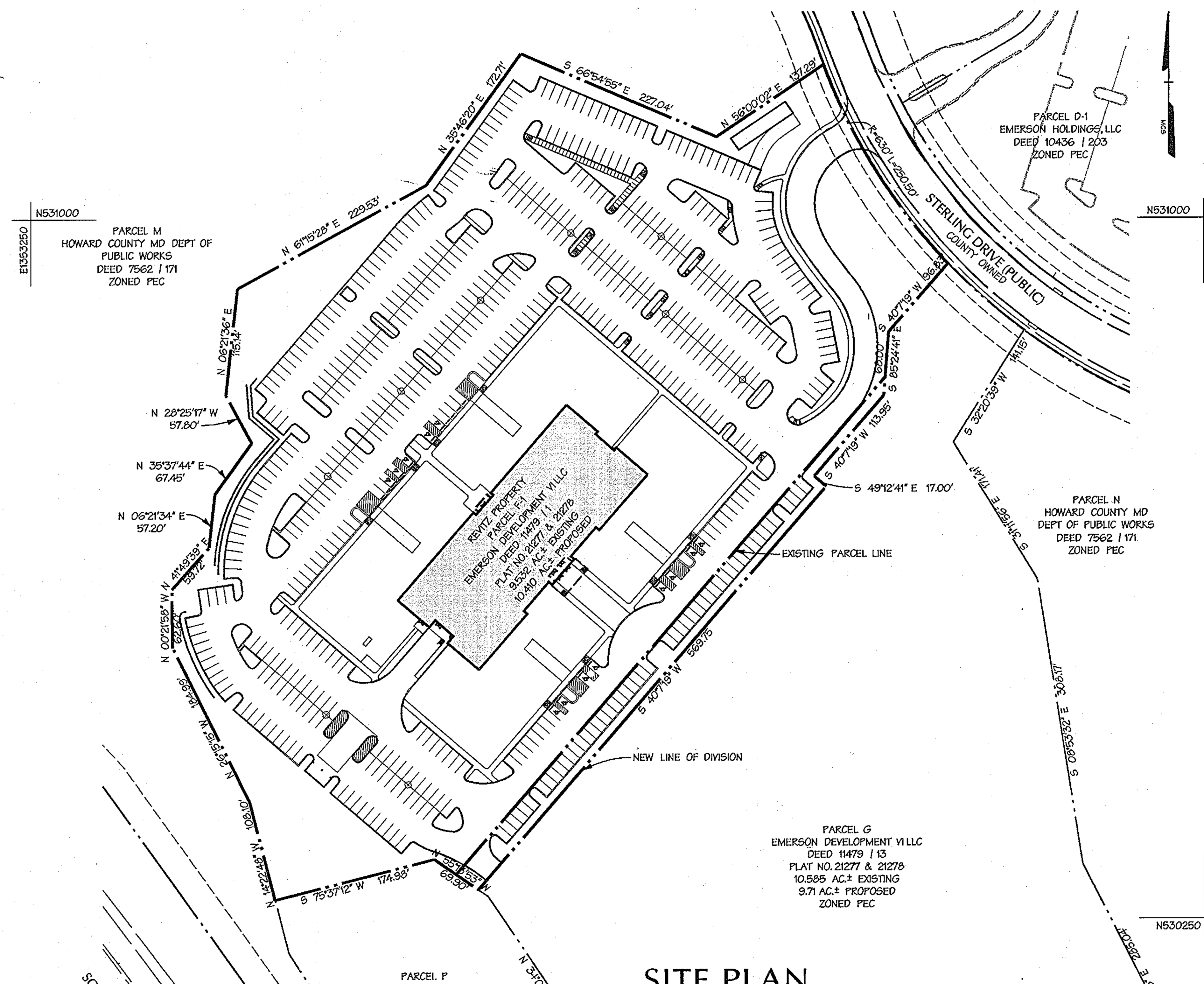

SITE PLAN

Scale: 1"=100'

Site Analysis Data Chart

1. General Site Data
   a. Present Zoning: PEC per the Comprehensive Plan, Feb. 2, 2004. The plan is subject to the Comp Lite Zoning Regulation amendments effective on July 28, 2006.
   b. Applicable DPZ File References: Plat # 18684, 18685, F-07-055, ZB-979M, S-99-12, P-01-25, SP-01-12, PB-339, PB-359, F-02-111, F-07-55, F-08-93 and F-08-207, F-11-019.
   c. Proposed Use: 5-Story commercial office building
   d. Proposed Water: Public
   e. Proposed Sewer: Public
   f. Any other relevant information: N/A
   g. Area of steep slopes: 0 Acres
   h. Area of floodplain: 0 Acres
2. Area Tabulation
   a. Total Site Area: Existing - ~~9.532 Ac Proposed~~ - 10.410 Ac.
   b. Limit of Disturbed Area: ±459,990 Sf. / 10.56 Acres
   c. Total Impervious Area: 253,110 Sf. / 5.81 Acres
   d. Building Coverage of Site: 0.70 Acres and 6.7% of Proposed Gross Area
3. Parking Space Data
   a. Number of Parking Spaces Required by Zoning Regulations and Criteria: 149,990 SF Office @ 3.3/1000 = 495 spaces
   b. Total Number of Parking Spaces Provided On-Site: ~~620~~ 612
   Total Includes:
   524 ~~576~~ Standard spaces
   31 Low Emitting / Fuel Efficient Vehicle spaces
   13 Handicap spaces
   36 Compact
   8 Motorcycle

ADDRESS CHART

PARCEL NUMBERS	STREET ADDRESS
PARCEL F-1	9055 STERLING DRIVE

AS BUILT NOT REQUIRED

[signature]
SURVEY SERVICES OF MD., LLC
BY: ROBERT W. MATIS - RLS 605

STATE OF MARYLAND — ROBERT WILLIAM MATIS — No. 605 REGISTERED — PROPERTY LINE SURVEYOR

APPROVED: HOWARD COUNTY DEPT. OF PUBLIC WORKS

[signature] 10-8-10
CHIEF, BUREAU OF HIGHWAYS — DATE

APPROVED: HOWARD COUNTY DEPT. OF PLANNING AND ZONING

[signature] 11-18-10
CHIEF, DIVISION OF LAND DEVELOPMENT — DATE

TM [signature] 11/16/10
CHIEF, DEVELOPMENT ENGINEERING DIVISION — DATE

[signature] 11/18/10
DIRECTOR — DATE

Date	No.	Revision Description
6/25/13	1	Parking & Additional sheets

PROPOSED BUILDING FLOOR AREA	
30,128 SF	1ST FLOOR AREA
30,114 SF	2ND FLOOR AREA
30,114 SF	3RD FLOOR AREA
30,114 SF	4TH FLOOR AREA
29,520 SF	5TH FLOOR AREA
149,990 SF	TOTAL FLOOR AREA

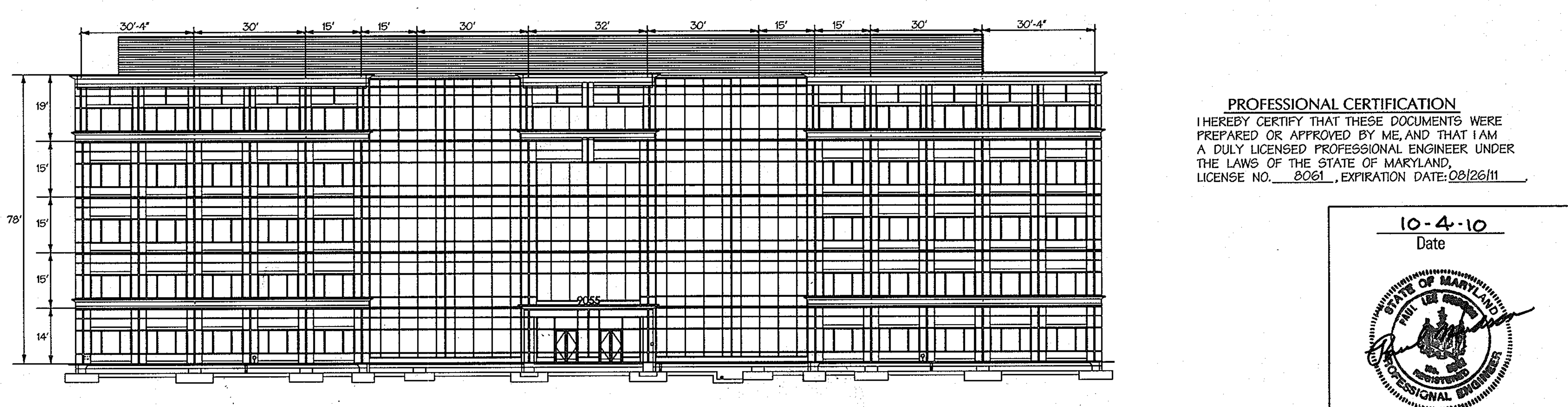

BUILDING ELEVATION

Not to Scale

BUILDING FACADE TO BE CONCRETE/MASONRY AND GLASS

PROFESSIONAL CERTIFICATION

I HEREBY CERTIFY THAT THESE DOCUMENTS WERE PREPARED OR APPROVED BY ME, AND THAT I AM A DULY LICENSED PROFESSIONAL ENGINEER UNDER THE LAWS OF THE STATE OF MARYLAND, LICENSE NO. 8061, EXPIRATION DATE: 08/26/11.

10-4-10
Date

STATE OF MARYLAND — PAUL LEE MUDDIMAN — PROFESSIONAL ENGINEER

Professional Engr. No. 8061

EMERSON PARCEL F–1 REVITZ PROPERTY

5–STORY COMMERCIAL OFFICE BUILDING

OWNER/DEVELOPER:
EMERSON DEVELOPMENT VII LLC
1 TEXAS STATION COURT, SUITE 200
TIMONIUM, MARYLAND 21093-8288
(443) 689-8000

DMW
DAFT McCUNE WALKER INC
200 EAST PENNSYLVANIA AVENUE • TOWSON, MD 21286
P: 410 296 3333 F: 410 296 4705 WWW.DMW.COM
A TEAM OF LAND PLANNERS, LANDSCAPE ARCHITECTS, ENGINEERS, SURVEYORS & ENVIRONMENTAL PROFESSIONALS

SUBDIVISION NAME	SECTION/AREA	LOT/PARCEL #
REVITZ PROPERTY		LOT F-1 / PAR. 165

PLAT # OR L/F	BLOCK #	ZONE	TAX/ZONE MAP	ELECT. DISTRICT	CENSUS TRACT
21277 & 21278	20	PEC	47	6	6903

WATER CODE — SEWER CODE —

TITLE: COVER SHEET

Des. By	THR/JDF	Scale	1"=100'	Proj. No.	95054.10
Dm. By	CRH	Date	09-29-10		
Chk. By		Approved			1 of ~~18~~ 20

SDP-10-096

REVISED SDP

P:\95054\95054.1\ENGR\95054SDP01.COV1 Sep 30 08:30:33 2010

9/30/2010 8:32:21 AM jsmith c:\hpm\95054SDP01.prf P:\95054\95054.1\ENGR\95054SDP01.COV1 95054SDP01.COV1

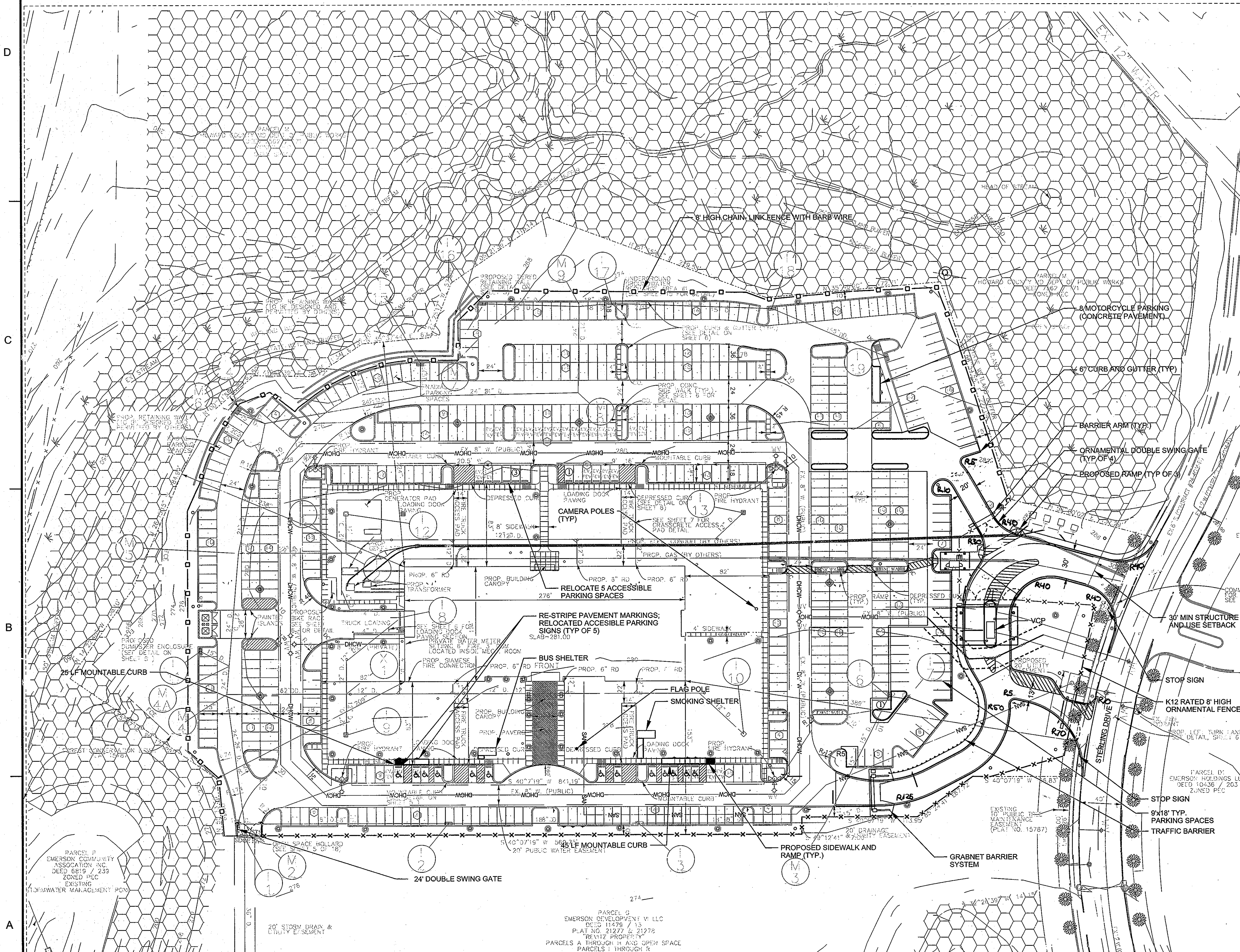

LEGEND

- PLATTED PROPERTY BOUNDARY
- PROPERTY BOUNDARY
- EX. RIGHT OF WAY
- ADJACENT PROPERTY BOUNDARY
- EX. ROADS AND WALKS
- EX. MAJOR CONTOUR
- EX. MINOR CONTOUR
- FOREST CONSERVATION EASEMENT
- PROP. BUILDING
- PROP. CURB / EDGE OF PAVING
- PROP. DEPRESSED CURB
- PROP. REVERSE CURB
- PROP. HEAVY DUTY PAVING
- PROP. INTERMEDIATE DUTY PAVING
- PROP. LIGHT DUTY PAVING
- PROP. LOADING DOCK PAVING
- PROP. GROUP LIGHT (BY OTHERS)
- PROP. SINGLE LIGHT (BY OTHERS)
- PROP. LIGHT (BY OTHERS)
- EX. STREET TREE TO BE REMOVED
- LIMIT OF DISTURBANCE

NOTES:

1. UNLESS LABELED OTHERWISE ALL CURB RADII ARE FIVE (5) FOOT.
2. SEE ARCHITECTURAL PLANS FOR EXACT BUILDING DIMENSIONS.
3. STREET LIGHT SHALL BE A 250 WATT HPS VAPER COBRA FIXTURE (CUTOFF) MOUNTED ON A 30' BRONZE FIBERGLASS POLE USING A 12' ARM. STREET LIGHT SHALL BE INSTALLED BY BGE AND PAID FOR BY THE DEVELOPER AS PART OF THE DEVELOPERS'S AGREEMENT.
4. CONCRETE PAVEMENT AT MOTORCYCLE PARKING AND VCP LOCATIONS.

PROFESSIONAL CERTIFICATION

I HEREBY CERTIFY THAT THESE DOCUMENTS WERE PREPARED OR APPROVED BY ME, AND THAT I AM A DULY LICENSED PROFESSIONAL ENGINEER UNDER THE LAWS OF THE STATE OF MARYLAND, LICENSE NO. 22350 EXPIRATION DATE: 05/22/2015

7/3/13

APPROVED: HOWARD COUNTY DEPT. OF PLANNING AND ZONING

CHIEF, DIVISION OF LAND DEVELOPMENT	DATE 7/11/13
CHIEF, DEVELOPMENT ENGINEERING DIVISION	DATE 7/9/13
DIRECTOR	DATE 7/11/13

Date	No.	Revision Description

EMERSON PARCEL F-1 REVITZ PROPERTY

5-STORY COMMERCIAL OFFICE BUILDING

OWNER DEVELOPER:
EMERSON DEVELOPMENT VII LLC
1 TEXAS STATION COURT, SUITE 200
TIMONIUM, MARYLAND 21093-8288
(443) 689-8000

SUBDIVISION NAME	SECTION AREA	LOT PARCEL #
REVITZ PROPERTY		LOT F-1 / PAR. 165
PLAT# OR L F / BLOCK# / ZONE: 21277 & 21278 / 20 / PEC	TAX ZONE MAP 47 / ELECT. DISTRICT 6	CENSUS TRACT 6903
WATER CODE	SEWER CODE	

TITLE: SITE PLAN

Des. By	Scale 1"=50'	Proj. No.95054.10
Drn. By	Date 07-03-13	2 of 20
Chk. By	Approved	

US Army Corps of Engineers
Baltimore District

REAL PROPERTY SERVICES FIELD OFFICE
ANNAPOLIS JUNCTION, MARYLAND

JACOBS
1100 N.GLEBE RD., ARLINGTON, VA, 22201
(571) 218-1000

THE INFORMATION PROVIDED HEREIN IS THE PROPERTY OF THE UNITED STATES GOVERNMENT. IT IS PROVIDED ONLY FOR THE PURPOSE STATED IN THE ACCOMPANYING DOCUMENT. DISTRIBUTION OF THIS DOCUMENT AND THE INFORMATION CONTAINED HEREIN IS LIMITED TO THE RECIPIENT SPECIFIED IN THE ACCOMPANYING DOCUMENT. REPRODUCTION OR DISSEMINATION OF THIS DOCUMENT OR OF THE INFORMATION CONTAINED HEREIN IN WHOLE OR IN PART IN ANY MEDIUM WITHOUT THE APPROVAL OF THE UNITED STATES GOVERNMENT IS STRICTLY PROHIBITED. VIOLATORS OF THIS REQUIREMENT WILL BE PROSECUTED TO THE FULLEST EXTENT OF THE LAW.

Mark	Description	Date	Appr.
	Redline Revision: perimeter fencing	7/13	

Designed by:
Dwn by:
Ckd by:
RSFO Project Manager CHARLES CANITZ
Submitted by: NATHAN JAMES PROJECT MANAGER
Date: JULY 10, 2013
Project No. 27877
Rev.
File name:
Plot date:
Plot scale:

EMERSON - PERIMETER SECURITY AND SITE
SITE PLAN
ROOM(S) OR FLOOR
LAUREL, MD

Drawing No.

Sheet Reference No.
2 OF 20
Sheet of 45

SDP-10-096

UNCLASSIFIED//FOR OFFICIAL USE ONLY

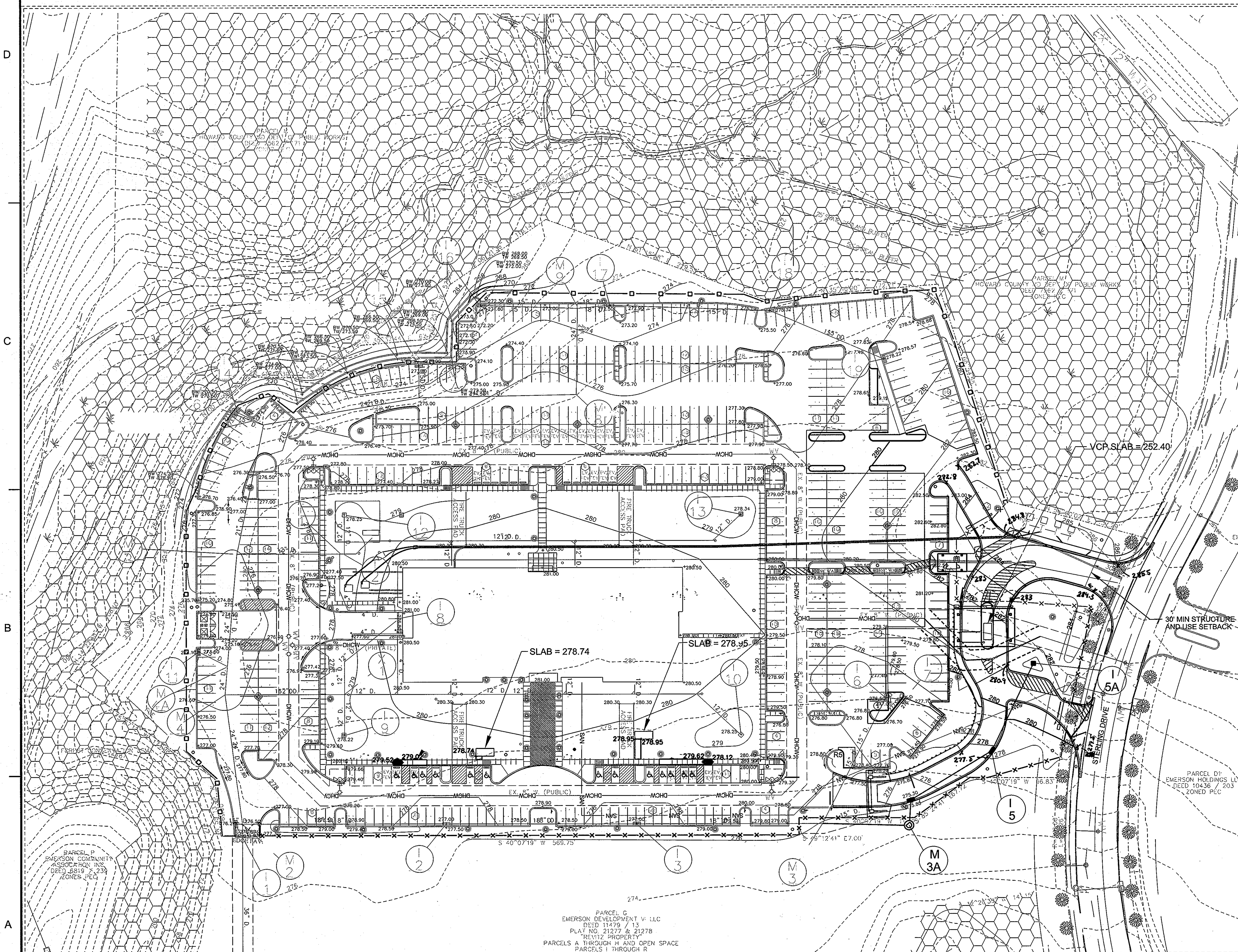

LEGEND

- PROPERTY BOUNDARY
- EX. RIGHT OF WAY
- ADJACENT PROPERTY BOUNDARY
- EX. ROADS AND WALKS
- 280 EX. MAJOR CONTOUR
- EX. MINOR CONTOUR
- FOREST CONSERVATION EASEMENT
- PROP. BUILDING
- PROP. CURB / EDGE OF PAVING
- PROP. DEPRESSED CURB
- PROP. SINGLE LIGHT (BY OTHERS)
- PROP. LIGHT (BY OTHERS)
- 280 PROP. MAJOR CONTOUR
- PROP. MINOR CONTOUR
- DRAINAGE & UTILITY EASEMENT
- LIMIT OF DISTURBANCE

GENERAL NOTES:

1. APPLICANT OWNS PARCELS "F" AND "G".
2. CONTRACTOR TO MAINTAIN POSITIVE DRAINAGE AWAY FROM BUILDING FOUNDATION AND LOADING DOCK AREA AT ALL TIMES DURING CONSTRUCTION.
3. CONTRACTOR TO COORDINATE LOCATION OF UTILITY CONNECTIONS TO BUILDING WITH ARCHITECTURAL PLANS.

PROFESSIONAL CERTIFICATION

I HEREBY CERTIFY THAT THESE DOCUMENTS WERE PREPARED OR APPROVED BY ME, AND THAT I AM A DULY LICENSED PROFESSIONAL ENGINEER UNDER THE LAWS OF THE STATE OF MARYLAND, LICENSE NO. 22350 EXPIRATION DATE: 05/22/2015

7/3/13 [seal: STATE OF MARYLAND, BRADFORD D. WEINERT, NO. 22350, PROFESSIONAL ENGINEER] [signature]

APPROVED: HOWARD COUNTY DEPT. OF PLANNING AND ZONING

[signature] CHIEF, DIVISION OF LAND DEVELOPMENT	7/11/13 DATE
[signature] CHIEF, DEVELOPMENT ENGINEERING DIVISION	7/9/13 DATE
[signature] DIRECTOR	7/11/13 DATE

Date	No.	Revision Description

EMERSON PARCEL F-1 REVITZ PROPERTY

5-STORY COMMERCIAL OFFICE BUILDING

OWNER DEVELOPER:
EMERSON DEVELOPMENT VII LLC
1 TEXAS STATION COURT, SUITE 200
TIMONIUM, MARYLAND 21093-8288
(443) 689-8000

SUBDIVISION NAME			SECTION AREA		LOT PARCEL #
REVITZ PROPERTY					LOT F-1 / PAR. 165
PLAT# OR L F	BLOCK#	ZONE	TAX ZONE MAP	ELECT. DISTRICT	CENSUS TRACT
21277 & 21278	20	PEC	47	6	6903
WATER CODE			SEWER CODE		

TITLE GRADING AND UTILITY PLAN

Des. By	Scale 1"=50'	Proj. No.95054.10
Drn. By	Date 07-05-13	3 of 20
Chk. By	Approved	

US Army Corps of Engineers
Baltimore District

REAL PROPERTY SERVICES FIELD OFFICE ANNAPOLIS JUNCTION, MARYLAND

JACOBS
1100 N.GLEBE RD., ARLINGTON, VA 22201
(571) 218-1000

THE INFORMATION PROVIDED HEREIN IS THE PROPERTY OF THE UNITED STATES GOVERNMENT. IT IS PROVIDED ONLY FOR THE PURPOSE STATED IN THE ACCOMPANYING DOCUMENT. DISTRIBUTION OF THIS DOCUMENT AND THE INFORMATION CONTAINED HEREIN IS LIMITED TO THE RECIPIENT SPECIFIED IN THE ACCOMPANYING DOCUMENT. REPRODUCTION OR DISSEMINATION OF THIS DOCUMENT OR OF THE INFORMATION CONTAINED HEREIN IN WHOLE OR IN PART IN ANY MEDIUM WITHOUT THE APPROVAL OF THE UNITED STATES GOVERNMENT IS STRICTLY PROHIBITED. VIOLATORS OF THIS REQUIREMENT WILL BE PROSECUTED TO THE FULLEST EXTENT OF THE LAW.

Mark	Description	Date	Appr.
	Red-line revision: perimeter fencing	7/13	

Designed by:	Date: JULY 10, 2013
Dwn by:	Ckd by:
	Project No. 27877
RSFO Project Manager CHARLES CANITZ	
Submitted by: NATHAN JAMES PROJECT MANAGER	File name: Plot date: Plot scale:
Rev.	-

EMERSON - PERIMETER SECURITY AND SITE
GRADING AND UTILITY PLAN
ROOM(S) OR FLOOR
LAUREL, MD

Drawing No.

Sheet Reference No. 3 OF 20

Sheet of 45

UNCLASSIFIED//FOR OFFICIAL USE ONLY

UNCLASSIFIED//FOR OFFICIAL USE ONLY

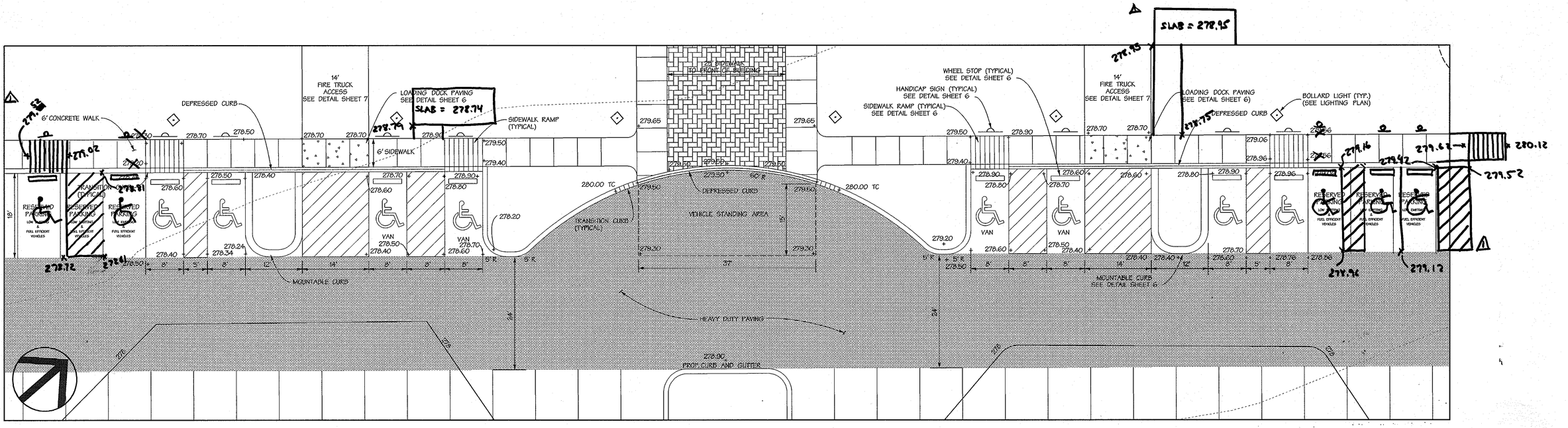

PROPOSED HANDICAP PARKING AND ACCESS (FRONT)

1"=10'

AS BUILT
NOT REQUIRED

SURVEY SERVICES OF MD., LLC
BY: ROBERT W. MATIS - RLS 605

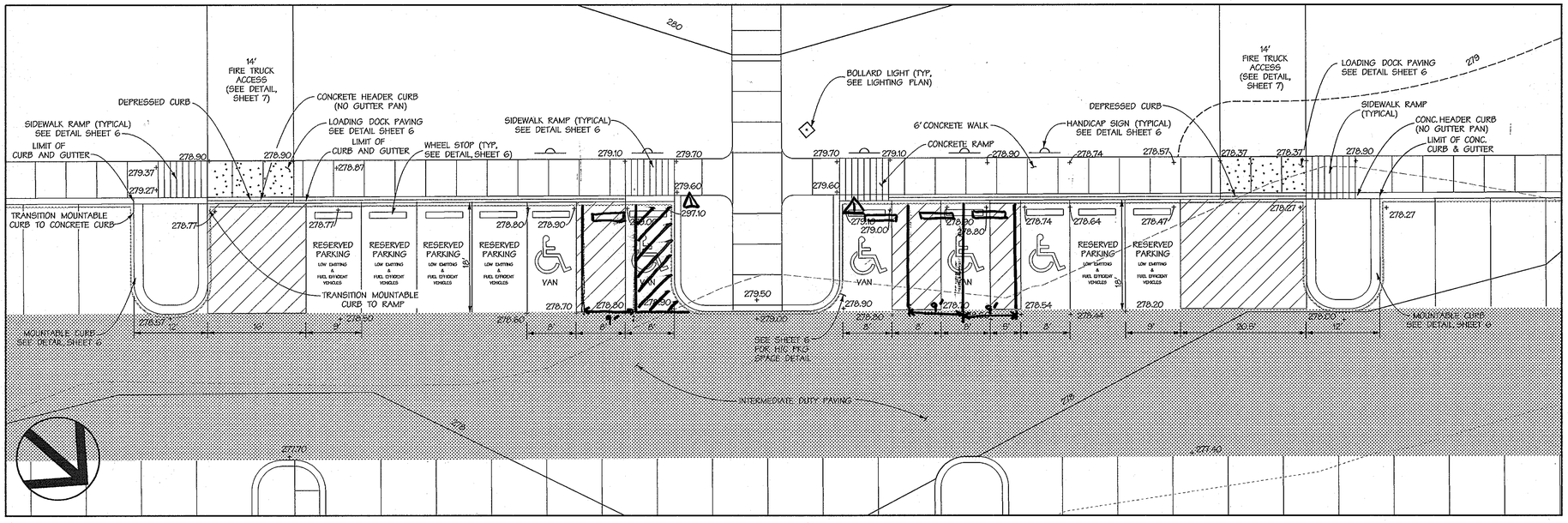

PROPOSED HANDICAP PARKING AND ACCESS (REAR)

1"=10'

AS-BUILT CERTIFICATION FOR PSWM

NOTE: THERE IS NO "AS-BUILT" INFORMATION PROVIDED ON THIS SHEET.

SIGNED _____ 5/22/12 P.E.# 16928
MELVIN CHARLES BEALL, JR.

PROFESSIONAL CERTIFICATION

I HEREBY CERTIFY THAT THESE DOCUMENTS WERE PREPARED OR APPROVED BY ME, AND THAT I AM A DULY LICENSED PROFESSIONAL ENGINEER UNDER THE LAWS OF THE STATE OF MARYLAND, LICENSE NO. 8061, EXPIRATION DATE: 8-26-2011

10-4-10
Date

Professional Engr. No. 8061

APPROVED: HOWARD COUNTY DEPT. OF PUBLIC WORKS

CHIEF, BUREAU OF HIGHWAYS — DATE 10-8-10

APPROVED: HOWARD COUNTY DEPT. OF PLANNING AND ZONING

CHIEF, DIVISION OF LAND DEVELOPMENT — DATE 11-18-10

CHIEF, DEVELOPMENT ENGINEERING DIVISION — DATE 11/16/10

DIRECTOR — DATE 11/18/10

Date	No.	Revision Description
5/22/12	1	RELOCATED HC SPOTS

EMERSON PARCEL F-1 REVITZ PROPERTY

5-STORY COMMERCIAL OFFICE BUILDING

OWNER/DEVELOPER:
EMERSON DEVELOPMENT VII LLC
1 TEXAS STATION COURT, SUITE 200
TIMONIUM, MARYLAND 21093-8288
(443) 689-8000

DMW
DAFT McCUNE WALKER INC
200 EAST PENNSYLVANIA AVENUE • TOWSON, MD 21286
P: 410 296 3333 F: 410 296 4705 WWW.DMW.COM
A TEAM OF LAND PLANNERS, LANDSCAPE ARCHITECTS, ENGINEERS, SURVEYORS & ENVIRONMENTAL PROFESSIONALS

SUBDIVISION NAME			SECTION / AREA		LOT/PARCEL #
REVITZ PROPERTY					LOT F-1 / PAR. 165
PLAT # OR L/F	BLOCK #	ZONE	TAX/ZONE MAP	ELECT. DISTRICT	CENSUS TRACT
21277 & 21278	20	PEC	47	6	6903
WATER CODE			SEWER CODE		

TITLE: **SITE DETAILS**

Des. By	THR/JDF	Scale	1"=10'	Proj. No.	95054.10
Dm. By	CRH	Date	09-29-10		4 of 18
Chk. By		Approved			

SDP-10-096

20

REVISED SDP

Thu Sep 30 08:27:02 2010 P:\95054\ENGR\95054SDP04.SP2
9/30/2010 8:27:46 AM jamth c:\hpm\95054SDP04.spf P:\95054\ENGR\95054SDP04.SP2

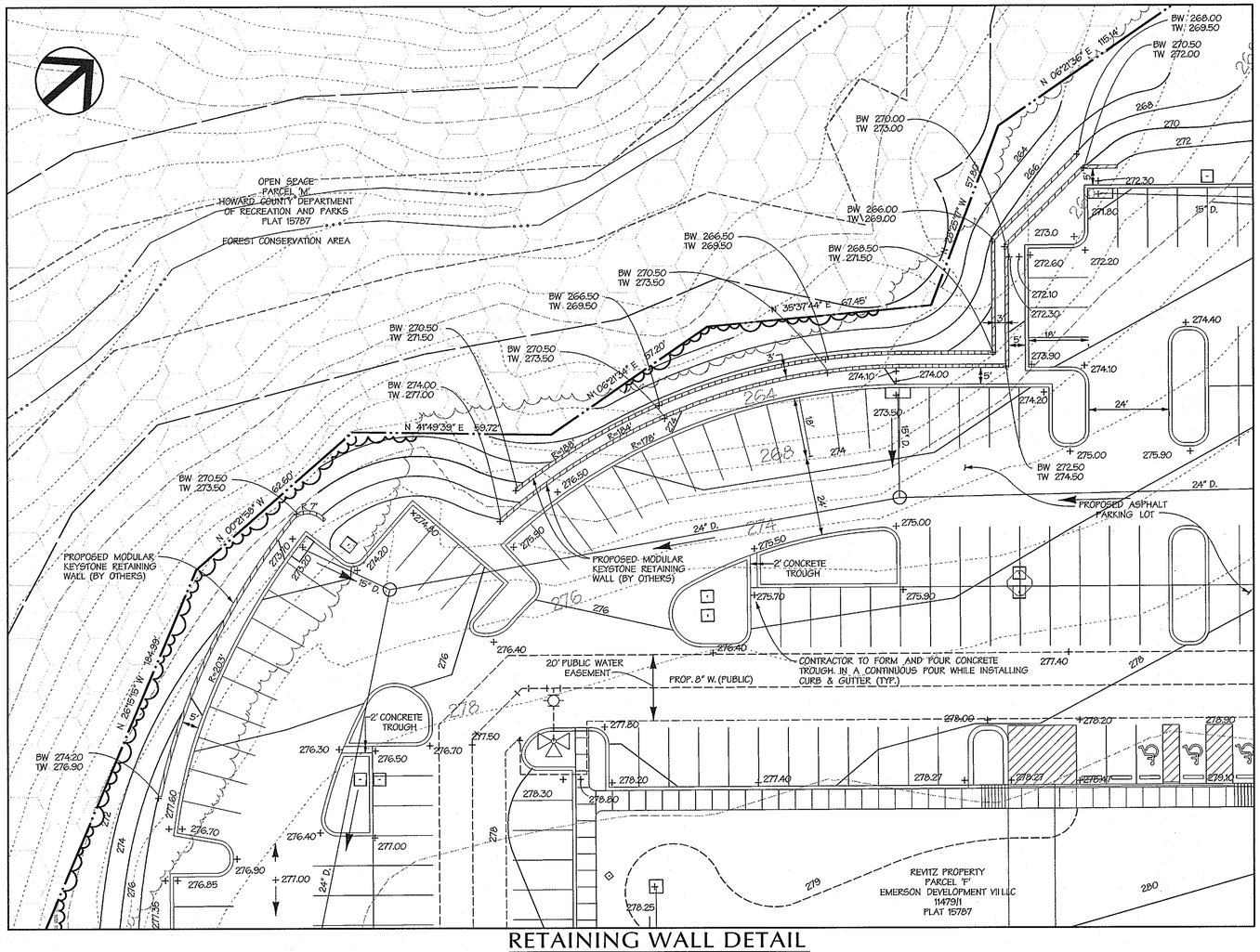

RETAINING WALL DETAIL

SCALE: 1"=20'

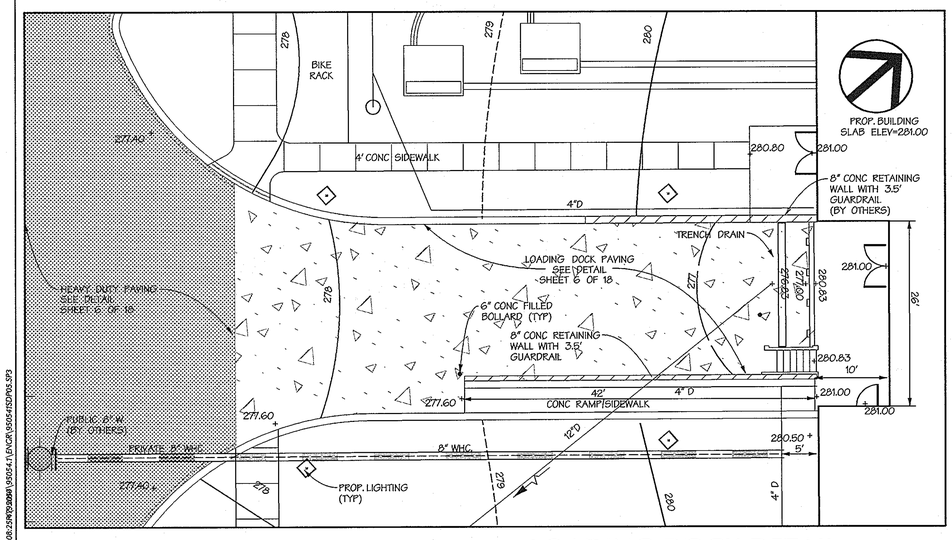

LOADING DOCK DETAIL

SCALE: 1"=10'

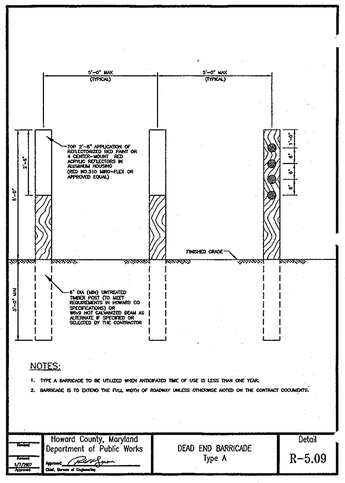

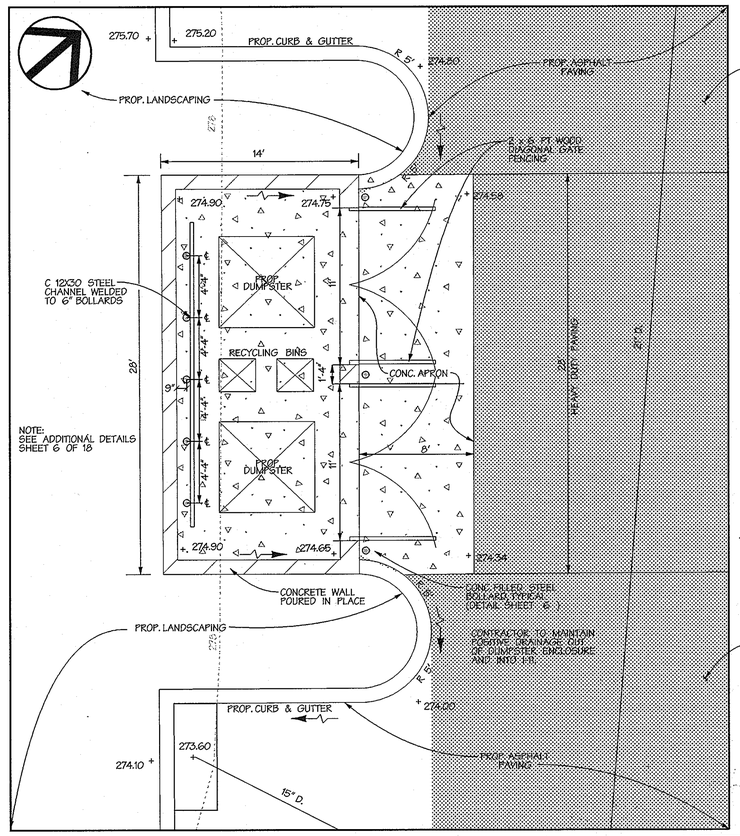

DUMPSTER ENCLOSURE DETAIL

SCALE: 1"=5'

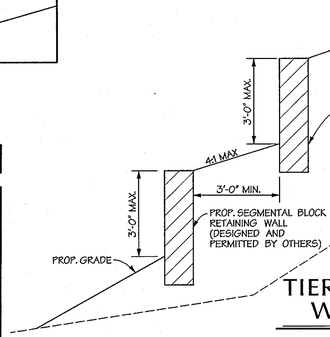

TIERED RETAINING WALL SECTION

NOT TO SCALE

RETAINING WALL NOTES

1. FOR WALL ELEVATIONS, SEE DETAIL ON THIS SHEET.
2. TIERED WALLS 10' HIGH OR GREATER SHALL BE DESIGNED AS "CRITICAL" WALLS.
3. SETBACK BETWEEN WALLS SHALL BE EQUAL TO THE HEIGHT OF THE LOWER WALL OR GREATER.
4. SLOPE BETWEEN TIERED WALLS SHALL NOT EXCEED 4:1.

AS BUILT
NOT REQUIRED

SURVEY SERVICES OF MD, LLC
BY: ROBERT W. MATIS - RLS 605

PROFESSIONAL CERTIFICATION

I HEREBY CERTIFY THAT THESE DOCUMENTS WERE PREPARED OR APPROVED BY ME, AND THAT I AM A DULY LICENSED PROFESSIONAL ENGINEER UNDER THE LAWS OF THE STATE OF MARYLAND, LICENSE NO. 8061, EXPIRATION DATE: 8-26-2011

10-4-10
Date

Professional Engr. No. 8061

AS-BUILT CERTIFICATION FOR PSWM

NOTE: THERE IS NO "AS-BUILT" INFORMATION PROVIDED ON THIS SHEET.

SIGNED _____ 5/23/12
MELVIN CHARLES [illegible] P.E. # 16928

APPROVED: HOWARD COUNTY DEPT. OF PUBLIC WORKS

CHIEF, BUREAU OF HIGHWAYS — DATE 10-8-10

APPROVED: HOWARD COUNTY DEPT. OF PLANNING AND ZONING

CHIEF, DIVISION OF LAND DEVELOPMENT — DATE 11-18-10

CHIEF, DEVELOPMENT ENGINEERING DIVISION — DATE 11/16/10

DIRECTOR — DATE 11/18/10

Date	No.	Revision Description

EMERSON PARCEL F-1 REVITZ PROPERTY

5-STORY COMMERCIAL OFFICE BUILDING

OWNER/DEVELOPER:
EMERSON DEVELOPMENT VII LLC
1 TEXAS STATION COURT, SUITE 200
TIMONIUM, MARYLAND 21093-8288
(443) 689-8000

DMW
DAFT McCUNE WALKER INC
200 EAST PENNSYLVANIA AVENUE • TOWSON, MD 21286
P: 410 296 3333 F: 410 296 4705 WWW.DMW.COM
A TEAM OF LAND PLANNERS, LANDSCAPE ARCHITECTS,
ENGINEERS, SURVEYORS & ENVIRONMENTAL PROFESSIONALS

SUBDIVISION NAME: REVITZ PROPERT		SECTION AREA	LOT PARCEL #: LOT F-1 / PARCEL 165
PLAT # OR L.F.: PLAT 21277 & 21278	BLOCK #: 20	ZONE: PEC	TAX ZONE MAP: 47
ELECT. DISTRICT: 6	CENSUS TRACT: 6903		
WATER CODE	SEWER CODE		

TITLE: **SITE DETAILS**

Des. By	THR/JDF	Scale	AS SHOWN	Proj. No.	95054.10
Dm. By	CRH	Date	09-29-10		
Chk. By		Approved			5 of 16

SDP-10-096 — 20

Thu Sep 30 08:25:47 2010 P:\95054\95054-1\ENGR\95054SDP05.SP3
9/30/2010 8:27:19 AM jsmith c:\hpm\95054SDP05.prf P:\95054\95054-1\ENGR\95054SDP05.SP3 95054SDP05.SP3 Thu Sep 30 08:25:47 2010

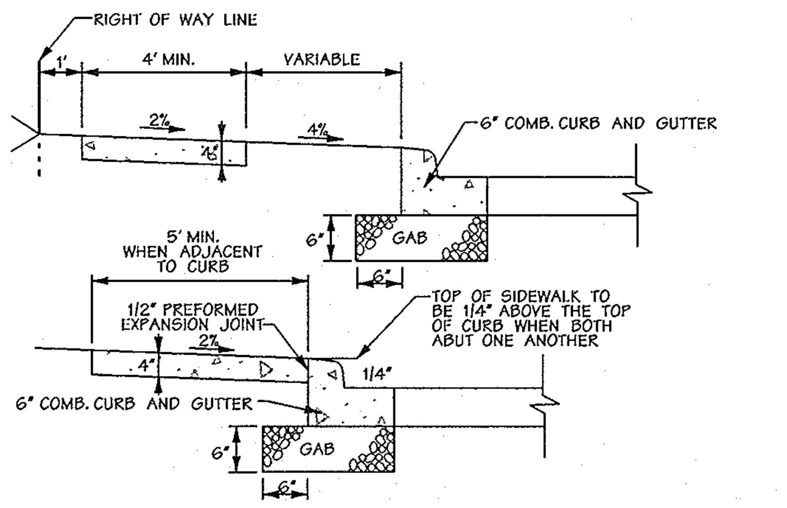

NOTES:
1. SIDEWALK TO BE SCRIBED IN 5'-0" MAXIMUM SQUARES.
2. EXPANSION JOINTS ACROSS SIDEWALK NOT TO BE MORE THAN 15' APART.
3. ½" PREFORMED EXPANSION MATERIAL IN EXPANSION JOINTS TO BE KEPT¼" BELOW SURFACE OF SIDEWALK.
4. CONCRETE TO BE MIX NO.3.
5. WHEN SIDEWALK ABUTS CURB, SIDEWALK SHALL BE ¼" ABOVE CURB WITH ½" PERFORMED EXPANSION JOINT BETWEEN SIDEWALK AND CURB.
6. ON LONGITUDINAL SIDEWALK GRADES OF 5% OR GREATER, A CONCRETE HEADER, 6" THICK AND 6" DEEP BELOW THE NORMAL 4" SIDEWALK THICKNESS SHALL BE CONSTRUCTED FOR THE FULL WIDTH OF THE SIDEWALK AT INTERVALS OF 48 FEET. THE HEADERS SHALL BE PLACED AT THE EXPANSION JOINT LOCATIONS AND SHALL BE MONOLITHIC WITH THE SIDEWALK.
7. 4' SIDEWALK REQUIRES A PASSING AREA (SEE HO.CO.STD. DETAIL R-4.01)
8. SEE SITE PLAN FOR PROPOSED SIDEWALK WIDTHS.

Concrete Sidewalk
Not to Scale

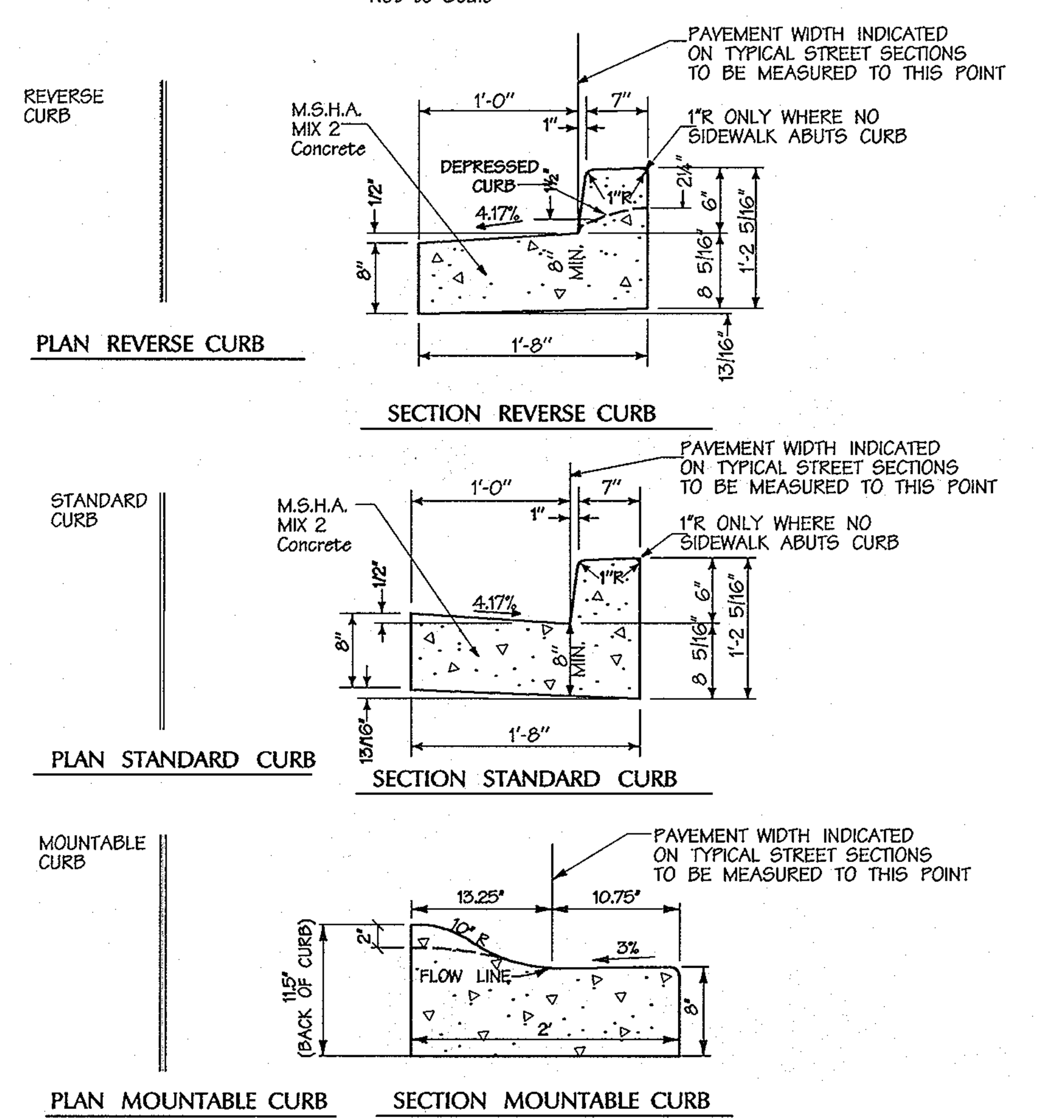

NOTE:
1. A REVERSE GUTTER PAN SHALL HAVE A GUTTER SLOPE OF 4.17% AWAY FROM THE FLOW LINE, AND SHALL NOT BE USED WHERE THIS DRAINAGE CREATES A HAZARDOUS CONDITION.
2. GUTTER PAN AT THE MEDIAN EDGE OF INTERMEDIATE ARTERIALS OR THE HIGH SIDE OF SUPER ELEVATED SECTIONS SHALL BE SLOPED AT THE SAME RATE AND IN THE SAME DIRECTION AS THE PAVEMENT. MATCH PAVEMENT CROSS SLOPE WHEN CURB IS LOCATED ON THE LOW SIDE OF SUPER ELEVATED SECTION AND THE RATE OF SUPER ELEVATION IS GREATER THAN 3% FOR MOUNTABLE CURB AND GUTTER.
3. A MINIMUM OF TWO (2) FEET OF COMPACTED STABILIZED EARTH, OR EQUIVALENT, SHALL SUPPORT THE ENTIRE BACK OF CURB.
4. POSITIVE DRAINAGE SHALL BE PROVIDED BOTH BEHIND THE CURB AND ALONG THE GUTTER AND FLOW LINE.

6" Combination Curb & Gutter
Not to Scale

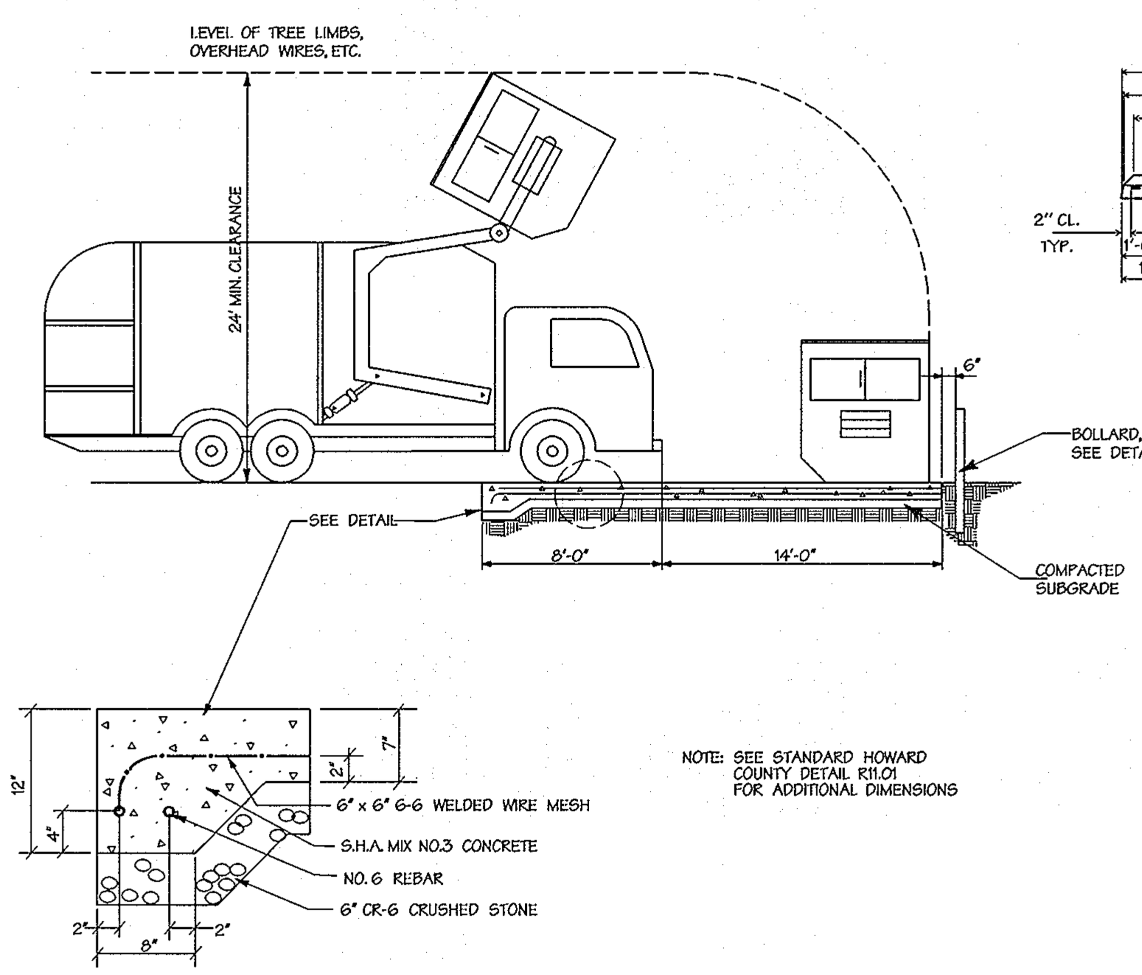

NOTE: SEE STANDARD HOWARD COUNTY DETAIL R11.01 FOR ADDITIONAL DIMENSIONS

Section

Service Pad and Dumpster Bin
Not to Scale

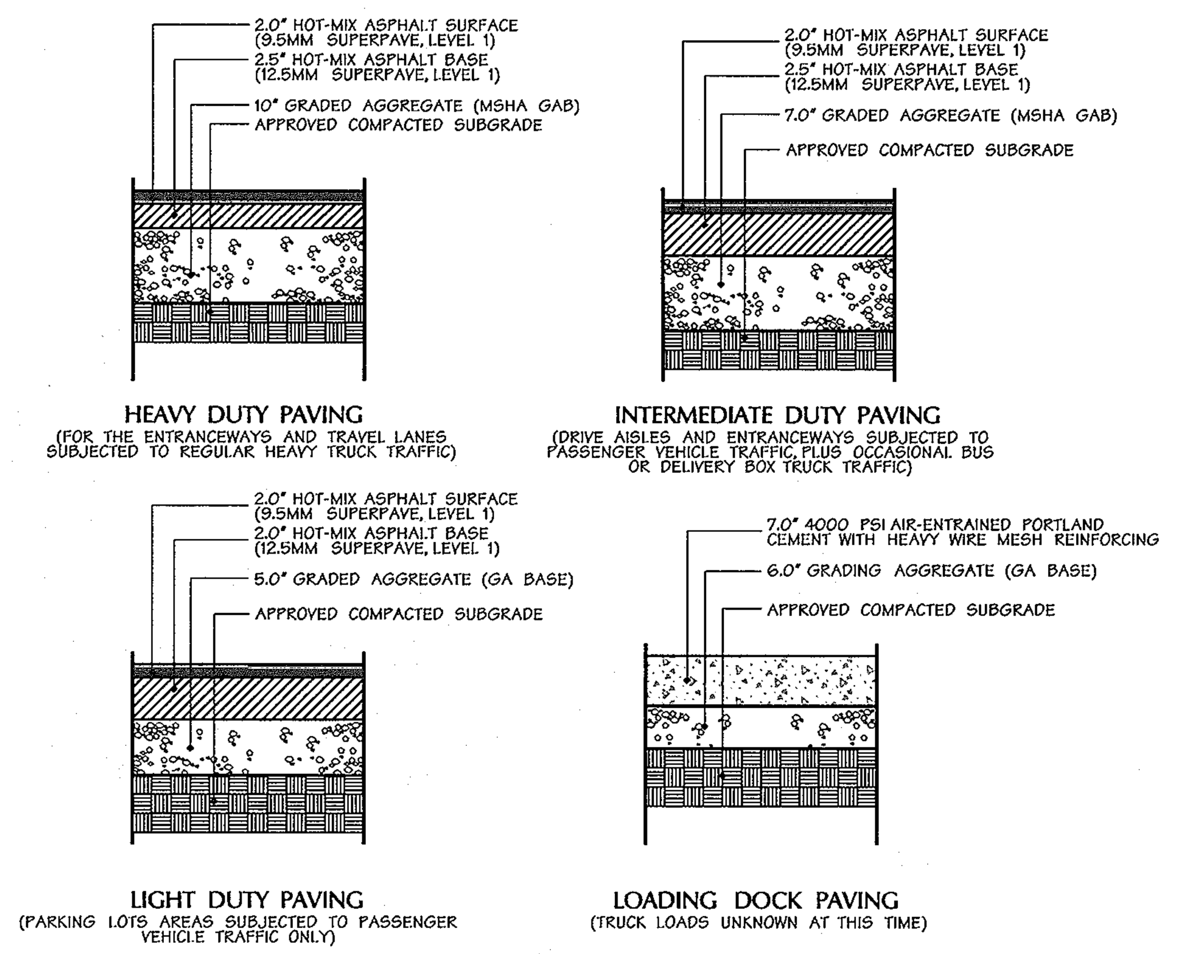

NOTE: PAVING SECTIONS WERE DESIGNED BY HERBST BENSON & ASSOCIATES ON MAY 19, 2010.

Paving Details
Not to Scale

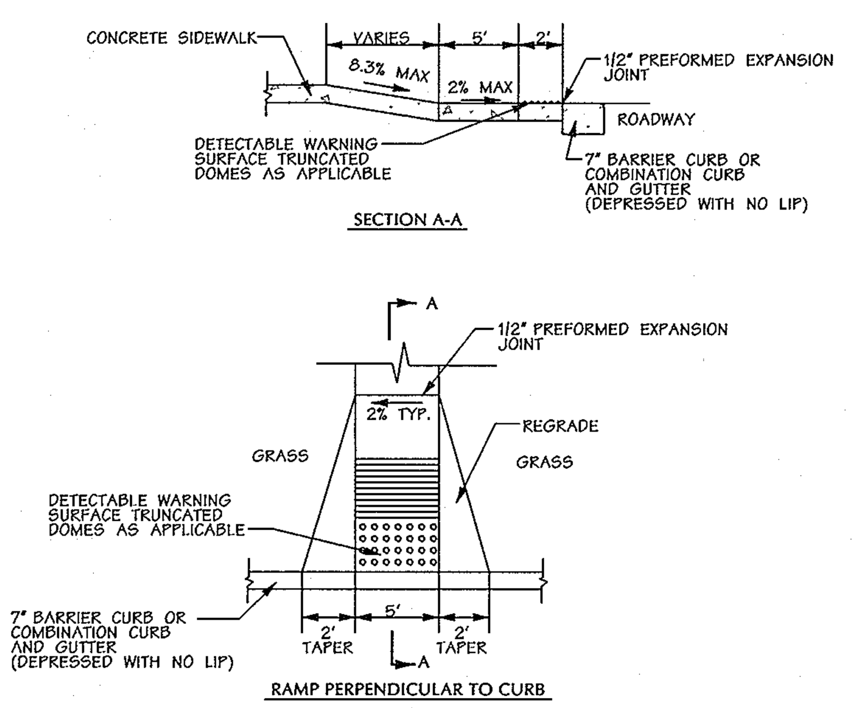

NOTES:
1. ALL RAMPS SHALL HAVE A WARNING TEXTURE EXTENDING THE FULL WIDTH AND DEPTH OF RAMP (SEE HO. CO. STD. DETAIL R-4.07).
2. GRASS AREA ADJACENT TO SIDEWALK MUST BE SLOPED TO MEET RAMP.
3. 4' SIDEWALK REQUIRES PASSING AREA (SEE HO. CO. STD. DETAIL R-4.07).

Sidewalk Ramp - Type 'A'
Not to Scale

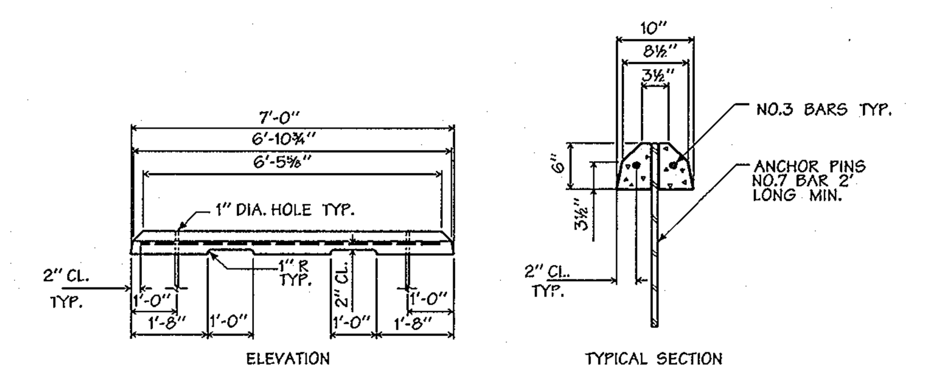

Concrete Cast Wheel Stop
Not to Scale

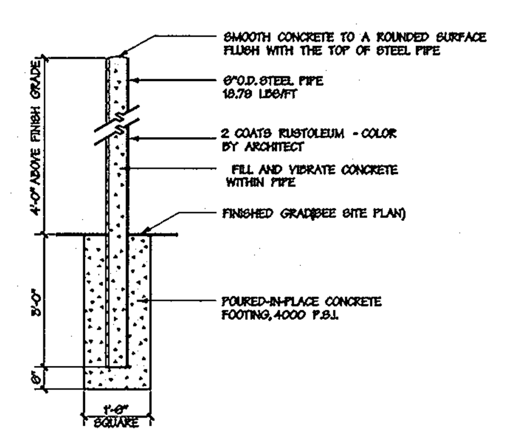

Bollard
Not To Scale

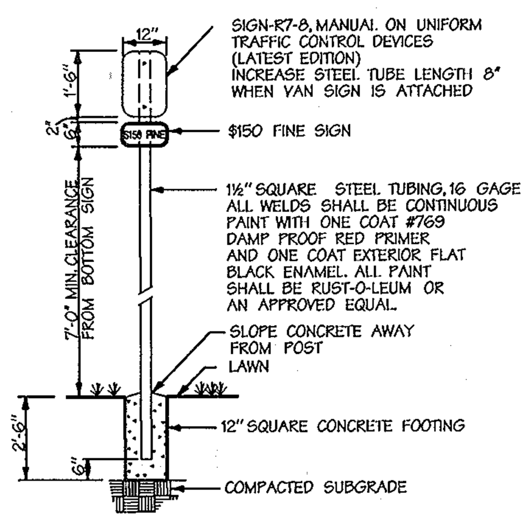

NOTES:
1. DISTANCE FROM GROUND TO BOTTOM OF SIGN SHALL BE 7'-0".
2. SEE HANDICAPPED PARKING SPACE DETAIL THIS SHEET FOR LOCATION OF HANDICAPPED SIGN.
3. SIGNS SHALL CONFORM TO CURRENT ADA CRITERIA.

SIGN COLORS:
LETTERS AND BORDER - GREEN
WHITE H.C. SYMBOLS ON BLUE BACKGROUND
BACKGROUND - WHITE

Handicap Parking Sign
Not to Scale

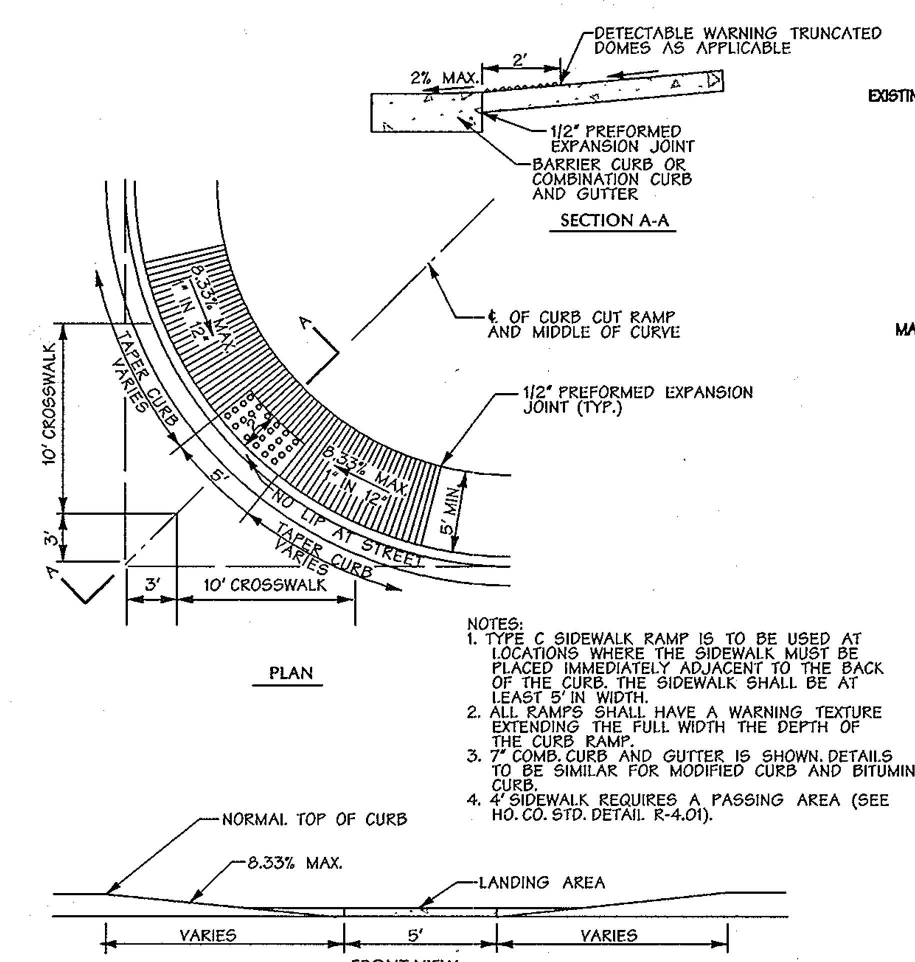

NOTES:
1. TYPE C SIDEWALK RAMP IS TO BE USED AT LOCATIONS WHERE THE SIDEWALK MUST BE PLACED IMMEDIATELY ADJACENT TO THE BACK OF THE CURB. THE SIDEWALK SHALL BE AT LEAST 5' IN WIDTH.
2. ALL RAMPS SHALL HAVE A WARNING TEXTURE EXTENDING THE FULL WIDTH THE DEPTH OF THE CURB RAMP.
3. 7" COMB. CURB AND GUTTER IS SHOWN. DETAILS TO BE SIMILAR FOR MODIFIED CURB AND BITUMINUS CURB.
4. 4' SIDEWALK REQUIRES A PASSING AREA (SEE HO. CO. STD. DETAIL R-4.01).

Sidewalk Ramp - Type 'C'
Not to Scale

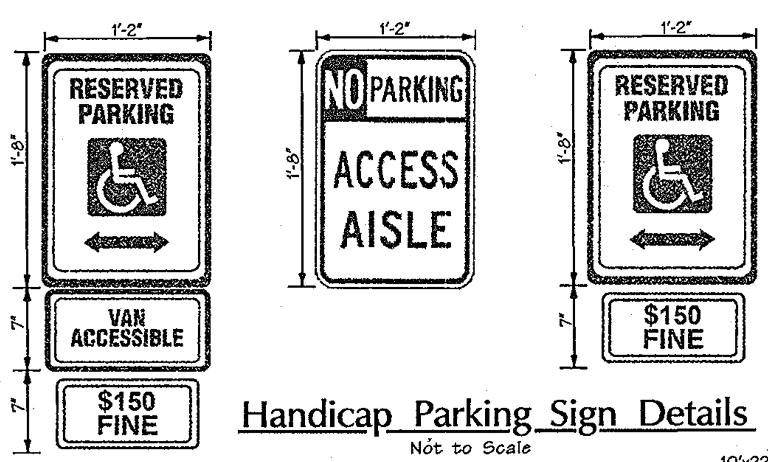

Handicap Parking Sign Details
Not to Scale

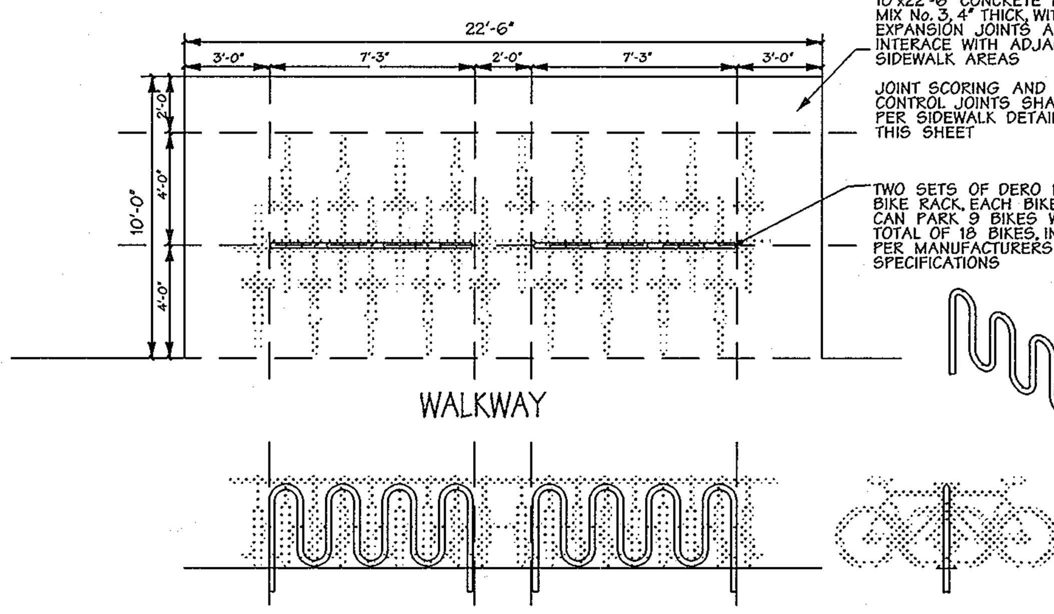

Bike Rack
Not to Scale

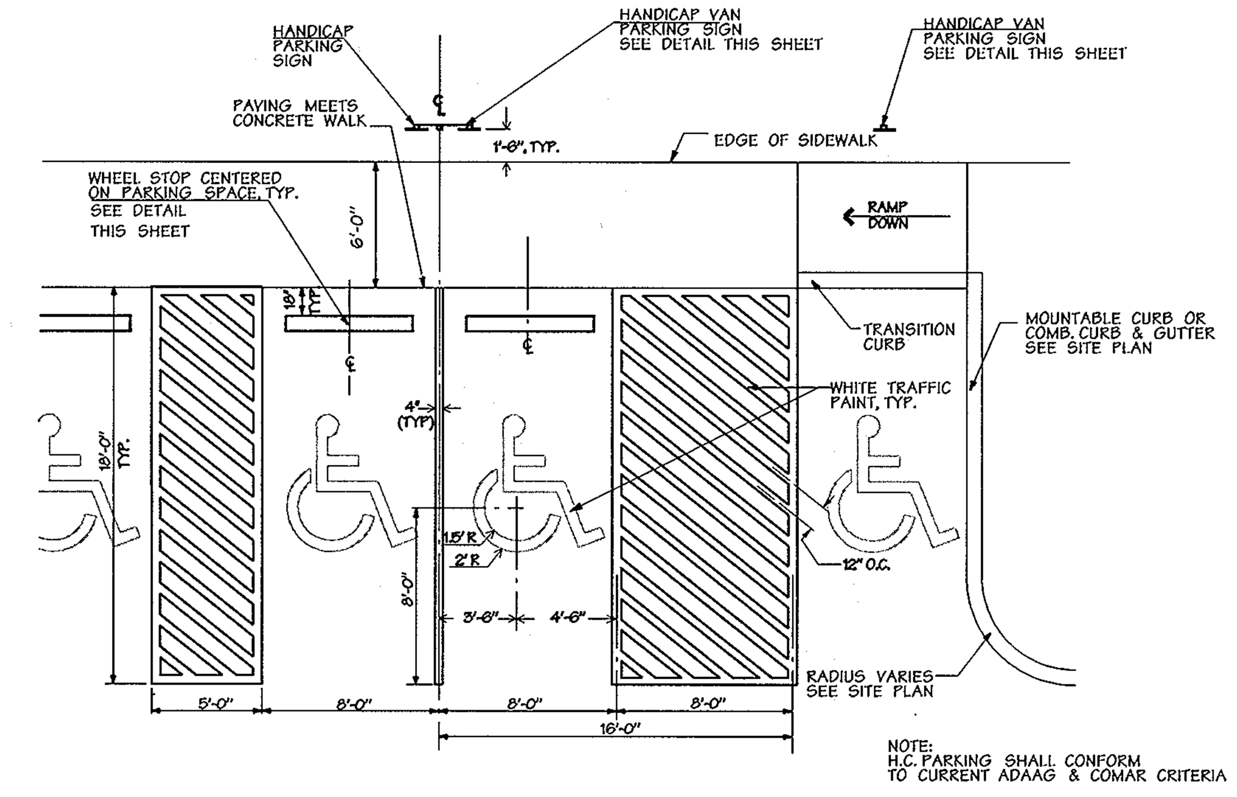

NOTE:
H.C. PARKING SHALL CONFORM TO CURRENT ADAAG & COMAR CRITERIA

Handicap Parking: Van & Standard
Not To Scale

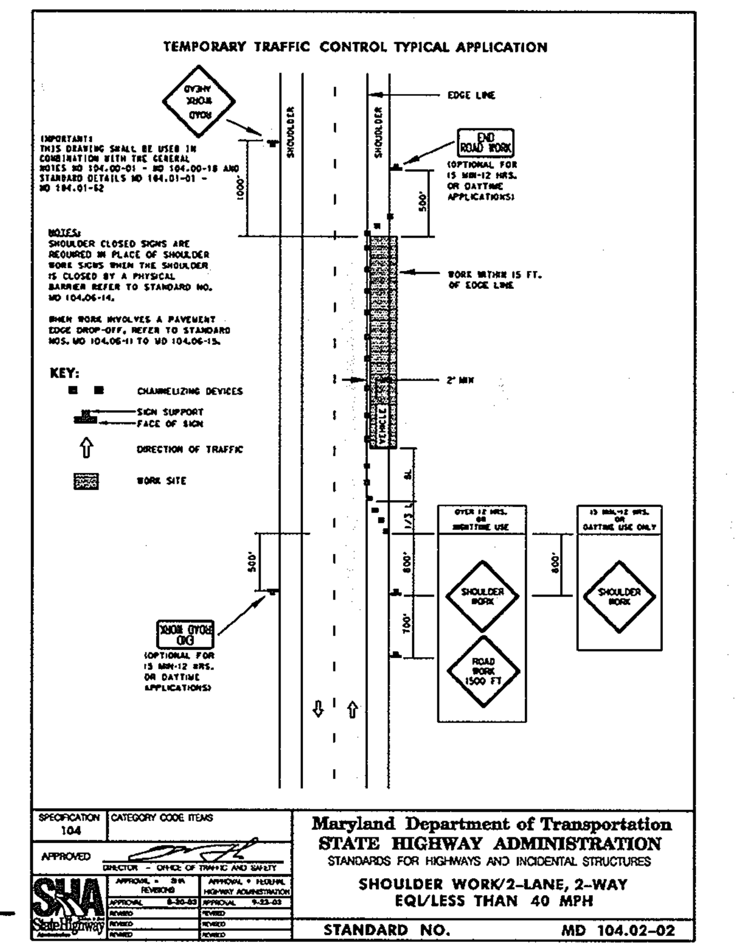

AS-BUILT
CERTIFICATION FOR PSWM

NOTE: THERE IS NO "AS-BUILT" INFORMATION PROVIDED ON THIS SHEET.

SIGNED [signature] 5/22/12 P.E.# 16928
MELVIN CHARLES BEALL, JR.

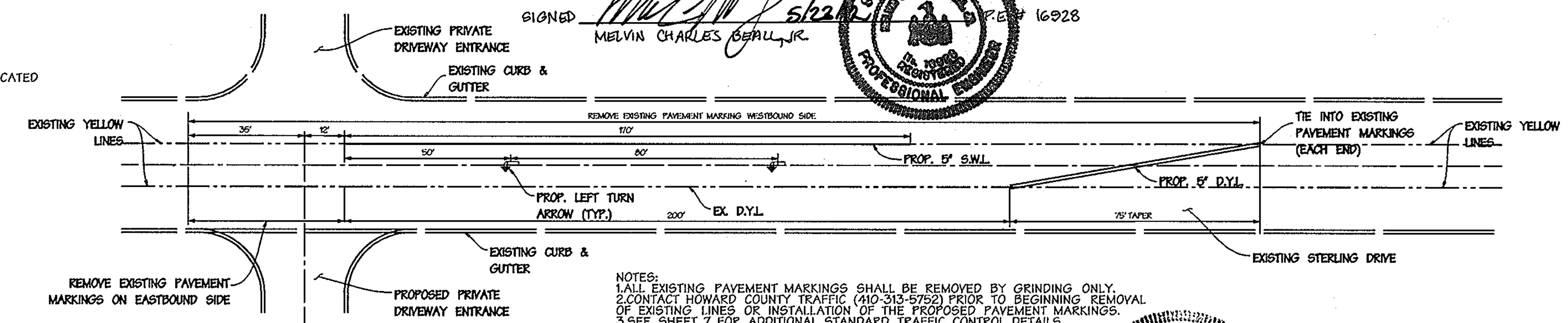

NOTES:
1. ALL EXISTING PAVEMENT MARKINGS SHALL BE REMOVED BY GRINDING ONLY.
2. CONTACT HOWARD COUNTY TRAFFIC (410-313-5752) PRIOR TO BEGINNING REMOVAL OF EXISTING LINES OR INSTALLATION OF THE PROPOSED PAVEMENT MARKINGS.
3. SEE SHEET 7 FOR ADDITIONAL STANDARD TRAFFIC CONTROL DETAILS.

STERLING DRIVE LEFT TURN LANE DETAIL
Not To Scale

AS BUILT
NOT REQUIRED

SURVEY SERVICES OF MD., LLC
BY: ROBERT W. MATIS - RLS 605

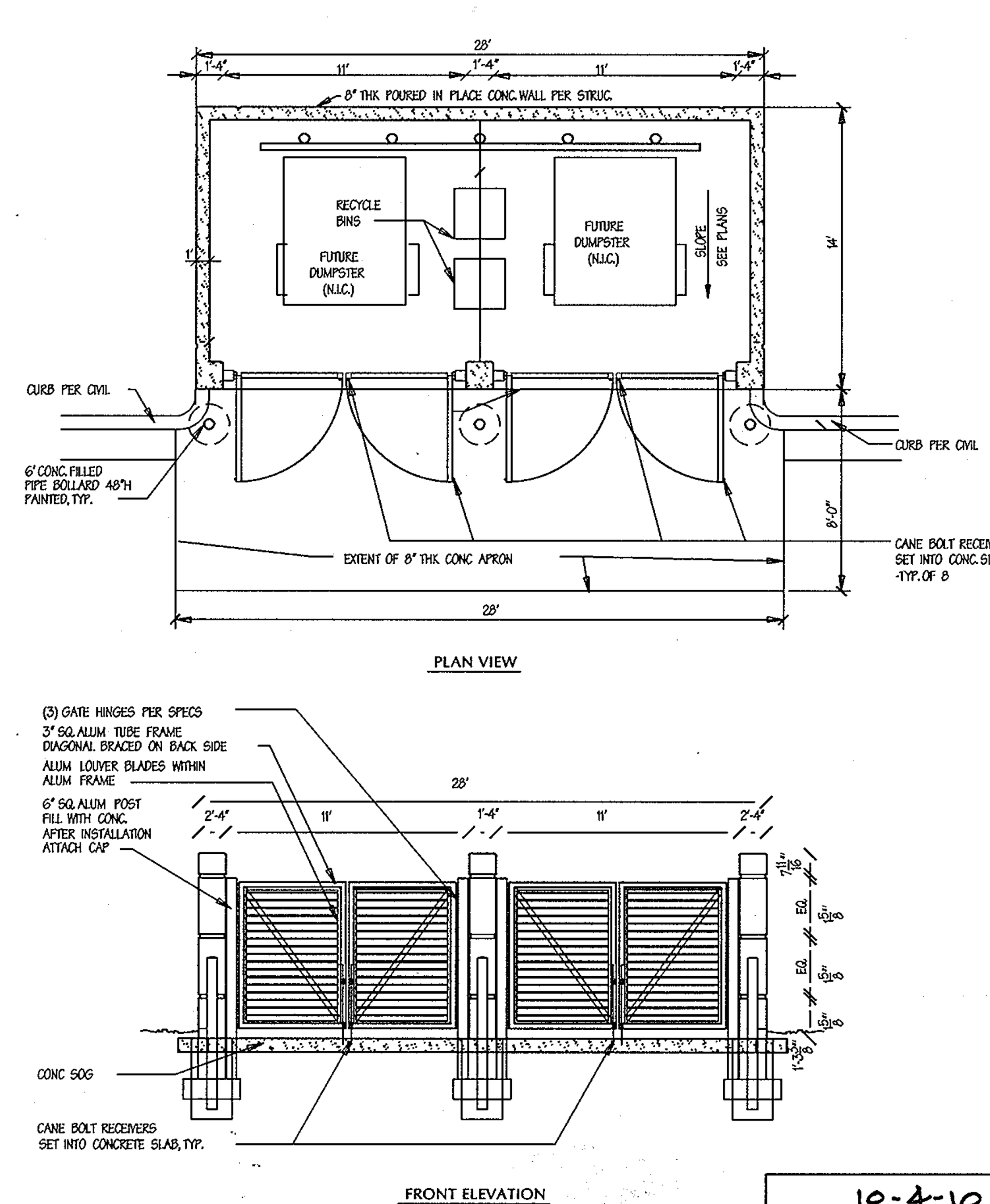

Dumpster Enclosure
Not to Scale

PROFESSIONAL CERTIFICATION
I HEREBY CERTIFY THAT THESE DOCUMENTS WERE PREPARED OR APPROVED BY ME, AND THAT I AM A DULY LICENSED PROFESSIONAL ENGINEER UNDER THE LAWS OF THE STATE OF MARYLAND, LICENSE NO. 8061, EXPIRATION DATE: 08-26-2011.

10-4-10
Date

Professional Engr. No. 8061

APPROVED: HOWARD COUNTY DEPT. OF PUBLIC WORKS

CHIEF, BUREAU OF HIGHWAYS	DATE 10-8-10

APPROVED: HOWARD COUNTY DEPT. OF PLANNING AND ZONING

CHIEF, DIVISION OF LAND DEVELOPMENT	DATE 11-18-10
CHIEF, DEVELOPMENT ENGINEERING DIVISION	DATE 11/16/10
DIRECTOR	DATE 11/18/10

Date	No.	Revision Description

EMERSON PARCEL F-1 REVITZ PROPERTY

5-STORY COMMERCIAL OFFICE BUILDING

OWNER/DEVELOPER:
EMERSON DEVELOPMENT VII LLC
1 TEXAS STATION COURT, SUITE 200
TIMONIUM, MARYLAND 21093-8288
(443) 689-8000

DMW
DAFT McCUNE WALKER INC
200 EAST PENNSYLVANIA AVENUE • TOWSON, MD 21286
P : 410 296 3333 F : 410 296 4705 WWW.DMW.COM
A TEAM OF LAND PLANNERS, LANDSCAPE ARCHITECTS, ENGINEERS, SURVEYORS & ENVIRONMENTAL PROFESSIONALS

SUBDIVISION NAME: REVITZ PROPERTY			SECTION/AREA		LOT/PARCEL #: LOT F-1 / PAR. 165
PLAT# OR L/F: 21277 & 21278	BLOCK #: 20	ZONE: PEC	TAX/ZONE MAP: 47	ELECT. DISTRICT: 6	CENSUS TRACT: 6903
WATER CODE			SEWER CODE		

TITLE: **SITE DETAILS**

Des. By JDF	Scale AS SHOWN	Proj. No. 95054.10
Drn. By CRH	Date 09-29-10	6 of ~~18~~ 20
Chk. By	Approved	

SDP-10-096

Thu Sep 30 08:24:45 2010 P:\95054\95054.1\ENGR\95054ISDP06.DT1

9/30/2010 8:26:56 AM jsmith c:\hpm\95054ISDP06.prf P:\95054\95054.1\ENGR\95054ISDP06.DT1 95054ISDP06.DT1

LIGHTING SPECS AND DETAILS

Ⓔ COOPER LIGHTING - LUMARK®

Catalog #	MPTR-SL-350-MT-DP	Type
Project	EMERSON	S1
Comments		Date
Prepared by		

DESCRIPTION

The Lumark Tribute is the most versatile, functionally designed, universally adaptable outdoor luminaire available. The Tribute brings outstanding performance to walkways, parking lots, roadways, loading docks, building areas, and any security lighting application. U.L. listed and CSA certified for wet locations.

SPECIFICATION FEATURES

Construction
Rugged one-piece die-cast aluminum housing and door frame. One-piece silicone gasket protects the optical chamber from performance degrading contaminants. One (1) stainless spring latch and two (2) stainless hinges allow toolless opening and removal of door frame.

Reflector
Choice of nine (9) high efficiency optical distributions, including five (5) segmented optical systems constructed of premium 95% reflective anodized aluminum sheet. Optical segments are rigidly mounted inside a thick gauge aluminum housing for superior protection. All segment faces are clean of rivet heads, tabs or other means of attachment which may cause streaking in the light distribution. Optical modules are field rotatable in 90° increments and offered standard with mogul-base lampholders for 150-400W assemblies or medium-base lampholders for 100W and below.

Electrical
Ballast and related electrical componentry are hard mounted to die-cast housing for optimal heat transfer and operating efficiency. Optional swing-down galvanized steel power tray with integral handle and quick disconnects allows tray to be completely removed from housing providing ample room for fixture installation and maintenance.

Mounting
Extruded 8" aluminum arm features internal bolt guides for easy positioning of fixture during installation to pole or wall surface. Standard single carton packaging of housing, square pole arm and round pole adapter allow for consolidated product arrival to site. Optional internal mast arm mount accepts a 1 1/4" to 2 3/8" O.D. horizontal tenon, while a 4-bolt clamping mechanism secures fixture. Cast-in leveling guides provide +/-5° vertical leveling adjustment.

Finish
Housing and arm finished in a 5 stage premium TGIC bronze polyester powder coat paint. Optional colors include black, grey, white, dark platinum and graphite metallic. RAL and custom color matches available.

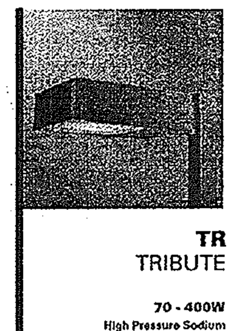

TR
TRIBUTE

70 - 400W
High Pressure Sodium
Pulse Start Metal Halide
Metal Halide

AREA LUMINAIRE

DARK SKY COMPLIANT

DIMENSIONS

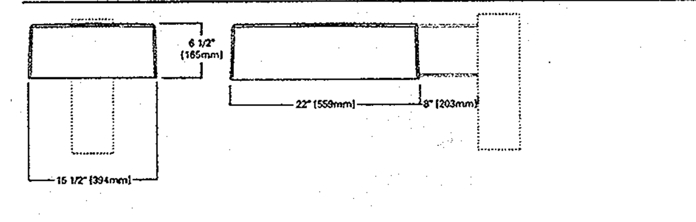

DRILLING PATTERNS

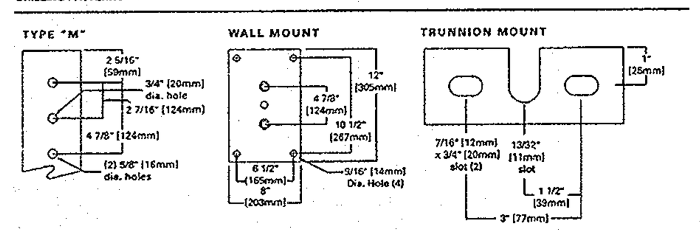

TECHNICAL DATA
UL Wet Locations Listed
CSA Certified
EISA Compliant

ENERGY DATA
Hi-Reactance Ballast Input Watts
70W HPS HPF (95 Watts)
100W HPS HPF (130 Watts)
150W HPS HPF (190 Watts)
150W MP HPF (185 Watts)
CWI Ballast Input Watts
250W HPS HPF (300 Watts)
CWA Ballast Input Watts
175W MH HPF (210 Watts)
200W MP HPF (227 Watts)
200W HPS HPF (250 Watts)
250W MH HPF (295 Watts)
250W MP HPF (283 Watts)
320W MP HPF (365 Watts)
350W MP HPF (397 Watts)
400W MP HPF (452 Watts)
400W MH HPF (455 Watts)
400W HPS HPF (465 Watts)

EPA
Effective Projected Area: (Sq. Ft.)
Without Arm: 1.10

SHIPPING DATA
Approximate Net Weight:
39 lbs. (17.73 kgs.)

COOPER Lighting
www.cooperlighting.com

Specifications and Dimensions subject to change without notice.
Consult your representative for additional options and finishes.

ADH082320
01/02/2009 4:35:20 PM

TYPE: CATALOG #:

COOPER LIGHTING®

DETAILS

SSS SQUARE STRAIGHT STEEL

10'-39' Mounting Height

SQUARE STRAIGHT STEEL

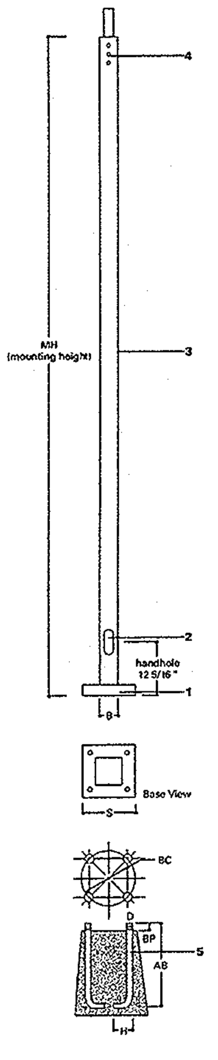

SPECIFICATION FEATURES

1···ASTM Grade steel base plate with ASTM A366 base cover.
2···Hand hole assembly 3" x 5" on 5" and 6" pole; and 2" x 4" on 4" pole.
3···ASTM A500 grade "B" steel shaft. Shot blasted and painted with polyester powder coat.
4···Drilled or Tenon (specify).
5···Anchor bolt per ASTM A576 with (2) nuts, (2) flat washer, and (1) lock washer. Nuts, washers and threaded portion of bolt are hot dip galvanized. 3" hook for 3/4" bolt. 4" hook for 1" bolt.

FOUR BOLT ANCHORAGE (see ordering information)
BC=Bolt Circle
BP=Bolt Projection
AB=Bolt Dimensions
D=Bolt Diameter
H=Bolt Dimensions

FINISH COLORS
F=Dark Bronze
G=Galvanized
V=Grey
W=White
Y=Black

COOPER LIGHTING

ADH020021

Saturn Cutoff

se'lux

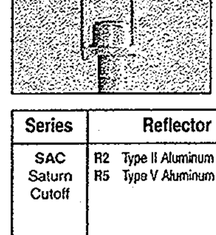

Project: EMERSON
Type: S5 Qty:

SAC - R5 - 1 - H070B - 830 - SV - X - DS -
Series / Reflector / Mounting / Lamping / Lamp Color / Finish / Voltage / Option / Option

A35 - 12 - SV - BC4 - -
Pole Series / Height / Finish / Pole Options

Series	Reflector	Mounting	Lamping	Lamp Color	Finish	Voltage	Options
SAC Saturn Cutoff	R2 Type II Aluminum reflector R5 Type V Aluminum reflector	1 Single 2 Double W Wall Mount	T6 Metal Halide H039T6¹ 39W T6 G12 H070T6 70W T6 G12 H150T6 150W T6 G12	830 3000° K NOL Lamp not included	WH White BK Black BZ Bronze SV Silver SP Specify RAL#	120 208 240 277 347	DS Full Cutoff Optics HS² House Side Shield (180°)

¹Only available in 120v and 277v ²Only available with R2 reflector

SAC-XX-1-DS

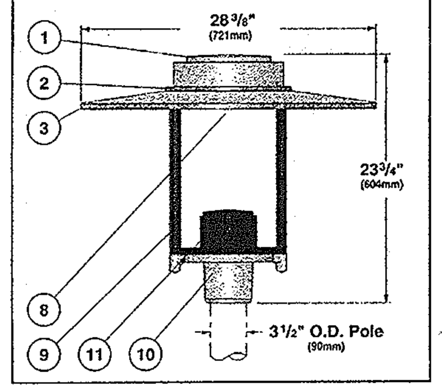

1. Fixture Cover - Die cast aluminum cover removes easily for access to field rotatable optics (rotatable 90 degrees).

2. Gasketing - Continuous gasket provides weatherproofing, dust and insect control at all fixture connections.

3. Fixture Hood - Aluminum shade with white painted interior.

4. Reflector - (Not shown) Precision formed, completely sealed aluminum reflector system with a Type II or Type V distribution. IDA-Approved™ dark sky friendly.

5. Lamp - (Not shown) Choose between 39 to 150 watt T6 (or T7.5) G12 base ceramic metal halide lamps. Fixtures suplied with 3000 degree K lamps, other color temperatures are available, please consult factory. Horizontal lamp for R2 reflector; base-up vertical lamp for R5 reflector.

6. Socket - (Not shown) Pulse rated porcelain G12 base socket. Socket is pre-wired to ballast at factory.

7. Ballast - (Not shown) A high power factor, open core and coil ballast regulates voltage for H.I.D. lamp. Consult factory for detailed ballast information.

8. Access Door - Hinged tempered glass lens, secured to fixture with two tool-less latches. Lens gasketed to die cast aluminum shade stabilizer.

9. Hood Supports - Two aluminum arms support shade and optic assembly and attach to the die cast aluminum pole fitter (shown painted matte black for DS option).

10. Pole Fitter - Self-leveling, die-cast aluminum, fitter base secured to pole with two, stainless steel, Allen head set screws. Fitter for 3 1/2" (90mm) O.D. poles.

11. Ballast cover - Die cast aluminum ballast cover removes easily for access to ballast. Ballast secured to removable tray for ease of maintenance (shown painted matte black for DS option).

Exterior Luminaire Finish - SELUX utilizes a high quality Polyester Powder Coating. All SELUX luminaires and poles undergo a five stage intensive pretreatment process where product is thoroughly cleaned, phosphated and sealed. SELUX powder coated products provide excellent salt and humidity resistance as well as ultra violet resistance for color retention. All products are tested in accordance with test specifications for coatings from ASTM and PCI.

Standard exterior colors are White (WH), Black (BK), Bronze (BZ), and Silver (SV). Custom RAL colors are available upon request. Please provide RAL#.

SELUX Corp. © 2009
TEL (845) 691-7723
FAX (845) 691-6749
www.selux.com/usa
SAC-1009-01 (SS-v2.31)

NRTL Listed (i.e. UL, CSA)
Union Made Affiliated with IBEW Local 363

In a continuing effort to offer the best product possible, we reserve the right to change, without notice, specifications or materials that in our opinion will not alter the function of the product. Specification sheets found at www.selux.com/usa are the most recent versions and supercede all other printed or electronic versions.

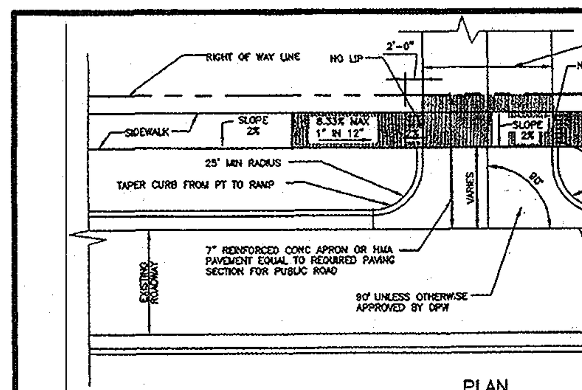

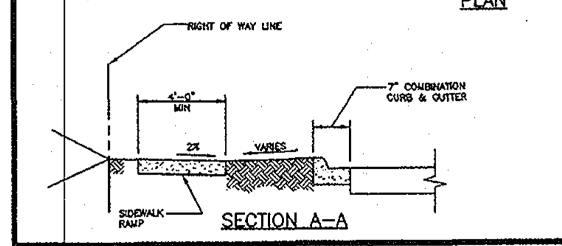

NOTES:
1. ENTRANCE TO BE USED ONLY IF AUXILIARY LANES ARE NOT REQUIRED IN ACCORDANCE WITH DESIGN MANUAL VOL. III SECTION 2.5.8.5 AND SECTION 2.6.G.
2. WHEN PROPOSED ENTRANCE IS CONSTRUCTED ON AN EXISTING STREET WITH COMBINATION CURB OR CURB & GUTTER, THE CURB OR CURB & GUTTER SHALL BE REMOVED TO THE FIRST EXISTING JOINT ON EITHER SIDE OF THE PROPOSED ENTRANCE AND REPLACED BY NEW CONSTRUCTION.
3. GRASS AREA ADJACENT TO SIDEWALK MUST BE SLOPED TO MEET RAMP.
4. ALL RAMPS SHALL HAVE A WARNING TEXTURE EXTENDING THE FULL WIDTH OF THE CURB RAMP.

Revised / Revised 5/7/2007 Approved	Howard County, Maryland Department of Public Works Approved: Chief, Bureau of Engineering	COMMERCIAL–INDUSTRIAL–APARTMENT Entrance on Closed Section Roadway (<200 V.P.H.)	Detail R-6.09

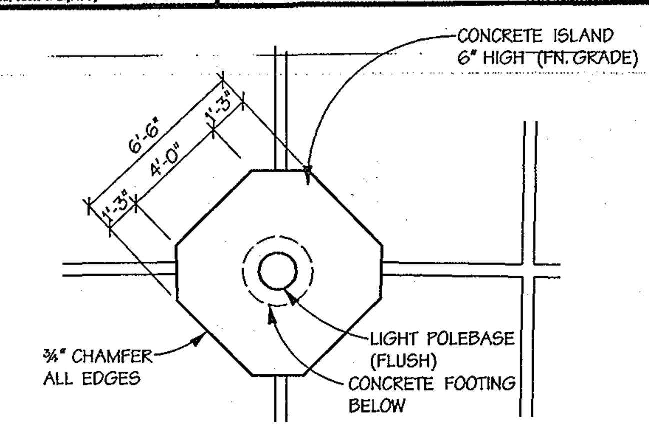

Pavement Area Light Pole Base Detail
NTS

TEMPORARY TRAFFIC CONTROL TYPICAL APPLICATION

IMPORTANT:
THIS DRAWING SHALL BE USED IN COMBINATION WITH THE GENERAL NOTES MD 104.00-01 - MD 104.00-18 AND STANDARD DETAILS MD 104.01-01 - MD 104.01-62

NOTE:
FLAGGER SHALL NEVER BE STATIONED MORE THAN 1000' AWAY FROM THE ADVANCE FLAGGER SIGN.

KEY:
CHANNELIZING DEVICES
SIGN SUPPORT
FACE OF SIGN
DIRECTION OF TRAFFIC
WORK SITE
FLAGGER

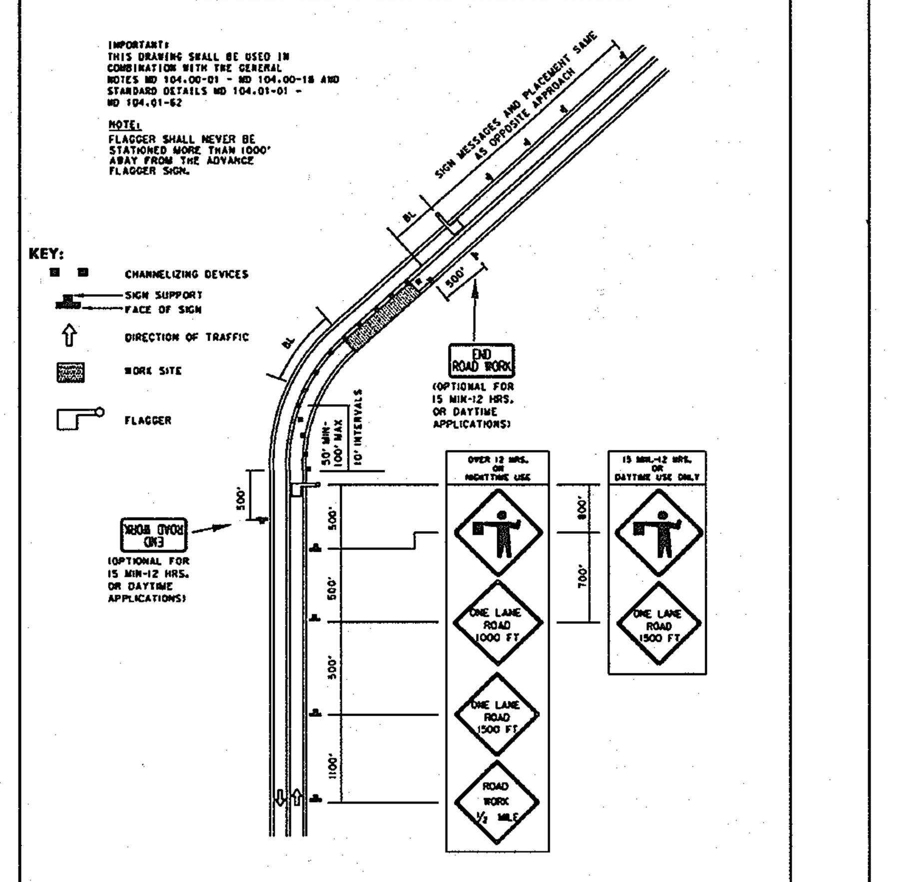

SPECIFICATION 104	CATEGORY CODE ITEMS	Maryland Department of Transportation STATE HIGHWAY ADMINISTRATION STANDARDS FOR HIGHWAYS AND INCIDENTAL STRUCTURES FLAGGING OPERATION/2-LANE, 2-WAY EQL/LESS THAN 40 MPH
APPROVED — DIRECTOR - OFFICE OF TRAFFIC AND SAFETY	APPROVAL - SHA REVISIONS / APPROVAL 8-30-03 / APPROVAL - FEDERAL HIGHWAY ADMINISTRATION 9-22-03	STANDARD NO. MD 104.02-10

LIGHTING SPECS AND DETAILS
NTS
NOTE: CONFIRM INSTALLATION DETAILS WITH ARCHITECT PRIOR TO COMMENCEMENT OF SITE LIGHTING WORK.

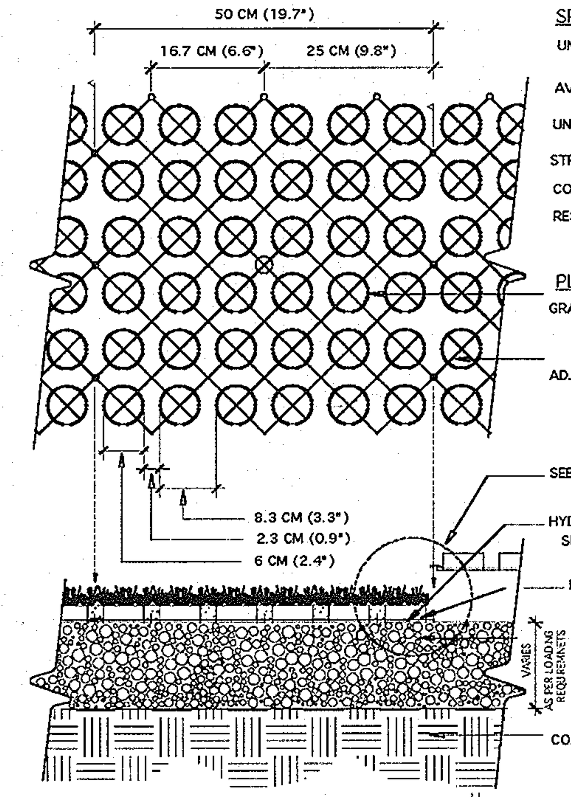

SPECIFICATIONS
UNIT SIZE - 50 CM X 50 CM X 2.5 CM (20" X 20" X 1")
AVAILABLE IN 9 STANDARD ROLL SIZES
UNIT WEIGHT - 510 GRAMS (18 OZ.) OR 2.0 KG (4.5 POUNDS)
STRENGTH - 402 KG/CM (5720 PSI)
COLOR - BLACK (STANDARD)
RESIN - HDPE (WITH SOME POST-CONSUMER RECYCLED CONTENT)

PLAN
GRASSPAVE2 SQUARES
ADJACENT GRASSPAVE2 SQUARES

SEE ENLARGEMENT BELOW
HYDROGROW MIX BELOW RING SUPPLIED FREE BY MANUFACTURER
RINGS FILLED WITH CONCRETE SAND (CLEAN, SHARP SAND)
COMPACTED SANDY GRAVEL ROAD BASE 95% MODIFIED PROCTOR DENSITY - 6 INCHES TO 12 INCHES (DEPTH OF BASE COURSE TO BE DETERMINED BY ON-SITE GEOTECHNICAL ENGINEER
COMPACTED SUBGRADE,

SECTION
TOP OF GRASS ROOT MASS 6 MM (1/4") ABOVE TOP OF RING
GRASSPAVE2 ATTACH WITH SNAP-FIT FASTENERS
ROOT MASS TO FILL GRASSPAVE2
COMPACTED SANDY GRAVEL BASE COURSE

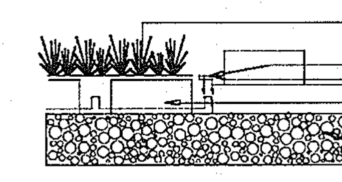

ENLARGEMENT

CONTRACTOR TO FOLLOW PERMANENT SEEDING SPECS FOR STABLIZATION IN AREA OF GRASS PAVE.

TYPICAL GRASSPAVE2 DETAIL (1 — 1 OF 1)
CHOOSE THIS PRODUCT FOR REINFORCING GRASS WEARING SURFACES

NOT TO SCALE
Invisible Structures, Inc.
GPDET.DWG

1600 Jackson St., Ste. 310
GOLDEN, COLORADO 80401
800-233-1510 OR 303-233-8383
FAX: 800-233-1522 OR 303-233-8282
www.invisiblestructures.com
rev. 10/05

FIRE TRUCK AND BGE TRUCK ACCESS PAD DETAIL
NTS

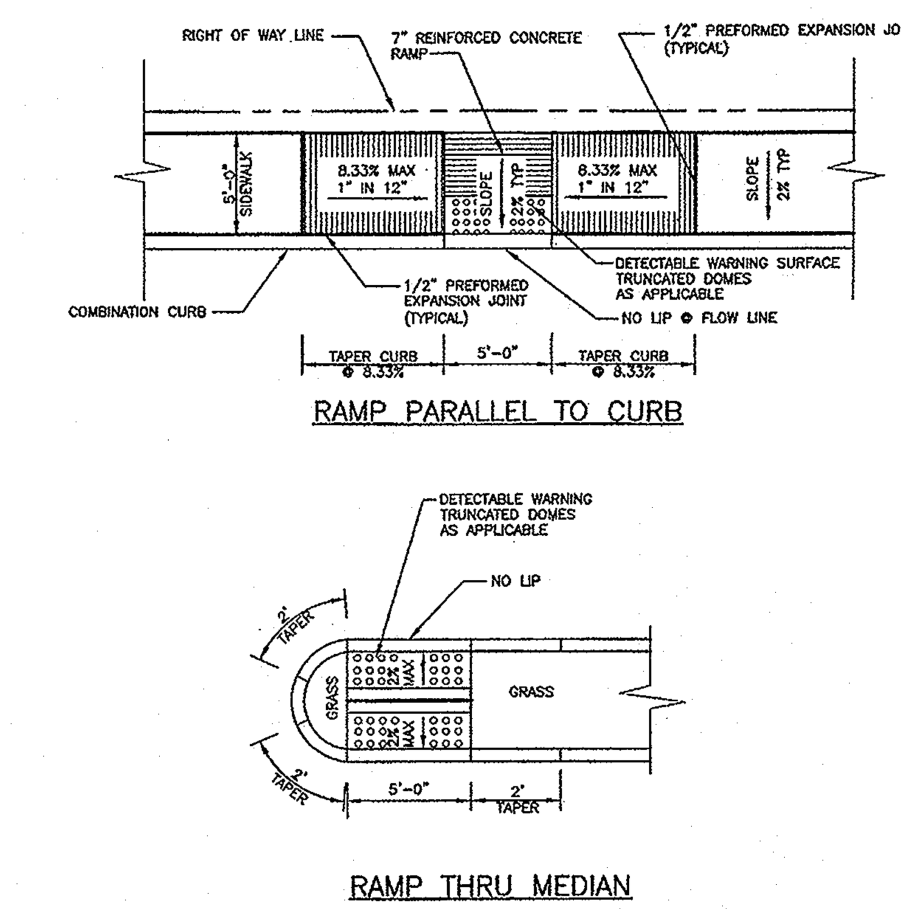

NOTES:
1. ALL RAMPS SHALL HAVE DETECTABLE WARNING SURFACES. SEE DETAIL R-4.07.
2. GRASS AREA ADJACENT TO SIDEWALK MUST BE SLOPED TO MEET RAMP.

Revised / Revised 5/7/2007 Approved	Howard County, Maryland Department of Public Works Approved: Chief, Bureau of Engineering	SIDEWALK RAMP Layout & Grading Parallel to Curb & Thru Median	Detail R-4.06

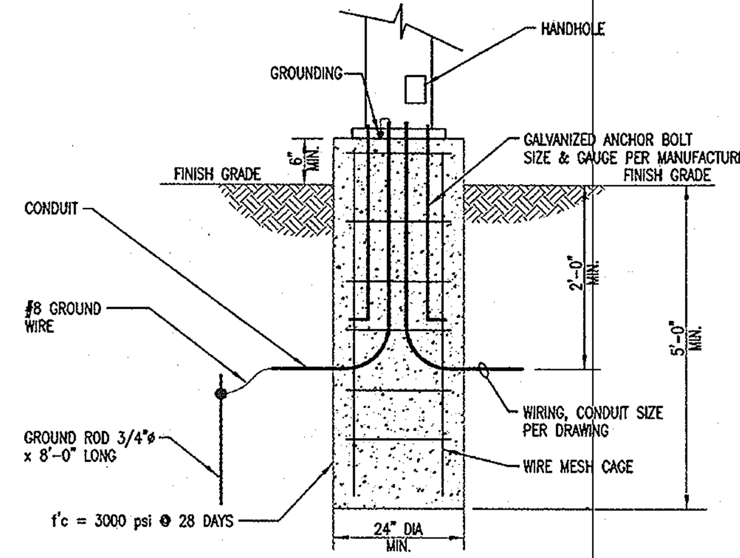

SITE LIGHTING POLE MOUNTING
NOT TO SCALE

NOTE: CONFIRM BASE HEIGHT, OTHER INSTALLATION DETAILS WITH ARCHITECT PRIOR TO COMMENCEMENT OF SITE LIGHTING WORK

TEMPORARY TRAFFIC CONTROL TYPICAL APPLICATION

IMPORTANT:
THIS DRAWING SHALL BE USED IN COMBINATION WITH THE GENERAL NOTES MD 104.00-01 - MD 104.00-18 AND STANDARD DETAILS MD 104.01-01 - MD 104.01-62

NOTES:
REFER TO MD 104.01-27 FOR GUIDANCE ON PAVEMENT MARKINGS THROUGH LANE SHIFTS.
•THIS TYPICAL SHALL BE USED FOR ANY LANE SHIFT WHICH SATISFIES EITHER CONDITION 'A' OR 'B':
►CONDITION 'A': LANE SHIFT IS "ABRUPT" - SHIFT HAS A TAPER LENGTH LESS THAN THE VALUE SPECIFIED IN THE TAPER LENGTH CRITERIA TABLE REFER TO MD 104.01-62
►CONDITION 'B': PREVAILING SPEEDS CANNOT BE MAINTAINED THROUGH THE SHIFT.
•FOR LANE SHIFTS WHICH DO NOT SATISFY ABOVE CONDITIONS:
►DELETE 'REVERSE CURVE' WARNING SIGNS, AND
►REPLACE "LANE SHIFT" SIGNS WITH "ROAD WORK XXX" SIGNS OR OTHER APPROPRIATE SIGNS AS SHOWN IN TEMPORARY TRAFFIC CONTROL TYPICAL APPLICATIONS.

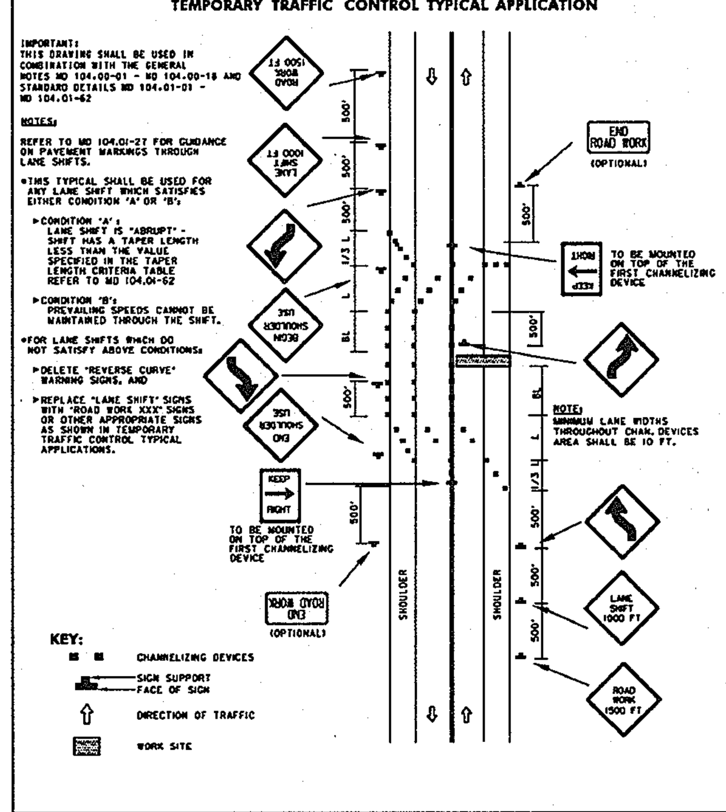

KEY:
CHANNELIZING DEVICES
SIGN SUPPORT
FACE OF SIGN
DIRECTION OF TRAFFIC
WORK SITE

SPECIFICATION 104	CATEGORY CODE ITEMS	Maryland Department of Transportation STATE HIGHWAY ADMINISTRATION STANDARDS FOR HIGHWAYS AND INCIDENTAL STRUCTURES LANE SHIFT RIGHT OR LEFT SIDE/2-LANE, 2-WAY EQL/LESS THAN 40 MPH/15 MIN - 12 HRS. OR DAYTIME ONLY
APPROVED — DIRECTOR - OFFICE OF TRAFFIC AND SAFETY	APPROVAL - SHA REVISIONS / APPROVAL 8-20-03 / APPROVAL - FEDERAL HIGHWAY ADMINISTRATION 9-23-03	STANDARD NO. MD 104.02-04

AS BUILT NOT REQUIRED

SURVEY SERVICES OF MD., LLC
BY: ROBERT W. MATIS - RLS 605

STATE OF MARYLAND — ROBERT WILLIAM MATIS — No. 605 — REGISTERED PROPERTY LINE SURVEYOR

AS-BUILT CERTIFICATION FOR PSWM

NOTE: THERE IS NO "AS-BUILT" INFORMATION PROVIDED ON THIS SHEET.

SIGNED ______ 5/23/12 P.E.# 16828
MELVIN CHARLES SCHULTZ

STATE OF MARYLAND — MELVIN CHARLES SCHULTZ — No. 16828 — REGISTERED PROFESSIONAL ENGINEER

10-4-10
Date

STATE OF MARYLAND — PAUL LEE HUDSON — No. 8061 — REGISTERED PROFESSIONAL ENGINEER

PROFESSIONAL CERTIFICATION
I HEREBY CERTIFY THAT THESE DOCUMENTS WERE PREPARED OR APPROVED BY ME, AND THAT I AM A DULY LICENSED PROFESSIONAL ENGINEER UNDER THE LAWS OF THE STATE OF MARYLAND, LICENSE NO. 8061, EXPIRATION DATE: 08-26-2011.

Professional Engr. No. 8061

APPROVED: HOWARD COUNTY DEPT. OF PUBLIC WORKS

CHIEF, BUREAU OF HIGHWAYS	DATE 10-8-10

APPROVED: HOWARD COUNTY DEPT. OF PLANNING AND ZONING

CHIEF, DIVISION OF LAND DEVELOPMENT	DATE 11-18-10
CHIEF, DEVELOPMENT ENGINEERING DIVISION	DATE 11/16/10
DIRECTOR	DATE 11/18/10

Date	No.	Revision Description

EMERSON PARCEL F-1
REVITZ PROPERTY

5-STORY COMMERCIAL OFFICE BUILDING

OWNER/DEVELOPER:
EMERSON DEVELOPMENT VII LLC
1 TEXAS STATION COURT, SUITE 200
TIMONIUM, MARYLAND 21093-8288
(443) 689-8000

DMW
DAFT McCUNE WALKER INC
200 EAST PENNSYLVANIA AVENUE • TOWSON, MD 21286
P: 410 296 3333 F: 410 296 4705 WWW.DMW.COM
A TEAM OF LAND PLANNERS, LANDSCAPE ARCHITECTS, ENGINEERS, SURVEYORS & ENVIRONMENTAL PROFESSIONALS

SUBDIVISION NAME		SECTION/AREA		LOT/PARCEL #
REVITZ PROPERTY				LOT F-1 / PAR. 165
PLAT# OR L/F: 21277 & 21278	BLOCK #: 20	ZONE: PEC	TAX/ZONE MAP: 47 / ELECT. DISTRICT: 6	CENSUS TRACT: 6903
WATER CODE		SEWER CODE		

TITLE: **SITE DETAILS**

Des. By JDF	Scale AS SHOWN	Proj. No. 95054.10
Drn. By CRH	Date 09-29-10	7 of ~~18~~ 20
Chk. By	Approved	

SDP-10-096

P:\95054\95054.1\ENGR\95054\SDP07.DWG Oct 06 10:13:01 2010
Wed Oct 06 10:13 P:\95054\95054.1\ENGR\95054\SDP07.DT2
10/6/2010 10:13:27 AM toralsay c:\hpm\95054\SDP07.prf P:\95054\95054.1\ENGR\95054\SDP07.DT2 95054\SDP07.DT2

STANDARD SEDIMENT CONTROL NOTES

1. A minimum of 48 hours notice must be given to the Howard County Department of Inspections, and Permits, Sediment Control Division prior to the start of any construction (410-313-1855).

2. All vegetative and structural practices are to be installed according to the provisions of this plan and are to be in conformance with the most current "Maryland Standards and Specifications for Soil Erosion and Sediment Control" and revisions thereto.

3. Following initial soil disturbance or re-disturbance, permanent or temporary stabilization shall be completed within:
   a. Seven (7) calendar days for all perimeter sediment control structures, dikes, perimeter slopes and all slopes greater than 3:1.
   b. Fourteen (14) days as to all other disturbed of graded areas on the project site.

4. All sediment traps/basin shown must be fenced and warning signs posted around their perimeter in accordance with Vol. 1, Chapter 12 of the "Howard County Design Manual", Storm Drainage.

5. All disturbed areas must be stabilized within the time period specified above in accordance with the "1994 Maryland Standards and Specifications for Soil Erosion and Sediment Control" for permanent seeding (Sec. 51), sod (Sec. 54), temporary seeding (Sec. 50), and mulching (Sec. 52). Temporary stabilization with mulch alone can only be done when recommended seeding dates do not allow for proper germination and establishment of grasses.

6. All sediment control structures are to remain in place and are to be maintained in operative condition until permission for their removal has been obtained from the Howard County Sediment Control Inspector.

7. Site Analysis:

Total Area of Site	10.41 Acres
Area Disturbed	13.0 Acres
Area to be roofed or paved	5.81 Acres
Area to be vegetatively stabilized	4.29 Acres
Total Cut	12,378 Cu. Yds.
Total Fill	10,085 Cu. Yds.
Off-site waste/borrow area location:	N/A

8. Any sediment control practice which is disturbed by grading activity for placement of utilities must be repaired on the same day of disturbance.

9. Additional sediment controls must be provided, if deemed necessary by the Howard County Sediment Control Inspector.

10. On all sites with disturbed areas in excess of 2 acres, approval of the inspection agency shall be requested upon completion of installation of perimeter erosion and sediment controls, but before proceeding with any other earth disturbance or grading. Other building or grading inspection approvals may not be authorized until this initial approval by the inspection agency is made.

11. Trenching for the construction of utilities is limited to three pipe lengths or that which shall be back-filled and stabilized within one working day, whichever is shorter.

STONE OUTLET SEDIMENT TRAP (ST II) #1

EXISTING DA	2.95 AC.
PROPOSED DA	2.95 AC.
STORAGE REQUIRED	10,620 CF
STORAGE PROVIDED	22,176 CF
WET STORAGE REQUIRED	5,310 CF
WET STORAGE PROVIDED	8,060 CF
WET STORAGE ELEVATION	262 TO 266
DRY STORAGE REQUIRED	14,002 CF
DRY STORAGE PROVIDED	14,116 CF
DRY STORAGE ELEVATION	266 TO 269
SIZE BARREL	NA
SIZE RISER	NA
SIZE TRASH RACK	NA
BOTTOM DIMENSION	NA
TOP EMBANKMENT ELEVATION	270 (MIN)
TOP EMBANKMENT WIDTH	4 FT. (MIN)
RISER ELEVATION	---
CLEANOUT STORAGE REQUIRED	2,597 CF
CLEANOUT STORAGE PROVIDED	2,597 CF
CLEANOUT ELEVATION	264
SIDE SLOPES	2:1
BOTTOM ELEVATION	262
MIN. ELEVATION OF EXIST. GROUND	268

SEQUENCE OF CONSTRUCTION

1. Obtain Grading Permit.
2. Notify Howard County Department of Permits and Licenses 48 hours prior to beginning work. (1 day)
3. Install Stabilized Construction Entrance and Super Silt Fence as shown on the Plan.
4. Manually install Orange Construction Fence along the limits of the Forest Conservation Easement, except in the areas of the proposed retaining walls. This shall be completed by and inspected at the Pre-Construction Meeting.
4. With permission from the Sediment Control Inspector, begin clearing and grubbing for and install Erosion and Sediment Control Devices for the installation of the retaining walls and Sediment Traps.
5. Construct Sediment Traps 1 and 2 and the temorary swales that accompany them.
6. Construct Retaining Walls and storm drain pipe to the existing SWM Facility, beginning work downstream at the Facility and working upstream to the Site. For the storm drain construction, use the "Utility Construction Outside Sediment Control Practices" sequence provided on the plans. (20 days). All storm inlets shall receive additional protection in the form of super silt fence.
7. Upon completion of the retaining walls, stabilization of the area below the wall with seed and mulch, and with the permission of the Sediment Control Inspector, begin grading operations. Maintain positive drainage to all sediment control measures and devices at all times. See "Dust Control Specifications" on sheet 8.
8. Begin construction of the proposed building. As work progresses install remaining utilities except Recharge Facilities. Provide inlet protection for newly installed inlets. Install Super Silt Fence around specified inlets as per plan. (30 days)
9. Continue with grading operations and building construction. (30 days)
10. As work progresses and disturbed areas draining to the Recharge Facilities are stabilized, install Recharge Facilities.
11. Fine grade all areas, install concrete curb and gutter and stone subbase. Proceed with landscaping. As the parking lot in the area of Sediment Trap I becomes stabilized and inlet protection is functional, and with the permission of the Sediment Control Inspector, remove Sediment Trap I and stabilize areas contributing to the Super Silt Fence below the Trap. (15 days)
12. After all areas that drain to the sediment control devices are stabilized, and with permission from the Howard County Sediment Control Inspector, remove all remaining sediment control measures and proceed with paving operations.

LEGEND

- PROPERTY BOUNDARY
- EX. RIGHT OF WAY
- ADJACENT PROPERTY BOUNDARY
- EX. ROADS AND WALKS
- 280 EX. MAJOR CONTOUR
- EX. MINOR CONTOUR
- FOREST CONSERVATION EASEMENT
- PROP. BUILDING
- PROP. CURB / EDGE OF PAVING
- PROP. DEPRESSED CURB
- PROP. GROUP LIGHT
- PROP. SINGLE LIGHT
- PROP. LIGHT
- 280 PROP. MAJOR CONTOUR
- PROP. MINOR CONTOUR
- LIMIT OF DISTURBANCE
- SSF SSF SUPER SILT FENCE
- OCF OCF ORANGE CONSTRUCTION FENCE
- AGIP AT GRADE INLET PROTECTION
- AGIP/CIP AT GRADE INLET PROTECTION/ CURB INLET PROTECTION
- SCE STABILIZED CONSTRUCTION ENTRANCE
- EROSION CONTROL MATTING

US Army Corps of Engineers
Baltimore District

REAL PROPERTY SERVICES FIELD OFFICE
ANNAPOLIS JUNCTION, MARYLAND

JACOBS
1100 N.GLEBE RD., ARLINGTON, VA, 22201
(571) 218-1000

THE INFORMATION PROVIDED HEREIN IS THE PROPERTY OF THE UNITED STATES GOVERNMENT. IT IS PROVIDED ONLY FOR THE PURPOSE STATED IN THE ACCOMPANYING DOCUMENT. DISTRIBUTION OF THIS DOCUMENT AND THE INFORMATION CONTAINED HEREIN IS LIMITED TO THE RECIPIENT SPECIFIED IN THE ACCOMPANYING DOCUMENT. REPRODUCTION OR DISSEMINATION OF THIS DOCUMENT OR OF THE INFORMATION CONTAINED HEREIN IN WHOLE OR IN PART IN ANY MEDIUM WITHOUT THE APPROVAL OF THE UNITED STATES GOVERNMENT IS STRICTLY PROHIBITED. VIOLATORS OF THIS REQUIREMENT WILL BE PROSECUTED TO THE FULLEST EXTENT OF THE LAW.

Mark	Description	Date	Appr.
	Red-line revision: perimeter fencing	7/13	

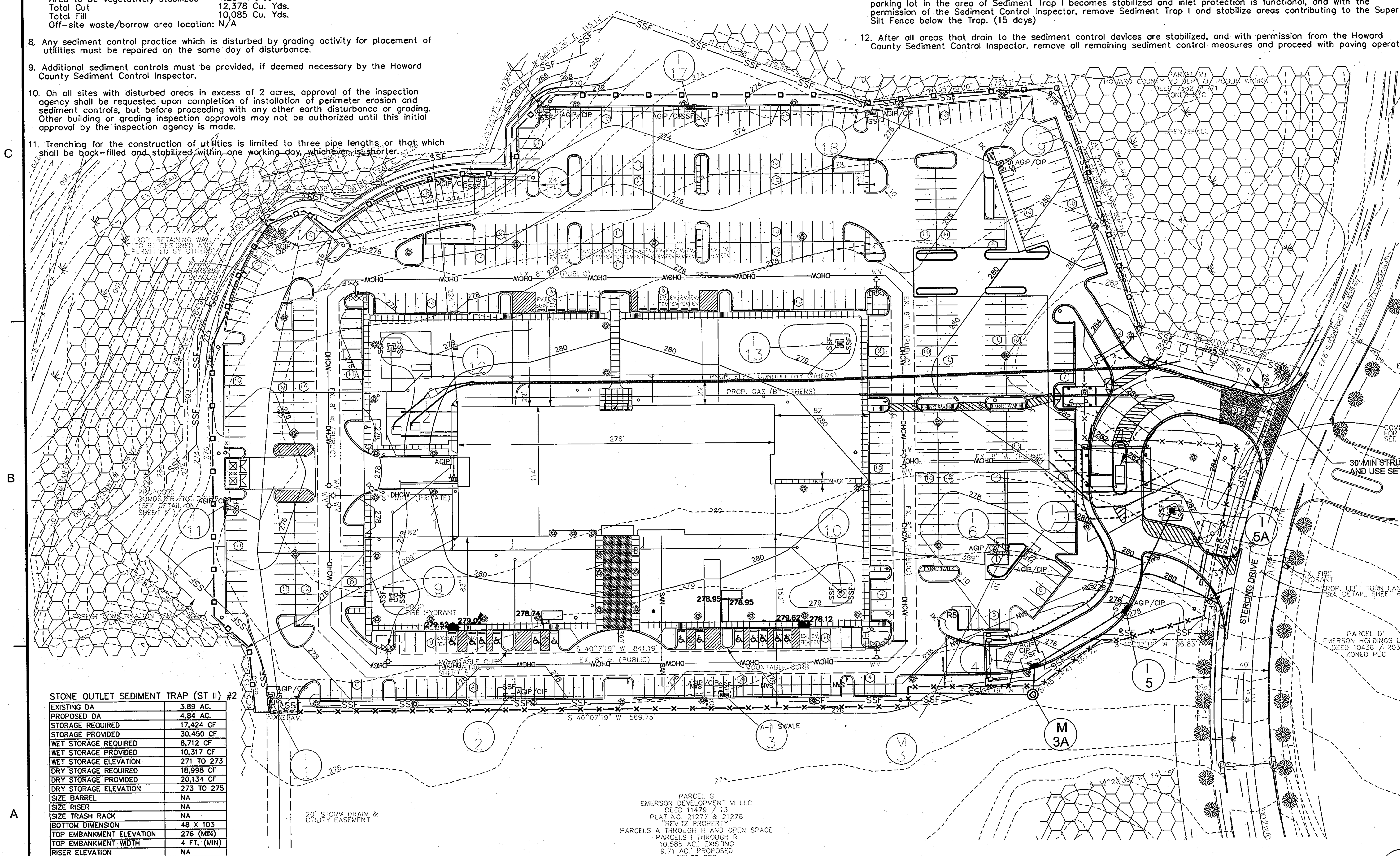

STONE OUTLET SEDIMENT TRAP (ST II) #2

EXISTING DA	3.89 AC.
PROPOSED DA	4.84 AC.
STORAGE REQUIRED	17,424 CF
STORAGE PROVIDED	30,450 CF
WET STORAGE REQUIRED	8,712 CF
WET STORAGE PROVIDED	10,317 CF
WET STORAGE ELEVATION	271 TO 273
DRY STORAGE REQUIRED	18,998 CF
DRY STORAGE PROVIDED	20,134 CF
DRY STORAGE ELEVATION	273 TO 275
SIZE BARREL	NA
SIZE RISER	NA
SIZE TRASH RACK	NA
BOTTOM DIMENSION	48 X 103
TOP EMBANKMENT ELEVATION	276 (MIN)
TOP EMBANKMENT WIDTH	4 FT. (MIN)
RISER ELEVATION	NA
CLEANOUT STORAGE REQUIRED	3,320 CF
CLEANOUT STORAGE PROVIDED	3,320 CF
CLEANOUT ELEVATION	272
SIDE SLOPES	2:1
BOTTOM ELEVATION	271
MIN. ELEVATION OF EXIST. GROUND	274

Note : A double row of Super Silt Fence is to be installed at the direction of the Sediment Control Inspector

PROFESSIONAL CERTIFICATION

I HEREBY CERTIFY THAT THESE DOCUMENTS WERE PREPARED OR APPROVED BY ME, AND THAT I AM A DULY LICENSED PROFESSIONAL ENGINEER UNDER THE LAWS OF THE STATE OF MARYLAND, LICENSE NO. 22350 EXPIRATION DATE: 05/22/2015

7/3/13

STATE OF MARYLAND · BRADFORD D. WEINERT · NO. 22350 · PROFESSIONAL ENGINEER

APPROVED: HOWARD COUNTY DEPT. OF PLANNING AND ZONING

CHIEF, DIVISION OF LAND DEVELOPMENT — DATE 7/11/13

CHIEF, DEVELOPMENT ENGINEERING DIVISION — DATE 7/9/13

DIRECTOR — DATE 7/11/13

Date	No.	Revision Description

EMERSON PARCEL F-1 REVITZ PROPERTY

5-STORY COMMERCIAL OFFICE BUILDING

OWNER DEVELOPER:
EMERSON DEVELOPMENT VII LLC
1 TEXAS STATION COURT, SUITE 200
TIMONIUM, MARYLAND 21093-8288
(443) 689-8000

SUBDIVISION NAME		SECTION AREA		LOT PARCEL #
REVITZ PROPERTY				LOT F-1 / PAR. 165
PLAT# OR L F	BLOCK# / ZONE	TAX ZONE MAP	ELECT. DISTRICT	CENSUS TRACT
21277 & 21278	20 / PEC	47	6	6903
WATER CODE		SEWER CODE		

TITLE

EROSION AND SEDIMENT CONTROL PLAN

Des. By	Scale 1"=50'	Proj. No.95054.10
Drn. By	Date 07-05-13	8 of 20
Chk. By	Approved	

Designed by:	Date: JULY 10, 2013
Rev.:	-
Dwn by:	Ckd by:
Project No.	27877
RSFO Project Manager	CHARLES CANITZ
Submitted by:	NATHAN JAMES, PROJECT MANAGER
File name:	
Plot date:	
Plot scale:	

EMERSON - PERIMETER SECURITY AND SITE

EROSION AND SEDIMENT CONTROL PLAN

LAUREL, MD

ROOM(S) OR FLOOR

Drawing No.

Sheet Reference No.
8 OF 20
Sheet of 45

SDP-10-096

UNCLASSIFIED//FOR OFFICIAL USE ONLY

PROFESSIONAL CERTIFICATION
I HEREBY CERTIFY THAT THESE DOCUMENTS WERE PREPARED OR APPROVED BY ME, AND THAT I AM A DULY LICENSED PROFESSIONAL ENGINEER UNDER THE LAWS OF THE STATE OF MARYLAND, LICENSE NO. 22350 EXPIRATION DATE: 05/22/2015

STATE OF MARYLAND
BRADFORD D. WEINERT
NO. 22350
PROFESSIONAL ENGINEER
7/3/13

US Army Corps of Engineers
Baltimore District

REAL PROPERTY SERVICES
FIELD OFFICE
ANNAPOLIS JUNCTION, MARYLAND

JACOBS
1100 N.GLEBE RD., ARLINGTON, VA, 22201
(571) 218-1000

THE INFORMATION PROVIDED HEREIN IS THE PROPERTY OF THE UNITED STATES GOVERNMENT. IT IS PROVIDED ONLY FOR THE PURPOSE STATED IN THE ACCOMPANYING DOCUMENT. DISTRIBUTION OF THIS DOCUMENT AND THE INFORMATION CONTAINED HEREIN IS LIMITED TO THE RECIPIENT SPECIFIED IN THE ACCOMPANYING DOCUMENT. REPRODUCTION OR DISSEMINATION OF THIS DOCUMENT OR OF THE INFORMATION CONTAINED HEREIN IN WHOLE OR IN PART IN ANY MEDIUM WITHOUT THE APPROVAL OF THE UNITED STATES GOVERNMENT IS STRICTLY PROHIBITED. VIOLATORS OF THIS REQUIREMENT WILL BE PROSECUTED TO THE FULLEST EXTENT OF THE LAW.

Mark	Description	Date	Appr.
	redline revision: Perimeter fencing	7/13	

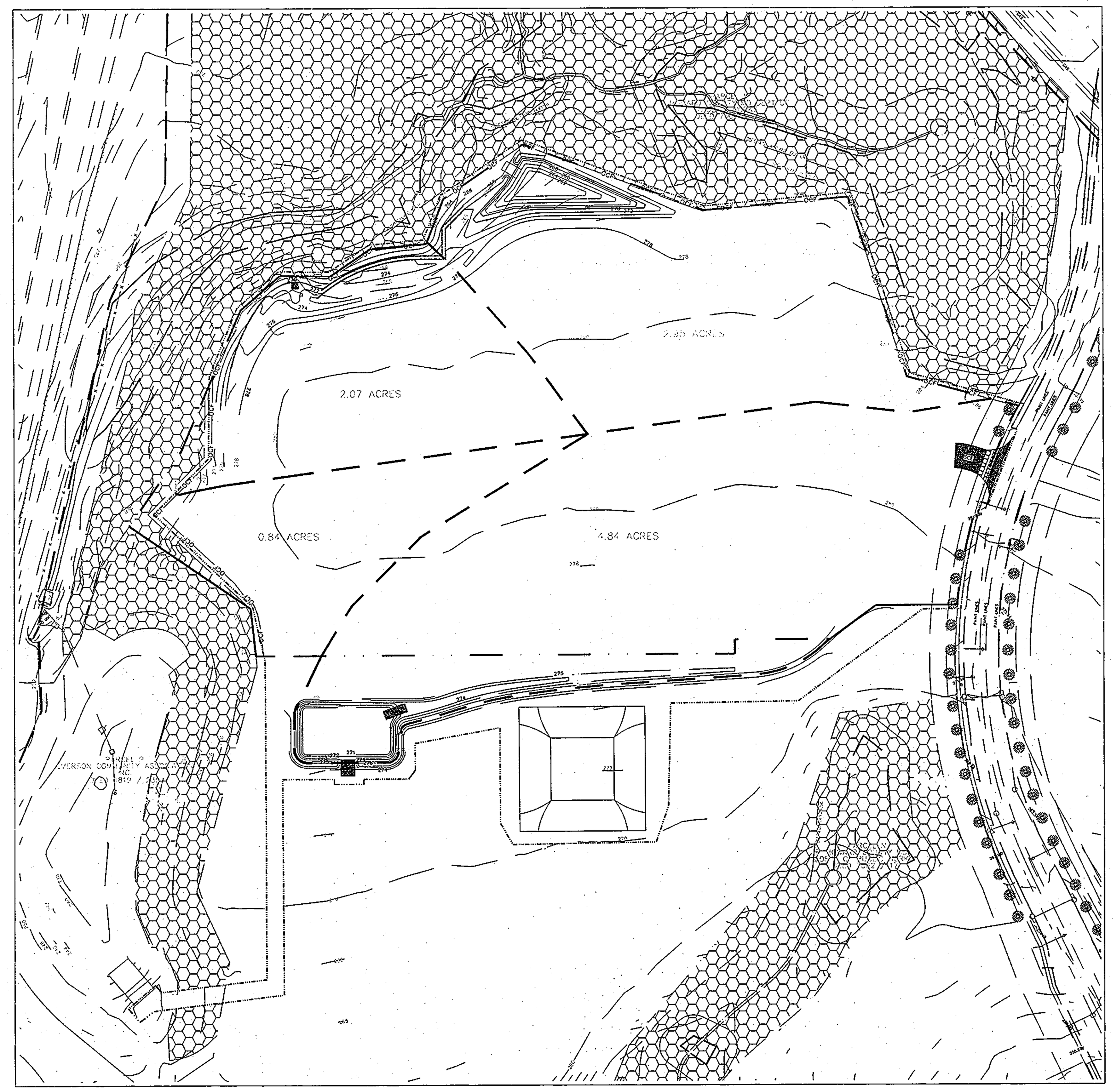

EXISTING DRAINAGE AREA MAP
SCALE: 1"=100'

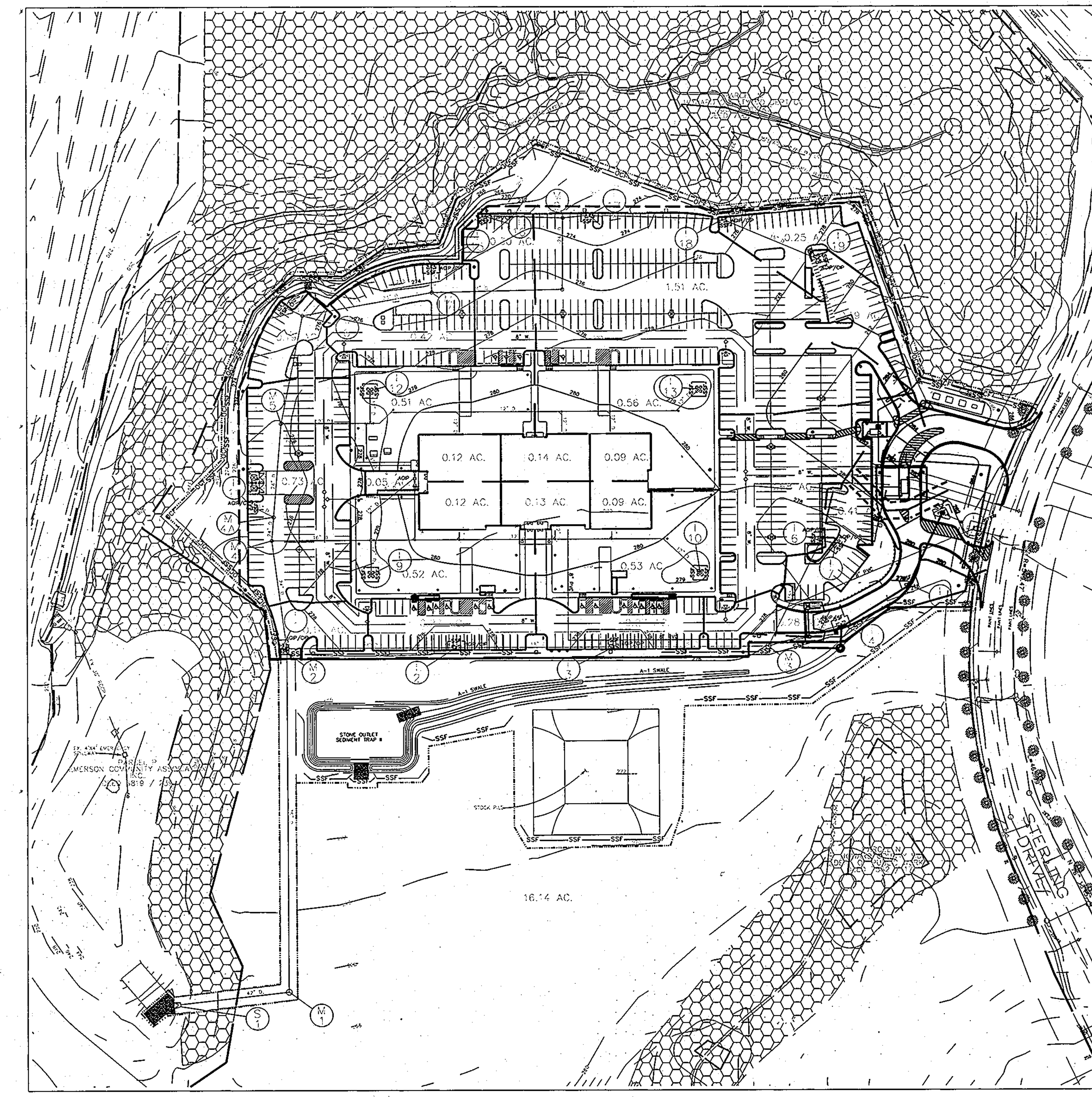

PROPOSED DRAINAGE AREA MAP
SCALE: 1"=100'

UTILITY CONSTRUCTION OUTSIDE SEDIMENT CONTROL PRACTICES

1. EXCAVATED TRENCH MATERIAL SHALL BE PLACED ON UPSTREAM SIDE OF TRENCH.
2. IMMEDIATELY FOLLOWING PIPE INSTALLATION, THE TRENCH SHALL BE BACKFILLED, COMPACTED AND IMMEDIATELY STABILIZED (PERMANENT SEED AND MULCH) AT THE END OF EACH WORK DAY.
3. SILT FENCE SHALL BE PLACED IMMEDIATELY DOWNSTREAM OF ANY DISTURBED AREA INTENDED TO REMAIN DISTURBED LONGER THAN ONE (1) WORKING DAY. (SILT FENCE AS PER SCS STANDARD DRAWING – E-15-3)
4. THE CONTRACTOR SHALL DISTURB AND OPEN TRENCH THE MINIMUM PRACTICAL AREA REQUIRED TO ACCOMPLISH THE WORK DESIGNATED FOR EACH DAY.
5. ALL SEDIMENT AND EROSION CONTROL PRACTICES AND VEGETATIVE STABILIZATION SHALL BE IN ACCORDANCE WITH THE "STANDARDS AND SPECIFICATIONS FOR SOIL EROSION AND SEDIMENT CONTROL IN DEVELOPING AREAS". ANY EROSION AND SEDIMENT CONTROL PRACTICES DAMAGED BY UTILITY CONSTRUCTION ARE TO BE REPAIRED IMMEDIATELY.

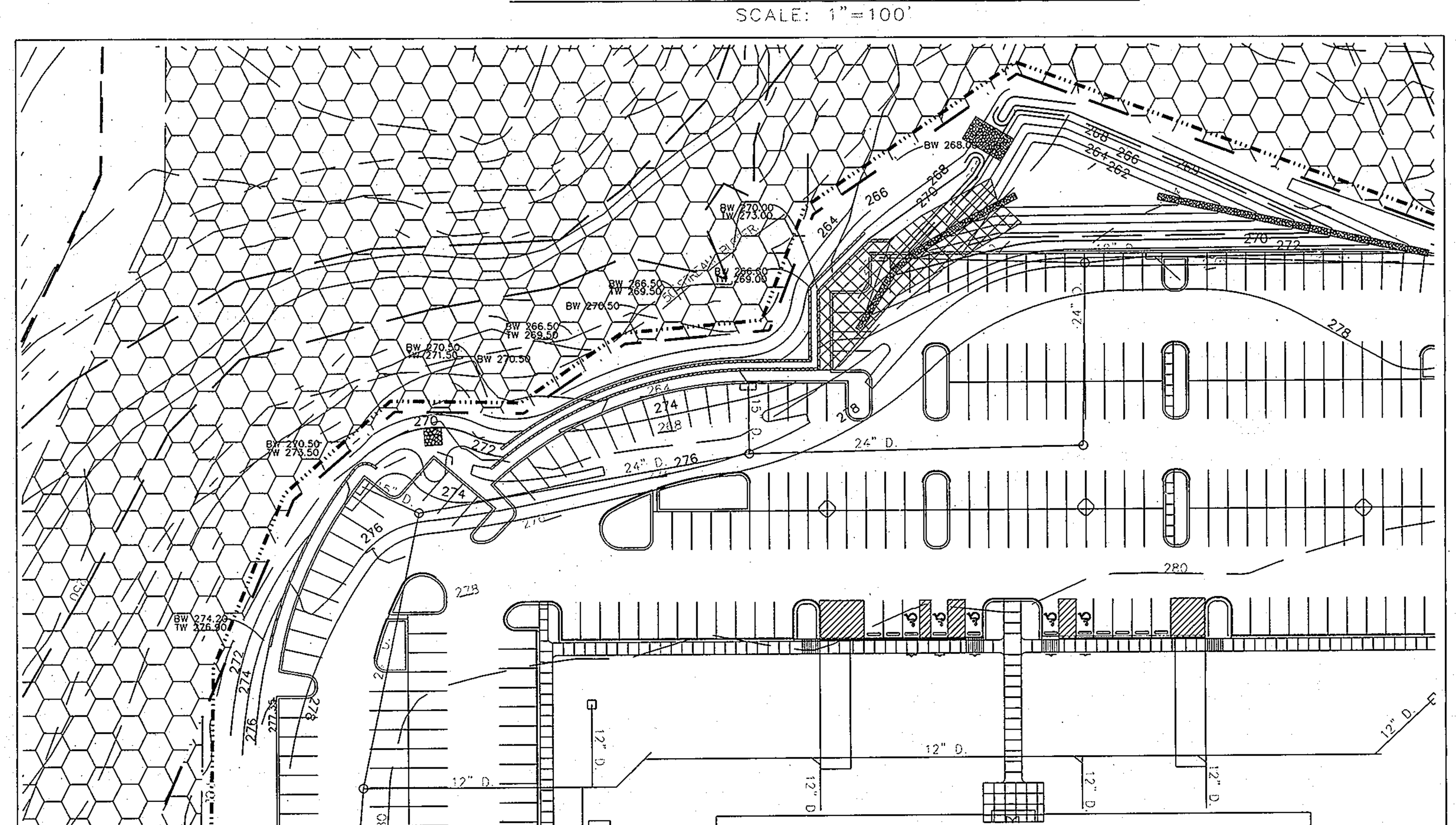

RETAINING WALL
SCALE: 1"=50'

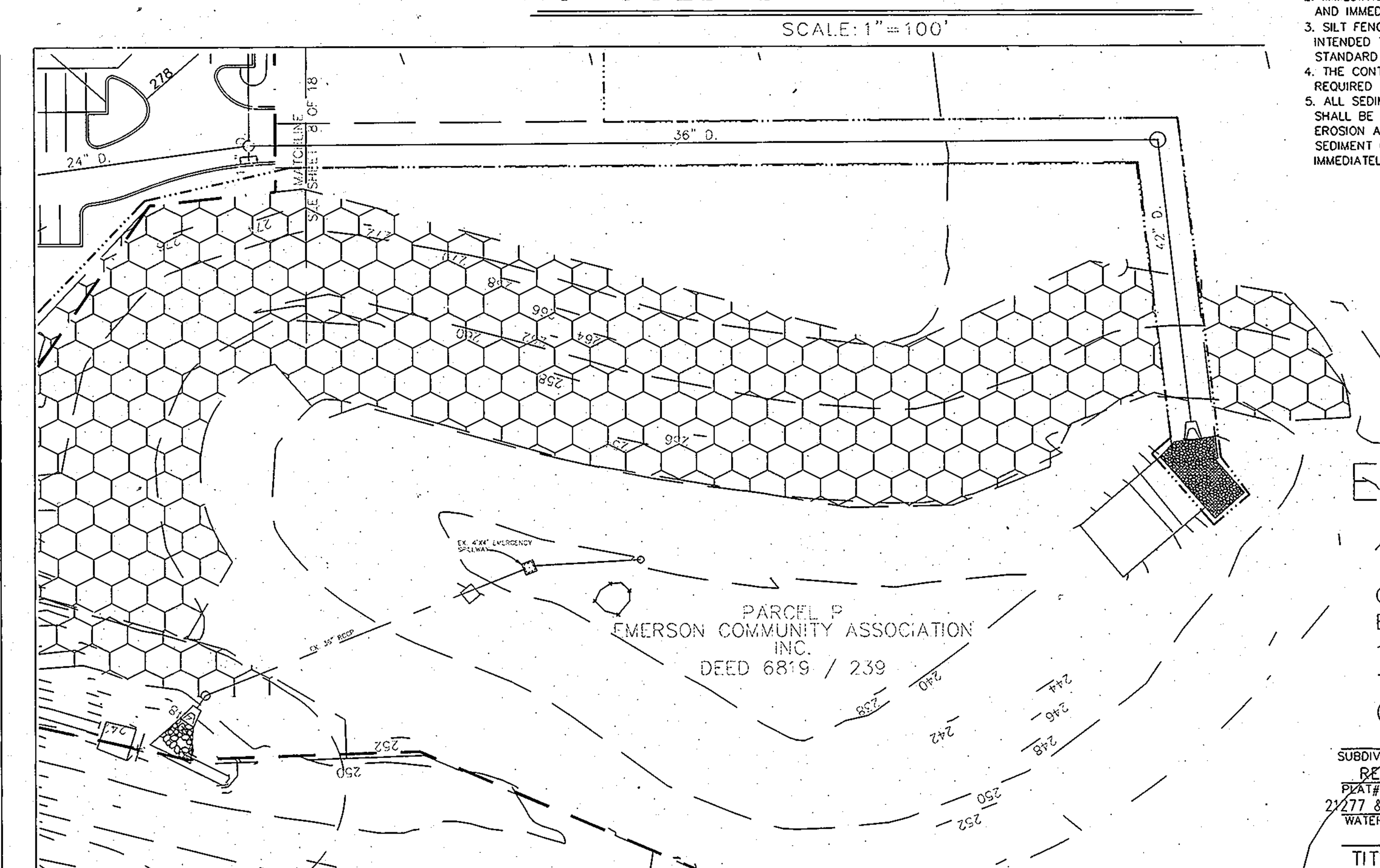

OFF-SITE STORMDRAIN
SCALE: 1"=50'

APPROVED: HOWARD COUNTY DEPT. OF PLANNING AND ZONING

CHIEF, DIVISION OF LAND DEVELOPMENT	DATE 7/11/13
CHIEF, DEVELOPMENT ENGINEERING DIVISION	DATE 7/9/13
DIRECTOR	DATE 7/11/13

Date	No.	Revision Description

EMERSON PARCEL F-1 REVITZ PROPERTY

5-STORY COMMERCIAL OFFICE BUILDING

OWNER DEVELOPER:
EMERSON DEVELOPMENT VII LLC
1 TEXAS STATION COURT, SUITE 200
TIMONIUM, MARYLAND 21093-8288
(443) 689-8000

SUBDIVISION NAME			SECTION AREA		LOT PARCEL #
REVITZ PROPERTY					LOT F-1 / PAR. 165
PLAT# OR L/F	BLOCK#	ZONE	TAX ZONE MAP	ELECT. DISTRICT	CENSUS TRACT
21277 & 21278	20	PEC	47	6	6903
WATER CODE			SEWER CODE		

TITLE: EROSION AND SEDIMENT CONTRAL DRAINAGE AREA MAP AND DETAILS

Des. By	Scale AS SHOWN	Proj. No.95054.10
Drn. By	Date 07-05-13	9 of 20
Chk. By	Approved	

Designed by:	Date: JULY 10, 2013
Dwn by:	Ckd by:
Project No. 27877	Rev.
RSFO Project Manager CHARLES CANITZ	File name:
Submitted by: NATHAN JAMES PROJECT MANAGER	Plot date:
	Plot scale:

EMERSON - PERIMETER SECURITY AND SITE
EROSION AND SEDIMENT CONTROL DRAINAGE AREA MAP AND DETAILS
ROOM(S) OR FLOOR
LAUREL, MD

Drawing No.
Sheet Reference No.
9 OF 20
Sheet of 45

SDP-10-096

UNCLASSIFIED//FOR OFFICIAL USE ONLY

UNCLASSIFIED//FOR OFFICIAL USE ONLY

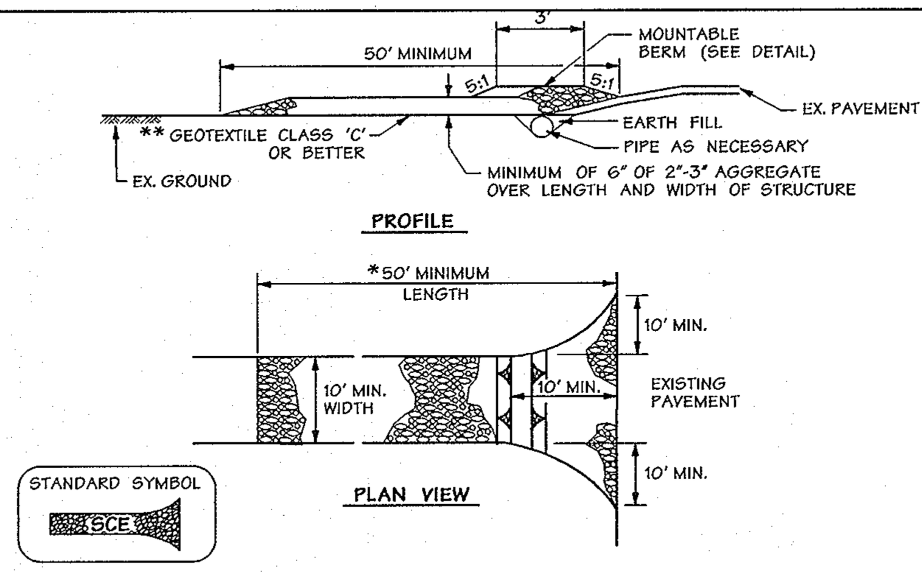

CONSTRUCTION SPECIFICATIONS

1. LENGTH - MINIMUM OF 50' (*30' FOR SINGLE RESIDENCE LOT).
2. WIDTH - 10' MINIMUM, SHOULD BE FLARED AT THE EXISTING ROAD TO PROVIDE A TURNING RADIUS.
3. GEOTEXTILE FABRIC CLASS C (FILTER CLOTH) SHALL BE PLACED OVER THE EXISTING GROUND PRIOR TO PLACING STONE.** THE PLAN APPROVAL AUTHORITY MAY NOT REQUIRE SINGLE FAMILY RESIDENCES TO USE GEOTEXTILE.
4. STONE - CRUSHED AGGREGATE (2" TO 3") OR RECLAIMED OR RECYCLED CONCRETE EQUIVALENT SHALL BE PLACED AT LEAST 6" DEEP OVER THE LENGTH AND WIDTH OF THE ENTRANCE.
5. SURFACE WATER - ALL SURFACE WATER FLOWING TO OR DIVERTED TOWARD CONSTRUCTION ENTRANCES SHALL BE PIPED THROUGH THE ENTRANCE, MAINTAINING POSITIVE DRAINAGE. PIPE INSTALLED THROUGH THE STABILIZED CONSTRUCTION ENTRANCE SHALL BE PROTECTED WITH A MOUNTABLE BERM WITH 5:1 SLOPES AND A MINIMUM OF 6" OF STONE OVER THE PIPE. PIPE HAS TO BE SIZED ACCORDING TO THE DRAINAGE. WHEN THE SCE IS LOCATED AT A HIGH SPOT AND HAS NO DRAINAGE TO CONVEY A PIPE WILL NOT BE NECESSARY. PIPE SHOULD BE SIZED ACCORDING TO THE AMOUNT OF RUNOFF TO BE CONVEYED. A 6" MINIMUM WILL BE REQUIRED.
6. LOCATION - A STABILIZED CONSTRUCTION ENTRANCE SHALL BE LOCATED AT EVERY POINT WHERE CONSTRUCTION TRAFFIC ENTERS OR LEAVES A CONSTRUCTION SITE. VEHICLES LEAVING THE SITE MUST TRAVEL OVER THE ENTIRE LENGTH OF THE STABILIZED CONSTRUCTION ENTRANCE.

U.S. DEPARTMENT OF AGRICULTURE SOIL CONSERVATION SERVICE — F - 17 - 3 — MARYLAND DEPARTMENT OF ENVIRONMENT WATER MANAGEMENT ADMINISTRATION

Stabilized Construction Entrance

Not To Scale

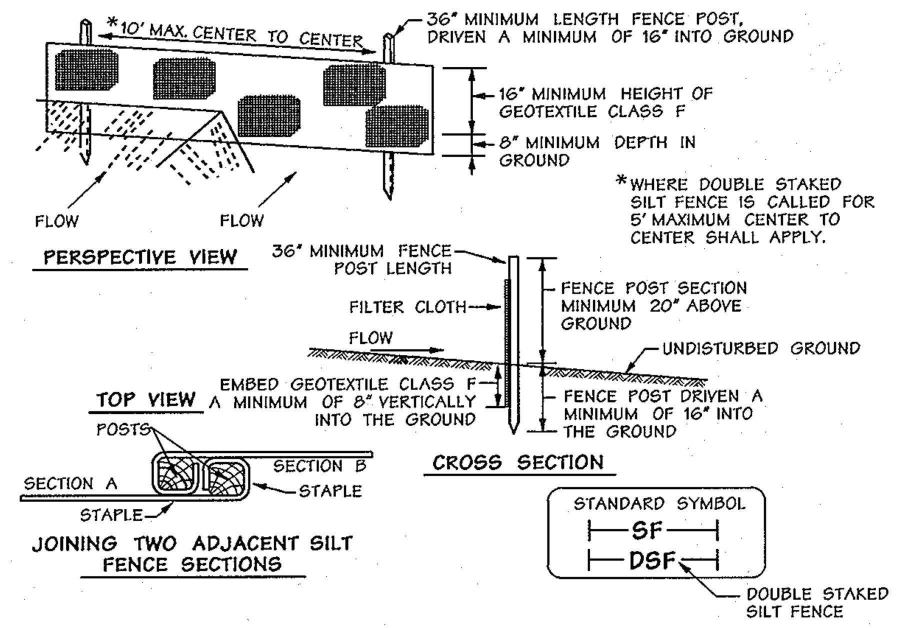

CONSTRUCTION SPECIFICATIONS

1. FENCE POSTS SHALL BE A MINIMUM OF 36" LONG DRIVEN 16" MINIMUM INTO THE GROUND. WOOD POSTS SHALL BE 1½" x 1½" SQUARE (MINIMUM) CUT, OR 1¾" DIAMETER (MINIMUM) ROUND AND SHALL BE OF SOUND QUALITY HARDWOOD. STEEL POSTS WILL BE STANDARD T OR U SECTION WEIGHTING NOT LESS THAN 1.00 POUND PER LINEAR FOOT.
2. GEOTEXTILE SHALL BE FASTENED SECURELY TO EACH FENCE POST WITH WIRE TIES OR STAPLES AT TOP AND MID-SECTION AND SHALL MEET THE FOLLOWING REQUIREMENTS FOR GEOTEXTILE CLASS F:

TENSILE STRENGTH	50 LBS./IN. (MIN.)	TEST: MSMT 509
TENSILE MODULUS	20 LBS./IN. (MIN.)	TEST: MSMT 509
FLOW RATE	0.3 GAL. FT./MIN. (MAX.)	TEST: MSMT 322
FILTERING EFFICIENCY	75% (MIN.	TEST: MSMT322

3. WHERE ENDS OF GEOTEXTILE FABRIC COME TOGETHER, THEY SHALL BE OVERLAPPED, FOLDED AND STAPLED TO PREVENT SEDIMENT BYPASS.
4. SILT FENCE SHALL BE INSPECTED AFTER EACH RAINFALL EVENT AND MAINTAINED WHEN BULGES OCCUR OR WHEN SEDIMENT ACCUMULATION REACHED 50% OF THE FABRIC HEIGHT.

U.S. DEPARTMENT OF AGRICULTURE SOIL CONSERVATION SERVICE — E - 15 - 3 — MARYLAND DEPARTMENT OF ENVIRONMENT WATER MANAGEMENT ADMINISTRATION

Silt Fence

Not To Scale

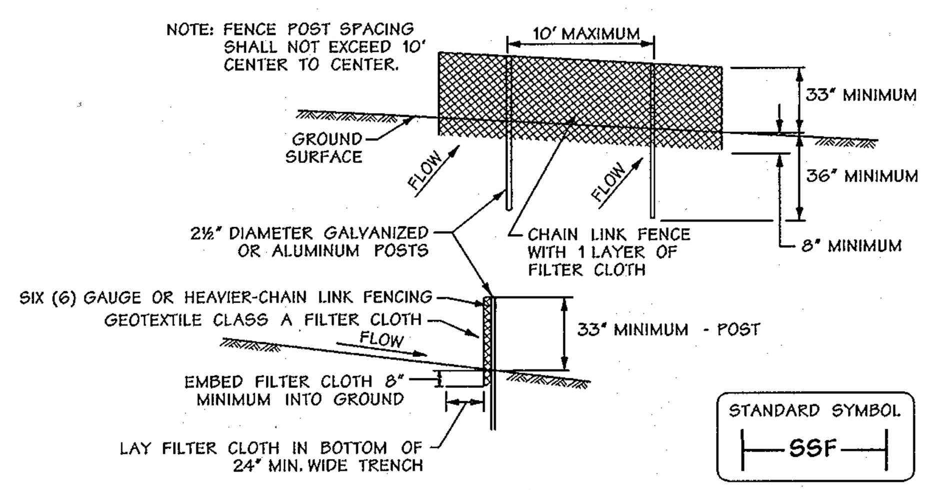

CONSTRUCTION SPECIFICATIONS

1. FENCING SHALL BE 42 INCHES IN HEIGHT AND CONSTRUCTED IN ACCORDANCE WITH THE LATEST MARYLAND STATE HIGHWAY (SHA) DETAILS FOR CHAIN LINK FENCING. THE SHA SPECIFICATIONS FOR A 6 FOOT FENCE SHALL BE USED, SUBSTITUTING 42" FABRIC AND 6 FOOT LENGTH POSTS.
2. THE POSTS DO NOT NEED TO BE SET IN CONCRETE.
3. CHAIN LINK FANCE SHALL BE FASTENED SECURELY TO THE FENCE POSTS WITH WIRE TIES OR STAPLES. THE LOWER TENSION WIRE, BRACE AND TRUSS RODS, DRIVE ANCHORS AND POST CAPS ARE NOT REQUIRED EXCEPT ON THE ENDS OF THE FENCE. THE CHAIN LINK FENCING SHALL BE SIX (6) GAUGE OR HEAVIER.
4. FILTER CLOTH SHALL BE FASTENED SECURELY TO THE CHAIN LINK FENCE WITH TIES SPACED EVERY 24" AT THE TOP AND MID SECTION.
5. FILTER CLOTH SHALL BE EMBEDDED A MINIMUM OF 8" INTO THE GROUND.
6. WHEN TWO SECTIONS OF GEOTEXTILE FABRIC ADJOIN EACH OTHER, THEY SHALL BE OVERLAPPED BY 6" AND FOLDED.
7. MAINTENANCE SHALL BE PERFORMED AS NEEDED AND SILT BUILDUPS REMOVED WHEN "BULGES" DEVELOP IN THE SILT FENCE, OR WHEN SILT REACHES 50% OF FENCE HEIGHT.

U.S. DEPARTMENT OF AGRICULTURE SOIL CONSERVATION SERVICE — MODIFIED — MARYLAND DEPARTMENT OF ENVIRONMENT WATER MANAGEMENT ADMINISTRATION

Super Silt Fence

Not To Scale

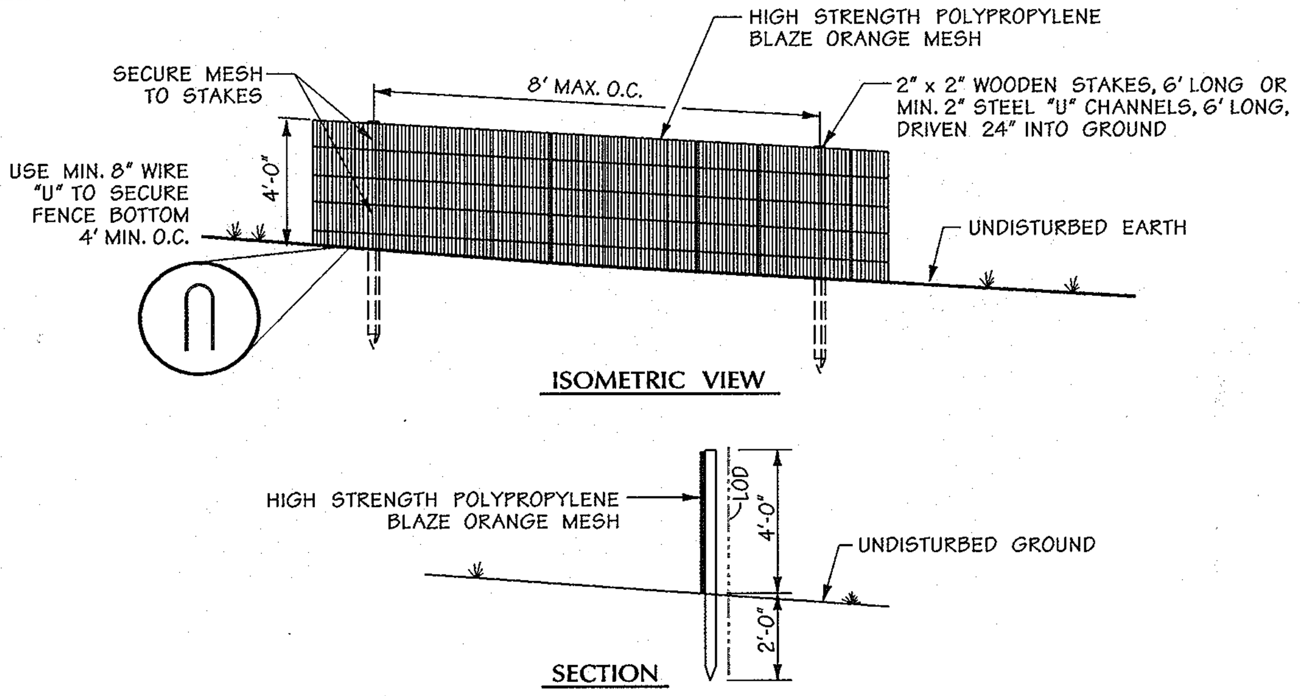

NOTES:

1. This detail is for Orange Construction Fence Device only.
2. Forest retention area will be set as part of the review process.
3. Boundaries of forest retention area should be staked and flagged prior to installing the device.
4. Root damage shall be avoided.
5. Protection signage may also be used.
6. Orange Construction fence shall be maintained throughout construction.

Orange Construction Fence

Not To Scale

21.0 STANDARD AND SPECIFICATIONS FOR TOPSOIL

DEFINITION

Placement of topsoil over a prepared subsoil prior to establishment of permanent vegetation.

PURPOSE

To provide a suitable soil medium for vegetative growth, soils of concern have low moisture content, low nutrient levels, low PH, materials toxic to plants, and/or unacceptable soil gradation.

CONDITION WHERE PRACTICE APPLIES

I. This practice is limited to areas having 2:1 or flatter slopes where:
   A. The texture of the exposed subsoil/parent material is not adequate to produce vegetative growth.
   B. The soil material is so shallow that the rooting zone is not deep enough to support plants or furnish continuing supplies of moisture and plant nutrients.
   C. The original soil to be vegetated contains material toxic to plant growth.
   D. The soil is so acidic that treatment with limestone is not feasible.
II. For the purpose of these standards and specifications, areas having slopes steeper than 2:1 require special consideration and design for adequate stabilization. Areas having slopes steeper than 2:1 shall have the appropriate stabilization shown on the plans.

CONSTRUCTION AND MATERIAL SPECIFICATIONS

I. Topsoil salvaged from the existing site may be used provided that it meets the standard as set forth in these specifications. Typically, the depth of topsoil to be salvaged for a given soil type can be found in the representative soil profile section in the soil survey published by USDA-SCS in cooperation with Maryland Agricultural Experimental Station.
II. Topsoil specifications - soil to be used as topsoil must meet the following:
   A. Topsoil shall be a loam, sandy loam, clay loam, silt loam, sandy clay loam, loamy sand, other appropriate approval authority. Regardless, topsoil shall not be a mixture of contrasting textured subsoils and shall contain less than 5% by volume of cinders, stones, slag, coarse fragments, gravel, sticks, roots, trash, or other material larger than 1 59/64 " in diameter.
   B. Topsoil must be free of plants or plat parts such as Bermuda grass, quackgrass, Johnsongrass, nutsedge, poison ivy, thistle, or others as specified.
C. Where the subsoil is either highly acidic or composed of heavy clays, ground limestone shall be spread at the rerate of 4-8 tons/acre (200-400 pounds per 1,000 square feet) prior to the placement of topsoil. Lime shall be distributed uniformly over designated areas and worked into the soil in conjunction with tillage operations as described in the following procedures.

III. For sites having disturbed areas under 5 acres:
   I. Place topsoil (if required) and apply soil amendment s as specified in 20.0 Vegetative Stabilization - Section I - Vegetative Stabilization Methods and Materials.

IV. For sites having disturbed areas over 5 acres:
   I. On site meeting topsoil specifications, obtain test results dictating fertilizer and lime amendments required to bring the soil into compliance with the following:
      A. PH for topsoil shall be between 6.0 and 7.5. If the tested soil demonstrates a PH of less than 6.0, sufficient lime shall be prescribed to raise the PH to 6.5 or higher.
      B. Organic content of topsoil shall be not less than 1.5 percent by weight.
      C. Topsoil having soluble salt content greater than 500 parts per million shall not be used.
      D. No sod or seed shall be placed on soil which has been treated with soil sterilants or chemicals used for weed control until sufficient time has elapsed (14 days min.) to permit dissipation of phyto-toxic materials.
   II. Place topsoil (if required) and apply soil amendments as specified in 20.0 Vegetative Stabilization - Section I - Vegetative Stabilization Methods and Materials.

V. Topsoil Application
   I. When topsoiling, maintain needed erosion and sediment control practices such as diversion, grade stabilization structures, earth dikes, slope silt fence and sediment traps and basins.
   II. Grades on the areas to be topsoiled, which have been previously established, shall be maintained, about 4" - 8" higher in elevation.
   III. Topsoil shall be uniformly distributed in a 4" - 8" layer and lightly compacted to a minimum thickness of 4". Spreading shall be performed in such a manner that sodding or seeding can proceed with a minimum of additional soil preparation and tillage. Any irregularities in the surface resulting from topsoiling or other operations shall be corrected in order to prevent the formation of depressions or water pockets.
   IV. Topsoil shall not be placed while the topsoil or subsoil is in a frozen or muddy condition, when the subsoil is excessively wet or in a condition that may otherwise be detrimental to proper grading and seedbed preparation.

VI. Alternative for permanent seeding - instead of applying the full amounts of lime and commercial fertilizer, composted sludge and amendment s may be applied as specified below:
   I. Composted sludge material for use as a soil conditioner for sites having disturbed areas over 5 acres shall be tested to prescribe amendments and for sites having disturbed areas under 5 acres shall conform to the following requirements:
      A. Composted sludge shall be supplied by, or originated from a person or persons that are permitted (at the time of acquisition of the compost) by the Maryland Department of the Environment under COMAR 26.04.06.
      B. Composted sludge shall contain at least 1 percent nitrogen, 1.5 percent phosphorus, and 0.2 percent potassium and have a PH of 7.0 to 8.0 If compost does not meet these requirements, the appropriate constituents must be added to meet the requirements prior to use.
      C. Composted sludge shall be applied at a rate of 1 ton/1,000 square feet.
   II. Composted sludge shall be amended with a potassium fertilizer applied at the rate of 4 lb. /1,000 square feet and 1/3 the normal lime application rate.

References: Guideline Specifications, Soil Preparation and Sodding, MD-VA Pub. #1, Cooperative Extension Service, University of Maryland and Virginia Polytechnic Institutes. Revised 1973.

DUST CONTROL SPECIFICATIONS

Temporary Methods:
1. Mulches - see Standards for Vegetative Stabilization with Mulches only. Mulch should be crimped or tacked to prevent blowing.
2. Vegetative cover - see Standards for Temporary Vegetative Cover.
3. Tillage - to roughen surface and bring clods to the surface. This is an emergency measure which should be used before soil blowing starts. Begin plowing on windward side of site. Chisel-type plows spaced about 12 inches apart, spring-toothed harrows, and similar plows are examples of equipment which may produce the desired effect.
4. Irrigation - this is generally done as an emergency treatment. Site is sprinkled with water until the surface is moist. Repeat as needed. At no time should the site be irrigated to the point the runoff begins to flow.
5. Barriers - solid board fences, snow fences, burlap fences, straw bales, and similar material can be used to control air currents and soil blowing. Barriers placed at right angles to prevailing currents at intervals of about 10 times their height are affective in controlling soil blowing.
6. Calcium Chloride - apply at a rate that will keep surface moist. May need retreatment.

Permanent Methods:
1. Permanent Vegetation - see Standards for Vegetative Cover and Permanent Stabilization with sod. Existing trees or large shrubs may afford valuable protection if left in place.
2. Topsoiling - covering with less erosive soil material. See Standards for Topsoiling.
3. Stone - cover surface with crushed or coarse gravel.

AS-BUILT CERTIFICATION FOR PSWM

NOTE: THERE IS NO "AS-BUILT" INFORMATION PROVIDED ON THIS SHEET.

SIGNED [signature] 5/23/12 P.E.# 16928
MELVIN CHARLES BEALL, JR.

PERMANENT / TEMPORARY SEEDING NOTES

Permanent Seeding Notes

Apply to graded or cleared areas not subject to immediate further disturbance where a permanent long lived vegetative cover is needed.

Seedbed Preparation: Loosen upper three inches of soil by raking, disking or other acceptable means before seeding, if not previously loosened.

Soil Amendments: In lieu of soil test recommendations, use on of the following schedule :
1. Preferred - apply 2 tons per acre dolomitic limestone (92 lbs. /1,000 square feet) and disk into upper three inches of soil. At time of seeding, apply 400 lbs. per acre 30-0-0 ureaform fertilizer (9 lbs/1,000 square feet).
2. Acceptable - apply 2 tons per acre dolomitic limestone (92 lbs. /1,000 square feet) and 1,000 lbs. per acre 10-10-10 fertilizer (23 lbs. /1,000 square feet) before seeding. Harrow or disk into upper three inches of soil.

Seeding - for the period March 1 thru April 30, and August 1 thru October 15, seed with 60 lbs. per acre (1.4 lbs. /1,000 square feet) of Kentucky 31 Tall Fescue. For the period of May 1 thru July 31, seed with 60 lbs. Kentucky 31 Tall Fescue per acre and 2 lbs. per acre (.05 lbs. /1,000 square feet) of Weeping Lovegrass. During the period of October 16 thru February 28, protect site by:
Option (1) - 2 tons per acre of well anchored straw. Mulch and seed as soon as possible in the spring. Option (2) - use sod.
Option (3) - seed with 60 lbs. /acre Kentucky 31 Tall Fescue and mulch with 2 tons/acre well anchored straw.

Mulching - Apply 1 1/2 to 2 tons per acre (70 - 90 lbs. /1,000 square feet) of unrotted small grain straw immediately after seeding. Anchor mulch immediately after applications using mulch anchoring tool or 218 gallons per acre (5 gal. /1,000 square feet) of emulsified asphalt on flat areas. On slopes 8 feet or higher, use 348 gallons per acre (8 gal. /1,000 square feet) for anchoring.

Maintenance - Inspect all seeding areas and make needed repairs, replacements and reseeding.

TEMPORARY SEEDING NOTES

Apply to graded or cleared area likely to be redisturbed where a short-term vegetative cover is needed.

Seedbed preparation - loosen upper three inches of soil by raking, disking or other acceptable means before seeding, if not previously loosened.

Soil Amendments - apply 600 lbs. per acre 10-10-10 fertilizer (14 lbs. /1,000 square feet).

Seeding - for the periods March 1 thru April 30, and August 15 thru October 15, seed with 2 1/2 bushels per acre of annual rye (3.2 lbs. /1,000 square feet) the period May 1 thru August 14, seed with 3 lbs. per acre Weeping Lovegrass (.07 lbs. /1,000 square feet). For the period November 16 thru February 28, protect site by applying 2 tons per acre of well anchored straw. Mulch and seed as soon as possible in the spring, or use sod.

Mulching - apply 1 1/2 to 2 tons per acre (70 - 90 bs. /1,000 square feet) of unrotted weed-free, small-grain straw immediately after seeding. Anchor mulch immediately after application using mulch anchoring tool or 218 gal. per acre (5 gal. /1,000 square feet) of emulsified asphalt on flat areas, on slopes 8 ft. or higher, use 348 gal. per acre (8 gal. /1,000 square feet) for anchoring.

Refer to the "1994 Maryland Standards and Specifications for Soil Erosion and Sediment Control" for additional rates and methods not covered.

Temporary Methods:
1. Mulches - see Standards for Vegetative Stabilization with Mulches only. Mulch should be crimped or tacked to prevent blowing.
2. Vegetative cover - see Standards for Temporary Vegetative Cover.
3. Tillage - to roughen surface and bring clods to the surface. This is an emergency measure which should be used before soil blowing starts. Begin plowing on windward side of site. Chisel-type plows spaced about 12 inches apart, spring-toothed harrows, and similar plows are examples of equipment which may produce the desired effect.
4. Irrigation - this is generally done as an emergency treatment. Site is sprinkled with water until the surface is moist. Repeat as needed. At no time should the site be irrigated to the point the runoff begins to flow.
5. Barriers - solid board fences, snow fences, burlap fences, straw bales, and similar material can be used to control air currents and soil blowing. Barriers placed at right angles to prevailing currents at intervals of about 10 times their height are affective in controlling soil blowing.
6. Calcium Chloride - apply at a rate that will keep surface moist. May need retreatment.

Permanent Methods:
1. Permanent Vegetation - see Standards for Vegetative Cover and Permanent Stabilization with sod. Existing trees or large shrubs may afford valuable protection if left in place.
2. Topsoiling - covering with less erosive soil material. See Standards for Topsoiling.
3. Stone - cover surface with crushed or coarse gravel.

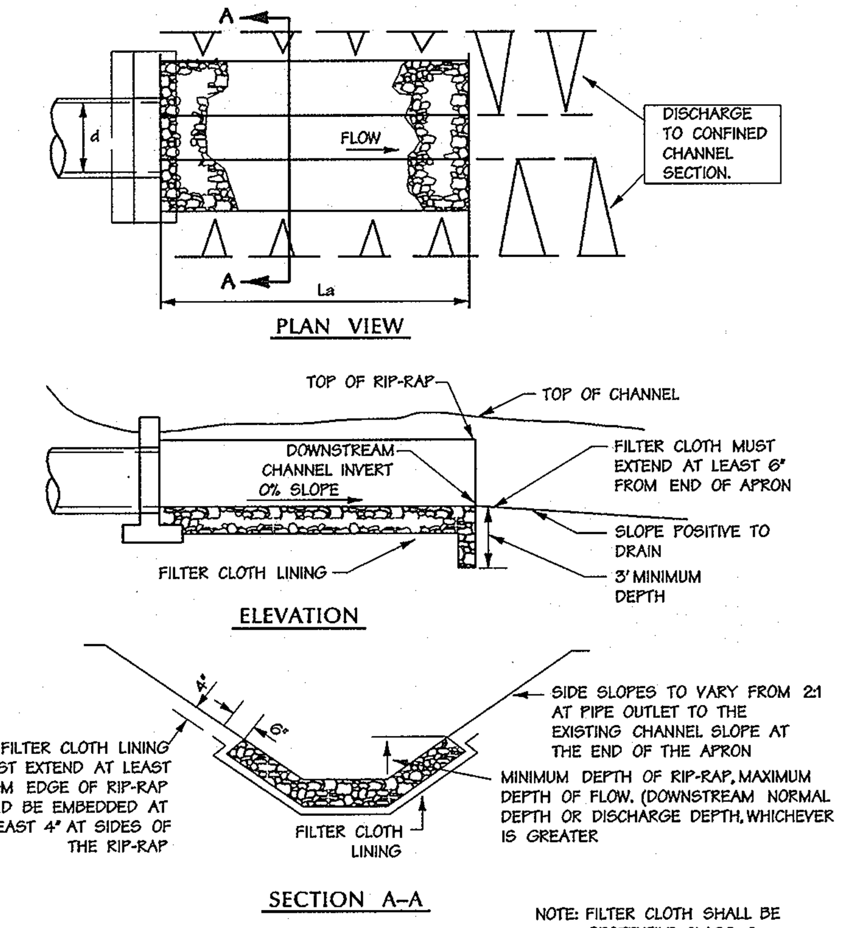

NOTE: FILTER CLOTH SHALL BE GEOTEXTILE CLASS C

U.S. DEPARTMENT OF AGRICULTURE SOIL CONSERVATION SERVICE — F - 18 - 9A — MARYLAND DEPARTMENT OF ENVIRONMENT WATER MANAGEMENT ADMINISTRATION

Rock Outlet Protection II

Not To Scale

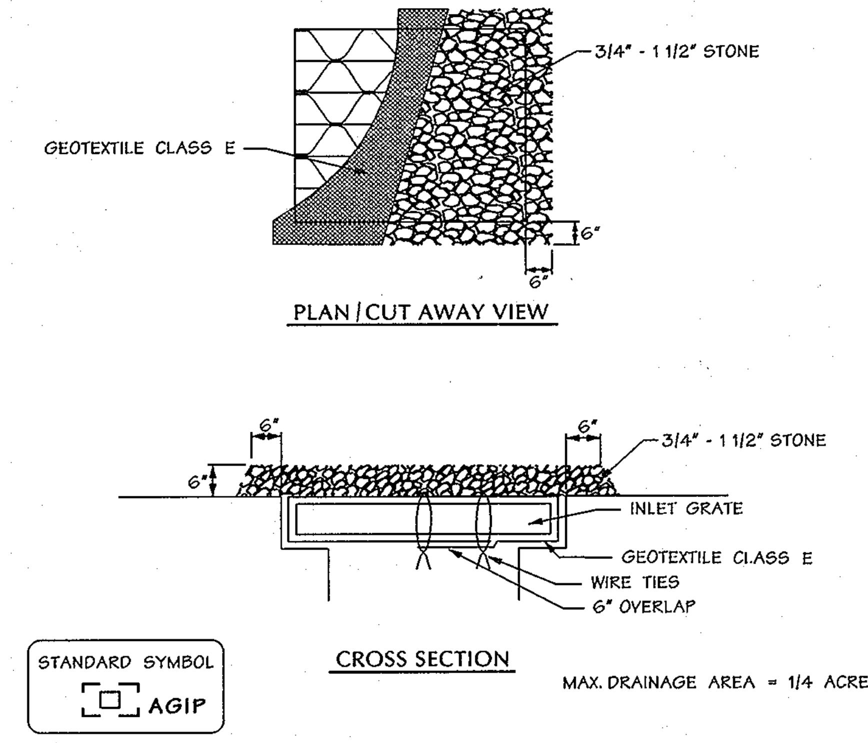

CONSTRUCTION SPECIFICATIONS

1. LIFT GRATE AND WRAP WITH GEOTEXTILE CLASS E TO COMPLETELY COVER ALL OPENINGS, THEN SET GRATE BACK IN PLACE.
2. PLACE ¾" TO 1½" STONE, 4"-6" THICK ON THE GRATE TO SECURE THE FABRIC AND PROVIDE ADDITIONAL FILTRATION.

U.S. DEPARTMENT OF AGRICULTURE SOIL CONSERVATION SERVICE — E - 16 - 5A — MARYLAND DEPARTMENT OF ENVIRONMENT WATER MANAGEMENT ADMINISTRATION

At Grade Inlet Protection

Not To Scale

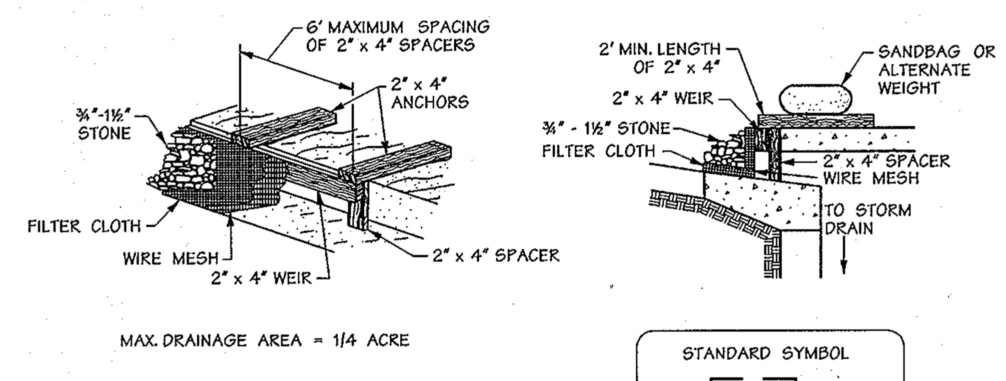

CONSTRUCTION SPECIFICATIONS

1. ATTACH A CONTINUOUS PIECE OF ½" x ½" WIRE MESH (30" MINIMUM WIDTH BY THROAT LENGTH PLUS 4') TO THE 2" x 4" WEIR (MEASURING THROAT LENGTH PLUS 2') AS SHOWN ON THE STANDARD DRAWING.
2. PLACE A CONTINUOUS PIECE OF GEOTEXTILE CLASS E THE SAME DIMENSIONS AS THE WIRE MESH OVER THE WIRE MESH AND SECURELY ATTACH IT TO THE 2" x 4" WEIR.
3. SECURELY NAIL THE 2" x 4" WEIR TO A 9" LONG VERTICAL SPACER TO BE LOCATED BETWEEN THE WEIR AND THE INLET FACE (MAX. 4' APART).
4. PLACE THE ASSEMBLY AGAINST THE INLET THROAT AND NAIL (MINIMUM 2' LENGTHS OF 2" x 4" TO THE TOP OF THE WEIR AT SPACER LOCATIONS). THESE 2" x 4" ANCHORS SHALL EXTEND ACROSS THE INLET TOP AND BE HELD IN PLACE BY SANDBAGS OR ALTERNATE WEIGHT.
5. THE ASSEMBLY SHALL BE PLACED SO THAT THE END SPACERS ARE A MINIMUM 1' BEYOND BOTH ENDS OF THE THROAT OPENING.
6. FORM THE ½" x ½" WIRE MESH AND THE GEOTEXTILE FABRIC TO THE CONCRETE GUTTER AND AGAINST THE FACE OF THE CURB ON BOTH SIDES OF THE INLET. PLACE CLEAN ¾" X 1½" STONE OVER THE WIRE MESH AND GEOTEXTILE IN SUCH A MANNER TO PREVENT WATER FROM ENTERING THE INLET UNDER OR AROUND THE GEOTEXTILE.
7. THIS TYPE OF PROTECTION MUST BE INSPECTED FREQUENTLY AND THE FILTER CLOTH AND STONE REPLACED WHEN CLOGGED WITH SEDIMENT.
8. ASSURE THAT STORM FLOW DOES NOT BYPASS THE INLET BY INSTALLING A TEMPORARY EARTH OR ASPHALT DIKE TO DIRECT THE FLOW OF THE INLET.

U.S. DEPARTMENT OF AGRICULTURE SOIL CONSERVATION SERVICE — E - 16 - 5B — MARYLAND DEPARTMENT OF ENVIRONMENT WATER MANAGEMENT ADMINISTRATION

Curb Inlet Protection (COG or COS Inlets)

Not To Scale

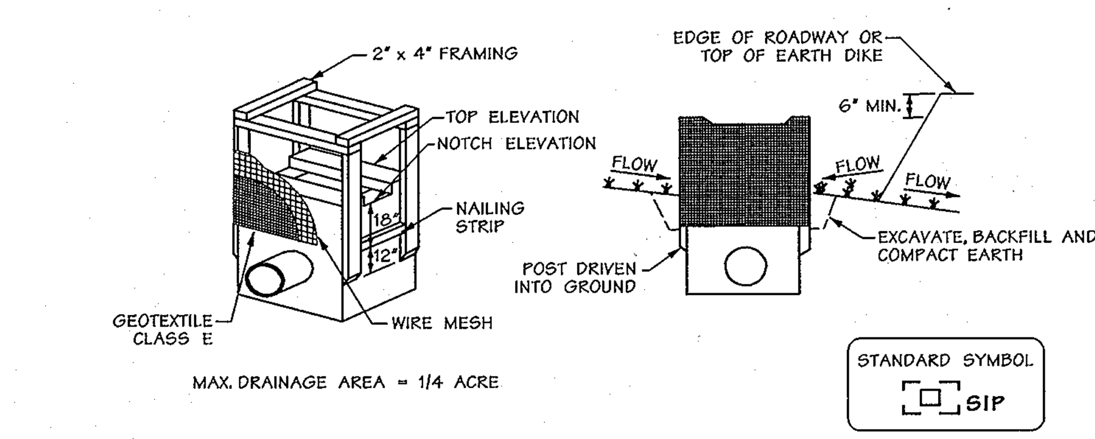

CONSTRUCTION SPECIFICATIONS

1. EXCAVATE COMPLETELY AROUND THE INLET TO A DEPTH OF 18" BELOW THE NOTCH ELEVATION.
2. DRIVE THE 2" x 4" CONSTRUCTION GRADE LUMBER POSTS 1' INTO THE GROUND AT EACH CORNER OF THE INLET. PLACE NAIL STRIPS BETWEEN THE POSTS ON THE ENDS OF THE INLET. ASSEMBLE THE TOP PORTION OF THE 2" x 4" FRAME USING THE OVERLAP JOINT SHOWN ON DETAIL. THE TOP OF THE FRAME (WEIR) MUST BE 6" BELOW ADJACENT ROADWAYS WHERE FLOODING AND SAFETY ISSUES MAY ARISE.
3. STRETCH THE ½" x ½" WIRE MESH TIGHTLY AROUND THE FRAME AND FASTEN SECURELY. THE ENDS MUST MEET AND OVERLAP AT A POST.
4. STRETCH THE GEOTEXTILE CLASS E TIGHTLY OVER THE WIRE MESH WITH THE GEOTEXTILE EXTENDING FROM THE TOP OF THE FRAME TO 18" BELOW THE INLET NOTCH ELEVATION. FASTEN THE GEOTEXTILE FIRMLY TO THE FRAME. THE ENDS OF THE GEOTEXTILE MUST MEET AT A POST, BE OVERLAPPED AND FOLDED, THEN FASTENED DOWN.
5. BACKFILL AROUND THE INLET IN COMPACTED 6" LAYERS UNTIL THE LAYER OF EARTH IS LEVEL WITH THE NOTCH ELEVATION ON THE ENDS AND TOP ELEVATION ON THE SIDES.
6. IF THE INLET IS NOT IN A SUMP, CONSTRUCT A COMPACTED EARTH DIKE ACROSS THE DITCH LINE DIRECTLY BELOW IT. THE TOP OF THE EARTH DIKE SHOULD BE AT LEAST 6" HIGHER THAN THE TOP OF THE FRAME.
7. THE STRUCTURE MUST BE INSPECTED PERIODICALLY AND AFTER EACH RAIN AND THE GEOTEXTILE REPLACED WHEN IT BECOMES CLOGGED.

U.S. DEPARTMENT OF AGRICULTURE SOIL CONSERVATION SERVICE — E - 16 - 5 — MARYLAND DEPARTMENT OF ENVIRONMENT WATER MANAGEMENT ADMINISTRATION

Standard Inlet Protection

Not To Scale

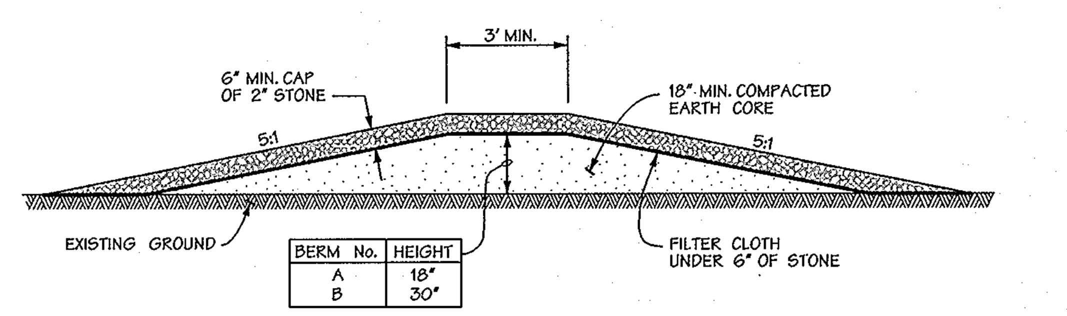

BERM No.	HEIGHT
A	18"
B	30"

FILTER CLOTH SHALL BE GEOTEXTILE CLASS 'C', OR BETTER

Sedctrl.cel / F175

Mountable Berm Detail

NOT TO SCALE

AS BUILT NOT REQUIRED

SURVEY SERVICES OF MD, LLC
BY: ROBERT W. MATIS - RLS 605

SILT FENCE DESIGN CRITERIA

SLOPE STEEPNESS	(MAXIMUM) SLOPE LENGTH	(MAXIMUM) SILT FENCE LENGTH
FLATTER THAN 50:1 (2%)	UNLIMITED	UNLIMITED
50:1 TO 10:1 (2-10%)	125 FEET	1,000 FEET
10:1 TO 5:1 (10-20%)	100 FEET	750 FEET
5:1 TO 3:1 (20-33%)	60 FEET	500 FEET
3:1 TO 2:1 (33-50%)	40 FEET	250 FEET
2:1 AND STEEPER (> 50%)	20 FEET	125 FEET

NOTE: IN AREAS OF LESS THAN 2% SLOPE AND SANDY SOILS (USDA GENERAL CLASSIFICATION SYSTEM, SOIL CLASS A) MAXIMUM SLOPE LENGTH AND SILT FENCE LENGTH WILL BE UNLIMITED. IN THESE AREAS A SILT FENCE MAY BE THE ONLY PERIMETER CONTROL REQUIRED

U.S. DEPARTMENT OF AGRICULTURE SOIL CONSERVATION SERVICE — E - 15 - 3A — MARYLAND DEPARTMENT OF ENVIRONMENT WATER MANAGEMENT ADMINISTRATION

Silt Fence

This development plan is approved for soil erosion and sediment control by the Howard Soil Conservation District.

[signature] 8/5/10
Howard Soil Conservation District — Date

APPROVED: HOWARD COUNTY DEPT. OF PUBLIC WORKS

[signature] 10-8-10
CHIEF, BUREAU OF HIGHWAYS — DATE

APPROVED: HOWARD COUNTY DEPT. OF PLANNING AND ZONING

[signature] 11-18-10
CHIEF, DIVISION OF LAND DEVELOPMENT — DATE
[signature] 11/18/10
DIRECTOR — DATE
[signature] 11/16/10
CHIEF, DEVELOPMENT ENGINEERING DIVISION — DATE

Date	No.	Revision Description

EMERSON PARCEL F-1 REVITZ PROPERTY

5-STORY COMMERCIAL OFFICE BUILDING

OWNER/DEVELOPER:
EMERSON DEVELOPMENT VII LLC
1 TEXAS STATION COURT
SUITE 200
TIMONIUM, MARYLAND 21093-8288

DMW
DAFT McCUNE WALKER INC
200 EAST PENNSYLVANIA AVENUE • TOWSON, MD 21286
P: 410 296 3333 F: 410 296 4705 WWW.DMW.COM
A TEAM OF LAND PLANNERS, LANDSCAPE ARCHITECTS, ENGINEERS, SURVEYORS & ENVIRONMENTAL PROFESSIONALS

SUBDIVISION NAME	SECTION/AREA	LOT/PARCEL #
REVITZ PROPERTY		LOT F-1 / PAR. 165

PLAT# OR L/F	BLOCK #	ZONE	TAX/ZONE MAP	ELECT. DISTRICT	CENSUS TRACT
21277-8	20	PEC	47	6	6903

WATER CODE — SEWER CODE

TITLE: EROSION & SEDIMENT CONTROL DETAILS

8-9-10
Date

PROFESSIONAL CERTIFICATION
I HEREBY CERTIFY THAT THESE DOCUMENTS WERE PREPARED OR APPROVED BY ME, AND THAT I AM A DULY LICENSED PROFESSIONAL ENGINEER UNDER THE LAWS OF THE STATE OF MARYLAND, LICENSE NO. 8061, EXPIRATION DATE: 08-26-2011

Professional Engr. No. 8061

Des. By	JDF/RJD	Scale	1"=50'	Proj. No.	95054.10
Drn. By	CRH/JSS	Date	07-16-10	10 of ~~18~~ 20	
Chk. By		Approved			

SDP-10-096

P:\95054\95054.1\ENGR\95054ISDP09.SC2 Aug 09 09:42:32 2010
Mon Aug 09 09:42:32 2010 95054.1\ENGR\95054ISDP09.SC2
8/9/2010 9:44:27 AM jsmith c:\hpm\95054ISDP09.prf P:\95054\95054.1\ENGR\95054ISDP09.SC2 95054ISDP09.SC2

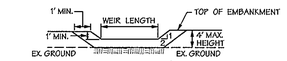

SECTION B-B

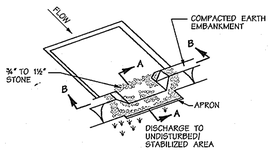

PERSPECTIVE VIEW

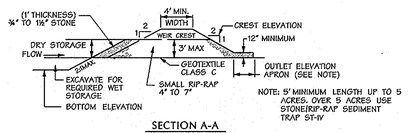

SECTION A-A

U.S. DEPARTMENT OF AGRICULTURE SOIL CONSERVATION SERVICE — C - 9 - 10 — MARYLAND DEPARTMENT OF ENVIRONMENT WATER MANAGEMENT ADMINISTRATION

Stone Outlet Sediment Trap - ST II

Not To Scale

CONSTRUCTION SPECIFICATIONS

1. AREA UNDER EMBANKMENT SHALL BE CLEARED, GRUBBED AND STRIPPED OF ANY VEGETATION AND ROOT MAT. THE POOL AREA SHALL BE CLEARED.
2. THE FILL MATERIAL FOR THE EMBANKMENT SHALL BE FREE OF ROOTS AND OTHER WOODY VEGETATION AS WELL AS OVER-SIZED STONES, ROCKS, ORGANIC MATERIAL OR OTHER OBJECTIONABLE MATERIAL. THE EMBANKMENT SHALL BE COMPACTED BY TRAVERSING WITH EQUIPMENT WHILE IT IS BEING CONSTRUCTED.
3. ALL CUT AND FILL SLOPES SHALL BE 2:1 OR FLATTER.
4. THE STONE USED IN THE OUTLET SHALL BE SMALL RIP-RAP 4" TO 7" IN SIZE WITH A 1' THICK LAYER OF ¾" TO 1½" WASHED AGGREGATE PLACED ON THE UPSTREAM FACE OF THE OUTLET. STONE FACING SHALL BE WASHED AS NECESSARY TO PREVENT CLOGGING. GEOTEXTILE CLASS C MAY BE SUBSTITUTED FOR THE STONE FACING BY PLACING IT ON THE INSIDE FACE OF THE STONE OUTLET.
5. SEDIMENT SHALL BE REMOVED AND TRAP RESTORED TO ITS ORIGINAL DIMENSIONS WHEN THE SEDIMENT HAS ACCUMULATED TO ONE HALF OF THE WET STORAGE DEPTH OF THE TRAP. REMOVED SEDIMENT SHALL BE DEPOSITED IN A SUITABLE AREA AND IN SUCH A MANNER THAT IT WILL NOT ERODE.
6. THE STRUCTURE SHALL BE INSPECTED PERIODICALLY AND AFTER EACH RAIN AND REPAIRS MADE AS NEEDED.
7. CONSTRUCTION OF TRAPS SHALL BE CARRIED OUT IN SUCH A MANNER THAT SEDIMENT POLLUTION IS ABATED. ONCE CONSTRUCTED, THE TOP AND OUTSIDE FACE OF THE EMBANKMENT SHALL BE STABILIZED WITH SEED AND MULCH. POINTS OF CONCENTRATION INFLOW SHALL BE PROTECTED IN ACCORDANCE WITH GRADE STABILIZATION STRUCTURE CRITERIA. THE REMAINDER OF THE INTERIOR SLOPES SHOULD BE STABILIZED (ONE TIME) WITH SEED AND MULCH UPON TRAP COMPLETION AND MONITORED AND MAINTAINED EROSION FREE DURING THE LIFE OF THE TRAP.
8. THE STRUCTURE SHALL BE DEWATERED BY APPROVED METHODS, REMOVED AND THE AREA STABILIZED WHEN THE DRAINAGE AREA HAS BEEN PROPERLY STABILIZED.
9. REFER TO SECTION D FOR SPECIFICATIONS CONCERNING TRAP DEWATERING.
10. MINIMUM TRAP DEPTH SHALL BE MEASURED FROM THE WEIR ELEVATION.
11. THE ELEVATION OF THE TOP OF ANY DIKE DIRECTING WATER INTO THE TRAP MUST EQUAL OR EXCEED THE ELEVATION OF THE TRAP EMBANKMENT.
12. GEOTEXTILE CLASS C SHALL BE PLACED OVER THE BOTTOM AND SIDES OF THE OUTLET CHANNEL PRIOR TO THE PLACEMENT OF STONE. SECTIONS OF FILTER CLOTH MUST OVERLAP AT LEAST 1' WITH THE SECTION NEAREST THE ENTRANCE PLACED ON TOP. THE FILTER CLOTH SHALL BE EMBEDDED AT LEAST 6" INTO EXISTING GROUND AT THE ENTRANCE OF THE OUTLET CHANNEL.
13. OUTLET - AN OUTLET SHALL BE PROVIDED, INCLUDING A MEANS OF CONVEYING THE DISCHARGE IN AN EROSION FREE MANNER TO AN EXISTING STABLE CHANNEL.

U.S. DEPARTMENT OF AGRICULTURE SOIL CONSERVATION SERVICE — C - 9 - 10A — MARYLAND DEPARTMENT OF ENVIRONMENT WATER MANAGEMENT ADMINISTRATION

Stone Outlet Sediment Trap - ST II

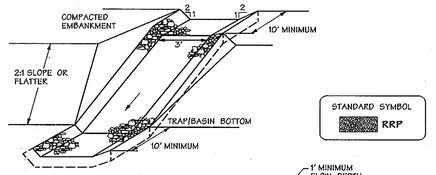

PERSPECTIVE VIEW

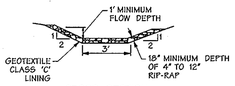

CROSS SECTION

CONSTRUCTION SPECIFICATIONS

1. RIP-RAP LINED INFLOW CHANNELS SHALL BE 1' IN DEPTH, HAVE A TRAPEZOIDAL CROSS SECTION WITH 2:1 OR FLATTER SIDE SLOPES AND 3' (MIN.) BOTTOM WIDTH. THE CHANNEL SHALL BE LINED WITH 4" TO 12" RIP-RAP TO A DEPTH OF 18".
2. FILTER CLOTH SHALL BE INSTALLED UNDER ALL RIP-RAP. FILTER CLOTH SHALL BE GEOTEXTILE CLASS C.
3. ENTRANCE AND EXIT SECTIONS SHALL BE INSTALLED AS SHOWN ON THE DETAIL SECTION.
4. RIP-RAP USED FOR THE LINING MAY BE RECYCLED FOR PERMANENT OUTLET PROTECTION IF THE BASIN IS TO BE CONVERTED TO A STORMWATER MANAGEMENT FACILITY.
5. GABION INFLOW PROTECTION MAY BE USED IN LIEU OF RIP-RAP INFLOW PROTECTION.
6. RIP-RAP SHOULD BLEND INTO EXISTING GROUND.
7. RIP-RAP INFLOW PROTECTION SHALL BE USED WHERE THE SLOPE IS BETWEEN 4:1 AND 10:1. FOR SLOPES FLATTER THAN 10:1 USE EARTH DIKE OR TEMPORARY SWALE LINING CRITERIA.

U.S. DEPARTMENT OF AGRICULTURE SOIL CONSERVATION SERVICE — B - 6 - 2 — MARYLAND DEPARTMENT OF ENVIRONMENT WATER MANAGEMENT ADMINISTRATION

RipRap Inflow Protection

Not To Scale

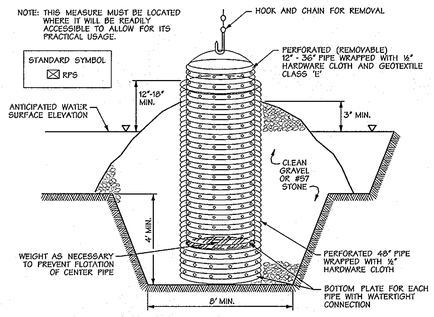

ELEVATION (CUT AWAY)

CONSTRUCTION SPECIFICATIONS

1. THE OUTER PIPE SHOULD BE 48" DIAMETER OR SMALL, IN ANY CASE, BE AT LEAST 4" GREATER IN DIAMETER THAN THE CENTER PIPE. THE OUTER PIPE SHALL BE WRAPPED WITH ½" HARDWARE CLOTH TO PREVENT BACKFILL MATERIAL FROM ENTERING THE PERFORATIONS.
2. AFTER INSTALLING THE OUTER PIPE, BACKFILL AROUND OUTER PIPE WITH 2" AGGREGATE OR CLEAN GRAVEL.
3. THE INSIDE STAND PIPE (CENTER PIPE) SHOULD BE CONSTRUCTED BY PERFORATING A CORRUGATED OR PVC PIPE BETWEEN 12" AND 36" IN DIAMETER. THE PERFORATIONS SHALL BE ½" x 6" SLITS OR 1" DIAMETER HOLES 6" ON CENTER. THE CENTER PIPE SHALL BE WRAPPED WITH ½" HARDWARE CLOTH FIRST, THEN WRAPPED AGAIN WITH GEOTEXTILE CLASS E.
4. THE CENTER PIPE SHOULD EXTEND 12" TO 18" ABOVE THE ANTICIPATED WATER SURFACE ELEVATION OR RISER CREST ELEVATION WHEN DEWATERING A BASIN.

U.S. DEPARTMENT OF AGRICULTURE SOIL CONSERVATION SERVICE — D - 12 - 5 — MARYLAND DEPARTMENT OF ENVIRONMENT WATER MANAGEMENT ADMINISTRATION

Removable Pumping Station

NOT TO SCALE

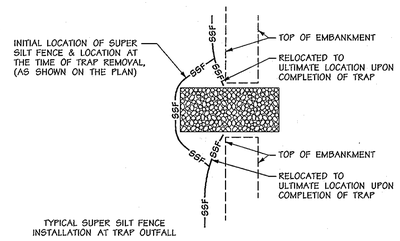

TYPICAL SUPER SILT FENCE INSTALLATION AT TRAP OUTFALL

Super Silt Fence Outfall Protection

Not To Scale

AS BUILT
NOT REQUIRED

SURVEY SERVICES OF MD., LLC
BY: ROBERT W. MATIS - RLS-605

STATE OF MARYLAND — ROBERT WILLIAM MATIS — No. 605 — REGISTERED PROPERTY LINE SURVEYOR

STATE OF MARYLAND — MELVIN CHARLES BEALL JR. — No. 16825 — REGISTERED PROFESSIONAL ENGINEER

AS-BUILT CERTIFICATION FOR PSWM

NOTE: THERE IS NO "AS-BUILT" INFORMATION PROVIDED ON THIS SHEET.

SIGNED _____ 5/23/12 P.E.# 16825
MELVIN CHARLES BEALL, JR.

PROFESSIONAL CERTIFICATION

I HEREBY CERTIFY THAT THESE DOCUMENTS WERE PREPARED OR APPROVED BY ME, AND THAT I AM A DULY LICENSED PROFESSIONAL ENGINEER UNDER THE LAWS OF THE STATE OF MARYLAND, LICENSE NO. 8061, EXPIRATION DATE: 08-26-2011.

8-9-10
Date

STATE OF MARYLAND — JOHN DAVID FRIEDMAN — No. 8061 — REGISTERED PROFESSIONAL ENGINEER

Professional Engr. No. 8061

This development plan is approved for soil erosion and sediment control by the Howard Soil Conservation District.

John R Robertson — Howard Soil Conservation District — 8/5/10 Date

APPROVED: HOWARD COUNTY DEPT. OF PUBLIC WORKS

CHIEF, BUREAU OF HIGHWAYS — 10-8-10 DATE

APPROVED: HOWARD COUNTY DEPT. OF PLANNING AND ZONING

CHIEF, DIVISION OF LAND DEVELOPMENT — 11-18-10 DATE
DIRECTOR — 11/18/10 DATE
CHIEF, DEVELOPMENT ENGINEERING DIVISION — 11/16/10 DATE

Date	No.	Revision Description

EMERSON PARCEL F-1 REVITZ PROPERTY

5-STORY COMMERCIAL OFFICE BUILDING

OWNER/DEVELOPER:
EMERSON DEVELOPMENT VII LLC
1 TEXAS STATION COURT
SUITE 200
TIMONIUM, MARYLAND 21093-8288

DMW
DAFT McCUNE WALKER INC
200 EAST PENNSYLVANIA AVENUE • TOWSON, MD 21286
P: 410 296 3333 F: 410 296 4705 WWW.DMW.COM
A TEAM OF LAND PLANNERS, LANDSCAPE ARCHITECTS, ENGINEERS, SURVEYORS & ENVIRONMENTAL PROFESSIONALS

SUBDIVISION NAME		SECTION/AREA		LOT/PARCEL #
REVITZ PROPERTY				LOT F-1 / PAR. 165
PLAT # OR L/F	BOOK # / ZONE	TAX/ZONE MAP	ELECT. DISTRICT	CENSUS TRACT
21278/20	PEC	47	6	6903
WATER CODE		SEWER CODE		

TITLE: **EROSION & SEDIMENT CONTROL DETAILS**

Des. By	JDF/RJD	Scale	1"=50'
Dm. By	CRH/JSS	Date	07-16-10
Chk. By		Approved	

Proj. No. 95054.10

11 of 18 20

SDP-10-096

F:\95054\95054.1\ENGR\95054SDP11.SC4 Aug 09 09:40:02 2010

Mon Aug 09 09:40:02 2010 J:\projects\95054\95054.1\ENGR\95054SDP11.SC4

8/9/2010 9:46:16 AM jmyh o:\hpm\95054\SDP11.prf P:\95054\95054.1\ENGR\95054SDP11.SC4 95054SDP11.SC4

SOILS CLASSIFICATION

Symbol	Soil Type	Slope	K-factor	Hydraulic Group	Comments
Fa	Fallsington sandy loam	0-2%	.02	D	Hydric
SaB	Sassafras loam	2-5%	.37	B	
SaC	Sassafras loam	5-10%	.24	B	
WoB	Woodstown sandy loam	2-5%	.24	C	Hydric

DRAINAGE AREAS

DA LABEL	DA SIZE (ac.)	COEFF. C	IMP. (%)
A	0.16	0.33	90%
B	0.25	0.37	88%
C	1.54	1.27	95%
D	0.30	0.42	97%
E	0.42	0.49	93%
F	0.19	0.34	100%
G	0.56	0.27	16%
H	0.09	0.27	100%
I	0.14	0.31	100%
J	0.12	0.29	100%
K	0.51	0.27	18%
L	0.73	0.73	96%
M	0.53	0.28	21%
N	0.09	0.27	100%
O	0.13	0.30	100%
P	0.12	0.29	100%
Q	0.52	0.28	19%
R	0.05	0.24	100%
S	0.27	0.44	90%
T	0.76	0.67	91%
U	0.30	0.29	95%
V	0.26	0.40	93%
W	0.27	0.40	96%
X	0.27	0.40	96%
Y	0.14	0.31	100%
Z	16.14	9.88	80%
ZZ	0.15	0.25	0%

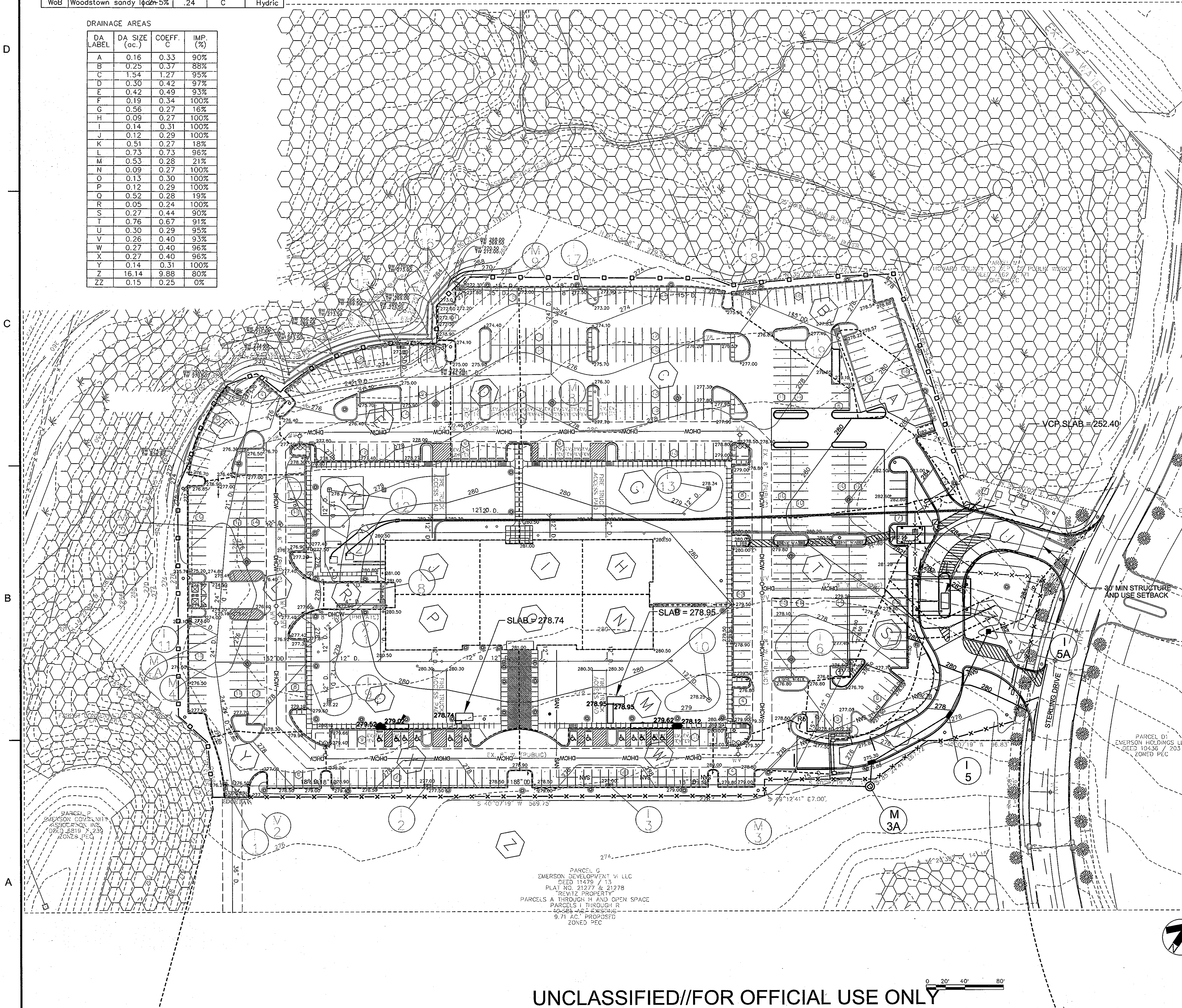

LEGEND

- PLATTED PROPERTY BOUNDARY
- PROPERTY BOUNDARY
- EX. RIGHT OF WAY
- ADJACENT PROPERTY BOUNDARY
- EX. ROADS AND WALKS
- 280 — EX. MAJOR CONTOUR
- EX. MINOR CONTOUR
- FOREST CONSERVATION EASEMENT
- PROP. BUILDING
- PROP. CURB / EDGE OF PAVING
- PROP. DEPRESSED CURB
- 280 — PROP. MAJOR CONTOUR
- PROP. MINOR CONTOUR
- PROP. GROUP LIGHT (BY OTHERS)
- PROP. SINGLE LIGHT (BY OTHERS)
- PROP. LIGHT (BY OTHERS)
- PROP. DRAINAGE DIVIDES
- SOIL LIMITS
- A — DRAINAGE AREA LABEL
- 12" D. — PROP. STORMDRAINS
- 6" S. — PROP. SANITARY SEWER
- 6" W. — PROP. WATER

PROFESSIONAL CERTIFICATION

I HEREBY CERTIFY THAT THESE DOCUMENTS WERE PREPARED OR APPROVED BY ME, AND THAT I AM A DULY LICENSED PROFESSIONAL ENGINEER UNDER THE LAWS OF THE STATE OF MARYLAND, LICENSE NO. 22350 EXPIRATION DATE: 05/22/2015

STATE OF MARYLAND — BRADFORD D. WEINERT — NO. 22350 — PROFESSIONAL ENGINEER

7/3/13

APPROVED: HOWARD COUNTY DEPT. OF PLANNING AND ZONING

CHIEF, DIVISION OF LAND DEVELOPMENT — DATE 7/11/13

CHIEF, DEVELOPMENT ENGINEERING DIVISION — DATE 7/9/13

DIRECTOR — DATE 7/10/13

Date	No.	Revision Description

EMERSON PARCEL F-1
REVITZ PROPERTY

5-STORY COMMERCIAL OFFICE BUILDING

OWNER DEVELOPER:
EMERSON DEVELOPMENT VII LLC
1 TEXAS STATION COURT, SUITE 200
TIMONIUM, MARYLAND 21093-8288
(443) 689-8000

SUBDIVISION NAME	SECTION AREA	LOT PARCEL #
REVITZ PROPERTY		LOT F-1 / PAR. 165

PLAT# OR L F	BLOCK#	ZONE	TAX ZONE MAP	ELECT. DISTRICT	CENSUS TRACT
21277 & 21278	20	PEC	47	6	6903

WATER CODE ________ SEWER CODE ________

TITLE

STORM DRAINAGE AREA AND SOILS MAP

Des. By	Scale 1"=50'	Proj. No.95054.10
Drn. By	Date 07-05-13	12 of 20
Chk. By	Approved	

US Army Corps of Engineers
Baltimore District

REAL PROPERTY SERVICES FIELD OFFICE
ANNAPOLIS JUNCTION, MARYLAND

JACOBS
1100 N.GLEBE RD., ARLINGTON, VA, 22201
(571) 218-1000

THE INFORMATION PROVIDED HEREIN IS THE PROPERTY OF THE UNITED STATES GOVERNMENT. IT IS PROVIDED ONLY FOR THE PURPOSE STATED IN THE ACCOMPANYING DOCUMENT. DISTRIBUTION OF THIS DOCUMENT AND THE INFORMATION CONTAINED HEREIN IS LIMITED TO THE RECIPIENT SPECIFIED IN THE ACCOMPANYING DOCUMENT. REPRODUCTION OR DISSEMINATION OF THIS DOCUMENT OR OF THE INFORMATION CONTAINED HEREIN IN WHOLE OR IN PART IN ANY MEDIUM WITHOUT THE APPROVAL OF THE UNITED STATES GOVERNMENT IS STRICTLY PROHIBITED. VIOLATORS OF THIS REQUIREMENT WILL BE PROSECUTED TO THE FULLEST EXTENT OF THE LAW.

Mark	Description	Date	Appr.
	REDLINE REVISION: Perimeter fencing	7/13	

Designed by: | Dwn by: | Ckd by: | Date: JULY 10, 2013 | Rev. -
Project No. 27877
RSFO Project Manager CHARLES CANITZ
Submitted by: NATHAN JAMES PROJECT MANAGER
File name: | Plot date: | Plot scale:

EMERSON - PERIMETER SECURITY AND SITE
STORM DRAINAGE AREA AND SOILS MAP
ROOM(S) OR FLOOR — LAUREL, MD

Drawing No.

Sheet Reference No. 12 OF 20

Sheet of 45

SDP-10-096

UNCLASSIFIED//FOR OFFICIAL USE ONLY

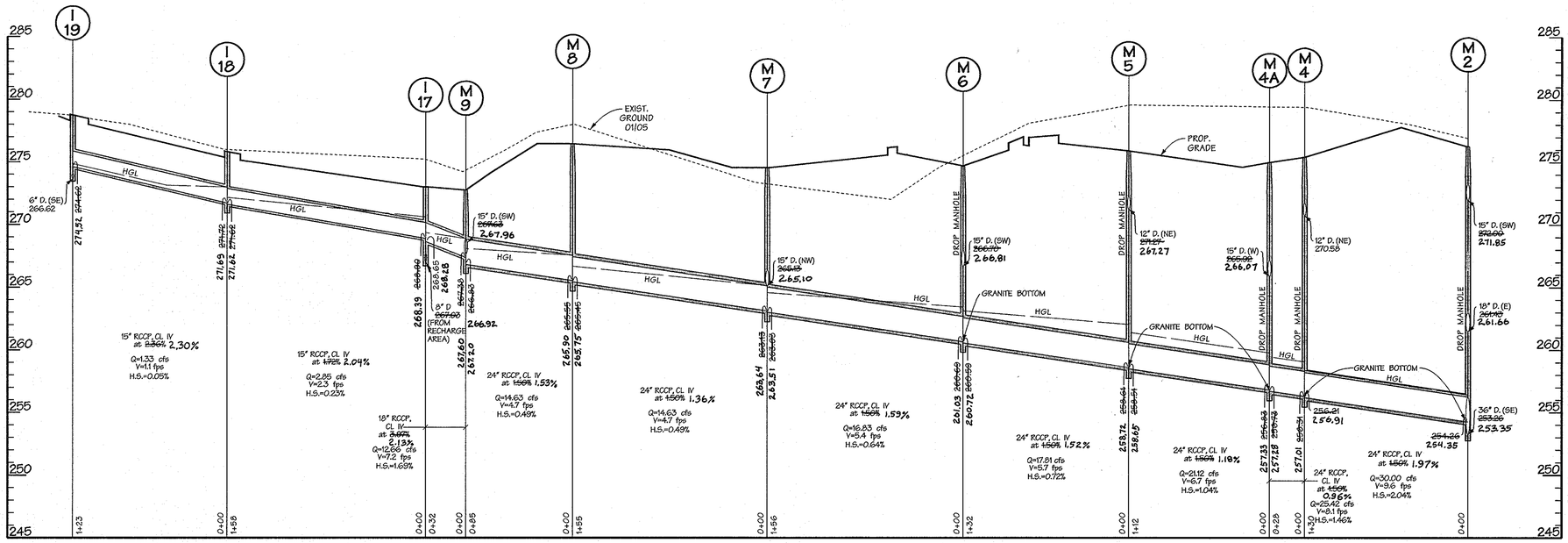

PROFILES

SCALE: HORIZ. 1"=50'
VERT. 1"=5'

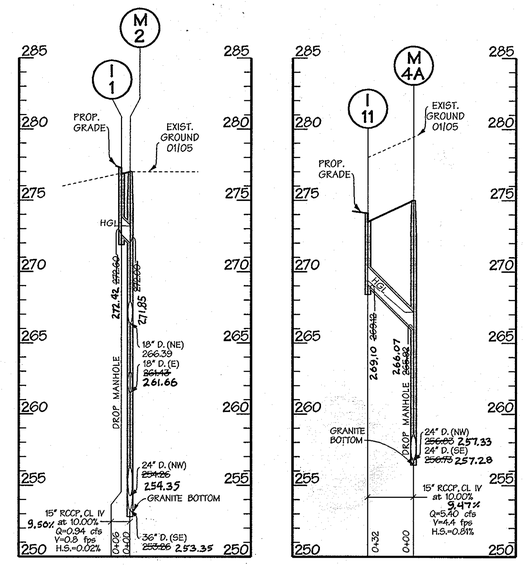

AS BUILT
REQUIRED
SEE REDLINES SHOWN HEREON

SURVEY SERVICES OF MD., LLC
BY: ROBERT W. MATIS - RLS 605

AS-BUILT CERTIFICATION FOR PSWM

I HEREBY CERTIFY THAT THE FACILITY SHOWN ON THE PLAN WAS CONSTRUCTED AS SHOWN ON THE "AS-BUILT" PLANS AND COMPLIES WITH THE APPROVED PLANS AND SPECIFICATIONS. I HAVE VERIFIED THAT THE CONTRIBUTING DRAINAGE AREA IS SUFFICIENTLY STABILIZED TO PREVENT CLOGGING OF THE UNDERGROUND SWM FACILITY.

SIGNED _____ 5/23/12 PE.# 16028
MELVIN CHARLES BEALL, JR. AS BUILT DATE: 7-26-11

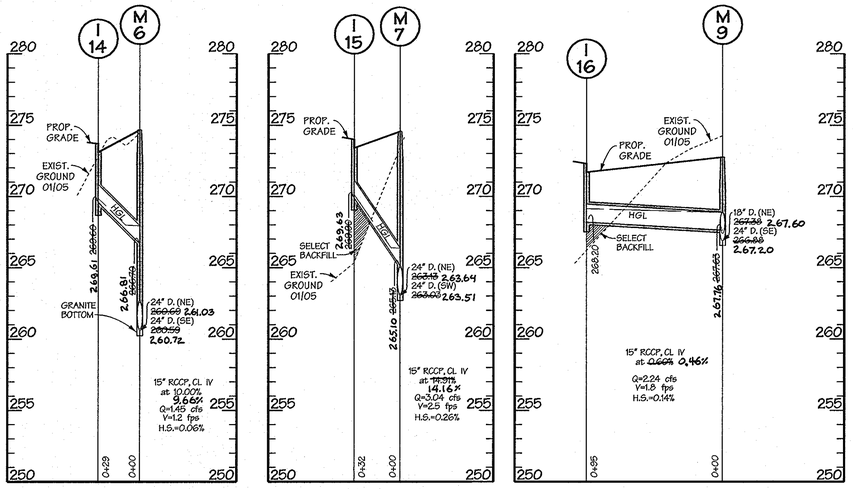

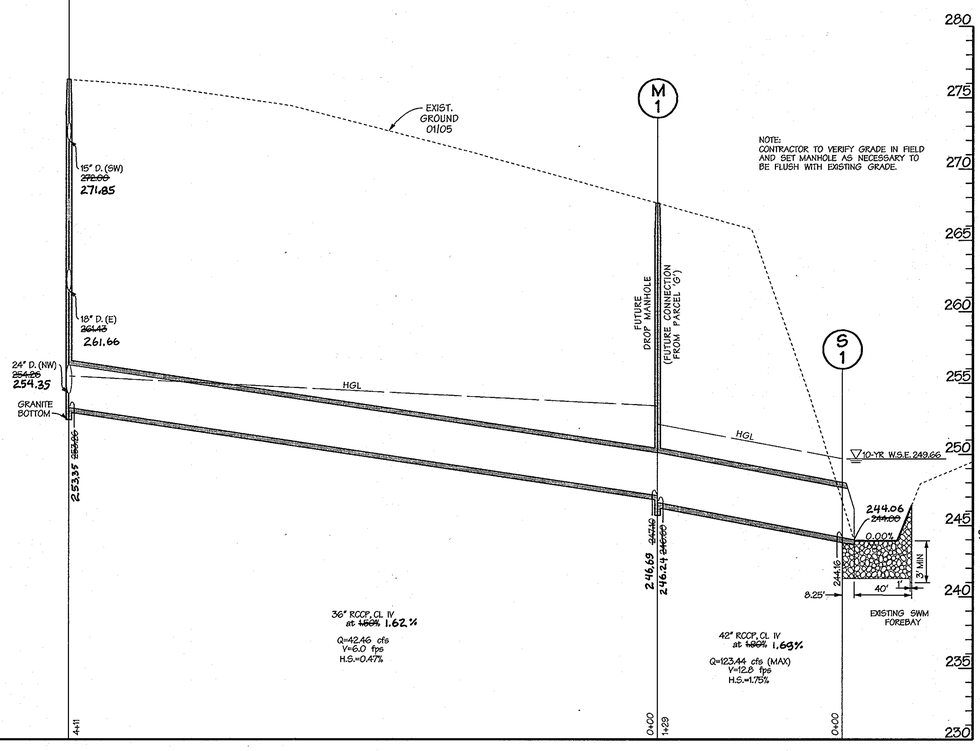

PROFILES

SCALE: HORIZ. 1"=50'
VERT. 1"=5'

SURVEY SERVICES OF MD., LLC
408 ALLEGHENY AVENUE
TOWSON, MD. 21204
410-321-8692
410-321-8693 (FAX)

10-4-10
Date

Professional Engr. No. 8061

PROFESSIONAL CERTIFICATION

I HEREBY CERTIFY THAT THESE DOCUMENTS WERE PREPARED OR APPROVED BY ME, AND THAT I AM A DULY LICENSED PROFESSIONAL ENGINEER UNDER THE LAWS OF THE STATE OF MARYLAND, LICENSE NO. 8061, EXPIRATION DATE: 08-26-2011

APPROVED: HOWARD COUNTY DEPT. OF PUBLIC WORKS
CHIEF, BUREAU OF HIGHWAYS — DATE 10-8-10

APPROVED: HOWARD COUNTY DEPT. OF PLANNING AND ZONING
CHIEF, DIVISION OF LAND DEVELOPMENT — DATE 11-18-10
DIRECTOR — DATE 11-18-10
CHIEF, DEVELOPMENT ENGINEERING DIVISION — DATE 11/16/10

Date	No.	Revision Description

EMERSON PARCEL F-1
REVITZ PROPERTY

5-STORY COMMERCIAL OFFICE BUILDING

OWNER/DEVELOPER:
EMERSON DEVELOPMENT VII LLC
1 TEXAS STATION COURT
SUITE 200
TIMONIUM, MARYLAND 21093-8288

DMW
DAFT McCUNE WALKER INC
200 EAST PENNSYLVANIA AVENUE • TOWSON, MD 21286
P:410 296 3333 F:410 296 4705 WWW.DMW.COM
A TEAM OF LAND PLANNERS, LANDSCAPE ARCHITECTS, ENGINEERS, SURVEYORS & ENVIRONMENTAL PROFESSIONALS

SUBDIVISION NAME		SECTION/AREA		LOT/PARCEL #
REVITZ PROPERTY				LOT F-1 / PAR. 165
PLAT OR L/F	BLOCK #	ZONE	TAX/ZONE MAP	ELECT. DISTRICT	CENSUS TRACT
21277 & 21278	20	PEC	47	6	6903
WATER CODE		SEWER CODE			

TITLE
STORM DRAIN PROFILES
"AS BUILT" PROFILES - 7-26-11

Des. By	LNL	Scale	1"=50'	Proj. No.	95054.10
Drn. By	JSS	Date	09-29-10	13 of 18	
Chk. By		Approved			

SDP-10-096

20

Wed Sep 29 15:26:05 2010 P:\95054\95054.10\ENGR\95054SDP13.SDI
9229/2010 3:26:21 PM jsmith c:\hpm\95054SDP13.prf P:\95054\95054.10\ENGR\95054SDP13.SDI 95054SDP13.DWG Sep 29 15:26:05 2010

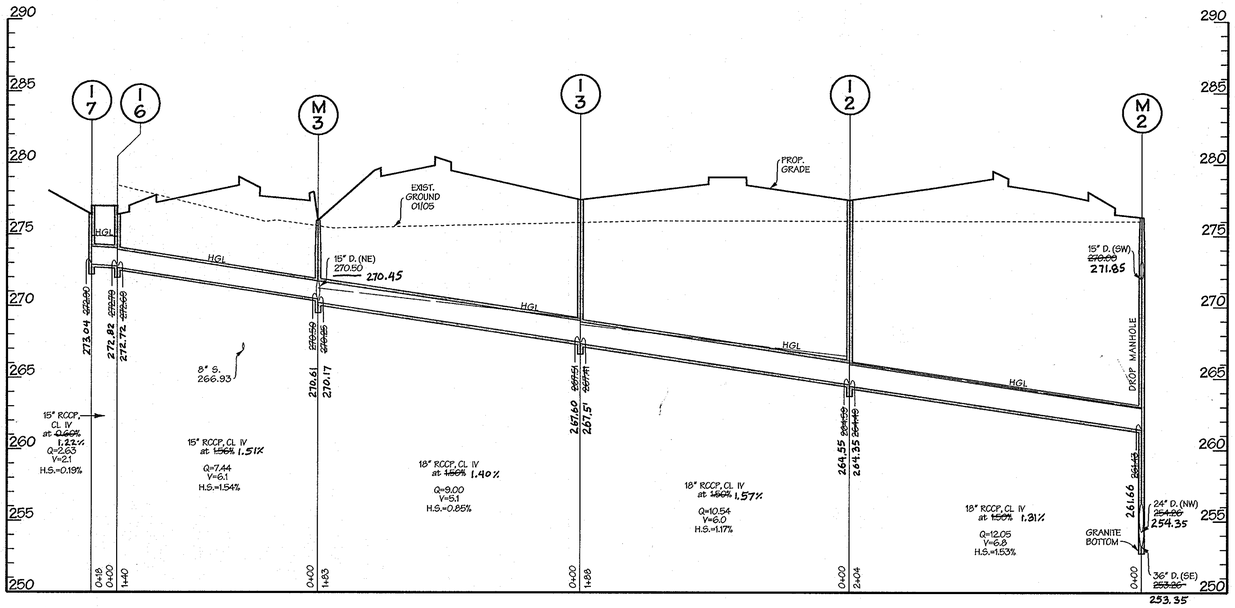

PROFILES

SCALE: HORIZ. 1"=50'
VERT. 1"=5'

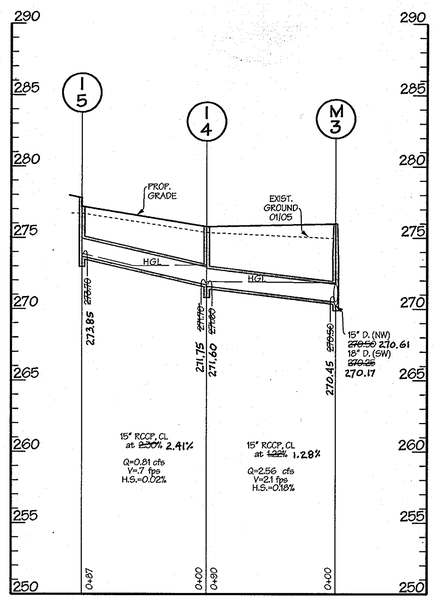

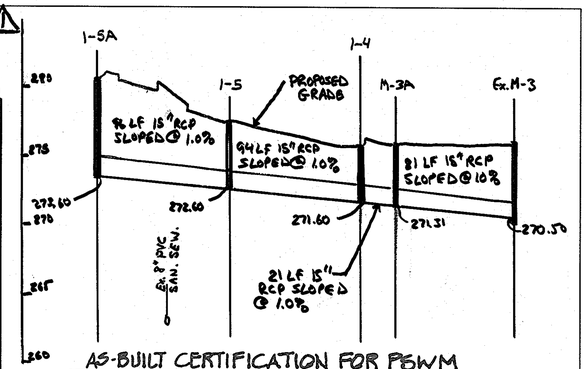

AS-BUILT CERTIFICATION FOR PSWM

I HEREBY CERTIFY THAT THE FACILITY SHOWN ON THE PLAN WAS CONSTRUCTED AS SHOWN ON THE "AS-BUILT" PLANS AND COMPLIES WITH THE APPROVED PLANS AND SPECIFICATIONS. I HAVE VERIFIED THAT THE CONTRIBUTING DRAINAGE AREA IS SUFFICIENTLY STABILIZED TO PREVENT CLOGGING OF THE UNDERGROUND SWM FACILITY.

SIGNED: _____ 5/23/12 PE # 16928
MELVIN CHARLES BEAUCHAMP, JR. AS-BUILT DATE: 7-26-11

STATE OF MARYLAND — MELVIN CHARLES BEAUCHAMP JR. — No. 16928 — REGISTERED PROFESSIONAL ENGINEER

AS BUILT REQUIRED
SEE REDLINES SHOWN HEREON

STATE OF MARYLAND — ROBERT WILLIAM MATIS — No. 605 — REGISTERED PROFESSIONAL LAND SURVEYOR

SURVEY SERVICES OF MD., LLC
BY: ROBERT W. MATIS - RLS 605

STATE OF MARYLAND — BRADFORD D. WERSHOW — NO. 22358 — PROFESSIONAL ENGINEER

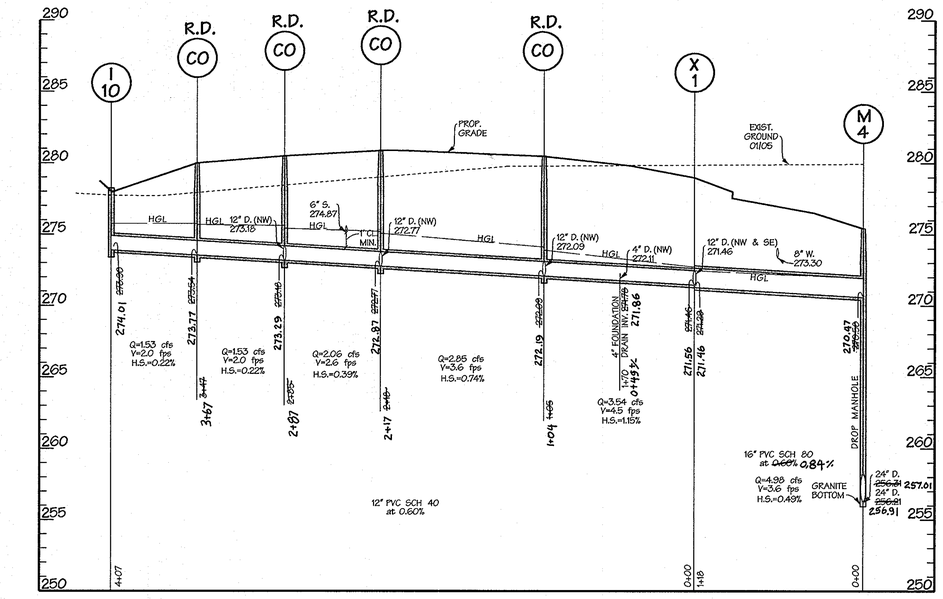

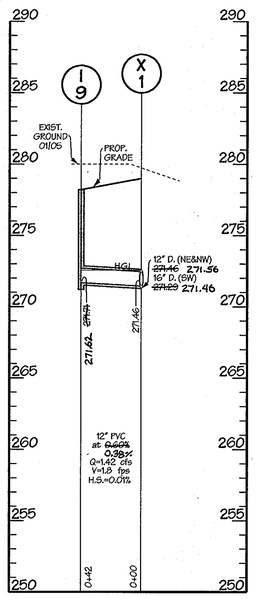

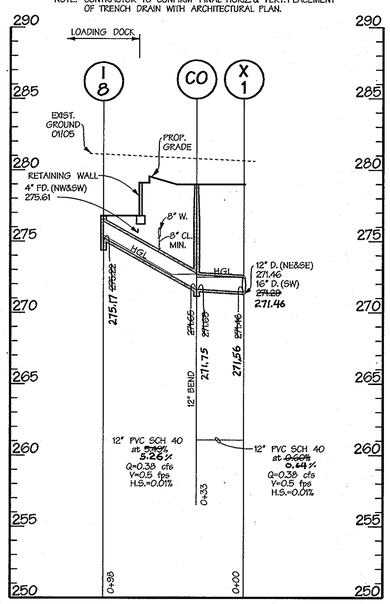

PROFILES

SCALE: HORIZ. 1"=50'
VERT. 1"=5'

SURVEY SERVICES OF MD., LLC.
408 ALLEGHENY AVE.
TOWSON, MD 21204
410-321-8692
410-321-8693 (FAX)

10-4-10
Date

STATE OF MARYLAND — PAUL LEE HUDSON — No. 8061 — REGISTERED PROFESSIONAL ENGINEER

PROFESSIONAL CERTIFICATION

I HEREBY CERTIFY THAT THESE DOCUMENTS WERE PREPARED OR APPROVED BY ME, AND THAT I AM A DULY LICENSED PROFESSIONAL ENGINEER UNDER THE LAWS OF THE STATE OF MARYLAND, LICENSE NO. 8061, EXPIRATION DATE: 08-26-2011

Professional Engr. No. 8061

APPROVED: HOWARD COUNTY DEPT. OF PUBLIC WORKS
CHIEF, BUREAU OF HIGHWAYS — DATE 10-8-10

APPROVED: HOWARD COUNTY DEPT. OF PLANNING AND ZONING
CHIEF DIVISION OF LAND DEVELOPMENT — DATE 11-18-10
DIRECTOR — DATE 11/18/10
CHIEF, DEVELOPMENT ENGINEERING DIVISION — DATE 11/16/10

Date	No.	Revision Description
5/23/12	1	I-5A - M-3 PROFILE

EMERSON PARCEL F-1 REVITZ PROPERTY

5-STORY COMMERCIAL OFFICE BUILDING

OWNER/DEVELOPER:
EMERSON DEVELOPMENT VII LLC
1 TEXAS STATION COURT
SUITE 200
TIMONIUM, MARYLAND 21093-8288

DMW
DAFT McCUNE WALKER INC
200 EAST PENNSYLVANIA AVENUE • TOWSON, MD 21286
P: 410 296 3333 F: 410 296 4705 WWW.DMW.COM
A TEAM OF LAND PLANNERS, LANDSCAPE ARCHITECTS, ENGINEERS, SURVEYORS & ENVIRONMENTAL PROFESSIONALS

SUBDIVISION NAME	SECTION/AREA	LOT/PARCEL #
REVITZ PROPERTY		LOT F-1 / PAR. 165

PLAT OR L/F	BLOCK #	ZONE	TAX/ZONE MAP	ELEC. DISTRICT	CENSUS TRACT
21277 & 21278	20	PEC	47	6	6903

WATER CODE — SEWER CODE

TITLE: **STORM DRAIN PROFILES**
"AS BUILT" PROFILES 7-26-11

Des. By LNL	Scale 1"=50'	Proj. No. 95054.10	
Drn. By JSS	Date 09-29-10		14 of 18
Chk. By	Approved		20

SDP-10-096

REVISED SDP

P:\95054\95054SDP14.dwg 9/29/2010 3:25:46 PM jsmith

P:\95054\95054LENGR\95054SDP14.SDP 9/29/2010 3:25:31 PM

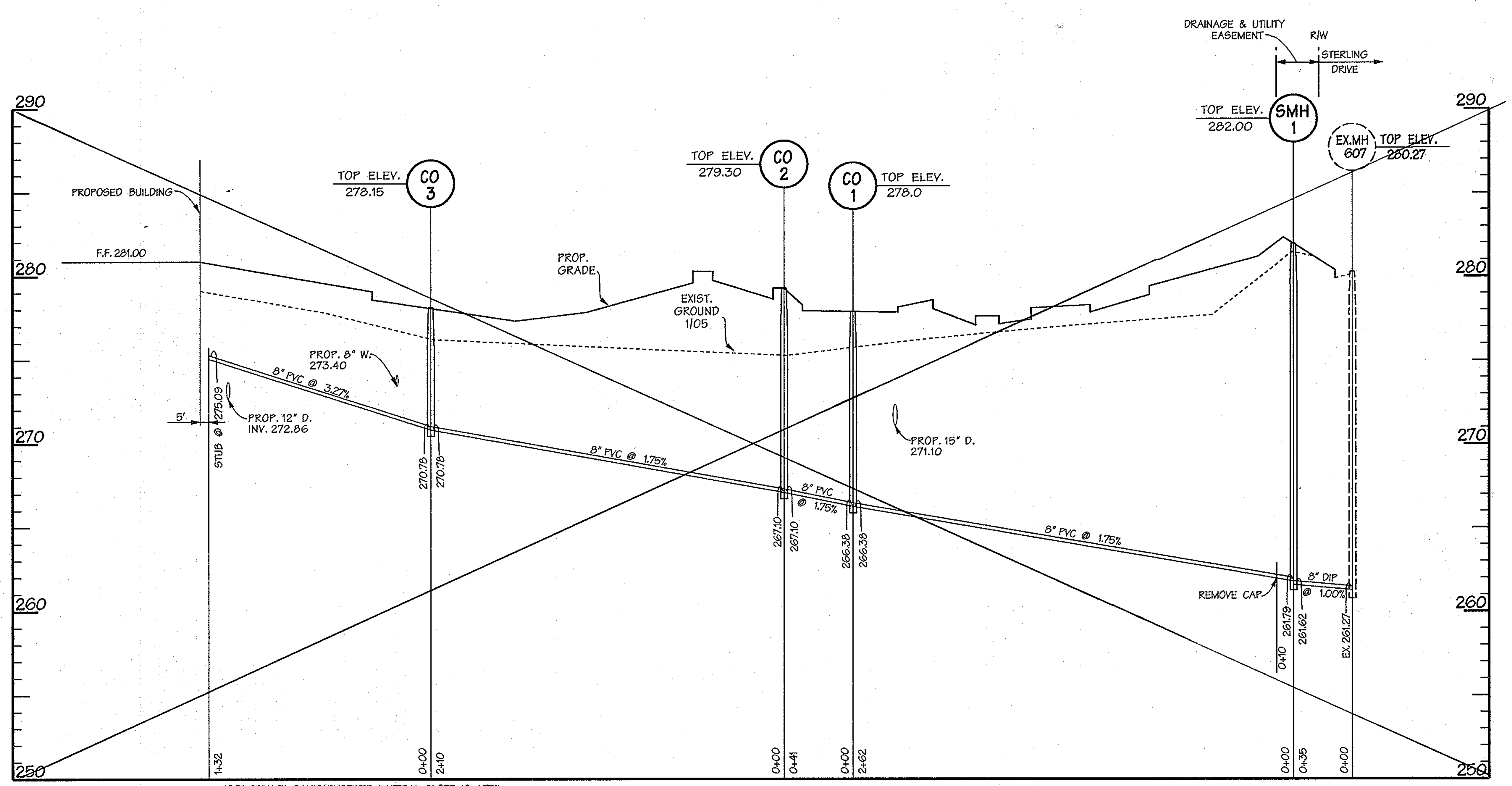

SANITARY SEWER PROFILE

SCALE: HORIZ. 1"=50'
VERT. 1"=5'

AS-BUILT CERTIFICATION FOR PSWM

I HEREBY CERTIFY THAT THE FACILITY SHOWN ON THE PLAN WAS CONSTRUCTED AS SHOWN ON THE "AS-BUILT" PLANS AND COMPLIES WITH THE APPROVED PLANS AND SPECIFICATIONS. I HAVE VERIFIED THAT THE CONTRIBUTING DRAINAGE AREA IS SUFFICIETLY STABILIZED TO PREVENT CLOGGING OF UNDERGROUND SWM FACILITY.

SIGNED [signature] 5/23/12 P.E. # 16928
MELVIN CHARLES BEALL, JR. AS-BUILT DATE: 7-28-11

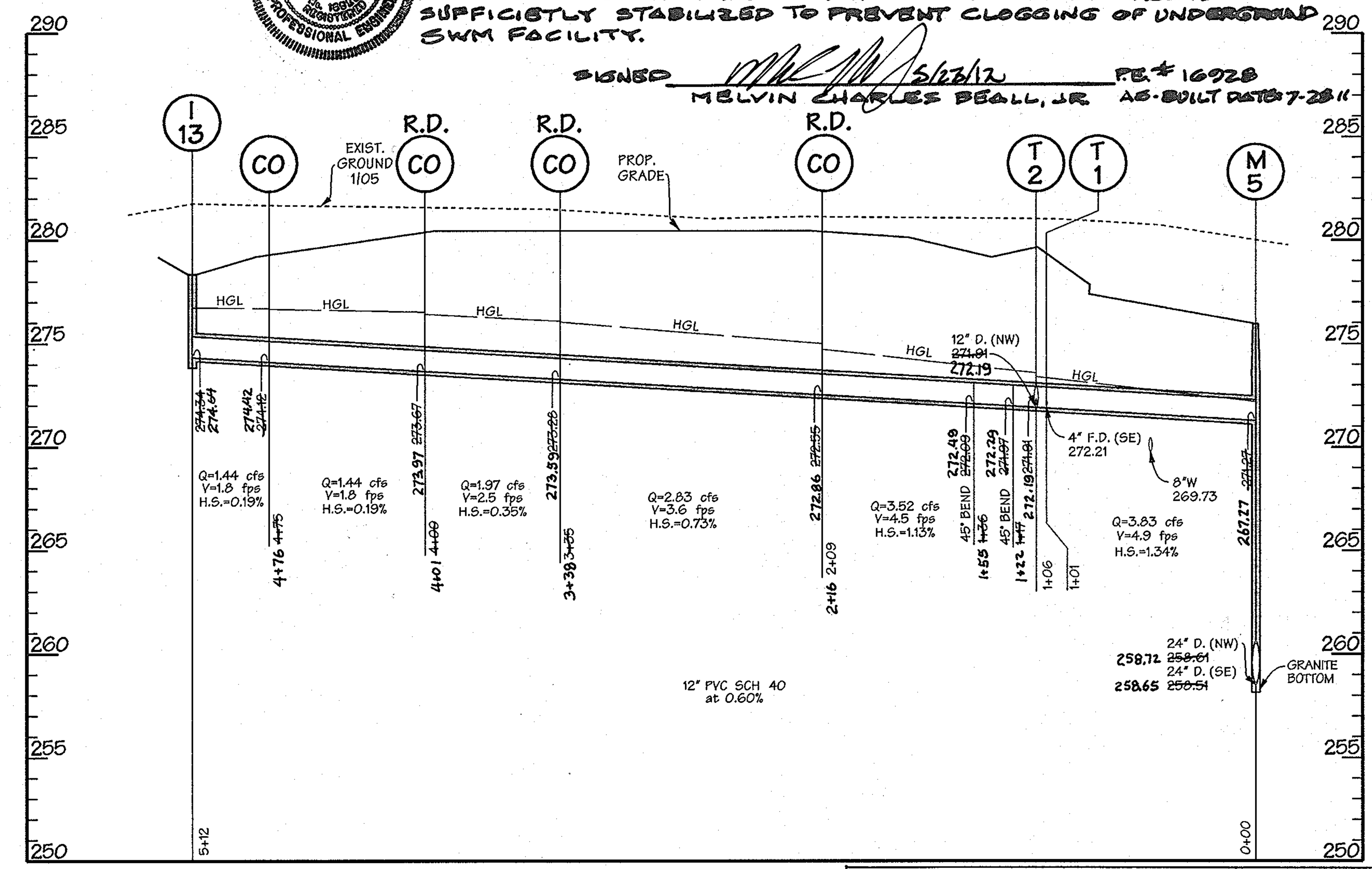

STORM DRAIN PROFILE

SCALE: HORIZ. 1"=50'
VERT. 1"=5'

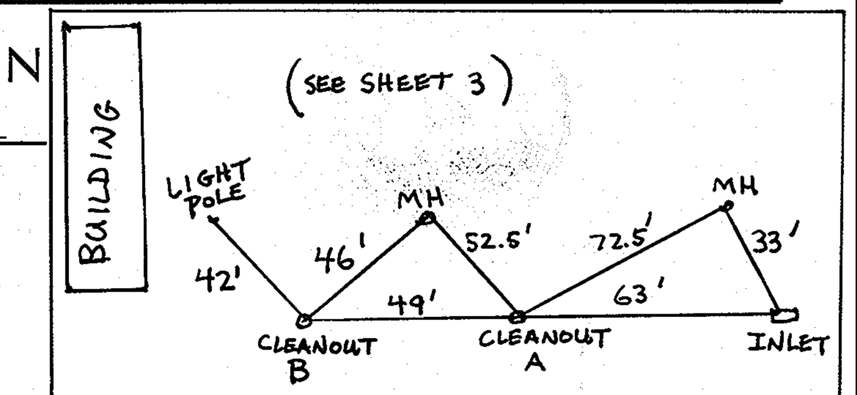

CLEAN-OUT AS-BUILTS

NOTE: SEE SHEETS 13 OF 18 & 14 OF 18 "AS-BUILT" PROFILES FOR INVERT ELEVATIONS

MANHOLE SCHEDULE

MH #	TYPE	SIZE	INV. IN	INV. OUT	TOP ELEV.	REMARKS	TOP MH ELEVATION
M-1	STD. MANHOLE	84"	247.10	246.60	267.60	SEE HOWARD CO. STD. DETAIL PLATE G-5.11	267.79
M-2	DROP MANHOLE	60"	272.00	253.26	276.28	SEE HOWARD CO. STD. DETAIL PLATE G-5.11 WITH G-5.16	276.35
M-3	STD. MANHOLE	60"	270.50	270.25	276.00	SEE HOWARD CO. STD. DETAIL PLATE G-5.11	278.33
M-4	DROP MANHOLE	48"	270.75	256.21	275.43	SEE HOWARD CO. STD. DETAIL PLATE G-5.11 WITH G-5.16	275.91
M-4A	DROP MANHOLE	48"	265.92	256.73	275.01	SEE HOWARD CO. STD. DETAIL PLATE G-5.11 WITH G-5.16	276.27
M-5	DROP MANHOLE	48"	271.27	258.51	275.94	SEE HOWARD CO. STD. DETAIL PLATE G-5.11 WITH G-5.16	276.07
M-6	DROP MANHOLE	48"	266.70	260.59	274.67	SEE HOWARD CO. STD. DETAIL PLATE G-5.11 WITH G-5.16	274.81
M-7	STD. MANHOLE	48"	263.13	263.03	274.55	SEE HOWARD CO. STD. DETAIL PLATE G-5.11	274.60
M-8	STD. MANHOLE	48"	265.55	265.45	276.47	SEE HOWARD CO. STD. DETAIL PLATE G-5.11	276.50
M-9	SHALLOW MANHOLE	48"	267.63	266.88	272.75	SEE HOWARD CO. STD. DETAIL PLATE G-5.12	273.00
M-3A (1)	STD MANHOLE	48"	217.41	271.31	276.50	SEE HOWARD CO. STD. DETAIL PLATE G-5.11	

PIPE SCHEDULE

SIZE	TYPE	LENGTH
4"	PVC SCH 40	226 LF
12"	PVC SCH 40	1208 LF
16"	PVC SCH 80	118 LF
15"	RCCP, CL IV	803 LF
18"	RCCP, CL IV	604 LF
24"	RCCP, CL IV	801 LF
36"	RCCP, CL IV	411 LF
42"	RCCP, CL IV	129 LF

STRUCTURE SCHEDULE

STRUCTURE #	TYPE	SIZE	INV. IN	INV. OUT	REMARKS
S-1	STD. CONC. END SECTION	42"	244.16	244.00	SEE HOWARD CO. STD. DETAIL PLATE D-5.51
X-1	PVC CROSS	16"	271.46	271.29	SEE HARRISON MACHINE & PLASTIC CORP. PART No. 720-16
X-2	PVC CROSS	12"	271.91	271.91	SEE HARRISON MACHINE & PLASTIC CORP. PART No. 720-12

NOTE: SEE SHEETS 13 OF 18 & 14 OF 18 "AS-BUILT" PROFILES FOR INVERT ELEVATIONS

NOTE:
TC = TOP OF CURB ELEVATION
TG = TOP OF GRATE ELEVATION

INLET SCHEDULE

Inlet #	TYPE	INV. IN	INV. OUT	TOP* ELEV.	REMARKS	
I-1	DBL. 'S' COMB.	272.60	272.60	276.70	SEE HOWARD CO. STD. DETAIL PLATE 4.34	TC 276.72
I-2	DBL. 'S' COMB.	264.59	264.49	277.50	SEE HOWARD CO. STD. DETAIL PLATE 4.34	TC 277.65
I-3	DBL. 'S' COMB.	267.51	267.41	277.50	SEE HOWARD CO. STD. DETAIL PLATE 4.34	TC 277.64
I-4	DBL. 'S' COMB.	271.70	271.60	275.80	SEE HOWARD CO. STD. DETAIL PLATE 4.34	TC 275.85
~~I-5~~	~~DBL. 'S' COMB.~~		~~273.70~~	~~277.80~~	~~SEE HOWARD CO. STD. DETAIL PLATE 4.34~~	~~TC 278.35~~
I-6	DBL. 'S' COMB.	272.79	272.69	277.00	SEE HOWARD CO. STD. DETAIL PLATE 4.34	TC 277.04
I-7	DBL. 'S' COMB.	—	272.90	277.00	SEE HOWARD CO. STD. DETAIL PLATE 4.34	TC 276.72
I-8	TRENCH DRAIN	—	275.22	276.80**	ACO DRAIN-POWER S300K (SLOTTED DUCTILE IRON-CLASS F)	TG 277.0 +/-
I-9	YARD	—	271.71	278.22	NOS #2400 WITH #2411 GRATE	TG 278.42
I-10	YARD	—	273.90	278.25	NOS #2400 WITH #2411 GRATE	TG 278.41
I-11	DBL. 'S' COMB.	—	269.12	274.10	SEE HOWARD CO. STD. DETAIL PLATE 4.34	TC 274.50
I-12	YARD	272.14	272.14	278.25	NOS #2400 WITH #2411 GRATE	TG 278.24
I-13	YARD	274.34	274.34	278.34	NOS #2400 WITH #2411 GRATE	TG 278.64
I-14	DBL. 'S' COMB.	—	269.60	273.70	SEE HOWARD CO. STD. DETAIL PLATE 4.34	TC 273.91
I-15	DBL. 'S' COMB.	—	269.90	274.00	SEE HOWARD CO. STD. DETAIL PLATE 4.34	TC 274.03
I-16	DBL. 'S' COMB.	—	268.20	272.30	SEE HOWARD CO. STD. DETAIL PLATE 4.34	TC 271.80
I-17	DBL. 'S' COMB.	268.90	268.65	273.00	SEE HOWARD CO. STD. DETAIL PLATE 4.34	TC 273.01
I-18	DBL. 'S' COMB.	271.72	271.62	275.82	SEE HOWARD CO. STD. DETAIL PLATE 4.34	TC 275.90
I-19	DBL. 'S' COMB.	—	274.62	278.72	SEE HOWARD CO. STD. DETAIL PLATE 4.34	TC 278.77

*TOP AND CENTER OF STD. 6" CURB
(1) **CONFIRM WITH ARCHITECTURAL PLANS

I-5	DBL 'S' COMB	272.70	272.60	277.80	SEE HOWARD CO. STD. DETAIL 4.34
I-5A	YARD	—	273.60	280.80	NOS #2400 WITH #2411 GRATE

NOTE: I-12 WAS REPOSITIONED IN THE FIELD APPROXIMATELY 53' EASTERLY RESULTING IN A LONGER PROFILE DISTANCE, 66' VERSUS THE DESIGN 39'.

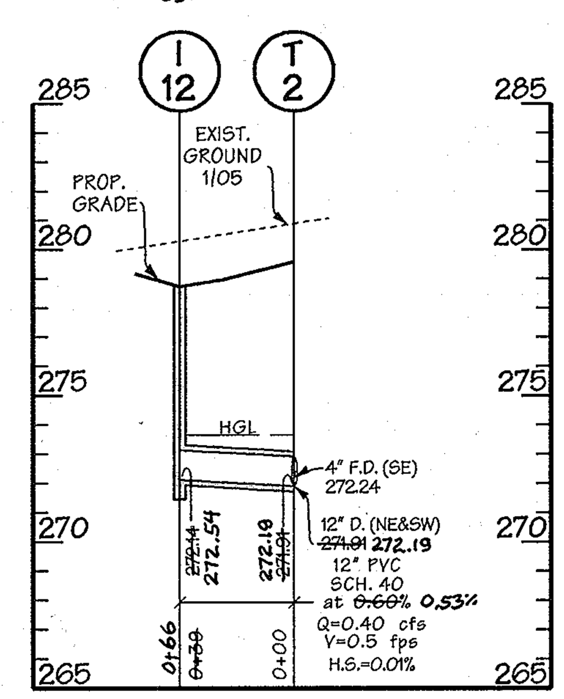

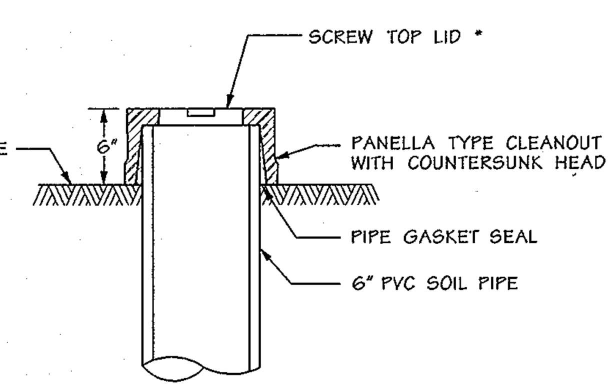

* ABOVE DETAIL PROVIDED AS SCHEMATIC SCREW TOP PVC CLEAN OUT CAP ONLY

EACH CLEANOUT SHALL INCLUDE THE FOLLOWING

1. FOR AN UNDERGROUND FLUSH MOUNTED CLEANOUT, PROVIDE A TUBE MADE OF NON-CORROSIVE MATERIAL, SCHEDULE 40 OR EQUAL, AT LEAST 3-FEET LONG WITH AN INSIDE DIAMETER OF AT LEAST 6-INCHES.
2. THE TUBE SHALL HAVE A FACTORY ATTACHED CAST IRON OR HIGH IMPACT PLASTIC COLLAR WITH RIBS TO PREVENT ROTATION WHEN REMOVING SCREW TOP LID. THE SCREW TOP LID SHALL BE CAST IRON OR HIGH IMPACT PLASTIC THAT WILL WITHSTAND ULTRA-VIOLET RAYS.
3. ALL CLEAN OUTS TO BE LOCATED IN LANDSCAPE ISLANDS.

CLEAN OUT DETAIL

NOT TO SCALE

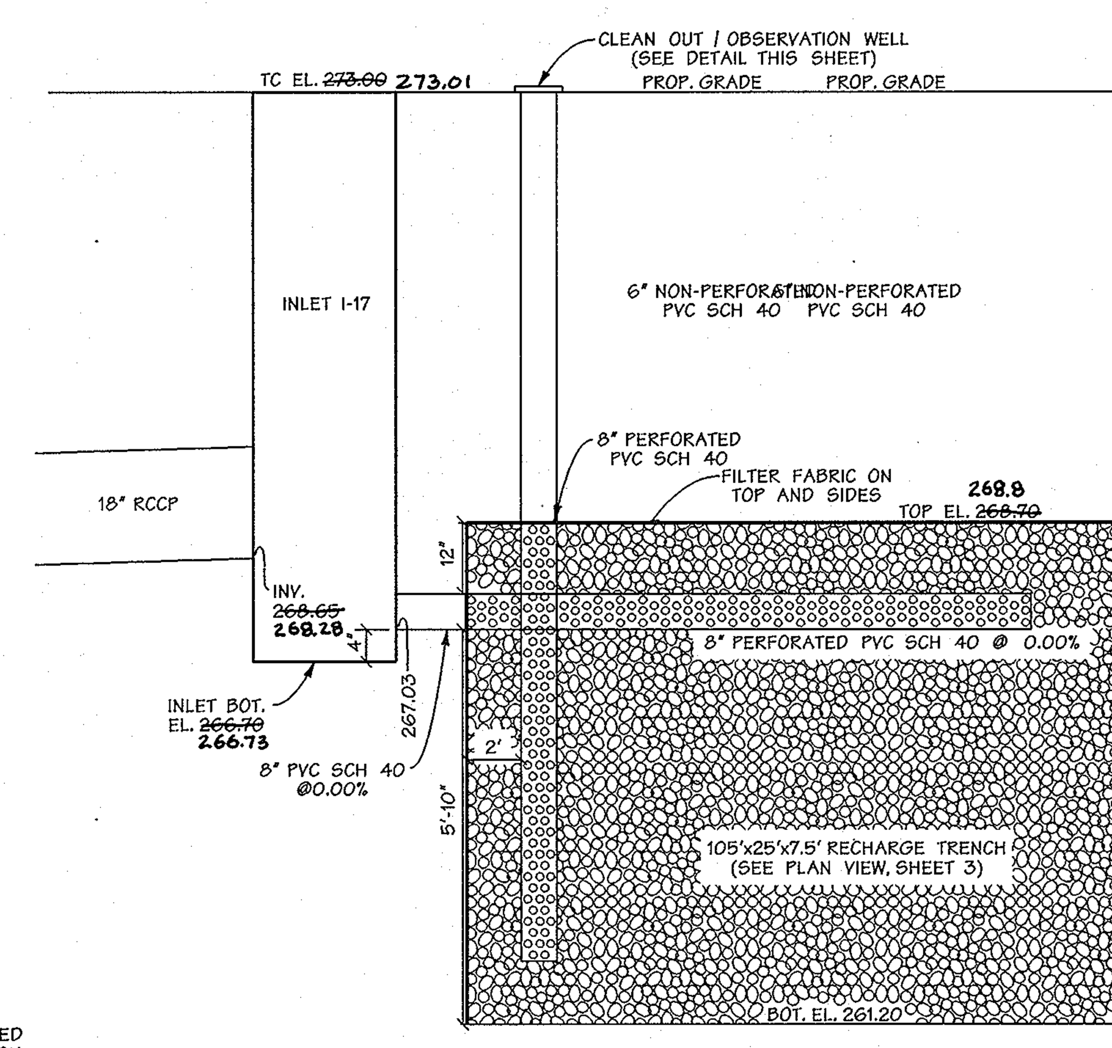

RECHARGE TRENCH DETAIL

N.T.S.

AS BUILT
REQUIRED
SEE REDLINES SHOWN HEREON

[signature]
SURVEY SERVICES OF MD, LLC
BY: ROBERT W. MATIS - RLS 605

SURVEY SERVICES OF MD, LLC.
408 ALLEGHENY AVE
TOWSON, MD 21204
410-321-8692
410-321-8693 (fax)

10-4-10
Date

PROFESSIONAL CERTIFICATION
I HEREBY CERTIFY THAT THESE DOCUMENTS WERE PREPARED OR APPROVED BY ME, AND THAT I AM A DULY LICENSED PROFESSIONAL ENGINEER UNDER THE LAWS OF THE STATE OF MARYLAND, LICENSE NO. 8061, EXPIRATION DATE: 8-26-11

Professional Engr. No. 8061

APPROVED: HOWARD COUNTY DEPT. OF PUBLIC WORKS

CHIEF, BUREAU OF HIGHWAYS	DATE 10-8-10

APPROVED: HOWARD COUNTY DEPT. OF PLANNING AND ZONING

CHIEF, DIVISION OF LAND DEVELOPMENT	DATE 11-18-10
CHIEF, DEVELOPMENT ENGINEERING DIVISION	DATE 11/16/10
DIRECTOR	DATE 11/18/10

Date	No.	Revision Description
6/26/13	1	STORM STRUCTURES M-3A, I-5, I-5A

EMERSON PARCEL F-1 REVITZ PROPERTY

5-STORY COMMERCIAL OFFICE BUILDING

OWNER/DEVELOPER:
EMERSON DEVELOPMENT VII LLC
1 TEXAS STATION COURT, SUITE 200
TIMONIUM, MARYLAND 21093-8288
(443) 689-8000

DMW
DAFT McCUNE WALKER INC
200 EAST PENNSYLVANIA AVENUE • TOWSON, MD 21286
P: 410 296 3333 F: 410 296 4705 WWW.DMW.COM
A TEAM OF LAND PLANNERS, LANDSCAPE ARCHITECTS, ENGINEERS, SURVEYORS & ENVIRONMENTAL PROFESSIONALS

SUBDIVISION NAME	SECTION/AREA	LOT/PARCEL #
REVITZ PROPERTY		LOT F-1 / PAR. 165

PLAT# OR L/F	BLOCK #	ZONE	TAX/ZONE MAP	ELECT. DISTRICT	CENSUS TRACT
21277 & 21278	20	PEC	47	6	6903

WATER CODE
SEWER CODE

TITLE
SANITARY SEWER AND STORM DRAIN PROFILES
"AS BUILT" PROFILES - 7-28-11

Des. By	THR	Scale	1"=50'	Proj. No.	95054.10
Dm. By	CRH	Date	09-29-10	15 of 18	
Chk. By		Approved			

SDP-10-096

REVISED SDP

P:\95054\95054.1\ENGR\950541SDP15.UP1 Sep 30 08:21:33 2010
Thu Sep 30 08:21:33 2010 \95054.1\ENGR\950541SDP15.UP1
9/30/2010 8:21:52 AM jsmith c:\hpm\950541SDP15.pr-f P:\95054\95054.1\ENGR\950541SDP15.UP1 950541SDP15.UP1

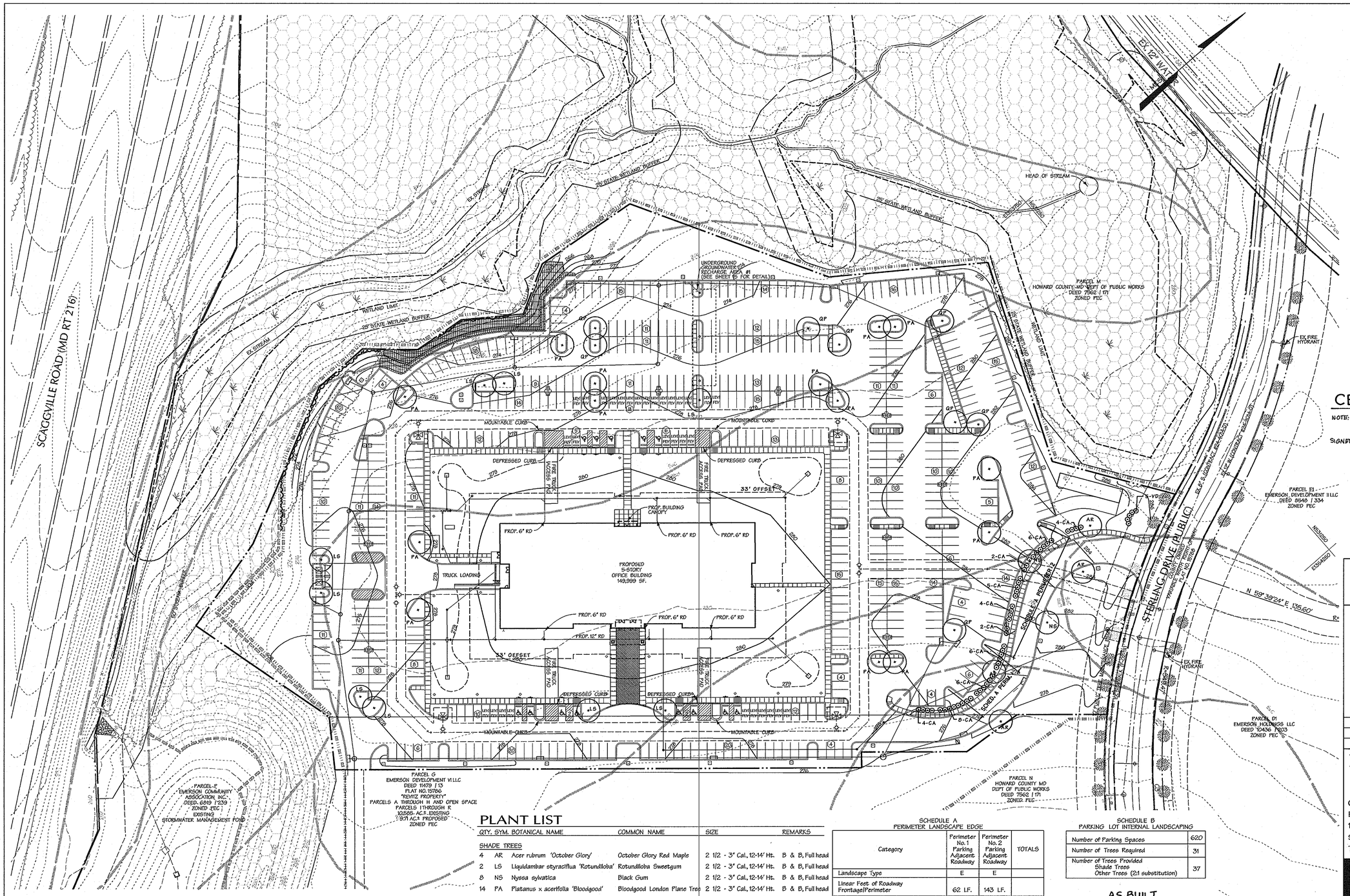

LEGEND

- PLATTED PROPERTY BOUNDARY
- PROPERTY BOUNDARY
- EX. RIGHT OF WAY
- ADJACENT PROPERTY BOUNDARY
- EX. ROADS AND WALKS
- 280 EX. MAJOR CONTOUR
- EX. MINOR CONTOUR
- FOREST CONSERVATION EASEMENT
- LIMIT OF DISTURBANCE
- PROP. BUILDING
- PROP. CURB / EDGE OF PAVING
- PROP. DEPRESSED CURB
- 280 PROP. MAJOR CONTOUR
- PROP. MINOR CONTOUR
- PROPOSED OVERSTORY/SHADE TREE
- PROPOSED ORNAMENTAL TREE
- PROPOSED EVERGREEN TREE
- PROPOSED SHRUB

AS-BUILT CERTIFICATION FOR PSWM

NOTE: THERE IS NO "AS-BUILT" WFORMATION PROVIDED ON THIS SHEET.

SIGNED _____ 5/23/12 P.E.# 16928
MELVIN CHARLES BEAM

STATE OF MARYLAND — MELVIN CHARLES BEAM — No. 16928 — REGISTERED PROFESSIONAL ENGINEER

APPROVED: HOWARD COUNTY DEPT. OF PUBLIC WORKS

CHIEF, BUREAU OF HIGHWAYS — DATE 10-8-10

APPROVED: HOWARD COUNTY DEPT. OF PLANNING AND ZONING

CHIEF, DIVISION OF LAND DEVELOPMENT — DATE 11-18-10

CHIEF, DEVELOPMENT ENGINEERING DIVISION — DATE 11/18/10

DIRECTOR — DATE 11/18/10

Date	No.	Revision Description

EMERSON PARCEL F-1 REVITZ PROPERTY

5-STORY COMMERCIAL OFFICE BUILDING

OWNER/DEVELOPER:
EMERSON DEVELOPMENT VII LLC
1 TEXAS STATION COURT
SUITE 200
TIMONIUM, MARYLAND 21093-8288

PLANT LIST

QTY.	SYM.	BOTANICAL NAME	COMMON NAME	SIZE	REMARKS
SHADE TREES					
4	AR	Acer rubrum 'October Glory'	October Glory Red Maple	2 1/2 - 3" Cal., 12-14' Ht.	B & B, Full head
2	LS	Liquidambar styraciflua 'Rotundiloba'	Rotundiloba Sweetgum	2 1/2 - 3" Cal., 12-14' Ht.	B & B, Full head
8	NS	Nyssa sylvatica	Black Gum	2 1/2 - 3" Cal., 12-14' Ht.	B & B, Full head
14	PA	Platanus x acerifolia 'Bloodgood'	Bloodgood London Plane Tree	2 1/2 - 3" Cal., 12-14' Ht.	B & B, Full head
9	QP	Quercus palustris	Pin Oak	2 1/2 - 3" Cal., 12-14' Ht.	B & B, Full head
SHRUBS					
47	CA	Clethra alnifolia	Summersweet	3-4' Ht.	B & B
5	VD	Viburnum dentatum	Arrowwood Viburnum	3-4' Ht.	B & B

THE OWNER, TENANT, AND/OR THEIR AGENTS SHALL BE RESPONSIBLE FOR MAINTENANCE OF THE REQUIRED LANDSCAPING, INCLUDING BOTH PLANT MATERIALS AND BERMS, FENCES AND WALLS. ALL PLANT MATERIALS SHALL BE MAINTAINED IN GOOD GROWING CONDITION, AND WHEN NECESSARY, REPLACED WITH NEW MATERIALS TO ENSURE CONTINUED COMPLIANCE WITH APPLICABLE REGULATIONS. ALL OTHER REQUIRED LANDSCAPING SHALL BE PERMANENTLY MAINTAINED IN GOOD CONDITION, AND WHEN NECESSARY, REPAIRED OR REPLACED.

NOTES:

1. AT THE TIME OF PLANT INSTALLATION, ALL SHRUBS AND TREES LISTED AND APPROVED ON THE LANDSCAPE PLAN SHALL COMPLY WITH THE PROPER HEIGHT REQUIREMENT IN ACCORDANCE WITH THE HOWARD COUNTY LANDSCAPE MANUAL. IN ADDITION, NO SUBSTITUTIONS OR RELOCATIONS OF THE REQUIRED PLANTINGS MAY BE MADE WITHOUT PRIOR REVIEW AND APPROVAL FROM THE DEPARTMENT OF PLANNING AND ZONING. ANY DEVIATION FROM THE APPROVED LANDSCAPE PLAN MAY RESULT IN DENIAL OR DELAY IN THE RELEASE OF LANDSCAPE SURETY UNTIL SUCH TIME AS ALL REQUIRED MATERIALS ARE PLANTED AND/OR REVISIONS ARE MADE TO THE APPLICABLE PLANS.
2. THIS PLAN HAS BEEN PREPARED IN ACCORDANCE WITH THE PROVISIONS OF SECTION 16.124 OF THE HOWARD COUNTY CODE AND THE EMERSON CORPORATE COMMONS LANDSCAPE DESIGN CRITERIA. FINANCIAL LANDSCAPE SURETY, IN THE AMOUNT OF $12,660 (UNLESS COUNTS CHANGE) IS TO BE POSTED FOR 37 SHADE TREES AND 52 SHRUBS. THE SURETY MUST BE POSTED AS PART OF THE DEVELOPER'S AGREEMENT.
3. EMERSON IS GOVERNED BY COVENANTS WHICH REQUIRE ADDITIONAL PLANT MATERIAL AND APPROVAL FROM THE HRD ARCHITECTURAL REVIEW COMMITTEE. PLEASE REFER TO PLAN APPROVAL LETTER FROM HRD.
4. ALL PROPERTY PERIMETERS, EXCEPT STERLING DRIVE AVE. EXEMPT FROM LANDSCAPING REQUIREMENTS SINCE THIS PARCEL IS INTERNAL TO THE EMERSON (REVITZ PROPERTY) SUBDIVISION.

NOTES:
1. PLANT MATERIAL PROVIDED ABOVE COUNTY REQUIREMENTS ARE NEEDED TO FULFILL THE EMERSON CORPORATE COMMONS DESIGN AND DEVELOPMENT STANDARDS FOR LANDSCAPE REQUIREMENTS.

2. PLANT LIST REFLECTS REQUIREMENTS FOR THE EMERSON CORP. COMMONS DESIGN AND DEVELOPMENT STANDARDS WHICH MEETS AND EXCEEDS THE NUMBER OF PLANT MATERIALS REQUIRED BY COUNTY SCHEDULES A AND B.

SCHEDULE A
PERIMETER LANDSCAPE EDGE

Category	Perimeter No.1 Parking Adjacent Roadway	Perimeter No. 2 Parking Adjacent Roadway	TOTALS
Landscape Type	E	E	
Linear Feet of Roadway Frontage/Perimeter	62 LF.	143 LF.	
Credit for Existing Vegetation (Yes, No, Linear Feet) (Describe below if needed)	NO	NO	
Credit for Wall, Fence or Berm (Yes, No, Linear Feet) (Describe below if needed)	N.A.	N.A.	
Number of Plants Required Shade Trees Evergreen Trees Shrubs	2 - 16	4 - 36	6 - 52
Number of Plants Provided Shade Trees Evergreen Trees Other Trees (2:1 substitution) Shrubs (10:1 substitution)	2 - - 16	4 - - 36	6 - - 52

SCHEDULE B
PARKING LOT INTERNAL LANDSCAPING

Number of Parking Spaces	620
Number of Trees Required	31
Number of Trees Provided Shade Trees Other Trees (2:1 substitution)	37

AS BUILT
NOT REQUIRED

SURVEY SERVICES OF MD, LLC
BY: ROBERT W. MATIS - RLS 605

STATE OF MARYLAND — ROBERT WILLIAM MATIS — No. 605 — REGISTERED PROFESSIONAL LAND SURVEYOR

Date

STATE OF MARYLAND — THOMAS H. REGNIER — No. 268 — REGISTERED LANDSCAPE ARCHITECT

Landscape Architect. No.

DMW
DAFT McCUNE WALKER INC
200 EAST PENNSYLVANIA AVENUE • TOWSON, MD 21286
P: 410 296 3333 F: 410 296 4705 WWW.DMW.COM
A TEAM OF LAND PLANNERS, LANDSCAPE ARCHITECTS, ENGINEERS, SURVEYORS & ENVIRONMENTAL PROFESSIONALS

SUBDIVISION NAME: REVITZ PROPERTY		SECTION/AREA	LOT/PARCEL #: LOT F-1 / PAR. 165
PLAT # OR L/F: 21278	BLOCK #: 20	ZONE: PEC	TAX/ZONE MAP: 47
ELECT. DISTRICT: 6	CENSUS TRACT: 6903	WATER CODE:	SEWER CODE:

TITLE: **LANDSCAPE PLAN**

Des. By	JEG	Scale	1"=50'
Drn. By	JEG	Date	09-27-10
Chk. By		Approved	

Proj. No. 95054.10

16 of 16
20

SDP-10-096

Mon Oct 04 11:56:07 2010 P:\95054\95054.11\ENGR\95054SDP16.DWG

10/4/2010 11:56:24 AM jsmith P:\95054\95054.11\ENGR\95054SDP16.dwf P:\95054\95054.11\ENGR\95054SDP16.LAI

NOTES:
1. FOR CONTAINER SHRUBS, COMPLETELY REMOVE ALL NON-BIODEGRADABLE CONTAINERS AND SCARIFY ROOTBALL BY USING A SHARP BLADE AND MAKING 4 TO 5 ONE INCH CUTS THE LENGTH OF THE ROOTBALL.
2. FOR B&B SHRUBS, CUT AND REMOVE BURLAP FROM TOP 1/3 OF ROOT BALL

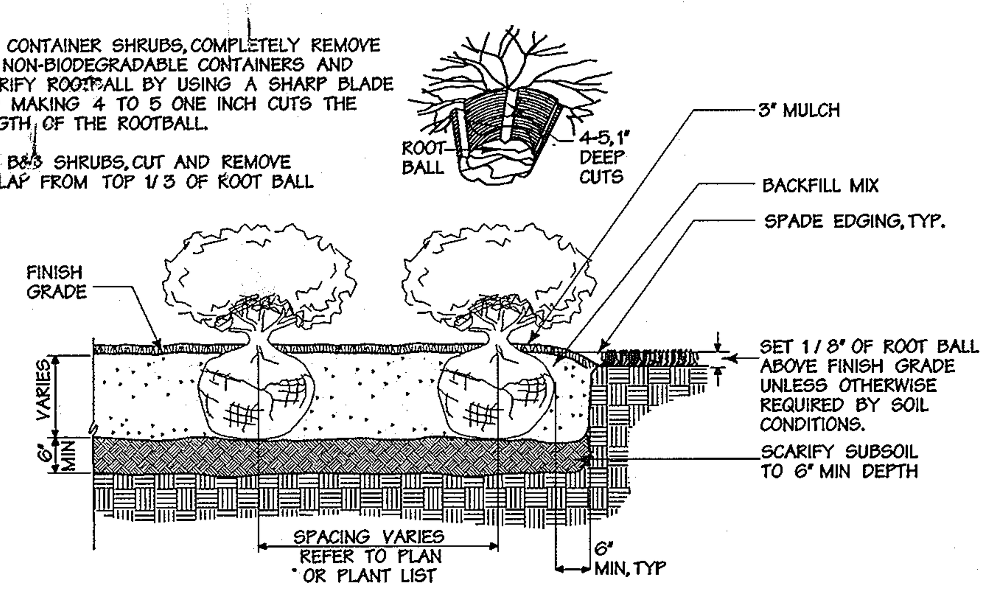

Shrub Bed Planting Detail

Not to Scale

NOTES:

1. FOR CONTAINER SHRUBS, COMPLETELY REMOVE ALL NON-BIODEGRADABLE CONTAINERS AND SCARIFY ROOTBALL BY USING A SHARP BLADE AND MAKING 4 TO 5 ONE INCH CUTS THE LENGTH OF THE ROOTBALL.
2. FOR B&B SHRUBS, CUT AND REMOVE BURLAP FROM TOP 1/3 OF ROOT BALL

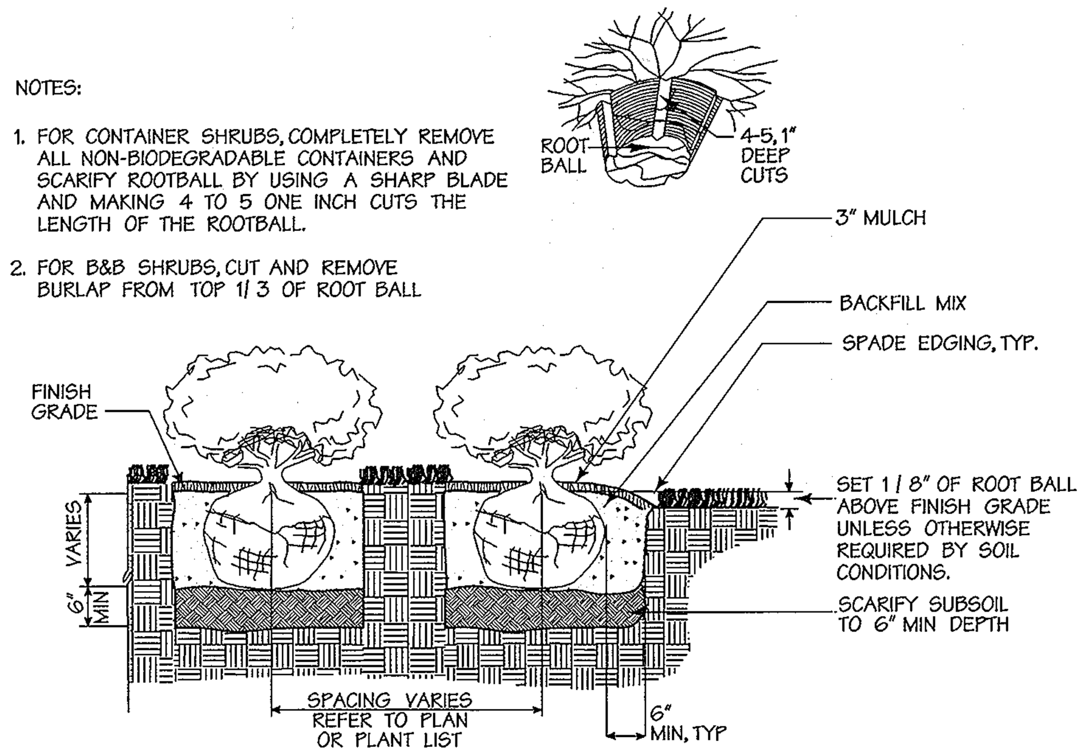

Container Planting

Not to Scale

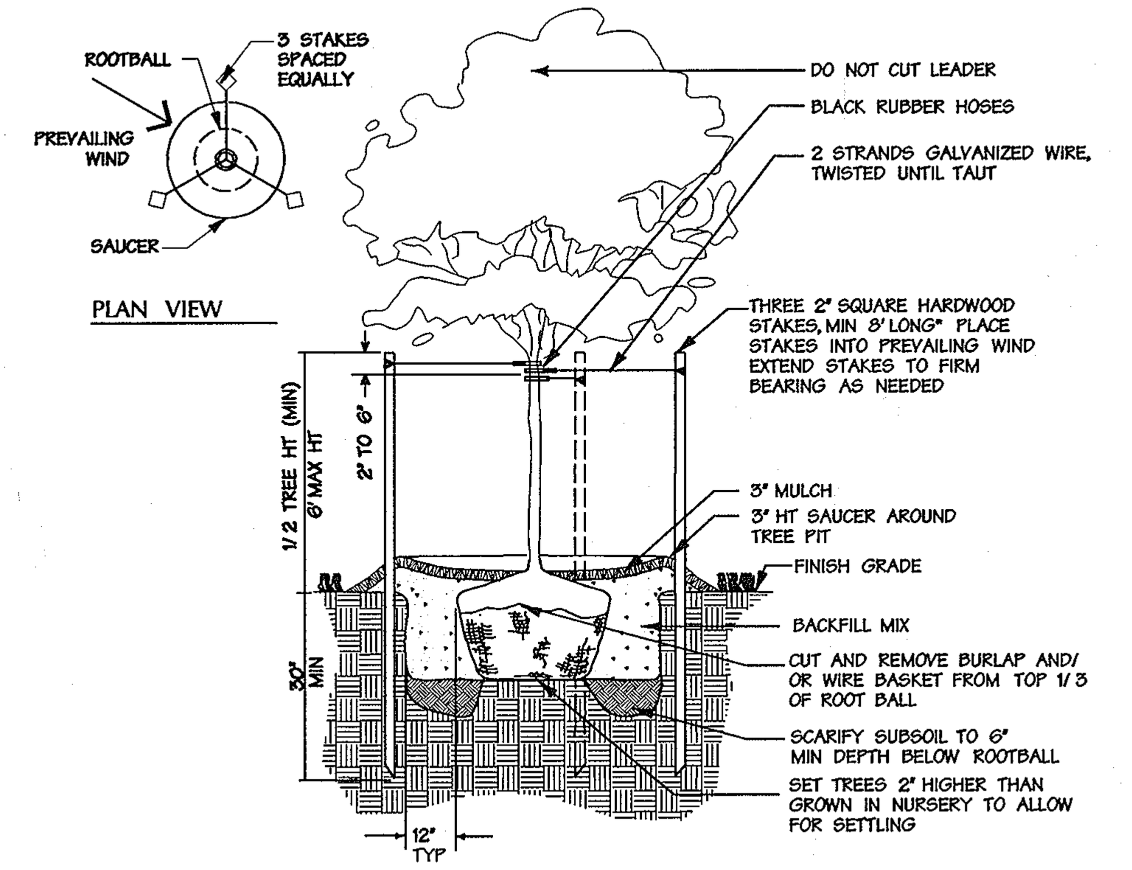

Deciduous Tree Planting Detail

Not to Scale

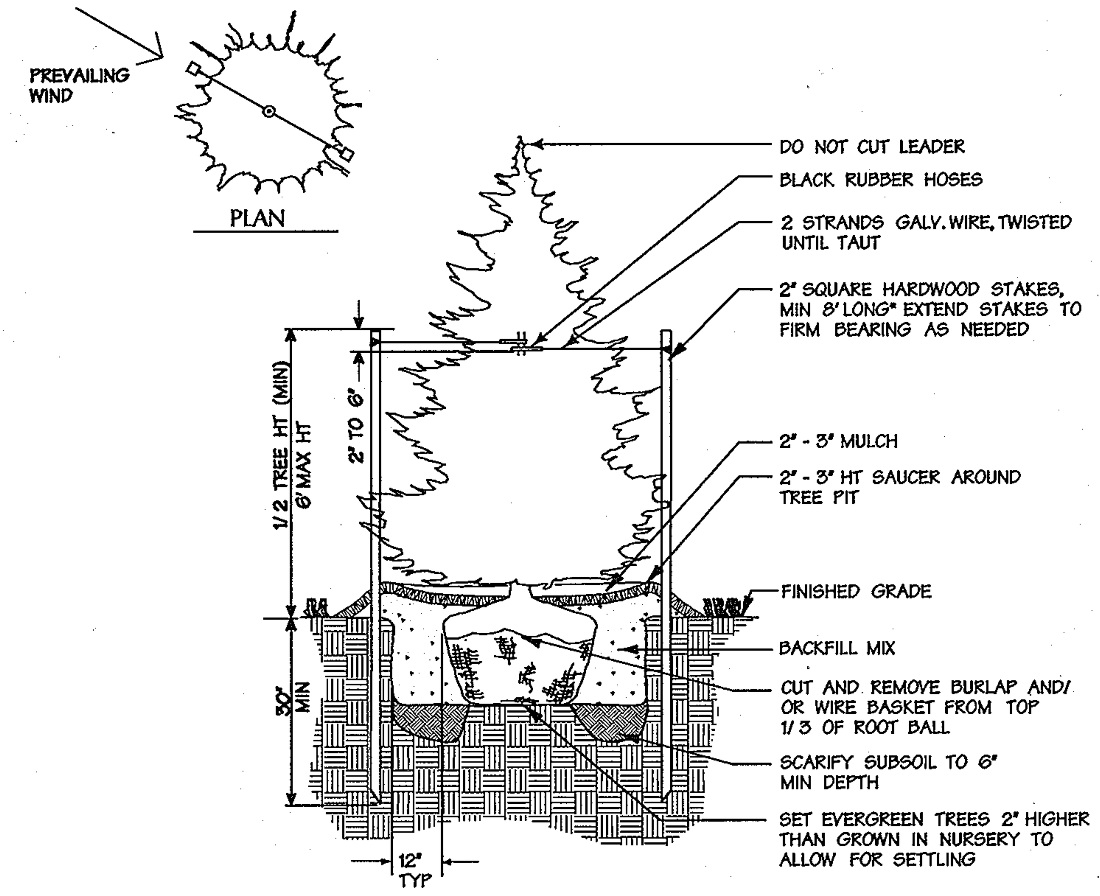

Evergreen Tree Planting Detail

Not to Scale

DEVELOPER'S | BUILDER'S CERTIFICATE

I/WE CERTIFY THAT THE LANDSCAPING SHOWN ON THIS PLAN WILL BE DONE ACCORDING TO THE PLAN, SECTION 16.124 OF THE HOWARD COUNTY CODE AND THE HOWARD COUNTY LANDSCAPE MANUAL.

I/WE FURTHER CERTIFY THAT UPON COMPLETION, A CERTIFICATION OF LANDSCAPE INSTALLATION, ACCOMPANIED BY AN EXECUTED ONE YEAR GUARANTEE OF PLANT MATERIALS, WILL BE SUBMITTED TO THE DEPARTMENT OF PLANNING AND ZONING.

[signature] 9/27/10
NAME DATE

"THIS PLAN HAS BEEN PREPARED IN ACCORDANCE WITH THE PROVISIONS OF SECTION 16.124 OF THE HOWARD COUNTY CODE AND THE LANDSCAPE MANUAL."

PROVIDE THE FOLLWING NOTE ON THE LANDSCAPE PLAN:

THE OWNER, TENANT, AND/OR THEIR AGENTS SHALL BE RESPONSIBLE FOR MAINTENANCE OF THE REQUIRED LANDSCAPING, INCLUDING BOTH PLANT MATERIALS AND BERMS, FENCES AND WALLS. ALL PLANT MATERIALS SHALL BE MAINTAINED IN GOOD GROWING CONDITION, AND WHEN NECESSARY, REPLACED WITH NEW MATERIALS TO ENSURE CONTINUED COMPLIANCE WITH APPLICABLE REGULATIONS. ALL OTHER REQUIRED LANDSCAPING SHALL BE PERMANENTLY MAINTAINED IN GOOD CONDITION, AND WHEN NECESSARY, REPAIRED OR REPLACED.

PLANTING SPECIFICATIONS

1. MAINTAIN POSITIVE DRAINAGE OUT OF PLANTING BEDS AT A MINIMUM 2% SLOPE. ALL GRADES, DIMENSIONS, AND EXISTING CONDITIONS SHALL BE VERIFIED BY THE CONTRACTOR ON SITE BEFORECONSTRUCTION BEGINS. ANY DISCREPANCIES SHALL BE BROUGHT TO THE ATTENTION OF THE LANDSCAPE ARCHITECT OR OWNER.

2. THE CONTRACTOR SHALL NOTIFY MISS UTILITY (800-257-7777) A MINIMUM OF THREE WORKING DAYS PRIOR TO PLANTING AND CONSTRUCTION.

3. THE CONTRACTOR IS ADVISED OF THE EXISTENCE OF UNDERGROUND UTILITIES ON THE SITE. THEIR EXACT LOCATION SHALL BE VERIFIED IN THE FIELD WITH THE OWNER OR GENERAL CONTRACTOR PRIOR TO THE COMMENCEMENT OF ANY DIGGING OPERATIONS. IN THE EVENT THEY ARE UNCOVERED, THE CONTRACTOR SHALL BE HELD RESPONSIBLE FOR ALL DAMAGE TO UTILITIES AND SUCH DAMAGE SHALL NOT RESULT IN ANY ADDITIONAL EXPENSES TO THE OWNER.

4. IF UTILITY LINES ARE ENCOUNTERED IN EXCAVATION OF TREE PITS, OTHER LOCATIONS FOR TREES SHALL BE MADE BY THE CONTRACTOR WITHOUT ADDITIONAL COMPENSATION. NO CHANGES OF LOCATION SHALL BE MADE WITHOUT APPROVAL OF THE LANDSCAPE ARCHITECT.

5. PLANT MATERIAL SUBSTITUTIONS WILL NOT BE ACCEPTED WITHOUT WRITTEN CONSENT OF THE OWNER OR LANDSCAPE ARCHITECT.

6. PLANT QUANTITIES ARE PROVIDED FOR THE CONVENIENCE OF THE CONTRACTOR. IN THE EVENT OF VARIATION BETWEEN QUANTITIES SHOWN ON THE PLANT LIST AND THE PLANS, THE PLANS SHALL CONTROL. THE CONTRACTOR IS RESPONSIBLE FOR VERIFYING ALL PLANT QUANTITIES PRIOR TO THE COMMENCEMENT OF WORK. SOD QUANTITY TAKE-OFFS ARE THE RESPONSIBILITY OF THE CONTRACTOR. ALL DISCREPANCIES SHALL BE REPORTED TO THE LANDSCAPE ARCHITECT FOR CLARIFICATION PRIOR TO BIDDING. THE CONTRACTOR SHALL FURNISH PLANT MATERIAL IN SIZES AS SPECIFIED IN PLANT LIST.

7. PLANT MATERIAL SUBSTITUTIONS WILL NOT BE ACCEPTED WITHOUT WRITTEN CONSENT OF THE OWNER OR LANDSCAPE ARCHITECT.

8. ALL PLANTS (B&B OR CONTAINER) SHALL BE PROPERLY IDENTIFIED BY WEATHER-PROOF LABELS SECURELY ATTACHED THERETO BEFORE DELIVERY TO PROJECT SITE. LABELS SHALL IDENTIFY PLANTS BY NAME, SPECIES, AND SIZE. LABELS SHALL NOT BE REMOVED UNTIL THE FINAL INSPECTION BY THE LANDSCAPE ARCHITECT OR AGENT IN CHARGE.

9. ANY MATERIAL AND/OR WORK MAY BE REJECTED BY THE LANDSCAPE ARCHITECT IF IT DOES NOT MEET THE REQUIREMENTS OF THE SPECIFICATIONS. ALL REJECTED MATERIALS SHALL BE REMOVED FROM THE SITE BY THE CONTRACTOR.

10. THE LANDSCAPE CONTRACTOR SHALL STAKE ALL MATERIAL LOCATED ON THE SITE FOR REVIEW AND POSSIBLE ADJUSTMENTS BY THE LANDSCAPE ARCHITECT PRIOR TO PLANTING. ALL LOCATIONS ARE TO BE APPROVED BY THE LANDSCAPE ARCHITECT BEFORE EXCAVATION.

11. THE LANDSCAPE ARCHITECT OR OWNER SHALL HAVE THE RIGHT, AT ANY STAGE OF THE OPERATIONS, TO REJECT ANY AND ALL WORK AND MATERIAL WHICH, IN HIS OPINION, DOES NOT MEET THE REQUIREMENTS OF THESE PLANS AND SPECIFICATIONS.

12. THE CONTRACTOR SHALL BE WHOLLY RESPONSIBLE FOR STABILITY AND CONDITIONS OF ALL TREES AND SHRUBS AND SHALL BE LEGALLY LIABLE FOR ANY DAMAGE CAUSED BY INSTABILITY OF ANY PLANT MATERIALS.

13. ALL PROPOSED TREES TO BE INSTALLED EITHER ENTIRELY IN OR ENTIRELY OUT OF PLANTING BEDS. PLANTING BED LINES ARE NOT TO BE OBSTRUCTED. ALL SHRUBS AND GROUND COVER AREAS SHALL BE PLANTED INCONTINUOUS PREPARED BED AND TOP DRESSED WITH 3-INCH SHREDDED HARDWOOD MULCH. MULCH SHALL HAVE BEEN SHREDDED WITHIN THE LAST SIX MONTHS.

14. ALL PLANTING BEDS ADJACENT TO LAWN, SOD, OR SEEDED AREAS SHALL BE SPADE EDGED.

15. ALL SOD SHALL BE OBTAINED FROM AREAS HAVING GROWING CONDITIONS FAMILIAR TO AREAS TO BE COVERED. AREAS TO BE SODDED SHALL BE RAKED OF STONES AND DEBRIS. DEBRIS AND STONES OVER 1 INCH IN DIAMETER SHALL BE REMOVED FROM THE SITE. ALL DAMAGED SOD WILL BE REJECTED. ALL SOD MUST BE PLACED WITH STAGGERED JOINTS, TIGHTLY BUTTED, WITH NO INEQUALITIES IN GRADE. PLACE ALL SOD IN ROWS AT RIGHT ANGLES TO SLOPES (WHERE APPLICABLE).

16. MAINTENANCE SHALL BEGIN AFTER EACH PLANT HAS BEEN INSTALLED AND SHALL CONTINUE UNTIL 90 DAYS AFTER FINAL ACCEPTANCE BY THE ARCHITECT OR OWNER REPRESENTATIVE. MAINTENANCE INCLUDES MOWING OF TURF, WATERING, PRUNING, WEEDING, FERTILIZING, MULCHING, REPLACEMENT OF SICK OR DEAD PLANTS, AND ANY OTHER CARE NECESSARY FOR THE PROPER GROWTH OF THE PLANT MATERIAL. THE CONTRACTOR MUST BE ABLE TO PROVIDE CONTINUED MAINTENANCE IF REQUESTED BY THE OWNER.

17. UPON COMPLETION OF ALL LANDSCAPING, AN ACCEPTANCE OF THE WORK SHALL BE HELD. THE CONTRACTOR SHALL NOTIFY THE LANDSCAPE ARCHITECT OR OWNER FOR SCHEDULING THE INSPECTION AT LEAST SEVEN (7) DAYS PRIOR TO THE ANTICIPATED INSPECTION DATE.

18. THE LIFE AND ROBUST HEALTH OF ALL TREES, SHRUBS AND GROUND COVER SHALL BE GUARANTEED FOR 12 MONTHS FROM THE DATE OF ACCEPTANCE.

19. MAINTAIN POSITIVE DRAINAGE OUT OF PLANTING BEDS AT A MINIMUM 2% SLOPE. ALL GRADES, DIMENSIONS, AND EXISTING CONDITIONS SHALL BE VERIFIED BY THE CONTRACTOR ON SITE BEFORECONSTRUCTION BEGINS. ANY DISCREPANCIES SHALL BE BROUGHT TO THE ATTENTION OF THE LANDSCAPE ARCHITECT OR OWNER.

20. THE CONTRACTOR SHALL INSURE THAT HIS WORK DOES NOT INTERRUPT ESTABLISHED OR PROJECTED DRAINAGE PATTERNS.

21. THE CONTRACTOR SHALL INSURE ADEQUATE VERTICAL DRAINAGE IN ALL PLANT BEDS AND PLANTERS.

22. THE CONTRACTOR SHALL REVIEW ARCHITECTURAL/ENGINEERING PLANS TO BECOME THOROUGHLY FAMILIAR WITH GRADING AND SURFACE UTILITIES.

23. ALL EQUIPMENT AND TOOLS SHALL BE PLACED SO AS NOT TO INTERFERE OR HINDER THE PEDESTRIAN AND VEHICULAR TRAFFIC FLOW.

24. THE CONTRACTOR SHALL COORDINATE WITH LIGHTING AND IRRIGATION CONTRACTORS REGARDING TIMING OF INSTALLATION OF PLANT MATERIAL.

25. DURING PLANTING OPERATIONS, EXCESS WASTE MATERIALS SHALL BE PROMPTLY AND FREQUENTLY REMOVED FROM THE SITE.

26. THE CONTRACTOR SHALL DISPOSE OF STUMPS AND MAJOR ROOTS OF ALL PLANTS TO BE REMOVED. ANY DEPRESSIONS CAUSED BY REMOVAL OPERATIONS SHALL BE REFILLED WITH FERTILE, FRIABLE SOIL PLACED AND COMPACTED SO AS TO REESTABLISH PROPER GRADE FOR NEW PLANTING AND/OR LAWN AREAS.

27. ALL AREAS WITHIN CONTRACT LIMITS DISTURBED DURING OR PRIOR TO CONSTRUCTION NOT DESIGNATED TO RECEIVE PLANTINGS AND MULCH SHALL BE FINE GRADED AND SEEDED IN ACCORDANCE WITH PLANTING AND CONSTRUCTION SPECIFICATIONS.

28. EVERY POSSIBLE SAFEGUARD SHALL BE TAKEN TO PROTECT BUILDING SURFACES, EQUIPMENT, AND FURNISHING. THE CONTRACTOR SHALL BE RESPONSIBLE FOR ANY DAMAGE OR INJURY TO PERSON OR PROPERTY WHICH MAY OCCUR AS A RESULT OF HIS NEGLIGENCE IN THE EXECUTION OF THE WORK.

29. THE CONTRACTOR IS RESPONSIBLE FOR TESTING PROJECT SOILS. THE CONTRACTOR IS TO PROVIDE A CERTIFIED SOILS REPORT TO THE OWNER. THE CONTRACTOR SHALL VERIFY THAT THE SOILS ON SITE ARE ACCEPTABLE FOR THE PROPER GROWTH OF THE PROPOSED PLANT MATERIAL. SHOULD THE CONTRACTOR FIND POOR SOIL CONDITIONS, THE CONTRACTOR SHALL BE REQUIRED TO PROVIDE SOIL AMENDMENTS AS NECESSARY. THESE AMENDMENTS SHALL INCLUDE, BUT NOT BE LIMITED TO, FERTILIZERS, LIME, AND TOPSOIL. PROPER PLANTING SOILS MUST BE VERIFIED PRIOR TO PLANTING OF MATERIALS.

30. PLANTING MIX:
A) PLANTING MIX SHALL BE PREPARED AT APPROVED ON-SITE STAGING AREA USING APPROVED ON-SITE EXISTING SOIL. MIX MINIMUM QUANTITIES OF 20 CUBIC YARDS OR SUFFICIENT MIX FOR ENTIRE JOB IF LESS THAN 20 CUBIC YARDS IS REQUIRED.

B) THOROUGHLY MIXED IN THE FOLLOWING PROPORTIONS FOR TREE AND SHRUB PLANTING MIX:
.5 CY EXISTING SOIL
.2 CY SHARP SAND
.3 CY WOOD RESIDUALS
4.5 LBS TREBLE SUPERPHOSPHATE
5 LBS DOLMONITE LIMESTONE (ELIMINATE FOR ACID LOVING PLANTS)

C) FOR BED PLANTING, SHRUBS AND GROUNDCOVER SPACES 24 INCHES OR CLOSER, INCORPORATE THE FOLLOWING INGREDIENTS PER 20 SF AND INCORPORATE INTO TOP 8 INCHES OF EXISTING SOILS BY ROTOTILLING OR SIMILAR METHOD OF INCORPORATION.
.2 CY SHARP SAND
.3 CY ORGANIC MATERIAL
4.5 LBS TREBLE SUPERPHOSPHATE
5 LBS DOLMONITE LIMESTONE (ELIMINATE FOR ACID LOVING PLANTS)

31. PLANTS SHALL CONFORM TO CURRENT "AMERICAN STANDARDS FOR NURSERY STOCK" BY AMERICAN ASSOCIATION OF NURSERYMEN (AAN), PARTICULARLY WITH REGARD TO SIZE, GROWTH, SIZE OF BALL, AND DENSITY OF BRANCH STRUCTURE. PLANT MATERIAL SHALL BE TAGGED AT THE SOURCE BY THE LANDSCAPE ARCHITECT UNLESS THIS REQUIREMENT IS SPECIFICALLY WAIVED.

32. ALL PLANTING PROCEDURES SHALL CONFORM TO LANDSCAPE CONTRACTORS ASSOCIATION (LCA) SPECIFICATION GUIDELINES FOR BALTIMORE / WASHINGTON METROPOLITAN AREA (LATEST EDITION). LCA LANDSCAPE SPECIFICATION GUIDELINES (4TH ED.) SECTION 1.16, REPLACEMENT AND CONDITIONS, "ITEM F. PLANT LOSSES DUE TO ABNORMAL WEATHER" DOES NOT APPLY.

33. ALL PLANTING PROCEDURES SHALL CONFORM TO DAFT MCCUNE WALKER INC. SPECIFICATIONS.

34. PLANTING RECOMMENDATIONS DELINEATED IN DMW'S STANDARD SPECIFICATIONS AND PLANTING DETAILS, WHICH ARE INCLUDED OR REFERENCED IN THESE DRAWINGS, ARE INTENDED AS A GENERAL GUIDE. THESE RECOMMENDATIONS ARE NOT BASED UPON A COMPREHENSIVE SOIL TEST OR AN EVALUATION OF THE POST-CONSTRUCTION CONDITIONS IN WHICH THE LANDSCAPE CONTRACTOR WILL BE EXPECTED TO WORK.

IN ORDER FOR PLANT MATERIAL TO THRIVE, A SOIL TEST MAY BE NECESSARY. SOIL TESTING SHOULD ADDRESS MICRO- AND MACRO- NUTRIENT LEVELS, SOIL PH, AND A USDA SOIL TEXTURE CLASSIFICATION. FURTHER, UNDERLYING SOIL CONDITIONS IN AREAS THAT HAVE BEEN DISTURBED BY CONSTRUCTION MAY CONTAIN COMPRESSED AND POORLY DRAINED SOIL, AND THEY MAY LACK ORGANIC MATERIAL OR MICRO-ORGANISMS NECESSARY FOR SUCCESSFUL PLANT GROWTH.

IF THESE CONDITIONS APPEAR TO THE CONTRACTOR TO BE A LIMITATION TO PLANT GROWTH, THE CONTRACTOR IS ENCOURAGED TO MAKE RECOMMENDATIONS FOR A SOIL AMENDMENT PROGRAM SUBJECT TO THE APPROVAL OF THE OWNER AND THE LANDSCAPE ARCHITECT.

SUCCESS OF THE LANDSCAPE PLANTING WILL DEPEND UPON A COMBINATION OF NATURAL RAINFALL AND SUPPLEMENTAL IRRIGATION. IT SHOULD BE NOTED THAT RRIGATION SHOULD BE APPLIED CAUTIOUSLY, AS NEW PLANTINGS ARE PARTICULARLY VULNERABLE TO OVER-WATERING. WATER CONDITIONS SHOULD BE MONITORED SIX INCHES BELOW THE SURFACE, AND POCKET PLANTED PLANT MATERIAL SHOULD BE CAREFULLY INVESTIGATED FOR ACCUMULATION OF WATER IN THE PLANTING PITS.

ANOTHER KEY INGREDIENT TO SUCCESSFUL PLANTING IS THE USE OF PLANT MATERIAL THAT HAS BEEN GROWN IN SIMILAR LIGHT AND WATER CONDITIONS TO THOSE PROPOSED. IN PARTICULAR, GROUNDCOVERS, ANNUALS, AND PERENNIALS -- WHICH MAY HAVE BEEN GROWN UNDER PROTECTED SHADING OR COVER AND ARE THEN SUBJECTED TO FULL WEATHER CONDITIONS -- MAY NEED CONDITIONG PRIOR TO INSTALLATION.

AS BUILT
NOT REQUIRED

SURVEY SERVICES OF MD., LLC
BY: ROBERT W. MATIS - RLS 605

AS-BUILT CERTIFICATION FOR PSWM

NOTE: THERE IS NO "AS-BUILT" INFORMATION PROVIDED ON THIS SHEET.

SIGNED [signature] 5/23/12 P.E.# 16928
MELVIN CHARLES BEALL JR.

APPROVED: HOWARD COUNTY DEPT. OF PUBLIC WORKS

[signature] 10-8-10
CHIEF, BUREAU OF HIGHWAYS DATE

APPROVED: HOWARD COUNTY DEPT. OF PLANNING AND ZONING

[signature] 11-18-10
CHIEF, DIVISION OF LAND DEVELOPMENT DATE

[signature] 11/16/10
CHIEF, DEVELOPMENT ENGINEERING DIVISION DATE

[signature] 11/18/10
DIRECTOR DATE

Date	No.	Revision Description

EMERSON PARCEL F-1
REVITZ PROPERTY

5-STORY COMMERCIAL OFFICE BUILDING

OWNER/DEVELOPER:
EMERSON DEVELOPMENT VII LLC
1 TEXAS STATION COURT
SUITE 200
TIMONIUM, MARYLAND 21093-8288

DMW
DAFT McCUNE WALKER INC
200 EAST PENNSYLVANIA AVENUE • TOWSON, MD 21286
P: 410 296 3333 F: 410 296 4705 WWW.DMW.COM
A TEAM OF LAND PLANNERS, LANDSCAPE ARCHITECTS, ENGINEERS, SURVEYORS & ENVIRONMENTAL PROFESSIONALS

10/4/10
Date

Landscape Architect. No. 1148

SUBDIVISION NAME: REVITZ PROPERTY	SECTION/AREA	LOT/PARCEL #: LOT F-1 / PAR. 165
PLAT# OR L/F: 21257-78 · BLOCK #: 20 · ZONE: PEC	TAX/ZONE MAP: 47 · ELECT. DISTRICT: 6	CENSUS TRACT: 6903
WATER CODE	SEWER CODE	

TITLE
LANDSCAPE DETAILS

Des. By JEG	Scale 1"=50'	Proj. No. 95054.10
Drn. By JEG	Date 09-27-10	17 of ~~18~~ 20
Chk. By	Approved	

SDP-10-096

P:\95054\95054.1\ENGR\95054\SDP17.MA3 Sep 27 09:08:22 2010

9/27/2010 9:08:46 AM jsmith c:\hpm\95054SDP17.prf P:\95054\95054.1\ENGR\95054SDP17.LA3 95054SDP17.LA3

Luminaire Schedule						
Symbol	Qty	Label	Arrangement	Lumens	LLF	Description
	23	S5	SINGLE	6700	0.850	SAC-R5-1-H7016
	11	S3-Twin	GROUP	N.A.	0.800	(2) MPTR-350-MP-MT-4S COOPERTRIBUTE TWIN ASSEMBLY
	4	S4	SINGLE	33000	0.800	MPTR-350-MP-2S COOPER TRIBUTE SINGLE
	17	S1	SINGLE	33000	0.800	MPTR-350-MP-XX-SL COOPER TRIBUTE SINGLE WITH SPILL LIGHT CONTROL

Calculation Summary							
Label	CalcType	Units	Avg	Max	Min	Avg/Min	Max/Min
Parking and Drive Aisle	Illuminance	Fc	2.04	8.0	0.0	N.A.	N.A.
Property Line	Illuminance	Fc	0.41	3.0	0.0	N.A.	N.A.

Luminaire Location Summary						
LumNo	Label	X	Y	Z	Orient	Tilt
1	S1	112507.6	43772.47	30	142.855	0
2	S1	112573	44238.47	30	138.829	0
3	S1	112834.9	44618.83	30	316.895	0
4	S1	112750.8	44563.51	30	240.224	0
5	S1	112826.4	44464.4	30	188.216	0
6	S1	112560.5	44410.67	30	220.551	0
7	S1	112451.0	44546.45	30	320.77	0
8	S1	112384.0	44472.71	30	316.266	0
9	S1	112316.7	44394.27	30	311.742	0
10	S1	112682.1	43995.92	30	144.654	0
11	S1	112641.2	43919.92	30	139.981	0
12	S1	112573.9	43842.16	30	142.91	0
13	S1	112743.3	44042.43	30	136.782	0
14	S1	112811.7	44118.82	30	135.681	0
15	S1	112254.9	44322.94	30	311.742	0
16	S1	112147.0	44033.21	30	0	0
17	S1	112551.6	44606.13	30	240.624	0
18	S3-Twin	112402.4	43844.87	30	103.241	0
19	S3-Twin	112694.5	44378.13	30	104.036	0
20	S3-Twin	112584.9	44457.99	30	104.036	0
21	S3-Twin	112689.0	44453.83	30	104.036	0
22	S3-Twin	112785.7	44295.12	30	104.036	0
23	S3-Twin	112246.7	43979.98	30	103.241	0
24	S3-Twin	112311.4	43925.28	30	103.241	0
25	S3-Twin	112315.3	44192.38	30	193.588	0
26	S3-Twin	112250.3	44115.12	30	13.179	0
27	S3-Twin	112486.6	44392.47	30	17.186	0
28	S3-Twin	112398.0	44288.48	30	191.645	0
29	S4	112871.8	44210.75	30	134.929	0
30	S4	112935.2	44347.83	30	189.725	0
31	S4	112880.7	44456.7	30	209.742	0
32	S4	112880.1	44538.53	30	136.635	0
33	S5	112427.5	44200.97	12	0	0
34	S5	112679.1	44084.67	12	0	0
35	S5	112710.3	44120.27	12	0	0
36	S5	112648.2	44049.27	12	0	0
37	S5	112620	44016.37	12	0	0
38	S5	112584.2	44048.17	12	0	0
39	S5	112510.7	44081.07	12	0	0
40	S5	112588	43978.47	12	0	0
41	S5	112555.8	43941.27	12	0	0
42	S5	112522.8	43903.97	12	0	0
43	S5	112464.8	44170.67	12	0	0
44	S5	112435.5	43976.87	12	0	0
45	S5	112405.1	44035.67	12	0	0
46	S5	112372.7	43966.77	12	0	0
47	S5	112412.1	43934.87	12	0	0
48	S5	112450.4	43901.87	12	0	0
49	S5	112486.5	43869.87	12	0	0
50	S5	112333.8	44001.37	12	0	0
51	S5	112297.1	44032.77	12	0	0
52	S5	112262.9	44259.65	12	0	0
53	S5	112685.9	44277.86	12	138.568	0
54	S5	112744.4	44156.64	12	0	0
55	S5	112777.2	44193.93	12	0	0

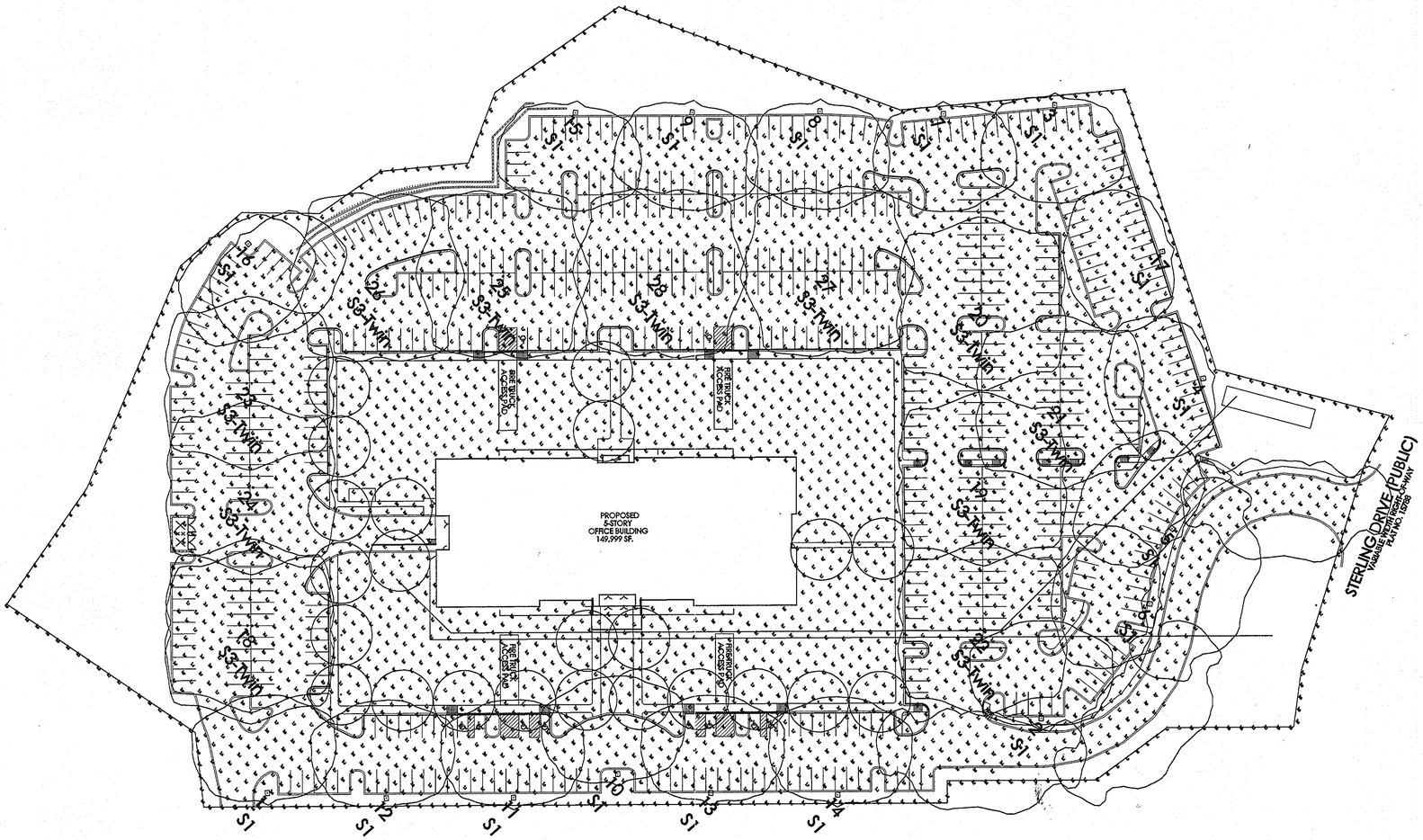

APPROVED: HOWARD COUNTY DEPT. OF PUBLIC WORKS

CHIEF, BUREAU OF HIGHWAYS — DATE 10-8-10

APPROVED: HOWARD COUNTY DEPT. OF PLANNING AND ZONING

CHIEF, DIVISION OF LAND DEVELOPMENT — DATE 11-18-10

CHIEF, DEVELOPMENT ENGINEERING DIVISION — DATE 11/16/10

DIRECTOR — DATE 11/18/10

Date	No.	Revision Description

EMERSON PARCEL F
REVITZ PROPERTY

5-STORY COMMERCIAL OFFICE BUILDING

OWNER/DEVELOPER:
EMERSON DEVELOPMENT VII LLC
1 TEXAS STATION COURT, SUITE 200
TIMONIUM, MARYLAND 21093-8288
(443) 689-8000

STATE OF MARYLAND — ROBERT WILLIAM MATIS — NO. 605 — REGISTERED — PROFESSIONAL LAND SURVEYOR

AS BUILT
NOT REQUIRED

SURVEY SERVICES OF MD, LLC
BY: ROBERT W. MATIS - RLS 605

STATE OF MARYLAND — MELVIN CHARLES BERALL JR. — NO. 16828 — REGISTERED — PROFESSIONAL ENGINEER

AS-BUILT CERTIFICATION FOR PSWM

NOTE: THERE IS NO "AS-BUILT" INFORMATION PROVIDED ON THIS SHEET.

SIGNED _____ 5/23/12 P.E.# 16828
MELVIN CHARLES BERALL JR.

SUBDIVISION NAME: REVITZ PROPERTY	SECTION/AREA		LOT/PARCEL #: LOT F / PAR. 165
PLAT# OR L/F: 21277-78	BLOCK #: 20	ZONE: PEC	TAX/ZONE MAP: 47
ELECT. DISTRICT: 6	CENSUS TRACT: 6903		
WATER CODE	SEWER CODE		

TITLE: **SITE LIGHTING PLAN**

Des. By	Scale 1"=50'	Proj. No. 95054.10	
Drn. By	Date 05-26-10	18 of ~~18~~ 20	
Chk. By	Approved		

SDP-10-096

10/5/2010 3:42:58 PM tcrawley c:\hpm\SITE LITING SHEET 18.prf P:\95054\95054.1\ENGR\transfer\transin\2010-08-14_From elec\SITE LITING SHEET 18.dgn

Tue Oct 05 15:41:29 2010 N:\95054\95054.1\ENGR\transfer\transin\2010-08-14_From elec\SITE LITING SHEET 18.dgn

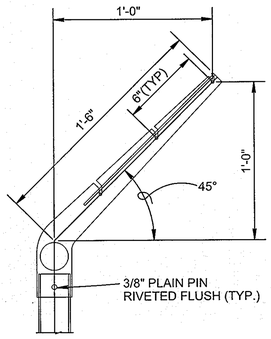

LINE POST

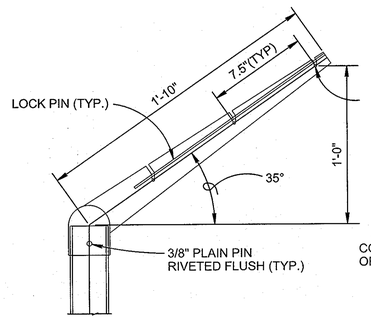

CORNER POST

EXTENSION ARM DETAILS

NOTES:

1. RAILS, POSTS, AND BRACES SHALL BE CONSTRUCTED ON THE SECURE SIDE OF THE FENCE ALIGNMENT. SECURA MESH FABRIC SHALL BE PLACED ON THE SIDE OPPOSITE THE SECURE AREA. FABRIC SHALL BE ATTACHED TO THE FENCE PER SECURA FENCE SYSTEM ASF .75-9R REQUIREMENTS.
2. UNLESS SPECIFICALLY SHOWN OR SPECIFIED, ALL AMERISTAR MATRIX FENCE SHALL HAVE APRON EXTENDED OUTWARD FROM THE AREA BEING PROTECTED.

GATE POST

GATE LEAF WIDTH	GATE POST (OD)	FABRIC HEIGHT	"A" DIAM	"B" DEPTH	"C" POST EMBED.
3' TO 6'	2.875"	5' TO 5'	12"	38"	36"
		6' TO 9'	14"	42"	40"
		10' TO 12'	16"	46"	44"
7' TO 12'	4.000"	3' TO 5'	14"	38"	36"
		6' TO 9'	16"	42"	40"
		10' TO 12'	18"	46"	44"

LINE AND TERMINAL POSTS

FABRIC HEIGHT	TYPE POST	"A" DIAM	"B" DEPTH	"C" POST EMBEDMENT
6'-0" TO 9'-0"	LINE	12"	38"	36"
	TERMINAL	12"	38"	36"

NOTE: TERMINAL POSTS INCLUDE END, CORNER, AND PULL POSTS

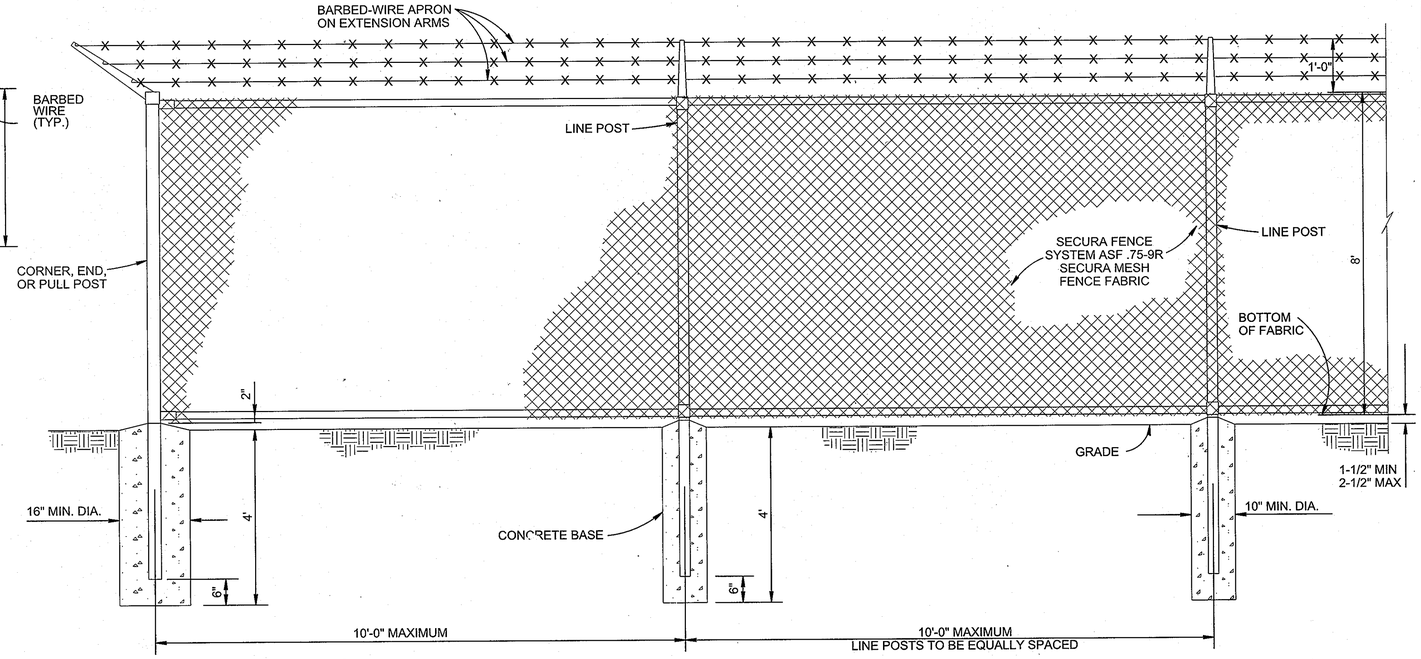

1 8' HIGH AMERISTAR MATRIX FENCE FRAME

SCALE: NONE

DETAIL IS BASE DESIGN. CONCRACTOR MAY USE EQUIVALENT PRODUCT THAT MEETS PROJECT REQUIREMENTS AND SPECIFICATIONS AND AS APPROVED BY THE COR.

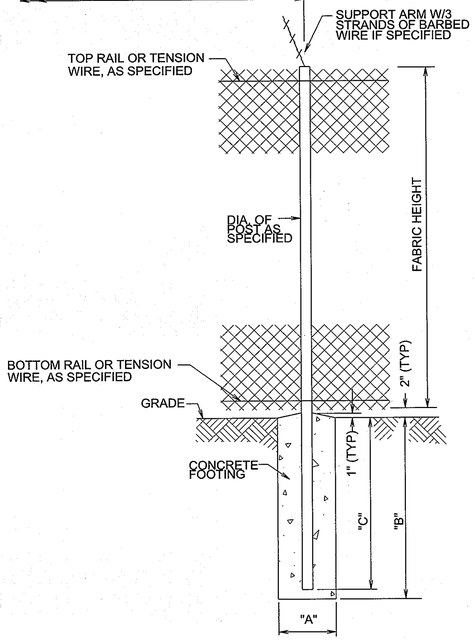

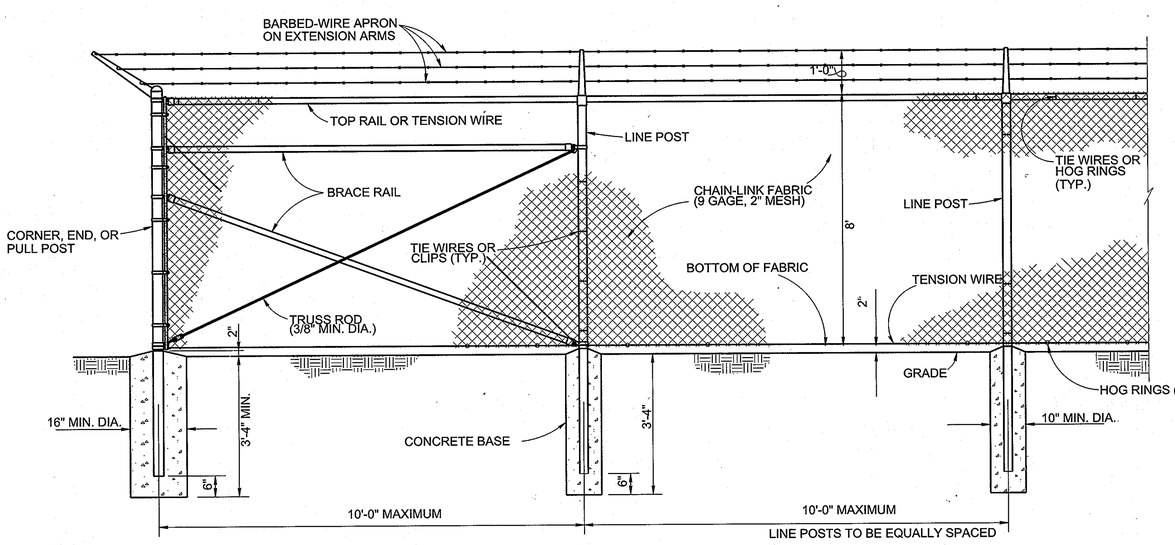

2 8' HIGH CHAIN LINK SECURITY FENCE

SCALE: NONE

PROFESSIONAL CERTIFICATION

I HEREBY CERTIFY THAT THESE DOCUMENTS WERE PREPARED OR APPROVED BY ME, AND THAT I AM A DULY LICENSED PROFESSIONAL ENGINEER UNDER THE LAWS OF THE STATE OF MARYLAND, LICENSE NO. 22350 EXPIRATION DATE: 05/22/2015.

7/12/13

STATE OF MARYLAND · BRADFORD D. WEINERT · No. 22350 · PROFESSIONAL ENGINEER

APPROVED: HOWARD COUNTY DEPT. OF PLANNING AND ZONING

CHIEF, DIVISION OF LAND DEVELOPMENT — DATE 7/11/13

CHIEF, DEVELOPMENT ENGINEERING DIVISION — DATE 7/9/13

DIRECTOR — DATE 7/10/13

Date	No.	Revision Description

EMERSON PARCEL F-1
REVITZ PROPERTY

5-STORY COMMERCIAL OFFICE BUILDING

OWNER DEVELOPER:
EMERSON DEVELOPMENT VII LLC
1 TEXAS STATION COURT, SUITE 200
TIMONIUM, MARYLAND 21093-8288
(443) 689-8000

SUBDIVISION NAME			SECTION AREA		LOT/PARCEL #
REVITZ PROPERTY					LOT F-1 / PAR. 165
PLAT OR L	BLOCK	ZONE	TAX ZONE MAP	ELECT. DISTRICT	CENSUS TRACT
21277 & 21278	20	PEC	47	6	6903
WATER CODE			SEWER CODE		

TITLE: SITE DETAILS

Des. By	Scale 1"=50'	Proj. No.95054.10
Drn. By	Date 07-05-13	19 of 20
Chk. By	Approved	

US Army Corps of Engineers
Baltimore District

REAL PROPERTY SERVICES
FEE AGENCY
ANNAPOLIS JUNCTION, MARYLAND

JACOBS
1111 JEFFERSON DAVIS RD., ARLINGTON, VA 22201
(571) 218-1000

THE INFORMATION PROVIDED HEREIN IS THE PROPERTY OF THE UNITED STATES GOVERNMENT AND IS FURNISHED FOR THE PURPOSE STATED IN THE ACCOMPANYING DOCUMENT. NO PART OF THIS DOCUMENT MAY BE DISCLOSED TO PERSONS NOT CONTAINED HEREIN OR LIMITED TO THE RECIPIENT SPECIFIED IN THE ACCOMPANYING DOCUMENT. REPRODUCTION OR DISCLOSURE TO ANY PERSON NOT AUTHORIZED IN WRITING BY THE CONTRACTING OFFICER OR HIS DESIGNATED REPRESENTATIVE IS PROHIBITED. ANY INFORMATION CONTAINED HEREIN IN WHOLE OR IN PART IN ANY MEDIUM WITHOUT THE APPROVAL OF THE UNITED STATES GOVERNMENT IS STRICTLY PROHIBITED. VIOLATORS OF THIS NOTICE WILL BE PROSECUTED TO THE FULLEST EXTENT OF THE LAW.

Mark	Description	Date	Appr.
	Redline Revised 6/28/13	7/13	
	Previous Grading		

Designed by: S.PARENT
Drawn by: S.PARENT
Cad by: B.WEINERT
RSFO Project Manager: CHARLES CANITZ
Submitted by: NATHAN JAMES, PROJECT MANAGER
Date: JULY 10, 2013
Project No. 27877
Rev. -
File name:
Plot date:
Plot table:

EMERSON - PERIMETER SECURITY AND SITE
SITE DETAILS
ROOM(S) OR FLOOR
LAUREL, MD

Drawing No.
Sheet Reference No.
19 OF 20
Sheet of 45

SDP-10-096

UNCLASSIFIED//FOR OFFICIAL USE ONLY

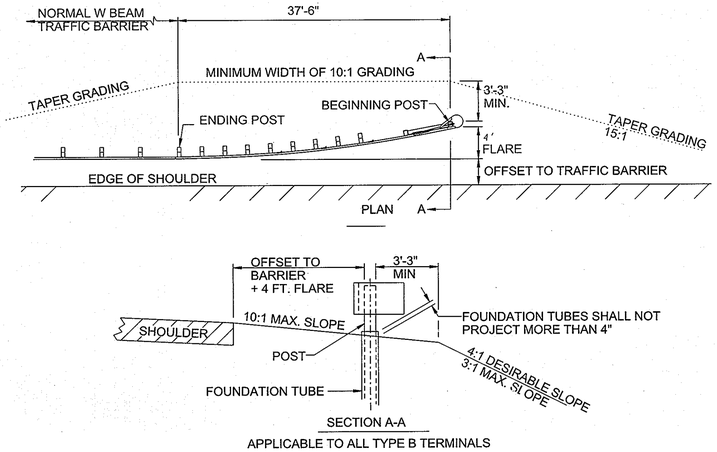

APPLICABLE TO ALL TYPE B TERMINALS

NOTES

1. 6:1 MAX GRADING IS ALLOWABLE WHEN THE BARRIER IS LOCATED 12 FT. OR MORE FROM THE OUTSIDE EDGE OF SHOULDER.
2. END TREATMENT DELINEATION SHALL BE PLACED IN ACCORDANCE WITH STD. MD 605.02-01
3. 4' FLARE REQUIRED
4. TYPE B TERMINAL SHALL ONLY BE USED WHEN THE GRADING AS SHOWN AND THE REQUIRED LENGTH OF NEED IS PROVIDED.

2 TRAFFIC BARRIER

SCALE: NONE

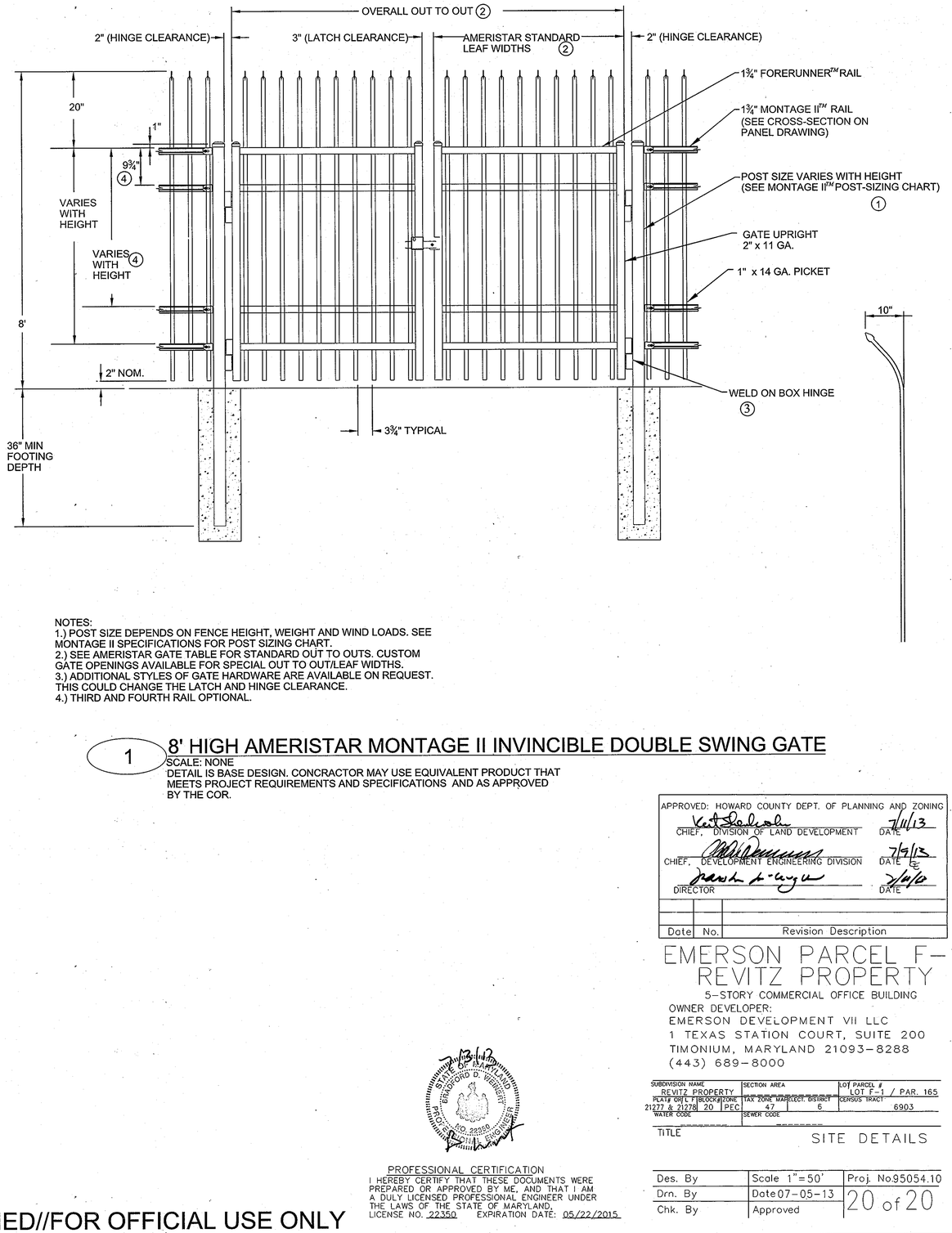

NOTES:
1.) POST SIZE DEPENDS ON FENCE HEIGHT, WEIGHT AND WIND LOADS. SEE MONTAGE II SPECIFICATIONS FOR POST SIZING CHART.
2.) SEE AMERISTAR GATE TABLE FOR STANDARD OUT TO OUTS. CUSTOM GATE OPENINGS AVAILABLE FOR SPECIAL OUT TO OUT/LEAF WIDTHS.
3.) ADDITIONAL STYLES OF GATE HARDWARE ARE AVAILABLE ON REQUEST. THIS COULD CHANGE THE LATCH AND HINGE CLEARANCE.
4.) THIRD AND FOURTH RAIL OPTIONAL.

1 8' HIGH AMERISTAR MONTAGE II INVINCIBLE DOUBLE SWING GATE

SCALE: NONE

DETAIL IS BASE DESIGN. CONCRACTOR MAY USE EQUIVALENT PRODUCT THAT MEETS PROJECT REQUIREMENTS AND SPECIFICATIONS AND AS APPROVED BY THE COR.

APPROVED: HOWARD COUNTY DEPT. OF PLANNING AND ZONING

CHIEF, DIVISION OF LAND DEVELOPMENT — DATE 7/11/13

CHIEF, DEVELOPMENT ENGINEERING DIVISION — DATE 7/9/13

DIRECTOR — DATE 7/9/13

Date	No.	Revision Description

PROFESSIONAL CERTIFICATION

I HEREBY CERTIFY THAT THESE DOCUMENTS WERE PREPARED OR APPROVED BY ME, AND THAT I AM A DULY LICENSED PROFESSIONAL ENGINEER UNDER THE LAWS OF THE STATE OF MARYLAND, LICENSE NO. 22350 EXPIRATION DATE: 05/22/2015

STATE OF MARYLAND — BRADFORD D. WORLEY — NO. 22350 — PROFESSIONAL ENGINEER — 7/3/13

EMERSON PARCEL F-1
REVITZ PROPERTY

5-STORY COMMERCIAL OFFICE BUILDING

OWNER DEVELOPER:
EMERSON DEVELOPMENT VII LLC
1 TEXAS STATION COURT, SUITE 200
TIMONIUM, MARYLAND 21093-8288
(443) 689-8000

SUBDIVISION NAME				SECTION AREA		LOT/PARCEL #
REVITZ PROPERTY						LOT F-1 / PAR. 165
PLAT # OR L F	BLOCK	ZONE	TAX ZONE	MAP	ELECT. DISTRICT	CENSUS TRACT
21277 & 21278	20	PEC	47		6	6903
WATER CODE			SEWER CODE			

TITLE: SITE DETAILS

Des. By	Scale 1"=50'	Proj. No.95054.10
Drn. By	Date 07-05-13	20 of 20
Chk. By	Approved	

US Army Corps of Engineers
Baltimore District

REAL PROPERTY SERVICES
FEDERAL PROJECTS
ANNAPOLIS JUNCTION, MARYLAND

JACOBS
1301 McGUIRE RD., ARLINGTON, VA. 22201
(703) 549-8000

THE INFORMATION PROVIDED HEREIN IS THE PROPERTY OF THE U.S. GOVERNMENT AND IS FURNISHED FOR THE PURPOSE STATED IN THE ACCOMPANYING DOCUMENT. COPYRIGHT OR OTHER PROPRIETARY RESTRICTIONS ON DISTRIBUTION OF THIS DOCUMENT ARE THE EXCEPTIONS IN THE ACCOMPANYING DOCUMENT. REPRODUCTION OR DISCLOSURE OF THIS DOCUMENT OR ANY PORTION THEREOF CONTAINED HEREIN IN WHOLE OR IN PART IN ANY MEDIUM WITHOUT THE APPROVAL OF THE UNITED STATES GOVERNMENT IS PROHIBITED BY LAW AND VIOLATORS OF THIS NOTICE WILL BE PROSECUTED TO THE FULLEST EXTENT OF THE LAW.

Rev.	Date	Description	Mark
	7/8	Redline Revisions (#3)	
		Per comments by Jacobs	

Designed by: S.PARENT
Drawn by: S.PARENT
Chkd by: B.WEINERT
RSFO Project Manager: CHARLES CANITZ
Submitted by: NATHAN JAMES PROJECT MANAGER
Date: JULY 10, 2013
Project No. 27877
File name:
Plot date:
Plot scale:

EMERSON - PERIMETER SECURITY AND SITE
ROOM(S) OR FLOOR
LAUREL, MD

Drawing No.
Sheet Reference No.
20 OF 20
Sheet of 45

SDP-10-096

UNCLASSIFIED//FOR OFFICIAL USE ONLY

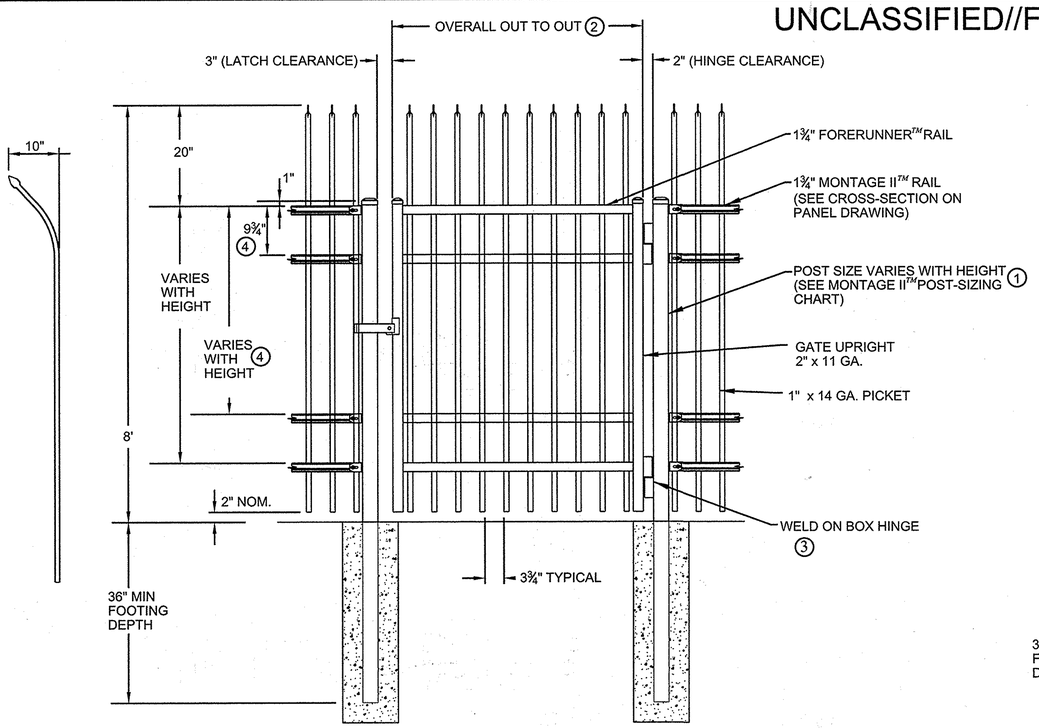

NOTES:
1.) POST SIZE DEPENDS ON FENCE HEIGHT, WEIGHT AND WIND LOADS. SEE *MONTAGE II ™* SPECIFICATIONS FOR POST SIZING CHART.
2.) SEE *AMERISTAR* GATE TABLE FOR STANDARD OUT TO OUTS. CUSTOM GATE OPENINGS AVAILABLE FOR SPECIAL OUT TO OUT/LEAF WIDTHS.
3.) ADDITIONAL STYLES OF GATE HARDWARE ARE AVAILABLE ON REQUEST THIS COULD CHANGE THE LATCH & HINGE CLEARANCE.
4.) THIRD & FORTH RAIL OPTIONAL.

2 AMERISTAR MONTAGE II ORNAMENTAL INVINCIBLE SINGLE SWING GATE

SCALE: NONE

DETAIL IS BASE DESIGN. CONCRACTOR MAY USE EQUIVALENT PRODUCT THAT MEETS PROJECT REQUIREMENTS AND SPECIFICATIONS AND AS APPROVED BY THE COR.

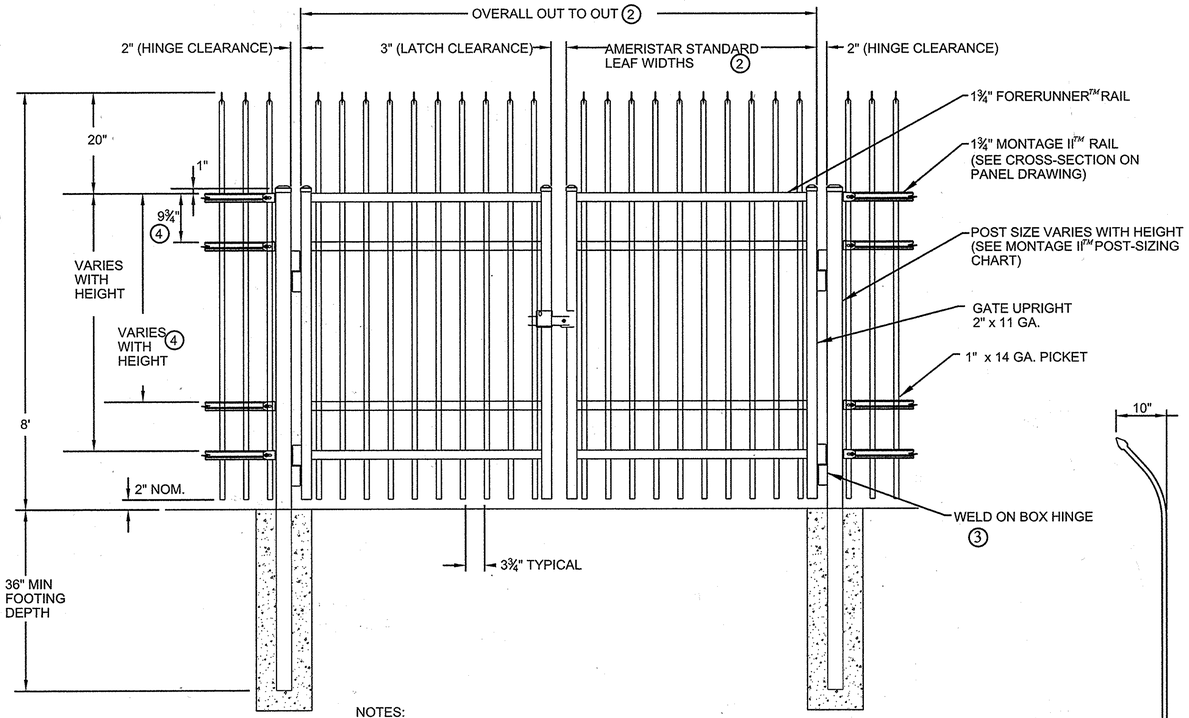

NOTES:
1.) POST SIZE DEPENDS ON FENCE HEIGHT, WEIGHT AND WIND LOADS. SEE MONTAGE II SPECIFICATIONS FOR POST SIZING CHART.
2.) SEE AMERISTAR GATE TABLE FOR STANDARD OUT TO OUTS. CUSTOM GATE OPENINGS AVAILABLE FOR SPECIAL OUT TO OUT/LEAF WIDTHS.
3.) ADDITIONAL STYLES OF GATE HARDWARE ARE AVAILABLE ON REQUEST. THIS COULD CHANGE THE LATCH AND HINGE CLEARANCE.
4.) THIRD AND FOURTH RAIL OPTIONAL.
5.) CONTRACTOR SHALL SAND DOWN END OF SCREWS ON HASPS AS NEEDED TO WELD HASP TO GATE.

3 AMERISTAR MONTAGE II ORNAMENTAL INVINCIBLE DOUBLE SWING GATE

SCALE: NONE

DETAIL IS BASE DESIGN. CONCRACTOR MAY USE EQUIVALENT PRODUCT THAT MEETS PROJECT REQUIREMENTS AND SPECIFICATIONS AND AS APPROVED BY THE COR.

GATE PLAN

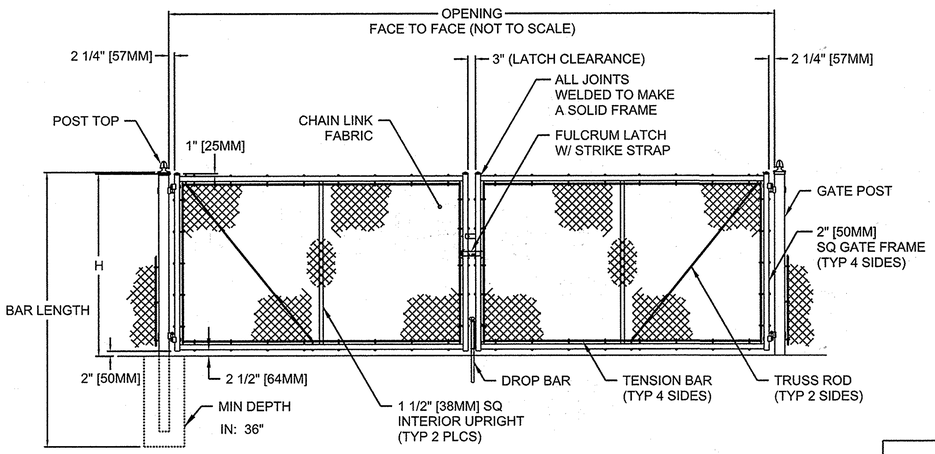

GATE ELEVATION - (4) BAYS SHOWN

NOM HEIGHT (H)
8'-0" [2438MM]

BAYS	OPENING (F/F)
4	20'-0" [6096MM]
4	22'-0" [6706MM]
4	24'-0" [7315MM]

END & CORNER POST TOP OPTIONS	
STANDARD	FLAT

GATE POST

OPENING	GATE POST (OD)	FABRIC HEIGHT	"A" DIAM	"B" DEPTH	"C" POST EMBED.
14' TO 24'	4"	3' TO 5'	12"	38"	36"
		6' TO 9'	14"	42"	40"
		10' TO 12'	16"	46"	44"

NOTES:
1. METRIC DIMENSIONS ARE NOMINAL EQUIVALENTS TO U.S. DIMENSIONS.
2. SPECIFICATIONS SHOWN CAN BE CHANGED BY MASTER-HALCO ONLY.
3. FOOTING WIDTH TO BE (4)X POST WIDTH.
4. GATES MAY BE MANUALLY OR ELECTRICALLY OPERATED. HARDWARE WILL VARY FOR ELECTRICALLY OPERATED GATES.

1 DOUBLE-LEAF DOUBLE SWING GATE

SCALE: NONE

APPROVED: HOWARD COUNTY DEPT. OF PLANNING AND ZONING

CHIEF, DIVISION OF LAND DEVELOPMENT — DATE 10/15/14

CHIEF, DEVELOPMENT ENGINEERING DIVISION — DATE 10-10-14

DIRECTOR — DATE 10/15/14

Date	No.	Revision Description

EMERSON PARCEL F-1 REVITZ PROPERTY

5-STORY COMMERCIAL OFFICE BUILDING

OWNER DEVELOPER:
EMERSON DEVELOPMENT VII LLC
1 TEXAS STATION COURT, SUITE 200
TIMONIUM, MARYLAND 21093-8288
(443) 689-8000

REVITZ PROPERTY			SECTION AREA		LOT/PARCEL #
PLAT # OR L F	BLOCK #	ZONE	TAX ZONE MAP	ELECT. DISTRICT	CENSUS TRACT
	20	PEC	47	6	6903
WATER CODE			SEWER CODE		LOT F-1 / PAR. 165

TITLE

FENCE LAYOUT PLAN

Des. By	Scale 1"=150'	Proj. No.95054.10
Drn. By	Date 09-12-14	20D
Chk. By	Approved	

PROFESSIONAL CERTIFICATION

I HEREBY CERTIFY THAT THESE DOCUMENTS WERE PREPARED OR APPROVED BY ME, AND THAT I AM A DULY LICENSED PROFESSIONAL ENGINEER UNDER THE LAWS OF THE STATE OF MARYLAND, LICENSE NO. 45292 EXPIRATION DATE: 05/21/2016

STATE OF MARYLAND — ROBERT EDWARD CROWLEY — 45292 — PROFESSIONAL ENGINEER

10-1-2014

US Army Corps of Engineers
Baltimore District

REAL PROPERTY SERVICES
ANNAPOLIS JUNCTION, MARYLAND

JACOBS
1100 N.GLEBE RD., ARLINGTON, VA. 22201

THE INFORMATION PROVIDED HEREIN IS THE PROPERTY OF THE U.S. GOVERNMENT AND IS FURNISHED FOR THE PURPOSE STATED IN THE ACCOMPANYING DOCUMENT. DISTRIBUTION OF THIS DOCUMENT AND THE INFORMATION CONTAINED HEREIN TO ANY PERSON OR ENTITY NOT NEEDED IN THE ACCOMPANYING DOCUMENT, REPRODUCTION OR DISSEMINATION OF THIS DOCUMENT OR OF THE INFORMATION CONTAINED HEREIN BEYOND THAT WHICH IS NECESSARY WITHOUT THE APPROVAL OF THE UNITED STATES GOVERNMENT IS STRICTLY PROHIBITED. VIOLATORS OF THIS REQUIREMENT WILL BE PROSECUTED TO THE FULLEST EXTENT OF THE LAW.

Mark	Description	Date	Appr.
1	NEW SHEET ADDED FOR REDLINE REVISION #2	10/1/2014	

Designed by: M.WERDER	Date: SEPTEMBER 19, 2014	Rev. -
Drwn by: M.WERDER	Ckd by: R.CROWLEY	Project No. 31435
RSFO Project Manager AMY YALE		File name:
Submitted by: NATHAN JAMES PROJECT MANAGER		Plot date: Plot scale: AS SHOWN

EMERSON - CAMPUS FENCE

SITE DETAILS

LAUREL, MD

ROOM(S) OR FLOOR

Drawing No.

Sheet Reference No. 20D

Sheet of 006

SDP-10-096

UNCLASSIFIED//FOR OFFICIAL USE ONLY

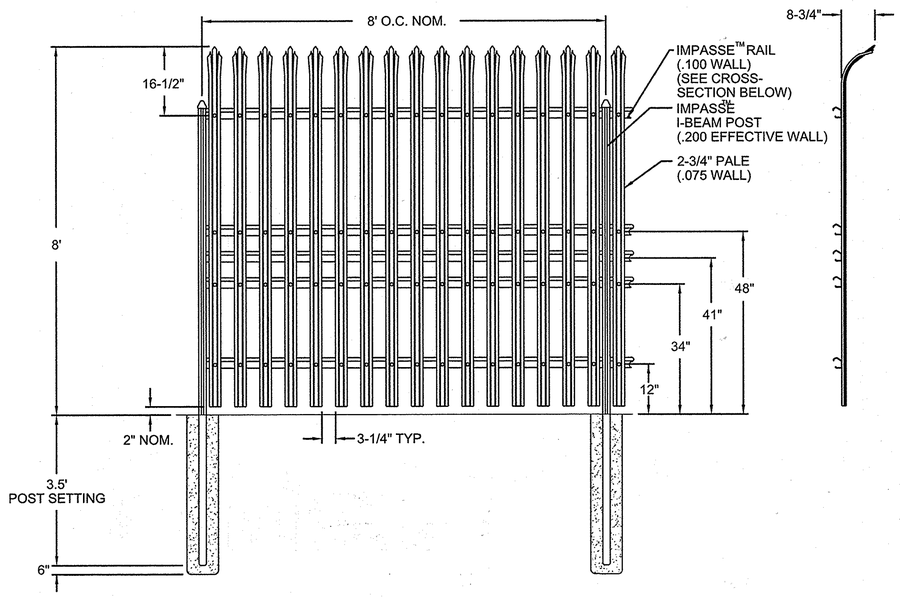

NOTES:

1. SEE DETAIL 2 ON THIS SHEET FOR K-12 ANTI-RAM CABLED STEEL BARRIER INSTALLTION FOR PORTIONS OF FENCE TO BE K-12 RATED. SEE SITE LAYOUT PLAN FOR SECTION OF FENCE THAT IS TO BE K-12 RATED.

2. IDS SYSTEM IS TO BE ATTACHED TO FENCE PICKETTS EVERY 8'. REPLACE CURVED PICKETTS WITH STRAIGHT PICKETTS AT LOCATIONS FOR IDS CONNECTIONS. FENCE HALF POSTS CAN BE USED FOR IDS CONNECTIONS. STRAIGHT PICKETTS ARE TO BE SAME HEIGHT AS CURVED PICKETTS.

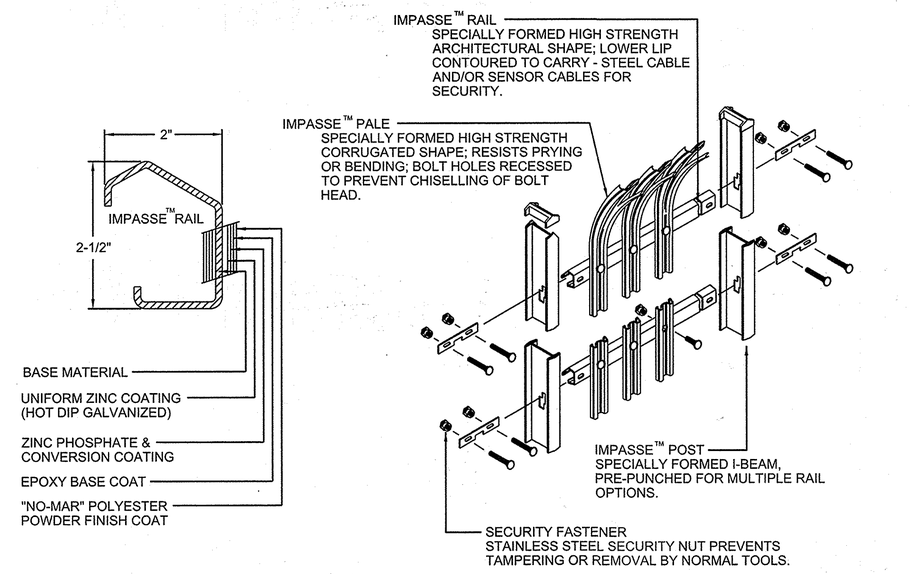

1 AMERISTAR 8' HIGH IMPASSE GAUNTLET HIGH SECURITY STEEL FENCE

SCALE: NONE

DETAIL IS BASE DESIGN. CONCRACTOR MAY USE EQUIVALENT PRODUCT THAT MEETS PROJECT REQUIREMENTS AND SPECIFICATIONS AND AS APPROVED BY THE COR.

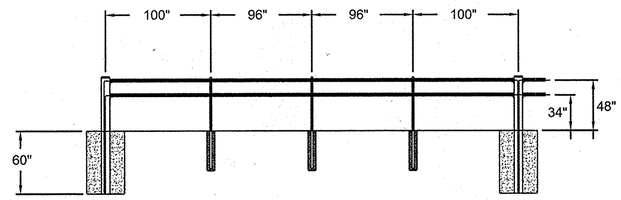

NOTE: SEE STALWART PANEL DRAWINGS FOR DETAILS OF PALES

IMPASSE PALES

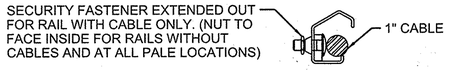

SECURITY FASTENER DETAIL

PROTECTION SIDE

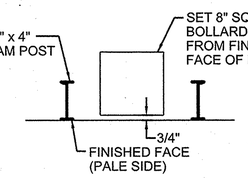

TOP VIEW POST SETTING

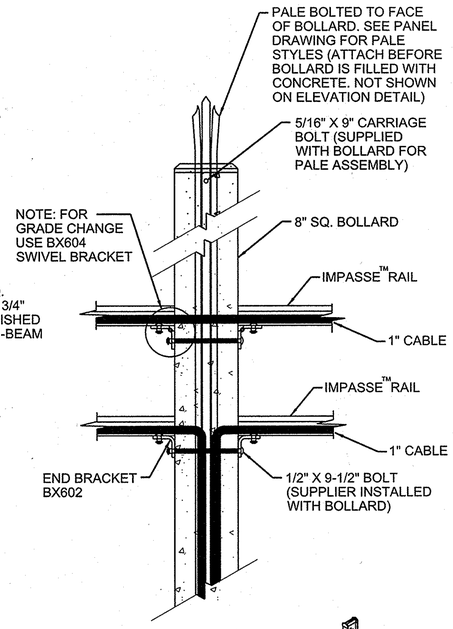

CABLE & RAIL DETAIL

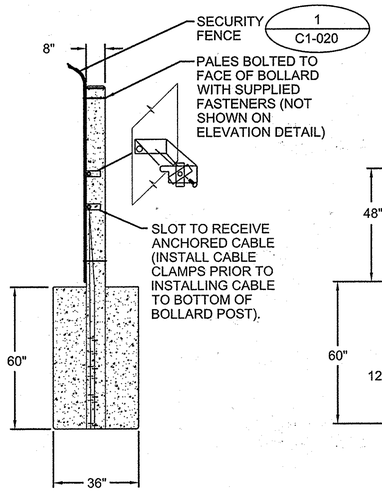

SIDE VIEW DETAIL

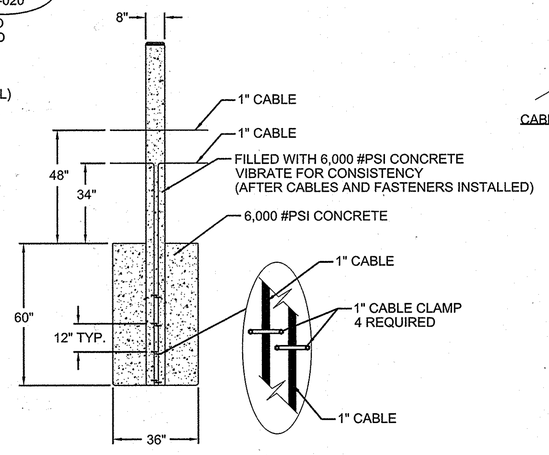

FRONT VIEW DETAIL

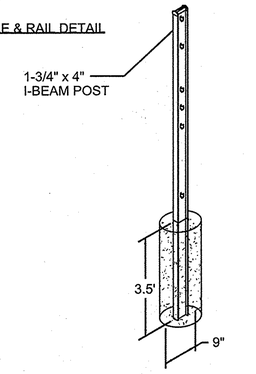

I-BEAM POST DETAIL

2 STALLWART M40 (K12) ANTI-RAM CABLED STEEL BARRIER

SCALE: NONE

DETAIL IS BASE DESIGN. CONCRACTOR MAY USE EQUIVALENT PRODUCT THAT MEETS PROJECT REQUIREMENTS AND SPECIFICATIONS AND AS APPROVED BY THE COR.

APPROVED: HOWARD COUNTY DEPT. OF PLANNING AND ZONING

CHIEF, DIVISION OF LAND DEVELOPMENT — DATE 10/15/14

CHIEF, DEVELOPMENT ENGINEERING DIVISION — DATE 10-10-14

DIRECTOR — DATE 10/10/14

Date	No.	Revision Description

EMERSON PARCEL F-1 REVITZ PROPERTY

5-STORY COMMERCIAL OFFICE BUILDING

OWNER DEVELOPER:
EMERSON DEVELOPMENT VII LLC
1 TEXAS STATION COURT, SUITE 200
TIMONIUM, MARYLAND 21093-8288
(443) 689-8000

REVITZ PROPERTY		SECTION AREA		LOT PARCEL # LOT F-1 / PAR. 165
PLAT# OR L F	BLOCK# ZONE	TAX ZONE MAP/ELECT. DISTRICT		CENSUS TRACT
	20 PEC	47	6	6903
WATER CODE		SEWER CODE		

TITLE **FENCE LAYOUT PLAN**

Des. By	Scale 1"=150'	Proj. No.95054.10
Drn. By	Date 09-12-14	20C
Chk. By	Approved	

STATE OF MARYLAND — ROBERT L. CROWLEY — 21292 — REGISTERED PROFESSIONAL ENGINEER

10-1-2014

PROFESSIONAL CERTIFICATION
I HEREBY CERTIFY THAT THESE DOCUMENTS WERE PREPARED OR APPROVED BY ME, AND THAT I AM A DULY LICENSED PROFESSIONAL ENGINEER UNDER THE LAWS OF THE STATE OF MARYLAND, LICENSE NO. 45292 EXPIRATION DATE: 05/21/2016

US Army Corps of Engineers
Baltimore District

REAL PROPERTY SERVICES
FIELD OFFICE
ANNAPOLIS JUNCTION, MARYLAND

JACOBS
1100 N GLEBE RD., ARLINGTON, VA. 22201

THE INFORMATION PROVIDED HEREIN IS THE PROPERTY OF THE UNITED STATES GOVERNMENT AND IS FURNISHED FOR THE PURPOSE STATED IN THE ACCOMPANYING DOCUMENT. DISTRIBUTION OF THIS DOCUMENT AND THE INFORMATION CONTAINED HEREIN TO ANY PERSON OTHER THAN THOSE NEEDED IN THE ACCOMPANYING DOCUMENT, REPRODUCTION OR DISSEMINATION OF THIS DOCUMENT OR OF THE INFORMATION CONTAINED HEREIN IN ANY MANNER OR FORM, IN WHOLE OR IN PART, WITHOUT THE APPROVAL OF THE UNITED STATES GOVERNMENT IS STRICTLY PROHIBITED. VIOLATORS OF THIS REQUIREMENT WILL BE PROSECUTED TO THE FULLEST EXTENT OF THE LAW.

Mark	Description	Date	Appr.
1	NEW SHEET ADDED FOR REDLINE REVISION #2	10/1/2014	

Designed by: BEMGEBRER
Drawn by: BEMGEBRER
Chkd by: R.CROWLEY
RSPO Project Manager: AMY YALE
Submitted by: NATHAN JAMES, PROJECT MANAGER
Date: SEPTEMBER 18, 2014
Project No. 31435
File name:
Plot date:
Plot scale: AS SHOWN
Rev. -

EMERSON - CAMPUS FENCE
SITE DETAILS
LAUREL, MD
ROOM(S) OR FLOOR

Drawing No.
Sheet Reference No. 20C
Sheet of 006

SDP-10-096

UNCLASSIFIED//FOR OFFICIAL USE ONLY

UNCLASSIFIED//FOR OFFICIAL USE ONLY

END & CORNER POST TOP OPTIONS	
STANDARD	FLAT

GATE POST

GATE LEAF WIDTH	GATE POST (OD)	FABRIC HEIGHT	"A" DIAM	"B" DEPTH	"C" POST EMBED.
3' TO 6'	2.875"	3' TO 5'	12"	38"	36"
		6' TO 9'	14"	42"	40"
		10' TO 12'	16"	46"	44"
7' TO 12'	4.000"	3' TO 5'	14"	38"	36"
		6' TO 9'	16"	42"	40"
		10' TO 12'	18"	46"	44"

NOM HEIGHT (H)
8'-0" [2438MM]

OPENING (F/F)
24' [7315MM]

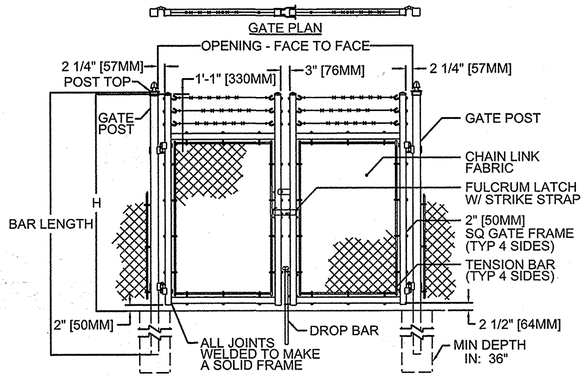

GATE ELEVATION

NOTES:
1. METRIC DIMENSIONS ARE NOMINAL EQUIVALENTS TO U.S. DIMENSIONS.
2. SPECIFICATIONS SHOWN CAN BE CHANGED BY MASTER HALCO ONLY.
3. FOOTING WIDTH TO BE (4)X POST WIDTH.
4. GATES MAY BE MANUALLY OR ELECTRICALLY OPERATED. HARDWARE WILL VARY FOR ELECTRICALLY OPERATED GATES.

2 SINGLE-LEAF DOUBLE SWING GATE
SCALE: NONE

END & CORNER POST TOP OPTIONS	
STANDARD	FLAT

GATE POST

GATE LEAF WIDTH	GATE POST (OD)	FABRIC HEIGHT	"A" DIAM	"B" DEPTH	"C" POST EMBED.
3' TO 6'	2.875"	3' TO 5'	12"	38"	36"
		6' TO 9'	14"	42"	40"
		10' TO 12'	16"	46"	44"

NOM HEIGHT (H)
8'-0" [2438MM]

OPENING (F/F)
4'-0" [1219MM]

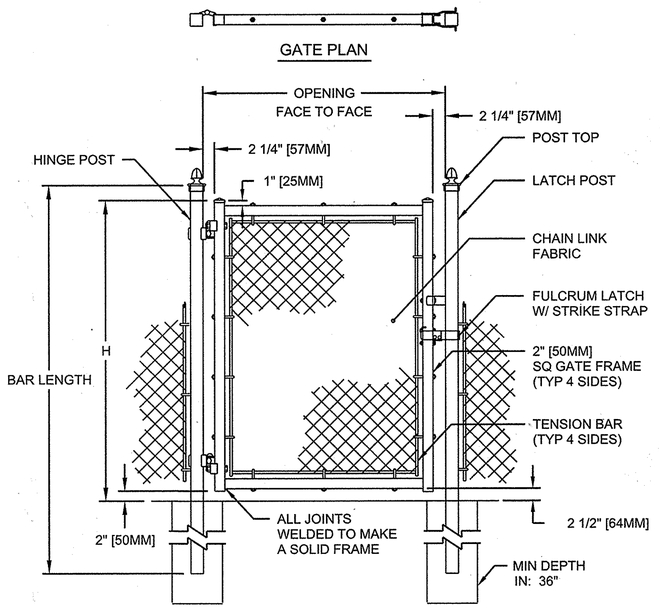

GATE ELEVATION

NOTES:
1. METRIC DIMENSIONS ARE NOMINAL EQUIVALENTS TO U.S. DIMENSIONS.
2. SPECIFICATIONS SHOWN CAN BE CHANGED BY MASTER-HALCO ONLY.
3. FOOTING WIDTH TO BE (4)X POST WIDTH.
4. GATES MAY BE MANUALLY OR ELECTRICALLY OPERATED. HARDWARE WILL VARY FOR ELECTRICALLY OPERATED GATES.

3 SINGLE SWING GATE
SCALE: NONE

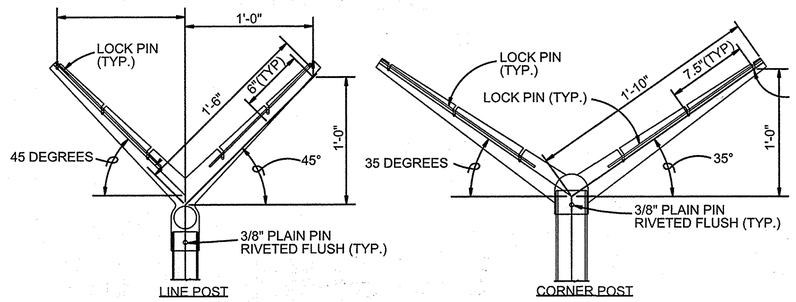

EXTENSION ARM DETAILS

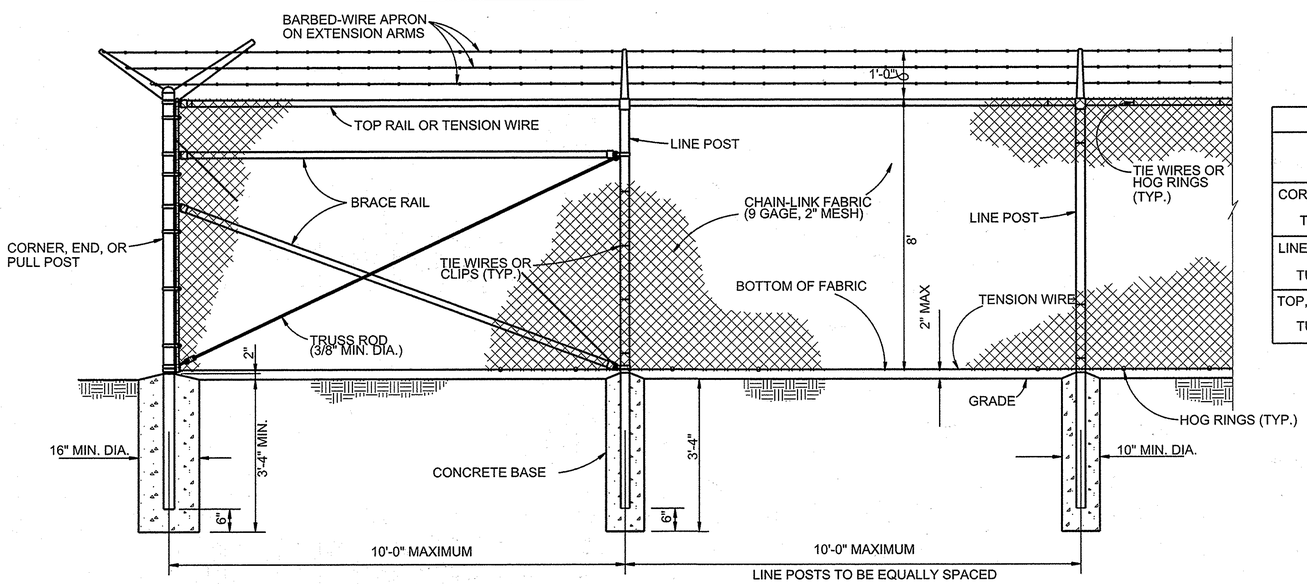

1 CHAIN LINK SECURITY FENCE
SCALE: NONE

STEEL POST SCHEDULE	
USE AND SECTION	MINIMUM OUTSIDE DIMENSIONS (NOMINAL)
	FABRIC WIDTH 84" TO 96"
CORNER, END & PULL POSTS TUBULAR - ROUND	2.875" O.D.
LINE POSTS TUBULAR - ROUND	2.375" O.D.
TOP, BOTTOM & BRACE RAILS TUBULAR - ROUND	1.66" O.D.

PROFESSIONAL CERTIFICATION
I HEREBY CERTIFY THAT THESE DOCUMENTS WERE PREPARED OR APPROVED BY ME, AND THAT I AM A DULY LICENSED PROFESSIONAL ENGINEER UNDER THE LAWS OF THE STATE OF MARYLAND, LICENSE NO. 45292 EXPIRATION DATE: 05/21/2016

STATE OF MARYLAND · ROBERT A. CROWLEY · 45292 · PROFESSIONAL ENGINEER
Robert Crowley 10-1-2014

APPROVED: HOWARD COUNTY DEPT. OF PLANNING AND ZONING

CHIEF, DIVISION OF LAND DEVELOPMENT — DATE 10/15/14

CHIEF, DEVELOPMENT ENGINEERING DIVISION — DATE 10.10.14

DIRECTOR — DATE 10/17/14

Date	No.	Revision Description

EMERSON PARCEL F-1 REVITZ PROPERTY

5-STORY COMMERCIAL OFFICE BUILDING

OWNER DEVELOPER:
EMERSON DEVELOPMENT VII LLC
1 TEXAS STATION COURT, SUITE 200
TIMONIUM, MARYLAND 21093-8288
(443) 689-8000

REVITZ PROPERTY			SECTION AREA		LOT/PARCEL #
PLAT OR L F	BLOCK	ZONE	TAX ZONE	MAP/ELECT. DISTRICT	CENSUS TRACT
	20	PEC	47	6	6903
WATER CODE			SEWER CODE		

LOT F-1 / PAR. 165

TITLE
FENCE LAYOUT PLAN

Des. By	Scale 1"=150'	Proj. No.95054.10
Drn. By	Date 09-12-14	20B
Chk. By	Approved	

US Army Corps of Engineers
Baltimore District

REAL PROPERTY SERVICES FIELD OFFICE
ANNAPOLIS JUNCTION, MARYLAND

JACOBS
1100 N.GLEBE RD., ARLINGTON, VA. 22201

THE INFORMATION PROVIDED HEREIN IS THE PROPERTY OF THE UNITED STATES GOVERNMENT AND IS FURNISHED FOR THE PURPOSE STATED IN THE ACCOMPANYING DOCUMENT. DISTRIBUTION OF THIS DOCUMENT AND THE INFORMATION CONTAINED THEREIN TO ANY PERSON OTHER THAN THOSE AUTHORIZED IN THE ACCOMPANYING DOCUMENT, REPRODUCTION OR DISSEMINATION OF THIS DOCUMENT OR OF THE INFORMATION CONTAINED THEREIN IS PROHIBITED. NO PART OF THIS REPORT MAY BE REPRODUCED OR DISSEMINATED IN ANY FORM OR BY ANY MEANS WITHOUT THE APPROVAL OF THE UNITED STATES GOVERNMENT IS STRICTLY PROHIBITED. VIOLATORS OF THIS REQUIREMENT WILL BE PROSECUTED TO THE FULLEST EXTENT OF THE LAW.

Mark	Description	Date	Appr.
1	NEW SHEET ADDED FOR REDLINE REVISION #2	10/1/2014	

Date: SEPTEMBER 19, 2014 — Rev. -
Project No. 314435
File name: — Plot date: — Plot scale: AS SHOWN
Designed by: M. WERDER
Drawn by: M. WERDER
Ckd by: R.CROWLEY
RSFO Project Manager AMY YALE
Submitted by: NATHAN JAMES PROJECT MANAGER

EMERSON - CAMPUS FENCE
SITE DETAILS
ROOM(S) OR FLOOR — LAUREL, MD

Drawing No.
Sheet Reference No. 20B
Sheet of 006

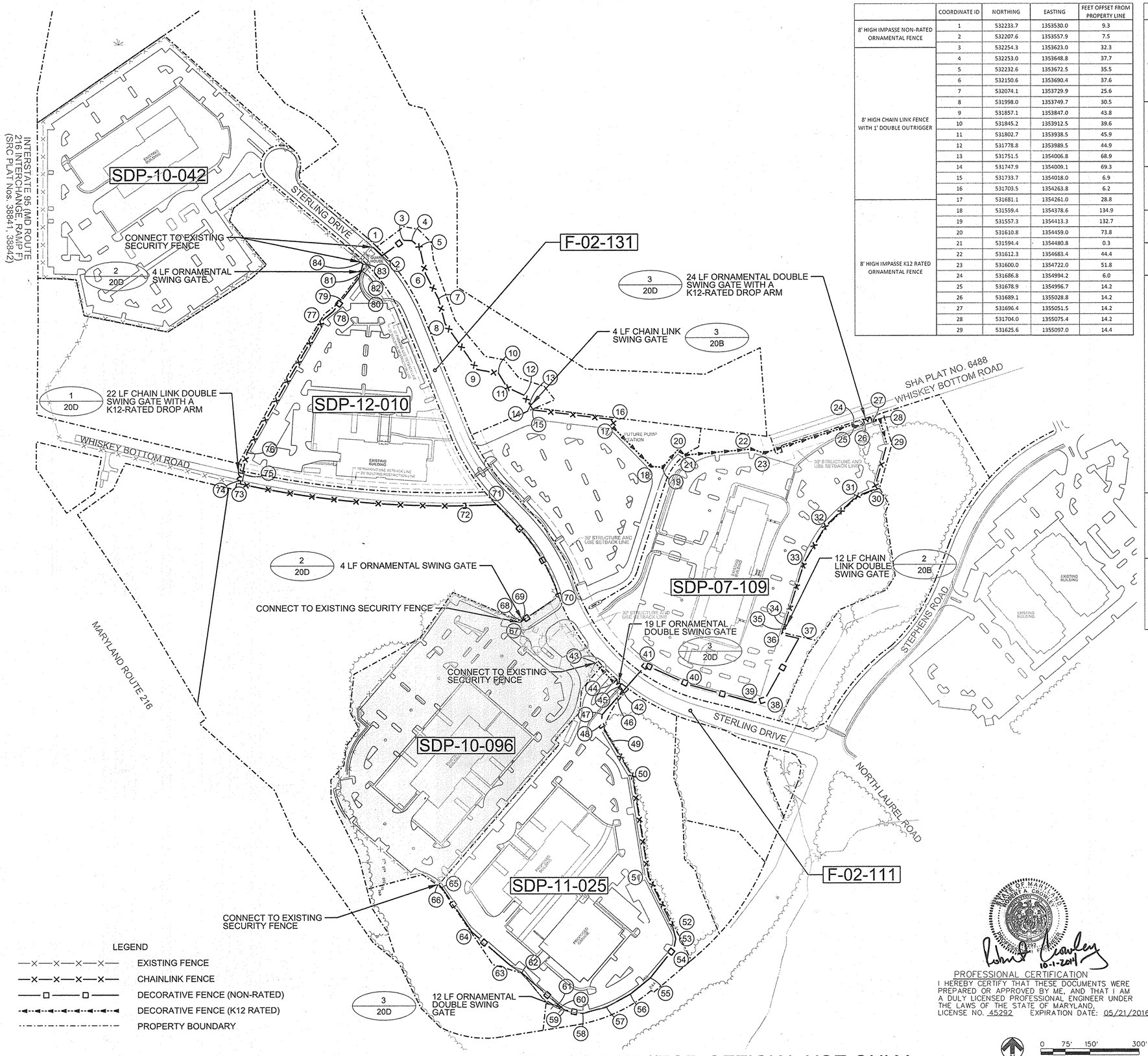

	COORDINATE ID	NORTHING	EASTING	FEET OFFSET FROM PROPERTY LINE
8' HIGH IMPASSE NON-RATED ORNAMENTAL FENCE	1	532233.7	1353530.0	9.3
	2	532207.6	1353557.9	7.5
	3	532254.3	1353623.0	32.3
8' HIGH CHAIN LINK FENCE WITH 1' DOUBLE OUTRIGGER	4	532253.0	1353648.8	37.7
	5	532232.6	1353672.5	35.5
	6	532150.6	1353690.4	37.6
	7	532074.1	1353729.9	25.6
	8	531998.0	1353749.7	30.5
	9	531857.1	1353847.0	43.8
	10	531845.2	1353912.5	39.6
	11	531802.7	1353938.5	45.9
	12	531778.8	1353989.5	44.9
	13	531751.5	1354006.8	68.9
	14	531747.9	1354009.1	69.3
	15	531733.7	1354018.0	6.9
	16	531703.5	1354263.8	6.2
	17	531681.1	1354261.0	28.8
8' HIGH IMPASSE K12 RATED ORNAMENTAL FENCE	18	531559.4	1354378.6	134.9
	19	531557.3	1354413.3	132.7
	20	531610.8	1354459.0	73.8
	21	531594.4	1354480.8	0.3
	22	531612.3	1354683.4	44.4
	23	531600.0	1354722.0	51.8
	24	531686.8	1354994.2	6.0
	25	531678.9	1354996.7	14.2
	26	531689.1	1355028.8	14.2
	27	531696.4	1355051.5	14.2
	28	531704.0	1355075.4	14.2
	29	531625.6	1355097.0	14.4
8' HIGH CHAIN LINK FENCE WITH 1' DOUBLE OUTRIGGER	29	531625.6	1355097.0	14.4
	30	531487.3	1355058.4	2.5
	31	531466.2	1355003.9	2.5
	32	531375.2	1354908.7	2.5
	33	531266.0	1354845.0	0.0
	34	531075.5	1354783.8	0.0
	35	531063.8	1354780.1	0.0
8' HIGH IMPASSE NON-RATED ORNAMENTAL FENCE	36	531045.8	1354774.3	6.0
	37	531033.3	1354827.1	6.0
	38	530846.1	1354723.0	50.0
	39	530837.3	1354691.9	33.0
	40	530891.5	1354495.6	34.4
	41	530953.0	1354360.7	26.5
8' HIGH IMPASSE K12 RATED ORNAMENTAL FENCE	42	530874.1	1354291.6	14.5
	43	530959.6	1354206.6	13.4
	44	530900.0	1354263.2	12.8
	45	530886.4	1354277.9	10.0
8' HIGH IMPASSE NON-RATED ORNAMENTAL FENCE	46	530854.5	1354274.0	7.5
	47	530802.1	1354227.0	20.0
	48	530771.7	1354223.7	12.3
	49	530720.0	1354255.0	2.0
8' HIGH CHAIN LINK FENCE WITH 1' DOUBLE OUTRIGGER	50	530615.3	1354318.4	2.0
	51	530308.5	1354367.5	2.0
8' HIGH IMPASSE NON-RATED ORNAMENTAL FENCE	52	530158.1	1354440.4	4.7
	53	530119.6	1354450.4	13.0
	54	530090.6	1354444.4	31.4
	55	530001.4	1354372.7	40.2
	56	529952.2	1354311.7	29.6
	57	529912.6	1354238.4	28.6
	58	529892.6	1354166.4	31.3
	59	529903.4	1354111.0	51.6
	60	529912.9	1354100.1	46.3
	61	529920.8	1354091.1	36.4
	62	530016.4	1353981.6	0.0
	63	530042.7	1353942.5	14.2
	64	530141.4	1353828.3	2.2
	65	530275.8	1353737.0	1.9
	66	530286.0	1353726.9	4.4
	67	531084.8	1353977.6	3.7
	68	531089.6	1353984.8	0.0
	69	531092.0	1353988.4	0.0
	70	531164.5	1354095.9	0.9
	71	531443.9	1353905.8	0.9
8' HIGH CHAIN LINK FENCE WITH 1' DOUBLE OUTRIGGER	72	531440.2	1353802.7	0.0
	73	531508.5	1353124.3	0.0
	74	531518.5	1353126.4	10.2
	75	531540.6	1353131.8	7.0
	76	531605.3	1353145.4	6.4
	77	532012.6	1353378.9	5.7
8' HIGH IMPASSE NON-RATED ORNAMENTAL FENCE	78	532035.8	1353407.9	10.0
	79	532070.3	1353434.3	4.4
	80	532140.6	1353488.1	4.7
	81	532155.9	1353492.3	1.1
	82	532160.1	1353493.5	2.7
	83	532181.5	1353499.4	7.9
	84	532187.4	1353492.6	8.5

US Army Corps of Engineers
Baltimore District

REAL PROPERTY SERVICES
FIELD OFFICE
ANNAPOLIS JUNCTION, MARYLAND

JACOBS
1100 N GLEBE RD., ARLINGTON, VA. 22201

THE INFORMATION PROVIDED HEREIN IS THE PROPERTY OF THE UNITED STATES GOVERNMENT. IT IS PROVIDED ONLY FOR THE PURPOSES STATED IN THE DOCUMENT. FURTHER DISTRIBUTION OF THIS DOCUMENT AND THE INFORMATION CONTAINED HEREIN IS LIMITED TO THE RECIPIENT SPECIFIED BY THE GOVERNMENT. ANY REPRODUCTION, COPYING, OR DISSEMINATION OF THIS DOCUMENT OR OF THE INFORMATION CONTAINED HEREIN IN WHOLE OR IN PART IN ANY MEDIUM WITHOUT THE EXPRESS WRITTEN PERMISSION OF THE GOVERNMENT IS STRICTLY PROHIBITED. VIOLATORS OF THIS REQUIREMENT WILL BE PROSECUTED TO THE FULLEST EXTENT OF THE LAW.

Date	No.	Revision Description
	1	NEW SHEET ADDED FOR REDLINE REVISION #2

Designed by: M. WERDER
Drawn by: M. WERDER
Chkd by: R.CROWLEY
RSFO Project Manager: AMY YALE
Submitted by: NATHAN JAMES, PROJECT MANAGER
Date: SEPTEMBER 19, 2014
Project No. 31435
Rev. 1
File name:
Plot date:
Plot scale: 1:150

APPROVED: HOWARD COUNTY DEPT. OF PLANNING AND ZONING

CHIEF, DIVISION OF LAND DEVELOPMENT — DATE 10/15/14

CHIEF, DEVELOPMENT ENGINEERING DIVISION — DATE 10-10-14

DIRECTOR — DATE 10/15/14

EMERSON PARCEL F-1
REVITZ PROPERTY

5-STORY COMMERCIAL OFFICE BUILDING

OWNER DEVELOPER:
EMERSON DEVELOPMENT VII LLC
1 TEXAS STATION COURT, SUITE 200
TIMONIUM, MARYLAND 21093-8288
(443) 689-8000

PROFESSIONAL CERTIFICATION
I HEREBY CERTIFY THAT THESE DOCUMENTS WERE PREPARED OR APPROVED BY ME, AND THAT I AM A DULY LICENSED PROFESSIONAL ENGINEER UNDER THE LAWS OF THE STATE OF MARYLAND, LICENSE NO. 45292 EXPIRATION DATE: 05/21/2016

10-1-2014

SUBDIVISION NAME			SECTION AREA		LOT PARCEL #
REVITZ PROPERTY					LOT F-1 / PAR. 165
PLAT # OR L F	BLOCK #	ZONE	TAX ZONE MAP	ELECT. DISTRICT	CENSUS TRACT
21277 & 21278	20	PEC	47	6	6903
WATER CODE			SEWER CODE		

TITLE
FENCE LAYOUT PLAN

Des. By	Scale 1"=150'	Proj. No.95054.10
Drn. By	Date 09-12-14	20A
Chk. By	Approved	

EMERSON - CAMPUS FENCE
FENCE LAYOUT PLAN
ROOM(S) OR FLOOR — LAUREL, MD

Drawing No.
Sheet Reference No. 20A
Sheet of 006

0 75' 150' 300'