# SITE DEVELOPMENT PLAN
# NORTH LAUREL PARK
## WEST SIDE AMENITIES
## CAPITAL PROJECT C-0304

PLANS PREPARED FOR

HOWARD COUNTY DEPARTMENT OF PUBLIC WORKS
HOWARD COUNTY, MARYLAND

## SHEET INDEX


| NO | DESCRIPTION | NO | DESCRIPTION |
|---|---|---|---|
| 1 | TITLE SHEET | 23 | GRADING & SEDIMENT CONTROL PLAN PHASE II |
| 2 | OVERALL SITE DEVELOPMENT PLAN | 24 | GRADING & SEDIMENT CONTROL PLAN PHASE II |
| 3 | MASS GRADING & SEDIMENT CONTROL PLAN PHASE I | 25 | GRADING & SEDIMENT CONTROL PLAN PHASE II |
| 4 | MASS GRADING & SEDIMENT CONTROL PLAN PHASE I | 26 | STORM DRAIN DRAINAGE AREA MAP |
| 5 | SEDIMENT CONTROL NOTES & DETAILS | 27 | STORM DRAIN PROFILES AND SCHEDULES |
| 6 | SEDIMENT CONTROL DETAILS | 28 | PRIVATE WATER AND SEWER PROFILES |
| 7 | POND AND SEDIMENT BASIN DETAILS | 29 | LANDSCAPE PLAN |
| 8 | SEDIMENT BASIN SPECIFICATIONS AND PROFILES | 30 | LANDSCAPE PLAN |
| 9 | SOIL BORING LOGS | 31 | LANDSCAPE PLAN |
| 10 | REVISED FOREST CONSERVATION PLAN | 32 | LANDSCAPE PLAN |
| 11 | REVISED FOREST CONSERVATION PLAN | 33 | LANDSCAPE NOTES |
| 12 | REVISED FOREST CONSERVATION PLAN | 34 | LANDSCAPE DETAILS |
| 13 | REVISED FOREST CONSERVATION PLAN | 35 | SITE DETAILS |
| 14 | REVISED FOREST CONSERVATION PLAN | 36 | SITE DETAILS |
| 15 | REVISED FOREST CONSERVATION PLAN NOTES & DETAILS | 37 | RETAINING WALL PLAN AND DETAILS |
| 16 | SITE DEVELOPMENT PLAN | 38 | RETAINING WALL ELEVATIONS |
| 17 | SITE DEVELOPMENT PLAN | 39 | BRIDGE ABUTMENT PLAN & DETAILS |
| 18 | SITE DEVELOPMENT PLAN | 40 | BRIDGE PROFILE & ABUTMENT DETAILS |
| 19 | GRADE ESTABLISHMENT PLAN ENTRY ROAD | 41 | BRIDGE ABUTMENT DETAILS |
| 20 | STORMWATER MANAGEMENT AND UTILITY PLAN | 42 | BRIDGE WING WALL ELEVATIONS |
| 21 | STORMWATER MANAGEMENT PROFILES AND DETAILS | 43 | SCHEMATIC BRIDGE DETAILS |
| 22 | STORMWATER MANAGEMENT DETAILS | | |


## GENERAL NOTES

1. ALL CONSTRUCTION SHALL BE IN ACCORDANCE WITH THE LATEST STANDARDS AND SPECIFICATIONS OF HOWARD COUNTY PLUS MSHA STANDARDS AND SPECIFICATIONS, IF APPLICABLE.

2. THE CONTRACTOR SHALL NOTIFY THE DEPARTMENT OF PUBLIC WORKS/BUREAU OF ENGINEERING/ CONSTRUCTION INSPECTION DIVISION AT (410) 313-1880 AT LEAST FIVE (5) WORKING DAYS PRIOR TO THE START OF WORK.

3. THE CONTRACTOR SHALL NOTIFY "MISS UTILITY" AT 1-800-257-7777 AT LEAST 48 HOURS PRIOR TO ANY EXCAVATION WORK BEING DONE.

4. TRAFFIC CONTROL DEVICES, MARKINGS, AND SIGNING SHALL BE IN ACCORDANCE WITH THE LATEST EDITION OF THE MANUAL ON UNIFORM TRAFFIC CONTROL DEVICES (MUTCD). ALL STREET AND REGULATORY SIGNS SHALL BE IN PLACE PRIOR TO THE PLACEMENT OF ANY ASPHALT.

6. THE EXISTING TOPOGRAPHY IS TAKEN FROM AERIAL TOPOGRAPHIC SURVEY PREPARED BY VIRGINIA RESOURCE MAPPING DATED MARCH 31, 2006, AND FIELD RUN SURVEY WITH MAXIMUM TWO FOOT CONTOUR INTERVALS PREPARED BY PATTON HARRIS RUST & ASSOCIATES DATED APRIL 24, 2008 AND JUNE 11, 2009. BOUNDARY SURVEY WAS PREPARED BY PATTON HARRIS RUST & ASSOCIATES DATED DECEMBER 12, 2006.

7. THE COORDINATES SHOWN HEREON ARE BASED UPON THE HOWARD COUNTY GEODETIC CONTROL WHICH IS BASED UPON THE MARYLAND STATE PLANE COORDINATE SYSTEM. HOWARD COUNTY MONUMENT NOS. 50B5 AND 50BA WERE USED FOR THIS PROJECT.

8. WATER IS PUBLIC. CONTRACT NO. 24-4669-D.

9. SEWER IS PUBLIC. CONTRACT NO. 24-4669-D.

10. STORMWATER MANAGEMENT FOR THIS SITE IS PROVIDED IN A DRY POND WHICH PROVIDES CHANNEL PROTECTION VOLUME, 10 AND 100-YEAR CONTROL. WATER QUALITY IS PROVIDED IN A BIORETENTION FACILITY, GRASS CHANNEL CREDIT WITH CHECK DAMS, AND SHEET FLOW TO BUFFER WITH LEVEL SPREADERS.

11. APPROXIMATE LOCATION OF EXISTING UTILITIES ARE SHOWN. THE CONTRACTOR SHALL TAKE ALL NECESSARY PRECAUTIONS TO PROTECT THE EXISTING UTILITIES AND MAINTAIN UNINTERRUPTED SERVICE. ANY DAMAGE INCURRED DUE TO CONTRACTOR'S OPERATION SHALL BE REPAIRED IMMEDIATELY AT THE CONTRACTOR'S EXPENSE. EXISTING UTILITIES ARE SHOWN BASED ON THE BEST AVAILABLE INFORMATION.

12. A 100-YEAR FLOODPLAIN STUDY WAS APPROVED UNDER SDP-08-118. THERE ARE NO CHANGES OR IMPACTS TO THE FLOODPLAIN PROPOSED WITH THIS PLAN.

13. WETLANDS ARE FOUND ON THIS PROJECT PER FIELD VISIT AND WETLAND DELINEATION BY JOHNSON MIRMIRAN & THOMPSON DATED JUNE 2005 & MAY 2009. FLOODPLAIN, STREAMS, STREAM BUFFERS, AND STEEP SLOPES ARE ALSO LOCATED ON SITE. NO DISTURBANCE TO THE WETLANDS IS PROPOSED FOR THE PROPOSED GRADING. 0.04 ACRES OF STREAM BUFFER DISTURBANCE IS PROPOSED FOR THE PROPOSED OUTFALL TO MEET MDE, SCD, AND COUNTY REQUIREMENTS. MDE AND SCD REQUIRE THAT THE OUTFALL BE LOCATED ON A SLOPE OF LESS THAN 10%. THE LOCATION SHOWN IS THE ONLY AREA IN THE VICINITY OF THE STORMWATER MANAGEMENT FACILITY THAT IS AT A SLOPE OF LESS THAN 10%. PER SECTION 16.116(c), THIS DISTURBANCE IS NECESSARY.

14. A TRAFFIC STUDY WAS APPROVED FOR THIS SITE. STUDY PREPARED BY TRAFFIC CONCEPTS.

15. THE SUBJECT PROPERTY IS ZONED R-SC PER THE 02-02-04 COMPREHENSIVE ZONING PLAN AND THE COMP LITE ZONING AMENDMENTS DATED JULY 28, 2006.

16. ALL ELEVATIONS SHOWN ARE BASED ON NAVD 1988.

17. SEE DEPARTMENT OF PLANNING AND ZONING FILE NO'S: SDP-08-118, F-07-129, F-08-201, AND F-10-97.

18. THE CONTRACTOR SHALL TEST PIT EXISTING UTILITIES AT LEAST (5) DAYS BEFORE STARTING WORK SHOWN ON THESE DRAWINGS.

19. CONTRACTOR IS SOLELY RESPONSIBLE FOR CONSTRUCTION MEANS, METHODS, TECHNIQUES, SEQUENCES, PROCEDURES, AND SAFETY PRECAUTIONS AND PROGRAMS. THE CONTRACTOR SHALL FOLLOW THE SEQUENCE OF CONSTRUCTION OUTLINED IN THESE PLANS.

20. PIPE SHALL NOT BE INSTALLED BY THE CONTRACTOR UNTIL THE LENGTH CALLED FOR AT EACH STATION HAS BEEN APPROVED BY THE ENGINEER IN THE FIELD.

21. NO PIPE SHALL BE LAID UNTIL LINES OF EXCAVATION HAVE BEEN BROUGHT WITHIN 6" OF FINISHED GRADE

22. ALL PIPE ELEVATIONS SHOWN ARE INVERT ELEVATIONS.

23. PROFILE STATIONS SHALL BE ADJUSTED AS NECESSARY TO CONFORM TO PLAN DIMENSIONS.

24. ALL FILL AREAS WITHIN ROADWAY AND UNDER STRUCTURES TO BE COMPACTED TO A MINIMUM OF 95% COMPACTION OF AASHTO T180.

25. THIS PLAN HAS BEEN PREPARED IN ACCORDANCE WITH THE PROVISIONS OF SECTION 16.124 OF THE HOWARD COUNTY CODE AND LANDSCAPE MANUAL. NO LANDSCAPE SURETY IS REQUIRED FOR THIS PLAN AS THIS IS A COUNTY PROJECT.

26. THIS PROJECT COMPLIES WITH THE REQUIREMENTS OF SECTION 16.1200 OF THE HOWARD COUNTY CODE FOR FOREST CONSERVATION BY PRESERVING 18.85 ACRES OF ON-SITE RETENTION AND BY EXCEEDING THE BREAK-EVEN POINT OF 18.31 ACRES. NO FOREST CONSERVATION SURETY IS REQUIRED FOR THIS PROJECT AS IT IS A COUNTY PROJECT. WAIVER PETITION WP-10-133 HAS BEEN APPROVED FOR CLEARING ASSOCIATED WITH THE ELEMENTARY SCHOOL SITE OFFSITE CLEARING.).

27. THERE ARE NO BURIAL GROUNDS OR CEMETERY SITES ON THE SUBJECT PROPERTY.

28. THIS PROJECT IS SUBJECT TO COMPLIANCE WITH THE AMENDED FIFTH EDITION OF THE SUBDIVISION AND LAND DEVELOPMENT REGULATIONS. DEVELOPMENT OR CONSTRUCTION ON THIS PROPERTY MUST COMPLY WITH SETBACK AND BUFFER REGULATIONS IN EFFECT AT THE TIME OF SUBMISSION OF THE SITE DEVELOPMENT PLAN, WAIVER PETITION APPLICATION OR BUILDING/GRADING PERMIT APPLICATIONS.

29. NO GRADING, REMOVAL OF VEGETATIVE COVER OR TREES, PAVING AND NEW STRUCTURES SHALL BE PERMITTED WITHIN WETLANDS, STREAMS, REQUIRED BUFFERS, 100 YEAR FLOODPLAIN AND 25% OR GREATER SLOPES, EXCEPT AS PERMITTED BY HOWARD COUNTY DEPARTMENT OF PLANNING AND ZONING AS ESSENTIAL OR NECESSARY DISTURBANCES (SEE GENERAL NOTE 13). 0.04 ACRES OF STREAM BUFFER DISTURBANCE IS NEEDED FOR THE PROPOSED OUTFALL TO MEET MDE, SCD, AND COUNTY REQUIREMENTS.

30. FOR AREAS WHICH WILL NOT BE DISTURBED AGAIN IN THE SHORT TERM, PERMANENT GRASS SEED MIXTURES SHALL BE UTILITIZED PER SPECIFICATION AND THE NOTES ON SHEET 5.

31. ALL TOPSOIL SHALL BE STOCKPILED AND STORED ON SITE. TOPSOIL SHALL BE SCREENED ON SITE.

32. CONTRACTOR SHALL PROVIDE A BALANCED SITE. IF THE SITE CANNOT BALANCED, THE CONTRACTOR SHALL BE PERMITTED TO USE THE SCHOOL BALLFIELD AREA FOR CUT OR FILL TO BALANCE THE SITE.

33. A WAIVER WAS APPROVED ON MARCH 18, 2010 FOR THE SWM LAG TIME REQUIREMENT AND MEASURED IMPERVIOUS AREA VS ZONING REQUIREMENT.

34. THIS PROJECT MEETS ALL FIVE CRITERIA LISTED IN SECTION 128.A.10 OF THE HOWARD COUNTY ZONING REGULATIONS WHICH ALLOWS TWO OR MORE CONTIGUOUS LOTS OR PARCELS TO BE TREATED AS A SINGLE PARCEL FOR DEVELOPMENT PURPOSES. SETBACKS FROM INTERNAL LOT LINES ARE NOT APPLICABLE.

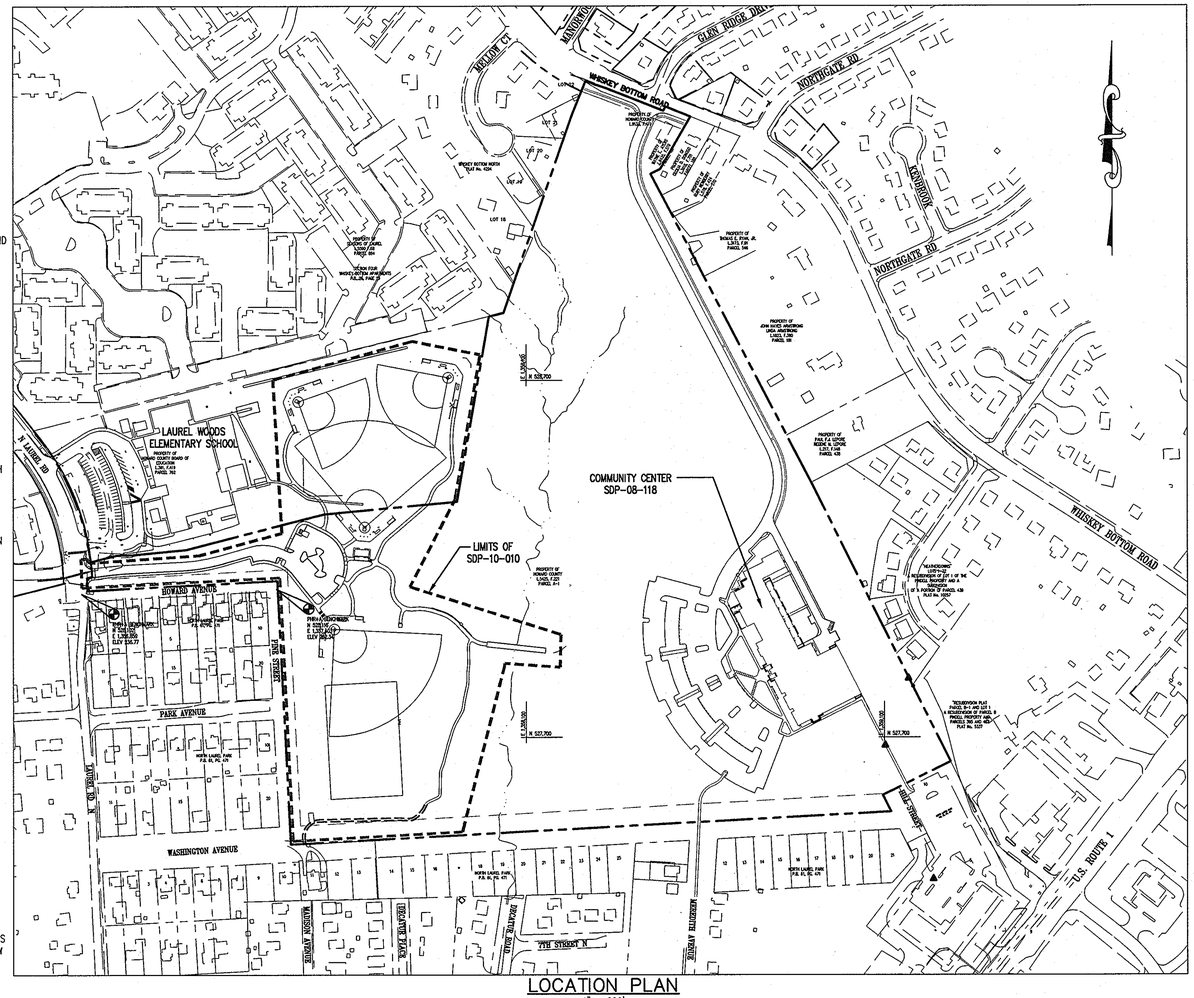


LOCATION PLAN
1" = 200'

35. THE SUBJECT PROPERTY IS ZONED R-SC PER THE FEBRUARY 2, 2004 COMPREHENSIVE ZONING PLAN.

36. THIS PROJECT HAS ESSENTIAL AND NECESSARY DISTURBANCES TO ENVIRONMENTALLY SENSITIVE FEATURES OR BUFFERS PER SECTION 16.116(c) OF THE HOWARD COUNTY SUBDIVISION REGULATIONS. THE DISTURBANCE IS NECESSARY IN ORDER TO PROVIDE AN OUTFALL ONTO AN EXISTING SLOPE OF LESS THAN 10 PERCENT IN ACCORDANCE WITH MDE AND SCD REQUIREMENTS. THERE ARE NO AREAS OUTSIDE OF THE STREAM BUFFER WHICH ARE LESS THAN 10 PERCENT.

37. WAIVER PETITION WP-10-133 WAS APPROVED ON MAY 3, 2010 TO ALLOW OFF SITE FOREST CLEARING OF 0.07 ACRES (3,114 SF) ON THE NEIGHBORING LAUREL WOODS ELEMENTARY SCHOOL SITE (PARCEL 762) BASED ON SECTION 16.1202.b.1.3. OF THE HOWARD COUNTY ZONING REGULATIONS.

38. A FOREST STAND DELINEATION WAS SUBMITTED FOR THIS PROPERTY UNDER SDP-08-118.

39. Stormwater Management Administrative Waiver: Stormwater mangement is provided in accordance with the 2000 Maryland Stormwater Design Manual. It was determined that this project met the Criteria outlined in the MDE Guidelines for implementation for acceptance of the 2000 Design Criteria and granted a waiver. The plan (SDP 10-010) received Technically Complete approval for SWM on 5/4/10. A grading permit shall be approved prior to May 4, 2013. This plans also subject to the expiration of this waiver unless all stormwater management is constructed by May 4, 2011. Conditions of Approval:

#39 con't: This site requires additional SWM in the form of 10 and 100 year management.

CALL "MISS UTILITY" AT LEAST 48 HOURS IN ADVANCE OF CONSTRUCTION AT 1-800-257-7777

## BENCHMARKS

HOWARD COUNTY SURVEY CONTROL: 50BA
ELEVATION 248.625'
N 527,567.677 E 1,359,772.604
LOCATION IS ±180' SOUTH OF WHISKEY BOTTOM ROAD ALONG SOUTH BOUND US ROUTE 1.

HOWARD COUNTY SURVEY CONTROL: 50B5
ELEVATION 177.385'
N 524,999.374 E 1,357,925.748
LOCATION IS ±150' NORTH OF N LAUREL ROAD ALONG SOUTH BOUND US ROUTE 1.

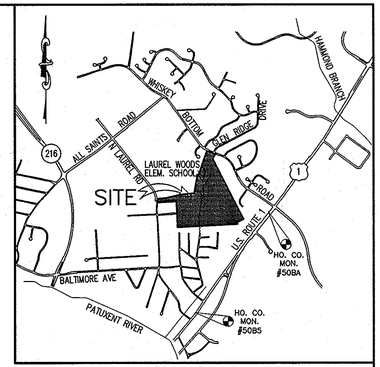


## VICINITY MAP

SCALE: 1" = 2000'
COPYRIGHT ADC THE MAP PEOPLE, PERMITTED USE NO. 20711188
HOWARD COUNTY ADC MAP 5169 GRIDS F2 & G2

## SITE DATA ANALYSIS CHART

| | |
|---|---|
| TOTAL PROJECT AREA: | 52.1692 AC± (2,272,490.3 SF±) |
| AREA OF PLAN SUBMISSION: | 15.32 AC (667,436 SF) |
| LIMIT OF DISTURBED AREA: | 15.32 AC (667,436 SF) |
| PRESENT ZONING: | R-SC |
| EXISTING USES: | VACANT LOT |
| PROPOSED USES: | BALL FIELDS |
| PARKING REQUIRED: | 30 SPACES/FIELD* |
| TOTAL PARKING PROVIDED FOR PARK: | 61 SPACES PROVIDED** |
| TOTAL HC PARKING PROVIDED FOR PARK: | 3 SPACES |

*BASED ON SIMILAR HOWARD COUNTY PARK SITES.

**61 SPACES ARE PROVIDED ON SITE. IN ADDITION, APPROXIMATELY 67 SPACES ARE PROVIDED AT LAUREL WOODS ELEMENTARY SCHOOL

## PERMIT INFORMATION CHART

| PARCEL NUMBER | STREET ADDRESS |
|---|---|
| A-1 | 9260 NORTH LAUREL ROAD |
| | |
| | |

| SUBDIVISION NAME | | | SECT./AREA | PARCEL |
|---|---|---|---|---|
| NORTH LAUREL PARK | | | WEST SIDE AMENITIES | 187, A-1, & 1065 |
| PLAT NO. 21398-21402 | GRID # | ZONING | TAX MAP NO. | ELECT. DIST. | CENSUS TRACT |
| F-10-97 | 22 & 3/4 | R-SC | 47 & 50 | 6 | 606903 |

APPROVED : HOWARD COUNTY DEPARTMENT OF PLANNING AND ZONING.

DIRECTOR — DATE 12/3/10

CHIEF, DEVELOPMENT ENGINEERING DIVISION — DATE 11/30/10

CHIEF, DIVISION OF LAND DEVELOPMENT — DATE 12/10/10

| DATE | NO. | REVISION |
|---|---|---|
| | | |

OWNER

HOWARD COUNTY DEPARTMENT OF PUBLIC WORKS
BUREAU OF ENGINEERING
9250 BENDIX ROAD, COLUMBIA, MARYLAND 21045
P 410 313 2414

DEVELOPER

HOWARD COUNTY DEPARTMENT OF PUBLIC WORKS
BUREAU OF ENGINEERING
9250 BENDIX ROAD, COLUMBIA, MARYLAND 21045
P 410 313 2414

PROJECT
NORTH LAUREL COMMUNITY CENTER
CAPITAL PROJECT C-0304 PROJECT MGR: DAVE LOUDERMILK

AREA TAX MAP 47 GRID 22 & TAX MAP 50
GRIDS 3 & 4, PARCELS A-1, 187 & 1065 ZONED R-SC
6TH ELECTION DISTRICT
HOWARD COUNTY, MARYLAND

TITLE
TITLE SHEET


Patton Harris Rust & Associates
Engineers. Surveyors. Planners. Landscape Architects.
8818 Centre Park Drive
Columbia, MD 21045
T 410.997.8900
F 410.997.9282


SEAL 9-21-10

BY: [signature]

PROFESSIONAL CERTIFICATION. I HEREBY CERTIFY THAT THESE DOCUMENTS WERE PREPARED OR APPROVED BY ME, AND THAT I AM A DULY LICENSED PROFESSIONAL ENGINEER UNDER THE LAWS OF THE STATE OF MARYLAND, LICENSE NO. 33054, EXPIRATION DATE: 01-24-11"

| | |
|---|---|
| DESIGNED BY : | JSN |
| DRAWN BY: | JSN |
| PROJECT NO : | 14466-1-2 C400SDP01.DWG |
| DATE : | SEPTEMBER 7, 2010 |
| SCALE : | 1" = 200' |
| DRAWING NO. | 1 OF 43 |

P:\Projects\14466\1-2\PLANS\C400SDP01.DWG

SDP-10-010

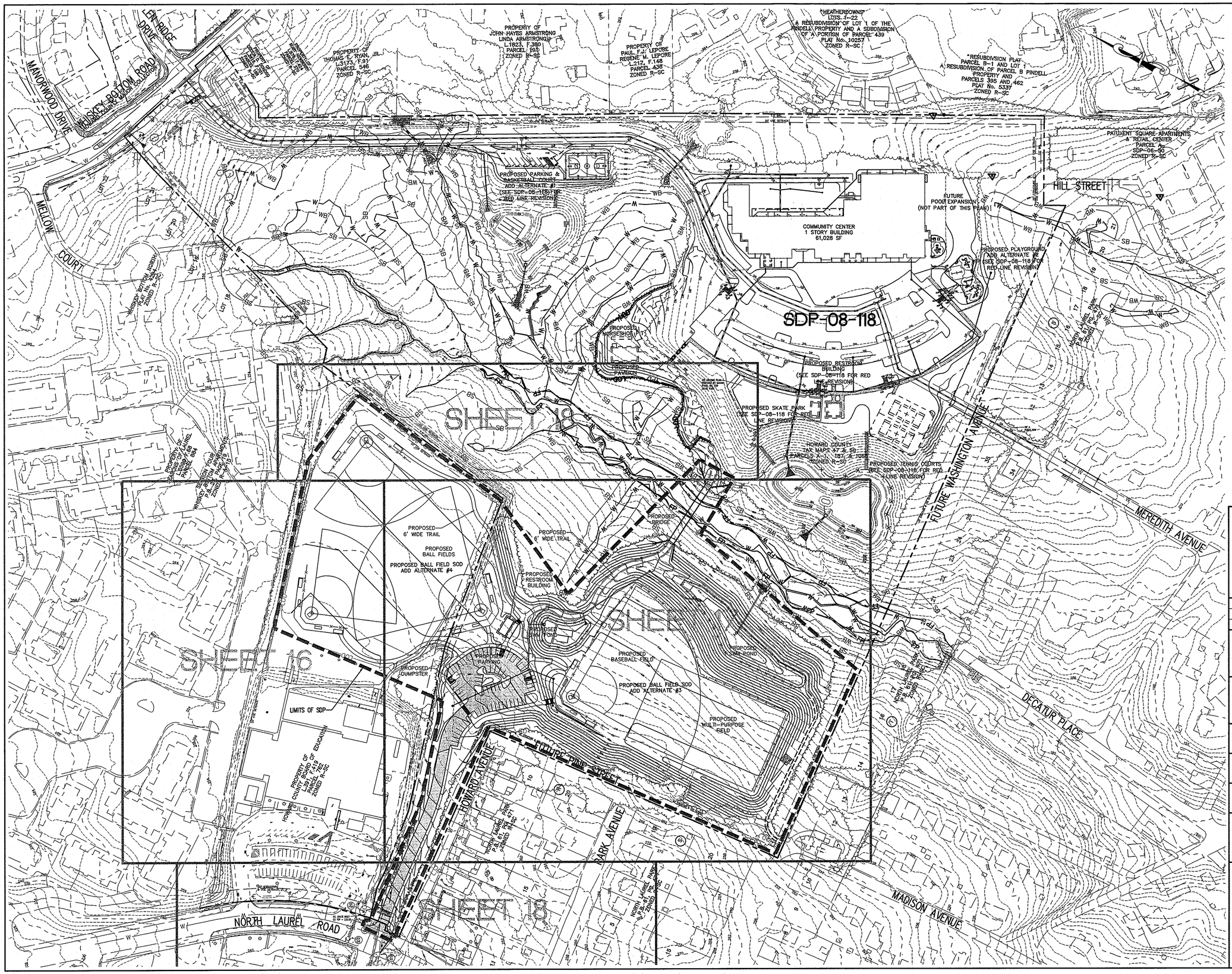


## LEGEND

| | |
|---|---|
| EXISTING 2' CONTOUR | 302 |
| EXISTING 10' CONTOUR | 300 |
| PROPOSED 2' CONTOUR | 302 |
| PROPOSED 10' CONTOUR | 300 |
| PROPERTY LINE AND RIGHT OF WAY | |
| FLOODPLAIN | FP |
| EX. TREELINE | |
| LIMIT OF CLEARING | |
| LIMIT OF DISTURBANCE | LOD |
| PROPOSED LIGHT POLE | |
| EX. FIRE HYDRANT | |
| PROP. FIRE HYDRANT | |
| WETLANDS | W |
| WETLAND BUFFER | WB |
| STREAM BUFFER | SB |
| LIMITS OF SDP | |

CALL "MISS UTILITY" AT LEAST 48 HOURS IN ADVANCE OF CONSTRUCTION AT 1-800-257-7777

APPROVED : HOWARD COUNTY DEPARTMENT OF PLANNING AND ZONING.

| | |
|---|---|
| DIRECTOR | DATE 12/13/10 |
| CHIEF, DEVELOPMENT ENGINEERING DIVISION | DATE 11/30/10 |
| CHIEF, DIVISION OF LAND DEVELOPMENT | DATE 12/10/10 |

| DATE | NO. | REVISION |
|---|---|---|

OWNER

HOWARD COUNTY DEPARTMENT OF PUBLIC WORKS
BUREAU OF ENGINEERING
9250 BENDIX ROAD, COLUMBIA, MARYLAND 21045
P 410 313 2414

DEVELOPER

HOWARD COUNTY DEPARTMENT OF PUBLIC WORKS
BUREAU OF ENGINEERING
9250 BENDIX ROAD, COLUMBIA, MARYLAND 21045
P 410 313 2414

PROJECT
**NORTH LAUREL COMMUNITY CENTER**
CAPITAL PROJECT C-0304 PROJECT MGR: DAVE LOUDERMILK

AREA TAX MAP 47 GRID 22 & TAX MAP 50
GRIDS 3 & 4, PARCELS A-1, 187 & 1065 ZONED R-SC
6TH ELECTION DISTRICT
HOWARD COUNTY, MARYLAND

TITLE
**OVERALL SITE DEVELOPMENT PLAN**


**Patton Harris Rust & Associates**
Engineers. Surveyors. Planners. Landscape Architects.
PHR+A
8818 Centre Park Drive
Columbia, MD 21045
T 410.997.8900
F 410.997.9282


SEAL 9-21-10

STATE OF MARYLAND · THOMAS CLARKE ARVESEN · 21431 · REGISTERED PROFESSIONAL ENGINEER

BY:

"PROFESSIONAL CERTIFICATION. I HEREBY CERTIFY THAT THESE DOCUMENTS WERE PREPARED OR APPROVED BY ME, AND THAT I AM A DULY LICENSED PROFESSIONAL ENGINEER UNDER THE LAWS OF THE STATE OF MARYLAND, LICENSE NO. 33954, EXPIRATION DATE: 01-24-11"

| | |
|---|---|
| DESIGNED BY : | JSN |
| DRAWN BY: | JSN |
| PROJECT NO : | 14466-1-2 C400SDP02.DWG |
| DATE : | SEPTEMBER 7, 2010 |
| SCALE : | 1" = 100' |
| DRAWING NO. | 2 OF 43 |

P:\Project\14466\1-2\PLANS\C400SDP02.DWG

SDP-10-010

## SEDIMENT BASIN # 1

| | | |
|---|---|---|
| EX. DRAINAGE AREA | = | 4.71 AC |
| INTERIM DRAINAGE AREA | = | 8.86 AC |
| DEV. DRAINAGE AREA | = | 8.76 AC |
| STORAGE REQUIRED (3,600 cu.ft./Ac.) | | |
| REQUIRED VOLUME WET | = | 15,948 CF |
| REQUIRED VOLUME DRY | = | 15,948 CF |
| TOTAL VOLUME | = | 31,896 CF |
| STORAGE PROVIDED | | |
| PROVIDED VOLUME WET | = | 16,070 CF |
| PROVIDED VOLUME DRY | = | 31,846 CF |
| TOTAL VOLUME | = | 47,916 CF |
| STORAGE | = | 5.05' |
| MINIMUM BOTTOM ELEVATION | = | 208.15 |
| BOTTOM DIMENSIONS | = | 40'X213' |
| RISER DIAMETER | = | 4'x4' |
| RISER CREST ELEVATION (DRY) | = | 213.20 |
| BARREL DIAMETER | = | 24" |
| BARREL LENGTH | = | 47 LF |
| BARREL INVERTS | | |
| UPSTREAM | = | 209.00 |
| DOWNSTREAM | = | 208.76 |
| TRASH RACK | = | N/A |
| ANTI-VORTEX DEVICE | = | N/A |
| CLEANOUT ELEVATION | = | 209.40 |
| PERMANENT POOL WSEL (WET) | = | 210.40 |
| MINIMUM DRY STORAGE ELEV. | = | 212.00 |
| DESIGN TOP OF EMBANKMENT EL. | = | 218.00 |
| CONSTRUCTED TOP OF EMBANKMENT EL. | = | 218.50 |
| EMERGENCY SPILLWAY CREST EL. | = | N/A |
| EMERGENCY SPILLWAY WIDTH | = | N/A |
| Q1 EXISTING | = | 0.62 cfs |
| Q1 INTERIM | = | 0.7 cfs |
| Q1 DEVELOPED (TSWM) | = | 0.4 cfs |

NOTE: SEE SHEET 4 FOR LEGEND, AND SHEETS 6–7, AND 9 FOR SEDIMENT CONTROL DETAILS

# SEDIMENT BASIN No. 1

MATCH LINE SEE SHEET 4

CALL "MISS UTILITY" AT LEAST 48 HOURS IN ADVANCE OF CONSTRUCTION AT 1-800-257-7777

BY THE DEVELOPER :

I/WE CERTIFY THAT ALL DEVELOPMENT AND/OR CONSTRUCTION WILL BE DONE ACCORDING TO THESE PLANS, AND THAT ANY RESPONSIBLE PERSONNEL INVOLVED IN THE CONSTRUCTION PROJECT WILL HAVE A CERTIFICATE OF ATTENDANCE AT A DEPARTMENT OF THE ENVIRONMENT APPROVED TRAINING PROGRAM FOR THE CONTROL OF SEDIMENT AND EROSION BEFORE BEGINNING THE PROJECT. I SHALL ENGAGE A REGISTERED PROFESSIONAL ENGINEER TO SUPERVISE POND CONSTRUCTION AND PROVIDE THE HOWARD SOIL CONSERVATION DISTRICT WITH AN "AS-BUILT" PLAN OF THE POND WITHIN 30 DAYS OF COMPLETION. I ALSO AUTHORIZE PERIODIC ON-SITE INSPECTIONS BY THE HOWARD SOIL CONSERVATION DISTRICT.

DEVELOPER — DATE 9/22/10

BY THE ENGINEER :

I CERTIFY THAT THIS PLAN FOR POND CONSTRUCTION, EROSION AND SEDIMENT CONTROL REPRESENTS A PRACTICAL AND WORKABLE PLAN BASED ON MY PERSONAL KNOWLEDGE OF THE SITE CONDITIONS. THIS PLAN WAS PREPARED IN ACCORDANCE WITH THE REQUIREMENTS OF THE HOWARD SOIL CONSERVATION DISTRICT. I HAVE NOTIFIED THE DEVELOPER THAT HE/SHE MUST ENGAGE A REGISTERED PROFESSIONAL ENGINEER TO SUPERVISE POND CONSTRUCTION AND PROVIDE THE HOWARD SOIL CONSERVATION DISTRICT WITH AN "AS-BUILT" PLAN OF THE POND WITHIN 30 DAYS OF COMPLETION.

ENGINEER — 9-21-10 DATE

THESE PLANS FOR SMALL POND CONSTRUCTION, SOIL EROSION AND SEDIMENT CONTROL MEET THE REQUIREMENTS OF THE HOWARD SOIL CONSERVATION DISTRICT.

HOWARD SOIL CONSERVATION DISTRICT — 11/1/10 DATE

APPROVED : HOWARD COUNTY DEPARTMENT OF PLANNING AND ZONING.

DIRECTOR — 12/13/10 DATE

CHIEF, DEVELOPMENT ENGINEERING DIVISION — 11/18/10 DATE

CHIEF, DIVISION OF LAND DEVELOPMENT — 12/10/10 DATE

| DATE | NO. | REVISION |
|---|---|---|

OWNER

HOWARD COUNTY DEPARTMENT OF PUBLIC WORKS
BUREAU OF ENGINEERING
9250 BENDIX ROAD, COLUMBIA, MARYLAND 21045
P 410 313 2414

DEVELOPER

HOWARD COUNTY DEPARTMENT OF PUBLIC WORKS
BUREAU OF ENGINEERING
9250 BENDIX ROAD, COLUMBIA, MARYLAND 21045
P 410 313 2414

PROJECT
# NORTH LAUREL COMMUNITY CENTER
CAPITAL PROJECT C-0304 PROJECT MGR: DAVE LOUDERMILK

AREA — TAX MAP 47 GRID 22 & TAX MAP 50
GRIDS 3 & 4, PARCELS A-1, 187 & 1065 ZONED R-SC
6TH ELECTION DISTRICT
HOWARD COUNTY, MARYLAND

TITLE
## MASS GRADING & SEDIMENT CONTROL PLAN PHASE I


Patton Harris Rust & Associates
Engineers. Surveyors. Planners. Landscape Architects.
8818 Centre Park Drive
Columbia, MD 21045
T 410.997.8900
F 410.997.9282


SEAL — 9-21-10

BY: Dennis C. Mitchell

"PROFESSIONAL CERTIFICATION. I HEREBY CERTIFY THAT THESE DOCUMENTS WERE PREPARED OR APPROVED BY ME, AND THAT I AM A DULY LICENSED PROFESSIONAL ENGINEER UNDER THE LAWS OF THE STATE OF MARYLAND, LICENSE NO. 33954, EXPIRATION DATE: 01-24-11"

DESIGNED BY :SCM
DRAWN BY: JSN
PROJECT NO : 14466-1-2 C400SDP03.DWG
DATE : SEPTEMBER 7, 2010
SCALE : 1" = 40'
DRAWING NO. 3 OF 43

P:\Project\14466\1-2\PLANS\C400SDP03.DWG

SDP-10-010

MATCH LINE SEE SHEET 3

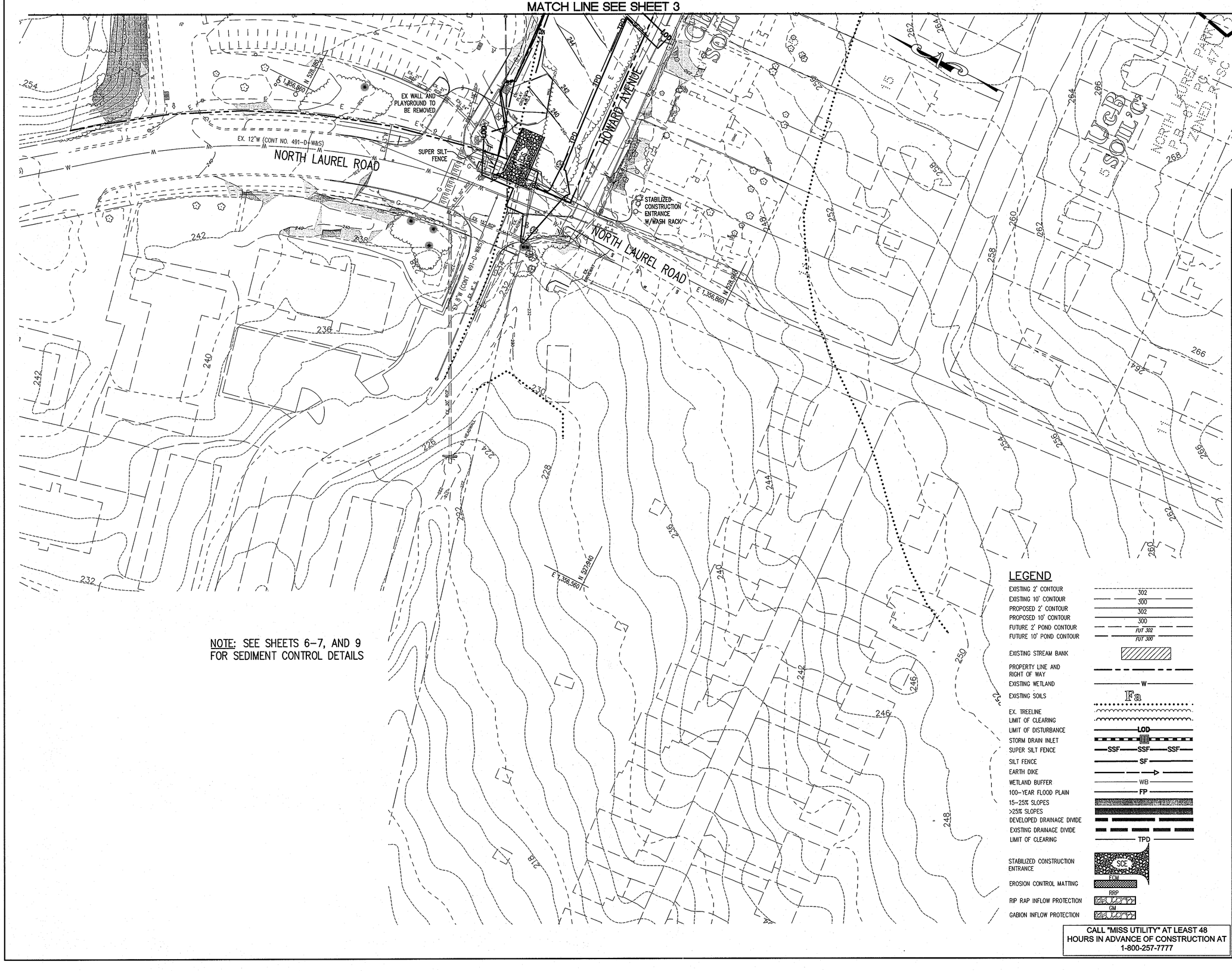


NOTE: SEE SHEETS 6-7, AND 9 FOR SEDIMENT CONTROL DETAILS

## LEGEND

| | |
|---|---|
| EXISTING 2' CONTOUR | 302 |
| EXISTING 10' CONTOUR | 300 |
| PROPOSED 2' CONTOUR | 302 |
| PROPOSED 10' CONTOUR | 300 |
| FUTURE 2' POND CONTOUR | FUT 302 |
| FUTURE 10' POND CONTOUR | FUT 300 |
| EXISTING STREAM BANK | |
| PROPERTY LINE AND RIGHT OF WAY | |
| EXISTING WETLAND | W |
| EXISTING SOILS | Fa |
| EX. TREELINE | |
| LIMIT OF CLEARING | |
| LIMIT OF DISTURBANCE | LOD |
| STORM DRAIN INLET | |
| SUPER SILT FENCE | SSF SSF SSF |
| SILT FENCE | SF |
| EARTH DIKE | |
| WETLAND BUFFER | WB |
| 100-YEAR FLOOD PLAIN | FP |
| 15-25% SLOPES | |
| >25% SLOPES | |
| DEVELOPED DRAINAGE DIVIDE | |
| EXISTING DRAINAGE DIVIDE | |
| LIMIT OF CLEARING | TPD |
| STABILIZED CONSTRUCTION ENTRANCE | SCE |
| EROSION CONTROL MATTING | ECM |
| RIP RAP INFLOW PROTECTION | RRP |
| GABION INFLOW PROTECTION | GM |

CALL "MISS UTILITY" AT LEAST 48 HOURS IN ADVANCE OF CONSTRUCTION AT 1-800-257-7777

BY THE DEVELOPER :

I/WE CERTIFY THAT ALL DEVELOPMENT AND/OR CONSTRUCTION WILL BE DONE ACCORDING TO THESE PLANS, AND THAT ANY RESPONSIBLE PERSONNEL INVOLVED IN THE CONSTRUCTION PROJECT WILL HAVE A CERTIFICATE OF ATTENDANCE AT A DEPARTMENT OF THE ENVIRONMENT APPROVED TRAINING PROGRAM FOR THE CONTROL OF SEDIMENT AND EROSION BEFORE BEGINNING THE PROJECT. I SHALL ENGAGE A REGISTERED PROFESSIONAL ENGINEER TO SUPERVISE POND CONSTRUCTION AND PROVIDE THE HOWARD SOIL CONSERVATION DISTRICT WITH AN "AS-BUILT" PLAN OF THE POND WITHIN 30 DAYS OF COMPLETION. I ALSO AUTHORIZE PERIODIC ON-SITE INSPECTIONS BY THE HOWARD SOIL CONSERVATION DISTRICT.

DEVELOPER — DATE 9/22/10

BY THE ENGINEER :

I CERTIFY THAT THIS PLAN FOR POND CONSTRUCTION, EROSION AND SEDIMENT CONTROL REPRESENTS A PRACTICAL AND WORKABLE PLAN BASED ON MY PERSONAL KNOWLEDGE OF THE SITE CONDITIONS. THIS PLAN WAS PREPARED IN ACCORDANCE WITH THE REQUIREMENTS OF THE HOWARD SOIL CONSERVATION DISTRICT. I HAVE NOTIFIED THE DEVELOPER THAT HE/SHE MUST ENGAGE A REGISTERED PROFESSIONAL ENGINEER TO SUPERVISE POND CONSTRUCTION AND PROVIDE THE HOWARD SOIL CONSERVATION DISTRICT WITH AN "AS-BUILT" PLAN OF THE POND WITHIN 30 DAYS OF COMPLETION.

Shannon C. Mitchell — ENGINEER — DATE 9-21-10

THESE PLANS FOR SMALL POND CONSTRUCTION, SOIL EROSION AND SEDIMENT CONTROL MEET THE REQUIREMENTS OF THE HOWARD SOIL CONSERVATION DISTRICT.

HOWARD SOIL CONSERVATION DISTRICT — DATE 11/1/10

APPROVED : HOWARD COUNTY DEPARTMENT OF PLANNING AND ZONING.

DIRECTOR — DATE 12/13/10

CHIEF, DEVELOPMENT ENGINEERING DIVISION — DATE 11/8/10

CHIEF, DIVISION OF LAND DEVELOPMENT — DATE 12/10/10

| DATE | NO. | REVISION |
|---|---|---|

OWNER

HOWARD COUNTY DEPARTMENT OF PUBLIC WORKS
BUREAU OF ENGINEERING
9250 BENDIX ROAD, COLUMBIA, MARYLAND 21045
P 410 313 2414

DEVELOPER

HOWARD COUNTY DEPARTMENT OF PUBLIC WORKS
BUREAU OF ENGINEERING
9250 BENDIX ROAD, COLUMBIA, MARYLAND 21045
P 410 313 2414

PROJECT
# NORTH LAUREL COMMUNITY CENTER
CAPITAL PROJECT C-0304 PROJECT MGR: DAVE LOUDERMILK

AREA TAX MAP 47 GRID 22 & TAX MAP 50
GRIDS 3 & 4, PARCELS A-1, 187 & 1065 ZONED R-SC
6TH ELECTION DISTRICT
HOWARD COUNTY, MARYLAND

TITLE
# MASS GRADING & SEDIMENT CONTROL PLAN PHASE I


Patton Harris Rust & Associates
Engineers. Surveyors. Planners. Landscape Architects.
8818 Centre Park Drive
Columbia, MD 21045
T 410.997.8900
F 410.997.9282


SEAL

STATE OF MARYLAND — SHANNON CLARKE MITCHELL — REGISTERED PROFESSIONAL ENGINEER — 22324

BY: Shannon C. Mitchell

"PROFESSIONAL CERTIFICATION. I HEREBY CERTIFY THAT THESE DOCUMENTS WERE PREPARED OR APPROVED BY ME, AND THAT I AM A DULY LICENSED PROFESSIONAL ENGINEER UNDER THE LAWS OF THE STATE OF MARYLAND, LICENSE NO. 22324, EXPIRATION DATE: 01-24-11"

| | |
|---|---|
| DESIGNED BY : | JSN |
| DRAWN BY: | JSN |
| PROJECT NO : | 14466-1-2 C400SDP04.DWG |
| DATE : | SEPTEMBER 7, 2010 |
| SCALE : | 1" = 40' |
| DRAWING NO. | 4 OF 43 |

P:\Project\14466\1-2 PLANS\C400SDP04.DWG

SDP-10-010

# STANDARD SEDIMENT CONTROL NOTES

1. A MINIMUM OF 48 HOURS NOTICE MUST BE GIVEN TO THE HOWARD COUNTY DEPARTMENT OF INSPECTIONS, LICENSES AND PERMITS, SEDIMENT CONTROL DIVISION PRIOR TO THE START OF ANY CONSTRUCTION (313–1855).

2. ALL VEGETATIVE AND STRUCTURAL PRACTICES ARE TO BE INSTALLED ACCORDING TO THE PROVISIONS OF THIS PLAN AND ARE TO BE IN CONFORMANCE WITH THE 1994 MARYLAND STANDARDS AND SPECIFICATIONS FOR SOIL EROSION AND SEDIMENT CONTROL AND REVISIONS THERETO.

3. FOLLOWING INITIAL SOIL DISTURBANCE OR RE–DISTURBANCE, PERMANENT OR TEMPORARY STABILIZATION SHALL BE COMPLETED WITHIN: A)7 CALENDAR DAYS FOR ALL PERIMETER SEDIMENT CONTROL STRUCTURES, DIKES, PERIMETER SLOPES, AND ALL SLOPES STEEPER THAN 3:1, B) 14 DAYS AS TO ALL OTHER DISTURBED OR GRADED AREAS ON THE PROJECT SITE.

4. ALL SEDIMENT TRAPS/BASINS SHOWN MUST BE FENCED AND WARNING SIGNS POSTED AROUND THE PERIMETER IN ACCORDANCE WITH VOL. 1, CHAPTER 7, OF THE HOWARD COUNTY DESIGN MANUAL, STORM DRAINAGE.

5. ALL DISTURBED AREAS MUST BE STABILIZED WITHIN THE TIME PERIOD SPECIFIED ABOVE IN ACCORDANCE WITH THE 1994 MARYLAND STANDARDS AND SPECIFICATIONS FOR SOIL EROSION AND SEDIMENT CONTROL FOR PERMANENT SEEDING, SOD, TEMPORARY SEEDING, AND MULCHING (SEC. G.). TEMPORARY STABILIZATION WITH MULCH ALONE SHALL ONLY BE DONE WHEN RECOMMENDED SEEDING DATES DO NOT ALLOW FOR PROPER GERMINATION AND ESTABLISHMENT OF GRASSES.

6. ALL SEDIMENT CONTROL STRUCTURES ARE TO REMAIN IN PLACE AND ARE TO BE MAINTAINED IN OPERATIVE CONDITION UNTIL PERMISSION FOR THEIR REMOVAL HAS BEEN OBTAINED FROM THE HOWARD COUNTY SEDIMENT CONTROL INSPECTOR.

7. SITE ANALYSIS:

| | |
|---|---|
| TOTAL AREA OF SITE | 52.17 ACRES |
| AREA DISTURBED | 15.44 ACRES |
| AREA TO BE PAVED | 1.20 ACRES |
| AREA TO BE VEGETATIVELY STABILIZED | 14.24 ACRES |
| TOTAL CUT | 43,300 CU. YARDS |
| TOTAL FILL | 43,300 CU. YARDS |
| OFFSITE WASTE AREA LOCATION TO HAVE ACTIVE GRADING PERMIT | |

8. ANY SEDIMENT CONTROL PRACTICE WHICH IS DISTURBED BY GRADING ACTIVITY FOR PLACEMENT OF UTILITIES MUST BE REPAIRED ON THE SAME DAY OF DISTURBANCE.

9. ADDITIONAL SEDIMENT CONTROLS MUST BE PROVIDED, IF DEEMED NECESSARY BY THE HOWARD COUNTY SEDIMENT CONTROL INSPECTOR.

10. ON ALL SITES WITH DISTURBED AREAS IN EXCESS OF 2 ACRES, APPROVAL OF THE INSPECTION AGENCY SHALL BE REQUESTED UPON COMPLETION OF INSTALLATION OF PERIMETER EROSION AND SEDIMENT CONTROLS, BUT BEFORE PROCEEDING WITH ANY OTHER EARTH DISTURBANCE OR GRADING. OTHER BUILDING OR GRADING INSPECTION APPROVALS MAY NOT BE AUTHORIZED UNTIL THIS INITIAL APPROVAL BY THE INSPECTION AGENCY IS MADE.

11. TRENCHES FOR THE CONSTRUCTION OF UTILITIES IS LIMITED TO THREE PIPE LENGTHS OR THAT WHICH SHALL BE BACK–FILLED AND STABILIZED WITHIN ONE WORKING DAY, WHICHEVER IS SHORTER.

12. SITE GRADING WILL BEGIN ONLY AFTER ALL PERIMETER SEDIMENT CONTROL MEASURES HAVE BEEN INSTALLED AND ARE IN A FUNCTIONING CONDITION.

13. SEDIMENT WILL BE REMOVED FROM TRAPS WHEN ITS DEPTH REACHES CLEAN OUT ELEVATION SHOWN ON THE PLANS.

14. CUT AND FILL QUANTITIES PROVIDED UNDER SITE ANALYSIS DO NOT REPRESENT BID QUANTITIES. THESE QUANTITIES DO NOT DISTINGUISH BETWEEN TOPSOIL, STRUCTURAL FILL OR EMBANKMENT MATERIAL, NOR DO THEY REFLECT CONSIDERATION OF UNDERCUTTING OR REMOVAL OF UNSUITABLE MATERIAL. THE CONTRACTOR SHALL FAMILIARIZE HIMSELF WITH SITE CONDITIONS WHICH MAY AFFECT THE WORK.

# TEMPORARY SEEDING NOTES

APPLY TO GRADED OR CLEARED AREAS LIKELY TO BE REDISTURBED WHERE A SHORT–TERM VEGETATIVE COVER IS NEEDED. WHERE AREAS WILL NOT BE DISTURBED AGAIN IN THE SHORT TERM, USE PERMANENT SEEDING AS NOTED BELOW.

SEEDBED PREPARATION : LOOSEN UPPER THREE INCHES OF SOIL BY RAKING, DISCING OR OTHER ACCEPTABLE MEANS BEFORE SEEDING, IF NOT PREVIOUSLY LOOSENED.

SOIL AMENDMENTS : APPLY 600 LBS. PER ACRE 10–10–10 FERTILIZER (14 LBS. PER 1000 SQ.FT.).

SEEDING : FOR PERIODS MARCH 1 THRU APRIL 30 AND FROM AUGUST 15 THRU NOVEMBER 15, SEED WITH 2–1/2 BUSHELS PER ACRE OF ANNUAL RYE (3.2 LBS. PER 1000 SQ.FT.). FOR THE PERIOD MAY 1 THRU AUGUST 14, SEED WITH 10 LBS. PER ACRE OF FOXTAIL MILLET. FOR THE PERIOD NOVEMBER 16 THRU FEBRUARY 28, PROTECT SITE BY APPLYING 2 TONS PER ACRE OF WELL ANCHORED STRAW MULCH AND SEED AS SOON AS POSSIBLE IN THE SPRING, OR USE SOD.

MULCHING : APPLY 1–1/2 TO 2 TONS PER ACRE (70 TO 90 LBS. PER 1000 SQ.FT.) OF UNROTTED SMALL GRAIN STRAW IMMEDIATELY AFTER SEEDING. ANCHOR MULCH IMMEDIATELY AFTER APPLICATION USING MULCH ANCHORING TOOL OR 218 GAL. PER ACRE (5 GAL. PER 1000 SQ.FT.) OF EMULSIFIED ASPHALT ON FLAT AREAS. ON SLOPES, 8 FT. OR HIGHER, USE 347 GAL. PER ACRE (8 GAL. PER 1000 SQ.FT.) FOR ANCHORING.

REFER TO THE 1994 MARYLAND STANDARDS AND SPECIFICATIONS FOR SOIL EROSION AND SEDIMENT CONTROL FOR RATE AND METHODS NOT COVERED.

# PERMANENT SEEDING NOTES

APPLY TO GRADED OR CLEARED AREAS NOT SUBJECT TO IMMEDIATE FURTHER DISTURBANCE WHERE A PERMANENT LONG–LIVED VEGETATIVE COVER IS NEEDED.

SEEDBED PREPARATION : LOOSEN UPPER THREE INCHES OF SOIL BY RAKING, DISCING OR OTHER ACCEPTABLE MEANS BEFORE SEEDING, IF NOT PREVIOUSLY LOOSENED.

SOIL AMENDMENTS : IN LIEU OF SOIL TEST RECOMMENDATIONS, USE ONE OF THE FOLLOWING SCHEDULES :

1) PREFERRED – APPLY 2 TONS PER ACRE DOLOMITIC LIMESTONE (92 LBS. PER 1000 SQ.FT.) AND 600 LBS. PER ACRE 10–10–10 FERTILIZER (14 LBS. PER 1000 SQ.FT.) BEFORE SEEDING. HARROW OR DISC INTO UPPER THREE INCHES OF SOIL. AT TIME OF SEEDING, APPLY 400 LBS. PER ACRE 30–0–0 UREAFORM FERTILIZER (9 LBS. PER 1000 SQ.FT.).

2) ACCEPTABLE – APPLY 2 TONS PER ACRE DOLOMITIC LIMESTONE (92 LBS. PER 1000 SQ.FT.) AND 1000 LBS. PER ACRE 10–10–10 FERTILIZER (23 LBS. PER 1000 SQ.FT.) BEFORE SEEDING. HARROW OR DISC INTO UPPER THREE INCHES OF SOIL.

SEEDING : FOR THE PERIOD MARCH 1 THRU APRIL 30 AND FROM AUGUST 1 THRU OCTOBER 15, SEED WITH FOLLOWING MIXTURE: 100% TALL TURF TYPE FESCUE (3 WAY BLEND) AT 6 LBS/1,000 SF. ALL SEED VARIETIES MUST BE SELECTED FROM LIST OF RECOMMENDED CULTIVARS OF TURF–TYPE TALL FESCUES AS INDICATED BY THE UNIVERSITY OF MARYLAND AGRONOMY MIMEO 77 (REVISED MAY 1995) OR MOST CURRENT EDITION. SEED MIX SHALL CONSIST OF A THREE–WAY BLEND (34%, 33%, AND 33%) OF TURF–TYPE TALL FESCUES FROM ABOVE UNIVERSITY OF MARYLAND LIST OR RECOMMENDED CULTIVARS. DURING THE PERIOD OCTOBER 16 THRU FEBRUARY 28, PROTECT SITE BY ONE OF THE FOLLOWING OPTIONS :

1) 2 TONS PER ACRE OF WELL–ANCHORED MULCH STRAW AND SEED AS SOON AS POSSIBLE IN THE SPRING.

2) USE SOD.

3) SEED AND MULCH WITH 2 TONS PER ACRE WELL ANCHORED STRAW.

MULCHING : APPLY 1–1/2 TO 2 TONS PER ACRE (70 TO 90 LBS. PER 1000 SQ.FT.) OF UNROTTED SMALL GRAIN STRAW IMMEDIATELY AFTER SEEDING. ANCHOR MULCH IMMEDIATELY AFTER APPLICATION USING MULCH ANCHORING TOOL OR 218 GAL. PER ACRE (5 GAL. PER 1000 SQ.FT.) OF EMULSIFIED ASPHALT ON FLAT AREAS. ON SLOPES, 8 FT. OR HIGHER, USE 347 GAL. PER ACRE (8 GAL. PER 1000 SQ.FT.) FOR ANCHORING.

MAINTENANCE : INSPECT ALL SEEDED AREAS AND MAKE NEEDED REPAIRS, REPLACEMENTS AND RESEEDINGS.

# 21.0 STANDARD AND SPECIFICATIONS FOR TOPSOIL

DEFINITION
PLACEMENT OF TOPSOIL OVER A PREPARED SUBSOIL PRIOR TO ESTABLISHMENT OF PERMANENT VEGETATION.

PURPOSE
TO PROVIDE A SUITABLE SOIL MEDIUM FOR VEGETATIVE GROWTH. SOILS OF CONCERN HAVE LOW MOISTURE CONTENT, LOW NUTRIENT LEVELS, LOW PH, MATERIALS TOXIC TO PLANTS, AND/OR UNACCEPTABLE SOIL GRADATION.

CONDITIONS WHERE PRACTICE APPLIES
I. THIS PRACTICE IS LIMITED TO AREAS HAVING 2:1 OR FLATTER SLOPES WHERE:
--a. THE TEXTURE OF THE EXPOSED SUBSOIL/PARENT MATERIAL IS NOT ADEQUATE TO PRODUCE VEGETATIVE GROWTH.
-b. THE SOIL MATERIAL IS SO SHALLOW THAT THE ROOTING ZONE IS NOT DEEP ENOUGH TO SUPPORT PLANTS OR FURNISH CONTINUING SUPPLIES OF MOISTURE AND PLANT NUTRIENTS.
--c. THE ORIGINAL SOIL TO BE VEGETATED CONTAINS MATERIAL TOXIC TO PLANT GROWTH.
--d. THE SOIL IS SO ACIDIC THAT TREATMENT WITH LIMESTONE IS NOT FEASIBLE.

II. FOR THE PURPOSE OF THESE STANDARDS AND SPECIFICATIONS, AREAS HAVING SLOPES STEEPER THAN 2:1 REQUIRE SPECIAL CONSIDERATION AND DESIGN FOR ADEQUATE STABILIZATION. AREAS HAVING SLOPES STEEPER THAN 2:1 SHALL HAVE THE APPROPRIATE STABILIZATION SHOWN ON THE PLANS.

CONSTRUCTION AND MATERIAL SPECIFICATIONS
I. TOPSOIL SALVAGED FROM THE EXISTING SITE MAY BE USED PROVIDED THAT IT MEETS THE STANDARDS AS SET FORTH IN THESE SPECIFICATIONS. TYPICALLY, THE DEPTH OF TOPSOIL TO BE SALVAGED FOR A GIVEN SOIL TYPE CAN BE FOUND IN THE REPRESENTATIVE SOIL PROFILE SECTION IN THE SOIL SURVEY PUBLISHED BY USDA–SCS IN COOPERATION WITH MARYLAND AGRICULTURAL EXPERIMENTATION STATION.

II. TOPSOIL SPECIFICATIONS – SOIL TO BE USED AS TOPSOIL MUST MEET THE FOLLOWING:
–i. TOPSOIL SHALL BE A LOAM, SANDY LOAM, CLAY LOAM, SILT LOAM, SANDY CLAY LOAM, LOAMY SAND. OTHER SOILS MAY BE USED IF RECOMMENDED BY AN AGRONOMIST OR SOIL SCIENTIST AND APPROVED BY THE APPROPRIATE APPROVAL AUTHORITY. REGARDLESS, TOPSOIL SHALL NOT BE A MIXTURE OF CONTRASTING TEXTURED SUBSOILS AND SHALL CONTAIN LESS THAN 5% BY VOLUME OF CINDERS, STONES, SLAG, COARSE FRAGMENTS, GRAVEL, STICKS, ROOTS, TRASH, OR OTHER MATERIALS LARGER THAN 1–1/2" IN DIAMETER.
–ii. TOPSOIL MUST BE FREE OF PLANTS OR PLANT PARTS SUCH AS BERMUDA GRASS, QUACKGRASS, JOHNSONGRASS, NUTSEDGE, POISON IVY, THISTLE, OR OTHERS AS SPECIFIED.
–iii. WHERE SUBSOIL IS EITHER HIGHLY ACIDIC OR COMPOSED OF HEAVY CLAYS, GROUND LIMESTONE SHALL BE SPREAD AT THE RATE OF 4–8 TONS/ACRE (200–400 POUNDS PER 1,000 SQUARE FEET) PRIOR TO THE PLACEMENT OF TOPSOIL. LIME SHALL BE DISTRIBUTED UNIFORMLY OVER DESIGNATED AREAS AND WORKED INTO THE SOIL IN CONJUNCTION WITH TILLAGE OPERATIONS AS DESCRIBED IN THE FOLLOWING PROCEDURES.

III. FOR SITES HAVING DISTURBED AREAS UNDER 5 ACRES:
–i. PLACE TOPSOIL (IF REQUIRED) AND APPLY SOIL AMENDMENTS AS SPECIFIED IN 20.0 VEGETATIVE STABILIZATION – SECTION I – VEGETATIVE STABILIZATION METHODS AND MATERIALS.

IIII. FOR SITES HAVING DISTURBED AREAS OVER 5 ACRES:
–i. ON SOIL MEETING TOPSOIL SPECIFICATIONS, OBTAIN TEST RESULTS DICTATING FERTILIZER AND LIME AMENDMENTS REQUIRED TO BRING THE SOIL INTO COMPLIANCE WITH THE FOLLOWING:
--a. PH FOR TOPSOIL SHALL BE BETWEEN 6.0 AND 7.5. IF THE TESTED SOIL DEMONSTRATES A PH OF LESS THAN 6.0, SUFFICIENT LIME SHALL BE PRESCRIBED TO RAISE THE PH TO 6.5 OR HIGHER.
--b. ORGANIC CONTENT OF TOPSOIL SHALL BE NOT LESS THAN 1.5 PERCENT BY WEIGHT.
--c. TOPSOIL HAVING SOLUBLE SALT CONTENT GREATER THAN 500 PARTS PER MILLION SHALL NOT BE USED.
--d. NO SOD OR SEED SHALL BE PLACED ON SOIL WHICH HAS BEEN TREATED WITH SOIL STERILANTS OR CHEMICALS USED FOR WEED CONTROL UNTIL SUFFICIENT TIME HAS ELAPSED (14 DAYS MIN.) TO PERMIT DISSIPATION OF PHYTO–TOXIC MATERIALS.

NOTE: TOPSOIL SUBSTITUTES TO AMENDMENTS, AS RECOMMENDED BY A QUALIFIED AGRONOMIST OR SOIL SCIENTIST AND APPROVED BY THE APPROPRIATE APPROVAL AUTHORITY MAY BE USED IN LIEU OF NATURAL TOPSOIL.
–ii. PLACE TOPSOIL (IF REQUIRED) AND APPLY SOIL AMENDMENTS AS SPECIFIED IN 20.0 VEGETATIVE STABILIZATION – SECTION I – VEGETATIVE STABILIZATION METHODS AND MATERIALS.

V. TOPSOIL APPLICATION
–i. WHEN TOPSOILING, MAINTAIN NEEDED EROSION AND SEDIMENT CONTROL PRACTICES SUCH AS DIVERSIONS, GRADE STABILIZATION STRUCTURES, EARTH DIKES, SLOPE SILT FENCE AND SEDIMENT TRAPS AND BASINS.
–ii. GRADES ON THE AREAS TO BE TOPSOILED, WHICH HAVE BEEN PREVIOUSLY ESTABLISHED, SHALL BE MAINTAINED, ALBEIT 4" – 8" HIGHER IN ELEVATION.
–iii. TOPSOIL SHALL BE UNIFORMLY DISTRIBUTED IN A 4" – 8" LAYER AND LIGHTLY COMPACTED TO A MINIMUM THICKNESS OF 4". SPREADING SHALL BE PERFORMED IN SUCH A MANNER THAT SODDING OR SEEDING CAN PROCEED WITH A MINIMUM OF ADDITIONAL SOIL PREPARATION AND TILLAGE. ANY IRREGULARITIES IN THE SURFACE RESULTING FROM TOPSOILING OR OTHER OPERATIONS SHALL BE CORRECTED IN ORDER TO PREVENT THE FORMATION OF DEPRESSIONS OR WATER POCKETS.
–iv. TOPSOIL SHALL NOT BE PLACED WHILE THE TOPSOIL OR SUBSOIL IS IN A FROZEN OR MUDDY CONDITION, WHEN THE SUBSOIL IS EXCESSIVELY WET OR IN A CONDITION THAT MAY OTHERWISE BE DETRIMENTAL TO PROPER GRADING AND SEEDBED PREPARATION.

VI. ALTERNATIVE FOR PERMANENT SEEDING – INSTEAD OF APPLYING THE FULL AMOUNTS OF LIME AND COMMERCIAL FERTILIZER, COMPOSTED SLUDGE AND AMENDMENTS MAY BE APPLIED AS SPECIFIED BELOW:
–i. COMPOSTED SLUDGE MATERIAL FOR USE AS A SOIL CONDITIONER FOR SITES HAVING DISTURBED AREAS OVER 5 ACRES SHALL BE TESTED TO PRESCRIBE AMENDMENTS AND FOR SITE HAVING DISTURBED AREAS UNDER 5 ACRES SHALL CONFORM TO THE FOLLOWING REQUIREMENTS:
--a. COMPOSTED SLUDGE SHALL BE SUPPLIED BY, OR ORIGINATE FROM, A PERSON OR PERSONS THAT ARE PERMITTED (AT THE TIME OF ACQUISITION OF THE COMPOST) BY THE MARYLAND DEPARTMENT OF THE ENVIRONMENT UNDER COMAR 26.04.06.
--b. COMPOSTED SLUDGE SHALL CONTAIN AT LEAST 1 PERCENT NITROGEN, 1.5 PERCENT PHOSPHORUS, AND 0.2 PERCENT POTASSIUM AND HAVE A PH OF 7.0 TO 8.0. IF COMPOST DOES NOT MEET THESE REQUIREMENTS, THE APPROPRIATE CONSTITUENTS MUST BE ADDED TO MEET THE REQUIREMENTS PRIOR TO USE.
--c. COMPOSTED SLUDGE SHALL BE APPLIED AT A RATE OF 1 TON/1,000 SQUARE FEET.
--d. COMPOSTED SLUDGE SHALL BE AMENDED WITH A POTASSIUM FERTILIZER APPLIED AT THE RATE OF 4 LB/1,000 SQUARE FEET, AND 1/3 THE NORMAL LIME APPLICATION RATE. REFERENCES: GUIDELINE SPECIFICATIONS, SOIL PREPARATION AND SODDING. MD–VA, PUB. #1, COOPERATIVE EXTENSION SERVICE, UNIVERSITY OF MARYLAND AND VIRGINIA POLYTECHNIC INSTITUTES. REVISED 1973.

ALL TOPSOIL TO BE STOCKPILED AND STORED ON SITE!!

$Q_2$= 6.16 cfs

**TEMPORARY SWALE CROSSING W/MOUNTABLE BERM**
(NOT TO SCALE)

## OPERATION AND MAINTENANCE SCHEDULE FOR STORMWATER PONDS (P–1 THROUGH P–5)

ROUTINE MAINTENANCE:
1. FACILITY SHALL BE INSPECTED ANNUALLY AND AFTER MAJOR STORMS. INSPECTIONS SHALL BE PERFORMED DURING WET WEATHER TO DETERMINE IF THE POND IS FUNCTIONING PROPERLY.
2. TOP AND SIDE SLOPES OF THE EMBANKMENT SHALL BE MOWED A MINIMUM OF TWO (2) TIMES PER YEAR ONCE IN JUNE AND ONCE IN SEPTEMBER. OTHER SIDE SLOPES AND MAINTENANCE ACCESS SHALL BE MOWED AS NEEDED.
3. DEBRIS AND LITTER SHALL BE REMOVED DURING REGULAR MOWING OPERATIONS AND AS NEEDED.
4. VISIBLE SIGNS OF EROSION IN THE POND AS WELL AS THE RIPRAP OR GABION OUTLET AREA SHALL BE REPAIRED AS SOON AS IT IS NOTICED.

NON–ROUTINE MAINTENANCE:
1. STRUCTURAL COMPONENTS OF THE UPON THE DETECTION OF ANY MAINTENANCE OPERATIONS.
2. SEDIMENT SHALL BE REMOVED FROM THE POND, AND FOREBAY, NO LATER THAN WHEN THE CAPACITY OF THE POND, OR FOREBAY, IS HALF FULL OF SEDIMENT, OR, WHEN DEEMED NECESSARY FOR AESTHETIC REASONS, UPON APPROVAL FROM THE DEPARTMENT OF PUBLIC WORKS.

| BERM No. | HEIGHT |
|---|---|
| A | 18" |
| B | 30" |

FILTER CLOTH SHALL BE GEOTEXTILE CLASS 'C' OR BETTER

**MOUNTABLE BERM**
(NOT TO SCALE)

## DETAIL B-2 WASH RACK ~~OPTION~~

STANDARD SYMBOL WR

NOTE: WASH RACK DESIGN MAY CONSIST OF OTHER MATERIALS SUITABLE FOR ANTICIPATED TRUCK TRAFFIC.

1 OF 2

MARYLAND STANDARDS AND SPECIFICATIONS FOR SOIL EROSION AND SEDIMENT CONTROL

| U.S. DEPARTMENT OF AGRICULTURE NATURAL RESOURCES CONSERVATION SERVICE | | MARYLAND DEPARTMENT OF ENVIRONMENT WATER MANAGEMENT ADMINISTRATION |
|---|---|---|

B.6 DRAFT October 15, 2009

## DETAIL B-2 WASH RACK ~~OPTION~~

STANDARD SYMBOL WR

CONSTRUCTION SPECIFICATIONS

1. MINIMUM LENGTH OF 50 FEET (30 FEET FOR SINGLE RESIDENCE LOT).
2. MINIMUM WIDTH OF 10 FEET. FLARE 10 FEET MINIMUM AT THE EXISTING PAVEMENT TO PROVIDE A TURNING RADIUS.
3. PLACE GEOTEXTILE CLASS SE OVER THE EXISTING GROUND PRIOR TO PLACING STONE. (THE PLAN APPROVAL AUTHORITY MAY NOT REQUIRE SINGLE FAMILY RESIDENCE TO USE GEOTEXTILE.)
4. PLACE CRUSHED AGGREGATE (2 TO 3 INCHES IN SIZE) OR EQUIVALENT RECYCLED CONCRETE (WITHOUT REBAR) AT LEAST 6 INCHES DEEP OVER THE LENGTH AND WIDTH OF THE SCE.
5. PROVIDE A WASH RACK DESIGNED AND CONSTRUCTED/MANUFACTURED FOR ANTICIPATED TRAFFIC LOADS.
6. PROVIDE A DRAINAGE DITCH THAT WILL CONVEY THE RUNOFF FROM THE WASH AREA (IF NOT CONTAINED) TO A SEDIMENT TRAPPING DEVICE.
7. PIPE ALL SURFACE WATER FLOWING TO OR DIVERTED TOWARD THE SCE UNDER THE ENTRANCE, MAINTAINING POSITIVE DRAINAGE. PROTECT PIPE INSTALLED THROUGH THE SCE WITH A MOUNTABLE BERM WITH 5:1 SLOPES AND A MINIMUM OF 12 INCHES OF STONE OVER THE PIPE. WHEN THE SCE IS LOCATED AT A HIGH SPOT ON THE LIMIT OF DISTURBANCE (LOD) AND HAS NO DRAINAGE TO CONVEY, A PIPE WILL NOT BE NECESSARY. SIZE PIPE (SIX INCH MINIMUM DIAMETER) TO CONVEY THE RUNOFF GENERATED BY A 2-YEAR FREQUENCY STORM. A MOUNTABLE BERM IS REQUIRED ON ALL SCEs NOT LOCATED AT A HIGH SPOT.
8. LOCATE SCE WITH WASH RACK AT EVERY POINT WHERE CONSTRUCTION TRAFFIC ENTERS OR LEAVES A CONSTRUCTION SITE. VEHICLES LEAVING THE SITE MUST TRAVEL OVER THE ENTIRE LENGTH OF THE SCE. THE ORIENTATION OF THE SCE MAY VARY FROM A STRAIGHT LINE AND BE CURVED OR 'T' SHAPED DEPENDING ON THE TOPOGRAPHY AND RIGHT OF WAY. AVOID LOCATING ENTRANCES ALONG THE LOW POINT OF THE WORK AREA WHERE POSSIBLE.

2 OF 2

MARYLAND STANDARDS AND SPECIFICATIONS FOR SOIL EROSION AND SEDIMENT CONTROL

| U.S. DEPARTMENT OF AGRICULTURE NATURAL RESOURCES CONSERVATION SERVICE | | MARYLAND DEPARTMENT OF ENVIRONMENT WATER MANAGEMENT ADMINISTRATION |
|---|---|---|

B.7 DRAFT October 15, 2009

WASH RACK DETAIL

# SEQUENCE OF CONSTRUCTION

PHASE I

1. OBTAIN GRADING PERMIT AND ALL REQUIRED PERMITS. SCHEDULE AND ATTEND THE PRECONSTRUCTION MEETING. (1 DAY)

2. CLEAR AND GRUB FOR AND INSTALL STABILIZED CONSTRUCTION ENTRANCE WITH WASH RACK AT NORTH LAUREL ROAD. INSTALL SILT FENCE AROUND SCE. INSTALL CURB INLET PROTECTION ON EXISTING INLET. (1 DAY)

3. ALL BASIN STRUCTURES, PIPE AND MATERIALS MUST BE ON–SITE PRIOR TO PROCEEDING WITH STEP 3. OBTAIN PERMISSION FROM INSPECTOR AND BEGIN BASIN NO. 1 CONSTRUCTION. FOLLOW MD–378 SPECIFICATIONS ON SHEET 9.
   a. INSTALL SUPER SILT FENCE ALONG DOWNSTREAM TOE OF EMBANKMENT. OBTAIN PERMISSION FROM INSPECTOR BEFORE PROCEEDING. (1 DAY)
   b. CLEAR POND AREA AND STRIP TOPSOIL FOR POND AREA AND STOCKPILE OUTSIDE OF THE EMBANKMENT AREA. (2 DAYS)
   c. GRADE A SMALL AREA TO BOTTOM ELEVATION OF 210.0 AND INSTALL REMOVABLE PUMPING STATION TO BE USED TO DEWATER THE WORK AREA DURING CONSTRUCTION. DIRECT FLOWS TO PUMPING STATION SUCH THAT WATER MAY BE PUMPED TO DEWATER THE WORK AREA. (1 DAY)
   d. CONSTRUCT THE CUT–OFF TRENCH. CUTOFF AND CORE TRENCH BACKFILL MATERIAL IS TO MEET THE PROVISIONS OF MD–378 CRITERIA AS SUPERVISED BY THE GEOTECHNICAL ENGINEER. (2 DAYS)
   e. CONSTRUCT RIP RAP OUTFALL, BARREL, CONCRETE CRADLE, ANTI–SEEP COLLAR, AND RISER STRUCTURE. CONCRETE COLLARS ARE TO BE CAST–IN–PLACE. INSTALL TRASH RACK. ALL INSTALLATION IS TO BE OBSERVED BY PHRA ENGINEER. (3 DAYS)
   f. CONSTRUCT EMBANKMENT IN 8" LIFTS, USING 4" LIFTS WITHIN 5 FEET HORIZONTALLY OF BARREL OR RISER. CONSTRUCT CORE. (4 DAYS)
   g. GRADE CHECK AND PERMANENTLY STABILIZE EMBANKMENT. (1 DAY)
   h. INSTALL TEMPORARY DRAWDOWN DEVICE. (1 DAY)
   i. EXCAVATE SEDIMENT BASIN STORAGE AREA AS SHOWN ON SEDIMENT CONTROL PLAN SHEET 7. (3 DAYS)
   j. UPON COMPLETION OF POND, STABILIZE WITH TEMPORARY SEEDING. (1 DAY)
   k. OBTAIN PERMISSION FROM INSPECTOR BEFORE PROCEEDING FURTHER. (1 DAY)

4. INSTALL REMAINING PERIMETER CONTROLS AND EARTH DIKES AND PIPE SLOPE DRAINS WHICH CONVEY RUNOFF TO BASIN. (1 WEEK)

5. OBTAIN PERMISSION FROM INSPECTOR. BEGIN CLEARING AND GRADING. FOLLOW DUST CONTROL PRACTICES PER MDE DETAIL H–30–1 (SEE SHEET 6) THROUGHOUT THE GRADING AND CONSTRUCTION ACTIVITY ON THE SITE. (1 MONTH)

6. IMMEDIATELY STABILIZE SWALES WITH EROSION CONTROL MATTING. (1 DAY)

7. AS GRADING PROGRESSES REMOVE PHASE 1 EARTH DIKE AND INSTALL TEMPORARY SWALE. (2 DAYS)

8. UPON COMPLETION OF ALL CONSTRUCTION AND STABILIZATION OF ALL GRASSED AREAS WITH PERMANENT SEEDING, STABILIZE ANY REMAINING AREAS. (3 DAYS)

9. OBTAIN WRITTEN PERMISSION FROM SEDIMENT CONTROL INSPECTOR BEFORE PROCEEDING FURTHER. (1 DAY)

10. PROCEED WITH PHASE 2 PLAN ON SHEETS 23, 24, AND 25. SEE SHEET 23 FOR PHASE 2 SEQUENCE OF CONSTRUCTION.

## HOWARD SOIL CONSERVATION DISTRICT OPERATION, MAINTENANCE AND INSPECTION

INSPECTION OF THE POND SHOWN HEREON SHALL BE PERFORMED AT LEAST ANNUALLY, IN ACCORDANCE WITH THE CHECKLIST AND REQUIREMENTS CONTAINED WITHIN USDA, SCS "STANDARDS AND SPECIFICATIONS FOR PONDS" (MD–378). THE POND OWNER(S) AND ANY HEIRS, SUCCESSORS, OR ASSIGNS SHALL BE RESPONSIBLE FOR THE SAFETY OF THE POND AND THE CONTINUED OPERATION, SURVEILLANCE, INSPECTION, AND MAINTENANCE THEREOF. THE POND OWNER(S) SHALL PROMPTLY NOTIFY THE SOIL CONSERVATION DISTRICT OF ANY UNUSUAL OBSERVATIONS THAT MAY BE INDICATIONS OF DISTRESS SUCH AS EXCESSIVE SEEPAGE, TURBID SEEPAGE, SLIDING OR SLUMPING.

BY THE DEVELOPER :
I/WE CERTIFY THAT ALL DEVELOPMENT AND/OR CONSTRUCTION WILL BE DONE ACCORDING TO THESE PLANS, AND THAT ANY RESPONSIBLE PERSONNEL INVOLVED IN THE CONSTRUCTION PROJECT WILL HAVE A CERTIFICATE OF ATTENDANCE AT A DEPARTMENT OF THE ENVIRONMENT APPROVED TRAINING PROGRAM FOR THE CONTROL OF SEDIMENT AND EROSION BEFORE BEGINNING THE PROJECT. I SHALL ENGAGE A REGISTERED PROFESSIONAL ENGINEER TO SUPERVISE POND CONSTRUCTION AND PROVIDE THE HOWARD SOIL CONSERVATION DISTRICT WITH AN "AS–BUILT" PLAN OF THE POND WITHIN 30 DAYS OF COMPLETION. I ALSO AUTHORIZE PERIODIC ON–SITE INSPECTIONS BY THE HOWARD SOIL CONSERVATION DISTRICT.

[signature] 2/2/10
DEVELOPER DATE

BY THE ENGINEER :
I CERTIFY THAT THIS PLAN FOR POND CONSTRUCTION, EROSION AND SEDIMENT CONTROL REPRESENTS A PRACTICAL AND WORKABLE PLAN BASED ON MY PERSONAL KNOWLEDGE OF THE SITE CONDITIONS. THIS PLAN WAS PREPARED IN ACCORDANCE WITH THE REQUIREMENTS OF THE HOWARD SOIL CONSERVATION DISTRICT. I HAVE NOTIFIED THE DEVELOPER THAT HE/SHE MUST ENGAGE A REGISTERED PROFESSIONAL ENGINEER TO SUPERVISE POND CONSTRUCTION AND PROVIDE THE HOWARD SOIL CONSERVATION DISTRICT WITH AN "AS–BUILT" PLAN OF THE POND WITHIN 30 DAYS OF COMPLETION.

Sheryl C. Mitchell 9-21-10
ENGINEER DATE

THESE PLANS FOR SMALL POND CONSTRUCTION, SOIL EROSION AND SEDIMENT CONTROL MEET THE REQUIREMENTS OF THE HOWARD SOIL CONSERVATION DISTRICT.

[signature] 11/1/10
HOWARD SOIL CONSERVATION DISTRICT DATE

APPROVED : HOWARD COUNTY DEPARTMENT OF PLANNING AND ZONING.

Thomas E. Butler 12/13/10
DIRECTOR DATE

[signature] 11/18/10
CHIEF, DEVELOPMENT ENGINEERING DIVISION DATE

Kent Sheubrooks 12/10/10
CHIEF, DIVISION OF LAND DEVELOPMENT DATE

| DATE | NO. | REVISION |
|---|---|---|
| | | |
| | | |

OWNER
HOWARD COUNTY DEPARTMENT OF PUBLIC WORKS
BUREAU OF ENGINEERING
9250 BENDIX ROAD, COLUMBIA, MARYLAND 21045
P 410 313 2414

DEVELOPER
HOWARD COUNTY DEPARTMENT OF PUBLIC WORKS
BUREAU OF ENGINEERING
9250 BENDIX ROAD, COLUMBIA, MARYLAND 21045
P 410 313 2414

PROJECT
**NORTH LAUREL COMMUNITY CENTER**
CAPITAL PROJECT C–0304 PROJECT MGR: DAVE LOUDERMILK

AREA TAX MAP 47 GRID 22 & TAX MAP 50 GRIDS 3 & 4, PARCELS A–1, 187 & 1065 ZONED R–SC
6TH ELECTION DISTRICT
HOWARD COUNTY, MARYLAND

TITLE **SEDIMENT CONTROL NOTES AND DETAILS**


**Patton Harris Rust & Associates**
Engineers. Surveyors. Planners. Landscape Architects.
PHR+A
8818 Centre Park Drive
Columbia, MD 21045
T 410.997.8900
F 410.997.9282


SEAL
STATE OF MARYLAND SHERYL CLARKE MITCHELL No. 33954 REGISTERED PROFESSIONAL ENGINEER
BY: Sheryl C. Mitchell
"PROFESSIONAL CERTIFICATION. I HEREBY CERTIFY THAT THESE DOCUMENTS WERE PREPARED OR APPROVED BY ME, AND THAT I AM A DULY LICENSED PROFESSIONAL ENGINEER UNDER THE LAWS OF THE STATE OF MARYLAND, LICENSE NO. 33954, EXPIRATION DATE: 01–24–11"

| | |
|---|---|
| DESIGNED BY :SCM | |
| DRAWN BY: SGM | |
| PROJECT NO : 14466–1–2 C400SDP05.DWG | |
| DATE : SEPTEMBER 7, 2010 | |
| SCALE : AS SHOWN | |
| DRAWING NO. 5 OF 43 | |

P:\Project\14466\1–0\PLANS\MASS GRADING\C400SDP05.DWG

SDP–10–010

## DETAIL 1 – EARTH DIKE

| | DIKE A | DIKE B |
|---|---|---|
| a-DIKE HEIGHT | 18" | 30" |
| b-DIKE WIDTH | 24" | 36" |
| c-FLOW WIDTH | 4' | 6' |
| d-FLOW DEPTH | 12" | 24" |

FLOW CHANNEL STABILIZATION
GRADE 0.5% MIN. 10% MAX.

1. Seed and cover with straw mulch.
2. Seed and cover with Erosion Control Matting or line with sod.
3. 4" – 7" stone or recycled concrete equivalent pressed into the soil 7" minimum

Construction Specifications

1. All temporary earth dikes shall have uninterrupted positive grade to an outlet. Spot elevations may be necessary for grades less than 1%.

2. Runoff diverted from a disturbed area shall be conveyed to a sediment trapping device.

3. Runoff diverted from an undisturbed area shall outlet directly into an undisturbed, stabilized area at a non-erosive velocity.

4. All trees, brush, stumps, obstructions, and other objectional material shall be removed and disposed of so as not to interfere with the proper functioning of the dike.

5. The dike shall be excavated or shaped to line, grade and cross section as required to meet the criteria specified herein and be free of bank projections or other irregularities which will impede normal flow.

6. Fill shall be compacted by earth moving equipment.

7. All earth removed and not needed for construction shall be placed so that it will not interfere with the functioning of the dike.

8. Inspection and maintenance must be provided periodically and after each rain event.

U.S. DEPARTMENT OF AGRICULTURE SOIL CONSERVATION SERVICE | PAGE A – 1 – 6 | MARYLAND DEPARTMENT OF ENVIRONMENT WATER MANAGEMENT ADMINISTRATION

## DETAIL 4 – PIPE SLOPE DRAIN

Table 6 Design Criteria for Pipe Slope Drain

| Size | Pipe/Tubing Diameter (D) in | Maximum Drainage Area (Acres) |
|---|---|---|
| PSD-12 | 12 | 0.5 |
| PSD-18 | 18 | 1.5 |
| PSD-21 | 21 | 2.5 |
| PSD-24 | 24 | 3.5 |
| PSD-24 (2) | 24 | 5.0 |

U.S. DEPARTMENT OF AGRICULTURE SOIL CONSERVATION SERVICE | PAGE B – 5 – 4 | MARYLAND DEPARTMENT OF ENVIRONMENT WATER MANAGEMENT ADMINISTRATION

## PIPE SLOPE DRAIN

### CONSTRUCTION SPECIFICATIONS – PIPE SLOPE DRAIN

1. THE PIPE SLOPE DRAIN (PSD) SHALL HAVE A SLOPE OF 3 PERCENT OR STEEPER.
2. THE TOP OF THE EARTH DIKE OVER THE INLET PIPE SHALL BE AT LEAST 2 TIMES THE PIPE DIAMETER MEASURED AT THE INVERT OF THE PIPE. PIPE.
3. FLEXIBLE TUBING IS PREFERRED. HOWEVER, CORRUGATED METAL PIPE OR EQUIVALENT PVC PIPE CAN BE USED. ALL CONNECTIONS SHALL BE WATERTIGHT. PIPE.
4. A FLARED END SECTION SHALL BE ATTACHED TO THE INLET END OF PIPE WITH A WATERTIGHT CONNECTION. FILTER CLOTH SHALL BE PLACED UNDER THE INLET OF THE PIPE SLOPE DRAIN AND SHALL EXTEND OUT 5' FROM THE INLET. THE FILTER CLOTH SHALL BE "KEYED IN" ON ALL SIDES. PIPE.
5. THE PIPE SLOPE DRAIN SHALL BE SECURELY ANCHORED TO THE SLOPE BY STAKING AT THE GROMMETS PROVIDED. SPACING FOR ANCHORS SHALL BE AS PROVIDED BY MANUFACTURER'S SPECIFICATION. IN NO CASE SHALL LESS THAN TWO (2) ANCHORS BE PROVIDED, EQUALLY SPACED ALONG THE LENGTH OF PIPE. THESE DETAILS SHOULD BE PROVIDED BY PIPE SUPPLIERS. PIPE. PIPE.
6. THE SOIL AROUND AND UNDER THE PIPE AND END SECTION SHALL BE HAND TAMPED IN 4 INCH LIFTS TO THE TOP OF THE EARTH DIKE.
7. ALL PIPE CONNECTIONS SHALL BE WATERTIGHT.
8. WHENEVER POSSIBLE WHERE A PSD DRAINS AN UNSTABILIZED AREA, IT SHALL OUTLET INTO A SEDIMENT TRAP OR BASIN. IF THIS IS NOT POSSIBLE THEN THE SLOPE DRAIN WILL DISCHARGE INTO A STABLE CONVEYENCE THAT LEADS TO A SEDIMENT TRAP OR BASIN. WHEN DISCHARGING INTO A TRAP OR BASIN THE PSD SHALL DISCHARGE AT THE SAME ELEVATION AS THE WET POOL ELEVATION. THE DISCHARGE FROM THE PSD MUST BE AS FAR AWAY FROM THE SEDIMENT CONTROL OUTLET AS POSSIBLE.
9. WHEN THE DRAINAGE AREA IS STABILIZED, THE PSD SHALL DISCHARGE ONTO A STABILIZED AREA AT A NON-EROSIVE VELOCITY.
10. INSPECTION AND ANY REQUIRED MAINTENANCE SHALL BE PERFORMED PERIODICALLY AND AFTER EACH RAIN EVENT.
11. THE INLET MUST BE KEPT OPEN AT ALL TIMES.

U.S. DEPARTMENT OF AGRICULTURE SOIL CONSERVATION SERVICE | PAGE B – 5 – 4A | MARYLAND DEPARTMENT OF ENVIRONMENT WATER MANAGEMENT ADMINISTRATION

## 30.0 – DUST CONTROL

DEFINITION

CONTROLLING DUST BLOWING AND MOVEMENT ON CONSTRUCTION SITES AND ROADS.

PURPOSE

TO PREVENT BLOWING AND MOVEMENT OF DUST FROM EXPOSED SOIL SURFACES, REDUCE ON AND OFF-SITE DAMAGE, HEALTH HAZARDS, AND IMPROVE TRAFFIC SAFETY.

CONDITIONS WHERE PRACTICE APPLIES

THIS PRACTICE IS APPLICABLE TO AREAS SUBJECT TO DUST BLOWING AND MOVEMENT WHERE ON OFF-SITE DAMAGE IS LIKELY WITHOUT TREATMENT.

SPECIFICATIONS

TEMPORARY METHODS

1. MULCHES – SEE STANDARDS FOR VEGETATIVE STABILIZATION WITH MULCHES ONLY. MULCH SHOULD BE CRIMPED OR TACKED TO PREVENT BLOWING.
2. VEGATATIVE COVER – SEE STANDARDS FOR TEMPORARY VEGETATIVE COVER.
3. TILLAGE – TO ROUGHEN SURFACE AND BRING CLODS TO THE SURFACE. THIS IS AN EMERGENCY MEASURE WHICH SHOULD BE USED BEFORE SOIL BLOWING STARTS. BEGIN PLOWING ON WINDWARD SIDE OF SITE. CHISEL-TYPE PLOWS SPACED ABOUT 12" APART, SPRING-TOOTHED HARROWS, AND SIMILIAR PLOWS ARE EXAMPLES OF EQUIPMENT WHICH MAY PRODUCE THE DESIRED EFFECT.
4. IRRIGATION – THIS IS GENERALLY DONE AS AN EMERGENGY TREATMENT. SITE IS SPRINKLED WITH WATER UNTIL THE SURFACE IS MOIST. REPEAT AS NEEDED. AT NO TIME SHOULD THE SITE BE IRRIGATED TO THE POINT THAT RUNOFF BEGINS TO FLOW.
5. BARRIERS – SOLID BOARD FENCES, SILT FENCES, SNOW FENCES, BURLAP FENCES, STRAW BALES, AND SIMILAR MATERIAL CAN BE USED TO CONTROL AIR CURRENTS AND SOIL BLOWING. BARRIERS PLACED AT RIGHT ANGLES TO PREVAILING CURRENTS AT INTERVALS OF ABOUT 10 TIMES THEIR HEIGHT ARE EFFECTIVE IN CONTROLLING SOIL BLOWING.
6. CALCIUM CHLORIDE – APPLY AT RATES THAT WILL KEEP SURFACE MOIST. MAY NEED RETREATMENT.

PERMANENT METHODS

1. PERMANENT VEGETATION – SEE STANDARDS FOR PERMANENT VEGETATIVE COVER, AND PERMANENT STABILIZATION WITH SOD. EXISTING TREES OR LARGE SHRUBS MAY AFFORD VALUABLE PROTECTION IF LEFT IN PLACE.
2. TOPSOILING – COVERING WITH LESS EROSIVE SOIL MATERIALS. SEE STANDARDS FOR TOPSOILING.
3. STONE – COVER SURFACE WITH CRUSHED STONE OR COARSE GRAVEL.

REFERENCES

1. AGRICULTURE HANDBOOK 346. WIND EROSION FORCES IN THE UNITED STATES AND THEIR USES IN PREDICTING SOIL LOSS.
2. AGRICULTURE INFORMATION BULLETIN 354. HOW TO CONTROL WIND EROSION, USDA-ARS.

U.S. DEPARTMENT OF AGRICULTURE SOIL CONSERVATION SERVICE | PAGE H – 30 – 1 | MARYLAND DEPARTMENT OF ENVIRONMENT WATER MANAGEMENT ADMINISTRATION

## DETAIL 27 – ROCK OUTLET PROTECTION III

NOTE: FILTER CLOTH SHALL BE GEOTEXTILE CLASS C

U.S. DEPARTMENT OF AGRICULTURE SOIL CONSERVATION SERVICE | PAGE F – 18 – 10 | MARYLAND DEPARTMENT OF ENVIRONMENT WATER MANAGEMENT ADMINISTRATION

## ROCK OUTLET PROTECTION III

Construction Specifications

1. The subgrade for the filter, rip-rap, or gabion shall be prepared to the required lines and grades Any fill required in the subgrade shall be compacted to a density of approximately that of the surrounding undisturbed material.

2. The rock or gravel shall conform to the specified grading limits when installed respectively in the rip-rap or filter.

3. Geotextile shall be protected from punching, cutting, or tearing. Any damage other than an occasional small hole shall be repaired by placing another piece of geotextile over the damaged part or by completely replacing the geotextile. All overlaps whether for repairs or for joining two pieces of geotextile shall be a minimum of one foot.

4. Stone for the rip-rap or gabion outlets may be placed by equipment. They shall be constructed to the full course thickness in one operation and in such a manner as to avoid displacement of underlying materials. The stone for rip-rap or gabion outlets shall be delivered and placed in a manner that will ensure that it is reasonably homogeneous with the smaller stones and spalls filling the voids between the larger stones. Rip-rap shall be placed in a manner to prevent damage to the filter blanket or geotextile. Hand placement will be required to the extent necessary to prevent damage to the permanent works.

5. The stone shall be placed so that it blends in with the existing ground. If the stone is placed too high then the flow will be forced out of the channel and scour adjacent to the stone will occur.

U.S. DEPARTMENT OF AGRICULTURE SOIL CONSERVATION SERVICE | PAGE F – 18 – 10A | MARYLAND DEPARTMENT OF ENVIRONMENT WATER MANAGEMENT ADMINISTRATION

BY THE DEVELOPER :

I/WE CERTIFY THAT ALL DEVELOPMENT AND/OR CONSTRUCTION WILL BE DONE ACCORDING TO THESE PLANS, AND THAT ANY RESPONSIBLE PERSONNEL INVOLVED IN THE CONSTRUCTION PROJECT WILL HAVE A CERTIFICATE OF ATTENDANCE AT A DEPARTMENT OF THE ENVIRONMENT APPROVED TRAINING PROGRAM FOR THE CONTROL OF SEDIMENT AND EROSION BEFORE BEGINNING THE PROJECT. I SHALL ENGAGE A REGISTERED PROFESSIONAL ENGINEER TO SUPERVISE POND CONSTRUCTION AND PROVIDE THE HOWARD SOIL CONSERVATION DISTRICT WITH AN "AS-BUILT" PLAN OF THE POND WITHIN 30 DAYS OF COMPLETION. I ALSO AUTHORIZE PERIODIC ON-SITE INSPECTIONS BY THE HOWARD SOIL CONSERVATION DISTRICT.

[signature] 9/22/10
DEVELOPER DATE

BY THE ENGINEER :

I CERTIFY THAT THIS PLAN FOR POND CONSTRUCTION, EROSION AND SEDIMENT CONTROL REPRESENTS A PRACTICAL AND WORKABLE PLAN BASED ON MY PERSONAL KNOWLEDGE OF THE SITE CONDITIONS. THIS PLAN WAS PREPARED IN ACCORDANCE WITH THE REQUIREMENTS OF THE HOWARD SOIL CONSERVATION DISTRICT. I HAVE NOTIFIED THE DEVELOPER THAT HE/SHE MUST ENGAGE A REGISTERED PROFESSIONAL ENGINEER TO SUPERVISE POND CONSTRUCTION AND PROVIDE THE HOWARD SOIL CONSERVATION DISTRICT WITH AN "AS-BUILT" PLAN OF THE POND WITHIN 30 DAYS OF COMPLETION.

Sheryl C. Mitchell 9-21-10
ENGINEER DATE

THESE PLANS FOR SMALL POND CONSTRUCTION, SOIL EROSION AND SEDIMENT CONTROL MEET THE REQUIREMENTS OF THE HOWARD SOIL CONSERVATION DISTRICT.

[signature] 11/1/10
HOWARD SOIL CONSERVATION DISTRICT DATE

APPROVED : HOWARD COUNTY DEPARTMENT OF PLANNING AND ZONING.

[signature] 12/13/10
DIRECTOR DATE

[signature] 11/18/10
CHIEF, DEVELOPMENT ENGINEERING DIVISION DATE

[signature] 12/10/10
CHIEF, DIVISION OF LAND DEVELOPMENT DATE

| DATE | NO. | REVISION |
|---|---|---|
| | | |
| | | |

## SEDIMENT TRAP AND BASIN DRAWDOWN SCHEMATIC HORIZONTAL DRAW DOWN DEVICE

Construction Specifications

1. The total area of the perforation must be greater than 2 times the area of the internal orifice.
2. The perforated portion of the drawdown device shall be wrapped with 1/2" hardware cloth and geotextile fabric. The geotextile fabric shall meet the specifications for Geotextile Class E.
3. Provide support of drawdown device to prevent sagging and floatation. An acceptable preventative measure is to stake both sides of drawdown device with 1" steel angle, or 1" by 4" square or 2" round wooden posts set 3' minimum into the ground then joining them to the device by wrapping with 12 gauge minimum wire.

U.S. DEPARTMENT OF AGRICULTURE SOIL CONSERVATION SERVICE | PAGE C – 10 – 29 | MARYLAND DEPARTMENT OF ENVIRONMENT WATER MANAGEMENT ADMINISTRATION

## DETAIL 5 - RIP-RAP INFLOW PROTECTION

### CONSTRUCTION SPECIFICATIONS

1. RIP-RAP LINED INFLOW CHANNELS SHALL BE 1' IN DEPTH, HAVE A TRAPEZOIDAL CROSS SECTION WITH 2:1 OR FLATTER SIDE SLOPES AND 3' (MIN.) BOTTOM WIDTH. THE CHANNEL SHALL BE LINED WITH 4" TO 12" RIP- RAP TO A DEPTH OF 18".
2. FILTER CLOTH SHALL BE INSTALLED UNDER ALL RIP-RAP. FILTER CLOTH SHALL BE GEOTEXTILE CLASS C.
3. ENTRANCE AND EXIT SECTIONS SHALL BE INSTALLED AS SHOWN ON THE DETAIL SECTION.
4. RIP-RAP USED FOR THE LINING MAY BE RECYCLED FOR PERMANENT OUTLET PROTECTION IF THE BASIN IS TO BE CONVERTED TO A STORMWATER MANAGEMENT FACILITY.
5. GABION INFLOW PROTECTION MAY BE USED IN LIEU OF RIP-RAP INFLOW PROTECTION.
6. RIP-RAP SHOULD BLEND INTO EXISTING GROUND.
7. RIP-RAP INFLOW PROTECTION SHALL BE USED WHERE THE SLOPE IS BETWEEN 4:1 AND 10:1, FOR SLOPES FLATTER THAN 10:1 USE EARTH DIKE OR TEMPORARY SWALE LINING CRITERIA.

U.S. DEPARTMENT OF AGRICULTURE SOIL CONSERVATION SERVICE | PAGE B – 6 – 2 | MARYLAND DEPARTMENT OF ENVIRONMENT WATER MANAGEMENT ADMINISTRATION

## DETAIL 6 - GABION INFLOW PROTECTION

### CONSTRUCTION SPECIFICATIONS

1. GABION INFLOW PROTECTION SHALL BE CONSTRUCTED OF 9' X 3' X 9" GABION BASKETS FORMING A TRAPEZOIDAL CROSS SECTION 1' DEEP, WITH 2:1 SIDE SLOPES, AND A 3' BOTTOM WIDTH.
2. GEOTEXTILE CLASS C SHALL BE INSTALLED UNDER ALL GABION BASKETS.
3. THE STONE USED TO FILL THE GABION BASKETS SHALL BE 4" – 7".
4. GABIONS SHALL BE INSTALLED IN ACCORDANCE WITH MANUFACTURERS RECOMMENDATIONS.
5. GABION INFLOW PROTECTION SHALL BE USED WHERE CONCENTRATED FLOW IS PRESENT ON SLOPES STEEPER THAN 4:1.

U.S. DEPARTMENT OF AGRICULTURE SOIL CONSERVATION SERVICE | PAGE B – 7 – 2 | MARYLAND DEPARTMENT OF ENVIRONMENT WATER MANAGEMENT ADMINISTRATION

## DETAIL 23C – CURB INLET PROTECTION

MAX. DRAINAGE AREA = 1/4 ACRE

Construction Specifications

1. Attach a continuous piece of wire mesh (30" minimum width by throat length plus 4') to the 2" x 4" weir (measuring throat length plus 2') as shown on the standard drawing.

2. Place a continuous piece of Geotextile Class E the same dimensions as the wire mesh over the wire mesh and securely attach it to the 2" x 4" weir.

3. Securely nail the 2" X 4" weir to a 9" long vertical spacer to be located between the weir and the inlet face (max. 4' apart).

4. Place the assembly against the inlet throat and nail (minimum 2' lengths of 2" x 4" to the top of the weir at spacer locations). These 2" x 4" anchors shall extend across the inlet top and be held in place by sandbags or alternate weight.

5. The assembly shall be placed so that the end spacers are a minimum 1' beyond both ends of the throat opening.

6. Form the 1/2 " x 1/2 " wire mesh and the geotextile fabric to the concrete gutter and against the face of the curb on both sides of the inlet. Place clean 3/4 " x 1 1/2 " stone over the wire mesh and geotextile in such a manner to prevent water from entering the inlet under or around the geotextile.

7. This type of protection must be inspected frequently and the filter cloth and stone replaced when clogged with sediment.

8. Assure that storm flow does not bypass the inlet by installing a temporary earth or asphalt dike to direct the flow to the inlet.

U.S. DEPARTMENT OF AGRICULTURE SOIL CONSERVATION SERVICE | PAGE E – 16 – 5B | MARYLAND DEPARTMENT OF ENVIRONMENT WATER MANAGEMENT ADMINISTRATION

## DETAIL 22 – SILT FENCE

Construction Specifications

1. Fence posts shall be a minimum of 36" long driven 16" minimum into the ground. Wood posts shall be 11/2" x 11/2" square (minimum) cut, or 13/4" diameter (minimum) round and shall be of sound quality hardwood. Steel posts will be standard T or U section weighting not less than 1.00 pound per linear foot.

2. Geotextile shall be fastened securely to each fence post with wire ties or staples at top and mid-section and shall meet the following requirements for Geotextile Class F:

| | | |
|---|---|---|
| Tensile Strength | 50 lbs/in (min.) | Test: MSMT 509 |
| Tensile Modulus | 20 lbs/in (min.) | Test: MSMT 509 |
| Flow Rate | 0.3 gal ft ²/ minute (max.) | Test: MSMT 322 |
| Filtering Efficiency | 75% (min.) | Test: MSMT 322 |

3. Where ends of geotextile fabric come together, they shall be overlapped, folded and stapled to prevent sediment bypass.

4. Silt Fence shall be inspected after each rainfall event and maintained when bulges occur or when sediment accumulation reached 50% of the fabric height.

U.S. DEPARTMENT OF AGRICULTURE SOIL CONSERVATION SERVICE | PAGE E – 15 – 3 | MARYLAND DEPARTMENT OF ENVIRONMENT WATER MANAGEMENT ADMINISTRATION

## DETAIL 33 – SUPER SILT FENCE

Construction Specifications

1. Fencing shall be 42" in height and constructed in accordance with the latest Maryland State Highway (SHA) Details for Chain Link Fencing. The SHA specifications for a 6 foot fence shall be used, substituting 42" fabric and 6 foot length posts.

2. The posts do not need to be set in concrete.

3. Chain link fence shall be fastened securely to the fence posts with wire ties or staples. The lower tension wire, brace and truss rods, drive anchors and post caps are not required except on the ends of the fence. The chain link fencing shall be six (6) gauge or heavier.

4. Filter cloth shall be fastened securely to the chain link fence with ties spaced every 24" at the top and mid section.

5. Filter cloth shall be embedded a minimum of 8" into the ground.

6. When two sections of geotextile fabric adjoin each other, they shall be overlapped by 6" and folded.

7. Maintenance shall be performed as needed and silt buildups removed when "bulges" develop in the silt fence, or when silt reaches 50% of fence height

U.S. DEPARTMENT OF AGRICULTURE SOIL CONSERVATION SERVICE | PAGE H – 26 – 3 | MARYLAND DEPARTMENT OF ENVIRONMENT WATER MANAGEMENT ADMINISTRATION

## DETAIL 20A – REMOVABLE PUMPING STATION

Construction Specifications

1. The outer pipe should be 48" dia. or shall, in any case, be at least 4" greater in diameter than the center pipe. The outer pipe shall be wrapped with 1/2" hardware cloth to prevent backfill material from entering the perforations.

2. After installing the outer pipe, backfill around outer pipe with 2" aggregate or clean gravel.

3. The inside stand pipe (center pipe) should be constructed by perforating a corrugated or PVC pipe between 12" and 36" in diameter. The perforations shall be 1/2" X 6" slits or 1" diameter holes 6" on center. The center pipe shall be wrapped with 1/2" hardware cloth first, then wrapped again with Geotextile Class C.

4. The center pipe should extend 12" to 18" above the anticipated water surface elevation or riser crest elevation when dewatering a basin.

U.S. DEPARTMENT OF AGRICULTURE SOIL CONSERVATION SERVICE | PAGE D – 12 – 4 | MARYLAND DEPARTMENT OF ENVIRONMENT WATER MANAGEMENT ADMINISTRATION

## DETAIL 24 – STABILIZED CONSTRUCTION ENTRANCE

Construction Specification

1. Length – minimum of 50' (*30' for single residence lot).

2. Width – 10' minimum, should be flared at the existing road to provide a turning radius.

3. Geotextile fabric (filter cloth) shall be placed over the existing ground prior to placing stone. **The plan approval authority may not require single family residences to use geotextile.

4. Stone – crushed aggregate (2" to 3") or reclaimed or recycled concrete equivalent shall be placed at least 6" deep over the length and width of the entrance.

5. Surface Water – all surface water flowing to or diverted toward construction entrances shall be piped through the entrance, maintaining positive drainage. Pipe installed through the stabilized construction entrance shall be protected with a mountable berm with 5:1 slopes and a minimum of 6" of stone over the pipe. Pipe has to be sized according to the drainage. When the SCE is located at a high spot and has no drainage to convey a pipe will not be necessary. Pipe should be sized according to the amount of runoff to be conveyed. A 6" minimum will be required.

6. Location – A stabilized construction entrance shall be located at every point where construction traffic enters or leaves a construction site. Vehicles leaving the site must travel over the entire length of the stabilized construction entrance.

U.S. DEPARTMENT OF AGRICULTURE SOIL CONSERVATION SERVICE | PAGE F – 17 – 3 | MARYLAND DEPARTMENT OF ENVIRONMENT WATER MANAGEMENT ADMINISTRATION

## DETAIL 30 – EROSION CONTROL MATTING

U.S. DEPARTMENT OF AGRICULTURE SOIL CONSERVATION SERVICE | PAGE G – 22 – 2 | MARYLAND DEPARTMENT OF ENVIRONMENT WATER MANAGEMENT ADMINISTRATION

## EROSION CONTROL MATTING

Construction Specifications

1. Key-in the matting by placing the top ends of the matting in a narrow trench, 6" in depth. Backfill the trench and tamp firmly to conform to the channel cross-section. Secure with a row of staples about 4" down slope from the trench. Spacing between staples is 6".

2. Staple the 4" overlap in the channel center using an 18" spacing between staples.

3. Before stapling the outer edges of the matting, make sure the matting is smooth and in firm contact with the soil.

4. Staples shall be placed 2' apart with 4 rows for each strip, 2 outer rows, and 2 alternating rows down the center.

5. Where one roll of matting ends and another begins, the end of the top strip shall overlap the upper end of the lower strip by 4", shiplap fashion. Reinforce the overlap with a double row of staples spaced 6" apart in a staggered pattern on either side.

6. The discharge end of the matting liner should be similarly secured with 2 double rows of staples.

Note: If flow will enter from the edge of the matting then the area effected by the flow must be keyed-in.

U.S. DEPARTMENT OF AGRICULTURE SOIL CONSERVATION SERVICE | PAGE G – 22 – 2A | MARYLAND DEPARTMENT OF ENVIRONMENT WATER MANAGEMENT ADMINISTRATION

OWNER

HOWARD COUNTY DEPARTMENT OF PUBLIC WORKS
BUREAU OF ENGINEERING
9250 BENDIX ROAD, COLUMBIA, MARYLAND 21045
P 410 313 2414

DEVELOPER

HOWARD COUNTY DEPARTMENT OF PUBLIC WORKS
BUREAU OF ENGINEERING
9250 BENDIX ROAD, COLUMBIA, MARYLAND 21045
P 410 313 2414

PROJECT
# NORTH LAUREL COMMUNITY CENTER
CAPITAL PROJECT C-0304 PROJECT MGR: DAVE LOUDERMILK

AREA TAX MAP 47 GRID 22 & TAX MAP 50
GRIDS 3 & 4, PARCELS A-1, 187 & 1065 ZONED R-SC
6TH ELECTION DISTRICT
HOWARD COUNTY, MARYLAND

TITLE
# SEDIMENT CONTROL DETAILS

Patton Harris Rust & Associates
Engineers. Surveyors. Planners. Landscape Architects.
PHR+A
8818 Centre Park Drive
Columbia, MD 21045
T 410.997.8900
F 410.997.9282

SEAL 9-21-10

BY: Sheryl C. Mitchell

"PROFESSIONAL CERTIFICATION. I HEREBY CERTIFY THAT THESE DOCUMENTS WERE PREPARED OR APPROVED BY ME, AND THAT I AM A DULY LICENSED PROFESSIONAL ENGINEER UNDER THE LAWS OF THE STATE OF MARYLAND, LICENSE NO. 33954, EXPIRATION DATE: 01-24-11"

DESIGNED BY :SCM
DRAWN BY: SGM
PROJECT NO : 14466-1-2 C400SDP06.DWG
DATE : SEPTEMBER 7, 2010
SCALE : AS SHOWN
DRAWING NO. 6 OF 43

P:\Project\14466\1-2\PLANS\C400SDP06.DWG

SDP-10-010

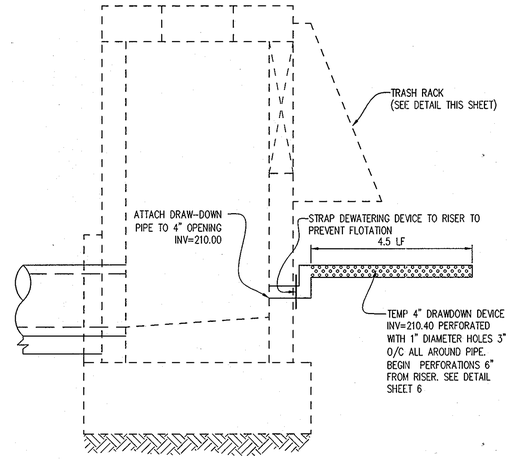


## SECTION "C-C"
SCALE: 1"=2'

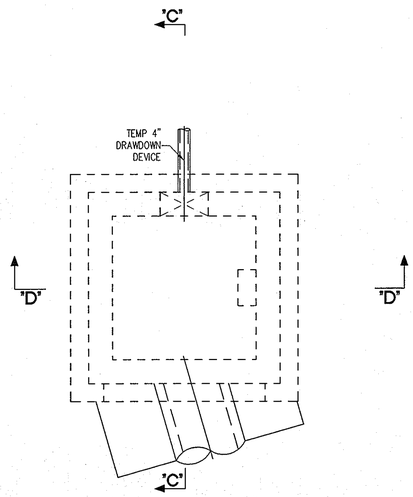


## PLAN SECTION
## TOP SLAB REMOVED
SCALE: 1"=2'

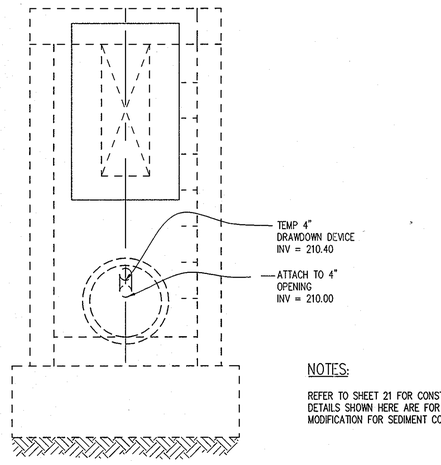


## SECTION "D-D"
SCALE: 1"=2'

NOTES:

REFER TO SHEET 21 FOR CONSTRUCTION OF RISER DETAILS SHOWN HERE ARE FOR TEMPORARY MODIFICATION FOR SEDIMENT CONTROL ONLY.

## CONCRETE RISER DETAIL
## STRUCTURE S3
## SEDIMENT CONTROL ONLY

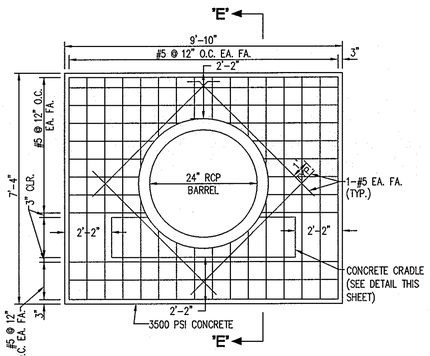


NOTE: COLLAR SHALL BE PLACED A MINIMUM OF 2 FEET FROM ANY PIPE JOINT

## CAST IN PLACE
## ANTI-SEEP COLLAR DETAIL
(2 REQUIRED)
NOT TO SCALE

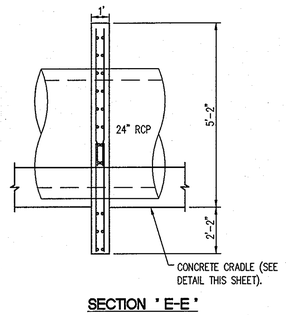


## SECTION " E-E "

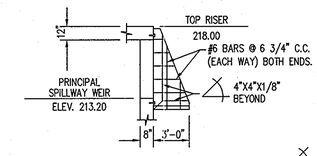


## SECTION "A-A"
## SIDE VIEW

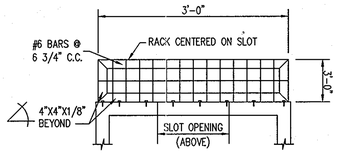


## SECTION "B-B"
## BOTTOM VIEW

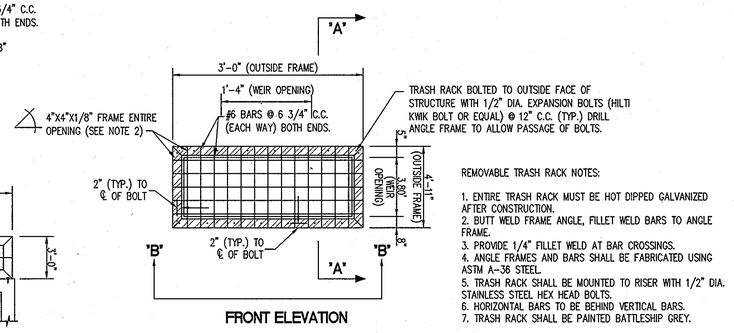


## FRONT ELEVATION

REMOVABLE TRASH RACK NOTES:

1. ENTIRE TRASH RACK MUST BE HOT DIPPED GALVANIZED AFTER CONSTRUCTION.
2. BUTT WELD FRAME ANGLE, FILLET WELD BARS TO ANGLE FRAME.
3. PROVIDE 1/4" FILLET WELD AT BAR CROSSINGS.
4. ANGLE FRAMES AND BARS SHALL BE FABRICATED USING ASTM A-36 STEEL.
5. TRASH RACK SHALL BE MOUNTED TO RISER WITH 1/2" DIA. STAINLESS STEEL HEX HEAD BOLTS.
6. HORIZONTAL BARS TO BE BEHIND VERTICAL BARS.
7. TRASH RACK SHALL BE PAINTED BATTLESHIP GREY.

## RISER TRASH RACK DETAILS
NOT TO SCALE

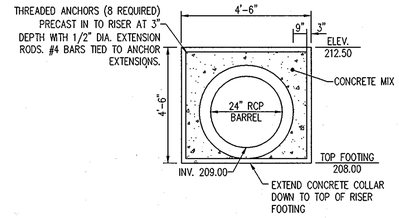


## CONCRETE COLLAR DETAIL AT 24" RCP
## BARREL CONNECTION TO RISER
NOT TO SCALE

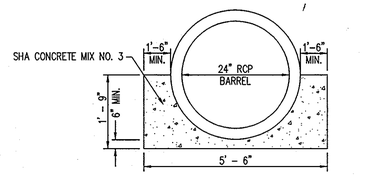


## CONCRETE CRADLE DETAIL
NOT TO SCALE

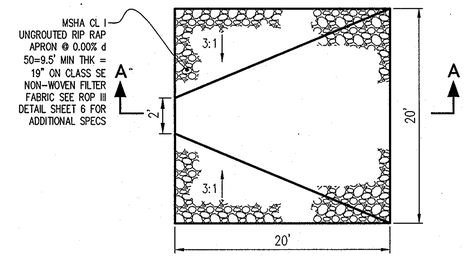


## PLAN VIEW
(NOT TO SCALE)

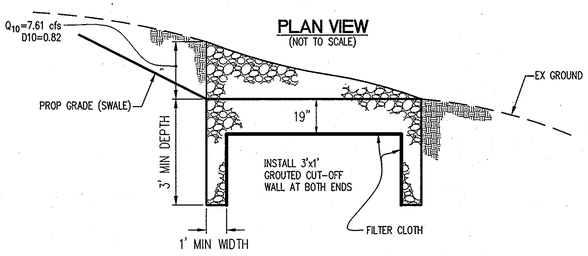


## SECTION A-A
## RIP RAP APRON DETAIL
(NOT TO SCALE)

BY THE DEVELOPER :

I/WE CERTIFY THAT ALL DEVELOPMENT AND/OR CONSTRUCTION WILL BE DONE ACCORDING TO THESE PLANS, AND THAT ANY RESPONSIBLE PERSONNEL INVOLVED IN THE CONSTRUCTION PROJECT WILL HAVE A CERTIFICATE OF ATTENDANCE AT A DEPARTMENT OF THE ENVIRONMENT APPROVED TRAINING PROGRAM FOR THE CONTROL OF SEDIMENT AND EROSION BEFORE BEGINNING THE PROJECT. I SHALL ENGAGE A REGISTERED PROFESSIONAL ENGINEER TO SUPERVISE POND CONSTRUCTION AND PROVIDE THE HOWARD SOIL CONSERVATION DISTRICT WITH AN "AS-BUILT" PLAN OF THE POND WITHIN 30 DAYS OF COMPLETION. I ALSO AUTHORIZE PERIODIC ON-SITE INSPECTIONS BY THE HOWARD SOIL CONSERVATION DISTRICT.

DEVELOPER — DATE 9/21/10

BY THE ENGINEER :

I CERTIFY THAT THIS PLAN FOR POND CONSTRUCTION, EROSION AND SEDIMENT CONTROL REPRESENTS A PRACTICAL AND WORKABLE PLAN BASED ON MY PERSONAL KNOWLEDGE OF THE SITE CONDITIONS. THIS PLAN WAS PREPARED IN ACCORDANCE WITH THE REQUIREMENTS OF THE HOWARD SOIL CONSERVATION DISTRICT. I HAVE NOTIFIED THE DEVELOPER THAT HE/SHE MUST ENGAGE A REGISTERED PROFESSIONAL ENGINEER TO SUPERVISE POND CONSTRUCTION AND PROVIDE THE HOWARD SOIL CONSERVATION DISTRICT WITH AN "AS-BUILT" PLAN OF THE POND WITHIN 30 DAYS OF COMPLETION.

ENGINEER Sherryl C. Mabry — DATE 9-21-10

THESE PLANS FOR SMALL POND CONSTRUCTION, SOIL EROSION AND SEDIMENT CONTROL MEET THE REQUIREMENTS OF THE HOWARD SOIL CONSERVATION DISTRICT.

HOWARD SOIL CONSERVATION DISTRICT — DATE 11/1/10

APPROVED : HOWARD COUNTY DEPARTMENT OF PLANNING AND ZONING.

DIRECTOR — DATE 12/13/10

CHIEF, DEVELOPMENT ENGINEERING DIVISION — DATE 11/18/10

CHIEF, DIVISION OF LAND DEVELOPMENT — DATE 12/10/10

| DATE | NO. | REVISION |
|---|---|---|

OWNER

HOWARD COUNTY DEPARTMENT OF PUBLIC WORKS
BUREAU OF ENGINEERING
9250 BENDIX ROAD, COLUMBIA, MARYLAND 21045
P 410 313 2414

DEVELOPER

HOWARD COUNTY DEPARTMENT OF PUBLIC WORKS
BUREAU OF ENGINEERING
9250 BENDIX ROAD, COLUMBIA, MARYLAND 21045
P 410 313 2414

PROJECT
# NORTH LAUREL COMMUNITY CENTER
CAPITAL PROJECT C-0304 PROJECT MGR: DAVE LOUDERMILK

AREA TAX MAP 47 GRID 22 & TAX MAP 50
GRIDS 3 & 4, PARCELS A-1, 187 & 1065 ZONED R-SC
6TH ELECTION DISTRICT
HOWARD COUNTY, MARYLAND

TITLE
## POND AND SEDIMENT BASIN DETAILS


Patton Harris Rust & Associates
Engineers. Surveyors. Planners. Landscape Architects.
8818 Centre Park Drive
Columbia, MD 21045
T 410.997.8900
F 410.997.9282


SEAL

STATE OF MARYLAND — MICHAEL CLARKE MUSSELL — No. 33954 — REGISTERED PROFESSIONAL ENGINEER

BY: Michael Mussell

"PROFESSIONAL CERTIFICATION. I HEREBY CERTIFY THAT THESE DOCUMENTS WERE PREPARED OR APPROVED BY ME, AND THAT I AM A DULY LICENSED PROFESSIONAL ENGINEER UNDER THE LAWS OF THE STATE OF MARYLAND, LICENSE NO. 33954, EXPIRATION DATE: 01-24-11"

| | |
|---|---|
| DESIGNED BY : | SCM |
| DRAWN BY: | SGM |
| PROJECT NO | 14466-1-2 C400SDP07.DWG |
| DATE : | SEPTEMBER 7, 2010 |
| SCALE : | AS SHOWN |
| DRAWING NO. | 7 OF 43 |

P:\Project\14466\1-2\PLANS\C400SDP07.DWG

SDP-10-010

## CONSTRUCTION SPECIFICATIONS

These specifications are appropriate to all ponds within the scope of the Standard for practice MD-378. All references to ASTM and AASHTO specifications apply to the most recent version.

**Site Preparation**

Areas designated for borrow areas, embankment, and structural works shall be cleared, grubbed and stripped of topsoil. All trees, vegetation, roots and other objectionable material shall be removed. Channel banks and sharp breaks shall be sloped to no steeper than 1:1. All trees shall be cleared and grubbed within 15 feet of the toe of the embankment.

Areas to be covered by the reservoir will be cleared of all trees, brush, logs, fences, rubbish and other objectionable material unless otherwise designated on the plans. Trees, brush, and stumps shall be cut approximately level with the ground surface. For dry stormwater management ponds, a minimum of a 25-foot radius around the inlet structure shall be cleared.

All cleared and grubbed material shall be disposed of outside and below the limits of the dam and reservoir as directed by the owner or his representative. When specified, a sufficient quantity of topsoil will be stockpiled in a suitable location for use on the embankment and other designated areas.

**Earth Fill**

***Material*** - The fill material shall be taken from approved designated borrow areas. It shall be free of roots, stumps, wood, rubbish, stones greater than 6", frozen or other objectionable materials. Fill material for the center of the embankment, and cut off trench shall conform to Unified Soil Classification GC, SC, CH, or CL and must have at least 30% passing the #200 sieve. Consideration may be given to the use of other materials in the embankment if designed by a geotechnical engineer. Such special designs must have construction supervised by a geotechnical engineer.



Materials used in the outer shell of the embankment must have the capability to support vegetation of the quality required to prevent erosion of the embankment.

***Placement*** - Areas on which fill is to be placed shall be scarified prior to placement of fill. Fill materials shall be placed in maximum 8 inch thick (before compaction) layers which are to be continuous over the entire length of the fill. The most permeable borrow material shall be placed in the downstream portions of the embankment. The principal spillway must be installed concurrently with fill placement and not excavated into the embankment.

***Compaction*** - The movement of the hauling and spreading equipment over the fill shall be controlled so that the entire surface of each lift shall be traversed by not less than one tread track of heavy equipment or compaction shall be achieved by a minimum of four complete passes of a sheepsfoot, rubber tired or vibratory roller. Fill material shall contain sufficient moisture such that the required degree of compaction will be obtained with the equipment used. The fill material shall contain sufficient moisture so that if formed into a ball it will not crumble, yet not be so wet that water can be squeezed out.

When required by the reviewing agency the minimum required density shall not be less than 95% of maximum dry density with a moisture content within ±2% of the optimum. Each layer of fill shall be compacted as necessary to obtain that density, and is to be certified by the Engineer at the time of construction. All compaction is to be determined by AASHTO Method T-99 (Standard Proctor).

***Cut Off Trench*** - The cutoff trench shall be excavated into impervious material along or parallel to the centerline of the embankment as shown on the plans. The bottom width of the trench shall be governed by the equipment used for excavation, with the minimum width being four feet. The depth shall be at least four feet below existing grade or as shown on the plans. The side slopes of the trench shall be 1 to 1 or flatter. The backfill shall be compacted with construction equipment, roll-



ers, or hand tampers to assure maximum density and minimum permeability.

***Embankment Core*** - The core shall be parallel to the centerline of the embankment as shown on the plans. The top width of the core shall be a minimum of four feet. The height shall extend up to at least the 10 year water elevation or as shown on the plans. The side slopes shall be 1 to 1 or flatter. The core shall be compacted with construction equipment, rollers, or hand tampers to assure maximum density and minimum permeability. In addition, the core shall be placed concurrently with the outer shell of the embankment.

**Structure Backfill**

Backfill adjacent to pipes or structures shall be of the type and quality conforming to that specified for the adjoining fill material. The fill shall be placed in horizontal layers not to exceed four inches in thickness and compacted by hand tampers or other manually directed compaction equipment. The material needs to fill completely all spaces under and adjacent to the pipe. At no time during the backfilling operation shall driven equipment be allowed to operate closer than four feet, measured horizontally, to any part of a structure. Under no circumstances shall equipment be driven over any part of a concrete structure or pipe, unless there is a compacted fill of 24" or greater over the structure or pipe.

Structure backfill may be flowable fill meeting the requirements of Maryland Department of Transportation, State Highway Administration Standard Specifications for Construction and Materials, Section 313 as modified. The mixture shall have a 100-200 psi; 28 day unconfined compressive strength. The flowable fill shall have a minimum pH of 4.0 and a minimum resistivity of 2,000 ohm-cm. Material shall be placed such that a minimum of 6" (measured perpendicular to the outside of the pipe) of flowable fill shall be under (bedding), over and, on the sides of the pipe. It only needs to extend up to the spring line for rigid conduits. Average slump of the fill shall be 7" to assure flowability of the material. Adequate measures shall be taken (sand bags,



etc.) to prevent floating the pipe. When using flowable fill, all metal pipe shall be bituminous coated. Any adjoining soil fill shall be placed in horizontal layers not to exceed four inches in thickness and compacted by hand tampers or other manually directed compaction equipment. The material shall completely fill all voids adjacent to the flowable fill zone. At no time during the backfilling operation shall driven equipment be allowed to operate closer than four feet, measured horizontally, to any part of a structure. Under no circumstances shall equipment be driven over any part of a structure or pipe unless there is a compacted fill of 24" or greater over the structure or pipe. Backfill material outside the structural backfill (flowable fill) zone shall be of the type and quality conforming to that specified for the core of the embankment or other embankment materials.

**Pipe Conduits**

All pipes shall be circular in cross section.

***Corrugated Metal Pipe*** - All of the following criteria shall apply for corrugated metal pipe:

1. Materials - (Polymer Coated steel pipe) - Steel pipes with polymeric coatings shall have a minimum coating thickness of 0.01 inch (10 mil) on both sides of the pipe. This pipe and its appurtenances shall conform to the requirements of AASHTO Specifications M-245 & M-246 with watertight coupling bands or flanges.

   Materials - (Aluminum Coated Steel Pipe) - This pipe and its appurtenances shall conform to the requirements of AASHTO Specification M-274 with watertight coupling bands or flanges. Aluminum Coated Steel Pipe, when used with flowable fill or when soil and/or water conditions warrant the need for increased durability, shall be fully bituminous coated per requirements of AASHTO Specification M-190 Type A. Any aluminum coating damaged or otherwise removed shall be replaced with cold applied bituminous coating compound. Aluminum surfaces that are to be in contact with concrete shall be painted





with one coat of zinc chromate primer or two coats of asphalt.

Materials - (Aluminum Pipe) - This pipe and its appurtenances shall conform to the requirements of AASHTO Specification M-196 or M-211 with watertight coupling bands or flanges. Aluminum Pipe, when used with flowable fill or when soil and/or water conditions warrant for increased durability, shall be fully bituminous coated per requirements of AASHTO Specification M-190 Type A. Aluminum surfaces that are to be in contact with concrete shall be painted with one coat of zinc chromate primer or two coats of asphalt. Hot dip galvanized bolts may be used for connections. The pH of the surrounding soils shall be between 4 and 9.

2. Coupling bands, anti-seep collars, end sections, etc., must be composed of the same material and coatings as the pipe. Metals must be insulated from dissimilar materials with use of rubber or plastic insulating materials at least 24 mils in thickness.

3. Connections - All connections with pipes must be completely watertight. The drain pipe or barrel connection to the riser shall be welded all around when the pipe and riser are metal. Anti-seep collars shall be connected to the pipe in such a manner as to be completely watertight. Dimple bands are not considered to be watertight.

   All connections shall use a rubber or neoprene gasket when joining pipe sections. The end of each pipe shall be re-rolled an adequate number of corrugations to accommodate the bandwidth. The following type connections are acceptable for pipes less than 24 inches in diameter: flanges on both ends of the pipe with a circular 3/8 inch closed cell neoprene gasket, pre-punched to the flange bolt circle, sandwiched between adjacent flanges; a 12-inch wide standard lap type band with 12-inch wide by 3/8-inch thick closed cell circular neoprene gasket; and a 12-inch wide hugger type band with o-ring gaskets having a minimum diameter





of 1/2 inch greater than the corrugation depth. Pipes 24 inches in diameter and larger shall be connected by a 24 inch long annular corrugated band using a minimum of 4 (four) rods and lugs, 2 on each connecting pipe end. A 24-inch wide by 3/8-inch thick closed cell circular neoprene gasket will be installed with 12 inches on the end of each pipe. Flanged joints with 3/8 inch closed cell gaskets the full width of the flange is also acceptable.

Helically corrugated pipe shall have either continuously welded seams or have lock seams with internal caulking or a neoprene bead.

4. Bedding - The pipe shall be firmly and uniformly bedded throughout its entire length. Where rock or soft, spongy or other unstable soil is encountered, all such material shall be removed and replaced with suitable earth compacted to provide adequate support.

5. Backfilling shall conform to "**Structure Backfill**".

6. Other details (anti-seep collars, valves, etc.) shall be as shown on the drawings.

***Reinforced Concrete Pipe*** - All of the following criteria shall apply for reinforced concrete pipe:

1. Materials - Reinforced concrete pipe shall have bell and spigot joints with rubber gaskets and shall equal or exceed ASTM C-361.

2. Bedding - Reinforced concrete pipe conduits shall be laid in a concrete bedding / cradle for their entire length. This bedding / cradle shall consist of high slump concrete placed under the pipe and up the sides of the pipe at least 50% of its outside diameter with a minimum thickness of 6 inches. Where a concrete cradle is not needed for structural reasons, flowable fill may be used as described in the "Structure Backfill" section of this standard. Gravel bedding is not permitted.

3. Laying pipe - Bell and spigot pipe shall be placed with the bell end upstream. Joints shall be made in accordance with recommendations of the manufacturer of the material. After the joints are sealed for the entire line, the bedding shall be placed so that all spaces under the pipe are filled. Care shall be exercised to prevent any deviation from the original line and grade of the pipe. The first joint must be located within 4 feet from the riser.

4. Backfilling shall conform to "**Structure Backfill**".

5. Other details (anti-seep collars, valves, etc.) shall be as shown on the drawings.

***Plastic Pipe*** - The following criteria shall apply for plastic pipe:

1. Materials - PVC pipe shall be PVC-1120 or PVC-1220 conforming to ASTM D-1785 or ASTM D-2241. Corrugated High Density Polyethylene (HDPE) pipe, couplings and fittings shall conform to the following: 4" – 10" inch pipe shall meet the requirements of AASHTO M252 Type S, and 12" through 24" inch shall meet the requirements of AASHTO M294 Type S.

2. Joints and connections to anti-seep collars shall be completely watertight.

3. Bedding -The pipe shall be firmly and uniformly bedded throughout its entire length. Where rock or soft, spongy or other unstable soil is encountered, all such material shall be removed and replaced with suitable earth compacted to provide adequate support.

4. Backfilling shall conform to "**Structure Backfill**".

5. Other details (anti-seep collars, valves, etc.) shall be as shown on the drawings.

***Drainage Diaphragms*** - When a drainage diaphragm is used, a registered professional engineer will supervise the design and construction inspection.



**Concrete**

Concrete shall meet the requirements of Maryland Department of Transportation, State Highway Administration Standard Specifications for Construction and Materials, Section 902.10, Mix No. 3.

**Rock Riprap**

Rock riprap shall meet the requirements of Maryland Department of Transportation, State Highway Administration Standard Specifications for Construction and Materials, Section 311.

Geotextile shall be placed under all riprap and shall meet the requirements of Maryland Department of Transportation, State Highway Administration Standard Specifications for Construction and Materials, Section 921.09, Class SE (Non-Woven).

**Care of Water during Construction**

All work on permanent structures shall be carried out in areas free from water. The Contractor shall construct and maintain all temporary dikes, levees, cofferdams, drainage channels, and stream diversions necessary to protect the areas to be occupied by the permanent works. The contractor shall also furnish, install, operate, and maintain all necessary pumping and other equipment required for removal of water from various parts of the work and for maintaining the excavations, foundation, and other parts of the work free from water as required or directed by the engineer for constructing each part of the work. After having served their purpose, all temporary protective works shall be removed or leveled and graded to the extent required to prevent obstruction in any degree whatsoever of the flow of water to the spillway or outlet works and so as not to interfere in any way with the operation or maintenance of the structure. Stream diversions shall be maintained until the full flow can be passed through the permanent works. The removal of water from the required excavation and the foundation shall be accomplished in a manner and to the extent that will maintain stability of the excavated slopes and bottom required excavations and will allow satisfactory per-





formance of all construction operations. During the placing and compacting of material in required excavations, the water level at the locations being refilled shall be maintained below the bottom of the excavation at such locations which may require draining the water sumps from which the water shall be pumped.

**Stabilization**

All borrow areas shall be graded to provide proper drainage and left in a sightly condition. All exposed surfaces of the embankment, spillway, spoil and borrow areas, and berms shall be stabilized by seeding, liming, fertilizing and mulching in accordance with the Natural Resources Conservation Service Standards and Specifications for Critical Area Planting (MD-342) or as shown on the accompanying drawings.

**Erosion and Sediment Control**

Construction operations will be carried out in such a manner that erosion will be controlled and water and air pollution minimized. State and local laws concerning pollution abatement will be followed. Construction plans shall detail erosion and sediment control measures.





**OPERATION AND MAINTENANCE**

An operation and maintenance plan in accordance with Local or State Regulations will be prepared for all ponds. As a minimum, the dam inspection checklist located in Appendix A shall be included as part of the operation and maintenance plan and performed at least annually. Written records of maintenance and major repairs needs to be retained in a file. The issuance of a Maintenance and Repair Permit for any repairs or maintenance that involves the modification of the dam or spillway from its original design and specifications is required. A permit is also required for any repairs or reconstruction that involve a substantial portion of the structure. All indicated repairs are to be made as soon as practical.



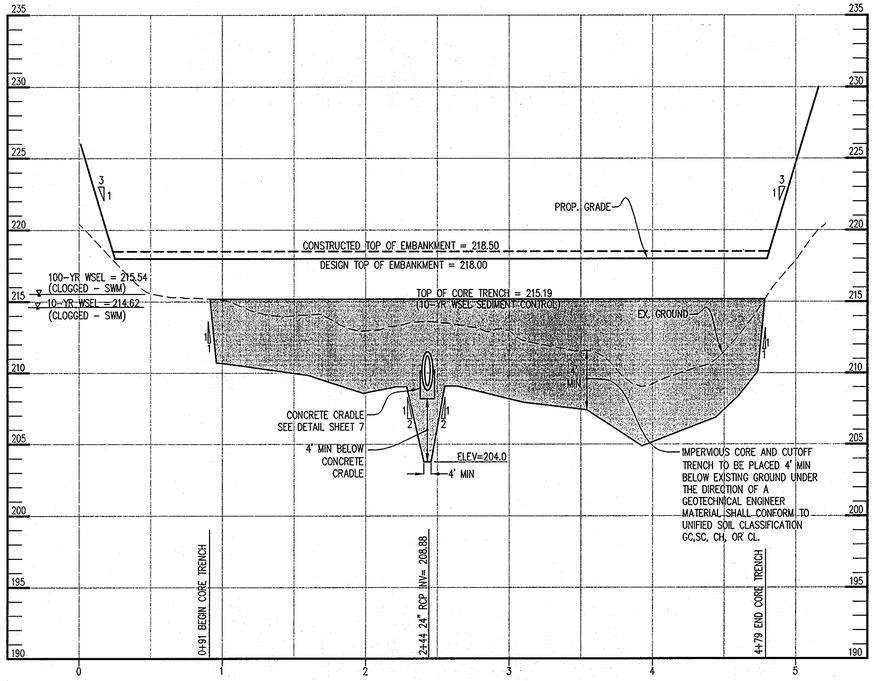


## EMBANKMENT CENTERLINE PROFILE A-A

SCALE : HOR: 1"=50'
VERT: 1"=5'

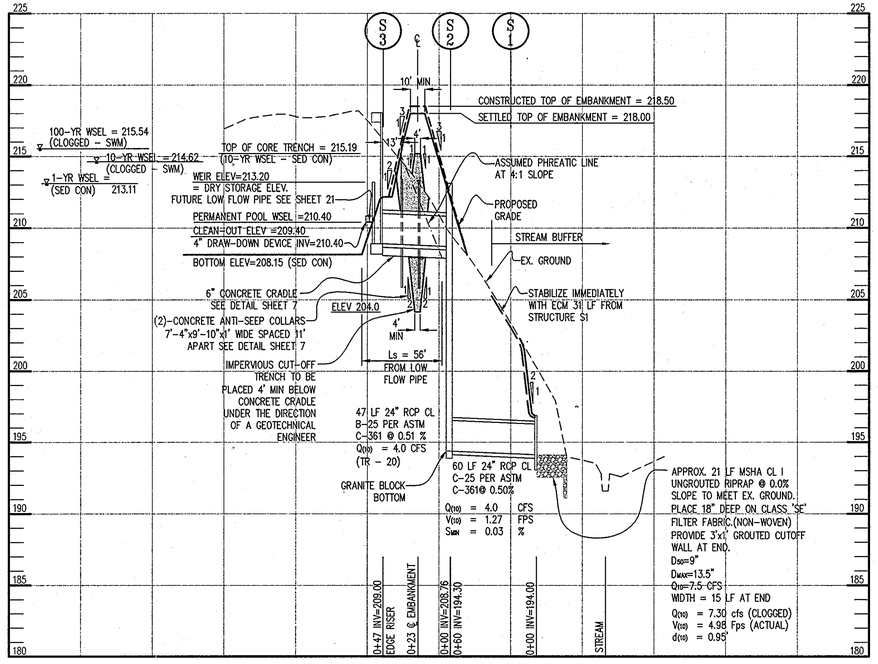


## PRINCIPAL SPILLWAY PROFILE

SCALE : HOR: 1"=50'
VERT: 1"=5'

## SEDIMENT CONTROL ONLY

BY THE DEVELOPER :

I/WE CERTIFY THAT ALL DEVELOPMENT AND/OR CONSTRUCTION WILL BE DONE ACCORDING TO THESE PLANS, AND THAT ANY RESPONSIBLE PERSONNEL INVOLVED IN THE CONSTRUCTION PROJECT WILL HAVE A CERTIFICATE OF ATTENDANCE AT A DEPARTMENT OF THE ENVIRONMENT APPROVED TRAINING PROGRAM FOR THE CONTROL OF SEDIMENT AND EROSION BEFORE BEGINNING THE PROJECT. I SHALL ENGAGE A REGISTERED PROFESSIONAL ENGINEER TO SUPERVISE POND CONSTRUCTION AND PROVIDE THE HOWARD SOIL CONSERVATION DISTRICT WITH AN "AS-BUILT" PLAN OF THE POND WITHIN 30 DAYS OF COMPLETION. I ALSO AUTHORIZE PERIODIC ON-SITE INSPECTIONS BY THE HOWARD SOIL CONSERVATION DISTRICT.

DEVELOPER — DATE 9/22/10

BY THE ENGINEER :

I CERTIFY THAT THIS PLAN FOR POND CONSTRUCTION, EROSION AND SEDIMENT CONTROL REPRESENTS A PRACTICAL AND WORKABLE PLAN BASED ON MY PERSONAL KNOWLEDGE OF THE SITE CONDITIONS. THIS PLAN WAS PREPARED IN ACCORDANCE WITH THE REQUIREMENTS OF THE HOWARD SOIL CONSERVATION DISTRICT. I HAVE NOTIFIED THE DEVELOPER THAT HE/SHE MUST ENGAGE A REGISTERED PROFESSIONAL ENGINEER TO SUPERVISE POND CONSTRUCTION AND PROVIDE THE HOWARD SOIL CONSERVATION DISTRICT WITH AN "AS-BUILT" PLAN OF THE POND WITHIN 30 DAYS OF COMPLETION.

Daryl C. Mitchell — ENGINEER — 9-21-10 DATE

THESE PLANS FOR SMALL POND CONSTRUCTION, SOIL EROSION AND SEDIMENT CONTROL MEET THE REQUIREMENTS OF THE HOWARD SOIL CONSERVATION DISTRICT.

HOWARD SOIL CONSERVATION DISTRICT — 11/1/10 DATE

APPROVED : HOWARD COUNTY DEPARTMENT OF PLANNING AND ZONING.

DIRECTOR — 12/13/10 DATE

CHIEF, DEVELOPMENT ENGINEERING DIVISION — 11/18/10 DATE

CHIEF, DIVISION OF LAND DEVELOPMENT — 12/16/10 DATE

| DATE | NO. | REVISION |
|---|---|---|

OWNER

HOWARD COUNTY DEPARTMENT OF PUBLIC WORKS
BUREAU OF ENGINEERING
9250 BENDIX ROAD, COLUMBIA, MARYLAND 21045
P 410 313 2414

DEVELOPER

HOWARD COUNTY DEPARTMENT OF PUBLIC WORKS
BUREAU OF ENGINEERING
9250 BENDIX ROAD, COLUMBIA, MARYLAND 21045
P 410 313 2414

PROJECT
**NORTH LAUREL COMMUNITY CENTER**
CAPITAL PROJECT C-0304 PROJECT MGR: DAVE LOUDERMILK

AREA TAX MAP 47 GRID 22 & TAX MAP 50
GRIDS 3 & 4, PARCELS A-1, 187 & 1065 ZONED R-SC
6TH ELECTION DISTRICT
HOWARD COUNTY, MARYLAND

TITLE
**POND AND SEDIMENT BASIN SPECIFICATIONS AND PROFILES**

**Patton Harris Rust & Associates**
Engineers. Surveyors. Planners. Landscape Architects.
8818 Centre Park Drive
Columbia, MD 21045
T 410.997.8900
F 410.997.9282

SEAL

"PROFESSIONAL CERTIFICATION. I HEREBY CERTIFY THAT THESE DOCUMENTS WERE PREPARED OR APPROVED BY ME, AND THAT I AM A DULY LICENSED PROFESSIONAL ENGINEER UNDER THE LAWS OF THE STATE OF MARYLAND, LICENSE NO. 23954, EXPIRATION DATE: 01-04-11"

BY: Daryl C. Mitchell

| | |
|---|---|
| DESIGNED BY : | SCM |
| DRAWN BY: | SGM |
| PROJECT NO : | 14466-1-2 C400SDP08.DWG |
| DATE : | SEPTEMBER 7, 2010 |
| SCALE : | AS SHOWN |
| DRAWING NO. | 8 OF 43 |

SDP-10-010

## PATTON HARRIS RUST & ASSOCIATES, pc — BORING LOG

| PROJECT NAME: | PROJECT NUMBER: | BORING NUMBER: |
|---|---|---|
| NORTH LAUREL PARK | 14466-1-2 | SW-1 |
| LOCATION: Laurel, Howard County, Maryland | | SHEET 1 OF 1 |
| LOGGED BY: I.Howard | DRILLER: Hurdis Drilling Company | ELEVATION: 211.1' |

| GROUNDWATER DATA | DATE | TIME | ELAPSED | CAVED (FT) | DEPTH (FT) | | DATE | TIME |
|---|---|---|---|---|---|---|---|---|
| ENCOUNTERED: | 07-02-09 | | — | — | DRY | START: | 07-02-09 | |
| UPON COMPLETION: | 07-02-09 | | — | 7.33 | DRY | FINISHED: | 07-02-09 | |
| SHORT TERM: | | | — | | | DRILLING METHOD: | HSA | |
| LONG TERM: | | | — | | | EQUIPMENT: | CME-45 ATV | |

| Recovery (inches) | SPT blows per 6-in. | SPT blows per foot | VISUAL DESCRIPTION | Depth to (ft.) |
|---|---|---|---|---|
| | | | Organic Surface - 4 inches. | 0.3 |
| 14 | 4 9 7 | 16 | Medium dense, orange brown, moist, silty fine to coarse SAND (SM), little fine to medium gravel. | 3.0 |
| 16 | 4 6 10 | 16 | Very stiff, orange brown mottled gray, moist, fine sandy CLAY (CL), trace fine to medium gravel. | |
| 15 | 9 10 15 | 25 | | 8.0 |
| 14 | 6 8 11 | 19 | Medium dense, light gray, moist, micaceous silty fine SAND (SM). | 10.0 |
| | | | Boring terminated at 10.0 feet. | |

COMMENTS: The split spoon sampler is driven into the soil a distance of 18 inches, by a 140-pound safety hammer falling 30 inches. The number of blows required to drive the sampler the final 12 inches is designated the SPT or N-value.

## PATTON HARRIS RUST & ASSOCIATES, pc — BORING LOG

| PROJECT NAME: | PROJECT NUMBER: | BORING NUMBER: |
|---|---|---|
| NORTH LAUREL PARK | 14466-1-2 | SW-2 |
| LOCATION: Laurel, Howard County, Maryland | | SHEET 1 OF 1 |
| LOGGED BY: I.Howard | DRILLER: Hurdis Drilling Company | ELEVATION: 213.7' |

| GROUNDWATER DATA | DATE | TIME | ELAPSED | CAVED (FT) | DEPTH (FT) | | DATE | TIME |
|---|---|---|---|---|---|---|---|---|
| ENCOUNTERED: | 07-02-09 | | — | — | DRY | START: | 07-02-09 | |
| UPON COMPLETION: | 07-02-09 | | — | 7.17 | DRY | FINISHED: | 07-02-09 | |
| SHORT TERM: | | | — | | | DRILLING METHOD: | HSA | |
| LONG TERM: | | | — | | | EQUIPMENT: | CME-45 ATV | |

| Recovery (inches) | SPT blows per 6-in. | SPT blows per foot | VISUAL DESCRIPTION | Depth to (ft.) |
|---|---|---|---|---|
| | | | Organic Surface - 3 inches. | 0.3 |
| 15 | 8 7 8 | 15 | Stiff to firm, orange brown, moist, fine to coarse sandy SILT (ML), trace medium to coarse gravel. | 3.0 |
| 16 | 4 4 4 | 8 | ....little medium to coarse gravel. | 5.5 |
| 16 | 7 9 14 | 23 | Very stiff, red, moist, silty CLAY (CL), trace fine sand. | 8.0 |
| 15 | 8 9 10 | 19 | Very stiff, gray, moist, micaceous fine sandy SILT (ML). | 10.0 |
| | | | Boring terminated at 10.0 feet. | |

COMMENTS: The split spoon sampler is driven into the soil a distance of 18 inches, by a 140-pound safety hammer falling 30 inches. The number of blows required to drive the sampler the final 12 inches is designated the SPT or N-value.

## PATTON HARRIS RUST & ASSOCIATES, pc — BORING LOG

| PROJECT NAME: | PROJECT NUMBER: | BORING NUMBER: |
|---|---|---|
| NORTH LAUREL PARK | 14466-1-2 | SW-3 |
| LOCATION: Laurel, Howard County, Maryland | | SHEET 1 OF 1 |
| LOGGED BY: I.Howard | DRILLER: Hurdis Drilling Company | ELEVATION: 213.3' |

| GROUNDWATER DATA | DATE | TIME | ELAPSED | CAVED (FT) | DEPTH (FT) | | DATE | TIME |
|---|---|---|---|---|---|---|---|---|
| ENCOUNTERED: | 07-02-09 | | — | — | DRY | START: | 07-02-09 | |
| UPON COMPLETION: | 07-02-09 | | — | 7.00 | DRY | FINISHED: | 07-02-09 | |
| SHORT TERM: | | | — | | | DRILLING METHOD: | HSA | |
| LONG TERM: | | | — | | | EQUIPMENT: | CME-45 ATV | |

| Recovery (inches) | SPT blows per 6-in. | SPT blows per foot | VISUAL DESCRIPTION | Depth to (ft.) |
|---|---|---|---|---|
| | | | Organic Surface - 2 inches. | 0.2 |
| 15 | 3 3 6 | 9 | Stiff, orange brown, moist, fine sandy SILT (ML), some clay. | 3.0 |
| 14 | 5 11 16 | 27 | Very stiff, moist, silty CLAY (CL), little fine sand. | |
| 15 | 7 9 18 | 27 | ....purple, some mica. | 8.0 |
| 15 | 11 12 18 | 30 | Very stiff, gray, yellow brown, red, moist, clayey SILT (ML), little fine sand. | 10.0 |
| | | | Boring terminated at 10.0 feet. | |

COMMENTS: The split spoon sampler is driven into the soil a distance of 18 inches, by a 140-pound safety hammer falling 30 inches. The number of blows required to drive the sampler the final 12 inches is designated the SPT or N-value.

## PATTON HARRIS RUST & ASSOCIATES, pc — BORING LOG

| PROJECT NAME: | PROJECT NUMBER: | BORING NUMBER: |
|---|---|---|
| NORTH LAUREL PARK | 14466-1-2 | SW-4 |
| LOCATION: Laurel, Howard County, Maryland | | SHEET 1 OF 1 |
| LOGGED BY: I.Howard | DRILLER: Hurdis Drilling Company | ELEVATION: 212.2' |

| GROUNDWATER DATA | DATE | TIME | ELAPSED | CAVED (FT) | DEPTH (FT) | | DATE | TIME |
|---|---|---|---|---|---|---|---|---|
| ENCOUNTERED: | 07-02-09 | | — | — | DRY | START: | 07-02-09 | |
| UPON COMPLETION: | 07-02-09 | | — | 7.67 | DRY | FINISHED: | 07-02-09 | |
| SHORT TERM: | | | — | | | DRILLING METHOD: | HSA | |
| LONG TERM: | | | — | | | EQUIPMENT: | CME-45 ATV | |

| Recovery (inches) | SPT blows per 6-in. | SPT blows per foot | VISUAL DESCRIPTION | Depth to (ft.) |
|---|---|---|---|---|
| | | | Organic Surface - 3 inches. | 0.3 |
| 16 | 3 4 5 | 9 | Stiff, dark red, gray, moist, CLAY (CL), some silt, trace rootlets and mica. | 3.0 |
| 14 | 4 8 10 | 18 | Very stiff, red, gray, moist, silty CLAY (CL), trace fine sand and mica. | |
| 14 | 5 12 14 | 26 | ....red. | 8.0 |
| 16 | 5 6 7 | 13 | Stiff, gray, moist, fine sandy SILT (ML), little mica. | 10.0 |
| | | | Boring terminated at 10.0 feet. | |

COMMENTS: The split spoon sampler is driven into the soil a distance of 18 inches, by a 140-pound safety hammer falling 30 inches. The number of blows required to drive the sampler the final 12 inches is designated the SPT or N-value.

## PATTON HARRIS RUST & ASSOCIATES, pc — BORING LOG

| PROJECT NAME: | PROJECT NUMBER: | BORING NUMBER: |
|---|---|---|
| NORTH LAUREL PARK | 14466-1-2 | SW-5 |
| LOCATION: Laurel, Howard County, Maryland | | SHEET 1 OF 1 |
| LOGGED BY: I.Howard | DRILLER: Hurdis Drilling Company | ELEVATION: 226.9' |

| GROUNDWATER DATA | DATE | TIME | ELAPSED | CAVED (FT) | DEPTH (FT) | | DATE | TIME |
|---|---|---|---|---|---|---|---|---|
| ENCOUNTERED: | 07-06-09 | | — | — | DRY | START: | 07-06-09 | |
| UPON COMPLETION: | 07-06-09 | | — | | DRY | FINISHED: | 07-06-09 | |
| SHORT TERM: | | | — | | | DRILLING METHOD: | HSA | |
| LONG TERM: | | | — | | | EQUIPMENT: | CME-45 ATV | |

| Recovery (inches) | SPT blows per 6-in. | SPT blows per foot | VISUAL DESCRIPTION | Depth to (ft.) |
|---|---|---|---|---|
| | | | Organic Surface - 2 inches. | 0.2 |
| | | | Stiff, gray, moist, fine sandy SILT (ML). | 1.2 |
| 13 | 4 5 10 | 15 | Medium dense, yellow brown, moist, silty fine to medium SAND (SM), trace fine gravel. | 3.5 |
| 12 | 6 12 13 | 25 | Very stiff, red, gray, moist, silty CLAY (CL), trace fine to medium gravel and fine sand. | |
| 15 | 7 10 13 | 23 | | 8.5 |
| 15 | 9 6 11 | 17 | Very stiff, red, moist, clayey SILT (ML), trace fine sand. | 10.0 |
| | | | Boring terminated at 10.0 feet. | |

COMMENTS: The split spoon sampler is driven into the soil a distance of 18 inches, by a 140-pound safety hammer falling 30 inches. The number of blows required to drive the sampler the final 12 inches is designated the SPT or N-value.

## PATTON HARRIS RUST & ASSOCIATES, pc — BORING LOG

| PROJECT NAME: | PROJECT NUMBER: | BORING NUMBER: |
|---|---|---|
| NORTH LAUREL PARK | 14466-1-2 | SW-6 |
| LOCATION: Laurel, Howard County, Maryland | | SHEET 1 OF 1 |
| LOGGED BY: I.Howard | DRILLER: Hurdis Drilling Company | ELEVATION: 231.4' |

| GROUNDWATER DATA | DATE | TIME | ELAPSED | CAVED (FT) | DEPTH (FT) | | DATE | TIME |
|---|---|---|---|---|---|---|---|---|
| ENCOUNTERED: | 07-06-09 | | — | — | DRY | START: | 07-06-09 | |
| UPON COMPLETION: | 07-06-09 | | — | | DRY | FINISHED: | 07-06-09 | |
| SHORT TERM: | | | — | | | DRILLING METHOD: | HSA | |
| LONG TERM: | | | — | | | EQUIPMENT: | CME-45 ATV | |

| Recovery (inches) | SPT blows per 6-in. | SPT blows per foot | VISUAL DESCRIPTION | Depth to (ft.) |
|---|---|---|---|---|
| | | | Organic Surface - 3 inches. | 0.3 |
| 18 | 2 2 2 | 4 | Loose, pale brown, moist, silty medium SAND (SM), some fine to coarse gravel. | 3.0 |
| 15 | 6 24 7 | 31 | Hard, gray mottled red, moist, clayey SILT (ML), trace fine sand. | 5.5 |
| 15 | 21 11 19 | 30 | Very stiff to hard, purple, dark red, moist, SILT (ML), trace fine sand. | |
| 15 | 13 17 33 | 50 | | 10.0 |
| | | | Boring terminated at 10.0 feet. | |

COMMENTS: The split spoon sampler is driven into the soil a distance of 18 inches, by a 140-pound safety hammer falling 30 inches. The number of blows required to drive the sampler the final 12 inches is designated the SPT or N-value.

## DETAIL 2 – TEMPORARY SWALE

CROSS SECTION

| | SWALE A | SWALE B |
|---|---|---|
| C | 1' MIN. | 1' MIN. |
| D | 4' MIN. | 6' MIN. |

OUTLET AS REQUIRED

PLAN VIEW

DRAINAGE AREA = 10 ac (MAX)
SLOPE = 10% (MAX)

STANDARD SYMBOL
A – 2 / B – 3

FLOW CHANNEL STABILIZATION
GRADE 0.5% MIN. 10% MAX.

1. Seed and cover with straw mulch.
2. Seed and cover with Erosion Control Matting or line with sod.
3. 4"–7" stone or recycled concrete equivalent pressed into soil in a minimum 7" layer.

Construction Specifications

1. All temporary swales shall have uninterrupted positive grade to an outlet. Spot elevations may be necessary for grades less than 1%.
2. Runoff diverted from a disturbed area shall be conveyed to a sediment trapping device.
3. Runoff diverted from an undisturbed area shall outlet directly into an undisturbed stabilized area at a non-erosive velocity.
4. All trees, brush, stumps, obstructions, and other objectional material shall be removed and disposed of so as not to interfere with the proper functioning of the swale.
5. The swale shall be excavated or shaped to line, grade and cross section as required to meet the criteria specified herein and be free of bank projections or other irregularities which will impede normal flow.
6. Fill, if necessary, shall be compacted by earth moving equipment.
7. All earth removed and not needed for construction shall be placed so that it will not interfere with the functioning of the swale.
8. Inspection and maintenance must be provided periodically and after each rain event.

| U.S. DEPARTMENT OF AGRICULTURE SOIL CONSERVATION SERVICE | PAGE A – 2 – 4 | MARYLAND DEPARTMENT OF ENVIRONMENT WATER MANAGEMENT ADMINISTRATION |
|---|---|---|

BY THE DEVELOPER :

I/WE CERTIFY THAT ALL DEVELOPMENT AND/OR CONSTRUCTION WILL BE DONE ACCORDING TO THESE PLANS, AND THAT ANY RESPONSIBLE PERSONNEL INVOLVED IN THE CONSTRUCTION PROJECT WILL HAVE A CERTIFICATE OF ATTENDANCE AT A DEPARTMENT OF THE ENVIRONMENT APPROVED TRAINING PROGRAM FOR THE CONTROL OF SEDIMENT AND EROSION BEFORE BEGINNING THE PROJECT. I SHALL ENGAGE A REGISTERED PROFESSIONAL ENGINEER TO SUPERVISE POND CONSTRUCTION AND PROVIDE THE HOWARD SOIL CONSERVATION DISTRICT WITH AN "AS-BUILT" PLAN OF THE POND WITHIN 30 DAYS OF COMPLETION. I ALSO AUTHORIZE PERIODIC ON-SITE INSPECTIONS BY THE HOWARD SOIL CONSERVATION DISTRICT.

DEVELOPER 9/20/10 DATE

BY THE ENGINEER :

I CERTIFY THAT THIS PLAN FOR POND CONSTRUCTION, EROSION AND SEDIMENT CONTROL REPRESENTS A PRACTICAL AND WORKABLE PLAN BASED ON MY PERSONAL KNOWLEDGE OF THE SITE CONDITIONS. THIS PLAN WAS PREPARED IN ACCORDANCE WITH THE REQUIREMENTS OF THE HOWARD SOIL CONSERVATION DISTRICT. I HAVE NOTIFIED THE DEVELOPER THAT HE/SHE MUST ENGAGE A REGISTERED PROFESSIONAL ENGINEER TO SUPERVISE POND CONSTRUCTION AND PROVIDE THE HOWARD SOIL CONSERVATION DISTRICT WITH AN "AS-BUILT" PLAN OF THE POND WITHIN 30 DAYS OF COMPLETION.

Sheryl C. Mitchell 9-21-10
ENGINEER DATE

THESE PLANS FOR SMALL POND CONSTRUCTION, SOIL EROSION AND SEDIMENT CONTROL MEET THE REQUIREMENTS OF THE HOWARD SOIL CONSERVATION DISTRICT.

HOWARD SOIL CONSERVATION DISTRICT 11/1/10 DATE

APPROVED : HOWARD COUNTY DEPARTMENT OF PLANNING AND ZONING.

Thomas E. Butler 12/13/10
DIRECTOR DATE

11/18/10
CHIEF, DEVELOPMENT ENGINEERING DIVISION DATE

12/10/10
CHIEF, DIVISION OF LAND DEVELOPMENT DATE

| DATE | NO. | REVISION |
|---|---|---|
| | | |
| | | |

OWNER
HOWARD COUNTY DEPARTMENT OF PUBLIC WORKS
BUREAU OF ENGINEERING
9250 BENDIX ROAD, COLUMBIA, MARYLAND 21045
P 410 313 2414

DEVELOPER
HOWARD COUNTY DEPARTMENT OF PUBLIC WORKS
BUREAU OF ENGINEERING
9250 BENDIX ROAD, COLUMBIA, MARYLAND 21045
P 410 313 2414

PROJECT
# NORTH LAUREL COMMUNITY CENTER
CAPITAL PROJECT C-0304 PROJECT MGR: DAVE LOUDERMILK

AREA TAX MAP 47 GRID 22 & TAX MAP 50 GRIDS 3 & 4, PARCELS A-1, 187 & 1065 ZONED R-SC
6TH ELECTION DISTRICT
HOWARD COUNTY, MARYLAND

TITLE
## SOIL BORING LOGS AND SEDIMENT CONTROL DETAILS

**Patton Harris Rust & Associates**
Engineers. Surveyors. Planners. Landscape Architects.
8818 Centre Park Drive
Columbia, MD 21045
T 410.997.8900
F 410.997.9282

SEAL

BY: Sheryl C. Mitchell

"PROFESSIONAL CERTIFICATION. I HEREBY CERTIFY THAT THESE DOCUMENTS WERE PREPARED OR APPROVED BY ME, AND THAT I AM A DULY LICENSED PROFESSIONAL ENGINEER UNDER THE LAWS OF THE STATE OF MARYLAND, LICENSE NO. 33954, EXPIRATION DATE: 01-24-11"

| | |
|---|---|
| DESIGNED BY : | SCM |
| DRAWN BY: | SGM |
| PROJECT NO : | 14466-1-2 C400SDP09.DWG |
| DATE : | SEPTEMBER 7, 2010 |
| SCALE : | AS SHOWN |
| DRAWING NO. | 9 OF 43 |

SDP-10-010

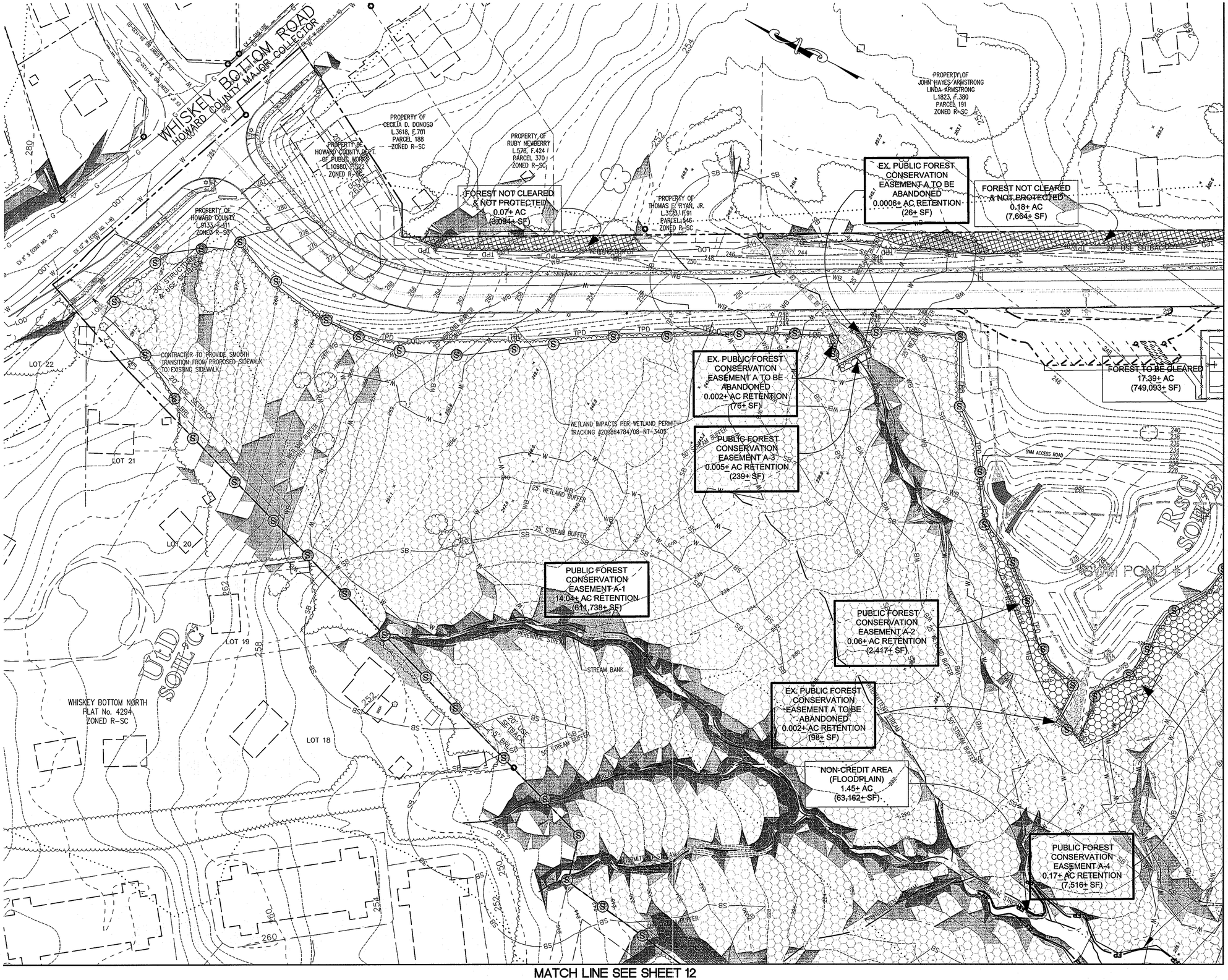


## LEGEND

- LIMIT OF DISTURBANCE — LOD —
- TREE PROTECTION FENCE — TPD —
- PROPERTY LINE AND RIGHT OF WAY
- FLOODPLAIN — FP —
- EX. TREELINE
- PROP. TREELINE
- EX. FOREST RETENTION AREA
- PROP. FOREST CONSERVATION ESMT
- FOREST NOT CLEARED OR PROTECTED
- EX. FOREST ESMT TO BE ABANDONED
- FOREST CONSERVATION EASEMENT SIGNAGE (S)
- SOILS MrE
- 15–25% SLOPES
- >25% SLOPES

NOTE:
1. SEE RED LINE REVISION OF SDP-08-118 FOR GRADING, TRAIL CONNECTIONS, AND IMPROVEMENTS TO THE EAST SIDE OF THE PROPERTY.

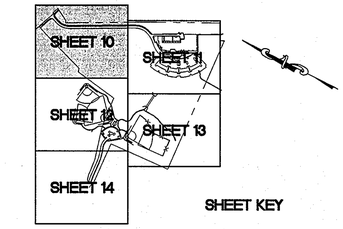


APPROVED : HOWARD COUNTY DEPARTMENT OF PLANNING AND ZONING.

DIRECTOR — DATE 12/13/10

CHIEF, DEVELOPMENT ENGINEERING DIVISION — DATE 11/18/10

CHIEF, DIVISION OF LAND DEVELOPMENT — DATE 12/10/10

| DATE | NO. | REVISION |
|---|---|---|

OWNER
HOWARD COUNTY DEPARTMENT OF PUBLIC WORKS
BUREAU OF ENGINEERING
9250 BENDIX ROAD, COLUMBIA, MARYLAND 21045
P 410 313 2414

DEVELOPER
HOWARD COUNTY DEPARTMENT OF PUBLIC WORKS
BUREAU OF ENGINEERING
9250 BENDIX ROAD, COLUMBIA, MARYLAND 21045
P 410 313 2414

PROJECT
# NORTH LAUREL COMMUNITY CENTER
CAPITAL PROJECT C-0304 PROJECT MGR: DAVE LOUDERMILK

AREA TAX MAP 47 GRID 22 & TAX MAP 50
GRIDS 3 & 4, PARCELS A-1, 187 & 1065 ZONED R-SC
6TH ELECTION DISTRICT
HOWARD COUNTY, MARYLAND

TITLE
## FOREST CONSERVATION PLAN


**Patton Harris Rust & Associates**
Engineers. Surveyors. Planners. Landscape Architects.
8818 Centre Park Drive
Columbia, MD 21045
T 410.997.8900
F 410.997.9282


SEAL
STATE OF MARYLAND 3068 PETER J. STONE PROFESSIONAL ENGINEER
9.9.10
PETER J. STONE #3068

DESIGNED BY : JSN
DRAWN BY: JSN
PROJECT NO 14466-1-2 C400SDP10.DWG
DATE : SEPTEMBER 7, 2010
SCALE : 1" = 40'
DRAWING NO. 10 OF 43

SDP-10-010

MATCH LINE SEE SHEET 10

MATCH LINE SEE SHEET 12

MATCH LINE SEE SHEET 13

PUBLIC FOREST CONSERVATION EASEMENT B-1
0.36± AC RETENTION
(15,857± SF)

EX. PUBLIC FOREST CONSERVATION EASEMENT B
1.89± AC RETENTION
(82,628± SF)
NO CHANGE

PUBLIC FOREST CONSERVATION EASEMENT C-2
0.06± AC RETENTION
(2,700± SF)

FOREST NOT CLEARED & NOT PROTECTED
0.08± AC
(3,106± SF)

EX PUBLIC FOREST CONSERVATION EASEMENT C
0.29± AC RETENTION
(12,632± SF)
NO CHANGE

EX. PUBLIC FOREST CONSERVATION EASEMENT A TO BE ABANDONED
0.005± AC RETENTION
(210± SF)

PUBLIC FOREST CONSERVATION EASEMENT A-1
14.04± AC RETENTION
(611,738± SF)

FOREST TO BE CLEARED
17.39± AC
(749,093± SF)

6' WIDE PAVED TRAIL TO BE FIELD LOCATED AS TO MINIMIZE DISTURBANCE

PUBLIC FOREST CONSERVATION ESMT C-1
0.23 AC
(9,980± SF)

FOREST NOT CLEARED & NOT PROTECTED
0.28± AC
(12,340± SF)

PUBLIC FOREST CONSERVATION EASEMENT A-5
0.01± AC RETENTION
(486± SF)

EX. PUBLIC FOREST CONSERVATION EASEMENT A TO BE ABANDONED
0.005± AC RETENTION
(209± SF)

PUBLIC FOREST CONSERVATION EASEMENT A-8
0.09± AC RETENTION
(3,928± SF)

EX. PUBLIC FOREST CONSERVATION EASEMENT A TO BE ABANDONED
0.01± AC RETENTION
(651± SF)

PUBLIC FOREST CONSERVATION EASEMENT A-7
0.11± AC RETENTION
(4,665± SF)

NON-CREDIT AREA (FLOODPLAIN)
1.45± AC
(63,162± SF)

EX. PUBLIC FOREST CONSERVATION EASEMENT D TO BE ABANDONED
0.08± AC RETENTION
(3,802± SF)

OFF-SITE FOREST TO BE CLEARED
0.11± AC
(4,854± SF)

HILL STREET

BIKE RACK

LOADING/UNLOADING ZONE

PUBLIC 100 YEAR FLOODPLAIN DRAINAGE & UTILITY EASEMENT

MATCH LINE SEE SHEET 13

## LEGEND

- LIMIT OF DISTURBANCE — LOD
- TREE PROTECTION FENCE — TPD
- PROPERTY LINE AND RIGHT OF WAY
- FLOODPLAIN — FP
- EX. TREELINE
- PROP. TREELINE
- EX. FOREST RETENTION AREA
- PROP. FOREST CONSERVATION ESMT
- FOREST NOT CLEARED OR PROTECTED
- EX. FOREST ESMT TO BE ABANDONED
- FOREST CONSERVATION EASEMENT SIGNAGE (S)
- SOILS — MrE
- 15–25% SLOPES
- >25% SLOPES

NOTES:

1. SEE RED LINE REVISION OF SDP-08-118 FOR GRADING, TRAIL CONNECTIONS, AND IMPROVEMENTS TO THE EAST SIDE OF THE PROPERTY.

SHEET 10 | SHEET 11 | SHEET 12 | SHEET 13 | SHEET 14

SHEET KEY

APPROVED : HOWARD COUNTY DEPARTMENT OF PLANNING AND ZONING.

DIRECTOR — DATE 12/3/10

CHIEF, DEVELOPMENT ENGINEERING DIVISION — DATE 11/8/10

CHIEF, DIVISION OF LAND DEVELOPMENT — DATE 12/10/10

| DATE | NO. | REVISION |
|---|---|---|

OWNER

HOWARD COUNTY DEPARTMENT OF PUBLIC WORKS
BUREAU OF ENGINEERING
9250 BENDIX ROAD, COLUMBIA, MARYLAND 21045
P 410 313 2414

DEVELOPER

HOWARD COUNTY DEPARTMENT OF PUBLIC WORKS
BUREAU OF ENGINEERING
9250 BENDIX ROAD, COLUMBIA, MARYLAND 21045
P 410 313 2414

PROJECT
# NORTH LAUREL COMMUNITY CENTER
CAPITAL PROJECT C-0304 — PROJECT MGR: DAVE LOUDERMILK

AREA — TAX MAP 47 GRID 22 & TAX MAP 50
GRIDS 3 & 4, PARCELS A-1, 187 & 1065 ZONED R-SC
6TH ELECTION DISTRICT
HOWARD COUNTY, MARYLAND

TITLE
## FOREST CONSERVATION PLAN


**Patton Harris Rust & Associates**
Engineers. Surveyors. Planners. Landscape Architects.
8818 Centre Park Drive
Columbia, MD 21045
T 410.997.8900
F 410.997.9282


SEAL — STATE OF MARYLAND 3068 PETER J. STONE — REGISTERED PROFESSIONAL ENGINEER
9-9-10
PETER J. STONE #3068

DESIGNED BY : JSN
DRAWN BY: JSN
PROJECT NO : 14466-1-2 C400SDP11.DWG
DATE : SEPTEMBER 7, 2010
SCALE : 1" = 40'
DRAWING NO. 11 OF 43

SDP-10-010

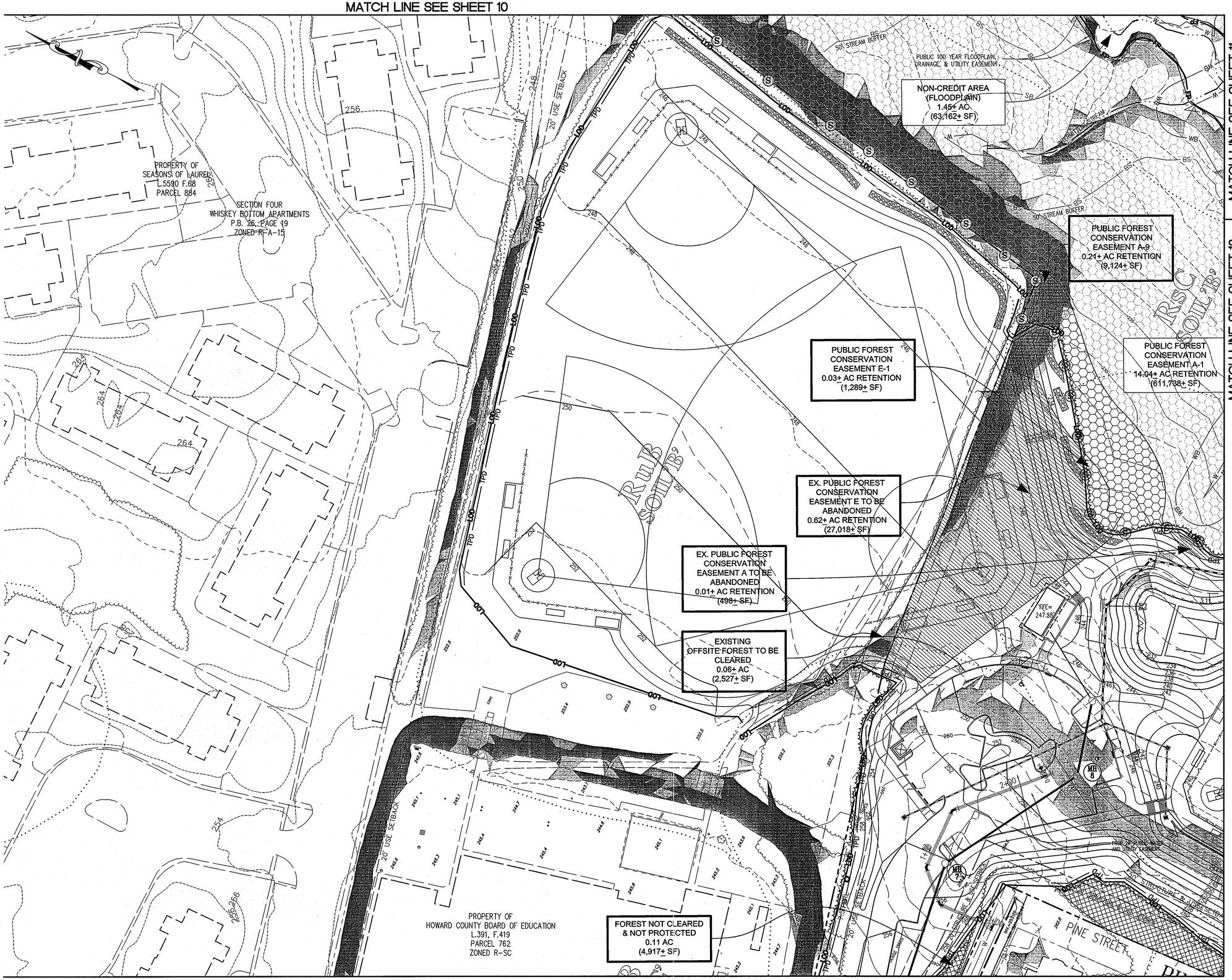


LEGEND

| | |
|---|---|
| PROP. BUILDING | |
| LIMIT OF DISTURBANCE | LOD |
| TREE PROTECTION FENCE | TPD |
| PROPERTY LINE AND RIGHT OF WAY | |
| FLOODPLAIN | FP |
| EX. TREELINE | |
| PROP. TREELINE | |
| EX. FOREST RETENTION AREA | |
| PROP. FOREST CONSERVATION ESMT | |
| FOREST NOT CLEARED OR PROTECTED | |
| EX. FOREST ESMT TO BE ABANDONED | |
| FOREST CONSERVATION EASEMENT SIGNAGE | S |
| SOILS | MrE |
| 15–25% SLOPES | |
| >25% SLOPES | |

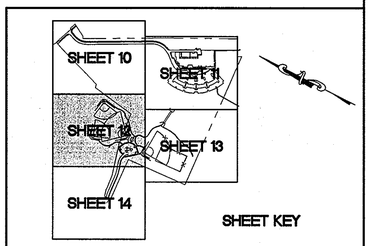


APPROVED : HOWARD COUNTY DEPARTMENT OF PLANNING AND ZONING.

DIRECTOR — DATE 12/13/10

CHIEF, DEVELOPMENT ENGINEERING DIVISION — DATE 11/18/10

CHIEF, DIVISION OF LAND DEVELOPMENT — DATE 12/10/10

| DATE | NO. | REVISION |
|---|---|---|

OWNER
HOWARD COUNTY DEPARTMENT OF PUBLIC WORKS
BUREAU OF ENGINEERING
9250 BENDIX ROAD, COLUMBIA, MARYLAND 21045
P 410 313 2414

DEVELOPER
HOWARD COUNTY DEPARTMENT OF PUBLIC WORKS
BUREAU OF ENGINEERING
9250 BENDIX ROAD, COLUMBIA, MARYLAND 21045
P 410 313 2414

PROJECT
NORTH LAUREL COMMUNITY CENTER
CAPITAL PROJECT C-0304 PROJECT MGR: DAVE LOUDERMILK

AREA TAX MAP 47 GRID 22 & TAX MAP 50
GRIDS 3 & 4, PARCELS A-1, 187 & 1065 ZONED R-SC
6TH ELECTION DISTRICT
HOWARD COUNTY, MARYLAND

TITLE
FOREST CONSERVATION PLAN

Patton Harris Rust & Associates
Engineers. Surveyors. Planners. Landscape Architects.
PHR+A
8818 Centre Park Drive
Columbia, MD 21045
T 410.997.8900
F 410.997.9282

SEAL
STATE OF MARYLAND 3068 PETER J. STONE BUREAU OF ENGINEERING LANDSCAPE ARCHITECTS
9.9.10
PETER J. STONE #3068

DESIGNED BY : JSN
DRAWN BY: JSN
PROJECT NO : 14466-1-2 C400SDP12.DWG
DATE : SEPTEMBER 7, 2010
SCALE : 1" = 40'
DRAWING NO. 12 OF 43

SDP-10-010

MATCH LINE SEE SHEET 11

MATCH LINE SEE SHEET 12 | MATCH LINE SEE SHEET 14

SELECTIVE CLEARING AND TRIMMING SHALL BE PERFORMED AS NEEDED TO INSTALL THE BRIDGE AND TO ENSURE THAT TREES ALONG THE BRIDGE ALIGNMENT ARE TRIMMED OR REMOVED TO PROVIDE ADEQUATE CLEARANCE FOR PASSAGE OF PEDESTRIANS

PUBLIC FOREST CONSERVATION EASEMENT A-8
0.08+ AC RETENTION
(3,495+ SF)

EX. PUBLIC FOREST CONSERVATION EASEMENT D TO BE ABANDONED
0.08+ AC RETENTION
(3,802+ SF)

EX. PUBLIC FOREST CONSERVATION EASEMENT F TO BE ABANDONED
0.08+ AC RETENTION
(3,414+ SF)

FOREST TO BE CLEARED
17.39+ AC
(749,093+ SF)

FOREST NOT CLEARED & NOT PROTECTED
0.60 AC
(26,122+ SF)

EX. PUBLIC FOREST CONSERVATION EASEMENT D-1
0.58+ AC RETENTION
(25,280+ SF)

EX. PUBLIC FOREST CONSERVATION EASEMENT F TO BE ABANDONED
0.19+ AC RETENTION
(8,390+ SF)

EX. PUBLIC FOREST CONSERVATION EASEMENT A TO BE ABANDONED
0.03+ AC RETENTION
(1,306+ SF)

EX. PUBLIC FOREST CONSERVATION EASEMENT A TO BE ABANDONED
0.0006+ AC RETENTION
(24+ SF)

PUBLIC FOREST CONSERVATION EASEMENT F-1
0.63+ AC RETENTION
(27,518+ SF)

EX. PUBLIC FOREST CONSERVATION EASEMENT F TO BE ABANDONED
0.004+ AC RETENTION
(174+ SF)

EXISTING FOREST TO BE CLEARED
8.58 AC
(373,920+ SF)

FOREST NOT CLEARED & NOT PROTECTED
0.46 AC
(19,924+ SF)

FOREST NOT CLEARED & NOT PROTECTED
0.51 AC
(22,370+ SF)

SOILS: SrC SOILS, MrE SOILS

DECATUR ROAD

DECATUR PLACE

7TH STREET N

PARK AVENUE

## LEGEND

- LIMIT OF DISTURBANCE — LOD —
- TREE PROTECTION FENCE — TPD —
- PROPERTY LINE AND RIGHT OF WAY
- FLOODPLAIN — FP —
- EX. TREELINE
- PROP. TREELINE
- EX. FOREST RETENTION AREA
- PROP. FOREST CONSERVATION ESMT
- FOREST NOT CLEARED OR PROTECTED
- EX. FOREST ESMT TO BE ABANDONED
- FOREST CONSERVATION EASEMENT SIGNAGE (S)
- SOILS MrE
- 15–25% SLOPES
- >25% SLOPES

NOTES:
1. SEE RED LINE REVISION OF SDP-08-118 FOR GRADING AND TRAIL CONNECTIONS TO THE EAST SIDE OF THE PROPERTY.

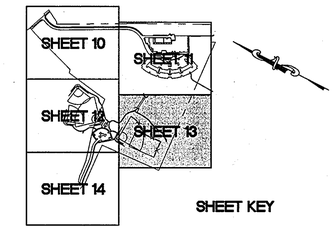

SHEET KEY

APPROVED : HOWARD COUNTY DEPARTMENT OF PLANNING AND ZONING.

DIRECTOR — DATE 12/13/10

CHIEF, DEVELOPMENT ENGINEERING DIVISION — DATE 11/18/10

CHIEF, DIVISION OF LAND DEVELOPMENT — DATE 12/10/10

| DATE | NO. | REVISION |
|---|---|---|

OWNER
HOWARD COUNTY DEPARTMENT OF PUBLIC WORKS
BUREAU OF ENGINEERING
9250 BENDIX ROAD, COLUMBIA, MARYLAND 21045
P 410 313 2414

DEVELOPER
HOWARD COUNTY DEPARTMENT OF PUBLIC WORKS
BUREAU OF ENGINEERING
9250 BENDIX ROAD, COLUMBIA, MARYLAND 21045
P 410 313 2414

PROJECT
# NORTH LAUREL COMMUNITY CENTER
CAPITAL PROJECT C-0304 PROJECT MGR: DAVE LOUDERMILK

AREA TAX MAP 47 GRID 22 & TAX MAP 50
GRIDS 3 & 4, PARCELS A-1, 187 & 1065 ZONED R-SC
6TH ELECTION DISTRICT
HOWARD COUNTY, MARYLAND

TITLE
## FOREST CONSERVATION PLAN


**Patton Harris Rust & Associates**
Engineers. Surveyors. Planners. Landscape Architects.
8818 Centre Park Drive
Columbia, MD 21045
T 410.997.8900
F 410.997.9282


SEAL
STATE OF MARYLAND 3068 PETER J. STONE
PETER J. STONE #3068 9.9.10

| | |
|---|---|
| DESIGNED BY : | JSN |
| DRAWN BY: | JSN |
| PROJECT NO : | 14466-1-2 C400SDP13.DWG |
| DATE : | SEPTEMBER 7, 2010 |
| SCALE : | 1" = 40' |
| DRAWING NO. | 13 OF 43 |

SDP-10-010

MATCH LINE SEE SHEET 12

MATCH LINE SEE SHEET 13

PROPERTY OF
HOWARD COUNTY BOARD OF EDUCATION
L.391, F.419
PARCEL 762
ZONED R-SC

EXISTING FOREST
TO BE CLEARED
8.58 AC±
(373,920± SF)

FOREST NOT CLEARED
& NOT PROTECTED
0.11 AC
(4,917± SF)

FOREST NOT CLEARED
& NOT PROTECTED
0.05 AC
(1,978± SF)

50' STRUCTURE
& USE SETBACK

EX. 12"W (CONT NO. 491-D-W&S)

EX. GRATE INLET
EX TOP = 235.00

EX. 8"S (CONT NO. 491-D-W&S)

HOWARD AVENUE

NORTH LAUREL ROAD

MrE

LEGEND

| | |
|---|---|
| LIMIT OF DISTURBANCE | LOD |
| TREE PROTECTION FENCE | TPD |
| PROPERTY LINE AND RIGHT OF WAY | |
| FLOODPLAIN | FP |
| EX. TREELINE | |
| PROP. TREELINE | |
| FOREST NOT CLEARED OR PROTECTED | |
| SOILS | MrE |
| 15–25% SLOPES | |
| >25% SLOPES | |

SHEET KEY

SHEET 10 | SHEET 11 | SHEET 12 | SHEET 13 | SHEET 14

APPROVED : HOWARD COUNTY DEPARTMENT OF PLANNING AND ZONING.

DIRECTOR — DATE 12/13/10

CHIEF, DEVELOPMENT ENGINEERING DIVISION — DATE 11/18/10

CHIEF, DIVISION OF LAND DEVELOPMENT — DATE 12/10/10

| DATE | NO. | REVISION |
|---|---|---|

OWNER

HOWARD COUNTY DEPARTMENT OF PUBLIC WORKS
BUREAU OF ENGINEERING
9250 BENDIX ROAD, COLUMBIA, MARYLAND 21045
P 410 313 2414

DEVELOPER

HOWARD COUNTY DEPARTMENT OF PUBLIC WORKS
BUREAU OF ENGINEERING
9250 BENDIX ROAD, COLUMBIA, MARYLAND 21045
P 410 313 2414

PROJECT
# NORTH LAUREL COMMUNITY CENTER
CAPITAL PROJECT C-0304 PROJECT MGR: DAVE LOUDERMILK

AREA TAX MAP 47 GRID 22 & TAX MAP 50
GRIDS 3 & 4, PARCELS A-1, 187 & 1065 ZONED R-SC
6TH ELECTION DISTRICT
HOWARD COUNTY, MARYLAND

TITLE
## FOREST CONSERVATION PLAN


**Patton Harris Rust & Associates**
Engineers. Surveyors. Planners. Landscape Architects.
8818 Centre Park Drive
Columbia, MD 21045
T 410.997.8900
F 410.997.9282


SEAL

STATE OF MARYLAND 3068 PETER J. STONE REGISTERED LANDSCAPE ARCHITECTS

9-9-10

PETER J. STONE #3068

| | |
|---|---|
| DESIGNED BY : | JSN |
| DRAWN BY: | JSN |
| PROJECT NO : | 14466-1-2 C400SDP14.DWG |
| DATE : | SEPTEMBER 7, 2010 |
| SCALE : | 1" = 40' |
| DRAWING NO. | 14 OF 43 |

SDP-10-010

# SEQUENCE OF OPERATIONS

PRE-CONSTRUCTION

1. FIELD STAKE LIMITS OF DISTURBANCE (L.O.D.) AT 25' INTERVALS.

2. REVIEW L.O.D. IN FIELD AND ADJUST IF PRACTICAL.

3. INSTALL TREE PROTECTION FENCE AT THE L.O.D. AND IMPLEMENT TREE PROTECTION METHODS AS SHOWN.

4. CLEAR AND GRUB AS NECESSARY TO FACILITATE ROOT PRUNING TO A DEPTH OF 2-3 FEET WITHIN THE LIMITS OF THE PROPOSED FOREST RETENTION AREA AND AROUND SPECIMEN TREES TO BE SAVED. CLEAR REMAINING TREES IN A WAY THAT "SAVE TREES" ARE NOT DISTURBED. GRIND STUMPS 12" IN DIAMETER AND LARGER THAT ARE WITHIN 25' OF THE L.O.D.

5. DO NOT ATTEMPT TO SAVE TREES WITHIN 25' FROM THE L.O.D. UNLESS, IN THE OPINION OF THE CONSULTING ARBORIST, THEY HAVE A 75% CHANCE OR BETTER OF SURVIVAL.

6. PRUNE AND FERTILIZE DESIRABLE 'EDGE TREES' AS PER CONSULTING ARBORIST'S RECOMMENDATIONS AND DETAILS PROVIDED ON THIS SHEET.

7. THERE SHALL BE NO STAGING, STORAGE, OR STOCKPILING OF MATERIALS OUTSIDE OF THE L.O.D.

8. REMOVE OR TREAT WITH AN ACCEPTABLE METHOD, NOXIOUS PLANT MATERIAL SUCH AS MULTIFLORA ROSE, TEARTHUMB, AND JOHNSON GRASS BEFORE INSTALLING REFORESTATION PLANTS.

9. INSTALL TREE PROTECTION SIGNAGE.

10. STABILIZE ANY DISTURBED AREAS USING THE SPECIFIED STABILIZATION MIXTURE WHICH ALLOWS FOR NATURAL REVEGETATION OF FOREST COMMUNITIES.

# FOREST CONSERVATION PROGRAM

I. OBJECTIVE:
IT IS THE OBJECTIVE OF THE FOREST CONSERVATION PLAN OF NORTH LAUREL PARK TO RETAIN ENVIRONMENTAL INTEGRITY BY PRESERVING EXISTING WOODED AREAS.

II. PRESERVATION:
FOREST PRESERVATION AREAS SHALL BE PERMANENTLY PROTECTED BY FOREST CONSERVATION EASEMENTS.

III. GENERAL CONSTRUCTION NOTE:
THERE WILL BE NO STAGING OR STORING OF EQUIPMENT OUTSIDE THE LIMIT OF DISTURBANCE.

IV. POST CONSTRUCTION MANAGEMENT PRACTICE:
A TWO-YEAR POSTED CONSTRUCTION AND MANAGEMENT PROGRAM TO ENSURE FOREST HEALTH IS REQUIRED AND INCLUDES THE FOLLOWING:

1-MAINTENANCE OF SIGNS, FENCES, AND TREE PROTECTION DEVICES TO PREVENT UNWARRANTED INTRUSION AND DAMAGE.
2-CAREFUL REMOVAL OF ALL TEMPORARY STRUCTURES AFTER CONSTRUCTION.
3-ROUTINE INSPECTIONS OF FOREST CONSERVATION EASEMENTS.
4-ROUTINE INSPECTIONS AND MAINTENANCE OF REFORESTATION AREAS.

# GENERAL NOTES

1. THE EXISTING TOPOGRAPHY IS TAKEN FROM AERIAL TOPOGRAPHIC SURVEY PREPARED BY VIRGINIA RESOURCE MAPPING DATED MARCH 31, 2006, AND FIELD RUN SURVEY WITH MAXIMUM TWO FOOT CONTOUR INTERVALS PREPARED BY PATTON HARRIS RUST & ASSOCIATES DATED APRIL 24, 2008. BOUNDARY SURVEY WAS PREPARED BY PATTON HARRIS RUST & ASSOCIATES DATED DECEMBER 12, 2006.

2. NO CRITICAL HABITATS OF RARE, THREATENED OR ENDANGERED SPECIES WERE OBSERVED.

3. NO TREES, SHRUBS, OR PLANTS IDENTIFIED AS RARE, THREATENED OR ENDANGERED SPECIES WERE OBSERVED.

4. THERE ARE NO KNOWN CEMETERIES OR BURIAL PLOTS LOCATED ON THE SITE, ACCORDING TO THE HOWARD COUNTY CEMETERIES INVENTORY.

5. ONE EXISTING BUILDING IS PRESENT ON THE SITE.

6. THE SOILS ON SITE ARE CHILLUM-RUSSETT LOAMS (2-5% SLOPES) - ChB, CODORUS AND HATBORO SOILS (0-2% SLOPES) - Cp, EVESBORO LOAMY SAND (2-10% SLOPES) - EbC, FALLSINGTON SANDY LOAM (0-2% SLOPES) - Fa, LEGORE SILT LOAM (8-15% SLOPES) - LeC, RUSSET FINE SANY LOAM (2-5% SLOPES) - RsB, RUSSET FINE SANY LOAM (5-10% SLOPES) - RsC, RUSSET FINE SANY LOAM (10-15% SLOPES) - RsD, RUSSETT AND BELTSVILLE SOILS (2-5% SLOPES) - RuB, SASSAFRAS LOAM (2-5% SLOPES) - SaB, SASSAFRAS AND CROOM SOILS (5-10% SLOPES) - SrC, SASSAFRAS AND CROOM SOILS (15-25% SLOPES) - SrE, URBAN LAND-CHILLUM-BELTSVILLE COMPLEX (0-5% SLOPES) - UcB, URBAN LAND-CHILLUM-BELTSVILLE COMPLEX (5-15% SLOPES) - UcD, URBAN LAND-FALLSINGTON COMPLEX (0-2& SLOPES) - UfA, URBAN LAND-SASSAFRAS-BELTSVILLE COMPLEX (0-5% SLOPES) - UsB, URBAN LAND-UDORTHENTS COMPLEX (0-15% SLOPES) - UtD, URBAN LAND-WOODSTOWN-SASSAFRAS COMPLEX (5-10% SLOPES) - UwC ACCORDING TO THE NATURAL RESOURCES CONSERVATION SERVICE WEB SOIL SURVEY.

7. THE FOREST STAND DELINEATION (FSD), DATED JUNE 2005 HAS BEEN PREPARED BY JOHNSON, MIRMIRAN, & THOMPSON.

8. THE HOWARD COUNTY FOREST CONSERVATION MANUAL SUPERCEDES ANY DISCREPANCIES BETWEEN THE MANUAL AND THESE PLANS.

9. THIS PROJECT COMPLIES WITH THE REQUIREMENTS OF SECTION 16.1200 OF THE HOWARD COUNTY CODE FOR FOREST CONSERVATION BY PRESERVING 18.85 ACRES OF ON-SITE RETENTION AND BY EXCEEDING THE BREAK-EVEN POINT OF 18.31 ACRES. NO FOREST CONSERVATION SURETY IS REQUIRED FOR THIS PROJECT AS IT IS A COUNTY PROJECT. 1.05 ACRES OF EXISTING FOREST RETENTION EASEMENT IS TO BE ABANDONED AND 0.34 ACRES OF NEW FOREST RETENTION EASEMENT IS TO BE ADDED.

10. THE FOREST CONSERVATION EASEMENTS HAVE BEEN ESTABLISHED TO FULFILL THE REQUIREMENTS OF SECTION 16.1200 OF THE HOWARD COUNTY CODE AND THE FOREST CONSERVATION MANUAL. NO CLEARING, GRADING, OR CONSTRUCTION IS PERMITTEDWITHIN THE FOREST CONSERVATION EASEMENT, HOWEVER, FOREST MANAGEMENT PRACTICES AS DEFINED IN THE DEED OF FOREST CONSERVATION EASEMENT ARE ALLOWED.

11. THE BOUNDARY OF THE PROPOSED FOREST CONSERVATION EASEMENTS ARE IDENTIFIED ON FINAL PLAT F-08-201 WITH BEARINGS AND DISTANCES UNDER PLAT NO.'S 20481-20486 AND F-10-97.

12. ALL FOREST CONSERVATION SIGNS ARE TO BE PERMANENTLY INSTALLED.

13. THERE ARE 0.77 ACRES (33,520 SF) OF STEEP SLOPE AREA WITHIN THE PROJECT SITE.

14. WAIVER PETITION WP-10-133 WAS APPROVED ON MAY 3, 2010 TO ALLOW OFF SITE FOREST CLEARING OF 0.07 ACRES (3,114 SF) ON THE NEIGHBORING LAUREL WOODS ELEMENTARY SCHOOL SITE (PARCEL 762) BASED ON SECTION 16.1202.b.1.3. OF THE HOWARD COUNTY ZONING REGULATIONS.

15. A FOREST STAND DELINEATION WAS SUBMITTED FOR THIS PROPERTY UNDER SDP-08-118.

# FOREST CONSERVATION SEQUENCE OF OPERATIONS

1. Prior to beginning any grading operations on this site or on a respective lot, there may be a preconstruction meeting held at the site which is to include the Contractor and representatives from Patton Harris Rust & Associates, Inc. (PHR+A). The Howard County Department of Planning and Zoning (DPZ) and the owner will be notified by the Contractor as to the time and place of the field meeting, should they wish to send a representative. The purpose of this meeting will be to review the approved FCP and to field verify the correct Limits of Disturbance (LOD).

2. The Limits of Disturbance (LOD) pertinent to the preservation of wooded areas shall be staked in the field with final adjustments being made as necessary to insure adequate protection of the Critical Root Zone of trees designated for retention. Stakes to be used shall be those specified for the "TREE PROTECTION DEVICE" to which approved protective material will be attached. Alternate means of defining the LOD may be used if approved by the DPZ.

3. All forest retention areas shall be protected by highly visible, well anchored temporary protection devices (see detail), which shall be securely in place prior to any clearing or grading operations.

4. Grading operations or other construction operations which could dislodge or otherwise damage the protective devices shall be avoided along the edges of the LOD lines if possible. Any protective devices which are damaged during site construction operations shall be properly repaired immediately by the Contractor.

5. After site grading, retaining wall, and parking lot have been completed, all trees adjacent to the LOD line shall be inspected for indications of crown die-back (summer indicator), damage within respective critical root zones or any dead wood or other conditions which might be hazardous to pedestrians, buildings, utility lines vehicular access ways or parked vehicles.

6. Should there be evidence of any damage to tree trunks, branches or the critical root zone of trees within the protected areas, or to isolated specimen trees to be preserved, the damage shall be examined within a period of two (2) days from the date of observance by a licensed tree care professional. Exposed roots should be covered immediately to a depth of 6 - 8 inches with soil, preferably mixed with 50% peat moss or leaf mold.

7. Remove damaged, dead or dying trees or limbs only if the trees or limbs pose an immediate safety hazard to buildings, utility lines, vehicles, or access and egress drives or pedestrian areas. Trees designated for pruning or removal shall be pruned or removed using equipment and methods which will not damage or destroy adjacent large trees or understory trees or shrubs designated for retention.

8. All temporary forest protection devices will be carefully removed after all general construction, necessary tree surgery, removal of debris, etc. regrading and reseeding of sediment and erosion control disturbance have been completed and acceptance and approval of the work and site conditions have been given by the DPZ.

### Howard County Forest Conservation Worksheet

Project Name: North Laurel Community Center - Updated Per SDP-10-010, Westside Mass Grading Plan
County File #: SDP-08-118
Date: February 25, 2010

| | | | Acres |
|---|---|---|---|
| **Net Tract Area** | | | |
| A. | *Total Tract Area* | A = | 52.35* |
| B. | *Floodplain Area* | B = | 1.45 |
| C. | *Net Tract Area* Net Tract Area = (A-B-C) | C = | 50.90 |
| **Land Use Category:** | | | |
| D. | *Afforestation Threshold* (Net Tract Area X 15% | D = | 7.64 |
| E. | *Conservation Threshold* (Net Tract Area X 20% | E = | 10.18 |
| **Existing Forest Cover** | | | |
| F. | ***Existing Forest Cover within the Net Tract Area*** | F = | 50.91** |
| G. | *Area of Forest Above Conservation Threshold* If the Existing Forest Cover (F) is greater than Conservation Threshold (G), then G = Existing Forest Cover (F) - Conservation Threshold (E); Otherwise G = 0 | G = | 40.63 |
| **Break Even Point** | | | |
| H. | *Break Even* ( Amount of forest that must be retained so that no mitigation is required) (1) If the area of forest above the Conservation Threshold (G) is greater than zero, then H = (0.2 X the area of forest above Conservation Threshold (G)) + the Conservation Threshold (E) (2) If the area of forest above the Conservation Threshold (G) is equal to zero, then H = Existing Forest Cover (F) | H = | 18.31 |
| I. | *Forest Clearing Permitted Without Mitigation* I = Existing Forest Cover (F) - Break Even Point (H) | I = | 32.50 |
| **Proposed Forest Clearing** | | | |
| J. | ***Total Area of Forest to be Cleared*** | J = | 31.96 |
| K. | *Total Area of Forest to be Retained* K = Existing Forest Cover (F) - forest to be cleared (J) | K = | 18.85 |
| **Planting Requirements** | | | |
| If the Total Area of Forest to be Cleared (K) is at or above the Breakeven Point (H), no planting is required and no further calculations are necessary (L=0, M=0, N=0, P=0); If not, calculate the planting requirement below: | | | |
| L. | *Reforestation for Clearing Above the Conservation Threshold* (1) If the total area of forest to be retained (K) is greater than the Conservation Threshold (E), then L = the area of forest to be cleared (J) X 0.25; or (2) If the forest to be retained (K) is less than or equal to the Conservation Threshold (E), then L = area of forest above Conservation Threshold (G) X 0.25 | L = | 0.00 |
| M. | *Reforestation for Clearing Below the Conservation Threshold* (1) If Existing Forest Cover (F) is greater than Conservation Threshold (E) and the forest to be retained (K) is less than or equal to the Conservation Threshold (E), then M = 2.0 X (the Conservation Threshold (E) - the forest to be retained (K)) (2) If Existing Forest (F) is less than or equal to the Conservation Threshold (E), then M = 2.0 X forest to be cleared (J). | M = | 0.00 |
| N. | *Credit for Retention Above the Conservation Threshold* If the area of forest to be retained (K) is greater than the Conservation Threshold (E), then N = K - E | N = | 8.67 |
| P. | *Total Reforestation Required* P = L + M - N | P = | 0.00 |
| Q. | *Total Afforestation Required* (1) If Existing Forest Cover (F) is less than the Afforestation Threshold (D) then Q = the Afforestation Threshold (D) - the Existing Forest Cover (F) | Q = | 0.00 |
| R. | *Total Planting Requirement* R = P + Q | R = | 0.00 |

*TOTAL TRACT AREA OF 52.35 ACRES REPRESENTS 52.17 ACRES ON-SITE, 0.11 ACRES OF OFF-SITE DISTURBANCE FOR THE MEREDITH AVENUE UTILITY CONNECTIONS (SEE SHEET 34 OF SDP-08-118), AND 0.07 ACRES OF OFF-SITE FOREST CLEARING FOR THE LAUREL WOODS ELEMENTARY SCHOOL BALL FIELDS .

**THE TOTAL FOREST AREA ALSO INLUDES 0.11 ACRES OF OFF-SITE DISTURBANCE FOR THE MEREDITH AVENUE UTILITY CONNECTIONS (SEE SHEET 34 OF SDP-08-118) AND 0.07 ACRES FOR THE OFF-SITE DISTURBANCE FOR THE LAUREL WOODS ELEMENTARY SCHOOL BALL FIELDS.

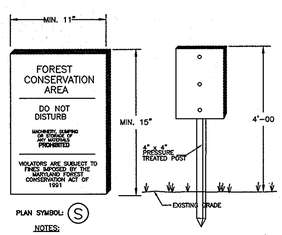


NOTES:
1. SIGNAGE SHALL BE LOCATED ON FOREST CONSERVATION / REFORESTATION / AFFORESTATION EASEMENT BORDER.
2. SEE PLAN FOR SPACING.
3. ALL SIGNS ARE TO BE PERMANENTLY INSTALLED.

FOREST CONSERVATION & REFORESTATION SIGN DETAIL

NOT TO SCALE

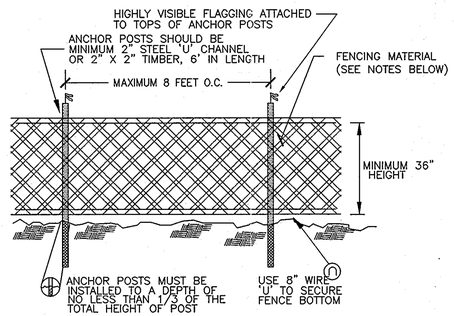


NOTES:
1. BLAZE ORANGE MESH OR SUPER SILT FENCE FOR TREE PROTECTION DEVICE, ONLY.
2. BOUNDARIES OF PROTECTION AREA WILL BE ESTABLISHED PRIOR TO GRADING AND SEDIMENT CONTROL.
3. AVOID DAMAGE TO CRITICAL ROOT ZONE. DO NOT DAMAGE OR SEVER LARGE ROOTS WHEN INSTALLING POSTS.
4. FENCING SHALL BE MAINTAINED THROUGHOUT CONSTRUCTION.

TREE PROTECTION FENCING

NOT TO SCALE

| UPDATED FOREST CONSERVATION EASEMENT TABLE | | | |
|---|---|---|---|
| CONSERVATION TYPE | AREA | NEW ACRES | NEW SF |
| 1. ON-SITE RETENTION | A-1 | 14.04 | 611,738 |
| | A-2 | 0.06 | 2,417 |
| | A-3 | 0.005 | 239 |
| | A-4 | 0.17 | 7,516 |
| | A-5 | 0.01 | 486 |
| | A-6 | 0.09 | 3,928 |
| | A-7 | 0.11 | 4,665 |
| | A-8 | 0.08 | 3,495 |
| | A-9 | 0.21 | 9,124 |
| | B (NO CHANGE) | 1.89 | 82,328 |
| | B-1 | 0.36 | 15,857 |
| | C (NO CHANGE) | 0.29 | 12,632 |
| | C-1 | 0.23 | 9,980 |
| | C-2 | 0.06 | 2,700 |
| | D-1 | 0.58 | 25,280 |
| | E-1 | 0.03 | 1,289 |
| | F-1 | 0.63 | 27,578 |
| TOTAL ON-SITE RETENTION | | 18.85 | 821,252 |

| SDP-08-118 FOREST CONSERVATION EASEMENT TABLE | | | |
|---|---|---|---|
| CONSERVATION TYPE | AREA | ACRES | SF |
| 1. ON-SITE RETENTION | A | 14.11 | 614,790 |
| | B | 1.89 | 82,281 |
| | C | 0.29 | 12,732 |
| | D | 0.67 | 29,086 |
| | E | 0.65 | 28,370 |
| | F | 0.90 | 39,376 |
| TOTAL ON-SITE RETENTION | | 18.51 | 806,635 |

### FOREST STAND SUMMARY TABLE

| STAND NO. | SIZE (acres) | # LARGE TREES | SENSITIVE ENVIRONMENT (acres) | STRUCTURE DIVERSITY VALUE | STAND AGE (years) | BASAL AREA (sf/acre) |
|---|---|---|---|---|---|---|
| 1 | 25.0 | 0 | 0.9 | 15-priority | 35-40 | 126 |
| 2 | 4.0 | 1 | 2.0 | 16-priority | 60-80 | 110 |
| 3 | 15.0 | 0 | 0.6 | 15-priority | 60-80 | 120 |
| 4 | 9.0 | 4 | 2.0 | 14-good | 60-80 | 120 |
| 5 | 4.0 | 6 | 4.3 | 14- good | 40-60 | 70 |

## SOILS CHART

| MAP SYMBOL | NAME | STRUCTURAL LIMITATIONS Dwellings w/ Basements | EROSION HAZARD | HYDRIC (Yes/No) | SLOPE (%) |
|---|---|---|---|---|---|
| ChB | Chillum-Russett Loams | Not limited | Low | No | 2-5 |
| Cp | Codorus and Hatboro Soils | Frequently flooded | Low | Yes | 0-2 |
| EbC | Evesboro Loamy Sand | Somewhat limited | Moderate | No | 2-10 |
| Fa | Fallsington Sandy Loam | Very limited | Low | Yes | 0-2 |
| LeC | Legore Silt Loam | Very limited | Moderate | No | 8-15 |
| RsB | Russett Fine Sandy Loam | Very limited | Low | No | 2-5 |
| RsC | Russett Fine Sandy Loam | Very limited | Moderate | No | 5-10 |
| RsD | Russett Fine Sandy Loam | Very limited | Moderate | No | 10-15 |
| RuB | Russett and Beltsville Soils | Very limited | Low | No | 2-5 |
| SaB | Sassafras Loam | Not limited | Low | No | 2-5 |
| SrC | Sassafras and Croom Soils | Somewhat limited | Moderate | No | 5-10 |
| SrE | Sassafras and Croom Soils | Somewhat limited | Severe | Yes | 15-25 |
| UcB | Urban Land - Chillum - Beltsville Complex | Not rated | Low | No | 0-5 |
| UcD | Urban Land - Chillum - Beltsville Complex | Not rated | Moderate | No | 5-15 |
| UfA | Urban Land - Fallsington Complex | Not rated | Low | Yes | 0-2 |
| UsB | Urban Land - Sassafras - Beltsville Complex | Not rated | Low | No | 0-5 |
| UtD | Urban Land - Udorthents Complex | Not rated | Moderate | No | 0-15 |
| UwC | Urban Land - Woodstown - Sassafras Complex | Not rated | Moderate | No | 5-10 |

SOURCE: SOIL INFORMATION TAKEN FROM THE NATURAL RESOURCES CONSERVATION SERVICE WEB SOIL SURVEY.

APPROVED : HOWARD COUNTY DEPARTMENT OF PLANNING AND ZONING.

DIRECTOR — DATE 12/13/10

CHIEF, DEVELOPMENT ENGINEERING DIVISION — DATE 11/10/10

CHIEF, DIVISION OF LAND DEVELOPMENT — DATE 12/10/10

| DATE | NO. | REVISION |
|---|---|---|

OWNER
HOWARD COUNTY DEPARTMENT OF PUBLIC WORKS
BUREAU OF ENGINEERING
9250 BENDIX ROAD, COLUMBIA, MARYLAND 21045
P 410 313 2414

DEVELOPER
HOWARD COUNTY DEPARTMENT OF PUBLIC WORKS
BUREAU OF ENGINEERING
9250 BENDIX ROAD, COLUMBIA, MARYLAND 21045
P 410 313 2414

PROJECT
# NORTH LAUREL COMMUNITY CENTER
CAPITAL PROJECT C-0304 PROJECT MGR: DAVE LOUDERMILK

AREA TAX MAP 47 GRID 22 & TAX MAP 50
GRIDS 3 & 4, PARCELS A-1, 187 & 1065 ZONED R-SC
6TH ELECTION DISTRICT
HOWARD COUNTY, MARYLAND

TITLE
## FOREST CONSERVATION NOTES & DETAILS


Patton Harris Rust & Associates
Engineers. Surveyors. Planners. Landscape Architects.
8818 Centre Park Drive
Columbia, MD 21045
T 410.997.8900
F 410.997.9282


SEAL
STATE OF MARYLAND 3068 PETER J. STONE REGISTERED PROFESSIONAL ENGINEER
9.9.10
PETER J. STONE #3068

| | |
|---|---|
| DESIGNED BY : | JSN |
| DRAWN BY: | JSN |
| PROJECT NO | 14466-1-2 C4005DP15.DWG |
| DATE : | SEPTEMBER 7, 2010 |
| SCALE : | AS SHOWN |
| DRAWING NO. | 15 OF 43 |

P:\Project\14466\1-2\PLANS\C4005DP15.DWG

SDP-10-010

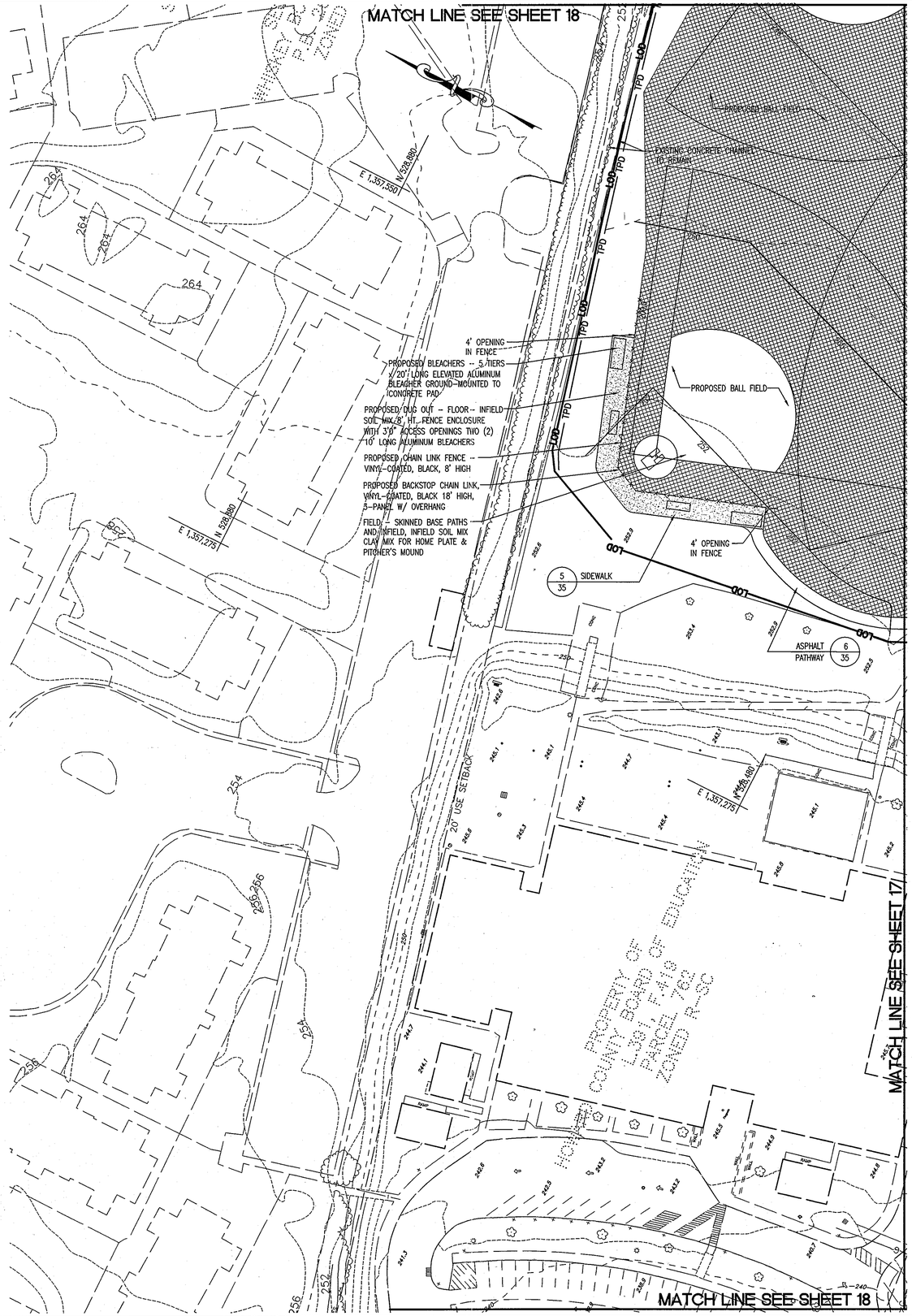


## LEGEND

| | |
|---|---|
| | PROPERTY LINE |
| 380 | EXISTING 10' CONTOURS |
| 378 | EXISTING 2' CONTOURS |
| 380 | PROPOSED 10' CONTOURS |
| 378 | PROPOSED 2' CONTOURS |
| | EXISTING CURB AND GUTTER |
| | PROPOSED CURB & GUTTER |
| EX. 48" RCP | EXISTING STORM DRAIN |
| 15"D | PROPOSED STORM DRAIN |
| | SETBACK LINES |
| | PROPOSED P-3 PAVING (HO. CO. DETAIL R-2.01) |
| | PROPOSED LIGHT POLE |
| | EXISTING LIGHTING |
| | EX. TREELINE |
| | PROPOSED TREELINE |
| FP | FLOODPLAIN |
| SB | STREAM BUFFER |
| W | WETLANDS |
| WB | WETLAND BUFFER |
| TPD | TREE PROTECTION FENCE |
| LOD | LIMIT OF DISTURBANCE |
| | PROPOSED SOD (ALTERNATE) |

NOTES:

1. SEE SHEET 2 FOR OVERALL SITE DEVELOPMENT PLAN.
2. SEE SEPARATE PLANS PREPARED BY MAHAN RYKIEL ASSOCIATES INC. FOR LAYOUT AND DETAILS OF BALL FIELDS.
3. SEEDING IS BASE BID. SOD IS BID ALTERNATE #3 FOR SCHOOL BALL FIELDS AND BID ALTERNATE #4 FOR COUNTY BALL FIELDS.

CALL "MISS UTILITY" AT LEAST 48 HOURS IN ADVANCE OF CONSTRUCTION AT 1-800-257-7777

APPROVED : HOWARD COUNTY DEPARTMENT OF PLANNING AND ZONING.

Thomas E. Butler 12/13/10
DIRECTOR DATE

11/18/10
CHIEF, DEVELOPMENT ENGINEERING DIVISION DATE

12/10/10
CHIEF, DIVISION OF LAND DEVELOPMENT DATE

| DATE | NO. | REVISION |
|---|---|---|
| | | |

OWNER
HOWARD COUNTY DEPARTMENT OF PUBLIC WORKS
BUREAU OF ENGINEERING
9250 BENDIX ROAD, COLUMBIA, MARYLAND 21045
P 410 313 2414

DEVELOPER
HOWARD COUNTY DEPARTMENT OF PUBLIC WORKS
BUREAU OF ENGINEERING
9250 BENDIX ROAD, COLUMBIA, MARYLAND 21045
P 410 313 2414

PROJECT
NORTH LAUREL COMMUNITY CENTER
CAPITAL PROJECT C-0304 PROJECT MGR: DAVE LOUDERMILK

AREA TAX MAP 47 GRID 22 & TAX MAP 50
GRIDS 3 & 4, PARCELS A-1, 187 & 1065 ZONED R-SC
6TH ELECTION DISTRICT
HOWARD COUNTY, MARYLAND

TITLE
SITE DEVELOPMENT PLAN

Patton Harris Rust & Associates
Engineers. Surveyors. Planners. Landscape Architects.
PHR+A
8818 Centre Park Drive
Columbia, MD 21045
T 410.997.8900
F 410.997.9282

SEAL 9-21-10

STATE OF MARYLAND SHERRY CLARKE MITCHELL No. 33954 REGISTERED PROFESSIONAL ENGINEER

BY: Sherry C. Mitchell

"PROFESSIONAL CERTIFICATION. I HEREBY CERTIFY THAT THESE DOCUMENTS WERE PREPARED OR APPROVED BY ME, AND THAT I AM A DULY LICENSED PROFESSIONAL ENGINEER UNDER THE LAWS OF THE STATE OF MARYLAND, LICENSE NO. 33954, EXPIRATION DATE: 01-24-11"

DESIGNED BY : JSN
DRAWN BY: JSN
PROJECT NO : 14466-1-2 C400SDP16.DWG
DATE : SEPTEMBER 7, 2010
SCALE : 1" = 40'
DRAWING NO. 16 OF 43

P:\Project\14466\1-2\PLANS\C400SDP16.DWG

SDP-10-010

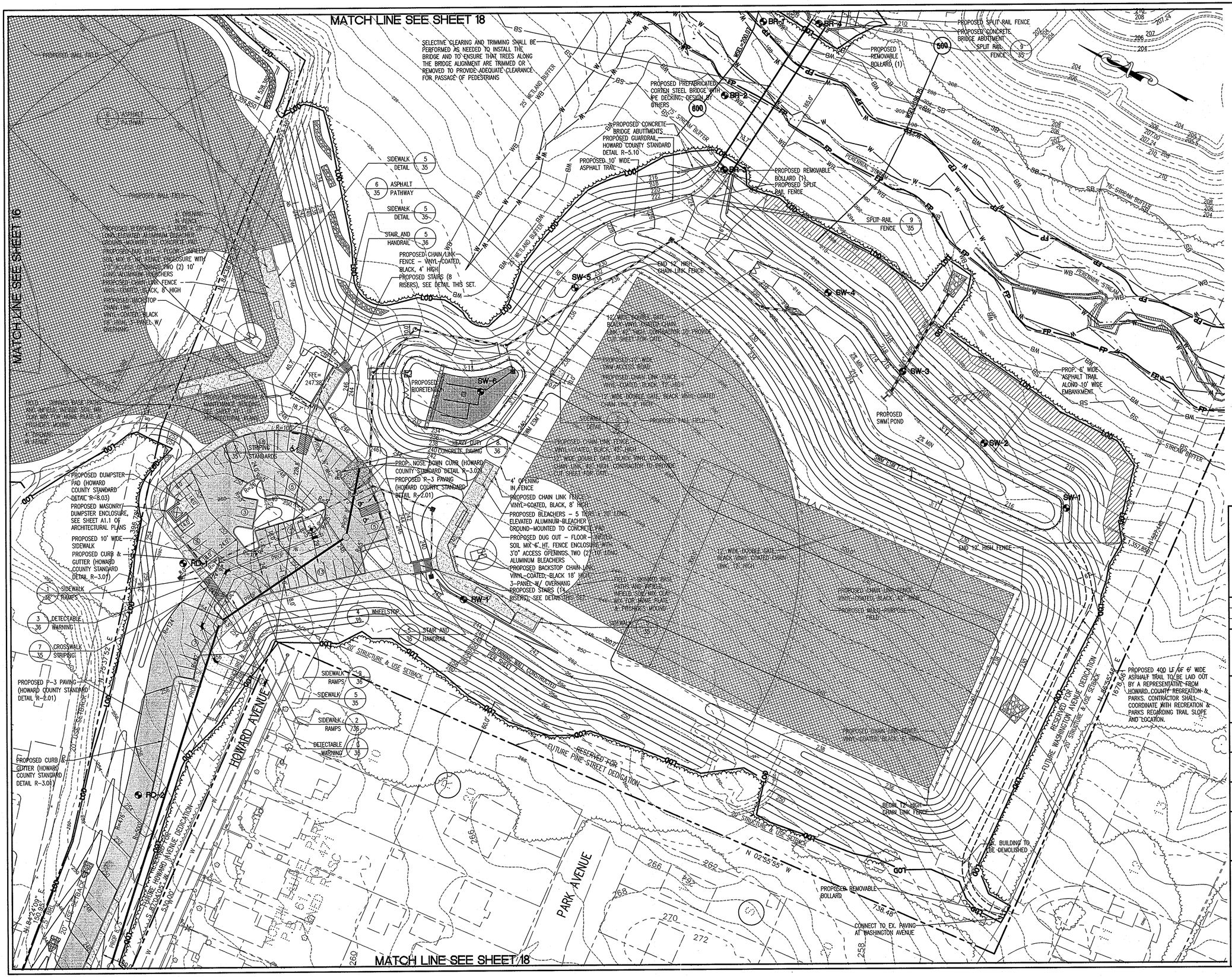


## LEGEND

- PROPERTY LINE
- 380 EXISTING 10' CONTOURS
- 378 EXISTING 2' CONTOURS
- 380 PROPOSED 10' CONTOURS
- 378 PROPOSED 2' CONTOURS
- EXISTING CURB AND GUTTER
- PROPOSED CURB & GUTTER
- EX. 48" RCP EXISTING STORM DRAIN
- 15"D PROPOSED STORM DRAIN
- SETBACK LINES
- PROPOSED SIDEWALK
- PROPOSED LIGHT POLE
- EXISTING LIGHTING
- EX. TREELINE
- PROPOSED TREELINE
- FP FLOODPLAIN
- SB STREAM BUFFER
- W WETLANDS
- WB WETLAND BUFFER
- LOD LIMIT OF DISTURBANCE
- PROPOSED SOD (ALTERNATE)
- 15' NON-WOODY BUFFER
- PROPOSED P-3 PAVING
- PROPOSED HEAVY DUTY CONCRETE PAVING

NOTES:

1. SEE RED LINE REVISION OF SDP-08-118 FOR GRADING AND TRAIL CONNECTIONS TO THE EAST SIDE OF THE PROPERTY.
2. SEEDING IS BASE BID. SOD IS BID ALTERNATE #3 FOR SCHOOL BALL FIELDS AND BID ALTERNATE #4 FOR COUNTY BALL FIELDS.
3. SEE SHEET 20 FOR ALL UTILITY AND STORMWATER MANAGEMENT INFORMATION. SHEET 24 FOR ALL SPOT ELEVATIONS.
4. SEE SEPARATE PLANS PREPARED BY MAHAN RYKIEL ASSOCIATES INC. FOR LAYOUT AND DETAILS OF BALL FIELDS AND FENCES.

CALL "MISS UTILITY" AT LEAST 48 HOURS IN ADVANCE OF CONSTRUCTION AT 1-800-257-7777

APPROVED : HOWARD COUNTY DEPARTMENT OF PLANNING AND ZONING.

DIRECTOR — DATE 12/3/10

CHIEF, DEVELOPMENT ENGINEERING DIVISION — DATE 11/18/10

CHIEF, DIVISION OF LAND DEVELOPMENT — DATE 12/10/10

| DATE | NO. | REVISION |
|---|---|---|

OWNER

HOWARD COUNTY DEPARTMENT OF PUBLIC WORKS
BUREAU OF ENGINEERING
9250 BENDIX ROAD, COLUMBIA, MARYLAND 21045
P 410 313 2414

DEVELOPER

HOWARD COUNTY DEPARTMENT OF PUBLIC WORKS
BUREAU OF ENGINEERING
9250 BENDIX ROAD, COLUMBIA, MARYLAND 21045
P 410 313 2414

PROJECT
# NORTH LAUREL COMMUNITY CENTER
CAPITAL PROJECT C-0304 PROJECT MGR: DAVE LOUDERMILK

AREA TAX MAP 47 GRID 22 & TAX MAP 50
GRIDS 3 & 4, PARCELS A-1, 187 & 1065 ZONED R-SC
6TH ELECTION DISTRICT
HOWARD COUNTY, MARYLAND

TITLE
## SITE DEVELOPMENT PLAN


**Patton Harris Rust & Associates**
Engineers. Surveyors. Planners. Landscape Architects.
8818 Centre Park Drive
Columbia, MD 21045
T 410.997.8900
F 410.997.9282


SEAL — 9-21-10

"PROFESSIONAL CERTIFICATION. I HEREBY CERTIFY THAT THESE DOCUMENTS WERE PREPARED OR APPROVED BY ME, AND THAT I AM A DULY LICENSED PROFESSIONAL ENGINEER UNDER THE LAWS OF THE STATE OF MARYLAND, LICENSE NO. 33954, EXPIRATION DATE: 01-24-11"

| | |
|---|---|
| DESIGNED BY : | JSN |
| DRAWN BY: | JSN |
| PROJECT NO : | 14466-1-2 C400SDP17.DWG |
| DATE : | SEPTEMBER 7, 2010 |
| SCALE : | 1" = 40' |
| DRAWING NO. | 17 OF 43 |

P:\Project\14466\1-2\PLANS\C400SDP17.DWG

SDP-10-010

MATCH LINE SEE SHEET 16

MATCH LINE SEE SHEET 17 AND 20

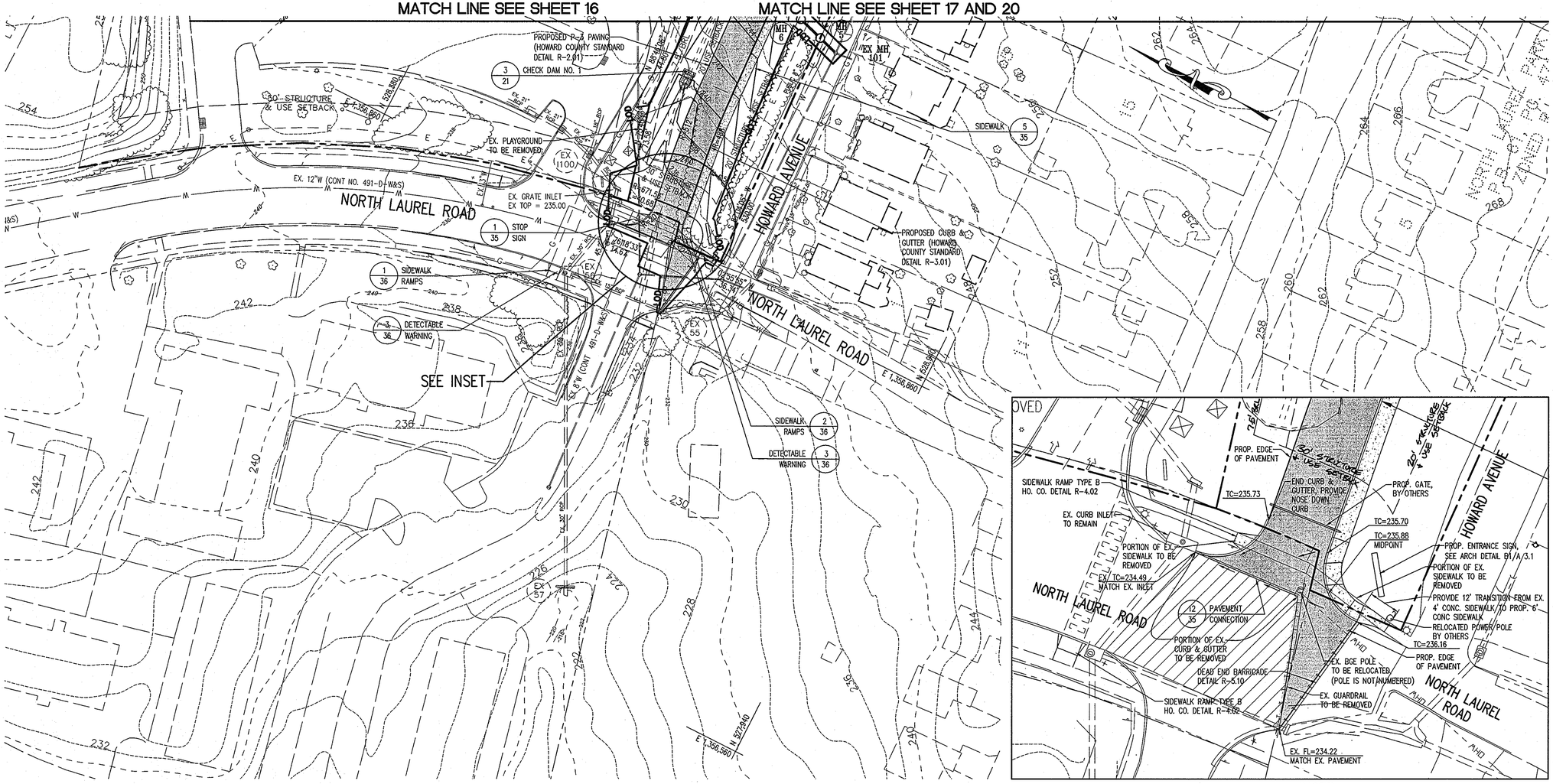





INSET

SCALE: 1"=20'

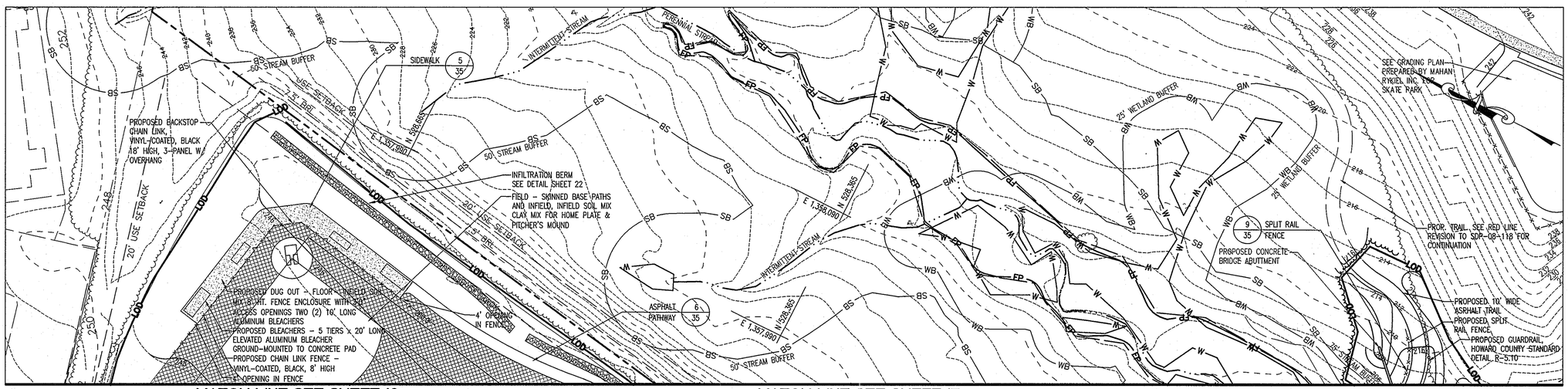


MATCH LINE SEE SHEET 16

MATCH LINE SEE SHEET 17

## LEGEND

- PROPERTY LINE
- EXISTING 10' CONTOURS
- EXISTING 2' CONTOURS
- PROPOSED 10' CONTOURS
- PROPOSED 2' CONTOURS
- EXISTING CURB AND GUTTER
- PROPOSED CURB & GUTTER
- EX. 48" RCP — EXISTING STORM DRAIN
- 15"D — PROPOSED STORM DRAIN
- SETBACK LINES
- PROPOSED SIDEWALK
- PROPOSED PAVING
- PROPOSED MILL AND OVERLAY
- PROPOSED LIGHT POLE
- EXISTING LIGHTING
- EX. TREELINE
- PROPOSED TREELINE
- FP — FLOODPLAIN
- SB — STREAM BUFFER
- W — WETLANDS
- WB — WETLAND BUFFER
- LOD — LIMIT OF DISTURBANCE
- PROPOSED SOD

NOTES:

1. SEE RED LINE REVISION OF SDP-08-118 FOR GRADING AND TRAIL CONNECTIONS TO THE EAST SIDE OF THE PROPERTY.
2. SEE SEPARATE PLANS PREPARED BY MAHAN RYKIEL ASSOCIATES INC. FOR LAYOUT AND DETAILS OF BALL FIELDS.
3. SEEDING IS BASE BID. SOD IS ALTERNATE #3 AND #4 FOR SCHOOL BALL FIELDS AND PARK BALL FIELDS.

CALL "MISS UTILITY" AT LEAST 48 HOURS IN ADVANCE OF CONSTRUCTION AT 1-800-257-7777

APPROVED : HOWARD COUNTY DEPARTMENT OF PLANNING AND ZONING.

DIRECTOR — DATE 12/13/10

CHIEF, DEVELOPMENT ENGINEERING DIVISION — DATE 11/30/10

CHIEF, DIVISION OF LAND DEVELOPMENT — DATE 12/10/10

| DATE | NO. | REVISION |
|---|---|---|

OWNER

HOWARD COUNTY DEPARTMENT OF PUBLIC WORKS
BUREAU OF ENGINEERING
9250 BENDIX ROAD, COLUMBIA, MARYLAND 21045
P 410 313 2414

DEVELOPER

HOWARD COUNTY DEPARTMENT OF PUBLIC WORKS
BUREAU OF ENGINEERING
9250 BENDIX ROAD, COLUMBIA, MARYLAND 21045
P 410 313 2414

PROJECT

# NORTH LAUREL COMMUNITY CENTER

CAPITAL PROJECT C-0304 PROJECT MGR: DAVE LOUDERMILK

AREA — TAX MAP 47 GRID 22 & TAX MAP 50
GRIDS 3 & 4, PARCELS A-1, 187 & 1065 ZONED R-SC
6TH ELECTION DISTRICT
HOWARD COUNTY, MARYLAND

TITLE

# SITE DEVELOPMENT PLAN


Patton Harris Rust & Associates
Engineers. Surveyors. Planners. Landscape Architects.
8818 Centre Park Drive
Columbia, MD 21045
T 410.997.8900
F 410.997.9282


SEAL — 9-21-10

STATE OF MARYLAND — STEPHEN CLARKE MITCHELL — REGISTERED PROFESSIONAL ENGINEER

BY: [signature]

"PROFESSIONAL CERTIFICATION. I HEREBY CERTIFY THAT THESE DOCUMENTS WERE PREPARED OR APPROVED BY ME, AND THAT I AM A DULY LICENSED PROFESSIONAL ENGINEER UNDER THE LAWS OF THE STATE OF MARYLAND, LICENSE NO. 33854, EXPIRATION DATE: 01-24-11"

| | |
|---|---|
| DESIGNED BY : | JSN |
| DRAWN BY: | JSN |
| PROJECT NO : | 14465-1-2 C400SDP18.DWG |
| DATE : | SEPTEMBER 7, 2010 |
| SCALE : | 1" = 40' |
| DRAWING NO. | 18 OF 43 |

P:\Project\14465\1-2\PLANS\C400SDP18.DWG

SDP-10-010

## LEGEND

EX. GRND. AT CENTER LINE
EX. GRND. 20' RIGHT
EX. GRND. 20' LEFT
PROP. GRADE AT CENTER LINE

## CURVE DATA TABLE

| CURVE NO. | DELTA | RADIUS | ARC | TAN | CHD. BRG. | CHD. LEN. |
|---|---|---|---|---|---|---|
| 1 | 04°53'38" | 500.00 | 42.71 | 21.37 | N84°37'16"E | 42.70 |
| 2 | 12°54'27" | 488.00 | 109.94 | 55.20 | N80°36'52"E | 109.70 |
| 3 | 36°22'46" | 112.00 | 71.11 | 36.80 | S87°38'59"E | 69.93 |

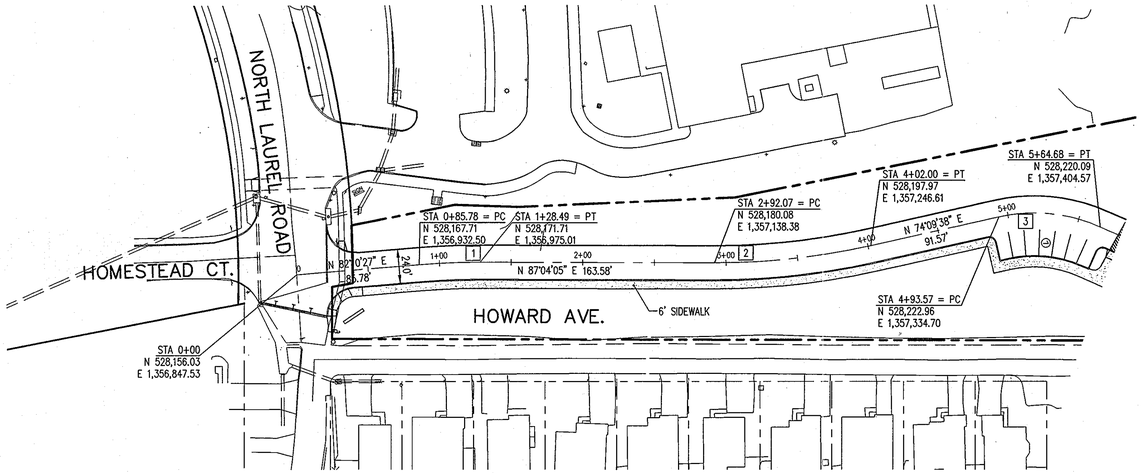


## PLAN
SCALE : 1"=50'

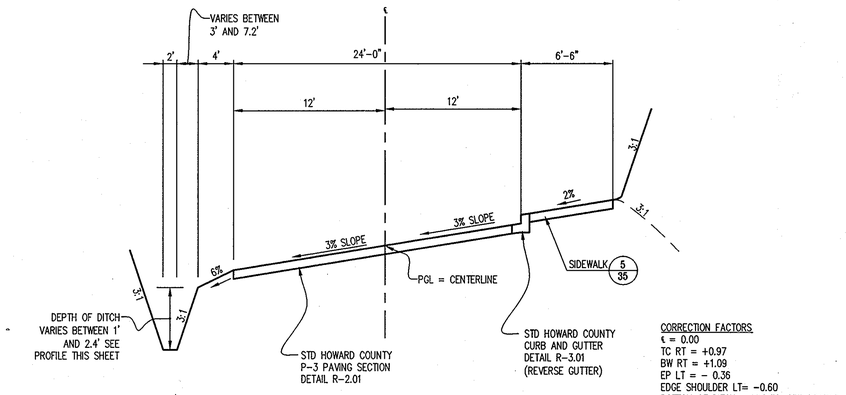


CORRECTION FACTORS
℄ = 0.00
TC RT = +0.97
BW RT = +1.09
EP LT = - 0.36
EDGE SHOULDER LT= -0.60
BOTTOM OF DITCH = VARIES. SEE PROFILE

## TYPICAL SECTION ENTRANCE ROAD
SCALE : NTS

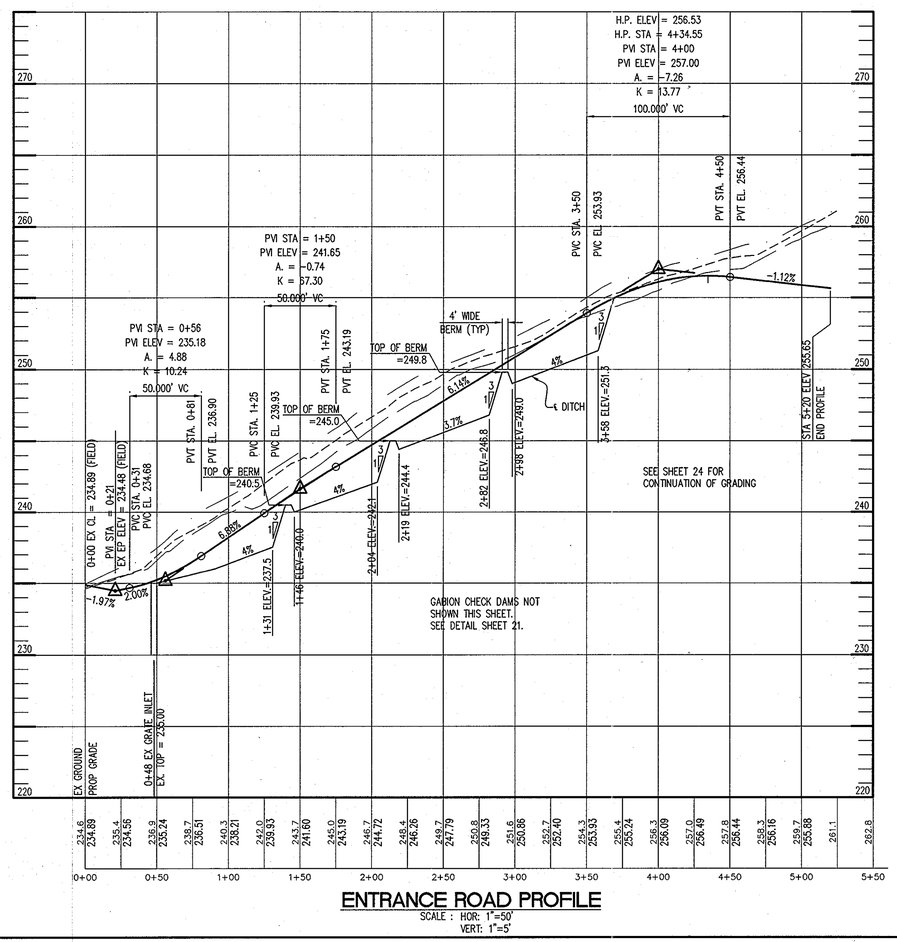


## ENTRANCE ROAD PROFILE
SCALE : HOR: 1"=50'
VERT: 1"=5'

APPROVED : HOWARD COUNTY DEPARTMENT OF PLANNING AND ZONING.

DIRECTOR — DATE 12/13/10
CHIEF, DEVELOPMENT ENGINEERING DIVISION — DATE 11/18/10
CHIEF, DIVISION OF LAND DEVELOPMENT — DATE 12/10/10

| DATE | NO. | REVISION |
|---|---|---|

OWNER
HOWARD COUNTY DEPARTMENT OF PUBLIC WORKS
BUREAU OF ENGINEERING
9250 BENDIX ROAD, COLUMBIA, MARYLAND 21045
P 410 313 2414

DEVELOPER
HOWARD COUNTY DEPARTMENT OF PUBLIC WORKS
BUREAU OF ENGINEERING
9250 BENDIX ROAD, COLUMBIA, MARYLAND 21045
P 410 313 2414

PROJECT
# NORTH LAUREL COMMUNITY CENTER
CAPITAL PROJECT C-0304 PROJECT MGR: DAVE LOUDERMILK

AREA TAX MAP 47 GRID 22 & TAX MAP 50
GRIDS 3 & 4, PARCELS A-1, 187 & 1065 ZONED R-SC
6TH ELECTION DISTRICT
HOWARD COUNTY, MARYLAND

TITLE
## GRADE ESTABLISHMENT PLAN
## ENTRY ROAD FROM NORTH LAUREL ROAD


**Patton Harris Rust & Associates**
Engineers. Surveyors. Planners. Landscape Architects.
8818 Centre Park Drive
Columbia, MD 21045
T 410.997.8900
F 410.997.9282


SEAL — STATE OF MARYLAND — STEPHEN CLARKE MITCHELL — No. 22654 — REGISTERED PROFESSIONAL ENGINEER
9-21-10
BY:
"PROFESSIONAL CERTIFICATION. I HEREBY CERTIFY THAT THESE DOCUMENTS WERE PREPARED OR APPROVED BY ME, AND THAT I AM A DULY LICENSED PROFESSIONAL ENGINEER UNDER THE LAWS OF THE STATE OF MARYLAND, LICENSE NO. 22654, EXPIRATION DATE: 01-24-11"

DESIGNED BY : SCM
DRAWN BY: SGM
PROJECT NO : 14466-1-2
C400SDP19.DWG
DATE : SEPTEMBER 7, 2010
SCALE : AS SHOWN
DRAWING NO. 19 OF 43

P:\Project\14466\1-2\PLANS\C400SDP19.DWG

SDP-10-010

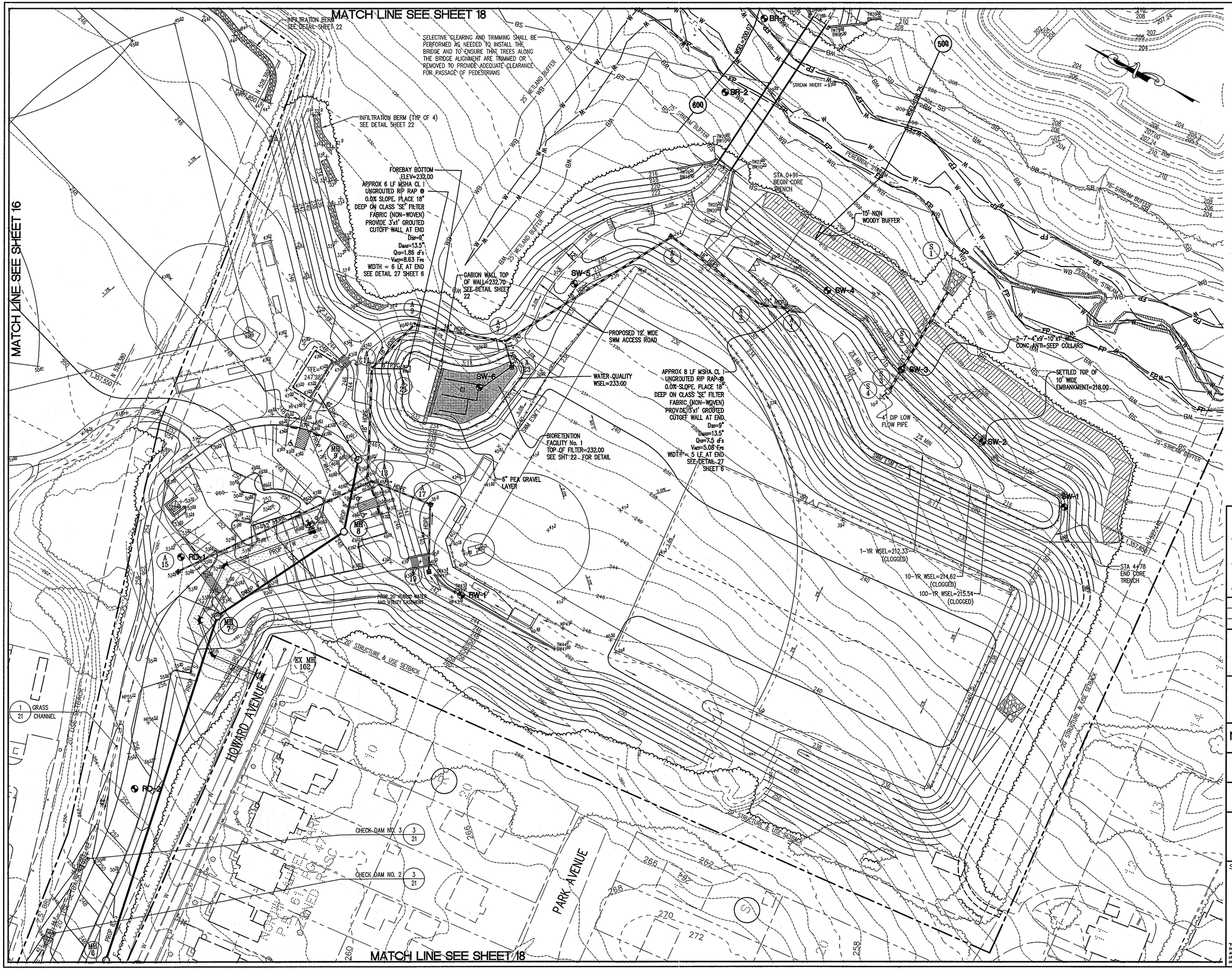


## LEGEND

- PROPERTY LINE
- 380 EXISTING 10' CONTOURS
- 378 EXISTING 2' CONTOURS
- 380 PROPOSED 10' CONTOURS
- 378 PROPOSED 2' CONTOURS
- EXISTING CURB AND GUTTER
- PROPOSED CURB & GUTTER
- EX. 48" RCP EXISTING STORM DRAIN
- 15" HDPE PROPOSED STORM DRAIN
- 8" S PROPOSED SANITARY SEWER
- PROP. 8" W PROPOSED PUBLIC WATER
- SETBACK LINES
- PROPOSED PUBLIC WATER AND UTILITY EASEMENT
- PROPOSED BIORETENTION FILTER MEDIA
- PROPOSED LIGHT POLE
- EXISTING LIGHTING
- EX. TREELINE
- PROPOSED LIMIT OF CLEARING
- FP FLOODPLAIN
- SB STREAM BUFFER
- W WETLANDS
- WB WETLAND BUFFER
- 15' NON-WOODY BUFFER

NOTE:

SEE SHEET 6 FOR INITIAL POND EMBANKMENT AND BARREL CONSTRUCTION

CALL "MISS UTILITY" AT LEAST 48 HOURS IN ADVANCE OF CONSTRUCTION AT 1-800-257-7777

APPROVED : HOWARD COUNTY DEPARTMENT OF PLANNING AND ZONING.

| | |
|---|---|
| DIRECTOR | DATE 12/13/10 |
| CHIEF, DEVELOPMENT ENGINEERING DIVISION | DATE 11/08/10 |
| CHIEF, DIVISION OF LAND DEVELOPMENT | DATE 12/10/10 |

| DATE | NO. | REVISION |
|---|---|---|

OWNER

HOWARD COUNTY DEPARTMENT OF PUBLIC WORKS
BUREAU OF ENGINEERING
9250 BENDIX ROAD, COLUMBIA, MARYLAND 21045
P 410 313 2414

DEVELOPER

HOWARD COUNTY DEPARTMENT OF PUBLIC WORKS
BUREAU OF ENGINEERING
9250 BENDIX ROAD, COLUMBIA, MARYLAND 21045
P 410 313 2414

PROJECT
# NORTH LAUREL COMMUNITY CENTER
CAPITAL PROJECT C-0304 PROJECT MGR: DAVE LOUDERMILK

AREA TAX MAP 47 GRID 22 & TAX MAP 50
GRIDS 3 & 4, PARCELS A-1, 187 & 1065 ZONED R-SC
6TH ELECTION DISTRICT
HOWARD COUNTY, MARYLAND

TITLE
## STORMWATER MANAGEMENT AND UTILITY PLAN


Patton Harris Rust & Associates
Engineers. Surveyors. Planners. Landscape Architects.
8818 Centre Park Drive
Columbia, MD 21045
T 410.997.8900
F 410.997.9282


SEAL 9-21-10

"PROFESSIONAL CERTIFICATION. I HEREBY CERTIFY THAT THESE DOCUMENTS WERE PREPARED OR APPROVED BY ME, AND THAT I AM A DULY LICENSED PROFESSIONAL ENGINEER UNDER THE LAWS OF THE STATE OF MARYLAND, LICENSE NO. 33954, EXPIRATION DATE: 01-24-11"

| | |
|---|---|
| DESIGNED BY | SCM |
| DRAWN BY | JSN |
| PROJECT NO | 14466-1-2 C400SDP20.DWG |
| DATE | SEPTEMBER 7, 2010 |
| SCALE | 1" = 40' |
| DRAWING NO. | 20 OF 43 |

P:\Project\14466\1-2\PLANS\C400SDP20.DWG

SDP-10-010

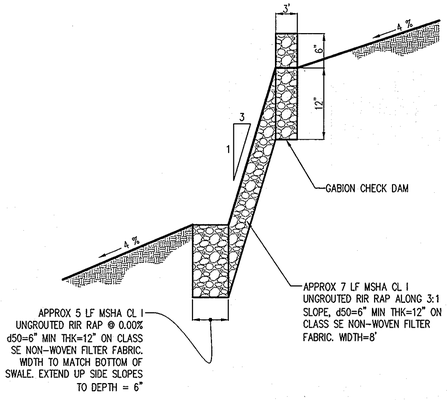


## 2/21 SECTION THROUGH CHECK DAM

SCALE: HOR: 1" = 10'
VERT: 1" = 1'

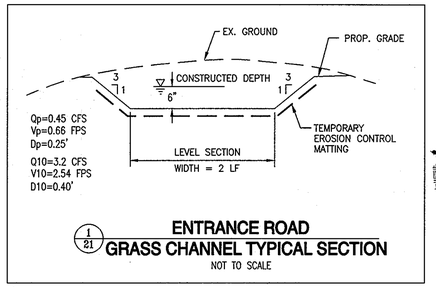


## 1/21 ENTRANCE ROAD GRASS CHANNEL TYPICAL SECTION

NOT TO SCALE

| CHECK DAM | ELEV A | ELEV B |
|---|---|---|
| 1 | 240.00 | 240.50 |
| 2 | 244.40 | 244.90 |
| 3 | 249.00 | 249.50 |

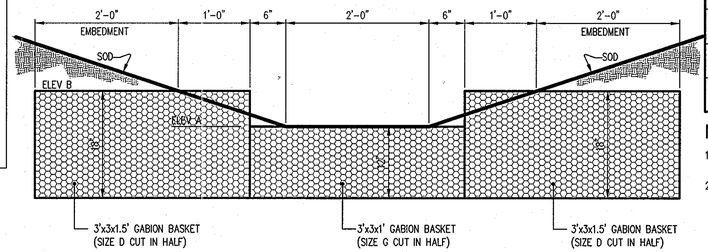


## 3/21 CHECK DAM DETAIL

SCALE: 1"=1'

## SWM STRUCTURE SCHEDULE

| NUMBER | TYPE | LOCATION | | TOP ELEVATION | | SIZE | REMARKS |
|---|---|---|---|---|---|---|---|
| | | NORTHING | EASTING | UPPER | LOWER | | |
| S-1 | TYPE C ENDWALL | 527,719.9327 | 1,357,980.0303 | 196.75 | * | DIA = 24" | D-5.21 |
| S-2 | 4'-0" MANHOLE | 527,723.8415 | 1,357,919.8268 | 212.86 | * | DIA = 4'-0" | G-5.12 |
| S-3 | CONTROL STRUCTURE | 527,727.5629 | 1,357,871.0645 | 218.00 | * | 4' x 4" | SEE DETAIL THIS SHEET |
| S-4 | TYPE C ENDWALL | 527,730.2731 | 1,357,863.5375 | 211.08 | * | DIA = 4" | D-5.21 USE SPEC FOR D=12" MODIFY H=13" |

## NOTES

1) ALL STRUCTURES ARE HOWARD COUNTY STANDARDS UNLESS NOTED OTHERWISE. CONTRACTOR MAY USE PRECAST STRUCTURE WHERE AVAILABLE TO MEET THE STANDARD STRUCTURE SPECIFIED.

2) STATIONS ARE GIVEN TO CENTER OF STRUCTURE UNLESS NOTED OTHERWSE.

### GENERAL NOTES FOR TRASH RACK

1. STEEL TO CONFORM TO ASTM A-36.
2. ALL SURFACES OF TRASH RACK MUST BE HOT DIPPED GALVANIZED AFTER FABRICATION.
3. TRASH RACK TO BE FASTENED TO WALL WITH ½" MASONRY ANCHORS TRASH RACK TO BE REMOVABLE.
4. TRASH RACK TO BE CENTERED OVER OPENING.
5. TRASH RACK SHALL BE PAINTED BATTLESHIP GREY.

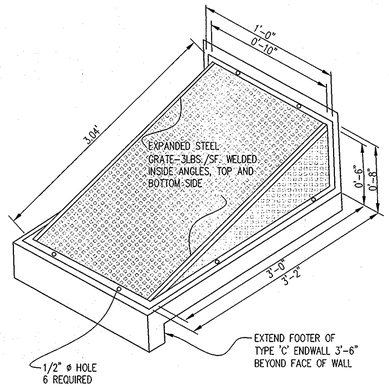


## 4/21 LOW FLOW TRASH RACK DETAIL

(NOT TO SCALE)

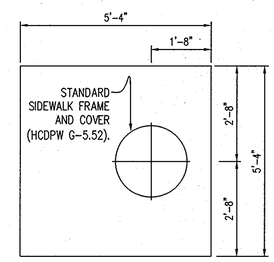


## TOP SLAB

SCALE: 1"=2'

### RISER GENERAL NOTES:

1. THIS DETAIL IS FOR A PRECAST RISER ONLY.
2. SHOP DRAWINGS MUST BE APPROVED BY THE DESIGN ENGINEER PRIOR TO FABRICATION.
3. RISER STRUCTURES MUST BE REINFORCED CONCRETE.
4. ALL CONNECTIONS SHALL BE WATERTIGHT.

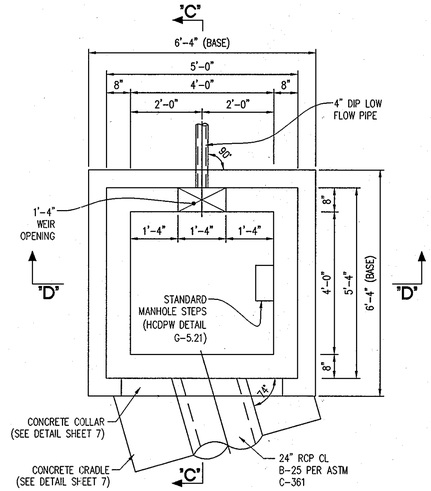


## PLAN SECTION TOP SLAB REMOVED

SCALE: 1"=2'

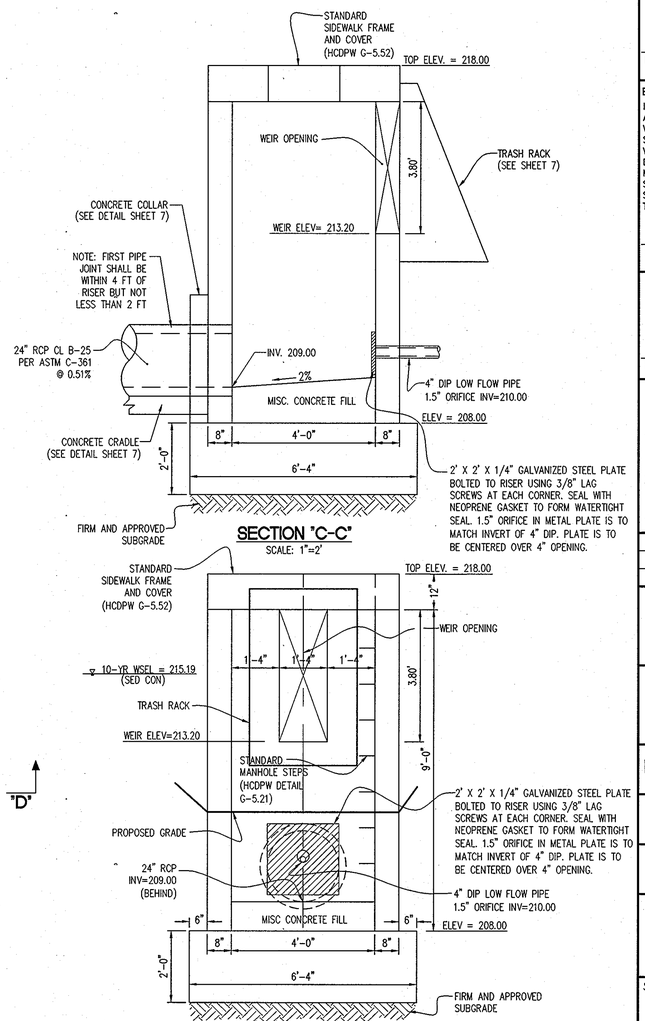


## SECTION "C-C"

SCALE: 1"=2'




## SECTION "D-D"

SCALE: 1"=2'

## 5/21 CONCRETE RISER DETAIL STRUCTURE S3

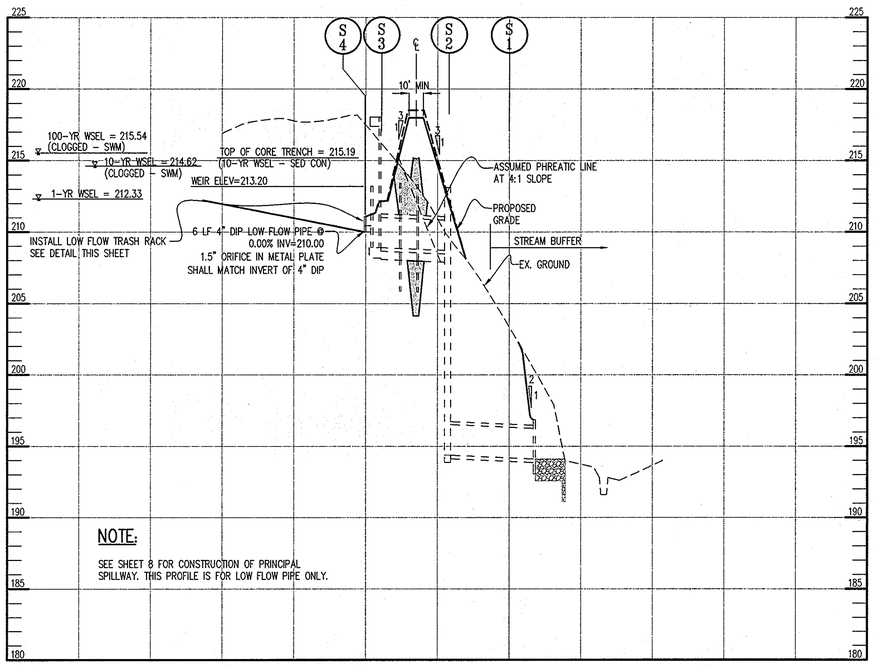


**NOTE:**

SEE SHEET 8 FOR CONSTRUCTION OF PRINCIPAL SPILLWAY. THIS PROFILE IS FOR LOW FLOW PIPE ONLY.

## PRINCIPAL SPILLWAY PROFILE - LOW FLOW PIPE

SCALE : HOR: 1"=50'
VERT: 1"=5'

**BY THE DEVELOPER :**

I/WE CERTIFY THAT ALL DEVELOPMENT AND/OR CONSTRUCTION WILL BE DONE ACCORDING TO THESE PLANS, AND THAT ANY RESPONSIBLE PERSONNEL INVOLVED IN THE CONSTRUCTION PROJECT WILL HAVE A CERTIFICATE OF ATTENDANCE AT A DEPARTMENT OF THE ENVIRONMENT APPROVED TRAINING PROGRAM FOR THE CONTROL OF SEDIMENT AND EROSION BEFORE BEGINNING THE PROJECT. I SHALL ENGAGE A REGISTERED PROFESSIONAL ENGINEER TO SUPERVISE POND CONSTRUCTION AND PROVIDE THE HOWARD SOIL CONSERVATION DISTRICT WITH AN "AS-BUILT" PLAN OF THE POND WITHIN 30 DAYS OF COMPLETION. I ALSO AUTHORIZE PERIODIC ON-SITE INSPECTIONS BY THE HOWARD SOIL CONSERVATION DISTRICT.

DEVELOPER — DATE

**BY THE ENGINEER :**

I CERTIFY THAT THIS PLAN FOR POND CONSTRUCTION, EROSION AND SEDIMENT CONTROL REPRESENTS A PRACTICAL AND WORKABLE PLAN BASED ON MY PERSONAL KNOWLEDGE OF THE SITE CONDITIONS. THIS PLAN WAS PREPARED IN ACCORDANCE WITH THE REQUIREMENTS OF THE HOWARD SOIL CONSERVATION DISTRICT. I HAVE NOTIFIED THE DEVELOPER THAT HE/SHE MUST ENGAGE A REGISTERED PROFESSIONAL ENGINEER TO SUPERVISE POND CONSTRUCTION AND PROVIDE THE HOWARD SOIL CONSERVATION DISTRICT WITH AN "AS-BUILT" PLAN OF THE POND WITHIN 30 DAYS OF COMPLETION.

Sheryl C. Mitchell — 9-21-10
ENGINEER — DATE

THESE PLANS FOR SMALL POND CONSTRUCTION, SOIL EROSION AND SEDIMENT CONTROL MEET THE REQUIREMENTS OF THE HOWARD SOIL CONSERVATION DISTRICT.

HOWARD SOIL CONSERVATION DISTRICT — 11/1/10 DATE

APPROVED : HOWARD COUNTY DEPARTMENT OF PLANNING AND ZONING.

DIRECTOR — 12/13/10 DATE

CHIEF, DEVELOPMENT ENGINEERING DIVISION — 11/18/10 DATE

CHIEF, DIVISION OF LAND DEVELOPMENT — 12/10/10 DATE

| DATE | NO. | REVISION |
|---|---|---|

**OWNER**

HOWARD COUNTY DEPARTMENT OF PUBLIC WORKS
BUREAU OF ENGINEERING
9250 BENDIX ROAD, COLUMBIA, MARYLAND 21045
P 410 313 2414

**DEVELOPER**

HOWARD COUNTY DEPARTMENT OF PUBLIC WORKS
BUREAU OF ENGINEERING
9250 BENDIX ROAD, COLUMBIA, MARYLAND 21045
P 410 313 2414

PROJECT
# NORTH LAUREL COMMUNITY CENTER
CAPITAL PROJECT C-0304 PROJECT MGR: DAVE LOUDERMILK

AREA TAX MAP 47 GRID 22 & TAX MAP 50
GRIDS 3 & 4, PARCELS A-1, 187 & 1065 ZONED R-SC
6TH ELECTION DISTRICT
HOWARD COUNTY, MARYLAND

TITLE
## STORMWATER MANAGEMENT PROFILES AND DETAILS


**Patton Harris Rust & Associates**
Engineers. Surveyors. Planners. Landscape Architects.
8818 Centre Park Drive
Columbia, MD 21045
T 410.997.8900
F 410.997.9282


SEAL

STATE OF MARYLAND — SHERYL CLARKE MITCHELL — NO. 21354 — REGISTERED PROFESSIONAL ENGINEER

BY: Sheryl C. Mitchell

"PROFESSIONAL CERTIFICATION. I HEREBY CERTIFY THAT THESE DOCUMENTS WERE PREPARED OR APPROVED BY ME, AND THAT I AM A DULY LICENSED PROFESSIONAL ENGINEER UNDER THE LAWS OF THE STATE OF MARYLAND, LICENSE NO. 21354, EXPIRATION DATE: 01-24-11"

| | |
|---|---|
| DESIGNED BY : | SCM |
| DRAWN BY: | SGM |
| PROJECT NO : | 14466-1-2 C40DSDP21.DWG |
| DATE : | SEPTEMBER 7, 2010 |
| SCALE : | AS SHOWN |
| DRAWING NO. | 21 OF 43 |

P:\Projects\14466\1-2\PLANS\C40DSDP21.DWG

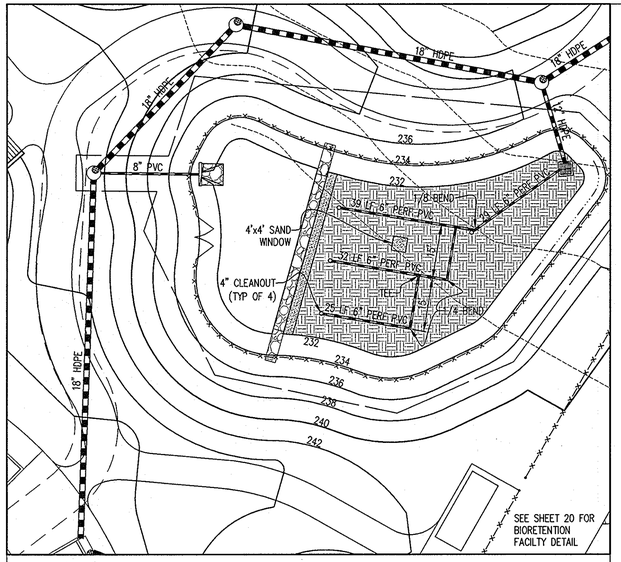


## BIORETENTION UNDERDRAIN DETAIL

SCALE: 1"=20'

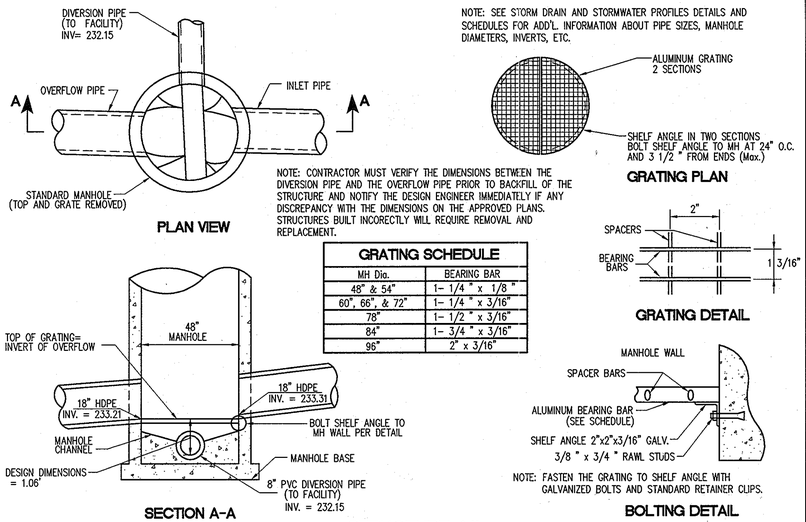


| GRATING SCHEDULE | |
|---|---|
| MH Dia. | BEARING BAR |
| 48" & 54" | 1- 1/4 " x 1/8 " |
| 60", 66", & 72" | 1- 1/4 " x 3/16" |
| 78" | 1- 1/2 " x 3/16" |
| 84" | 1- 3/4 " x 3/16" |
| 96" | 2" x 3/16" |

## STRUCTURE A11 DIVERSION STRUCTURE MANHOLE DETAIL

NOT TO SCALE

| BIO-RETENTION AREA PLANT SCHEDULE | | | | | |
|---|---|---|---|---|---|
| SYMBOL | QTY. | SCIENTIFIC/ COMMON NAME | SIZE | ROOT | REMARKS |
| SHRUBS | | | | | |
| CO | 41 | CEPHALANTHUS OCCIDENTALIS BUTTONBUSH | #5 | CONT | 30" HT, FULL |
| IG | 47 | ILEX GLABRA 'SHAMROCK' SHAMROCK INKBERRY HOLLY | #5 | CONT | 30" HT, FULL |
| IV | 18 | ILEX VERTICILLATA WINTERBERRY HOLLY | #5 | CONT | 30" HT, FULL |
| VD | 22 | VIBURNUM DENTATUM ARROWWOOD VIBURNUM | #5 | CONT | 30" HT, FULL |
| HERBACEOUS | | | | | |
| EPU | 397 | ECHINACEA PURPUREA PURPLE CONEFLOWER | #1 | CONT | 24" O.C. |
| EPE | 143 | EUPATORIUM MACULATUM JOE PYE WEED | #1 | CONT | 36" O.C. |
| IVE | 745 | IRIS VERSICOLOR BLUEFLAG IRIS | #1 | CONT | 18" O.C. |

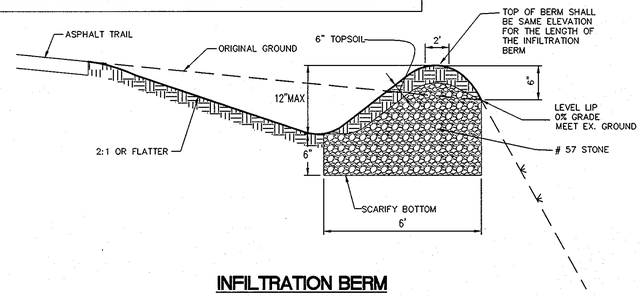


## INFILTRATION BERM

NOT TO SCALE

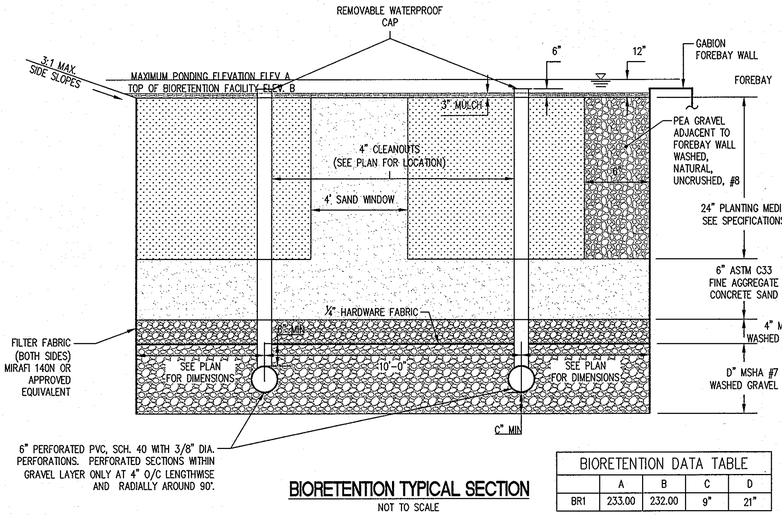


## BIORETENTION TYPICAL SECTION

NOT TO SCALE

| BIORETENTION DATA TABLE | | | | |
|---|---|---|---|---|
| | A | B | C | D |
| BR1 | 233.00 | 232.00 | 9" | 21" |

## BIORETENTION SPECIFICATIONS

1. THE UNDERDRAIN PIPE MUST BE 6-INCH DIAMETER SCHEDULE 40 OR STRONGER PERFORATED PVC PIPE AT 0.00% SLOPE. A MINIMUM OF THREE INCHES OF GRAVEL MUST BE PLACED UNDER THE PIPE, WITH A MINIMUM OF 6 INCHES OF GRAVEL OVER THE PIPE. PERFORATIONS MUST BE 3/8 INCH IN DIAMETER AND MUST BE LOCATED 4 INCHES ON CENTER, EVERY 90 DEGREES AROUND THE PIPE. PERFORATED PIPE MUST BEGIN AT LEAST 5 FT. INSIDE THE FILTER MEDIA. FILTER FABRIC MUST NOT BE WRAPPED AROUND THE UNDERDRAIN PIPE.
2. 4" INCH CLEAN-OUTS SHOULD BE USED. CLEANOUTS FOR EACH PIPE SHOULD EXTEND 6 INCHES ABOVE THE TOP OF THE PLANTING MEDIA AND HAVE A REMOVABLE CAP.
3. THE GRAVEL LAYER SURROUNDING THE UNDERDRAIN PIPES MUST MEET MSHA SIZE #7 (TABLE 901A), AND MUST PROVIDE A MINIMUM OF 6 INCHES COVER OVER THE PIPE, AND MINIMUM 3 INCHES UNDER THE PIPE. NO GEOTEXTILE OR FILTER FABRIC IS ALLOWED ANYWHERE WITHIN THE FILTER MEDIA (STONE OR SAND).
4. A MINIMUM 6-INCH FINE AGGREGATE SAND LAYER SHALL BE PROVIDED BELOW THE SOIL FILTER/PLANTING MEDIA. A SAND WINDOW SHALL EXTEND FROM THE SAND FILTER TO THE SURFACE OF THE PLANTING MEDIA. THE SAND WINDOW MUST BE ASTM C33 FINE AGGREGATE CONCRETE SAND. MANUFACTURED SAND OR STONE DUST IS NOT ACCEPTABLE.
5. THE PLANTING MEDIA SHALL CONSIST OF 1/3 PERLITE, 1/3 COMPOST AND 1/3 TOPSOIL. THE PERLITE SHALL BE COARSE GRADE HORTICULTURAL PERLITE. THE COMPOST SHALL BE HIGH GRADE COMPOST FREE OF STONES AND PARTIALLY COMPOSTED WOODY MATERIAL. THE SOIL SHALL MEET THE FOLLOWING MINIMUM CRITERIA: CONTAIN NO MORE THAN 10% CLAY, 30-55% SILT AND 35-60% SAND. THE SOIL SHALL BE FREE OF STONES, STUMPS, ROOTS OR OTHER SIMILAR OBJECTS LARGER THAN 2 INCHES. THE FIRST LAYER OF THE PLANTING MEDIA SHALL BE LIGHTLY TILLED TO MIX IT INTO THE SAND LAYER, SO NOT TO CREATE A DEFINITIVE BOUNDARY. THE PLANTING MATERIAL SHALL BE FLOODED AFTER PLACEMENT. ANY SETTLEMENT THAT OCCURS SHALL BE FILLED BACK TO THE DESIGN ELEVATION.
6. THE SURFACE MULCH LAYER WILL CONSIST OF STANDARD FINE SHREDDED AGED HARDWOOD MULCH. THE MULCH SHOULD BE UNIFORMLY TO A DEPTH OF 2 TO 3 INCHES. YEARLY REPLENISHING MAY BE NECESSARY. PINE BARK IS NOT ACCEPTABLE. COORDINATE WITH PLANTING SPECIFICATIONS ON SHEET 32.

## BIORETENTION AREA OPERATION AND MAINTENANCE SCHEDULE

1. ANNUAL MAINTENANCE OF PLANT MATERIAL, MULCH LAYER AND SOIL LAYER IS REQUIRED. MAINTENANCE OF MULCH AND SOIL IS LIMITED TO CORRECTING AREAS OF EROSION OR WASH OUT. ANY MULCH REPLACEMENT SHALL BE DONE IN THE SPRING. PLANT MATERIAL SHALL BE CHECKED FOR DISEASE AND INSECT INFESTATION AND MAINTENANCE WILL ADDRESS DEAD MATERIAL AND PRUNING.
2. SCHEDULE OF PLANTING INSPECTION WILL BE TWICE A YEAR IN SPRING AND FALL. THIS INSPECTION WILL INCLUDE REMOVAL OF DEAD AND DISEASED VEGETATION CONSIDERED BEYOND TREATMENT, TREATMENT OF ALL DISEASED TREES AND SHRUBS AND REPLACEMENT OF ALL DEFICIENT STAKES AND WIRES.
3. MULCH SHALL BE INSPECTED EACH SPRING. REMOVE PREVIOJS MULCH LAYER BEFORE APPLYING NEW LAYER ONCE EVERY 2 TO 3 YEARS.
4. SOIL EROSION TO BE ADDRESSED ON AN AS NEEDED BASIS, WITH A MINIMUM OF ONCE A MONTH AND AFTER HEAVY STORMS.

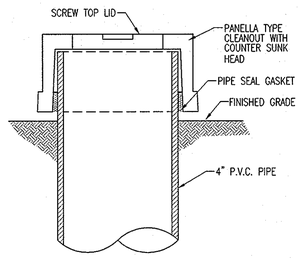


## CLEANOUT / OBSERVATION WELL CAP

(NOT TO SCALE)

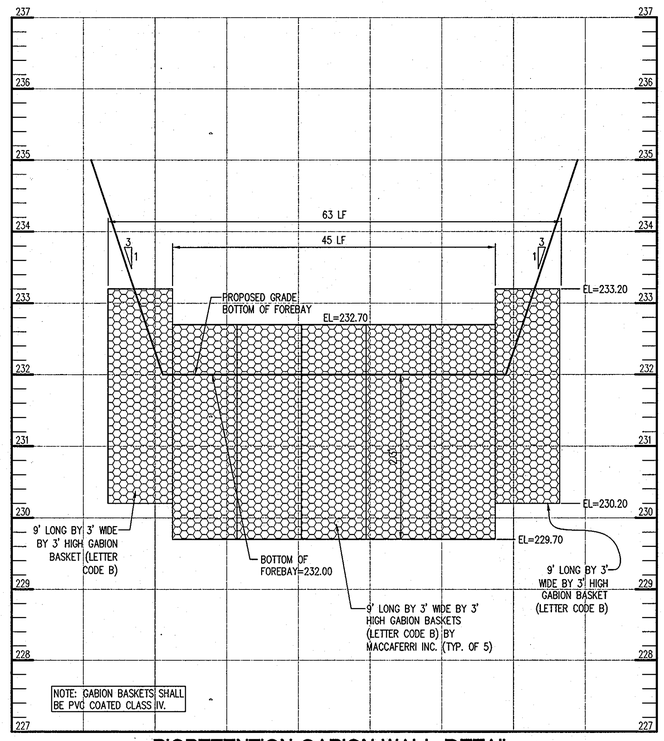


## BIORETENTION GABION WALL DETAIL

SCALE : HOR: 1"=10'
VERT: 1"=1'

THESE PLANS FOR SMALL POND CONSTRUCTION, SOIL EROSION AND SEDIMENT CONTROL MEET THE REQUIREMENTS OF THE HOWARD SOIL CONSERVATION DISTRICT.

HOWARD SOIL CONSERVATION DISTRICT DATE

APPROVED : HOWARD COUNTY DEPARTMENT OF PLANNING AND ZONING.

DIRECTOR 12/13/10 DATE

CHIEF, DEVELOPMENT ENGINEERING DIVISION 11/8/10 DATE

CHIEF, DIVISION OF LAND DEVELOPMENT 12/10/10 DATE

| DATE | NO. | REVISION |
|---|---|---|

OWNER

HOWARD COUNTY DEPARTMENT OF PUBLIC WORKS
BUREAU OF ENGINEERING
9250 BENDIX ROAD, COLUMBIA, MARYLAND 21045
P 410 313 2414

DEVELOPER

HOWARD COUNTY DEPARTMENT OF PUBLIC WORKS
BUREAU OF ENGINEERING
9250 BENDIX ROAD, COLUMBIA, MARYLAND 21045
P 410 313 2414

PROJECT
**NORTH LAUREL COMMUNITY CENTER**
CAPITAL PROJECT C-0304 PROJECT MGR: DAVE LOUDERMILK

AREA TAX MAP 47 GRID 22 & TAX MAP 50
GRIDS 3 & 4, PARCELS A-1, 187 & 1065 ZONED R-SC
6TH ELECTION DISTRICT
HOWARD COUNTY, MARYLAND

TITLE
STORMWATER MANAGEMENT DETAILS


**Patton Harris Rust & Associates**
Engineers. Surveyors. Planners. Landscape Architects.
8818 Centre Park Drive
Columbia, MD 21045
T 410.997.8900
F 410.997.9282


SEAL

STATE OF MARYLAND · STEVEN CLARKE MYERS · No. 33954 · REGISTERED PROFESSIONAL ENGINEER

9-21-10

BY: S. Myers

"PROFESSIONAL CERTIFICATION. I HEREBY CERTIFY THAT THESE DOCUMENTS WERE PREPARED OR APPROVED BY ME, AND THAT I AM A DULY LICENSED PROFESSIONAL ENGINEER UNDER THE LAWS OF THE STATE OF MARYLAND, LICENSE NO. 33954, EXPIRATION DATE: 01-24-11"

| | |
|---|---|
| DESIGNED BY : | SCM |
| DRAWN BY: | SGM |
| PROJECT NO : | 14466-1-2 C400SDP22.DWG |
| DATE : | SEPTEMBER 7, 2010 |
| SCALE : | AS SHOWN |
| DRAWING NO. | 22 OF 43 |

P:\Project\14466\1-2\PLANS\C400SDP22.DWG

SDP-10-010

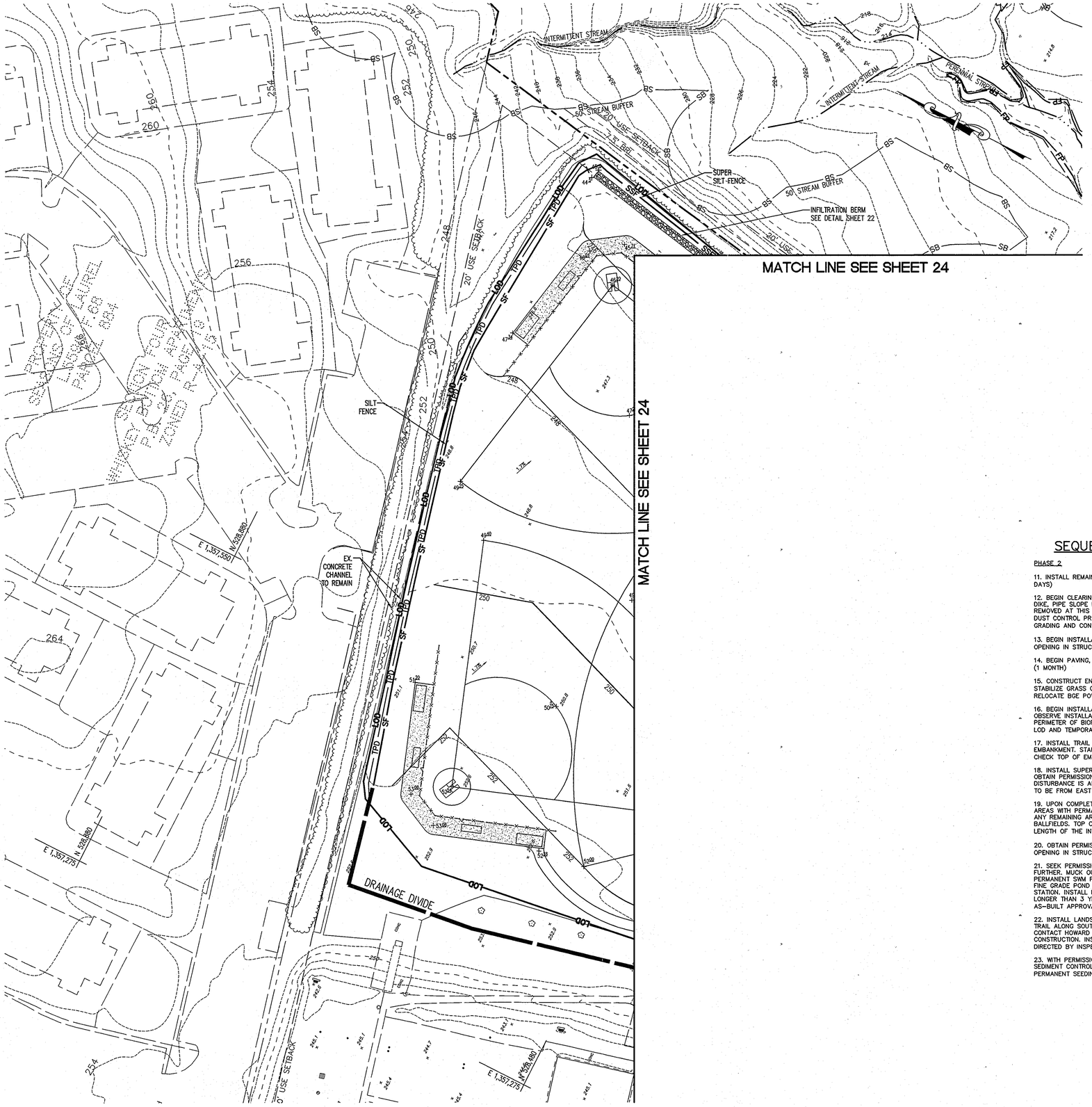


## LEGEND

- PROPERTY LINE
- 380 EXISTING 10' CONTOURS
- 378 EXISTING 2' CONTOURS
- 380 PROPOSED 10' CONTOURS
- 378 PROPOSED 2' CONTOURS
- EXISTING CURB AND GUTTER
- PROPOSED CURB & GUTTER
- EX. 48" RCP EXISTING STORM DRAIN
- 15"D PROPOSED STORM DRAIN
- SETBACK LINES
- EX. TREELINE
- LIMIT OF CLEARING
- FP FLOODPLAIN
- SB STREAM BUFFER
- W WETLANDS
- WB WETLAND BUFFER
- TPD TREE PROTECTION FENCE
- LOD LIMIT OF DISTURBANCE

## SEQUENCE OF CONSTRUCTION

PHASE 2

11. INSTALL REMAINING PERIMETER CONTROLS AS SHOWN ON SHEETS 23 AND 24. (2 DAYS)

12. BEGIN CLEARING AND GRADING FOR BALLFIELDS ON ELEMENTARY SCHOOL SITE. EARTH DIKE, PIPE SLOPE DRAIN, AND OUTFALL PROTECTION FROM PHASE I PLAN MAY BE REMOVED AT THIS TIME, FROM POINT A TO POINT B AS SHOWN ON SHEET 3. FOLLOW DUST CONTROL PRACTICES PER MDE DETAIL H-30-1 (SEE SHEET 6) THROUGHOUT THE GRADING AND CONSTRUCTION ACTIVITY ON THE SITE. (2 WEEKS).

13. BEGIN INSTALLATION OF WATER, SEWER AND STORM DRAIN. TEMPORARILY BLOCK 6" OPENING IN STRUCTURE A11. (1 MONTH)

14. BEGIN PAVING, CURB AND GUTTER, SIDEWALK, TRAILS AND BUILDING CONSTRUCTION. (1 MONTH)

15. CONSTRUCT ENTRY ROAD ALONG WITH GRASS CHANNELS AND GABION CHECK DAMS. STABILIZE GRASS CHANNELS IMMEDIATELY WITH EROSION CONTROL MATTING (ECM). RELOCATE BGE POWER POLE AT ENTRANCE. (2 WEEKS)

16. BEGIN INSTALLATION OF BIORETENTION FACILITY. CONTACT PHRA ENGINEER TO OBSERVE INSTALLATION OF BIORETENTION FACILITY. INSTALL SILT FENCE AROUND PERIMETER OF BIORETENTION FILTER MEDIA. AT THIS TIME EARTH DIKE ALONG EASTERN LOD AND TEMPORARY SWALE MAY BE REMOVED. (1 WEEK)

17. INSTALL TRAIL DOWNHILL FROM BIORETENTION FACILITY AND ALONG TOP OF EMBANKMENT. STABILIZE SWALE ADJACENT TO TRAIL IMMEDIATELY WITH ECM. GRADE CHECK TOP OF EMBANKMENT ONCE TRAIL IS INSTALLED. (3 DAYS)

18. INSTALL SUPER SILT FENCE ALONG STREAM BUFFER FOR BRIDGE CONSTRUCTION. OBTAIN PERMISSION FROM INSPECTOR AND BEGIN BRIDGE CONSTRUCTION. NO DISTURBANCE IS ALLOWED WITHIN WETLAND BUFFER. ACCESS TO EAST SIDE OF BRIDGE IS TO BE FROM EAST SIDE OF PARK. SEE SDP-08-118 (RED-LINE REVISION) (1 MONTH)

19. UPON COMPLETION OF ALL CONSTRUCTION AND STABILIZATION OF ALL GRASSED AREAS WITH PERMANENT SEEDING, APPLY FINAL PAVING SURFACE COURSE AND STABILIZE ANY REMAINING AREAS. INSTALL INFILTRATION BERMS ADJACENT TO ELEMENTARY SCHOOL BALLFIELDS. TOP OF INFILTRATION BERMS SHALL BE THE SAME ELEVATION FOR THE LENGTH OF THE INFILTRATION BERM. (3 DAYS)

20. OBTAIN PERMISSION FROM INSPECTOR AND FLUSH STORM DRAIN. THEN UNBLOCK 6" OPENING IN STRUCTURE A11. (1 DAY)

21. SEEK PERMISSION FROM SEDIMENT CONTROL INSPECTOR BEFORE PROCEEDING FURTHER. MUCK OUT BASIN 1 AND BEGIN CONVERSION OF SEDIMENT BASIN TO PERMANENT SWM POND. PROVIDE FILL AND RE-GRADE ALL 2:1 SLOPES TO 3:1 SLOPES. FINE GRADE POND BOTTOM. REMOVE DRAWDOWN DEVICE AND REMOVABLE PUMPING STATION. INSTALL LOW FLOW PIPE. INSTALL TRASH RACKS. BASIN MAY NOT REMAIN LONGER THAN 3 YEARS. CONTRACTOR IS TO PROVIDE INSPECTOR WITH COPY OF AS-BUILT APPROVAL LETTER FROM HOWARD SCD. (3 WEEKS)

22. INSTALL LANDSCAPING. OBTAIN PERMISSION FROM INSPECTOR AND INSTALL ASPHALT TRAIL ALONG SOUTHERN LOD ONCE EARTH DIKE IS REMOVED. CONTRACTOR IS TO CONTACT HOWARD COUNTY RECREATION AND PARKS TO COORDINATE TRAIL LAYOUT AND CONSTRUCTION. INSTALL SEDIMENT CONTROL MEASURES FOR TRAIL CONSTRUCTION AS DIRECTED BY INSPECTOR. (1 WEEK)

23. WITH PERMISSION OF COUNTY SEDIMENT CONTROL INSPECTOR, REMOVE ALL REMAINING SEDIMENT CONTROL DEVICES AND STABILIZE DISTURBED AREAS IN ACCORDANCE WITH PERMANENT SEEDING NOTES. (2 DAYS)

CALL "MISS UTILITY" AT LEAST 48 HOURS IN ADVANCE OF CONSTRUCTION AT 1-800-257-7777

**BY THE DEVELOPER :**

I/WE CERTIFY THAT ALL DEVELOPMENT AND/OR CONSTRUCTION WILL BE DONE ACCORDING TO THESE PLANS, AND THAT ANY RESPONSIBLE PERSONNEL INVOLVED IN THE CONSTRUCTION PROJECT WILL HAVE A CERTIFICATE OF ATTENDANCE AT A DEPARTMENT OF THE ENVIRONMENT APPROVED TRAINING PROGRAM FOR THE CONTROL OF SEDIMENT AND EROSION BEFORE BEGINNING THE PROJECT. I SHALL ENGAGE A REGISTERED PROFESSIONAL ENGINEER TO SUPERVISE POND CONSTRUCTION AND PROVIDE THE HOWARD SOIL CONSERVATION DISTRICT WITH AN "AS-BUILT" PLAN OF THE POND WITHIN 30 DAYS OF COMPLETION. I ALSO AUTHORIZE PERIODIC ON-SITE INSPECTIONS BY THE HOWARD SOIL CONSERVATION DISTRICT.

DEVELOPER _____ DATE 9/21/10

**BY THE ENGINEER :**

I CERTIFY THAT THIS PLAN FOR POND CONSTRUCTION, EROSION AND SEDIMENT CONTROL REPRESENTS A PRACTICAL AND WORKABLE PLAN BASED ON MY PERSONAL KNOWLEDGE OF THE SITE CONDITIONS. THIS PLAN WAS PREPARED IN ACCORDANCE WITH THE REQUIREMENTS OF THE HOWARD SOIL CONSERVATION DISTRICT. I HAVE NOTIFIED THE DEVELOPER THAT HE/SHE MUST ENGAGE A REGISTERED PROFESSIONAL ENGINEER TO SUPERVISE POND CONSTRUCTION AND PROVIDE THE HOWARD SOIL CONSERVATION DISTRICT WITH AN "AS-BUILT" PLAN OF THE POND WITHIN 30 DAYS OF COMPLETION.

Sheryl C. Mitchell 9-21-10
ENGINEER DATE

THESE PLANS FOR SMALL POND CONSTRUCTION, SOIL EROSION AND SEDIMENT CONTROL MEET THE REQUIREMENTS OF THE HOWARD SOIL CONSERVATION DISTRICT.

HOWARD SOIL CONSERVATION DISTRICT 11/1/10 DATE

APPROVED : HOWARD COUNTY DEPARTMENT OF PLANNING AND ZONING.

DIRECTOR 12/13/10 DATE

CHIEF, DEVELOPMENT ENGINEERING DIVISION 11/8/10 DATE

CHIEF, DIVISION OF LAND DEVELOPMENT 12/10/10 DATE

| DATE | NO. | REVISION |
|---|---|---|

OWNER

HOWARD COUNTY DEPARTMENT OF PUBLIC WORKS
BUREAU OF ENGINEERING
9250 BENDIX ROAD, COLUMBIA, MARYLAND 21045
P 410 313 2414

DEVELOPER

HOWARD COUNTY DEPARTMENT OF PUBLIC WORKS
BUREAU OF ENGINEERING
9250 BENDIX ROAD, COLUMBIA, MARYLAND 21045
P 410 313 2414

PROJECT
# NORTH LAUREL COMMUNITY CENTER
CAPITAL PROJECT C-0304 PROJECT MGR: DAVE LOUDERMILK

AREA TAX MAP 47 GRID 22 & TAX MAP 50 GRIDS 3 & 4, PARCELS A-1, 187 & 1065 ZONED R-SC
6TH ELECTION DISTRICT
HOWARD COUNTY, MARYLAND

TITLE
## GRADING & SEDIMENT CONTROL PLAN PHASE II


**Patton Harris Rust & Associates**
Engineers. Surveyors. Planners. Landscape Architects.
8818 Centre Park Drive
Columbia, MD 21045
T 410.997.8900
F 410.997.9282


SEAL

STATE OF MARYLAND — CAROL CLARKE MITCHELL — REG. NO. 21586 — PROFESSIONAL ENGINEER

BY: Carol C. Mitchell

"PROFESSIONAL CERTIFICATION. I HEREBY CERTIFY THAT THESE DOCUMENTS WERE PREPARED OR APPROVED BY ME, AND THAT I AM A DULY LICENSED PROFESSIONAL ENGINEER UNDER THE LAWS OF THE STATE OF MARYLAND, LICENSE NO. 21586, EXPIRATION DATE: 01-24-11"

| | |
|---|---|
| DESIGNED BY : | JSN |
| DRAWN BY: | JSN |
| PROJECT NO : | 14466-1-2 C400SDP23.DWG |
| DATE : | SEPTEMBER 7, 2010 |
| SCALE : | 1" = 40' |
| DRAWING NO. | 23 OF 43 |

P:\Project\14466\1-2\PLANS\C400SDP23.DWG

SDP-10-010

MATCH LINE SEE SHEET 23

MATCH LINE SEE SHEET 23

## NOTES:

1. SEE RED LINE REVISION OF SDP-08-118 FOR GRADING AND TRAIL CONNECTIONS TO THE EAST SIDE OF THE PROPERTY.
2. SEE SHEET 25 FOR LEGEND.
3. THIS SHEET SHOWS GRADING FOR POND CONVERSION ONLY. SEE SHEET 3 FOR BASIN GRADING AND CONTINUE TO USE BASIN SCHEDULE SHOWN ON SHEET 3.
4. THIS SHEET IS FOR GRADING AND SEDIMENT CONTROL ONLY. SEE SHEETS 16, 17 AND 18 FOR CONSTRUCTION OF SITE AMENITIES.

CALL "MISS UTILITY" AT LEAST 48 HOURS IN ADVANCE OF CONSTRUCTION AT 1-800-257-7777

BY THE DEVELOPER :

I/WE CERTIFY THAT ALL DEVELOPMENT AND/OR CONSTRUCTION WILL BE DONE ACCORDING TO THESE PLANS, AND THAT ANY RESPONSIBLE PERSONNEL INVOLVED IN THE CONSTRUCTION PROJECT WILL HAVE A CERTIFICATE OF ATTENDANCE AT A DEPARTMENT OF THE ENVIRONMENT APPROVED TRAINING PROGRAM FOR THE CONTROL OF SEDIMENT AND EROSION BEFORE BEGINNING THE PROJECT. I SHALL ENGAGE A REGISTERED PROFESSIONAL ENGINEER TO SUPERVISE POND CONSTRUCTION AND PROVIDE THE HOWARD SOIL CONSERVATION DISTRICT WITH AN "AS-BUILT" PLAN OF THE POND WITHIN 30 DAYS OF COMPLETION. I ALSO AUTHORIZE PERIODIC ON-SITE INSPECTIONS BY THE HOWARD SOIL CONSERVATION DISTRICT.

DEVELOPER — DATE 9/28/10

BY THE ENGINEER :

I CERTIFY THAT THIS PLAN FOR POND CONSTRUCTION, EROSION AND SEDIMENT CONTROL REPRESENTS A PRACTICAL AND WORKABLE PLAN BASED ON MY PERSONAL KNOWLEDGE OF THE SITE CONDITIONS. THIS PLAN WAS PREPARED IN ACCORDANCE WITH THE REQUIREMENTS OF THE HOWARD SOIL CONSERVATION DISTRICT. I HAVE NOTIFIED THE DEVELOPER THAT HE/SHE MUST ENGAGE A REGISTERED PROFESSIONAL ENGINEER TO SUPERVISE POND CONSTRUCTION AND PROVIDE THE HOWARD SOIL CONSERVATION DISTRICT WITH AN "AS-BUILT" PLAN OF THE POND WITHIN 30 DAYS OF COMPLETION.

Sherryl C. Mitchell — ENGINEER — DATE 9-21-10

THESE PLANS FOR SMALL POND CONSTRUCTION, SOIL EROSION AND SEDIMENT CONTROL MEET THE REQUIREMENTS OF THE HOWARD SOIL CONSERVATION DISTRICT.

HOWARD SOIL CONSERVATION DISTRICT — DATE 11/1/10

APPROVED : HOWARD COUNTY DEPARTMENT OF PLANNING AND ZONING.

DIRECTOR — DATE 12/13/10

CHIEF, DEVELOPMENT ENGINEERING DIVISION — DATE 11/18/10

CHIEF, DIVISION OF LAND DEVELOPMENT — DATE 12/10/10

| DATE | NO. | REVISION |
|---|---|---|

OWNER

HOWARD COUNTY DEPARTMENT OF PUBLIC WORKS
BUREAU OF ENGINEERING
9250 BENDIX ROAD, COLUMBIA, MARYLAND 21045
P 410 313 2414

DEVELOPER

HOWARD COUNTY DEPARTMENT OF PUBLIC WORKS
BUREAU OF ENGINEERING
9250 BENDIX ROAD, COLUMBIA, MARYLAND 21045
P 410 313 2414

PROJECT
# NORTH LAUREL COMMUNITY CENTER
CAPITAL PROJECT C-0304 PROJECT MGR: DAVE LOUDERMILK

AREA TAX MAP 47 GRID 22 & TAX MAP 50
GRIDS 3 & 4, PARCELS A-1, 187 & 1065 ZONED R-SC
6TH ELECTION DISTRICT
HOWARD COUNTY, MARYLAND

TITLE
## GRADING & SEDIMENT CONTROL PLAN PHASE II

**Patton Harris Rust & Associates**
Engineers. Surveyors. Planners. Landscape Architects.
8818 Centre Park Drive
Columbia, MD 21045
T 410.997.8900
F 410.997.9282

SEAL

STATE OF MARYLAND — JOHN STANLEY NIEBEL — NO. 33954 — REGISTERED PROFESSIONAL ENGINEER

BY: Sherryl C. Mitchell

*PROFESSIONAL CERTIFICATION. I HEREBY CERTIFY THAT THESE DOCUMENTS WERE PREPARED OR APPROVED BY ME, AND THAT I AM A DULY LICENSED PROFESSIONAL ENGINEER UNDER THE LAWS OF THE STATE OF MARYLAND, LICENSE NO. 33954, EXPIRATION DATE: 01-24-11*

| | |
|---|---|
| DESIGNED BY : | JSN |
| DRAWN BY: | JSN |
| PROJECT NO : | 14466-1-2 C400SDSP24.DWG |
| DATE : | SEPTEMBER 7, 2010 |
| SCALE : | 1" = 40' |
| DRAWING NO. | 24 OF 43 |

P:\Project\14466\1-2\PLANS\C400SDSP24.DWG

SDP-10-010

MATCH LINE SEE SHEET 24

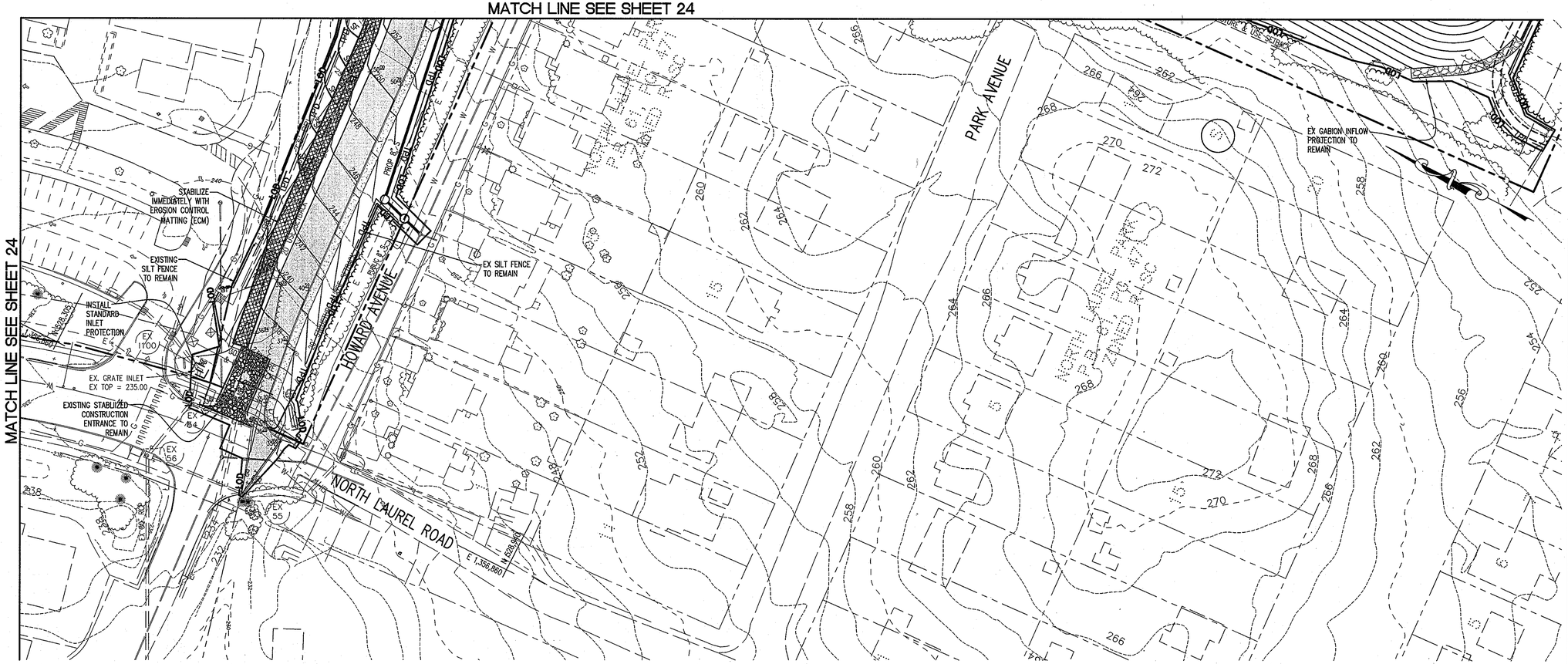


## DETAIL 23A – STANDARD INLET PROTECTION

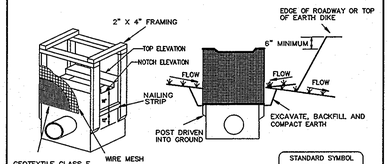


MAX. DRAINAGE AREA = 1/4 ACRE

Construction Specifications

1. Excavate completely around the inlet to a depth of 18" below the notch elevation.

2. Drive the 2" x 4" construction grade lumber posts 1' into the ground at each corner of the inlet. Place nail strips between the posts on the ends of the inlet. Assemble the top portion of the 2" x 4" frame using the overlap joint shown on Detail 23A. The top of the frame (weir) must be 6" below adjacent roadways where flooding and safety issues may arise.

3. Stretch the 1/2" x 1/2" wire mesh tightly around the frame and fasten securely. The ends must meet and overlap at a post.

4. Stretch the Geotextile Class E tightly over the wire mesh with the geotextile extending from the top of the frame to 18" below the inlet notch elevation. Fasten the geotextile firmly to the frame. The ends of the geotextile must meet at a post, be overlapped and folded, then fastened down.

5. Backfill around the inlet in compacted 6" layers until the layer of earth is level with the notch elevation on the ends and top elevation on the sides.

6. If the inlet is not in a sump, construct a compacted earth dike across the ditch line directly below it. The top of the earth dike should be at least 6" higher than the top of the frame.

7. The structure must be inspected periodically and after each rain and the geotextile replaced when it becomes clogged.

| U.S. DEPARTMENT OF AGRICULTURE SOIL CONSERVATION SERVICE | PAGE E – 18 – 5 | MARYLAND DEPARTMENT OF ENVIRONMENT WATER MANAGEMENT ADMINISTRATION |
|---|---|---|

## LEGEND

| | |
|---|---|
| EXISTING 2'CONTOUR | 302 |
| EXISTING 10'CONTOUR | 300 |
| PROPOSED 2'CONTOUR | 302 |
| PROPOSED 10'CONTOUR | 300 |
| PROPERTY LINE AND RIGHT OF WAY | |
| EXISTING WETLAND | W |
| EX. TREELINE | |
| LIMIT OF CLEARING | |
| LIMIT OF DISTURBANCE | LOD |
| STORM DRAIN INLET | |
| SUPER SILT FENCE | SSF |
| SILT FENCE | SF |
| EARTH DIKE | |
| WETLAND BUFFER | WB |
| 100-YEAR FLOOD PLAIN | FP |
| 15-25% SLOPES | |
| >25% SLOPES | |
| DRAINAGE DIVIDE | |
| STABILIZED CONSTRUCTION ENTRANCE | SCE |
| EROSION CONTROL MATTING | |
| RIP RAP INFLOW PROTECTION | RRP |
| GABION INFLOW PROTECTION | GM |

CALL "MISS UTILITY" AT LEAST 48 HOURS IN ADVANCE OF CONSTRUCTION AT 1-800-257-7777

**BY THE DEVELOPER :**

I/WE CERTIFY THAT ALL DEVELOPMENT AND/OR CONSTRUCTION WILL BE DONE ACCORDING TO THESE PLANS, AND THAT ANY RESPONSIBLE PERSONNEL INVOLVED IN THE CONSTRUCTION PROJECT WILL HAVE A CERTIFICATE OF ATTENDANCE AT A DEPARTMENT OF THE ENVIRONMENT APPROVED TRAINING PROGRAM FOR THE CONTROL OF SEDIMENT AND EROSION BEFORE BEGINNING THE PROJECT. I SHALL ENGAGE A REGISTERED PROFESSIONAL ENGINEER TO SUPERVISE POND CONSTRUCTION AND PROVIDE THE HOWARD SOIL CONSERVATION DISTRICT WITH AN "AS-BUILT" PLAN OF THE POND WITHIN 30 DAYS OF COMPLETION. I ALSO AUTHORIZE PERIODIC ON-SITE INSPECTIONS BY THE HOWARD SOIL CONSERVATION DISTRICT.

DEVELOPER — DATE 9/20/10

**BY THE ENGINEER :**

I CERTIFY THAT THIS PLAN FOR POND CONSTRUCTION, EROSION AND SEDIMENT CONTROL REPRESENTS A PRACTICAL AND WORKABLE PLAN BASED ON MY PERSONAL KNOWLEDGE OF THE SITE CONDITIONS. THIS PLAN WAS PREPARED IN ACCORDANCE WITH THE REQUIREMENTS OF THE HOWARD SOIL CONSERVATION DISTRICT. I HAVE NOTIFIED THE DEVELOPER THAT HE/SHE MUST ENGAGE A REGISTERED PROFESSIONAL ENGINEER TO SUPERVISE POND CONSTRUCTION AND PROVIDE THE HOWARD SOIL CONSERVATION DISTRICT WITH AN "AS-BUILT" PLAN OF THE POND WITHIN 30 DAYS OF COMPLETION.

Sheryl C. Mitchell — ENGINEER — 9-21-10 DATE

THESE PLANS FOR SMALL POND CONSTRUCTION, SOIL EROSION AND SEDIMENT CONTROL MEET THE REQUIREMENTS OF THE HOWARD SOIL CONSERVATION DISTRICT.

HOWARD SOIL CONSERVATION DISTRICT — 11/4/10 DATE

APPROVED : HOWARD COUNTY DEPARTMENT OF PLANNING AND ZONING.

DIRECTOR — 12/3/10 DATE

CHIEF, DEVELOPMENT ENGINEERING DIVISION — 11/18/10 DATE

CHIEF, DIVISION OF LAND DEVELOPMENT — 12/10/10 DATE

| DATE | NO. | REVISION |
|---|---|---|

**OWNER**

HOWARD COUNTY DEPARTMENT OF PUBLIC WORKS
BUREAU OF ENGINEERING
9250 BENDIX ROAD, COLUMBIA, MARYLAND 21045
P 410 313 2414

**DEVELOPER**

HOWARD COUNTY DEPARTMENT OF PUBLIC WORKS
BUREAU OF ENGINEERING
9250 BENDIX ROAD, COLUMBIA, MARYLAND 21045
P 410 313 2414

PROJECT
# NORTH LAUREL COMMUNITY CENTER
CAPITAL PROJECT C-0304 — PROJECT MGR: DAVE LOUDERMILK

AREA — TAX MAP 47 GRID 22 & TAX MAP 50 GRIDS 3 & 4, PARCELS A-1, 187 & 1065 ZONED R-SC 6TH ELECTION DISTRICT HOWARD COUNTY, MARYLAND

TITLE
# GRADING & SEDIMENT CONTROL PLAN PHASE II


**Patton Harris Rust & Associates**
Engineers. Surveyors. Planners. Landscape Architects.
8818 Centre Park Drive
Columbia, MD 21045
T 410.997.8900
F 410.997.9282


SEAL — STATE OF MARYLAND — SHERYL CLARKE MITCHELL — 22402 — REGISTERED PROFESSIONAL ENGINEER — 9-21-10

BY: Sheryl C. Mitchell

"PROFESSIONAL CERTIFICATION. I HEREBY CERTIFY THAT THESE DOCUMENTS WERE PREPARED OR APPROVED BY ME, AND THAT I AM A DULY LICENSED PROFESSIONAL ENGINEER UNDER THE LAWS OF THE STATE OF MARYLAND, LICENSE NO. 22854, EXPIRATION DATE: 01-24-11"

| | |
|---|---|
| DESIGNED BY : | JSN |
| DRAWN BY: | JSN |
| PROJECT NO : | 14466-1-2 C400SDP25.DWG |
| DATE : | SEPTEMBER 7, 2010 |
| SCALE : | 1" = 40' |
| DRAWING NO. | 25 OF 43 |

P:\Project\14466\1-2\PLANS\C400SDP25.DWG

SDP-10-010

APPROVED : HOWARD COUNTY DEPARTMENT OF PLANNING AND ZONING.

| | |
|---|---|
| DIRECTOR | DATE 12/13/10 |
| CHIEF, DEVELOPMENT ENGINEERING DIVISION | DATE 11/12/10 |
| CHIEF, DIVISION OF LAND DEVELOPMENT | DATE 12/10/10 |

| DATE | NO. | REVISION |
|---|---|---|

OWNER

HOWARD COUNTY DEPARTMENT OF PUBLIC WORKS
BUREAU OF ENGINEERING
9250 BENDIX ROAD, COLUMBIA, MARYLAND 21045
P 410 313 2414

DEVELOPER

HOWARD COUNTY DEPARTMENT OF PUBLIC WORKS
BUREAU OF ENGINEERING
9250 BENDIX ROAD, COLUMBIA, MARYLAND 21045
P 410 313 2414

PROJECT
# NORTH LAUREL COMMUNITY CENTER
CAPITAL PROJECT C-0304 PROJECT MGR: DAVE LOUDERMILK

AREA TAX MAP 47 GRID 22 & TAX MAP 50
GRIDS 3 & 4, PARCELS A-1, 187 & 1065 ZONED R-SC
6TH ELECTION DISTRICT
HOWARD COUNTY, MARYLAND

TITLE
## STORM DRAIN DRAINAGE AREA MAP

**Patton Harris Rust & Associates**
Engineers. Surveyors. Planners. Landscape Architects.
8818 Centre Park Drive
Columbia, MD 21045
T 410.997.8900
F 410.997.9282

SEAL

STATE OF MARYLAND · CLARKE MITCHELL · No. 21563 · REGISTERED PROFESSIONAL ENGINEER

9-21-10

BY: [signature]

"PROFESSIONAL CERTIFICATION. I HEREBY CERTIFY THAT THESE DOCUMENTS WERE PREPARED OR APPROVED BY ME, AND THAT I AM A DULY LICENSED PROFESSIONAL ENGINEER UNDER THE LAWS OF THE STATE OF MARYLAND, LICENSE NO. 21563, EXPIRATION DATE: 01-24-11"

| | |
|---|---|
| DESIGNED BY : | SCM |
| DRAWN BY: | SGM |
| PROJECT NO : | 14466-1-2 C400SDP26.DWG |
| DATE : | SEPTEMBER 7, 2010 |
| SCALE : | 1" = 40' |
| DRAWING NO. | 26 OF 43 |

P:\Project\14466\1-2\PLANS\C400SDP26.DWG

SDP-10-010

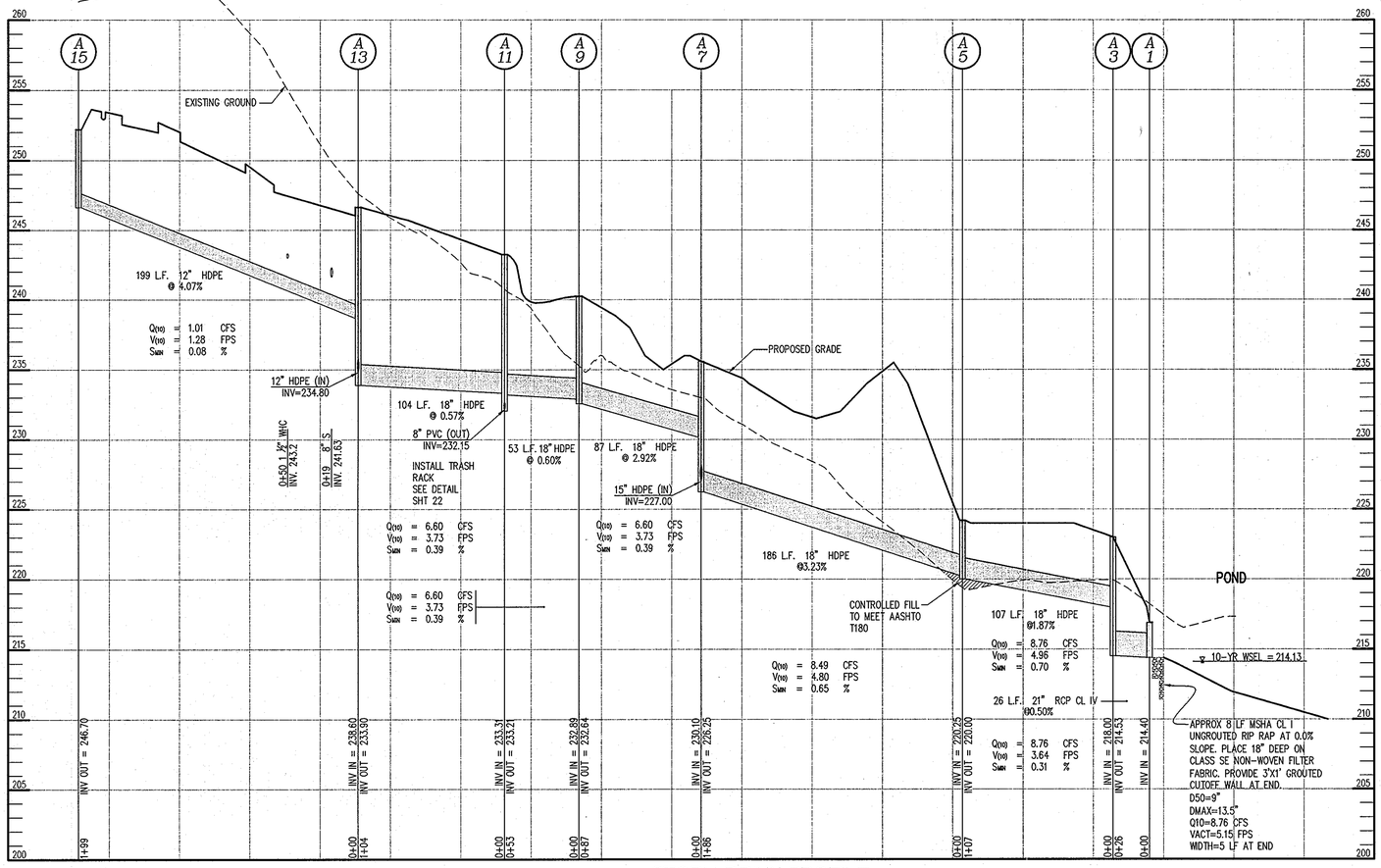


## STORM DRAIN PROFILE

SCALE : HOR: 1"=50'
VERT: 1"=5'

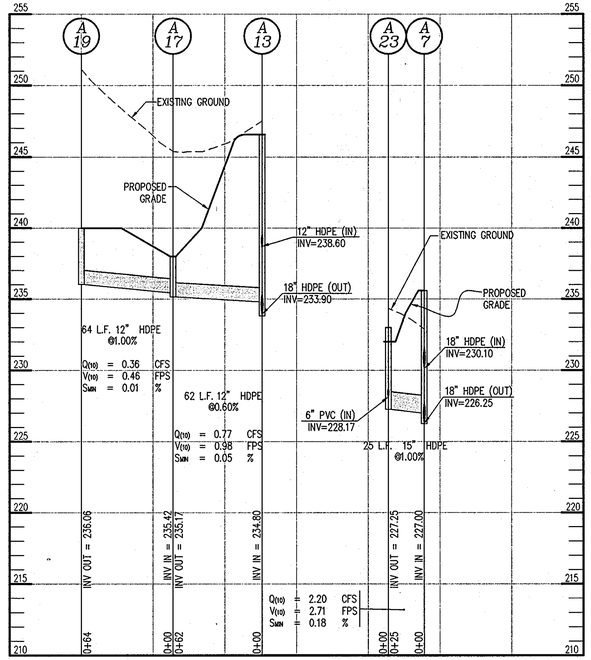


## STORM DRAIN PROFILES

SCALE : HOR: 1"=50'
VERT: 1"=5'

## HDPE SPECIFICATIONS

CORRUGATED HIGH-DENSITY POLYETHYLENE STORM DRAIN (HDPE) PIPE FOR ON-SITE DRAINAGE SHALL MEET THE REQUIREMENTS OF AASHTO M294. AASHTO WALL TYPE MAY BE TYPE "S" OR TYPE "D". PIPE AND FITTINGS SHALL BE MANUFACTURED FROM VIRGIN PE COMPOUNDS AND SHALL CONFORM TO THE APPLICABLE CURRENT EDITION OF THE AASHTO MATERIAL SPECIFICATIONS FOR CELL CLASSIFICATIONS AS DEFINED AND DESCRIBED IN ASTM D3350.

PIPES SHALL BE CONNECTED THROUGH A BELL AND SPIGOT CONNECTION. A RUBBER GASKET MEETING THE REQUIREMENTS OF ASTM F477 SHALL BE SUPPLIED ON THE SPIGOT END. THE PIPE MANUFACTURER SHALL PROVIDE CERTIFICATIONS ON JOINT INTEGRITY.

PIPE SHALL BE INSTALLED IN ACCORDANCE WITH ASTM D2321 AND MANUFACTURER'S RECOMMENDATIONS.

ALL PIPES SHALL BE BEDDED ON 4" TO 6" OF (CLASS I FILL (UNDER THE PIPE) AND UP TO ½ THE PIPE DIAMETER COMPACTED AT OPTIMUM MOISTURE CONTENT (PLUS OR MINUS 2 PERCENTAGE POINTS), AND TO A MINIMUM OF 95% OF THE MAXIMUM DENSITY AS DETERMINED IN THE LABORATORY BY ASTM TEST METHOS D-1557-78. ALL ADDITIONAL BACKFILL SHALL MEET HOWARD COUNTY SPECIFICATIONS.

CORRUGATED HDPE STORM DRAIN SHALL BE N-12 PRO-LINK WT, AS MANUFACTURED BY ADS, INC., COLUMBUS, OH, OR APPROVED EQUAL.

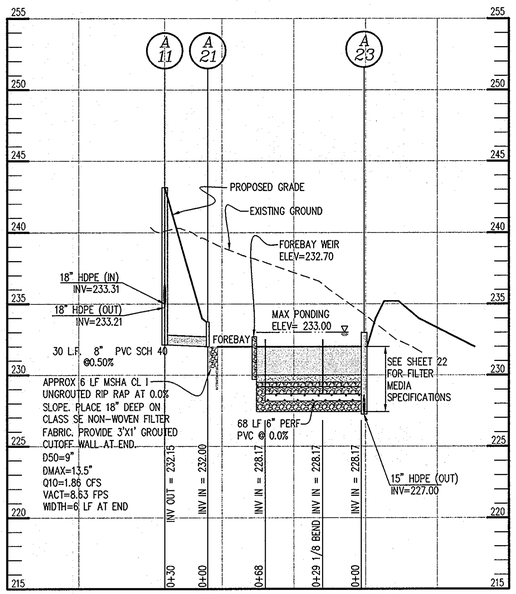


## DIVERSION PIPE PROFILE

SCALE : HOR: 1"=50'
VERT: 1"=5'

## STORM DRAIN STRUCTURE SCHEDULE

| NUMBER | TYPE | LOCATION | | TOP ELEVATION | | SIZE | REMARKS |
|---|---|---|---|---|---|---|---|
| | | STATION | OFFSET | UPPER | LOWER | | |
| A1 | TYPE 'C' ENDWALL | SEE | PLAN | 216.90 | * | DIA = 21" | D-5.21 |
| A3 | 4'-0" MANHOLE | SEE | PLAN | 223.00 | * | DIA = 4'-0" | G-5.12 |
| A5 | TYPE 'S' INLET | SEE | PLAN | 224.20 | * | 2'-7" X 2'-7 1/2" | D-4.22 |
| A7 | 4'-0" MANHOLE | SEE | PLAN | 235.60 | * | DIA = 4'-0" | G-5.12 |
| A9 | 4'-0" MANHOLE | SEE | PLAN | 240.25 | * | DIA = 4'-0" | G-5.12 |
| A11 | 4'-0" MANHOLE | SEE | PLAN | 243.00 | * | DIA = 4'-0" | G-5.12 MODIFIED PER DETAIL SHT 22 |
| A13 | A-10 INLET | SEE | PLAN | 246.74 | * | T = 10' | D-4.04 |
| A15 | TYPE 'S' INLET | SEE | PLAN | 252.20 | * | 2'-7" X 2'-7 1/2" | D-4.22 |
| A17 | TYPE 'S' INLET | SEE | PLAN | 238.00 | * | 2'-7" X 2'-7 1/2" | D-4.22 |
| A19 | TYPE 'S' INLET | SEE | PLAN | 240.00 | * | 2'-7" X 2'-7 1/2" | D-4.22 |
| A21 | TYPE 'C' ENDWALL | SEE | PLAN | 233.75 | * | DIA = 8" | D-5.21 USE SPEC FOR D=12" |
| A23 | TYPE 'S' INLET | SEE | PLAN | 233.00 | * | 2'-7" X 2'-7 1/2" | D-4.22 |

## PIPE SCHEDULE

| SIZE | TYPE | LINEAR FOOTAGE |
|---|---|---|
| 8" | PVC SCH 40 | 30 |
| 12" | HDPE ASTM F477 | 325 |
| 15" | HDPE ASTM F477 | 25 |
| 18" | HDPE ASTM F477 | 537 |
| 21" | RCP CL IV | 26 |

ALL QUANTITIES TO BE VERIFIED BY CONTRACTOR. UNDERDRAIN PIPING NOT INCLUDED

## NOTES

1) ALL STRUCTURES ARE HOWARD COUNTY STANDARDS UNLESS NOTED OTHERWSE. CONTRACTOR MAY USE PRECAST STRUCTURE WHERE AVAILABLE TO MEET THE STANDARD STRUCTURE SPECIFIED.

2) STATIONS ARE GIVEN TO CENTER OF STRUCTURE AT FACE OF CURB FOR CURB INLETS AND TO CENTER OF STRUCTURE FOR ALL OTHER STRUCTURES.

3) ELEVATIONS ARE GIVEN TO TOP OF CURB FOR CURB INLETS, TOP OF GRATE FOR GRATE INLETS AND TOP OF LID FOR MANHOLES.

4) PIPE LENGTHS ARE GIVEN TO THE CENTER OF THE STRUCTURE. CONTRACTOR SHALL ADJUST LENGTH TO OBTAIN ACTUAL PIPE LENGTHS.

APPROVED : HOWARD COUNTY DEPARTMENT OF PLANNING AND ZONING.

DIRECTOR — DATE 12/13/10

CHIEF, DEVELOPMENT ENGINEERING DIVISION — DATE 11/18/10

CHIEF, DIVISION OF LAND DEVELOPMENT — DATE 12/10/10

| DATE | NO. | REVISION |
|---|---|---|

OWNER

HOWARD COUNTY DEPARTMENT OF PUBLIC WORKS
BUREAU OF ENGINEERING
9250 BENDIX ROAD, COLUMBIA, MARYLAND 21045
P 410 313 2414

DEVELOPER

HOWARD COUNTY DEPARTMENT OF PUBLIC WORKS
BUREAU OF ENGINEERING
9250 BENDIX ROAD, COLUMBIA, MARYLAND 21045
P 410 313 2414

PROJECT
**NORTH LAUREL COMMUNITY CENTER**
CAPITAL PROJECT C-0304 PROJECT MGR: DAVE LOUDERMILK

AREA TAX MAP 47 GRID 22 & TAX MAP 50
GRIDS 3 & 4, PARCELS A-1, 187 & 1065 ZONED R-SC
6TH ELECTION DISTRICT
HOWARD COUNTY, MARYLAND

TITLE
**STORM DRAIN PROFILES AND SCHEDULES**


Patton Harris Rust & Associates
Engineers. Surveyors. Planners. Landscape Architects.
8818 Centre Park Drive
Columbia, MD 21045
T 410.997.8900
F 410.997.9282


SEAL — 9-21-10

STATE OF MARYLAND · SHAWN C. MILLER · No. 21502 · REGISTERED PROFESSIONAL ENGINEER

BY: Shawn C. Miller

"PROFESSIONAL CERTIFICATION. I HEREBY CERTIFY THAT THESE DOCUMENTS WERE PREPARED OR APPROVED BY ME, AND THAT I AM A DULY LICENSED PROFESSIONAL ENGINEER UNDER THE LAWS OF THE STATE OF MARYLAND, LICENSE NO. 21502, EXPIRATION DATE: 07-24-11"

| | |
|---|---|
| DESIGNED BY : | SCM |
| DRAWN BY: | SGM |
| PROJECT NO : | 14466-1-2 C400SDP27.DWG |
| DATE : | SEPTEMBER 7, 2010 |
| SCALE : | 1" = 40' |
| DRAWING NO. | 27 OF 43 |

P:\Project\14466\1-2\PLANS\C400SDP27.DWG

SDP-10-010

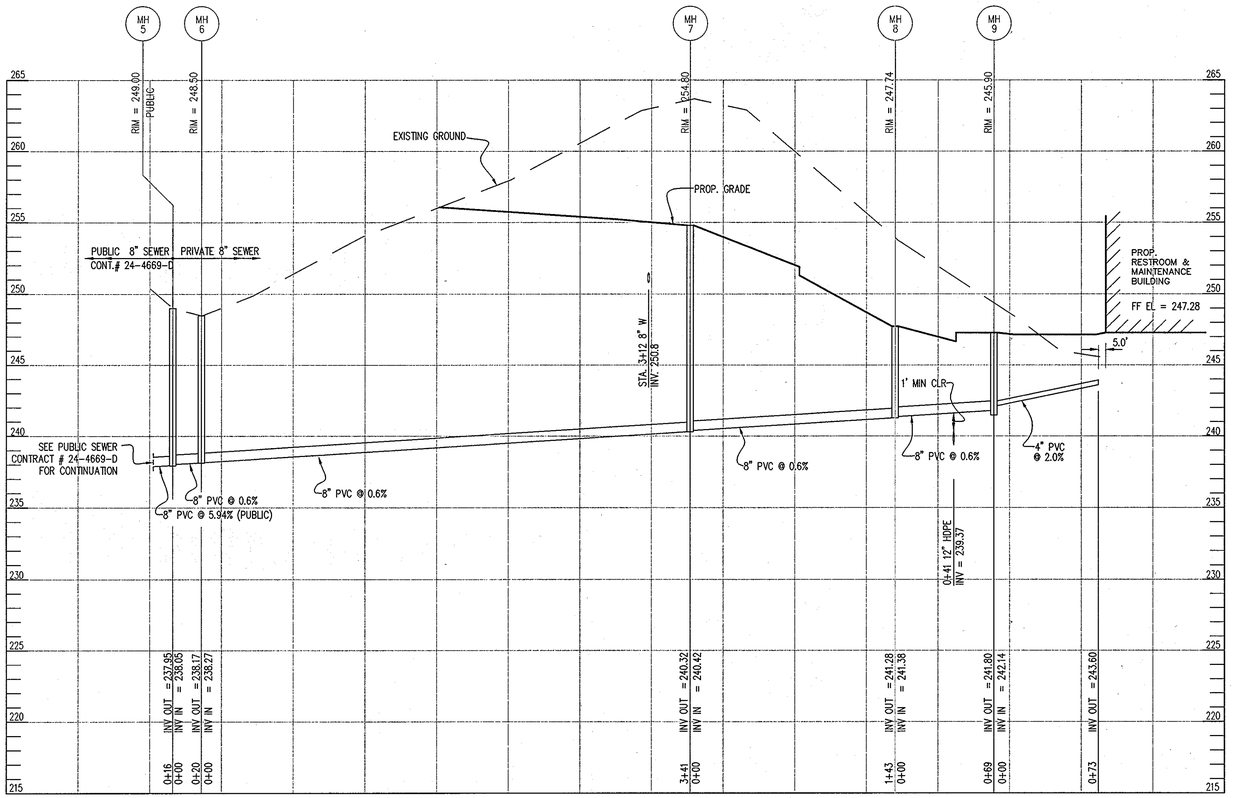


## PRIVATE SANITARY SEWER PROFILE

SCALE : HOR: 1"=50' - VERT: 1"=5'

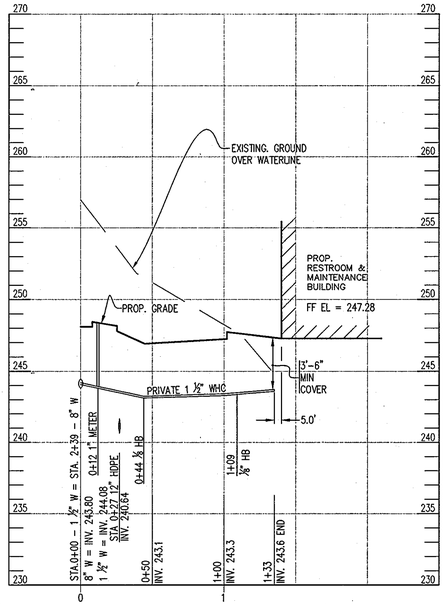


## PRIVATE WHC PROFILE

HOR: 1"=50' VERT: 1"=5'

### SEWER PIPE SCHEDULE

| SIZE | TYPE | LINEAR FOOTAGE |
|---|---|---|
| 8" S | PVC-SDR 35 ASTM D3034 | 573 |
| 4" S | PVC-SDR 35 ASTM D3034 | 73 |
| | | |
| 1-1/2" WHC | AWWA C900 DR18 | 135 |
| | | |

### SEWER STRUCTURE SCHEDULE

| NUMBER | TYPE | LOCATION | | TOP ELEVATION | INVERTS | | REMARKS |
|---|---|---|---|---|---|---|---|
| | | NORTHING | EASTING | | IN | OUT | |
| MH-5 | PRECAST MANHOLE | SEE | PLAN | 249.00 | 238.05 | 237.95 | G-5.11 |
| MH-6 | PRECAST MANHOLE | SEE | PLAN | 248.50 | 238.27 | 238.17 | G-5.11 |
| MH-7 | PRECAST MANHOLE | SEE | PLAN | 254.08 | 240.42 | 240.32 | G-5.11 |
| MH-8 | PRECAST MANHOLE | SEE | PLAN | 247.74 | 241.38 | 241.28 | G-5.11 |
| MH-9 | PRECAST MANHOLE | SEE | PLAN | 247.24 | 242.14 | 241.80 | G-5.11 |

APPROVED : HOWARD COUNTY DEPARTMENT OF PLANNING AND ZONING.

DIRECTOR — DATE 12/13/10

CHIEF, DEVELOPMENT ENGINEERING DIVISION — DATE 11/18/10

CHIEF, DIVISION OF LAND DEVELOPMENT — DATE 12/10/10

| DATE | NO. | REVISION |
|---|---|---|

OWNER

HOWARD COUNTY DEPARTMENT OF PUBLIC WORKS
BUREAU OF ENGINEERING
9250 BENDIX ROAD, COLUMBIA, MARYLAND 21045
P 410 313 2414

DEVELOPER

HOWARD COUNTY DEPARTMENT OF PUBLIC WORKS
BUREAU OF ENGINEERING
9250 BENDIX ROAD, COLUMBIA, MARYLAND 21045
P 410 313 2414

PROJECT
**NORTH LAUREL COMMUNITY CENTER**
CAPITAL PROJECT C-0304 PROJECT MGR: DAVE LOUDERMILK

AREA TAX MAP 47 GRID 22 & TAX MAP 50
GRIDS 3 & 4, PARCELS A-1, 187 & 1065 ZONED R-SC
6TH ELECTION DISTRICT
HOWARD COUNTY, MARYLAND

TITLE
**PRIVATE WATER AND SEWER PROFILES**

**Patton Harris Rust & Associates**
Engineers. Surveyors. Planners. Landscape Architects.
8818 Centre Park Drive
Columbia, MD 21045
T 410.997.8900
F 410.997.9282

SEAL — STATE OF MARYLAND — SEBRON CLARKE HOBBS — NO. 33954 — REGISTERED PROFESSIONAL ENGINEER — 9-21-10

BY: _____

"PROFESSIONAL CERTIFICATION. I HEREBY CERTIFY THAT THESE DOCUMENTS WERE PREPARED OR APPROVED BY ME, AND THAT I AM A DULY LICENSED PROFESSIONAL ENGINEER UNDER THE LAWS OF THE STATE OF MARYLAND, LICENSE NO. 33954, EXPIRATION DATE: 01-24-11"

DESIGNED BY : SCM
DRAWN BY: SGM
PROJECT NO : 14466-1-2
C400SDP28.DWG
DATE : SEPTEMBER 7, 2010
SCALE : 1" = 40'
DRAWING NO. 28 OF 43

P:\Project\14466\1-2\PLANS\C400SDP28.DWG

SDP-10-010

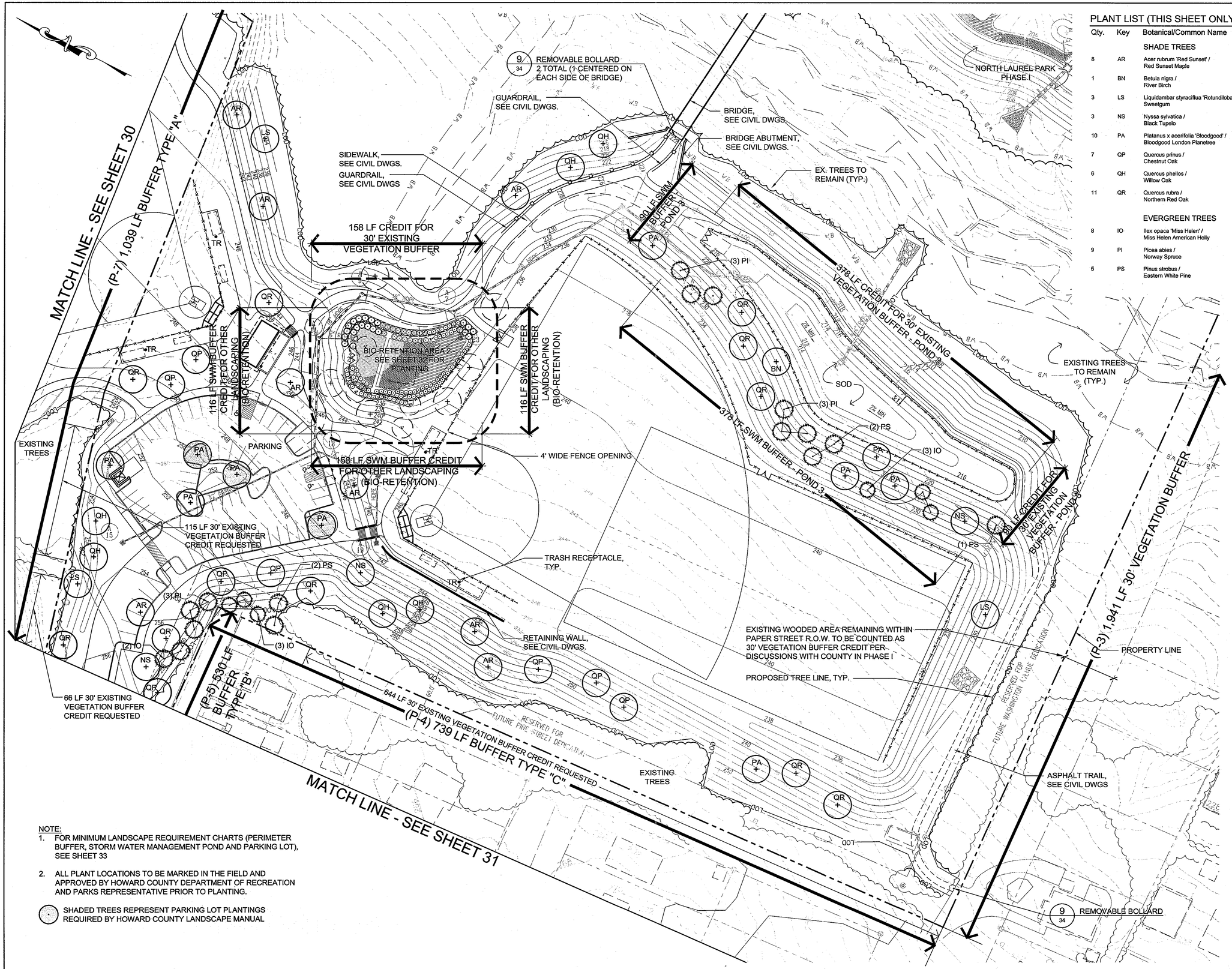


## PLANT LIST (THIS SHEET ONLY)

| Qty. | Key | Botanical/Common Name | Size | Root | Comments |
|---|---|---|---|---|---|
| | | **SHADE TREES** | | | |
| 8 | AR | Acer rubrum 'Red Sunset' / Red Sunset Maple | 2-1/2" Cal. | B+B | Central Leader, Full Can. |
| 1 | BN | Betula nigra / River Birch | 2-1/2" Cal. | B+B | Central Leader, Full Can. |
| 3 | LS | Liquidambar styraciflua 'Rotundiloba'/ Sweetgum | 2-1/2" Cal. | B+B | Central Leader, Full Can. |
| 3 | NS | Nyssa sylvatica / Black Tupelo | 2-1/2" Cal. | B+B | Central Leader, Full Can. |
| 10 | PA | Platanus x acerifolia 'Bloodgood' / Bloodgood London Planetree | 2-1/2" Cal. | B+B | Central Leader, Full Can. |
| 7 | QP | Quercus prinus / Chestnut Oak | 2-1/2" Cal. | B+B | Central Leader, Full Can. |
| 6 | QH | Quercus phellos / Willow Oak | 2-1/2" Cal. | B+B | Central Leader, Full Can. |
| 11 | QR | Quercus rubra / Northern Red Oak | 2-1/2" Cal. | B+B | Central Leader, Full Can. |
| | | **EVERGREEN TREES** | | | |
| 8 | IO | Ilex opaca 'Miss Helen' / Miss Helen American Holly | 6' Ht. | B+B | Central Leader, Full Provide 1 Male |
| 9 | PI | Picea abies / Norway Spruce | 6' Ht. | B+B | Central Leader, Full |
| 5 | PS | Pinus strobus / Eastern White Pine | 6' Ht. | B+B | Central Leader, Full |

NOTE:
1. FOR MINIMUM LANDSCAPE REQUIREMENT CHARTS (PERIMETER BUFFER, STORM WATER MANAGEMENT POND AND PARKING LOT), SEE SHEET 33
2. ALL PLANT LOCATIONS TO BE MARKED IN THE FIELD AND APPROVED BY HOWARD COUNTY DEPARTMENT OF RECREATION AND PARKS REPRESENTATIVE PRIOR TO PLANTING.

SHADED TREES REPRESENT PARKING LOT PLANTINGS REQUIRED BY HOWARD COUNTY LANDSCAPE MANUAL


The Lukmire Partnership
Architecture
Planning
Interior Design
2700 South Quincy Street
Suite 300
Arlington, VA 22206
703.998.0101
FAX 703.998.7796

MAHAN RYKIEL ASSOCIATES INC.
Landscape Architects
The Stieff Silver Building
800 Wyman Park Drive
Suite 100
Baltimore, MD 21211 USA
Tel. 410.236.6001


APPROVED : HOWARD COUNTY DEPARTMENT OF PLANNING AND ZONING.

DIRECTOR — DATE 12/13/10

CHIEF, DEVELOPMENT ENGINEERING DIVISION — DATE 11/18/10

CHIEF, DIVISION OF LAND DEVELOPMENT — DATE 12/10/10

| DATE | NO. | REVISION |
|---|---|---|

OWNER
HOWARD COUNTY DEPARTMENT OF PUBLIC WORKS
BUREAU OF ENGINEERING
9250 BENDIX ROAD, COLUMBIA, MARYLAND 21045
P 410 313 2414

DEVELOPER
HOWARD COUNTY DEPARTMENT OF PUBLIC WORKS
BUREAU OF ENGINEERING
9250 BENDIX ROAD, COLUMBIA, MARYLAND 21045
P 410 313 2414

PROJECT
NORTH LAUREL COMMUNITY CENTER
CAPITAL PROJECT C-0304

AREA — TAX MAP 47 GRID 22 & TAX MAP 50
GRIDS 3 & 4, PARCELS A-1, 187 & 1065 ZONED R-SC
6TH ELECTION DISTRICT
HOWARD COUNTY, MARYLAND

TITLE
# LANDSCAPE PLAN


Patton Harris Rust & Associates
Engineers. Surveyors. Planners. Landscape Architects.
PHR+A
8818 Centre Park Drive
Columbia, MD 21045
T 410.997.8900
F 410.997.9282


"PROFESSIONAL CERTIFICATION. I HEREBY CERTIFY THAT THESE DOCUMENTS WERE PREPARED OR APPROVED BY ME, AND THAT I AM A DULY LICENSED PROFESSIONAL UNDER THE LAWS OF THE STATE OF MARYLAND."

| | |
|---|---|
| DESIGNED BY : | CB |
| DRAWN BY : | CD/ RC |
| PROJECT NO : | 09102 |
| DATE : | SEPTEMBER 3, 2010 |
| SCALE : | 1" = 40' |
| DRAWING NO. | 29 OF 37 |

SDP-10-010

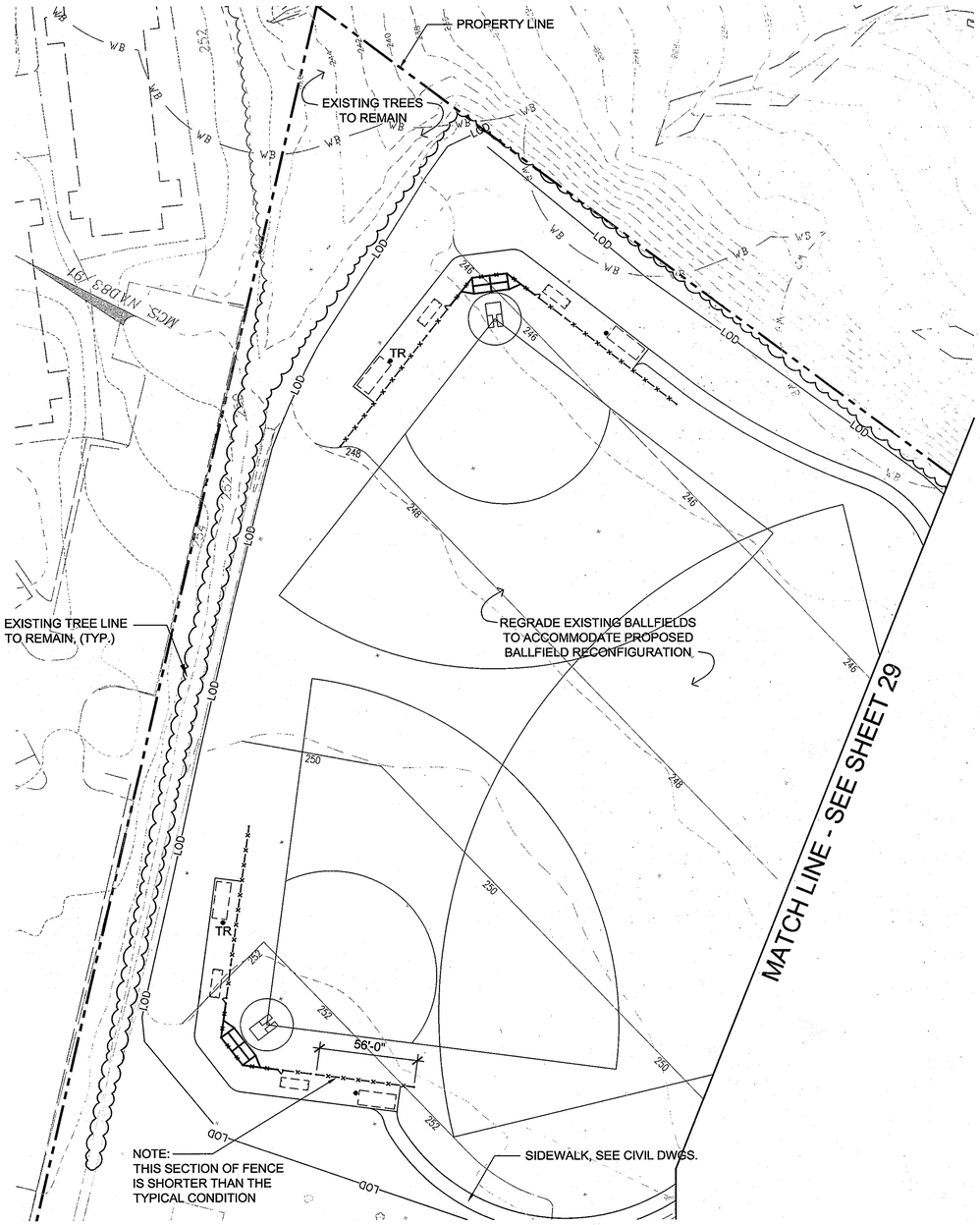


NO PLANTING THIS SHEET

The Lukmire Partnership
Architecture
Planning
Interior Design
2700 South Quincy Street
Suite 300
Arlington, VA 22206
703.998.0101
FAX 703.998.7798

MAHAN RYKIEL ASSOCIATES INC.
Landscape Architects
The Stieff Silver Building
800 Wyman Park Drive
Suite 100
Baltimore, MD 21211 USA
Tel. 410.235.6001

APPROVED : HOWARD COUNTY DEPARTMENT OF PLANNING AND ZONING.

DIRECTOR — DATE 12/13/10

CHIEF, DEVELOPMENT ENGINEERING DIVISION — DATE 11/10/10

CHIEF, DIVISION OF LAND DEVELOPMENT — DATE 12/10/10

| DATE | NO. | REVISION |
|---|---|---|

OWNER
HOWARD COUNTY DEPARTMENT OF PUBLIC WORKS
BUREAU OF ENGINEERING
9250 BENDIX ROAD, COLUMBIA, MARYLAND 21045
P 410 313 2414

DEVELOPER
HOWARD COUNTY DEPARTMENT OF PUBLIC WORKS
BUREAU OF ENGINEERING
9250 BENDIX ROAD, COLUMBIA, MARYLAND 21045
P 410 313 2414

PROJECT
NORTH LAUREL COMMUNITY CENTER
CAPITAL PROJECT C-0304

AREA
TAX MAP 47 GRID 22 & TAX MAP 50
GRIDS 3 & 4, PARCELS A-1, 187 & 1065 ZONED R-SC
6TH ELECTION DISTRICT
HOWARD COUNTY, MARYLAND

TITLE
# LANDSCAPE PLAN

Patton Harris Rust & Associates
Engineers. Surveyors. Planners. Landscape Architects.
8818 Centre Park Drive
Columbia, MD 21045
T 410.997.8900
F 410.997.9282

BOARD OF EXAMINERS OF LANDSCAPE ARCHITECTS 773 DONALD EUGENE SELLER, JR. STATE OF MARYLAND

"PROFESSIONAL CERTIFICATION. I HEREBY CERTIFY THAT THESE DOCUMENTS WERE PREPARED OR APPROVED BY ME, AND THAT I AM A DULY LICENSED PROFESSIONAL UNDER THE LAWS OF THE STATE OF MARYLAND."

DESIGNED BY : CB
DRAWN BY : CD/ RC
PROJECT NO : 09102
DATE : SEPTEMBER 3, 2010
SCALE : 1" = 40'
DRAWING NO. 30 OF 37

SDP-10-010

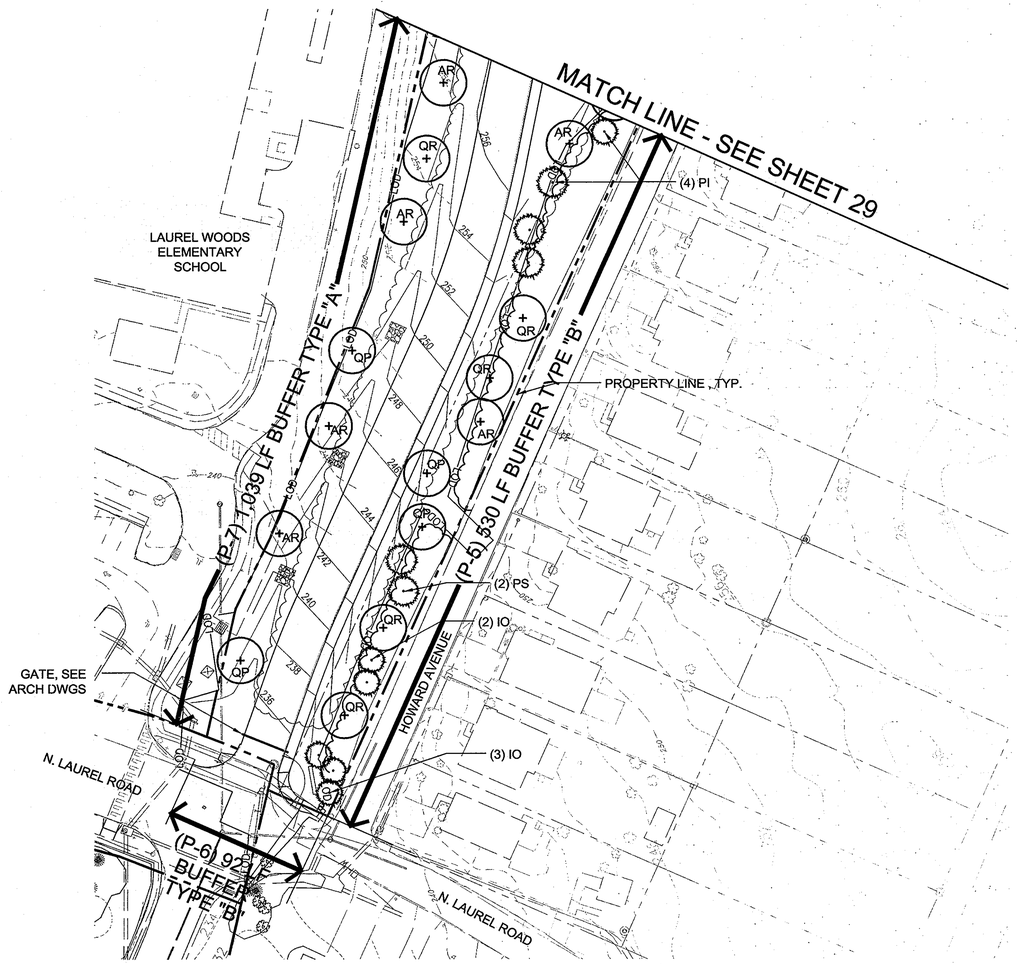


## PLANT LIST (THIS SHEET ONLY)

| Qty. | Key | Botanical/Common Name | Size | Root | Comments |
|---|---|---|---|---|---|
| | | SHADE TREES | | | |
| 6 | AR | Acer rubrum 'Red Sunset' / Red Sunset Maple | 2-1/2" Cal. | B+B | Central Leader, Full Can. |
| 4 | QP | Quercus prinus / Chestnut Oak | 2-1/2" Cal. | B+B | Central Leader, Full Can. |
| 5 | QR | Quercus rubra / Northern Red Oak | 2-1/2" Cal. | B+B | Central Leader, Full Can. |
| | | EVERGREEN TREES | | | |
| 5 | IO | Ilex opaca 'Miss Helen' / Miss Helen American Holly | 6' Ht. | B+B | Central Leader, Full Provide 1 Male |
| 4 | PI | Picea ables / Norway Spruce | 6' Ht. | B+B | Central Leader, Full |
| 2 | PS | Pinus strobus / Eastern White Pine | 6' Ht. | B+B | Central Leader, Full |

NOTE:
1. FOR MINIMUM LANDSCAPE REQUIREMENT CHARTS (PERIMETER BUFFER, STORM WATER MANAGEMENT POND AND PARKING LOT), SEE SHEET 33

2. ALL PLANT LOCATIONS TO BE MARKED IN THE FIELD AND APPROVED BY HOWARD COUNTY DEPARTMENT OF RECREATION AND PARKS REPRESENTATIVE PRIOR TO PLANTING.

The Lukmire Partnership
Architecture
Planning
Interior Design
2700 South Quincy Street
Suite 300
Arlington, VA 22206
703.998.0101
FAX 703.998.7798

MAHAN RYKIEL ASSOCIATES INC.
Landscape Architects
The Stieff Silver Building
800 Wyman Park Drive
Suite 100
Baltimore, MD 21211 USA
Tel. 410.235.6001

APPROVED : HOWARD COUNTY DEPARTMENT OF PLANNING AND ZONING.

Thomas E. Butler — DIRECTOR — 12/13/10 DATE

CHIEF, DEVELOPMENT ENGINEERING DIVISION — 11/18/10 DATE

CHIEF, DIVISION OF LAND DEVELOPMENT — 12/10/10 DATE

| DATE | NO. | REVISION |
|---|---|---|

OWNER
HOWARD COUNTY DEPARTMENT OF PUBLIC WORKS
BUREAU OF ENGINEERING
9250 BENDIX ROAD, COLUMBIA, MARYLAND 21045
P 410 313 2414

DEVELOPER
HOWARD COUNTY DEPARTMENT OF PUBLIC WORKS
BUREAU OF ENGINEERING
9250 BENDIX ROAD, COLUMBIA, MARYLAND 21045
P 410 313 2414

PROJECT
NORTH LAUREL COMMUNITY CENTER
CAPITAL PROJECT C-0304

AREA TAX MAP 47 GRID 22 & TAX MAP 50
GRIDS 3 & 4, PARCELS A-1, 187 & 1065 ZONED R-SC
6TH ELECTION DISTRICT
HOWARD COUNTY, MARYLAND

TITLE
LANDSCAPE PLAN

Patton Harris Rust & Associates
Engineers. Surveyors. Planners. Landscape Architects.
PHR+A
8818 Centre Park Drive
Columbia, MD 21045
T 410.997.8900
F 410.997.9282

"PROFESSIONAL CERTIFICATION. I HEREBY CERTIFY THAT THESE DOCUMENTS WERE PREPARED OR APPROVED BY ME, AND THAT I AM A DULY LICENSED PROFESSIONAL UNDER THE LAWS OF THE STATE OF MARYLAND."

| | |
|---|---|
| DESIGNED BY : CB | |
| DRAWN BY : CD/ RC | |
| PROJECT NO : 09102 | |
| DATE : SEPTEMBER 3, 2010 | |
| SCALE : 1" = 40' | |
| DRAWING NO. 31 OF 37 | |

SDP-10-010

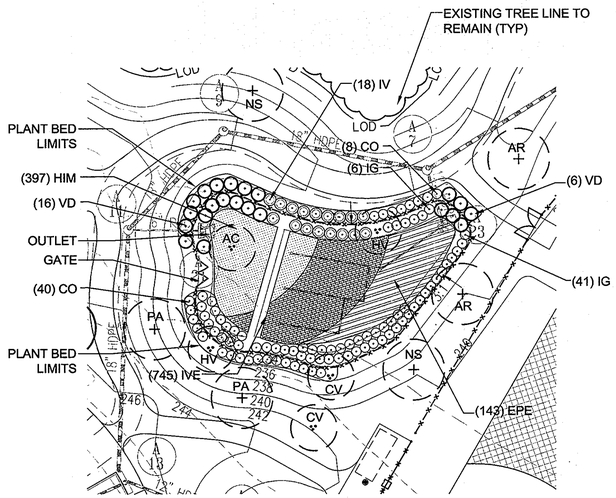


# 1 Bio-Retention Area 2 Planting Plan

Scale: 1" = 30'

## PLANT LIST (THIS SHEET ONLY)

| Qty. | Key | Botanical/Common Name | Size | Root | Comments |
|---|---|---|---|---|---|
| | | **SHADE TREES** | | | |
| 2 | AR | Acer rubrum 'Red Sunset' / Red Sunset Maple | 2-1/2" Cal. | B+B | Central Leader, Full Canopy |
| 2 | NS | Nyssa sylvatica / Black Tupelo | 2-1/2" Cal. | B+B | Central Leader, Full Canopy |
| 2 | PA | Platanus x acerifolia 'Bloodgood' / Bloodgood London Planetree | 2-1/2" Cal. | B+B | Central Leader, Full Canopy |
| | | **UNDERSTORY TREES** | | | |
| 1 | AC | Amelanchier canadensis / Serviceberry | 8' Ht. | B+B | Clump, 3-5 Canes, Full Canopy |
| 2 | CV | Chionanthus virginicus / White Fringetree | 8' Ht. | B+B | |
| 2 | HV | Hamamelis virginiana / Witchhazel | 8' Ht. | B+B | |
| | | **SHRUBS** | | | |
| 41 | CO | Cephalanthus occidentalis / Buttonbush | #5 | Cont. | 30" Ht, Full |
| 47 | IG | Ilex glabra 'Shamrock' / Shamrock Inkberry Holly | #5 | Cont. | 30" Ht, Full |
| 18 | IV | Ilex verticillata 'Winter Red' / Winter Red Winterberry Holly | #5 | Cont. | 30" Ht, Full |
| 22 | VD | Viburnum dentatum / Arrowwood Viburnum | #5 | Cont. | 30" Ht, Full |
| | | **HERBACEOUS** | | | |
| 397 | HIM | Hibiscus moscheutos Hardy Hibiscus | #1 | Cont. | 24" O.C. |
| 143 | EPE | Eupatorium maculatum / Joe Pye Weed | #1 | Cont. | 36" O.C. |
| 745 | IVE | Iris versicolor / Blueflag Iris | #1 | Cont. | 18" O.C. |

NOTE:

1. FOR MINIMUM LANDSCAPE REQUIREMENTS FOR STORM WATER MANAGEMENT AREA, SEE SHEET 33.
2. ALL PLANT LOCATIONS TO BE MARKED IN THE FIELD AND APPROVED BY HOWARD COUNTY DEPARTMENT OF RECREATION AND PARKS REPRESENTATIVE PRIOR TO PLANTING.
3. PLANTING DESIGN FOR BIO-RETENTION AREA 2 BASED ON "LANDSCAPING GUIDANCE FOR STORMWATER BMP'S" PROVIDED BY MARYLAND DEPARTMENT OF THE ENVIRONMENT (MDE). THE LANDSCAPING STRATEGY FOR THE AREA ATTEMPTS TO CREATE AN ENVIRONMENTAL AND AESTHETIC AMENITY THAT FITS WITHIN ITS PARKLAND CONTEXT INSTEAD OF SCREENING ITS VIEW FROM PARK USERS AS SUGGESTED IN THE COUNTY LANDSCAPE MANUAL. INCORPORATION OF NATIVE AND ADAPTED WETLAND SPECIES HELPS TREAT STANDING WATER AND CONTRIBUTES TO A SUSTAINABLE ENVIRONMENT FOR INSECTS, AQUATIC LIFE, AND WILDLIFE. TREES AND SHRUBS ARE LOCATED TO PROMOTE SOIL STABILITY AND PROVIDE AN AESTHETICALLY-PLEASING VIEW TO THE POND.
4. SEED ALL AREAS NOT RECEIVING PLANTING AND/OR HARDSCAPE UNLESS NOTED OTHERWISE.

The Lukmire Partnership
Architecture
Planning
Interior Design
2700 South Quincy Street
Suite 300
Arlington, VA 22206
703.998.0101
FAX 703.998.7798

MAHAN RYKIEL ASSOCIATES INC.
Landscape Architects
The Stieff Silver Building
800 Wyman Park Drive
Suite 100
Baltimore, MD 21211 USA
Tel. 410.235.6001

APPROVED : HOWARD COUNTY DEPARTMENT OF PLANNING AND ZONING.

DIRECTOR — DATE 12/13/10

CHIEF, DEVELOPMENT ENGINEERING DIVISION — DATE 11/18/10

CHIEF, DIVISION OF LAND DEVELOPMENT — DATE 12/6/10

| DATE | NO. | REVISION |
|---|---|---|
| | | |

OWNER

HOWARD COUNTY DEPARTMENT OF PUBLIC WORKS
BUREAU OF ENGINEERING
9250 BENDIX ROAD, COLUMBIA, MARYLAND 21045
P 410 313 2414

DEVELOPER

HOWARD COUNTY DEPARTMENT OF PUBLIC WORKS
BUREAU OF ENGINEERING
9250 BENDIX ROAD, COLUMBIA, MARYLAND 21045
P 410 313 2414

PROJECT

NORTH LAUREL COMMUNITY CENTER
CAPITAL PROJECT C-0304

AREA — TAX MAP 47 GRID 22 & TAX MAP 50
GRIDS 3 & 4, PARCELS A-1, 187 & 1065 ZONED R-SC
6TH ELECTION DISTRICT
HOWARD COUNTY, MARYLAND

TITLE

STORMWATER PLANTING PLANS

Patton Harris Rust & Associates
Engineers. Surveyors. Planners. Landscape Architects.
8818 Centre Park Drive
Columbia, MD 21045
T 410.997.8900
F 410.997.9282

"PROFESSIONAL CERTIFICATION. I HEREBY CERTIFY THAT THESE DOCUMENTS WERE PREPARED OR APPROVED BY ME, AND THAT I AM A DULY LICENSED PROFESSIONAL UNDER THE LAWS OF THE STATE OF MARYLAND."

| | |
|---|---|
| DESIGNED BY : | CB |
| DRAWN BY : | CD/ RC |
| PROJECT NO : | 09102 |
| DATE : | SEPTEMBER 3, 2010 |
| SCALE : | 1" = 30' |
| DRAWING NO. | 32 OF 37 |

SDP-10-010

| SCHEDULE A<br>PERIMETER LANDSCAPE EDGE | | | | | |
|---|---|---|---|---|---|
| CATEGORY | ADJACENT TO<br>PERIMETER AND ROADWAYS | | | | |
| Perimeter Number | *P-3 | P-4 | P-5 | P-6 | P-7 |
| Perimeter/Frontage<br>Designation/Landscape Type | C | C | B | B | A |
| Linear Feet of Roadway<br>Frontage/Perimeter | 1941 LF | 739 LF | 530 LF | 92 LF | 1039 LF |
| Credit for Existing Vegetation<br>(Yes, No, Linear Feet<br>Describe Below if Needed) | Yes<br>1941 LF | Yes<br>644 LF | No | No | Yes<br>181 LF |
| Credit for Wall, Fence or Berm<br>(Yes, No, Linear Feet<br>Describe Below if Needed) | No | No | No | No | No |
| Subtotal<br>(LF of Perimeter - Credits) | 0 LF | 95 LF | 530 LF | 92 LF | 858 LF |
| Number of Plants Required<br>Shade Trees<br>Evergreen Trees<br>Shrubs | -<br>-<br>- | 1:40 2<br>1:20 5<br>- | 1:50 11<br>1:40 13<br>- | 1:50 2<br>1:40 2<br>- | 1:60 14<br>-<br>- |
| Number of Plants Provided<br>Shade Trees<br>Evergreen Trees<br>Other Trees (2:1 substitution)<br>Shrubs (10:1 substitution)<br>(Describe plant substitution credits<br>below if needed) | -<br>-<br>-<br>- | 2<br>5<br>-<br>- | 11<br>13<br>-<br>- | 2<br>2<br>-<br>- | 15<br>-<br>-<br>- |

NOTE:
1. PLANT QUANTITIES PROVIDED REPRESENT MORE THAN IS REQUIRED PER SCHEDULES A, B & C.
2. SEE INDIVIDUAL SHEETS FOR PLANT QUANTITIES.
3. *PERIMETER P-3 PREVIOUSLY ACCOUNTED FOR ON PHASE I

| SCHEDULE B<br>PARKING LOT INTERNAL LANDSCAPING | |
|---|---|
| Number of Parking Spaces | 56 |
| Number of Trees Required (1:9) | 6 |
| Number of Trees Provided<br>Shade Trees<br>Other Trees (2:1 Substitution) | 6<br>- |

| SCHEDULE C<br>STORMWATER MANAGEMENT AREA LANDSCAPING | | |
|---|---|---|
| Stormwater Management Area | Bio-Retention 2 | Dry Pond 3 |
| Linear feet of perimeter | 548 LF | 936 LF |
| Credit for existing vegetation | Yes<br>158 LF | Yes<br>378 LF |
| Credit for other landscaping (See *Note below) | Yes<br>390 LF | No |
| Subtotal (linear feet of perimeter - credits) | 0 LF | 468 LF |
| Number of Plants Required<br>Shade Trees (1:50)<br>Evergreen Trees (1:40) | -<br>- | 9<br>12 |
| Number of Plants Provided<br>Shade Trees<br>Other Trees (2:1 substitution) | -<br>- | 9<br>12 |

*NOTE:
1. PLANTING DESIGN FOR BIO-RETENTION AREA 2 BASED ON "LANDSCAPING GUIDANCE FOR STORMWATER BMP'S" PROVIDED BY MARYLAND DEPARTMENT OF THE ENVIRONMENT (MDE). THE LANDSCAPING STRATEGY FOR THE AREA ATTEMPTS TO CREATE AN ENVIRONMENTAL AND AESTHETIC AMENITY THAT FITS WITHIN ITS PARKLAND CONTEXT INSTEAD OF SCREENING ITS VIEW FROM PARK USERS AS SUGGESTED IN THE COUNTY LANDSCAPE MANUAL. INCORPORATION OF NATIVE AND ADAPTED WETLAND SPECIES HELPS TREAT STANDING WATER AND CONTRIBUTES TO A SUSTAINABLE ENVIRONMENT FOR INSECTS, AQUATIC LIFE AND OTHER WILDLIFE. TREES AND SHRUBS ARE LOCATED TO PROMOTE SOIL STABILITY AND PROVIDE AN AESTHETICALLY-PLEASING VIEW TO THE POND.

At the time of plant installation, all shrubs and trees listed and approved on the Landscape Plan, shall comply with the proper height requirement in accordance with the Howard County Landscape Manual. In addition, no substitutions or relocations of the required plantings may be made without prior review and approval from the Department of Planning and Zoning. Any deviation from the approved Landscape Plan may result in denial or delay in the final release of the landscape plan until such time as all required materials are planted and/or revisions are made to the applicable plans

The owner, tenants, and/or their agents shall be responsible for maintenance of the required landscaping including both plant materials and berms, fences and walls. All plant materials shall be maintained in good growing condition, and when necessary, replaced with new materials to ensure continued compliance with applicable regulations. All other required landscaping shall be permanently maintained in good condition, and when necessary, repaired or replaced.

This plan has been prepared in accordance with Section 16.124 of the Howard County Code and Landscape Manual with 10 shade trees, 5 ornamental trees, 33 evergreen trees and 128 shrubs.

**Developer's/Owner's Landscape Certificate**

I/we certify that the landscaping shown on this plan will be done according to the plan, Section 16.124 of the Howard County Code and the Landscape Manual. I/we further certify that upon completion a Letter of Landscape Installation, accompanied by an executed one year guarantee of plant materials, will be submitted to the Department of Planning and Zoning.

Developer's/Owner's Name


The Lukmire Partnership
Architecture
Planning
Interior Design
2700 South Quincy Street
Suite 300
Arlington, VA 22206
703.998.0101
FAX 703.998.7798

MAHAN RYKIEL ASSOCIATES INC.
Landscape Architects
The Stieff Silver Building
800 Wyman Park Drive
Suite 100
Baltimore, MD 21211 USA
Tel. 410.235.6001


APPROVED : HOWARD COUNTY DEPARTMENT OF PLANNING AND ZONING.

DIRECTOR — DATE 12/13/10

CHIEF, DEVELOPMENT ENGINEERING DIVISION — DATE 12/10/10

CHIEF, DIVISION OF LAND DEVELOPMENT — DATE 12/10/10

| DATE | NO. | REVISION |
|---|---|---|
| | | |

OWNER
HOWARD COUNTY DEPARTMENT OF PUBLIC WORKS
BUREAU OF ENGINEERING
9250 BENDIX ROAD, COLUMBIA, MARYLAND 21045
P 410 313 2414

DEVELOPER
HOWARD COUNTY DEPARTMENT OF PUBLIC WORKS
BUREAU OF ENGINEERING
9250 BENDIX ROAD, COLUMBIA, MARYLAND 21045
P 410 313 2414

PROJECT
NORTH LAUREL COMMUNITY CENTER
CAPITAL PROJECT C-0304

AREA
TAX MAP 47 GRID 22 & TAX MAP 50
GRIDS 3 & 4, PARCELS A-1, 187 & 1065 ZONED R-SC
6TH ELECTION DISTRICT
HOWARD COUNTY, MARYLAND

TITLE
LANDSCAPE CALCULATIONS


Patton Harris Rust & Associates
Engineers. Surveyors. Planners. Landscape Architects.
8818 Centre Park Drive
Columbia, MD 21045
T 410.997.8900
F 410.997.9282


"PROFESSIONAL CERTIFICATION. I HEREBY CERTIFY THAT THESE DOCUMENTS WERE PREPARED OR APPROVED BY ME, AND THAT I AM A DULY LICENSED PROFESSIONAL UNDER THE LAWS OF THE STATE OF MARYLAND."

| | |
|---|---|
| DESIGNED BY : CB | |
| DRAWN BY : CD/ RC | |
| PROJECT NO : 09102 | |
| DATE : SEPTEMBER 3, 2010 | |
| SCALE : | |
| DRAWING NO. 33 OF 37 | |

SDP-10-010

NOTES:
1. DO NOT CUT CENTRAL LEADER.
2. FOR PLANTS IN WIRE BASKETS, REFER TO SPECIFICATIONS.
3. DO NOT PLACE MULCH AGAINST TRUNK.
4. TREES TO HAVE SINGLE LEADER.
5. CUT AND REMOVE TOP HALF OF WIRE BASKETS.

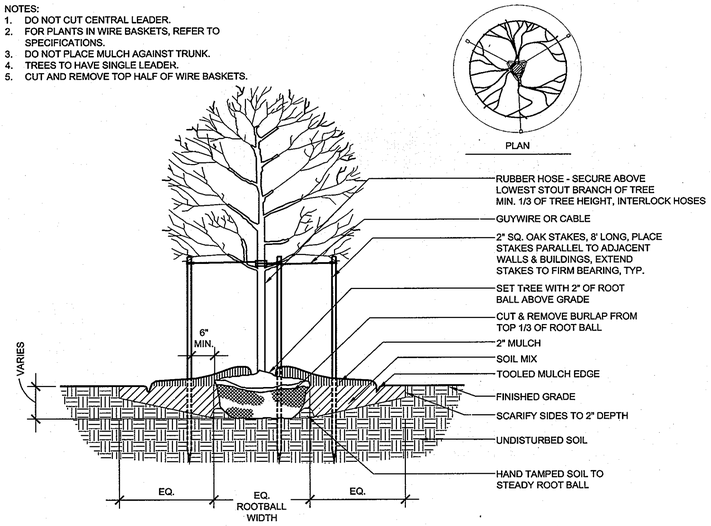


## 1 Typical Deciduous Tree Planting
Scale: 1/2" = 1'-0"

NOTES:
1. DO NOT CUT CENTRAL LEADER.
2. DO NOT MULCH AGAINST TRUNK.
3. SET TREE WITH 1/8 OF ROOT BALL ABOVE GRADE.
4. STAKES, WIRES, AND HOSES SHALL BE REMOVED AFTER ONE YEAR.
5. SCARIFY SUBSOIL AND SIDES OF TREE PIT TO A MIN. OF 4" DEPTH.
6. TREES UNDER 2-1/2" CAL.: 10' x 2" x 2" STAKES SET VERTICAL, MIN. 2' INTO COMPACTED SUBGRADE.

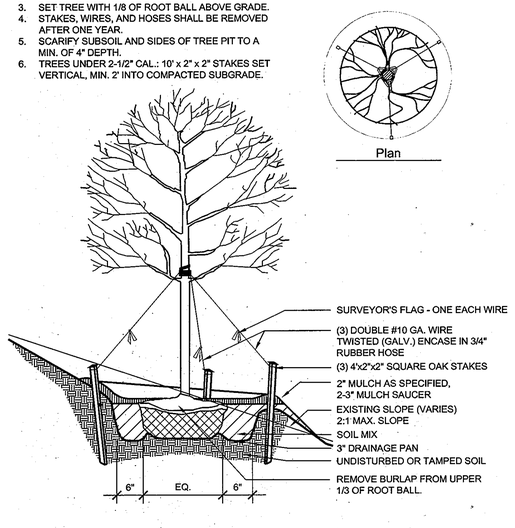


## 2 Typical Deciduous Tree Planting on Slope
Scale: 1/2" = 1'-0"

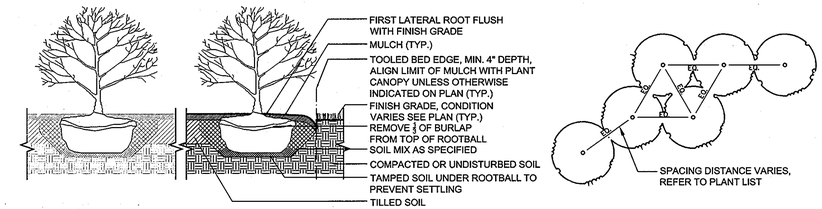


## 3 Typical Shrub Tree Planting
NTS

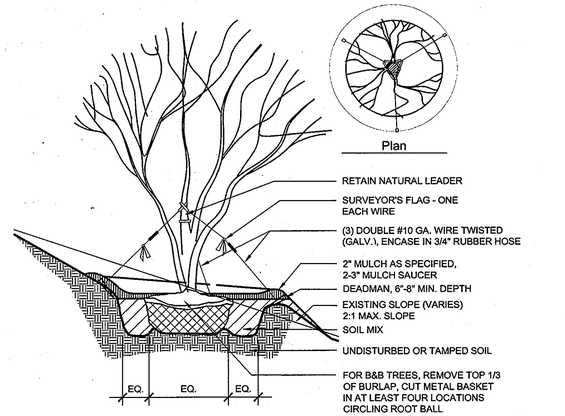


## 6 Typical Bio-Retention Multi-Stem Tree Planting
Scale: 1/2" = 1'-0"

NOTES:
1. DO NOT CUT CENTRAL LEADER.
2. FOR PLANTS IN WIRE BASKETS, REFER TO SPECIFICATIONS.
3. DO NOT PLACE MULCH AGAINST TRUNK.
4. TREES TO HAVE SINGLE LEADER.
5. CUT AND REMOVE TOP HALF OF WIRE BASKETS.

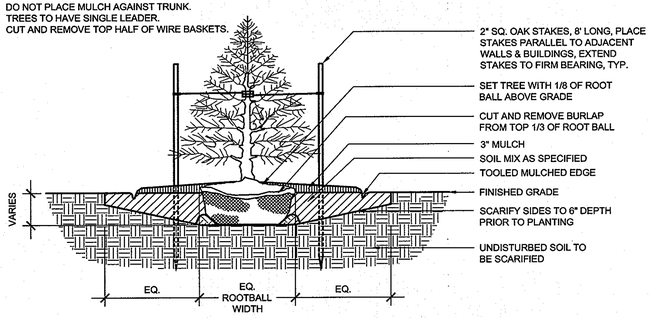


## 4 Typical Evergreen Tree Planting
Scale: 1/2" = 1' - 0"

NOTES:
1. DO NOT CUT CENTRAL LEADER.
2. FOR PLANTS IN WIRE BASKETS, REFER TO SPECIFICATIONS.

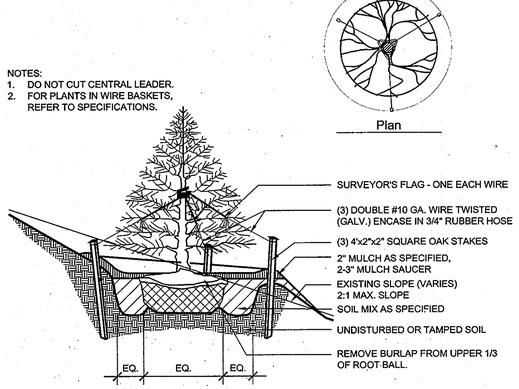


## 5 Typical Evergreen Tree Planting on Slope
Scale: 1/2" = 1'-0"

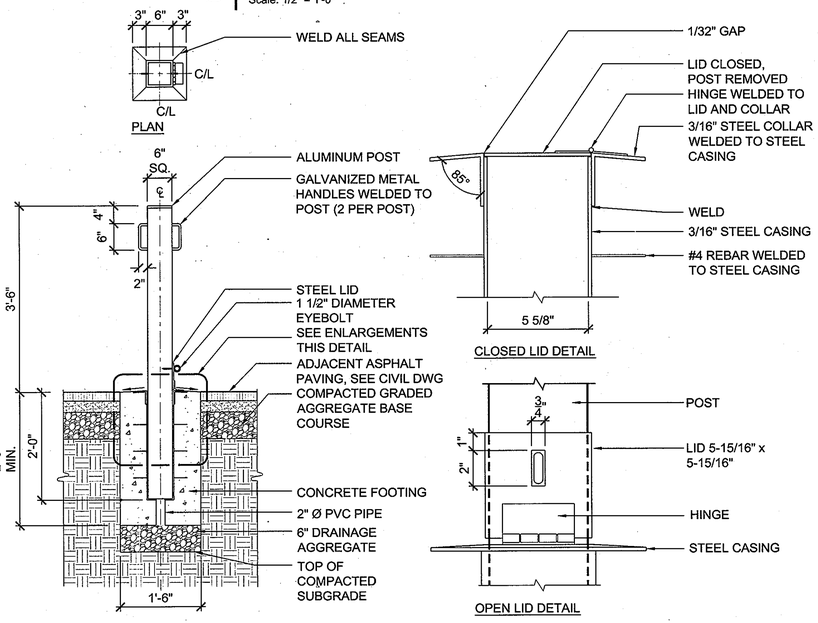


SECTION

NOTE:
1. ORIENT HANDLES PARALLEL TO DIRECTION OF PATHWAY
2. GRIND ALL EXPOSED SURFACES SMOOTH AND FREE FROM BURRS. PAINT ALL EXPOSED SURFACES WITH 2 COATS 'GLIDDEN GLID GUARD' ALKYD INDUSTRIAL ENAMEL OR APPROVED EQUAL. COLOR TO MATCH BENCH FRAME (BROWN), PROVIDE A SAMPLE FOR APPROVAL.
3. CONTRACTOR TO SUBMIT SHOP DWGS. FOR REVIEW PRIOR TO FABRICATION.

## 9 Removable Bollard
Scale: 3/4" = 1' - 0"

NOTE:
1. CUT AND REMOVE BURLAP FROM TOP 1/3 OF ROOTBALL AS SHOWN.

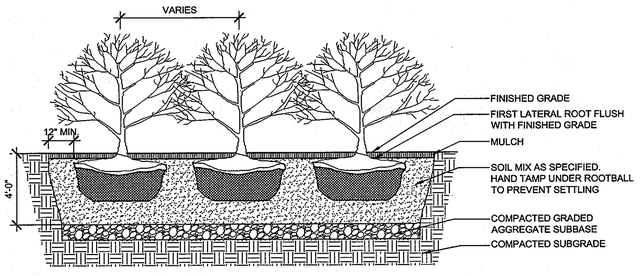


## 7 Typical Bio-Retention Shrub Planting
Scale: 1/4" = 1' - 0"

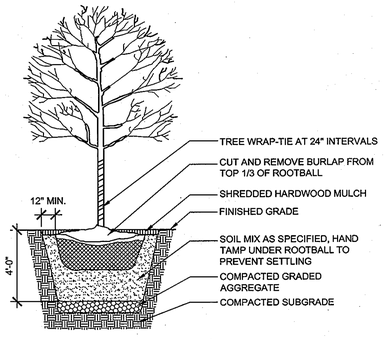


## 8 Typical Bio-Retention Tree Planting
Scale: 1/4" = 1' - 0"


The Lukmire Partnership
Architecture
Planning
Interior Design
2700 South Quincy Street
Suite 300
Arlington, VA 22206
703.998.0101
FAX 703.998.7798

MAHAN RYKIEL ASSOCIATES INC.
Landscape Architects
The Stieff Silver Building
800 Wyman Park Drive
Suite 100
Baltimore, MD 21211 USA
Tel. 410.235.6001


APPROVED : HOWARD COUNTY DEPARTMENT OF PLANNING AND ZONING.

DIRECTOR — DATE 12/13/10

CHIEF, DEVELOPMENT ENGINEERING DIVISION — DATE 11/12/10

CHIEF, DIVISION OF LAND DEVELOPMENT — DATE 12/10/10

| DATE | NO. | REVISION |
|---|---|---|
| | | |

OWNER
HOWARD COUNTY DEPARTMENT OF PUBLIC WORKS
BUREAU OF ENGINEERING
9250 BENDIX ROAD, COLUMBIA, MARYLAND 21045
P 410 313 2414

DEVELOPER
HOWARD COUNTY DEPARTMENT OF PUBLIC WORKS
BUREAU OF ENGINEERING
9250 BENDIX ROAD, COLUMBIA, MARYLAND 21045
P 410 313 2414

PROJECT
NORTH LAUREL COMMUNITY CENTER
CAPITAL PROJECT C-0304

AREA
TAX MAP 47 GRID 22 & TAX MAP 50
GRIDS 3 & 4, PARCELS A-1, 187 & 1065 ZONED R-SC
6TH ELECTION DISTRICT
HOWARD COUNTY, MARYLAND

TITLE
# LANDSCAPE DETAILS


Patton Harris Rust & Associates
Engineers. Surveyors. Planners. Landscape Architects.
8818 Centre Park Drive
Columbia, MD 21045
T 410.997.8900
F 410.997.9282


"PROFESSIONAL CERTIFICATION. I HEREBY CERTIFY THAT THESE DOCUMENTS WERE PREPARED OR APPROVED BY ME, AND THAT I AM A DULY LICENSED PROFESSIONAL UNDER THE LAWS OF THE STATE OF MARYLAND."

| | |
|---|---|
| DESIGNED BY : | CB |
| DRAWN BY : | CD/ RC |
| PROJECT NO : | 09102 |
| DATE : | SEPTEMBER 3, 2010 |
| SCALE : | AS NOTED |
| DRAWING NO. | 34 OF 37 |

SDP-10-010

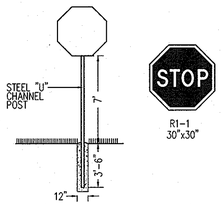


1/35 **STOP SIGN DETAIL**
NOT TO SCALE

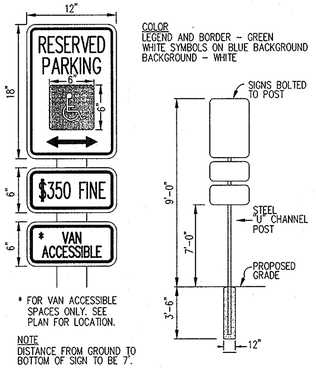


2/35 **HANDICAP SIGN DETAIL**
NOT TO SCALE

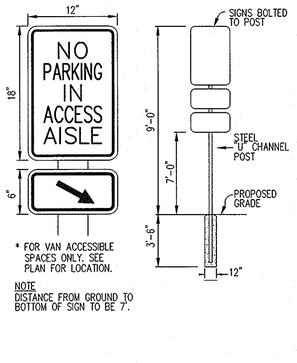


3/35 **ACCESS AISLE SIGN**
NOT TO SCALE

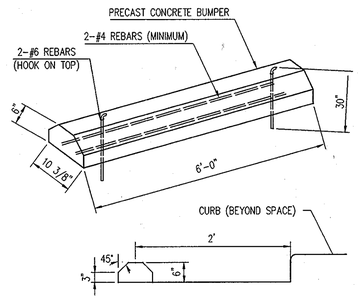


4/35 **CONCRETE WHEEL STOP**
NOT TO SCALE

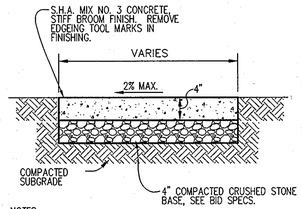


NOTES :
1. PROVIDE LATITUDINAL EXPANSION JOINTS AT 15' O.C. (MAX.)
2. PROVIDE CONTRACTION (DUMMY) JOINT AT 5' O.C. INTERVALS BETWEEN EXPANSION JOINTS. SIDEWALK TO BE SCRIBED IN 5' MAX. SQUARES. CONTRACTOR TO AVOID THE CREATION OF SMALL SCORED AREAS THAT WILL CRACK AND BREAK OFF FROM SIDWALK.
3. SIDEWALK CROSS SLOPE SHALL NOT EXCEED 2%.
4. CONCRETE SHALL BE 3,500 PSI.

5/35 **SIDEWALK DETAIL**
NOT TO SCALE

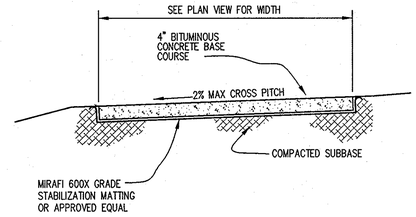


6/35 **TYPICAL SECTION - ASPHALT PATHWAY**
NOT TO SCALE

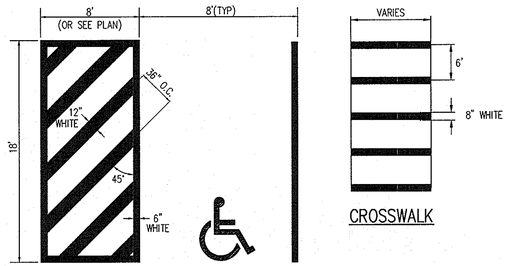


7/35 **STRIPING STANDARDS**
NOT TO SCALE

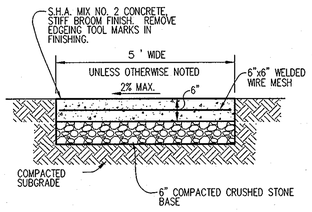


NOTES :
1. PROVIDE LATITUDINAL EXPANSION JOINTS AT 15' O.C. (MAX.)
2. PROVIDE CONTRACTION (DUMMY) JOINT AT 5' O.C. INTERVALS BETWEEN EXPANSION JOINTS. PAVEMENT TO BE SCRIBED IN 5' MAX. SQUARES. CONTRACTOR TO AVOID THE CREATION OF SMALL SCORED AREAS THAT WILL CRACK AND BREAK OFF FROM PAVEMENT.
3. CROSS SLOPE SHALL NOT EXCEED 2%.
4. CONCRETE SHALL BE 3,500 PSI.

8/35 **HEAVY DUTY CONCRETE PAVING**
NOT TO SCALE

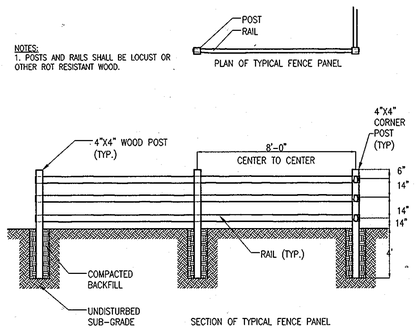


9/35 **SPLIT RAIL FENCE**
NOT TO SCALE

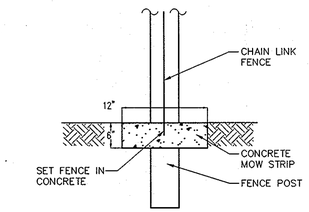


10/35 **MOWING STRIP**
NOT TO SCALE

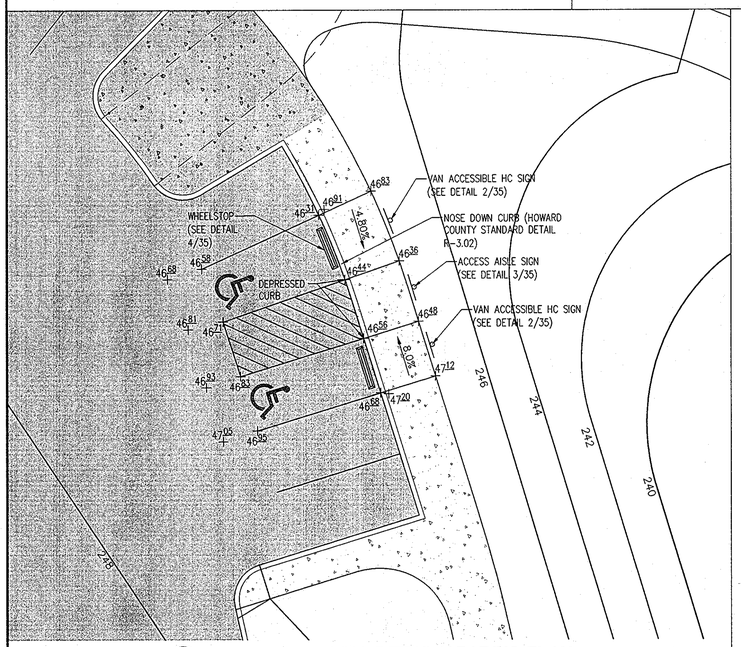


11/35 **HANDICAP PARKING DETAIL GRADING PLAN**
SCALE: 1"=10'

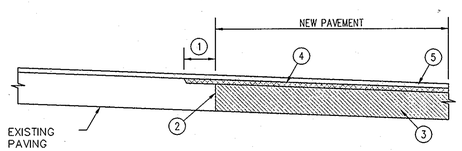


1. MILL A 1' WIDE X 2" DEEP STRIP
2. SAW-CUT THROUGH FULL DEPTH PAVING
3. INSTALL SUB BASE GRAVEL AND BASIC PAVEMENT PER THE TYPICAL PAVEMENT SECTION.
4. PROVIDE CONTINUOUS 1½" WEARING COURSE*
5. PROVIDE 1½" TOP SURFACE COARSE*

*NOTE: LONGITUDINAL JOINTS FOR THE WEARING AND TOP SURFACE COARSE MUST NOT COINCIDE WITH THE FULL-DEPTH SAW-CUT JOINT

12/35 **PAVEMENT CONNECTION DETAIL**
NOT TO SCALE

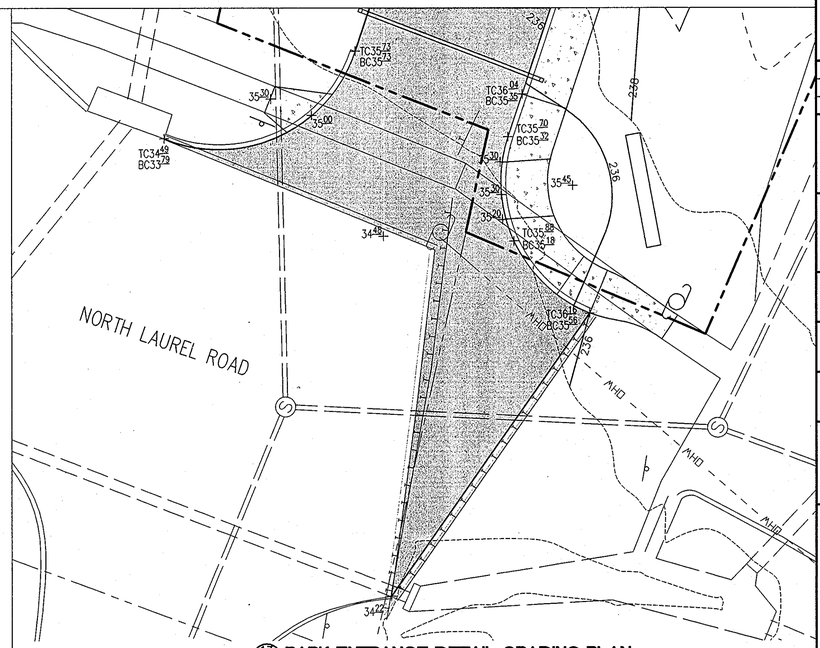


13/35 **PARK ENTRANCE DETAIL GRADING PLAN**
SCALE: 1"=10'

APPROVED : HOWARD COUNTY DEPARTMENT OF PLANNING AND ZONING.

DIRECTOR — DATE 12/13/10

CHIEF, DEVELOPMENT ENGINEERING DIVISION — DATE 12/8/10

CHIEF, DIVISION OF LAND DEVELOPMENT — DATE 12/10/10

| DATE | NO. | REVISION |
|---|---|---|

OWNER
HOWARD COUNTY DEPARTMENT OF PUBLIC WORKS
BUREAU OF ENGINEERING
9250 BENDIX ROAD, COLUMBIA, MARYLAND 21045
P 410 313 2414

DEVELOPER
HOWARD COUNTY DEPARTMENT OF PUBLIC WORKS
BUREAU OF ENGINEERING
9250 BENDIX ROAD, COLUMBIA, MARYLAND 21045
P 410 313 2414

PROJECT
**NORTH LAUREL COMMUNITY CENTER**
CAPITAL PROJECT C-0304 PROJECT MGR: DAVE LOUDERMILK

AREA TAX MAP 47 GRID 22 & TAX MAP 50
GRIDS 3 & 4, PARCELS A-1, 187 & 1065 ZONED R-SC
6TH ELECTION DISTRICT
HOWARD COUNTY, MARYLAND

TITLE
**SITE DETAILS**


**Patton Harris Rust & Associates**
Engineers. Surveyors. Planners. Landscape Architects.
8818 Centre Park Drive
Columbia, MD 21045
T 410.997.8900
F 410.997.9282


SEAL — STATE OF MARYLAND — CHARLES MITCHELL — NO. 23054 — REGISTERED PROFESSIONAL ENGINEER — 9-21-10

BY: _____

"PROFESSIONAL CERTIFICATION. I HEREBY CERTIFY THAT THESE DOCUMENTS WERE PREPARED OR APPROVED BY ME, AND THAT I AM A DULY LICENSED PROFESSIONAL ENGINEER UNDER THE LAWS OF THE STATE OF MARYLAND, LICENSE NO. 23054, EXPIRATION DATE: 07-24-11"

DESIGNED BY : JSN
DRAWN BY: JSN
PROJECT NO : 14466-1-2
C400SDP35.DWG
DATE : SEPTEMBER 7, 2010
SCALE : AS SHOWN
DRAWING NO. 35 OF 43

P:\Project\14466\1-2\PLANS\C400SDP35.DWG

SDP-10-010

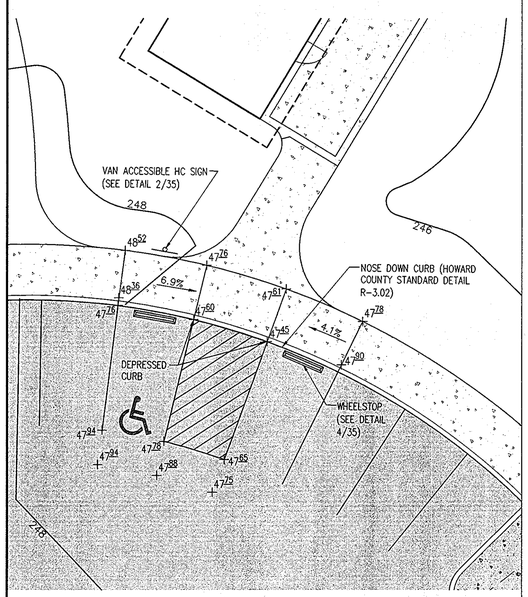


## 1/36 HANDICAP PARKING DETAIL GRADING PLAN

SCALE: 1"=10'

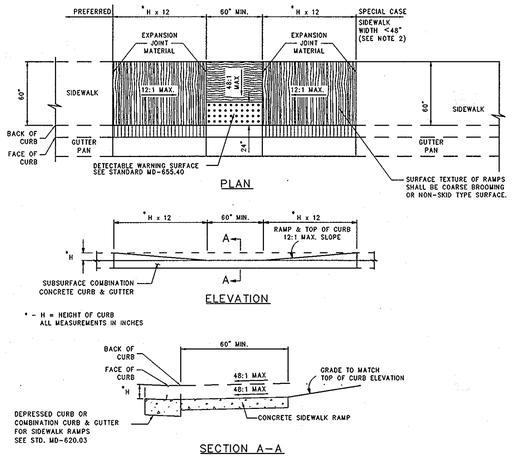


## SIDEWALK RAMPS PARALLEL

SHA STANDARD NO. MD 655.12

NOTES

1. TO BE USED WHERE SIDEWALK IS ADJACENT TO THE CURB. THIS STANDARD MAY BE MODIFIED TO SUIT A PARTICULAR LOCATION.
2. WHERE 60" SIDEWALK CAN NOT BE PROVIDED, A DESIGN WAIVER MUST BE REQUESTED.
3. NO TRAVERSABLE SLOPE ON THE RAMP OR SIDEWALK SHALL EXCEED 12:1 IN THE DIRECTION OF PEDESTRIAN TRAVEL, OR 48:1 PERPENDICULAR TO THE DIRECTION OF PEDESTRIAN TRAVEL.
4. EXPANSION JOINT MATERIAL SHALL BE INSTALLED IN ACCORDANCE WITH STD. MD-655.01.
5. SIDEWALK RAMP SHALL BE INCLUDED IN PRICE BID FOR CONCRETE SIDEWALK. DEPRESSED CURB AND CURB TRANSITION SHALL BE INCLUDED IN PRICE BID FOR CURB OR CURB & GUTTER ADJACENT TO SIDEWALK RAMP. DETECTABLE WARNING SURFACE SHALL BE PAID FOR IN ACCORDANCE WITH SECTION 611 OF THE SPECIFICATIONS.
6. SIDEWALK RAMPS TO BE SHOWN ON PLANS SYMBOLICALLY AND REFERENCED WITH THE CENTER OF THE RAMP ALIGNED TO A STATION ON THE CONSTRUCTION CENTERLINE. SEPARATE DETAILS SHALL BE SHOWN WHERE PROPOSED RAMP VARIES FROM STANDARD CASES.

## 2/36 SIDEWALK RAMPS - PARALLEL

NOT TO SCALE

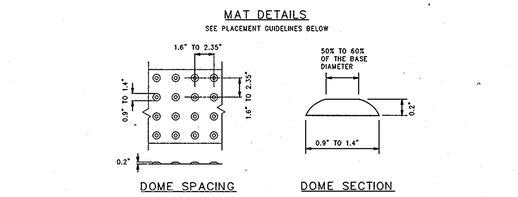


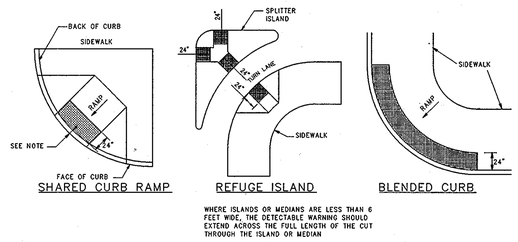


WHERE ISLANDS OR MEDIANS ARE LESS THAN 6 FEET WIDE, THE DETECTABLE WARNING SHOULD EXTEND ACROSS THE FULL LENGTH OF THE CUT THROUGH THE ISLAND OR MEDIAN

## 3/36 DETECTABLE WARNING SURFACES

SHA STANDARD NO. MD 655.40

NOTES

1. THE DETECTABLE WARNING SURFACE SHALL BE LOCATED SO THAT THE EDGE NEAREST THE CURB LINE IS 6 TO 8 INCHES FROM THE FACE OF CURB.
2. FOR SIDEWED APPLICATIONS DETECTABLE WARNING SHALL BE PLACED SUCH THAT THE DOMES CLOSEST TO THE BACK OF CURB ARE NO LESS THAN 0.5" AND NO MORE THAN 3.0" FROM THE BACK OF CURB. TRUNCATED DOME SURFACES SHALL BE FABRICATED TO PROVIDE FULL DOMES ONLY.
3. DETECTABLE WARNING SURFACE SHALL BE PAID FOR IN ACCORDANCE WITH SECTION 611 OF THE SPECIFICATIONS.
4. DETECTABLE WARNING SURFACES ARE REQUIRED AT STREET CROSSING & SIGNALIZED INTERSECTIONS.

## 3/36 DETECTABLE WARNING SURFACES

NOT TO SCALE

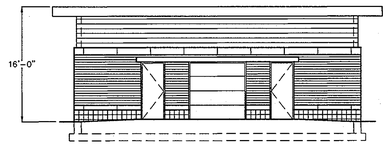


WESTSIDE RESTROOM & MAINTENANCE PAVILION-FRONT ELEVATION
SCALE: 1"=10' (FOR REFERENCE ONLY. PLEASE REFER TO ARCHITECTURALS FOR CONSTRUCTION PLANS)

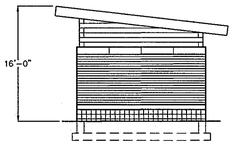


WESTSIDE RESTROOM & MAINTENANCE PAVILION-SIDE ELEVATION
SCALE: 1"=10' (FOR REFERENCE ONLY. PLEASE REFER TO ARCHITECTURALS FOR CONSTRUCTION PLANS)

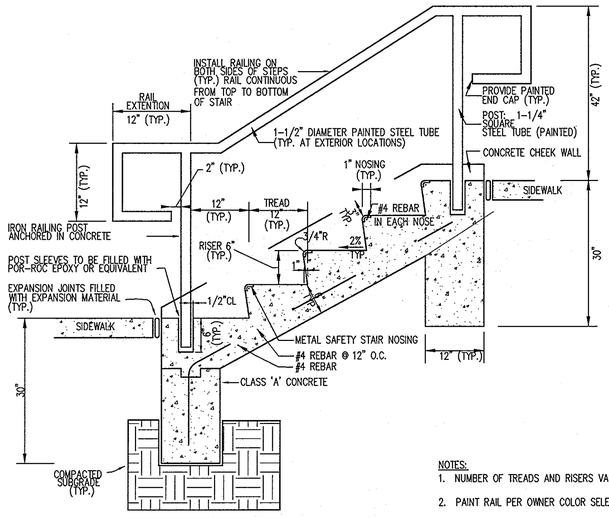


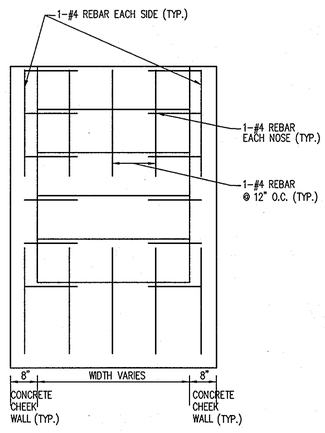


NOTES:

1. NUMBER OF TREADS AND RISERS VARIES. SEE PLANS FOR STAIR LAYOUT.
2. PAINT RAIL PER OWNER COLOR SELECTION.

## 5/36 STAIR AND HANDRAIL

NOT TO SCALE

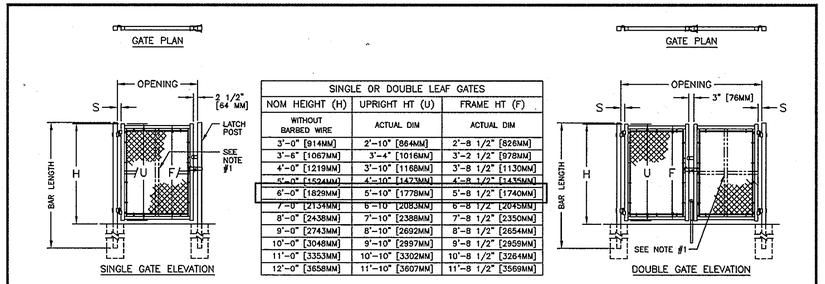


| SINGLE OR DOUBLE LEAF GATES | | |
|---|---|---|
| NOM HEIGHT (H) WITHOUT BARBED WIRE | UPRIGHT HT (U) ACTUAL DIM | FRAME HT (F) ACTUAL DIM |
| 3'-0" [914MM] | 2'-10" [864MM] | 2'-8 1/2" [826MM] |
| 3'-6" [1067MM] | 3'-4" [1016MM] | 3'-2 1/2" [978MM] |
| 4'-0" [1219MM] | 3'-10" [1168MM] | 3'-8 1/2" [1130MM] |
| 5'-0" [1524MM] | 4'-10" [1473MM] | 4'-8 1/2" [1435MM] |
| 6'-0" [1829MM] | 5'-10" [1778MM] | 5'-8 1/2" [1740MM] |
| 7'-0" [2134MM] | 6'-10" [2083MM] | 6'-8 1/2" [2045MM] |
| 8'-0" [2438MM] | 7'-10" [2388MM] | 7'-8 1/2" [2350MM] |
| 9'-0" [2743MM] | 8'-10" [2692MM] | 8'-8 1/2" [2654MM] |
| 10'-0" [3048MM] | 9'-10" [2997MM] | 9'-8 1/2" [2959MM] |
| 11'-0" [3353MM] | 10'-10" [3302MM] | 10'-8 1/2" [3264MM] |
| 12'-0" [3658MM] | 11'-10" [3607MM] | 11'-8 1/2" [3569MM] |

| SINGLE LEAF GATES | | |
|---|---|---|
| OPENING FACE TO FACE | GATE POSTS SQ & RND SIZES | HINGE SPACE (S) POST TO UPRIGHT |
| 3'-0" [914MM] THROUGH 6'-0" [1829MM] | 2 1/2" [63.5MM] SQ OR 2.875" [73MM] OD | FOR SQUARE & ROUND GATE POSTS: 2 1/4" [57MM] |
| 7'-0" [2134MM] THROUGH 10'-0" [3048MM] | 3" [76MM] SQ OR 4" [102MM] OD | FOR SQUARE & ROUND GATE POSTS: 2 1/4" [57MM] |
| 11'-0" [3353MM] THROUGH 12'-0" [3658MM] | 4" [102MM] SQ OR 4" [102MM] OD | FOR SQUARE & ROUND GATE POSTS: 2 1/4" [57MM] |
| 13'-0" [3962MM] THROUGH 18'-0" [5486MM] | 6" [152MM] SQ OR 6.625" [168MM] OD | FOR GATE POSTS: SQ-2 1/4" [57MM] RND-3 1/2" [89MM] |
| 19'-0" [5791MM] THROUGH 20'-0" [8098MM] | 8" [203MM] SQ OR 8.625" [219MM] OD | FOR GATE POSTS: SQ-2 1/4" [57MM] RND-3 1/2" [89MM] |

| DOUBLE LEAF GATES | | |
|---|---|---|
| OPENING FACE TO FACE | GATE POSTS SQ & RND SIZES | HINGE SPACE (S) POST TO UPRIGHT |
| 8'-0" [2438MM] THROUGH 12'-0" [3658MM] | 2 1/2" [63.5MM] SQ OR 2.875" [73MM] OD | FOR SQUARE & ROUND GATE POSTS: 2 1/4" [57MM] |
| 14'-0" [4267MM] THROUGH 24'-0" [7315MM] | 3" [76MM] SQ OR 4" [102MM] OD | FOR SQUARE & ROUND GATE POSTS: 2 1/4" [57MM] |
| 26'-0" [7925MM] THROUGH 36'-0" [10973MM] | 6" [152MM] SQ OR 6.625" [168MM] OD | FOR GATE POSTS: SQ-2 1/4" [57MM] RND-3 1/2" [89MM] |
| 38'-0" [11582MM] THROUGH 40'-0" [12192MM] | 8" [203MM] SQ OR 8.625" [219MM] OD | FOR GATE POSTS: SQ-2 1/4" [57MM] RND-3 1/2" [89MM] |

NOTES:
1. SPECIFICATIONS SHOWN CAN BE CHANGED BY MASTER HALCO ONLY.
2. CENTER UPRIGHT REQUIRED ON GATE LEAVES 8'-0" [2438MM] & WIDER. CENTER RAIL REQUIRED ON GATE LEAVES 10'-0" [3048MM] & HIGHER.
3. THIS DWG CORRESPONDS WITH DWGS 3-1010R, 3-1015R, 3-1015M, & 3-1015L.

MASTER HALCO®
COPYRIGHT ©2001-2006 MASTER HALCO, INC. ALL RIGHTS RESERVED.

ANCHOR FENCE PRODUCTS by Master Halco
Orange, CA
Phone No.: 800-229-5615
www.FenceOnline.com

TYPICAL SWING GATES WITHOUT BARBED WIRE

DIMENSIONS & SPECIFICATIONS

BY: JRR
DATE: 01-04-96
REV: C
REV DATE: 08-25-06
DWG: 3-1000
LAYER: 1
SCALE: 1/4" = 1'-0"

## 6/36 GATE DETAIL

NOT TO SCALE

APPROVED : HOWARD COUNTY DEPARTMENT OF PLANNING AND ZONING.

DIRECTOR — DATE 12/13/10

CHIEF, DEVELOPMENT ENGINEERING DIVISION — DATE 12/10/10

CHIEF, DIVISION OF LAND DEVELOPMENT — DATE 12/10/10

| DATE | NO. | REVISION |
|---|---|---|

OWNER

HOWARD COUNTY DEPARTMENT OF PUBLIC WORKS
BUREAU OF ENGINEERING
9250 BENDIX ROAD, COLUMBIA, MARYLAND 21045
P 410 313 2414

DEVELOPER

HOWARD COUNTY DEPARTMENT OF PUBLIC WORKS
BUREAU OF ENGINEERING
9250 BENDIX ROAD, COLUMBIA, MARYLAND 21045
P 410 313 2414

PROJECT
# NORTH LAUREL COMMUNITY CENTER
CAPITAL PROJECT C-0304 PROJECT MGR: DAVE LOUDERMILK

AREA TAX MAP 47 GRID 22 & TAX MAP 50
GRIDS 3 & 4, PARCELS A-1, 187 & 1065 ZONED R-SC
6TH ELECTION DISTRICT
HOWARD COUNTY, MARYLAND

TITLE
## SITE DETAILS


Patton Harris Rust & Associates
Engineers. Surveyors. Planners. Landscape Architects.
8818 Centre Park Drive
Columbia, MD 21045
T 410.997.8900
F 410.997.9282


SEAL — 9-21-10

STATE OF MARYLAND — RICHARD CLARKE MITCHELL — No. 33954 — REGISTERED PROFESSIONAL ENGINEER

BY: Sherry L. Mitchell

"PROFESSIONAL CERTIFICATION. I HEREBY CERTIFY THAT THESE DOCUMENTS WERE PREPARED OR APPROVED BY ME, AND THAT I AM A DULY LICENSED PROFESSIONAL ENGINEER UNDER THE LAWS OF THE STATE OF MARYLAND, LICENSE NO. 33954, EXPIRATION DATE: 01-24-11"

| | |
|---|---|
| DESIGNED BY : | JSN |
| DRAWN BY: | JSN |
| PROJECT NO : | 14466-1-2 C400SDP36.DWG |
| DATE : | SEPTEMBER 7, 2010 |
| SCALE : | AS SHOWN |
| DRAWING NO. | 36 OF 43 |

P:\Project\14466\1-2\PLANS\C400SDP36.DWG

SDP-10-010

NOTES:

1. No trees shall be planted within 10 feet of the top of the retaining wall.
2. Retaining walls shall only be constructed under the observation of a registered professional engineer and a (NICET, WACEL, or equiv.) certified soils technician.
3. One soil boring shall be required every one hundred feet along the entire length of the wall. Copies of all boring reports shall be provided to the Howard County Inspector Prior to the start of construction.
4. The required bearing pressure beneath the wall system shall be verified in the field by a certified soils technician. Testing documentation must be provided to the Howard County Inspector prior to start of construction. The required bearing test shall be the Dynamic Cone Penetrometer test ASTM STP-399.
5. The suitability of fill material shall be confirmed by the on-site soils technician. Each 8" lift must be compacted to a minimum 95% standard proctor density and the testing report shall be made available to the Howard County Inspector upon completion of construction.
6. Walls shall not be constructed on uncertified fill materials.
7. Walls shall not be constructed within a Howard Co. right-of-way or easement.

WALL #1 LOCATION PLAN
1" = 40'

# SPECIFICATIONS
## MODULAR CONCRETE BLOCK RETAINING WALL

**PART 1: GENERAL**

**1.01 Description**
A. Work shall consist of furnishing and construction of a Modular Retaining Wall System in accordance with these specifications and in reasonably close conformity with the lines, grades, design, and dimensions shown on the plans.
B. Work includes preparing foundation soil, furnishing and installing leveling pad, unit drainage fill and backfill to the lines and grades shown on the construction drawings.
C. Work includes furnishing and installing geogrid soil reinforcement of the type, size, location, and lengths designated on the construction drawings.

**1.02 Delivery, Storage and Handling**
A. Contractor shall check all materials upon delivery to assure that the proper type, grade, color, and certification has been received.
B. Contractor shall protect all materials from damage due to job site conditions and in accordance with manufacturer's recommendations. Damaged materials shall not be incorporated into the work.

**PART 2: PRODUCTS**

**2.01 Modular Concrete Retaining Wall Units**
A. Modular concrete units shall conform to the following architectural requirements:
face color - color may be specified by the Owner.
face finish - sculptured rock face in angular tri-planer or flat configuration. Other face finishes will not be allowed without written approval of Owner.
bond configuration - running with bonds nominally located at midpoint vertically adjacent units, in both straight and curved alignments.
exposed surfaces of units shall be free of chips, cracks or other imperfections when viewed from a distance of 10 feet under diffused lighting.
B. Modular concrete materials shall conform to the requirements of ASTM C1372 - Standard Specifications for Segmental Retaining Wall Units.
C. Modular concrete units shall conform to the following structural and geometric requirements measured in accordance with appropriate references:
compressive strength = 3000 psi minimum;
absorption = 8 % maximum (6% in northern states) for standard weight aggregates;
dimensional tolerances = ± 1/8" from nominal unit dimensions not including rough split face, ±1/16" unit height - top and bottom planes;
unit size - 8" (H) x 18" (W) x 12 (D) minimum;
unit weight - 75 lbs/unit minimum for standard weight aggregates;
inter-unit shear strength - 1000 plf minimum at 2 psi normal pressure;
geogrid/unit peak connection strength - 1000 plf minimum at 2 psi normal force.
D. Modular concrete units shall conform to the following constructability requirements: (if applicable)
vertical setback = 1/8"± per course (near vertical) or 1"+ per course per the design;
alignment and grid positioning mechanism - fiberglass pins, two per unit minimum;
maximum horizontal gap between erected units shall be - 1/2 inch.

**2.02 Shear Connectors** (if applicable)
A. Shear connectors shall be 1/2 inch diameter thermoset isopthalic polyester resin-protruded fiberglass reinforcement rods or equivalent to provide connection between vertically and horizontally adjacent units. Strength of shear connectors between vertical adjacent units shall be applicable over a design temperature of 10 degrees F to + 100 degrees F.
B. Shear connectors shall be capable of holding the geogrid in the proper design position during grid pre-tensioning and backfilling.

**2.03 Base Leveling Pad Material**
A. Material shall consist of a compacted #57 crushed stone base as shown on the construction drawings.

**2.04 Unit Drainage Fill**
A. Unit drainage fill shall consist of #57crushed stone

**2.05 Reinforced Backfill**
A. Reinforced backfill shall type SM, be free of debris and meet the following gradation tested in accordance with ASTM D-422 and meet other properties shown on the plan:

| Sieve Size | Percent Passing |
|---|---|
| 2 inch | 100-75 |
| 3/4 inch | 100-75 |
| No. 40 | 0-60 |
| No. 200 | 0-40 |

Plasticity Index (PI) <10 and Liquid Limit <35 per ASTM D-4318.
B. Material can be site excavated soils where the above requirements can be met. Unsuitable soils for backfill (high plastic clays or organic soils) shall not be used in the reinforced soil mass.

**2.06 Geogrid Soil Reinforcement**
A. Geosynthetic reinforcement shall consist of geogrids manufactured specifically for soil reinforcement applications and shall be manufactured from high tenacity polyester yarn.

**2.07 Drainage Pipe**
A. The drainage pipe shall be perforated corrugated HDPE pipe manufactured in accordance with ASTM D-1248.

**PART 3 EXECUTION**

**3.01 Excavation**
A. Contractor shall excavate to the lines and grades shown on the construction drawings. Owner's representative shall be responsible for inspecting and approving the excavation prior to placement of leveling material or fill soils.

**3.02 Base Leveling Pad**
A. Leveling pad material shall be placed to the lines and grades shown on the construction drawings, to a minimum thickness of 6 inches and extend laterally a minimum of 6" in front and behind the modular wall unit.
B. Leveling pad shall be prepared to insure full contact to the base surface of the concrete units.

**3.03 Modular Unit Installation**
A. First course of units shall be placed on the leveling pad at the appropriate line and grade. Alignment and level shall be checked in all directions and insure that all units are in full contact with the base and properly seated.
B. Place the front of units side-by-side. Do not leave gaps between adjacent units. Layout of corners and curves shall be in accordance with manufacturer's recommendations.
C. Install shear/connecting devices per manufacturer's recommendations.
D. Place and compact drainage fill within and behind wall units. Place and compact backfill soil behind drainage fill. Follow wall erection and drainage fill closely with structure backfill.
E. Maximum stacked vertical height of wall units, prior to unit drainage fill and backfill placement and compaction, shall not exceed three courses.

**3.04 Structural Geogrid Installation**
A. Geogrid shall be oriented with the highest strength axis perpendicular to the wall alignment.
B. Geogrid reinforcement shall be placed at the strengths, lengths, and elevations shown on the construction design drawings or as directed by the Engineer.
C. The geogrid shall be laid horizontally on compacted backfill and attached to the modular wall units. Place the next course of modular concrete units over the geogrid. The geogrid shall be pulled taut, and anchored prior to backfill placement on the geogrid.
D. Geogrid reinforcements shall be continuous throughout their embedment lengths and placed side-by-side to provide 100% coverage at each level. Spliced connections between shorter pieces of geogrid or gaps between adjacent pieces of geogrid are not permitted.

**3.05 Reinforced Backfill Placement**
A. Reinforced backfill shall be placed, spread, and compacted in such a manner that minimizes the development of slack in the geogrid and installation damage.
B. Reinforced backfill shall be placed and compacted in lifts not to exceed 6 inches where hand compaction is used, or 8 - 10 inches where heavy compaction equipment is used. Lift thickness shall be decreased to achieve the required density as required.
C. Reinforced backfill shall be compacted to 95% of the maximum density as determined by ASTM D698. The moisture content of the backfill material prior to and during compaction shall be uniformly distributed throughout each layer and shall be + 3% to - 3% of optimum.
D. Only lightweight hand-operated equipment shall be allowed within 3 feet from the tail of the modular concrete unit.
E. Tracked construction equipment shall not be operated directly upon the geogrid reinforcement. A minimum fill thickness of 6 inches is required prior to operation of tracked vehicles over the geogrid. Tracked vehicle turning should be kept to a minimum to prevent tracks from displacing the fill and damaging the geogrid.
F. Rubber tired equipment may pass over geogrid reinforcement at slow speeds, less than 10 MPH. Sudden braking and sharp turning shall be avoided.
G. At the end of each day's operation, the Contractor shall slope the last lift of reinforced backfill away from the wall units to direct runoff away from wall face. The Contractor shall not allow surface runoff from adjacent areas to enter the wall construction site.

**3.06 Cap Installation**
A. Cap units shall be glued to underlying units with an all-weather adhesive recommended by the manufacturer.

**3.07 Field Quality Control**
A. The Owner shall engage inspection and testing services, including independent laboratories, to provide quality assurance and testing services during construction.
B. As a minimum, quality assurance testing should include foundation soil inspection, soil and backfill testing, verification of design parameters, and observation of construction for general compliance with design drawings and specifications.

TYPICAL WALL SECTION
N.T.S.

APPROVED : HOWARD COUNTY DEPARTMENT OF PLANNING AND ZONING.

[signature] 12/13/10
DIRECTOR — DATE

[signature] 11/18/10
CHIEF, DEVELOPMENT ENGINEERING DIVISION — DATE

[signature] 12/10/10
CHIEF, DIVISION OF LAND DEVELOPMENT — DATE

| DATE | NO. | REVISION |
|---|---|---|
| | | |
| | | |

OWNER
HOWARD COUNTY DEPARTMENT OF PUBLIC WORKS
BUREAU OF ENGINEERING
9250 BENDIX ROAD, COLUMBIA, MARYLAND 21045
PHONE: 410 313 2414

DEVELOPER
HOWARD COUNTY DEPARTMENT OF PUBLIC WORKS
BUREAU OF ENGINEERING
9250 BENDIX ROAD, COLUMBIA, MARYLAND 21045
PHONE: 410 313 2414

PROJECT
NORTH LAUREL COMMUNITY CENTER
CAPITAL PROJECT C-0304

AREA
TAX MAP 47, GRID 22 & TAX MAP 50
GRIDS 3 & 4. PARCELS A-1, 187 & 1065 ZONED R-SC
6TH ELECTION DISTRICT
HOWARD COUNTY, MARYLAND

TITLE
RETAINING WALL #1
PLAN AND DETAILS

HILLIS-CARNES
ENGINEERING ASSOCIATES
10975 Guilford Road, Suite A (410) 880-4788 — Annapolis Junction, MD Fax: (410) 880-4098

SEAL

BY:

"PROFESSIONAL CERTIFICATION. I HEREBY CERTIFY THAT THESE DOCUMENTS WERE PREPARED OR APPROVED BY ME, AND THAT I AM A DULY LICENSED PROFESSIONAL ENGINEER UNDER THE LAWS OF THE STATE OF MARYLAND, LICENSE NO. 14434, EXPIRATION DATE: 05/13/2011."

| | |
|---|---|
| DESIGNED BY : | RWS |
| DRAWN BY: | AM |
| PROJECT NO : | 09059-B |
| DATE : AUGUST 19, 2010 | |
| SCALE : AS SHOWN | |
| DRAWING NO. 37 OF 43 | |

SDP-10-010

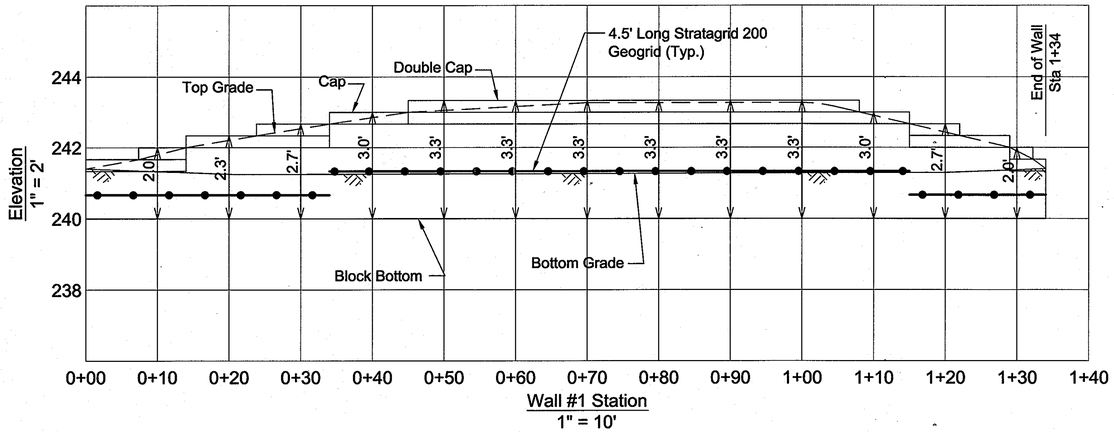


WALL #1 ELEVATION

APPROVED : HOWARD COUNTY DEPARTMENT OF PLANNING AND ZONING.

Thomas E. Butler 12/13/10
DIRECTOR DATE

[signature] 11/18/10
CHIEF, DEVELOPMENT ENGINEERING DIVISION CE DATE

[signature] 12/10/10
CHIEF, DIVISION OF LAND DEVELOPMENT DATE

| DATE | NO. | REVISION |
|---|---|---|
| | | |
| | | |

OWNER
HOWARD COUNTY DEPARTMENT OF PUBLIC WORKS
BUREAU OF ENGINEERING
9250 BENDIX ROAD, COLUMBIA, MARYLAND 21045
PHONE: 410 313 2414

DEVELOPER
HOWARD COUNTY DEPARTMENT OF PUBLIC WORKS
BUREAU OF ENGINEERING
9250 BENDIX ROAD, COLUMBIA, MARYLAND 21045
PHONE: 410 313 2414

PROJECT
NORTH LAUREL COMMUNITY CENTER
CAPITAL PROJECT C-0304

AREA
TAX MAP 47, GRID 22 & TAX MAP 50
GRIDS 3 & 4. PARCELS A-1, 187 & 1065 ZONED R-SC
6TH ELECTION DISTRICT
HOWARD COUNTY, MARYLAND

TITLE
RETAINING WALL #1 ELEVATION

HILLIS-CARNES
ENGINEERING ASSOCIATES
10975 Guilford Road, Suite A Annapolis Junction, MD
(410) 880-4788 Fax: (410) 880-4098

SEAL
STATE OF MARYLAND RICHARD W. STURTEVANT No. 14434 PROFESSIONAL ENGINEER

BY:

"PROFESSIONAL CERTIFICATION. I HEREBY CERTIFY THAT THESE DOCUMENTS WERE PREPARED OR APPROVED BY ME, AND THAT I AM A DULY LICENSED PROFESSIONAL ENGINEER UNDER THE LAWS OF THE STATE OF MARYLAND, LICENSE NO. 14434, EXPIRATION DATE: 05/13/2011."

| | |
|---|---|
| DESIGNED BY : | RWS |
| DRAWN BY: | AM |
| PROJECT NO : | 09059-B |
| DATE : AUGUST 19, 2010 | |
| SCALE : AS SHOWN | |
| DRAWING NO. 38 OF 45 | |

SDP-10-010

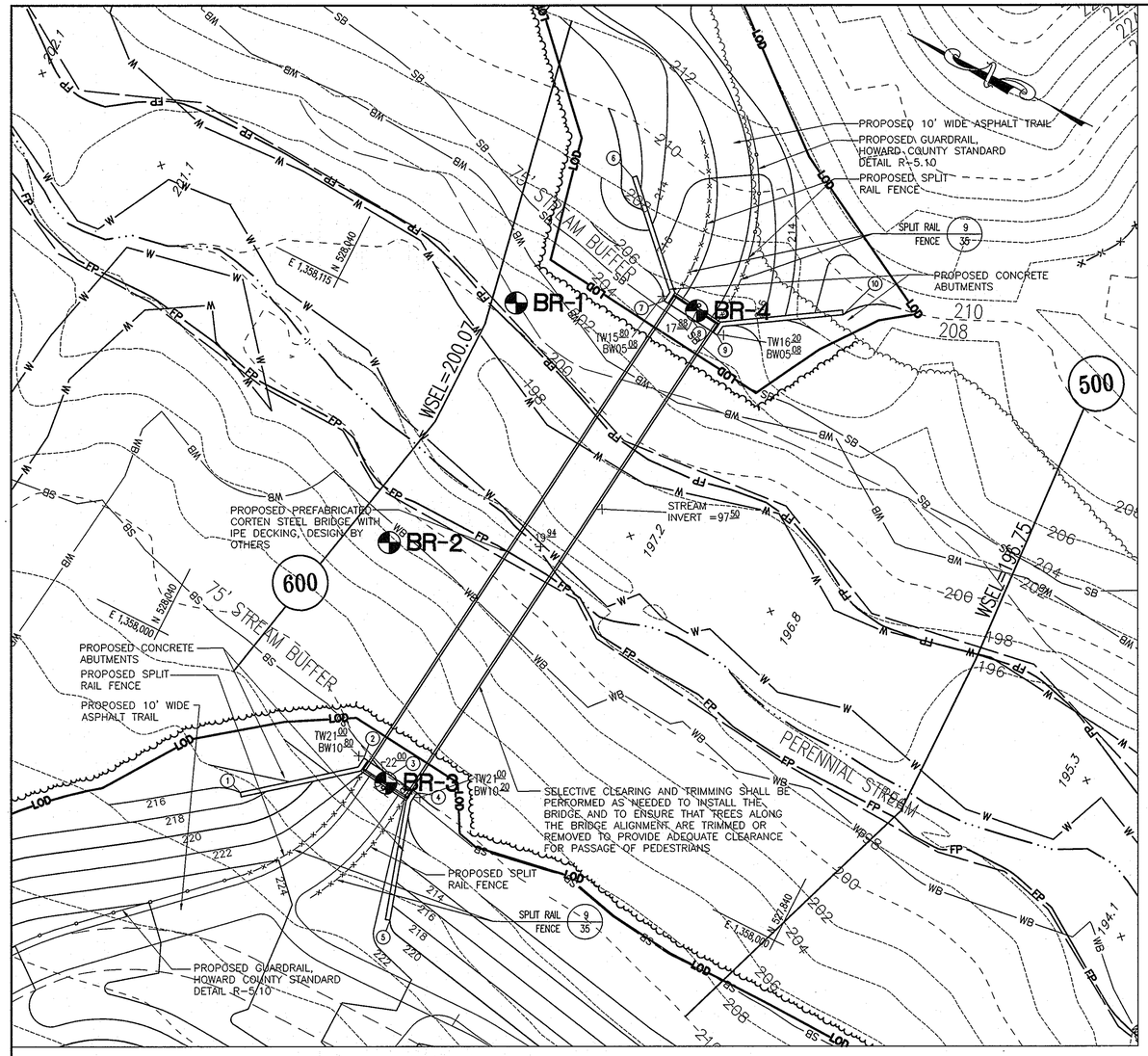


## BRIDGE DETAIL PLAN

SCALE: 1"=20'

BRIDGE NOTES:

1. ALL CONCRETE SHALL BE SHA MIX NO. 6.
2. REINFORCING STEEL SHALL BE DEFORMED BARS CONFORMING TO ASTM A615, GRADE 60
3. ALL KEYS ARE NOMINAL SIZE.
4. MINIMUM COVER OF ANY STEEL BAR SHALL BE 3 INCH FOR ABUTMENT WALLS AND 2 INCH FOR WING WALLS.
5. ALL PVC PIPES FOR WEEP HOLES SHALL BE SDR 35.
6. ANTI-GRAFFITI COATING FOR CONCRETE SHALL BE FX-441 ANTI-GRAFFITI SYSTEM BY FOX INDUSTRIES, INC., BALTIMORE, MD. PHONE 888-760-0369. INSTALL PER MANUFACTURER'S SPECIFICATIONS. http://www.foxind.com/product.asp?sheet=6 . COLOR TO BE A DARK COLOR, SELECTED BY OWNER.
7. FORMS FOR ABUTMENTS AND WING WALLS SHALL HAVE A WOOD SURFACE.
8. SUBGRADE SHALL BE INSPECTED BY THE ENGINEER PRIOR TO PLACING MUDMAT OR CONCRETE FOOTER.
9. CONTRACTOR SHALL OBTAIN THE SPACING AND LOCATION OF ANCHOR BOLTS FROM THE PEDESTRIAN BRIDGE SUPPLIER.

GENERAL NOTES:

1. SEE RED LINE REVISION OF SDP-08-118 FOR GRADING AND TRAIL CONNECTIONS TO THE EAST SIDE OF THE PROPERTY.

## LEGEND

- PROPERTY LINE
- EXISTING 10' CONTOURS
- EXISTING 2' CONTOURS
- PROPOSED 10' CONTOURS
- PROPOSED 2' CONTOURS
- EXISTING CURB AND GUTTER
- PROPOSED CURB & GUTTER
- EXISTING STORM DRAIN
- PROPOSED STORM DRAIN
- SETBACK LINES
- PROPOSED P-3 PAVING (HO. CO. DETAIL R-2.01)
- PROPOSED LIGHT POLE
- EXISTING LIGHTING
- EX. TREELINE
- PROPOSED TREELINE
- FLOODPLAIN
- STREAM BUFFER
- WETLANDS
- WETLAND BUFFER
- TREE PROTECTION FENCE
- LIMIT OF DISTURBANCE
- SOIL BORINGS

CALL "MISS UTILITY" AT LEAST 48 HOURS IN ADVANCE OF CONSTRUCTION AT 1-800-257-7777

### COORDINATE DATA TABLE

| POINT NO. | NORTHING | EASTING | REMARKS |
|---|---|---|---|
| 1 | 527997.5279 | 1357968.6363 | MIDPOINT OF TOP OF WING WALL 3 |
| 2 | 527970.1792 | 1357993.6840 | NORTH CORNER OF WEST ABUTMENT |
| 3 | 527961.0684 | 1357992.6802 | MIDPOINT OF WEST ABUTMENT |
| 4 | 527951.9575 | 1357991.6764 | SOUTH CORNER OF WEST ABUTMENT |
| 5 | 527942.0824 | 1357954.9532 | MIDPOINT OF TOP OF WING WALL 4 |
| 6 | 527977.1870 | 1358179.4584 | MIDPOINT OF TOP OF WING WALL 1 |
| 7 | 527952.7668 | 1358151.7277 | NORTH CORNER OF EAST ABUTMENT |
| 8 | 527943.6559 | 1358150.7239 | MIDPOINT OF EAST ABUTMENT |
| 9 | 527934.5450 | 1358149.7201 | SOUTH CORNER OF EAST ABUTMENT |
| 10 | 527904.6734 | 1358171.4692 | MIDPOINT OF TOP OF WING WALL 2 |

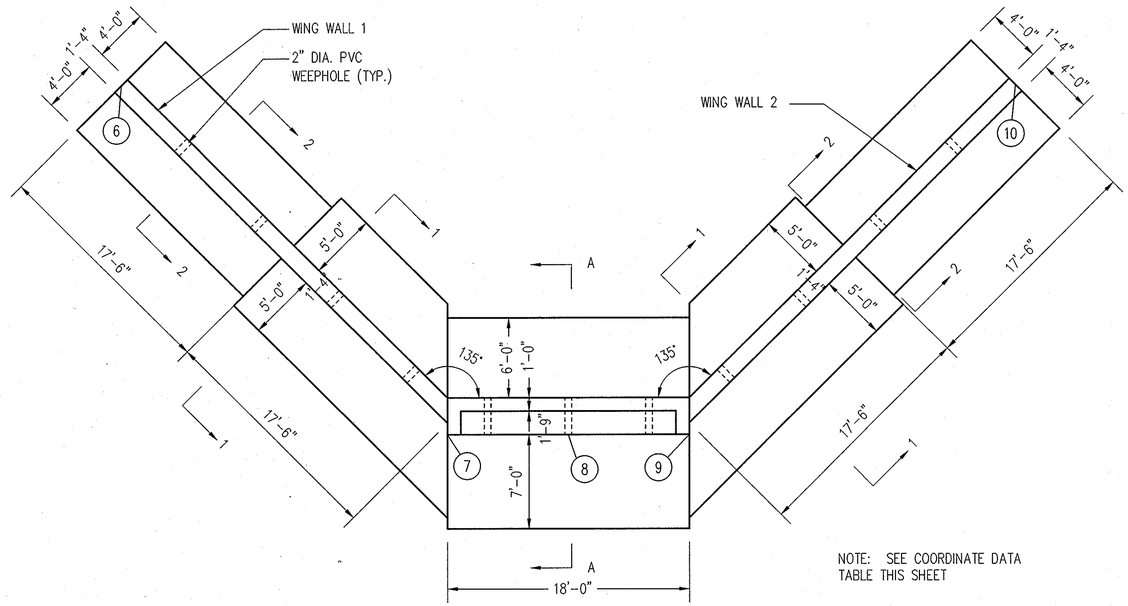


## EAST ABUTMENT AND WING WALL PLAN

SCALE : 3/16" = 1'-0"

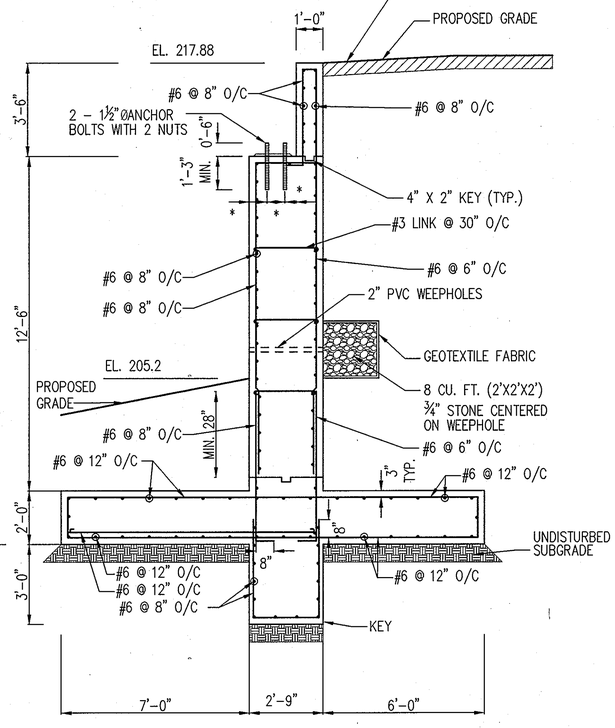


*SEE NOTE 9.

## SECTION A-A

SCALE : 3/8" = 1'-0"

APPROVED : HOWARD COUNTY DEPARTMENT OF PLANNING AND ZONING.

DIRECTOR — DATE 12/3/10

CHIEF, DEVELOPMENT ENGINEERING DIVISION — DATE 11/10/10

CHIEF, DIVISION OF LAND DEVELOPMENT — DATE 12/6/10

| DATE | NO. | REVISION |
|---|---|---|

OWNER

HOWARD COUNTY DEPARTMENT OF PUBLIC WORKS
BUREAU OF ENGINEERING
9250 BENDIX ROAD, COLUMBIA, MARYLAND 21045
P 410 313 2414

DEVELOPER

HOWARD COUNTY DEPARTMENT OF PUBLIC WORKS
BUREAU OF ENGINEERING
9250 BENDIX ROAD, COLUMBIA, MARYLAND 21045
P 410 313 2414

PROJECT
**NORTH LAUREL COMMUNITY CENTER**
CAPITAL PROJECT C-0304 PROJECT MGR: DAVE LOUDERMILK

AREA TAX MAP 47 GRID 22 & TAX MAP 50
GRIDS 3 & 4, PARCELS A-1, 187 & 1065 ZONED R-SC
6TH ELECTION DISTRICT
HOWARD COUNTY, MARYLAND

TITLE
**BRIDGE ABUTMENT PLAN & DETAILS**


**Patton Harris Rust & Associates**
Engineers. Surveyors. Planners. Landscape Architects.
8818 Centre Park Drive
Columbia, MD 21045
T 410.997.8900
F 410.997.9282


SEAL

STATE OF MARYLAND — JOSEPH S. NOVOTNY — No. 21674 — REGISTERED PROFESSIONAL ENGINEER

BY:

"PROFESSIONAL CERTIFICATION. I HEREBY CERTIFY THAT THESE DOCUMENTS WERE PREPARED OR APPROVED BY ME, AND THAT I AM A DULY LICENSED PROFESSIONAL ENGINEER UNDER THE LAWS OF THE STATE OF MARYLAND, LICENSE NO. 21674, EXPIRATION DATE: 2011-09-12."

| | |
|---|---|
| DESIGNED BY : | RA/JSN |
| DRAWN BY: | JSN |
| PROJECT NO : | 14466-1-2 C400SDP39.DWG |
| DATE : | SEPTEMBER 7, 2010 |
| SCALE : | AS SHOWN |
| DRAWING NO. | 39 OF 43 |

P:\Project\14466\1-2\PLANS\C400SDP39.DWG

SDP-10-010

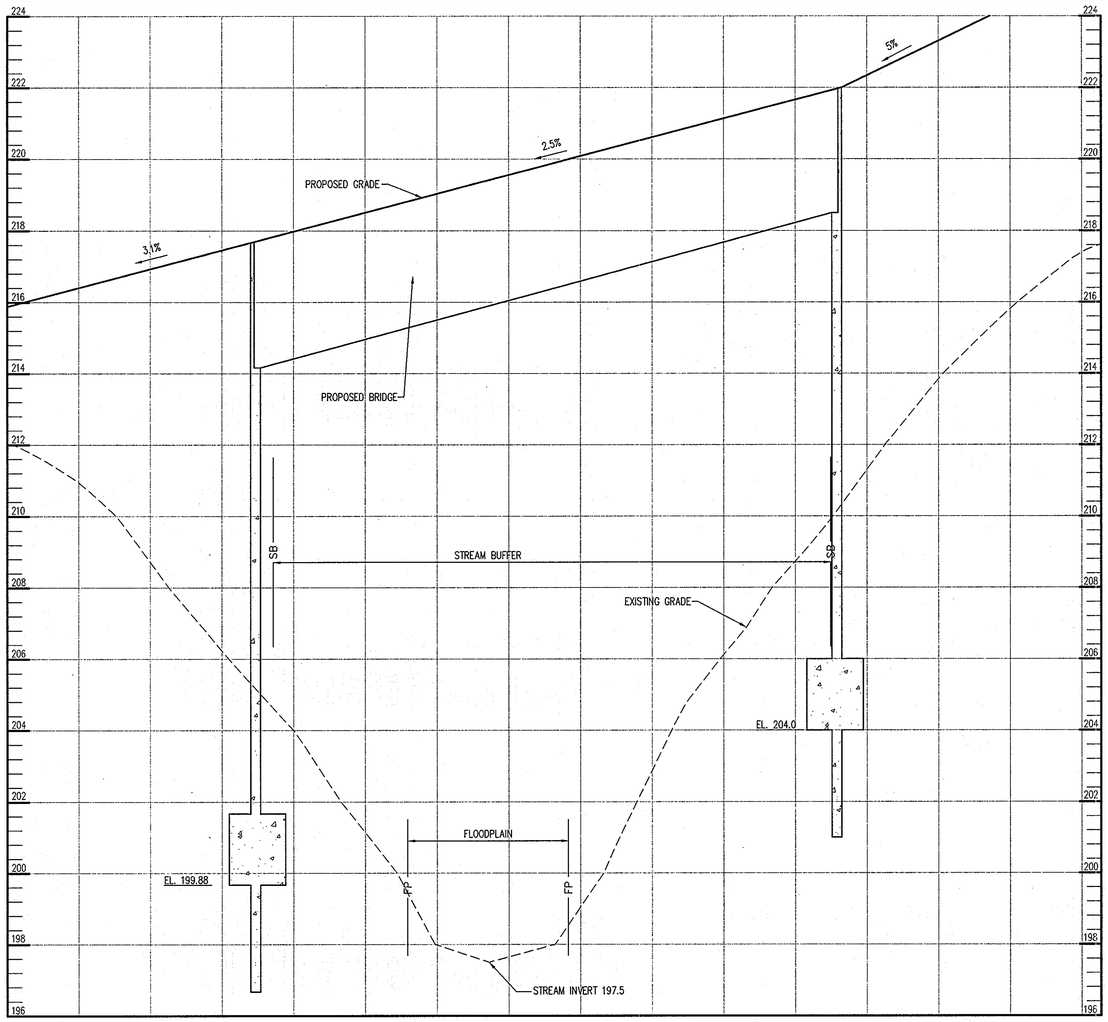


## BRIDGE PROFILE

SCALE : HOR: 1"=20'
VERT: 1"=2'

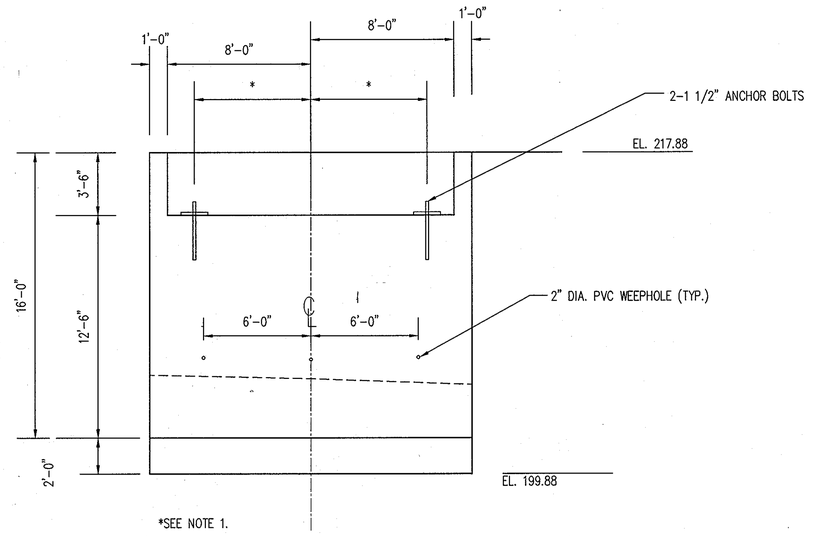


## EAST ABUTMENT ELEVATION

SCALE : 1/4" = 1'-0"

NOTE:

1. CONTRACTOR SHALL OBTAIN THE SPACING AND LOCATION OF ANCHOR BOLTS FROM THE PEDESTRIAN BRIDGE SUPPLIER.

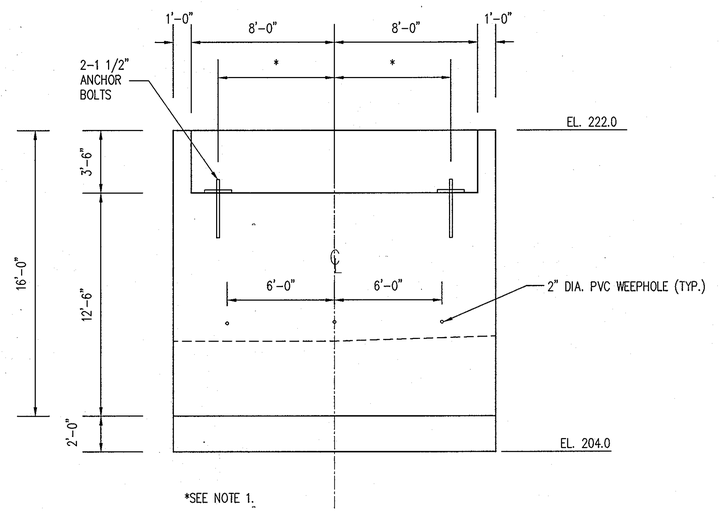


## WEST ABUTMENT ELEVATION

SCALE : 1/4" = 1'-0"

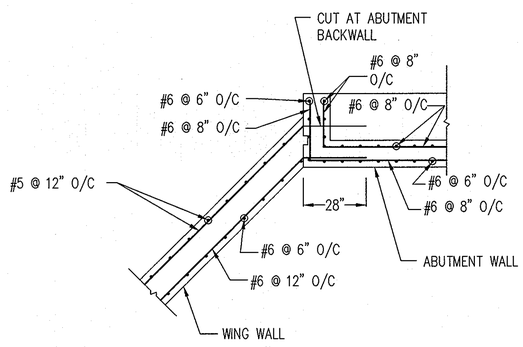


## ABUTMENT/WING WALL CONNECTION DETAIL

SCALE : 3/8" = 1'-0"

CALL "MISS UTILITY" AT LEAST 48 HOURS IN ADVANCE OF CONSTRUCTION AT 1-800-257-7777

APPROVED : HOWARD COUNTY DEPARTMENT OF PLANNING AND ZONING.

DIRECTOR — DATE 12/13/10

CHIEF, DEVELOPMENT ENGINEERING DIVISION — DATE 11/18/10

CHIEF, DIVISION OF LAND DEVELOPMENT — DATE 12/10/10

| DATE | NO. | REVISION |
|---|---|---|

OWNER
HOWARD COUNTY DEPARTMENT OF PUBLIC WORKS
BUREAU OF ENGINEERING
9250 BENDIX ROAD, COLUMBIA, MARYLAND 21045
P 410 313 2414

DEVELOPER
HOWARD COUNTY DEPARTMENT OF PUBLIC WORKS
BUREAU OF ENGINEERING
9250 BENDIX ROAD, COLUMBIA, MARYLAND 21045
P 410 313 2414

PROJECT
NORTH LAUREL COMMUNITY CENTER
CAPITAL PROJECT C-0304 PROJECT MGR: DAVE LOUDERMILK

AREA TAX MAP 47 GRID 22 & TAX MAP 50
GRIDS 3 & 4, PARCELS A-1, 187 & 1065 ZONED R-SC
6TH ELECTION DISTRICT
HOWARD COUNTY, MARYLAND

TITLE
BRIDGE PROFILE & ABUTMENT DETAILS

Patton Harris Rust & Associates
Engineers. Surveyors. Planners. Landscape Architects.
PHR+A
8818 Centre Park Drive
Columbia, MD 21045
T 410.997.8900
F 410.997.9282

SEAL
STATE OF MARYLAND
GRAHAME CLIFFORD LAKE
REGISTERED PROFESSIONAL ENGINEER
NO. 20745
BY:
"PROFESSIONAL CERTIFICATION. I HEREBY CERTIFY THAT THESE DOCUMENTS WERE PREPARED OR APPROVED BY ME, AND THAT I AM A DULY LICENSED PROFESSIONAL ENGINEER UNDER THE LAWS OF THE STATE OF MARYLAND, LICENSE NO. 20745 EXPIRATION DATE: 2011-02-19."

DESIGNED BY : RA/JSN
DRAWN BY: JSN
PROJECT NO : 14466-1-2 C400SDP40.DWG
DATE : SEPTEMBER 7, 2010
SCALE : AS SHOWN
DRAWING NO. 40 OF 43

P:\Project\14466\1-2\PLANS\C400SDP40.DWG

SDP-10-010

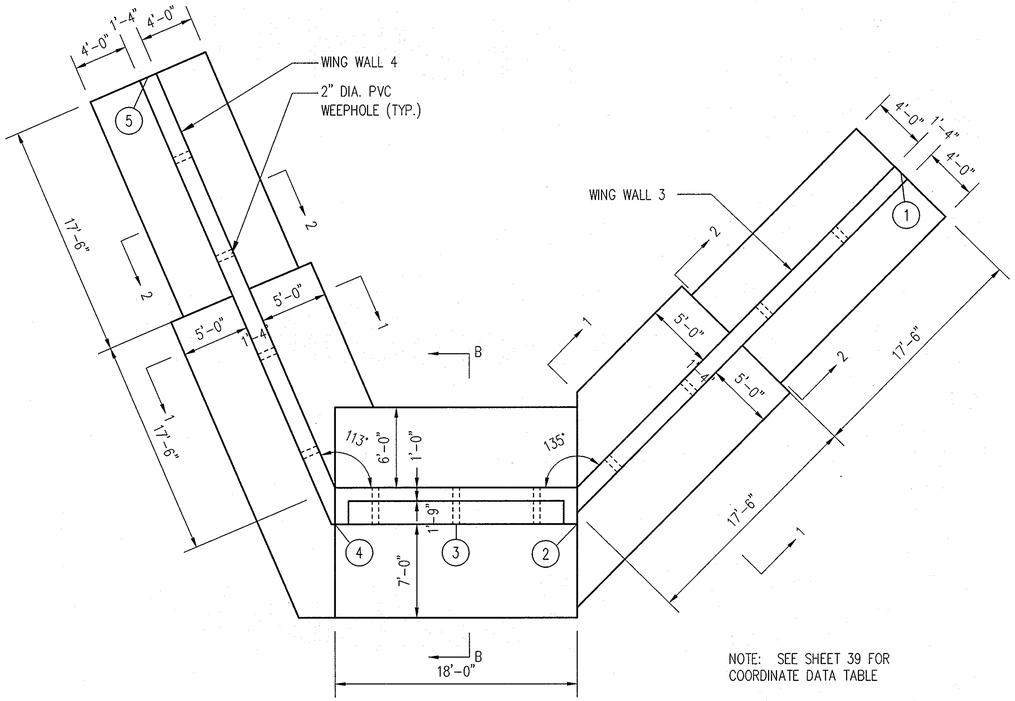


NOTE: SEE SHEET 39 FOR COORDINATE DATA TABLE

## WEST ABUTMENT AND WING WALL PLAN

SCALE : 3/16" = 1'-0"

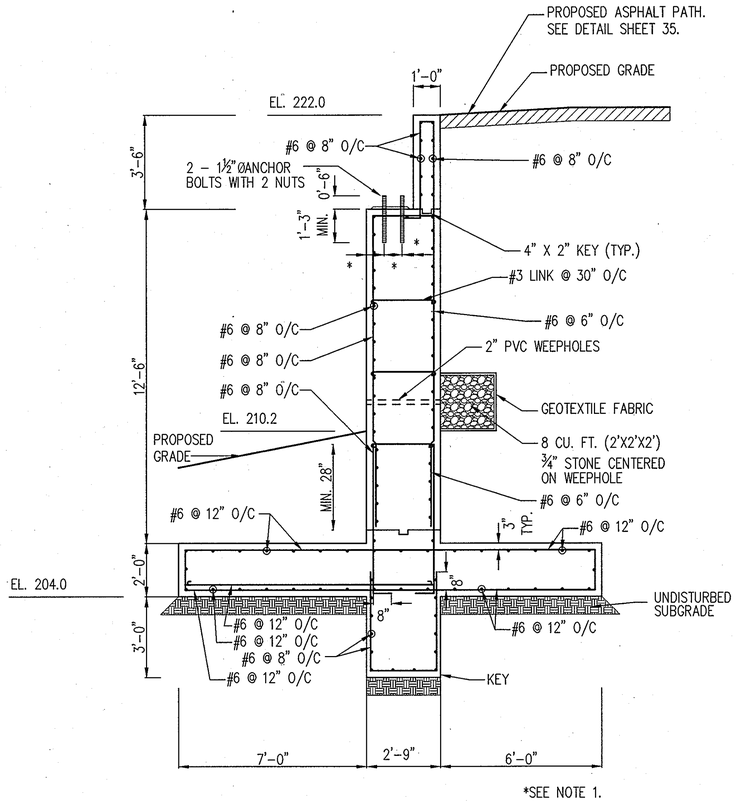


*SEE NOTE 1.

## SECTION B-B

SCALE : 3/8" = 1'-0"

NOTE:

1. CONTRACTOR SHALL OBTAIN THE SPACING AND LOCATION OF ANCHOR BOLTS FROM THE PEDESTRIAN BRIDGE SUPPLIER.

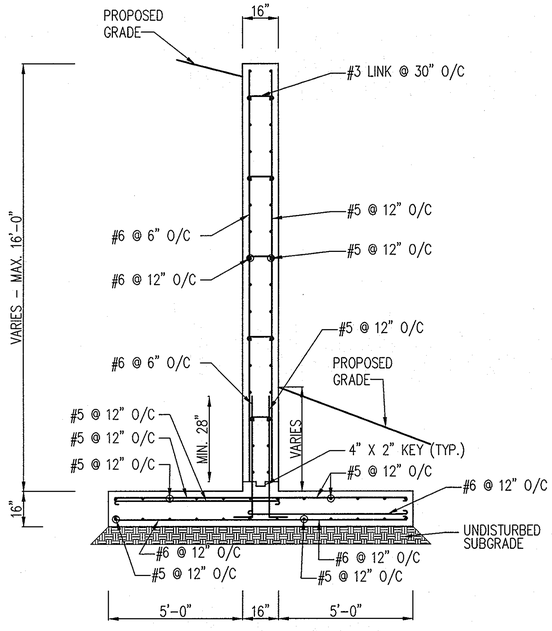


## WING WALL SECTION 1-1

SCALE : 3/8" = 1'-0"

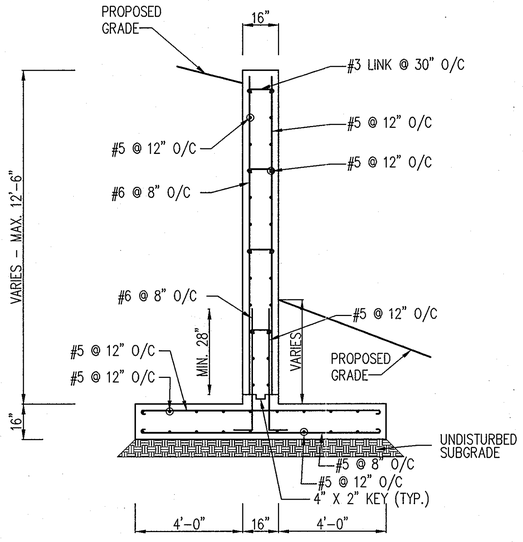


## WING WALL SECTION 2-2

SCALE : 3/8" = 1'-0"

APPROVED : HOWARD COUNTY DEPARTMENT OF PLANNING AND ZONING.

DIRECTOR — DATE 12/13/10

CHIEF, DEVELOPMENT ENGINEERING DIVISION — DATE 11/18/10

CHIEF, DIVISION OF LAND DEVELOPMENT — DATE 12/10/10

| DATE | NO. | REVISION |
|---|---|---|

OWNER

HOWARD COUNTY DEPARTMENT OF PUBLIC WORKS
BUREAU OF ENGINEERING
9250 BENDIX ROAD, COLUMBIA, MARYLAND 21045
P 410 313 2414

DEVELOPER

HOWARD COUNTY DEPARTMENT OF PUBLIC WORKS
BUREAU OF ENGINEERING
9250 BENDIX ROAD, COLUMBIA, MARYLAND 21045
P 410 313 2414

PROJECT
NORTH LAUREL COMMUNITY CENTER
CAPITAL PROJECT C-0304 PROJECT MGR: DAVE LOUDERMILK

AREA TAX MAP 47 GRID 22 & TAX MAP 50
GRIDS 3 & 4, PARCELS A-1, 187 & 1065 ZONED R-SC
6TH ELECTION DISTRICT
HOWARD COUNTY, MARYLAND

TITLE
BRIDGE ABUTMENT DETAILS


Patton Harris Rust & Associates
Engineers. Surveyors. Planners. Landscape Architects.
PHR+A
8818 Centre Park Drive
Columbia, MD 21045
T 410.997.8900
F 410.997.9282


SEAL

STATE OF MARYLAND — COLLEGE CLIFFORD LAKE — REGISTERED PROFESSIONAL ENGINEER

BY:

"PROFESSIONAL CERTIFICATION. I HEREBY CERTIFY THAT THESE DOCUMENTS WERE PREPARED OR APPROVED BY ME, AND THAT I AM A DULY LICENSED PROFESSIONAL ENGINEER UNDER THE LAWS OF THE STATE OF MARYLAND, LICENSE NO. 20765 EXPIRATION DATE: 2011-02-19."

DESIGNED BY : RA/JSN
DRAWN BY: JSN
PROJECT NO : 14466-1-2 C400SDP41.DWG
DATE : SEPTEMBER 7, 2010
SCALE : AS SHOWN
DRAWING NO. 41 OF 43

P:\Project\14466\1-2\PLANS\C400SDP41.DWG

SDP-10-010

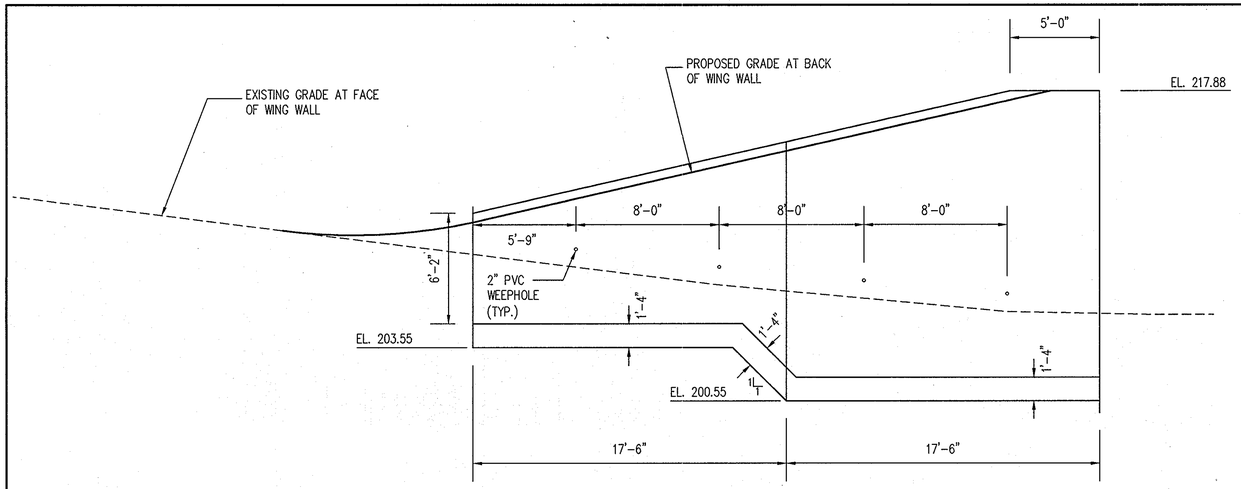


## WING WALL 1 ELEVATION

SCALE : 1/4" = 1'-0"

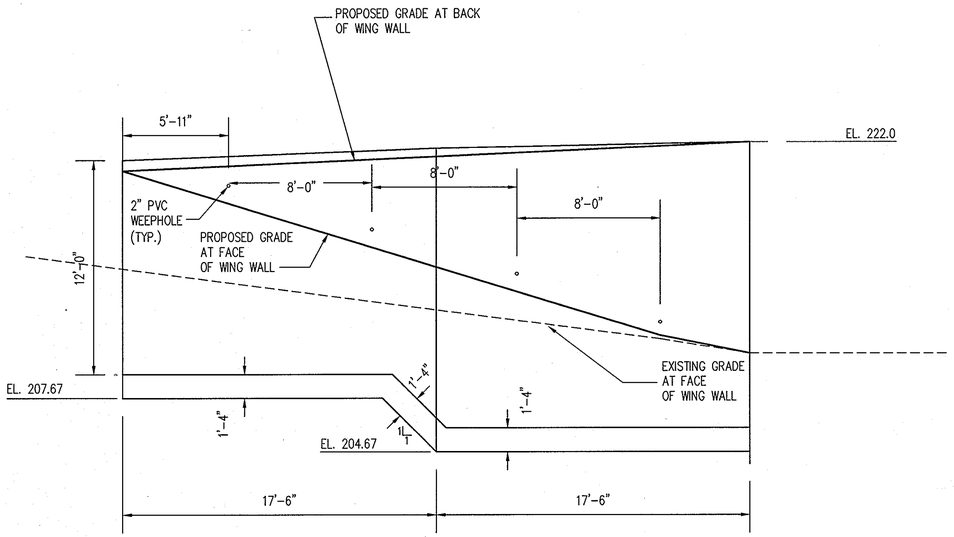


## WING WALL 4 ELEVATION

SCALE : 1/4" = 1'-0"

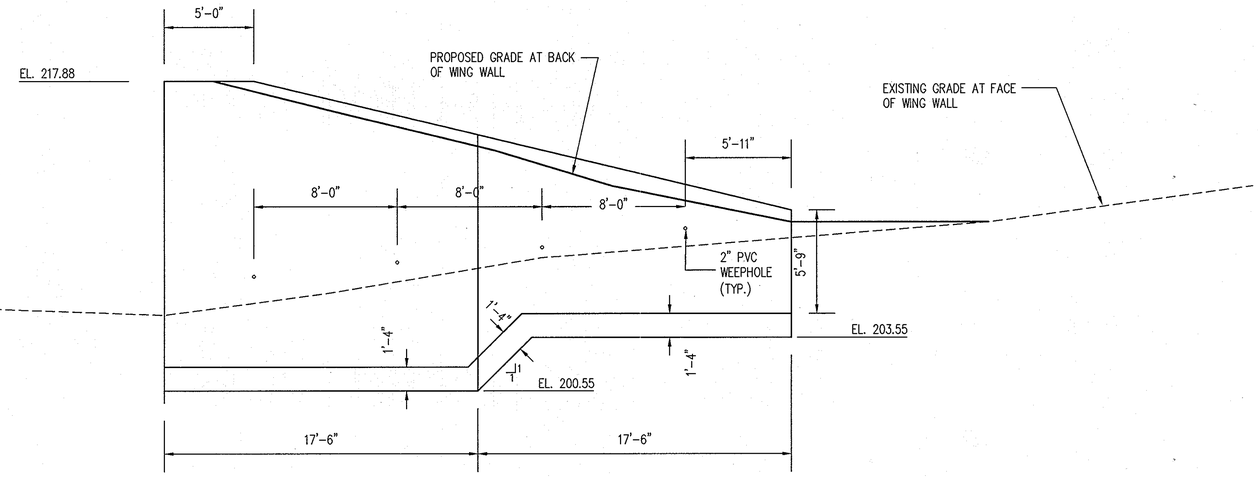


## WING WALL 2 ELEVATION

SCALE : 1/4" = 1'-0"

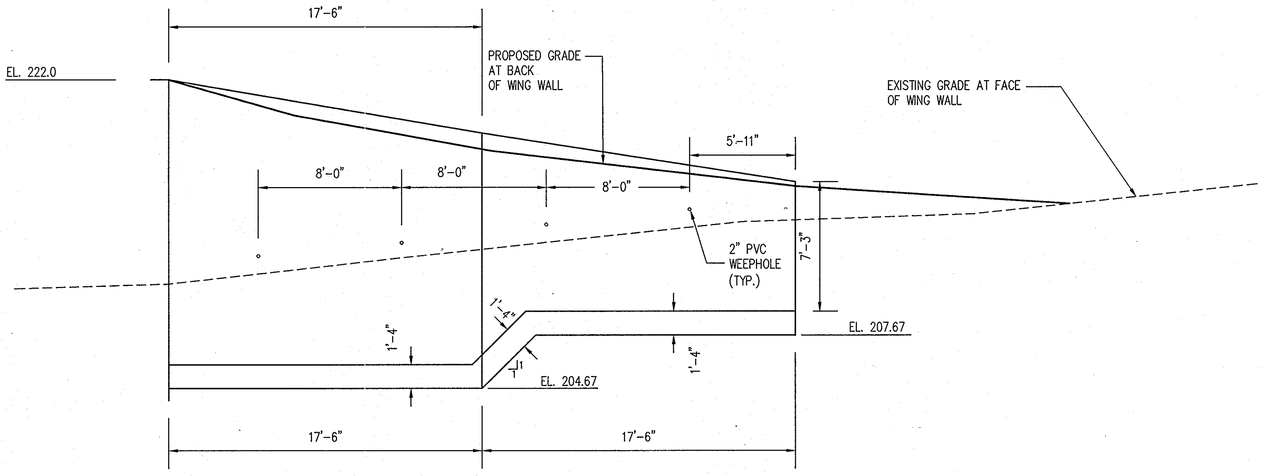


## WING WALL 3 ELEVATION

SCALE : 1/4" = 1'-0"

CALL "MISS UTILITY" AT LEAST 48 HOURS IN ADVANCE OF CONSTRUCTION AT 1-800-257-7777

APPROVED : HOWARD COUNTY DEPARTMENT OF PLANNING AND ZONING.

DIRECTOR — DATE 12/3/10

CHIEF, DEVELOPMENT ENGINEERING DIVISION — DATE 11/30/10

CHIEF, DIVISION OF LAND DEVELOPMENT — DATE 12/6/10

| DATE | NO. | REVISION |
|---|---|---|

OWNER

HOWARD COUNTY DEPARTMENT OF PUBLIC WORKS
BUREAU OF ENGINEERING
9250 BENDIX ROAD, COLUMBIA, MARYLAND 21045
P 410 313 2414

DEVELOPER

HOWARD COUNTY DEPARTMENT OF PUBLIC WORKS
BUREAU OF ENGINEERING
9250 BENDIX ROAD, COLUMBIA, MARYLAND 21045
P 410 313 2414

PROJECT
**NORTH LAUREL COMMUNITY CENTER**
CAPITAL PROJECT C-0304 PROJECT MGR: DAVE LOUDERMILK

AREA TAX MAP 47 GRID 22 & TAX MAP 50
GRIDS 3 & 4, PARCELS A-1, 187 & 1065 ZONED R-SC
6TH ELECTION DISTRICT
HOWARD COUNTY, MARYLAND

TITLE
**BRIDGE WING WALL ELEVATIONS**

**Patton Harris Rust & Associates**
Engineers. Surveyors. Planners. Landscape Architects.
8818 Centre Park Drive
Columbia, MD 21045
T 410.997.8900
F 410.997.9282

SEAL

STATE OF MARYLAND — JAMIE CLIFFORD LANE — NO. 20745 — REGISTERED PROFESSIONAL ENGINEER

BY:

"PROFESSIONAL CERTIFICATION. I HEREBY CERTIFY THAT THESE DOCUMENTS WERE PREPARED OR APPROVED BY ME, AND THAT I AM A DULY LICENSED PROFESSIONAL ENGINEER UNDER THE LAWS OF THE STATE OF MARYLAND, LICENSE NO. 20745 EXPIRATION DATE: 2011-02-15"

DESIGNED BY : RA/JSN
DRAWN BY: JSN
PROJECT NO : 14466-1-2 C40DSDP42.DWG
DATE : SEPTEMBER 7, 2010
SCALE : AS SHOWN
DRAWING NO. 42 OF 43

P:\Project\14466\1-2\PLANS\C40DSDP42.DWG

SDP-10-010

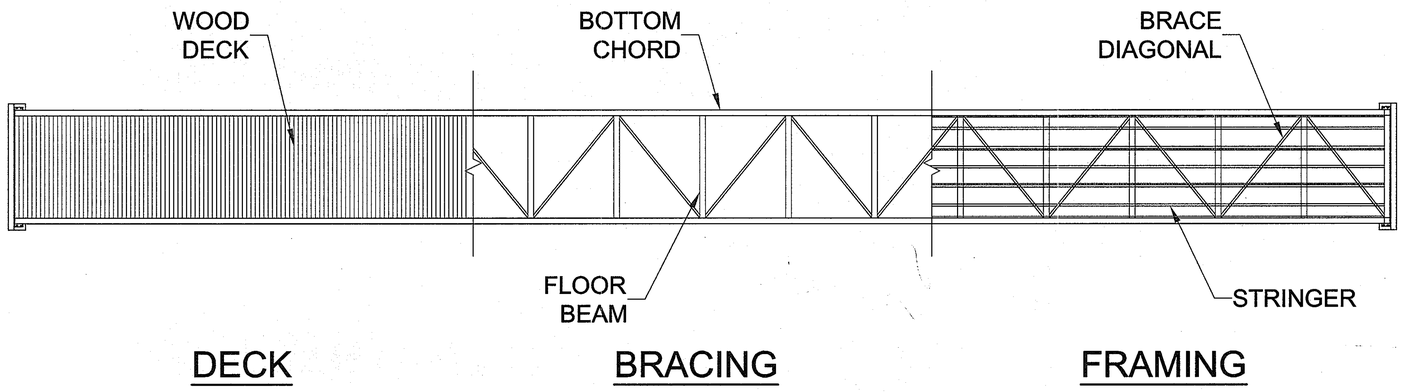


## SCHEMATIC BRIDGE PLAN

NOT TO SCALE

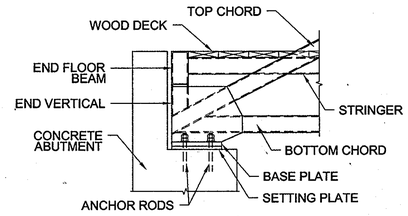


## BEARING SIDE VIEW

INFORMATION PROVIDED FOR REPRESENTATION ONLY.
ACTUAL BEARING DIAGRAMS TO BE BASED ON FINAL DESIGN.
NOT TO SCALE

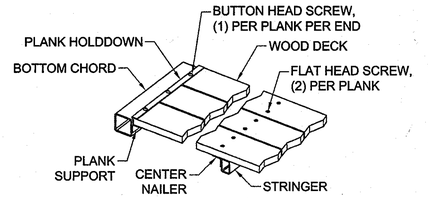


## WOOD DECK DETAIL

NOT TO SCALE

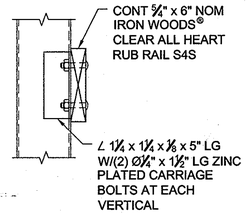


## RUB RAIL DETAIL

NOT TO SCALE

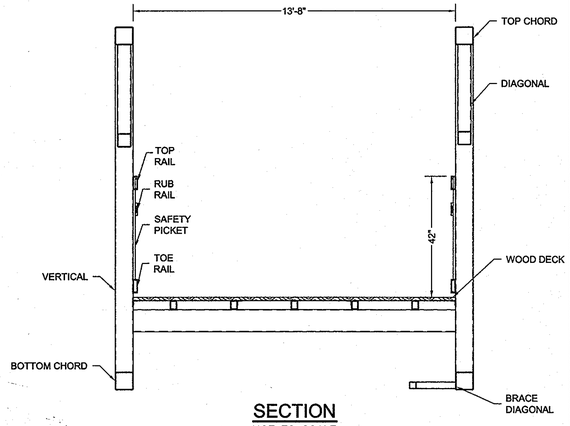


## SECTION

NOT TO SCALE

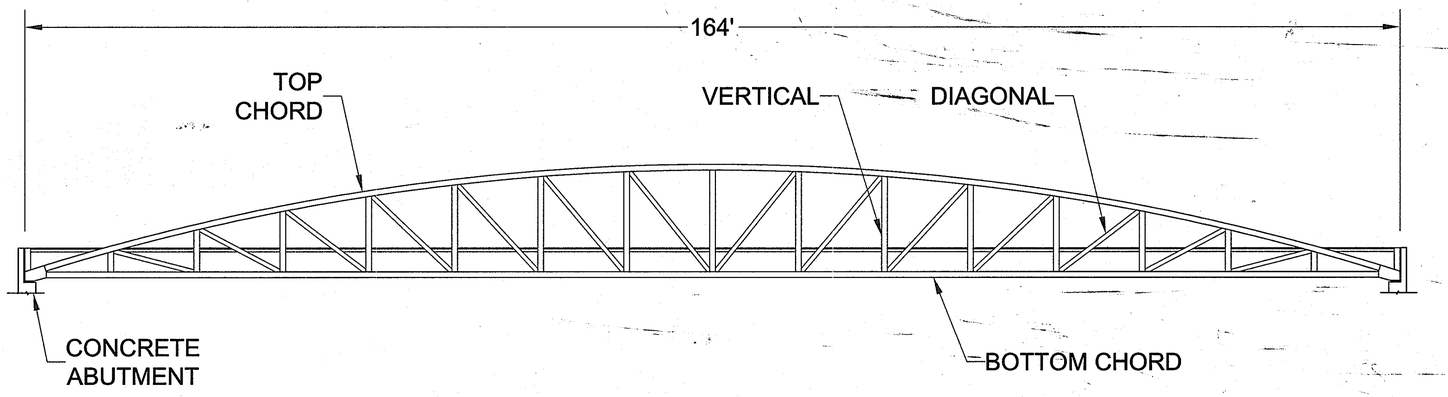


## SCHEMATIC BRIDGE ELEVATION

NOT TO SCALE

NOTE: BRIDGE DETAILS AND PLANS SHOWN ARE SCHEMATIC FOR INFORMATIONAL PURPOSES ONLY AND WILL VARY WITH FINAL ENGINEERING. CONTRACTOR SHALL CONTRACT WITH AN APPROVED PEDESTRIAN BRIDGE SUPPLIER TO PREPARE ALL FINAL DRAWINGS AND COMPUTATIONS FOR CONSTRUCTION.

APPROVED : HOWARD COUNTY DEPARTMENT OF PLANNING AND ZONING.

DIRECTOR — DATE 12/13/10

CHIEF, DEVELOPMENT ENGINEERING DIVISION — DATE 11/18/10

CHIEF, DIVISION OF LAND DEVELOPMENT — DATE 12/10/10

| DATE | NO. | REVISION |
|---|---|---|

OWNER
HOWARD COUNTY DEPARTMENT OF PUBLIC WORKS
BUREAU OF ENGINEERING
9250 BENDIX ROAD, COLUMBIA, MARYLAND 21045
P 410 313 2414

DEVELOPER
HOWARD COUNTY DEPARTMENT OF PUBLIC WORKS
BUREAU OF ENGINEERING
9250 BENDIX ROAD, COLUMBIA, MARYLAND 21045
P 410 313 2414

PROJECT
NORTH LAUREL COMMUNITY CENTER
CAPITAL PROJECT C-0304 PROJECT MGR: DAVE LOUDERMILK

AREA TAX MAP 47 GRID 22 & TAX MAP 50
GRIDS 3 & 4, PARCELS A-1, 187 & 1065 ZONED R-SC
6TH ELECTION DISTRICT
HOWARD COUNTY, MARYLAND

TITLE
SCHEMATIC BRIDGE DETAILS

Patton Harris Rust & Associates
Engineers. Surveyors. Planners. Landscape Architects.
PHR+A
8818 Centre Park Drive
Columbia, MD 21045
T 410.997.8900
F 410.997.9282

SEAL
STATE OF MARYLAND — GRAEME CLIFFORD LAKE — No. 20745 — REGISTERED PROFESSIONAL ENGINEER
BY:
"PROFESSIONAL CERTIFICATION. I HEREBY CERTIFY THAT THESE DOCUMENTS WERE PREPARED OR APPROVED BY ME, AND THAT I AM A DULY LICENSED PROFESSIONAL ENGINEER UNDER THE LAWS OF THE STATE OF MARYLAND. LICENSE NO. 20745 EXPIRATION DATE: 2011-02-19."

DESIGNED BY : RA/JSN
DRAWN BY: JSN
PROJECT NO : 14466-1-2 C400SDP43.DWG
DATE : SEPTEMBER 7, 2010
SCALE : AS SHOWN
DRAWING NO. 43 OF 43

P:\Project\14466\1-2\PLANS\C400SDP43.DWG

SDP-10-010