THE JOHNS HOPKINS UNIVERSITY

APPLIED PHYSICS LABORATORY

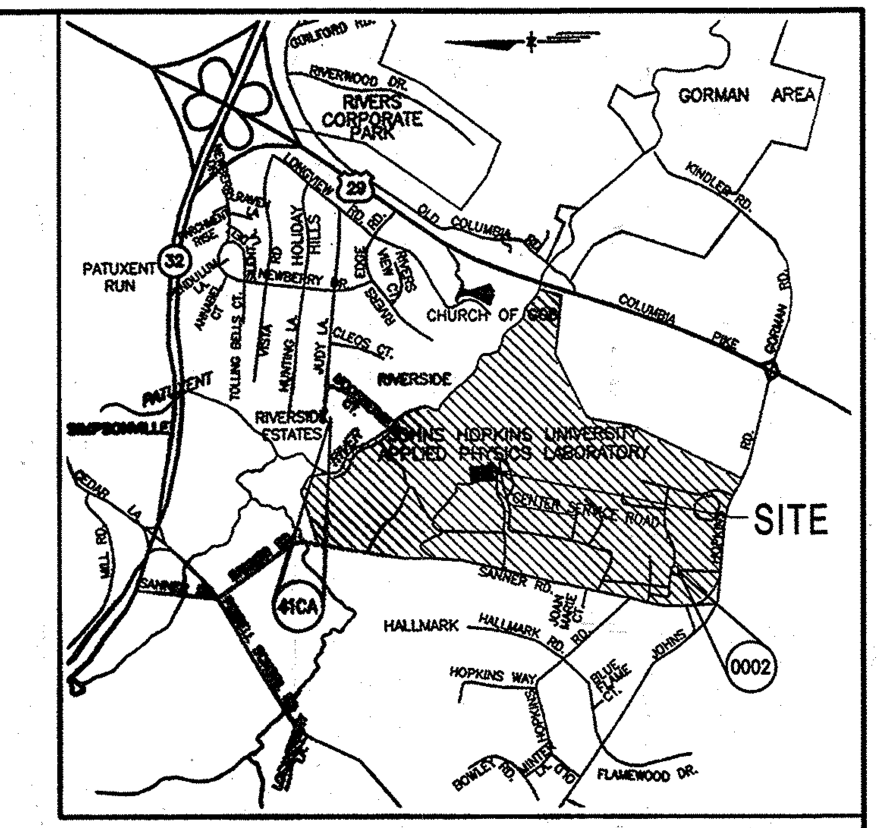

VICINITY MAP

Scale: 1"=2000'

GEODETIC CONTROL

0002:	N 544836.5284	E 1340825.353	NGVD ELEV. 444.991
41CA:	N 550124.8623	E 1342960.8820	NGVD ELEV. 295.397

ADC MAP 19, GRID A2

GENERAL NOTES

1. ALL CONSTRUCTION SHALL BE IN ACCORDANCE WITH THE LATEST STANDARDS AND SPECIFICATIONS OF HOWARD COUNTY PLUS MSHA STANDARDS AND SPECIFICATIONS IF APPLICABLE.
2. EXISTING SITE FEATURES AND UTILITIES SHOWN HAVE BEEN BASED UPON SURVEYS AND OTHER SOURCES BELIEVED TO BE RELIABLE. THE CORRECTNESS OR COMPLETENESS OF THE INFORMATION SHOWN IS NOT GUARANTEED. THE CONTRACTOR SHALL VERIFY ALL INFORMATION BEFORE COMMENCING WORK.
3. THE CONTRACTOR SHALL NOTIFY MISS UTILITY AT 1-800-257-7777 A MINIMUM OF FIVE WORKING DAYS PRIOR TO CONSTRUCTION.
4. THE CONTRACTOR SHALL MAINTAIN, REPAIR, AND/OR REPLACE ANY EXISTING SEDIMENT CONTROL DEVICES ENCOUNTERED AND DISTURBED DURING THE COURSE OF CONSTRUCTION AT THE END OF EACH DAY, ALL MEASURES AND DEVICES SHALL BE REPAIRED OR REPLACED BEFORE LEAVING THE WORK SITE.
5. CONSTRUCTION SHALL FOLLOW THE SEQUENCE OF CONSTRUCTION ON THE APPROVED EROSION AND SEDIMENT CONTROL DRAWINGS.
6. THE CONTRACTOR SHALL OBTAIN ALL NECESSARY PERMITS AND INSPECTIONS.
7. THE CONTRACTOR SHALL MAINTAIN TRAFFIC AT ALL TIMES.
8. NUMERICALLY WRITTEN DIMENSIONS SHALL TAKE PRECEDENCE OVER SCALED DIMENSIONS.
9. UNLESS OTHERWISE NOTED, DIMENSIONS FROM CURB ARE MEASURED AT FACE OF CURB.
10. ALL GRADING AND EXCAVATION SHALL BE INSPECTED BY A GEOTECHNICAL ENGINEER.
11. THE CONTRACTOR SHALL DETERMINE THE EXACT LOCATION AND DEPTH OF ALL EXISTING UTILITIES, AS NECESSARY PRIOR TO INSTALLING STORM DRAINS. REPORT ANY DISCREPANCIES FROM THE PLANS TO CENTURY ENGINEERING, INC. ALL UTILITIES SHALL BE RETAINED UNLESS LABELED OTHERWISE. THE CONTRACTOR SHALL BE RESPONSIBLE FOR ALL COSTS AND WORK REQUIRED TO ADJUST EXISTING AND PROPOSED UTILITIES AND APPURTENANCES TO FINISH GRADES WITHIN THE LIMITS OF WORK. DAMAGE TO EXISTING CONDITIONS AND UTILITIES SHALL BE REPAIRED TO THE OWNER'S SATISFACTION AT THE EXPENSE OF THE CONTRACTOR. THE ULTIMATE STATUS OF ALL EXISTING ELECTRIC, TELEPHONE AND LIGHT POLES WITHIN THE LIMIT OF DISTURBANCE SHALL BE COORDINATED WITH FIELD ENGINEER FROM JHU/APL.
12. THE CONTRACTOR SHALL HAVE ALL PRIVATE UTILITIES LOCATED PRIOR TO ANY CONSTRUCTION.
13. EXISTING UTILITIES WHICH ARE NOT TO BE REMOVED OR ABANDONED SHALL REMAIN OPERATIONAL AT ALL TIMES. APPROPRIATE EXISTING UTILITIES SHALL REMAIN IN SERVICE UNTIL REPLACEMENT/RELOCATED UTILITIES ARE OPERATIONAL.
14. THE CONTRACTOR SHALL COORDINATE INSTALLATION OF ALL UTILITIES TO AVOID CONSTRUCTION PROBLEMS/CONFLICTS WITH EROSION AND SEDIMENT CONTROL MEASURES. SEE APPROVED SEDIMENT CONTROL PLAN.
15. THE CONTRACTOR SHALL MAINTAIN 2.0 FEET MINIMUM COVER OVER ALL UTILITIES DURING CONSTRUCTION.
16. UNLESS OTHERWISE NOTED, ALL PROPOSED WATER LINES SHALL HAVE FOUR FEET MINIMUM COVER, 0.5 FEET MINIMUM VERTICAL CLEARANCE FROM ALL STORM DRAIN LINES, AND 1.0 FEET MINIMUM VERTICAL CLEARANCE ABOVE SANITARY SEWER LINES.
17. THE SUBJECT PROPERTY IS ZONED PEC PER THE 2004 COMPREHENSIVE ZONING PLAN. AND THE COMP-LITE ZONING AMENDMENTS DATED 7/28/06.
18. NO GRADING, REMOVAL OF VEGETATIVE COVER OR TREES, PAVING AND NEW STRUCTURES SHALL BE PERMITTED WITHIN ANY REQUIRED WETLANDS, STREAMS OR THEIR BUFFERS, FOREST CONSERVATION EASEMENT AREAS AND/OR 100 YEAR FLOODPLAIN. NONE ARE LOCATED WITHIN 100 FEET OF THE LIMIT OF DISTURBANCE.
19. THE COORDINATES HEREON ARE BASED UPON THE HOWARD COUNTY GEODETIC CONTROL WHICH IS BASED UPON THE MARYLAND STATE PLANE COORDINATE SYSTEM, GEODETIC CONTROLS 0002 AND 41CA.
20. WATER SERVICE IS PUBLIC TO THE CAMPUS. INTERNAL SERVICE PRIVATELY MAINTAINED.
21. SEWER SERVICE IS PUBLIC TO THE CAMPUS. INTERNAL SERVICE PRIVATELY MAINTAINED.
22. THE SITE IS LOCATED IN THE MIDDLE PATUXENT WATERSHED.
23. STORMWATER MANAGEMENT PROVIDED BY REDUCTION IN THE AMOUNT OF IMPERVIOUS AREA ON SITE. NEW IMPERVIOUS OVER EXISTING IMPERVIOUS IS EXCHANGED ON A 1:1 BASIS. NEW IMPERVIOUS OVER EXISTING PERVIOUS REQUIRED A 1.25:1 REMOVAL OF EXISTING IMPERVIOUS SURFACES TO COMPENSATE FOR THE NEW PERVIOUS SURFACE.
24. NO TRAFFIC STUDY IS REQUIRED FOR THIS PROJECT.
25. THERE ARE NO STEEP SLOPES, FLOODPLAINS OR WETLANDS LOCATED IN THE AREAS OF PLAN SUBMISSION.
26. THIS PROJECT COMPLIES WITH THE REQUIREMENTS OF SECTION 16.1200 OF THE HOWARD COUNTY CODE FOR FOREST CONSERVATION BY F-02-40.
27. NO PERIMETER LANDSCAPING IS REQUIRED FOR THIS PLAN DUE TO INTERIOR LOCATION OF THE SITE.
28. SOIL MAP IS SHEET NUMBER 29, HOWARD COUNTY SOIL SURVEY.
29. THE EXISTING TOPOGRAPHY IS TAKEN FROM AN AERIAL SURVEY WITH 1 FOOT CONTOUR INTERVALS PREPARED BY W.R. & ASSOCIATES AND SUPPLIED BY JHU-APL, SUPPLEMENTED BY FIELD RUN TOPOGRAPHY BY CENTURY ENGINEERING, INC., DATED JULY 13, 2007 AND FEBRUARY 18, 2008.

LEGEND

EX. MINOR CONTOUR	391
EX. MAJOR CONTOUR	390
EX. SPOT ELEVATION	× 387.6
EX. FIRE HYDRANT	
EX. STORM DRAIN	SD
EX. WATER LINE	W W
EX. SANITARY SEWER	S S
EX. ELECTRIC LINE	Elec
EX. COMMUNICATIONS LINE	
EX. MANHOLE	
EX. INLET	
EX. TREE LINE	
EX. BUILDING	
EX. CURB AND GUTTER	
EX. BITUMINOUS PAVING	
EX. CONCRETE SIDEWALK	
EX. FENCE	X X
EX. WALL	
EX. CLEANOUT	CO
EX. LIGHT STANDARD	
EX. BUSH	
EX. TREE	
EX. PIPE BOLLARD	
EX. UTILITY POLE	Ø
PROP. MINOR CONTOUR	379
PROP. MAJOR CONTOUR	380
PROP. SPOT ELEVATION	+385.58
PROP. CURB & GUTTER	

NOTE:
THIS RED LINE SUBMISSION RELOCATES SOME OF THE ON-SITE UTILITIES, REMOVES BUILDINGS 10A, 10B, AND 10C, AND SHOWS THE LOCATION OF THE EROSION CONTROLS

1 OF 14:	COVER SHEET
2 OF 14:	SITE PLAN
4 OF 14:	UTILITY PLAN
7 OF 14:	EROSION AND SEDIMENT CONTROL
8 OF 14:	EROSION AND SEDIMENT CONTROL DRAINAGE AREA MAP
9 OF 14:	EROSION AND SEDIMENT CONTROL SPECIFICATIONS AND NOTES
9A OF 14:	EROSION AND SEDIMENT CONTROL SPECIFICATIONS AND NOTES
10 OF 14:	EROSION AND SEDIMENT CONTROL PLAN
12 OF 14:	STORMWATER MANAGEMENT CHANGE IN IMPERVIOUS AREA

SHEET INDEX

1 COVER SHEET
2 SITE PLAN
3 GRADING PLAN
4 UTILITY PLAN
5 UTILITY PROFILES AND NOTES
6 STORM DRAIN DRAINAGE AREA MAP AND FLOW TABULATIONS
7 EROSION & SEDIMENT CONTROL PLAN
8 EROSION & SEDIMENT CONTROL DRAINAGE AREA MAP
9 EROSION & SEDIMENT CONTROL SPECIFICATIONS AND NOTES
10 EROSION & SEDIMENT CONTROL DETAILS
11 SITE DETAILS
12 CHANGE IN IMPERVIOUS SURFACES PLAN
13 LOADING DOCK & CANOPY PLAN & DETAILS
14 LOADING DOCK & CANOPY PLAN & DETAILS

BOARD FOR PROFESSIONAL ENGINEERS 20906 RICHARD E. BURGOYNE STATE OF MARYLAND

FOR 1 REVISION

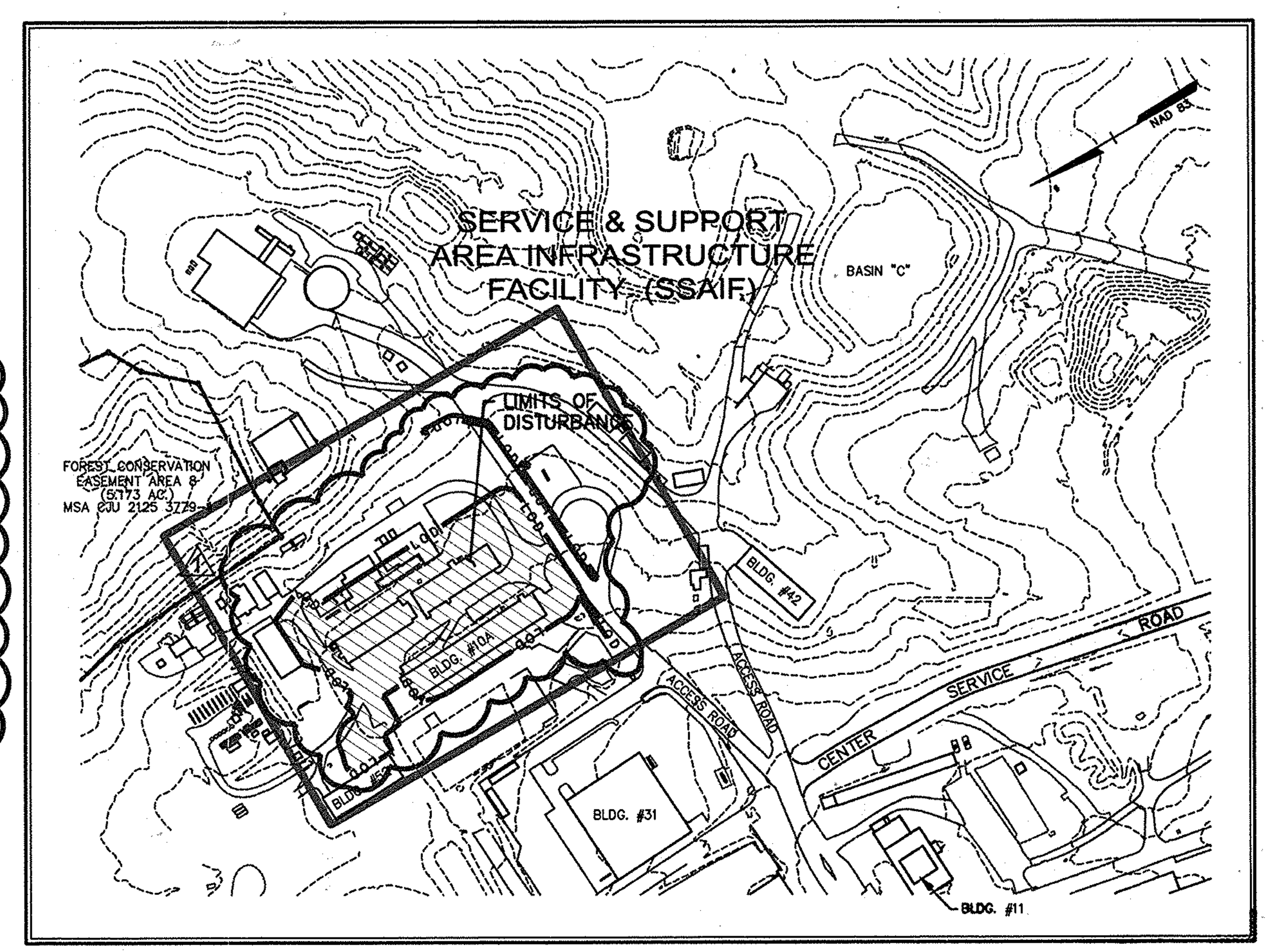

LOCATION MAP

Scale: 1"=200'

SITE ANALYSIS CHART

A. TOTAL PROJECT AREA: (JHU/APL CAMPUS) 357.98 ACRES/15,593,609 SQ.FT.
B. AREA OF PLAN SUBMISSION: (SSAIF SITE) 1.72 Ac.
C. LIMIT OF DISTURBED AREA: 1.72 Ac.
D. PRESENT ZONING DESIGNATION: PEC
E. PROPOSED USES FOR SITE AND STRUCTURES: RESEARCH CAMPUS PARK
F. FLOOR SPACE ON EACH LEVEL OF BUILDING(S) PER USE: N/A
G. TOTAL NUMBER OF UNITS ALLOWED FOR PROJECT AS SHOWN ON FINAL PLAT: N/A
H. TOTAL NUMBER OF UNITS PROPOSED ON SUBMISSION: N/A
I. MAXIMUM NUMBER OF EMPLOYEES, TENANTS ON SITE PER USE: 3937
J. NUMBER OF PARKING SPACES REQUIRED BY HOWARD COUNTY ZONING REGULATIONS AND/OR FDP CRITERIA: 2450 (SDP-99-11)
K. NUMBER OF PARKING SPACES PROVIDED ON SITE: 4940 (SDP-0466)
L. OPEN SPACE ON SITE: N/A
M. AREA OF RECREATION OPEN SPACE REQUIRED BY SUBDIVISION AND LAND DEVELOPMENT REGULATIONS: N/A
N. BUILDING COVERAGE OF SITE: N/A
O. APPLICABLE DPZ FILE REFERENCES: N/A
P. ANY OTHER INFORMATION WHICH MAY BE RELEVANT: N/A
Q. FLOOR AREA RATIO (FAR): N/A

PREVIOUS SDP AND FINAL PLAN REFERENCES

SDP-04-76: SERVICES AREA COMPLEX
F-02-40: SWM BASIN 'A', APFO, FOREST CONSERVATION
SDP-04-35: SWM BASIN 'G'
SDP-90-218: BUILDING No. 31 AND SWM BASIN 'G'
SDP-99-63: B52
F-02-77: SWM BASIN 'B'
SDP-04-66: MAIN PARKING LOT
SDP-04-133: BASIN 'C' SWM FACILITIES AND LAYDOWN AREA
SDP-05-042: JHU/LIBRARIES SERVICE CENTER (FOREST CONSERVATION AND WETLANDS UPDATES)
SDP-03-043: SANNER ROAD IMPROVEMENTS (NEW APFO NUMBER 4,600)
SDP-05-050: BUILDINGS 12 AND 15. CENTER SERVICE ROAD AND SA-3
SDP-05-133: PRECINCT 21, BUILDINGS 21 AND 43 (PARKING RATIO 1.62/1000)
SDP-07-080: MP-6 CONDUIT PATHWAY
F-04-188: FOREST CONSERVATION EASEMENT RE-PLAT
F-04-140: SANNER ROAD SWM, STORM DRAINS AND UTILITY EASEMENT
F-07-035: FOREST CONSERVATION, RE-PLAT EASEMENT
SDP-08-061: CENTRAL GREEN PHASE II

JHU/APL INTERNAL USE

THIS DATA SHALL NOT BE DISCLOSED TO A THIRD PARTY AND SHALL NOT BE DUPLICATED, USED, OR DISCLOSED IN WHOLE OR IN PART FOR ANY PURPOSE OTHER THAN TO EVALUATE THIS RFP OR, IN THE CASE OF A CONTRACT AWARD, TO PERFORM THE WORK REQUIRED HEREUNDER, WITHOUT THE EXPRESS WRITTEN CONSENT OF JHU/APL.

PROFESSIONAL CERTIFICATION

I HEREBY CERTIFY THAT THESE DOCUMENTS WERE PREPARED OR APPROVED BY ME, AND THAT I AM A DULY LICENSED PROFESSIONAL ENGINEER UNDER THE LAWS OF THE STATE OF MARYLAND

LICENSE NUMBER: 20906 EXPIRATION DATE: 21J17

PROFESSIONAL CERTIFICATION

I HEREBY CERTIFY THAT THESE DOCUMENTS WERE PREPARED OR APPROVED BY ME, AND THAT I AM A DULY LICENSED PROFESSIONAL ENGINEER UNDER THE LAWS OF THE STATE OF MARYLAND

LICENSE NUMBER: 32574 EXPIRATION DATE: 1/16/18

PURPOSE OF PLAN

THIS SITE DEVELOPMENT PLAN IS FOR THE FIRST PHASE OF THE DEVELOPMENT OF THE SERVICE AND SUPPORT AREA INFRASTRUCTURE FACILITY. THIS FACILITY WILL ULTIMATELY SERVE AS A CENTRAL CAMPUS BASE FOR THE COLLECTION OF SURPLUS MATERIALS AND RECYCLING. PHASE ONE WILL COVER THE CONSTRUCTION OF THE LOADING DOCK AND TRANSFER PLATFORM FOR RECYCLED MATERIALS.

ADDRESS CHART	
LOT/PARCEL No.	STREET ADDRESS
1	11100 JOHNS HOPKINS ROAD

PERMIT INFORMATION CHART

SUBDIVISION NAME			SECTION/AREA		LOT/PARCEL No.
JOHNS HOPKINS UNIV.-APL			N/A		1
PLAT# OR L/F	GRID #	ZONING	TAX MAP No.	ELECT. DISTRICT	CENSUS TRACT
15429/15433	16	PEC	41	5-05	605102
WATER CODE			SEWER CODE		
E-21			6480000		

APPROVED: DEPARTMENT OF PLANNING AND ZONING

Chief, Development Engineering Division	Date 2-22-16
Chief, Division of Land Development	Date 3-01-16
Director	Date 3-2-16

CENTURY ENGINEERING
CONSULTING ENGINEERS - PLANNERS
10710 Gilroy Road, Hunt Valley, MD 21031
Phone: 443.589.2400 Fax: 443.589.2401

STATE OF MARYLAND ANTHONY JOSEPH DIETZ No. 32574 PROFESSIONAL ENGINEER

DESIGN BY:	A.J.D.
DRAWN BY:	M.C.A./M.S.S.
CHECKED BY:	
DATE:	7/18/08

BY	NO.	REVISION	DATE
REB	1	RELOCATION OF UTILITIES AND REMOVAL OF BUILDINGS 10A, 10B, 10C	1/15/16

THE JOHNS HOPKINS UNIVERSITY
APPLIED PHYSICS LABORATORY
11100 JOHNS HOPKINS ROAD
LAUREL, MARYLAND 20723-6099
443-778-5134

COVER SHEET
SERVICE & SUPPORT AREA INFRASTRUCTURE FACILITY PHASE I
TAX MAP: 41 GRID: 16 PARCEL: 123
ELECTION DISTRICT 5-05 HOWARD COUNTY, MARYLAND
SHEET 1 OF 14

C.E.I. PROJECT NUMBER 22172.26

SCALE: AS SHOWN

SDP-08-084

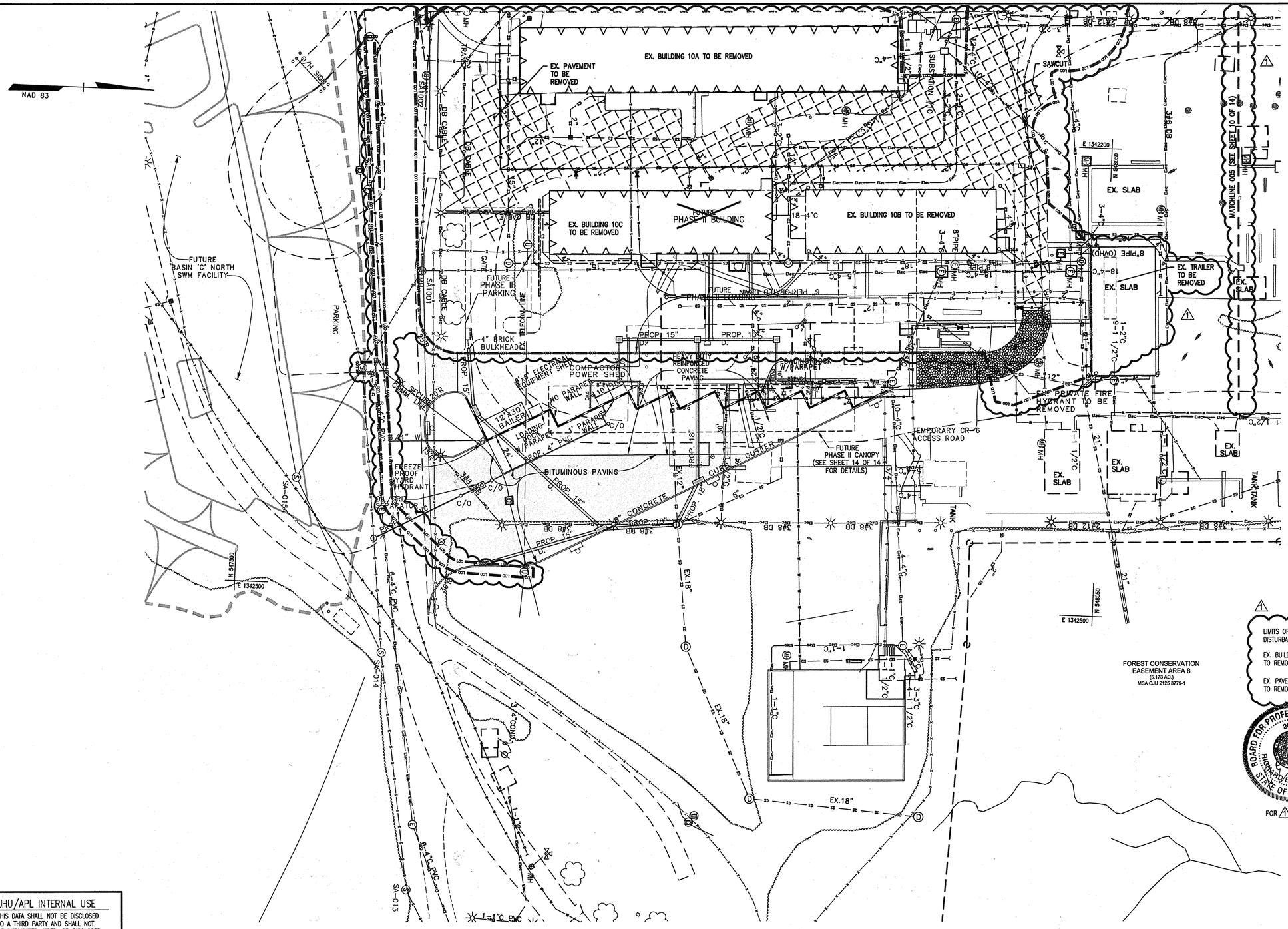

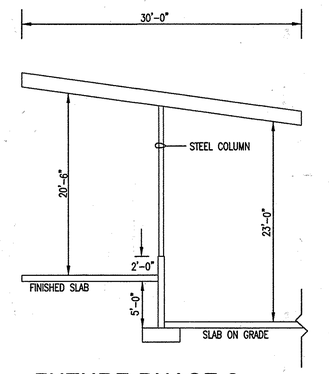

FUTURE PHASE 2 CANOPY SCHEMATIC

NOT TO SCALE

(SEE SHEET 14 OF 14 FOR DETAILS)

LEGEND

- LIMITS OF DISTURBANCE — LOD
- EX. BUILDING TO REMOVED
- EX. PAVEMENT TO REMOVED
- EX. CONCRETE SIDEWALK
- EX. FENCE
- EX. WALL
- EX. TREE LINE
- EX. BUILDING
- EX. CURB AND GUTTER
- EX. BITUMINOUS PAVING
- EX. RETAINING WALL TO REMAIN
- PROP. CURB & GUTTER
- PROP. A.D.A. COMPLIANT MULCH SIDEWALK
- PROPOSED PAVING
- PROPOSED REPAVING
- EX. LIGHT FIXTURES
- BITUMINOUS ASPHALT PAVING
- REINFORCED CONCRETE PAVING
- LOADING DOCK W/ PARAPET
- LOADING DOCK W/O PARAPET
- TRENCH DRAIN
- FUTURE STRUCTURE (SEE SHEET 14 OF 14)
- PROPOSED LIGHT FIXTURE

BOARD FOR PROFESSIONAL ENGINEERS 20906 RICHARD E. BURGOON STATE OF MARYLAND

FOR 1 REVISION

JHU/APL INTERNAL USE

THIS DATA SHALL NOT BE DISCLOSED TO A THIRD PARTY AND SHALL NOT BE DUPLICATED, USED, OR DISCLOSED IN WHOLE OR IN PART FOR ANY PURPOSE OTHER THAN TO EVALUATE THIS RFP OR, IN THE CASE OF A CONTRACT AWARD, TO PERFORM THE WORK REQUIRED HEREUNDER, WITHOUT THE EXPRESS WRITTEN CONSENT OF JHU/APL.

PROFESSIONAL CERTIFICATION

I HEREBY CERTIFY THAT THESE DOCUMENTS WERE PREPARED OR APPROVED BY ME, AND THAT I AM A DULY LICENSED PROFESSIONAL ENGINEER UNDER THE LAWS OF THE STATE OF MARYLAND

LICENSE NUMBER: 32574 EXPIRATION DATE: 1/16/18

PROFESSIONAL CERTIFICATION

I HEREBY CERTIFY THAT THESE DOCUMENTS WERE PREPARED OR APPROVED BY ME, AND THAT I AM A DULY LICENSED PROFESSIONAL ENGINEER UNDER THE LAWS OF THE STATE OF MARYLAND

LICENSE NUMBER: 20906 EXPIRATION DATE: 21 July 2017

APPROVED: DEPARTMENT OF PLANNING AND ZONING

Chief, Development Engineering Division	Date 2-22-16
Chief, Division of Land Development	Date 3-01-16
Director	Date 3-2-16

CENTURY ENGINEERING
CONSULTING ENGINEERS - PLANNERS
10710 Gilroy Road, Hunt Valley, MD 21031
Phone: 443.589.2400 Fax: 443.589.2401

STATE OF MARYLAND ANTHONY JOSEPH RIETZ No. 32574 PROFESSIONAL ENGINEER

DESIGN BY: A.J.D.
DRAWN BY: M.S.S./M.C.A.
CHECKED BY:
DATE: 7/18/08

BY	NO.	REVISION	DATE
REB	1	REMOVAL OF PAVEMENT, EX. BURIED SLABS, AND BUILDINGS 10A, 10B, AND 10C	1/15/16

THE JOHNS HOPKINS UNIVERSITY
APPLIED PHYSICS LABORATORY
11100 JOHNS HOPKINS ROAD
LAUREL, MARYLAND 20723-6099
443-778-5134

SITE PLAN
SERVICE & SUPPORT AREA
INFRASTRUCTURE FACILITY PHASE I
TAX MAP: 41 GRID: 16 PARCEL: 123
ELECTION DISTRICT 5-05 HOWARD COUNTY, MARYLAND
SHEET 2 OF 14

C.E.I. PROJECT NUMBER 22172.26

SCALE: 1"=30'

SDP-08-084

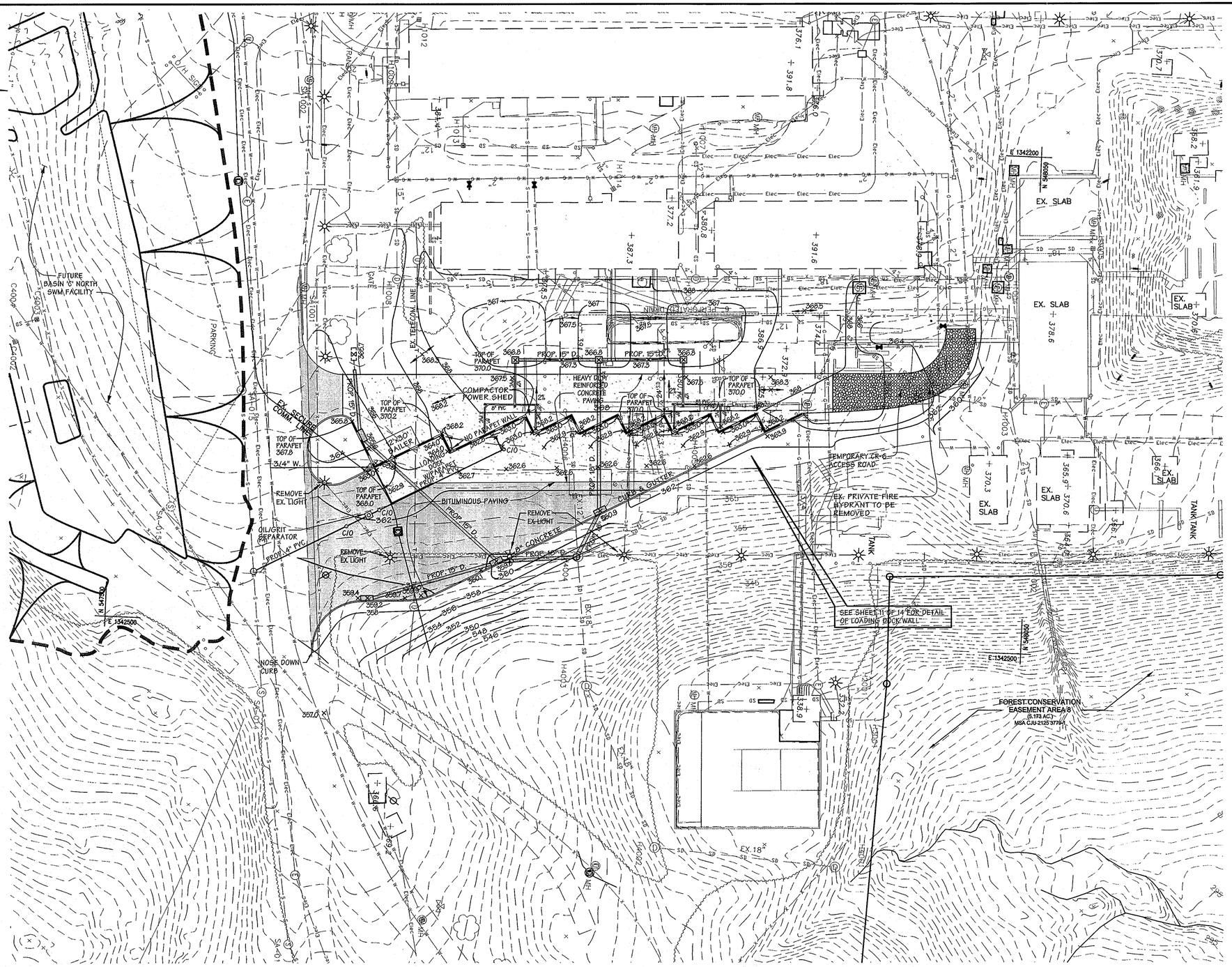

LEGEND

- EX. CONCRETE SIDEWALK
- EX. FENCE
- EX. WALL
- EX. TREE LINE
- EX. BUILDING
- EX. CURB AND GUTTER
- EX. BITUMINOUS PAVING
- EX. RETAINING WALL TO REMAIN
- PROP. CURB & GUTTER
- PROP. A.D.A. COMPLIANT MULCH SIDEWALK
- PROPOSED PAVING
- PROPOSED REPAVING
- LIGHT FIXTURES
- BITUMINOUS ASPHALT PAVING
- REINFORCED CONCRETE PAVING
- LOADING DOCK W/ PARAPET
- LOADING DOCK W/O PARAPET
- TRENCH DRAIN

JHU/APL INTERNAL USE

THIS DATA SHALL NOT BE DISCLOSED TO A THIRD PARTY AND SHALL NOT BE DUPLICATED, USED, OR DISCLOSED IN WHOLE OR IN PART FOR ANY PURPOSE OTHER THAN TO EVALUATE THIS RFP OR, IN THE CASE OF A CONTRACT AWARD, TO PERFORM THE WORK REQUIRED HEREUNDER, WITHOUT THE EXPRESS WRITTEN CONSENT OF JHU/APL.

PROFESSIONAL CERTIFICATION

I HEREBY CERTIFY THAT THESE DOCUMENTS WERE PREPARED OR APPROVED BY ME, AND THAT I AM A DULY LICENSED PROFESSIONAL ENGINEER UNDER THE LAWS OF THE STATE OF MARYLAND

LICENSE NUMBER: 32574 EXPIRATION DATE: 1/16/10

APPROVED: DEPARTMENT OF PLANNING AND ZONING

Chief, Development Engineering Division — Date 10/7/08

Chief, Division of Land Development — Date 10/6/08

Director — Date 10/6/08

CENTURY ENGINEERING
CONSULTING ENGINEERS - PLANNERS
10710 Gilroy Road, Hunt Valley, MD 21031
Phone: 443.589.2400 Fax: 443.589.2401

STATE OF MARYLAND — ANTHONY J. DI MARCO — No. 32574 — PROFESSIONAL ENGINEER — 9/26/08

DESIGN BY:	A.J.D.
DRAWN BY:	M.S.S./M.C.A.
CHECKED BY:	AJDM
DATE:	7/18/08

BY	NO.	REVISION	DATE

THE JOHNS HOPKINS UNIVERSITY
APPLIED PHYSICS LABORATORY
11100 JOHNS HOPKINS ROAD
LAUREL, MARYLAND 20723-6099
443-778-5134

GRADING PLAN
SERVICE & SUPPORT AREA
INFRASTRUCTURE FACILITY PHASE I
TAX MAP: 41 GRID: 16 PARCEL: 123
ELECTION DISTRICT 5-05 HOWARD COUNTY, MARYLAND
SHEET 3 OF 14

C.E.I. PROJECT NUMBER 22172.26

SCALE: 1"=30'

SDP-08-084

O:\DRAWINGS\JHU-DEV\2002\22172.12 JHU doctrc Vault at Bldg 29\22172.26\Dev06\GP(1) Grading Plan.dwg, 8/28/2008 1:51:17 PM, msmith

NAD 83

MATCHLINE 001 (SEE SHEET 10 OF 14)

EX. BLDG 10A TO BE REMOVED

CONNECT TO SWITCH

CONNECT TO GENSET

EX. 2x2", 1x3" RE-FEED

MATCHLINE 002 (SEE THIS SHEET)

FUTURE PHASE II BUILDING

EX. SLAB

FUTURE BASIN 'C' NORTH SWM FACILITY

PARKING

SA-001

SA-015

SA-014

S-A

4" BRICK BULKHEAD

COMPACTOR CANOPY (SEE NOTE THIS SHEET)

8'X6' ELECTRICAL EQUIPMENT SHED

COMPACTOR POWER SHED

SECURE ELECTRONIC COMMUNICATION VAULT

REMOVE EX. LIGHT

FREEZE PROOF HOD HYDRANT CONTRACTOR TO TEST PIT

CONTRACTOR TO TEST PIT

TEMPORARY CR-6 ACCESS ROAD

EX. PRIVATE FIRE HYDRANT TO BE REMOVED

TANK

CURB & GUTTER

EX. M-3 TO BE REBUILT AS REQUIRED

EX. M-2

EX. M-1

EX. E-1

EX.18"

PROP. 15" D.

PROP. 18" D.

PROP. 12" D.

PROP. 6" S.

NOSE DOWN CURB

EXISTING TELECOMMUNICATION MANHOLE RIM ELEVATION TO BE ADJUSTED IN THE FIELD UNDER SUPERVISION OF APL PERSONAL.

SECURE ELECTRONIC COMMUNICATION VAULT, RIM ELEVATION TO BE ADJUSTED IN FIELD UNDER SUPERVISION OF APL PERSONEL. EXISTING FRAME AND COVER TO BE REPLACED WITH HEAVY DUTY, TRAFFIC BEARING FRAME AND COVER. SEE SHEET 5 OF 6 FOR DETAIL EXISTING ELEVATION 360.24 PROPOSED ELEVATION 360.60

N 547500
E 1342500
N 548050
E 1342500

BLDG 52

FOREST CONSERVATION EASEMENT AREA 8 (5.173 AC.) MSA CJU 2125 3779-1

EX. 2x2", 1x3" RE-FEED

MATCHLINE 002

BLDG. 35
BLDG. 32
BLDG. 10A
BLDG. 10C
BLDG. 10B

KEY MAP (1"=200')

SANITARY SEWER STRUCTURE SCHEDULE

STRUCTURE NUMBER	TOP ELEV.	INVERT IN	INVERT IN	INVERT OUT	STRUCTURE TYPE	HOWARD CO. STD. DETAIL No.
SMH-1	*	351.84	352.54	351.84	4'-0" DIA. PRE-CAST	G5.14

* TO BE DETERMINED, SET IN FIELD

SANITARY SEWER STRUCTURE SCHEDULE (REDLINE REVISION) 1

STRUCTURE NUMBER	TOP ELEV.	INVERT IN	INVERT IN	INVERT OUT	STRUCTURE TYPE	HOWARD CO. STD. DETAIL No.
S-A	365.20	359.39		359.39	CLEANOUT LAMPHOLE	S-3.21

STORM DRAIN STRUCTURE SCHEDULE

STRUCTURE NUMBER	TOP ELEV.	INVERT IN	INVERT IN	INVERT OUT	STRUCTURE TYPE	HOWARD CO. STD. DETAIL No.
I-1	366.80*	363.30***		362.90	DOUBLE TYPE 'S'	SD-4.23
I-2	366.80*	361.90	361.90	356.50	DOUBLE TYPE 'S'	SD-4.23
I-3	366.80*	363.30***		362.90	DOUBLE TYPE 'S'	SD-4.23
I-4	360.90*	354.00		353.80	DOUBLE TYPE 'S' COMBINATION	SD-4.34
I-5	359.80 **	354.00	354.00	353.75	DOUBLE TYPE 'S' COMBINATION	SD-4.34
I-6	359.20 **			356.00	DOUBLE TYPE 'S' COMBINATION	SD-4.34
I-7	365.90 **	361.00		355.10	DOUBLE TYPE 'S' COMBINATION	SD-4.34

* TOP OF GRATE AT CENTERLINE OF STRUCTURE
** TOP OF GRATE AT CENTERLINE OF STRUCTURE AT FACE OF CURB
*** PVC ROOF DRAINS FROM FUTURE ROOF CANOPY

STORM DRAIN STRUCTURE SCHEDULE (REDLINE REVISION) 1

STRUCTURE NUMBER	TOP ELEV.	INVERT IN	INVERT IN	INVERT OUT	STRUCTURE TYPE	HOWARD CO. STD. DETAIL No.
SD-1	367.82	354.90		354.80	MANHOLE	G-5.12
SD-2	366.03	355.76		355.51	YARD INLET	D-4.14
SD-3	369.47	366.84		366.74	MANHOLE	G-5.12

LEGEND

EX. MINOR CONTOUR	391
EX. MAJOR CONTOUR	390
EX. SPOT ELEVATION	× 387.6
EX. FIRE HYDRANT	
EX. STORM DRAIN	SD
EX. WATER LINE	W W
EX. SANITARY SEWER	S S
EX. ELECTRIC LINE	Elec
EX. COMMUNICATIONS LINE	
EX. MANHOLE	
EX. INLET	
EX. TREE LINE	
EX. BUILDING	
EX. CURB AND GUTTER	
EX. BITUMINOUS PAVING	
EX. CONCRETE SIDEWALK	
EX. FENCE	× ×
EX. WALL	
EX. CLEANOUT	
EX. LIGHT STANDARD	
EX. BUSH	
EX. TREE	
EX. PIPE BOLLARD	
EX. UTILITY POLE	
EX. RETAINING WALL TO REMAIN	
EX. UTILITY TO BE REMOVED	× × SD × ×
EX. UTILITY TO BE ABANDONED IN PLACE	SD
PROP. MINOR CONTOUR	379
PROP. MAJOR CONTOUR	380
PROP. SPOT ELEVATION	+ 385.58
PROP. CURB & GUTTER	
PROP. SEWER	PROP. 6" S.
PROP. STORM DRAIN	PROP. 15" D.
DRAINAGE AREA	
LOADING DOCK W/ PARAPET	
LOADING DOCK W/O PARAPET	
TRENCH DRAIN	
PROPOSED LIGHT FIXTURE	
LIMITS OF DISTURBANCE	LOD
PROP. TELECOMM	U 2-4", C 4-4", E 3-3"
PROP. ELECTRIC	
PROP. SANITARY	S
PROP. STORM	D
PROP. WATER	
PROP. GAS	

NOTES:
1. ALL WATER, TELECOM, ELECTRIC, AND GAS INSTALLATION SHALL BE CUT AND COVERED AT THE END OF EACH DAY'S WORK. SANITARY AND STORM DRAIN EXCAVATION WILL ONLY BE LEFT OPEN TO THE EXTENT NECESSARY.
2. SPOIL PILES TO BE PLACED TO THE HIGH SIDES OF ALL TRENCHES WHENEVER POSSIBLE.

NOTE: SYMBOLOGY AND LINETYPES FROM SHEET LEGEND TO BE APPLIED FOR REDLINE REVISIONS

1

RICHARD E. BURGOYNE, III 20906 STATE OF MARYLAND PROFESSIONAL ENGINEER

FOR 1 REVISION

NOTE:
1.) CANOPY ROOF DRAINS SET @ MINIMUM 2% GRADE
2.) CLEANOUTS FOR CANOPY ROOF DRAINS TO BE TRAFFIC BEARING AND COMPLY WITH HOWARD COUNTY STANDARD DETAIL S-3.21 (SEE SHEET 11 OF 14 FOR DETAIL)
3.) CONTRACTOR TO CAP/PLUG EXISTING UTILITIES TO BE ABANDONED IN PLACE. ALL LINES 8" OR LARGER TO BE FILLED WITH CONCRETE SLURRY.

NOTE: THE OWNER IS TO PROVIDE A TEMPORARY CANOPY OVER THE COMPACTOR HOPPER UNTIL SUCH TIME AS THE PERMANENT LOADING DOCK CANOPY IS INSTALLED.

JHU/APL INTERNAL USE

THIS DATA SHALL NOT BE DISCLOSED TO A THIRD PARTY AND SHALL NOT BE DUPLICATED, USED, OR DISCLOSED IN WHOLE OR IN PART FOR ANY PURPOSE OTHER THAN TO EVALUATE THIS RFP OR, IN THE CASE OF A CONTRACT AWARD, TO PERFORM THE WORK REQUIRED HEREUNDER, WITHOUT THE EXPRESS WRITTEN CONSENT OF JHU/APL.

PROFESSIONAL CERTIFICATION

I HEREBY CERTIFY THAT THESE DOCUMENTS WERE PREPARED OR APPROVED BY ME, AND THAT I AM A DULY LICENSED PROFESSIONAL ENGINEER UNDER THE LAWS OF THE STATE OF MARYLAND

LICENSE NUMBER: 20906 EXPIRATION DATE: 2/9/2017

PROFESSIONAL CERTIFICATION

I HEREBY CERTIFY THAT THESE DOCUMENTS WERE PREPARED OR APPROVED BY ME, AND THAT I AM A DULY LICENSED PROFESSIONAL ENGINEER UNDER THE LAWS OF THE STATE OF MARYLAND

LICENSE NUMBER: 32574 EXPIRATION DATE: 1/16/18

APPROVED: DEPARTMENT OF PLANNING AND ZONING

Chief, Development Engineering Division — Date 2.22.16

Chief, Division of Land Development — Date 3-01-16

Director — Date 3-2-16

CENTURY ENGINEERING
CONSULTING ENGINEERS - PLANNERS
10710 Gilroy Road, Hunt Valley, MD 21031
Phone: 443.589.2400 Fax: 443.589.2401

STATE OF MARYLAND ANTHONY JOSEPH DEL GIORNO 25314 PROFESSIONAL ENGINEER

DESIGN BY: A.J.D.				
DRAWN BY: M.S.S./M.C.A.				
CHECKED BY:				
DATE: 7/18/08	REB	1	RELOCATION AND REMOVAL OF UTILITIES, REVISED SANITARY SEWER AND STORM DRAIN STRUCTURE TABLES	1/15/16
	BY	NO.	REVISION	DATE

THE JOHNS HOPKINS UNIVERSITY
APPLIED PHYSICS LABORATORY
11100 JOHNS HOPKINS ROAD
LAUREL, MARYLAND 20723-6099
443-778-5134

UTILITY PLAN
SERVICE & SUPPORT AREA
INFRASTRUCTURE FACILITY PHASE I
TAX MAP: 41 GRID: 16 PARCEL: 123
ELECTION DISTRICT 5-05 HOWARD COUNTY, MARYLAND
SHEET 4 OF 14

C.E.I. PROJECT NUMBER 22172.26

SCALE: 1"=30'

SDP-08-084

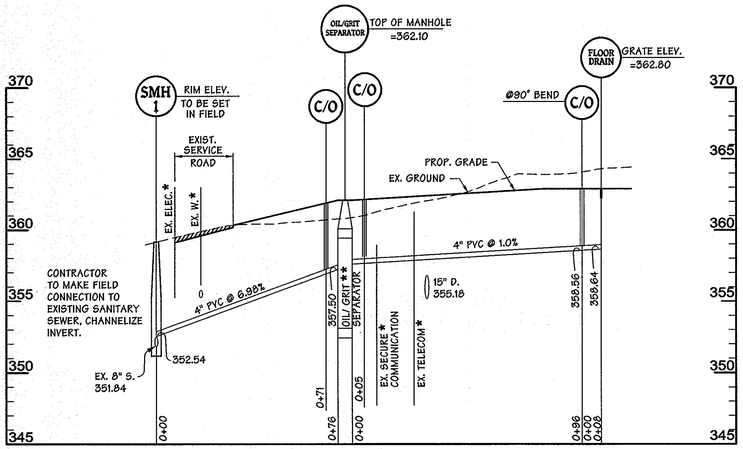

* CONTRACTOR TO TEST PIT
** SEE DETAIL SHEET 11 OF 14

SANITARY SEWER PROFILE

SCALE: HORIZ. 1"=30'
VERT. 1"=5'

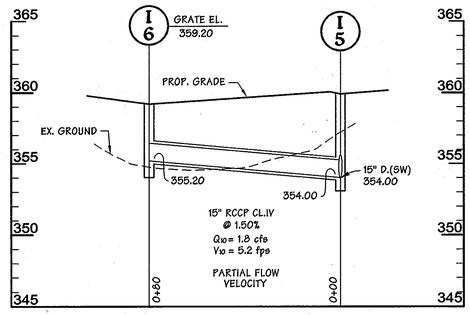

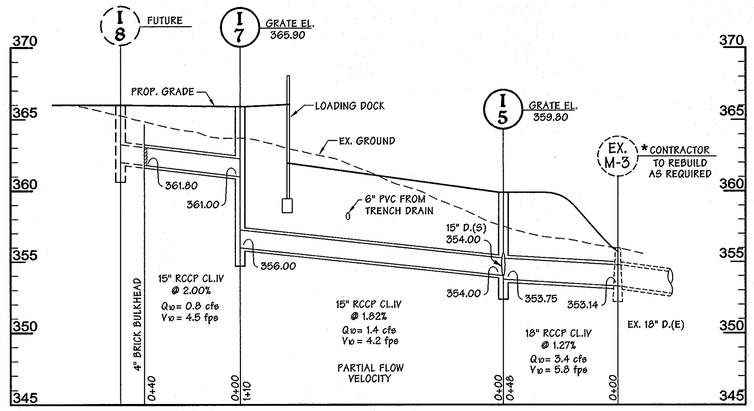

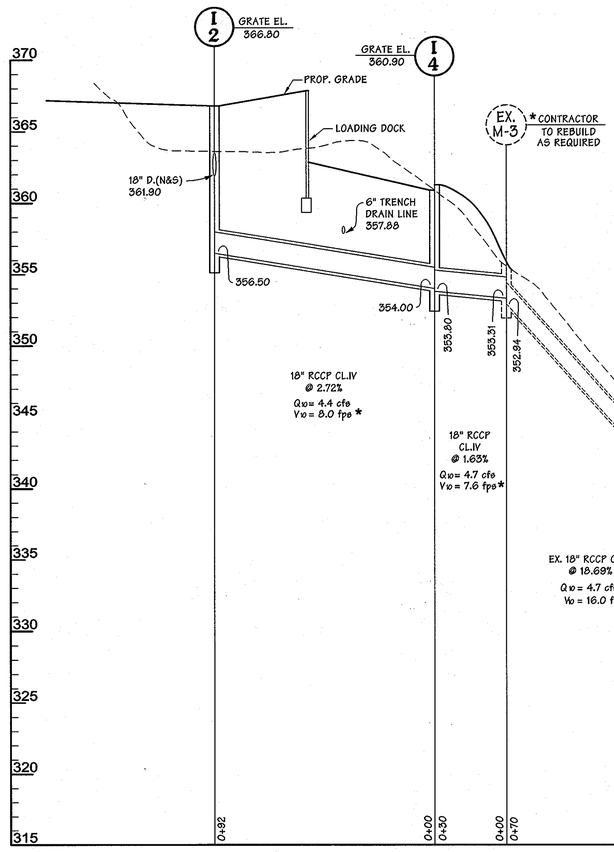

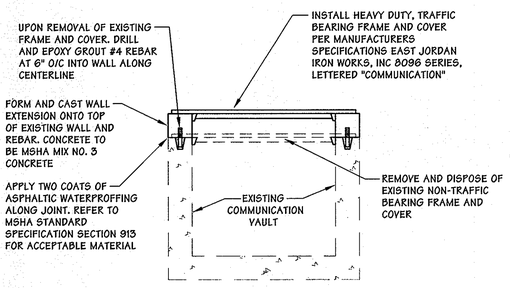

COMMUNICATION VAULT TOP ADJUSTMENT DETAIL

NOT TO SCALE

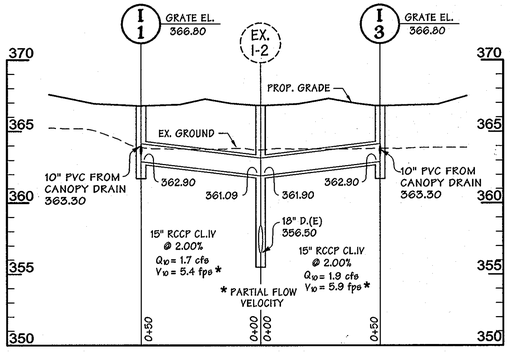

STORM DRAIN PROFILES

SCALE: HORIZ. 1"=30'
VERT. 1"=5'

JHU/APL INTERNAL USE

THIS DATA SHALL NOT BE DISCLOSED TO A THIRD PARTY AND SHALL NOT BE DUPLICATED, USED, OR DISCLOSED IN WHOLE OR IN PART FOR ANY PURPOSE OTHER THAN TO EVALUATE THIS RFP OR, IN THE CASE OF A CONTRACT AWARD, TO PERFORM THE WORK REQUIRED HEREUNDER, WITHOUT THE EXPRESS WRITTEN CONSENT OF JHU/APL.

PROFESSIONAL CERTIFICATION

I HEREBY CERTIFY THAT THESE DOCUMENTS WERE PREPARED OR APPROVED BY ME, AND THAT I AM A DULY LICENSED PROFESSIONAL ENGINEER UNDER THE LAWS OF THE STATE OF MARYLAND

LICENSE NUMBER: 32574 EXPIRATION DATE: 1/16/10

APPROVED: DEPARTMENT OF PLANNING AND ZONING

Chief, Development Engineering Division — Date 10/29/08

Chief, Division of Land Development — Date 10/5/08

Director — Date 10/8/08

CENTURY ENGINEERING
CONSULTING ENGINEERS - PLANNERS
10710 Gilroy Road, Hunt Valley, MD 21031
Phone: 443.589.2400 Fax: 443.589.2401

STATE OF MARYLAND — ANTHONY JOSEPH SCOTT — No. 32574 — PROFESSIONAL ENGINEER

DESIGN BY:	A.J.D.
DRAWN BY:	M.S.S./M.C.A.
CHECKED BY:	
DATE:	7/18/08

BY	NO.	REVISION	DATE

THE JOHNS HOPKINS UNIVERSITY
APPLIED PHYSICS LABORATORY
11100 JOHNS HOPKINS ROAD
LAUREL, MARYLAND 20723-6099
443-778-5134

UTILITY PLAN PROFILES AND NOTES
SERVICE & SUPPORT AREA
INFRASTRUCTURE FACILITY PHASE I
TAX MAP: 41 GRID: 16 PARCEL: 123
ELECTION DISTRICT 5-05 HOWARD COUNTY, MARYLAND
SHEET 5 OF 14

C.E.I. PROJECT NUMBER 22172.26

SCALE: 1"=30'

SDP-08-084

O:\DRAWINGS\LAND-DEV\2000\22172.12 JHU district Vault at Bldg 26\22172.26\Sheet\UTIL Utility Profile & Notes.dwg, 8/28/2008 1:53:13 PM, rsmith

LEGEND

EX. MINOR CONTOUR	391	EX. LIGHT STANDARD	
EX. MAJOR CONTOUR	390	EX. BUSH	
EX. SPOT ELEVATION	× 387.6	EX. TREE	
EX. FIRE HYDRANT		EX. PIPE BOLLARD	
EX. STORM DRAIN	SD	EX. UTILITY POLE	
EX. WATER LINE	W W	EX. RETAINING WALL TO REMAIN	
EX. SANITARY SEWER	S S	EX. UTILITY TO BE REMOVED	X X SD X X
EX. ELECTRIC LINE	Elec	EX. UTILITY TO BE ABANDONED IN PLACE	SD
EX. COMMUNICATIONS LINE		PROP. MINOR CONTOUR	379
EX. MANHOLE		PROP. MAJOR CONTOUR	380
EX. INLET		PROP. SPOT ELEVATION	+ 385.58
EX. TREE LINE		PROP. CURB & GUTTER	
EX. BUILDING		PROP. SEWER	PROP. 6" S.
EX. CURB AND GUTTER		PROP. STORM DRAIN	PROP. 15" D.
EX. BITUMINOUS PAVING		DRAINAGE AREA	
EX. CONCRETE SIDEWALK		SOIL LIMITS	MIB2(B) (SOIL SERIES / HYDROLOGIC SOIL GROUP)
EX. FENCE	X X	FUTURE BUILDING	
EX. WALL			
EX. CLEANOUT	CO		

SOIL INFORMATION

SYMBOL	SERIE	HYDROLOGIC SOIL GROUP
MgB2	MANOR	B
MgC2	MANOR	B
MIB2	MANOR	B
MID2	MANOR	B
MID3	MANOR	B
MnF	MANOR	B

DRAINAGE AREA INFORMATION

A = AREA (ACRE)
B = AREA (I.D.)
C = COMPOSITE RATIONAL 'C'
Z = ZONING
P = WEIGHTED% IMPERVIOUS COVER
S = % SCS SOIL NOTE 'C' SOILS ASSUMED HSG

JHU/APL INTERNAL USE

THIS DATA SHALL NOT BE DISCLOSED TO A THIRD PARTY AND SHALL NOT BE DUPLICATED, USED, OR DISCLOSED IN WHOLE OR IN PART FOR ANY PURPOSE OTHER THAN TO EVALUATE THIS RFP OR, IN THE CASE OF A CONTRACT AWARD, TO PERFORM THE WORK REQUIRED HEREUNDER, WITHOUT THE EXPRESS WRITTEN CONSENT OF JHU/APL.

PROFESSIONAL CERTIFICATION

I HEREBY CERTIFY THAT THESE DOCUMENTS WERE PREPARED OR APPROVED BY ME, AND THAT I AM A DULY LICENSED PROFESSIONAL ENGINEER UNDER THE LAWS OF THE STATE OF MARYLAND

LICENSE NUMBER: 21574 EXPIRATION DATE: 1/16/10

APPROVED: DEPARTMENT OF PLANNING AND ZONING

Chief, Development Engineering Division — Date 10/9/08

Chief, Division of Land Development — Date 10/8/08

Director — Date 10/8/08

CENTURY ENGINEERING
CONSULTING ENGINEERS - PLANNERS
10710 Gilroy Road, Hunt Valley, MD 21031
Phone: 443.589.2400 Fax: 443.589.2401

STATE OF MARYLAND — ANTHONY JOSEPH DIPPE — 21574 — PROFESSIONAL ENGINEER

DESIGN BY:	A.J.D.
DRAWN BY:	M.S.S./M.C.A.
CHECKED BY:	
DATE:	7/18/08

BY	NO.	REVISION	DATE

THE JOHNS HOPKINS UNIVERSITY
APPLIED PHYSICS LABORATORY
11100 JOHNS HOPKINS ROAD
LAUREL, MARYLAND 20723-6099
443-778-5134

PHASE I STORM DRAIN DRAINAGE AREA MAP AND FLOW TABULATIONS
SERVICE & SUPPORT AREA INFRASTRUCTURE FACILITY PHASE I
TAX MAP: 41 GRID: 16 PARCEL: 123
ELECTION DISTRICT 5-05 HOWARD COUNTY, MARYLAND
SHEET 6 OF 14

C.E.I. PROJECT NUMBER 22172.26

SCALE: 1"=30'

SDP-08-084

O:\DRAWINGS\LAND-DEV\2000\22172.12 JHU elydric Vault at Bldg 29\22172-29\Cadd\(SD1) Storm Drain DAR.dwg, 8/28/2008 1:54:54 PM, msmith

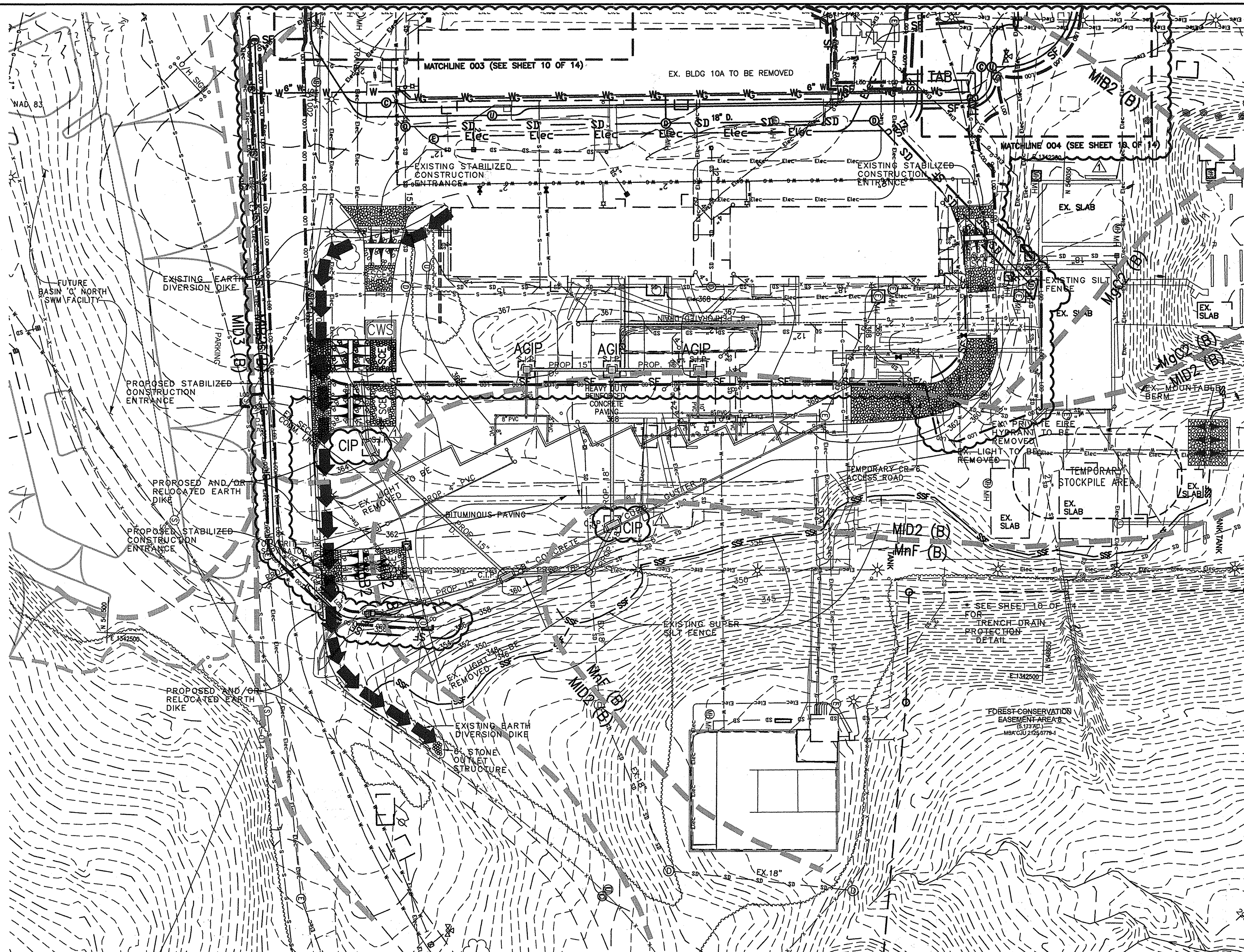

HOWARD SOIL CONSERVATION DISTRICT

STANDARD SEDIMENT CONTROL NOTES

1. A MINIMUM OF 48 HOURS NOTICE MUST BE GIVEN TO THE HOWARD COUNTY DEPARTMENT OF INSPECTIONS, LICENSES AND PERMITS, SEDIMENT CONTROL DIVISION PRIOR TO THE START OF ANY CONSTRUCTION (313–1855).
2. ALL VEGETATIVE AND STRUCTURAL PRACTICES ARE TO BE INSTALLED ACCORDING TO THE PROVISIONS OF THIS PLAN AND ARE TO BE IN CONFORMANCE WITH THE MOST CURRENT MARYLAND STANDARDS AND SPECIFICATIONS FOR SOIL EROSION AND SEDIMENT CONTROL AND REVISIONS THERETO.
3. FOLLOWING INITIAL SOIL DISTURBANCE OR RE–DISTURBANCE, PERMANENT OR TEMPORARY STABILIZATION SHALL BE COMPLETED WITHIN: A) 7 CALENDAR DAYS FOR ALL PERIMETER SEDIMENT CONTROL STRUCTURES, DIKES, PERIMETER SLOPES AND ALL SLOPES GREATER THAN 3:1, B) 14 DAYS AS TO ALL OTHER DISTURBED OR GRADED AREAS ON THE PROJECT SITE.
4. ALL SEDIMENT TRAPS/BASINS SHOWN MUST BE FENCED AND WARNING SIGNS POSTED AROUND THEIR PERIMETER IN ACCORDANCE WITH VOL 1, CHAPTER 12 OF THE HOWARD COUNTY DESIGN MANUAL, STORM DRAINAGE.
5. ALL DISTURBED AREAS MUST BE STABILIZED WITHIN THE TIME PERIOD SPECIFIED ABOVE IN ACCORDANCE WITH THE 1994 MARYLAND STANDARDS AND SPECIFICATIONS FOR SOIL EROSION AND SEDIMENT CONTROL FOR PERMANENT SEEDING (SEC. 51) SOD (SEC. 54), TEMPORARY SEEDING (SEC. 50) AND MULCHING (SEC. 52). TEMPORARY STABILIZATION WITH MULCH ALONE CAN ONLY BE DONE WHEN RECOMMENDED SEEDING DATES DO NOT ALLOW FOR PROPER GERMINATION AND ESTABLISHMENT OF GRASSES.
6. ALL SEDIMENT CONTROL STRUCTURES ARE TO REMAIN IN PLACE AND ARE TO BE MAINTAINED IN OPERATIVE CONDITION UNTIL PERMISSION FOR THEIR REMOVAL HAS BEEN OBTAINED FROM THE HOWARD COUNTY SEDIMENT CONTROL INSPECTOR.
7. SITE ANALYSIS:

	STOCKPILE AREA
TOTAL AREA OF SITE	1.72 ACRES
AREA DISTURBED	1.72 ACRES
AREA TO BE ROOFED OR PAVED	0.73 ACRES
AREA TO BE VEGETATIVELY STABILIZED .	0.99 ACRES
TOTAL CUT	183 CU. YDS.
TOTAL FILL	4163 CU. YDS.JHU/APL CAMPUS
OFFSITE WASTE/BORROW AREA LOCATION .	JHU/APL CAMPUS

8. ANY SEDIMENT CONTROL PRACTICE WHICH IS DISTURBED BY GRADING ACTIVITY FOR PLACEMENT OF UTILITIES MUST BE REPAIRED ON THE SAME DAY OF DISTURBANCE.
9. ADDITIONAL SEDIMENT CONTROL MUST BE PROVIDED, IF DEEMED NECESSARY BY THE HOWARD COUNTY SEDIMENT CONTROL INSPECTOR.
10. ON ALL SITES WITH DISTURBED AREAS IN EXCESS OF 2 ACRES, APPROVAL OF THE INSPECTION AGENCY SHALL BE REQUESTED UPON COMPLETION OF INSTALLATION OF PERIMETER EROSION AND SEDIMENT CONTROLS, BUT BEFORE PROCEEDING WITH ANY OTHER EARTH DISTURBANCE OR GRADING. OTHER BUILDING OR GRADING INSPECTION APPROVALS MAY NOT BE AUTHORIZED UNTIL THIS INITIAL APPROVAL BY THE INSPECTION AGENCY IS MADE.
11. TRENCHES FOR THE CONSTRUCTION OF UTILITIES IS LIMITED TO THREE PIPE LENGTHS OR THAT WHICH SHALL BE BACK–FILLED AND STABILIZED BY THE END OF EACH WORK DAY, WHICHEVER IS SHORTER.

SEE SHEET 9A OF 14 FOR STANDARD SEDIMENT CONTROL NOTES

LEGEND

EX. MINOR CONTOUR	— — 391 — — —	PROP. MINOR CONTOUR	—— 379 ——
EX. MAJOR CONTOUR	— —390— —	PROP. MAJOR CONTOUR	—— 380 ——
EX. SPOT ELEVATION	× 387.6	PROP. SPOT ELEVATION	+385.58
EX. FIRE HYDRANT		PROP. CURB & GUTTER	
EX. STORM DRAIN	—— SD ——	PROP. SILT FENCE	—— SF ——
EX. WATER LINE	—W—— W—	PROP. SUPER SILT FENCE	—— SSF ——
EX. SANITARY SEWER	—S—— S—	PROP. LIMIT OF DISTURBANCE	
EX. ELECTRIC LINE	—— Elec ——	EX. EARTH DIKE	
EX. COMMUNICATIONS LINE	— — — — —		
EX. MANHOLE	○	EX. STABILIZED CONSTRUCTION ENTRANCE	SCE
EX. INLET	□		
EX. TREE LINE			
EX. BUILDING		EX. MOUNTABLE BERM	
EX. CURB AND GUTTER			
EX. BITUMINOUS PAVING			
EX. CONCRETE SIDEWALK		PROP. EARTH DIKE	
EX. FENCE	—×——×—		
EX. WALL		PROP. STABILIZED CONSTRUCTION ENTRANCE	SCE
EX. CLEANOUT	○CO		
EX. LIGHT STANDARD			
EX. BUSH		MOUNTABLE BERM	
EX. TREE			
EX. PIPE BOLLARD	○	EX. SILT FENCE	—— SF ——
EX. UTILITY POLE	⌀	EX. SUPER SILT FENCE	—— SSF ——
EX. LIGHT		CONCRETE WASHOUT AREA	CWS
LIMITS OF DISTURBANCE	—— LOD ——	INLET PROTECTION	CIP AGIP
		TEMPRORARY ASPHALT BERM	TAB

BY THE ENGINEER:

"I CERTIFY THAT THIS PLAN FOR EROSION AND SEDIMENT CONTROL REPRESENTS A PRACTICAL AND WORKABLE PLAN BASED ON MY PERSONAL KNOWLEDGE OF THE SITE CONDITIONS, AND THAT IT WAS PREPARED IN ACCORDANCE WITH THE REQUIREMENTS OF THE HOWARD SOIL CONSERVATION DISTRICT."

Anthony J. Dietz — SIGNATURE OF ENGINEER   7/18/08 — DATE

BY THE DEVELOPER:

"I/WE CERTIFY THAT ALL DEVELOPMENT AND CONSTRUCTION WILL BE DONE ACCORDING TO THIS PLAN, AND THAT ANY RESPONSIBLE PERSONNEL INVOLVED IN THE CONSTRUCTION PROJECT WILL HAVE A CERTIFICATE OF ATTENDANCE AT A DEPARTMENT OF THE ENVIRONMENT APPROVED TRAINING PROGRAM FOR THE CONTROL OF SEDIMENT AND EROSION BEFORE BEGINNING THE PROJECT. I ALSO AUTHORIZE PERIODIC ON–SITE INSPECTION BY THE HOWARD SOIL CONSERVATION DISTRICT."

Glen M. Carey — SIGNATURE OF DEVELOPER   2/3/16 — DATE

THIS DEVELOPMENT PLAN IS AS APPROVED FOR SOIL EROSION AND SEDIMENT CONTROL BY THE HOWARD SOIL CONSERVATION DISTRICT.

John R Robertson — HOWARD S.C.D.   2/17/16 — DATE

ONLY EROSION CONTROL BMPS SHALL BE CONSTRUCTED AND MAINTAINED FOR SDP 08–084 REVISION 1.

NOTE:
THERE ARE NO DRAINAGE AREAS ON THIS SITE GREATER THAN 2.0 ACRES THEREFORE INTERIM STORMWATER MANAGEMENT IS NOT REQUIRED.

JHU/APL INTERNAL USE

THIS DATA SHALL NOT BE DISCLOSED TO A THIRD PARTY AND SHALL NOT BE DUPLICATED, USED, OR DISCLOSED IN WHOLE OR IN PART FOR ANY PURPOSE OTHER THAN TO EVALUATE THIS RFP OR, IN THE CASE OF A CONTRACT AWARD, TO PERFORM THE WORK REQUIRED HEREUNDER, WITHOUT THE EXPRESS WRITTEN CONSENT OF JHU/APL.

PROFESSIONAL CERTIFICATION

I HEREBY CERTIFY THAT THESE DOCUMENTS WERE PREPARED OR APPROVED BY ME, AND THAT I AM A DULY LICENSED PROFESSIONAL ENGINEER UNDER THE LAWS OF THE STATE OF MARYLAND

LICENSE NUMBER: 20906   EXPIRATION DATE: 21 July 2017

PROFESSIONAL CERTIFICATION

I HEREBY CERTIFY THAT THESE DOCUMENTS WERE PREPARED OR APPROVED BY ME, AND THAT I AM A DULY LICENSED PROFESSIONAL ENGINEER UNDER THE LAWS OF THE STATE OF MARYLAND

LICENSE NUMBER: 32574   EXPIRATION DATE: 1/16/18

STATE OF MARYLAND BOARD FOR PROFESSIONAL ENGINEERS — RICHARD E. BURGOYNE — 20906   1/29/2016

FOR 1 REVISION

APPROVED: DEPARTMENT OF PLANNING AND ZONING

Chief, Development Engineering Division	Date 2.22.16
Chief, Division of Land Development	Date 3-01-16
Director	Date 3-2-16

CENTURY ENGINEERING
CONSULTING ENGINEERS - PLANNERS
10710 Gilroy Road, Hunt Valley, MD 21031
Phone: 443.589.2400 Fax: 443.589.2401

STATE OF MARYLAND — ANTHONY JOSEPH DIETZ — No. 32574 — PROFESSIONAL ENGINEER

DESIGN BY: A.J.D.
DRAWN BY: M.S.S./M.C.A.
CHECKED BY:
DATE: 7/18/08

BY	NO.	REVISION	DATE
REB	1	REVISION OF EROSION CONTROL LOCATIONS	1/15/16

THE JOHNS HOPKINS UNIVERSITY
APPLIED PHYSICS LABORATORY
11100 JOHNS HOPKINS ROAD
LAUREL, MARYLAND 20723–6099
443–778–5134

EROSION AND SEDIMENT CONTROL
SERVICE & SUPPORT AREA INFRASTRUCTURE FACILITY PHASE I

TAX MAP: 41   GRID: 16   PARCEL: 123
ELECTION DISTRICT 5-05   HOWARD COUNTY, MARYLAND

SHEET 7 OF 14

C.E.I. PROJECT NUMBER 22172.26

SCALE: 1"=30'

SDP-08-084

LEGEND

EX. MINOR CONTOUR — 391
EX. MAJOR CONTOUR — 390
EX. SPOT ELEVATION × 387.6
EX. FIRE HYDRANT
EX. STORM DRAIN — SD —
EX. WATER LINE — W — W —
EX. SANITARY SEWER — S — S —
EX. ELECTRIC LINE — Elec —
EX. COMMUNICATIONS LINE
EX. MANHOLE
EX. INLET
EX. TREE LINE
EX. BUILDING
EX. CURB AND GUTTER
EX. BITUMINOUS PAVING
EX. CONCRETE SIDEWALK
EX. FENCE — X — X —
EX. WALL
EX. CLEANOUT
EX. LIGHT STANDARD
EX. BUSH
EX. TREE
EX. PIPE BOLLARD
EX. UTILITY POLE
PROP. MINOR CONTOUR — 379 —
PROP. MAJOR CONTOUR — 380 —
PROP. SPOT ELEVATION +385.58
PROP. CURB & GUTTER
PROP. SILT FENCE — SF —
PROP. SUPER SILT FENCE — SSF —
EX. D.A. LIMITS
PROP. D.A. LIMITS
PROP. LIMIT OF DISTURBANCE — LOD — LOD —
EX. EARTH DIKE
EX. STABILIZED CONSTRUCTION ENTRANCE — SCE —
EX. MOUNTABLE BERM
PROP. EARTH DIKE
PROP. STABILIZED CONSTRUCTION ENTRANCE — SCE —
MOUNTABLE BERM
STANDARD INLIT PROTECTION — S.I.P.
CURB INLIT PROTECTION — C.I.P.

⚠1 ONLY EROSION CONTROL BMPS SHALL BE CONSTRUCTED AND MAINTAINED FOR SDP 08-084 REVISION 1.

BOARD FOR PROFESSIONAL ENGINEERS 20906 RICHARD E. BURGOYNE STATE OF MARYLAND 1/2016
FOR ⚠1 REVISION

BY THE ENGINEER:

"I CERTIFY THAT THIS PLAN FOR EROSION AND SEDIMENT CONTROL REPRESENTS A PRACTICAL AND WORKABLE PLAN BASED ON MY PERSONAL KNOWLEDGE OF THE SITE CONDITIONS, AND THAT IT WAS PREPARED IN ACCORDANCE WITH THE REQUIREMENTS OF THE HOWARD SOIL CONSERVATION DISTRICT."

Anthony J. Dietz — 1/16/18
SIGNATURE OF ENGINEER — DATE

BY THE DEVELOPER:

"I/WE CERTIFY THAT ALL DEVELOPMENT AND CONSTRUCTION WILL BE DONE ACCORDING TO THIS PLAN, AND THAT ANY RESPONSIBLE PERSONNEL INVOLVED IN THE CONSTRUCTION PROJECT WILL HAVE A CERTIFICATE OF ATTENDANCE AT A DEPARTMENT OF THE ENVIRONMENT APPROVED TRAINING PROGRAM FOR THE CONTROL OF SEDIMENT AND EROSION BEFORE BEGINNING THE PROJECT. I ALSO AUTHORIZE PERIODIC ON-SITE INSPECTION BY THE HOWARD SOIL CONSERVATION DISTRICT."

Glenn M. Carey — 3/10/08
SIGNATURE OF DEVELOPER — DATE

THIS DEVELOPMENT PLAN IS AS APPROVED FOR SOIL EROSION AND SEDIMENT CONTROL BY THE HOWARD SOIL CONSERVATION DISTRICT.

John R Robertson — 2/17/16
HOWARD S.C.D. — DATE

JHU/APL INTERNAL USE

THIS DATA SHALL NOT BE DISCLOSED TO A THIRD PARTY AND SHALL NOT BE DUPLICATED, USED, OR DISCLOSED IN WHOLE OR IN PART FOR ANY PURPOSE OTHER THAN TO EVALUATE THIS RFP OR, IN THE CASE OF A CONTRACT AWARD, TO PERFORM THE WORK REQUIRED HEREUNDER, WITHOUT THE EXPRESS WRITTEN CONSENT OF JHU/APL.

NOTE:
THERE ARE NO DRAINAGE AREAS ON THIS SITE GREATER THAN 2.0 ACERS THEREFORE INTERIM STORMWATER MANAGEMENT IS NOT REQUIRED.

PROFESSIONAL CERTIFICATION

I HEREBY CERTIFY THAT THESE DOCUMENTS WERE PREPARED OR APPROVED BY ME, AND THAT I AM A DULY LICENSED PROFESSIONAL ENGINEER UNDER THE LAWS OF THE STATE OF MARYLAND

LICENSE NUMBER: 20906 EXPIRATION DATE: 2/9/2017

PROFESSIONAL CERTIFICATION

I HEREBY CERTIFY THAT THESE DOCUMENTS WERE PREPARED OR APPROVED BY ME, AND THAT I AM A DULY LICENSED PROFESSIONAL ENGINEER UNDER THE LAWS OF THE STATE OF MARYLAND

LICENSE NUMBER: 32574 EXPIRATION DATE: 1/16/18

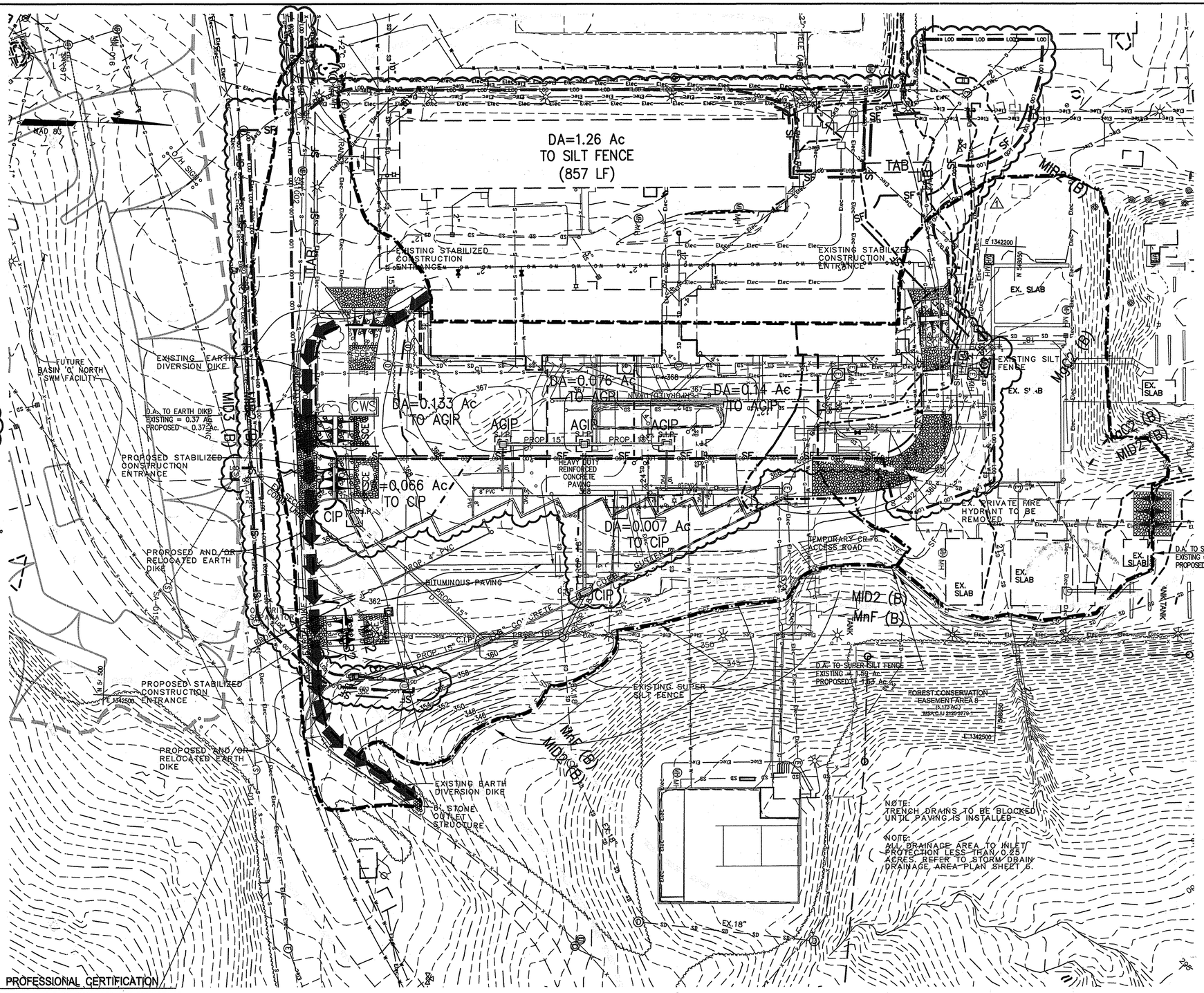

APPROVED: DEPARTMENT OF PLANNING AND ZONING

Chief, Development Engineering Division — Date 2-22-16
Chief, Division of Land Development — Date 3-01-16
Director — Date 3-2-16

CENTURY ENGINEERING
CONSULTING ENGINEERS - PLANNERS
10710 Gilroy Road, Hunt Valley, MD 21031
Phone: 443.589.2400 Fax: 443.589.2401

STATE OF MARYLAND ANTHONY JOSEPH DIETZ No. 32574 PROFESSIONAL ENGINEER

DESIGN BY:				
A.J.D.				
DRAWN BY: M.S.S./M.C.A.				
CHECKED BY:				
DATE: 7/18/08	REB	⚠1	REVISION OF EROSION CONTROL LOCATIONS	1/15/16
	BY	NO.	REVISION	DATE

THE JOHNS HOPKINS UNIVERSITY
APPLIED PHYSICS LABORATORY
11100 JOHNS HOPKINS ROAD
LAUREL, MARYLAND 20723-6099
443-778-5134

EROSION AND SEDIMENT CONTROL PLAN
DRAINAGE AREA MAP
SERVICE & SUPPORT AREA INFRASTRUCTURE FACILITY PHASE I
TAX MAP: 41 GRID: 16 PARCEL: 123
ELECTION DISTRICT 5-05 HOWARD COUNTY, MARYLAND
SHEET 8 OF 14

C.E.I. PROJECT NUMBER 22172.26

SCALE: 1"=30'

SDP-08-084

HOWARD SOIL CONSERVATION DISTRICT

PERMANENT SEEDING NOTES (BORROW & STOOCKPILE AREAS)

APPLY TO GRADED OR CLEARED AREAS NOT SUBJECT TO IMMEDIATE FURTHER DISTURBANCE WHERE A PERMANENT LONG-LIVED VEGETATIVE COVER IS NEEDED.

SEEDBED PREPARATION: LOOSEN UPPER THREE INCHES OF SOIL BY RAKING, DISKING OR OTHER ACCEPTABLE MEANS BEFORE SEEDING, IF NOT PREVIOUSLY LOOSENED.

SOIL AMENDMENTS: IN LIEU OF SOIL TEST RECOMMENDATIONS, USE ONE OF THE FOLLOWING SCHEDULES:

1. PREFERRED – APPLY 2 TONS/ACRE DOLOMITIC LIMESTONE (92,000 LBS/1000 SQ. FT) AND 600 LBS/ACRE 10-10-10 FERTILIZER (14 LBS/1000 SQ. FT) BEFORE SEEDING. HARROW OR DISK INTO UPPER THREE INCHES OF SOIL. AT TIME OF SEEDING, APPLY 400 LBS/ACRE 30-0-0 UREAFORM FERTILIZER (9 LBS/1000 SQ. FT.).

2. ACCEPTABLE – APPLY 2 TONS/ACRE DOLOMITIC LIMESTONE (92 LBS/1000 SQ. FT) AND 1000 LBS/ACRE 10-10-10 FERTILIZER (23 LBS/1000 SQ. FT.) BEFORE SEEDING. HARROW OR DISK INTO UPPER THREE INCHES OF SOIL.

SEE SHEET 9A OF 12 FOR SEEDING NOTES

SEEDING – FOR THE PERIODS MARCH 1 – APRIL 30 AND AUGUST 1 – OCTOBER 15, SEED WITH 60 LBS/ACRE (1.4 LBS/1000 SQ. FT.) OF KENTUCKY 31 TALL FESCUE. FOR THE PERIOD MAY – JULY 31, SEED WITH 60 LBS. KENTUCKY 31 TALL FESCUE PER ACRE AND 2 LBS/ACRE (.05 LBS/1000 SQ. FT.) OF WEEPING LOVEGRASS. DURING THE PERIOD ON OCTOBER 16 – FEBRUARY 28, PROTECT SITE BY: OPTION 1 – TWO TONS PER ACRE OF WELL ANCHORED STRAW MULCH AND SEED AS SOON AS POSSIBLE IN THE SPRING. OPTION 2 – USE SOD. OPTION 3 – SEED WITH 60 LBS/ACRE KENTUCKY 30 TALL FESCUE AND MULCH WITH 2 TONS/ACRE WELL ANCHORED STRAW.

MULCHING – APPLY 1 1/2 TO 2 TONS PER ACRE (70 TO 90 LBS/1000 SQ. FT.) OF UNROTTED SMALL GRAIN STRAW IMMEDIATELY AFTER SEEDING. ANCHOR MULCH IMMEDIATELY AFTER APPLICATION USING MULCH ANCHORING TOOL OR 218 GALLONS PER ACRE (5 GAL/1000 SQ. FT.) OF EMULSIFIED ASPHALT ON FLAT AREAS. ON SLOPE 8 FEET OR HIGHER, USE 348 GALLONS PER ACRE (8 GAL/1000 SQ. FT.) FOR ANCHORING.

MAINTENANCE: INSPECT ALL SEEDING AREAS AND MAKE NEEDED REPAIRS, REPLACEMENTS AND RESEEDINGS.

PERMANENT SEEDING NOTES (CENTRAL GREEN)

APPLY TO GRADED OR CLEARED AREAS NOT SUBJECT TO IMMEDIATE FURTHER DISTURBANCE WHERE A PERMANENT LONG-LIVED VEGETATIVE COVER IS NEEDED.

SEEDBED PREPARATION: LOOSEN UPPER THREE INCHES OF SOIL BY RAKING, DISKING OR OTHER ACCEPTABLE MEANS BEFORE SEEDING, IF NOT PREVIOUSLY LOOSENED. PROVIDE A MINIMUM OF 4" OF SCREENED TOP-SOIL (NO DEBRIS 3/4" OR LARGER)

SOIL AMENDMENTS: IN LIEU OF SOIL TEST RECOMMENDATIONS, USE ONE OF THE FOLLOWING SCHEDULES:

1. PREFERRED – APPLY 2 TONS/ACRE DOLOMITIC LIMESTONE (92,000 LBS/1000 SQ. FT) AND 600 LBS/ACRE 10-10-10 FERTILIZER (14 LBS/1000 SQ. FT) BEFORE SEEDING. HARROW OR DISK INTO UPPER THREE INCHES OF SOIL. AT TIME OF SEEDING, APPLY 400 LBS/ACRE 30-0-0 UREAFORM FERTILIZER (9 LBS/1000 SQ. FT.).

2. ACCEPTABLE – APPLY 2 TONS/ACRE DOLOMITIC LIMESTONE (92 LBS/1000 SQ. FT.) AND 1000 LBS/ACRE 10-10-10 FERTILIZER (23 LBS/1000 SQ. FT.) BEFORE SEEDING. HARROW OR DISK INTO UPPER THREE INCHES OF SOIL.

SEEDING – FOR THE PERIODS MARCH 1 – MAY 10 AND AUGUST 15 – OCTOBER 15, SEED WITH 125 LBS/ACRE (2.9 LBS/1000 SF) 3-WAY TALL FESCUE MIX & 25 LBS/ACRE (0.6 LBS/1000 SF) OF PERENNIAL RYE GRASS. FOR THE PERIOD MAY 15 – AUGUST 14, SEED WITH 125 LBS/ACRE (2.9 LBS/100 SF) OF 3-WAY TALL FESCUE MIX & 25 LBS/ACRE (0.6 LBS/1000 SF) OF PERENNIAL RYE GRASS. DURING THE PERIOD OF OCTOBER 16-FEBRUARY 28, PROTECT SITE BY: OPTION 1 – TWO TONS PER ACRE OF WELL ANCHORED STRAW MULCH AND SEED AS SOON AS POSSIBLE IN THE SPRING. OPTION 2 – USE SOD. OPTION 3-SEED WITH 125 LBS/ACRE 3-WAY TALL FESCUE MIX AND MULCH WITH 2 TONS/ACRE WELL ANCHORED STRAW.

MULCHING – APPLY 1 1/2 TO 2 TONS PER ACRE (70 TO 90 LBS/1000 SQ. FT.) OF UNROTTED SMALL GRAIN STRAW IMMEDIATELY AFTER SEEDING. ANCHOR MULCH IMMEDIATELY AFTER APPLICATION USING MULCH ANCHORING TOOL OR 218 GALLONS PER ACRE (5 GAL/1000 SQ. FT.) OF EMULSIFIED ASPHALT ON FLAT AREAS. ON SLOPE 8 FEET OR HIGHER, USE 348 GALLONS PER ACRE (8 GAL/1000 SQ. FT.) FOR ANCHORING.

MAINTENANCE: INSPECT ALL SEEDING AREAS AND MAKE NEEDED REPAIRS, REPLACEMENTS AND RESEEDINGS.

TEMPORARY SEEDING NOTES

APPLY TO GRADED OR CLEARED AREAS LIKELY TO BE RE-DISTURBED WHERE A SHORT-TERM VEGETATIVE COVER IS NEEDED.

SEEDBED PREPARATION – LOOSEN UPPER THREE INCHES OF SOIL BY RAKING, DISKING OR OTHER MEANS BEFORE SEEDING, IF NOT PREVIOUSLY LOOSENED.

SOIL AMENDMENTS – APPLY 600 LBS/ACRE 10-10-10 FERTILIZER (14 LBS/1000 SQ. FT.).

SEEDING – FOR PERIOD MARCH 1 – APRIL 30 FROM AUGUST 15 – OCTOBER 15, SEED WITH 2 1/2 BUSHEL PER ACRE OF ANNUAL RYE (3.2 LBS/1000 SQ. FT.). FOR THE PERIOD MAY 1 – AUGUST 14, SEED WITH 3 LBS/ACRE OF WEEPING LOVEGRASS (.07 LBS/1000 SQ. FT.). FOR THE PERIOD NOVEMBER 16 – FEBRUARY 28, PROTECT SITE BY APPLYING 2 TONS/ACRE OF WELL ANCHORED STRAW MULCH AND SEED AS SOON AS POSSIBLE IN THE SPRING, OR USE SOD.

MULCHING – APPLY 1 1/2 TO 2 TONS/ACRE (70 TO 90 LBS/1000 SQ. FT.) OF UNROTTED WEED-FREE, SMALL GRAIN STRAW IMMEDIATELY AFTER SEEDING. ANCHOR MULCH IMMEDIATELY AFTER APPLICATION USING MULCH ANCHORING TOOL OR 218 GAL. PER ACRE (5 GAL/1000 SQ. FT.) OF EMULSIFIED ASPHALT ON FLAT AREAS. ON SLOPE 8 FT. OR HIGHER, USE 348 GAL. PER ACRE (8 GAL/1000 SQ. FT.) FOR ANCHORING.

REFER TO THE 1994 MARYLAND STANDARDS AND SPECIFICATIONS FOR SOIL EROSION AND SEDIMENT CONTROL FOR ADDITIONAL RATES AND METHODS NOT COVERED.

UTILITY NOTES

1. CONTRACTOR SHOULD OPEN THAT SECTION OF TRENCH THAT CAN BE BACKFILLED AND STABILIZED EACH DAY. IF TRENCH MUST REMAIN OPEN LONGER THAN ONE DAY, SILT FENCE SHALL BE PLACED BELOW (DOWNSLOPE) THE TRENCH.
2. PLACE ALL EXCAVATED MATERIAL ON UPHILL SIDE OF TRENCH.
3. ANY SEDIMENT CONTROLS DISTURBED BY UTILITY CONSTUCTION ARE TO BE REPAIRED IMMEDIATELY.

JHU/APL INTERNAL USE

THIS DATA SHALL NOT BE DISCLOSED TO A THIRD PARTY AND SHALL NOT BE DUPLICATED, USED, OR DISCLOSED IN WHOLE OR IN PART FOR ANY PURPOSE OTHER THAN TO EVALUATE THIS RFP OR, IN THE CASE OF A CONTRACT AWARD, TO PERFORM THE WORK REQUIRED HEREUNDER, WITHOUT THE EXPRESS WRITTEN CONSENT OF JHU/APL.

PROFESSIONAL CERTIFICATION

I HEREBY CERTIFY THAT THESE DOCUMENTS WERE PREPARED OR APPROVED BY ME, AND THAT I AM A DULY LICENSED PROFESSIONAL ENGINEER UNDER THE LAWS OF THE STATE OF MARYLAND

LICENSE NUMBER: 32574 EXPIRATION DATE: 1/16/18

REQUIRED SEQUENCE OF CONSTRUCTION

		TIMETABLE
1.	OBTAIN ALL REQUIRED PERMITS FROM HOWARD COUNTY.	1 WEEK
2.	NOTIFY JAMES LOESCH, PE AT THE APPLIED PHYSICS LABORATORY AT 443-778-5134 AT LEAST 10 DAYS PRIOR TO BEGINNING WORK.	1 DAY
3.	NOTIFY THE HOWARD COUNTY DEPARTMENT OF PERMITS & LICENSES, GRADING AND SEDIMENT CONTROL INSPECTIONS AT 410-313-1855, AT LEAST 48 HOURS PRIOR TO BEGINNING WORK.	1 DAY
4.	INSTALL PROPOSED STABILIZED CONSTRUCTION ENTRANCE, ~~EARTH DIVERSION DIKE, STONE OUTLET STRUCTURE, RELOCATE EXISTING MOUNTABLE BERM AND SILT FENCE ON NORTH SIDE OF SITE.~~ INSTALL SILT FENCE AND TEMPORARY ASPHALT BERM	1 WEEK
5.	CLEAR AND GRUB AREA OUTSIDE OF EXISTING STOCKPILE AND WITHIN THE LIMIT OF DISTURBANCE. DEMOLISH BUILDINGS	~~1 WEEK~~ 4 WEEKS
6.	REMOVE OR ABANDON IN PLACE DESIGNATED UTILITYS.	1 WEEK
7.	MASS GRADE SITE.	2 WEEK
	UTILITIES	
8.	INSTALL ~~STORM DRAINS & 3/4" WATER~~ ONSTALL INLET PROTECTION, ONCE INLETS ARE INSTALLED.	~~1 WEEK~~ 2 WEEKS
9.	~~INSTALL PROPOSED RETAINING WALL AND APPURTENANCES INCLUDING CANOPY COLUMN FOOTING.~~	~~1 MONTH~~
11.	FINE GRADE ROAD & LOADING DOCK AREAS.	1 WEEK
12.	~~INSTALL CURB & GUTTER.~~	~~2 DAYS~~
13.	~~INSTALL ROAD AND LOADING DOCK SUBBASE.~~	~~3 DAYS~~
14.	~~INSTALL TEMPORARY GRAVEL ACCESS ROAD.~~	~~1 DAYS~~
15.	~~PAVE ALL ROAD & LOADING DOCK AREAS WITH EITHER BITUMINOUS PAVING OR REINFORCED HEAVY DUTY CONCRETE PAVING.~~	~~2 WEEKS~~
16.	FINE GRADE AND STABILIZE ALL REMAINING NON-PAVED SURFACES.	2 DAYS
17.	~~INSTALL CANOPIES, BALER, AND COMPACTOR POWER SUPPLY BUILDINGS.~~	~~5 WEEKS~~
18.	REMOVE ALL SEDIMENT CONTROLS, FINE GRADE AND STABILIZE THOSE AREAS.	1 WEEKS

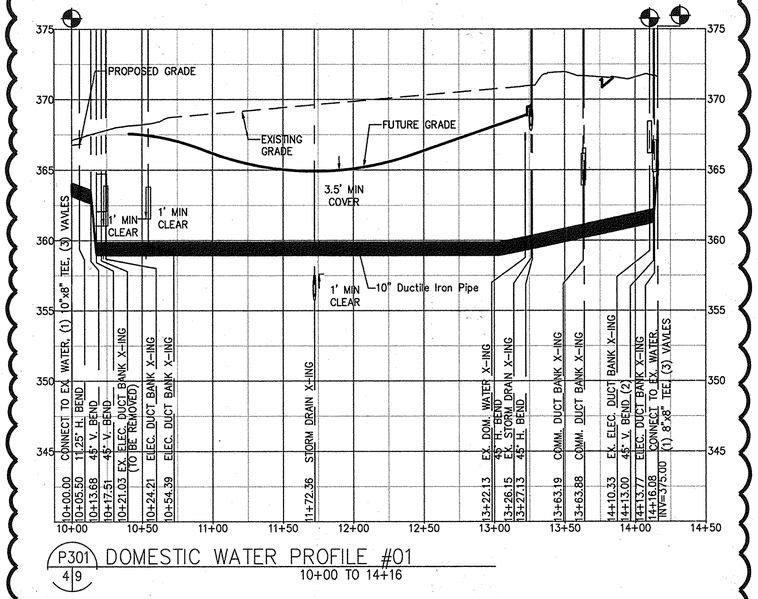

P301 / 4 9 DOMESTIC WATER PROFILE #01
10+00 TO 14+16

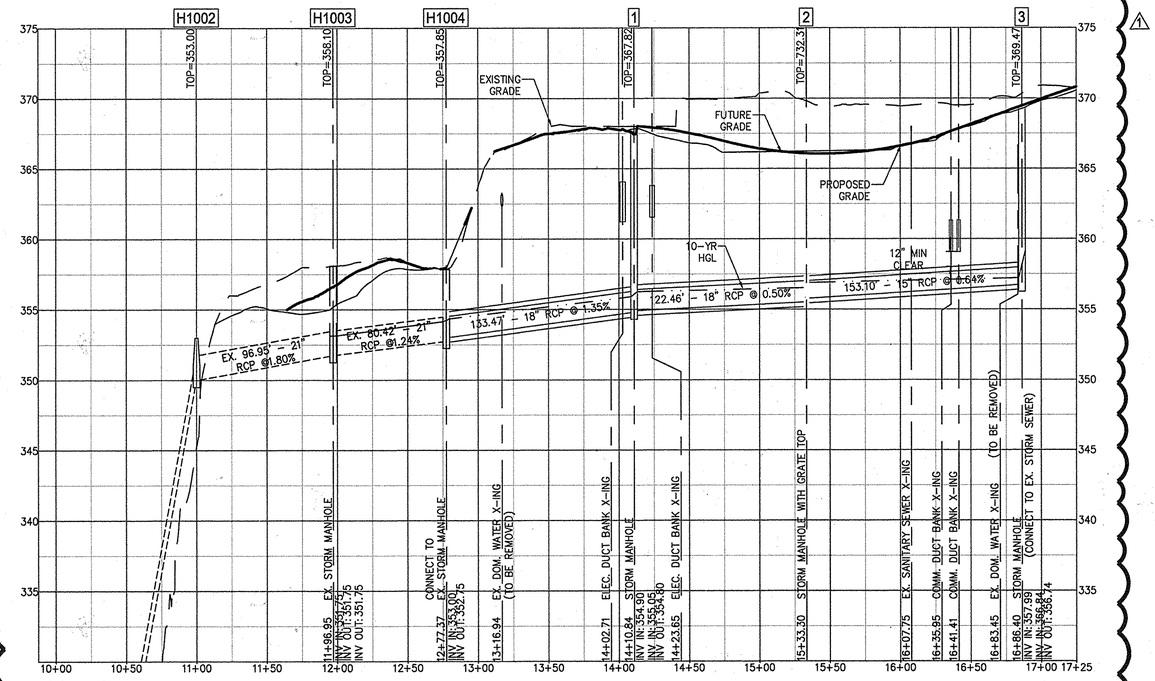

P101 / 4 9 STORM SEWER PROFILE #01
10+00 TO 16+86

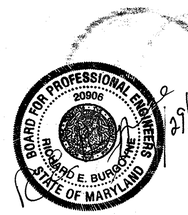

FOR 1 REVISION

PROFESSIONAL CERTIFICATION

I HEREBY CERTIFY THAT THESE DOCUMENTS WERE PREPARED OR APPROVED BY ME, AND THAT I AM A DULY LICENSED PROFESSIONAL ENGINEER UNDER THE LAWS OF THE STATE OF MARYLAND

LICENSE NUMBER: 20906 EXPIRATION DATE: 2/9/2017

BY THE ENGINEER:

"I CERTIFY THAT THIS PLAN FOR EROSION AND SEDIMENT CONTROL REPRESENTS A PRACTICAL AND WORKABLE PLAN BASED ON MY PERSONAL KNOWLEDGE OF THE SITE CONDITIONS, AND THAT IT WAS PREPARED IN ACCORDANCE WITH THE REQUIREMENTS OF THE HOWARD SOIL CONSERVATION DISTRICT."

SIGNATURE OF ENGINEER — DATE 7/18/08

BY THE DEVELOPER:

"I/WE CERTIFY THAT ALL DEVELOPMENT AND CONSTRUCTION WILL BE DONE ACCORDING TO THIS PLAN, AND THAT ANY RESPONSIBLE PERSONNEL INVOLVED IN THE CONSTRUCTION PROJECT WILL HAVE A CERTIFICATE OF ATTENDANCE AT A DEPARTMENT OF THE ENVIRONMENT APPROVED TRAINING PROGRAM FOR THE CONTROL OF SEDIMENT AND EROSION BEFORE BEGINNING THE PROJECT. I ALSO AUTHORIZE PERIODIC ON-SITE INSPECTION BY THE HOWARD SOIL CONSERVATION DISTRICT."

SIGNATURE OF DEVELOPER — DATE 2/8/16

THIS DEVELOPMENT PLAN IS AS APPROVED FOR SOIL EROSION AND SEDIMENT CONTROL BY THE HOWARD SOIL CONSERVATION DISTRICT.

HOWARD S.C.D. — DATE 2/12/16

APPROVED: DEPARTMENT OF PLANNING AND ZONING

Chief, Development Engineering Division — Date 2-22-16

Chief, Division of Land Development — Date 3-01-16

Director — Date 3-2-16

CENTURY ENGINEERING
CONSULTING ENGINEERS - PLANNERS
10710 Gilroy Road, Hunt Valley, MD 21031
Phone: 443.589.2400 Fax: 443.589.2401

STATE OF MARYLAND — ANTHONY JOSEPH DIETZ — No. 32574 — PROFESSIONAL ENGINEER

DESIGN BY:	A.J.D.
DRAWN BY:	M.S.S./M.C.A.
CHECKED BY:	
DATE:	7/18/08

BY	NO.	REVISION	DATE
REB	1	RELOCATED STORM AND WATER PROFILES	1/15/16

THE JOHNS HOPKINS UNIVERSITY
APPLIED PHYSICS LABORATORY
11100 JOHNS HOPKINS ROAD
LAUREL, MARYLAND 20723-6099
443-778-5134

EROSION AND SEDIMENT CONTROL SPECIFICATIONS AND NOTES
SERVICE & SUPPORT AREA
INFRASTRUCTURE FACILITY PHASE I
TAX MAP: 41 GRID: 16 PARCEL: 123
ELECTION DISTRICT 5-05 HOWARD COUNTY, MARYLAND
SHEET 9 OF 14

C.E.I. PROJECT NUMBER 22172.26

SCALE: 1"=30'

SDP-08-084

B-4-2 STANDARDS AND SPECIFICATIONS

FOR

SOIL PREPARATION, TOPSOILING, AND SOIL AMENDMENTS

Definition

The process of preparing the soils to sustain adequate vegetative stabilization.

Purpose

To provide a suitable soil medium for vegetative growth.

Conditions Where Practice Applies

Where vegetative stabilization is to be established.

Criteria

A. Soil Preparation

1. Temporary Stabilization
   a. Seedbed preparation consists of loosening soil to a depth of 3 to 5 inches by means of suitable agricultural or construction equipment, such as disc harrows or chisel plows or rippers mounted on construction equipment. After the soil is loosened, it must not be rolled or dragged smooth but left in the roughened condition. Slopes 3:1 or flatter are to be tracked with ridges running parallel to the contour of the slope.
   b. Apply fertilizer and lime as prescribed on the plans.
   c. Incorporate lime and fertilizer into the top 3 to 5 inches of soil by disking or other suitable means.
2. Permanent Stabilization
   a. A soil test is required for any earth disturbance of 5 acres or more. The minimum soil conditions required for permanent vegetative establishment are:
      i. Soil pH between 6.0 and 7.0.
      ii. Soluble salts less than 500 parts per million (ppm).
      iii. Soil contains less than 40 percent clay but enough fine grained material (greater than 30 percent silt plus clay) to provide the capacity to hold a moderate amount of moisture. An exception: if lovegrass will be planted, then a sandy soil (less than 30 percent silt plus clay) would be acceptable.
      iv. Soil contains 1.5 percent minimum organic matter by weight.
      v. Soil contains sufficient pore space to permit adequate root penetration.
   b. Application of amendments or topsoil is required if on-site soils do not meet the above conditions.
   c. Graded areas must be maintained in a true and even grade as specified on the approved plan, then scarified or otherwise loosened to a depth of 3 to 5 inches.

   d. Apply soil amendments as specified on the approved plan or as indicated by the results of a soil test.
   e. Mix soil amendments into the top 3 to 5 inches of soil by disking or other suitable means. Rake lawn areas to smooth the surface, remove large objects like stones and branches, and ready the area for seed application. Loosen surface soil by dragging with a heavy chain or other equipment to roughen the surface where site conditions will not permit normal seedbed preparation. Track slopes 3:1 or flatter with tracked equipment leaving the soil in an irregular condition with ridges running parallel to the contour of the slope. Leave the top 1 to 3 inches of soil loose and friable. Seedbed loosening may be unnecessary on newly disturbed areas.

B. Topsoiling

1. Topsoil is placed over prepared subsoil prior to establishment of permanent vegetation. The purpose is to provide a suitable soil medium for vegetative growth. Soils of concern have low moisture content, low nutrient levels, low pH, materials toxic to plants, and/or unacceptable soil gradation.
2. Topsoil salvaged from an existing site may be used provided it meets the standards as set forth in these specifications. Typically, the depth of topsoil to be salvaged for a given soil type can be found in the representative soil profile section in the Soil Survey published by USDA-NRCS.
3. Topsoiling is limited to areas having 2:1 or flatter slopes where:
   a. The texture of the exposed subsoil/parent material is not adequate to produce vegetative growth.
   b. The soil material is so shallow that the rooting zone is not deep enough to support plants or furnish continuing supplies of moisture and plant nutrients.
   c. The original soil to be vegetated contains material toxic to plant growth.
   d. The soil is so acidic that treatment with limestone is not feasible.
4. Areas having slopes steeper than 2:1 require special consideration and design.
5. Topsoil Specifications: Soil to be used as topsoil must meet the following criteria:
   a. Topsoil must be a loam, sandy loam, clay loam, silt loam, sandy clay loam, or loamy sand. Other soils may be used if recommended by an agronomist or soil scientist and approved by the appropriate approval authority. Topsoil must not be a mixture of contrasting textured subsoils and must contain less than 5 percent by volume of cinders, stones, slag, coarse fragments, gravel, sticks, roots, trash, or other materials larger than 1½ inches in diameter.
   b. Topsoil must be free of noxious plants or plant parts such as Bermuda grass, quack grass, Johnson grass, nut sedge, poison ivy, thistle, or others as specified.
   c. Topsoil substitutes or amendments, as recommended by a qualified agronomist or soil scientist and approved by the appropriate approval authority, may be used in lieu of natural topsoil.
6. Topsoil Application
   a. Erosion and sediment control practices must be maintained when applying topsoil.
   b. Uniformly distribute topsoil in a 5 to 8 inch layer and lightly compact to a minimum thickness of 4 inches. Spreading is to be performed in such a manner that sodding or seeding can proceed with a minimum of additional soil preparation and tillage. Any irregularities in the surface resulting from topsoiling or other operations must be corrected in order to prevent the formation of depressions or water pockets.
   c. Topsoil must not be placed if the topsoil or subsoil is in a frozen or muddy condition, when the subsoil is excessively wet or in a condition that may otherwise be detrimental to proper grading and seedbed preparation.

C. Soil Amendments (Fertilizer and Lime Specifications)

1. Soil tests must be performed to determine the exact ratios and application rates for both lime and fertilizer on sites having disturbed areas of 5 acres or more. Soil analysis may be performed by a recognized private or commercial laboratory. Soil samples taken for engineering purposes may also be used for chemical analyses.
2. Fertilizers must be uniform in composition, free flowing and suitable for accurate application by appropriate equipment. Manure may be substituted for fertilizer with prior approval from the appropriate approval authority. Fertilizers must all be delivered to the site fully labeled according to the applicable laws and must bear the name, trade name or trademark and warranty of the producer.
3. Lime materials must be ground limestone (hydrated or burnt lime may be substituted except when hydroseeding) which contains at least 50 percent total oxides (calcium oxide plus magnesium oxide). Limestone must be ground to such fineness that at least 50 percent will pass through a #100 mesh sieve and 98 to 100 percent will pass through a #20 mesh sieve.
4. Lime and fertilizer are to be evenly distributed and incorporated into the top 3 to 5 inches of soil by disking or other suitable means.
5. Where the subsoil is either highly acidic or composed of heavy clays, spread ground limestone at the rate of 4 to 8 tons/acre (200-400 pounds per 1,000 square feet) prior to the placement of topsoil.

B-4-3 STANDARDS AND SPECIFICATIONS

FOR

SEEDING AND MULCHING

Definition

The application of seed and mulch to establish vegetative cover.

Purpose

To protect disturbed soils from erosion during and at the end of construction.

Conditions Where Practice Applies

To the surface of all perimeter controls, slopes, and any disturbed area not under active grading.

Criteria

A. Seeding

1. Specifications
   a. All seed must meet the requirements of the Maryland State Seed Law. All seed must be subject to re-testing by a recognized seed laboratory. All seed used must have been tested within the 6 months immediately preceding the date of sowing such material on any project. Refer to Table B.4 regarding the quality of seed. Seed tags must be available upon request to the inspector to verify type of seed and seeding rate.
   b. Mulch alone may be applied between the fall and spring seeding dates only if the ground is frozen. The appropriate seeding mixture must be applied when the ground thaws.
   c. Inoculants: The inoculant for treating legume seed in the seed mixtures must be a pure culture of nitrogen fixing bacteria prepared specifically for the species. Inoculants must not be used later than the date indicated on the container. Add fresh inoculants as directed on the package. Use four times the recommended rate when hydroseeding. Note: It is very important to keep inoculant as cool as possible until used. Temperatures above 75 to 80 degrees Fahrenheit can weaken bacteria and make the inoculant less effective.
   d. Sod or seed must not be placed on soil which has been treated with soil sterilants or chemicals used for weed control until sufficient time has elapsed (14 days min.) to permit dissipation of phyto-toxic materials.

2. Application
   a. Dry Seeding: This includes use of conventional drop or broadcast spreaders.
      i. Incorporate seed into the subsoil at the rates prescribed on Temporary Seeding Table B.1, Permanent Seeding Table B.3, or site-specific seeding summaries.
      ii. Apply seed in two directions, perpendicular to each other. Apply half the seeding rate in each direction. Roll the seeded area with a weighted roller to provide good seed to soil contact.
   b. Drill or Cultipacker Seeding: Mechanized seeders that apply and cover seed with soil.
      i. Cultipacking seeders are required to bury the seed in such a fashion as to provide at least 1/4 inch of soil covering. Seedbed must be firm after planting.
      ii. Apply seed in two directions, perpendicular to each other. Apply half the seeding rate in each direction.
   c. Hydroseeding: Apply seed uniformly with hydroseeder (slurry includes seed and fertilizer).
      i. If fertilizer is being applied at the time of seeding, the application rates should not exceed the following: nitrogen, 100 pounds per acre total of soluble nitrogen; P_2O_5 (phosphorous), 200 pounds per acre; K_2O (potassium), 200 pounds per acre.
      ii. Lime: Use only ground agricultural limestone (up to 3 tons per acre may be applied by hydroseeding). Normally, not more than 2 tons are applied by hydroseeding at any one time. Do not use burnt or hydrated lime when hydroseeding.
      iii. Mix seed and fertilizer on site and seed immediately and without interruption.
      iv. When hydroseeding do not incorporate seed into the soil.

B. Mulching

1. Mulch Materials (in order of preference)
   a. Straw consisting of thoroughly threshed wheat, rye, oat, or barley and reasonably bright in color. Straw is to be free of noxious weed seeds as specified in the Maryland Seed Law and not musty, moldy, caked, decayed, or excessively dusty. **Note: Use only sterile straw mulch in areas where one species of grass is desired.**
   b. Wood Cellulose Fiber Mulch (WCFM) consisting of specially prepared wood cellulose processed into a uniform fibrous physical state.
      i. WCFM is to be dyed green or contain a green dye in the package that will provide an appropriate color to facilitate visual inspection of the uniformly spread slurry.
      ii. WCFM, including dye, must contain no germination or growth inhibiting factors.
      iii. WCFM materials are to be manufactured and processed in such a manner that the wood cellulose fiber mulch will remain in uniform suspension in water under agitation and will blend with seed, fertilizer and other additives to form a homogeneous slurry. The mulch material must form a blotter-like ground cover, on application, having moisture absorption and percolation properties and must cover and hold grass seed in contact with the soil without inhibiting the growth of the grass seedlings.
      iv. WCFM material must not contain elements or compounds at concentration levels that will be phyto-toxic.
      v. WCFM must conform to the following physical requirements: fiber length of approximately 10 millimeters, diameter approximately 1 millimeter, pH range of 4.0 to 8.5, ash content of 1.6 percent maximum and water holding capacity of 90 percent minimum.

2. Application
   a. Apply mulch to all seeded areas immediately after seeding.
   b. When straw mulch is used, spread it over all seeded areas at the rate of 2 tons per acre to a uniform loose depth of 1 to 2 inches. Apply mulch to achieve a uniform distribution and depth so that the soil surface is not exposed. When using a mulch anchoring tool, increase the application rate to 2.5 tons per acre.
   c. Wood cellulose fiber used as mulch must be applied at a net dry weight of 1500 pounds per acre. Mix the wood cellulose fiber with water to attain a mixture with a maximum of 50 pounds of wood cellulose fiber per 100 gallons of water.

3. Anchoring
   a. Perform mulch anchoring immediately following application of mulch to minimize loss by wind or water. This may be done by one of the following methods (listed by preference), depending upon the size of the area and erosion hazard:
      i. A mulch anchoring tool is a tractor drawn implement designed to punch and anchor mulch into the soil surface a minimum of 2 inches. This practice is most effective on large areas, but is limited to flatter slopes where equipment can operate safely. If used on sloping land, this practice should follow the contour.
      ii. Wood cellulose fiber may be used for anchoring straw. Apply the fiber binder at a net dry weight of 750 pounds per acre.. Mix the wood cellulose fiber with water at a maximum of 50 pounds of wood cellulose fiber per 100 gallons of water.
      iii. Synthetic binders such as Acrylic DLR (Agro-Tack), DCA-70, Petroset, Terra Tax II, Terra Tack AR or other approved equal may be used. Follow application rates as specified by the manufacturer. Application of liquid binders needs to be heavier at the edges where wind catches mulch, such as in valleys and on crests of banks. **Use of asphalt binders is strictly prohibited.**
      iv. Lightweight plastic netting may be stapled over the mulch according to manufacturer recommendations. Netting is usually available in rolls 4 to 15 feet wide and 300 to 3,000 feet long.

Temporary Seeding Summary

Hardiness Zone (from Figure B.3): _____ Seed Mixture (from Table B.1): _____					Fertilizer Rate (10-20-20)	Lime Rate
No.	Species	Application Rate (lb/ac)	Seeding Dates	Seeding Depths		
	ANNUAL RYEGRASS	40	MAR 1 – MAY 15; AUG 1 – OCT 15	0.5"	436 lb/ac (10 lb/1000 sf)	2 tons/ac (90 lb/1000 sf)

Permanent Seeding Summary

Hardiness Zone (from Figure B.3): _____ Seed Mixture (from Table B.3): _____					Fertilizer Rate (10-20-20)			Lime Rate
No.	Species	Application Rate (lb/ac)	Seeding Dates	Seeding Depths	N	P_2O_5	K_2O	
	3-WAY TALL FESCUE MIX	60	MAR 1 – MAY 15; AUG 15 – OCT 15	¼- ½ in	45 pounds per acre (1.0 lb/ 1000 sf)	90 lb/ac (2 lb/ 1000 sf)	90 lb/ac (2 lb/ 1000 sf)	2 tons/ac (90 lb/ 1000 sf)

HOWARD SOIL CONSERVATION DISTRICT
STANDARD SEDIMENT CONTROL NOTES

1. A PRE-CONSTRUCTION MEETING MUST OCCUR WITH THE HOWARD COUNTY DEPARTMENT OF PUBLIC WORKS, CONSTRUCTION INSPECTION DIVISION (CID), 410-313-1855 AFTER THE FUTURE LOD AND PROTECTED AREAS ARE MARKED CLEARLY IN THE FIELD. A MINIMUM OF 48 HOUR NOTICE TO CID MUST BE GIVEN AT THE FOLLOWING STAGES:
   A. PRIOR TO THE START OF EARTH DISTURBANCE
   B. UPON COMPLETION OF THE INSTALLATION OF PERIMETER EROSION AND SEDIMENT CONTROLS, BUT BEFORE PROCEEDING WITH ANY OTHER EARTH DISTURBANCE OR GRADING.
   C. PRIOR TO THE START OF ANOTHER PHASE OF CONSTRUCTION OR OPENING OF ANOTHER GRADING UNIT.
   D. PRIOR TO THE REMOVAL OR MODIFICATION OF SEDIMENT CONTROL PRACTICES.

   OTHER BUILDING OR GRADING INSPECTION APPROVALS MAY NOT BE AUTHORIZED UNTIL THIS INITIAL APPROVAL BY THE INSPECTION AGENCY IS MADE. OTHER RELATED, STATE AND FEDERAL REQUIREMENTS SHALL BE REFERENCED, TO ENSURE COORDINATION AND TO AVOID CONFLICTS WITH THIS PLAN.
2. ALL VEGETATIVE AND STRUCTURAL PRACTICES ARE TO BE INSTALLED ACCORDING TO THE PROVISIONS OF THIS PLAN AND ARE TO BE IN CONFORMANCE WITH THE 2011 MARYLAND STANDARDS AND SPECIFICATIONS FOR SOIL EROSION AND SEDIMENT CONTROL AND REVISIONS THERETO.
3. FOLLOWING INITIAL SOIL DISTURBANCE OR RE-DISTURBANCE, PERMANENT OR TEMPORARY STABILIZATION IS REQUIRED WITHIN THREE (3) CALENDAR DAYS AS TO THE SURFACE OF ALL PERIMETER CONTROLS, DIKES, SWALES, DITCHES, PERIMETER SLOPES, AND ALL SLOPES STEEPER THAN 3 HORIZONTAL TO 1 VERTICAL (3:1), AND WITHIN SEVEN (7) CALENDAR DAYS AS TO ALL OTHER DISTURBED AREAS ON THE PROJECT SITE EXCEPT FOR THOSE AREAS UNDER ACTIVE GRADING.
4. ALL DISTURBED AREAS MUST BE STABILIZED WITHIN THE PERIOD SPECIFIED ABOVE IN ACCORDANCE WITH THE 2011 MARYLAND STANDARDS AND SPECIFICATIONS FOR SOIL EROSION AND SEDIMENT CONTROL FOR TOPSOIL (SEC. B-4-2), PERMANENT SEEDING (SEC. B-4-3), TEMPORARY SEEDING (SEC. B-4-4) AND MULCHING (SEC. B-4-3). TEMPORARY STABILIZATION WITH MULCH ALONE CAN ONLY BE APPLIED BETWEEN THE FALL AND SPRING SEEDING DATES IF THE GROUND IS FROZEN. INCREMENTAL STABILIZATION, AS SPECIFIED, SHALL BE ENFORCED IN AREAS WITH 15' OF CUT AND/OR FILL. STOCKPILES (SEC. B-4-6) IN EXCESS OF 20 CU. YDS. MUST BE BENCHED WITH STABLE OUTLET. ALL CONCENTRATED FLOW, STEEP SLOPE, AND HIGHLY ERODIBLE AREAS SHALL RECEIVE SOIL STABILIZATION MATTING (SEC. B-4-8).
5. ALL SEDIMENT CONTROL STRUCTURES ARE TO REMAIN IN PLACE, AND ARE TO BE MAINTAINED IN OPERATIVE CONDITION UNTIL PERMISSION FOR THEIR REMOVAL HAS BEEN OBTAINED FROM THE CID.
6. SITE ANALYSIS:
   Total Area of Site: 359.98 Acres
   Area Disturbed: 2.99 Acres
   Area to be roofed or paved: 1.21 Acres
   Area to be vegetatively stabilized: 1.78 Acres
   Total Cut: 0 Cu. Yds.
   Total Fill: 593 Cu. Yds.
   Off-site waste/borrow area location: WILL BE DISPOSED OF ON-SITE.
7. ANY SEDIMENT CONTROL PRACTICE, WHICH IS DISTURBED BY GRADING ACTIVITY FOR PLACEMENT OF UTILITIES MUST BE REPAIRED ON THE SAME DAY OF DISTURBANCE.
8. ADDITIONAL SEDIMENT CONTROL MEASURES SHALL BE PROVIDED, IF DEEMED NECESSARY BY THE CID. THE SITE AND ALL CONTROLS SHALL BE INSPECTED BY THE CONTRACTOR WEEKLY, AND THE NEXT DAY AFTER EACH RAIN EVENT. A WRITTEN REPORT BY THE CONTRACTOR, MADE AVAILABLE UPON REQUEST, IS REQUIRED OF EVERY INSPECTION AND SHOULD INCLUDE:
   - INSPECTION DATE
   - INSPECTION TYPE (ROUTINE, PRE-STORM EVENT, DURING RAIN EVENT)
   - NAME AND TITLE OF INSPECTOR
   - WEATHER INFORMATION (CURRENT CONDITIONS AS WELL AS TIME AND AMOUNT OF LAST RECORDED PRECIPITATION)
   - BRIEF DESCRIPTION OF PROJECTS STATUS (E.G., PERCENT COMPLETE) AND/OR CURRENT ACTIVITIES
   - EVIDENCE OF SEDIMENT DISCHARGES
   - IDENTIFICATION OF PLAN DEFICIENCIES
   - IDENTIFICATION OF SEDIMENT CONTROLS THAT REQUIRE MAINTENANCE
   - IDENTIFICATION OF MISSING OR IMPROPERLY INSTALLED SEDIMENT CONTROLS
   - COMPLIANCE STATUS REGARDING THE SEQUENCE OF CONSTRUCTION AND STABILIZATION REQUIREMENTS
   - PHOTOGRAPHS
   - MONITORING/SAMPLING
   - MAINTENANCE AND/OR CORRECTIVE ACTION PERFORMED
   - OTHER INSPECTION ITEMS AS REQUIRED BY THE GENERAL PERMIT FOR STORMWATER ASSOCIATED WITH CONSTRUCTION ACTIVITIES (NPDES)
9. TRENCHES FOR THE CONSTRUCTION OF UTILITIES IS LIMITED TO THREE PIPE LENGTHS OR THAT WHICH CAN AND SHALL BE BACK-FILLED AND STABILIZED BY THE END OF EACH WORKDAY, WHICHEVER IS SHORTER.
10. ANY MAJOR CHANGES OR REVISIONS TO THE PLAN OR SEQUENCE OF CONSTRUCTION MUST BE REVIEWED AND APPROVED BY THE HSCD PRIOR TO PROCEEDING WITH CONSTRUCTION. MINOR REVISIONS MAY ALLOWED BY THE CID PER THE LIST OF HSCD-APPROVED FIELD CHANGES.
11. DISTURBANCE SHALL NOT OCCUR OUTSIDE THE L.O.D. A PROJECT IS TO BE SEQUENCED SO THAT GRADING ACTIVITIES BEGIN ON ONE GRADING UNIT (MAXIMUM AVERAGE OF 20 ACRES PER GRADING UNIT) AT A TIME. WORK MAY PROCEED TO A SUBSEQUENT GRADING UNIT WHEN AT LEAST 50 PERCENT OF THE DISTURBED AREA IN THE PRECEDING GRADING UNIT HAS BEEN STABILIZED AND APPROVED BY THE CID. ONLY ONE GRADING UNIT MAY BE EXPOSED AND APPROVED BY THE CID. NO MORE THAN 30 ACRES CUMULATIVELY MAY BE DISTURBED AT A GIVEN TIME.
12. WASH WATER FROM CONCRETE EQUIPMENT, WHEELS, PAVEMENT, AND OTHER SOURCES MUST BE DISPOSED IN A SEDIMENT BASIN OR OTHER APPROVED WASHOUT STRUCTURE.
13. TOPSOIL SHALL BE STOCKPILED AND PRESERVED ON-SITE FOR REDISTRIBUTION ONTO FINAL GRADE.
14. ALL SILT FENCE AND SUPER SILT FENCE SHALL BE PLACED ON-THE-CONTOUR AND BE FABRICATED AT 25' MINIMUM INTERVALS WITH LOWER ENDS CURLED UPHILL BY 2' IN ELEVATION.
15. STREAM CHANNELS MUST NOT BE DISTURBED DURING THE FOLLOWING RESTRICTED TIME PERIODS (INCLUSIVE):
   - USE 1 AND 1P MARCH 1 – JUNE 15
   - USE I AND IIP OCTOBER 1 – APRIL 30
   - USE III MARCH 1 – MAY 31
16. A COPY OF THIS PLAN, THE 2011 MARYLAND STANDARDS AND SPECIFICATIONS FOR SOIL EROSION AND SEDIMENT CONTROL AND ASSOCIATED PERMITS SHALL BE ON-SITE AND AVAILABLE WHEN THE SITE IS ACTIVE.
17. STANDARD SILT FENCE IS TO REPLACED BY "SUPER" SILT FENCE AT THE DIRECTION OF THE SEDIMENT CONTROL INSPECTOR.

DETAIL C-5 TEMPORARY ASPHALT BERM

STANDARD SYMBOL: ----------TAB----------

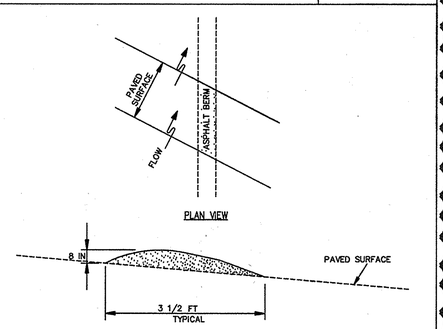

CONSTRUCTION SPECIFICATIONS

1. CONSTRUCT BERM ON AN UNINTERRUPTED, CONTINUOUS GRADE.
2. INSTALL BERM TO CONFORM TO CROSS SECTION DIMENSIONS OF A UNIFORM HEIGHT OF 8 INCHES MINIMUM AND APPROXIMATE WIDTH OF 3½ FEET.
3. PROVIDE OUTLET PROTECTION AS REQUIRED ON PLAN.
4. COMPACT ASPHALT BERM.
5. REPAIR DAMAGED ASPHALT. REMOVE ACCUMULATED SEDIMENT AND DEBRIS. MAINTAIN POSITIVE DRAINAGE.
6. UPON REMOVAL OF ASPHALT BERM, RETURN TO ORIGINAL CONDITIONS OR AS SPECIFIED ON APPROVED PLAN.

MARYLAND STANDARDS AND SPECIFICATIONS FOR SOIL EROSION AND SEDIMENT CONTROL

U.S. DEPARTMENT OF AGRICULTURE NATURAL RESOURCES CONSERVATION SERVICE	2011	MARYLAND DEPARTMENT OF ENVIRONMENT WATER MANAGEMENT ADMINISTRATION

B-4-8 STANDARDS AND SPECIFICATIONS

FOR

STOCKPILE AREA

Definition

A mound or pile of soil protected by appropriately designed erosion and sediment control measures.

Purpose

To provide a designated location for the temporary storage of soil that controls the potential for erosion, sedimentation, and changes to drainage patterns.

Conditions Where Practice Applies

Stockpile areas are utilized when it is necessary to salvage and store soil for later use.

Criteria

1. The stockpile location and all related sediment control practices must be clearly indicated on the erosion and sediment control plan.
2. The footprint of the stockpile must be sized to accommodate the anticipated volume of material and based on a side slope ratio no steeper than 2:1. Benching must be provided in accordance with Section B-3 Land Grading.
3. Runoff from the stockpile area must drain to a suitable sediment control practice.
4. Access the stockpile area from the upgrade side.
5. Clear water runoff into the stockpile area must be minimized by use of a diversion device such as an earth dike, temporary swale or diversion fence. Provisions must be made for discharging concentrated flow in a non-erosive manner.
6. Where runoff concentrates along the toe of the stockpile fill, an appropriate erosion/sediment control practice must be used to intercept the discharge.
7. Stockpiles must be stabilized in accordance with the 3/7 day stabilization requirement as well as Standard B-4-1 Incremental Stabilization and Standard B-4-4 Temporary Stabilization.
8. If the stockpile is located on an impervious surface, a liner should be provided below the stockpile to facilitate cleanup. Stockpiles containing contaminated material must be covered with impermeable sheeting.

Maintenance

The stockpile area must continuously meet the requirements for Adequate Vegetative Establishment in accordance with Section B-4 Vegetative Stabilization. Side slopes must be maintained at no steeper than a 2:1 ratio. The stockpile area must be kept free of erosion. If the vertical height of a stockpile exceeds 20 feet for 2:1 slopes, 30 feet for 3:1 slopes, or 40 feet for 4:1 slopes, benching must be provided in accordance with Section B-3 Land Grading.

⚠ NEW SHEET

PROFESSIONAL CERTIFICATION

I HEREBY CERTIFY THAT THESE DOCUMENTS WERE PREPARED OR APPROVED BY ME, AND THAT I AM A DULY LICENSED PROFESSIONAL ENGINEER UNDER THE LAWS OF THE STATE OF MARYLAND

LICENSE NUMBER: 20906 EXPIRATION DATE: 21 Jul 17

FOR ⚠ REVISION

BY THE ENGINEER:

"I CERTIFY THAT THIS PLAN FOR EROSION AND SEDIMENT CONTROL REPRESENTS A PRACTICAL AND WORKABLE PLAN BASED ON MY PERSONAL KNOWLEDGE OF THE SITE CONDITIONS, AND THAT IT WAS PREPARED IN ACCORDANCE WITH THE REQUIREMENTS OF THE HOWARD SOIL CONSERVATION DISTRICT."

Richard E. Burgel — 1/29/16
SIGNATURE OF ENGINEER — DATE

BY THE DEVELOPER:

"I/WE CERTIFY THAT ALL DEVELOPMENT AND CONSTRUCTION WILL BE DONE ACCORDING TO THIS PLAN, AND THAT ANY RESPONSIBLE PERSONNEL INVOLVED IN THE CONSTRUCTION PROJECT WILL HAVE A CERTIFICATE OF ATTENDANCE AT A DEPARTMENT OF THE ENVIRONMENT APPROVED TRAINING PROGRAM FOR THE CONTROL OF SEDIMENT AND EROSION BEFORE BEGINNING THE PROJECT. I ALSO AUTHORIZE PERIODIC ON-SITE INSPECTION BY THE HOWARD SOIL CONSERVATION DISTRICT."

Glenn M. Carey — 2/8/16 (3/10/08 GMC)
SIGNATURE OF DEVELOPER — DATE

THIS DEVELOPMENT PLAN IS AS APPROVED FOR SOIL EROSION AND SEDIMENT CONTROL BY THE HOWARD SOIL CONSERVATION DISTRICT.

John M. Newton — 2/17/16
HOWARD S.C.D. — DATE

JHU/APL INTERNAL USE

THIS DATA SHALL NOT BE DISCLOSED TO A THIRD PARTY AND SHALL NOT BE DUPLICATED, USED, OR DISCLOSED IN WHOLE OR IN PART FOR ANY PURPOSE OTHER THAN TO EVALUATE THIS RFP OR, IN THE CASE OF A CONTRACT AWARD, TO PERFORM THE WORK REQUIRED HEREUNDER, WITHOUT THE EXPRESS WRITTEN CONSENT OF JHU/APL.

APPROVED: DEPARTMENT OF PLANNING AND ZONING

Chief, Development Engineering Division — Date 7.22.16
Chief, Division of Land Development — Date 3-01-16
Director — Date 3-2-16

FOR ⚠ REVISION

DESIGN BY: J.M.
DRAWN BY: J.M.
CHECKED BY: D.B.
DATE: 1/15/16

BY	NO.	REVISION	DATE
REB	⚠	NEW SHEET	1/15/16

THE JOHNS HOPKINS UNIVERSITY
APPLIED PHYSICS LABORATORY
11100 JOHNS HOPKINS ROAD
LAUREL, MARYLAND 20723-6099
443-778-5134

EROSION AND SEDIMENT CONTROL SPECIFICATIONS AND NOTES
SERVICE & SUPPORT AREA
INFRASTRUCTURE FACILITY PHASE I
TAX MAP: 41 GRID: 16 PARCEL: 123
ELECTION DISTRICT 5-05 HOWARD COUNTY, MARYLAND
SHEET 9A OF 14

SCALE: 1"=30'

SDP-08-084

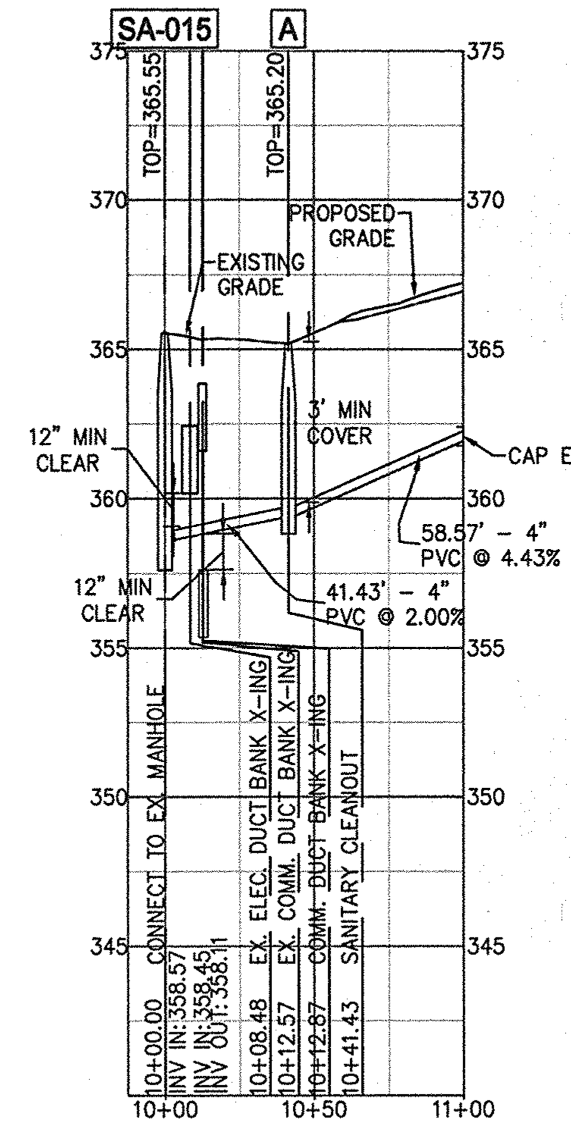

P201 4|10 SANITARY SEWER PROFILE #01
10+00 TO 11+00

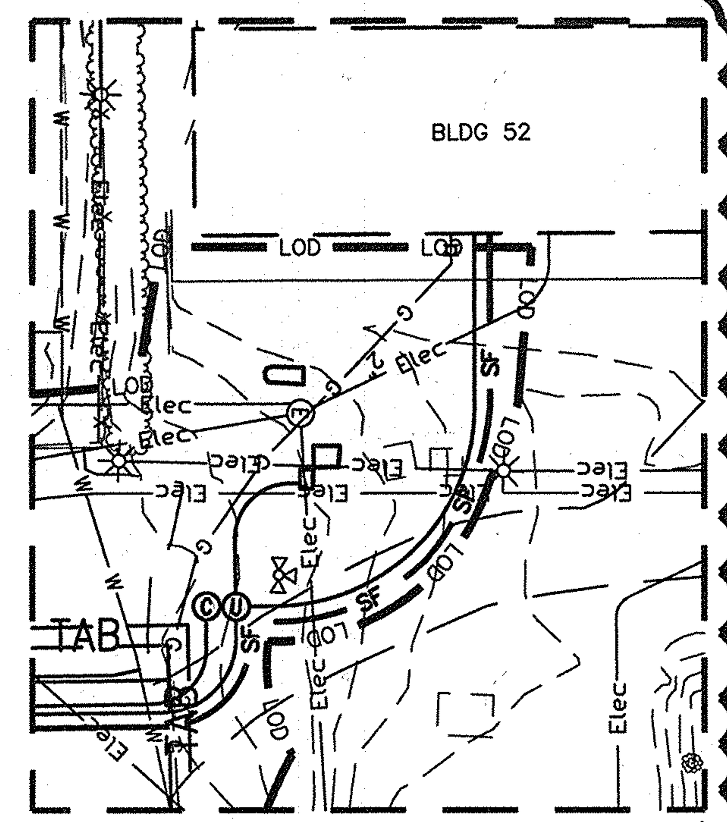

MATCHLINE 004 (SEE SHEET 7 OF 14)
(SEE SHEET 7 OF 14 FOR LEGEND)

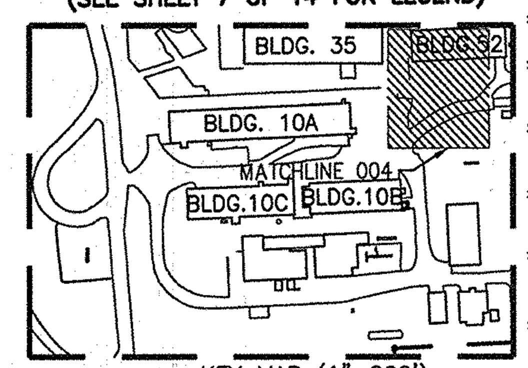

KEY MAP (1"=200')

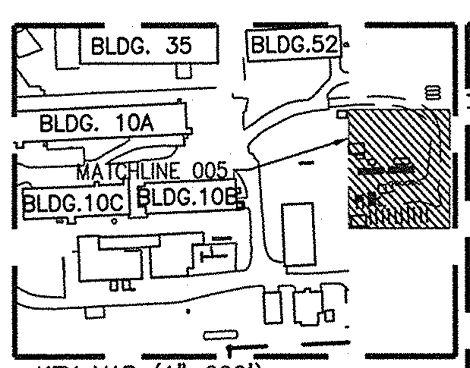

KEY MAP (1"=200')

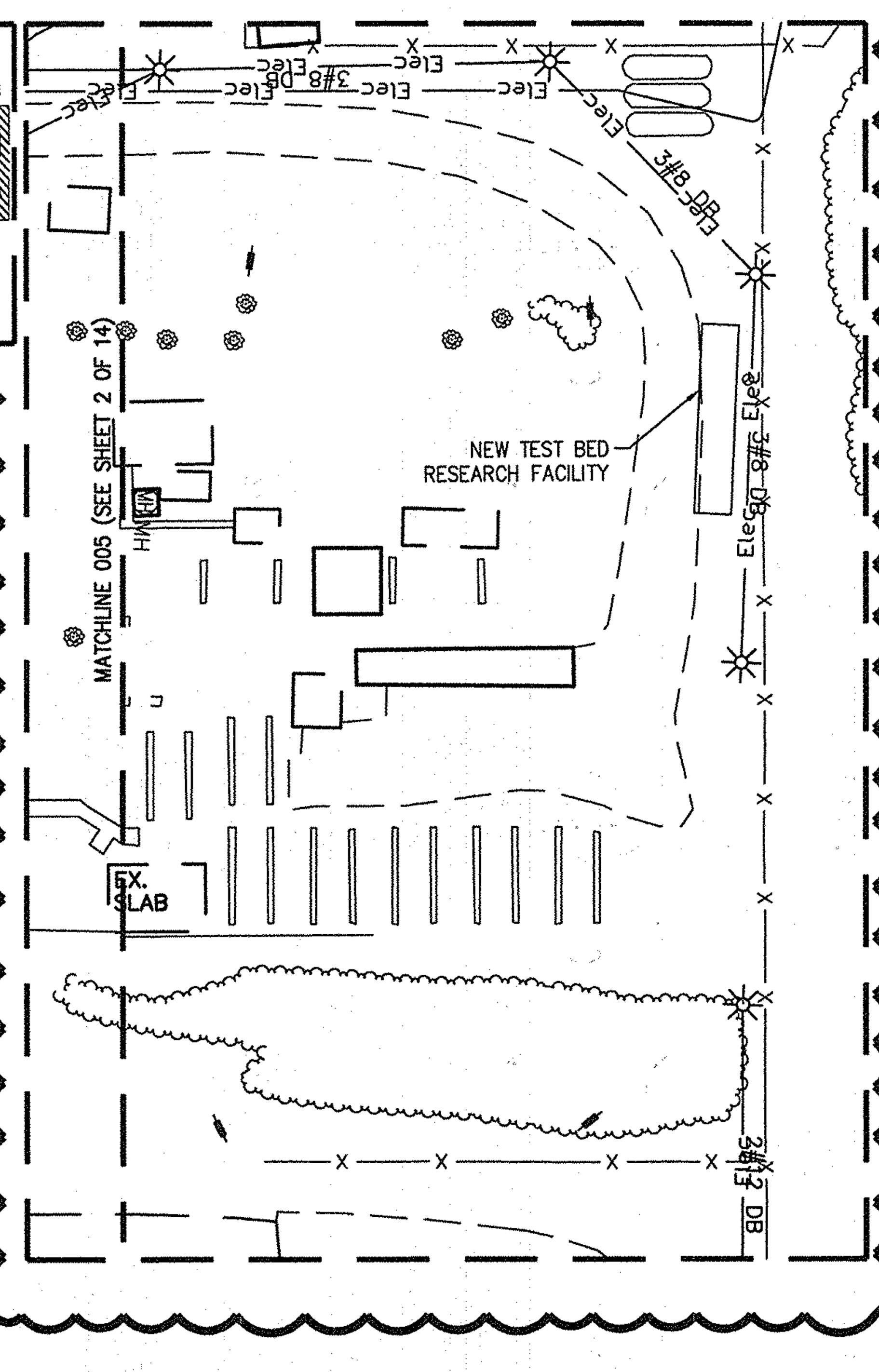

DETAIL 22 – SILT FENCE

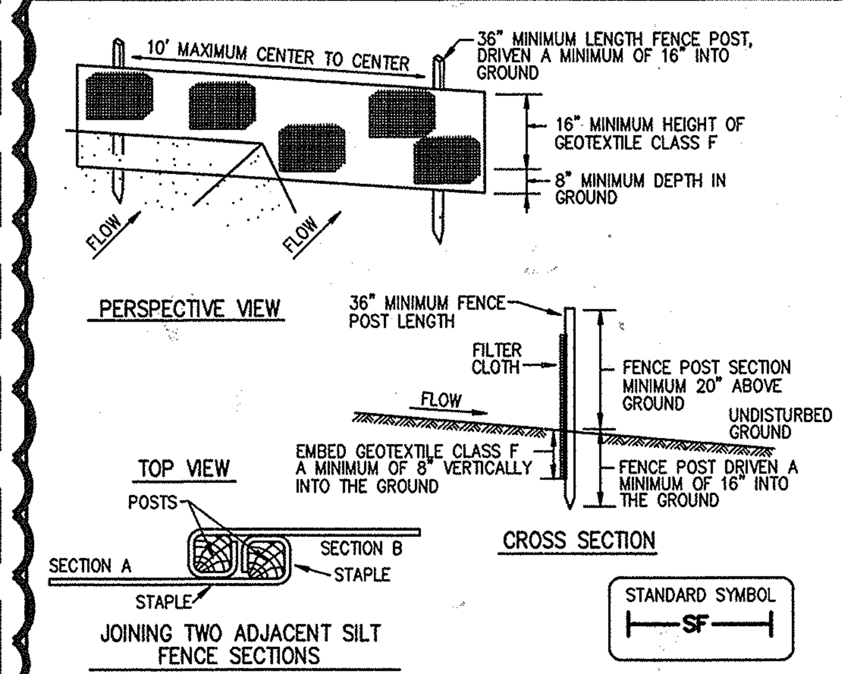

CONSTRUCTION SPECIFICATIONS

1. FENCE POSTS SHALL BE A MINIMUM OF 36" LONG DRIVEN 16" MINIMUM INTO THE GROUND. WOOD POSTS SHALL BE 11/2" X 11/2" SQUARE (MINIMUM) CUT, OR 13/4" DIAMETER (MINIMUM) ROUND AND SHALL BE OF SOUND QUALITY HARDWOOD. STEEL POSTS WILL BE STANDARD T OR U SECTION WEIGHTING NOT LESS THAN 1.00 POND PER LINEAR FOOT.
2. GEOTEXTILE SHALL BE FASTENED SECURELY TO EACH FENCE POST WITH WIRE TIES OR STAPLES AT TOP AND MID-SECTION AND SHALL MEET THE FOLLOWING REQUIREMENTS FOR GEOTEXTILE CLASS F:

TENSILE STRENGTH	50 LBS/IN (MIN.)	TEST: MSMT 509
TENSILE MODULUS	20 LBS/IN (MIN.)	TEST: MSMT 509
FLOW RATE	0.3 GAL FT²/ MINUTE (MAX.)	TEST: MSMT 322
FILTERING EFFICIENCY	75% (MIN.)	TEST: MSMT 322

3. WHERE ENDS OF GEOTEXTILE FABRIC COME TOGETHER, THEY SHALL BE OVERLAPPED, FOLDED AND STAPLED TO PREVENT SEDIMENT BYPASS.
4. SILT FENCE SHALL BE INSPECTED AFTER EACH RAINFALL EVENT AND MAINTAINED WHEN BULGES OCCUR OR WHEN SEDIMENT ACCUMULATION REACHED 50% OF THE FABRIC HEIGHT.

U.S. DEPARTMENT OF AGRICULTURE SOIL CONSERVATION SERVICE	PAGE E – 15 – 3	MARYLAND DEPARTMENT OF ENVIRONMENT WATER MANAGEMENT ADMINISTRATION

DETAIL 33 – SUPER SILT FENCE

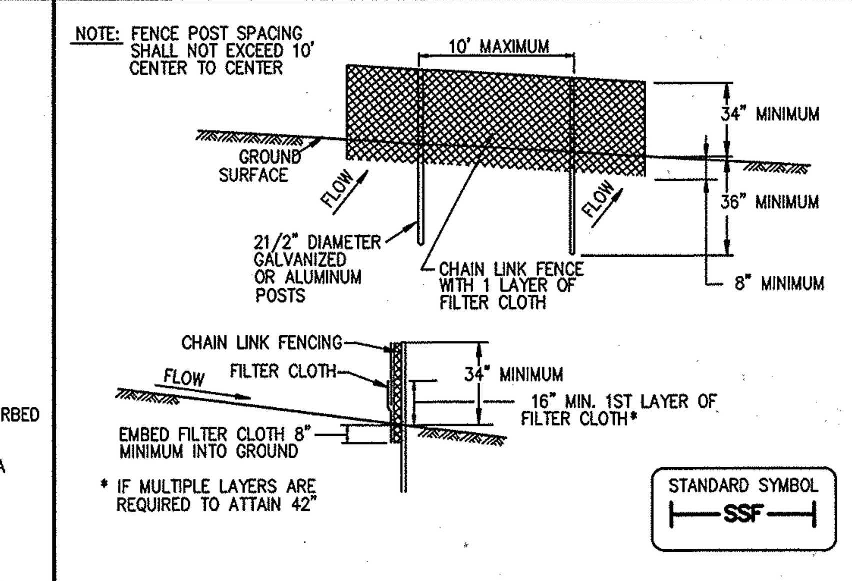

CONSTRUCTION SPECIFICATIONS

1. FENCING SHALL BE 42" IN HEIGHT AND CONSTRUCTED IN ACCORDANCE WITH THE LATEST MARYLAND STATE HIGHWAY DETAILS FOR CHAIN LINK FENCING. THE SPECIFICATION FOR A 6' FENCE SHALL BE USED, SUBSTITUTING 42" FABRIC AND 6' LENGTH POSTS.
2. CHAIN LINK FENCE SHALL BE FASTENED SECURELY TO THE FENCE POSTS WITH WIRE TIES. THE LOWER TENSION WIRE, BRACE AND TRUSS RODS, DRIVE ANCHORS AND POST CAPS ARE NOT REQUIRED EXCEPT ON THE ENDS OF THE FENCE.
3. FILTER CLOTH SHALL BE FASTENED SECURELY TO THE CHAIN LINK FENCE WITH TIES SPACED EVERY 24" AT THE TOP AND MID SECTION.
4. FILTER CLOTH SHALL BE EMBEDDED A MINIMUM OF 8" INTO THE GROUND.
5. WHEN TWO SECTIONS OF FILTER CLOTH ADJOIN EACH OTHER, THEY SHALL BE OVERLAPPED BY 6" AND FOLDED.
6. MAINTENANCE SHALL BE PERFORMED AS NEEDED AND SILT BUILDUPS REMOVED WHEN "BULGES" DEVELOP IN THE SILT FENCE, OR WHEN SILT REACHES 50% OF FENCE HEIGHT
7. FILTER CLOTH SHALL BE FASTENED SECURELY TO EACH FENCE POST WITH WIRE TIES OR STAPLES AT TOP AND MID SECTION AND SHALL MEET THE FOLLOWING REQUIREMENTS FOR GEOTEXTILE CLASS F:

TENSILE STRENGTH	50 LBS/IN (MIN.)	TEST: MSMT 509
TENSILE MODULUS	20 LBS/IN (MIN.)	TEST: MSMT 509
FLOW RATE	0.3 GAL FT²/ MINUTE (MAX.)	TEST: MSMT 322
FILTERING EFFICIENCY	75% (MIN.)	TEST: MSMT 322

U.S. DEPARTMENT OF AGRICULTURE SOIL CONSERVATION SERVICE	PAGE H – 26 – 3	MARYLAND DEPARTMENT OF ENVIRONMENT WATER MANAGEMENT ADMINISTRATION

DETAIL 23C – CURB INLET PROTECTION (COG OR COS INLETS)

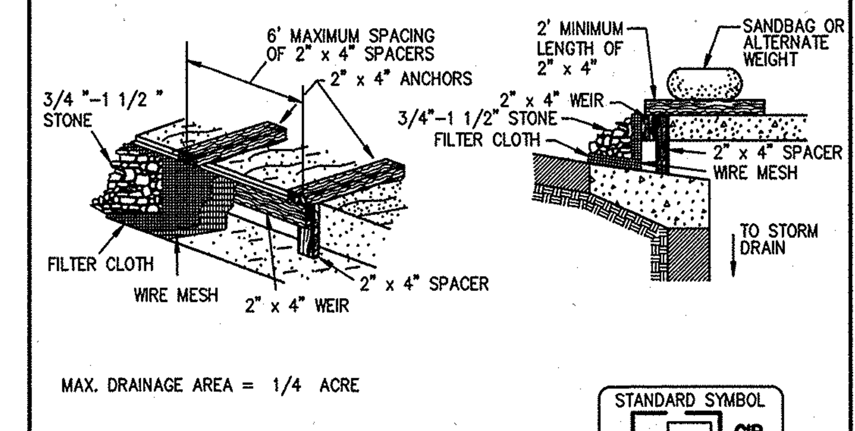

MAX. DRAINAGE AREA = 1/4 ACRE

CONSTRUCTION SPECIFICATIONS

1. ATTACH A CONTINUOUS PIECE OF WIRE MESH (30" MINIMUM WIDTH BY THROAT LENGTH PLUS 4') TO THE 2" X 4" WEIR (MEASURING THROAT LENGTH PLUS 2') AS SHOWN ON THE STANDARD DRAWING.
2. PLACE A CONTINUOUS PIECE OF GEOTEXTILE CLASS E THE SAME DIMENSIONS AS THE WIRE MESH OVER THE WIRE MESH AND SECURELY ATTACH IT TO THE 2" X 4" WEIR.
3. SECURELY NAIL THE 2" x 4" WEIR TO A 9" LONG VERTICAL SPACER TO BE LOCATED BETWEEN THE WEIR AND THE INLET FACE (MAX. 4' APART).
4. PLACE THE ASSEMBLY AGAINST THE INLET THROAT AND NAIL (MINIMUM 2' LENGTHS OF 2" X 4" TO THE TOP OF THE WEIR AT SPACER LOCATIONS). THESE 2" x 4" ANCHORS SHALL EXTEND ACROSS THE INLET TOP AND BE HELD IN PLACE BY SANDBAGS OR ALTERNATE WEIGHT.
5. THE ASSEMBLY SHALL BE PLACED SO THAT THE END SPACERS ARE A MINIMUM 1' BEYOND BOTH ENDS OF THE THROAT OPENING.
6. FORM THE 1/2 " x 1/2 " WIRE MESH AND THE GEOTEXTILE FABRIC TO THE CONCRETE GUTTER AND AGAINST THE FACE OF THE CURB ON BOTH SIDES OF THE INLET. PLACE CLEAN 3/4" x 1-1/2" STONE OVER THE WIRE MESH AND GEOTEXTILE IN SUCH A MANNER TO PREVENT WATER FROM ENTERING THE INLET UNDER OR AROUND THE GEOTEXTILE.
7. THIS TYPE OF PROTECTION MUST BE INSPECTED FREQUENTLY AND THE FILTER CLOTH AND STONE REPLACED WHEN CLOGGED WITH SEDIMENT.
8. ASSURE THAT STORM FLOW DOES NOT BYPASS THE INLET BY INSTALLING A TEMPORARY EARTH OR ASPHALT DIKE TO DIRECT THE FLOW TO THE INLET.

U.S. DEPARTMENT OF AGRICULTURE SOIL CONSERVATION SERVICE	PAGE E – 16 – 5B	MARYLAND DEPARTMENT OF ENVIRONMENT WATER MANAGEMENT ADMINISTRATION

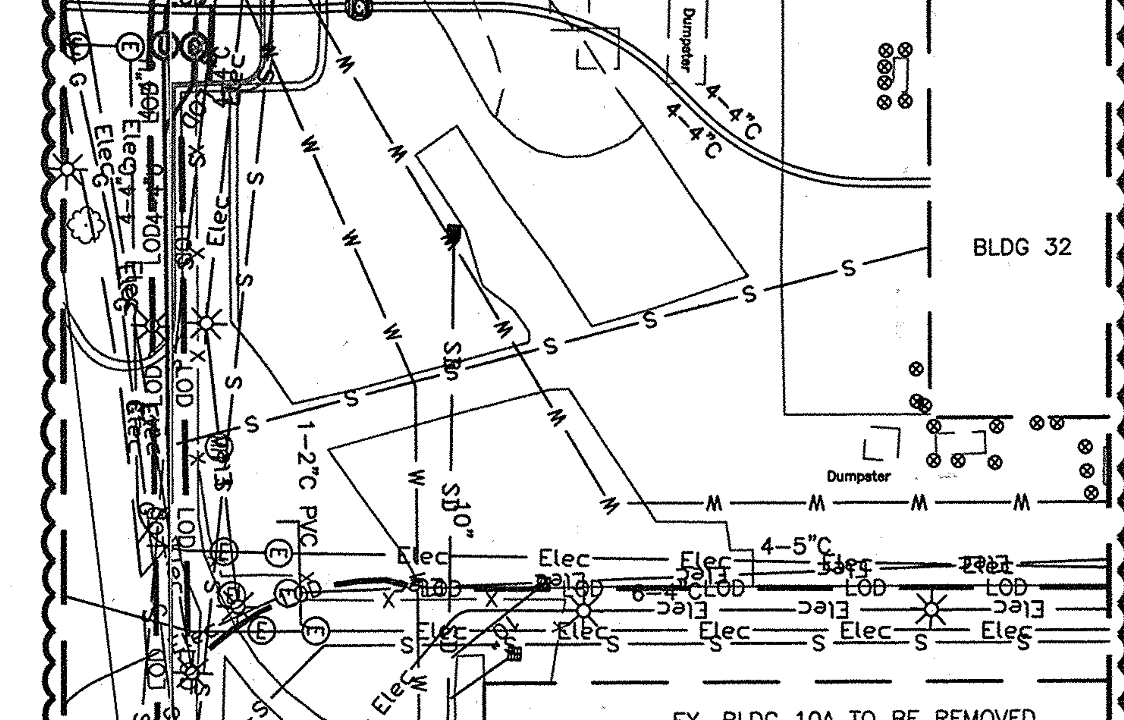

MATCHLINE 001 (SEE SHEET 4 OF 14)
(SEE SHEET 4 OF 14 FOR LEGEND)

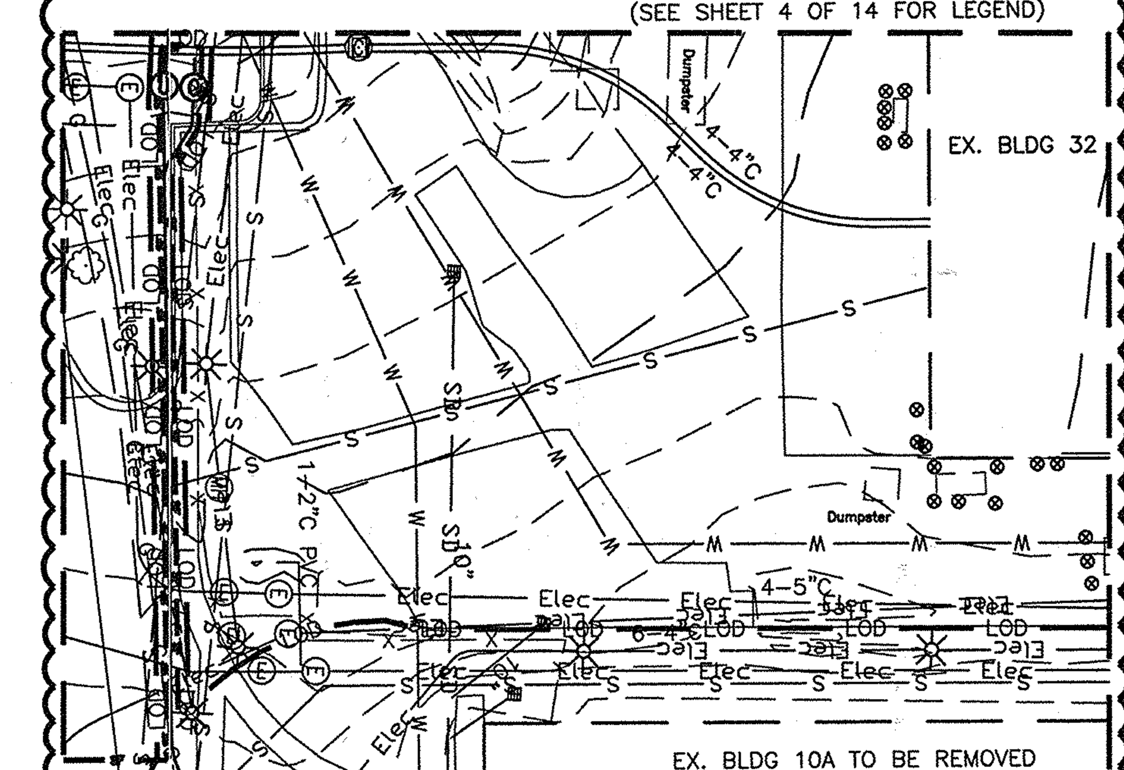

MATCHLINE 003 (SEE SHEET 7 OF 14)
(SEE SHEET 7 OF 14 FOR LEGEND)

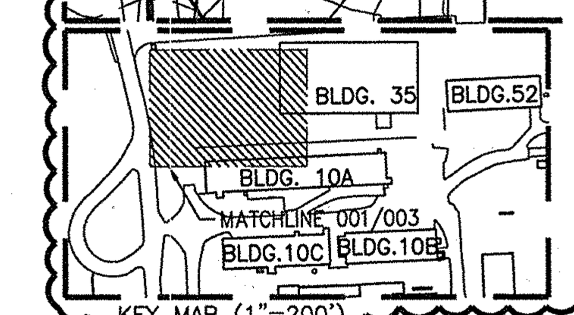

KEY MAP (1"=200')

DETAIL 24 – STABILIZED CONSTRUCTION ENTRANCE

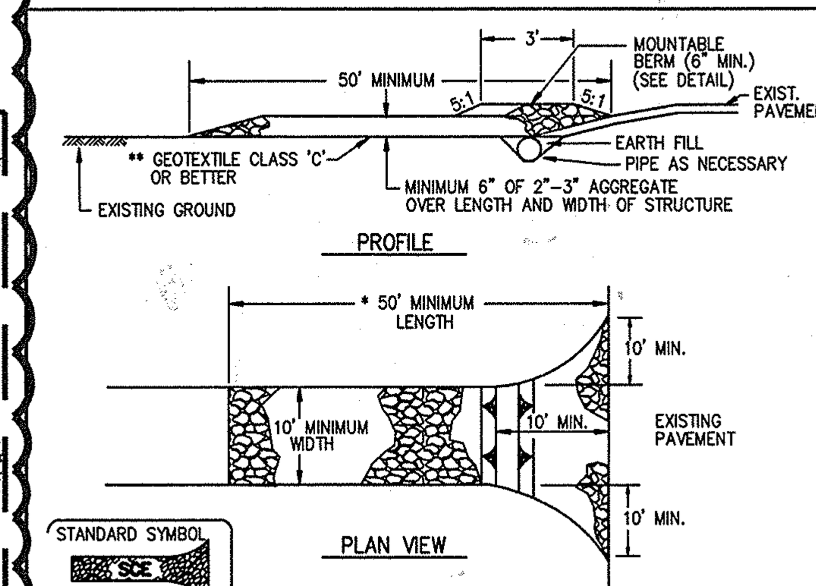

CONSTRUCTION SPECIFICATIONS

1. LENGTH – MINIMUM OF 50' (*30' FOR SINGLE RESIDENCE LOT).
2. WIDTH – 10' MINIMUM, SHOULD BE FLARED AT THE EXISTING ROAD TO PROVIDE A TURNING RADIUS.
3. GEOTEXTILE FABRIC (FILTER CLOTH) SHALL BE PLACED OVER THE EXISTING GROUND PRIOR TO PLACING STONE. **THE PLAN APPROVAL AUTHORITY MAY NOT REQUIRE SINGLE FAMILY RESIDENCES TO USE GEOTEXTILE.
4. STONE – CRUSHED AGGREGATE (2" TO 3") OR RECLAIMED OR RECYCLED CONCRETE EQUIVALENT SHALL BE PLACED AT LEAST 6" DEEP OVER THE LENGTH AND WIDTH OF THE ENTRANCE.
5. SURFACE WATER – ALL SURFACE WATER FLOWING TO OR DIVERTED TOWARD CONSTRUCTION ENTRANCES SHALL BE PIPED THROUGH THE ENTRANCE, MAINTAINING POSITIVE DRAINAGE. PIPE INSTALLED THROUGH THE STABILIZED CONSTRUCTION ENTRANCE SHALL BE PROTECTED WITH A MOUNTABLE BERM WITH 5:1 SLOPES AND A MINIMUM OF 6" OF STONE OVER THE PIPE. PIPE HAS TO BE SIZED ACCORDING TO THE DRAINAGE. WHEN THE SCE IS LOCATED AT A HIGH SPOT AND HAS NO DRAINAGE TO CONVEY A PIPE WILL NOT BE NECESSARY. PIPE SHOULD BE SIZED ACCORDING TO THE AMOUNT OF RUNOFF TO BE CONVEYED. A 6" MINIMUM WILL BE REQUIRED.
6. LOCATION – A STABILIZED CONSTRUCTION ENTRANCE SHALL BE LOCATED AT EVERY POINT WHERE CONSTRUCTION TRAFFIC ENTERS OR LEAVES A CONSTRUCTION SITE. VEHICLES LEAVING THE SITE MUST TRAVEL OVER THE ENTIRE LENGTH OF THE STABILIZED CONSTRUCTION ENTRANCE.

U.S. DEPARTMENT OF AGRICULTURE SOIL CONSERVATION SERVICE	PAGE F – 17 – 3	MARYLAND DEPARTMENT OF ENVIRONMENT WATER MANAGEMENT ADMINISTRATION

DETAIL 23A – STANDARD INLET PROTECTION

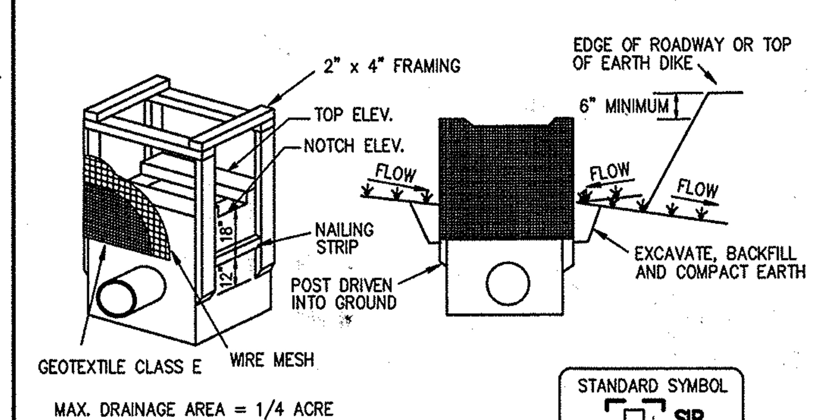

MAX. DRAINAGE AREA = 1/4 ACRE

CONSTRUCTION SPECIFICATIONS

1. EXCAVATE COMPLETELY AROUND THE INLET TO A DEPTH OF 18" BELOW THE NOTCH ELEVATION.
2. DRIVE THE 2" x 4" CONSTRUCTION GRADE LUMBER POSTS 1' INTO THE GROUND AT EACH CORNER OF THE INLET. PLACE NAIL STRIPS BETWEEN THE POSTS ON THE ENDS OF THE INLET. ASSEMBLE THE TOP PORTION OF THE 2" x 4" FRAME USING THE OVERLAP JOINT SHOWN ON DETAIL 23A. THE TOP OF THE FRAME (WEIR) MUST BE 6" BELOW ADJACENT ROADWAYS WHERE FLOODING AND SAFETY ISSUES MAY ARISE.
3. STRETCH THE 1/2" x 1/2" WIRE MESH TIGHTLY AROUND THE FRAME AND FASTEN SECURELY. THE ENDS MUST MEET AND OVERLAP AT A POST.
4. STRETCH THE GEOTEXTILE CLASS E TIGHTLY OVER THE WIRE MESH WITH THE GEOTIXTILE EXTENDING FROM THE TOP OF THE FRAME TO 18" BELOW THE INLET NOTCH ELEVATION. FASTEN THE GEOTEXTILE FIRMLY TO THE FRAME. THE ENDS OF THE GEOTEXTILE MUST MEET AT A POST, BE OVERLAPPED AND FOLDED, THEN FASTENED DOWN.
5. BACKFILL AROUND THE INLET IN COMPACTED 6" LAYERS UNTIL THE LAYER OF EARTH IS LEVEL WITH THE NOTCH ELEVATION ON THE ENDS AND TOP ELEVATION ON THE SIDES.
6. IF THE INLET IS NOT IN A SUMP, CONSTRUCT A COMPACTED EARTH DIKE ACROSS THE DITCH LINE DIRECTLY BELOW IT. THE TOP OF THE EARTH DIKE SHOULD BE AT LEAST 6" HIGHER THAN THE TOP OF THE FRAME.
7. THE STRUCTURE MUST BE INSPECTED PERIODICALLY AND AFTER EACH RAIN AND THE GEOTEXTILE REPLACED WHEN IT BECOMES CLOGGED.

U.S. DEPARTMENT OF AGRICULTURE SOIL CONSERVATION SERVICE	PAGE E – 16 – 5	MARYLAND DEPARTMENT OF ENVIRONMENT WATER MANAGEMENT ADMINISTRATION

DETAIL 1 – EARTH DIKE

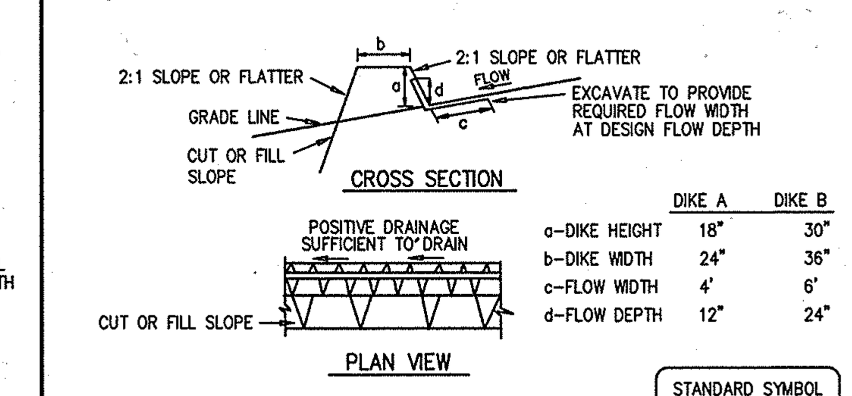

	DIKE A	DIKE B
a–DIKE HEIGHT	18"	30"
b–DIKE WIDTH	24"	36"
c–FLOW WIDTH	4'	6'
d–FLOW DEPTH	12"	24"

FLOW CHANNEL STABILIZATION
GRADE 0.5% MIN. 10% MAX.

1. SEED AND COVER WITH STRAW MULCH.
2. SEED AND COVER WITH EROSION CONTROL MATTING OR LINE WITH SOD.
3. 4" – 7" STONE OR RECYCLED CONCRETE EQUIVALENT PRESSED INTO THE SOIL 7" MINIMUM

CONSTRUCTION SPECIFICATIONS

1. ALL TEMPORARY EARTH DIKES SHALL HAVE UNINTERRUPTED POSITIVE GRADE TO AN OUTLET. SPOT ELEVATIONS MAY BE NECESSARY FOR GRADES LESS THAN 1%.
2. RUNOFF DIVERTED FROM A DISTURBED AREA SHALL BE CONVEYED TO A SEDIMENT TRAPPING DEVICE.
3. RUNOFF DIVERTED FROM AN UNDISTURBED AREA SHALL OUTLET DIRECTLY INTO AN UNDISTURBED, STABILIZED AREA AT A NON-EROSIVE VELOCITY.
4. ALL TREES, BRUSH, STUMPS, OBSTRUCTIONS, AND OTHER OBJECTIONAL MATERIAL SHALL BE REMOVED AND DISPOSED OF SO AS NOT TO INTERFERE WITH THE PROPER FUNCTIONING OF THE DIKE.
5. THE DIKE SHALL BE EXCAVATED OR SHAPED TO LINE, GRADE AND CROSS SECTION AS REQUIRED TO MEET THE CRITERIA SPECIFIED HEREIN AND BE FREE OF BANK PROJECTIONS OR OTHER IRREGULARITIES WHICH WILL IMPEDE NORMAL FLOW.
6. FILL SHALL BE COMPACTED BY EARTH MOVING EQUIPMENT.
7. ALL EARTH REMOVED AND NOT NEEDED FOR CONSTRUCTION SHALL BE PLACED SO THAT IT WILL NOT INTERFERE WITH THE FUNCTIONING OF THE DIKE.
8. INSPECTION AND MAINTENANCE MUST BE PROVIDED PERIODICALLY AND AFTER EACH RAIN EVENT.

U.S. DEPARTMENT OF AGRICULTURE SOIL CONSERVATION SERVICE	PAGE A – 1 – 6	MARYLAND DEPARTMENT OF ENVIRONMENT WATER MANAGEMENT ADMINISTRATION

MOUNTABLE BERM DETAIL

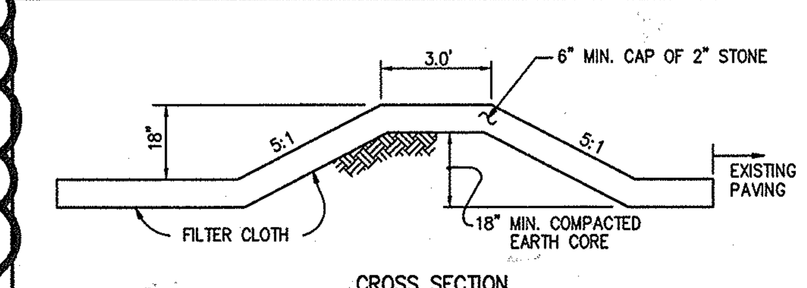

CROSS SECTION
NOT TO SCALE

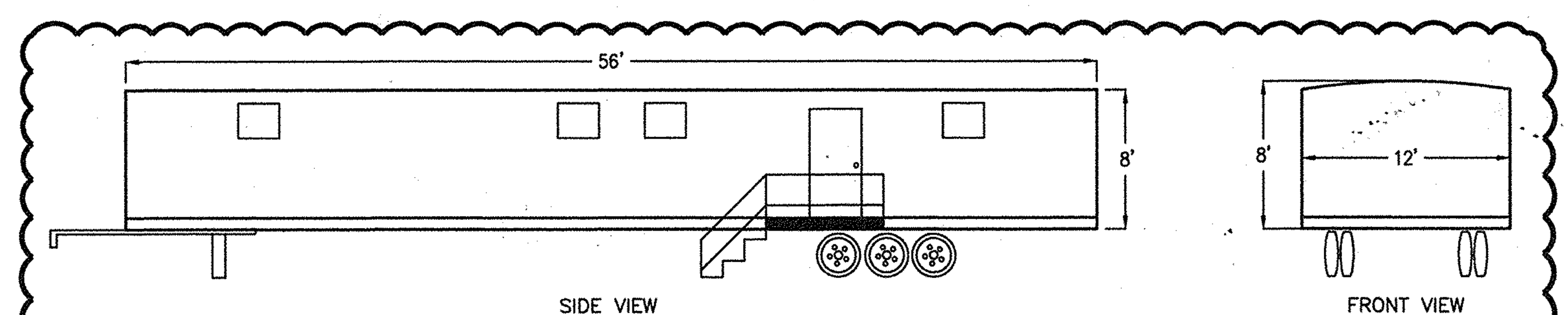

TEST BED RESEARCH FACILITY
(NOT TO SCALE)

BOARD FOR PROFESSIONAL ENGINEERS 20906 RICHARD E. BURGOYNE STATE OF MARYLAND 2016

FOR 1 REVISION

BY THE ENGINEER:
"I CERTIFY THAT THIS PLAN FOR EROSION AND SEDIMENT CONTROL REPRESENTS A PRACTICAL AND WORKABLE PLAN BASED ON MY PERSONAL KNOWLEDGE OF THE SITE CONDITIONS, AND THAT IT WAS PREPARED IN ACCORDANCE WITH THE REQUIREMENTS OF THE HOWARD SOIL CONSERVATION DISTRICT."

Anthony J. Dietz — SIGNATURE OF ENGINEER — 7/18/08 DATE

BY THE DEVELOPER:
"I/WE CERTIFY THAT ALL DEVELOPMENT AND CONSTRUCTION WILL BE DONE ACCORDING TO THIS PLAN, AND THAT ANY RESPONSIBLE PERSONNEL INVOLVED IN THE CONSTRUCTION PROJECT WILL HAVE A CERTIFICATE OF ATTENDANCE AT A DEPARTMENT OF THE ENVIRONMENT APPROVED TRAINING PROGRAM FOR THE CONTROL OF SEDIMENT AND EROSION BEFORE BEGINNING THE PROJECT. I ALSO AUTHORIZE PERIODIC ON-SITE INSPECTION BY THE HOWARD SOIL CONSERVATION DISTRICT."

Glenn M. Cary — SIGNATURE OF DEVELOPER — 2/8/16 DATE

THIS DEVELOPMENT PLAN IS AS APPROVED FOR SOIL EROSION AND SEDIMENT CONTROL BY THE HOWARD SOIL CONSERVATION DISTRICT.

John R Robertson — HOWARD S.C.D. — 2/17/16 DATE

JHU/APL INTERNAL USE

THIS DATA SHALL NOT BE DISCLOSED TO A THIRD PARTY AND SHALL NOT BE DUPLICATED, USED, OR DISCLOSED IN WHOLE OR IN PART FOR ANY PURPOSE OTHER THAN TO EVALUATE THIS RFP OR, IN THE CASE OF A CONTRACT AWARD, TO PERFORM THE WORK REQUIRED HEREUNDER, WITHOUT THE EXPRESS WRITTEN CONSENT OF JHU/APL.

PROFESSIONAL CERTIFICATION

I HEREBY CERTIFY THAT THESE DOCUMENTS WERE PREPARED OR APPROVED BY ME, AND THAT I AM A DULY LICENSED PROFESSIONAL ENGINEER UNDER THE LAWS OF THE STATE OF MARYLAND

LICENSE NUMBER: 32574 EXPIRATION DATE: 1/16/18

PROFESSIONAL CERTIFICATION

I HEREBY CERTIFY THAT THESE DOCUMENTS WERE PREPARED OR APPROVED BY ME, AND THAT I AM A DULY LICENSED PROFESSIONAL ENGINEER UNDER THE LAWS OF THE STATE OF MARYLAND

LICENSE NUMBER: 20906 EXPIRATION DATE: 21 July 2017

APPROVED: DEPARTMENT OF PLANNING AND ZONING

Chad Edmondson — Chief, Development Engineering Division NY	2-22-16 Date
Kent Sheubrooks — Chief, Division of Land Development	3-01-16 Date
Valdis Lazdins — Director	3-2-16 Date

CENTURY ENGINEERING
CONSULTING ENGINEERS - PLANNERS
10710 Gilroy Road, Hunt Valley, MD 21031
Phone: 443.589.2400 Fax: 443.589.2401

STATE OF MARYLAND ANTHONY JOSEPH DIETZ No. 32574 PROFESSIONAL ENGINEER

DESIGN BY: A.J.D.				
DRAWN BY: M.S.S./M.C.A.				
CHECKED BY:				
DATE: 7/18/08	REB	1	SITE PLAN, UTILITY PLAN, AND EROSION CONTROL PLAN REFERENCES. RELOCATED SANITARY PROFILE. NOMINAL DIMENSIONS OF TEST BED RESEARCH FACILITY.	1/15/16
	BY	NO.	REVISION	DATE

THE JOHNS HOPKINS UNIVERSITY
APPLIED PHYSICS LABORATORY
11100 JOHNS HOPKINS ROAD
LAUREL, MARYLAND 20723–6099
443–778–5134

EROSION AND SEDIMENT CONTROL PLAN
SERVICE & SUPPORT AREA
INFRASTRUCTURE FACILITY PHASE I
TAX MAP: 41 GRID: 16 PARCEL: 123
ELECTION DISTRICT 5-05 HOWARD COUNTY, MARYLAND
SHEET 10 OF 14

C.E.I. PROJECT NUMBER 22172.26

SCALE: 1"=30'

SDP-08-084

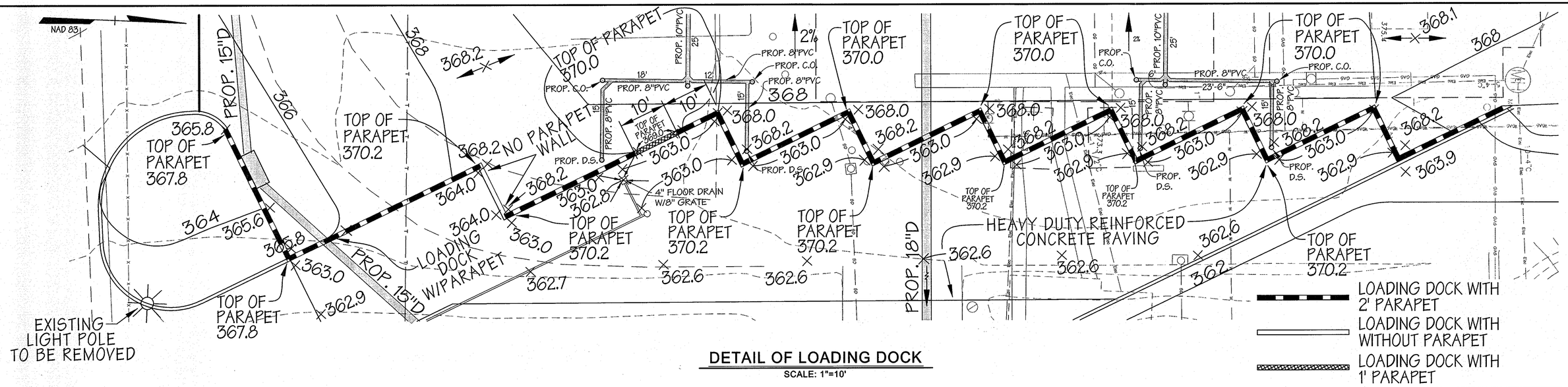

DETAIL OF LOADING DOCK

SCALE: 1"=10'

REFER TO SHEETS 13 AND 14 OF 14 FOR STRUCTURAL DETAILS OF LOADING DOCK

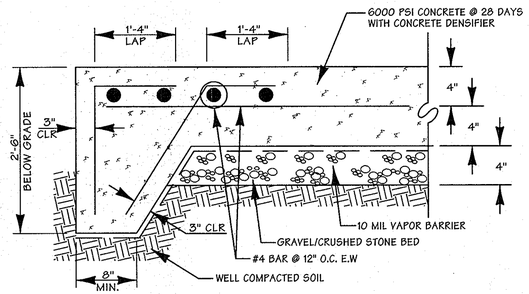

NOTE:
TURN DOWN SLAB WHERE CONCRETE MEETS BITUMINOUS PAVING

Heavy Duty Concrete Paving Section

Not To Scale

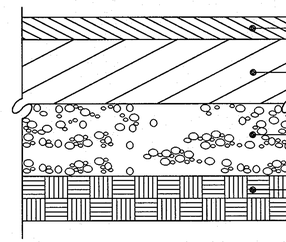

EQUIVALENT TO HOWARD COUNTY P.4 SECTION

Heavy Duty Bituminous Concrete Paving Section

Not To Scale

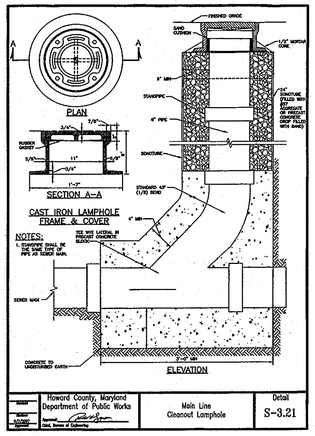

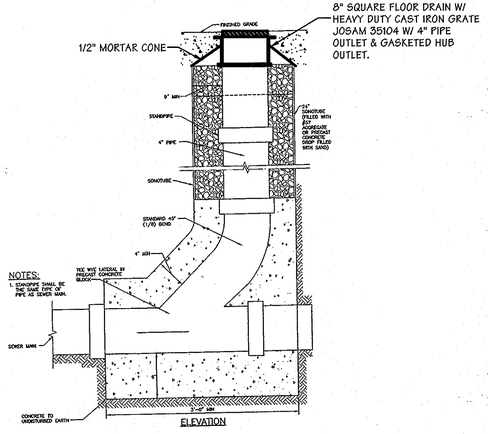

FLOOR DRAIN CONNECTION

NOT TO SCALE

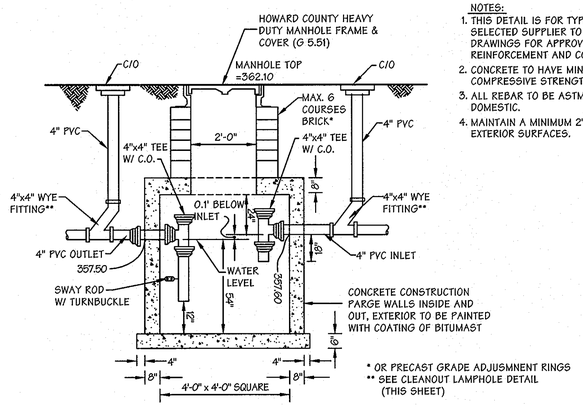

NOTES:
1. THIS DETAIL IS FOR TYPE, SIZE & LOCATION. SELECTED SUPPLIER TO PROVIDE SHOP DRAWINGS FOR APPROVAL SPECIFYING REINFORCEMENT AND CONSTRUCTION DETAILS.
2. CONCRETE TO HAVE MINIMUM 5000 psi COMPRESSIVE STRENGTH AT 28 DAYS.
3. ALL REBAR TO BE ASTM A-615 GRADE 60 DOMESTIC.
4. MAINTAIN A MINIMUM 2" CLEARANCE FROM EXTERIOR SURFACES.

* OR PRECAST GRADE ADJUSMNENT RINGS
** SEE CLEANOUT LAMPHOLE DETAIL (THIS SHEET)

OIL/GRIT SEPARATOR

NOT TO SCALE

JHU/APL INTERNAL USE

THIS DATA SHALL NOT BE DISCLOSED TO A THIRD PARTY AND SHALL NOT BE DUPLICATED, USED, OR DISCLOSED IN WHOLE OR IN PART FOR ANY PURPOSE OTHER THAN TO EVALUATE THIS RFP OR, IN THE CASE OF A CONTRACT AWARD, TO PERFORM THE WORK REQUIRED HEREUNDER, WITHOUT THE EXPRESS WRITTEN CONSENT OF JHU/APL.

PROFESSIONAL CERTIFICATION

I HEREBY CERTIFY THAT THESE DOCUMENTS WERE PREPARED OR APPROVED BY ME, AND THAT I AM A DULY LICENSED PROFESSIONAL ENGINEER UNDER THE LAWS OF THE STATE OF MARYLAND

LICENSE NUMBER: 32574 EXPIRATION DATE: 1/16/10

APPROVED: DEPARTMENT OF PLANNING AND ZONING

Chief, Development Engineering Division — Date 10/9/08

Chief, Division of Land Development — Date 10/8/08

Director — Date 10/6/08

CENTURY ENGINEERING
CONSULTING ENGINEERS - PLANNERS
10710 Gilroy Road, Hunt Valley, MD 21031
Phone: 443.589.2400 Fax: 443.589.2401

STATE OF MARYLAND ANTHONY JOSEPH DIMARCO No. 32574 PROFESSIONAL ENGINEER 8/29/08

DESIGN BY:	A.J.D.
DRAWN BY:	M.S.S./M.C.A.
CHECKED BY:	A.J.D.
DATE:	7/18/08

BY	NO.	REVISION	DATE

THE JOHNS HOPKINS UNIVERSITY
APPLIED PHYSICS LABORATORY
11100 JOHNS HOPKINS ROAD
LAUREL, MARYLAND 20723-6099
443-778-5134

SITE DETAILS
SERVICE & SUPPORT AREA INFRASTRUCTURE FACILITY PHASE I
TAX MAP: 41 GRID: 16 PARCEL: 123
ELECTION DISTRICT 5-05 HOWARD COUNTY, MARYLAND
SHEET 11 OF 14

C.E.I. PROJECT NUMBER 22172.26

SCALE: 1"=30'

SDP-08-084

O:\DRAWINGS\LAND-DEV\2002\22172.12 JHU eastic Vault at Bldg 20\22172.26\Cadd\(SP2) Site Details.dwg, 8/28/2008 1:59:49 PM, msmith

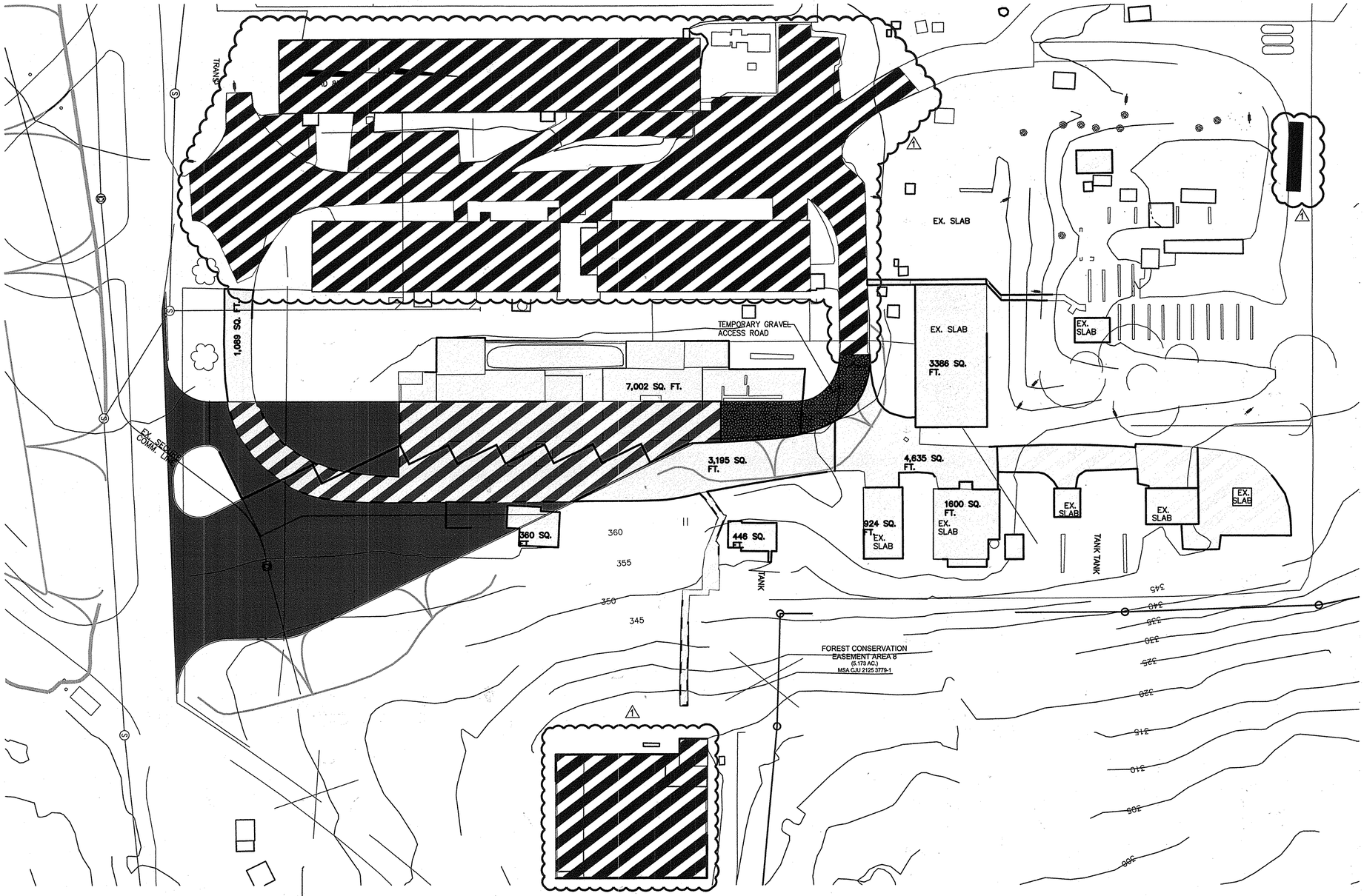

1. PROPOSED IMPERVIOUS SURFACES THAT WILL BE CONSTRUCTED OVER EXISTING IMPERVIOUS SURFACES WILL BE EXCHANGED AT A RATIO OF 1.0 SQ. FT. OF EXISTING IMPERVIOUS FOR 1.0 SQ. FT. OF PROPOSED IMPERVIOUS AREA.
2. PROPOSED IMPERVIOUS SURFACES THAT WILL BE CONSTRUCTED OVER EXISTING PERVIOUS SURFACES WILL BE COMPENSATED FOR BY REMOVING ADDITIONAL EXISTING IMPERVIOUS AREAS AT A RATIO OF 1.25 SQ. FT. OF EXISTING IMPERVIOUS AREA FOR 1.0 SQ. FT. OF NEW PROPOSED IMPERVIOUS AREA.

PROPOSED IMPERVIOUS OVER EXISTING IMPERVIOUS (11,745 SQ. FT.) (1:1 RATIO)

NEW PROPOSED IMPERVIOUS AREA OVER EXISTING PERVIOUS AREA (16,749 SQ. FT.) (1.25:1 RATIO) (REQUIRED EXISTING IMPERVIOUS AREA TO BE REMOVED 16,749 x 1.25 = 20, 937 SQ. FT.)

IMPERVIOUS TO BE REMOVED TO MEET MINIMUM REQUIRED REDUCTION IN IMPERVIOUS AREA (1.25:1 RATIO) (21,037 SQ. FT. > 20,937 SQ. FT.)

ADDITIONAL IMPERVIOUS AVAILABLE FOR REMOVAL

REMOVAL OF EXISTING IMPERVIOUS

NEW PROPOSED IMPERVIOUS AREA OVER EXISTING PERVIOUS AREA

BOARD FOR PROFESSIONAL ENGINEERS 20906 RICHARD E. BURGOYNE STATE OF MARYLAND 1/15/16

FOR 1 REVISION

JHU/APL INTERNAL USE

THIS DATA SHALL NOT BE DISCLOSED TO A THIRD PARTY AND SHALL NOT BE DUPLICATED, USED, OR DISCLOSED IN WHOLE OR IN PART FOR ANY PURPOSE OTHER THAN TO EVALUATE THIS RFP OR, IN THE CASE OF A CONTRACT AWARD, TO PERFORM THE WORK REQUIRED HEREUNDER, WITHOUT THE EXPRESS WRITTEN CONSENT OF JHU/APL.

PROFESSIONAL CERTIFICATION

I HEREBY CERTIFY THAT THESE DOCUMENTS WERE PREPARED OR APPROVED BY ME, AND THAT I AM A DULY LICENSED PROFESSIONAL ENGINEER UNDER THE LAWS OF THE STATE OF MARYLAND

LICENSE NUMBER: 20906 EXPIRATION DATE: 21 Jul 2017

PROFESSIONAL CERTIFICATION

I HEREBY CERTIFY THAT THESE DOCUMENTS WERE PREPARED OR APPROVED BY ME, AND THAT I AM A DULY LICENSED PROFESSIONAL ENGINEER UNDER THE LAWS OF THE STATE OF MARYLAND

LICENSE NUMBER: 32579 EXPIRATION DATE: 1/16/18

APPROVED: DEPARTMENT OF PLANNING AND ZONING

Chief, Development Engineering Division NY — Date 2-22-16

Chief, Division of Land Development — Date 3-01-16

Director — Date 3-2-16

CENTURY ENGINEERING
CONSULTING ENGINEERS - PLANNERS
10710 Gilroy Road, Hunt Valley, MD 21031
Phone: 443.589.2400 Fax: 443.589.2401

STATE OF MARYLAND ANTHONY JOSEPH PETZ No. 32579 PROFESSIONAL ENGINEER

DESIGN BY: A.J.D.
DRAWN BY: M.S.S./M.C.A.
CHECKED BY:
DATE: 7/18/08

BY	NO.	REVISION	DATE
REB	1	REMOVAL OF PAVEMENT, EX. BURIED SLABS, AND BUILDINGS 10A, 10B, AND 10C. ADDITION OF IMPERVIOUS FROM NEW TRAILER.	1/15/16

THE JOHNS HOPKINS UNIVERSITY
APPLIED PHYSICS LABORATORY
11100 JOHNS HOPKINS ROAD
LAUREL, MARYLAND 20723-6099
443-778-5134

STORMWATER MANAGEMENT
CHANGE IN IMPERVIOUS AREA
SERVICE & SUPPORT AREA
INFRASTRUCTURE FACILITY PHASE I

TAX MAP: 41 GRID: 16 PARCEL: 123
ELECTION DISTRICT 5-05 HOWARD COUNTY, MARYLAND
SHEET 12 OF 14

C.E.I. PROJECT NUMBER 22172.26

SCALE: 1"=30'

SDP-08-084

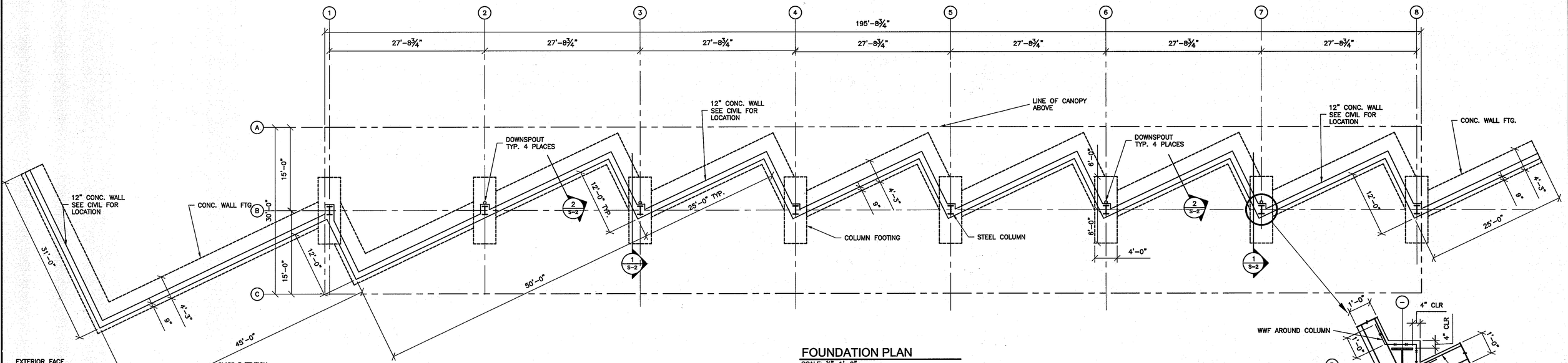

FOUNDATION PLAN

SCALE: ⅛"=1'-0"

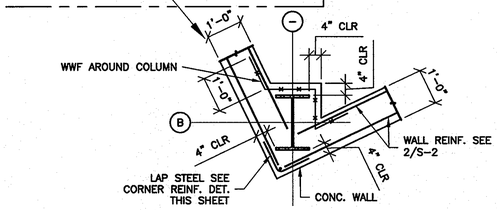

TYP. CORNER DETAIL @ COL.

SCALE: ½"=1'-0"

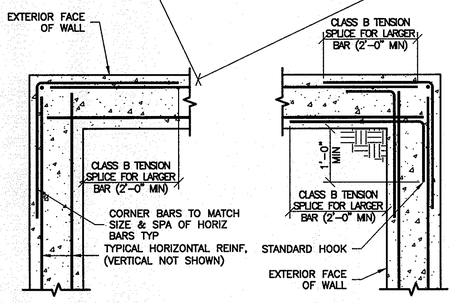

TYP. WALL CORNER REINF. DETAIL

SCALE: ¾"=1'-0"

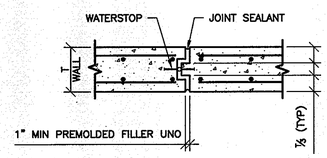

NOTE: PROVIDE JOINT EVERY 60' MAX UNLESS NOTED OTHERWISE

TYP. WALL CONSTR. JOINT

SCALE: ¾"=1'-0"

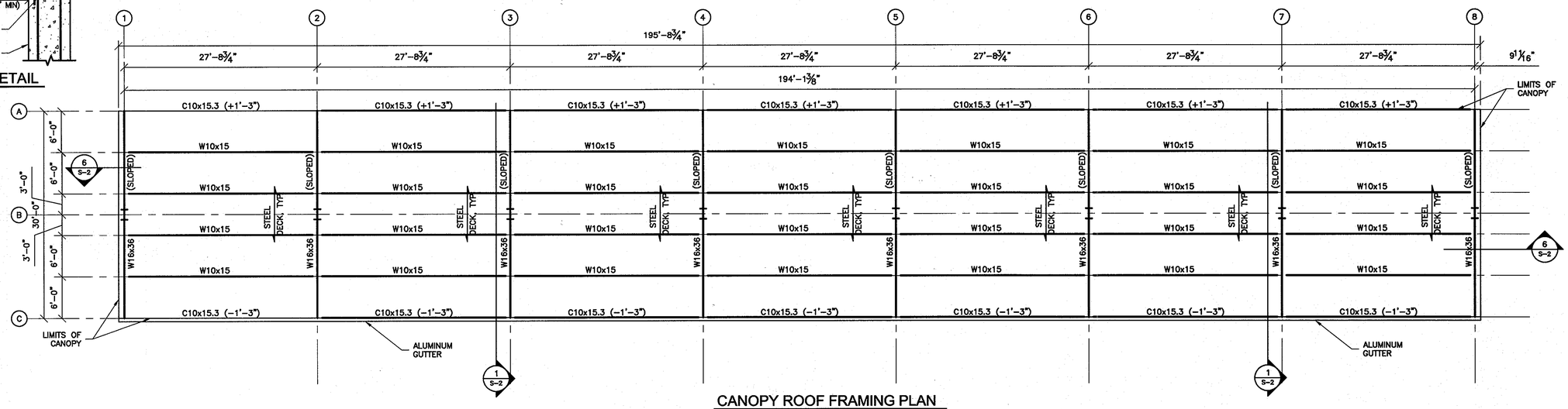

CANOPY ROOF FRAMING PLAN

SCALE: ⅛"=1'-0"

NOTES:
1. TOP OF STEEL ON COLUMN LINE B (BOTTOM OF METAL DECK) ELEVATIONS SHALL BE +25'-7", UNLESS NOTED THUS T/STL = ±0'-0".
2. ALL ELEVATIONS SHOWN ON PLAN ARE REFERENCED FROM ELEVATION 0'-0".
3. ROOF CONSTRUCTION CONSISTS OF EPDM ROOF OVER ½" PLYWOOD OVER 1½"x22 GA. TYPE B STEEL DECK.
4. SLOPE STEEL BETWEEN ELEVATIONS SHOWN.
5. STEEL TO BE PRIMED & PAINTED WITH STANDARD "SHERWIN WILLIAMS" PAINT SPECIFICATIONS.
6. ALL STEEL COLUMNS W18x86 UNLESS NOTED OTHERWISE.

JHU/APL INTERNAL USE

THIS DATA SHALL NOT BE DISCLOSED TO A THIRD PARTY AND SHALL NOT BE DUPLICATED, USED, OR DISCLOSED IN WHOLE OR IN PART FOR ANY PURPOSE OTHER THAN TO EVALUATE THIS RFP OR, IN THE CASE OF A CONTRACT AWARD, TO PERFORM THE WORK REQUIRED HEREUNDER, WITHOUT THE EXPRESS WRITTEN CONSENT OF JHU/APL.

PROFESSIONAL CERTIFICATION

I hereby certify that these documents were prepared or approved by me, and that I am a duly licensed professional engineer under the laws of the State of Maryland, License No. 19154, Expiration Date May 31, 2009

APPROVED: DEPARTMENT OF PLANNING AND ZONING

Chief, Development Engineering Division — Date 10/7/08

Chief, Division of Land Development — Date 10/8/08

Director — Date 10/8/08

CENTURY ENGINEERING
CONSULTING ENGINEERS - PLANNERS
10710 Gilroy Road, Hunt Valley, MD 21031
Phone: 443.589.2400 Fax: 443.589.2401

8/27/08 STATE OF MARYLAND RICHARD ALLEN BEARD NO. 19154 REGISTERED PROFESSIONAL ENGINEER

DESIGN BY: GWS				
DRAWN BY: RDM				
CHECKED BY: RAB				
DATE: 04.25.08	BY	NO.	REVISION	DATE

THE JOHNS HOPKINS UNIVERSITY
APPLIED PHYSICS LABORATORY
11100 JOHNS HOPKINS ROAD
LAUREL, MARYLAND 20723-6099
443-778-5134

STRUCTURAL PLANS AND NOTES
SERVICE & SUPPORT AREA
INFRASTRUCTURE FACILITY PHASE I

TAX MAP: 41 GRID: 16 PARCEL: 123
ELECTION DISTRICT 5-05 HOWARD COUNTY, MARYLAND

SHEET 13 of 14

C.E.I. PROJECT NUMBER 22172.26

SCALE: AS NOTED

SDP-08-084

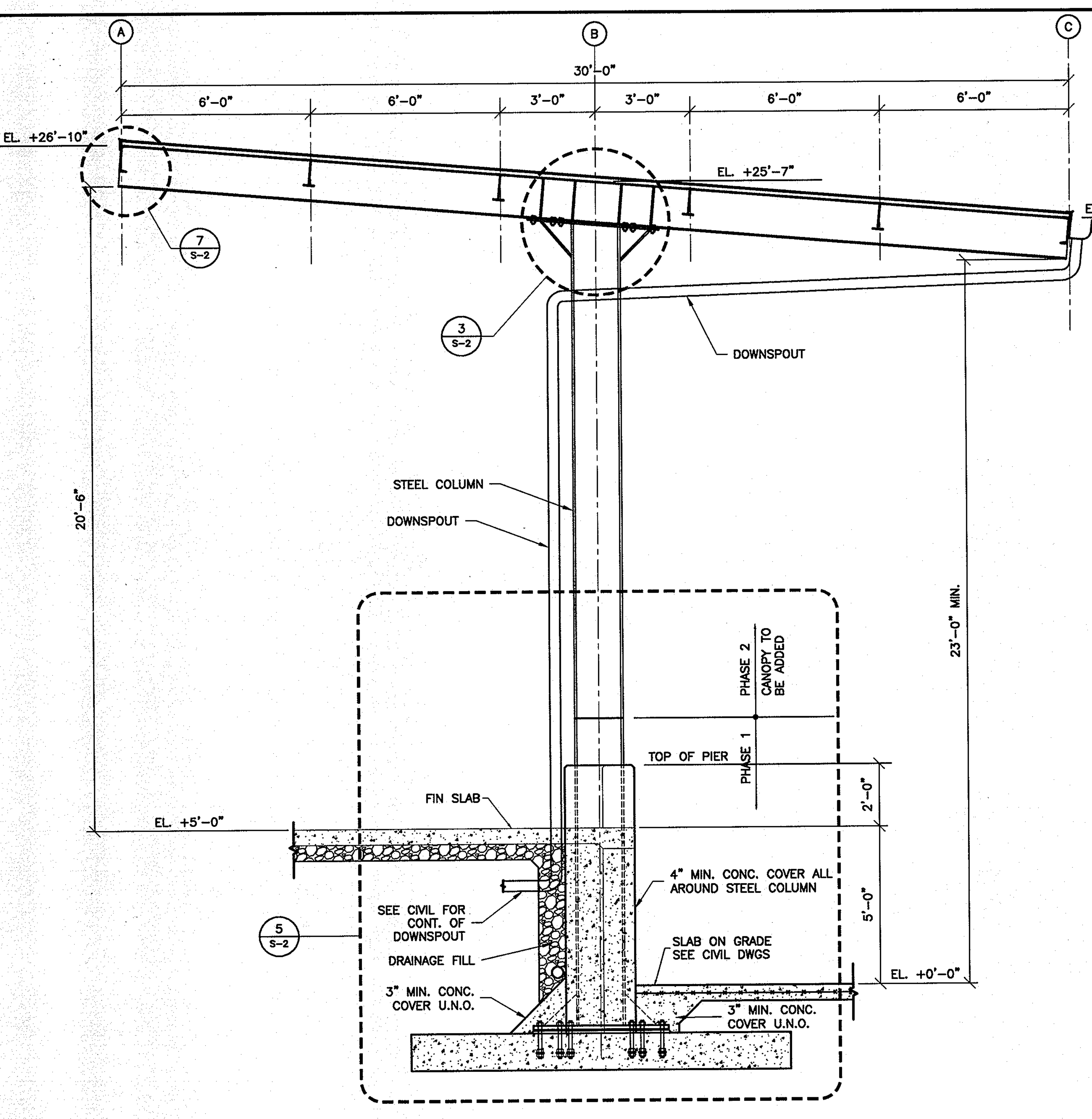

1 DETAIL S-2
SCALE: 3/8"=1'-0"

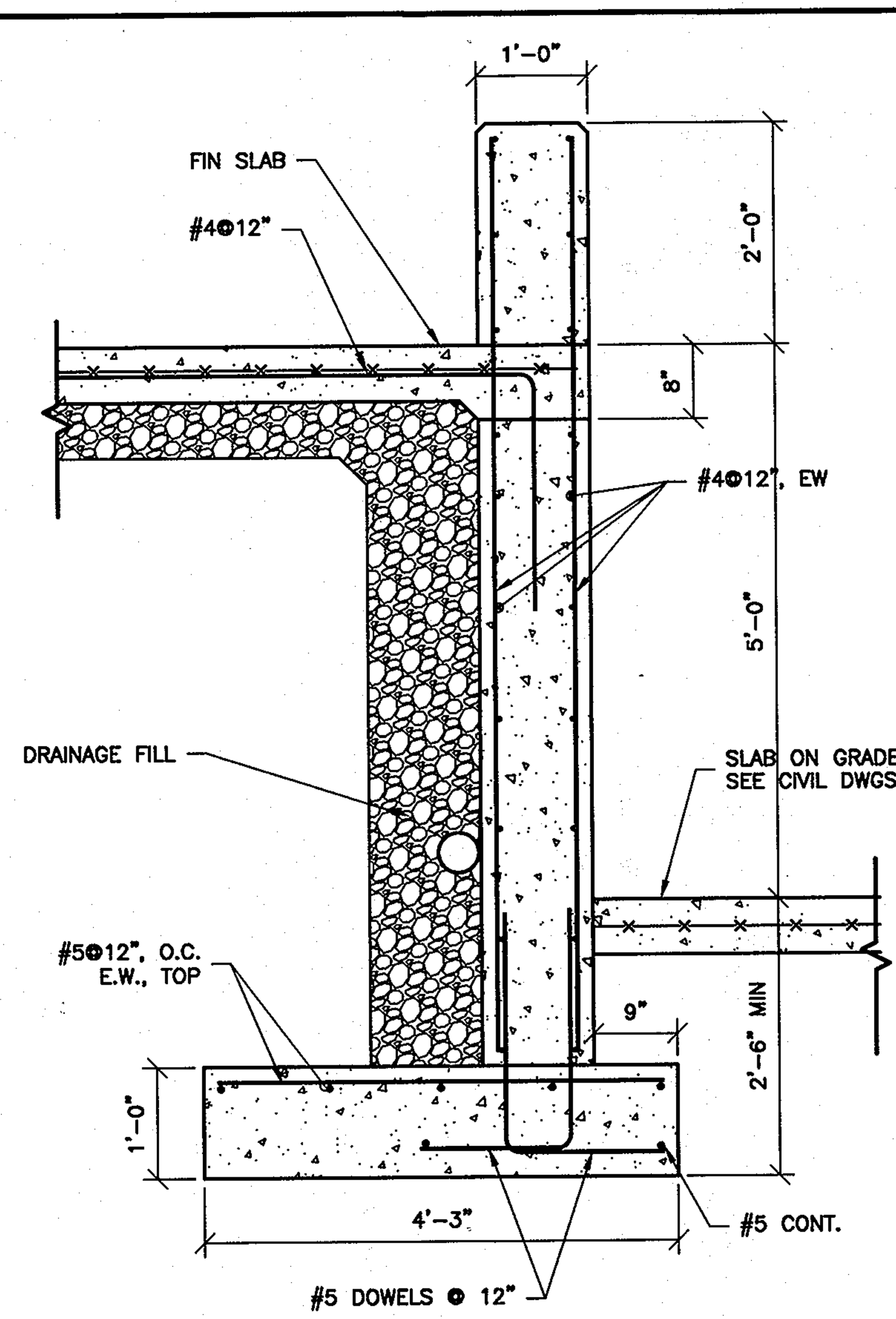

2 SECTION S-2
SCALE: 3/4"=1'-0"

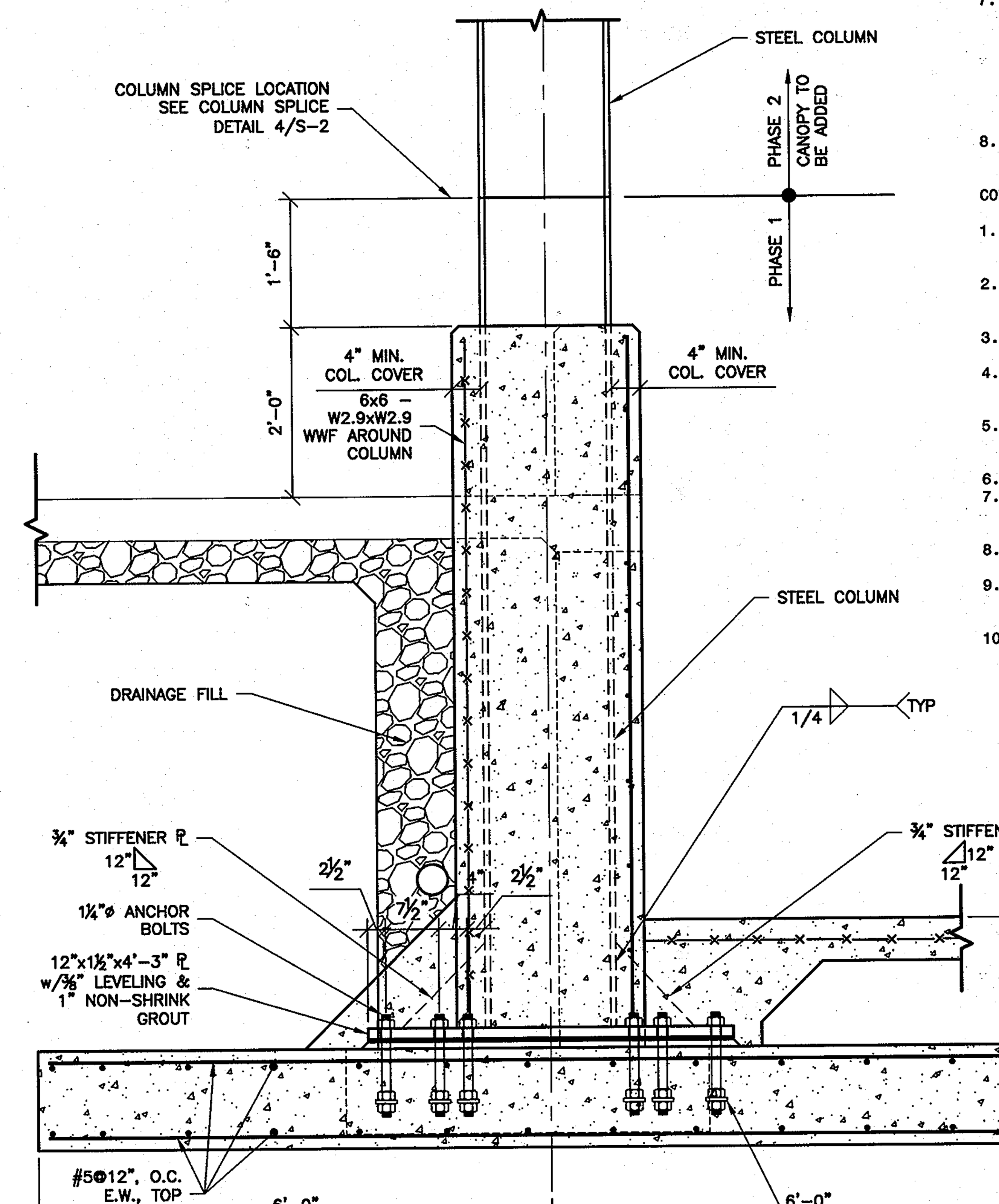

5 DETAIL S-2
SCALE: 3/4"=1'-0"

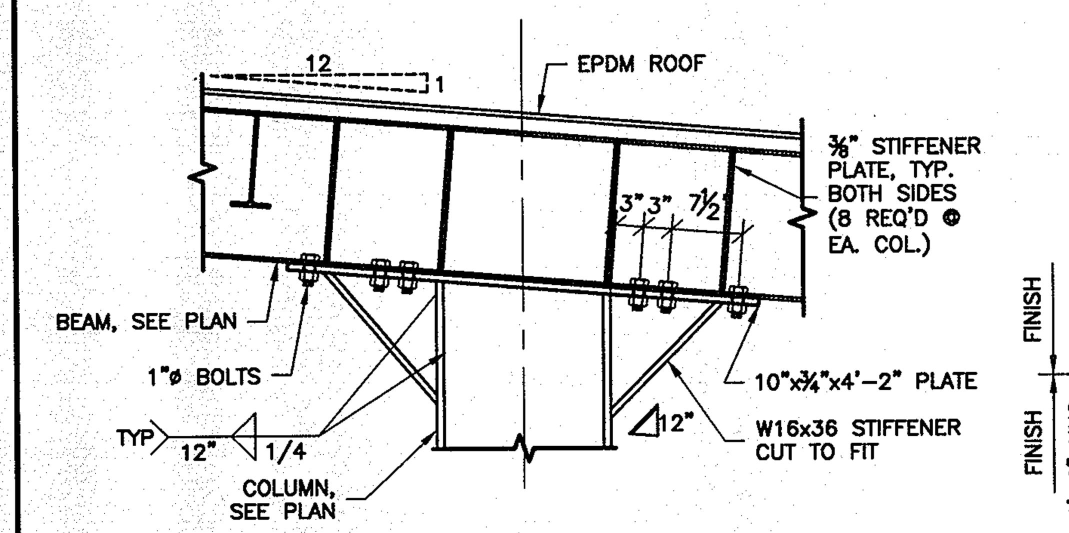

3 DETAIL S-2
SCALE: 3/4"=1'-0"

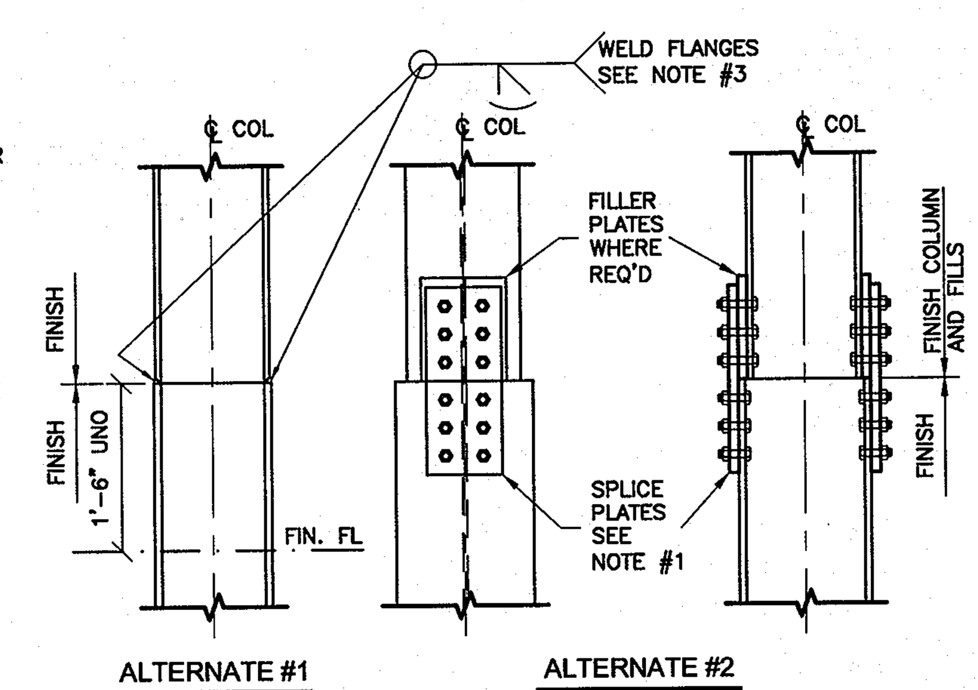

NOTES:
1. FLANGE SPLICE TO DEVELOP A MINIMUM OF 10% OF TENSILE CAPACITY OF FLANGES 0.6Fy.
2. TENSILE CAPACITY IS DEFINED AS 0.6Fy.
3. WELD SIZE SHALL NOT BE LESS THAN 20% OF THICKNESS OF THINNER FLANGE.

4 COLUMN SPLICE DETAIL S-2
SCALE: 3/4"=1'-0"

JHU/APL INTERNAL USE

THIS DATA SHALL NOT BE DISCLOSED TO A THIRD PARTY AND SHALL NOT BE DUPLICATED, USED, OR DISCLOSED IN WHOLE OR IN PART FOR ANY PURPOSE OTHER THAN TO EVALUATE THIS RFP OR, IN THE CASE OF A CONTRACT AWARD, TO PERFORM THE WORK REQUIRED HEREUNDER, WITHOUT THE EXPRESS WRITTEN CONSENT OF JHU/APL.

DESIGN CRITERIA

1. THE DESIGN OF THE STRUCTURE IS IN ACCORDANCE WITH IBC 2003.
2. DESIGN LIVE LOADS:
   A. ROOF LIVE LOAD = 30 PSF
3. SNOW LOADING:
   A. GROUND SNOW LOAD (Pg): 25 psf
   B. FLAT ROOF SNOW LOAD (Pf): 27 psf
   C. SNOW EXPOSURE FACTOR (Ce): 0.9
   D. IMPORTANCE FACTOR (Is): 1.0
   E. THERMAL FACTOR (Ct): 1.2
4. WIND LOADING ON MAIN WIND FORCE - RESISTING SYSTEM:
   A. BASIC WIND SPEED: 90 MPH
   B. IMPORTANCE FACTOR (Iw): 1.0
   C. WIND EXPOSURE: C
   D. BUILDING CATEGORY: II.
   E. PRESSURE COEFFICIENTS (GCpi): +0.00.
   F. PRESSURES FOR COMPONENTS AND CLADDING: 10 psf

MISCELLANEOUS

1. CONTRACTOR SHALL VERIFY CONDITIONS IN THE FIELD AND IMMEDIATELY NOTIFY ENGINEER OR ARCHITECT OF ANY CONDITIONS NOT AS SHOWN. CONTRACTOR SHALL TAKE FIELD MEASUREMENTS AS REQUIRED.
2. CONTRACTOR SHALL COORDINATE DETAILING, FABRICATION AND ERECTION WITH ALL RELATED TRADES.
3. NO OPENINGS SHALL BE MADE IN ANY STRUCTURAL MEMBER UNLESS SPECIFICALLY SHOWN ON THE STRUCTURAL DRAWINGS OR UPON WRITTEN APPROVAL FROM THE STRUCTURAL ENGINEER.
4. THE DESIGN LIVE LOADS SHALL NOT BE EXCEEDED DURING CONSTRUCTION. CONTRACTOR SHALL BE RESPONSIBLE FOR PROVIDING ADEQUATE SHORING AND/OR BRACING DURING CONSTRUCTION TO ACCOUNT FOR ALL LOADING, INCLUDING BUT NOT LIMITED TO GRAVITY, WIND, EARTHQUAKE, EARTH AND CONSTRUCTION LOADING. BRACING MEMBERS SHOWN ARE THOSE REQUIRED FOR THE FINISHED STRUCTURE AND MAY NOT BE ADEQUATE FOR CONSTRUCTION LOADS.

FOUNDATIONS

1. THE FOUNDATION DESIGN IS BASED ON AN ASSUMED SOIL BEARING PRESSURE OF 3 ksf. PRIOR TO PLACING FOOTINGS, CONTRACTOR SHALL VERIFY SOIL BEARING PRESSURE.
2. ALL EXISTING FILL MATERIALS, CONSISTING OF GRAVEL, BRICK FRAGMENTS, CONCRETE CHIPS, WOOD CHIPS, AND DEMOLITION DEBRIS SHALL BE REMOVED IN THE REGIONS OF ALL FOUNDATIONS AND UNDER AREAS OF SLAB-ON-GRADE.
3. PROOF ROLL SLAB SUBGRADE UNDER THE DIRECTION OF THE INSPECTION AGENCY. REMOVE ALL UNSUITABLE AREAS AND REPLACE WITH COMPACTED STRUCTURAL FILL MATERIALS. PLACE FILL IN 8" LIFTS AND COMPACT FILL TO AT LEAST 95% OF THE MAXIMUM DENSITY AS DETERMINED BY THE ASTM D1557 MODIFIED PROCTOR TEST. FILL MATERIAL SHALL BE SM OR BETTER AS CLASSIFIED PER ASTM D2487.
4. SHALLOW FOUNDATIONS SHALL BE SPREAD FOOTINGS TO BEAR ON UNDISTURBED NATURAL SOIL OR CONTROLLED STRUCTURAL FILL, HAVING A MINIMUM SAFE BEARING CAPACITY OF 3 KSF.
5. THE TESTING AND INSPECTION AGENCY SHALL VERIFY SOIL BEARING CAPACITY AT EACH FOOTING PRIOR TO INSTALLATION OF FOOTING. NOTIFY ENGINEER OF ANY VARIATION FROM ANTICIPATED BEARING CAPACITY FOR APPROPRIATE REDESIGN OR LOWERING OF FOOTING.
6. THE BOTTOMS OF ALL EXTERIOR FOOTINGS SHALL BE 2'-6" MINIMUM BELOW FINISHED GRADE UNLESS ROCK OF SPECIFIED BEARING CAPACITY IS ENCOUNTERED AT A HIGHER ELEVATION, IN WHICH CASE FOOTING MAY BE RAISED IF APPROVED BY THE ENGINEER.
7. THE CONTRACTOR SHALL SAFEGUARD AND PROTECT ALL EXCAVATIONS, AND ADJACENT STRUCTURES, PAVEMENTS, AND UTILITIES. ALL EXCAVATIONS SHALL BE KEPT FREE OF WATER. THE CONTRACTOR IS RESPONSIBLE FOR THE DESIGN, INSTALLATION, MAINTENANCE, AND REMOVAL OF ALL SHORING, BRACING, AND DEWATERING REQUIRED TO PROPERLY CONSTRUCT THE FOUNDATIONS AND TO PROTECT ADJACENT STRUCTURES, PAVEMENTS AND UTILITIES. DO NOT REMOVE SHORING SUCH AS SHEET PILING IF IT WILL CAUSE SETTLEMENT OR DAMAGE TO EXISTING OR NEW STRUCTURES, PAVEMENT, AND/OR UTILITIES.
8. THE CONTRACTOR SHALL REFER TO THE CIVIL DRAWINGS FOR LOCATIONS OF THE DRAIN TRENCH.

CONCRETE

1. ALL CONCRETE WORK SHALL BE IN ACCORDANCE WITH ACI 301 - "SPECIFICATIONS FOR STRUCTURAL CONCRETE" AND ACI 318 - "BUILDING CODE REQUIREMENTS FOR STRUCTURAL CONCRETE."
2. CONCRETE DESIGN MIX SHALL BE NORMAL WEIGHT WITH A 3,000 PSI 28-DAY COMPRESSIVE STRENGTH. ALL CONCRETE SHALL CONTAIN A WATER-REDUCING ADMIXTURE. CALCIUM CHLORIDE IS PROHIBITED.
3. REPRESENTATIVE TEST CYLINDERS WILL BE TAKEN FROM THE CONCRETE PLACED EACH DAY.
4. REINFORCING STEEL SHALL BE DEFORMED BARS OF NEW BILLET STEEL CONFORMING TO ASTM A615, GRADE 60. REINFORCING STEEL FOR WELDED APPLICATIONS SHALL BE DEFORMED BARS CONFORMING TO ASTM A706.
5. CONCRETE COVER OVER REINFORCING UNLESS OTHERWISE SHOWN, SHALL BE 3" FOR FOOTINGS AND OTHER STRUCTURAL CONCRETE DEPOSITED AGAINST GROUND, 2" FOR CONCRETE PERMANENTLY EXPOSED TO EARTH OR WEATHER AND 3/4" FOR SLABS.
6. NO CONCRETE SHALL BE PLACED IN WATER OR ON FROZEN SUBGRADE.
7. ALL SLABS-ON-GRADE SHALL HAVE THICKENED SECTIONS, DEPRESSIONS, JOINTS, PENETRATIONS, ETC. AS SHOWN IN TYPICAL DETAILS OR AS REQUIRED BY VARIOUS TRADES.
8. FOR ADDITIONAL CONCRETE WORK NOT SHOWN ON STRUCTURAL DRAWINGS, SEE CIVIL DRAWINGS.
9. NO OPENINGS SHALL BE MADE IN ANY STRUCTURAL MEMBER, UNLESS SPECIFICALLY SHOWN ON THE STRUCTURAL DRAWINGS, WITHOUT WRITTEN APPROVAL FROM THE ENGINEER.
10. PROVIDE BAR SUPPORTS AND SPACERS IN ACCORDANCE WITH CRSI MANUAL OF STANDARD PRACTICE AND PROJECT SPECIFICATIONS.

STRUCTURAL STEEL

1. STRUCTURAL STEEL WORK SHALL CONFORM TO THE AISC SPECIFICATION FOR STRUCTURAL STEEL BUILDINGS, ALLOWABLE STRESS DESIGN AND PLASTIC DESIGN AISC 335.
2. STRUCTURAL STEEL MATERIALS SHALL CONFORM TO THE FOLLOWING ASTM DESIGNATIONS:
   A. STRUCTURAL STEEL WIDE FLANGE SHAPES: A992 HAVING A MINIMUM YIELD STRENGTH OF 50 KSI.
   B. OTHER STRUCTURAL STEEL SHAPES, BARS AND PLATES: A36 HAVING A MINIMUM YIELD STRENGTH OF 36 KSI.
1. FASTENERS SHALL CONFORM TO THE FOLLOWING ASTM DESIGNATIONS:
   A. HIGH STRENGTH BOLTS: A490, TYPE 1.
   B. ANCHOR RODS: F1554, GRADE 36.
   C. TWIST-OFF-TYPE, TENSION CONTROL BOLTS: F1852
   D. COMMON BOLTS: A307, GRADE A
   E. NUTS: A563
   F. WASHERS: F436
1. ALL WELDING SHALL BE DONE BY CERTIFIED WELDERS IN ACCORDANCE WITH AWS D.1.1, STRUCTURAL WELDING CODE - STEEL. ALL WELDING ELECTRODES SHALL CONFORM TO THE E-70 SERIES OF THE AWS. REMOVE BACKING BARS AND RUNOFF TABS.
2. ALL BOLTS SHALL BE MINIMUM 3/4" DIAMETER, INSTALLED IN STANDARD HOLES UNLESS OTHERWISE SHOWN OR NOTED.
3. ALL JOINTS USING HIGH STRENGTH BOLTS SHALL BE CONSIDERED PRETENSIONED JOINTS, UNLESS SPECIFICALLY NOTED AS "SNUG TIGHT" ON THE DRAWINGS. ALL HIGH STRENGTH BOLTS IN STANDARD HOLES SHALL BE CONSIDERED TYPE N BOLTS, UNLESS NOTED OTHERWISE. INSTALL BOLTS IN PRETENSIONED JOINTS AND SLIP CRITICAL JOINTS BY THE TURN-OF-NUT METHOD, BY USING A DIRECT TENSION INDICATOR, BY CALIBRATED WRENCH OR USE TWIST-OFF-TYPE TENSION CONTROL BOLTS.
4. ALL FIELD CONNECTIONS SHALL BE HIGH STRENGTH BOLTED EXCEPT WHERE DETAILS INDICATE WELDING.
5. NO PENETRATIONS ARE PERMITTED THROUGH STRUCTURAL STEEL MEMBERS UNLESS INDICATED ON STRUCTURAL DRAWINGS OR WITH WRITTEN APPROVAL OF ENGINEER.
6. BRACE STEEL FRAME DURING ERECTION. THE CONTRACTOR SHALL BE RESPONSIBLE FOR THE MEANS, METHODS AND SAFETY OF ERECTION OF THE STEEL FRAME.
7. CONNECTIONS NOT SHOWN SHALL BE DETAILED IN ACCORDANCE WITH AISC "MANUAL FOR STEEL CONSTRUCTION", NINTH ED. (AISC 335) SHEAR CONNECTIONS SHALL BE DESIGNED PER AISC FOR REACTION EQUAL TO 1/2 THE ALLOWABLE UNIFORM LOAD ON BEAM PER MANUAL (MINIMUM OF 6 KIPS). SHEARS, MOMENTS AND AXIAL FORCES ARE GIVEN AT SERVICE LOAD LEVEL.
8. GROUT UNDER STEEL PLATES SHALL BE NON-SHRINK AND SHALL HAVE A MINIMUM COMPRESSIVE STRENGTH OF 5,000 PSI, UNLESS NOTED OTHERWISE.

METAL DECKING

1. METAL DECK WORK SHALL BE IN ACCORDANCE WITH STEEL DECK INSTITUTE SPECIFICATION FOR STEEL ROOF DECK.
2. METAL DECKING SHALL BE MADE OF STEEL CONFORMING TO ASTM A653 FOR GALVANIZED DECK, HAVING A MINIMUM YIELD STRENGTH OF 33,000 PSI
3. ROOF DECKING SHALL BE GALVANIZED PER ASTM A924 WITH A MINIMUM COATING CLASS, AS DEFINED IN ASTM A653, OF G-90.
4. ALL METAL DECK HAS BEEN DESIGNED TO BE CONTINUOUS OVER 3 SPANS MINIMUM, UNLESS OTHERWISE INDICATED AND SHALL BEAR AT LEAST 1-1/2 INCHES ON STEEL SUPPORTS. FOR ONE OR TWO SPAN CONDITIONS, THE CONTRACTOR SHALL PROVIDE SHORING AS REQUIRED, OR FURNISH HEAVIER GAGE DECK AS REQUIRED TO SUPPORT ALL THE APPLICABLE LOADS. CONTRACTOR SHALL SUBMIT ALTERNATE FOR APPROVAL.
5. DECK SHALL BE WELDED TO SUPPORTING STEEL AT ENDS OF UNITS AND AT ALL INTERMEDIATE SUPPORTS IN ACCORDANCE WITH DETAILS SHOWN OR WHEN NOT SHOWN, IN ACCORDANCE WITH SDI SPECIFICATIONS. WELDING SHALL BE IN ACCORDANCE WITH AWS D1.3-STRUCTURAL WELDING CODE-SHEET STEEL AND SHALL BE DONE BY CERTIFIED WELDERS. SIDE LAPS SHALL BE WELDED OR SCREWED AT 3' O/C MAXIMUM FOR SPANS OVER 5' AND AT END OF AND AT MAXIMUM 12 INCHES ON CENTER FROM THE END OF CANTILEVERED DECK.
6. PROVIDE STANDARD CLOSURES, CANT STRIPS, FINISH STRIPS, AND OTHER ACCESSORIES AS SHOWN ON DRAWINGS OR AS REQUIRED FOR A COMPLETE JOB. ATTACH ACCESSORIES TO SUPPORTS WITH WELDS OR SELF-DRILLING SCREWS SPACED A MAXIMUM OF 12 INCHES O/C.
7. METAL DECK SHALL HAVE THE FOLLOWING MINIMUM PROPERTIES PER FOOT OF WIDTH:
   A. ROOF CONSTRUCTION
   1-1/2", TYPE B, WIDE RIB, 22 GAGE
   I = 0.17 IN. ^4
   S= 0.19 IN. ^3

FIELD DRILLED ADHESIVE ANCHORS

1. FIELD DRILLED ADHESIVE ANCHORS SHALL BE HILTI HVA ADHESIVE ANCHORS AS MANUFACTURED BY HILTI FASTENING SYSTEMS, INC., OR APPROVED EQUAL. ADHESIVE ANCHORS SHALL CONSIST OF ALL-THREAD ANCHOR ROD, NUT, WASHER AND ADHESIVE CAPSULE. THE ADHESIVE CAPSULE USED SHALL CONTAIN A VINYLESTER RESIN AS SUPPLIED IN THE HILTI HEA ADHESIVE CAPSULES, OR APPROVED EQUAL.
2. ANCHORS SHALL BE INSTALLED PER CONTRACT DOCUMENTS AND PER MANUFACTURER'S RECOMMENDATIONS. WHERE THE PROVISIONS ARE IN CONFLICT, THE MOST RESTRICTIVE REQUIREMENT SHALL GOVERN.
3. DO NOT DRILL THROUGH EXISTING EMBEDDED REINFORCING STEEL. LOCATE EXISTING REINFORCING STEEL, CREATE TEMPLATES AND ADJUST LOCATIONS OF HOLES IN MEMBERS BEING ATTACHED TO CLEAR EXISTING EMBEDDED REINFORCING.
4. DO NOT INSTALL ANCHORS WITH LESS THAN MINIMUM BOLT SPACINGS OR LESSER EDGE DISTANCE THAN SHOWN ON DRAWINGS OR IN THE MANUFACTURER'S LITERATURE.
5. ALL ABANDONED HOLES DRILLED IN THE CONCRETE SHALL BE COMPLETELY FILLED WITH GROUT.
6. TYPICALLY HOLES IN CONNECTION PLATES SHALL BE NO MORE THAN 1/16" LARGER THAN THE ADHESIVE ANCHOR ROD DIAMETER. IF LARGER DIAMETER HOLES ARE USED FOR ERECTION PURPOSES THE CONTRACTOR MUST PROVIDE PLATE WASHERS. PLATE WASHERS MUST BE WELDED TO THE CONNECTION PLATE TO TRANSFER THE LOAD.

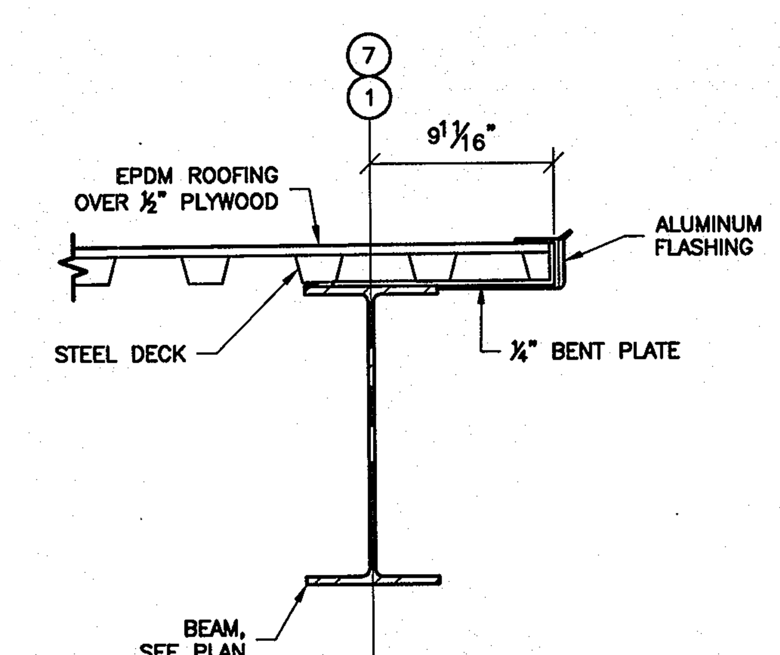

6 SECTION S-2
SCALE: 3/4"=1'-0"

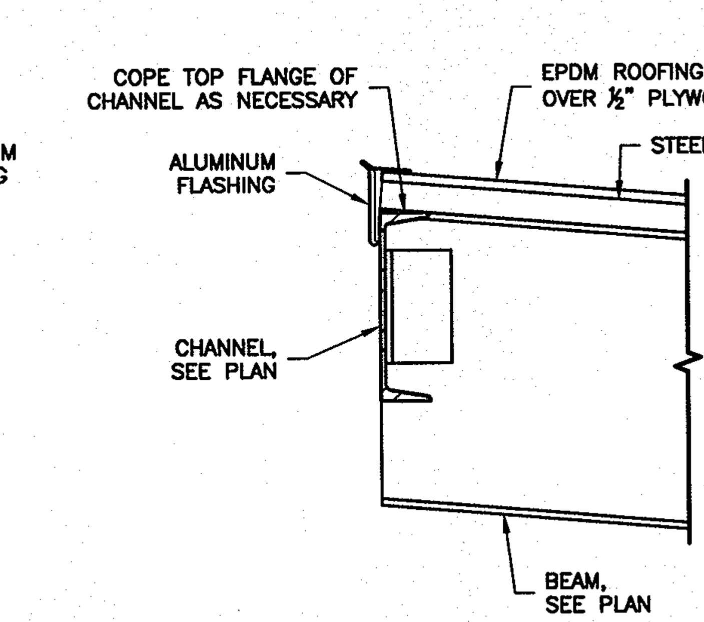

7 DETAIL S-2
SCALE: 3/4"=1'-0"

PROFESSIONAL CERTIFICATION

I hereby certify that these documents were prepared or approved by me, and that I am a duly licensed professional engineer under the laws of the State of Maryland, License No. 19154, Expiration Date May 31, 2009

APPROVED: DEPARTMENT OF PLANNING AND ZONING

Chief, Development Engineering Division — Date 10/2/08
Chief, Division of Land Development — Date 10/5/08
Director — Date 10/8/08

CENTURY ENGINEERING
CONSULTING ENGINEERS - PLANNERS
10710 Gilroy Road, Hunt Valley, MD 21031
Phone: 443.589.2400 Fax: 443.589.2401

8/27/08
STATE OF MARYLAND RICHARD ALLEN BEARD NO. 19154 REGISTERED PROFESSIONAL ENGINEER

DESIGN BY:	BY	NO.	REVISION	DATE
GWS				
DRAWN BY: RDM				
CHECKED BY: RAB				
DATE: 04.25.08				

THE JOHNS HOPKINS UNIVERSITY
APPLIED PHYSICS LABORATORY
11100 JOHNS HOPKINS ROAD
LAUREL, MARYLAND 20723-6099
443-778-5134

STRUCTURAL SECTIONS AND DETAILS
SERVICE & SUPPORT AREA
INFRASTRUCTURE FACILITY PHASE I

TAX MAP: 41 GRID: 16 PARCEL: 123
ELECTION DISTRICT 5-05 HOWARD COUNTY, MARYLAND

C.E.I. PROJECT NUMBER 22172.26

SCALE: AS NOTED

SDP-08-084