WEGMANS FOOD MARKETS
SITE DEVELOPMENT PLAN
PARCEL 'D-2' (redevelopment of Parcel D-1)
TAX MAP PARCEL 356
SECTION 1 AREA 1
SIXTH ELECTION DISTRICT
HOWARD COUNTY, MARYLAND

GENERAL NOTES

1. ALL CONSTRUCTION SHALL BE IN ACCORDANCE WITH THE LATEST STANDARDS AND SPECIFICATIONS OF HOWARD COUNTY PLUS MSHA STANDARDS AND SPECIFICATIONS IF APPLICABLE.

2. THE CONTRACTOR SHALL NOTIFY THE BUREAU OF ENGINEERING/CONSTRUCTION INSPECTION DIVISION AT (410) 313-1880 AT LEAST FIVE (5) WORKING DAYS PRIOR TO START OF WORK.

3. THE CONTRACTOR SHALL NOTIFY "MISS UTILITY" AT 1-800-257-7777 AT LEAST 48-HOURS PRIOR TO ANY EXCAVATION WORK.

4. PROJECT BACKGROUND:

LOCATION:	TAX MAP 36
ZONING:	NT
ELECTION DISTRICT:	6TH ELECTION DISTRICT
SECTION/AREA:	1/1
SITE AREA:	12.2± AC. (AREA OF PARCEL D-2)

APPROVED NAME AND DEPT. OF PLANNING & ZONING REF. FILE NOS.:

FDP PHASE 117-A-11 (AS AMENDED), SDP-72-120c, SDP-89-05, F-72-90, F-23-29, F-05-124 F-07-208 (McGaw Road Improvements) and Contract 24-4504-D, WP-10-71, F-10-120

5. TRAFFIC CONTROL DEVICES, MARKINGS, AND SIGNING SHALL BE IN ACCORDANCE WITH THE LATEST EDITION OF THE MANUAL ON UNIFORM TRAFFIC CONTROL DEVICES (MUTC). ALL STREET AND REGULATORY SIGNS SHALL BE IN PLACE PRIOR TO THE PLACEMENT OF ANY ASPHALT.

6. ALL PLAN DIMENSIONS ARE TO THE FACE OF CURB OR FACE OF BUILDING UNLESS OTHERWISE NOTED. DIMENSIONS ARE MEASURED PERPENDICULAR OF RADIALLY BETWEEN ITEMS UNLESS OTHERWISE NOTED.

7. EXISTING TOPOGRAPHY AND FEATURES WERE DERIVED FROM AVAILABLE PUBLIC RECORDS AND FROM SURVEY BY GUTSCHICK, LITTLE & WEBER, P.A. DONE IN FEBRUARY, 2005.

8. COORDINATES ARE BASED ON HOWARD COUNTY GEODETIC CONTROL STA. NOs. 36IB AND 42CA. THE VERTICAL DATUM IS IN NAVD88.

9. THIS SITE WILL BE SERVED BY PUBLIC WATER & SEWER UNDER CONTRACT #24-4504-D.

10. ALL ON-SITE STORM DRAINS PROPOSED UNDER THIS SDP ARE PRIVATE.

11. THE EXISTING UTILITIES SHOWN HEREIN WERE DERIVED FROM AVAILABLE PUBLIC RECORDS. THE CONTRACTOR MUST HAND DIG TEST PITS AT ALL UTILITY CROSSINGS AND CONNECTION POINTS TO VERIFY EXACT LOCATION.

12. ALL PROPOSED RAMPS SHALL BE IN ACCORDANCE WITH CURRENT A.D.A. STANDARDS. MAXIMUM SIDEWALK CROSS SLOPE SHALL BE (2%) TWO PERCENT. PROVIDE A MINIMUM OF (5x5) FIVE BY FIVE FOOT LEVEL LANDING (2% MAX.) AT THE TOP AND BOTTOM OF ALL RAMPS AND BUILDING INGRESS/EGRESS POINTS.

13. ALL ON-SITE PAVING AND ROADWAYS ARE PRIVATELY OWNED AND MAINTAINED.

14. ANY DAMAGE TO COUNTY OWNED RIGHT-OF-WAY TO BE CORRECTED AT THE CONTRACTOR'S EXPENSE.

15. TRENCH BEDDING FOR STORM DRAINAGE STRUCTURES SHALL BE IN ACCORDANCE WITH HOWARD COUNTY STANDARD G2.01. CLASS "C" BEDDING, UNLESS OTHERWISE NOTED.

16. GUTTER PAN OF CURBS SHALL BE PITCHED TO CONFORM TO THE ADJACENT DRAINAGE PATTERN OF THE ADJOINING PAVING FOR VEHICULAR USE. FOR CONCRETE CURB AND GUTTER, SEE DETAIL ON SHEET 3.

17. ALL CURB FILLETS ARE 5' RADIUS UNLESS NOTED OTHERWISE. SPOT ELEVATIONS ALONG CURB LINE ARE FOR THE FLOW LINE (BOTTOM OF CURB), UNLESS NOTED OTHERWISE.

18. THERE ARE NO KNOWN GRAVE SITES OR CEMETERIES ON THIS SITE.

19. OTHER TOPICS RELATED TO THIS SITE:
- APPFO & TRAFFIC STUDY PREPARED BY THE TRAFFIC GROUP (MAY 23, 2007).
- SUBSURFACE EXPLORATION AND GEOTECHNICAL EVALUATION BY SPECIALIZED ENGINEERING (MAR. 5, 2007).

20. ALL OUTSIDE LIGHTING SHALL COMPLY WITH ZONING REGULATION SECTION 134 WHICH REQUIRES LIGHTS TO BE INSTALLED TO DIRECT/REFLECT LIGHT DOWNWARDS AND INWARDS ON SITE AWAY FROM ALL ADJOINING PUBLIC STREETS AND RESIDENTIAL AREAS. SEE SHEET 3 FOR LIGHTING SCHEDULE.

21. ALL BUILDINGS SHALL HAVE AN INSIDE WATER METER SETTING. ALL BUILDINGS SHALL BE EQUIPPED WITH AN AUTOMATIC FIRE PREVENTION SPRINKLER SYSTEM.

22. THIS SITE DEVELOPMENT PLAN IS EXEMPT FROM THE REQUIREMENTS OF THE FOREST CONSERVATION ACT IN ACCORDANCE WITH SECTION 16.1202(B)(1)(IV) OF THE HOWARD COUNTY CODE FOR A PLANNED UNIT DEVELOPMENT (NT) WHICH HAS PRELIMINARY DEVELOPMENT PLAN APPROVAL AND WAS MORE THAN 50% DEVELOPED PRIOR TO 12/31/92.

23. THERE ARE NO WETLANDS, STREAMS, FLOODPLAIN OR REQUIRED BUFFERS ON THIS SITE. ALSO, THERE ARE NO HISTORIC STRUCTURES OR CEMETERIES LOCATED ON THIS SITE.

24. THIS PLAN HAS BEEN PREPARED IN ACCORDANCE WITH THE PROVISIONS OF SECTION 16.124 OF THE HOWARD COUNTY CODE AND THE LANDSCAPE MANUAL. LANDSCAPE SURETY FOR THE REQUIRED LANDSCAPING IS POSTED AS PART OF THE DEVELOPER'S AGREEMENT FOR THIS SDP. FOR INFORMATION ON THE REQUIRED LANDSCAPE PLANTING AND ASSOCIATED SURETY SEE SHEETS 11 & 12.

25. THE MINIMUM BUILDING SETBACK RESTRICTIONS FROM PROPERTY LINES AND PUBLIC ROAD RIGHT-OF-WAYS ARE TO BE IN ACCORDANCE WITH FDP-117-A-11 RECORDED ON 9-27-07 AS PLAT NOs. 19417 thru 19423.

26. THIS PROJECT IS SUBJECT TO THE AMENDED FIFTH EDITION OF THE SUBDIVISION AND LAND DEVELOPMENT REGULATIONS PER COUNCIL BILL 45-2003 AND THE ZONING REGULATIONS AS AMENDED BY COUNCIL BILL 75-2003. DEVELOPMENT OR CONSTRUCTION ON THIS PROPERTY MUST COMPLY WITH SETBACK AND BUFFER REGULATIONS IN EFFECT AT THE TIME OF SUBMISSION OF THE SITE DEVELOPMENT PLAN, WAIVER PETITION APPLICATION OR BUILDING/GRADING PERMIT APPLICATIONS.

27. STORMWATER MANAGEMENT IS PROVIDED BY A SURFACE SAND FILTER POND (FACILITY-A) AND BY AN UNDERGROUND PIPE MANIFOLD SYSTEM (FACILITY-B). FACILITY-A PROVIDES WATER QUALITY (WQv) FOR THE ENTIRE SITE AS WELL AS WATER QUALITY FOR THE ROAD IMPROVEMENTS UNDER F-07-208. FACILITY-B CONSISTS OF A STORMCEPTOR FOLLOWED BY A 72" CMP UNDERGROUND MANIFOLD. THIS FACILITY CONTROLS THE DISCHARGE OF THE 2 AND 10 YEAR STORM TO THE EXISTING POST OFFICE POND LOCATED IN THE SOUTHERN CORNER OF THE PROPERTY. BOTH FACILITY-A AND FACILITY-B ARE PRIVATELY OWNED AND MAINTAINED.

28. ON JANUARY 31, 2008 THE HOWARD COUNTY PLANNING BOARD APPROVED THIS SDP (EXCEPT FOR THE CLOCK TOWER HEIGHT ADJUSTMENT). ON APRIL 24, 2008 THE HOWARD COUNTY PLANNING BOARD APPROVED THIS SDP FOR THE REQUESTED HEIGHT ADJUSTMENT FOR THE CLOCK TOWER. On April 7, 2011 the planning board approved the relocation of the clock tower to the northeast corner of the parking garage.

29. Any future expansions may require an update to the traffic study and stormwater design.

WP-10-71
was approved on 12/23/09 to allow the right-in/right-out from this site (Parcel D-2) to Snowden River Parkway (SRP) which is restricted for vehicular ingress/egress per Section 16.119(f). The remaining portion of SRP along this site is still restricted.

WP-10-22
On Oct. 28, 2009 the planning director approved request to waive section 16.156(o)(1)(i) requiring the developer to apply to the department of inspections, licenses and permits for building permits to initiate construction on the site within 1 Yr. of signature approval of the site development plan original. The developer shall apply for building permits for all construction authorized by the approved site development plan within 2 years from the date of the approval letter from the department of Planning and Zoning (October 28, 2009), or by the new plan expiration date of October 28, 2011.

HOWARD COUNTY CONTROL
NAD83 & NAVD88 (VERTICAL DATA)

36IB	N 553348.6361 E 1364085.2553 ELEV.=385.72
42CA	N 551695.7342 E 1362506.4222 ELEV.=376.50

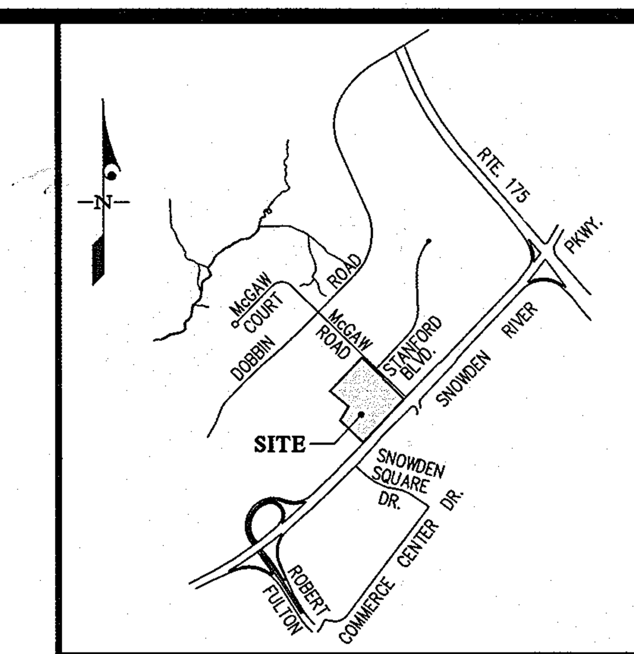

VICINITY MAP
1"=2000'

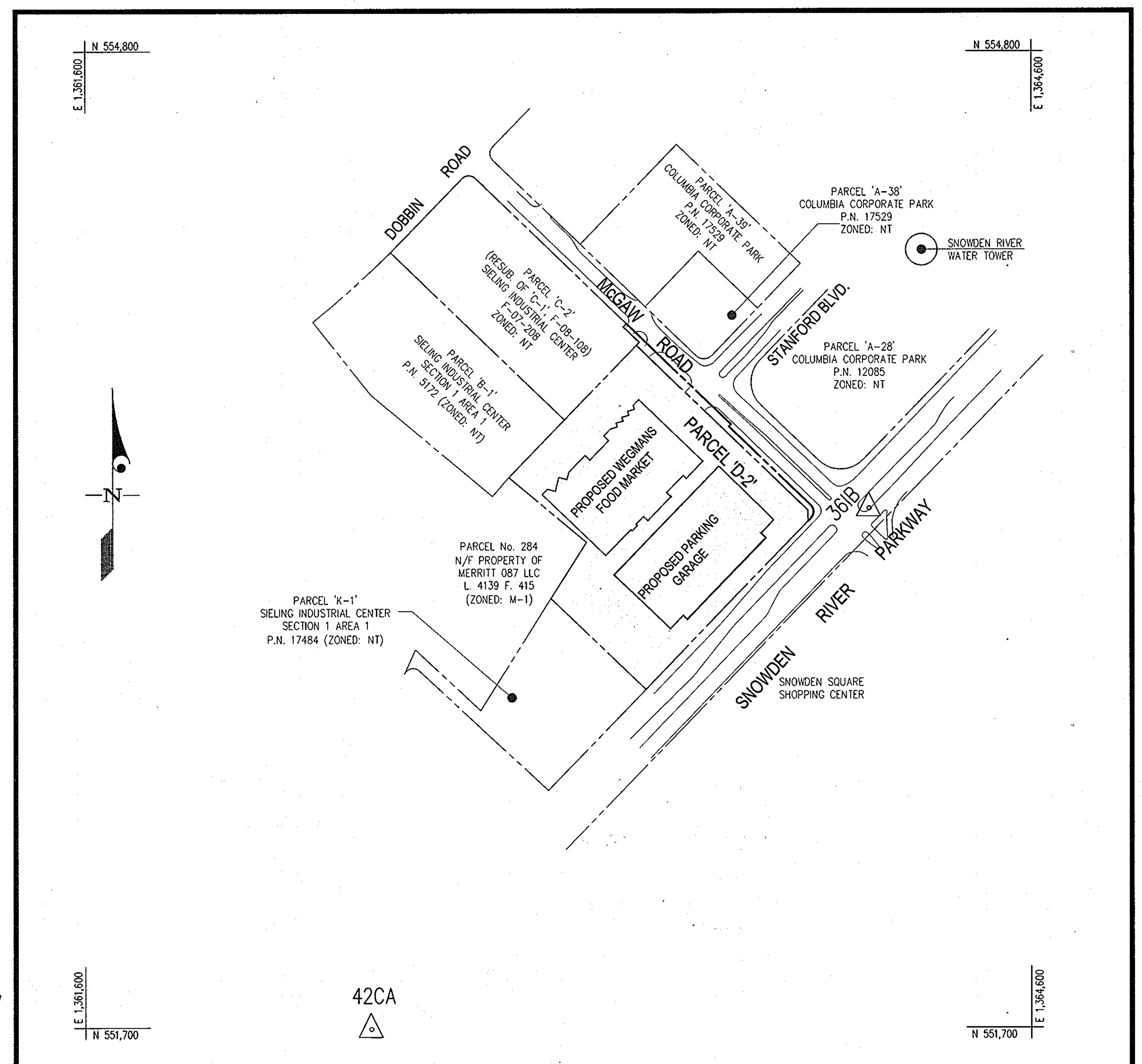

SITE OVERVIEW SCALE: 1" = 300'

SITE ANALYSIS DATA

1. GENERAL SITE DATA
   - A. PRESENT ZONING: NT-EMPLOYMENT CENTER INDUSTRIAL
   - B. PROPOSED USE OF SITE OR STRUCTURES: REDEVELOPMENT WITH A WEGMANS FOOD STORE AND A PARKING GARAGE

2. AREA TABULATION
   - A. SITE AREA: 12.2± ACRES (Area of Parcel D-2 = Parcel D-1 at 12.6± ac. less 0.40 ac. of public road dedication)
   - B. AREA OF THIS PLAN SUBMISSION: 12.2± AC
   - C. LIMIT OF DISTURBED AREA BY THIS SDP: 12.6± ACRES
   - D. BUILDING AREA:
     - WEGMANS STORE = 160,000 S.F. (116,927 s.f. 1st floor + 28,084 s.f. Mezzanine
     - PARKING STRUCTURE = 137,146 S.F. (128,524 s.f. footprint + 8,622 s.f. ramp)
   - E. BUILDING COVERAGE OF SITE (50% MAXIMUM LOT COVERAGE ALLOWED IN ACCORDANCE WITH FDP-117-A-II):
     - WEGMANS STORE = 21.9% ±
     - PARKING STRUCTURE = 25.8% ±
     - TOTAL = 47.7% ±
   - F. TOTAL PAVED SURFACES (DRIVEWAYS, SURFACE PARKING, SIDEWALKS, PLAZAS, ETC.) ON SITE: 3.59± ACRES OR 29.4% ± OF THE SITE

3. OPEN SPACE DATA
   - A. OPEN SPACE REQUIRED ON SITE: N/A
   - B. OPEN SPACE PROPOSED: N/A

4. PARKING SPACE DATA
   - A. REQUIRED PARKING PER SEC.133.D.4.m OF THE ZONING REGULATIONS AND PER FDP-117-A-II: 800 SPACES ARE REQUIRED GENERAL RETAIL @ 5.0 PER 1000 S.F. OF GROSS FLOOR AREA
   - B. PARKING PROVIDED:
     - 68 STANDARD 90° 9x18 SURFACE PARKING SPACES
     - 713 STANDARD 90° 9X18 PARKING GARAGE SPACES
     - 3 REGULAR HANDICAP PARKING SPACES IN THE PARKING GARAGE
     - 30 VAN-ACCESSIBLE HANDICAP PARKING SPACES IN THE PARKING GARAGE
     - 814 TOTAL PARKING SPACES PROVIDED

SHEET INDEX

1. COVER SHEET
2. SITE DEVELOPMENT PLAN
3. SITE DEVELOPMENT PLAN / SITE DETAILS
4. CURB AND PAVING DELINEATION PLAN / SITE DETAILS
5. STORM DRAIN & STORMWATER MANAGEMENT DRAINAGE AREA MAP
6. STORMWATER MANAGEMENT NOTES & DETAILS / SWM PROFILES
7. STORM DRAIN PROFILES / UTILITY PROFILES
8. DEMOLITION PLAN
9. SEDIMENT CONTROL PLAN
10. SEDIMENT CONTROL NOTES AND DETAILS
11. LANDSCAPE PLAN
12. DETAILS, LANDSCAPE NOTES & SCHEDULES
13. Retaining Wall / Guard Plan & Elevation Sheet 1
14. Retaining Wall / Guard Plan & Elevation Sheet 2
15. Retaining Wall & Pier Sections
16. Decorative Pier Plans Sections
17. Structural Plan & Details ~ Retaining Wall
18. Structural Notes & Sections ~ Retaining Wall
19. Rear Retaining Wall ~ Plan, Sections & Elevation
20. Seating Area ~ Plan, Sections & Elevation
21. Retaining Walls ~ Plan & Sections

APPROVED
PLANNING BOARD OF HOWARD COUNTY

DATE January 31, 2008 and April 24, 2008 & April 7, 2011
KS

APPROVED: FOR PUBLIC WATER & SEWERAGE SYSTEM HOWARD COUNTY HEALTH DEPARTMENT
B Nyan for Peter Beilenson 8/28/2008
County Health Officer SD Date

APPROVED: HOWARD COUNTY DEPARTMENT OF PLANNING & ZONING
Director Date 9/3/08
Chief, Division of Land Development Date 9/2/08 KS
Chief, Development Engineering Division Date 8/20/08

PROFESSIONAL CERTIFICATION
I HEREBY CERTIFY THAT THESE PLANS WERE PREPARED OR APPROVED BY ME, AND THAT I AM A DULY LICENSED PROFESSIONAL ENGINEER UNDER THE LAWS OF THE STATE OF MARYLAND, LICENSE NO. 12975, EXPIRATION DATE: MAY 26, 2010.
7-28-08

WATER CODE: E06	SEWER CODE: 3380000	ADDRESS CHART	
		STORE BLDG.	8855 McGAW ROAD
		PARKING GARAGE	8815 McGAW ROAD

PROJ. NAME:	COLUMBIA SEILING INDUSTRIAL CENTER PARCEL D-2 (WEGMANS FOOD MARKETS)	SECTION/AREA 1/1	PARCEL(S) D-2

PLAT	ZONE	TAX MAP	BLOCK	ELEC. DIST.	CENSUS TRACT
17484, 20012 & 21178	NT	36	24	6	6067.03

GLW GUTSCHICK LITTLE & WEBER, P.A.
CIVIL ENGINEERS, LAND SURVEYORS, LAND PLANNERS, LANDSCAPE ARCHITECTS
3909 NATIONAL DRIVE - SUITE 250 - BURTONSVILLE OFFICE PARK
BURTONSVILLE, MARYLAND 20866
TEL: 301-421-4024 BALT: 410-880-1820 DC/VA: 301-989-2524 FAX: 301-421-4186

\Drawings\07005\SDP\07005-CS.dwg	DES. MBT	DRN. klp	CHK.

DATE	REVISION	BY	APP'R.
1/13/2010	revise parking count and added WP-10-22 & WP-10-71	klp	

PREPARED FOR:

OWNER/DEVELOPER/LAND LEASER:	LAND LEASEE:
SCIENCE FICTION, LLC C/O ANTWERPEN AUTOMOTIVE GROUP 6440 BALTIMORE NATIONAL PIKE CATONSVILLE, MD 21228	WEGMANS FOOD MARKETS, INC. 100 WEGMANS MARKET STREET ROCHESTER, NY 14624
CONTACT: Stanford Hess	CONTACT: STEPHEN LEATY 585-464-4600 EXT. 6833

COVER SHEET
WEGMANS FOOD MARKETS
COLUMBIA SIELING INDUSTRIAL CENTER
PARCEL 'D-2' (redevelopment of Parcel D-1)
TAX MAP PARCEL 356
SECTION I, AREA I; PLAT Nos. 17484 & 20012 & 21178
6TH ELECTION DISTRICT HOWARD COUNTY, MARYLAND

SCALE	ZONING	G. L. W. FILE No.
AS SHOWN	NT	07005
DATE	TAX MAP - GRID	SHEET
July/2008	TM 36 - 24	1 OF 21

SDP-07-131

SITE DEVELOPMENT PLAN LEGEND

- 366 — EXISTING CONTOUR
- 300 — PROPOSED CONTOUR
- +32.10 — PROPOSED SPOT ELEVATION
- EXISTING STORM DRAIN
- PROPOSED STORM DRAIN
- M-30 / I-31
- PROPOSED ELECTRIC CONDUIT ENCASED (DUCT BANK)
- G — EXISTING GAS LINE
- EX. 8"S. — EXISTING SANITARY SEWER
- 8"S. (priv.) — SANITARY SEWER (PRIVATE)
- EX. 8"W. — WATERLINE (PUBLIC)
- WHC (PRIVATE)
- EXISTING FIRE HYDRANT
- EXISTING CURB & GUTTER
- LIMIT OF GRADING DISTURBANCE

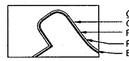

- CONCRETE/PAVER SIDEWALK (DET. 1/4)
- EASEMENT AREA (SHADED)
- (6) — NUMBER OF PARKING SPACES
- EXISTING LIGHT FIXTURES & POLE
- PROPOSED LIGHT FIXTURES & POLE
- G2 — SOIL BORING LOCATION AND No.

NOTES:

1. UNLESS NOTED OTHERWISE, PROPOSED SPOT ELEVATIONS ALONG THE CONCRETE CURB & GUTTER ARE TO THE FLOW LINE (BOTTOM OF CURB) AT THE PC'S/PT'S, CORNERS AND TERMINUSES.
2. SEE ROAD CONSTRUCTION PLAN F-07-208 FOR THE PUBLIC ROAD IMPROVEMENT WORK TO McGAW ROAD AND SNOWDEN RIVER PARKWAY ASSOCIATED WITH THIS SDP.
3. ALL ON-SITE PAVING AND ROADWAYS ARE PRIVATE.
4. ALL ON-SITE STORM DRAIN ARE PRIVATE AND SHALL BE PRIVATELY MAINTAINED. THE ON-SITE WATER IS PRIVATELY MAINTAINED EXCEPT THE PORTION OF THE 8"W. AND FIRE HYDRANTS THAT ARE WITHIN THE "PUBLIC WATER & UTILITY EASEMENT". ALL ON-SITE PRIVATE SEWER LINES AND STRUCTURES SHALL BE PRIVATELY MAINTAINED.
5. FOR INFORMATION OF THE PUBLIC PORTION OF THE ON-SITE WATER AND SEWER LINE, SEE DPW CONTRACT No. 24-4504-D.
6. UNLESS NOTED OTHERWISE, ALL PLAN DIMENSION ARE TO THE FACE OF STRUCTURE (BLDG, CURB, ETC.). DIMENSIONS ARE MEASURED PERPENDICULAR OR RADIAL BETWEEN ITEMS, UNLESS NOTED OTHERWISE.
7. ALL CURB RADII ARE 5' (FACE OF CURB @ FLOW LINE) UNLESS NOTED OTHERWISE.
8. A KNOX BOX (FIRE DEPARTMENT ACCESS BOX) IS REQUIRED TO BE PLACED ON THE FRONT OF THE STORE BUILDING. IT SHALL BE PLACED TO THE RIGHT OF THE MAIN ENTRANCE AT A RANGE OF 4'-5' IN HEIGHT AND NO MORE THAN 6' LATERALLY FROM THE DOOR. THE BOX SHALL BE ELECTRONICALLY MONITORED TO NOTIFY THE OWNER THAT IT IS BEING ACCESSED (INTEGRATED WITH THE FIRE ALARM SYSTEM).
9. THE TOP OF THE FOOTINGS FOR THE COLUMNS ALONG THE SOUTH SIDE OF THE ELEVATED GARAGE RAMP SHALL BE SET A MINIMUM OF 1.0' BELOW THE INVERT OF THE ADJACENT PUBLIC WATER MAIN (SEE CONTRACT #24-4504-D).
10. SIDEWALK ALONG McGAW ROAD SHALL BE BY THE ROAD CONTRACTOR (NOT THE SITE CONTRACTOR).

PROFESSIONAL CERTIFICATION

I HEREBY CERTIFY THAT THESE PLANS WERE PREPARED OR APPROVED BY ME, AND THAT I AM A DULY LICENSED PROFESSIONAL ENGINEER UNDER THE LAWS OF THE STATE OF MARYLAND, LICENSE NO. 12975, EXPIRATION DATE: MAY 26, 2012.

STATE OF MARYLAND — PATRICK K. GUTSCHICK — REG. NO. 12975 — PROFESSIONAL ENGINEER

3-2-11

APPROVED
PLANNING BOARD OF HOWARD COUNTY
DATE January 31, 2008, April 24, 2008 and April 7, 2011

APPROVED: FOR PUBLIC WATER & SEWERAGE SYSTEM
HOWARD COUNTY HEALTH DEPARTMENT

County Health Officer — Date

APPROVED: HOWARD COUNTY DEPARTMENT OF PLANNING & ZONING

Director — Date 3/21/11

Chief, Division of Land Development — Date 3/21/11

Chief, Development Engineering Division — Date 3/14/11

DATE	REVISION	BY	APP'R.
11/7/2012	added stop bars for parking garage	klp	
3/3/2011	REVISE BLDG. & PARKING GARAGE FOOTPRINTS; REV. GRADING. RELOCATE CLOCK TOWER TO GARAGE CORNER.	KLP	
06/11/2010	Revised eastern parking facilities, storm drain system and water main to affect necessary changes for the access to S.R.P.	klp/mbt	

GLW GUTSCHICK LITTLE & WEBER, P.A.
CIVIL ENGINEERS, LAND SURVEYORS, LAND PLANNERS, LANDSCAPE ARCHITECTS
3909 NATIONAL DRIVE – SUITE 250 – BURTONSVILLE OFFICE PARK
BURTONSVILLE, MARYLAND 20866
TEL: 301-421-4024 BALT: 410-880-1820 DC/VA: 301-989-2524 FAX: 301-421-4186

L:\CADD\DRAWINGS\07005\SDP\07005-SDP.dwg | DES. MBT | DRN. KLP | CHK.

PREPARED FOR:

OWNER/DEVELOPER/LAND LEASER:
SCIENCE FICTION, LLC
C/O ANTWERPEN AUTOMOTIVE GROUP
6440 BALTIMORE NATIONAL PIKE
CATONSVILLE, MD 21228
CONTACT: STANFORD HESS

LAND LEASEE:
WEGMANS FOOD MARKETS, INC.
100 WEGMANS MARKET STREET
ROCHESTER, NY 14624
CONTACT: STEPHEN LEATY
585-464-4600 EXT. 6833

(REVISED) SITE DEVELOPMENT PLAN

WEGMANS FOOD MARKETS

COLUMBIA SIELING INDUSTRIAL CENTER
PARCEL 'D-2' (redevelopment of Parcel D-1)
TAX MAP PARCEL 356
SECTION 1, AREA 1; PLAT Nos. 17484, 20012 & 21178

6TH ELECTION DISTRICT — HOWARD COUNTY, MARYLAND

SCALE	ZONING	G. L. W. FILE No.
1"=40'	NT	07005
DATE	TAX MAP – GRID	SHEET
JUNE/2010	TM 36 – 24	2 OF 21

SDP-07-131

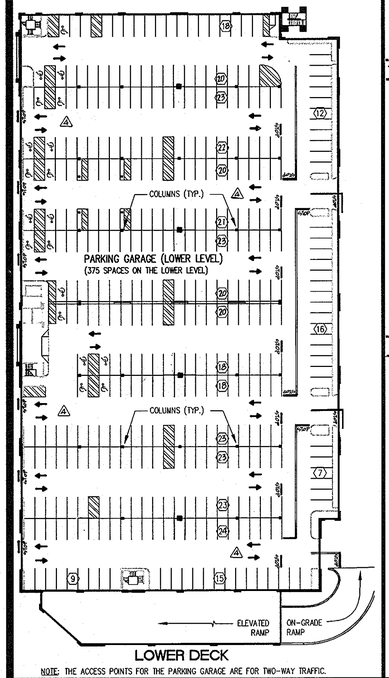

LOWER DECK

NOTE: THE ACCESS POINTS FOR THE PARKING GARAGE ARE FOR TWO-WAY TRAFFIC.

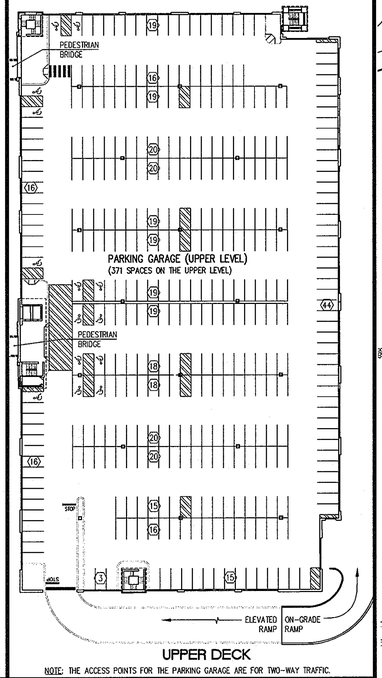

UPPER DECK

NOTE: THE ACCESS POINTS FOR THE PARKING GARAGE ARE FOR TWO-WAY TRAFFIC.

GARAGE PARKING SPACE LAYOUT

NOTE: SEE BUILDING CONSTRUCTION DRAWINGS BY PARKING GARAGE CONSULTANT FOR DIMENSIONS, UTILITY, MECHANICAL, & OTHER INFORMATION ON GARAGE. SCALE: 1" = 60'

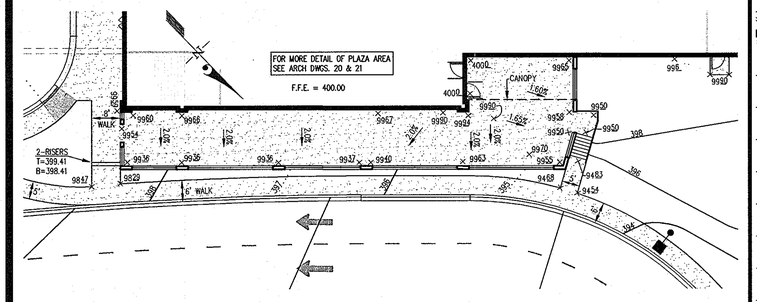

DETAIL OF PLAZA AREA GRADING SCALE: 1" = 20'

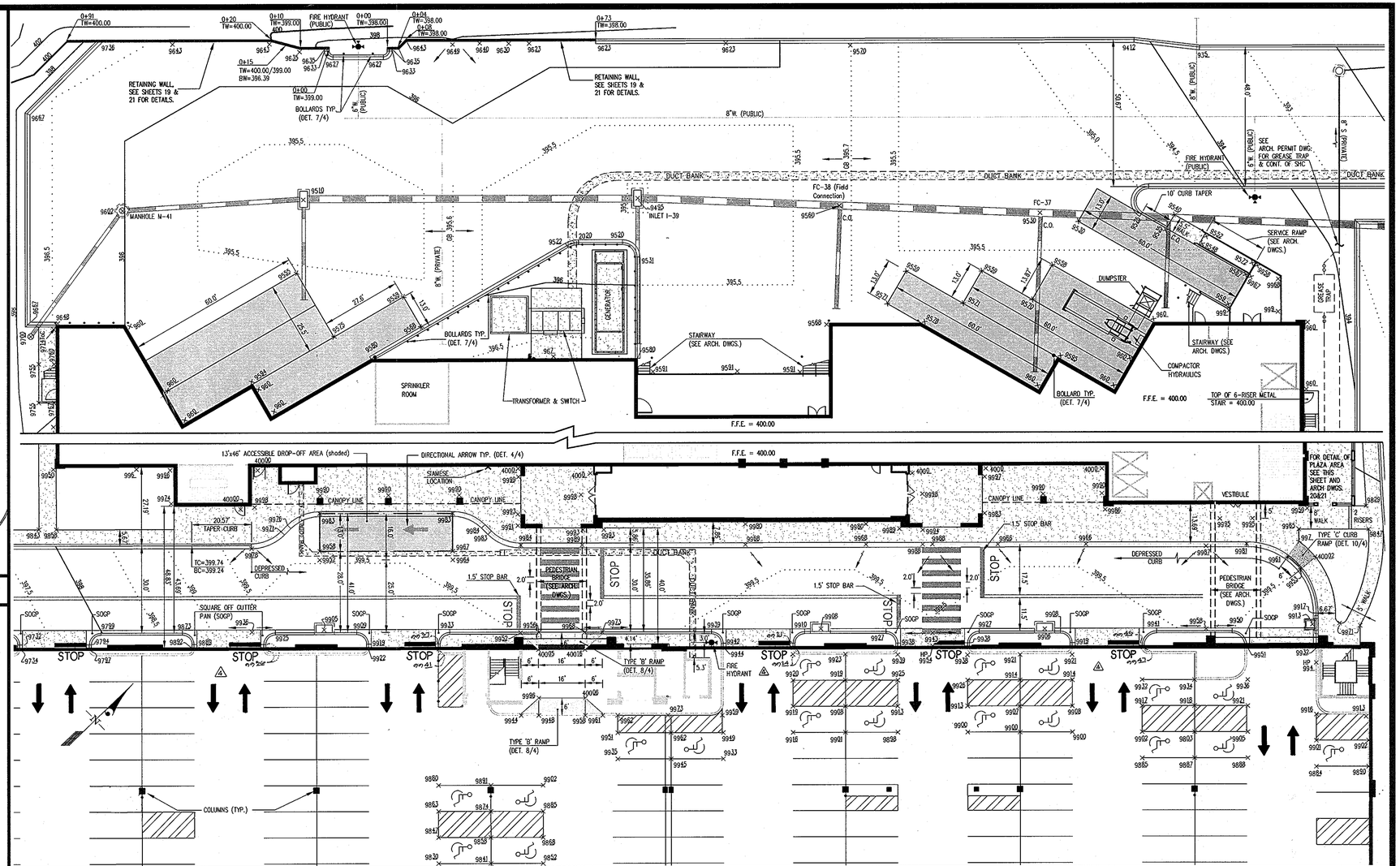

DETAIL OF FRONT OF BUILDING and LOADING DOCK (AT REAR OF BUILDING) SCALE: 1" = 20'

PROFESSIONAL CERTIFICATION

I HEREBY CERTIFY THAT THESE PLANS WERE PREPARED OR APPROVED BY ME, AND THAT I AM A DULY LICENSED PROFESSIONAL ENGINEER UNDER THE LAWS OF THE STATE OF MARYLAND, LICENSE NO. 12975, EXPIRATION DATE: MAY 26, 2012.

3-2-11

STATE OF MARYLAND — CARLTON K. GUTSCHICK — REG. NO. 12975 — PROFESSIONAL ENGINEER

APPROVED
PLANNING BOARD OF HOWARD COUNTY
DATE January 31, 2008, April 24, 2008 and April 7, 2011

APPROVED: FOR PUBLIC WATER & SEWERAGE SYSTEM
HOWARD COUNTY HEALTH DEPARTMENT

County Health Officer — Date

APPROVED: HOWARD COUNTY DEPARTMENT OF PLANNING & ZONING

Director — Date 3/21/11

Chief, Division of Land Development — Date 3/21/11

Chief, Development Engineering Division — Date 3/14/11

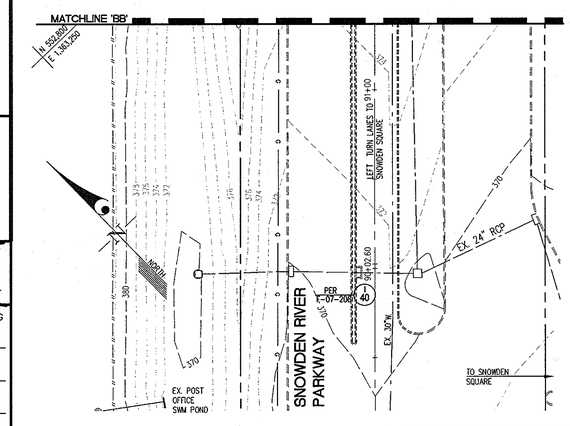

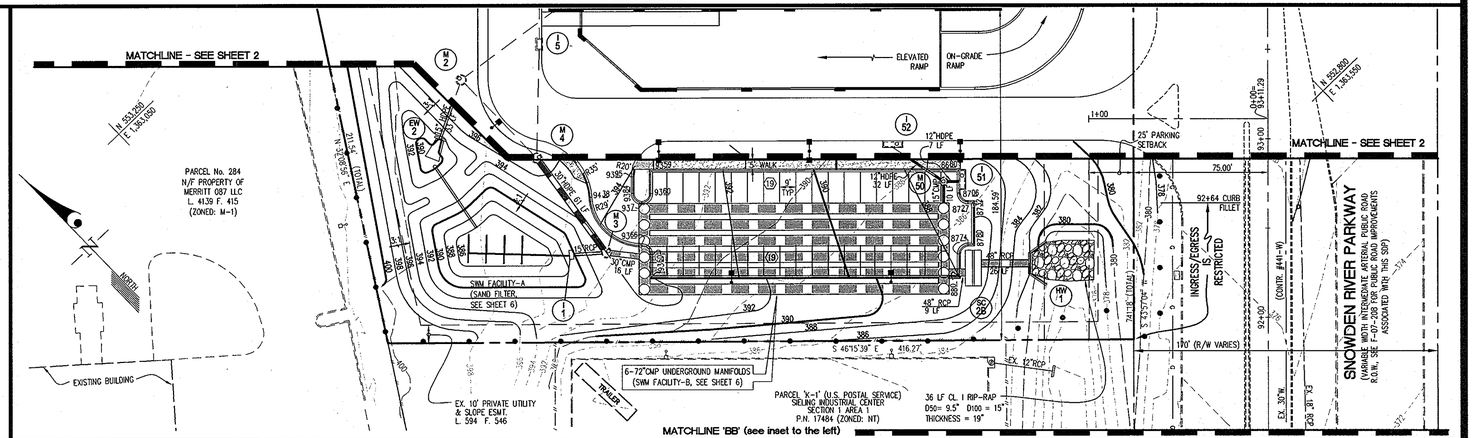

GLW GUTSCHICK LITTLE & WEBER, P.A.
CIVIL ENGINEERS, LAND SURVEYORS, LAND PLANNERS, LANDSCAPE ARCHITECTS
3909 NATIONAL DRIVE – SUITE 250 – BURTONSVILLE OFFICE PARK
BURTONSVILLE, MARYLAND 20866
TEL: 301-421-4024 BALT: 410-880-1820 DC/VA: 301-989-2524 FAX: 301-421-4186

L:\CADD\DRAWINGS\07005\SDP\07005-SDP.dwg | DES. MBT | DRN. KLP | CHK.

DATE	REVISION	BY	APP'R.
11/7/2012	added stop bars for parking gar. & double yellow striping; rev. esmt. corner locations	klp	
3/3/2011	REV. BUILDING & PARKING GARAGE FOOTPRINTS; REVISE LOADING DOCK & FRONT OF BLDG. DETAIL & PARKING GAR. LAYOUT	KLP	
06/11/2010	Revised eastern parking facilities, storm drain system and water main to affect necessary changes for the access to S.R.P.	KLP/MBT	

PREPARED FOR:

OWNER/DEVELOPER/LAND LEASER:
SCIENCE FICTION, LLC
C/O ANTWERPEN AUTOMOTIVE GROUP
6440 BALTIMORE NATIONAL PIKE
CATONSVILLE, MD 21228
CONTACT: STANFORD HESS

LAND LEASEE:
WEGMANS FOOD MARKETS, INC.
100 WEGMANS MARKET STREET
ROCHESTER, NY 14624
CONTACT: STEPHEN LEATY
585-464-4600 EXT. 6833

(REVISED) SITE DEVELOPMENT PLAN

WEGMANS FOOD MARKETS

COLUMBIA SIELING INDUSTRIAL CENTER
PARCEL 'D-2' (redevelopment of Parcel D-1)
TAX MAP PARCEL 356
SECTION 1, AREA 1; PLAT Nos. 17484, 20012 & 21178

6TH ELECTION DISTRICT — HOWARD COUNTY, MARYLAND

SCALE	ZONING	G. L. W. FILE No.
1"=40'	NT	07005
DATE	TAX MAP – GRID	SHEET
JUNE/2010	TM 36 – 24	3 OF 21

SDP-07-131

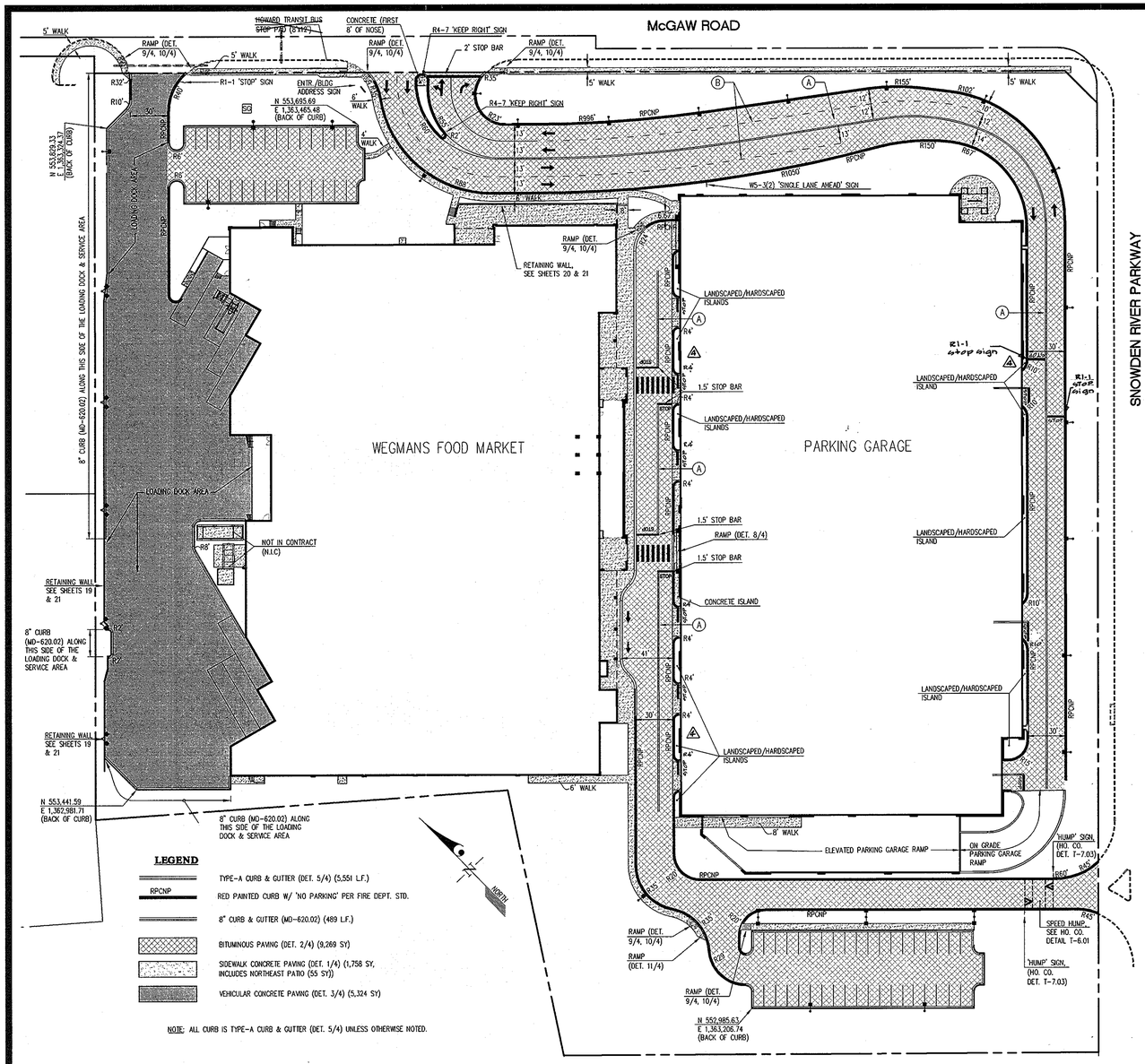

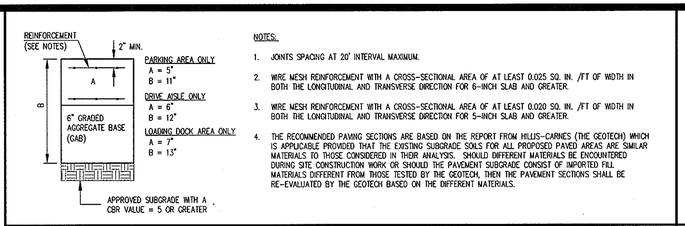

3 **VEHICULAR CONCRETE PAVING SECTIONS** NO SCALE

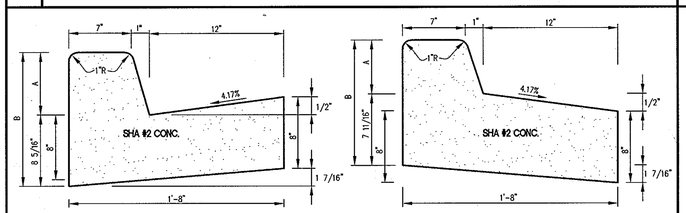

CURB TYPE	A	B
6"	6"	1'-2 5/16"
7"	7 3/16"	1'-3 1/2"

NOTES:
1. 50' MAX. BETWEEN EXPANSION JOINTS & 10' MAX. BETWEEN CONTROL JOINTS.
2. UNLESS NOTED OTHERWISE, ALL ON-SITE CURB & GUTTER SHALL BE 6" HIGH. CURB & GUTTER IN PUBLIC R.O.W. SHALL BE 7"-TYPE.
3. STANDARD CURB & GUTTER SHALL BE USED WHERE THE DRIVEWAY SLOPES TOWARDS THE CURB & GUTTER. REVERSE CURB & GUTTER SHALL BE USED WHERE THE DRIVEWAY SLOPES AWAY FROM THE CURB & GUTTER.

4 **PAINTED VEHICULAR TRAFFIC DIRECTIONAL ARROWS** NO SCALE

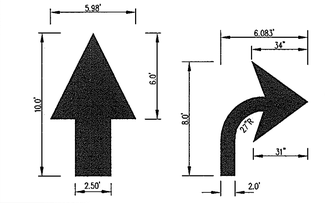

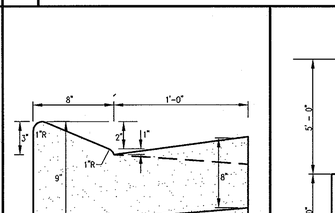

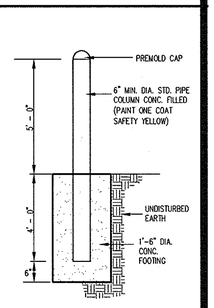

5 **TYPE-A CONCRETE CURB AND GUTTER (STANDARD AND REVERSE)** NO SCALE

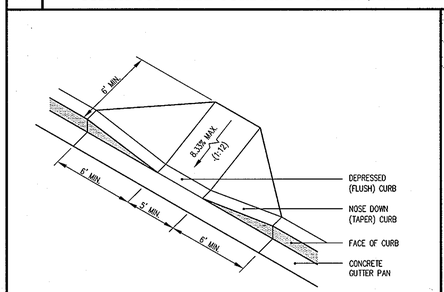

NOTE: SEE HO. CO. DET. 4.07 FOR REQUIRED DETECTABLE WARNING SURFACE

6 **TYPE-C COMBINATION CURB and GUTTER** NO SCALE

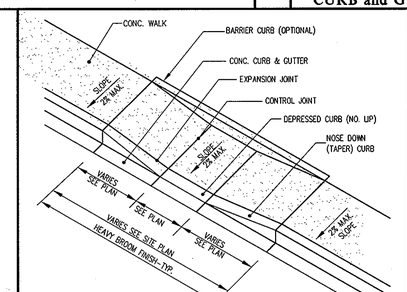

NOTE: SEE HO. CO. DET. 4.07 FOR REQUIRED DETECTABLE WARNING SURFACE

7 **BOLLARD DETAIL** NO SCALE

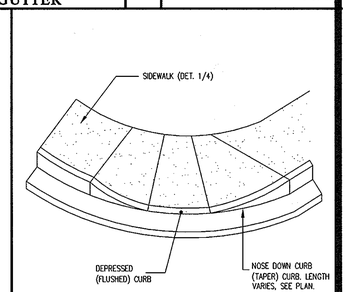

NOTE: SEE HO. CO. DET. 4.07 FOR REQUIRED DETECTABLE WARNING SURFACE

8 **TYPE-B HANDICAP RAMP DETAIL** NO SCALE

9 **TYPE-C HANDICAP RAMP DETAIL** NO SCALE

10 **TYPICAL CURB/NOSE DOWN TAPER AT INTERSECTION** NO SCALE

NORTH ELEVATION (FRONTAGE on McGAW ROAD) SCALE: 1" = 40'

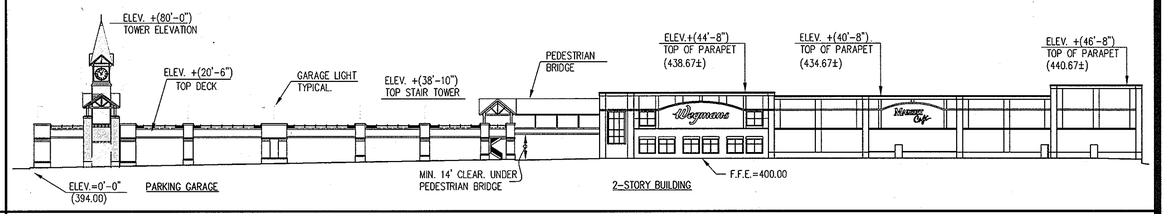

EAST ELEVATION (FRONTAGE on SNOWDEN RIVER PARKWAY) SCALE: 1" = 40'

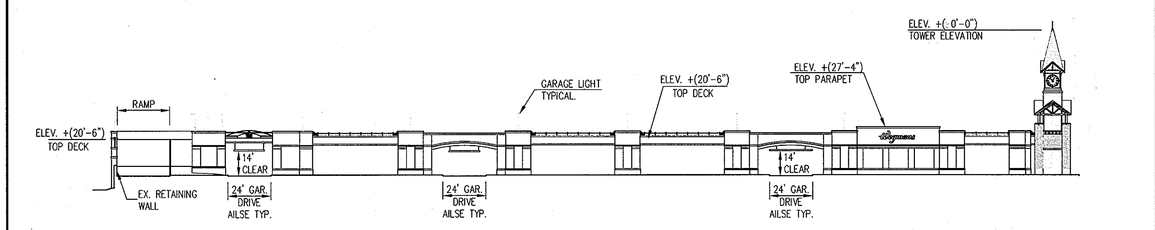

CURB & PAVING DELINEATION PLAN SCALE: 1" = 50'

APPROVED
PLANNING BOARD OF HOWARD COUNTY
DATE January 31, 2008, April 24, 2008 and April 7, 2011

APPROVED: FOR PUBLIC WATER & SEWERAGE SYSTEM HOWARD COUNTY HEALTH DEPARTMENT
County Health Officer — Date

APPROVED: HOWARD COUNTY DEPARTMENT OF PLANNING & ZONING
Director — Date 3/21/11
Chief, Division of Land Development — Date 3/21/11
Chief, Development Engineering Division — Date 3/14/11

STATE OF MARYLAND — STEVEN K. GUTSCHICK — REG. NO. 12975 — PROFESSIONAL ENGINEER
3-2-11
PROFESSIONAL CERTIFICATION
I HEREBY CERTIFY THAT THESE PLANS WERE PREPARED OR APPROVED BY ME, AND THAT I AM A DULY LICENSED PROFESSIONAL ENGINEER UNDER THE LAWS OF THE STATE OF MARYLAND, LICENSE NO. 12975, EXPIRATION DATE: MAY 26, 2012.

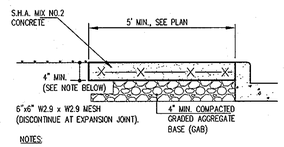

NOTES:
1. UNLESS SHOWN OTHERWISE, INSTALL EXPANSION JOINTS AT MAX. 20'-0" O.C. AND SCORING JOINTS AT MAX. 5'-0" O.C.
2. CONCRETE THICKNESS SHALL BE 7" AT DRIVEWAY LOCATIONS.
3. PROVIDE 1/2" PREFORMED BITUMINOUS EXPANSION JOINT WHERE SIDEWALK ABUTS AGAINST CURB AND SET SIDEWALK 1/4" ABOVE CURB PER HO. CO. DET. R-3.05.

1 **TYPICAL SIDEWALK SECTION** NO SCALE

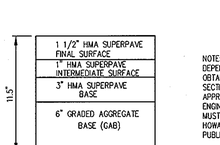

NOTE:
DEPENDING ON THE CBR VALUES OBTAINED IN THE FIELD, THE PAVING SECTIONS MAY BE REVISED, IF APPROVED BY A PROFESSIONAL SOILS ENGINEERS. THESE SUBSTITUTIONS MUST ALSO BE APPROVED BY THE HOWARD COUNTY DEPARTMENT OF PUBLIC WORKS.

2 **BITUMINOUS PAVING SECTION** NO SCALE

GLW GUTSCHICK LITTLE & WEBER, P.A.
CIVIL ENGINEERS, LAND SURVEYORS, LAND PLANNERS, LANDSCAPE ARCHITECTS
3909 NATIONAL DRIVE – SUITE 250 – BURTONSVILLE OFFICE PARK
BURTONSVILLE, MARYLAND 20866
TEL: 301-421-4024 BALT: 410-880-1820 DC/VA: 301-989-2524 FAX: 301-421-4186

DATE	REVISION	BY	APP'R.
11/7/2012	⚠ added step bars for parking garage	klp	
3/3/2011	REV. PAVING & CURB DELINEATION PLAN TO REFLECT CHANGES DUE TO NEW BLDG, LOADING DOCK & PARKING GARAGE, REV. BLDG. ELEVATIONS	KLP	
06-11-2010	Revised Curb/Paving Delineation Plan and Building Elevations.		

\DRAWINGS\07005\SDP\07005-PAVING.dwg | DES. MBT | DRN. KLP | CHK. MBT

PREPARED FOR:

OWNER/DEVELOPER/LAND LEASER:
SCIENCE FICTION, LLC
C/O ANTWERPEN AUTOMOTIVE GROUP
6440 BALTIMORE NATIONAL PIKE
CATONSVILLE, MD 21228
CONTACT: STANFORD HESS

LAND LEASER:
WEGMANS FOOD MARKETS, INC.
100 WEGMANS MARKET STREET
ROCHESTER, NY 14624
CONTACT: STEPHEN LEATY
585-464-4600 EXT. 6833

(REVISED) CURB & PAVING DELINEATION PLAN / SITE DETAILS

WEGMANS FOOD MARKETS

COLUMBIA SIEBLING INDUSTRIAL CENTER
PARCEL 'D-2' (redevelopment of Parcel D-1)
TAX MAP PARCEL 356
SECTION 1, AREA 1; PLAT Nos. 17484, 20012 & 21178
6TH ELECTION DISTRICT — HOWARD COUNTY, MARYLAND

SCALE	ZONING	G. L. W. FILE No.
AS SHOWN	NT	07005
DATE	TAX MAP – GRID	SHEET
JUNE/2010	TM 36 – 24	4 OF 21

SDP-07-131

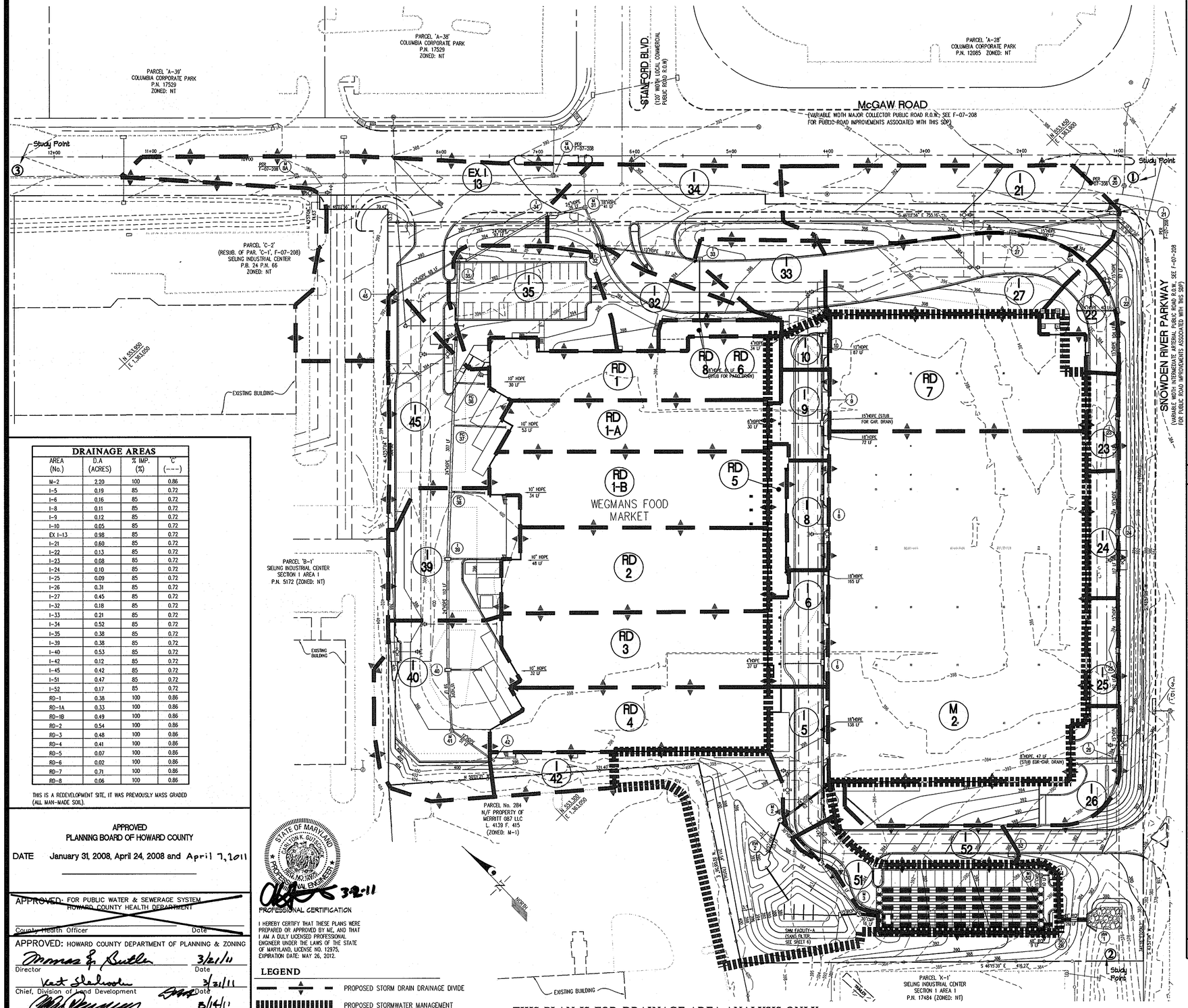

DRAINAGE AREAS			
AREA (No.)	D.A (ACRES)	% IMP. (%)	'C' (---)
M-2	2.20	100	0.86
I-5	0.19	85	0.72
I-6	0.16	85	0.72
I-8	0.11	85	0.72
I-9	0.12	85	0.72
I-10	0.05	85	0.72
EX I-13	0.98	85	0.72
I-21	0.60	85	0.72
I-22	0.13	85	0.72
I-23	0.08	85	0.72
I-24	0.10	85	0.72
I-25	0.09	85	0.72
I-26	0.31	85	0.72
I-27	0.45	85	0.72
I-32	0.18	85	0.72
I-33	0.21	85	0.72
I-34	0.52	85	0.72
I-35	0.38	85	0.72
I-39	0.38	85	0.72
I-40	0.53	85	0.72
I-42	0.12	85	0.72
I-45	0.42	85	0.72
I-51	0.47	85	0.72
I-52	0.17	85	0.72
RD-1	0.38	100	0.86
RD-1A	0.33	100	0.86
RD-1B	0.49	100	0.86
RD-2	0.54	100	0.86
RD-3	0.48	100	0.86
RD-4	0.41	100	0.86
RD-5	0.07	100	0.86
RD-6	0.02	100	0.86
RD-7	0.71	100	0.86
RD-8	0.06	100	0.86

THIS IS A REDEVELOPMENT SITE, IT WAS PREVIOUSLY MASS GRADED (ALL MAN-MADE SOIL).

APPROVED
PLANNING BOARD OF HOWARD COUNTY
DATE January 31, 2008, April 24, 2008 and April 7, 2011

APPROVED: FOR PUBLIC WATER & SEWERAGE SYSTEM
HOWARD COUNTY HEALTH DEPARTMENT

County Health Officer — Date

APPROVED: HOWARD COUNTY DEPARTMENT OF PLANNING & ZONING

Director — Date 3/21/11

Chief, Division of Land Development — Date 3/21/11

Chief, Development Engineering Division — Date 5/14/11

STATE OF MARYLAND
ERIK K. GUTSCHICK
No. 12975
REGISTERED PROFESSIONAL ENGINEER

3-2-11
PROFESSIONAL CERTIFICATION

I HEREBY CERTIFY THAT THESE PLANS WERE PREPARED OR APPROVED BY ME, AND THAT I AM A DULY LICENSED PROFESSIONAL ENGINEER UNDER THE LAWS OF THE STATE OF MARYLAND, LICENSE NO. 12975, EXPIRATION DATE: MAY 26, 2012.

LEGEND

PROPOSED STORM DRAIN DRAINAGE DIVIDE

PROPOSED STORMWATER MANAGEMENT DRAINAGE DIVIDE

THIS PLAN IS FOR DRAINAGE AREA ANALYSIS ONLY

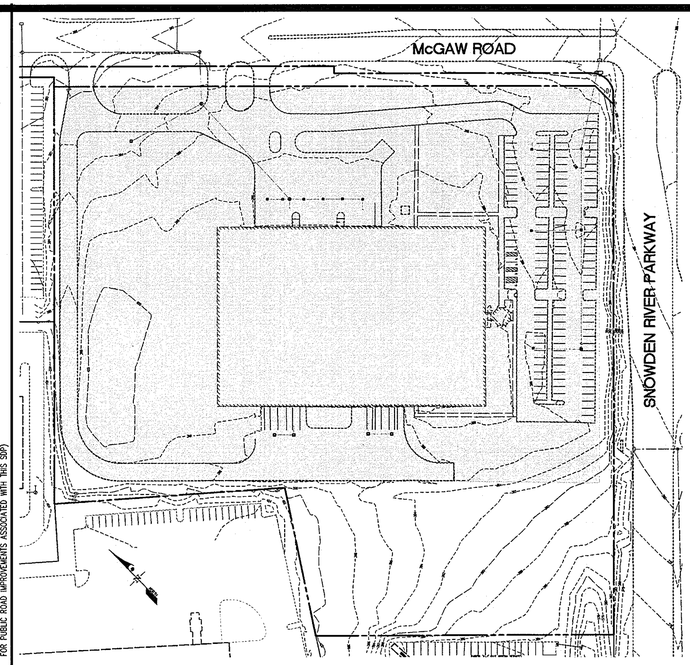

TOTAL SITE AREA = 10.5 Ac
TOTAL IMPERVIOUS AREA = 9.5 Ac

EXISTING IMPERVIOUS ENVELOPE SCALE: 1" = 100'

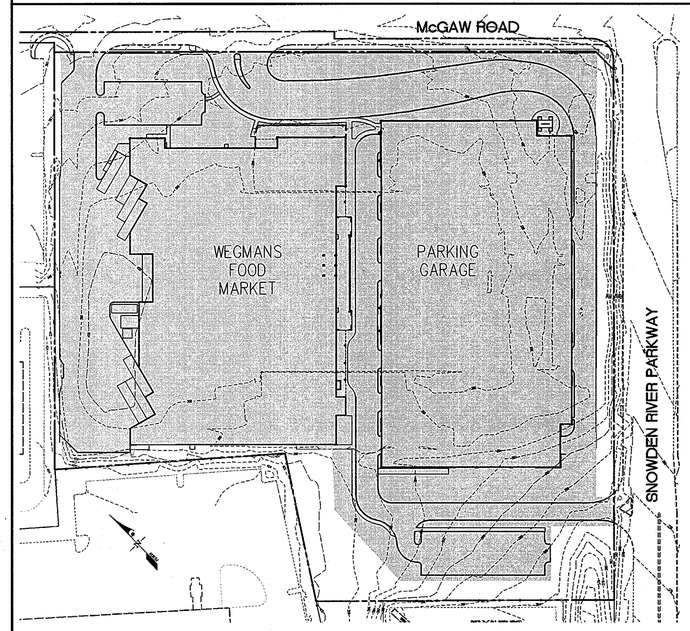

TOTAL SITE AREA = 12.2 Ac
TOTAL IMPERVIOUS AREA = 10.8 Ac

PROPOSED IMPERVIOUS ENVELOPE SCALE: 1" = 100'

GLW GUTSCHICK LITTLE & WEBER, P.A.
CIVIL ENGINEERS, LAND SURVEYORS, LAND PLANNERS, LANDSCAPE ARCHITECTS
3909 NATIONAL DRIVE – SUITE 250 – BURTONSVILLE OFFICE PARK
BURTONSVILLE, MARYLAND 20866
TEL: 301-421-4024 BALT: 410-880-1820 DC/VA: 301-989-2524 FAX: 301-421-4186

\DRAWINGS\07005\SDP\07005-UTILITIES.dwg | DES. dds | DRN. klp | CHK. dds

DATE	REVISION	BY	APP'R.
03-3-2011	REV. BLDG., PARKING GARAGE & LOADING DOCK AREA, REV. SD IN FRONT & BEHIND BLDG. ;REV. DA ACCORDINGLY		
06-11-2010	Update Drainage Areas for changes associated with Snowden River Pkwy. access and expansion of service area (I-44)		

PREPARED FOR:

OWNER/DEVELOPER/LAND LEASER:
SCIENCE FICTION, LLC
C/O ANTWERPEN AUTOMOTIVE GROUP
6440 BALTIMORE NATIONAL PIKE
CATONSVILLE, MD 21228
CONTACT: STANFORD HESS

LAND LEASEE:
WEGMANS FOOD MARKETS, INC.
100 WEGMANS MARKET STREET
ROCHESTER, NY 14624
CONTACT: STEPHEN LEATY
585-464-4600 EXT. 6833

(REVISED) STORM DRAIN / STORMWATER MANAGEMENT DRAINAGE AREA MAP

WEGMANS FOOD MARKETS

COLUMBIA SIELING INDUSTRIAL CENTER
PARCEL 'D-2' (redevelopment of Parcel D-1)
TAX MAP PARCEL 356
SECTION 1, AREA 1; PLAT Nos. 17484, 20012 & 21178
6TH ELECTION DISTRICT — HOWARD COUNTY, MARYLAND

SCALE	ZONING	G. L. W. FILE No.
1" = 50'	NT	07005
DATE	TAX MAP – GRID	SHEET
JUNE/2010	TM 36 – 24	5 OF 21

SDP-07-131

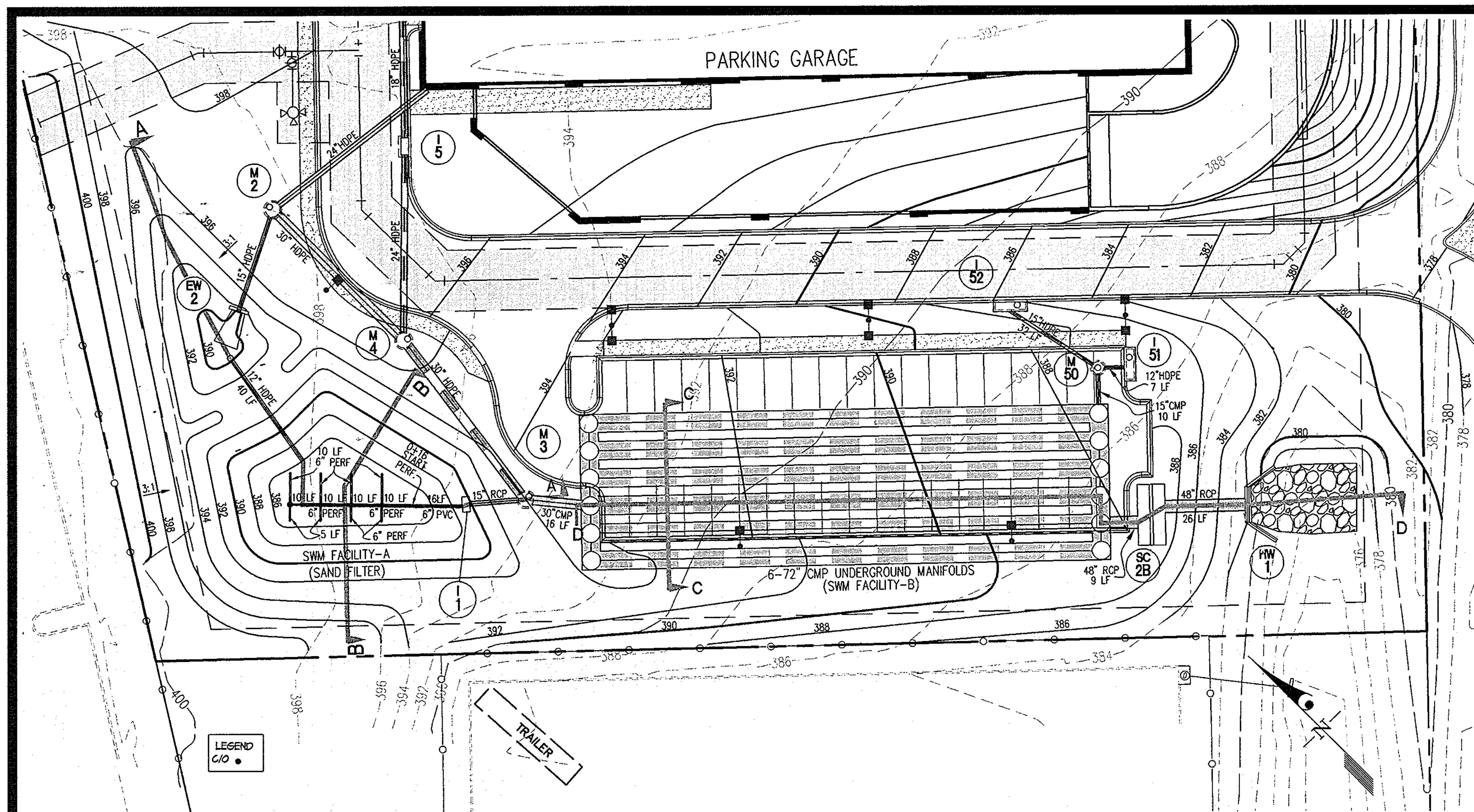

STORMWATER MANAGEMENT POND 'A' & FACILITY 'B'

SCALE: 1" = 30'

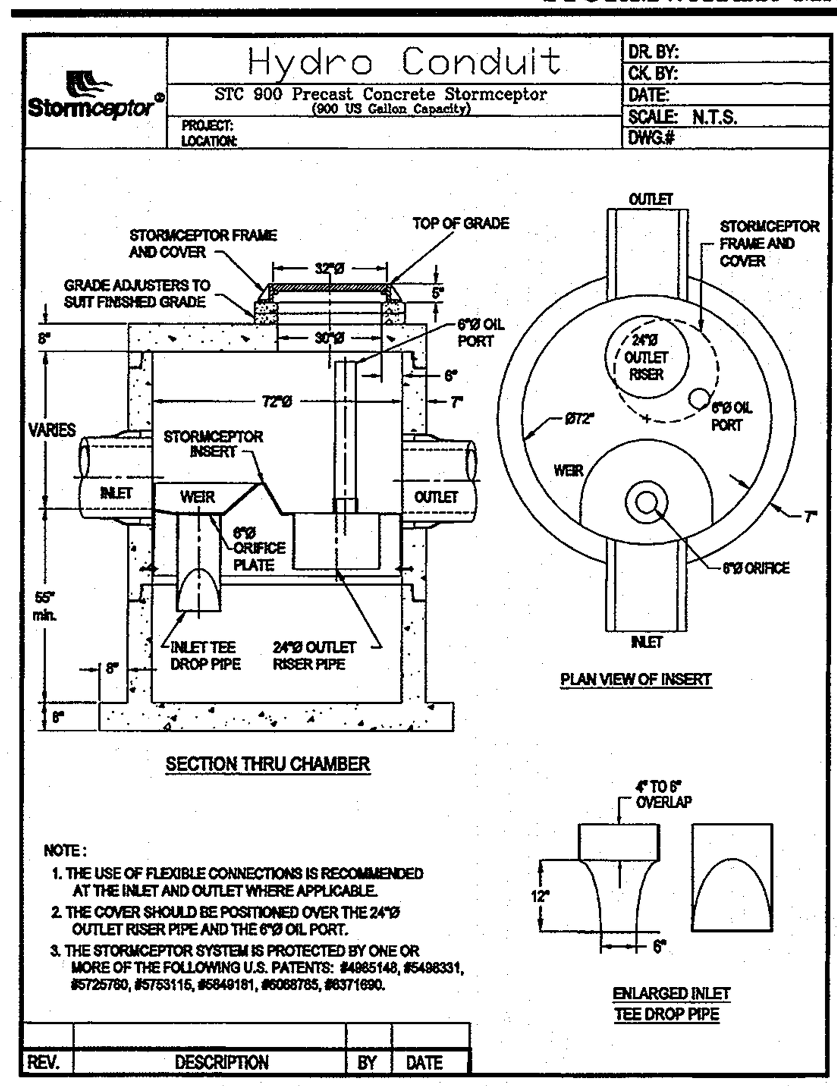

M-4 DETAIL NO SCALE

OPERATION AND MAINTENANCE SCHEDULE
PRIVATE STORMWATER MANAGEMENT FACILITY

ROUTINE MAINTENANCE

1. THE FACILITY SHALL BE INSPECTED ANNUALLY AND AFTER MAJOR STORMS. INSPECTIONS SHOULD BE PERFORMED DURING WET WEATHER TO DETERMINE IF THE POND IS FUNCTIONING PROPERLY.

2. TOP AND SIDE SLOPES OF THE EMBANKMENT SHALL BE MOWED A MINIMUM OF TWO (2) TIMES A YEAR, ONCE IN JUNE AND ONCE IN SEPTEMBER. OTHER SIDE SLOPES, THE BOTTOM OF THE POND, AND MAINTENANCE ACCESS SHOULD BE MOWED AS NEEDED.

3. DEBRIS AND LITTER NEXT TO THE OUTLET STRUCTURE SHALL BE REMOVED DURING REGULAR MOWING OPERATIONS AND AS NEEDED.

4. VISIBLE SIGNS OF EROSION IN THE POND AS WELL AS RIP-RAP OUTLET AREA SHALL BE REPAIRED AS SOON AS IT IS NOTICED.

NON-ROUTINE MAINTENANCE

1. STRUCTURAL COMPONENTS OF THE POND SUCH AS THE DAM, THE RISER, AND THE PIPES SHALL BE REPAIRED UPON DETECTION OF ANY DAMAGE. THE COMPONENTS SHOULD BE INSPECTED DURING ROUTINE MAINTENANCE OPERATIONS.

2. SEDIMENT SHOULD BE WHEN ITS ACCUMULATION SIGNIFICANTLY REDUCES THE DESIGN STORAGE, INTERFERES WITH THE FUNCTION OF THE RISER, WHEN DEEMED NECESSARY FOR AESTHETIC REASONS, OR WHEN DEEMED NECESSARY.

OPERATION AND MAINTENANCE SCHEDULE

NOTE: COMPONENTS ARE TO BE INSPECTED QUARTERLY

FACILITY COMPONENT REQUIRING MAINTENANCE	MAINTENANCE ACTIVITY	WHEN MAINTENANCE ACTIVITY IS REQUIRED	EXPECTED FACILITY PERFORMANCE AFTER MAINTENANCE
STORAGE MANIFOLD	TRASH AND DEBRIS REMOVAL, & SEDIMENT REMOVAL.	FLOATABLE OBJECTS OR OTHER DEBRIS IS PRESENT IN THE FILTER OR MANIFOLD SYSTEM.	FILTRATION CAPACITY IS MAXIMIZED.
PIPING FITTINGS & CONTROL DEVICES.	ENSURE ALL FITTINGS ARE SECURE AND THAT ALL CONTROLS ARE UNCLOGGED. FLUSH WITH WATER.	DRAINAGE SYSTEM IS OBSTRUCTED BY DEBRIS OR SEDIMENT.	SYSTEM FLOWS FREELY.
STORMCEPTOR	REMOVE ALL WATER AND POLLUTANTS FROM STRUCTURE	SEDIMENT ACCUMULATES TO A DEPTH OF THREE FEET IN THE TREATMENT SUMP OR AFTER A SPILL.	STRUCTURE IS EMPTY.

SWM POND A SUMMARY TABLE

Type (per MDE): SURFACE SAND FILTER (F1)
Non – MDE 378 Facility
Total Drainage Area To Facility = 2.33 acres
WQv Required = 0.28 ac-ft
WQv Provided = 0.28 ac-ft
WQv WSEL = 391.00
Q-1YR = 0.06 cfs
CPv Not Required
1-YR WSEL = 391.00
100-YR WSEL = 391.50
Low-flow Outfall: 6" Perforated Underdrain
High-flow Outfall: I-1 Weir @ 391.00
Media Depth: 1.5'
T.O.D. = 392.0
Outfall: M-1

SWM FACILITY B SUMMARY TABLE

Type: UNDERGROUND PIPE MANIFOLD
Non – MDE 378 Facility
Total Drainage Area To Facility = 5.29 acres
Q-1YR = 2.23 cfs
CPv Not Required
1-YR WSEL = 379.59
Q-2YR = 2.61 cfs
2-YR WSEL = 380.30
Q-10YR = 7.89
10-YR WSEL = 382.59
Q-100 YR = 40.65
100-YR WSEL = 383.47
Low-flow Outfall: 7.5" Orifice @ 377.0
Mid Flow Wier: 5" Weir @ 380.25
High-flow Outfall: 18' Weir @ 382.60
1068 LF 72" CMP
INV. = 377.0
OUTFALL: Study Point 2

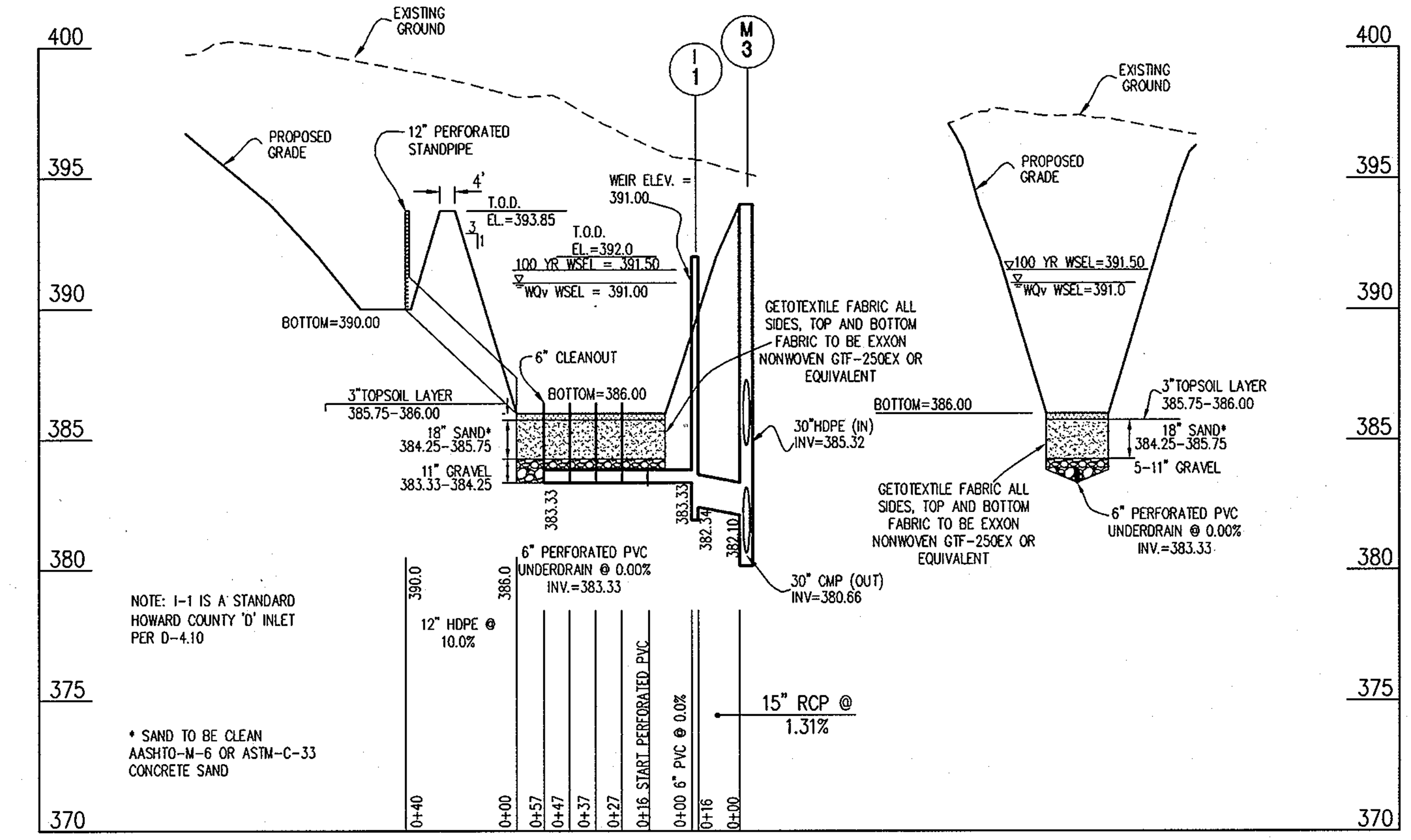

PROFILE THROUGH A-A PRINCIPAL SPILLWAY FACILITY 'A' SCALE: 1"=50' (H) 1"=5' (V) PROFILE THROUGH B-B

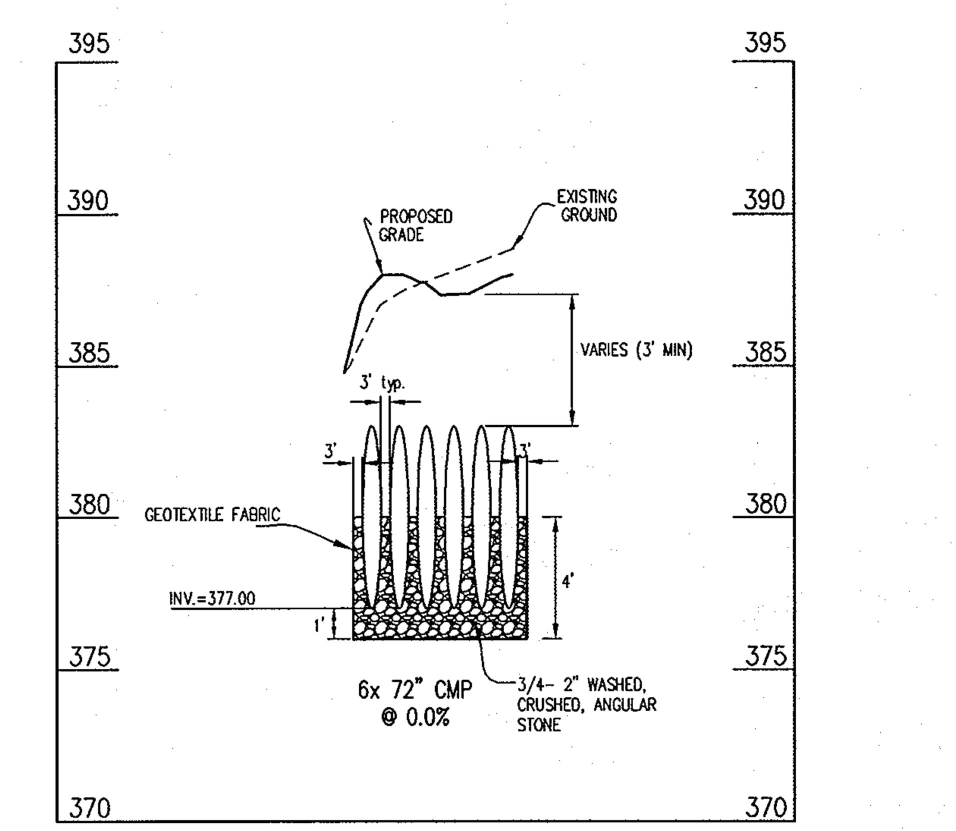

PROFILE THROUGH C-C SCALE: 1"=50' (H) 1"=5' (V)

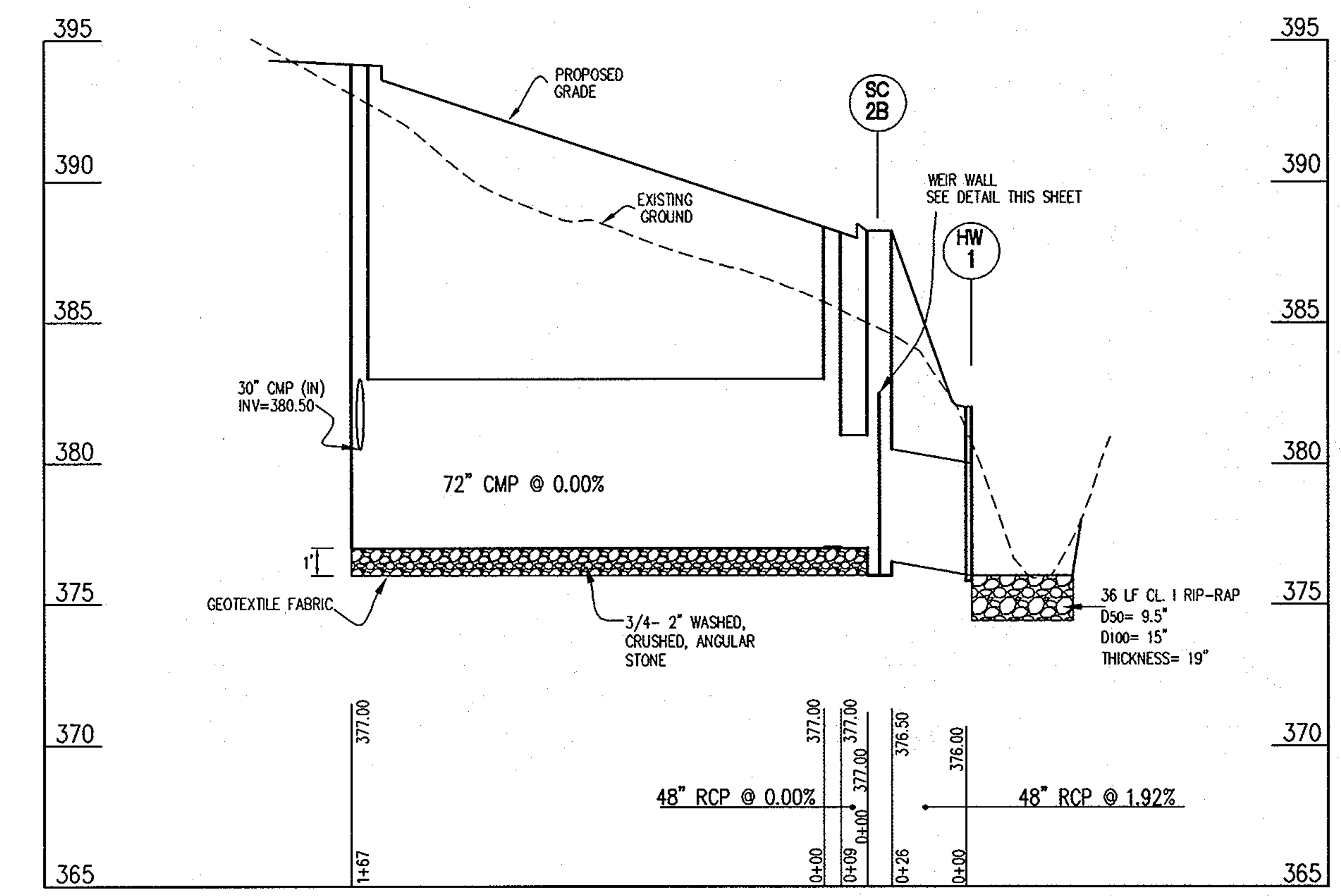

PROFILE THROUGH D-D PRINCIPAL SPILLWAY FACILITY 'B' SCALE: 1"=50' (H) 1"=5' (V)

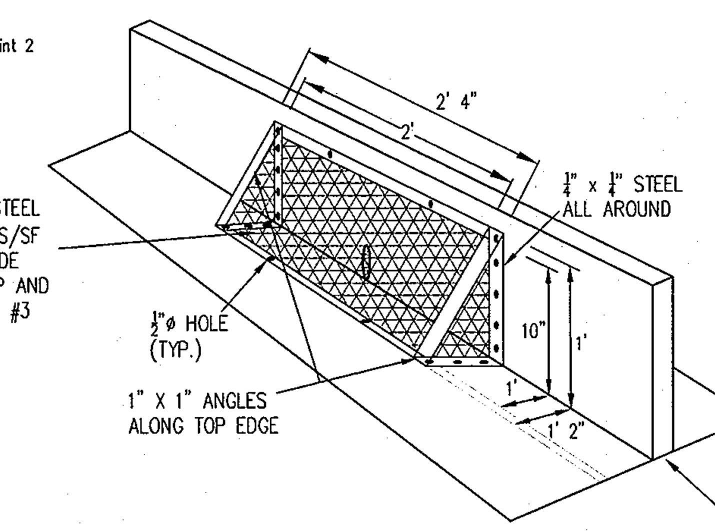

TRASH RACK DETAIL N.T.S.

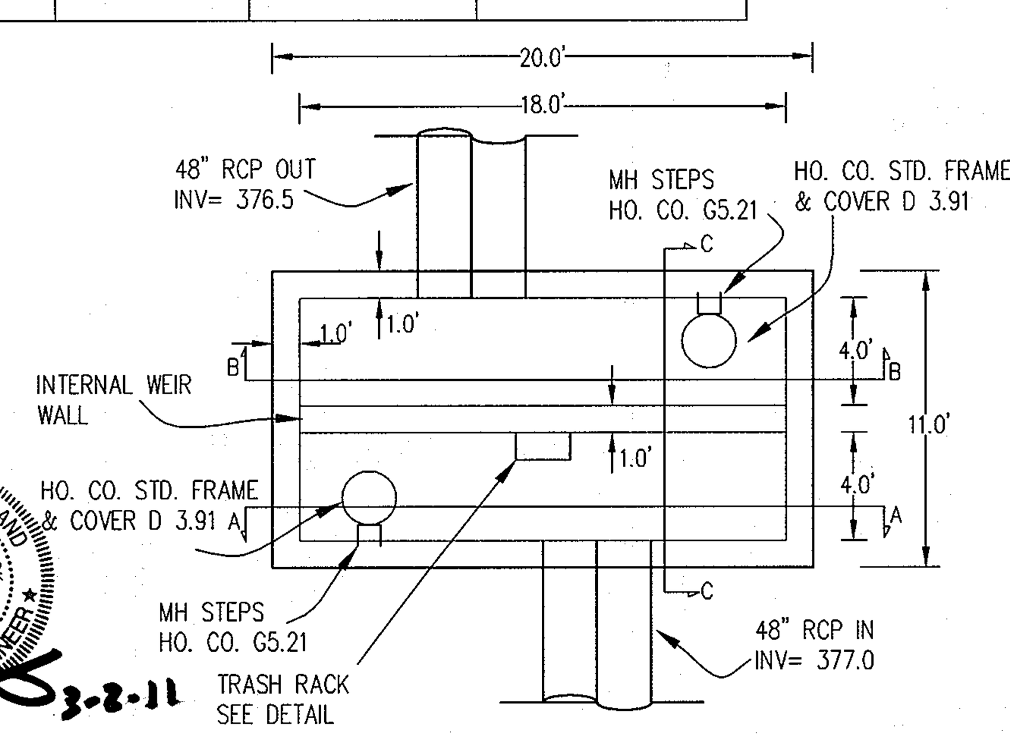

SC 2B TOP VIEW

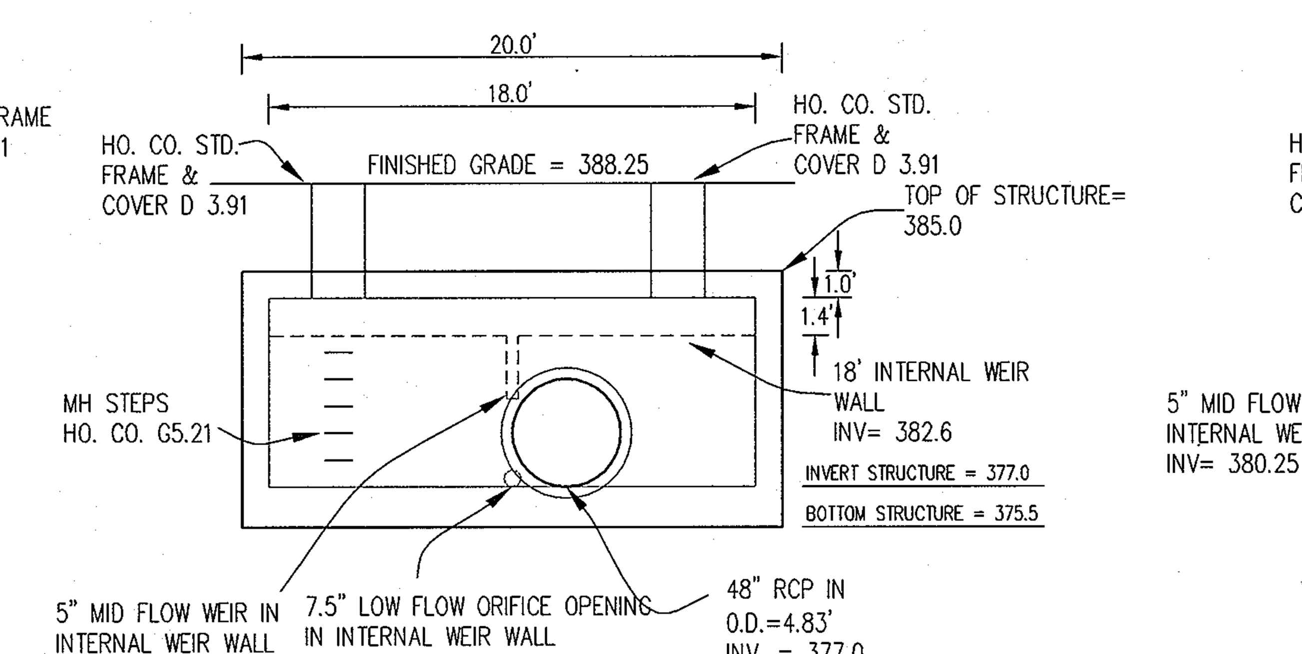

SECTION A-A

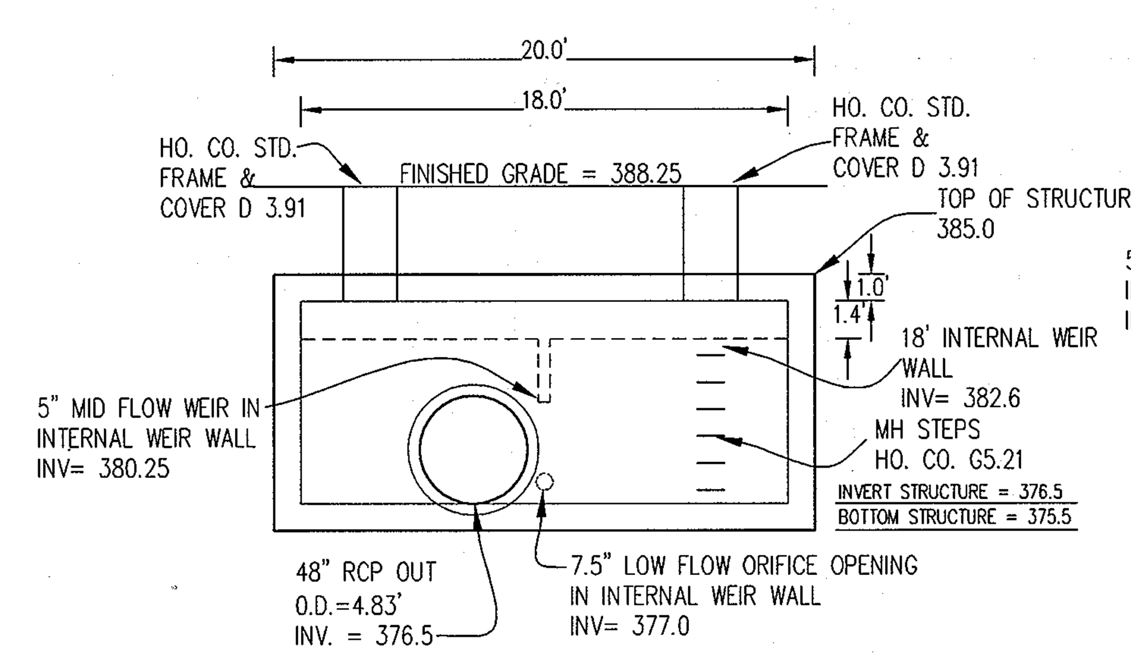

SECTION B-B

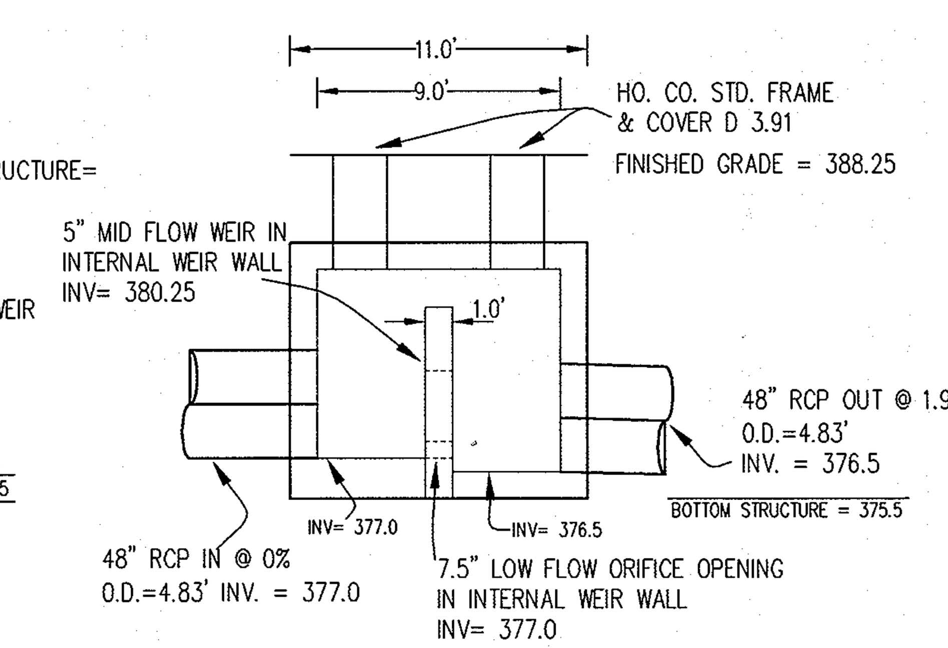

SECTION C-C

RISER SC-2B DETAIL NTS

NOTE:
PROVIDE WATERTIGHT CONNECTIONS AT ALL ORIFICE OPENINGS,
USE NON-SHRINKING GROUT WHERE NECESSARY.

APPROVED
PLANNING BOARD OF HOWARD COUNTY

DATE January 31, 2008, April 24, 2008 and April 7, 2011

~~APPROVED: FOR PUBLIC WATER & SEWERAGE SYSTEM HOWARD COUNTY HEALTH DEPARTMENT~~

~~County Health Officer~~ ~~Date~~

APPROVED: HOWARD COUNTY DEPARTMENT OF PLANNING & ZONING

[signature] Director — 3/2/11 Date

[signature] Chief, Division of Land Development — 3/21/11 Date

[signature] Chief, Development Engineering Division — 3/14/11 Date

STATE OF MARYLAND — CARLTON K. GUTSCHICK — REG. NO. 12975 — PROFESSIONAL ENGINEER

[signature] 3-2-11

PROFESSIONAL CERTIFICATION

I HEREBY CERTIFY THAT THESE PLANS WERE PREPARED OR APPROVED BY ME, AND THAT I AM A DULY LICENSED PROFESSIONAL ENGINEER UNDER THE LAWS OF THE STATE OF MARYLAND, LICENSE NO. 12975, EXPIRATION DATE: MAY 26, 2012.

GLW GUTSCHICK LITTLE & WEBER, P.A.

CIVIL ENGINEERS, LAND SURVEYORS, LAND PLANNERS, LANDSCAPE ARCHITECTS
3909 NATIONAL DRIVE – SUITE 250 – BURTONSVILLE OFFICE PARK
BURTONSVILLE, MARYLAND 20866
TEL: 301-421-4024 BALT: 410-880-1820 DC/VA: 301-989-2524 FAX: 301-421-4186

L:\Drawings\07005\SDP\07005-SWM-DET	DES. dds	DRN. klp	CHK. dds

DATE	REVISION	BY	APP'R.
3-3-2011	REMOVE SLOTTED DRAIN DETAIL, REV. PLAN VIEW DETAIL TO SHOW NEW PARKING GAR. AND GRADING		
11-20-09	REVISE SWM POND & FACILITY DETAIL AND PROFILE THROUGH C-C		

PREPARED FOR:

OWNER/DEVELOPER/LAND LEASER:
SCIENCE FICTION, LLC
C/O ANTWERPEN AUTOMOTIVE GROUP
6440 BALTIMORE NATIONAL PIKE
CATONSVILLE, MD 21228
CONTACT: STANFORD HESS

LAND LEASEE:
WEGMANS FOOD MARKETS, INC.
100 WEGMANS MARKET STREET
ROCHESTER, NY 14624
CONTACT: STEPHEN LEATY
585-464-4600 EXT. 6833

(REVISED) STORMWATER MANAGEMENT NOTES & DETAILS / SWM PROFILES

WEGMANS FOOD MARKETS

COLUMBIA SIELING INDUSTRIAL CENTER
PARCEL 'D-2' (redevelopment of Parcel D-1)
TAX MAP PARCEL 356
SECTION 1, AREA 1; PLAT Nos. 17484, 20012 & 21178

6TH ELECTION DISTRICT — HOWARD COUNTY, MARYLAND

SCALE	ZONING	G. L. W. FILE No.
AS SHOWN	NT	07005
DATE	TAX MAP – GRID	SHEET
JUNE/2010	TM 36 – 24	6 OF 21

SDP-07-131

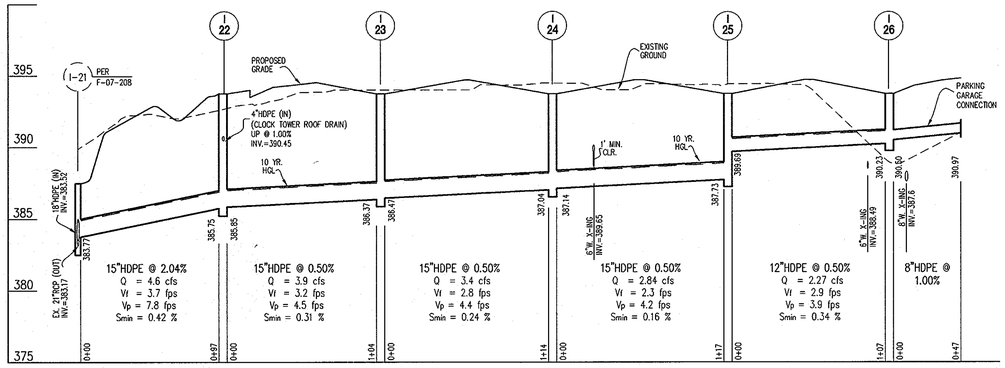

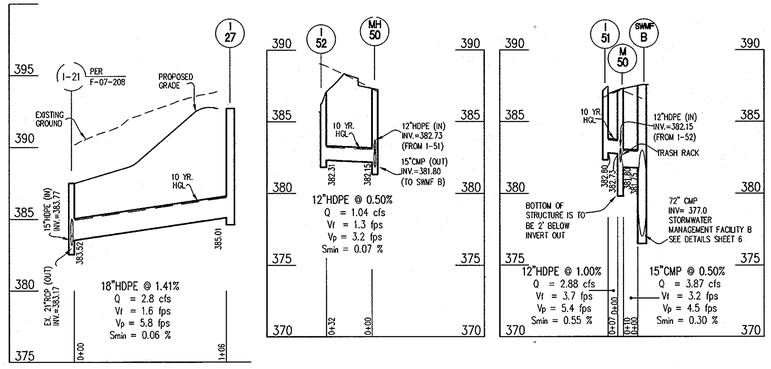

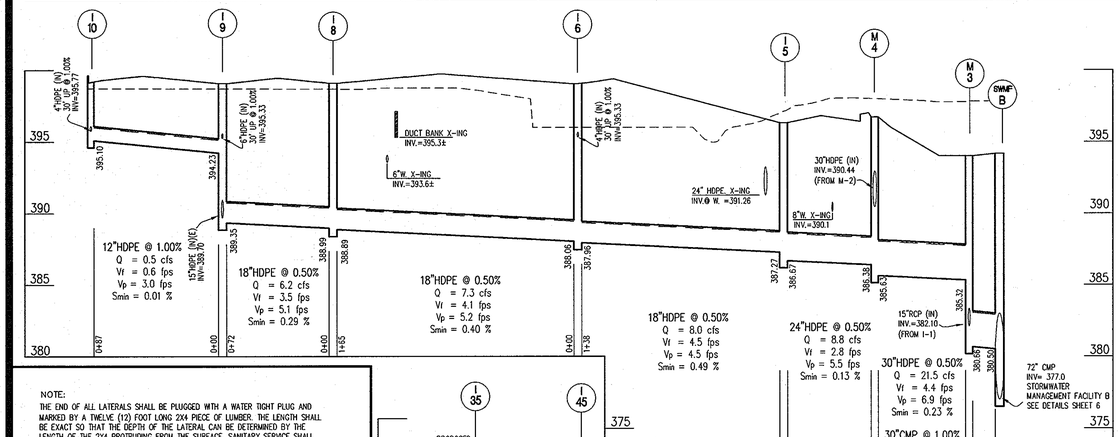

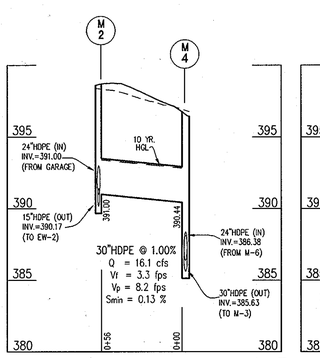

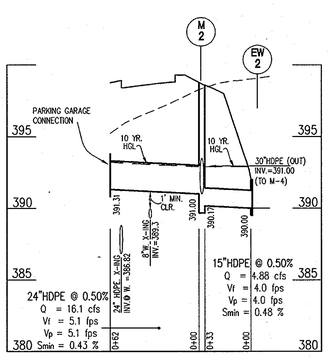

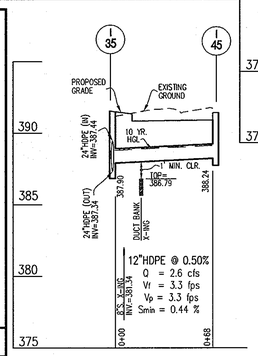

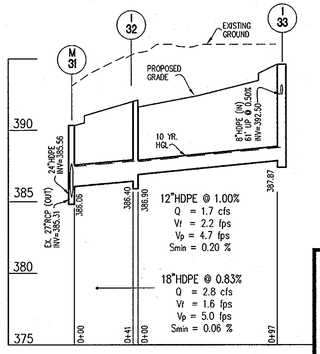

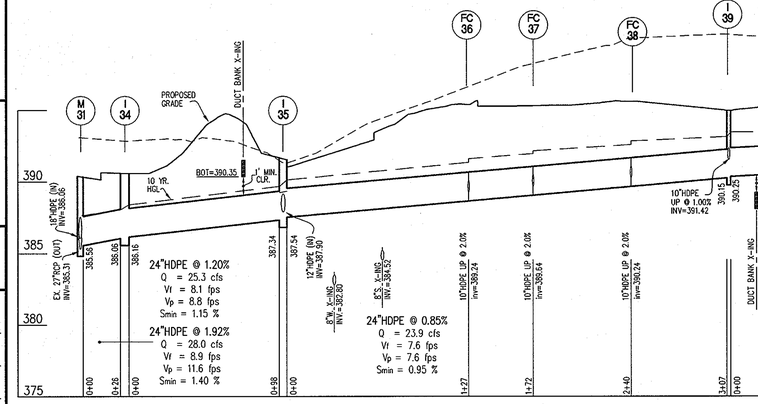

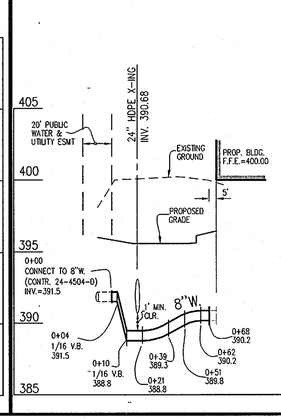

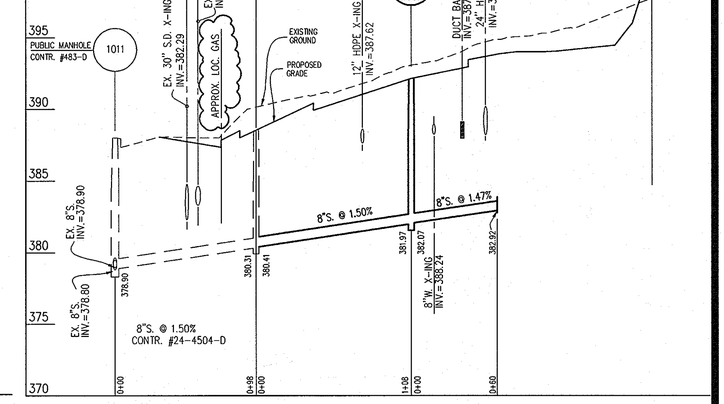

NOTE:
THE END OF ALL LATERALS SHALL BE PLUGGED WITH A WATER TIGHT PLUG AND MARKED BY A TWELVE (12) FOOT LONG 2X4 PIECE OF LUMBER. THE LENGTH SHALL BE EXACT SO THAT THE DEPTH OF THE LATERAL CAN BE DETERMINED BY THE LENGTH OF THE 2X4 PROTRUDING FROM THE SURFACE. SANITARY SERVICE SHALL HAVE GREEN PAINT, WATER BLUE PAINT, STORM RED PAINT ON THE END OF THE 2X4, AND "SAN, WATER, OR S/M" STENCILED IN 2.5" LETTERS. THE 2X4 SHALL BE EVEN WITH THE INVERT AND PLUMB. UTILITY SHUT OFF AND CAPPING BY BUILDING DEMOLITION CONTRACTOR.

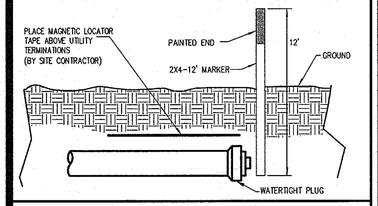

UTILITY STUB MARKER DETAIL NOT TO SCALE

PROFESSIONAL CERTIFICATION

I HEREBY CERTIFY THAT THESE PLANS WERE PREPARED OR APPROVED BY ME, AND THAT I AM A DULY LICENSED PROFESSIONAL ENGINEER UNDER THE LAWS OF THE STATE OF MARYLAND, LICENSE NO. 12975, EXPIRATION DATE: MAY 26, 2012.

STATE OF MARYLAND — VICTOR K. KHOURY — REG. NO. 12975 — PROFESSIONAL ENGINEER

3-2-11

APPROVED
PLANNING BOARD OF HOWARD COUNTY
DATE January 31, 2008, April 24, 2008 and April 7, 2011

APPROVED: FOR PUBLIC WATER & SEWERAGE SYSTEM HOWARD COUNTY HEALTH DEPARTMENT

County Health Officer Date

APPROVED: HOWARD COUNTY DEPARTMENT OF PLANNING & ZONING

Director Date 3/24/11

Chief, Division of Land Development Date 3/24/11

Chief, Development Engineering Division Date 3/14/11

STRUCTURE SCHEDULE

NO.	TYPE	WIDTH (INSIDE)	TOP ELEVATION UPPER	TOP ELEVATION LOWER	INVERT ELEVATION UPPER	INVERT ELEVATION LOWER	STANDARD DETAIL	LOCATIONS & REMARKS
HW-1	'A' HEADWALL	48" PIPE	382.00	------	376.00	------	D-5.11	
EW-2	'C' ENDWALL	12" PIPE	392.00	------	390.00	------	D-5.21	
I-1	A-5	2'-6"	391.83		383.33	382.48	D-4.01	See Sheet 6. A-5 w/ openings on both sides and no gutter sections
M-2	5' MANHOLE	5'-0"	397.00	------	391.00	390.17	G-5.13	
M-3	5' MANHOLE	5'-0"	394.00	------	385.32	380.66	G-5.13	
M-4	STORMCEPTOR	------	396.57	------	390.44	385.63	SEE DETAIL (sheet 6)	
I-5	WR	3'-6"	396.80	------	387.27	386.67	D-4.35	
I-6	WR	3'-6"	399.55	------	395.33	387.96	D-4.35	
I-8	WR	3'-6"	399.58	------	388.99	388.89	D-4.35	
I-9	WR	3'-6"	399.56	------	394.33	389.35	D-4.35	
I-10	SINGLE S COMBO	2'-7"	399.63	------	395.77	395.10	D-4.32	
I-22	A-5	4'-0"	393.75	------	390.45	385.75	D-4.02	
I-23	DOUBLE S COMBO	3'-6"	394.23	------	386.47	386.37	D-4.32 & SD-4.34	
I-24	DOUBLE S COMBO	3'-6"	394.23	------	387.14	387.04	D-4.32 & SD-4.34	
I-25	DOUBLE S COMBO	3'-6"	394.23	------	389.69	387.79	D-4.32 & SD-4.34	
I-26	DOUBLE S COMBO	3'-6"	394.23	------	390.50	390.23	D-4.32 & SD-4.34	
I-27	A-5	4'-0"	392.70	------	terminal	385.01	D-4.02	
M-31	4' MANHOLE	4'-0"	390.50	------	386.06	385.31	G-5.12	
I-32	A-5	4'-0"	392.01	391.87	386.90	386.40	D-4.02	
I-33	A-5	4'-0"	394.68	394.57	392.50	387.87	D-4.02	
I-34	A-10	2'-6"	390.53	390.36	386.08	385.98	D-4.04	
I-35	A-10	2'-6"	391.61	391.50	387.90	387.34	D-4.04	
I-39	DOUBLE S INLET	2'-7"	394.95	------	391.42	390.15	D-4.23	
I-40	DOUBLE S INLET	2'-7"	395.10	------	392.08	390.81	D-4.23	
M-41	4' MANHOLE	4'-0"	396.02	------	392.48	391.96	G-5.12	
I-42	YARD INLET	2'-7"	397.00	------	terminal	392.57	D-4.14	
I-45	A-10	2'-6"	391.60	391.26	terminal	388.24	D-4.02	
M-50	4' MANHOLE	4'-0"	387.28	------	382.73	381.85	G-5.12	
I-51	A-10	2'-6"	387.52	387.30	terminal	382.80	D-4.04	
I-52	A-10	2'-6"	386.49	385.80	terminal	382.31	D-4.04	

NOTES:
1. ALL STRUCTURES TO BE PRECAST.
2. THE STRUCTURE SCHEDULE IS PROVIDED FOR THE CONVENIENCE OF THE CONTRACTOR ONLY. IF DISCREPANCIES EXIST BETWEEN VALUES SHOWN ON THE SCHEDULE AND THOSE SHOWN ON THE PLAN & PROFILES, THE CONTRACTOR SHALL CONTACT THE ENGINEER FOR CLARIFICATION PRIOR TO PRECASTING.

ALL PROFILES
SCALE: 1" = 5' VERT.
1" = 50' HORZ.

PIPE SCHEDULE (Storm Drain & SWM)

SIZE & TYPE	QUANTITY (LF)	REMARKS
4" HDPE	182	Front Roof Drain (see sheet 2)
6" PVC (PERFORATED)	100	SWM (see sheet 6)
6" PVC (SOLID)	16	SWM (see sheet 6)
8" HDPE	108	Storm Drain
10" HDPE	280	Rear Roof Drain (see sheet 2)
12" HDPE	489	Storm Drain (449') and SWM (40')
15" HDPE	524	Storm Drain
15" RCP (ASTM C-361)	16	SWM (see sheet 6)
15" CMP	10	Storm Drain
18" HDPE	522	Storm Drain
24" HDPE	663	Storm Drain
30" HDPE	117	Storm Drain
30" CMP	16	Storm Drain
72" CMP	1068	SWM (see sheet 6)
48" RCP (ASTM C-361)	35	SWM (see sheet 6)

DATE	REVISION	BY	APP'R.
03-3-2011	REVISE SD, WHC & SEWER PROFILE DUE TO NEW BLDG & GARAGE AND NEW GRADING		
06-11-2010	Update Storm Drain Profiles (to I-21 and HW-1) & Structure Schedules for changes associated w/ shifting parking facilities for access to S.R.P.		

\DRAWINGS\07005\SDP\07005-UTILITY-PROF.dwg | DES. dds | DRN. KLP | CHK. dds

GLW GUTSCHICK LITTLE & WEBER, P.A.
CIVIL ENGINEERS, LAND SURVEYORS, LAND PLANNERS, LANDSCAPE ARCHITECTS
3909 NATIONAL DRIVE – SUITE 250 – BURTONSVILLE OFFICE PARK
BURTONSVILLE, MARYLAND 20866
TEL: 301-421-4024 BALT: 410-880-1820 DC/VA: 301-989-2524 FAX: 301-421-4186

PREPARED FOR:

OWNER/DEVELOPER/LAND LEASER:
SCIENCE FICTION, LLC
C/O ANTWERPEN AUTOMOTIVE GROUP
6440 BALTIMORE NATIONAL PIKE
CATONSVILLE, MD 21228
CONTACT: STANFORD HESS

LAND LEASER:
WEGMANS FOOD MARKETS, INC.
100 WEGMANS MARKET STREET
ROCHESTER, NY 14624
CONTACT: STEPHEN LEATY
585-464-4600 EXT. 6833

(REVISED) STORM DRAIN / UTILITY PROFILES

WEGMANS FOOD MARKETS

COLUMBIA SIELING INDUSTRIAL CENTER
PARCEL 'D-2' (redevelopment of Parcel D-1)
TAX MAP PARCEL 356
SECTION 1, AREA 1; PLAT Nos. 17484, 20012 & 21178

6TH ELECTION DISTRICT HOWARD COUNTY, MARYLAND

SCALE	ZONING	G. L. W. FILE No.
AS SHOWN	NT	07005
DATE	TAX MAP – GRID	SHEET
JUNE/2010	TM 36 – 24	7 OF 21

SDP-07-131

LEGEND

- 600 — EXISTING CONTOUR
- 600 — PROPOSED CONTOUR
- FOOTPRINT OF PROPOSED BUILDING AND PAVING
- SSF — SILT FENCE
- SF — SUPER SILT FENCE

DEMOLITION NOTES

1. APPLY FOR A DEMOLITION/GRADING PERMIT. CONTACT THE FIRE DEPARTMENT REGARDING THE POSSIBLE USE OF THE EXISTING BUILDING FOR TRAINING EXERCISES.
2. INSTALL SUPER SILT FENCE (SSF) AND SILT FENCE (-SF-) AND STABILIZE CONSTRUCTION ENTRANCE (SCE). A DOUBLE ROW OF SSF SHALL BE INSTALLED AT THE DISCRETION OF THE SCI.
3. SHUT OFF ALL POWER AND UTILITIES TO THE SITE. FOR WATER, CONTACT DPW. FOR GAS & ELECTRIC, CONTACT BGE.
4. UNLESS OTHERWISE NOTED, DEMOLISH ALL EXISTING ONSITE IMPROVEMENTS AND HAUL THE DEBRIS TO A LEGAL DUMP SITE OF RECYCLE FACILITY. COORDINATE THE DEMOLITION WORK WITH THE ROAD IMPROVEMENT WORK TO MCGAW PER F-07-208. EXTEND THE SSF ACROSS THE EX. ENTRANCE ONCE THE PAVEMENT IN THIS AREA IS REMOVED.
5. REMOVE ALL UNDER GROUND PIPES 4" OR LARGER IN DIAMETER. FOR THE EXISTING STORM DRAIN FROM M-X (ON SITE, NORTHEAST OF THE BUILDING) TO M-9 (IN MCGAW RD.) REMOVE M-X AND TEMPORARY BLOCK THE EX. 27" RCP GOING OUT OF M-X. THE 27" RCP WILL BE USE FOR THE REDEVELOPMENT STORM DRAIN SYSTEM. FOR THE EXISTING WATER MAIN, REMOVE THE WATER PIPE TO ONE FULL PIPE LEFT FROM THE EXISTING WATER VALVE.
6. STABILIZED THE CLEARED SITE WITH TEMPORARY SEEDING. LEAVE THE SSF AND SF IN PLACE.

THIS DEVELOPMENT PLAN IS APPROVED FOR SOIL EROSION AND SEDIMENT CONTROL BY THE HOWARD SOIL CONSERVATION DISTRICT.

HOWARD S.C.D. _____ DATE _____

THESE PLANS HAVE BEEN REVIEWED FOR THE HOWARD SOIL CONSERVATION DISTRICT AND MEET THE TECHNICAL REQUIREMENTS.

NATURAL RESOURCES CONSERVATION SERVICE _____ DATE _____

DEVELOPER'S/BUILDER'S CERTIFICATE

"I/WE CERTIFY THAT ALL DEVELOPMENT AND/OR CONSTRUCTION WILL BE DONE ACCORDING TO THIS PLAN, AND THAT ANY RESPONSIBLE PERSONNEL INVOLVED IN THE CONSTRUCTION PROJECT WILL HAVE A CERTIFICATE OF ATTENDANCE AT A MARYLAND DEPARTMENT OF THE ENVIRONMENT APPROVED TRAINING PROGRAM FOR THE CONTROL OF SEDIMENT AND EROSION BEFORE BEGINNING THE PROJECT. I ALSO AUTHORIZE PERIODIC ON-SITE INSPECTION BY THE HSCD."

SIGNATURE OF DEVELOPER/BUILDER _____ DATE 7/28/08

ENGINEER'S CERTIFICATE

"I CERTIFY THAT THIS PLAN FOR EROSION AND SEDIMENT CONTROL REPRESENTS A PRACTICAL AND WORKABLE PLAN BASED ON MY PERSONAL KNOWLEDGE OF THE SITE CONDITIONS AND THAT IT WAS PREPARED IN ACCORDANCE WITH THE REQUIREMENTS OF THE HOWARD SOIL CONSERVATION DISTRICT."

_____ 7-28-08 DATE

PROFESSIONAL CERTIFICATION

I HEREBY CERTIFY THAT THESE PLANS WERE PREPARED OR APPROVED BY ME, AND THAT I AM A DULY LICENSED PROFESSIONAL ENGINEER UNDER THE LAWS OF THE STATE OF MARYLAND, LICENSE NO. 12975, EXPIRATION DATE: MAY 26, 2010.

APPROVED
PLANNING BOARD OF HOWARD COUNTY

DATE January 31, 2008 and April 24, 2008 & April 7, 2011

APPROVED: FOR PUBLIC WATER & SEWERAGE SYSTEMS HOWARD COUNTY HEALTH DEPARTMENT

_____ 8/28/2008
County Health Officer DATE

APPROVED: HOWARD COUNTY DEPARTMENT OF PLANNING & ZONING

Director _____ Date 5/2/08

Chief, Division of Land Development _____ Date 9/2/08

Chief, Development Engineering Division _____ Date 8/20/08

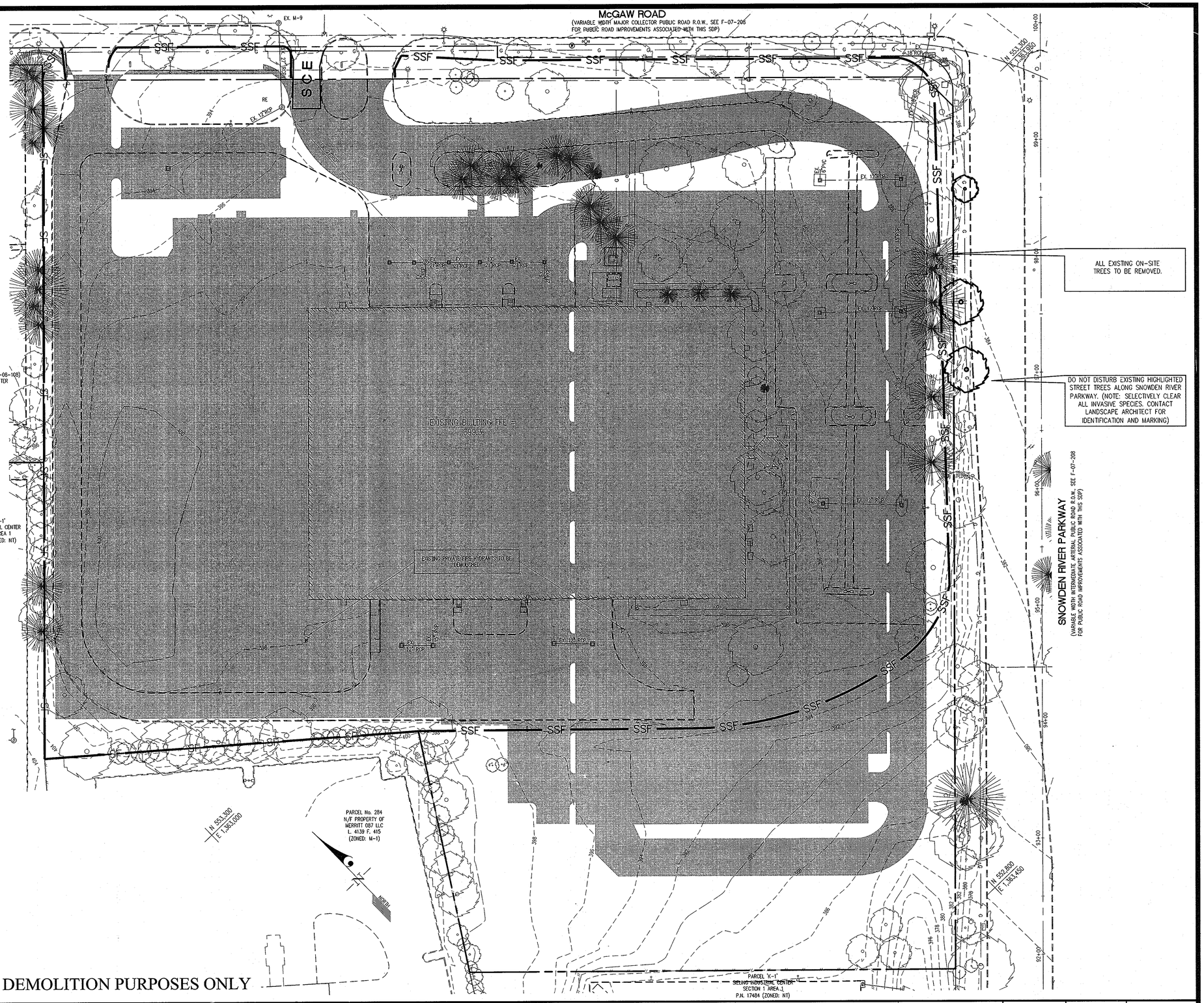

THIS PLAN IS FOR DEMOLITION PURPOSES ONLY

GLW GUTSCHICK LITTLE & WEBER, P.A.
CIVIL ENGINEERS, LAND SURVEYORS, LAND PLANNERS, LANDSCAPE ARCHITECTS
3909 NATIONAL DRIVE – SUITE 250 – BURTONSVILLE OFFICE PARK
BURTONSVILLE, MARYLAND 20866
TEL: 301-421-4024 BALT: 410-880-1820 DC/VA: 301-989-2524 FAX: 301-421-4186

L:\CADD\DRAWINGS\07005\SDP\07005-DEMO.dwg | DES. MBT | DRN. | CHK.

DATE	REVISION	BY	APP'R.

PREPARED FOR:

OWNER/DEVELOPER/LAND LEASER:
SCIENCE FICTION, LLC
C/O ANTWERPEN AUTOMOTIVE GROUP
6440 BALTIMORE NATIONAL PIKE
CATONSVILLE, MD 21228
CONTACT: Stanford Hesse

LAND LEASEE:
WEGMANS FOOD MARKETS, INC.
100 WEGMANS MARKET STREET
ROCHESTER, NY 14624
CONTACT: STEPHEN LEATY
585-464-4600 EXT. 6833

DEMOLITION PLAN

WEGMANS FOOD MARKETS

COLUMBIA SIELING INDUSTRIAL CENTER
PARCEL 'D-2' (redevelopment of Parcel D-1)
TAX MAP PARCEL 356
SECTION 1, AREA 1; PLAT Nos. 17484 & 20012

6TH ELECTION DISTRICT — HOWARD COUNTY, MARYLAND

SCALE	ZONING	G. L. W. FILE No.
1"=40'	NT	07005
DATE	TAX MAP – GRID	SHEET
July/2008	TM 36 – 24	8 OF 21

SDP-07-131

SEQUENCE OF CONSTRUCTION

1. APPLY FOR A GRADING PERMIT AND SCHEDULE A PRE-CONSTRUCTION MEETING WITH THE SEDIMENT CONTROL INSPECTOR (SCI). THE PERMIT IS ISSUED AT THE PRE-CON MEETING.

2. INSTALL SUPER SILT FENCE (SSF), SILT FENCE (-SF-) AND STABILIZE CONSTRUCTION ENTRANCE (SCE). A DOUBLE ROW OF SSF SHALL BE INSTALLED AT THE DIRECTION OF THE SCI.

3. UPON RECEIVING PERMISSION FROM THE SEDIMENT CONTROL INSPECTOR, PERFORM SITE DEMOLITION WORK PER THE "DEMOLITION PLAN" AND COORDINATE THIS WITH THE ROAD IMPROVEMENT WORK TO MCGAW.

4. INSTALL BASIN B, SC-6, ES-5, EARTH DIKE 1 AND TEMPORARY SWALE 2 (10 DAYS).

5. UPON RECEIVING PERMISSION FROM THE SEDIMENT CONTROL INSPECTOR, GRADE SITE TO AN APPROPRIATE SUBGRADE (90 DAYS).

INITIATE UTILITY AND BUILDING CONSTRUCTION (STORE & PARKING GARAGE). PROVIDE INLET PROTECTION AT EACH INLET AS SOON AS THEY ARE INSTALLED. DO NOT CONNECT PROPOSED STORM DRAIN TO EXISTING STORM DRAIN IN MCGAW ROAD UNTIL ALL UPSTREAM INLETS HAVE INLET PROTECTION. (UTILITY WORK, 1 WEEK; BUILDING CONSTRUCTION, 10-12 MONTHS).

INSTALL TRAP D AND EARTH DIKE 3 PRIOR TO DISTURBING THE AREA TO THE SOUTH OF BASIN B AND EARTH DIKE 1

6. INSTALL CURB & GUTTER AND BASE PAVING (3-4 DAYS).

7. STABILIZE ALL "GREEN" AREA WITH LANDSCAPING AND PERMANENT SEEDING OR SOD WHERE SPECIFIED (3-4 DAYS).

8. ONCE THE AREA DRAINING TO THE BASIN HAS BEEN PERMANENTLY STABILIZED, A 5 DAY CLEAR WEATHER (NO PRECIPITATION) FORECAST FROM THE SWS, OBTAIN PERMISSION FROM THE SCI TO REMOVE BASIN B, SC-5, AND ES-6 AND INSTALL THE UNDERGROUND STORMWATER MANAGEMENT FACILITY B , SC-2B. AND EW-1. CONNECT FACILITY B TO THE STORM DRAIN AT M-1. (5 DAYS)
NOTE: ALL MATERIALS NECESSARY FOR SWM CONSTRUCTION EACH DAY MUST BE ON SITE PRIOR TO START OF CONSTRUCTION THAT DAY.

9. ONCE STORMWATER MANAGEMENT FACILITY B HAS BEEN INSTALLED, BRING THE REMAINDER OF THE SITE UP TO SUBGRADE. INSTALL CURB & GUTTER AND BASE PAVEMENT, & ALL UTILITIES ABOVE STORMWATER MANAGEMENT FACILITY B (10 DAYS)

10. OBTAIN PERMISSION FROM THE SCI TO REMOVE ALL REMAINING SEDIMENT CONTROL MEASURES.

11. INSTALL FINISH PAVING COURSE AND STRIPE THE PARKING SPACES (2 DAYS)

12. COMPLETE THE STORE & GARAGE, OBTAIN A USE & OCCUPANCY PERMIT, THEN HAVE A GRAND OPENING.

NOTES:
1. FOR CLARITY, THE EXISTING IMPROVEMENTS THAT ARE DEMOLISHED (SEE SHEET 8) ARE NOT SHOWN.
2. TEMPORARY SWM IS PROVIDED BY THE EXISTING REGIONAL FACILITIES IN GATEWAY COMMERCE CENTER AND COLUMBIA CORPORATE PARK.
3. ALL FENCE THAT IS TEMPORARILY MOVED FOR UTILITY INSTALLATION OR GRADING SHALL BE THE RESPONSIBILITY OF THE CONTRACTOR. ALL DISTURBED FENCE SHALL BE RESTORED DAILY.

THIS DEVELOPMENT PLAN IS APPROVED FOR SOIL EROSION AND SEDIMENT CONTROL BY THE HOWARD SOIL CONSERVATION DISTRICT.

HOWARD S.C.D. — DATE 3/9/11

DEVELOPER'S/BUILDER'S CERTIFICATE

"I/WE CERTIFY THAT ALL DEVELOPMENT AND/OR CONSTRUCTION WILL BE DONE ACCORDING TO THIS PLAN, AND THAT ANY RESPONSIBLE PERSONNEL INVOLVED IN THE CONSTRUCTION PROJECT WILL HAVE A CERTIFICATE OF ATTENDANCE AT A MARYLAND DEPARTMENT OF THE ENVIRONMENT APPROVED TRAINING PROGRAM FOR THE CONTROL OF SEDIMENT AND EROSION BEFORE BEGINNING THE PROJECT. I ALSO AUTHORIZE PERIODIC ON-SITE INSPECTION BY THE HSCD."

SIGNATURE OF DEVELOPER/BUILDER — DATE 3/2/11

ENGINEER'S CERTIFICATE

"I CERTIFY THAT THIS PLAN FOR EROSION AND SEDIMENT CONTROL REPRESENTS A PRACTICAL AND WORKABLE PLAN BASED ON MY PERSONAL KNOWLEDGE OF THE SITE CONDITIONS AND THAT IT WAS PREPARED IN ACCORDANCE WITH THE REQUIREMENTS OF THE HOWARD SOIL CONSERVATION DISTRICT."

DATE 3-2-11

PROFESSIONAL CERTIFICATION

I HEREBY CERTIFY THAT THESE PLANS WERE PREPARED OR APPROVED BY ME, AND THAT I AM A DULY LICENSED PROFESSIONAL ENGINEER UNDER THE LAWS OF THE STATE OF MARYLAND, LICENSE NO. 12975, EXPIRATION DATE: MAY 26, 2012.

STATE OF MARYLAND — CLINTON K. HOFFMAN — PROFESSIONAL ENGINEER

3-2-11

APPROVED
PLANNING BOARD OF HOWARD COUNTY

DATE January 31, 2008, April 24, 2008 and April 7, 2011

APPROVED: FOR PUBLIC WATER & SEWERAGE SYSTEM
HOWARD COUNTY HEALTH DEPARTMENT

County Health Officer — Date

APPROVED: HOWARD COUNTY DEPARTMENT OF PLANNING & ZONING

Director — Date 3/21/11

Chief, Division of Land Development — Date 3/14/11

Chief, Development Engineering Division — Date 3/14/11

BASIN DRAWDOWN SCHEMATIC
VERTICAL DRAW-DOWN DEVICE

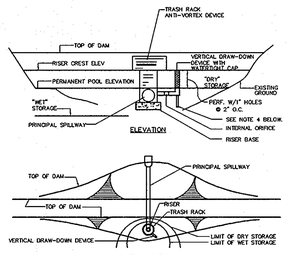

CONSTRUCTION SPECIFICATIONS

1. Perforations in the draw-down device may not extend into the wet storage.
2. The total area of the perforations must be greater than 4 times the area of the internal orifice.
3. The perforated portion of the draw-down device shall be wrapped with 1/2" hardware cloth and geotextile fabric. The geotextile fabric shall meet the specifications for Geotextile Class C.
4. Provide support at draw-down device to prevent sagging and flotation. An acceptable preventative measure is to stake both sides of draw-down device with 1" steel angle, or 1" by 4" square or 2" round wooden posts set 3' minimum into the ground then fixing them to the device by wrapping with 12 gauge minimum wire.

U.S. DEPARTMENT OF AGRICULTURE SOIL CONSERVATION SERVICE	PAGE C - 18 - 30	MARYLAND DEPARTMENT OF ENVIRONMENT WATER MANAGEMENT ADMINISTRATION

DETAIL 14 - TYPICAL ANTI-SEEP COLLARS

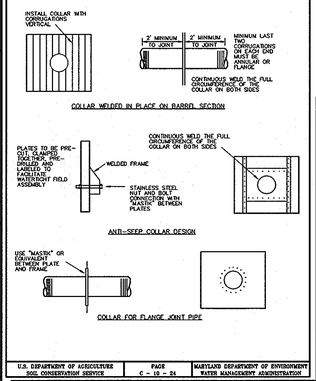

U.S. DEPARTMENT OF AGRICULTURE SOIL CONSERVATION SERVICE	PAGE C - 18 - 24	MARYLAND DEPARTMENT OF ENVIRONMENT WATER MANAGEMENT ADMINISTRATION

DETAIL 17 - TYPES OF COUPLERS FOR CORRUGATED STEEL PIPE
(ALL CONNECTOR BANDS REQUIRE NEOPRENE GASKETS)

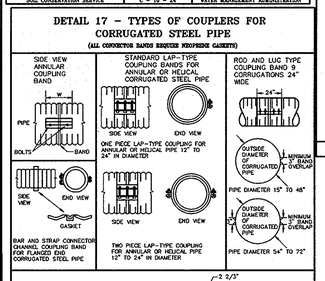

NOTE: UNDER NO CIRCUMSTANCES WILL THE DIMPLE (UNIVERSAL) CONNECTOR BAND BE ACCEPTABLE FOR USE IN ANY SEDIMENT CONTROL OR STORMWATER MANAGEMENT STRUCTURE

U.S. DEPARTMENT OF AGRICULTURE SOIL CONSERVATION SERVICE	PAGE C - 19 - 27	MARYLAND DEPARTMENT OF ENVIRONMENT WATER MANAGEMENT ADMINISTRATION

DETAIL 2 - TEMPORARY SWALE

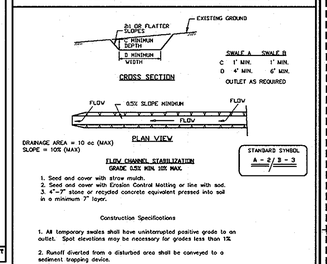

DRAINAGE AREA = 10 ac (MAX)
SLOPE = 10% (MAX)

STANDARD SYMBOL: A - 2 / 3 - 3

FLOW CHANNEL STABILIZATION
GRADE 0.5% MIN. 10% MAX.

1. Seed and cover with straw mulch.
2. Seed and cover with Erosion Control Matting or line with sod.
3. 4"-7" stone or recycled concrete equivalent pressed into soil in a minimum 7" layer.

Construction Specifications

1. All temporary swales shall have uninterrupted positive grade to an outlet. Spot elevations may be necessary for grades less than 1%.
2. Runoff diverted from a disturbed area shall be conveyed to a sediment trapping device.
3. Runoff diverted from an undisturbed area shall outlet directly into an undisturbed stabilized area at a non-erosive velocity.
4. All trees, brush, stumps, obstructions, and other objectional material shall be removed and disposed of so as not to interfere with the proper functioning of the swale.
5. The swale shall be excavated or shaped to line, grade and cross section as required to meet the criteria specified herein and be free of bank projections or other irregularities which will impede normal flow.
6. Fill, if necessary, shall be compacted by earth moving equipment.
7. All earth removed and not needed for construction shall be placed so that it will not interfere with the functioning of the swale.
8. Inspection and maintenance must be provided periodically and after each rain event.

U.S. DEPARTMENT OF AGRICULTURE SOIL CONSERVATION SERVICE	PAGE A - 2 - 4	MARYLAND DEPARTMENT OF ENVIRONMENT WATER MANAGEMENT ADMINISTRATION

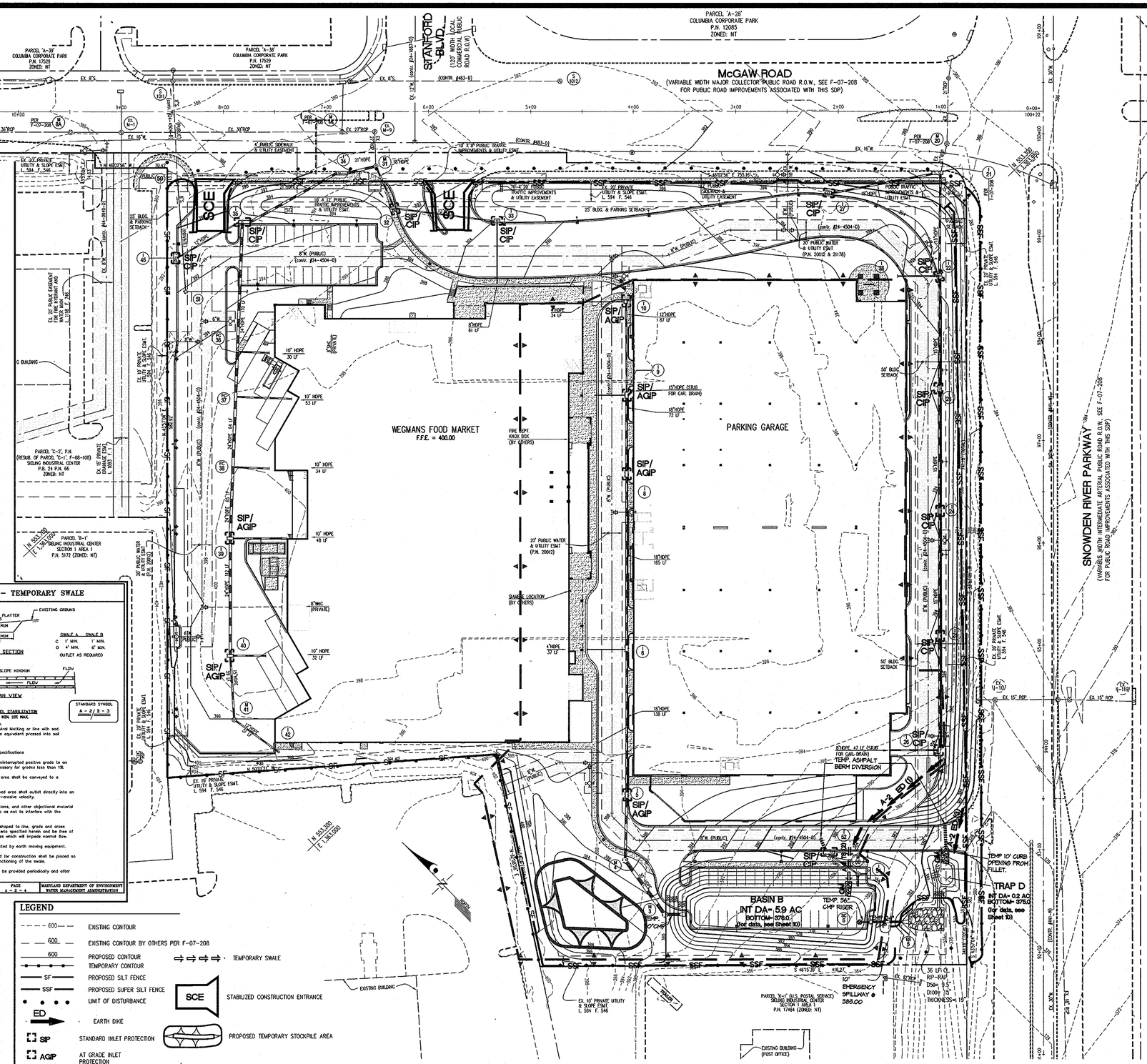
PARCEL 'A-3B' COLUMBIA CORPORATE PARK P/N. 17529 ZONED: NT
PARCEL 'A-3B' COLUMBIA CORPORATE PARK P/N. 17529 ZONED: NT
STANFORD BLVD. (120' WIDTH LOCAL COMMERCIAL PUBLIC ROAD R.O.W.)
PARCEL 'A-2B' COLUMBIA CORPORATE PARK P.N. 12085 ZONED: NT
McGAW ROAD
(VARIABLE WIDTH MAJOR COLLECTOR PUBLIC ROAD R.O.W., SEE F-07-208 FOR PUBLIC ROAD IMPROVEMENTS ASSOCIATED WITH THIS SDP)
SNOWDEN RIVER PARKWAY
(VARIABLE WIDTH INTERMEDIATE ARTERIAL PUBLIC ROAD R.O.W., SEE F-07-208 FOR PUBLIC ROAD IMPROVEMENTS ASSOCIATED WITH THIS SDP)
WEGMANS FOOD MARKET
F.F.E. = 400.00
PARKING GARAGE
BASIN B
INT DA= 5.9 AC
BOTTOM= 378.0
(for data, see Sheet 10)
TEMP. 36" CMP RISER
TRAP D
INT DA= 0.2 AC
BOTTOM= 375.0
(for data, see Sheet 10)
TEMP 10' CURB OPENING FROM FILLET.
TEMP. ASPHALT BERM DIVERSION
EMERGENCY SPILLWAY @ 385.00
PARCEL 'C-1', P.N. (RESUB. OF PARCEL 'C-1', F-08-108) SIELING INDUSTRIAL CENTER P.B. 24 P.N. 66 ZONED: NT
PARCEL 'B-1' SIELING INDUSTRIAL CENTER SECTION 1 AREA 1 P.N. 5172 (ZONED: NT)
EXISTING BUILDING (POST OFFICE)
EX. 10' PRIVATE UTILITY & SLOPE ESMT. L. 594 F. 546
EX. 20' PRIVATE UTILITY & SLOPE ESMT. L. 594 F. 546
EX. 20' PUBLIC WATER & UTILITY ESMT. (P.N. 20002 & 21178)
EX. 20' PUBLIC WATER & UTILITY ESMT. (P.N. 20002)
EX. 10' PUBLIC WATER & UTILITY ESMT. (P.N. 20002)
EX. 10' PUBLIC WATER & SEWER ESMT. L. 1198 F. 286
EX. 20' PUBLIC WATER & SEWER ESMT. L. 1198 F. 286
EX. 20' PRIVATE UTILITY & SLOPE ESMT. L. 594 F. 546
EX. 10' PRIVATE UTILITY & SLOPE ESMT. L. 594 F. 546
EX. 10' PRIVATE UTILITY & SLOPE ESMT. L. 1093 F. 1
EX. 10' PRIVATE UTILITY & SLOPE ESMT. L. 594 F. 546
EX. 15" RCP
EX. 18"W
EX. 30"RCP
EX. 27"RCP
EX. 8"S
EX. 12"W
EX. 6"W
EX. 4"FM
EX. 8"W
EX. 4"W
EX. 6"S
EX. 8"W
EX. 8"W
EX. 8"W

PERMANENT SEEDING NOTES

APPLY TO GRADED OR CLEARED AREA NOT SUBJECT TO IMMEDIATE FURTHER DISTURBANCE WHERE A PERMANENT LONG-LIVED VEGETATIVE COVER IS NEEDED.

SEEDBED PREPARATION: LOOSEN UPPER THREE INCHES OF SOIL BY RAKING, DISCING OR OTHER ACCEPTABLE MEANS BEFORE SEEDING (UNLESS PREVIOUSLY LOOSENED).

SOIL AMENDMENTS: IN LIEU OF SOIL TEST RECOMMENDATIONS, USE ONE OF THE FOLLOWING SCHEDULES

1) PREFERRED – APPLY 2 TONS PER ACRE DOLOMITIC LIMESTONE (92 LBS/1000 SQUARE FEET) AND 600 LBS PER ACRE 10-10-10 FERTILIZER (14 LBS/1000 SQ FT) BEFORE SEEDING. HARROW OR DISC INTO UPPER THREE INCHES OF SOIL. AT TIME OF SEEDING, APPLY 400 LBS PER ACRE 30-0-0 UREA-FORM FERTILIZER (9 LBS/1000 SQ FT).
2) ACCEPTABLE – APPLY 2 TONS PER ACRE DOLOMITIC LIMESTONE (92 LBS/1000 SQ FT) AND 1000 LBS PER ACRE OF 10-10-10 FERTILIZER (23 LBS/1000 SQ FT) BEFORE SEEDING. HARROW OR DISC INTO UPPER THREE INCHES OF SOIL.

SEEDING: FOR THE PERIODS MARCH 1 THRU APRIL 30, AND AUGUST 1 THRU OCTOBER 15, SEED WITH 60 LBS PER ACRE (1.4 LBS/1000 SQ FT) OF KENTUCKY 31 TALL FESCUE. FOR THE PERIOD MAY 1 THRU JULY 31, SEED WITH 60 LBS KENTUCKY 31 TALL FESCUE PER ACRE AND 2 LBS PER ACRE (.05 LBS/1000 SQ FT) OF WEEPING LOVEGRASS. DURING THE PERIOD OF OCTOBER 16 THRU FEBRUARY 28, PROTECT SITE BY: OPTION (1) 2 TONS PER ACRE OF WELL ANCHORED STRAW MULCH AND SEED AS SOON AS POSSIBLE IN THE SPRING. OPTION (2) USE SOD. OPTION (3) SEED WITH 60 LBS/ACRE KENTUCKY 31 TALL FESCUE AND MULCH WITH 2 TONS/ACRE WELL ANCHORED STRAW.
MULCHING: APPLY 1-1/2 TO 2 TONS PER ACRE (70 TO 90 LBS/1000 SQ FT) OF UNROTTED SMALL GRAIN STRAW IMMEDIATELY AFTER SEEDING. ANCHOR MULCH IMMEDIATELY AFTER APPLICATION USING MULCH ANCHORING TOOL OR 218 GALLONS PER ACRE (5 GAL/1000 SQ FT) OF EMULSIFIED ASPHALT ON FLAT AREAS. ON SLOPES 8 FEET OR HIGHER, USE 348 GALLONS PER ACRE (8 GAL/1000 SQ FT) FOR ANCHORING.

MAINTENANCE: INSPECT ALL SEEDED AREAS AND MAKE NEEDED REPAIRS, REPLACEMENTS AND RESEEDINGS.

TEMPORARY SEEDING NOTES

APPLY TO GRADED OR CLEARED AREAS LIKELY TO BE REDISTURBED WHERE A SHORT-TERM VEGETATIVE COVER IS NEEDED.

SEEDBED PREPARATION: LOOSEN UPPER THREE INCHES OF SOIL BY RAKING, DISCING OR OTHER ACCEPTABLE MEANS BEFORE SEEDING (UNLESS PREVIOUSLY LOOSENED).

SOIL AMENDMENTS: APPLY 600 LBS PER ACRE 10-10-10 FERTILIZER (14 LBS/1000 SQ FT).

SEEDING: FOR PERIODS MARCH 1 THRU APRIL 30 AND FROM AUGUST 15 THRU OCTOBER 15, SEED WITH 2-1/2 BUSHEL PER ACRE OF ANNUAL RYE (3.2 LBS./1000 SQ.FT.). FOR THE PERIOD MAY 1 THRU AUGUST 14, SEED WITH 3 LBS PER ACRE OF WEEPING LOVEGRASS (.07 LBS/1000 SQ FT). FOR THE PERIOD NOVEMBER 16 THRU FEBRUARY 28, PROTECT SITE BY APPLYING 2 TONS PER ACRE OF WELL ANCHORED STRAW MULCH AND SEED AS SOON AS POSSIBLE IN THE SPRING, OR USE SOD.

MULCHING: APPLY 1-1/2 TO 2 TONS PER ACRE (70 TO 90 LBS/1000 SQ FT) OF UNROTTED, WEED-FREE, SMALL GRAIN STRAW IMMEDIATELY AFTER SEEDING. ANCHOR MULCH IMMEDIATELY AFTER APPLICATION USING MULCH ANCHORING TOOL OR 218 GAL PER ACRE (5 GAL/1000 SQ FT) OF EMULSIFIED ASPHALT ON FLAT AREAS. ON SLOPES, 8 FT OR HIGHER, USE 348 GAL PER ACRE (8 GAL/1000 SQ FT) FOR ANCHORING.

THIS DEVELOPMENT PLAN IS APPROVED FOR SOIL EROSION AND SEDIMENT CONTROL BY THE HOWARD SOIL CONSERVATION DISTRICT.

John K Robertson 6/4/10
HOWARD S.C.D. DATE

DEVELOPER'S/BUILDER'S CERTIFICATE

"I/WE CERTIFY THAT ALL DEVELOPMENT AND/OR CONSTRUCTION WILL BE DONE ACCORDING TO THIS PLAN, AND THAT ANY RESPONSIBLE PERSONNEL INVOLVED IN THE CONSTRUCTION PROJECT WILL HAVE A CERTIFICATE OF ATTENDANCE AT A MARYLAND DEPARTMENT OF THE ENVIRONMENT APPROVED TRAINING PROGRAM FOR THE CONTROL OF SEDIMENT AND EROSION BEFORE BEGINNING THE PROJECT. I ALSO AUTHORIZE PERIODIC ON-SITE INSPECTION BY THE HSCD."

Stephen Leaty 6/11/10
SIGNATURE OF DEVELOPER/BUILDER DATE

ENGINEER'S CERTIFICATE

"I CERTIFY THAT THIS PLAN FOR EROSION AND SEDIMENT CONTROL REPRESENTS A PRACTICAL AND WORKABLE PLAN BASED ON MY PERSONAL KNOWLEDGE OF THE SITE CONDITIONS AND THAT IT WAS PREPARED IN ACCORDANCE WITH THE REQUIREMENTS OF THE HOWARD SOIL CONSERVATION DISTRICT."

6-11-10
SIGNATURE OF ENGINEER DATE

PROFESSIONAL CERTIFICATION

I HEREBY CERTIFY THAT THESE PLANS WERE PREPARED OR APPROVED BY ME, AND THAT I AM A DULY LICENSED PROFESSIONAL ENGINEER UNDER THE LAWS OF THE STATE OF MARYLAND, LICENSE NO. 12975, EXPIRATION DATE: MAY 26, 2012.

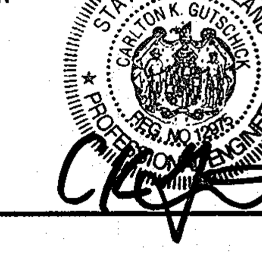

APPROVED
PLANNING BOARD OF HOWARD COUNTY

DATE January 31, 2008 and April 24, 2008 & April 7, 2011

~~APPROVED: FOR PUBLIC WATER & SEWERAGE SYSTEM HOWARD COUNTY HEALTH DEPARTMENT~~

~~County Health Officer Date~~

APPROVED: HOWARD COUNTY DEPARTMENT OF PLANNING & ZONING

Director Date 8/27/10

Chief, Division of Land Development Date 8/27/10

Chief, Development Engineering Division Date 8/10/10

STANDARD AND SPECIFICATIONS FOR TOPSOIL

DEFINITION

PLACEMENT OF TOPSOIL OVER A PREPARED SUBSOIL PRIOR TO ESTABLISHMENT OF PERMANENT VEGETATION.

PURPOSE

TO PROVIDE A SUITABLE SOIL MEDIUM FOR VEGETATIVE GROWTH. SOILS OF CONCERN HAVE LOW MOISTURE CONTENT, LOW NUTRIENT LEVELS, LOW PH, MATERIALS TOXIC TO PLANTS, AND/OR UNACCEPTABLE SOIL GRADATION.

CONDITIONS WHERE PRACTICE APPLIES

I. THIS PRACTICE IS LIMITED TO AREAS HAVING 2:1 OR FLATTER SLOPE WHERE:

A. THE TEXTURE OF THE EXPOSED SUBSOIL/PARENT MATERIAL IS NOT ADEQUATE TO PRODUCE VEGETATIVE GROWTH.

B. THE SOIL MATERIAL IS SO SHALLOW THAT THE ROOTING ZONE IS NOT DEEP ENOUGH TO SUPPORT PLANTS OR FURNISH CONTINUING SUPPLIED OF MOISTURE AND PLANT NUTRIENTS.

C. THE ORIGINAL SOIL TO BE VEGETATED CONTAINS MATERIAL TOXIC TO PLANT GROWTH.

D. THE SOIL IS SO ACIDIC THAT TREATMENT WITH LIMESTONE IS NOT FEASIBLE.

II. FOR THE PURPOSE OF THESE STANDARDS AND SPECIFICATIONS, AREAS HAVING SLOPES STEEPER THAN 2:1 REQUIRE SPECIAL CONSIDERATION AND DESIGN FOR ADEQUATE STABILIZATION. AREAS HAVING SLOPES STEEPER THAN 2:1 SHALL HAVE THE APPROPRIATE STABILIZATION SHOWN ON THE PLANS.

CONSTRUCTION AND MATERIAL SPECIFICATIONS

I. TOPSOIL SALVAGED FROM THE EXISTING SITE MAY BE USED PROVIDED THAT IT MEETS THE STANDARDS AS SET FORTH IN THESE SPECIFICATIONS. TYPICALLY, THE DEPTH OF TOPSOIL TO BE SALVAGED FOR A GIVEN SOIL TYPE CAN BE FOUND IN THE RESPECTIVE SOIL PROFILE SECTION IN THE SOIL SURVEY PUBLISHED BY USDA-SCS IN COOPERATION WITH MARYLAND AGRICULTURAL EXPERIMENTAL STATION.

II. TOPSOIL SPECIFICATIONS – SOIL TO BE USED AS TOPSOIL MUST MEET THE FOLLOWING:

A. TOPSOIL SHALL BE A LOAM, SANDY LOAM, CLAY LOAM, SILT LOAM, SANDY CLAY LOAM, LOAMY SAND. OTHER SOILS MAY BE USED IF RECOMMENDED BY A AGRONOMIST OR SOIL SCIENTIST AND APPROVED BY THE APPROPRIATE APPROVAL AUTHORITY. REGARDLESS, TOPSOIL SHALL NOT BE A MIXTURE OF CONTRASTING TEXTURED SUBSOILS AND SHALL CONTAIN LESS THAN 5% BY VOLUME OF CINDERS, STONES, SLAG, COARSE FRAGMENTS, GRAVEL, STICKS, ROOTS, TRASH, OR OTHER MATERIALS LARGER THAN 1 1/2" IN DIAMETER.

B. TOPSOIL MUST BE FREE OF PLANT PARTS SUCH AS BERMUDA GRASS, QUACKGRASS, JOHNSONGRASS, NUTSEDGE, POISON IVY, THISTLE, OR OTHERS AS SPECIFIED.

C. WHERE THE SUBSOIL IS EITHER HIGHLY ACIDIC OR COMPOSED OF HEAVY CLAYS, GROUND LIMESTONE SHALL BE SPREAD AT THE RATE IF 4-8 TONS/ACRE (200-400 POUNDS PER 1,000 SQUARE FEET) PRIOR TO THE PLACEMENT OF TOPSOIL. LIME SHALL BE DISTRIBUTED UNIFORMLY OVER DESIGNATED AREAS AND WORKED INTO THE SOIL IN CONJUNCTION WITH TILLAGE OPERATIONS AS DESCRIBED IN THE FOLLOWING PROCEDURES.

III. FOR SITES HAVING DISTURBED AREAS UNDER 5 ACRES:

A. PLACE TOPSOIL (IF REQUIRED) AND APPLY SOIL AMENDMENTS AS SPECIFIED IN 20.0 VEGETATIVE STABILIZATION – SECTION 1 – VEGETATIVE STABILIZATION METHODS AND MATERIALS (OR SEE SEEDING NOTES).

IV. FOR SITES HAVING DISTURBED AREAS OVER 5 ACRES:

A. ON SOIL MEETING TOPSOIL SPECIFICATIONS, OBTAIN TEST RESULTS DICTATING FERTILIZER & LIME AMENDMENTS REQUIRED TO BRING THE SOIL INTO COMPLIANCE WITH THE FOLLOWING:

1. PH FOR TOPSOIL SHALL BE BETWEEN 6.0 AND 7.5. IF THE TESTED SOIL DEMONSTRATES A PH OF LESS THAN 6.0, SUFFICIENT LIME SHALL BE PRESCRIBED TO RAISE THE PH TO 6.5 OR HIGHER.
2. ORGANIC CONTENT OF TOPSOIL SHALL BE NOT LESS THAN 1.5 PERCENT BY WEIGHT.
3. TOPSOIL HAVING SOLUBLE SALT GREATER THAN 500 PARTS PER MILL SHALL NOT BE USED.
4. NO SOD OR SEED SHALL BE PLACED ON SOIL WHICH HAS BEEN WITH SOIL STERILANTS OR CHEMICALS USED FOR WEED CONTROL UNTIL SUFFICIENT TIME HAS ELAPSED (14 DAYS MIN.) TO PERMIT DISSIPATION OF PHOTO-TOXIC MATERIALS.

NOTE: TOPSOIL SUBSTITUTES OR AMENDMENTS, AS RECOMMENDED BY A QUALIFIED AGRONOMIST OR SOIL SCIENTIST AND APPROVED BY THE APPROPRIATE APPROVAL AUTHORITY, MAY BE USED IN LIEU OF NATURAL TOPSOIL.

B. PLACE TOPSOIL (IF REQUIRED) AND APPLY SOIL AMENDMENTS AS SPECIFIED IN 2.0 VEGETATIVE STABILIZATION – SECTION I – VEGETATIVE STABILIZATION METHODS AND MATERIALS (OR SEE SEEDING NOTES).

V. TOPSOIL APPLICATION

A. WHEN TOPSOILLING, MAINTAIN NEEDED EROSION AND SEDIMENT CONTROL PRACTICES SUCH AS DIVERSION, GRADE STABILIZATION STRUCTURES, EARTH DIKES, SLOPE SILT FENCE AND SEDIMENT TRAPS AND BASINS.

B. GRADES ON THE AREAS TO BE TOPSOILED, WHICH HAVE BEEN PREVIOUSLY ESTABLISHED, SHALL BE MAINTAINED, ALBEIT 4"-8" HIGHER IN ELEVATION.

C. TOPSOIL SHALL BE UNIFORMLY DISTRIBUTED IN A 4' -8' LAYER AND LIGHTLY COMPACTED TO A MINIMUM THICKNESS OF 4". SPREADING SHALL BE PERFORMED IN SUCH A MANNER THAT SODDING OR SEEDING CAN PROCEED WITH A MINIMUM OF ADDITIONAL SOIL PREPARATION AND TILLAGE. ANY IRREGULARITIES IN THE SURFACE RESULTING FROM TOPSOILLING OR OTHER OPERATIONS SHALL BE CORRECTED IN ORDER TO PREVENT THE FORMATION OF DEPRESSIONS OR WATER

D. TOPSOIL SHALL NOT BE PLACED WHILE THE TOPSOIL OR SUBSOIL IS FROZEN OR MUDDY CONDITION, WHEN THE SUBSOIL IS EXCESSIVELY WET OR IN A CONDITION THAT MAY OTHERWISE BE DETRIMENTAL TO PROPER GRADING AND SEEDBED PREPARATION.

VI. ALTERNATIVE FOR PERMANENT SEEDING – INSTEAD OF APPLYING THE FULL AMOUNTS OF LIME AND COMMERCIAL FERTILIZER, COMPOSTED SLUDGE AND AMENDMENTS MAY BE APPLIED AS SPECIFIED BELOW:

A. COMPOSTED SLUDGE MATERIAL FOR USE AS A SOIL CONDITIONER FOR SITES HAVING DISTURBED AREAS OVER 5 ACRES SHALL BE TESTED TO PRESCRIBE AMENDMENTS AND FOR SITES HAVING DISTURBED AREAS UNDER 5 ACRES SHALL CONFORM TO THE FOLLOWING REQUIREMENTS:

1. COMPOSTED SLUDGE SHALL BE SUPPLIED BY, OR ORIGINATE FROM, A PERSON OR PERSONS THAT ARE PERMITTED (AT THE TIME OF ACQUISITION OF THE COMPOST) BY THE MARYLAND DEPARTMENT OF THE ENVIRONMENT UNDER COMAR 26.04.06.

2. COMPOSTED SLUDGE SHALL CONTAIN AT LEAST 1 PERCENT NITROGEN, 1.5 PERCENT PHOSPHORUS, AND 0.2 PERCENT POTASSIUM AND HAVE A PH OF 7.0 TO 8.0. IF COMPOST DOES NOT MEET THESE REQUIREMENTS, THE APPROPRIATE CONSTITUENTS MUST BE ADDED TO MEET THE REQUIREMENTS PRIOR TO USE.

3. COMPOSTED SLUDGE SHALL BE APPLIED AT A RATE OF 1 TON/1,000 SQUARE FEET.

B. COMPOSTED SLUDGE SHALL BE AMENDED WITH A POTASSIUM FERTILIZER APPLIED AT A RATE OF 4LB/1,000 SQUARE FEET, AND 1/3 THE NORMAL LIME APPLICATION RATE.

REFERENCES: GUIDELINE SPECIFICATIONS, SOIL PREPARATION AND SODDING. MD-VA PUB. #1, COOPERATIVE EXTENSION SERVICE, UNIVERSITY OF MARYLAND AND VIRGINIA POLYTECHNIC INSTITUTES. REVISED 1973.

Dust Control

Definition

Controlling dust blowing and movement on construction sites and roads.

Purpose

To prevent blowing and movement of dust from exposed soil surfaces, reduce on and off-site damage, health hazards, and improve traffic safety.

Conditions Where Practice Applies

This practice is applicable to areas subject to dust blowing and movement where on and off-site damage is likely without treatment.

Dust Control Continued

Specifications

Temporary Methods

1. Mulches – See standards for vegetative stabilization with mulches only. much should be crimped or tacked to prevent blowing.
2. Vegetative Cover – See standards for temporary vegetative cover.
3. Tillage – To roughen surface and bring clods to the surface. This is an emergency measure which should be used before soil blowing starts. Begin plowing on windward side of site. Chisel-type plows spaced about 12" apart, spring-toothed harrows, and similar plows are examples of equipment which may produce the desired effect.
4. Irrigation – This is generally done as an emergency treatment. Site is sprinkled with water until the surface is moist. Repeat as needed At no time should the site be irrigated to the point that runoff begins to flow.
5. Barriers – Solid board fences, silt fences, snow fences, straw bales, and similar material can be used to control air currents and soil blowing. Barriers placed at right angle to prevailing currents at intervals at about ten times their height are effective in controlling soil blowing.
6. Calcium Chloride – Apply at rates that will keep surface moist. May need treatment.

Permanent Methods
1. Permanent Vegetation – See standards for permanent vegetative cover, and permanent stabilization with sod. Existing trees or large shrubs may afford valuable protection if left in place.
2. Topsoiling – Covering with less erosive soil material. See standards for top soil.
3. Stone – Cover surface with crushed stone or gravel.

References

1. Agriculture Handbook 346. Wind Erosion Forces in the United States and Their Use in Predicting Soil Loss.
2. Agriculture Information Bulletin 354. How to Control Wind Erosion, USDA_ARS.

SEDIMENT CONTROL NOTES

1. A MINIMUM OF 24 HOURS NOTICE MUST BE GIVEN TO THE HOWARD COUNTY OFFICE OF INSPECTION AND PERMITS PRIOR TO THE START OF ANY CONSTRUCTION. (410) 313-1855

2. ALL VEGETATIVE AND STRUCTURAL PRACTICES ARE TO BE INSTALLED ACCORDING TO THE PROVISIONS OF THIS PLAN AND ARE TO BE IN CONFORMANCE WITH THE 1994 MARYLAND STANDARDS AND SPECIFICATIONS FOR SOIL EROSION AND SEDIMENT CONTROL AND REVISIONS THERETO.

3. FOLLOWING INITIAL SOIL DISTURBANCE OR REDISTURBANCE, PERMANENT OR TEMPORARY STABILIZATION SHALL BE COMPLETED WITHIN: A) 7 CALENDAR DAYS FOR ALL PERIMETER SEDIMENT CONTROL STRUCTURES, DIKES AND PERIMETER SLOPES AND ALL SLOPES GREATER THAN 3:1, B) 14 DAYS AS TO ALL OTHER DISTURBED OR GRADED AREAS ON THE PROJECT SITE.

4. ALL SEDIMENT TRAPS/BASINS SHOWN MUST BE FENCED AND WARNING SIGNS POSTED AROUND THEIR PERIMETER IN ACCORDANCE WITH VOL. 1, CHAPTER 12, OF THE HOWARD COUNTY DESIGN MANUAL, STORM DRAINAGE.

5. ALL DISTURBED AREAS MUST BE STABILIZED WITHIN THE TIME PERIOD SPECIFIED ABOVE IN ACCORDANCE WITH THE 1994 MARYLAND STANDARDS AND SPECIFICATIONS FOR SOIL EROSION AND SEDIMENT CONTROL FOR PERMANENT SEEDINGS, SOD, TEMPORARY SEEDINGS AND MULCHING (SEC. G). TEMPORARY STABILIZATION, WITH MULCH ALONE, CAN ONLY BE DONE WHEN RECOMMENDED SEEDING DATES DO NOT ALLOW FOR PROPER GERMINATION AND ESTABLISHMENT OF GRASSES.

6. ALL SEDIMENT CONTROL STRUCTURES ARE TO REMAIN IN PLACE AND ARE TO BE MAINTAINED IN OPERATIVE CONDITION UNTIL PERMISSION FOR THEIR REMOVAL HAS BEEN OBTAINED FROM THE HOWARD COUNTY SEDIMENT CONTROL INSPECTOR.

TOTAL AREA OF SITE	:	12.2± ACRES (PARCEL D-2)
AREA DISTURBED	:	12.6± ACRES **
AREA TO BE ROOFED OR PAVED	:	10.2± ACRES
AREA TO BE VEGETATIVELY STABILIZED	:	2.4± ACRES
TOTAL CUT	:	35,000± CU. YDS.
TOTAL FILL	:	35,000± CU. YDS.
OFF-SITE WASTE/BORROW AREA LOCATION	:	NONE

8. ANY SEDIMENT CONTROL PRACTICE WHICH IS DISTURBED BY GRADING ACTIVITY FOR PLACEMENT OF UTILITIES MUST BE REPAIRED ON THE SAME DAY OF DISTURBANCE.

9. ADDITIONAL SEDIMENT CONTROL MUST BE PROVIDED, IF DEEMED NECESSARY BY THE HOWARD COUNTY DPW SEDIMENT CONTROL INSPECTOR.

10. ON ALL SITES WITH DISTURBED AREAS IN EXCESS OF 2 ACRES, APPROVAL OF THE INSPECTION AGENCY SHALL BE REQUESTED UPON COMPLETION OF INSTALLATION OF PERIMETER EROSION AND SEDIMENT CONTROLS, BUT BEFORE PROCEEDING WITH ANY OTHER EARTH DISTURBANCE OR GRADING. OTHER BUILDING OR GRADING INSPECTION APPROVALS MAY NOT BE AUTHORIZED UNTIL THIS INITIAL APPROVAL BY THE INSPECTION AGENCY IS MADE.

11. TRENCHES FOR THE CONSTRUCTION OF UTILITIES IS LIMITED TO 3 PIPE LENGTHS OR THAT WHICH SHALL BE BACKFILLED AND STABILIZED WITHIN 1 WORKING DAY, WHICHEVER IS SHORTER.

** THE 12.6 ACRES DOES NOT INCLUDE THE AREA OF McGAW AND SNOWDEN RIVER PKWY. THAT ARE DISTURBED UNDER F-07-208.

DETAIL 15 – RISER BASE DETAIL

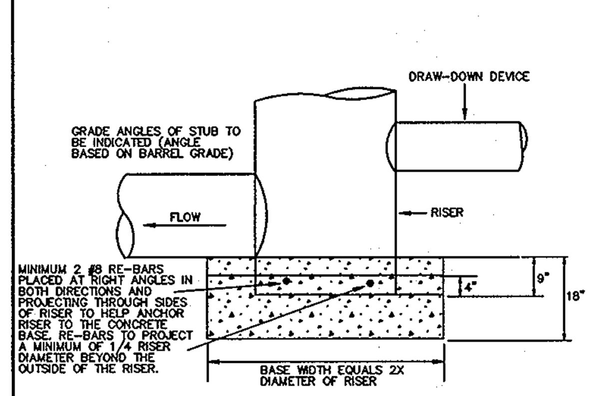

Construction Specifications

The riser shall have a base attached with a watertight connection and shall have sufficient weight to prevent flotation of the riser. Two approved bases for risers 10' or less in height are:

1. A concrete base 18" thick with the riser embedded 9" in the base.

2. A 1/4" minimum thickness steel plate attached to the riser by a continuous weld around the circumference of the riser to form a watertight connection. The plate shall have 2' of stone, gravel, or compacted earth placed on it to prevent flotation. In either case, each side of the square base shall be twice the riser diameter.

Note: For risers greater than ten feet high computations shall be made to design a base which will prevent floatation. The minimum factor of safety shall be 1.20 (downward forces = 1.20 x upward forces).

U.S. DEPARTMENT OF AGRICULTURE SOIL CONSERVATION SERVICE	PAGE C – 10 – 26	MARYLAND DEPARTMENT OF ENVIRONMENT WATER MANAGEMENT ADMINISTRATION

DETAIL 24 – STABILIZED CONSTRUCTION ENTRANCE

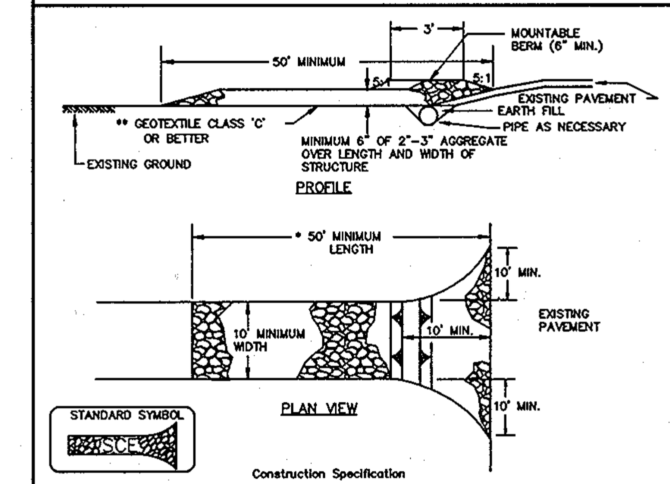

Construction Specification

1. Length – minimum of 50' (*30' for single residence lot).

2. Width – 10' minimum, should be flared at the existing road to provide a turning radius.

3. Geotextile fabric (filter cloth) shall be placed over the existing ground prior to placing stone. **The plan approval authority may not require single family residences to use geotextile.

4. Stone – crushed aggregate (2" to 3") or reclaimed or recycled concrete equivalent shall be placed at least 6" deep over the length and width of the entrance.

5. Surface Water – all surface water flowing to or diverted toward construction entrances shall be piped through the entrance, maintaining positive drainage. Pipe installed through the stabilized construction entrance shall be protected with a mountable berm with 5:1 slopes and a minimum of 6" of stone over the pipe. Pipe has to be sized according to the drainage. When the SCE is located at a high spot and has no drainage to convey a pipe will not be necessary. Pipe should be sized according to the amount of runoff to be conveyed. A 6" minimum will be required.

6. Location – A stabilized construction entrance shall be located at every point where construction traffic enters or leaves a construction site. Vehicles leaving the site must travel over the entire length of the stabilized construction entrance.

U.S. DEPARTMENT OF AGRICULTURE SOIL CONSERVATION SERVICE	PAGE F – 17 – 3	MARYLAND DEPARTMENT OF ENVIRONMENT WATER MANAGEMENT ADMINISTRATION

DETAIL 22 – SILT FENCE

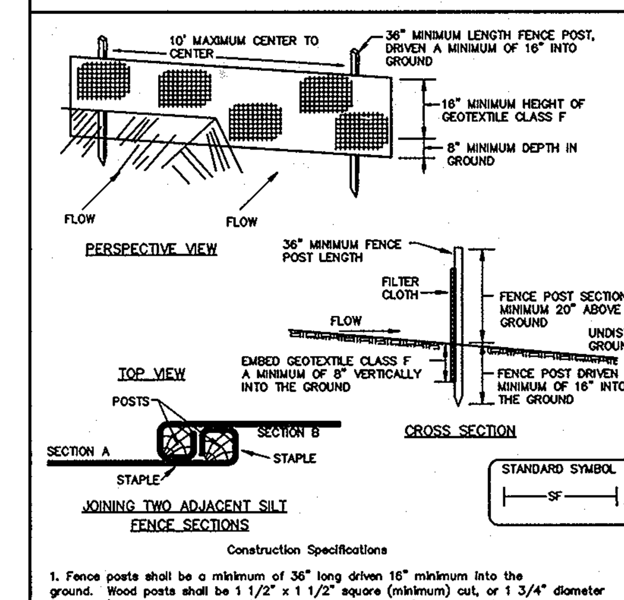

Construction Specifications

1. Fence posts shall be a minimum of 36" long driven 16" minimum into the ground. Wood posts shall be 1 1/2" x 1 1/2" square (minimum) cut, or 1 3/4" diameter (minimum) round and shall be of sound quality hardwood. Steel posts will be standard T or U section weighting not less than 1.00 pond per linear foot.

2. Geotextile shall be fastened securely to each fence post with wire ties or staples at top and mid-section and shall meet the following requirements for Geotextile Class F:

Tensile Strength	50 lbs/in (min.)	Test: MSMT 509
Tensile Modulus	20 lbs/in (min.)	Test: MSMT 509
Flow Rate	0.3 gal ft / minute (max.)	Test: MSMT 322
Filtering Efficiency	75% (min.)	Test: MSMT 322

3. Where ends of geotextile fabric come together, they shall be overlapped, folded and stapled to prevent sediment bypass.

4. Silt Fence shall be inspected after each rainfall event and maintained when bulges occur or when sediment accumulation reached 50% of the fabric height.

U.S. DEPARTMENT OF AGRICULTURE SOIL CONSERVATION SERVICE	PAGE E – 15 – 3	MARYLAND DEPARTMENT OF ENVIRONMENT WATER MANAGEMENT ADMINISTRATION

DETAIL 33 – SUPER SILT FENCE

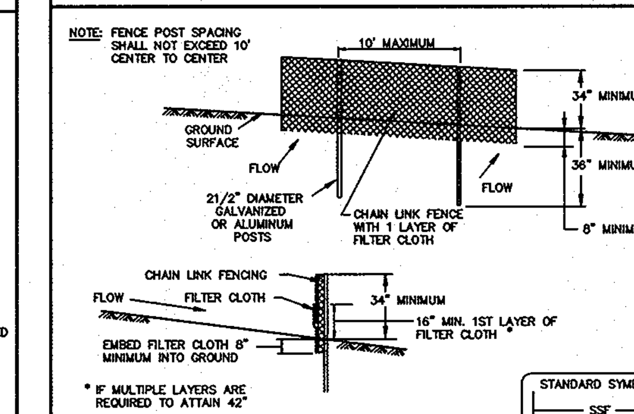

Construction Specifications

1. Fencing shall be 42" in height and constructed in accordance with the latest Maryland State Highway Details for Chain Link Fencing. The specification for a 6' fence shall be used, substituting 42" fabric and 6' length posts.

2. Chain link fence shall be fastened securely to the fence posts with wire ties. The lower tension wire, brace and truss rods, drive anchors and post caps are not required except on the ends of the fence.

3. Filter cloth shall be fastened securely to the chain link fence with ties spaced every 24" at the top and mid section.

4. Filter cloth shall be embedded a minimum of 8" into the ground.

5. When two sections of filter cloth adjoin each other, they shall be overlapped by 6" and folded.

6. Maintenance shall be performed as needed and silt buildups removed when "bulges" develop in the silt fence, or when silt reaches 50% of fence height.

7. Filter cloth shall be fastened securely to each fence post with wire ties or staples at top and mid section and shall meet the following requirements for Geotextile Class F:

Tensile Strength	50 lbs/in (min.)	Test: MSMT 509
Tensile Modulus	20 lbs/in (min.)	Test: MSMT 509
Flow Rate	0.3 gal/ft /minute (max.)	Test: MSMT 322
Filtering Efficiency	75% (min.)	Test: MSMT 322

U.S. DEPARTMENT OF AGRICULTURE SOIL CONSERVATION SERVICE	PAGE H – 26 – 3	MARYLAND DEPARTMENT OF ENVIRONMENT WATER MANAGEMENT ADMINISTRATION

DETAIL 6 – GABION INFLOW PROTECTION

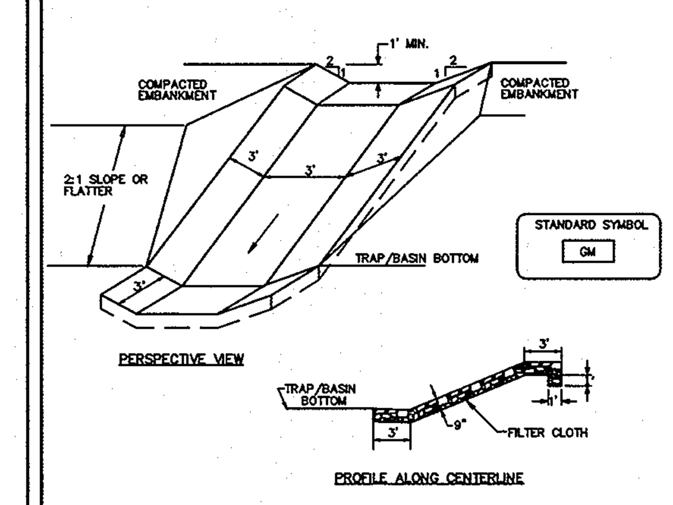

Construction Specifications

1. Gabion inflow protection shall be constructed of 9' x 3' x 9" gabion baskets forming a trapezoidal cross section 1' deep, with 2:1 side slopes, and a 3' bottom width.

2. Geotextile Class C shall be installed under all gabion baskets.

3. The stone used to fill the gabion baskets shall be 4" – 7".

4. Gabions shall be installed in accordance with manufacturers recommendations.

5. Gabion Inflow Protection shall be used where concentrated flow is present on slopes steeper than 4:1.

U.S. DEPARTMENT OF AGRICULTURE SOIL CONSERVATION SERVICE	PAGE B – 7 – 2	MARYLAND DEPARTMENT OF ENVIRONMENT WATER MANAGEMENT ADMINISTRATION

DETAIL 23C CURB INLET PROTECTION (COG OR COS INLETS)

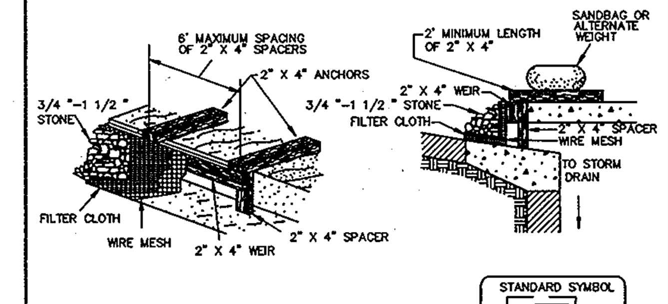

MAX. DRAINAGE AREA = 1/4 ACRE

Construction Specifications

1. Attach a continuous piece of wire mesh (30" minimum width by throat length plus 4') to the 2" x 4" weir (measuring throat length plus 2') as shown on the standard drawing.

2. Place a continuous piece of Geotextile Class E the same dimensions as the wire mesh over the wire mesh and securely attach it to the 2" x 4" weir.

3. Securely nail the 2" X 4" weir to a 9" long vertical spacer to be located between the weir and the inlet face (max. 4' apart).

4. Place the assembly against the inlet throat and nail (minimum 2' lengths of 2" x 4" to the top of the weir at spacer locations). These 2" x 4" anchors shall extend across the inlet top and be held in place by sandbags or alternate weight.

5. The assembly shall be placed so that the end spacers are a minimum 1' beyond both ends of the throat opening.

6. Form the 1/2" x 1/2" wire mesh and the geotextile fabric to the concrete gutter and against the face of the curb on both sides of the inlet. Place clean 3/4" x 1 1/2" stone over the wire mesh and geotextile in such a manner to prevent water from entering the inlet under or around the geotextile.

7. This type of protection must be inspected frequently and the filter cloth and stone replaced when clogged with sediment.

8. Assure that storm flow does not bypass the inlet by installing a temporary earth or asphalt dike to direct the flow to the inlet.

U.S. DEPARTMENT OF AGRICULTURE SOIL CONSERVATION SERVICE	PAGE E – 16 – 5B	MARYLAND DEPARTMENT OF ENVIRONMENT WATER MANAGEMENT ADMINISTRATION

DETAIL 23B – AT GRADE INLET PROTECTION

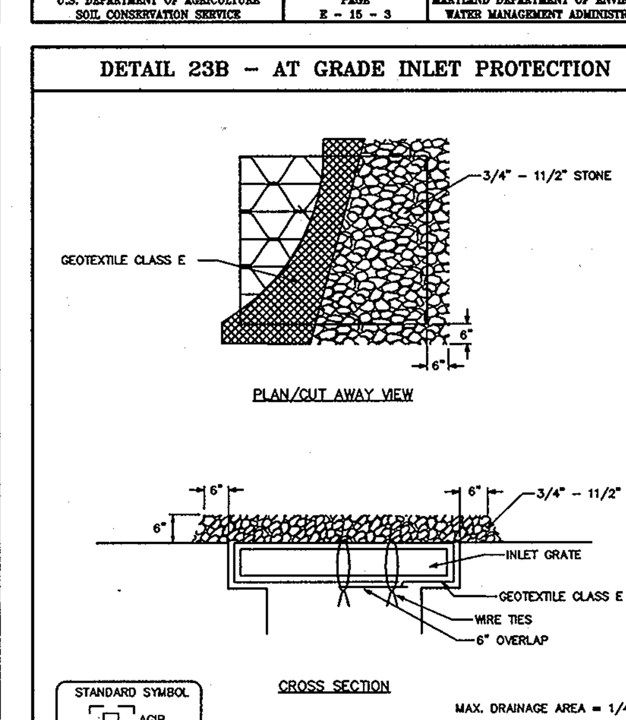

MAX. DRAINAGE AREA = 1/4 ACRE

Construction Specifications

1. Lift grate and wrap with Geotextile Class E to completely cover all openings, then set grate back in place.

2. Place 3/4" to 11/2" stone, 4"-6" thick on the grate to secure the fabric and provide additional filtration.

U.S. DEPARTMENT OF AGRICULTURE SOIL CONSERVATION SERVICE	PAGE E – 16 – 5A	MARYLAND DEPARTMENT OF ENVIRONMENT WATER MANAGEMENT ADMINISTRATION

DETAIL 23A – STANDARD INLET PROTECTION

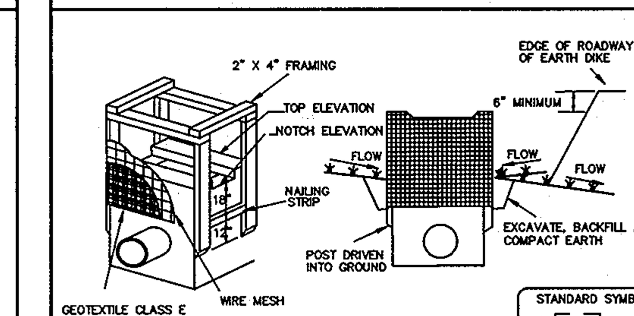

MAX. DRAINAGE AREA = 1/4 ACRE

Construction Specifications

1. Excavate completely around the inlet to a depth of 18" below the notch elevation.

2. Drive the 2" x 4" construction grade lumber posts 1' into the ground at each corner of the inlet. Place nail strips between the posts on the ends of the inlet. Assemble the top portion of the 2" x 4" frame using the overlap joint shown on Detail 23A. The top of the frame (weir) must be 6" below adjacent roadways where flooding and safety issues may arise.

3. Stretch the 1/2" x 1/2" wire mesh tightly around the frame and fasten securely. The ends must meet and overlap at a post.

4. Stretch the Geotextile Class E tightly over the wire mesh with the geotextile extending from the top of the frame to 18" below the inlet notch elevation. Fasten the geotextile firmly to the frame. The ends of the geotextile must meet at a post, be overlapped and folded, then fastened down.

5. Backfill around the inlet in compacted 6" layers until the layer of earth is level with the notch elevation on the ends and top elevation on the sides.

6. If the inlet is not in a sump, construct a compacted earth dike across the ditch line directly below it. The top of the earth dike should be at least 6" higher than the top of the frame.

7. The structure must be inspected periodically and after each rain and the geotextile replaced when it becomes clogged.

U.S. DEPARTMENT OF AGRICULTURE SOIL CONSERVATION SERVICE	PAGE E – 16 – 5	MARYLAND DEPARTMENT OF ENVIRONMENT WATER MANAGEMENT ADMINISTRATION

DETAIL 16 – CONCENTRIC TRASH RACK AND ANTI-VORTEX DEVICE

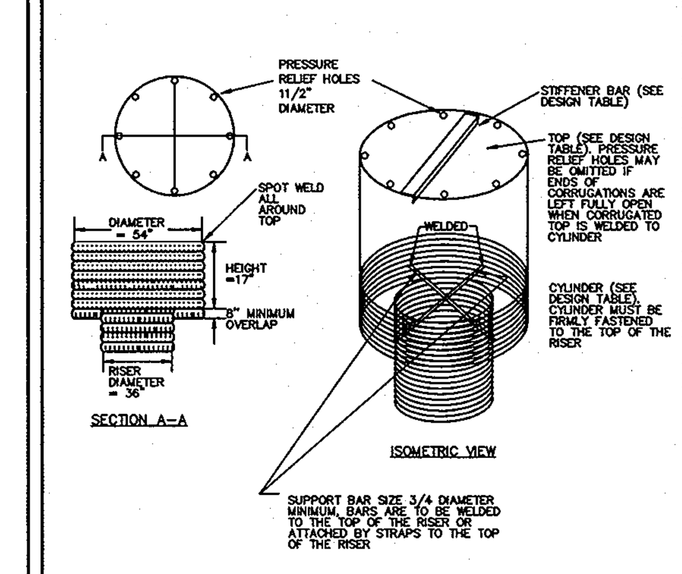

U.S. DEPARTMENT OF AGRICULTURE SOIL CONSERVATION SERVICE	PAGE C – 10 – 26	MARYLAND DEPARTMENT OF ENVIRONMENT WATER MANAGEMENT ADMINISTRATION

SEDIMENT BASIN 'B' DATA TABLE

INTERIM DRAINAGE AREA : 5.9 AC

WET STORAGE VOL. REQUIRED : 0.24 AC-FT
WET STORAGE VOL. PROVIDED : 0.29 AC-FT
WET STORAGE ELEV : 378.00
DRY STORAGE REQUIRED: 0.24 AC-FT
DRY STORAGE PROVIDED = 0.60 AC-FT
DRY STORAGE WSEL = 381.00
BASIN CLEANOUT ELEVATION = 377.00
EXISTING Q-1YR = 2.14 cfs
INTERIM Q-1YR = 0.68 cfs
SAFE PASS OF 10-YR STORM PROVIDED
Q10 = 26.29 cfs
10-YR WSEL = 381.95 ft.
BOTTOM ELEVATION : 376.0
TOP OF EMBANKMENT : 384
OUTFALL: 36" CMP RISER
RISER WEIR CREST ELEVATION : 381.00
RISER WEIR LENGTH : 9.42'
RISER TRASH RACK/ANTIVORTEX: 54"

DEWATERING DEVICE = 8" PERFORATED PVC -WITH 6" PVC BARREL AT 0.0%
DEWATERING INVERT AT 36" RISER = 378.0
INVERT FIRST PERFORATION = 378.0
DEWATERING PERFORATION CONFIGURATION:
WITH 1" HOLES @ 2" C-O-C.
12 HOLES PER CIRCUMFERENTIAL ROW.
18 HOLES RUNNING VERTICALLY.
216 HOLES TOTAL.

EMERGENCY SPILLWAY ELEV : 383.0
SIDE SLOPES : 2:1 INTERIOR – 3:1 EXTERIOR

LOW FLOW ORIFICE

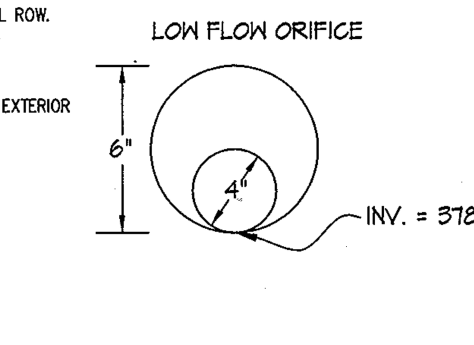

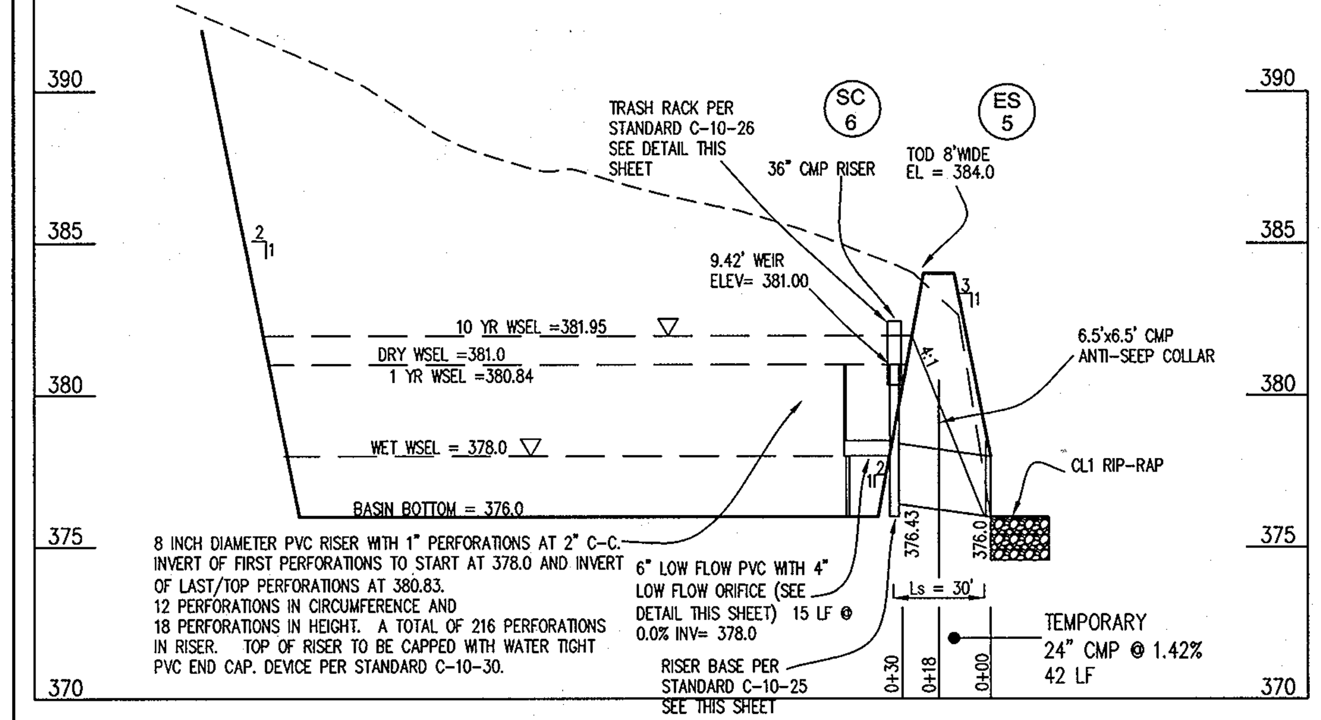

SEDIMENT BASIN B - PROFILE THROUGH PRINCIPLE SPILLWAY

SCALE: (H) 1" = 50'
(V) 1" = 5'

SEDIMENT TRAP'D' DATA TABLE

STONE OUTLET SEDIMENT TRAP

WORST CASE INTERIM DRAINAGE AREA : 0.2 AC

WET STORAGE VOL. REQUIRED : 0.01 AC-FT
WET STORAGE VOL. PROVIDED : 0.01 AC-FT
WET STORAGE ELEV : 376.00
DRY STORAGE REQUIRED: 0.01 AC-FT
DRY STORAGE PROVIDED = 0.02 AC-FT
DRY STORAGE WSEL = 377.00
INTERIM Q-1YR = 0.24 cfs
SAFE PASS OF 10-YR STORM PROVIDED
Q_{10} = 1.1 cfs
10-YR WSEL = 377.17 ft.
BOTTOM ELEVATION : 375.00
TOP OF EMBANKMENT : 378.00
WEIR CREST ELEVATION : 377.00
WEIR LENGTH : 2'

EMERGENCY SPILLWAY ELEV : NONE
CLEANOUT ELEVATION : 375.5
EMBANKMENT TOP WIDTH: 4'
SIDE SLOPES : 2:1 INTERIOR - 3:1 EXTERIOR
BOTTOM WIDTH = 15'
BOTTOM LENGTH= 17'

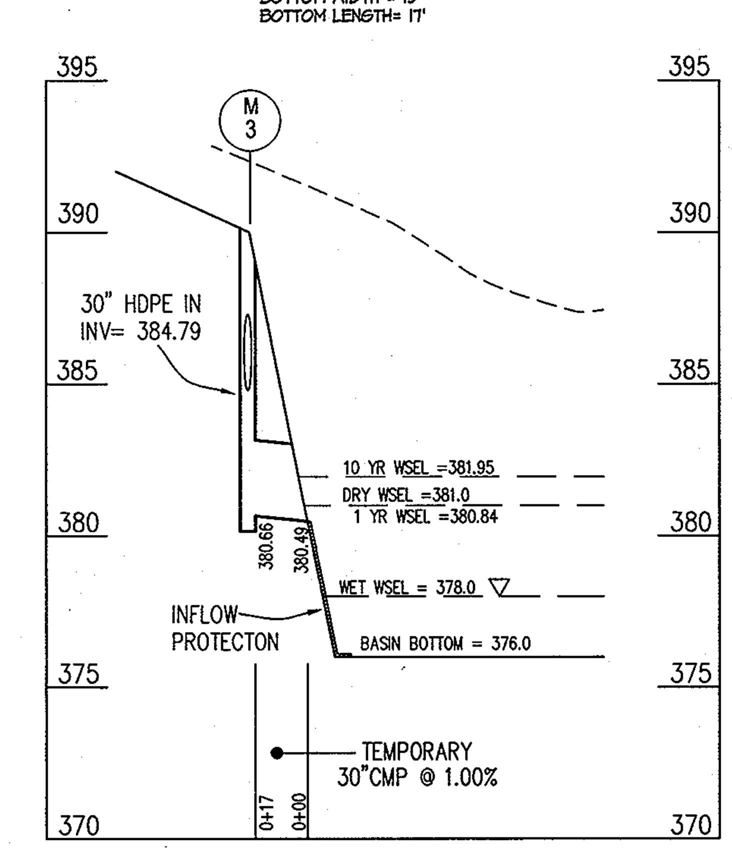

NOTE:
1. EXCEPT FOR THE TRENCH DRAIN, ALL INLETS SHALL BE PROTECTED INITIALLY WITH THE STANDARD INLET PROTECTION (SIP, DET. 23A) UNTIL CURB & GUTTER AND BASE PAVING ARE INSTALLED. SWITCH TO 'CIP' AND 'AGIP' ONCE CURB & GUTTER AND BASE PAVING ARE IN PLACE.
2. SEE MDE "1994 MARYLAND STARDARDS & SPECIFICATIONS FOR SOIL EROSION & SEDIMENT CONTROL" PAGES C-10-16 AND C-10-7 FOR BASIN CONSTRUCTION SPECIFICATIONS.

DETAIL 9 – STONE OUTLET SEDIMENT TRAP – ST II

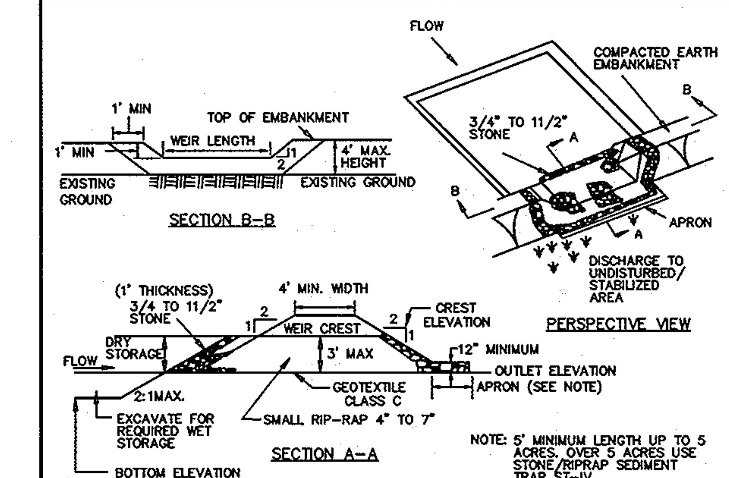

Construction Specifications

1. Area under embankment shall be cleared, grubbed and stripped of any vegetation and root mat. The pool area shall be cleared.

2. The fill material for the embankment shall be free of roots and other woody vegetation as well as over-sized stones, rocks, organic material or other objectionable material. The embankment shall be compacted by traversing with equipment while it is being constructed.

3. All cut and fill slopes shall be 2:1 or flatter.

4. The stone used in the outlet shall be small rip-rap 4" to 7" in size with a 1' thick layer of 3/4" to 11/2" washed aggregate placed on the upstream face of the outlet. Stone facing shall be as necessary to prevent clogging. Geotextile Class C may be substituted for the stone facing by placing it on the inside face of the stone outlet.

5. Sediment shall be removed and trap restored to its original dimensions when the sediment has accumulated to one half of the wet storage depth of the trap. Removed sediment shall be deposited in a suitable area and in such a manner that it will not erode.

U.S. DEPARTMENT OF AGRICULTURE SOIL CONSERVATION SERVICE	PAGE C – 9 – 10	MARYLAND DEPARTMENT OF ENVIRONMENT WATER MANAGEMENT ADMINISTRATION

GLW GUTSCHICK LITTLE & WEBER, P.A.
CIVIL ENGINEERS, LAND SURVEYORS, LAND PLANNERS, LANDSCAPE ARCHITECTS
3909 NATIONAL DRIVE – SUITE 250 – BURTONSVILLE OFFICE PARK
BURTONSVILLE, MARYLAND 20866
TEL: 301-421-4024 BALT: 410-880-1820 DC/VA: 301-989-2524 FAX: 301-421-4186

\Drawings\07005\SDP\07005-SNE-DET.dwg	DES. MBT	DRN. KLP	CHK.

DATE	REVISION	BY	APP'R.
06-11-2010	UPDATE PROFILES, DATA TABLES & ADDED MDE TRAP DETAIL		

PREPARED FOR:

OWNER/DEVELOPER/LAND LEASER:
SCIENCE FICTION, LLC
C/O ANTWERPEN AUTOMOTIVE GROUP
6440 BALTIMORE NATIONAL PIKE
CATONSVILLE, MD 21228
CONTACT: Stanford Hess

LAND LEASEE:
WEGMANS FOOD MARKETS, INC.
100 WEGMANS MARKET STREET
ROCHESTER, NY 14624
CONTACT: STEPHEN LEATY
585-464-4600 EXT. 6833

(REVISED) SEDIMENT CONTROL NOTES & DETAILS

WEGMANS FOOD MARKETS

COLUMBIA SIELING INDUSTRIAL CENTER
PARCEL 'D-2' (redevelopment of Parcel D-1)
TAX MAP PARCEL 356
SECTION 1, AREA 1; PLAT Nos. 17484, 20012 & 21178

6TH ELECTION DISTRICT HOWARD COUNTY, MARYLAND

SCALE	ZONING	G. L. W. FILE No.
NO SCALE	NT	07005
DATE	TAX MAP – GRID	SHEET
JUNE/2010	TM 36 – 24	10 OF 21

SDP-07-131

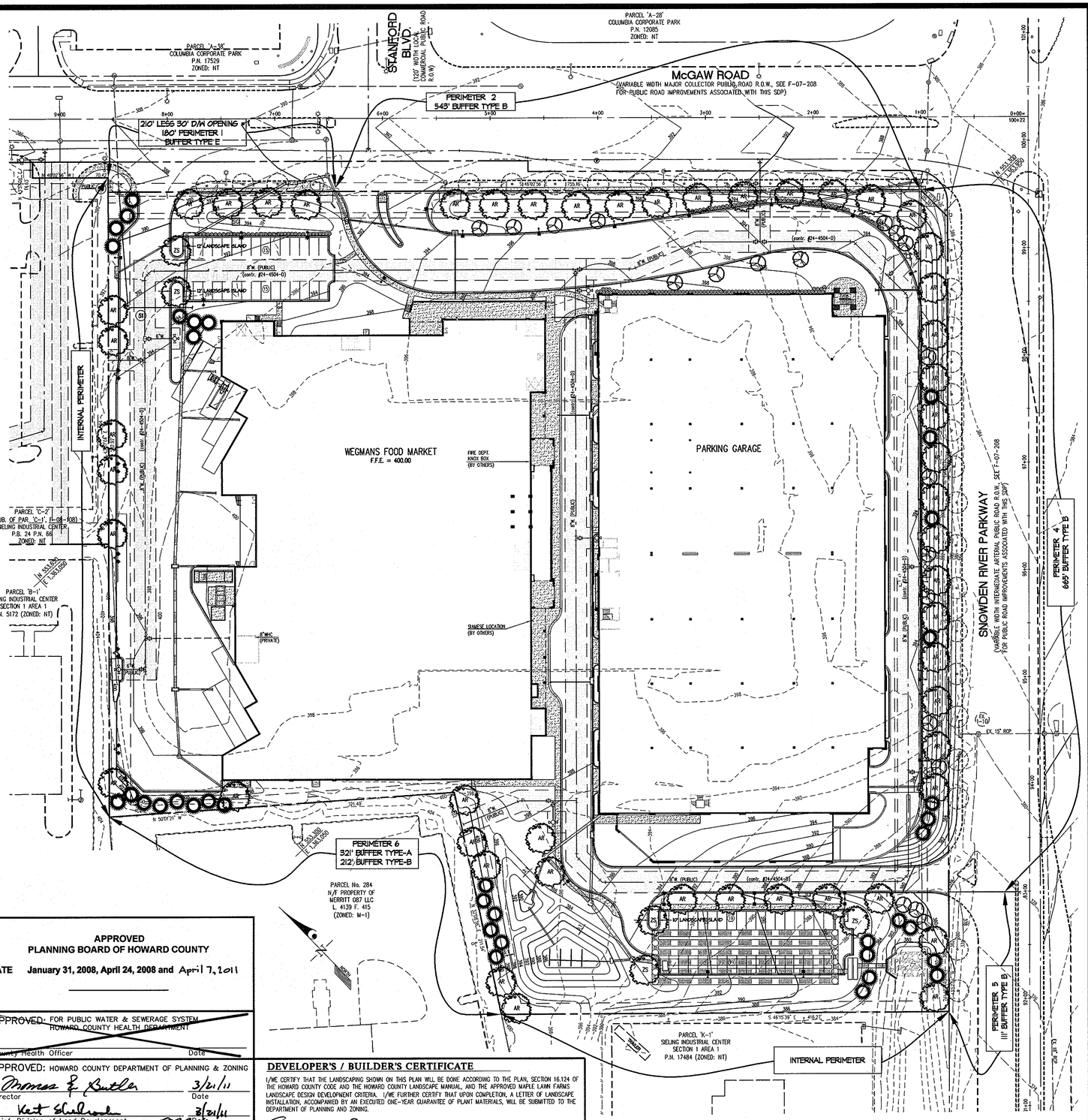

THIS PLAN IS FOR LANDSCAPE PURPOSES ONLY

PLANT LEGEND:

- AR — PROPOSED SHADE TREE (NEW)
- PROPOSED EVERGREEN TREE (NEW)
- PROPOSED ORNAMENTAL TREE (NEW)
- PROPOSED SHRUB (NEW)
- STREET TREE PER F-07-208

SCHEDULE A - PERIMETER LANDSCAPE EDGE

PERIMETER LOCATION	McGAW ROAD, PERIMETER (1)	McGAW ROAD, PERIMETER (2)	McGAW ROAD AND SNOWDEN RIVER, PERIMETER (3)	SNOWDEN RIVER, PERIMETER (4)	SNOWDEN RIVER, PERIMETER (5)	MERRITT 087 LLC PERIMETER (6)		INTERNAL (ALL OTHERS)
USE SITUATION	PARKING ADJACENT TO PUBLIC ROAD	NON-RESIDENTIAL ADJACENT TO PUBLIC ROAD	PARKING ADJACENT TO PUBLIC ROAD	NON-RESIDENTIAL ADJACENT TO PUBLIC ROAD	STORMWATER MANAGEMENT ADJACENT TO PUBLIC ROAD	NON-RESIDENTIAL ADJACENT TO NON-RESIDENTIAL	SWM ADJACENT TO NON-RESIDENTIAL	INTERNAL
LANDSCAPE BUFFER TYPE	E	B	E	B	B	A	B	N/A
LINEAR FEET OF ROADWAY FRONTAGE/PERIMETER	180 LF	543 LF	465 LF	665 LF	111 LF	321 LF	212 LF	N/A
CREDIT FOR EXISTING VEGETATION	NONE	NONE	NONE	NONE	NONE	NONE	NONE	N/A
CREDIT FOR WALL, FENCE OR BERM	NONE	NONE	NONE	NONE	NONE	NONE	NONE	N/A
LENGTH OF PERIMETER TO BE BUFFERED	180 LF	543 LF	465 LF	665 LF (less 24' d/w opening=641')	111 LF	321 LF	211 LF	N/A
NUMBER OF PLANTS REQUIRED								N/A
SHADE TREES	5	11	12	13	2	6	5	
EVERGREEN TREES	NONE	14	NONE	16	3	NONE	6	
SHRUBS	45	NONE	117	NONE	NONE	NONE	NONE	
NUMBER OF PLANTS PROVIDED								N/A
SHADE TREES	4	11	11	15 (2 for 4 evgrn.)	2	2	5	
EVERGREEN TREES	4, 2 for 1 shade and 2 for 10 shrubs	0	0	7	>3	8 for 4 shade	6	
ORNAMENTAL TREES (@ 2:1 substitution)	0	The 14 evergreens are substituted with 11 ornt'l trees & 117 shrubs	3 ornamental for 1 shade tree	6 for 6 evergreen	0	0	0	
SHRUBS (10:1 substitution)	35		117	0	0	0	0	

SURETY FOR SCHEDULE 'A':

46 SHADE TREES @ $300/TREE =	$ 13,800.00
27 EVERGREEN TREES @ $150/TREE =	$ 4,050.00
162 SHRUBS @ $30/SHRUB =	$ 4,860.00
TOTAL SURETY =	$ 22,710.00

THE SCHEDULE-A LANDSCAPE SURETY OF $22,710.00 IS MORE THAN SUFFICIENT TO COVER THE REVISED SURETY OF $19,800.00 FOR THE REQUIRED PERIMETER PLANTING ASSOCIATED WITH THE REVISIONS FOR DIRECT ACCESS TO SNOWDEN RIVER PKWY. THE REVISED SURETY OF $19,800 IS FOR:

42 SHADE TREES AT $300/TREE =	$12,600
39 EVERGREEN TREES AT $150/TREE =	$ 5,850
45 SHRUBS AT $30/SHRUB =	$ 1,350

SCHEDULE B - PARKING LOT INTERNAL LANDSCAPING

NUMBER OF PARKING SPACES	68 NEW SURFACE PARKING SPACES.
NUMBER OF TREES REQUIRED	4 (1 SHADE TREE PER 20 PARKING SPACES)
NUMBER OF TREES PROVIDED	
SHADE TREES	5
OTHER TREES (2:1 substitution)	

THE SURETY FOR THE REQUIRED PLANTING PER SCHEDULE-B IS: 5 trees x $300/tree = $1,500.00

THE SCHEDULE-B SURETY OF $1,500.00 FOR 5 SHADE TREES IS MORE THAN SUFFICIENT TO COVER THE 4 TREES REQUIRED FOR REVISIONS ASSOCIATED WITH THE ACCESS TO SNOWDEN RIVER PKWY.

PLANT LIST

SYMBOL	QUANT.	SIZE	NAME (BOTANICAL/COMMON) OF PLANTS FOR SELECTION BY OWNER/BUYER	COMMENTS
AR	51	3-3.5" CAL.	ACER RUBRUM 'RED SUNSET'/ RED SUNSET RED MAPLE	ALL B&B
ZS	5	3-3.5" CAL.	ZELKOVA SERRATA 'VILLAGE GREEN' / VILLAGE GREEN ZELKOVA	ALL B&B
	37	8' HT. MIN.	CUPRESSOCYPARIS LEYLANDII / LEYLAND CYPRESS	ALL B&B
	20	ALL ORNAMENTAL FLOWERING TREES SHALL BE A MIN. OF 2" CAL. AND 8-10' HT.	CHOICE OF THE FOLLOWING SPECIES: BETULA NIGRA / RIVER BIRCH LAGERSTROEMIA INDICA / CRAPE MYRTLE MALUS ZUMI 'CALOCARPA' / ZUMI CRABAPPLE	ALL B&B
	152	ALL SHRUBS SHALL BE A MIN. OF 3' HT.	CHOICE OF THE FOLLOWING SPECIES: VIBURNUM RHYTIDOPHYLLUM / LEATHERLEAF VIBURNUM TAXUS X MEDIA 'DENSIFORMIS' / DENSE YEW BUXUS MICROPHYLLA KOREANA 'GREEN VELVET' / GREEN VELVET BOXWOOD	CONT

(ALL LANDSCAPE PLANTING ABOVE THE MINIMUM IS VOLUNTARY AND NOT MANDATORY)

APPROVED
PLANNING BOARD OF HOWARD COUNTY
DATE January 31, 2008, April 24, 2008 and April 7, 2011

APPROVED: FOR PUBLIC WATER & SEWERAGE SYSTEM
HOWARD COUNTY HEALTH DEPARTMENT

County Health Officer — Date

APPROVED: HOWARD COUNTY DEPARTMENT OF PLANNING & ZONING

Director — Date 3/21/11

Chief, Division of Land Development — Date 3/21/11

Chief, Development Engineering Division — Date 3/14/11

DEVELOPER'S / BUILDER'S CERTIFICATE

I/WE CERTIFY THAT THE LANDSCAPING SHOWN ON THIS PLAN WILL BE DONE ACCORDING TO THE PLAN, SECTION 16.124 OF THE HOWARD COUNTY CODE AND THE HOWARD COUNTY LANDSCAPE MANUAL, AND THE APPROVED MAPLE LAWN FARMS LANDSCAPE DESIGN DEVELOPMENT CRITERIA. I/WE FURTHER CERTIFY THAT UPON COMPLETION, A LETTER OF LANDSCAPE INSTALLATION, ACCOMPANIED BY AN EXECUTED ONE-YEAR GUARANTEE OF PLANT MATERIALS, WILL BE SUBMITTED TO THE DEPARTMENT OF PLANNING AND ZONING.

NAME (DEVELOPER'S /BUILDER'S) — 3/2/11 DATE

STATE OF MARYLAND
Michael B. Tran
REGISTERED LANDSCAPE ARCHITECT
933
3/2/11

GLW GUTSCHICK LITTLE & WEBER, P.A.
CIVIL ENGINEERS, LAND SURVEYORS, LAND PLANNERS, LANDSCAPE ARCHITECTS
3909 NATIONAL DRIVE - SUITE 250 - BURTONSVILLE OFFICE PARK
BURTONSVILLE, MARYLAND 20866
TEL: 301-421-4024 BALT: 410-880-1820 DC/VA: 301-989-2524 FAX: 301-421-4186

L:\CADD\DRAWINGS\07005\SDP\07005-LS.dwg | DES. | DRN. | CHK.

DATE	REVISION	BY	APP'R.
03-3-2011	REVISED BUILDING AND PARKING GARAGE AND REVISED LANDSCAPING ACCORDINGLY		
06-11-2010	Revised landscaping for changes associated with the direct access to Snowden River Parkway.		

PREPARED FOR:

OWNER/DEVELOPER/LAND LEASER:
SCIENCE FICTION, LLC
C/O ANTWERPEN AUTOMOTIVE GROUP
6440 BALTIMORE NATIONAL PIKE
CATONSVILLE, MD 21228

CONTACT: STANFORD HESS

LAND LEASER:
WEGMANS FOOD MARKETS, INC.
100 WEGMANS MARKET STREET
ROCHESTER, NY 14624

CONTACT: STEPHEN LEATY
585-464-4600 EXT. 6833

(REVISED) LANDSCAPE PLAN

WEGMANS FOOD MARKETS

COLUMBIA SIELING INDUSTRIAL CENTER
PARCEL 'D-2' (redevelopment of Parcel D-1)
TAX MAP PARCEL 356
SECTION 1, AREA 1; PLAT Nos. 17484, 20012 & 21178

6TH ELECTION DISTRICT — HOWARD COUNTY, MARYLAND

SCALE	ZONING	G. L. W. FILE No.
1"=50'	NT	07005
DATE	TAX MAP - GRID	SHEET
JUNE/2010	TM 36 - 24	11 OF 21

SDP-07-131

SPECIFICATIONS: PLANT MATERIALS AND PLANTING METHODS

A. PLANT MATERIALS

THE LANDSCAPE CONTRACTOR SHALL FURNISH AND INSTALL AND/OR DIG, BALL, BURLAP AND TRANSPLANT ALL OF THE PLANT MATERIALS CALLED FOR ON DRAWINGS AND/OR LISTED IN THE PLANT SCHEDULE.

1. PLANT NAMES

PLANT NAMES USED IN THE PLANT SCHEDULE SHALL CONFORM WITH "STANDARDIZED PLANT NAMES," LATEST EDITION.

2. PLANT STANDARDS

ALL PLANT MATERIAL SHALL BE EQUAL TO OR BETTER THAN THE REQUIREMENTS OF THE "USA STANDARD FOR NURSERY STOCK" LATEST EDITION, AS PUBLISHED BY THE AMERICAN ASSOCIATION OF NURSERYMEN (HERE- AFTER REFERRED TO AS AAN STANDARDS). ALL PLANTS SHALL BE TYPICAL OF THEIR SPECIES AND VARIETY, SHALL HAVE A NORMAL HABIT OF GROWTH AND SHALL BE FIRST QUALITY, SOUND, VIGOROUS, WELL-BRANCHED AND WITH HEALTHY, WELL-FURNISHED ROOT SYSTEMS. THEY SHALL BE FREE OF DISEASE, INSECT PESTS AND MECHANICAL INJURIES.

ALL PLANTS SHALL BE NURSERY GROWN AND SHALL HAVE BEEN GROWN UNDER THE SAME CLIMATE CONDITIONS AS THE LOCATION OF THIS PROJECT FOR AT LEAST TWO YEARS BEFORE PLANTING. NEITHER HEELED-IN PLANTS NOR PLANTS FROM COLD STORAGE WILL BE ACCEPTED.

3. PLANT MEASUREMENTS

ALL PLANTS SHALL CONFORM TO THE MEASUREMENTS SPECIFIED IN THE PLANT SCHEDULE AS APPROVED BY THE DESIGN REVIEW COMMITTEE (DRC).

A. CALIPER MEASUREMENTS SHALL BE TAKEN SIX INCHES (6") ABOVE GRADE FOR TREES UNDER FOUR-INCH (4") CALIPER AND TWELVE (12") ABOVE GRADE FOR TREES FOUR INCHES (4") IN CALIPER AND OVER.

B. MINIMUM BRANCHING HEIGHT FOR ALL SHADE TREES SHALL BE SIX FEET (6'), MAXIMUM EIGHT FEET (8').

C. CALIPER, HEIGHT, SPREAD AND SIZE OF BALL SHALL BE GENERALLY AS FOLLOWS:

CALIPER	HEIGHT	SPREAD	SIZE OF BALL
3" - 3.5"	14'-16'	6'-8'	32" DIAMETER
3.5"- 4"	14'-16'	8'-10'	36" DIAMETER
4" - 4.5"	16'-18'	8'-10'	40" DIAMETER
4.5"- 5"	16'-17'	10'-12'	44" DIAMETER
5" - 5.5"	16'-20'	10'-12'	48" DIAMETER
5.5"- 6"	18'-20'	12'-14'	52" DIAMETER

ALL PLANT MATERIAL SHALL GENERALLY AVERAGE THE MEDIAN FOR THE SIZE RANGES INDICATED ABOVE AS INDICATED IN THE "AAN STANDARDS".

4. PLANT IDENTIFICATION

LEGIBLE LABELS SHALL BE ATTACHED TO ALL SHADE TREES, MINOR TREES, SPECIMEN SHRUBS AND BUNDLES OR BOXES OF OTHER PLANT MATERIAL GIVING THE BOTANICAL AND COMMON NAMES, SIZE AND QUANTITY OF EACH. EACH SHIPMENT OF PLANTS SHALL BEAR CERTIFICATES OF INSPECTION AS REQUIRED BY FEDERAL, STATE AND COUNTY AUTHORITIES.

5. PLANT INSPECTION

THE DESIGN REVIEW COMMITTEE MAY, UPON REQUEST BY THE BUILDER OR DEVELOPER, AT LEAST TEN (10) DAYS PRIOR TO THE INSTALLATION OF ANY PROPOSED PLANT MATERIAL, INSPECT ALL PROPOSED PLANT MATERIAL AT THE SOURCE OF ORIGIN.

B. PLANTING METHODS

ALL PROPOSED PLANT MATERIALS THAT MEET THE SPECIFICATIONS IN SECTION A ARE TO BE PLANTED IN ACCORDANCE WITH THE FOLLOWING METHODS DURING THE PROPER PLANTING SEASONS AS DESCRIBED IN THE FOLLOWING:

1. PLANTING SEASONS

THE PLANTING OF DECIDUOUS TREES, SHRUBS AND VINES SHALL BE FROM MARCH 1ST TO JUNE 15TH AND FROM SEPTEMBER 15TH TO DECEMBER 15TH. PLANTING OF DECIDUOUS MATERIAL MAY BE CONTINUED DURING THE WINTER MONTHS PROVIDING THERE IS NO FROST IN THE GROUND AND FROST-FREE TOPSOIL PLANTING MIXTURES ARE USED.

THE PLANTING OF EVERGREEN MATERIAL SHALL BE FROM MARCH 15TH TO JUNE 15TH AND FROM AUGUST 15TH TO DECEMBER 1ST. NO PLANTING SHALL BE DONE WHEN THE GROUND IS FROZEN OR EXCESSIVELY MOIST. NO FROZEN OR WET TOPSOIL SHALL BE USED AT ANY TIME.

2. DIGGING

ALL PLANT MATERIAL SHALL BE DUG, BALLED AND BURLAPPED (B&B) IN ACCORDANCE WITH THE "AAN STANDARDS".

3. EXCAVATION OF PLANT PITS

THE LANDSCAPING CONTRACTOR SHALL EXCAVATE ALL PLANT PITS, VINE PITS, HEDGE TRENCHES AND SHRUB BEDS IN ACCORDANCE WITH THE FOLLOWING SCHEDULE:

A. LOCATIONS OF ALL PROPOSED PLANT MATERIAL SHALL BE STAKED AND APPROVED IN THE FIELD BY THE LANDSCAPE ARCHITECT BEFORE ANY OF THE PROPOSED PLANT MATERIAL IS INSTALLED BY THE LANDSCAPE CONTRACTOR.

B. ALL PITS SHALL BE GENERALLY CIRCULAR IN OUTLINE, VERTICAL SIDES; DEPTH SHALL NOT BE LESS THAN 6" DEEPER THAN THE ROOT BALL, DIAMETER SHALL NOT BE LESS THAN TWO TIMES THE DIAMETER OF THE ROOT BALL AS SET FORTH IN THE FOLLOWING SCHEDULE.

C. IF AREAS ARE DESIGNATED AS SHRUB BEDS OR HEDGE TRENCHES, THEY SHALL BE EXCAVATED TO AT LEAST 18" DEPTH MINIMUM. AREAS DESIGNATED FOR GROUND COVERS AND VINES SHALL BE EXCAVATED TO AT LEAST 12" IN DEPTH MINIMUM.

D. DIAMETER AND DEPTH OF TREE PITS SHALL GENERALLY BE AS FOLLOWS:

PLANT SIZE	ROOT BALL	PIT DIA.	PIT DEPTH
3" - 3.5"CAL.	32"	64"	28"
3.5"- 4" CAL.	36"	72"	32"
4" - 4.5"CAL.	40"	80"	36"
4.5"- 5" CAL.	44"	88"	40"
5" - 5.5"CAL.	48"	96"	44"
5.5"- 6" CAL.	52"	104"	48"

A 20 % COMPACTION FIGURE OF THE SOIL TO BE REMOVED IS ASSUMED AND WILL BE ALLOWED IN CALCULATION OF EXTRA TOPSOIL. THE TABULATED PIT SIZES ARE FOR PURPOSES OF UNIFORM CALCULATION AND SHALL NOT OVERRIDE THE SPECIFIED DEPTHS BELOW THE BOTTOMS OF THE ROOT BALLS.

4. STAKING, GUYING AND WRAPPING

ALL PLANT MATERIAL SHALL BE STAKED OR GUYED, AND WRAPPED IN ACCORDANCE WITH THE FOLLOWING SPECIFICATIONS:

A. STAKES: SHALL BE SOUND WOOD 2" X 2" ROUGH SAWN OAK OR SIMILAR DURABLE WOODS, OR LENGTHS, MINIMUM 7'-0" FOR MAJOR TREES AND 5'-0" MINIMUM FOR MINOR TREES.

B. WIRE AND CABLE: WIRE SHALL BE #10 GA. GALVANIZED OR BETHANIZED ANNEALED STEEL WIRE. FOR TREES OVER 3" CALIPER, PROVIDE 5/16" TURN BUCKLES, EYE AND EYE WITH 4" TAKE-UP. FOR TREES OVER 5" CALIPER, PROVIDE 3/16", 7 STRAND CABLE CADMIUM PLATED STEEL, WITH GALVANIZED "EYE" THIMBLES OF WIRE AND HOSE ON TREES UP TO 3" IN CALIPER.

C. HOSE: SHALL BE NEW, 2 PLY REINFORCED RUBBER HOSE, MINIMUM 1/2" I.D. "PLASTIC LOCK TIES" OR "PAUL'S TREES BRACES" MAY BE USED IN PLACE OF WIRE AND HOSE ON TREES UP TO 3" IN CALIPER.

D. ALL TREES UNDER 3" IN CALIPER ARE TO BE PLANTED AND STAKED IN ACCORDANCE WITH THE ATTACHED PLANTING DETAILS.

5. PLANT PRUNING, EDGING AND MULCHING

A. EACH TREE, SHRUB OR VINE SHALL BE PRUNED IN AN APPROPRIATE MANNER TO ITS PARTICULAR REQUIREMENTS, IN ACCORDANCE WITH ACCEPTED STANDARD PRACTICE. BROKEN OR BRUISED BRANCHES SHALL BE REMOVED WITH CLEAN CUTS FLUSH WITH THE ADJACENT TRUNK OR BRANCHES. ALL CUTS OVER 1" IN DIAMETER SHALL BE PAINTED WITH AN APPROVED ANTISEPTIC TREE WOUND DRESSING.

B. ALL TRENCHES AND SHRUB BEDS SHALL BE EDGED AND CULTIVATED TO THE LINES SHOWN ON THE DRAWING. THE AREAS AROUND ISOLATED PLANTS SHALL BE EDGED AND CULTIVATED TO THE FULL DIAMETER OF THE PIT. SOD WHICH HAS BEEN REMOVED AND STACKED SHALL BE USED TO TRIM THE EDGES OF ALL EXCAVATED AREAS TO THE NEAT LINES OF THE PLANT PIT SAUCERS, THE EDGES OF SHRUB AREAS, HEDGE TRENCHES AND VINE POCKETS.

C. AFTER CULTIVATION, ALL PLANT MATERIALS SHALL BE MULCHED WITH A 3" LAYER OF FINE, SHREDDED PINE BARK, PEAT MOSS, OR ANOTHER APPROVED MATERIAL OVER THE ENTIRE AREA OF THE BED OR SAUCER.

6. PLANT INSPECTION AND ACCEPTANCE

THE DESIGN REVIEW COMMITTEE SHALL BE RESPONSIBLE FOR INSPECTING ALL PLANTING PROJECTS ON A PERIODIC BASIS TO ASSURE THAT ALL WORK IS PROCEEDING IN ACCORDANCE WITH THE APPROVED PLANS AND SPECIFICATIONS.

7. PLANT GUARANTEE

ALL PLANT MATERIAL SHALL BE GUARANTEED FOR THE DURATION OF ONE FULL GROWING SEASON, AFTER FINAL INSPECTION AND ACCEPTANCE OF THE WORK IN THE PLANTING PROJECT. PLANTS SHALL BE ALIVE AND IN SATISFACTORY GROWING CONDITION AT THE END OF THE GUARANTEE PERIOD.

A. FOR THIS PURPOSE, THE "GROWING SEASON" SHALL BE THAT PERIOD BETWEEN THE END OF THE "SPRING" PLANTING SEASON, AND THE COMMENCEMENT OF THE "FALL" PLANTING SEASON.

B. GUARANTEE FOR PLANTING PERFORMED AFTER THE SPECIFIED END OF THE "SPRING" PLANTING SEASON, SHALL BE EXTENDED THROUGH THE END OF THE NEXT FOLLOWING "SPRING" PLANTING SEASON.

SODDING

ALL SODDING SHALL BE IN ACCORDANCE TO THE "LANDSCAPE SPECIFICATION GUIDELINES FOR BALTIMORE-WASHINGTON METROPOLITAN AREAS" LATEST EDITION, APPROVED BY THE LANDSCAPE CONTRACTORS ASSOCIATION OF METROPOLITAN WASHINGTON AND THE AMERICAN SOCIETY OF LANDSCAPE ARCHITECTS.

ALL SOD SHALL BE STRONGLY ROOTED SOD, NOT LESS THAN TWO YEARS OLD AND FREE OF WEEDS AND UNDESIRABLE NATIVE GRASSES. PROVIDE ONLY SOD CAPABLE OF GROWTH DEVELOPMENT WHEN PLANTED AND IN STRIPS NOT MORE THAN 18" WIDE X 4" LONG. PROVIDE SOD COMPOSED PRINCIPALLY OF IMPROVED STRAIN KENTUCKY BLUEGRASS, SUCH AS, COLUMBIA, VICTA, OR ESCORT.

STATE OF MARYLAND
Michael B. Tran
REGISTERED LANDSCAPE ARCHITECT
933
3/2/11

APPROVED
PLANNING BOARD OF HOWARD COUNTY

DATE January 31, 2008, April 24, 2008 and

~~APPROVED: FOR PUBLIC WATER & SEWERAGE SYSTEM HOWARD COUNTY HEALTH DEPARTMENT~~

~~County Health Officer Date~~

APPROVED: HOWARD COUNTY DEPARTMENT OF PLANNING & ZONING

Director — Date 3/21/11

Chief, Division of Land Development — Date 3/21/11

Chief, Development Engineering Division — Date 3/14/11

DEVELOPER'S / BUILDER'S CERTIFICATE

I/WE CERTIFY THAT THE LANDSCAPING SHOWN ON THIS PLAN WILL BE DONE ACCORDING TO THE PLAN, SECTION 16.124 OF THE HOWARD COUNTY CODE AND THE HOWARD COUNTY LANDSCAPE MANUAL. I/WE FURTHER CERTIFY THAT UPON COMPLETION, A LETTER OF LANDSCAPE INSTALLATION, ACCOMPANIED BY AN EXECUTED ONE-YEAR GUARANTEE OF PLANT MATERIALS, WILL BE SUBMITTED TO THE DEPARTMENT OF PLANNING AND ZONING.

NAME (DEVELOPER'S /BUILDER'S) — DATE 3/2/11

LANDSCAPE NOTES

1. THIS PLAN HAS BEEN PREPARED IN ACCORDANCE WITH SECTION 16.124 OF THE HOWARD COUNTY CODE & THE HOWARD COUNTY LANDSCAPE MANUAL..

2. CONTRACTOR SHALL NOTIFY ALL UTILITIES AT LEAST (5) FIVE DAYS BEFORE STARTING WORK. ALL GENERAL NOTES, ESPECIALLY THOSE REGARDING UTILITIES, ON SHEET No.1 SHALL APPLY.

3. FIELD VERIFY UNDERGROUND UTILITY LOCATIONS AND EXISTING CONDITIONS BEFORE STARTING PLANTING WORK. CONTACT CONSTRUCTION MANAGER OR OWNER IF ANY RELOCATIONS ARE REQUIRED.

4. PLANT QUANTITIES SHOWN ON THE PLAN LIST ARE PROVIDED FOR THE CONVENIENCE OF THE CONTRACTOR ONLY. IF DISCREPANCIES EXIST BETWEEN QUANTITIES SHOWN ON THE PLAN AND THOSE SHOWN ON THE PLANT LIST, THE QUANTITIES ON THE PLAN SHALL TAKE PRECEDENCE.

5. ALL PLANT MATERIAL SHALL BE FULL, HEAVY, WELL FORMED, SYMMETRICAL, AND CONFORM TO THE A.A.N. SPECIFICATIONS. IN ADDITION, ALL REQUIRED PLANTING FOR THE LANDSCAPE ISLANDS IN THE PARKING LOT SHALL CONFORM TO THE HOWARD COUNTY LANDSCAPE MANUAL ALL PLANT MATERIAL SHALL BE INSTALLED IN ACCORDANCE WITH THE PROJECT SPECIFICATIONS AND THIS PLAN. SEE THIS SHEET FOR PLANTING DETAILS.

6. NO SUBSTITUTION SHALL BE MADE WITHOUT PRIOR APPROVAL FROM HOWARD COUNTY DPZ AND THE OWNER OR HIS REPRESENTATIVE.

7. ALL AREAS DISTURBED BY CONSTRUCTION ACTIVITIES BUT NOT OTHERWISE PLANTED, PAVED, OR MULCHED SHALL BE SODDED OR SEEDED IN ACCORDANCE WITH THE PERMANENT SEEDING SPECIFICATION. A MINIMUM OF 4" OF TOPSOIL SHALL BE PROVIDED TO ALL PLANTING AREAS.

8. THE CONTRACTOR SHALL NOTIFY THE OWNER IN WRITING IF HE/SHE ENCOUNTERS SOIL DRAINAGE CONDITIONS THAT MAY BE DETRIMENTAL TO THE GROWTH OF THE PLANTS.

9. ALL EXPOSED EARTH WITHIN THE LIMITS OF PLANTING BEDS SHALL BE MULCHED WITH SHREDDED HARDWOOD MULCH PER THE PLANTING DETAILS.

10. DO NOT PLANT WITHIN THE PUBLIC WATER, SEWER AND UTILITY EASEMENT.

11. "SCHEDULE-A" AND "SCHEDULE-B" ARE PROVIDED FOR LANDSCAPE SURETY CALCULATION PURPOSES. FINANCIAL SURETY FOR THE REQUIRED LANDSCAPING SHALL BE POSTED AS PART OF THE DPW DEVELOPER'S AGREEMENT IN THE AMOUNT OF $24,210.00 FOR THE FOLLOWING PLANTS:

51 SHADE TREES AT $300/TREE	=	$15,300.00
27 EVERGREEN TREES AT $150/TREE	=	$4,050.00
162 SHRUBS AT $30/SHRUB	=	$4,860.00

FOR LANDSCAPE INSPECTION TO OBTAIN THE RELEASE OF THE SURETY, CONTACT HOWARD COUNTY DEPT. OF PLANNING & ZONING AT 410-313-2350.

12. AT THE TIME OF PLANT INSTALLATION, ALL SHRUBS AND TREES LISTED AND APPROVED ON THE LANDSCAPE PLAN, SHALL COMPLY WITH THE PROPER HEIGHT REQUIREMENT IN ACCORDANCE WITH THE HOWARD COUNTY LANDSCAPE MANUAL. IN ADDITION, NO SUBSTITUTIONS OR RELOCATIONS OF THE REQUIRED PLANTINGS MAY BE MADE WITHOUT PRIOR REVIEW AND APPROVAL FROM THE DEPARTMENT OF PLANNING AND ZONING. ANY DEVIATION FROM THE APPROVED LANDSCAPE PLAN MAY RESULT IN DENIAL IN THE RELEASE OF LANDSCAPE SURETY UNTIL SUCH TIME AS ALL REQUIRED MATERIALS ARE PLANTED AND/OR REVISIONS ARE MADE TO THE APPLICABLE PLANS.

13. THE OWNER, TENANTS AND/OR THEIR AGENTS SHALL BE RESPONSIBLE FOR MAINTENANCE OF THE REQUIRED LANDSCAPING INCLUDING BOTH PLANT MATERIALS AND BERMS, FENCES AND WALLS. ALL PLANT MATERIALS SHALL BE MAINTAINED IN GOOD GROWING CONDITION, AND WHEN NECESSARY, REPLACED WITH NEW MATERIAL TO ENSURE CONTINUED COMPLIANCE WITH APPLICABLE REGULATIONS. ALL OTHER REQUIRED LANDSCAPING SHALL BE PERMANENTLY MAINTAINED IN GOOD CONDITION, AND WHEN NECESSARY, REPAIRED OR REPLACED.

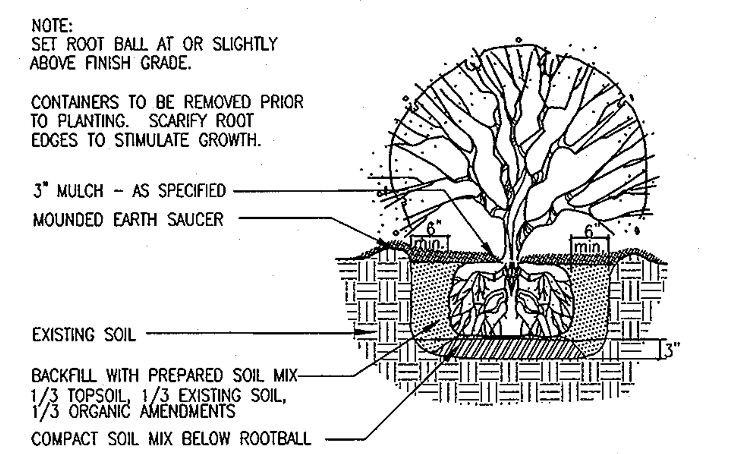

SHRUB PLANTING DETAIL — NTS

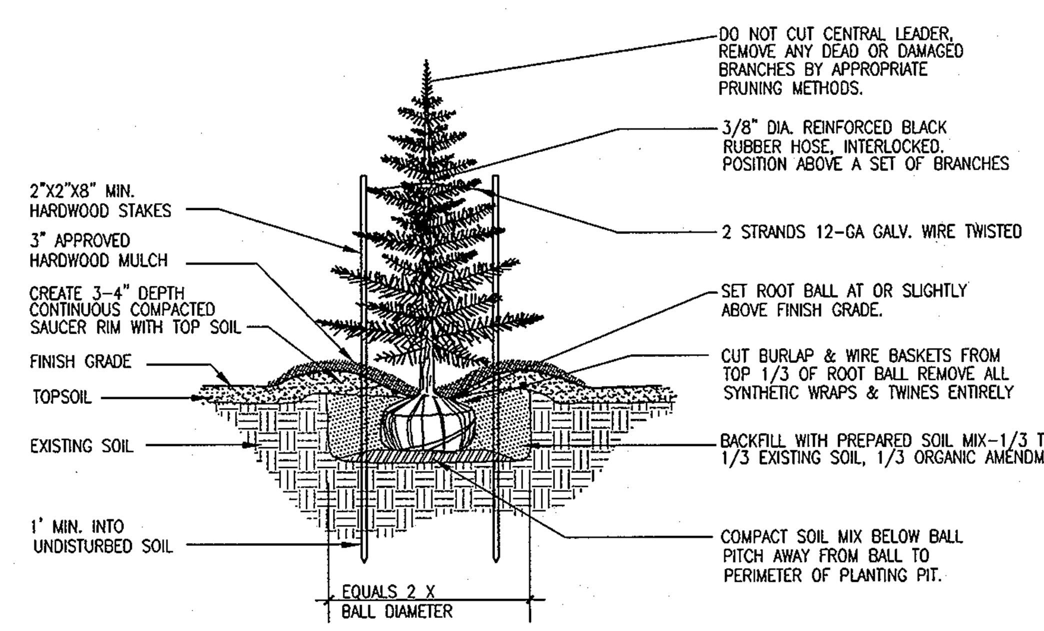

EVERGREEN TREE PLANTING DETAIL — NTS

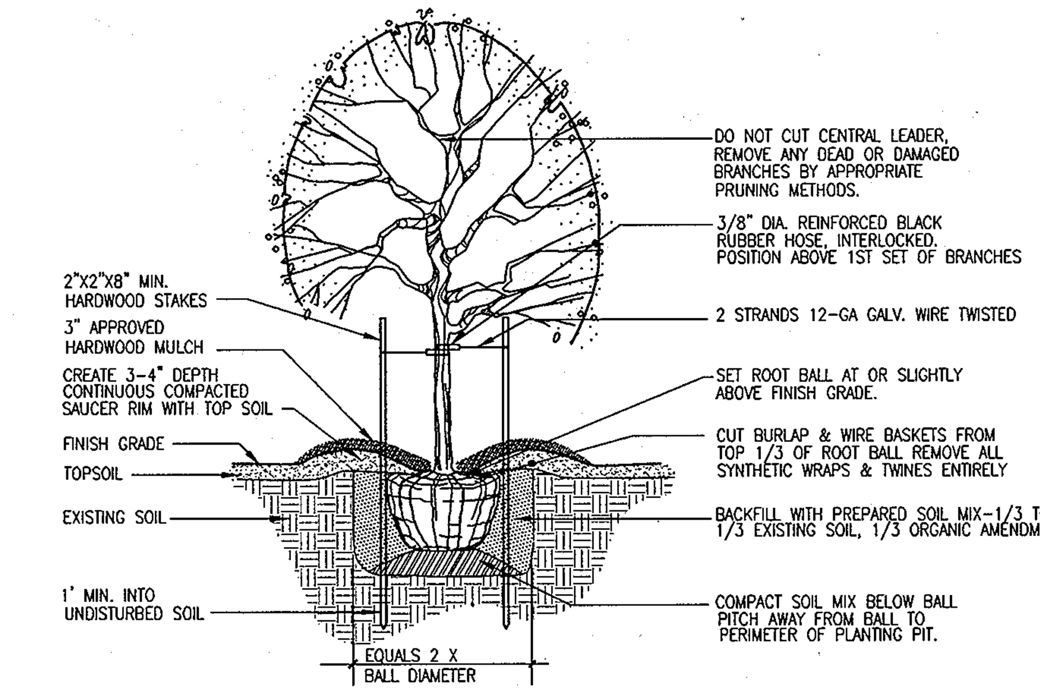

DECIDUOUS TREE PLANTING DETAIL
FOR PLANTING MATERIAL UP TO 3 1/2" CALIPER — NTS

LIGHTING FIXTURE SCHEDULE

TYPE/SYMBOL	MANUFACTURER	WATTAGE	LAMP	POLE and FIXTURE
	LSI LIGHTING SYSTEMS: CROSSOVER XAM3 SERIES TYPE FT OR GARDCO EQUIVALENT	1870	LED	ALUMINUM HOUSING, BRONZE FINISH. INSTALL ON 26' POLE ON 3' BASE
	LSI LIGHTING SYSTEMS: CROSSOVER XAM3 SERIES TYPE 3 OR GARDCO EQUIVALENT	6732	LED	ALUMINUM HOUSING, BRONZE FINISH. INSTALL ON 24' POLE ON 3' BASE
	LSI LIGHTING SYSTEMS: CROSSOVER XAM3 SERIES TYPE 5 OR GARDCO EQUIVALENT	1122	LED	ALUMINUM HOUSING, BRONZE FINISH. INSTALL ON 24' POLE ON 3' BASE
	LSI LIGHTING SYSTEMS: CROSSOVER XAM3 SERIES TYPE 3 OR GARDCO EQUIVALENT	561	LED	ALUMINUM HOUSING, BRONZE FINISH. INSTALL ON 24' POLE ON 3' BASE

NOTE: SEE ELECTRICAL DWGS. FOR EXACT LOCATION OF LIGHTING

LED AREA LIGHT - MEDIUM (XAM3)

Crossover SOLID-STATE LIGHTING

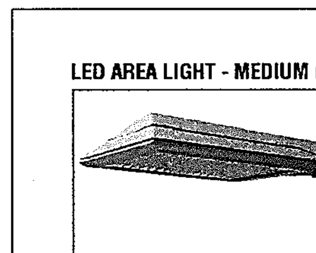

U.S. and international patents pending

EXPECTED LIFE - Minimum 60,000 hours to 100,000 hours depending upon the ambient temperature of the installation location. See LSI web site for specific guidance.

LEDS - Select high-brightness LEDs. 5800°K color temperature (nominal).

DISTRIBUTION/PERFORMANCE - Types 2, 3, FT and 5. Exceptional uniformity creates bright environment at lower light levels. Improved backlight cutoff minimizes light trespass.

HOUSING - Die-formed aluminum. Weather-tight housing contains factory prewired driver and field connections. Wiring access door (with safety lanyard) is located underneath and utilizes tool-less thumbscrew fastener.

OPTICAL UNIT - Clear tempered optical grade flat glass lens sealed to aluminum optics housing creates an IP67 rated, sealed optical unit. Pressure stabilizing breather allows super-tight IP67 protection while preventing temperature cycling from building up internal pressures and vacuums that can stress optical unit seals and components. Optical unit lanyard serves dual purposes of safety and provides positive ground between unit and housing.

MOUNTING - Tapered rear design allows fixtures to be mounted in a quad pattern without the need for extension arms. Use with Crossover steel round and steel square poles. See separate data sheets.

ELECTRICAL - A terminal block for attachment of incoming primary wiring is supplied. Two-stage surge protection (including separate surge protection built into electronic driver) meets IEEE C62.41.2, Scenario 1, Location Category C-Medium standards (10KV, 5KA). Available with universal voltage power supply 120-277VAC (50/60Hz input), 347VAC and 480VAC. Optional twistlock photocell receptacle is available. Photocell must be ordered separately. Optional button-type photocells (PCI) are also available in 120, 208, 240, 277 or 347 volt (supply voltage must be specified).

DRIVER - Available in 350mA and 450mA drive currents (Drive currents are factory programmed). State-of-the-art driver technology designed specifically for LSI LED light sources provides unsurpassed system efficiency. Components are fully encased in potting material for IP68 moisture resistance. Driver complies with IEC and FCC standards. Driver can be easily accessed and removed without the use of tools.

OPERATING TEMPERATURE - -40°C to +50°C (-40°F to +122°F).

FINISH - Fixtures are finished with LSI's DuraGrip® polyester powder coat finishing process. The DuraGrip finish withstands extreme weather changes without cracking or peeling, and is guaranteed for five full years. Standard colors include bronze, black, platinum plus, buff, graphite, satin verde green, metallic silver and white.

WARRANTY - LSI LED fixtures carry a limited 5-year warranty.

PHOTOMETRICS - Application layouts are available upon request. Contact LSI Applications Group at lighting.apps@lsi-industries.com

SHIPPING WEIGHT (in carton) - 34.6 lbs (16 kg)

LISTING - ETL listed to U.S. and International safety standards. Suitable for wet locations.

LIGHT OUTPUT - XAM3	Lumens (Nominal)	
Distribution	350mA	450mA
Type 2	9770	11960
Type 3	9549	10437
Type FT	10028	12342
Type 5	9148	10396
Input Power	138 watts	184 watts

This product, or selected versions of this product, meet the standards listed below. Please consult factory for your specific requirements.

IP67 CE RoHS FC

Not all versions of this product are CE certified.

10/25/10 Project Name ____ Fixture Type ____
© 2010 LSI INDUSTRIES INC. Catalog # ____

LED AREA LIGHT - MEDIUM (XAM3)

Crossover SOLID-STATE LIGHTING

LUMINAIRE ORDERING INFORMATION

TYPICAL ORDER EXAMPLE: XAM3 2 LED 119 350 CW UE WHT PCI120

Prefix	Distribution	Light Source	# of LEDs	Drive Current	LED Color Temperature	Line Voltage	Luminaire Finish	Options
XAM3 - LED Area Medium	2 - Type 2 3 - Type 3 FT - Forward Throw 5 - Type 5	LED	119	350 - 350mA 450 - 450mA	CW - Cool White (5800°K nom.)	UE - Universal Voltage (120-277) 347 480	BLK - Black BRZ - Bronze BUF - Buff GPT - Graphite MSV - Metallic Silver PLP - Platinum Plus SVG - Satin Verde Green WHT - White	Button Type Photocells PCI 120 - 120v PCI 208 - 208v PCI 240 - 240v PCI 277 - 277v PCI 347 - 347v PCR - Twistlock Photoelectric Control Receptacle

LUMINAIRE EPA CHART² - XAM3	
Single	1.2
D180°	2.4
D90°	2.0
T90°	3.4
TN120°	3.4
Q90°	4.0

ACCESSORY ORDERING INFORMATION (Accessories are field installed)

Description	Order Number
BKA-X80-EC-6-CLR 6" Extension Arm	382130CLR¹
BKS-X80-WM-*-CLR Wall Mounting Bracket	382132CLR¹
XAM3 FT HSS - House Side Shield (back only - rear mount)²	439436
DVS - Direct View Shield (rear mount only)²	390687CLR
X4RPP Round Pole Plate for 4" Poles	379967CLR¹
X5RPP Round Pole Plate for 5" Poles	379968CLR¹
PC 120 - Photocell for use w/ PCR option (120V)³	122514
PC 208-277 - Photocell for use w/ PCR option (208V, 240V or 277V)³	122515
PC 347 - Photocell for use w/ PCR option (347V)³	159516
PC 480 - Photocell for use w/ PCR option (480V)³	1225180

NOTES:
1- Replace 'CLR' with desired color (ex: 382136BRZ)
2- Direct View Shield and House Side Shield add to fixture EPA. Consult factory.
3- Factory installed PCR option required. See Options.

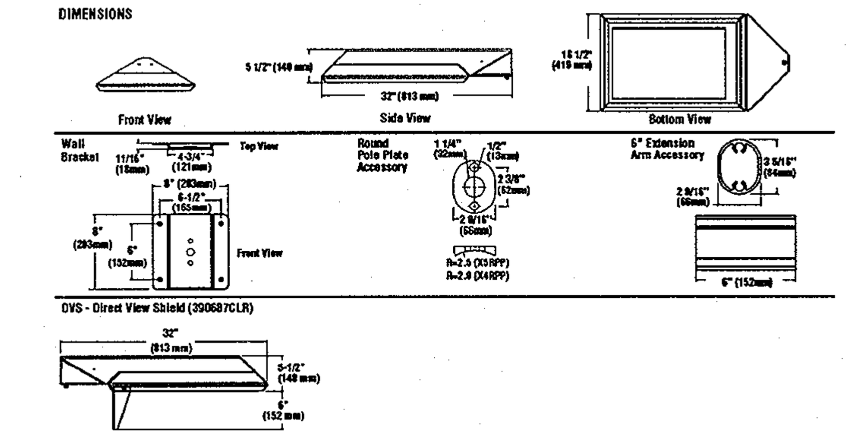

10/25/10 Project Name ____ Fixture Type ____
©2010 LSI INDUSTRIES INC. Catalog # ____

PHILIPS
GARDCO

Applications Department
1611 Clovis Barker Rd.
San Marcos, TX 78666
Phone 512-753-1000
Fax 512 753 1241
Email: apps@sitelighting.com

Project: Wegman's - Columbia, MD - Site — Project #160-9349
Agent: David Secor - Lightspec Rochester
Calculations By: Gayle Partridge - Philips Gardco
Date: November 11, 2010
Scale: 1 : 1
Filename: T:\Private\apps\2010\LightSpec-Rochester#160\WegmansColumbia\160-9349-site.AGI
Photometric data used is based on established IES procedures and published lamp ratings
Pt x pt values shown are horizontal illuminance at grade (single-plane), in footcandles.
Calc is based on lamp manufacturer's published mean lumen ratings.
Field performance will depend on actual lamp, ballast, electrical, and site characteristics.
Luminaire height shown is approximate overall mounting height above finished grade. (UNO)
TWIN arrangement luminaires require field rotation of the optics.

Luminaire Schedule
Project: Wegmans - Columbia, MD

Symbol	Qty	Label	Description	Arrangement	Lum. Lumens	LLF	Total Watts	Filename
	5	F1	Enco ELA21-2-4-210LA-CW @ 29'	TWIN-ROTATED	11447	0.850	2075	ELA21-4-210LA-CW.ies
	18	F2	Enco ELA21-2-3-210LA-CW @ 27'	TWIN-ROTATED	11116	0.850	75132	ELA21-3-210LA-CW.ies
	3	F3	Enco ELA21-1-3-210LA-CW @ 27'	SINGLE	11116	0.850	6261	ELA21-3-210LA-CW.ies
	4	F4	Enco ELA21-1-3-210LA-CW @ 19'	SINGLE	11116	0.850	8348	ELA21-3-210LA-CW.ies
	18	F5	Enco ELA21-2-5-210LA-CW @ 27'	4 @ 90 DEGREES	10430	0.850	14757.2	ELA21-5-210LA-CW.ies
	20	F7	Enco ELA21-W-4-210LA-CW @ 15'	SINGLE	11447	0.850	4151	ELA21-4-210LA-CW.ies
	8	F8	Enco ELA21-2-3-210LA-CW @ 27'	BACK-BACK	11116	0.850	12522	ELA21-3-210LA-CW.ies
	20	WA	Enco ELA21-W-4-210LA-CW @ 18'	SINGLE	11447	0.850	4151	ELA21-4-210LA-CW.ies

Statistical Area Summary
Project: Wegmans - Columbia, MD

Label	Avg	Max	Min	Avg/Min	Max/Min	# Pts	Units
Entry Drive and Lower Parking	3.55	10.30	1.10	3.59	9.36	371	Fc
Rear Loading and Upper Parking	2.28	6.80	1.10	2.55	6.18	329	Fc
Roof Top (Orange Points)	5.19	7.7	1.7	2.59	4.53	554	Fc

GLW GUTSCHICK LITTLE & WEBER, P.A.
CIVIL ENGINEERS, LAND SURVEYORS, LAND PLANNERS, LANDSCAPE ARCHITECTS
3909 NATIONAL DRIVE - SUITE 250 - BURTONSVILLE OFFICE PARK
BURTONSVILLE, MARYLAND 20866
TEL: 301-421-4024 BALT: 410-880-1820 DC/VA: 301-989-2524 FAX: 301-421-4186

L:\CADD\DRAWINGS\07005\SDP\07005-LS.dwg | DES. MBT | DRN. KLP | CHK.

DATE	REVISION	BY	APP'R.
3/3/2011	RELOCATE LIGHTING INFORMATION FROM SHEET 3 TO THIS SHEET; & ADDED NEW LIGHTING INFO.	KLP	

PREPARED FOR:

OWNER/DEVELOPER/LAND LEASER:
SCIENCE FICTION, LLC
C/O ANTWERPEN AUTOMOTIVE GROUP
6440 BALTIMORE NATIONAL PIKE
CATONSVILLE, MD 21228
CONTACT: STANFORD HESS

LAND LEASEE:
WEGMANS FOOD MARKETS, INC.
100 WEGMANS MARKET STREET
ROCHESTER, NY 14624
CONTACT: STEPHEN LEATY
585-464-4600 EXT. 6833

(REVISED) LANDSCAPE NOTES & DETAILS / LIGHTING SCHEDULE & DETAILS

WEGMANS FOOD MARKETS
COLUMBIA SIELING INDUSTRIAL CENTER
PARCEL 'D-2' (redevelopment of Parcel D-1)
TAX MAP PARCEL 356
SECTION 1, AREA 1; PLAT Nos. 17484, 20012 & 21178

6TH ELECTION DISTRICT — HOWARD COUNTY, MARYLAND

SCALE	ZONING	G. L. W. FILE No.
1"=50'	NT	07005
DATE	TAX MAP - GRID	SHEET
JUNE/2010	TM 36 - 24	12 OF 21

SDP-07-131

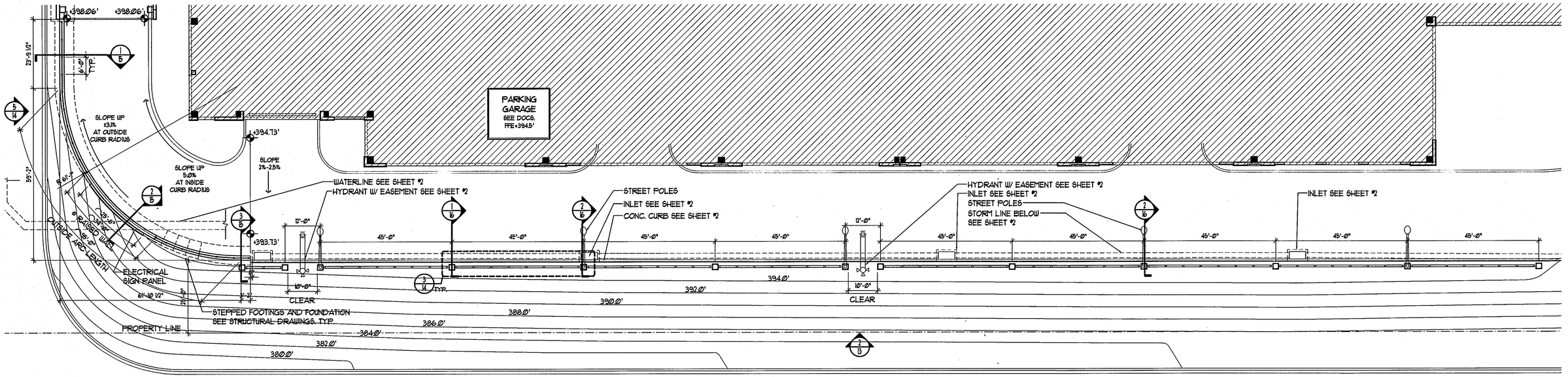

1 RETAINING WALL PLAN

SCALE : 1/16" = 1'-0"

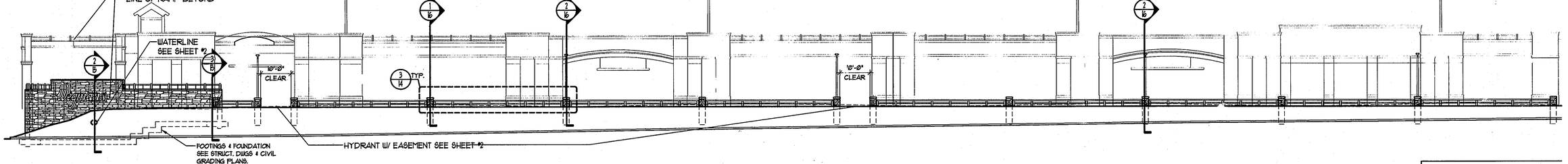

2 RETAINING WALL ELEVATION

SCALE : 1/16" = 1'-0"

EXTERIOR MATERIAL LEGEND	
PCI	PRECAST CONCRETE MANUF./DIST: OLDCASTLE STYLE/ TYPE:T.B.D. COLOR: T.B.D.
SI	STONE VENEER MANUF/DIST: EL DORADO STYLE/ TYPE: LIMESTONE COLOR: NEW HAVEN

ARCHITECT 12551 DANIEL FRANCIS MURRAY NUMBER STATE OF MARYLAND 2-19-10

APPROVED: HOWARD COUNTY DEPARTMENT OF PLANNING & ZONING

Director — Date 8/27/10

Chief, Division of Land Development — Date 8/27/10

Chief, Development Engineering Division — Date 8/6/10

APPROVED
PLANNING BOARD OF HOWARD COUNTY

DATE January 31, 2008 and April 24, 2008 & April 7, 2011

DES.	DRN.	CHK.

DATE	REVISION	BY	APP'R.

PREPARED FOR:

OWNER/DEVELOPER/LAND LEASER:
SCIENCE FICTION, LLC
C/O ANTWERPEN AUTOMOTIVE GROUP
6440 BALTIMORE NATIONAL PIKE
CATONSVILLE, MD 21228
CONTACT: Stanford Heam

LAND LEASER:
WEGMANS FOOD MARKETS, INC.
100 WEGMANS MARKET STREET
ROCHESTER, NY 14624
CONTACT: STEPHEN LEATY
585-464-4600 EXT. 6833

RETAINING WALL, GUARD PLAN & ELEVATION SHEET ONE

WEGMANS FOOD MARKETS

COLUMBIA SIENNA INDUSTRIAL CENTER
PARCEL D-2 (redevelopment of Parcel D-1)
TAX MAP PARCEL 356
SECTION 1, AREA 1; PLAT Nos. 17484, 20012 & 21178

6TH ELECTION DISTRICT — HOWARD COUNTY, MARYLAND

SCALE	ZONING	G. L. W. FILE No.
	NT	
DATE		SHEET
JUNE/2010	TM 36 - 24	13 OF 21

SDP-07-131

Bignell Watkins Hasser
ARCHITECTS P.C.

ONE PARK PLACE, SUITE 250
ANNAPOLIS, MARYLAND 21401
Maryland: (301) 261-8228
MD Fax: (410) 224-4443
Baltimore: (410) 841-6595
Annapolis: (410) 224-2727

8500 LEESBURG PIKE, SUITE 503
VIENNA, VIRGINIA 22182
Virginia: (703) 288-3520
VA Fax: (703) 288-4211
Website: www.bigwaha.com

These drawings are the property of the Architect. Bignell Watkins Hasser Architects P.C. Unauthorized reproduction for any purpose is an infringement upon copyright laws. Violators will be subject to prosecution by fullest extent of the law.
Written dimensions on these drawings shall have precedence over scale dimensions. Contractors shall verify and be responsible for all dimensions and conditions on the job and this office must be notified of any variation from the dimensions and conditions shown by these drawings.

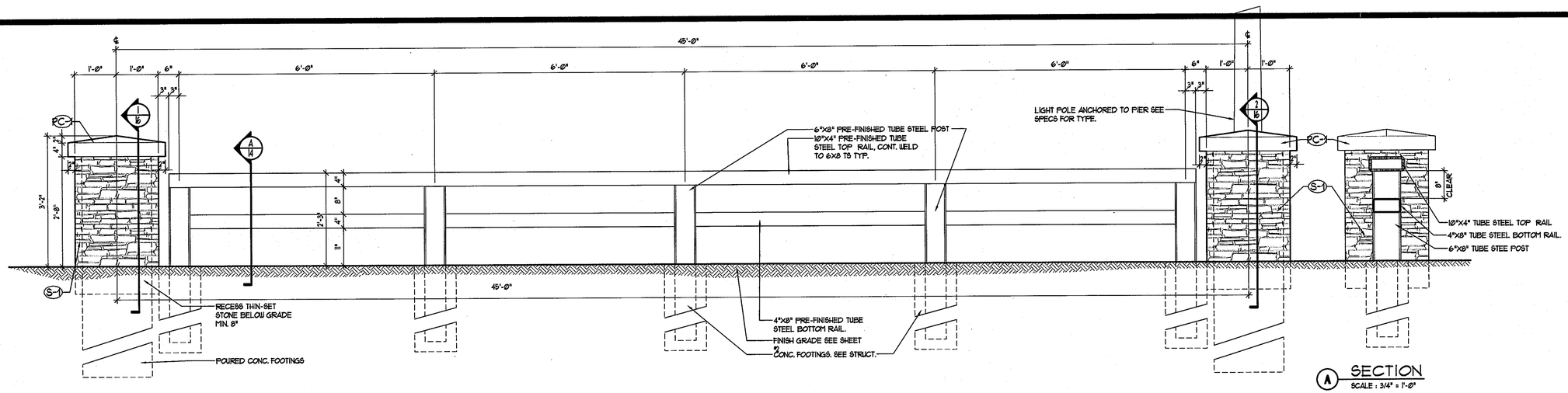

A SECTION
SCALE : 3/4" = 1'-0"

3 DETAIL ELEVATION
SCALE : 3/4" = 1'-0"

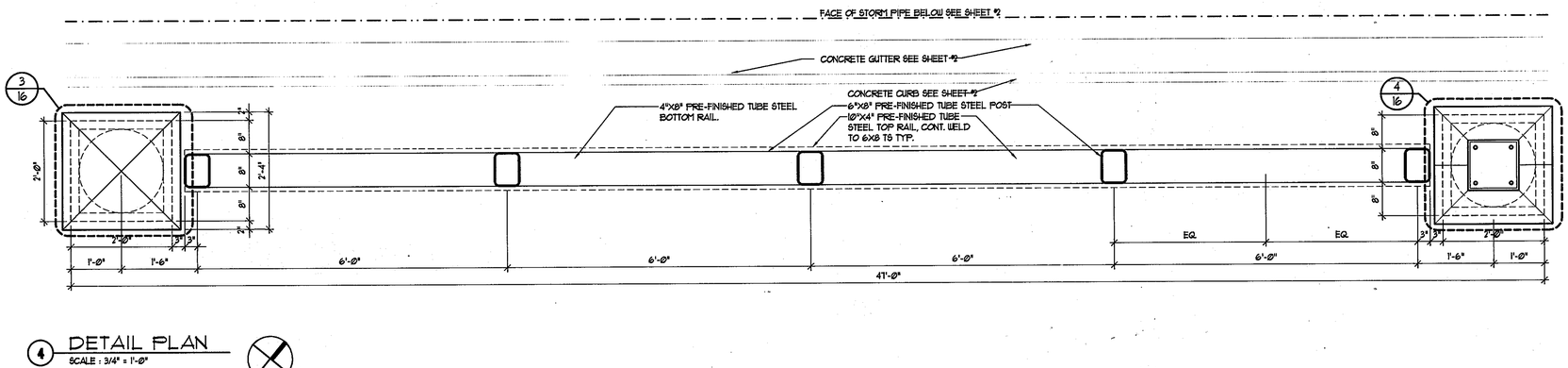

4 DETAIL PLAN
SCALE : 3/4" = 1'-0"

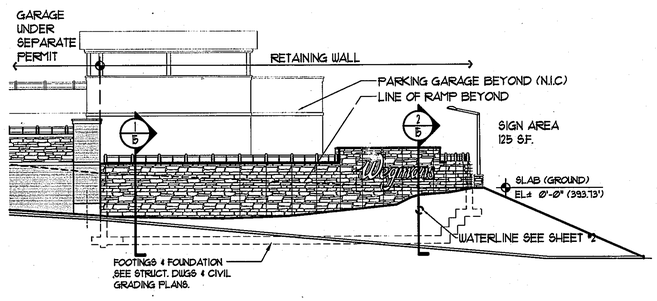

5 RETAINING WALL ELEVATION
SCALE : 1/16" = 1'-0"

EXTERIOR MATERIAL LEGEND	
PC1	PRECAST CONCRETE MANUF/DIST: OLDCASTLE STYLE/ TYPE:T.B.D. COLOR: T.B.D.
S1	STONE VENEER MANUF/DIST: EL DORADO STYLE/ TYPE: LIMESTONE COLOR: NEW HAVEN

ARCHITECT 12557 DANIEL FRANCIS MURRAY, JR. STATE OF MARYLAND
7-13-10

APPROVED: HOWARD COUNTY DEPARTMENT OF PLANNING & ZONING

Director	Date 8/27/10
Chief, Division of Land Development	Date 8/27/10
Chief, Development Engineering Division	Date 8/6/10

APPROVED
PLANNING BOARD OF HOWARD COUNTY
DATE January 31, 2008 and April 24, 2008 & April 7, 2011

DES.	DRN.	CHK.

DATE	REVISION	BY	APP'R.

PREPARED FOR:

OWNER/DEVELOPER/LAND LEASER:
SCIENCE FICTION, LLC
C/O ANTWERPEN AUTOMOTIVE GROUP
6440 BALTIMOR' NATIONAL PIKE
CATONSVILLE, MD 21228
CONTACT: Stanford Hesse

LAND LEASEE:
WEGMANS FOOD MARKETS, INC.
100 WEGMANS MARKET STREET
ROCHESTER, NY 14624
CONTACT: STEPHEN LEATY
585-464-4600 EXT. 6833

RETAINING WALL/ GUARD PLAN & ELEVATION SHEET TWO

WEGMANS FOOD MARKETS

COLUMBIA SIELING INDUSTRIAL CENTER
PARCEL 'D-2' (redevelopment of Parcel D-1)
TAX MAP PARCEL 356
SECTION 1, AREA 1; PLAT Nos. 17484, 20012 & 21178

6TH ELECTION DISTRICT — HOWARD COUNTY, MARYLAND

SCALE	ZONING	G. L. W. FILE No.
	NT	
DATE		SHEET
JUNE/2010	TM 36 – 24	14 OF 21

SDP-07-131

Bignell Watkins Hasser
ARCHITECTS P. C.

ONE PARK PLACE, SUITE 250
ANNAPOLIS, MARYLAND 21401
Maryland: (301) 261-8228
MD Fax: (410) 224-4443
Baltimore: (410) 841-6595
Annapolis: (410) 224-2727

8500 LEESBURG PIKE, SUITE 503
VIENNA, VIRGINIA 22182
Virginia: (703) 288-3320
VA Fax: (703) 288-4211
Website: www.bigwaha.com

These drawings are the property of the Architect. Bignell Watkins Hasser Architects P.C. Unauthorized reproduction for any purpose is an infringement upon copyright laws. Violators will be subject to prosecution by fullest extent of the law.
Written dimensions on these drawings shall have precedence over scale dimensions. Contractors shall verify and be responsible for all dimensions and conditions on the job and this office must be notified of any variation from the dimensions and conditions shown by these drawings.

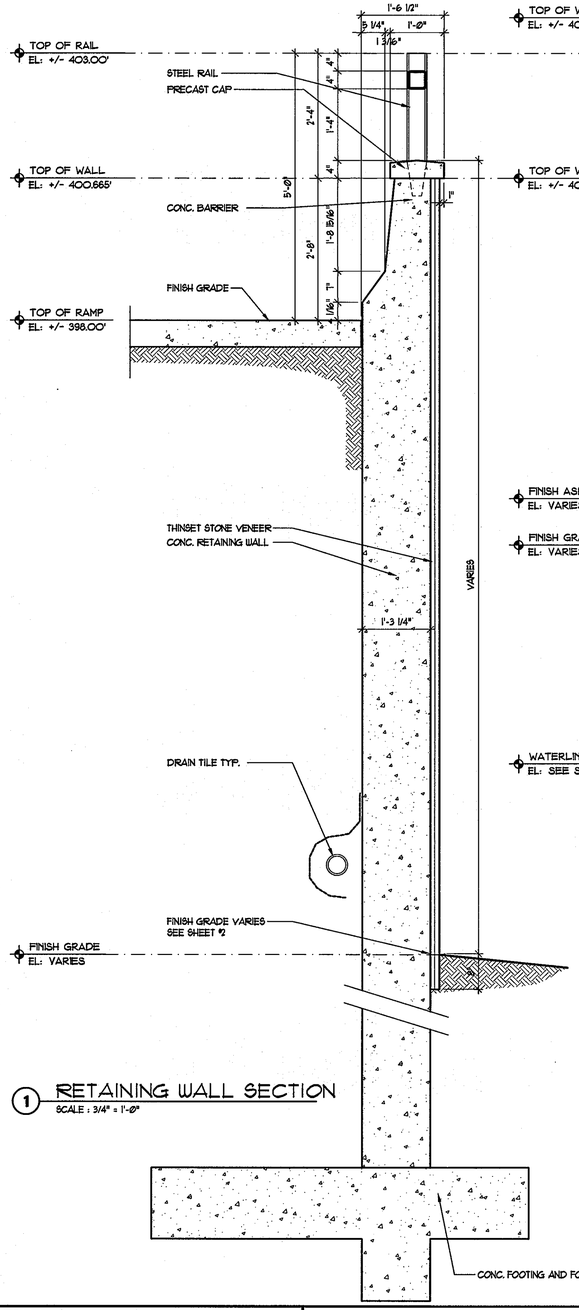

1 RETAINING WALL SECTION
SCALE : 3/4" = 1'-0"

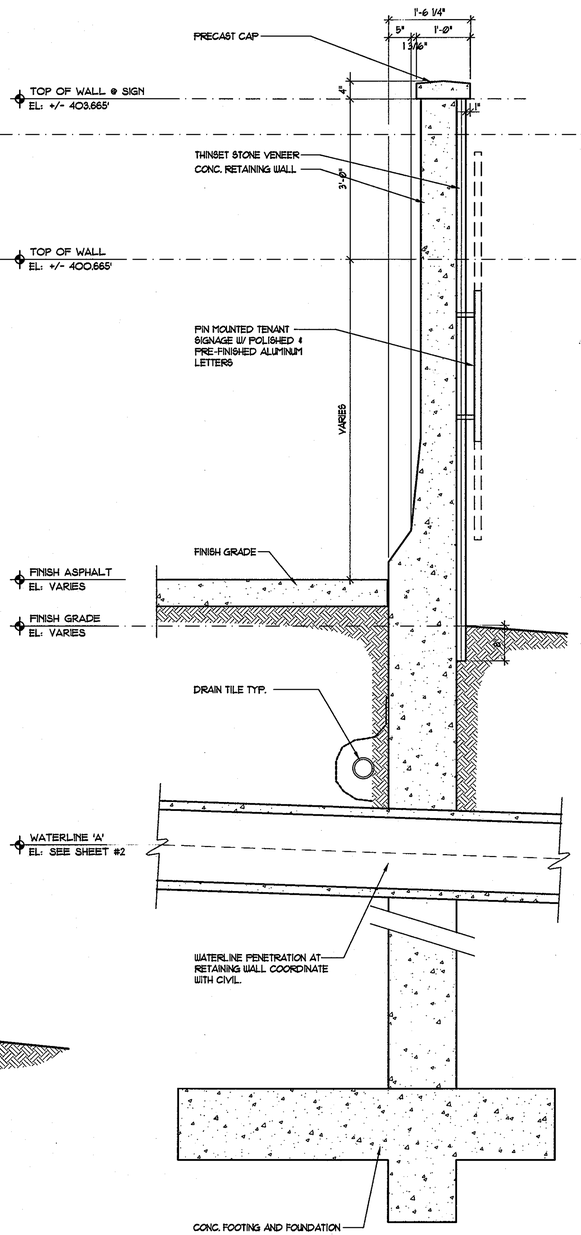

2 RETAINING WALL SECTION
SCALE : 3/4" = 1'-0"

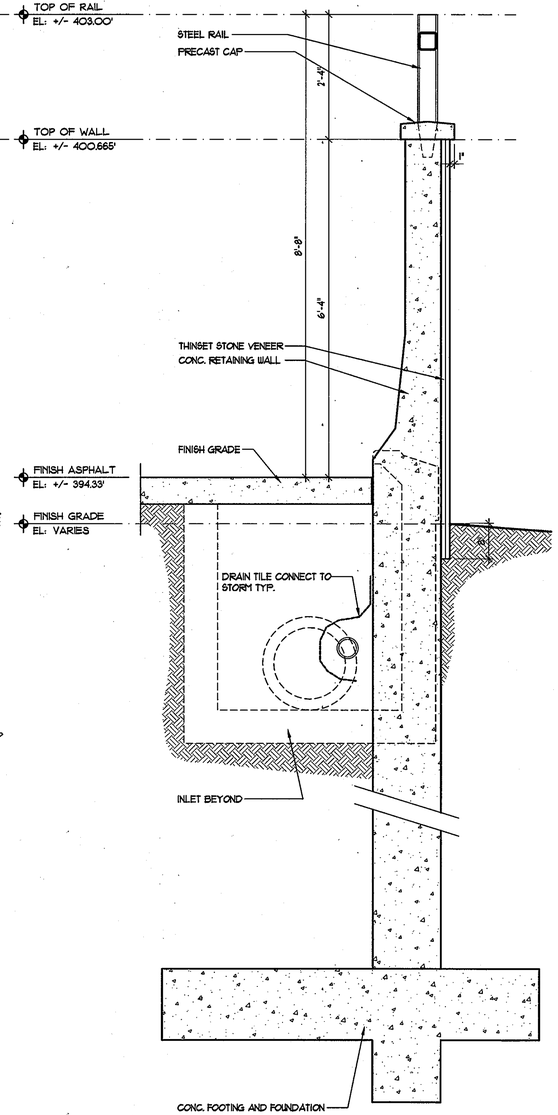

3 RETAINING WALL SECTION
SCALE : 3/4" = 1'-0"

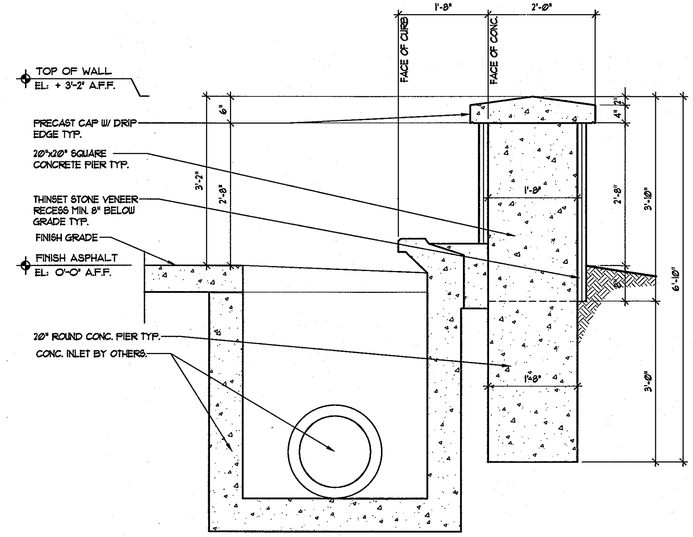

4 PIER SECTION
SCALE : 3/4" = 1'-0"

ARCHITECT 1255
DANIEL FRANCIS MURRAY WILDERSON
STATE OF MARYLAND
7-13-10

APPROVED: HOWARD COUNTY DEPARTMENT OF PLANNING & ZONING

Director	Date 8/27/10
Chief, Division of Land Development	Date 8/27/10
Chief, Development Engineering Division	Date 8/6/10

APPROVED
PLANNING BOARD OF HOWARD COUNTY
DATE January 31, 2008 and April 24, 2008 & April 7, 2011

DES.	DRN.	CHK.

DATE	REVISION	BY	APP'R.

PREPARED FOR:

OWNER/DEVELOPER/LAND LEASER:
SCIENCE FICTION, LLC
C/O ANTWERPEN AUTOMOTIVE GROUP
3440 BALTIMORE NATIONAL PIKE
CATONSVILLE, MD 21228
CONTACT: Stanford Heess

LAND LEASER:
WEGMANS FOOD MARKETS, INC.
100 WEGMANS MARKET STREET
ROCHESTER, NY 14624
CONTACT: STEPHEN LEATY
585-464-4600 EXT. 6833

RETAINING WALL & PIER SECTIONS

WEGMANS FOOD MARKETS

COLUMBIA SIELING INDUSTRIAL CENTER
PARCEL 'D-2' (redevelopment of Parcel D-1)
TAX MAP PARCEL 356
SECTION 1, AREA 1; PLAT Nos. 17484, 20012 & 21178

6TH ELECTION DISTRICT — HOWARD COUNTY, MARYLAND

SCALE	ZONING	G. L. W. FILE No.
	NT	
DATE		SHEET
JUNE/2010	TM 36 - 24	15 OF 21

Bignell Watkins Hasser
ARCHITECTS P.C.

ONE PARK PLACE, SUITE 250
ANNAPOLIS, MARYLAND 21401
Maryland: (301) 261-8228
MD Fax: (410) 224-4443
Baltimore: (410) 841-6595
Annapolis: (410) 224-2727

8500 LEESBURG PIKE, SUITE 503
VIENNA, VIRGINIA 22182
Virginia: (703) 288-3320
VA Fax: (703) 288-4211
Website: www.bigwaha.com

These drawings are the property of the Architect. Bignell Watkins Hasser Architects P.C. Unauthorized reproduction for any purpose is an infringement upon copyright laws. Violators will be subject to prosecution by fullest extent of the law.

Written dimensions on these drawings shall have precedence over scale dimensions. Contractors shall verify and be responsible for all dimensions and conditions on the job and this office must be notified of any variation from the dimensions and conditions shown by these drawings.

SDP-07-131

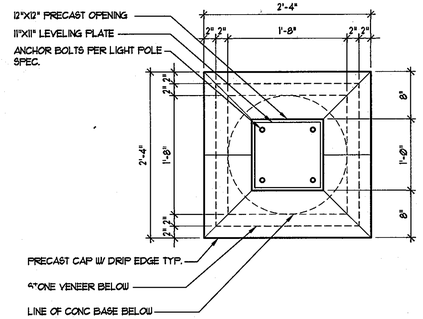

4 CONC PIER PLAN @ LIGHT
SCALE : 1" = 1'-0"

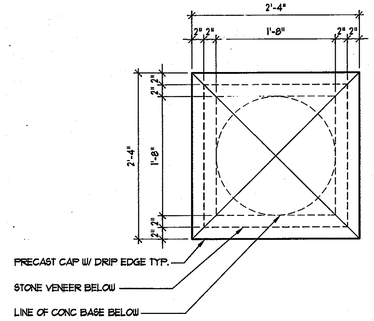

3 CONC PIER PLAN
SCALE : 1" = 1'-0"

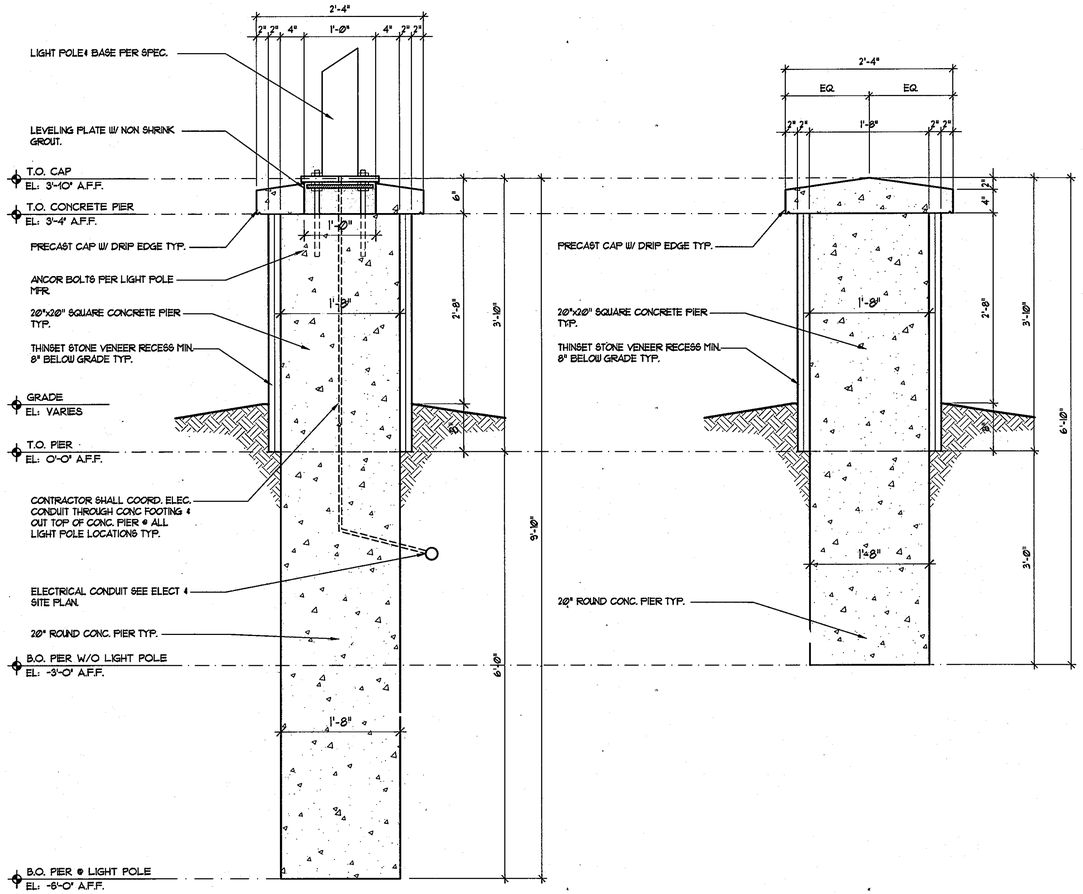

2 CONC PIER SECTION @ LIGHT
SCALE : 1" = 1'-0"

1 CONC PIER SECTION
SCALE : 1" = 1'-0"

ARCHITECT 12551 DANIEL FRANCIS MURRAY WILDERSON STATE OF MARYLAND 7-13-10

APPROVED: HOWARD COUNTY DEPARTMENT OF PLANNING & ZONING

Director — Date 8/27/10

Chief, Division of Land Development — Date 8/27/10

Chief, Development Engineering Division — Date 8/6/10

APPROVED
PLANNING BOARD OF HOWARD COUNTY
DATE January 31, 2008 and April 24, 2008 & April 7, 2011

DES.	DRN.	CHK.

DATE	REVISION	BY	APP'D

PREPARED FOR:

OWNER/DEVELOPER/LAND LEASER:
SCIENCE FICTION, LLC
C/O ANTHERPEN AUTOMOTIVE GROUP
8440 BALTIMORE NATIONAL PIKE
CATONSVILLE, MD 21228
CONTACT: Stanford Heess

LAND LEASER:
WEGMANS FOOD MARKETS, INC.
100 WEGMANS MARKET STREET
ROCHESTER, NY 14624
CONTACT: STEPHEN LEATY
585-464-4600 EXT. 6833

DECORATIVE PIER PLANS SECTIONS

WEGMANS FOOD MARKETS

COLUMBIA SIELING INDUSTRIAL CENTER
PARCEL 'D-2' (redevelopment of Parcel D-1)
TAX MAP PARCEL 356
SECTION 1, AREA 1; PLAT Nos. 17484, 20012 & 21172

6TH ELECTION DISTRICT — HOWARD COUNTY, MARYLAND

SCALE	ZONING	G. L. W. FILE No.
	NT	
DATE	TM 36 – 24	SHEET
JUNE/2010		16 OF 21

Bignell Watkins Hasser
ARCHITECTS P.C.

ONE PARK PLACE, SUITE 250
ANNAPOLIS, MARYLAND 21401
Maryland: (301) 261-8228
MD Fax: (410) 224-4443
Baltimore: (410) 841-6595
Annapolis: (410) 224-2727

8500 LEESBURG PIKE, SUITE 503
VIENNA, VIRGINIA 22182
Virginia: (703) 288-3520
VA Fax: (703) 288-4211
Website: www.bigwha.com

These drawings are the property of the Architect. Bignell Watkins Hasser Architects P.C. Unauthorized reproduction for any purpose is an infringement upon copyright laws. Violators will be subject to prosecution by fullest extent of the law.
Written dimensions on these drawings shall have precedence over scale dimensions. Contractors shall verify and be responsible for all dimensions and conditions on the job and this office must be notified of any variation from the dimensions and conditions shown by these drawings.

SDP-07-131

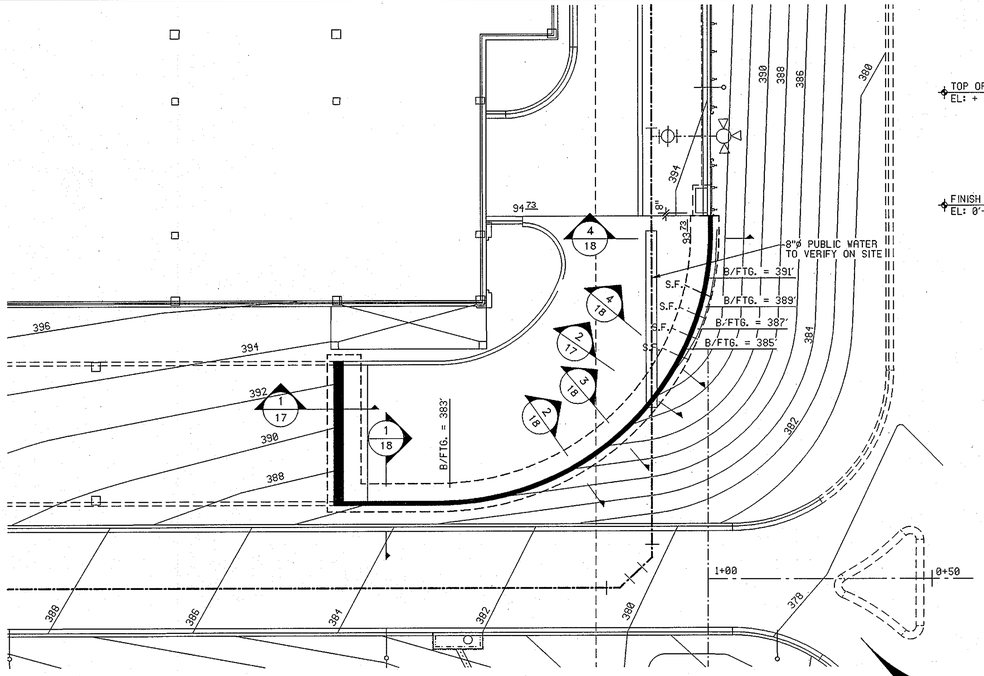

PARTIAL SITE PLAN

SCALE: 1/16"=1'0"

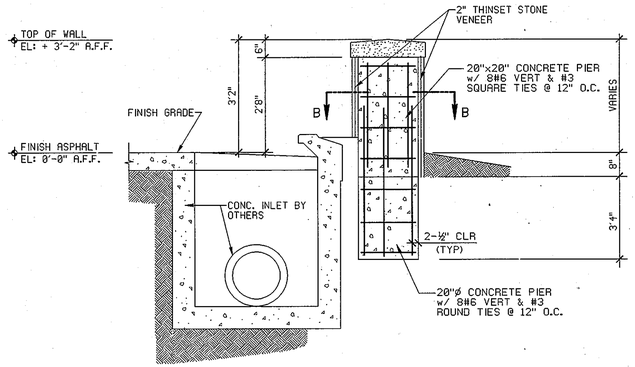

3/17 PIER SECTION WITH OUT LIGHT POLE
REF.: 1/A1-1.0A

SCALE: 1/2"=1'0"

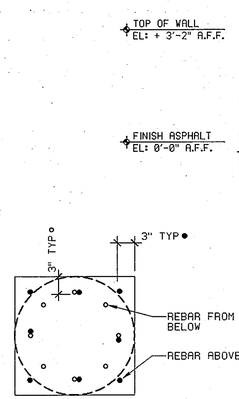

SECTION B-B

SCALE: 1" = 1'0"

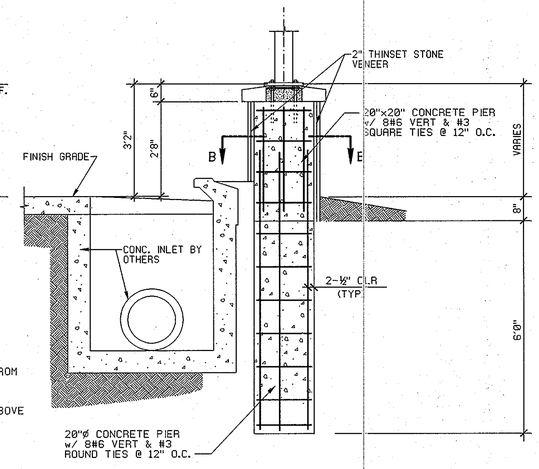

4/17 PIER SECTION WITH LIGHT POLE
REF.: 1/A1-1.0A

SCALE: 1/2"=1'0"

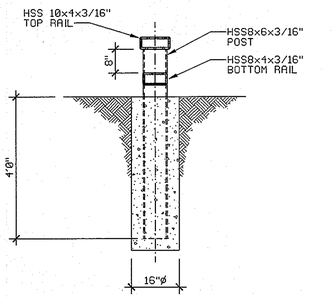

5/17 SECTION
A1-1.0

SCALE: 1/2" = 1'0"

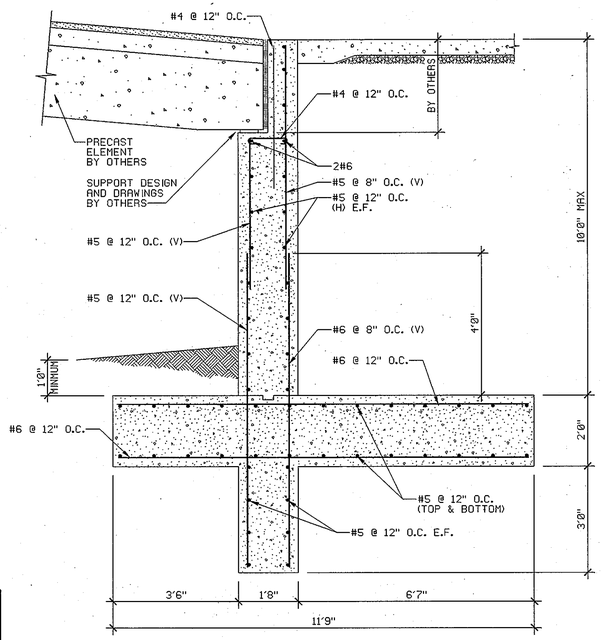

1/17 SECTION @ RAMP RETAINING WALL

SCALE: 1/2"=1'0"

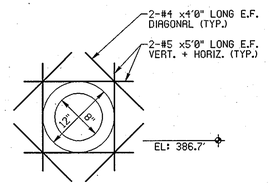

SECTION A-A

SCALE: 1"=1'0"

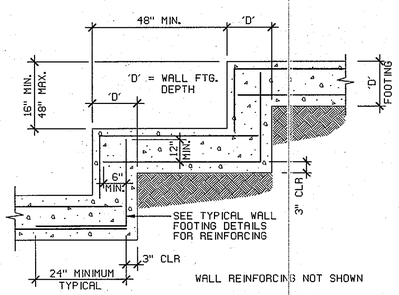

D16a DET TYPICAL STEPPED FOOTING DETAIL
(AS REQUIRED)

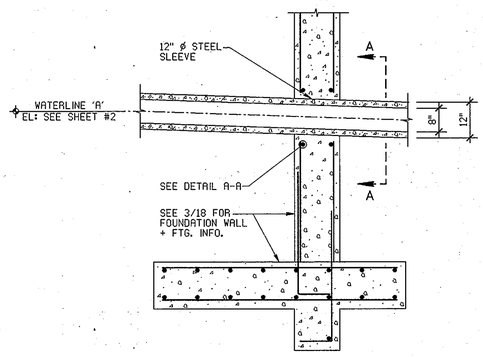

2/17 RETAINING WALL SECTION
REF.: 2/A-1.0A

SCALE: 1/2"=1'0"

APPROVED: HOWARD COUNTY DEPARTMENT OF PLANNING & ZONING

Director — Date 8/27/10

Chief, Division of Land Development — Date 8/27/10

Chief, Development Engineering Division — Date 8/26/10

APPROVED
PLANNING BOARD OF HOWARD COUNTY

DATE January 31, 2008 and April 24, 2008 & April 7, 2011

DES.	DRN.	CHK.	DATE	REVISION	BY	APP'R.

PREPARED FOR:

OWNER/DEVELOPER/LAND LEASER:
SCIENCE FICTION, LLC
C/O ANTWERPEN AUTOMOTIVE GROUP
6440 BALTIMORE NATIONAL PIKE
CATONSVILLE, MD 21228
CONTACT: Stanford Hess

LAND LEASEE:
WEGMANS FOOD MARKETS, INC.
100 WEGMANS MARKET STREET
ROCHESTER, NY 14624
CONTACT: STEPHEN LEATY
585-464-4600 EXT. 6835

STRUCTURAL PLAN & DETAILS - RETAINING WALL

WEGMANS FOOD MARKETS

COLUMBIA SIELING INDUSTRIAL CENTER
PARCEL 'D-2' (redevelopment of Parcel D-1)
TAX MAP PARCEL 356
SECTION 1, AREA 1; PLAT Nos. 17484, 20012 & 21178

6TH ELECTION DISTRICT — HOWARD COUNTY, MARYLAND

SCALE	ZONING	G. L. W. FILE No.
	NT	
DATE		SHEET
JUNE/2010	TM 36 - 24	17 OF 21

SDP-07-131

The VATKINS Partnership Inc.
Consulting Structural Engineering
3032 Mitchellville Road
Suite 202
Bowie, Maryland 20716
ANNAP. (410) 741-1791
WASH. (301) 249-0974
FAX (301) 249-0976

PROJECT #: 20100101

REGISTERED PROFESSIONAL ENGINEER — No. 12658 — STATE OF MARYLAND — 11/20/2010

Professional Certification
I hereby certify that these documents were prepared or approved by me, and that I am a duly licensed professional engineer under the laws of the State of Maryland, license number 12658 S.M.W. expiration date October 11, 2011

GENERAL NOTES:

CODE: DESIGN AND CONSTRUCTION TO BE IN ACCORD WITH THE IBC 2003 CODE AND THE PARTICULAR CODES AS REFERENCED IN IBC 2003 BLDG CODE OR IN ACCORDANCE WITH THE ASCE 7-02.

LIVE LOADS: THE STRUCTURE HAS BEEN DESIGNED FOR LIVE LOADS AS FOLLOWS:

FLOOR LOAD:
RETAIL: 100.00 PSF
PARKING: 50.00

BUILDING CATEGORY: I
EXPOSURE CATEGORY: A

WIND:
3-SEC GUST SPEED: 90.00 MPH
IMPORTANCE FACTOR (Iw): 1.0

SEISMIC:
SEISMIC USE GROUP: A
IMPORTANCE FACTOR (Ie): 1.00
SOIL SITE CLASS: D

CONSTRUCTION SAFETY: LOADS GREATER THAN THE APPLICABLE DESIGN LOADS SHALL NOT BE PLACED ON THE STRUCTURE. PROVISION SHALL BE MADE FOR ADEQUATE BRACING AND SUPPORT OF ADJACENT CONSTRUCTION, UTILITIES AND EXCAVATIONS. JOB SITE SAFETY AND CONSTRUCTION PROCEDURES ARE THE RESPONSIBILITY OF THE CONTRACTOR.

FOUNDATION: THE SOILS REPORT AS PREPARED BY HILLIS-CARNES(#07050A) SHALL BE CONSIDERED PART OF THESE SPECIFICATIONS. IF ANY CONFLICT EXISTS BETWEEN SOIL CONSULTANTS REPORT AND THE FOLLOWING RECOMMENDATIONS, THE MORE STRINGENT REQUIREMENT WILL APPLY. BEFORE PLACEMENT OF FILL, IT IS RECOMMENDED THAT THE SITE BE INSPECTED BY A PROFESSIONAL SOILS ENGINEER REGISTERED IN THE JURISDICTION OF THE PROJECT FOR PROPER STRIPPING AND PREPARATION FOR RECEIVING THE FILL.

EXCAVATION FOR AND BEARING MATERIAL FOR FOUNDATIONS SHOULD BE SUPERVISED AND APPROVED BY A PROFESSIONAL SOILS ENGINEER REGISTERED IN THE JURISDICTION OF THE PROJECT.

THE AREAS WITHIN THE BUILDING LIMITS AND THOSE EXTENDING ON ALL THE SIDES, TO A MINIMUM OF SIX (6) FEET OR THE DEPTH OF CONTROLLED FILL, WHICHEVER IS MORE, SHALL BE PREPARED (BY EXCAVATION OR BY PLACING CONTROLLED FILL) TO AN ELEVATION (2'6") INCHES BELOW THE FINISHED FLOOR LEVELS OF SLABS ON GRADE.

THE FOOTINGS SHALL BE EXCAVATED AFTER THE BUILDING AREAS HAVE BEEN PROPERLY PREPARED.

MATERIAL SATISFACTORY FOR CONTROLLED FILL AND BACKFILL MATERIAL AROUND AND ABOVE FOOTINGS SHALL INCLUDE CLEAN SOIL OR BANKRUN SAND AND GRAVEL (GW, GC, SC, SM, ML & CL), BUT EXCLUDE HIGHLY PLASTIC CLAYS (MH & CH) OR HIGH SHRINK-SWELL SOILS. THE FILL MATERIALS SHALL BE FREE FROM TOPSOIL, ORGANIC CONTAMINATED SOIL AND ROCK FRAGMENTS HAVING A MAJOR DIMENSION GREATER THAN FOUR (4) INCHES, AND SHALL CONTAIN NO ICE OR SNOW.

ALL FOOTINGS SHALL BE CARRIED DOWN A MINIMUM OF ONE FOOT INTO VIRGIN SOIL OR COMPACTED FILL OR AS DIRECTED BY THE SOILS ENGINEER AND, IF EXTERIOR, SHALL BE A MINIMUM OF 2'6" BELOW FINISHED EXTERIOR GRADE. FOOTINGS ARE DESIGNED FOR A SOIL BEARING PRESSURE OF 6500 PSF. FOOTING ELEVATIONS HAVE BEEN ESTABLISHED FROM AVAILABLE INFORMATION AND SHALL NOT BE TAKEN AS A WAIVER OF THESE REQUIREMENTS.

WATER, LOOSE SOIL AND SOIL SOFTENED BY WATER SHALL BE REMOVED FROM THE BOTTOM OF THE FOOTING EXCAVATIONS BEFORE PLACING CONCRETE.

FOOTING EXCAVATIONS SHALL NOT BE LEFT OPEN FOR LONG PERIODS. IT IS SUGGESTED THAT THE BOTTOM OF THE FOOTING EXCAVATIONS AND TRENCHES BE PROTECTED BY UNDERCUTTING AND PLACING THREE (3) INCHES OF A LEAN-MIX CONCRETE SLAB IMMEDIATELY UPON APPROVAL AND BEFORE REINFORCING STEEL IS PLACED.

DEPTH OF EXCAVATIONS BELOW ANY FOOTINGS SHALL NOT EXCEED 1/2 THE DISTANCE FROM THE NEAREST EDGE OF THAT FOOTING.

PROVISIONS MUST BE TAKEN TO PROTECT ALL CONCRETE WORK FROM FROST DAMAGE WITH SPECIAL ATTENTION PAID TO FOOTINGS AND OTHER CONCRETE ON GRADE PRIOR TO BACKFILLING AND ENCLOSING THE BUILDING.

CARE SHOULD BE TAKEN TO ASSURE THAT DURING PLACING OF CONCRETE FOOTINGS AND SLABS ON GRADE NO ORGANIC MATTER, SALTS, OR CLAYS ARE MIXED WITH THE CONCRETE.

UNLESS OTHERWISE NOTED, FLOOR SLAB ON GRADE TO BE AS SHOWN ON DRAWINGS. FLOOR SLAB TO BE POURED IN STRIPS OR AS NOTED BY THE ARCHITECT. CUT ALTERNATE STRANDS OF WWF AT POUR JOINTS OR USE SCREED KEYS, IN WHICH CASE ALL STRANDS AT THE KEY MAY BE CUT.

COMPACTION: EACH LAYER OF FILL SHALL BE COMPACTED AT OPTIMUM MOISTURE CONTENT (PLUS OR MINUS 2%) TO NOT LESS THAN 95% OF MAXIMUM DRY DENSITY.

LOWER DEGREES OF COMPACTION MAY BE PERMITTED BY THE BUILDING OFFICIAL AFTER RECEIPT OF A REPORT FROM THE SOILS ENGINEER CERTIFYING THAT HE HAS INVESTIGATED THE SUBSOIL OF THE SITE, HAS TESTED REPRESENTATIVE FILL MATERIALS AND THAT IN HIS OPINION SUCH LOWER DEGREE OF COMPACTION WILL BE ADEQUATE FOR THE INTENDED USE OF THE FILL.

IN-PLACE FIELD DENSITY SHALL BE DETERMINED IN ACCORDANCE WITH ASTM D-698 OR ASTM D-1557.

ALL FILLS SHALL BE PLACED IN APPROXIMATELY HORIZONTAL LAYERS, EACH LAYER HAVING A LOOSE THICKNESS OF NOT MORE THAN 8 INCHES.

NO FILL SHALL BE PLACED ON FROZEN GROUND.

TEMPORARY LATERAL BRACING: PROVIDE ADEQUATE BRACING AND SHORING FOR BASEMENT, RETAINING AND PIT WALLS. BRACE BASEMENT AND PIT WALLS UNTIL SUPPORTING FLOORS ABOVE ARE IN PLACE AND HAVE ATTAINED DESIGN STRENGTH. DO NOT BACKFILL WALLS UNTIL AFTER FLOORS AT THE TOP AND BASE OF THE WALLS ARE IN PLACE. WHERE BACKFILL IS REQUIRED ON BOTH SIDES OF A WALL, BACKFILL BOTH SIDES SIMULTANEOUSLY WITH THE GRADE DIFFERENCE NOT TO EXCEED 2'0" AT ANY TIME.

LATERALLY BRACE BUILDING WALLS IN AN APPROVED MANNER AS REQUIRED. BRACING SHALL REMAIN IN PLACE UNTIL ROOF OR FLOOR MEMBERS HAVE BEEN SECURELY ANCHORED TO THE WALL.

PROVIDE ADEQUATE BRACING AND GUY-WIRING FOR STEEL FRAME AND MEMBERS DURING STEEL ERECTION AND CONCRETE WORK ON DECK. BRACING ARRANGEMENT SHALL REMAIN IN PLACE UNTIL PERMANENT CONNECTIONS HAVE BEEN MADE. STEEL FRAME SHALL BE PLUMB WITHIN AISC TOLERANCES AND PROJECT SPECIFICATION REQUIREMENTS.

CONCRETE: TO BE MIXED AND PLACED IN ACCORDANCE WITH THE CURRENT "AMERICAN CONCRETE INSTITUTE (ACI) BUILDING CODE REQUIREMENTS FOR REINFORCED CONCRETE". A COPY OF THIS CODE SHALL BE AVAILABLE ON THE PROJECT AT ALL TIMES.

ALL REINFORCED CONCRETE, INCLUDING FLOOR TOPPING, TO HAVE A COMPRESSIVE STRENGTH (f'c) OF 3,000 PSI, UNLESS OTHERWISE NOTED.
WALLS AND FOOTINGS 4,000 PSI

CONTRACTOR SHALL SUBMIT MIX DESIGNS ACCOMPANIED BY APPROPRIATE GRAPHS AND BACKGROUND DATA FOR APPROVAL. MIX DESIGN SHALL INDICATE 7 AND 28 DAYS STRENGTHS. CEMENT CONTENT, AIR CONTENT, WATER-CEMENT RATIO, AMOUNT OF FINE AND COARSE AGGREGATES AND ADMIXTURES. ALL EXTERIOR CONCRETE AND CONCRETE EXPOSED TO WEATHER SHALL BE AIR-ENTRAINED.

CONCRETE CYLINDER TESTS SHALL BE MADE BY AN INDEPENDENT QUALIFIED TESTING AGENCY, TO BE RETAINED AND PAID FOR BY THE CONTRACTOR, IN

ACCORDANCE WITH ASTM SPECIFICATION FOR "COMPRESSION TESTS OF CONCRETE". A MINIMUM OF 4 TEST CYLINDERS SHALL BE MADE FOR EACH 50 CUBIC YARDS, OR FRACTION THEREOF, OF CONCRETE PLACED: TWO TESTED AT SEVEN DAYS AND TWO TESTED AT TWENTY-EIGHT DAYS. THE TESTING AGENCY SHALL BE RESPONSIBLE FOR OBTAINING SAMPLES AND FOR STORAGE.

ALL CONTINUOUS REINFORCING SHALL BE CONTINUOUS OR LAPPED AT ALL SPLICES, CORNERS AND INTERSECTIONS A MINIMUM OF 30 BAR DIAMETERS (U.N.O.).

PROVIDE SPACERS, CHAIRS, TIES AS REQUIRED AND NECESSARY FOR ASSEMBLING, PLACING AND SUPPORTING ALL REINFORCEMENT IN PROPER POSITION.

CONCRETE PROTECTION FOR REINFORCEMENT SHALL BE AS GIVEN IN ACI-318.

ALL CONCRETE WORK, REINFORCING PLACEMENT, FORMWORK AND SHORING SHALL BE INSPECTED BY A PROFESSIONAL ENGINEER REGISTERED IN THE JURISDICTION OF THE PROJECT. CONCRETE QUALITY CONTROL, INSPECTION AND TESTING SHALL BE IN STRICT ACCORDANCE WITH THE PROJECT SPECIFICATIONS, AS WELL AS LOCAL BUILDING CODE REQUIREMENTS.

USE OF ADDITIVES SHALL NOT BE PERMITTED UNLESS SPECIFICALLY APPROVED BY THE STRUCTURAL ENGINEER. USE OF ADDITIVES CONTAINING CALCIUM CHLORIDE SHALL NOT BE PERMITTED.

USE OF CEMENT SUBSTITUTES SUCH AS "NEWCEM" SHALL NOT BE PERMITTED WITHOUT PRIOR APPROVAL FROM THE STRUCTURAL ENGINEER. THE USE OF CEMENT SUBSTITUTES WILL ONLY BE PERMITTED DURING SPECIFIC SEASONS. THE AMOUNT OF CEMENT SUBSTITUTE PERMITTED IN THE MIX DESIGN WILL BE LIMITED TO 25% BY WEIGHT OF THE TOTAL AMOUNT OF CEMENT IN THE MIX.

SHOP DRAWINGS: PARTIAL SUBMISSIONS OF SHOP DRAWINGS FOR REVIEW MUST BE PRE-APPROVED BY THE STRUCTURAL ENGINEER.

INCOMPLETE OR SHOP DRAWINGS WHICH HAVE NOT BEEN CHECKED BY THE DETAILER, CONTRACTOR WILL NOT BE REVIEWED BY THE STRUCTURAL ENGINEER.

NUMEROUS DIMENSIONAL ERRORS, LACK OF CONNECTION COORDINATION, AND MISSING MEMBER FABRICATION DETAILING ARE CONSIDERED PROOF THAT THE SHOP DRAWING HAVE NOT BEEN CHECKED OR ARE INCOMPLETE.

THE CONTRACTOR SHALL REVIEW ALL SHOP DRAWINGS FOR CONFORMANCE WITH THE STRUCTURAL/ARCHITECTURAL DRAWINGS BEFORE SUBMISSION TO THE STRUCTURAL ENGINEER.

ANY DEVIATIONS FROM THE CONTRACT STRUCTURAL/ARCHITECTURAL DRAWINGS SHALL BE INDICATED IN RED ON THE SHOP DRAWINGS BY THE CONTRACTOR.

ONLY SHOP DRAWINGS SIGNED AND DATED BY THE CONTRACTOR WILL BE REVIEWED BY THE STRUCTURAL ENGINEER.

THE STRUCTURAL ENGINEER WILL PROCESS A MAXIMUM OF 5 SETS OF SHOP DRAWINGS PER SUBMISSION.

THE STRUCTURAL ENGINEER SHALL HAVE 12 WORKING DAYS TO PERFORM THE SHOP DRAWING REVIEW.

CONTRACT DOCUMENTS MAY NOT BE REPRODUCED FOR USE AS SHOP DRAWINGS WITHOUT A WRITTEN AGREEMENT BETWEEN THE GENERAL CONTRACTOR AND THE ENGINEER OF RECORD.

A USE AND ROYALTY FEE WILL BE ASSESSED PER EACH SHEET OR ELECTRONIC FILE, AND MUST BE PAID IN FULL PRIOR TO THE ENGINEER RELEASING THE SHOP DRAWINGS.

SPECIAL INSPECTION: STRUCTURAL STEEL AND CONCRETE CONSTRUCTION SHALL BE INSPECTED AS REQUIRED PER SECTION 1704 OF THE IBC 2003 AND THE JURISDICTION OF THE PROJECT.

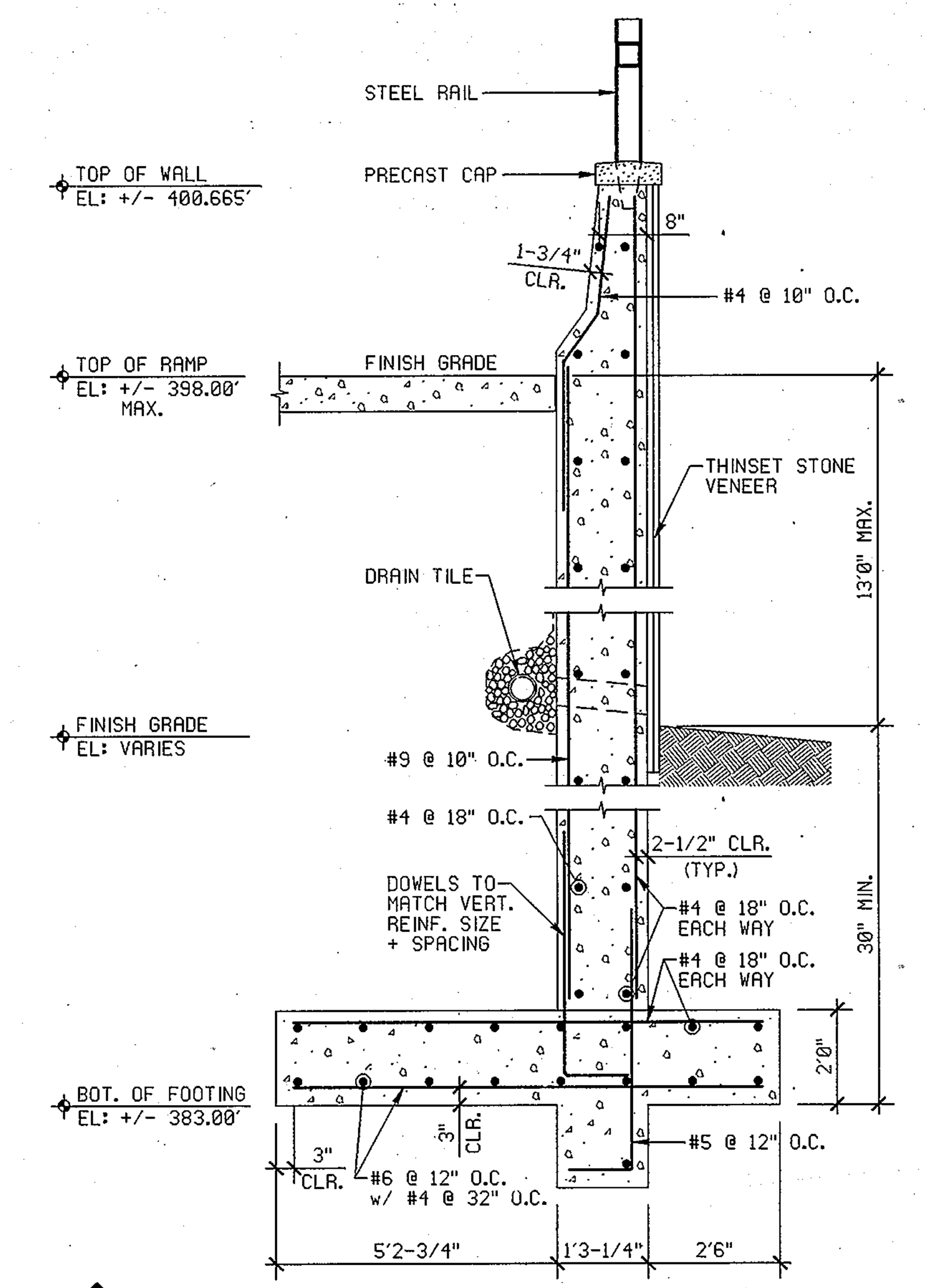

1/18 RETAINING WALL SECTION

REF: 1/A-1.0A SCALE: 1/2"=1'0"

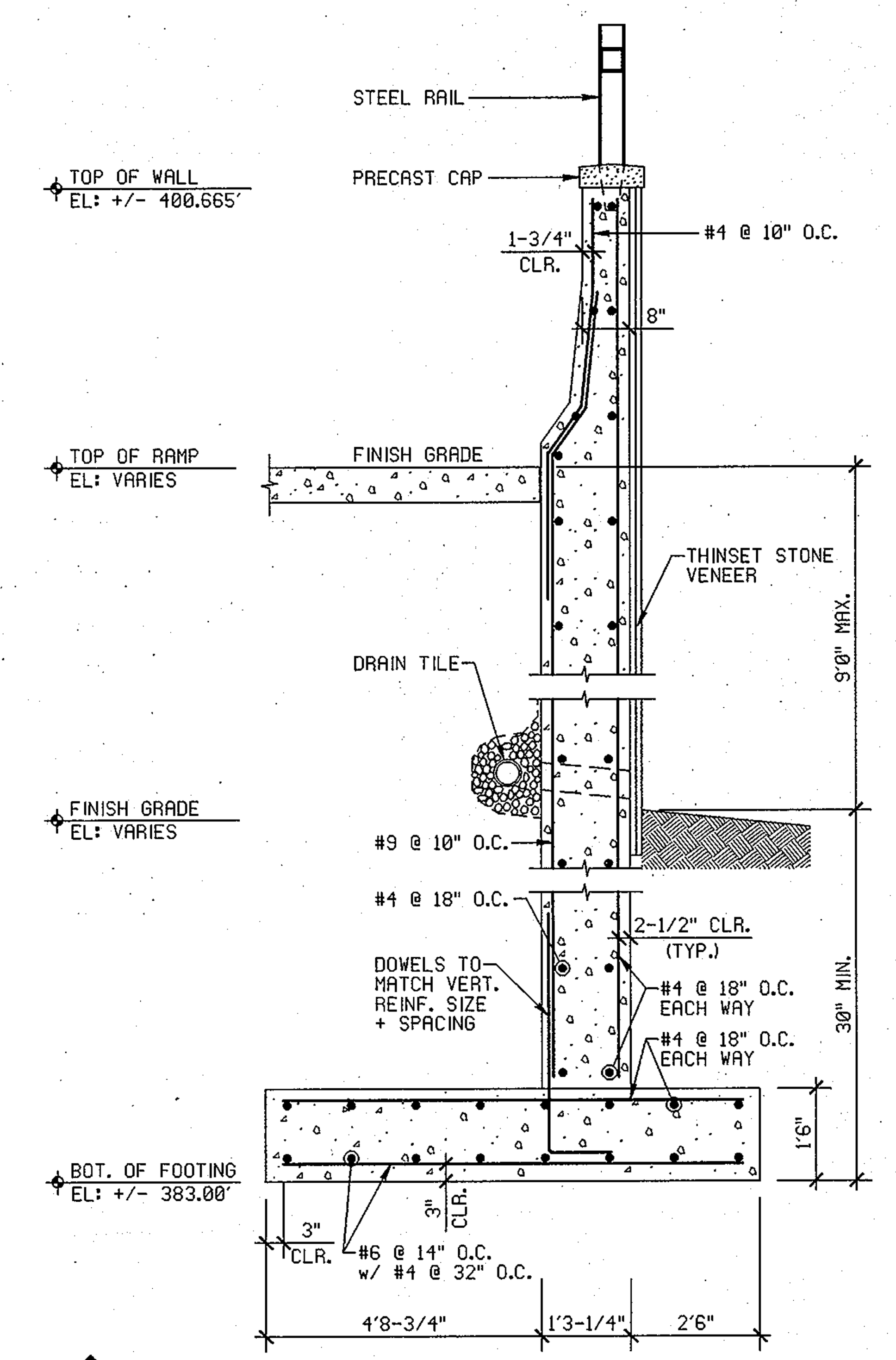

2/18 RETAINING WALL SECTION

REF: 1/A-1.0A SCALE: 1/2"=1'0"

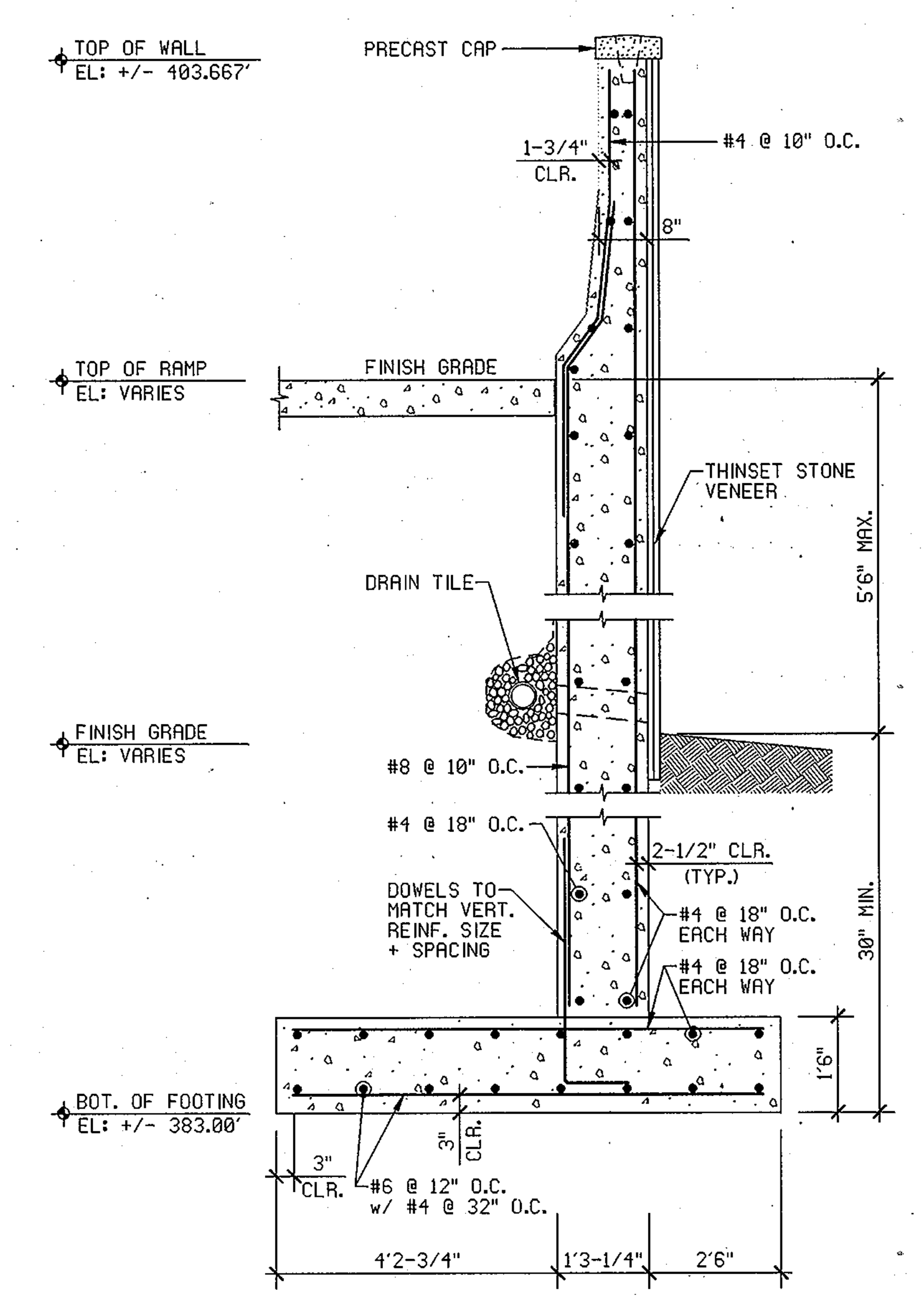

3/18 RETAINING WALL SECTION

REF: 1/A-1.0A SCALE: 1/2"=1'0"

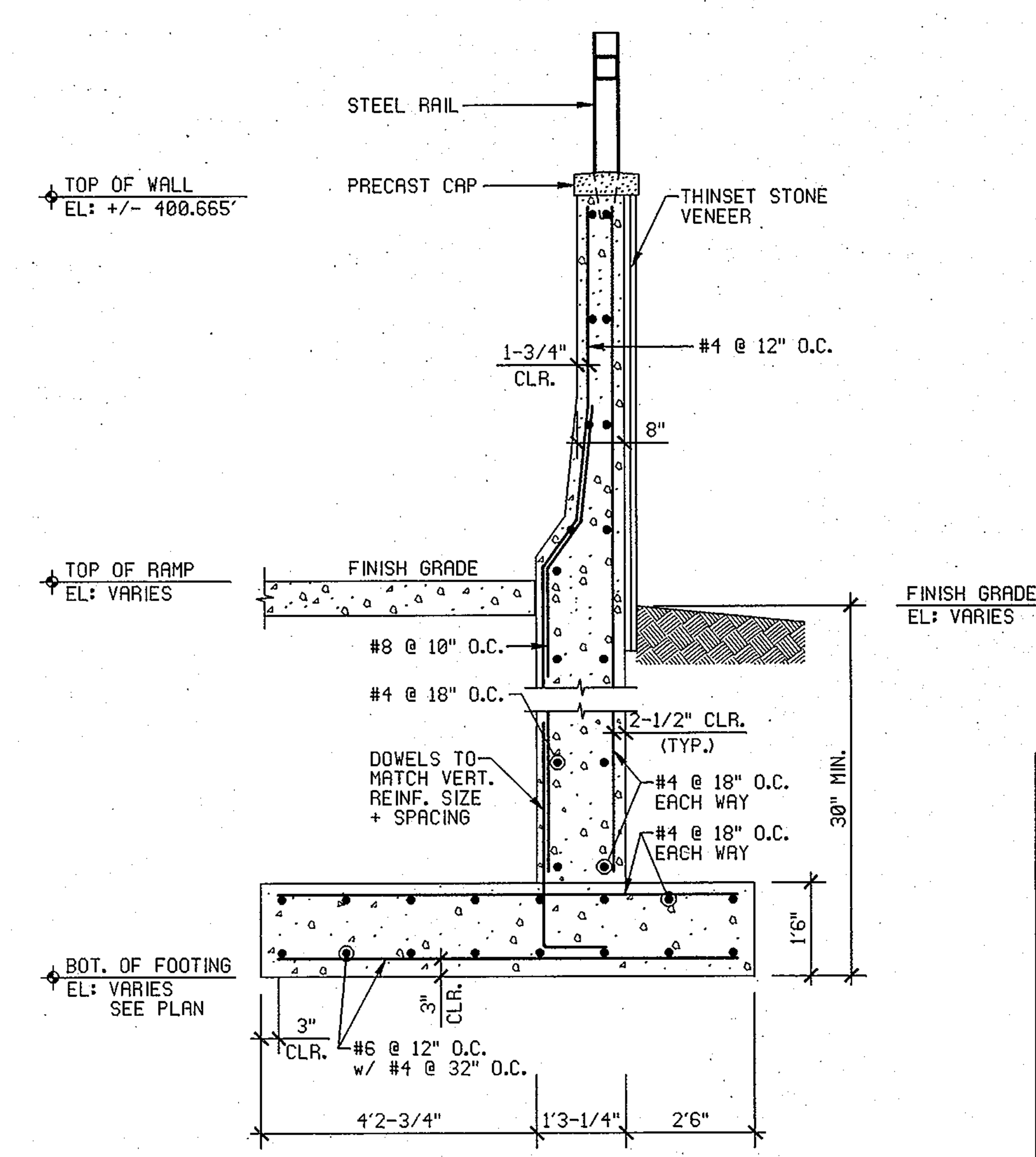

4/18 RETAINING WALL SECTION

REF: 1/A-1.0A SCALE: 1/2"=1'0"

APPROVED: HOWARD COUNTY DEPARTMENT OF PLANNING & ZONING

Thomas J. Butler — Director — Date 8/27/10

Kent Sheubrooks — Chief, Division of Land Development — Date 8/27/10

[signature] — Chief, Development Engineering Division — Date 8/6/10

APPROVED
PLANNING BOARD OF HOWARD COUNTY

DATE January 31, 2008 and April 24, 2008 & April 7, 2011

			DATE	REVISION	BY	APP'R.
DES.	DRN.	CHK.				

PREPARED FOR:

OWNER/DEVELOPER/LAND LEASER:
SCIENCE FICTION, LLC
C/O ANTWERPEN AUTOMOTIVE GROUP
6440 BALTIMORE NATIONAL PIKE
CATONSVILLE, MD 21228
CONTACT: Stanford Hess

LAND LEASEE:
WEGMANS FOOD MARKETS, INC.
100 WEGMANS MARKET STREET
ROCHESTER, NY 14624
CONTACT: STEPHEN LEATY
585-464-4600 EXT. 6833

STRUCTURAL NOTES & SECTIONS – RETAINING WALL

WEGMANS FOOD MARKETS

COLUMBIA SIELING INDUSTRIAL CENTER
PARCEL 'D-2' (redevelopment of Parcel D-1)
TAX MAP PARCEL 356
SECTION 1, AREA 1; PLAT Nos. 17484, 20012 & 21178

6TH ELECTION DISTRICT — HOWARD COUNTY, MARYLAND

The WATKINS Partnership Inc. Consulting Structural Engineering
3032 Mitchellville Road Suite 202 Bowie, Maryland 20716
ANNAP. (410) 741-1791
WASH. (301) 249-0974
FAX (301) 249-0976

PROJECT #: 20100101

STATE OF MARYLAND — STEPHEN MATTHEW WATKINS — No. 12658 — PROFESSIONAL ENGINEER — 8-13-2010

Professional Certification
I hereby certify that these documents were prepared or approved by me, and that I am a duly licensed professional engineer under the laws of the State of Maryland. license number 12658 S.M.W. expiration date October 11, 2011

SCALE	ZONING	G. L. W. FILE No.
	NT	
DATE		SHEET
JUNE/2010	TM 36 – 24	18 OF 21

SDP-07-131

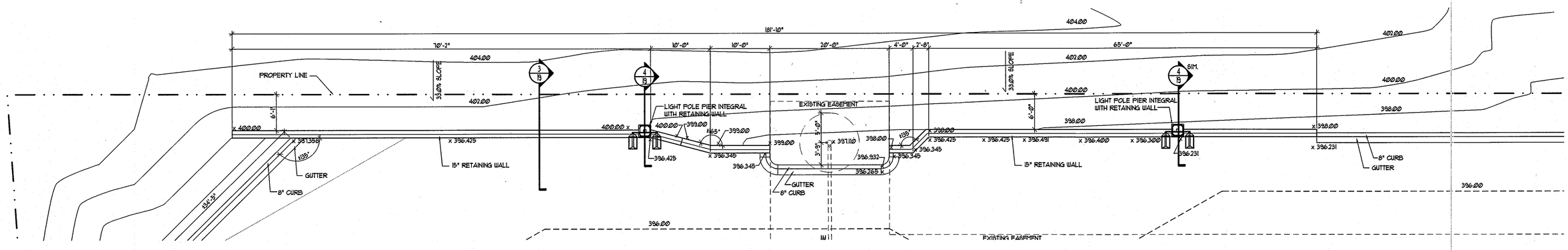

1 RETAINING WALL - ENLARGED PLAN

1/8" = 1'-0"

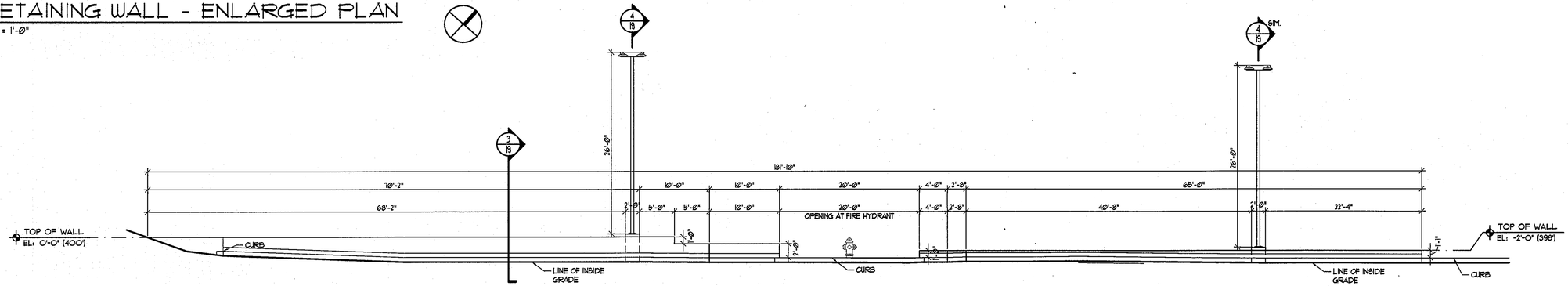

2 RETAINING WALL - INTERIOR ELEVATION

1/8" = 1'-0"

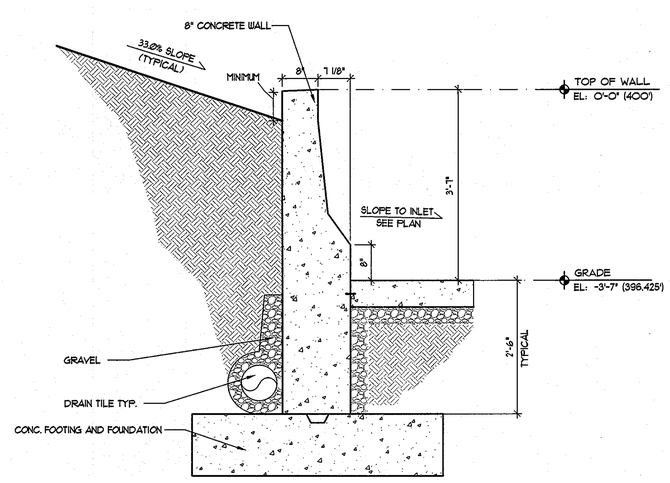

3 RETAINING WALL SECTION

3/4" = 1'-0"

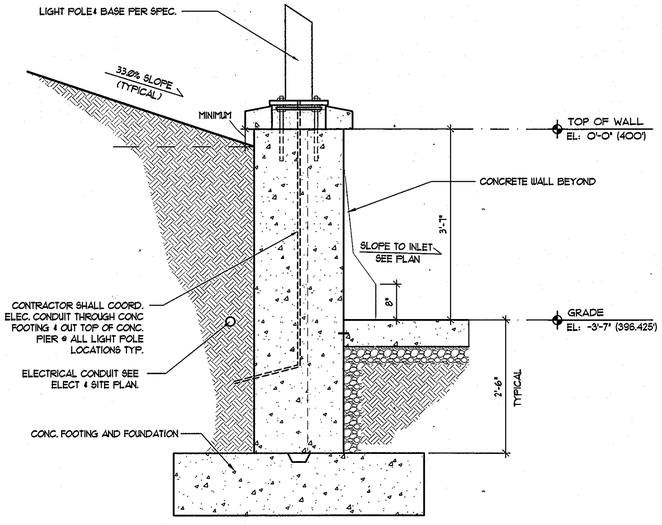

4 RETAINING WALL SECTION @ LIGHT PIER

3/4" = 1'-0"

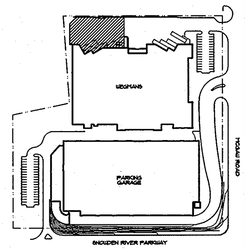

APPROVED: HOWARD COUNTY DEPARTMENT OF PLANNING & ZONING

Director — Date 3/21/11

Chief, Division of Land Development — Date 3/21/11

Chief, Development Engineering Division — Date 3/14/11

APPROVED
PLANNING BOARD OF HOWARD COUNTY

DATE January 31, 2008 and April 24, 2008 & April 7, 2011

DES.	DRN.	CHK.

DATE	REVISION	BY	APP'R.

PREPARED FOR:

OWNER/DEVELOPER/LAND LEASER:
SCIENCE FICTION, LLC
C/O ANTWERPEN AUTOMOTIVE GROUP
6440 BALTIMORE NATIONAL PIKE
CATONSVILLE, MD 21228
CONTACT: STANFORD HESS

LAND LEASEE:
WEGMANS FOOD MARKETS, INC.
100 WEGMANS MARKET STREET
ROCHESTER, NY 14624
CONTACT: STEPHEN LEATY
585-464-4600 EXT. 6833

REAR RETAINING WALL - PLAN, SECTIONS & ELEVATION

WEGMANS FOOD MARKETS

COLUMBIA SIELING INDUSTRIAL CENTER
PARCEL 'D-2' (redevelopment of Parcel D-1)
TAX MAP PARCEL 356
SECTION 1, AREA 1; PLAT Nos. 17484, 20012 & 21178

6TH ELECTION DISTRICT — HOWARD COUNTY, MARYLAND

SCALE	ZONING	G. L. W. FILE No.
	NT	
DATE		SHEET
JANUARY/2011	TM 36 - 24	19 OF 21

ARCHITECT 12551 — REG. FRANCIS MURRAY WILLOUGHBY — STATE OF MARYLAND

Bignell Watkins Hasser
ARCHITECTS P.C.

ONE PARK PLACE, SUITE 250
ANNAPOLIS, MARYLAND 21401
Maryland: (301) 261-8228
MD Fax: (410) 224-4443
Baltimore: (410) 841-6595
Annapolis: (410) 224-2727

8509 LEESBURG PIKE, SUITE 503
VIENNA, VIRGINIA 22182
Virginia: (703) 288-3320
VA Fax: (703) 288-4211
Website: www.bigwaho.com

These drawings are the property of the Architect. Bignell Watkins Hasser Architects P.C. Unauthorized reproduction for any purpose is an infringement upon copyright laws. Violator will be subject to prosecution by fullest extent of the law.
Written dimensions on these drawings shall have precedence over scale dimensions. Contractors shall verify and be responsible for all dimensions and conditions on the job and this office must be notified of any variation from the dimensions and conditions shown by these drawings.

SDP-07-131

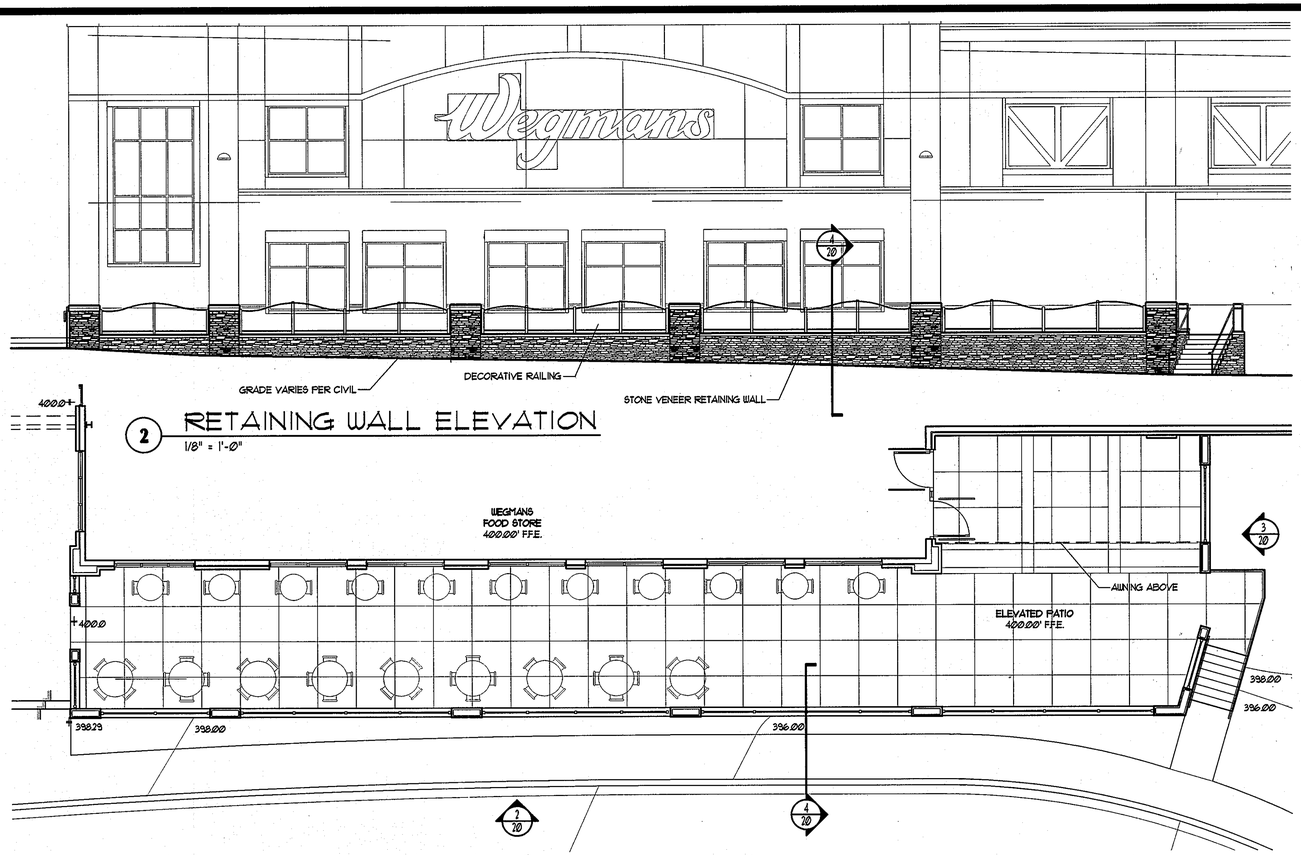

2 RETAINING WALL ELEVATION
1/8" = 1'-0"

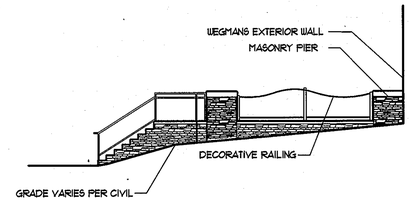

3 RETAINING WALL ELEVATION
1/8" = 1'-0"

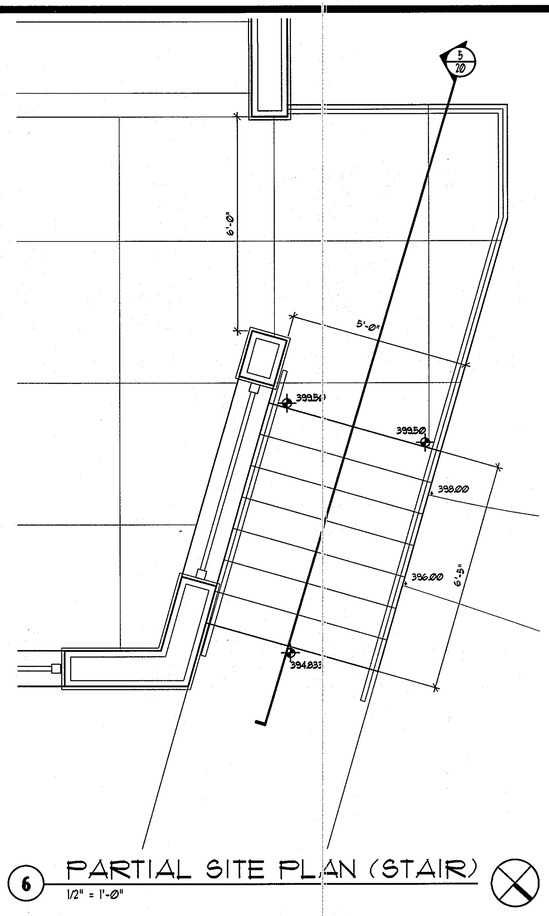

6 PARTIAL SITE PLAN (STAIR)
1/2" = 1'-0"

1 PARTIAL SITE PLAN (STAIR OPTION)
1/8" = 1'-0"

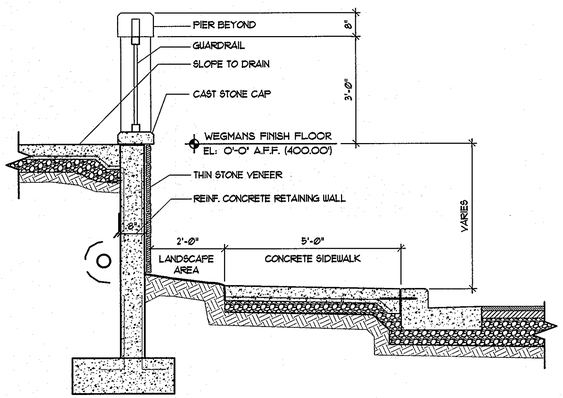

4 RETAINING WALL SECTION
1/2" = 1'-0"

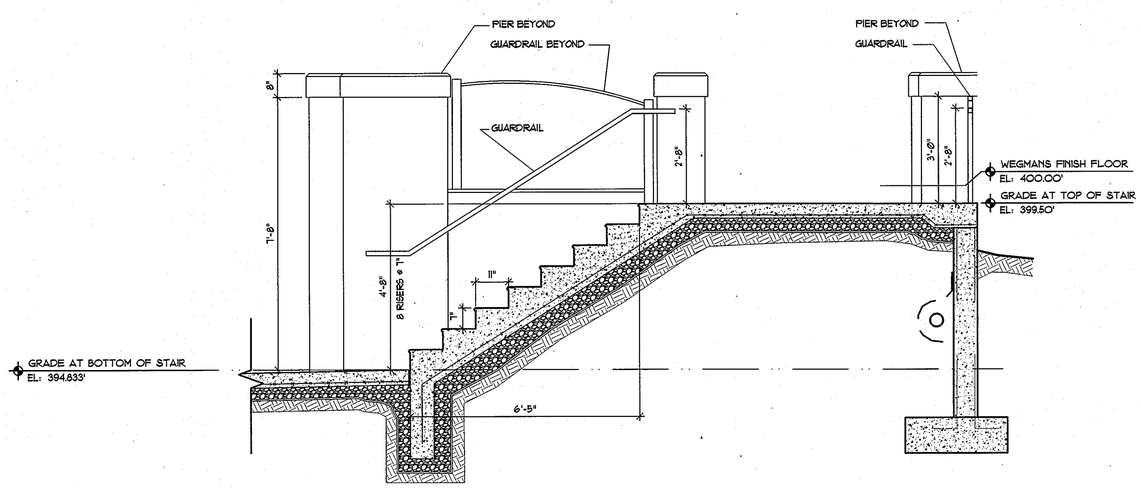

5 STAIR SECTION
1/2" = 1'-0"

APPROVED: HOWARD COUNTY DEPARTMENT OF PLANNING & ZONING

Director — Date 3/24/11

Chief, Division of Land Development — Date 3/21/11

Chief, Development Engineering Division — Date 3/14/11

APPROVED
PLANNING BOARD OF HOWARD COUNTY
DATE January 31, 2008 and April 24, 2008 & April 7, 2011

DES.	DRN.	CHK.

DATE	REVISION	BY	APP'R.

PREPARED FOR:

OWNER/DEVELOPER/LAND LEASER:
SCIENCE FICTION, LLC
C/O ANTWERPEN AUTOMOTIVE GROUP
8440 BALTIMORE NATIONAL PIKE
CATONSVILLE, MD 21228
CONTACT: STANFORD HESS

LAND LEASEE:
WEGMANS FOOD MARKETS, INC.
100 WEGMANS MARKET STREET
ROCHESTER, NY 14624
CONTACT: STEPHEN LEATY
585-464-4600 EXT. 6833

SEATING AREA - PLAN, SECTIONS & ELEVATION

WEGMANS FOOD MARKETS

COLUMBIA SIELING INDUSTRIAL CENTER
PARCEL 'D-2' (redevelopment of Parcel D-1)
TAX MAP PARCEL 356
SECTION 1, AREA 1; PLAT Nos. 17484, 20012 & 21178
6TH ELECTION DISTRICT — HOWARD COUNTY, MARYLAND

SCALE	ZONING	G. L. W. FILE No.
	NT	
DATE		SHEET
JANUARY/2011	TM 36 - 24	20 OF 21

ARCHITECT 12551
MICHAEL FRANCIS MURRAY WATKINS
STATE OF MARYLAND

Bignell Watkins Hasser
ARCHITECTS P.C.

ONE PARK PLACE, SUITE 250
ANNAPOLIS, MARYLAND 21401
Maryland: (301) 261-8228
MD Fax: (410) 224-4443
Baltimore: (410) 841-6595
Annapolis (410) 224-2727

8500 LEESBURG PIKE, SUITE 503
VIENNA, VIRGINIA 22182
Virginia: (703) 288-3320
VA Fax: (703) 288-4211
Website: www.bigwaha.com

These drawings are the property of the Architect. Bignell Watkins Hasser Architects P.C. Unauthorized reproduction for any purpose is an infringement upon copyright laws. Violators will be subject to prosecution by fullest extent of the law.
Written dimensions on these drawings shall have precedence over scale dimensions. Contractors shall verify and be responsible for all dimensions and conditions on the job and this office must be notified of any variation from the dimensions and conditions shown by these drawings.

SDP-07-131

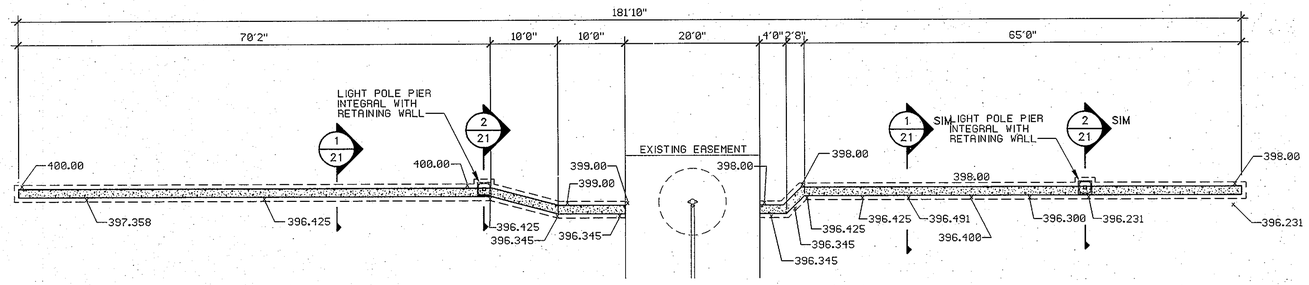

RETAINING WALL – PLAN

SCALE: 3/32" = 1'0"

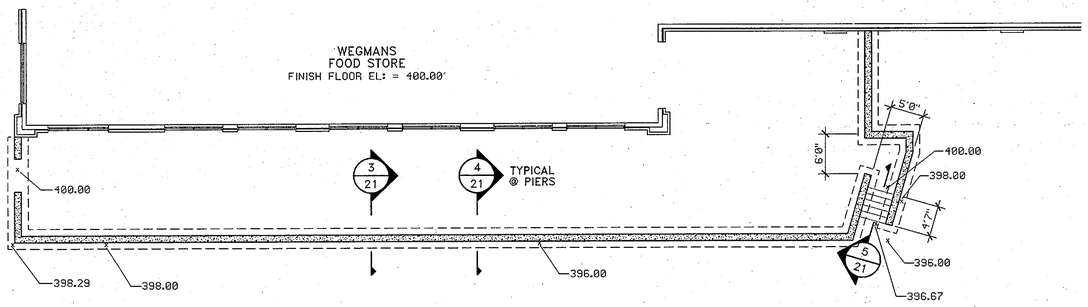

PARTIAL FOUNDATION PLAN (STAIR OPTION)

SCALE: 3/32" = 1'0"

NOTE: G.C. TO VERIFY VERTICAL PLUMBNESS OF EXISTING CONCRETE WALL TO ENSURE ACCURATE PLACEMENT OF ANGLE

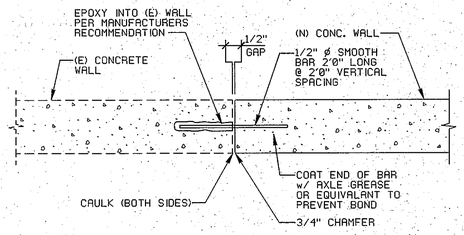

D20b / DET BONDING ANGLE DETAIL

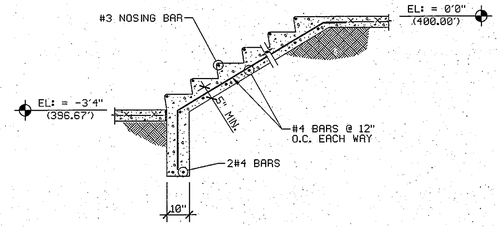

5 / 21 STAIR SECTION

SCALE: 3/8" = 1'0"

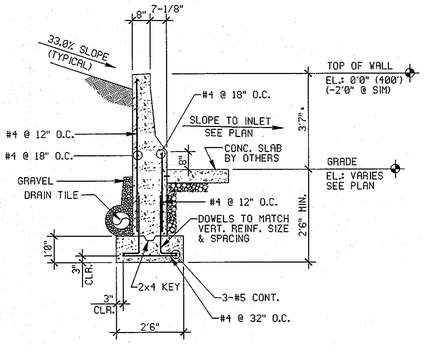

1 / 21 SECTION

SCALE: 3/8" = 1'0"

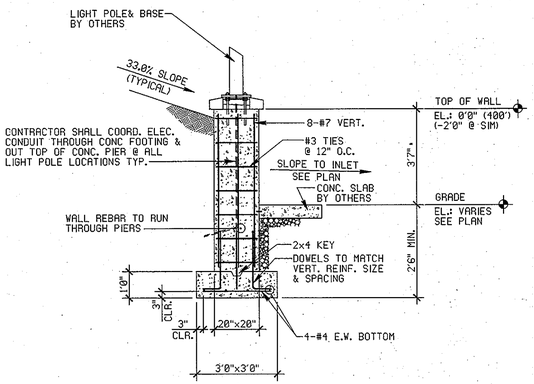

2 / 21 SECTION

SCALE: 3/8" = 1'0"

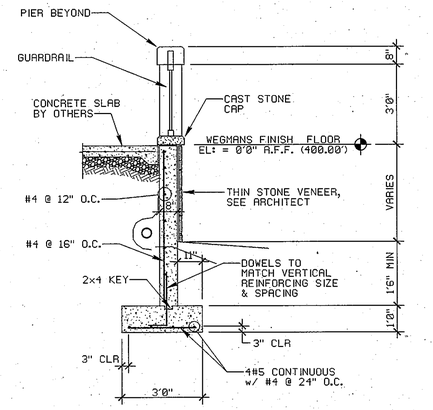

3 / 21 RETAINING WALL SECTION

SCALE: 3/8" = 1'0"

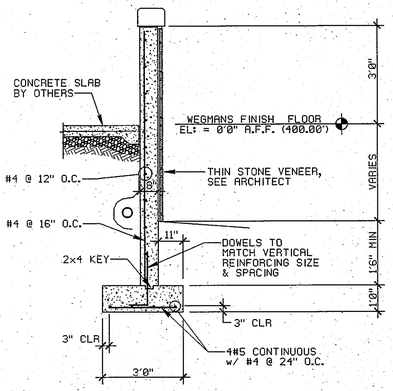

4 / 21 PIER SECTION

SCALE: 3/8" = 1'0"

APPROVED: HOWARD COUNTY DEPARTMENT OF PLANNING & ZONING

Director — Date 3/24/11

Chief, Division of Land Development — Date 3/24/11

Chief, Development Engineering Division — Date 3/14/11

APPROVED
PLANNING BOARD OF HOWARD COUNTY

DATE January 31, 2008 and April 24, 2008 & April 7, 2011

DES.	DRN.	CHK.	DATE	REVISION	BY	APP'R.

PREPARED FOR:

OWNER/DEVELOPER/LAND LEASER:
SCIENCE FICTION, LLC
C/O ANTWERPEN AUTOMOTIVE GROUP
6440 BALTIMORE NATIONAL PIKE
CATONSVILLE, MD 21228
CONTACT: STANFORD HESS

LAND LEASEE:
WEGMANS FOOD MARKETS, INC.
100 WEGMANS MARKET STREET
ROCHESTER, NY 14624
CONTACT: STEPHEN LEATY
585-464-4600 EXT. 6833

The Vatkins Partnership, Inc.
Consulting Structural Engineering
3032 Mitchellville Road
Suite 202
Bowie, Maryland 20716
ANNAP. (410) 741-1701
WASH. (301) 249-0574
FAX (301) 249-0976

PROJECT #: 20100101

MAR 1 2011

Professional Certification
I hereby certify that these documents were prepared or approved by me, and that I am a duly licensed professional engineer under the laws of the State of Maryland.
license number 12688 S.M.W. expiration date October 11, 2011

RETAINING WALLS - PLAN & SECTIONS

WEGMANS FOOD MARKETS
COLUMBIA SIELING INDUSTRIAL CENTER
PARCEL 'D-2' (redevelopment of Parcel D-1)
TAX MAP PARCEL 356
SECTION 1, AREA 1; PLAT Nos. 17484, 20012 & 21178
6th ELECTION DISTRICT — HOWARD COUNTY, MARYLAND

SCALE	ZONING	G. L. W. FILE No.
AS NOTED	NT	
DATE		SHEET
JANUARY/2011	TM 36 - 24	21 OF 21

SDP-07-131