TURF VALLEY, LORIEN

NURSING HOME AND ASSISTED LIVING FACILITY

HOWARD COUNTY, MARYLAND

GENERAL NOTES

1. All ASPECTS OF THE PROJECT ARE IN CONFORMANCE WITH THE LATEST HOWARD COUNTY STANDARDS UNLESS OTHERWISE SHOWN BY WAIVERS INDICATED.

2. PROJECT BACKGROUND:
   - LOCATION: TAX MAP 16 – P/O PARCEL 8– GRID 16 & 17; POD I per S–86–13;(PB 368) (4th AMENDED) PARCEL Q per F–02–82
   - ZONING: PGCC MULTI–USE SUBDISTRICT
   - ELECTION DISTRICT: THIRD
   - DPZ REFERENCE: S–86–13 (PB 181);1st AMENDED S–86–13 (PB 294); 2nd AMENDED S–86–13 (PB 300); 3rd AMENDED S–86–13 (PB 351);4th AMENDED S–86–13 (PB 368); PLAT #3054–A–1434; PLAT #3054–A1510/1511; F–94–06; SDP–95–12; S–94–45; SP–95–14; F–96–107; F–96–150; F–96–151; SP–97–12; F–02–74; F–02–82; S–04–12
   - 4 DEED REFERENCE: LIBER 11767, FOLIO 106
   - AREA OF TRACT: 6.07 ACRES
   - LIMIT OF SUBMISSION: 6.07 ACRES
   - OPEN SPACE REQUIRED: 15 % of 6.07 ACRES = 0.91 ACRES
   - OPEN SPACE PROVIDED: 23.22 ACRES (PARCELS V, W & X) PER F–02–82
   - RIGHT OF WAY DEDICATION: NONE
   - PROPOSED USES FOR SITE AND STRUCTURES: NURSING HOME AND ASSISTED LIVING FACILITY
   - 4 TOTAL NUMBER OF UNITS PROPOSED: 91 NURSING HOME BEDS (37,350 SF) 100 ASSISTED LIVING UNITS WHICH EQUATES TO 25 NON–RESIDENTIAL UNITS (4 ASSISTED LIVING UNITS=1 NON–RESIDENTIAL UNIT). AREA OF ASSISTED LIVING COMPONENT=75,139 SF.
   - LIMIT OF DISTURBED AREA: 5.99 ACRES

3. ALL CONSTRUCTION SHALL BE IN ACCORDANCE WITH THE LATEST STANDARDS AND SPECIFICATIONS OF HOWARD COUNTY PLUS MSHA STANDARDS AND SPECIFICATIONS IF APPLICABLE.

4. THE CONTRACTOR SHALL NOTIFY THE DEPARTMENT OF PUBLIC WORKS/BUREAU OF ENGINEERING/CONSTRUCTION INSPECTION DIVISION AT (410) 313–1880 ATLEAST FIVE (5) WORKING DAYS PRIOR TO THE START OF WORK.

5. THE CONTRACTOR SHALL NOTIFY "MISS UTILITY" AT 1–800–257–7777 ATLEAST 48 HOURS PRIOR TO ANY EXCAVATION WORK BEING DONE.

6. CONTRACTOR TO VERIFY ELEVATIONS IN FIELD BEFORE BEGINNING ANY CONSTRUCTION.

7. TRAFFIC CONTROL DEVICES, MARKINGS AND SIGNING SHALL BE IN ACCORDANCE WITH THE LATEST EDITION OF THE MANUAL OF UNIFORM TRAFFIC CONTROL DEVICES (MUTCD). ALL STREET AND REGULATORY SIGNS SHALL BE IN PLACE PRIOR TO THE PLACEMENT OF ANY ASPHALT.

8. ALL PLAN DIMENSIONS ARE TO FACE OF CURB UNLESS OTHERWISE NOTED.

9. BRL DENOTES BUILDING RESTRICTION LINE.

10. THERE ARE NO FLOODPLAINS ON SITE. FLOODPLAIN STUDY IS ON FILE WITH THE COUNTY UNDER F–02–74, WHICH HAS BEEN APPROVED BY THE COUNTY.

11. THERE ARE NO WETLANDS ON SITE. COMPLETE WETLAND REPORT IS ON FILE WITH THE COUNTY UNDER PLAT ENTITLED OAKMONT AT TURF VALLEY (DPZ FILE NUMBER F–02–082 AND PLAT NUMBERS 18773–18775) WHICH HAS BEEN APPROVED BY THE COUNTY.

12. TOPOGRAPHIC INFORMATION IS BASED ON FIELD RUN SURVEY BY MILDENBERG,BOENDER AND ASSOCIATES, INC. ON OR ABOUT MARCH 2006. AND PER MASS GRADING PERFORMED UNDER SDP–07–085. VERTICAL DATUM IS NAD'83.

13. COORDINATES BASED ON NAD'83 MARYLAND COORDINATE SYSTEM AS PROJECTED BY HOWARD COUNTY GEODETIC CONTROL STATIONS NO: 16 E1 & 16 IA
    STA. No. 16 E1 N 593,250.960 EL. 463.981
    E 1,340,192.70
    STA. No. 16 IA N 589,509.366 EL. 463.085
    E 1,346,343.63

14. POD BOUNDARY INFORMATION IS BASED ON 2nd AMENDED FINAL DEVELOPMENT PLAN FOR TURF VALLEY, PGCC DISTRICT, MULTI–USE SUBDISTRICT.

15. PROPERTY IS LOCATED WITHIN THE METROPOLITAN DISTRICT PER COUNTY COUNCIL BILL NO.17–2007 EFFECTIVE JULY 10, 2007. PUBLIC SEWER IS AVAILABLE FROM THE WAVERLY SEWER INTERCEPTOR (#24–3447). PROJECT WILL BE SERVICED THROUGH #44–3480, SUBJECT TO APPROVAL OF WATER EXTENSION PLANS BY THE DEPARTMENT OF PUBLIC WORKS.

16. STORMWATER MANAGEMENT HAS BEEN PROVIDED IN ACCORDANCE WITH 2000 MDE STORMWATER DESIGN MANUAL AND HOWARD COUNTY DESIGN MANUAL VOL I. STORMWATER MANAGEMENT IS MANAGED BY AN UNDERGROUND (~~CON~~/S~~TO~~RM) EXTENDED DETENTION FACILITY TO PROVIDE CPv AND UNDERGROUND WATER QUALITY TREATMENT FACILITY (STORMVAULT) TO PROVIDE WQv & Rev FOR DRAINAGE AREA 1; AND AN UNDERGROUND WATER QUALITY TREATMENT FACILITY (STORMFILTER) TO PROVIDE WQv FOR DRAINAGE AREA 2. THE FACILITIES WILL BE PRIVATELY OWNED AND MAINTAINED. CPv IS NOT REQUIRED TO BE TREATED FOR DRAINAGE AREA #2, AS 1–YEAR PEAK DISCHANGE IS LESS THAN 2 cfs. ALL FACILITIES WILL BE PRIVATELY OWNED AND MAINTAINED.
    4 STORMWATER MANAGEMENT HAS BEEN PROVIDED FOR PROPOSED ADDITION USING 2 MICRO-BIORETENTION FACILITIES AND PERMEABLE PAVEMENT.

17. NO CEMETERIES OR HISTORIC STRUCTURES EXIST ON SITE.

18. THE ORIGINAL TRAFFIC STUDY WAS PREPARED BY THE TRAFFIC GROUP DATED 31/3/1986. AN UPDATED TRAFFIC STUDY WAS PREPARED BY THE TRAFFIC GROUP DATED 1/7/05 AND WAS APPROVED BY THE PLANNING BOARD ON 4/27/06. RESORT ROAD IN THIS AREA WILL BE BUILT UNDER F–02–74. SUPPLEMENTED APFO STUDY APPROVAL DATE 6/26/07.

19. THIS PROJECT IS EXEMPT FROM HOWARD COUNTY FOREST CONSERVATION REQUIREMENTS UNDER SECTION 16.1202(b)(iv) OF THE COUNTY CODE BECAUSE IT IS A PLANNED UNIT DEVELOPMENT WHICH HAS PRELIMINARY DEVELOPMENT PLAN APPROVAL AND 50% OR MORE OF THE LAND IS RECORDED AND SUBSTANTIALLY DEVELOPED BEFORE DECEMBER 31, 1992

20. BULK REGULATIONS:
    PERMITTED USES: ALL USES AS PER 2nd AMENDED FINAL DEVELOPMENT PLAN FOR TURF VALLEY PGCC DISTRICT, MULTI-USE SUBDISTRICT. PROPOSED USE: NURSING HOME AND ASSISTED LIVING FACILITY.
    PERMITTED SETBACKS:
    FROM ARTERIAL ROADS (MARRIOTTSVILLE ROAD)
    NON–RESIDENTIAL STRUCTURES –30 FEET
    PARKING – 25 FEET
    FROM COLLECTORS AND LOCAL STREETS (RESORT ROAD)
    NON–RESIDENTIAL STRUCTURES – 30 FEET FROM 60 FT. ROW
    20 FEET FROM 50 FT. ROW
    FROM NON–PGCC ADJACENT PROPERTIES
    FROM RESIDENTIAL DISTRICTS – 75 FEET
    FROM ALL OTHER DISTRICTS – 30 FEET
    FROM LOT LINES WITHIN PGCC MULTI- USE DISTRICT
    SINGLE FAMILY DETACHED (SIDE) – 7.5 FEET
    ZERO LOT LINE & ALL OTHER USES (SIDE, – 0 FEET
    A MINIMUM OF 10 FT. MUST BE PROVIDE BTW. STRUCTURES
    RESIDENTIAL (REAR) – 20 FEET

21. PARKING REQUIREMENTS AS PER ZONING SECTION 133.D(7)(f):
    1 SPACE PER 2 NURSING HOME BED UNITS; 163 UNITS/2=82 PARKING SPACES
    TOTAL PARKING REQUIREMENT = 82 P.S.
    HANDICAPPED ACCESSIBLE = 10% OF TOTAL PARKING SPACES =8 P.S.

22. PARKING PROVIDED:
    TOTAL HANDICAPPED ACCESSIBLE =14 P.S.
    HANDICAPPED WITH VAN ACCESSIBLE = 2 P.S.
    REGULAR PARKING = 119 P.S.
    TOTAL PARKING PROVIDED = 133 P.S.

23. SLOPES GREATER THAN 15% HAVE BEEN SHOWN ON–SITE. CONTIGUOUS STEEP SLOPES 25% AND MORE ARE LESS THAN 20,000 SF.

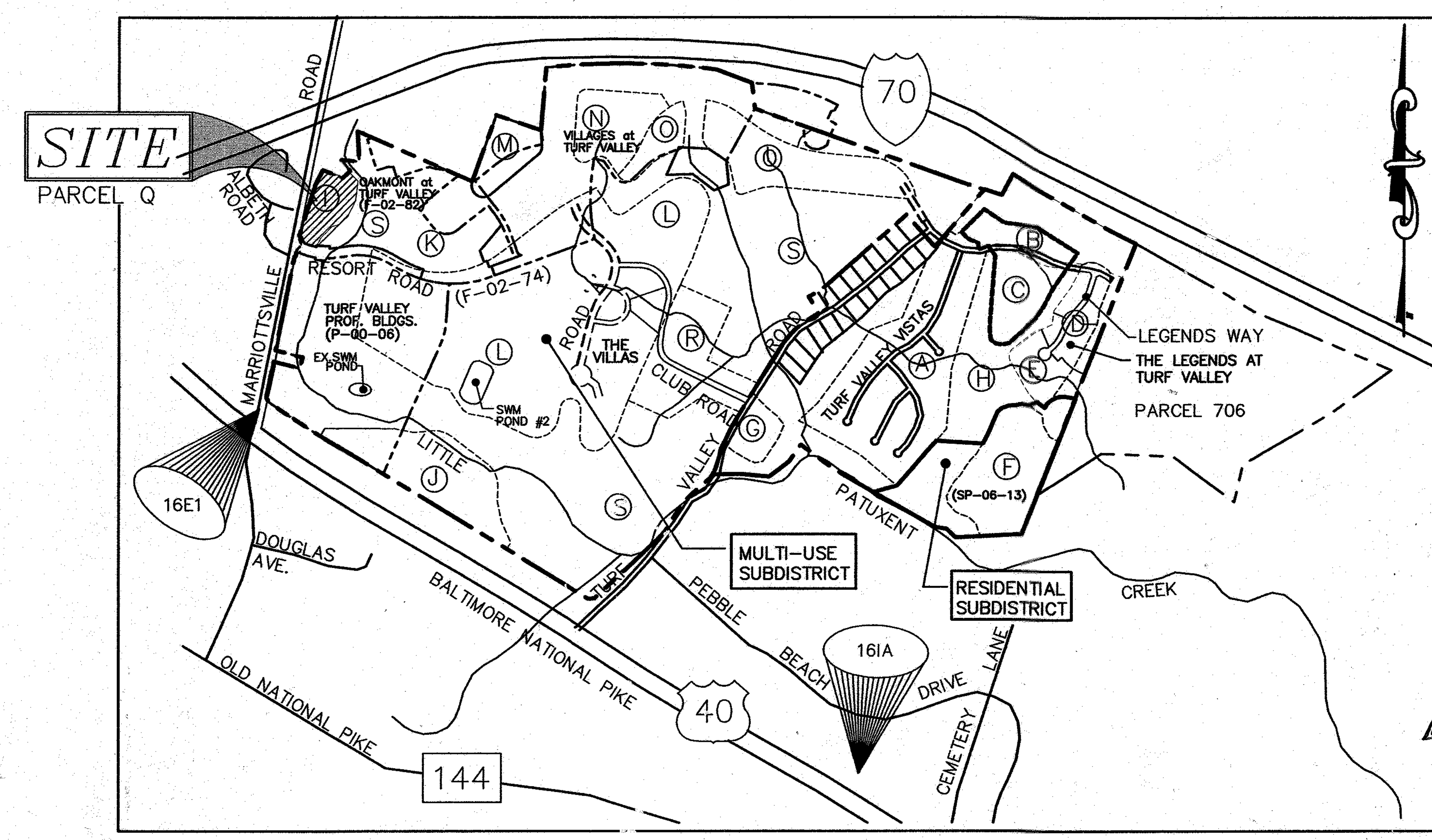

USES FOR TURF VALLEY PARCEL Q (POD I) SITE

AREA	PROJECTED LAND USE
POD I	ALL PERMITTED USES IN THE PGCC MULTI–USE SUBDISTRICT PER 2ND AMENDED FDP

LOCATION MAP
SCALE : 1" = 1000'
ADC MAP NO. 11, GRID A3

24. PER SECTION 16.116(c)(1) OF THE HOWARD COUNTY SUBDIVISION AND LAND DEVELOPMENT REGULATIONS, CLEARING, GRADING, OR CONSTRUCTION HAS BEEN DETERMINED TO BE NECESSARY AND IS PERMITTED WITHIN THE STREAM BUFFER FOR THE PURPOSE OF CONSTRUCTION OF ACCESS DRIVEWAY TO THE SITE.

25. THE TYPE OF STREET LIGHT TO BE USED ARE 250 WATT HPS VAPOR FIXTURE MOUNTED ON A 30–FOOT BRONZE FIBERGLASS POLE USING A 12–FOOT ARM.

26. LANDSCAPING HAS BEEN PROVIDED IN ACCORDANCE WITH THE PROVISIONS OF SECTION 16.124 OF THE HOWARD COUNTY CODE AND THE LANDSCAPE MANUAL. FINANCIAL SURETY FOR THE REQUIRED LANDSCAPING HAS BEEN POSTED AS PART OF THE DEVELOPER'S AGREEMENT FOR 34 SHADE TREES, 30 EVERGREEN TREES AND 114 SHRUBS IN THE AMOUNT OF $18,120.

27. THIS PROJECT IS SUBJECT TO THE AMENDED FIFTH EDITION SUBDIVISION AND LAND DEVELOPMENT REGULATIONS EFFECTIVE OCTOBER 2, 2003 AND TO THE ZONING REGULATIONS EFFECTIVE APRIL 13, 2004 PER SECTION 126(H)(1).

28. NO COVERAGE REQUIREMENT IS IMPOSED UPON NON–RESIDENTIAL USES, EXCEPT IN ACCORDANCE WITH A SITE DEVELOPMENT PLAN APPROVED BY THE HOWARD COUNTY PLANNING BOARD.

29. THE EXISTING WELL AND SEPTIC AREA SHALL BE PROPERLY ABANDONED AS PER STATE REGULATIONS PRIOR TO SDP APPROVAL.

30. STREET LIGHT PLACEMENT AND THE TYPE OF FIXTURE AND POLE SHALL BE IN ACCORDANCE WITH THE HOWARD COUNTY DESIGN MANUAL, VOLUME III (1993) AND AS MODIFIED BY "GUIDELINES FOR STREET LIGHT RESIDENTIAL DEVELOPMENTS" (JUNE 1993). A MINIMUM SPACING OF 20' SHALL BE MAINTAINED BETWEEN ANY STREETLIGHT AND ANY TREE.

31. ALL SIGN POSTS USED FOR TRAFFIC CONTROL SIGNS INSTALLED IN THE COUNTY RIGHT–OF–WAY SHALL BE MOUNTED ON A 2" GALVANIZED STEEL, PERFORATED, SQUARE TUBE POST (14 GAUGE) INSERTED INTO A 2–1/2" GALVANIZED STEEL, PERFORATED, SQUARE TUBE SLEEVE (12 GAUGE) –3' LONG. A GALVANIZED STEEL POLE CAP SHALL BE MOUNTED ON TOP OF EACH POST.

32. THE SUBJECT PROPERTY IS ZONED PGCC PER THE 2/2/04 COMPREHENSIVE ZONING PLAN AND PER THE "COMP LITE" ZONING REGULATION AMENDMENTS EFFECTIVE 7/28/06.

33. THE 65 dBA NOISE CONTOUR LINE DRAWN ON THIS DEVELOPMENT PLAN IS ADVISORY AS REQUIRED BY THE HOWARD COUNTY DESIGN MANUAL, CHAPTER 5, REVISED FEBRUARY, 1992 AND CANNOT BE CONSIDERED TO EXACTLY LOCATE THE 65 dBA NOISE EXPOSURE. THE 65 dBA NOISE LINE WAS ESTABLISHED BY HOWARD COUNTY TO ALERT DEVELOPERS, BUILDERS AND FUTURE RESIDENTS THAT AREAS BEYOND THIS THRESHOLD MAY EXCEED GENERALLY ACCEPTED NOISE LEVELS ESTABLISHED BY THE U.S. DEPARTMENT OF HOUSING AND URBAN DEVELOPMENT.

34. NO GRADING, REMOVAL OF VEGETATIVE COVER OR TREES, PAVING & NEW STRUCTURES SHALL BE PERMITTED WITHINTHE REQUIRED WETLANDS, STREAM OR THEIR BUFFERS, FOREST CONSERVATION EASEMENT AREAS AND 100–YEAR FLOODPLAIN.

35. THE CLEARANCE UNDER THE ENTRANCE CANOPY SHALL BE LESS THAN 13'–6" FOR FIRE DEPARTMENT ACCESS.

36. THE NOISE STUDY FOR THIS PROJECT WAS PREPARED BY POLYSONICS CORP. DATED JUNE 20,2007, AND WAS APPROVED ON SEPTEMBER 19,2007.

37. PRIOR TO GRADING PERMIT APPLICATION, THE PROJECT SHALL COMPLY WITH THE REQUIREMENTS OF HOWARD COUNTY COUNCIL BILL 60–2007.

38. INDIVIDUAL ASSISTED LIVING UNITS WILL NOT BE EQUIPPED WITH FULL KITCHEN FACILITIES.

39. ON SEPTEMBER 1, 2016, THE HOWARD COUNTY PLANNING BOARD APPROVED THE PETITIONER'S REQUEST TO ADJUST THE STRUCTURE SETBACK, REDUCING IT FROM 30 TO 14 FEET, TO ALLOW CONSTRUCTION OF A RETAINING WALL, SIDEWALK AND BUILDING ADDITION IN ACCORDANCE WITH SECTION 126.0.H.3 OF THE HOWARD COUNTY ZONING REGULATIONS.

4 TOTAL BUILDING AREA: 55,032 SF
SF AREA PER FLOOR:
BASEMENT – 13,671 SF
MED GAS – 348 SF
GROUND FLOOR – 55,032 SF
SECOND FLOOR – 22,813 SF
THIRD FLOOR – 22,799 SF
TOTAL SQUARE FOOTAGE – 114,663 SF

4 BUILDING ADDITION TABULATION

EAST WING ADDITION	6,639 SF (INCL. BASEMENT)
NORTHEAST WING ADDITION	3,280 SF
NORTH WING ADDITION	1,389 SF
DINING ROOM ADDITION	1,165 SF
TOTAL ADDITIONAL SQ.FT.	12,473 SF

APPROVED
PLANNING BOARD
OF HOWARD COUNTY
DATE 3/27/08

APPROVED: DEPARTMENT OF PLANNING AND ZONING	
Chief, Development Engineering Division	Date 6/25/08
Chief, Division of Land Development	Date 6/27/08
Director	Date 6/30/08

AS-BUILT CERTIFICATION

I hereby certify that the facility shown on this plan was constructed as shown on the "as-built" plans and meets the approved plans and specifications.

Signature
PE No. 8818
Date: 04/05/2010

Certify means to state or declare professional opinion based on site inspection and tests which are conducted during construction. The onsite inspection and test are those inspections and test deemed sufficient and appropriate by commonly accepted engineering standards. Certify does not mean or imply a guarantee by the engineer nor does an engineer's certification relieve any party from meeting requirements imposed by contract, employment, or other means, including meeting commonly accepted industry practice.

OPERATION, MAINTENANCE AND INSPECTION

Inspection of the pond(s) shown hereon shall be performed atleast annually in accordance with the checklist and requirements maintained within USDA, NRCS "Standards and Specifications for Ponds" (MD-378). The pond owner(s) and any heirs, successors, or assigns shall be responsible for the safety of the pond and the continued operation, surveillance, inspection, and maintenance thereof. The pond owner(s) shall promptly notify the Soil Conservation District of any unusual observations that may be indication of distress such as excessive seepage, turbid seepage, sliding or slumping.

OWNER

4 LORIEN AT TURF VALLEY, LLC
1205 YORK ROAD, PENTHOUSE
LUTHERVILLE, MARYLAND 21093
PHONE (410) 825–8400

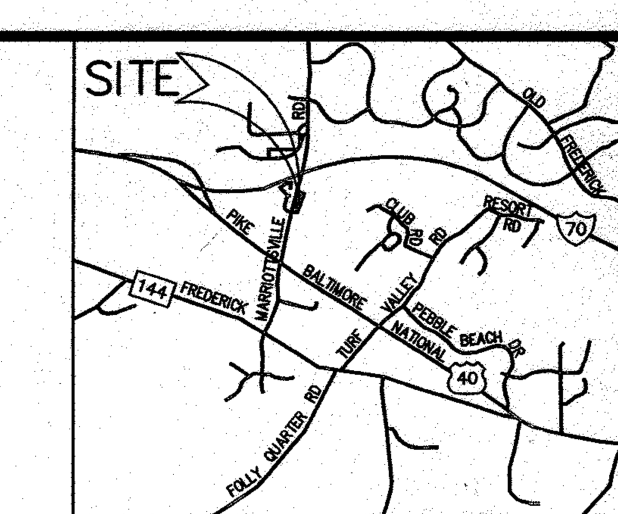

VICINITY MAP
SCALE :1" = 5000'

SHEET INDEX

SHEET NO.	TITLE
1 OF 36	COVER SHEET (4)
2 OF 36	SITE PLAN (4)
3 OF 36	GRADING & STORMWATER MANAGEMENT PLAN (4)
4 OF 36	SITE DETAILS
5 OF 36	RETAINING WALLS 1&2 – PLANS, SECTIONS & DETAILS
6 OF 36	RETAINING WALLS 1&2 – ELEVATIONS
11 OF 36	SEGMENTAL BLOCK RETAINING WALL PLAN
12 OF 36	BUILDING ELEVATIONS
14 OF 36	OUTDOOR LIGHTING PLAN
15 OF 36	SEWER PROFILES
16 OF 36	STORM DRAIN DRAINAGE AREA MAP
17 OF 36	STORM DRAIN PROFILES
18 OF 36	BORING LOGS
19 OF 36	SWM FACILITY #1– LOCATION PLAN & GENERAL NOTES
20 OF 36	STORM VAULT PLAN & SECTION
21 OF 36	STORM VAULT FOUNDATION PLAN & DETAILS
22 OF 36	STORM VAULT DETAILS
	~~CON/STORM PLAN, SECTION & DETAILS~~
23 OF 36	CMP STORAGE SECTION & DETAILS
	~~CON/STORM SECTIONS & DETAILS~~
24 OF 36	STORMVAULT INSTALLATION SPECIFICATIONS
25 OF 36	SWMF #1 BACKFILL PLAN
26 OF 36	SWM CONSTRUCTION DETAILS – I
27 OF 36	STORM FILTER LAYOUT PLAN & NOTES
28 OF 36	SWM ~~FILTER~~ CONSTRUCTION DETAILS – II
29 OF 36	MD–378 CONSTRUCTION SPECIFICATION & OPERATION & MAINTENANCE SCHEDULE – I
30 OF 36	OPERATION & MAINTENANCE SCHEDULE – II
33 OF 36	SEDIMENT AND EROSION CONTROL PLAN (4)
34 OF 36	SEDIMENT AND EROSION CONTROL NOTES & DETAILS (4)
35 OF 36	LANDSCAPE PLAN (4)
36 OF 36	LANDSCAPE NOTES & DETAILS (4)
7 OF 36	SEGMENTAL BLOCK RETAINING WALLS #1&2 PLAN & DETAILS (1)
8 OF 36	SEGMENTAL BLOCK RETAINING WALL ELEVATIONS
9 OF 36	RETAINING WALL PLAN & DETAILS (4)
10 OF 36	RETAINING WALL ELEVATION
13 OF 36	BUILDING ELEVATIONS
31 OF 36	SWM DETAILS & SECTION
32 OF 36	CONSTRUCTION DETAILS

HOWARD COUNTY GEODETIC SURVEY CONTROLS

COUNTY MONUMENT	NORTHING, EASTING	ELEVATION
16IA	N 589509.3660, E 1346343.6300	463.0850'
16E1	N 593250.9600, E 1340192.7000	463.9810'

ADDRESS CHART

LOT/PARCEL #	STREET ADDRESS
Q	11150 RESORT ROAD

PERMIT INFORMATION CHART

Subdivision Name			Section/Area		Lot/Parcel No.
OAKMONT at TURF VALLEY			N/A		POD I, Parcel Q [2nd–Amended FDP]
Plat # of L/F	Grid #	Zoning	Tax Map No.	Elect Distr	Census Tract
18773–18775	16 & 17	PGCC	16	Third	601101
Water Code			Sewer Code		
H–06			5992000		

1	REVISE RETAINING WALLS #1&2 TO BE SEGMENTAL BLOCK WALLS, MODIFY SWMF #2, REALIGN PRIVATE SEWER	07/18/08
2	REVISED SHEET INDEX, REPLACE CON/STORM W/CMP STORAGE	09/02/08
3	SWM AS-BUILT INFORMATION ADDED	03/01/10
4	ADDITION OF BUILDING, SWM FACILITIES, RETAINING WALL, SERVICE LANE	10/13/16

COVER SHEET

TURF VALLEY, LORIEN
NURSING HOME & ASSISTED LIVING FACILITY
OAKMONT AT TURF VALLEY
PARCEL Q
PLATS 18773 - 18775
TAX MAP 16 - P/O PARCEL 8- GRID 16 & 17;
POD I per S-86-13 (4th AMENDED)
THIRD ELECTION DISTRICT HOWARD COUNTY, MARYLAND

KCE ENGINEERING, INC.
EXECUTIVE CENTER
3300 NORTH RIDGE ROAD, SUITE 315
ELLICOTT CITY, MARYLAND 21043
PHONE (410) 203–9800 FAX (410) 203–9228

"Professional Certification. I hereby certify that these documents were prepared or approved by me, and that I am a duly licensed professional engineer under the laws of the State of Maryland, License NO. 8818, Expiration Date: 10/17/08."

DRAWN BY: MG
CHECKED BY: DVK
SCALE: AS SHOWN
DATE 04/30/2008

SHEET: 1 OF 36

SDP-07-084

CURVE TABLE					
NO.	ARC LENGTH	CHORD LENGTH	CHORD BEARING	RADIUS	DELTA
C1	125.84'	125.61'	N 74°03'14" W	610.00'	11°49'11"

PROPERTY LINE TABLE		
NO.	LENGTH	BEARING
L1	74.34'	S 42°06'44" E
L2	58.40'	S 46°20'11" E
L3	39.62'	S 11°12'36" W
L4	53.61'	S 07°27'29" E
L5	135.80'	S 12°13'13" W
L6	62.18'	S 23°40'13" W
L7	86.37'	S 33°48'39" W
L8	109.12'	S 48°26'32" W
L9	88.27'	S 71°24'49" W
L10	65.27'	S 45°07'07" W
L11	38.60'	S 25°41'33" W
L12	43.15'	S 54°25'44" W
L13	44.38'	S 21°31'21" W
L14	48.85'	S 29°05'01" W
L15	15.00'	S 10°02'11" W
L16	52.43'	N 33°33'29" W
L17	47.38'	N 33°30'48" W

COORDINATE TABLE		
NO.	NORTHING	EASTING
668	595704.5297	1340842.4238
669	595031.8285	1340601.5238

NO.	BY	DATE	REVISION
1	KCE	07/16/08	REVISE RETAINING WALLS #1 & #2 TO BE SEGMENTAL BLOCK WALLS, MODIFY SWMF # 2; REALIGN PRIVATE SEWER.
2	KCE	09/02/08	REVISED SWM FACILITY #1
3	KCE	03/01/10	SWM AS BUILT INFORMATION ADDED
4	KCE	10/13/16	ADDITION OF BUILDING, SWM FACILITY, RETAINING WALL, SERVICE LANE

APPROVED
PLANNING BOARD
OF HOWARD COUNTY
DATE 3/27/08

APPROVED: DEPARTMENT OF PLANNING AND ZONING	
Chief, Development Engineering Division	Date 6/25/08
Chief, Division of Land Development	Date 6/27/08
Director	Date 6/30/08

OWNER
LORIEN AT TURF VALLEY, LLC
1205 YORK ROAD, PENTHOUSE
LUTHERVILLE, MARYLAND 21093
PHONE (410) 825-8400

LEGEND

- SC — SIAMESE CONNECTION
- N — N — MITIGATED 65 dBA NOISE LINE
- EX. WETLANDS
- EX. WETLAND BUFFER
- EX. STREAM
- EX. STREAM BUFFER
- EX. 100-YEAR FLOODPLAIN
- EXISTING EASEMENTS

SITE PLAN

TURF VALLEY, LORIEN

NURSING HOME & ASSISTED LIVING FACILITY

OAKMONT AT TURF VALLEY
PARCEL Q
PLATS 18773 - 18775
TAX MAP 16 - P/O PARCEL 8- GRID 16 & 17;
POD I per S-86-13 (4th AMENDED)
THIRD ELECTION DISTRICT HOWARD COUNTY, MARYLAND

KCE ENGINEERING, INC.
EXECUTIVE CENTER
3300 NORTH RIDGE ROAD, SUITE 315
ELLICOTT CITY, MARYLAND 21043
PHONE (410) 203-9800 FAX (410) 203-9228

Professional Certification. I hereby certify that these documents were prepared or approved by me, and that I am a duly licensed professional engineer under the laws of the State of Maryland, License NO. 8818, Expiration Date: 10/17/08.

DRAWN BY: MG
CHECKED BY: DVK
SCALE: 1"=30'
DATE: 04/30/2008

SHEET: 2 OF 36

SDP-07-084

CURVE TABLE					
NO.	ARC LENGTH	CHORD LENGTH	CHORD BEARING	RADIUS	DELTA
C1	125.84'	125.61'	N 74°03'14" W	610.00'	11°49'11"

PROPERTY LINE TABLE		
NO.	LENGTH	BEARING
L1	74.34'	S 42°06'44" E
L2	58.40'	S 46°20'11" E
L3	39.62'	S 11°12'36" W
L4	53.61'	S 07°27'29" E
L5	135.80'	S 12°13'13" W
L6	62.18'	S 23°40'13" W
L7	86.37'	S 33°48'39" W
L8	109.12'	S 48°26'32" W
L9	88.27'	S 71°24'49" W
L10	65.27'	S 45°07'07" W
L11	38.60'	S 25°41'33" W
L12	43.15'	S 54°25'44" W
L13	44.38'	S 21°31'21" W
L14	48.85'	S 29°05'01" W
L15	15.00'	S 10°02'11" W
L16	52.43'	N 33°33'29" W
L17	47.38'	N 33°30'48" W

COORDINATE TABLE		
NO.	NORTHING	EASTING
668	595704.5297	1340842.4238
669	595031.8285	1340601.5238

4	KCI	10/4/16	ADDITION OF BUILDING, SWM FACILITIES, RETAINING WALL AND SERVICE LANE
3	KCE	3/1/10	SWM AS-BUILT INFORMATION ADDED
2	KCE	9/2/08	REVISED SWM FACILITY #1
1	KCE	7/16/08	REVISE RETAINING WALLS #1 & #2 TO BE SEGMENTAL BLOCK WALLS, MODIFY SWM #2, REALIGN PRIVATE SEWER

DESIGN SUMMARY, FACILITY #1 (D.A.#1)

FACILITY IDENTIFICATION:	CONSTORM UNDERGROUND BMP
TYPE OF FACILITY:	PRIVATE
DRAINAGE AREA:	4 ACS.
INVERT ELEVATION:	445.00
10-YR WSEL:	449.48
100-YR WSEL:	449.65
STORAGE VOL.:	0.38 AC.FT.
INFLOW RATE FOR 1-YR STORM:	4.43 cfs
OUTFLOW RATE FOR 1-YR STORM:	0.73 cfs
INFLOW RATE FOR 10-YR STORM:	11.41 cfs
OUTFLOW RATE FOR 10-YR STORM:	12.64 cfs
INFLOW RATE FOR 100-YR STORM:	17.33 cfs
OUTFLOW RATE FOR 100-YR STORM:	16.83 cfs
SPILLWAY TYPE, SIZE & MATERIAL:	24" RCP
EMERGENCY SPILLWAY:	NONE

APPROVED: DEPARTMENT OF PLANNING AND ZONING

Chief, Development Engineering Division — Date 11-28-16

Chief, Division of Land Development — Date 12-6-16

Director — Date 12-6-16

APPROVED
PLANNING BOARD
OF HOWARD COUNTY
DATE 3/22/2008
9/01/2016

SOIL LEGEND:

SOIL	TYPE	DESCRIPTION
EkB2	C	ELIOAK SILT LOAM, 3 TO 8% SLOPES, MODERATELY ERODED
EnB2	B	ELSINBORO LOAM, 8 TO 15% SLOPES, MODERATELY ERODED
GIC2	B	GLENELG LOAM, 8 TO 15% SLOPES, MODERATELY ERODED
CO	C	CODORUS SILT LOAM

HOWARD COUNTY SOIL MAP # 9

STORMWATER MANAGEMENT REQUIREMENTS SUMMARY TABLE AREA 1 (4 ACS)

	REQUIREMENT	VOLUME REQUIREMENT	VOLUME PROVIDED	NOTES
1	WATER QUALITY VOLUME WQv	0.21 AC.FT.	0.21 AC.FT.	PROVIDED WITHIN UNDERGROUND STORAGE FACILITY (STORM VAULT)
2	RECHARGE VOLUME Rev	0.04 AC.FT.	0.09 AC.FT.	PROVIDED IN STONE STORAGE UNDER UNDERGROUND FACILITY
3	CHANNEL PROTECTION VOLUME Cpv	0.30 AC.FT.	0.47 AC.FT.	PROVIDED WITHIN UNDERGROUND STORAGE FACILITY (CMP STORAGE)
4	OVERHEAD FLOOD PROTECTION $Q_{10}P$	-	-	NOT REQUIRED
5	EXTREME FLOOD VOLUME $Q_{100}P$	-	-	NOT REQUIRED

STORMWATER MANAGEMENT REQUIREMENTS SUMMARY TABLE AREA 2 (1 AC)

	REQUIREMENT	VOLUME REQUIREMENT	VOLUME PROVIDED	NOTES
1	WATER QUALITY VOLUME WQv	0.053 AC.FT.	0.053 AC.FT.	TREATMENT PROVIDED BY UNDERGROUND STORM FILTER STORAGE WITHIN UNDERGROUND CMP FACILITY
2	RECHARGE VOLUME Rev	0.011 AC.FT.	0.02 AC.FT.	INCLUDED IN WQv ABOVE
3	CHANNEL PROTECTION VOLUME Cpv	0.069AC.FT.	-	WAIVER REQUESTED
4	OVERHEAD FLOOD PROTECTION $Q_{10}P$	-	-	NOT REQUIRED
5	EXTREME FLOOD VOLUME $Q_{100}P$	-	-	NOT REQUIRED

LEGEND

- SC — SIAMESE CONNECTION
- 25% SLOPES
- 15% – 24.9% SLOPES
- MITIGATED 65 dBA NOISE LINE
- EX. WETLANDS
- EX. WETLAND BUFFER
- EX. STREAM
- EX. STREAM BUFFER
- EX. 100-YEAR FLOODPLAIN
- SOIL TYPES
- EXISTING EASEMENTS
- EX. WATER

OWNER
LORIEN AT TURF VALLEY, LLC
1205 YORK ROAD, PENTHOUSE
LUTHERVILLE, MARYLAND 21093
PHONE (410) 825-8400

GRADING & STORMWATER MANAGEMENT PLAN

REVISED SITE DEVELOPMENT PLAN
TURF VALLEY, LORIEN
NURSING HOME & ASSISTED LIVING FACILITY

OAKMONT AT TURF VALLEY
PARCEL Q
PLATS 18773 - 18775
TAX MAP 16 - P/O PARCEL 8- GRID 16 & 17;
POD I per S-86-13 (4th AMENDED)
THIRD ELECTION DISTRICT HOWARD COUNTY, MARYLAND

KCI TECHNOLOGIES
ENGINEERS
PLANNERS
SCIENTISTS
CONSTRUCTION MANAGERS
3300 North Ridge Road
Suite 370
Ellicott City, MD 21043
Phone (410)203-0800
Fax (410)203-0228
www.kci.com

Professional Certification. I hereby certify that these documents were prepared or approved by me, and that I am a duly licensed professional engineer under the laws of the State of Maryland, License No. 8818, Expiration Date: 10/17/18.

STATE OF MARYLAND — DAVID V. KITCHEN — NO. 8818 — REGISTERED PROFESSIONAL ENGINEER
10/26/16

DRAWN BY: SK
CHECKED BY: DVK
SCALE: 1"=30'
DATE: 10/4/2016

SHEET: 3 OF 36

SDP-07-084

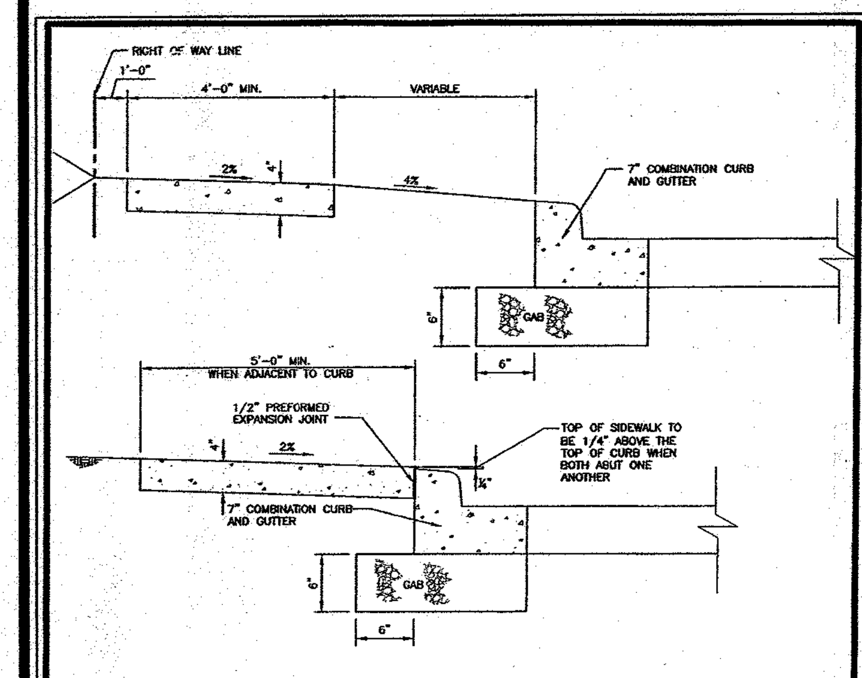

NOTES:

1. SIDEWALK TO BE SCRIBED IN 5'-0" MAXIMUM SQUARES.
2. EXPANSION JOINTS ACROSS THE SIDEWALK NOT TO BE MORE THAN 15' APART.
3. 1/2" PREFORMED EXPANSION MATERIAL IN EXPANSION JOINTS TO BE KEPT 1/4" BELOW SURFACE OF SIDEWALK.
4. CONCRETE TO BE MIX NO.3.
5. WHEN SIDEWALK ABUTS CURB, SIDEWALK SHALL BE 1/4" ABOVE CURB WITH 1/2" PREFORMED EXPANSION JOINT BETWEEN SIDEWALK AND CURB.
6. ON LONGITUDINAL SIDEWALK GRADES OF 5% OR GREATER, A CONCRETE HEADER, 6" THICK AND 6" DEEP BELOW THE NORMAL 4" SIDEWALK THICKNESS SHALL BE CONSTRUCTED FOR THE FULL WIDTH OF THE SIDEWALK AT INTERVALS OF 48 FEET. THE HEADERS SHALL BE PLACED AT THE EXPANSION JOINT LOCATIONS AND SHALL BE MONOLITHIC WITH THE SIDEWALK.
7. SIDEWALK WIDTH ADJACENT TO CURB SHALL BE 5'-0" MINIMUM EXCEPT SIDEWALK ADJACENT TO CURB IN CUL-DE-SAC BULBS MAY BE 4'-0" WIDE.
8. SIDEWALK LOCATED 2' OR MORE FROM CURB MAY BE 4'-0" IN WIDTH WITH A 5'x5' PAVED SECTION PLACED 200' APART.
9. 4'-0" SIDEWALK REQUIRES A PASSING AREA (SEE DETAIL R-4.01).

Revised / Revised 5/7/2007 / Approved	Howard County, Maryland Department of Public Works — Approved: Chief, Bureau of Engineering	Concrete Sidewalk	Detail R-3.05

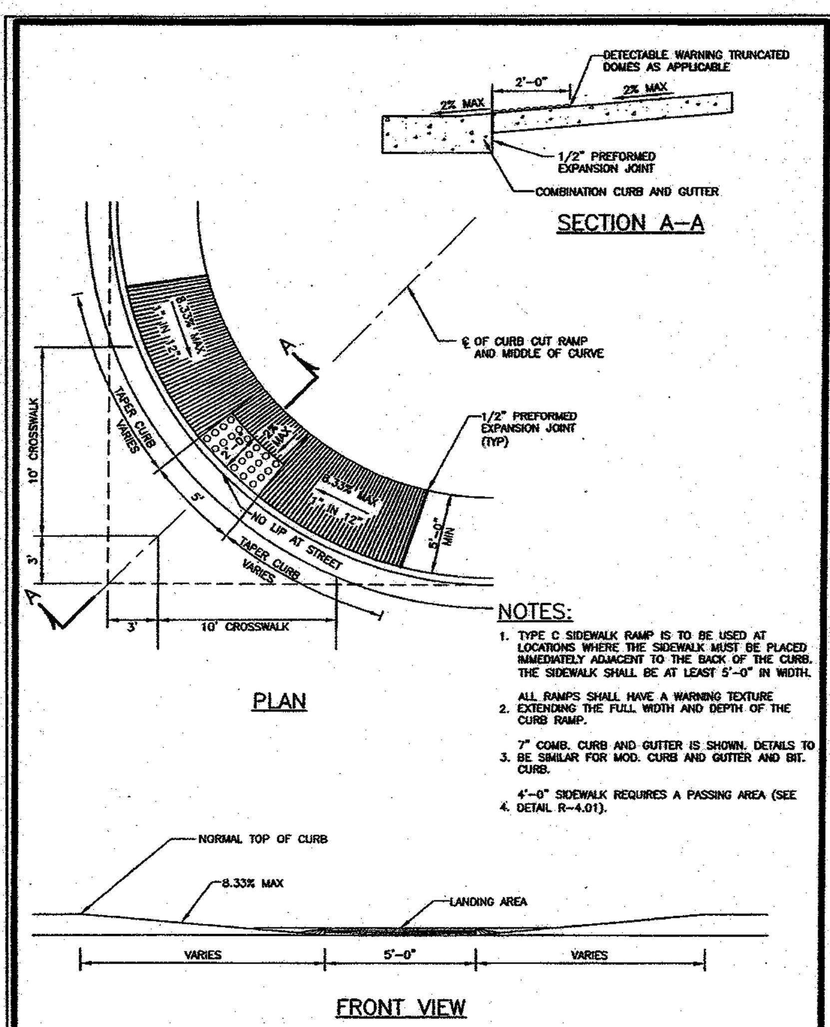

NOTES:

1. TYPE C SIDEWALK RAMP IS TO BE USED AT LOCATIONS WHERE THE SIDEWALK MUST BE PLACED IMMEDIATELY ADJACENT TO THE BACK OF THE CURB. THE SIDEWALK SHALL BE AT LEAST 5'-0" IN WIDTH.
2. ALL RAMPS SHALL HAVE A WARNING TEXTURE EXTENDING THE FULL WIDTH AND DEPTH OF THE CURB RAMP.
3. 7" COMB. CURB AND GUTTER IS SHOWN. DETAILS TO BE SIMILAR FOR MOD. CURB AND GUTTER AND BIT. CURB.
4. 4'-0" SIDEWALK REQUIRES A PASSING AREA (SEE DETAIL R-4.01).

Revised / Revised 5/7/2007 / Approved	Howard County, Maryland Department of Public Works — Approved: Chief, Bureau of Engineering	SIDEWALK RAMP Type C	Detail R-4.04

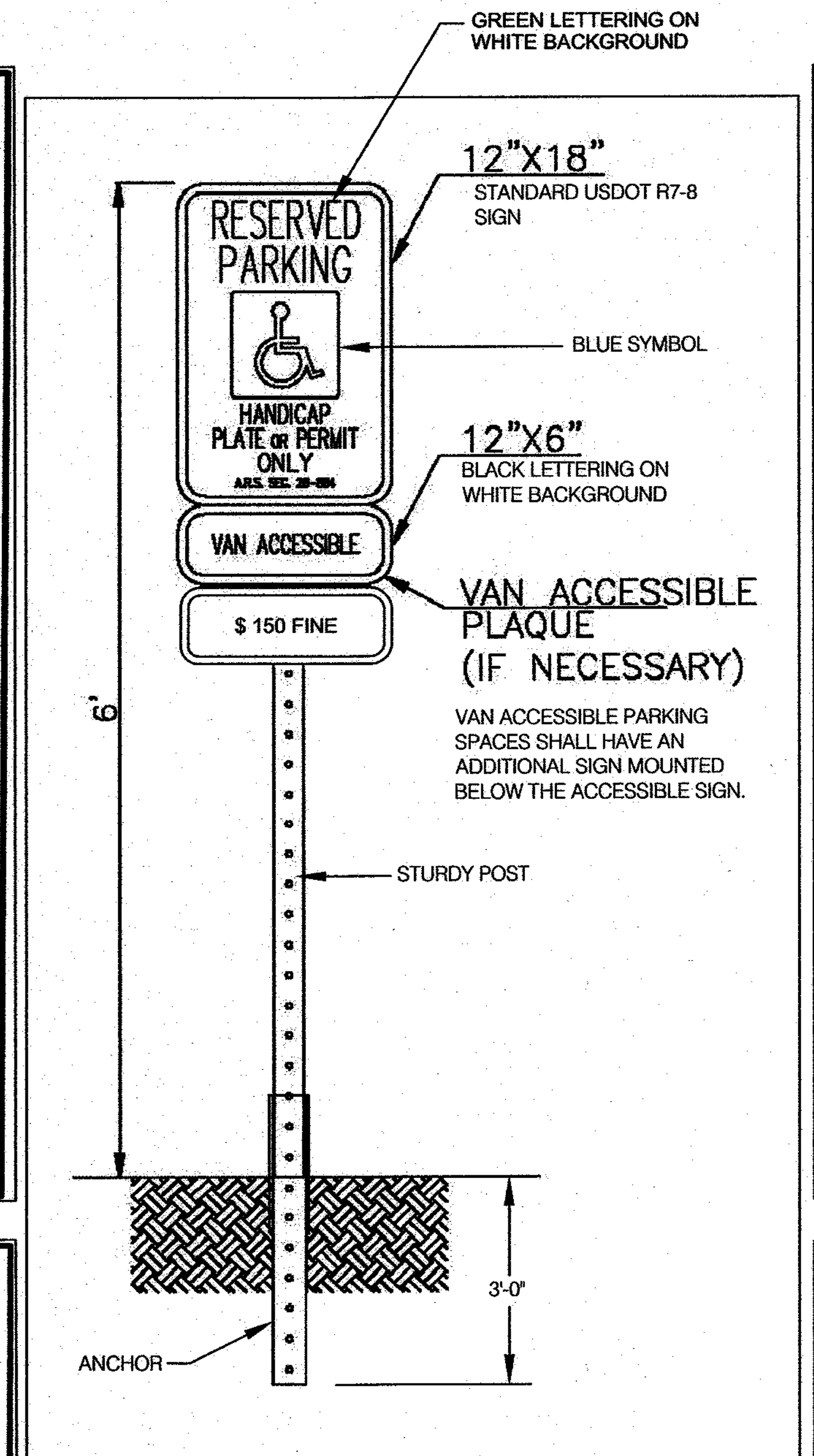

ACCESSIBLE PARKING SIGN DETAIL

SCALE: NTS

NOTE:

A U.S. DEPARTMENT OF TRANSPORTATION R7-8 (RESERVED PARKING) AND SUPPLEMENTAL SIGNS AS NOTED ABOVE MUST BE MOUNTED ON A PERMANENT POST NO LOWER THAN FOUR FEET FROM THE PAVEMENT. THE POST MUST BE MOUNTED IN THE CENTER OF THE 8 FOOT WIDE ACCESSIBLE PARKING SPACE, NO MORE THAN 5 FEET FROM THE FRONT OF THE PARKING SPACE.

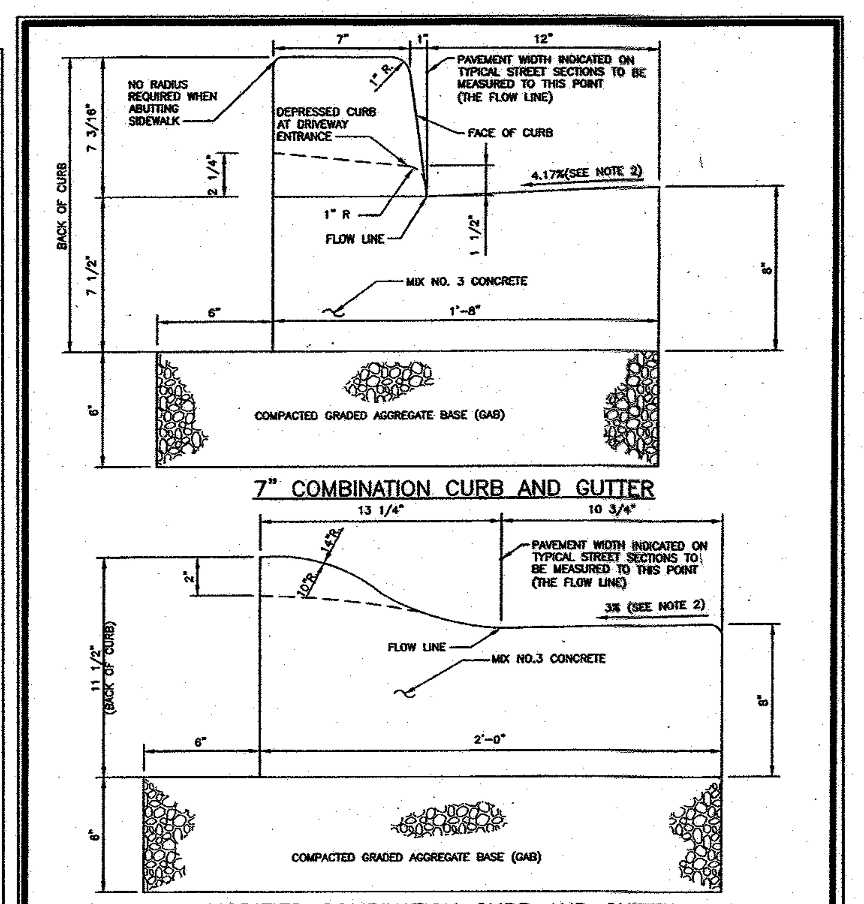

NOTE:

1. A REVERSE GUTTER PAN SHALL HAVE A GUTTER SLOPE OF 4.17% AWAY FROM THE FLOW LINE, AND SHALL NOT BE USED WHERE THIS DRAINAGE CREATES A HAZARDOUS CONDITION.
2. GUTTER PAN AT THE MEDIAN EDGE OF INTERMEDIATE ARTERIALS OR THE HIGH SIDE OF SUPERELEVATED SECTIONS SHALL BE SLOPED AT THE SAME RATE AND IN THE SAME DIRECTION AS THE PAVEMENT. MATCH PAVEMENT CROSS SLOPE WHEN CURB IS LOCATED ON THE LOW SIDE OF SUPERELEVATED SECTION AND THE RATE OF SUPERELEVATION IS GREATER THAN 3% FOR MODIFIED CURB & GUTTER.
3. A MINIMUM OF TWO (2) FEET OF COMPACTED STABILIZED EARTH, OR EQUIVALENT, SHALL SUPPORT THE ENTIRE BACK OF CURB.
4. POSITIVE DRAINAGE SHALL BE PROVIDED BOTH BEHIND THE CURB AND ALONG THE GUTTER AND FLOW LINE.

Revised / Revised 5/7/2007 / Approved	Howard County, Maryland Department of Public Works — Approved: Chief, Bureau of Engineering	CURB AND GUTTER 7" & Modified	Detail R-3.01

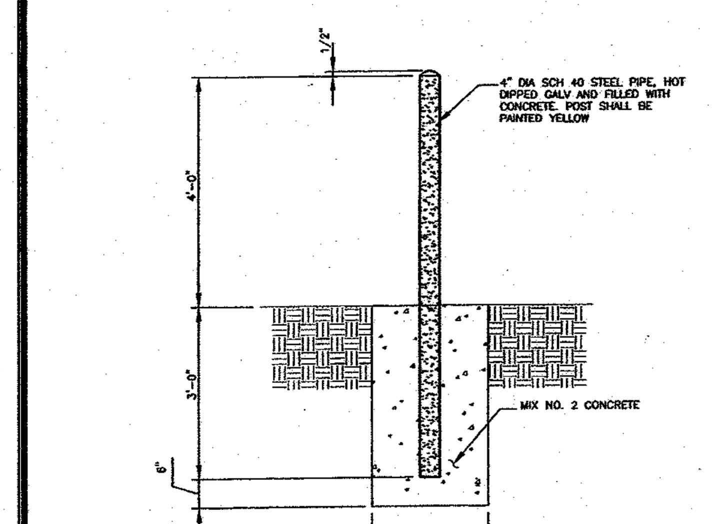

Revised / Revised 5/7/2007 / Approved	Howard County, Maryland Department of Public Works — Approved: Chief, Bureau of Engineering	Metal Bollard	Detail G-7.42

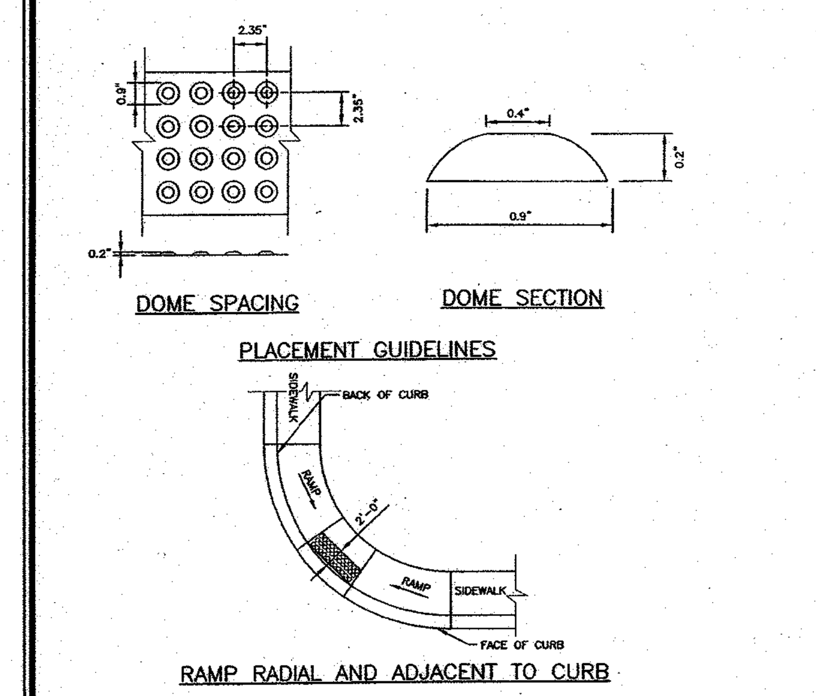

NOTES:

1. THE DETECTABLE WARNING SURFACE SHALL BE LOCATED SO THAT THE EDGE NEAREST THE CURB LINE IS 6 TO 8 INCHES FROM THE FACE OF THE CURB.
2. FOR SKEWED APPLICATIONS DETECTABLE WARNING SHALL BE PLACED SUCH THAT THE DOMES CLOSEST TO THE BACK OF THE CURB ARE NO LESS THAN 0.5" AND NO MORE 3.0" FROM THE BACK OF THE CURB. TRUNCATED DOME SURFACES SHALL BE FABRICATED TO PROVIDE FULL DOMES ONLY.

Revised / Revised 5/7/2007 / Approved	Howard County, Maryland Department of Public Works — Approved: Chief, Bureau of Engineering	SIDEWALK RAMP Detectable Warning Truncated Domes	Detail R-4.07

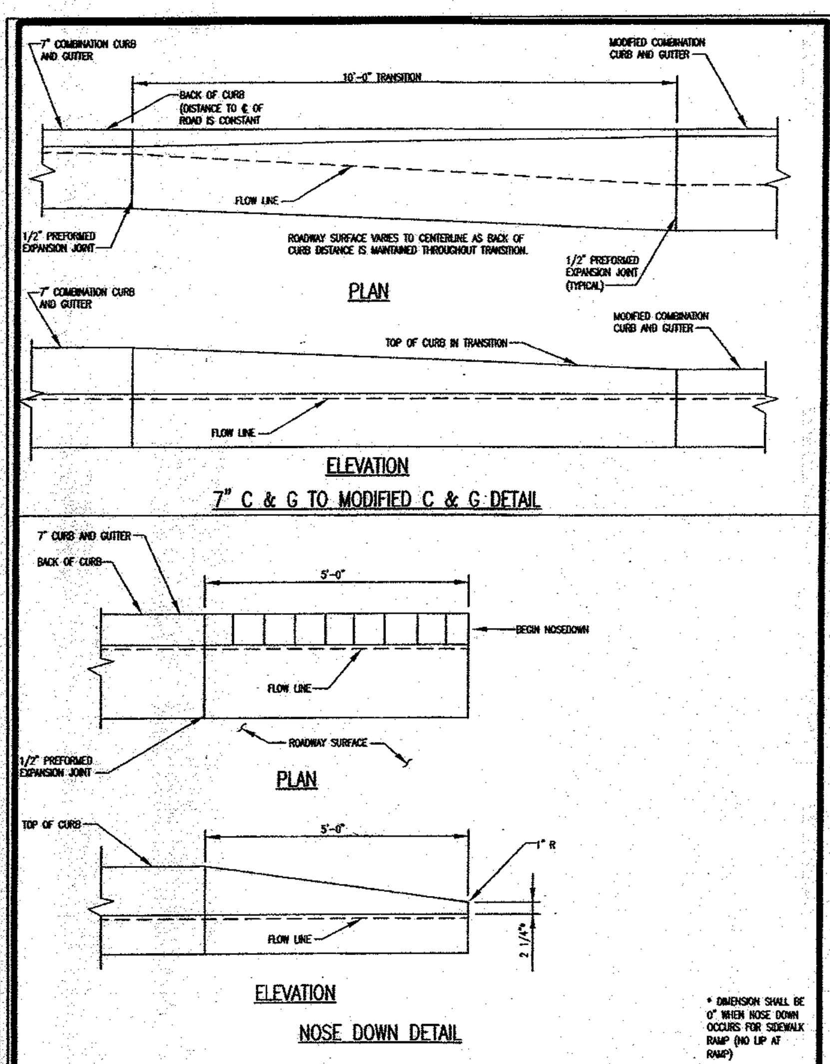

Revised / Revised 5/7/2007 / Approved	Howard County, Maryland Department of Public Works — Approved: Chief, Bureau of Engineering	CURB AND GUTTER 7" Transition to Modified & Nose Down	Detail R-3.02

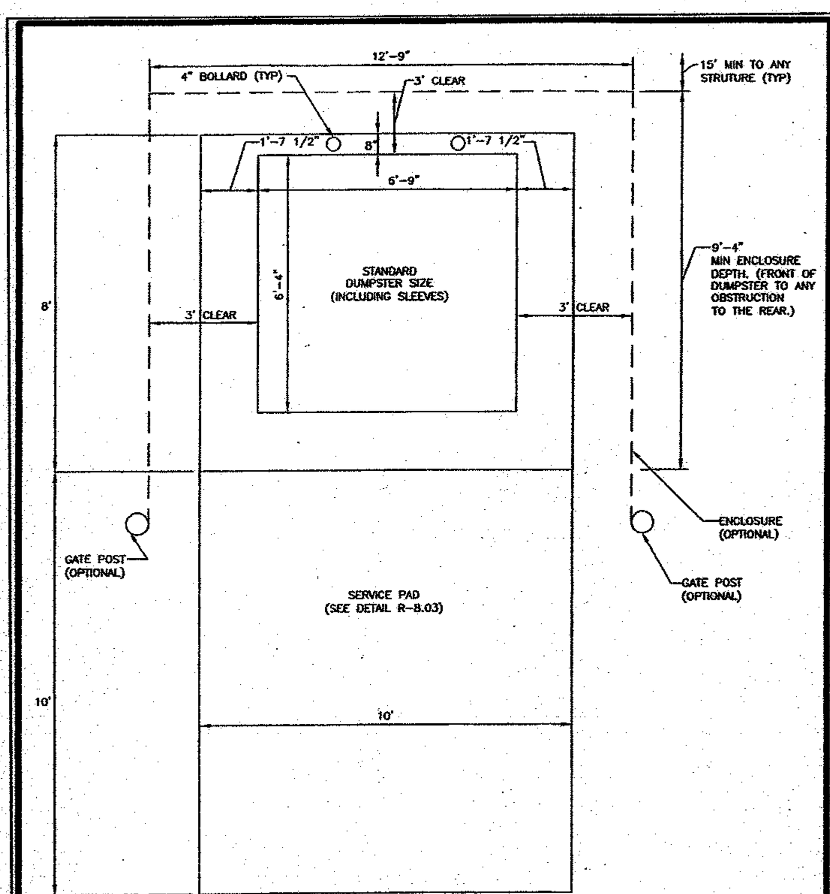

NOTES:

1. ENCLOSURE GATES ARE NOT RECOMMENDED.
2. IF ENCLOSURE GATES ARE INSTALLED, MINIMUM OPENING OF 12'-9" MUST BE MAINTAINED WHEN GATES ARE SECURED OPEN.
3. A MINIMUM OF 15' CLEAR SPACE SHALL BE PROVIDED FROM THE ENCLOSURE TO ANY STRUCTURE.

Revised / Revised 5/7/2007 / Approved	Howard County, Maryland Department of Public Works — Approved: Chief, Bureau of Engineering	SOLID WASTE Single Container Enclosure	Detail R-8.04

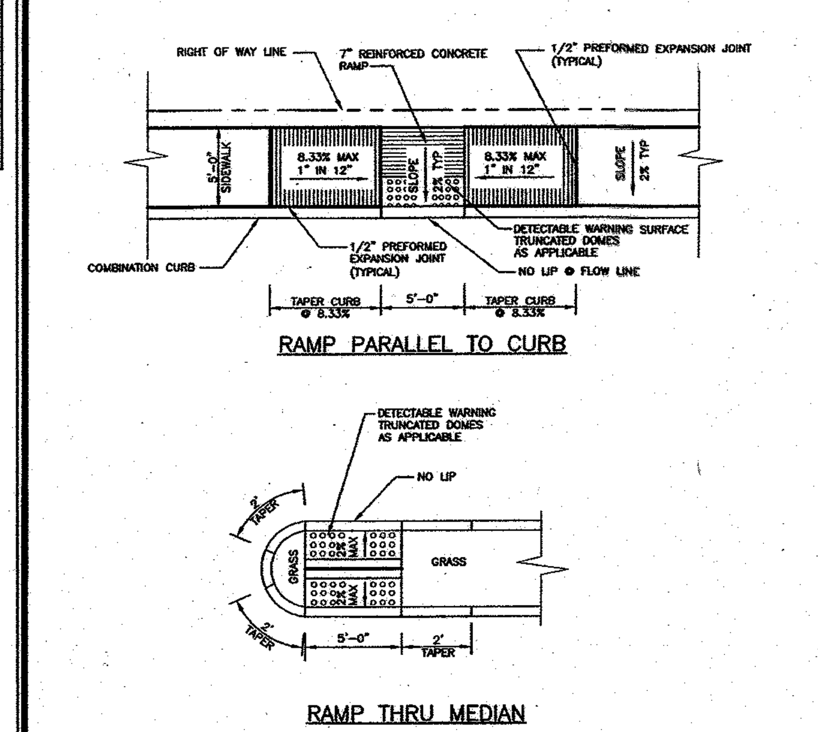

NOTES:

1. ALL RAMPS SHALL HAVE DETECTABLE WARNING SURFACES. SEE DETAIL R-4.07.
2. GRASS AREA ADJACENT TO SIDEWALK MUST BE SLOPED TO MEET RAMP.

Revised / Revised 5/7/2007 / Approved	Howard County, Maryland Department of Public Works — Approved: Chief, Bureau of Engineering	SIDEWALK RAMP Layout & Grading Parallel to Curb & Thru Median	Detail R-4.06

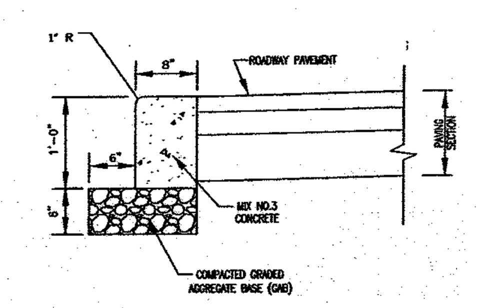

Revised / Revised 5/7/2007 / Approved	Howard County, Maryland Department of Public Works — Approved: Chief, Bureau of Engineering	Curb Flush	Detail R-3.07

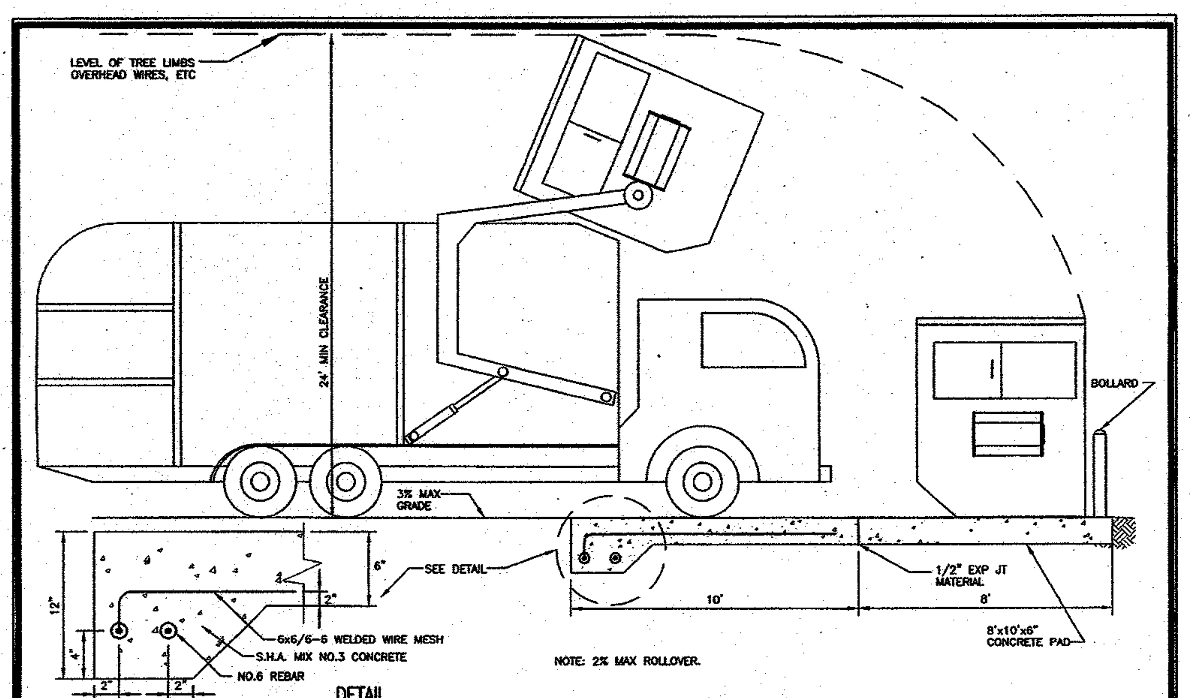

Revised / Revised 5/7/2007 / Approved	Howard County, Maryland Department of Public Works — Approved: Chief, Bureau of Engineering	SOLID WASTE Service Pad	Detail R-8.03

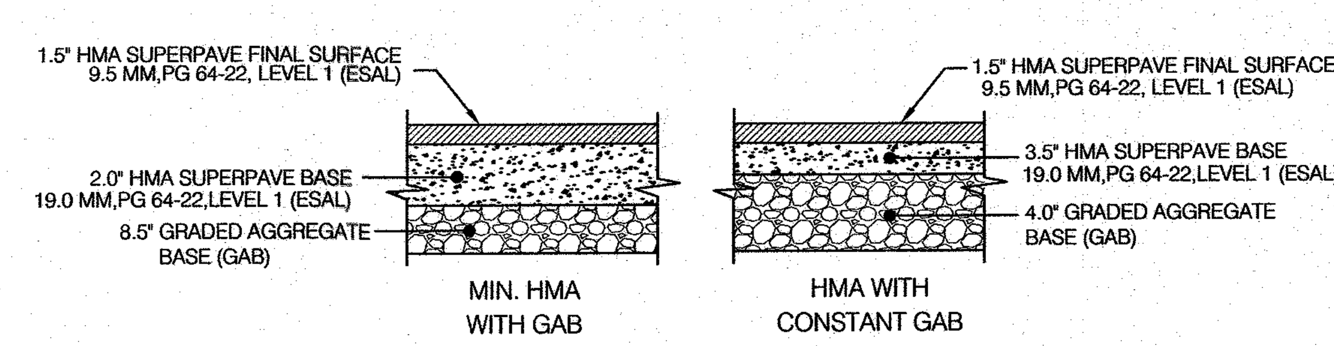

PAVING SECTION P-1

N.T.S

(REF. R-2.01)

ROAD CLASSIFICATION : PARKING BAYS
PARKING DRIVE AISLES

CALIFORNIA BEARING RATIO (CBR): 3

APPROVED
PLANNING BOARD
OF HOWARD COUNTY
DATE 3/27/08

APPROVED: DEPARTMENT OF PLANNING AND ZONING

Chief, Development Engineering Division — Date 6/25/08

Chief, Division of Land Development — Date 6/27/08

Director — Date 6/30/08

OWNER
MANGIONE ENTERPRISES OF TURF VALLEY LIMITED PARTNERSHIP
1205 YORK ROAD, PENTHOUSE
LUTHERVILLE, MARYLAND 21093
PHONE (410) 825-8400

NO	REVISION	DATE

SITE DETAILS

TURF VALLEY, LORIEN
NURSING HOME & ASSISTED LIVING FACILITY

OAKMONT AT TURF VALLEY
PARCEL Q
PLATS 18773 - 18775
TAX MAP 16 - P/O PARCEL 8- GRID 16 & 17;
POD I per S-86-13 (4th AMENDED)
THIRD ELECTION DISTRICT HOWARD COUNTY, MARYLAND

KCE ENGINEERING, INC.
EXECUTIVE CENTER
3300 NORTH RIDGE ROAD, SUITE 315
ELLICOTT CITY, MARYLAND 21043
PHONE (410) 203-9800 FAX (410) 203-9228

"Professional Certification. I hereby certify that these documents were prepared or approved by me, and that I am a duly licensed professional engineer under the laws of the State of Maryland, License NO. 8818, Expiration Date: 10/17/08."

STATE OF MARYLAND NO. 8818 REGISTERED PROFESSIONAL ENGINEER — 4/24/08

DRAWN BY: MG
CHECKED BY: DVK
SCALE: AS SHOWN
DATE: 04/30/2008

SHEET: 4 OF 36

SDP-07-084

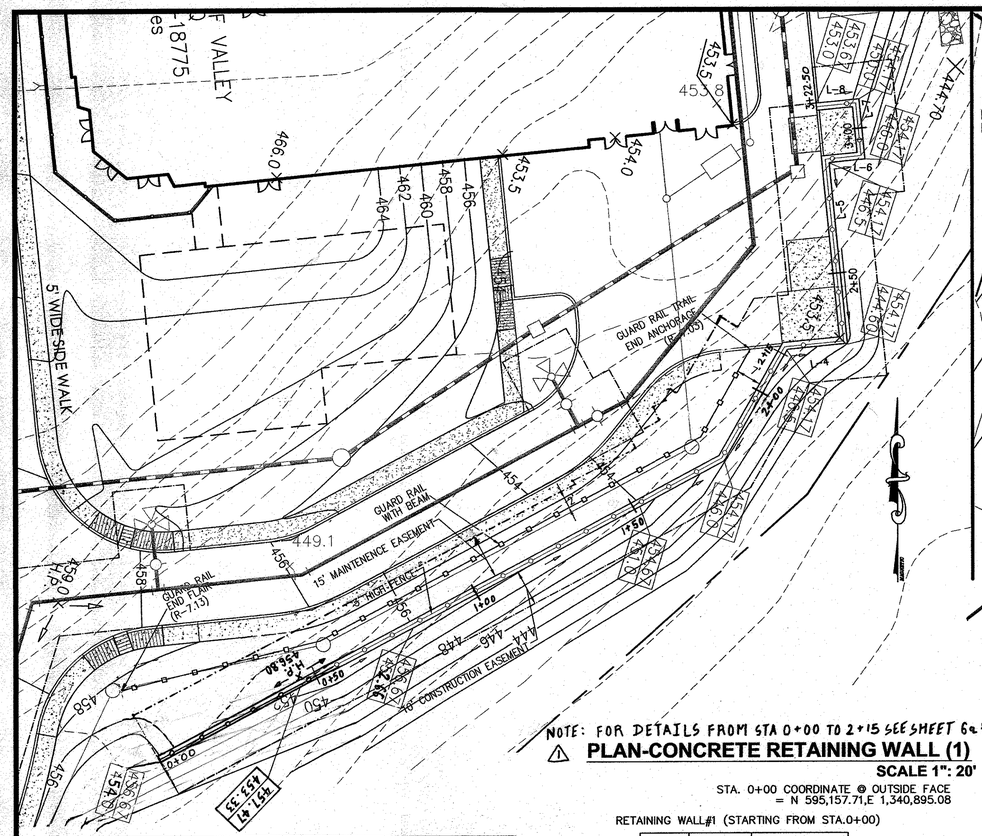

NOTE: ALL COORDINATES, DIMENSIONS AND STATIONING ARE GIVEN FOR OUTSIDE FACE OF RETAINING WALL.

NOTE: FOR DETAILS FROM STA 0+00 TO 2+15 SEE SHEET 6a & 6b

⚠ PLAN-CONCRETE RETAINING WALL (1)

SCALE 1": 20'

STA. 0+00 COORDINATE @ OUTSIDE FACE = N 595,157.71,E 1,340,895.08

RETAINING WALL#1 (STARTING FROM STA.0+00)

LINE	BEARING	DISTANCE
L-1	180.44'	N61°55'03"E
L-2	33.39'	N 28°22'16" E
L-4	16.96'	N 84°22'16" E
L-5	50.62'	N 05°37'44" W
L-6	10.00'	N 84°22'16" E
L-7	16.75'	N 05°37'44" W
L-8	12.00'	S 84°22'16" W

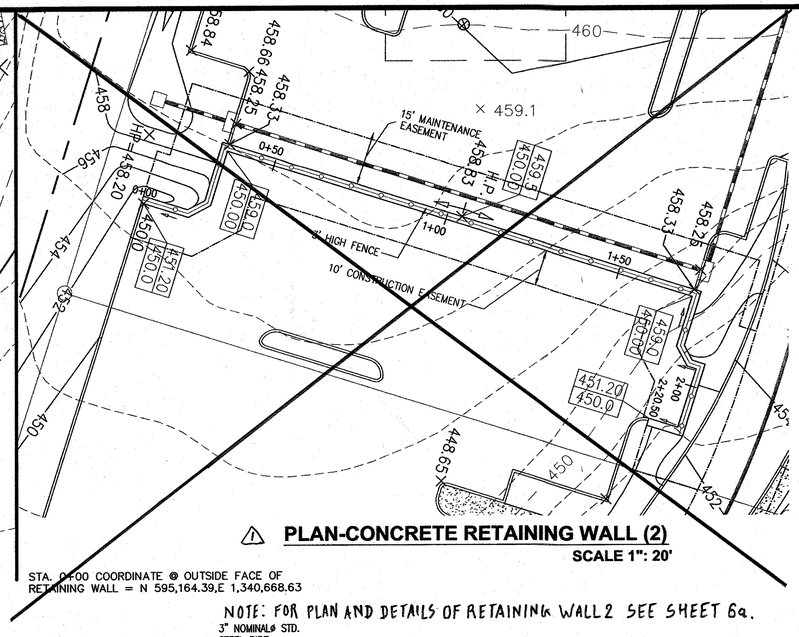

STA. 0+00 COORDINATE @ OUTSIDE FACE OF RETAINING WALL = N 595,164.39,E 1,340,668.63

NOTE: FOR PLAN AND DETAILS OF RETAINING WALL 2 SEE SHEET 6a.

⚠ PLAN-CONCRETE RETAINING WALL (2)

SCALE 1": 20'

RETAINING WALL#2 (STARTING FROM STA.0+00)

LINE	BEARING	DISTANCE
L-1	13.67'	N 72°30'55" E
L-2	7.07'	N 62°29'05" E
L-3	15.77'	N 17°29'05" E
L-4	135.00'	S 72°30'55" E
L-5	14.50'	S 17°29'05" W
L-6	6.36'	S 27°30'55" E
L-7	2.59'	S 72°30'55" E
L-8	17.11'	N 17°29'05" W
L-9	8.42'	N 72°30'55" W

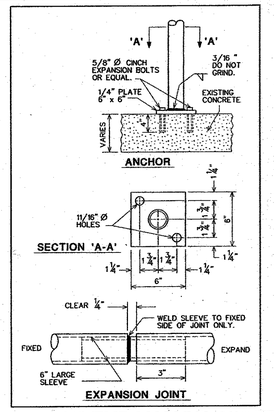

FENCE EXPANSION JOINT

NTS

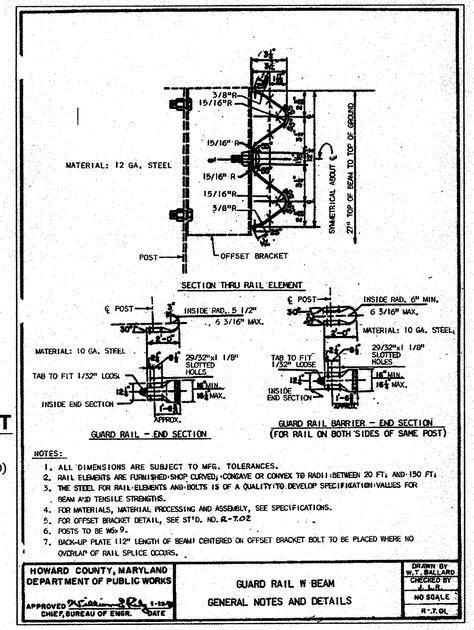

NOTES:

1. ALL DIMENSIONS ARE SUBJECT TO MFG. TOLERANCES.
2. RAIL ELEMENTS ARE FURNISHED SHOP CURVED, CONCAVE OR CONVEX TO RADII BETWEEN 20 FT. AND 150 FT.
3. THE STEEL FOR RAIL ELEMENTS AND BOLTS IS OF A QUALITY TO DEVELOP SPECIFICATION VALUES FOR BEAM AND TENSILE STRENGTHS.
4. FOR MATERIALS, MATERIAL PROCESSING AND ASSEMBLY, SEE SPECIFICATIONS.
5. FOR OFFSET BRACKET DETAIL, SEE ST'D. NO. R-7.02
6. POSTS TO BE W6x9.
7. BACK-UP PLATE 1'2" LENGTH OF BEAM CENTERED ON OFFSET BRACKET BOLT TO BE PLACED WHERE NO OVERLAP OF RAIL SPLICE OCCURS.

HOWARD COUNTY, MARYLAND DEPARTMENT OF PUBLIC WORKS	GUARD RAIL W BEAM GENERAL NOTES AND DETAILS	DRAWN BY W.T. BALLARD CHECKED BY J.L.R. NO SCALE R-7.01
APPROVED: CHIEF, BUREAU OF ENGR. DATE 1-15-08		

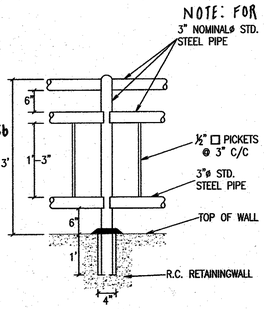

FENCE FOOTING

NTS

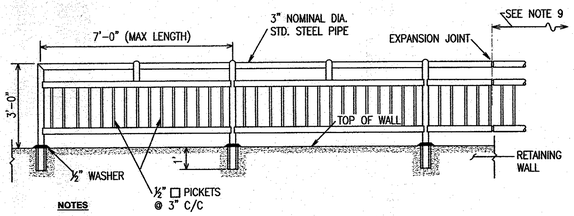

NOTES

1. Fence is designed for a concentrated loading of 200 lbs applied horzontally at any point.
2. Unless otherwise noted, painted railing shall be furnished for the fence.
3. Fence railings and posts to be painted shall conform to ASTM designation A-36.
4. Fence railings and posts to be galvanized shall conform to ASTM designation A-441. Galvanized railings shall be hot-dip galvanized after fabrication.
5. Fence railings shall be welded, with all joints ground smooth and free of burrs.
6. Fence railing posts shall be set in 8" deep metal sleeves which shall be filled with hot poured lead or hot poured sulphur or an equivalent epoxy compound.
7. The fence railing shall be paid for at the unit price bid per linear foot. Measured horizontally, complete in place; or its cost shall be included in the lump sum price bid for other items, complete in place.
8. Construction on private property shall conform to latest edition, BOCA National Building Codes.
9. Within each 20 linear feet of fence railings, provide for 1/4" expansion.
10. The gap between two consecutive vertical bars should be 3".

FENCE DETAIL

NTS

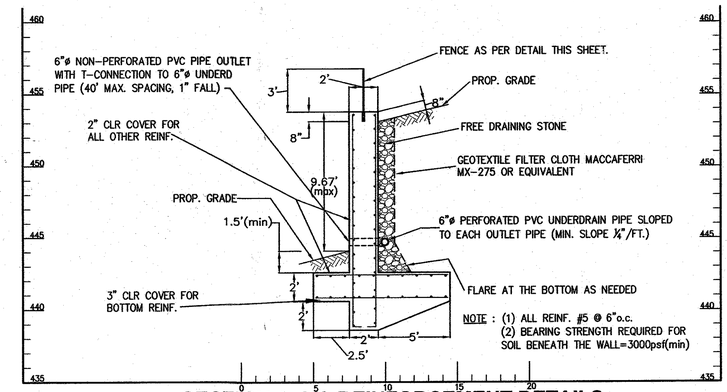

SECTION A-A & REINFORCEMENT DETAILS

RETAINING WALLS (1) (STA 2+15 TO STA 3+22)

SCALE: 1" = 5'

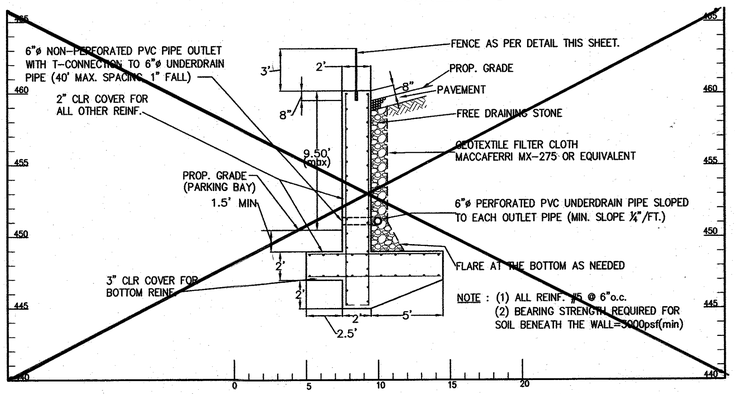

⚠ SECTION B-B & REINFORCEMENT DETAILS

RETAINING WALLS (2)

SCALE: 1" = 5'

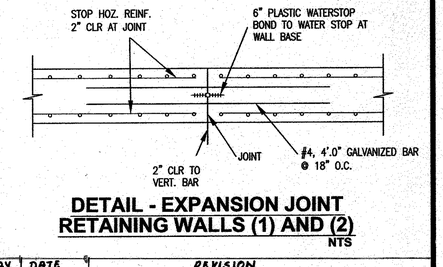

DETAIL - EXPANSION JOINT RETAINING WALLS (1) AND (2)

NTS

NO.	BY	DATE	REVISION
⚠	KCE	07/16/08	REVISED RETAINING WALL 1&2.

OWNER

MANGIONE ENTERPRISES OF TURF VALLEY LIMITED PARTNERSHIP
1205 YORK ROAD
LUTHERVILLE, MARYLAND 21093
PHONE: (410) 825-8400

APPROVED
PLANNING BOARD OF HOWARD COUNTY
DATE 3/27/08

APPROVED: DEPARTMENT OF PLANNING AND ZONING

Chief, Development Engineering Division — Date 6/20/08
Chief, Division of Land Development — Date 6/23/08
Director — Date 6/20/08

RETAINING WALLS 1&2 - PLANS, SECTIONS & DETAILS

TURF VALLEY, LORIEN

NURSING HOME & ASSISTED LIVING FACILITY

OAKMONT AT TURF VALLEY
PARCEL Q
PLATS 18773 - 18775
TAX MAP 16 - P/O PARCEL 8- GRID 16 & 17;
POD I per S-86-13 (4th AMENDED)
THIRD ELECTION DISTRICT HOWARD COUNTY, MARYLAND

KCE ENGINEERING, INC.
EXECUTIVE CENTER
3300 NORTH RIDGE ROAD, SUITE 315
ELLICOTT CITY, MARYLAND 21043
PHONE (410) 203-9800 FAX (410) 203-9228

"Professional Certification. I hereby certify that these documents were prepared or approved by me, and that I am a duly licensed professional engineer under the laws of the State of Maryland, License NO. 8818, Expiration Date: 10/17/08".

STATE OF MARYLAND — DAVID V. KOONTZ — NO. 8818 — REGISTERED PROFESSIONAL ENGINEER

DRAWN BY: MG
CHECKED BY: DVK
SCALE: AS SHOWN
DATE: 04/30/2008

SHEET: 5 OF 36

SDP-07-084

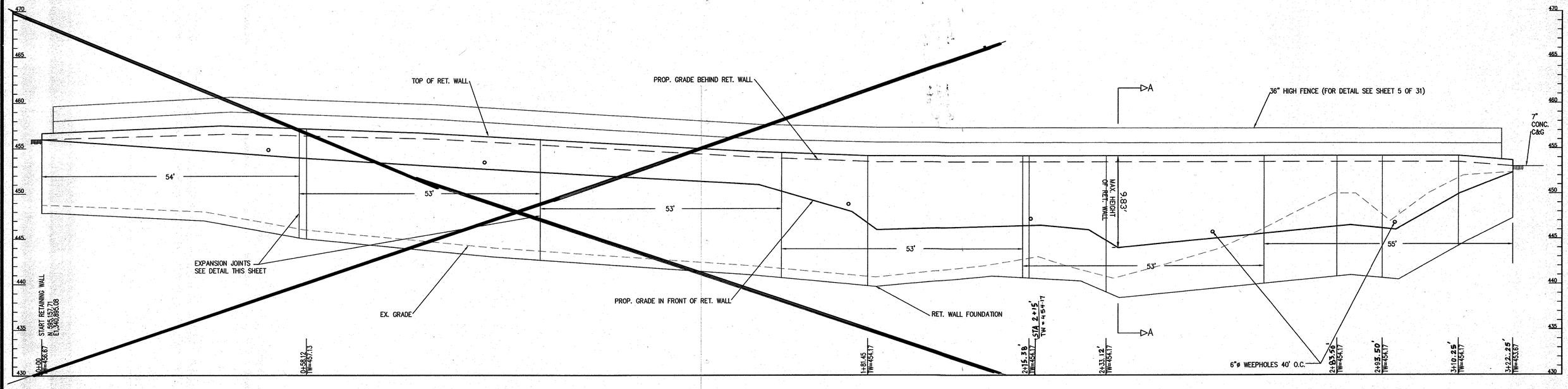

⚠ ELEVATION-CONCRETE RETAINING WALL (1)

SCALE: V 1" = 5', H 1" = 10'

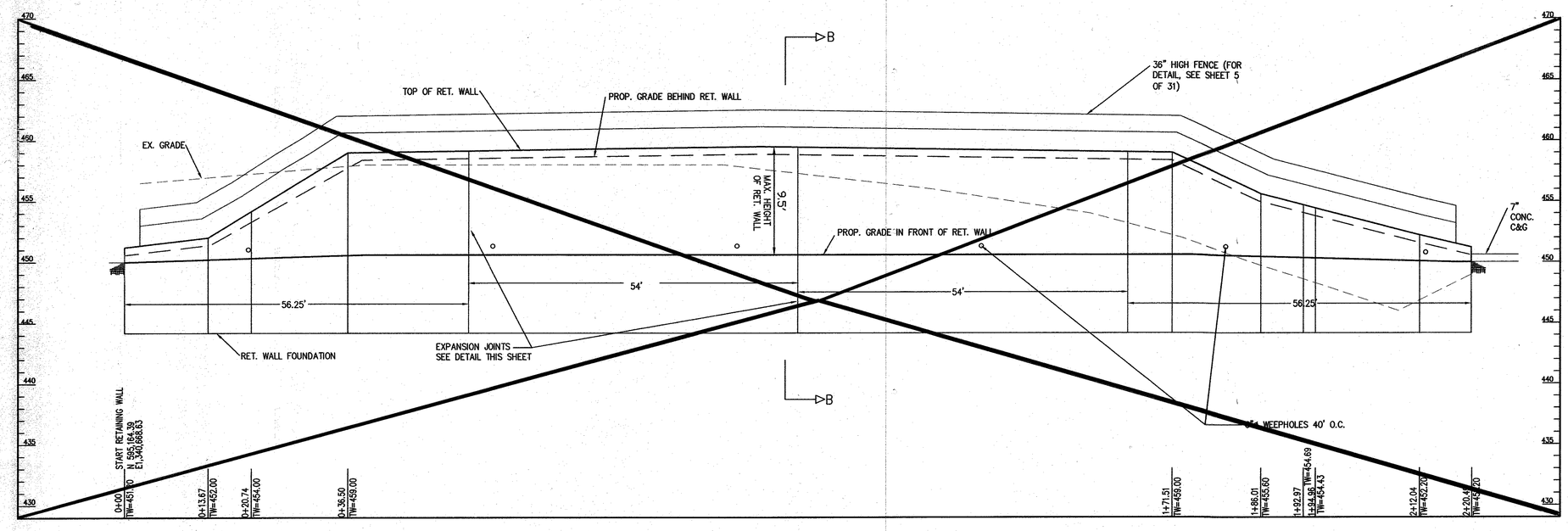

⚠ ELEVATION-CONCRETE RETAINING WALL (2)

SCALE: V 1" = 5', H 1" = 10'

OWNER
MANGIONE ENTERPRISES OF TURF VALLEY
LIMITED PARTNERSHIP
1205 YORK ROAD
LUTHERVILLE, MARYLAND 21093
PHONE: (410) 825-8400

RETAINING WALLS 1&2- ELEVATIONS

TURF VALLEY, LORIEN

NURSING HOME & ASSISTED LIVING FACILITY

OAKMONT AT TURF VALLEY
PARCEL Q
PLATS 18773 - 18775
TAX MAP 16 - P/O PARCEL 8- GRID 16 & 17;
POD I per S-86-13 (4th AMENDED)
THIRD ELECTION DISTRICT HOWARD COUNTY, MARYLAND

KCE ENGINEERING, INC.
EXECUTIVE CENTER
3300 NORTH RIDGE ROAD, SUITE 315
ELLICOTT CITY, MARYLAND 21043
PHONE (410) 203-9800 FAX (410) 203-9228

APPROVED
PLANNING BOARD
OF HOWARD COUNTY
DATE 3/27/08

APPROVED: DEPARTMENT OF PLANNING AND ZONING

Chief, Development Engineering Division	6/25/08 Date
Chief, Division of Land Development	6/23/08 Date
Director	6/20/08 Date

NOTE: ALL COORDINATES, DIMENSIONS AND STATIONING ARE GIVEN FOR OUTSIDE FACE OF RETAINING WALL.

NO.	BY	DATE	REVISION
⚠	KCE	07/16/08	REVISED RETAINING WALL 1 & 2.

"Professional Certification. I hereby certify that these documents were prepared or approved by me, and that I am a duly licensed professional engineer under the laws of the State of Maryland, License NO. 8818, Expiration Date: 10/17/08."

STATE OF MARYLAND · SHAWN M. VAYHURA · NO. 8818 · REGISTERED PROFESSIONAL ENGINEER

4/24/08

DRAWN BY: MG
CHECKED BY: DVK
SCALE: AS SHOWN
DATE: 04/30/2008

SHEET: 6 OF 36

SDP-07-084

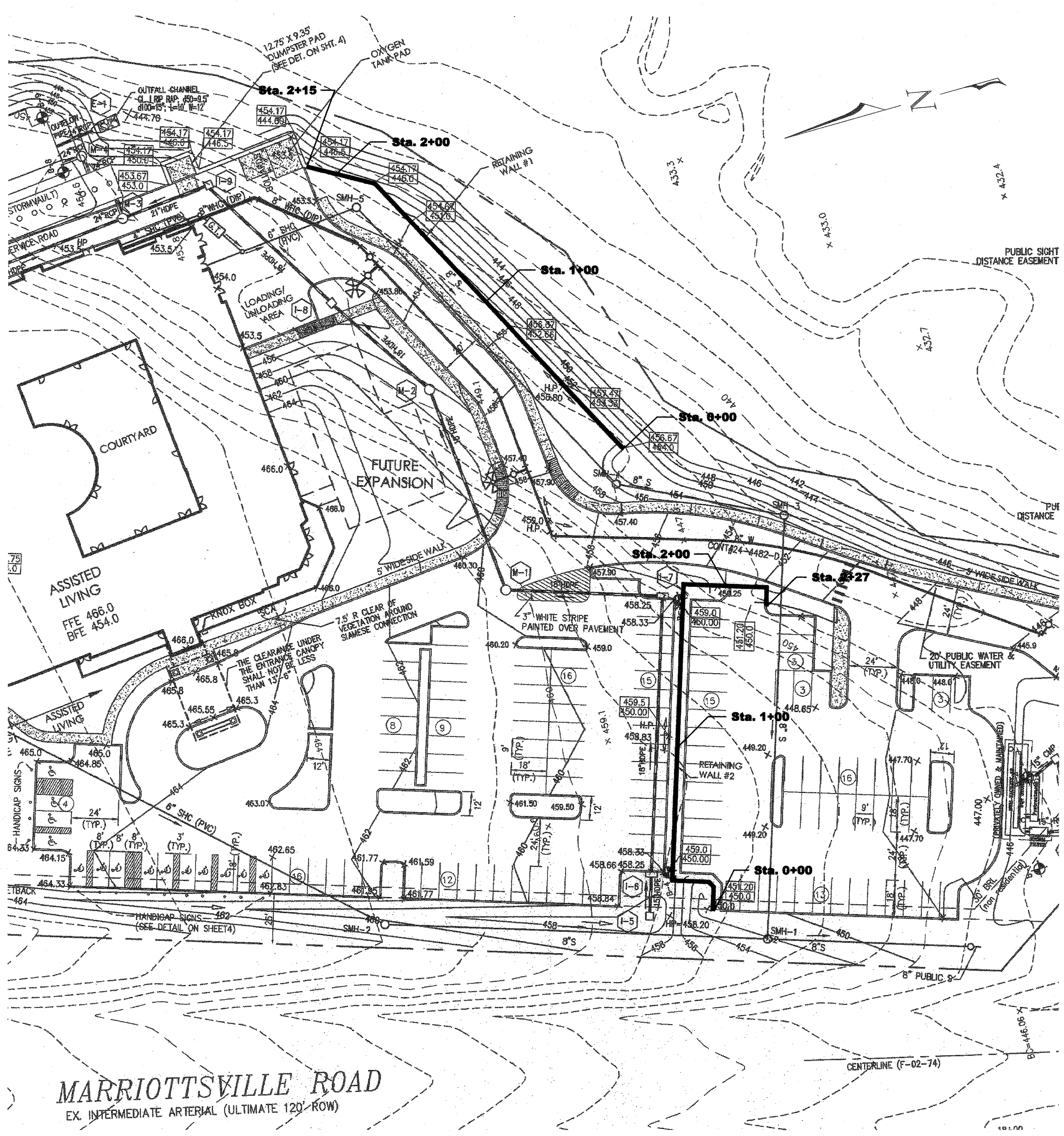

WALL 1 & 2 LOCATION PLAN

1" = 30'

REFER TO GRADING PLAN (C-3) FOR ELEVATIONS.

APPROVED:	DEPARTMENT OF PLANNING AND ZONING
Chief, Development Engineering Division	8/26/08 Date
Chief, Division of Land Development	8/26/08 Date
Director	8/20/08 Date

SPECIFICATIONS

MODULAR CONCRETE BLOCK RETAINING WALL

PART 1: GENERAL

1.01 Description

A. Work shall consist of furnishing and construction of a Modular Block Retaining Wall System in accordance with these specifications and in reasonably close conformity with the lines, grades, design, and dimensions shown on the plans.

B. Work includes preparing foundation soil, furnishing and installing leveling pad, unit drainage fill and backfill to the lines and grades shown on the construction drawings.

C. Work includes furnishing and installing geogrid soil reinforcement of the type, size, location, and lengths designated on the construction drawings.

1.02 Delivery, Storage and Handling

A. Contractor shall check all materials upon delivery to assure that the proper type, grade, color, and certification has been received.

B. Contractor shall protect all materials from damage due to job site conditions and in accordance with manufacturer's recommendations. Damaged materials shall not be incorporated into the work.

PART 2: PRODUCTS

2.01 Modular Concrete Retaining Wall Units

A. Modular concrete units shall conform to the following architectural requirements:
face color - concrete gray - standard manufacturers' color may be specified by the Owner.
face finish - sculptured rock face in angular tri-planer configuration. Other face finishes will not be allowed without written approval of Owner.
bond configuration - running with bonds nominally located at midpoint vertically adjacent units, in both straight and curved alignments.
exposed surfaces of units shall be free of chips, cracks or other imperfections when viewed from a distance of 10 feet under diffused lighting.

B. Modular concrete materials shall conform to the requirements of ASTM C1372 - Standard Specifications for Segmental Retaining Wall Units.

C. Modular concrete units shall conform to the following structural and geometric requirements measured in accordance with appropriate references:
compressive strength = 3000 psi minimum;
absorption = 8 % maximum (6% in northern states) for standard weight aggregates;
dimensional tolerances = ± 1/8" from nominal unit dimensions not including rough split unit dimensions not including rough split face, ±1/16" unit height - top and bottom planes;
unit size - 8" (H) x 22" (W) x 18" (D) minimum;
unit weight - 95 lbs/unit minimum for standard weight aggregates;
inter-unit shear strength - 600 plf minimum at 2 psi normal pressure;
geogrid/unit peak connection strength - 600 plf minimum at 2 psi normal force.

D. Modular concrete units shall conform to the following constructability requirements:
vertical setback = 1/8"± per course (near vertical) or 1"+ per course per the design;
alignment and grid positioning mechanism - fiberglass pins, two per unit minimum;
maximum horizontal gap between erected units shall be - 1/2 inch.

2.03 Base Levelling Pad Material

A. Material shall consist of a compacted #57 crushed stone base as shown on the construction drawings.

2.04 Unit Drainage Fill

A. Unit drainage fill shall consist of #57crushed stone

2.05 Reinforced Backfill

A. Reinforced backfill shall type SM, be free of debris and meet the following gradation tested in accordance with ASTM D-422 and meet other properties shown on the plan:

Sieve Size	Percent Passing
2 inch	100-75
3/4 inch	100-75
No. 40	0-60
No. 200	0-40

Plasticity Index (PI) <10 and Liquid Limit <40 per ASTM D-4318.

B. Material can be site excavated soils where the above requirements can be met. Unsuitable soils for backfill (high plastic clays or organic soils) shall not be used in the reinforced soil mass.

2.06 Geogrid Soil Reinforcement

A. Geosynthetic reinforcement shall consist of geogrids manufactured specifically for soil reinforcement applications and shall be manufactured from high tenacity polyester yarn.

2.07 Drainage Pipe

A. The drainage pipe shall be perforated corrugated HDPE pipe manufactured in accordance with ASTM D-1248.

PART 3 EXECUTION

3.01 Excavation

A. Contractor shall excavate to the lines and grades shown on the construction drawings. Owner's representative shall be responsible for inspecting and approving the excavation prior to placement of leveling material or fill soils.

3.02 Base Leveling Pad

A. Leveling pad material shall be placed to the lines and grades shown on the construction drawings, to a minimum thickness of 6 inches and extend laterally a minimum of 6" in front and behind the modular wall unit.

B. Leveling pad shall be prepared to insure full contact to the base surface of the concrete units.

3.03 Modular Unit Installation

A. First course of units shall be placed on the leveling pad at the appropriate line and grade. Alignment and level shall be checked in all directions and insure that all units are in full contact with the base and properly seated.

B. Place the front of units side-by-side. Do not leave gaps between adjacent units. Layout of corners and curves shall be in accordance with manufacturer's recommendations.

C. Install shear/connecting devices per manufacturer's recommendations.

D. Place and compact drainage fill within and behind wall units. Place and compact backfill soil behind drainage fill. Follow wall erection and drainage fill closely with structure backfill.

E. Maximum stacked vertical height of wall units, prior to unit drainage fill and backfill placement and compaction, shall not exceed three courses.

3.04 Structural Geogrid Installation

A. Geogrid shall be oriented with the highest strength axis perpendicular to the wall alignment.

B. Geogrid reinforcement shall be placed at the strengths, lengths, and elevations shown on the construction design drawings or as directed by the Engineer.

C. The geogrid shall be laid horizontally on compacted backfill and attached to the modular wall units. Place the next course of modular concrete units over the geogrid. The geogrid shall be pulled taut, and anchored prior to backfill placement on the geogrid.

D. Geogrid reinforcements shall be continuous throughout their embedment lengths and placed side-by-side to provide 100% coverage at each level. Spliced connections between shorter pieces of geogrid or gaps between adjacent pieces of geogrid are not permitted.

3.05 Reinforced Backfill Placement

A. Reinforced backfill shall be placed, spread, and compacted in such a manner that minimizes the development of slack in the geogrid and installation damage.

B. Reinforced backfill shall be placed and compacted in lifts not to exceed 6 inches where hand compaction is used, or 8 - 10 inches where heavy compaction equipment is used. Lift thickness shall be decreased to achieve the required density as required.

C. Reinforced backfill shall be compacted to 95% of the maximum density as determined by ASTM D698. The moisture content of the backfill material prior to and during compaction shall be uniformly distributed throughout each layer and shall be + 3% to - 3% of optimum.

D. Only lightweight hand-operated equipment shall be allowed within 3 feet from the tail of the modular concrete unit.

E. Tracked construction equipment shall not be operated directly upon the geogrid reinforcement. A minimum fill thickness of 6 inches is required prior to operation of tracked vehicles over the geogrid. Tracked vehicle turning should be kept to a minimum to prevent tracks from displacing the fill and damaging the geogrid.

F. Rubber tired equipment may pass over geogrid reinforcement at slow speeds, less than 10 MPH. Sudden braking and sharp turning shall be avoided.

G. At the end of each day's operation, the Contractor shall slope the last lift of reinforced backfill away from the wall units to direct runoff away from wall face. The Contractor shall not allow surface runoff from adjacent areas to enter the wall construction site.

3.06 Cap Installation

A. Cap units shall be glued to underlying units with an all-weather adhesive recommended by the manufacturer.

3.07 Field Quality Control

A. The Owner shall engage inspection and testing services, including independent laboratories, to provide quality assurance and testing services during construction.

B. As a minimum, quality assurance testing should include foundation soil inspection, soil and backfill testing, verification of design parameters, and observation of construction for general compliance with design drawings and specifications.

NOTES:

1. No trees shall be planted within 10 feet of the top of the retaining wall.
2. Retaining walls shall only be constructed under the observation of a registered professional engineer and a (NICET, WACEL, or equiv.) certified soils technician.
3. One soil boring shall be required every one hundred feet along the entire length of the wall. Copies of all boring reports shall be provided to the Howard County Inspector Prior to the start of construction.
4. The required bearing pressure beneath the wall system shall be verified in the field by a certified soils technician. Testing documentation must be provided to the Howard County Inspector prior to start of construction. The required bearing test shall be the Dynamic Cone Penetrometer test ASTM STP-399.
5. The suitability of fill material shall be confirmed by the on-site soils technician. Each 8" lift must be compacted to a minimum 95% standard proctor density and the testing report shall be made available to the Howard County Inspector upon completion of construction.
6. Walls shall not be constructed on uncertified fill materials.
7. Walls shall not be constructed within a Howard Co. right-of-way or easement.

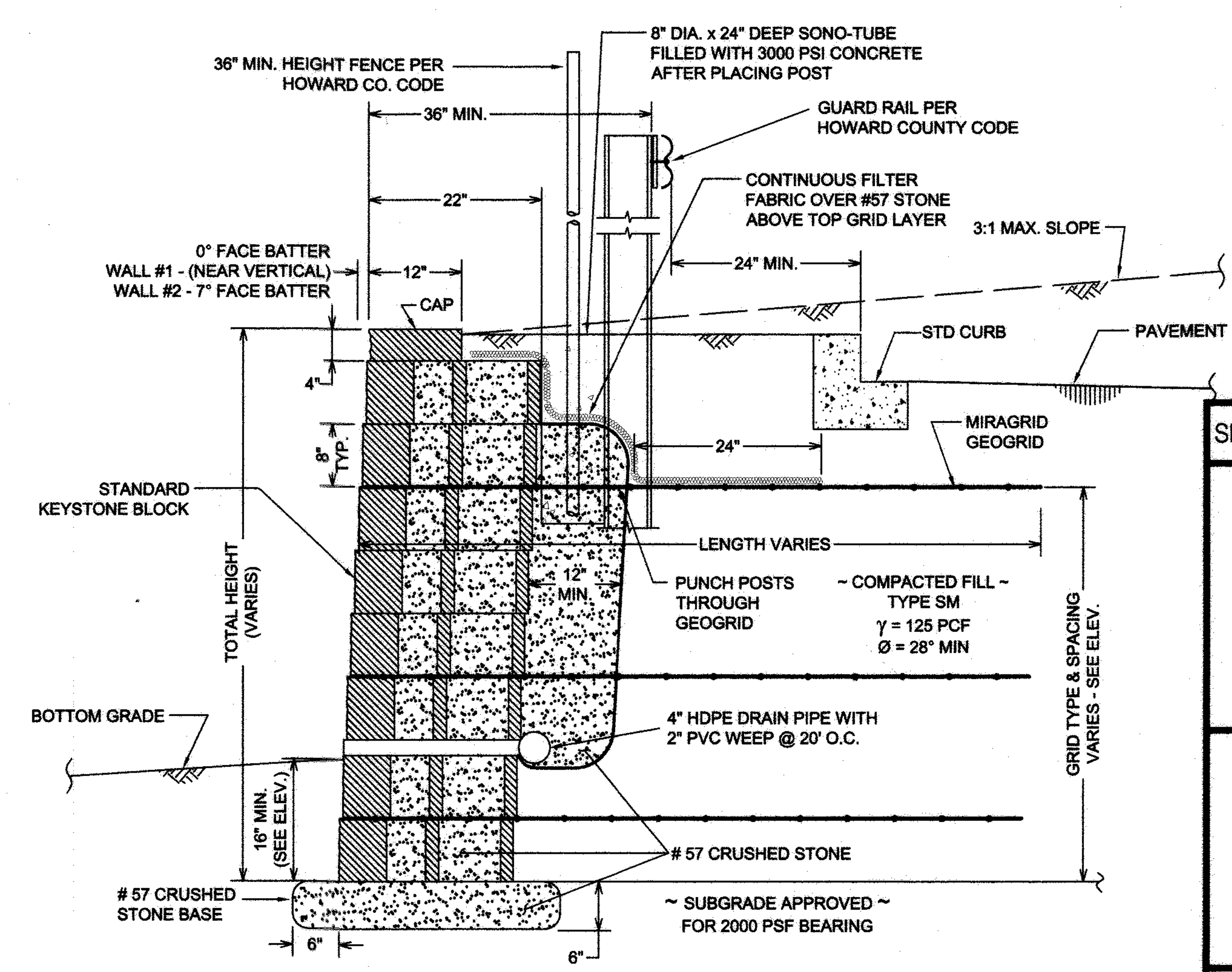

TYPICAL WALL SECTION

NTS

OWNER/DEVELOPER
MANGIONE ENTERPRISES OF TURF VALLEY LIMITED PARTNERSHIP
1205 YORK ROAD, PENTHOUSE
LUTHERVILLE, MARYLAND 21093
PHONE (410) 825-8400

SEGMENTAL BLOCK RETAINING WALLS #1 & 2 PLAN AND DETAILS

TURF VALLEY, LORIEN
NURSING HOME & ASSISTED LIVING
OAKMONT AT TURF VALLEY
PARCEL Q
PLATS 18773 - 18775
TAX MAP 16 - P/O PARCEL 8- GRID 16 & 17;
POD I per S-86-13 (4th AMENDED)
~~FIFTH~~ THIRD ELECTION DISTRICT HOWARD COUNTY, MARYLAND

HILLIS-CARNES
ENGINEERING ASSOCIATES
10975 Guilford Road, Suite A Annapolis Junction, Maryland
(410) 880-4788 Fax: (410) 880-4098

PROFESSIONAL CERTIFICATION

I HEREBY CERTIFY THAT THESE PLANS WERE PREPARED OR APPROVED BY ME, AND THAT I AM A DULY LICENSED PROFESSIONAL ENGINEER UNDER THE LAWS OF THE STATE OF MARYLAND, LICENSE NO. 14434, EXPIRATION DATE: 05/13/09.

STATE OF MARYLAND PROFESSIONAL ENGINEER No. 14434

HCEA NO: 08209-B	SHEET:
DRAWN BY: AM	7
CHECKED BY: RWS	OF
SCALE: AS SHOWN	36
DATE: 08/11/2008	

SDP-07-084

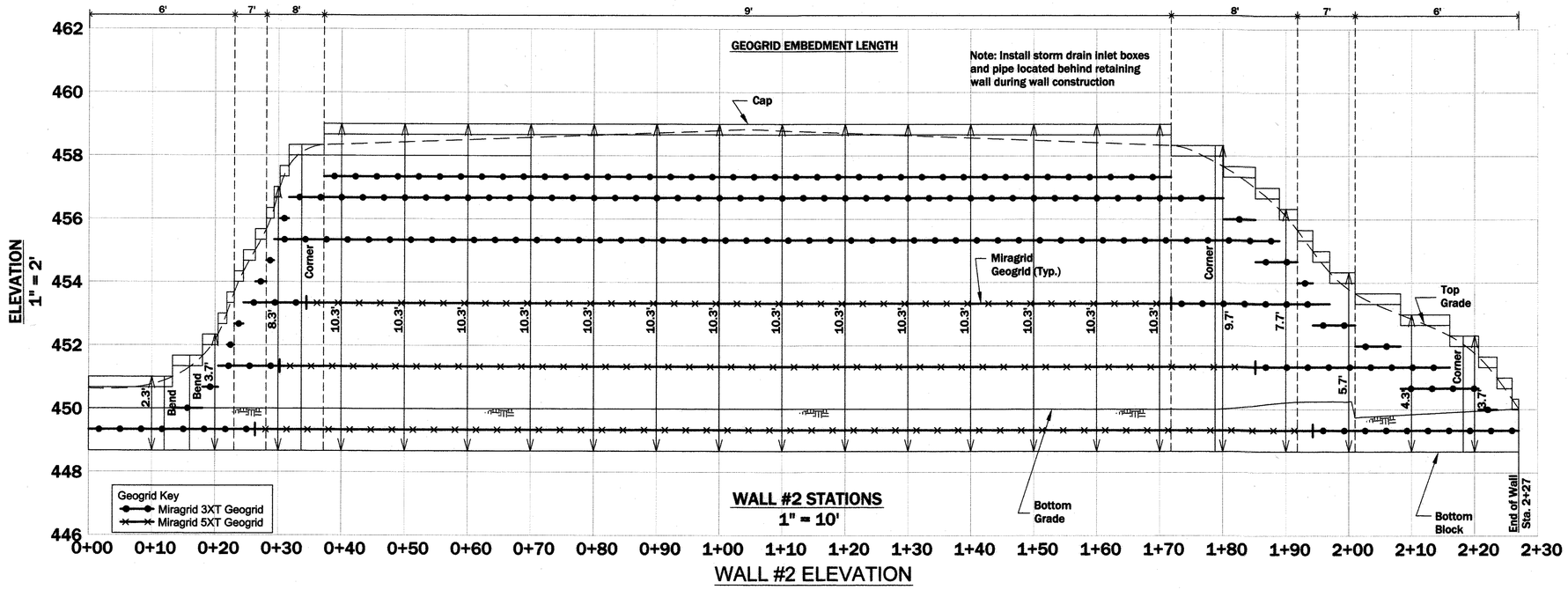

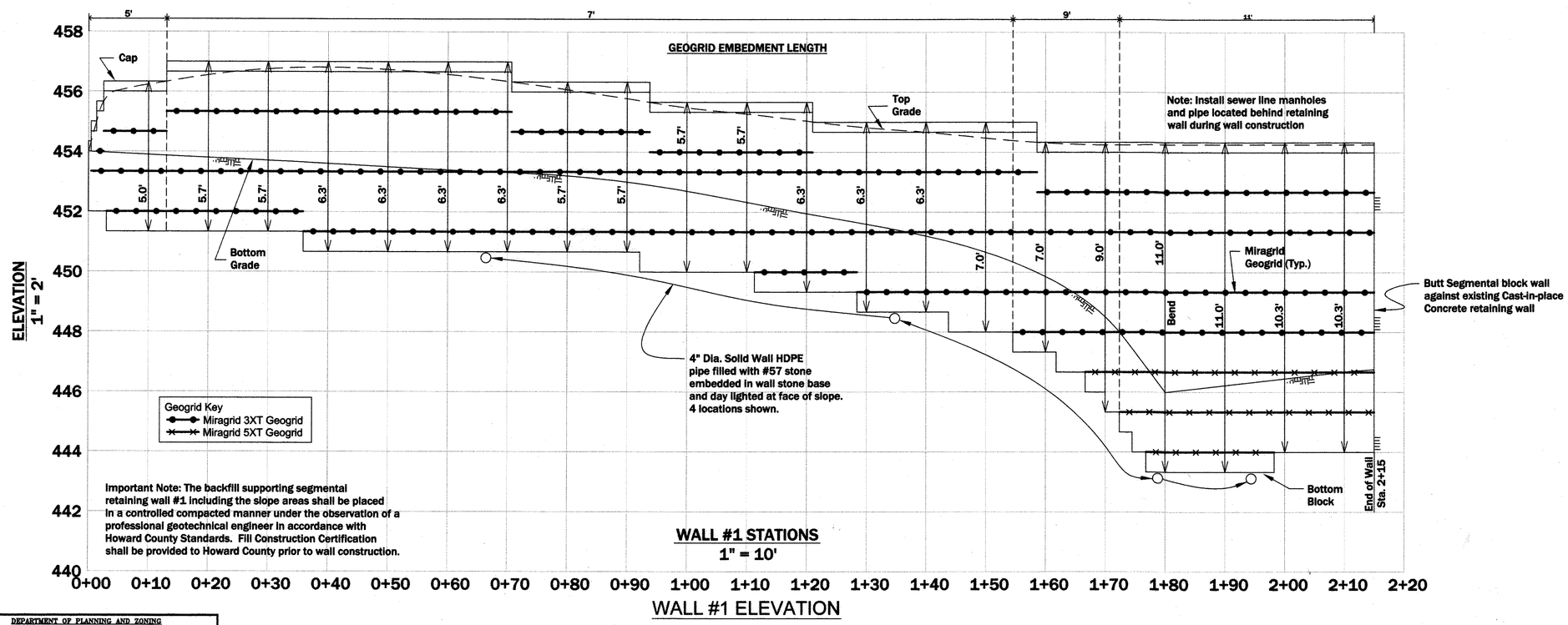

APPROVED: DEPARTMENT OF PLANNING AND ZONING

Chief, Development Engineering Division — Date 8/26/08

Chief, Division of Land Development — Date 8/26/08

Director — Date 8/28/08

OWNER/DEVELOPER
MANGIONE ENTERPRISES OF TURF VALLEY LIMITED PARTNERSHIP
1205 YORK ROAD, PENTHOUSE
LUTHERVILLE, MARYLAND 21093
PHONE (410) 825-8400

SEGMENTAL BLOCK RETAINING WALL ELEVATIONS

TURF VALLEY, LORIEN
NURSING HOME & ASSISTED LIVING
OAKMONT AT TURF VALLEY
PARCEL Q
PLATS 18773 - 18775
TAX MAP 16 - P/O PARCEL 8- GRID 16 & 17;
POD I per S-86-13 (4th AMENDED)
~~FIFTH~~ THIRD ELECTION DISTRICT HOWARD COUNTY, MARYLAND

HILLIS-CARNES
ENGINEERING ASSOCIATES
10975 Guilford Road, Suite A — Annapolis Junction, Maryland
(410) 880-4788 — Fax: (410) 880-4098

PROFESSIONAL CERTIFICATION
I HEREBY CERTIFY THAT THESE PLANS WERE PREPARED OR APPROVED BY ME, AND THAT I AM A DULY LICENSED PROFESSIONAL ENGINEER UNDER THE LAWS OF THE STATE OF MARYLAND, LICENSE NO. 14434, EXPIRATION DATE: 05/13/09.

STATE OF MARYLAND — NO. 14434 — PROFESSIONAL ENGINEER

HCEA NO: 08209-B
DRAWN BY: AM
CHECKED BY: RWS
SCALE: AS SHOWN
DATE: 08/11/2008

SHEET: 8 OF 36

SDP-07-084

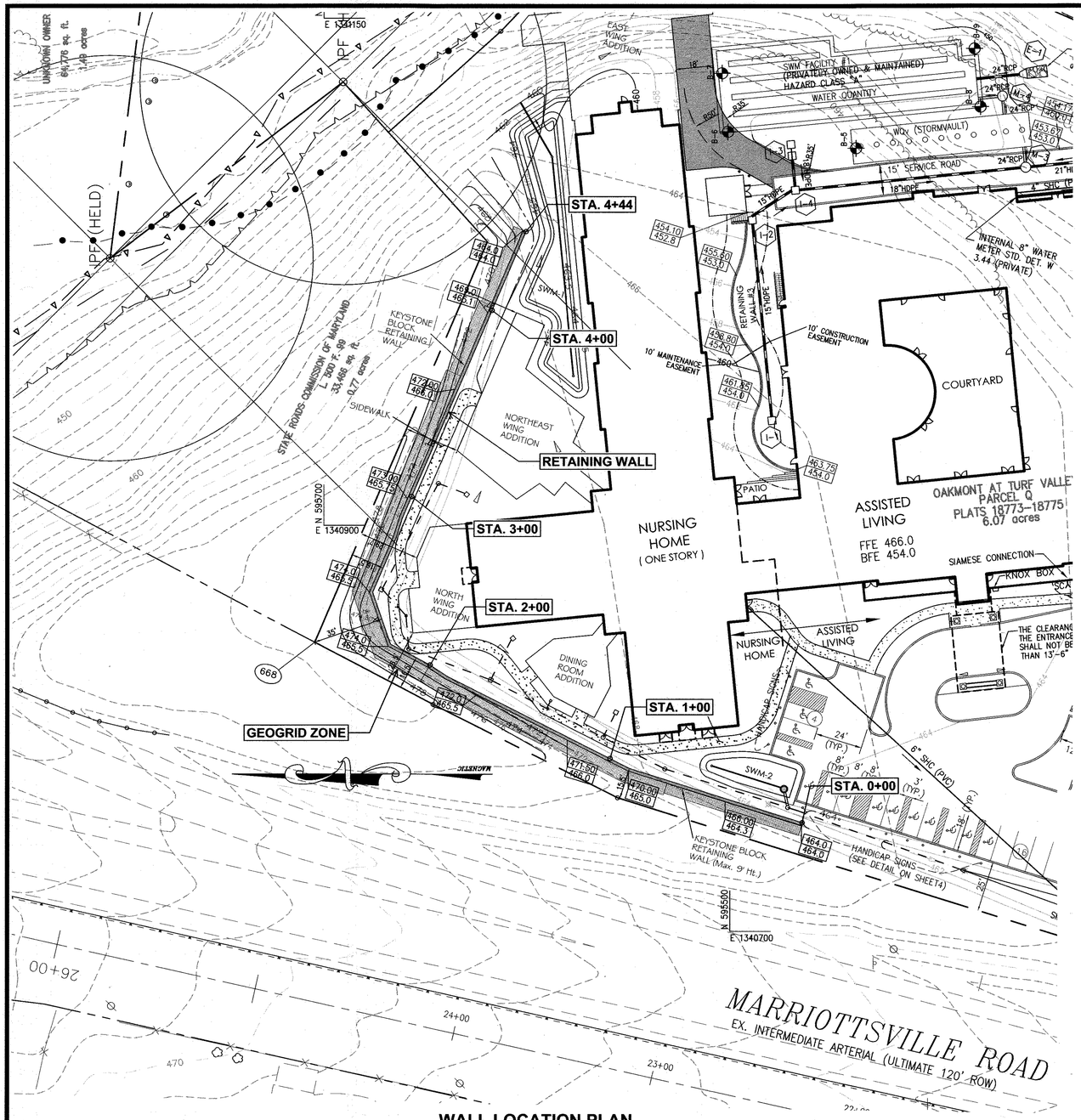

WALL LOCATION PLAN
1" = 30'

APPROVED
PLANNING BOARD
OF HOWARD COUNTY
DATE 3/27/2008
9/01/2016

APPROVED: DEPARTMENT OF PLANNING AND ZONING

Chief, Development Engineering Division — Date 11-28-16

Chief, Division of Land Development — Date 12-6-16

Director — Date 12/6/16

SPECIFICATIONS

MODULAR CONCRETE BLOCK RETAINING WALL

PART 1: GENERAL

1.01 DESCRIPTION

A. WORK SHALL CONSIST OF FURNISHING AND CONSTRUCTION OF A MODULAR RETAINING WALL SYSTEM IN ACCORDANCE WITH THESE SPECIFICATIONS AND IN REASONABLY CLOSE CONFORMITY WITH THE LINES, GRADES, DESIGN, AND DIMENSIONS SHOWN ON THE PLANS.

B. WORK INCLUDES PREPARING FOUNDATION SOIL, FURNISHING AND INSTALLING LEVELING PAD, UNIT DRAINAGE FILL AND BACKFILL TO THE LINES AND GRADES SHOWN ON THE CONSTRUCTION DRAWINGS.

C. WORK INCLUDES FURNISHING AND INSTALLING GEOGRID SOIL REINFORCEMENT OF THE TYPE, SIZE, LOCATION, AND LENGTHS DESIGNATED ON THE CONSTRUCTION DRAWINGS.

1.02 DELIVERY, STORAGE AND HANDLING

A. CONTRACTOR SHALL CHECK ALL MATERIALS UPON DELIVERY TO ASSURE THAT THE PROPER TYPE, GRADE, COLOR, AND CERTIFICATION HAS BEEN RECEIVED.

B. CONTRACTOR SHALL PROTECT ALL MATERIALS FROM DAMAGE DUE TO JOB SITE CONDITIONS AND IN ACCORDANCE WITH MANUFACTURERS RECOMMENDATIONS. DAMAGED MATERIALS SHALL NOT BE INCORPORATED INTO THE WORK.

PART 2: PRODUCTS

2.01 MODULAR CONCRETE RETAINING WALL UNITS

A. MODULAR CONCRETE UNITS SHALL CONFORM TO THE FOLLOWING ARCHITECTURAL REQUIREMENTS:

FACE COLOR - COLOR MAY BE SPECIFIED BY THE OWNER.

FACE FINISH - SCULPTURED ROCK FACE IN ANGULAR TRI-PLANER OR FLAT CONFIGURATION. OTHER FACE FINISHES WILL NOT BE ALLOWED WITHOUT WRITTEN APPROVAL OF OWNER.

BOND CONFIGURATION - RUNNING WITH BONDS NOMINALLY LOCATED AT MIDPOINT VERTICALLY ADJACENT UNITS, IN BOTH STRAIGHT AND CURVED ALIGNMENTS.

EXPOSED SURFACES OF UNITS SHALL BE FREE OF CHIPS, CRACKS OR OTHER IMPERFECTIONS WHEN VIEWED FROM A DISTANCE OF 10 FEET UNDER DIFFUSED LIGHTING.

B. MODULAR CONCRETE MATERIALS SHALL CONFORM TO THE REQUIREMENTS OF ASTM C1372 - STANDARD SPECIFICATIONS FOR SEGMENTAL RETAINING WALL UNITS.

C. MODULAR CONCRETE UNITS SHALL CONFORM TO THE FOLLOWING STRUCTURAL AND GEOMETRIC REQUIREMENTS MEASURED IN ACCORDANCE WITH APPROPRIATE REFERENCES:

COMPRESSIVE STRENGTH = 3000 PSI MINIMUM; ABSORPTION = 8% MAXIMUM (6% IN NORTHERN STATES) FOR STANDARD WEIGHT AGGREGATES;

DIMENSIONAL TOLERANCES = ±1/8" FROM NOMINAL UNIT DIMENSIONS NOT INCLUDING ROUGH SPLIT FACE, ±1/16"

UNIT HEIGHT - TOP AND BOTTOM PLANES; UNIT SIZE - 8" (H) x 18" (W) x 12" (D) MINIMUM;

UNIT WEIGHT - 75 LBS/UNIT MINIMUM FOR STANDARD WEIGHT AGGREGATES;

INTER-UNIT SHEAR STRENGTH - 1000 PLF MINIMUM AT 2 PSI NORMAL PRESSURE; AT 2 PSI NORMAL FORCE.

GEOGRID/UNIT PEAK CONNECTION STRENGTH - 1000 PLF MINIMUM

D. MODULAR CONCRETE UNITS SHALL CONFORM TO THE FOLLOWING CONSTRUCTABILITY REQUIREMENTS: (IF APPLICABLE)

VERTICAL SETBACK = 1/8"± PER COURSE (NEAR VERTICAL) OR 1"± PER COURSE PER THE DESIGN; ALIGNMENT AND GRID POSITIONING MECHANISM - FIBERGLASS PINS, TWO PER UNIT MINIMUM;

MAXIMUM HORIZONTAL GAP BETWEEN ERECTED UNITS SHALL BE - 1/2 INCH.

2.02 SHEAR CONNECTORS

A. SHEAR CONNECTORS SHALL BE 1/2 INCH DIAMETER THERMOSET ISOPTHALIC POLYESTER RESIN-PROTRUDED FIBERGLASS REINFORCEMENT RODS OR EQUIVALENT TO PROVIDE CONNECTION BETWEEN VERTICALLY AND HORIZONTALLY ADJACENT UNITS. STRENGTH OF SHEAR CONNECTORS BETWEEN VERTICAL ADJACENT UNITS SHALL BE APPLICABLE OVER A DESIGN TEMPERATURE OF 10 DEGREES F TO + 100 DEGREES F. B. SHEAR CONNECTORS SHALL BE CAPABLE OF HOLDING THE GEOGRID IN THE PROPER DESIGN POSITION DURING GRID PRE-TENSIONING AND BACKFILLING.

2.03 BASE LEVELING PAD MATERIAL

A. MATERIAL SHALL CONSIST OF A COMPACTED #57 CRUSHED STONE BASE AS SHOWN ON THE CONSTRUCTION DRAWINGS.

2.04 UNIT DRAINAGE FILL

A. UNIT DRAINAGE FILL SHALL CONSIST OF #57 CRUSHED STONE

2.05 REINFORCED BACKFILL

A. REINFORCED BACKFILL SHALL BE TYPE SM, BE FREE OF DEBRIS AND MEET THE FOLLOWING GRADATION TESTED IN ACCORDANCE WITH ASTM D-422 AND MEET OTHER PROPERTIES SHOWN ON THE PLAN:

SIEVE SIZE	PERCENT PASSING
2 INCH	100-75
3/4 INCH	100-75
NO. 40	0-60
NO. 200	0-35

PLASTICITY INDEX (PI) <10 AND LIQUID LIMIT <35 PER ASTM D-4318.

B. MATERIAL CAN BE SITE EXCAVATED SOILS WHERE THE ABOVE REQUIREMENTS CAN BE MET. UNSUITABLE SOILS FOR BACKFILL (HIGH PLASTIC CLAYS OR ORGANIC SOILS) SHALL NOT BE USED IN THE REINFORCED SOIL MASS.

2.06 GEOGRID SOIL REINFORCEMENT

A. GEOSYNTHETIC REINFORCEMENT SHALL CONSIST OF GEOGRIDS MANUFACTURED SPECIFICALLY FOR SOIL REINFORCEMENT APPLICATIONS AND SHALL BE MANUFACTURED FROM HIGH TENACITY POLYESTER YARN.

2.07 DRAINAGE PIPE

A. THE DRAINAGE PIPE SHALL BE PERFORATED CORRUGATED HDPE PIPE MANUFACTURED IN ACCORDANCE WITH ASTM D-1248.

PART 3 EXECUTION

3.01 EXCAVATION

A. CONTRACTOR SHALL EXCAVATE TO THE LINES AND GRADES SHOWN ON THE CONSTRUCTION DRAWINGS. OWNER'S REPRESENTATIVE SHALL BE RESPONSIBLE FOR INSPECTING AND APPROVING THE EXCAVATION PRIOR TO PLACEMENT OF LEVELING MATERIAL OR FILL SOILS.

3.02 BASE LEVELING PAD

A. LEVELING PAD MATERIAL SHALL BE PLACED TO THE LINES AND GRADES SHOWN ON THE CONSTRUCTION DRAWINGS, TO A MINIMUM THICKNESS OF 6 INCHES AND EXTEND LATERALLY A MINIMUM OF 6" IN FRONT AND BEHIND THE MODULAR WALL UNIT.

B. LEVELING PAD SHALL BE PREPARED TO INSURE FULL CONTACT TO THE BASE SURFACE OF THE CONCRETE UNITS.

3.03 MODULAR UNIT INSTALLATION

A. FIRST COURSE OF UNITS SHALL BE PLACED ON THE LEVELING PAD AT THE APPROPRIATE LINE AND GRADE. ALIGNMENT AND LEVEL SHALL BE CHECKED IN ALL DIRECTIONS AND INSURE THAT ALL UNITS ARE IN FULL CONTACT WITH THE BASE AND PROPERLY SEATED.

B. PLACE THE FRONT OF UNITS SIDE-BY-SIDE. DO NOT LEAVE GAPS BETWEEN ADJACENT UNITS. LAYOUT OF CORNERS AND CURVES SHALL BE IN ACCORDANCE WITH MANUFACTURER'S RECOMMENDATIONS.

C. INSTALL SHEAR/CONNECTING DEVICES PER MANUFACTURER'S RECOMMENDATIONS.

D. PLACE AND COMPACT DRAINAGE FILL WITHIN AND BEHIND WALL UNITS. PLACE AND COMPACT BACKFILL SOIL BEHIND DRAINAGE FILL. FOLLOW WALL ERECTION AND DRAINAGE FILL CLOSELY WITH STRUCTURE BACKFILL.

E. MAXIMUM STACKED VERTICAL HEIGHT OF WALL UNITS, PRIOR TO UNIT DRAINAGE FILL AND BACKFILL PLACEMENT AND COMPACTION, SHALL NOT EXCEED THREE COURSES.

3.04 STRUCTURAL GEOGRID INSTALLATION

A. GEOGRID SHALL BE ORIENTED WITH THE HIGHEST STRENGTH AXIS PERPENDICULAR TO THE WALL ALIGNMENT.

B. GEOGRID REINFORCEMENT SHALL BE PLACED AT THE STRENGTHS, LENGTHS, AND ELEVATIONS SHOWN ON THE CONSTRUCTION DESIGN DRAWINGS OR AS DIRECTED BY THE ENGINEER.

C. THE GEOGRID SHALL BE LAID HORIZONTALLY ON COMPACTED BACKFILL AND ATTACHED TO THE MODULAR WALL UNITS. PLACE THE NEXT COURSE OF MODULAR CONCRETE UNITS OVER THE GEOGRID. THE GEOGRID SHALL BE PULLED TAUT, AND ANCHORED PRIOR TO BACKFILL PLACEMENT ON THE GEOGRID.

D. GEOGRID REINFORCEMENTS SHALL BE CONTINUOUS THROUGHOUT THEIR EMBEDMENT LENGTHS AND PLACED SIDE-BY-SIDE TO PROVIDE 100% COVERAGE AT EACH LEVEL. SPLICED CONNECTIONS BETWEEN SHORTER PIECES OF GEOGRID OR GAPS BETWEEN ADJACENT PIECES OF GEOGRID ARE NOT PERMITTED.

3.05 REINFORCED BACKFILL PLACEMENT

A. REINFORCED BACKFILL SHALL BE PLACED, SPREAD, AND COMPACTED IN SUCH A MANNER THAT MINIMIZES THE DEVELOPMENT OF SLACK IN THE GEOGRID AND INSTALLATION DAMAGE.

B. REINFORCED BACKFILL SHALL BE PLACED AND COMPACTED IN LIFTS NOT TO EXCEED 6 INCHES WHERE HAND COMPACTION IS USED, OR 8 - 10 INCHES WHERE HEAVY COMPACTION EQUIPMENT IS USED. LIFT THICKNESS SHALL BE DECREASED TO ACHIEVE THE REQUIRED DENSITY AS REQUIRED.

C. REINFORCED BACKFILL SHALL BE COMPACTED TO 95% OF THE MAXIMUM DENSITY AS DETERMINED BY ASTM D698. THE MOISTURE CONTENT OF THE BACKFILL MATERIAL PRIOR TO AND DURING COMPACTION SHALL BE UNIFORMLY DISTRIBUTED THROUGHOUT EACH LAYER AND SHALL BE + 3% TO - 3% OF OPTIMUM.

D. ONLY LIGHTWEIGHT HAND-OPERATED EQUIPMENT SHALL BE ALLOWED WITHIN 3 FEET FROM THE TAIL OF THE MODULAR CONCRETE UNIT.

E. TRACKED CONSTRUCTION EQUIPMENT SHALL NOT BE OPERATED DIRECTLY UPON THE GEOGRID REINFORCEMENT. A MINIMUM FILL THICKNESS OF 6 INCHES IS REQUIRED PRIOR TO OPERATION OF TRACKED VEHICLES OVER THE GEOGRID. TRACKED VEHICLE TURNING SHOULD BE KEPT TO A MINIMUM TO PREVENT TRACKS FROM DISPLACING THE FILL AND DAMAGING THE GEOGRID.

F. RUBBER TIRED EQUIPMENT MAY PASS OVER GEOGRID REINFORCEMENT AT SLOW SPEEDS, LESS THAN 10 MPH. SUDDEN BRAKING AND SHARP TURNING SHALL BE AVOIDED.

G. AT THE END OF EACH DAY'S OPERATION, THE CONTRACTOR SHALL SLOPE THE LAST LIFT OF REINFORCED BACKFILL AWAY FROM THE WALL UNITS TO DIRECT RUNOFF AWAY FROM WALL FACE. THE CONTRACTOR SHALL NOT ALLOW SURFACE RUNOFF FROM ADJACENT AREAS TO ENTER THE WALL CONSTRUCTION SITE.

3.06 CAP INSTALLATION

A. CAP UNITS SHALL BE GLUED TO UNDERLYING UNITS WITH AN ALL-WEATHER ADHESIVE RECOMMENDED BY THE MANUFACTURER.

3.07 FIELD QUALITY CONTROL

A. THE OWNER SHALL ENGAGE INSPECTION AND TESTING SERVICES, INCLUDING INDEPENDENT LABORATORIES, TO PROVIDE QUALITY ASSURANCE AND TESTING SERVICES DURING CONSTRUCTION.

B. AS A MINIMUM, QUALITY ASSURANCE TESTING SHOULD INCLUDE FOUNDATION SOIL INSPECTION, SOIL AND BACKFILL TESTING, VERIFICATION OF DESIGN PARAMETERS, AND OBSERVATION OF CONSTRUCTION FOR GENERAL COMPLIANCE WITH DESIGN DRAWINGS AND SPECIFICATIONS.

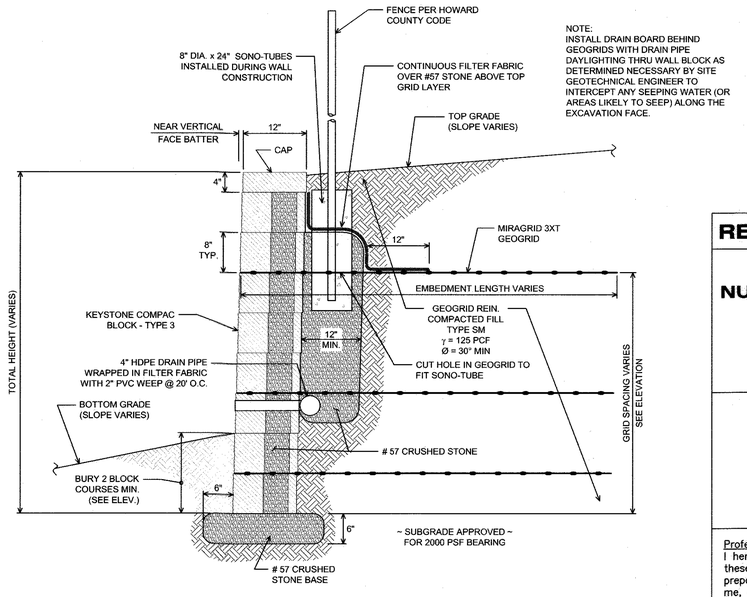

NOTE:
INSTALL DRAIN BOARD BEHIND GEOGRIDS WITH DRAIN PIPE DAYLIGHTING THRU WALL BLOCK AS DETERMINED NECESSARY BY SITE GEOTECHNICAL ENGINEER TO INTERCEPT ANY SEEPING WATER (OR AREAS LIKELY TO SEEP) ALONG THE EXCAVATION FACE.

TYPICAL WALL SECTION
N.T.S.

GENERAL NOTES:

1. No trees shall be planted within 10 feet of the top of the retaining wall.
2. Retaining walls shall only be constructed under the observation of a registered professional engineer and a (NICET, WACEL, or equiv.) certified soils technician.
3. The required bearing pressure beneath the wall system shall be verified in the field by a certified soils technician. Testing documentation must be provided to the Howard County Inspector prior to start of construction. The required bearing test shall be the Dynamic Cone Penetrometer test ASTM STP-399.
4. The suitability of fill material shall be confirmed by the on-site soils technician. Each 8" lift must be compacted to a minimum 95% standard proctor density and the testing report shall be made available to the Howard County Inspector upon completion of construction.
5. Walls shall not be constructed on uncertified fill materials.
6. Walls shall not be constructed within a Howard Co. right-of-way or easement.
7. For "CRITICAL" walls, one soil boring is required for 100' along length of the wall. Copies of the boring report shall be provided to the Howard County inspector upon completion of construction.

RETAINING WALL PLAN AND DETAILS

TURF VALLEY, LORIEN

NURSING HOME & ASSISTED LIVING FACILITY

OAKMONT AT TURF VALLEY
PARCEL Q
PLATS 18773 - 18775
TAX MAP 16 - P/O PARCEL 8- GRID 16 & 17;
POD I per S-86-13 (4th AMENDED)
THIRD ELECTION DISTRICT HOWARD COUNTY, MARYLAND

HILLIS-CARNES ENGINEERING ASSOCIATES
10975 Guilford Road, Suite A Annapolis Junction, Maryland
(410) 880-4788 WWW.HCEA.COM Fax: (410) 880-4098

Professional Certification. I hereby certify that these documents were prepared or approved by me, and that I am a duly licensed professional engineer under the laws of the State of Maryland, License NO. 14434, Expiration Date: 05/13/17.

DRAWN BY: AM
CHECKED BY: RWS
SCALE: AS NOTED
HCEA JOB#: 16239A
DATE: 08/15/2016

SHEET: 9 OF 36

SDP-07-084

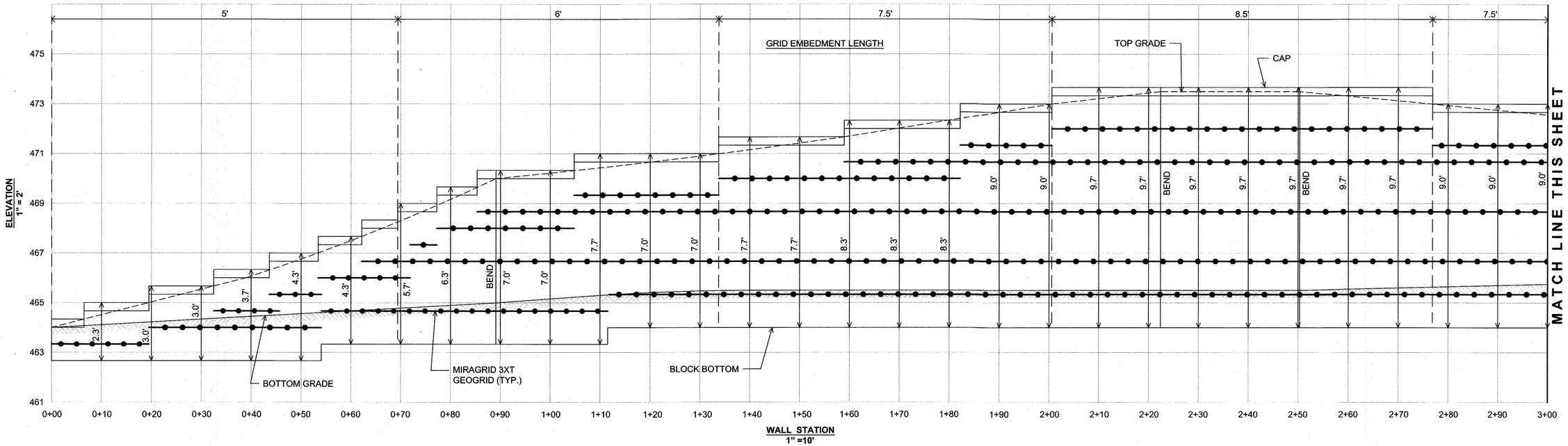

WALL ELEVATION

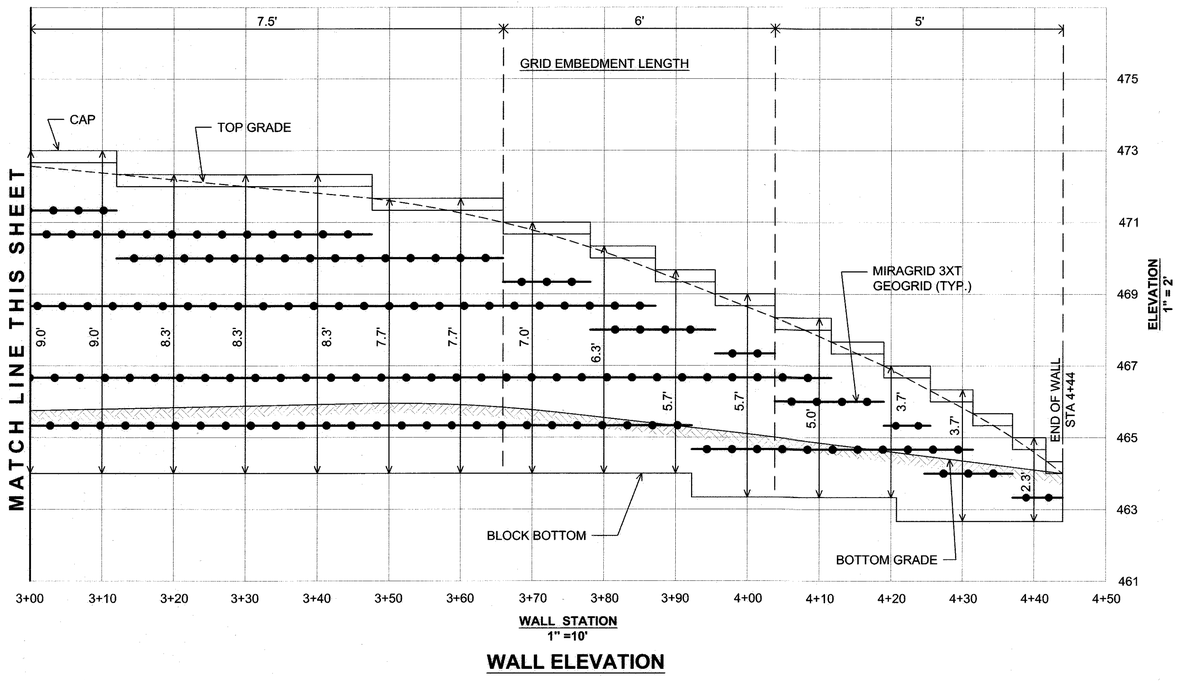

WALL ELEVATION

APPROVED
PLANNING BOARD
OF HOWARD COUNTY
DATE 3/27/2008
9/01/2016

APPROVED: DEPARTMENT OF PLANNING AND ZONING

Chief, Development Engineering Division — Date 11-28-16

Chief, Division of Land Development — Date 12-6-16

Director — Date 12-6-16

RETAINING WALL ELEVATION

TURF VALLEY, LORIEN

NURSING HOME & ASSISTED LIVING FACILITY

OAKMONT AT TURF VALLEY
PARCEL Q
PLATS 18773 - 18775
TAX MAP 16 - P/O PARCEL 8- GRID 16 & 17;
POD I per S-86-13 (4th AMENDED)
THIRD ELECTION DISTRICT HOWARD COUNTY, MARYLAND

HILLIS-CARNES
ENGINEERING ASSOCIATES
10975 Guilford Road, Suite A Annapolis Junction, Maryland
(410) 880-4788 WWW.HCEA.COM Fax: (410) 880-4098

Professional Certification, I hereby certify that these documents were prepared or approved by me, and that I am a duly licensed professional engineer under the laws of the State of Maryland, License NO. 14434, Expiration Date: 05/13/17.

STATE OF MARYLAND · RICHARD W. STUART · No. 14434 · PROFESSIONAL ENGINEER

DRAWN BY: AM
CHECKED BY: RWS
SCALE: AS NOTED
HCEA JOB#: 16239A
DATE: 08/15/2016

SHEET: 10 OF 36

SDP-07-084

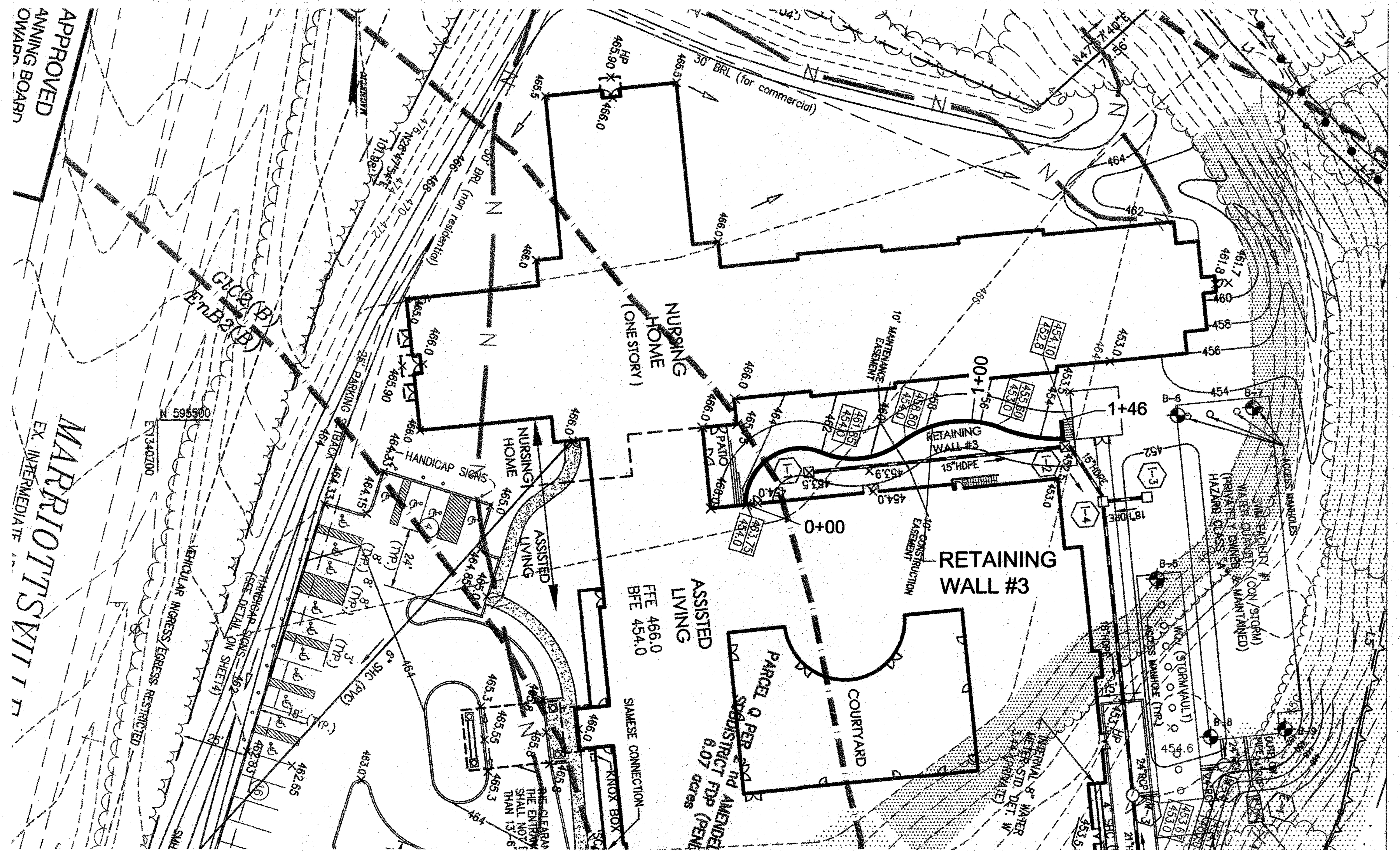

WALL LOCATION PLAN
1" = 30'

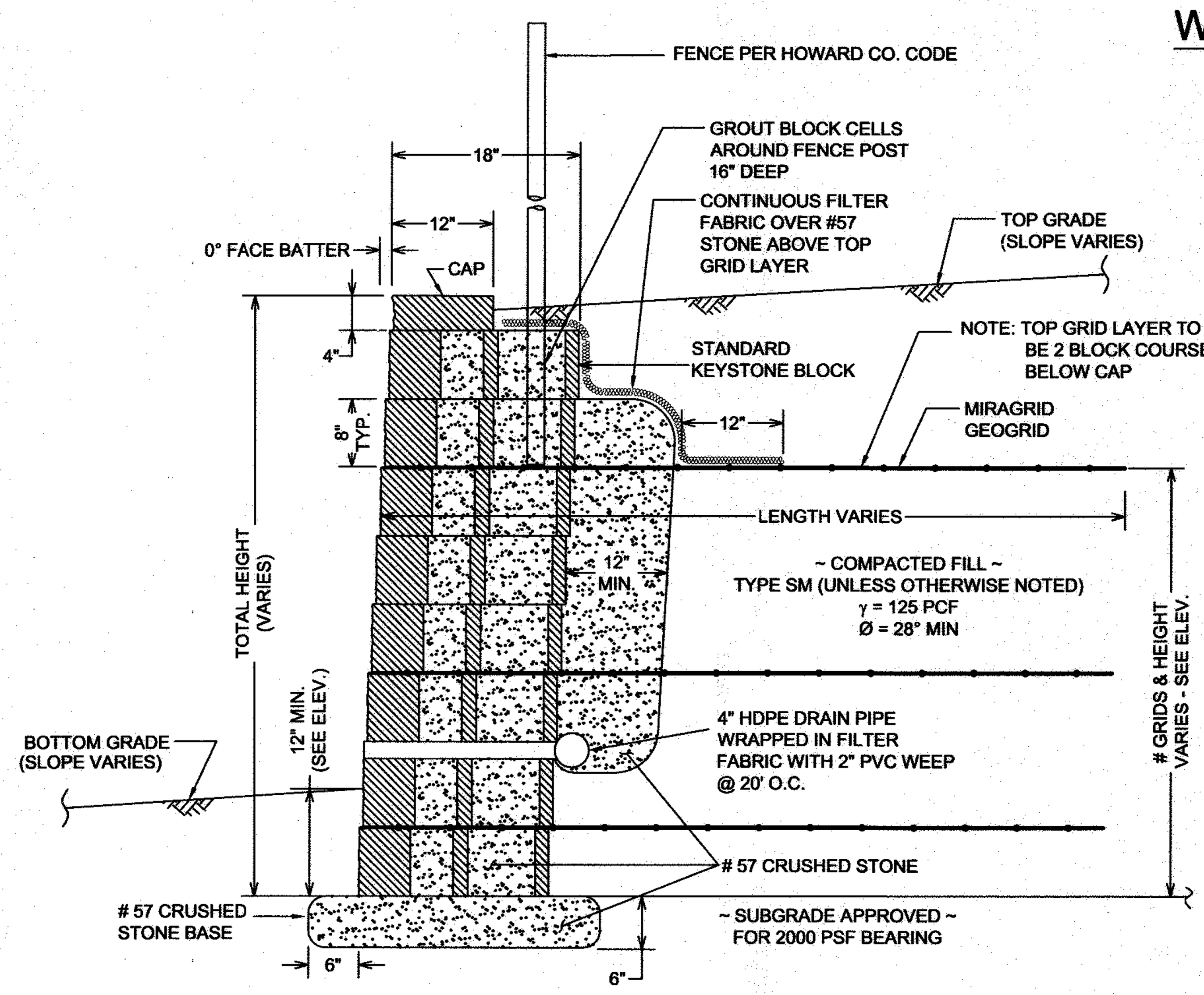

TYPICAL WALL SECTION
NTS

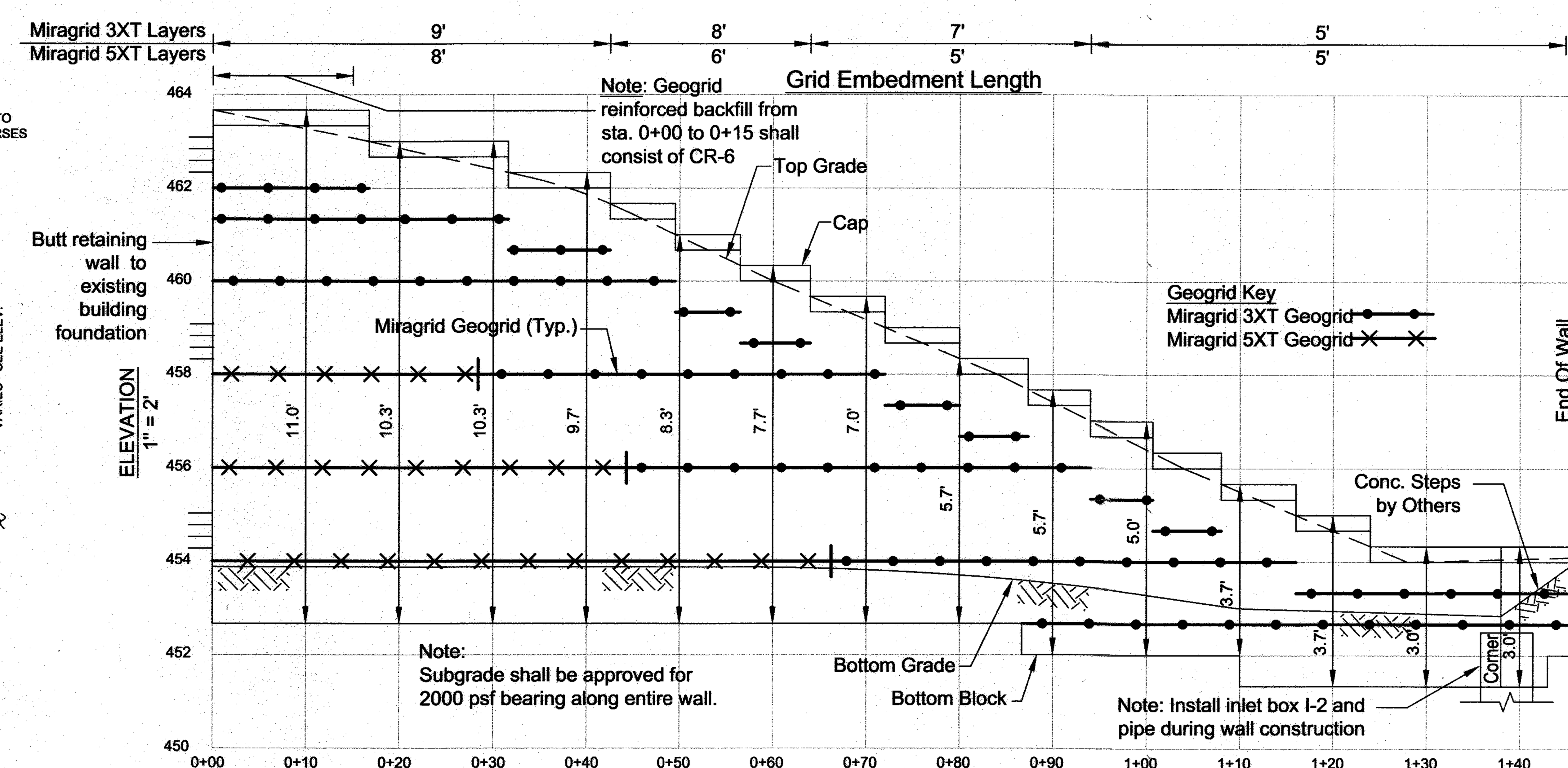

WALL ELEVATION

SPECIFICATIONS
MODULAR CONCRETE BLOCK RETAINING WALL

PART 1: GENERAL

1.01 Description
A. Work shall consist of furnishing and construction of a Modular Block Retaining Wall System in accordance with these specifications and in reasonably close conformity with the lines, grades, design, and dimensions shown on the plans.
B. Work includes preparing foundation soil, furnishing and installing leveling pad, unit drainage fill and backfill to the lines and grades shown on the construction drawings.
C. Work includes furnishing and installing geogrid soil reinforcement of the type, size, location, and lengths designated on the construction drawings.

1.02 Delivery, Storage and Handling
A. Contractor shall check all materials upon delivery to assure that the proper type, grade, color, and certification has been received.
B. Contractor shall protect all materials from damage due to job site conditions and in accordance with manufacturer's recommendations. Damaged materials shall not be incorporated into the work.

PART 2: PRODUCTS

2.01 Modular Concrete Retaining Wall Units
A. Modular concrete units shall conform to the following architectural requirements:
face color - concrete gray - standard manufacturers' color may be specified by the Owner.
face finish - sculptured rock face in angular tri-planer configuration. Other face finishes will not be allowed without written approval of Owner.
bond configuration - running with bonds nominally located at midpoint vertically adjacent units, in both straight and curved alignments.
exposed surfaces of units shall be free of chips, cracks or other imperfections when viewed from a distance of 10 feet under diffused lighting.
B. Modular concrete materials shall conform to the requirements of ASTM C1372 - Standard Specifications for Segmental Retaining Wall Units.
C. Modular concrete units shall conform to the following structural and geometric requirements measured in accordance with appropriate references:
compressive strength = 3000 psi minimum;
absorption = 8 % maximum (6% in northern states) for standard weight aggregates;
dimensional tolerances = ± 1/8" from nominal unit dimensions not including rough split unit dimensions not including rough split face, ±1/16" unit height - top and bottom planes;
unit size - 8" (H) x 18" (W) x 18" (D) minimum;
unit weight - 95 lbs/unit minimum for standard weight aggregates;
inter-unit shear strength - 600 plf minimum at 2 psi normal pressure;
geogrid/unit peak connection strength - 600 plf minimum at 2 psi normal force.
D. Modular concrete units shall conform to the following constructability requirements:
vertical setback = 1/8"± per course (near vertical) or 1"+ per course per the design;
alignment and grid positioning mechanism - fiberglass pins, two per unit minimum;
maximum horizontal gap between erected units shall be - 1/2 inch.

2.03 Base Levelling Pad Material
A. Material shall consist of a compacted #57 crushed stone base as shown on the construction drawings.

2.04 Unit Drainage Fill
A. Unit drainage fill shall consist of #57crushed stone

2.05 Reinforced Backfill
A. Reinforced backfill shall type SM, be free of debris and meet the following gradation tested in accordance with ASTM D-422 and meet other properties shown on the plan:

Sieve Size	Percent Passing
2 inch	100-75
3/4 inch	100-75
No. 40	0-60
No. 200	0-40

Plasticity Index (PI) <10 and Liquid Limit <40 per ASTM D-4318.
B. Material can be site excavated soils where the above requirements can be met. Unsuitable soils for backfill (high plastic clays or organic soils) shall not be used in the reinforced soil mass.

2.06 Geogrid Soil Reinforcement
A. Geosynthetic reinforcement shall consist of geogrids manufactured specifically for soil reinforcement applications and shall be manufactured from high tenacity polyester yarn.

2.07 Drainage Pipe
A. The drainage pipe shall be perforated corrugated HDPE pipe manufactured in accordance with ASTM D-1248.

PART 3 EXECUTION

3.01 Excavation
A. Contractor shall excavate to the lines and grades shown on the construction drawings. Owner's representative shall be responsible for inspecting and approving the excavation prior to placement of leveling material or fill soils.

3.02 Base Leveling Pad
A. Leveling pad material shall be placed to the lines and grades shown on the construction drawings, to a minimum thickness of 6 inches and extend laterally a minimum of 6" in front and behind the modular wall unit.
B. Leveling pad shall be prepared to insure full contact to the base surface of the concrete units.

3.03 Modular Unit Installation
A. First course of units shall be placed on the leveling pad at the appropriate line and grade. Alignment and level shall be checked in all directions and insure that all units are in full contact with the base and properly seated.
B. Place the front of units side-by-side. Do not leave gaps between adjacent units. Layout of corners and curves shall be in accordance with manufacturer's recommendations.
C. Install shear/connecting devices per manufacturer's recommendations.
D. Place and compact drainage fill within and behind wall units. Place and compact backfill soil behind drainage fill. Follow wall erection and drainage fill closely with structure backfill.
E. Maximum stacked vertical height of wall units, prior to unit drainage fill and backfill placement and compaction, shall not exceed three courses.

3.04 Structural Geogrid Installation
A. Geogrid shall be oriented with the highest strength axis perpendicular to the wall alignment.
B. Geogrid reinforcement shall be placed at the strengths, lengths, and elevations shown on the construction design drawings or as directed by the Engineer.
C. The geogrid shall be laid horizontally on compacted backfill and attached to the modular wall units. Place the next course of modular concrete units over the geogrid. The geogrid shall be pulled taut, and anchored prior to backfill placement on the geogrid.
D. Geogrid reinforcements shall be continuous throughout their embedment lengths and placed side-by-side to provide 100% coverage at each level. Spliced connections between shorter pieces of geogrid or gaps between adjacent pieces of geogrid are not permitted.

3.05 Reinforced Backfill Placement
A. Reinforced backfill shall be placed, spread, and compacted in such a manner that minimizes the development of slack in the geogrid and installation damage.
B. Reinforced backfill shall be placed and compacted in lifts not to exceed 6 inches where hand compaction is used, or 8 - 10 inches where heavy compaction equipment is used. Lift thickness shall be decreased to achieve the required density as required.
C. Reinforced backfill shall be compacted to 95% of the maximum density as determined by ASTM D698. The moisture content of the backfill material prior to and during compaction shall be uniformly distributed throughout each layer and shall be + 3% to - 3% of optimum.
D. Only lightweight hand-operated equipment shall be allowed within 3 feet from the tail of the modular concrete unit.
E. Tracked construction equipment shall not be operated directly upon the geogrid reinforcement. A minimum fill thickness of 6 inches is required prior to operation of tracked vehicles over the geogrid. Tracked vehicle turning should be kept to a minimum to prevent tracks from displacing the fill and damaging the geogrid.
F. Rubber tired equipment may pass over geogrid reinforcement at slow speeds, less than 10 MPH. Sudden braking and sharp turning shall be avoided.
G. At the end of each day's operation, the Contractor shall slope the last lift of reinforced backfill away from the wall units to direct runoff away from wall face. The Contractor shall not allow surface runoff from adjacent areas to enter the wall construction site.

3.06 Cap Installation
A. Cap units shall be glued to underlying units with an all-weather adhesive recommended by the manufacturer.

3.07 Field Quality Control
A. The Owner shall engage inspection and testing services, including independent laboratories, to provide quality assurance and testing services during construction.
B. As a minimum, quality assurance testing should include foundation soil inspection, soil and backfill testing, verification of design parameters, and observation of construction for general compliance with design drawings and specifications.

NOTES:
1. No trees shall be planted within 10 feet of the top of the retaining wall.
2. Retaining walls shall only be constructed under the observation of a registered professional engineer and a (NICET, WACEL, or equiv.) certified soils technician.
3. One soil boring shall be required every one hundred feet along the entire length of the wall. Copies of all boring reports shall be provided to the Howard County Inspector Prior to the start of construction.
4. The required bearing pressure beneath the wall system shall be verified in the field by a certified soils technician. Testing documentation must be provided to the Howard County Inspector prior to start of construction. The required bearing test shall be the Dynamic Cone Penetrometer test ASTM STP-399.
5. The suitability of fill material shall be confirmed by the on-site soils technician. Each 8" lift must be compacted to a minimum 95% standard proctor density and the testing report shall be made available to the Howard County Inspector upon completion of construction.
6. Walls shall not be constructed on uncertified fill materials.
7. Walls shall not be constructed within a Howard Co. right-of-way or easement.

APPROVED: DEPARTMENT OF PLANNING AND ZONING

Chief, Development Engineering Division	Date 6/25/08
Chief, Division of Land Development	Date 6/27/08
Director	Date 6/30/08

APPROVED PLANNING BOARD of HOWARD COUNTY DATE 3/27/08

OWNER/DEVELOPER
MANGIONE ENTERPRISES OF TURF VALLEY LIMITED PARTNERSHIP
1205 YORK ROAD, PENTHOUSE
LUTHERVILLE, MARYLAND 21093
PHONE (410) 825-8400

PROFESSIONAL CERTIFICATION
I HEREBY CERTIFY THAT THESE PLANS WERE PREPARED OR APPROVED BY ME, AND THAT I AM A DULY LICENSED PROFESSIONAL ENGINEER UNDER THE LAWS OF THE STATE OF MARYLAND, LICENSE NO. 14434, EXPIRATION DATE: 05/13/09.

SEGMENTAL BLOCK RETAINING WALL #3 PLAN

TURF VALLEY, LORIEN
NURSING HOME & ASSISTED LIVING
PARCEL Q (per F-02-82) MULTI-USE SUBDISTRICT
PLAT 18773 - 18775
TAX MAP 16 - P/O PARCEL 8- GRID 16 & 17;
POD I per S-86-13 (4th AMENDED)
FIFTH ELECTION DISTRICT HOWARD COUNTY, MARYLAND

HILLIS-CARNES
ENGINEERING ASSOCIATES
10975 Guilford Road, Suite A
(410) 880-4783
Annapolis Junction, Maryland
Fax: (410) 880-4098

STATE OF MARYLAND PROFESSIONAL ENGINEER No. 14434

HCEA PROJECT #: 07235-R
DRAWN BY: HM
CHECKED BY: RWS
SCALE: AS SHOWN
DATE: 04/30/2008

SHEET: 11 OF 36

SDP-07-084

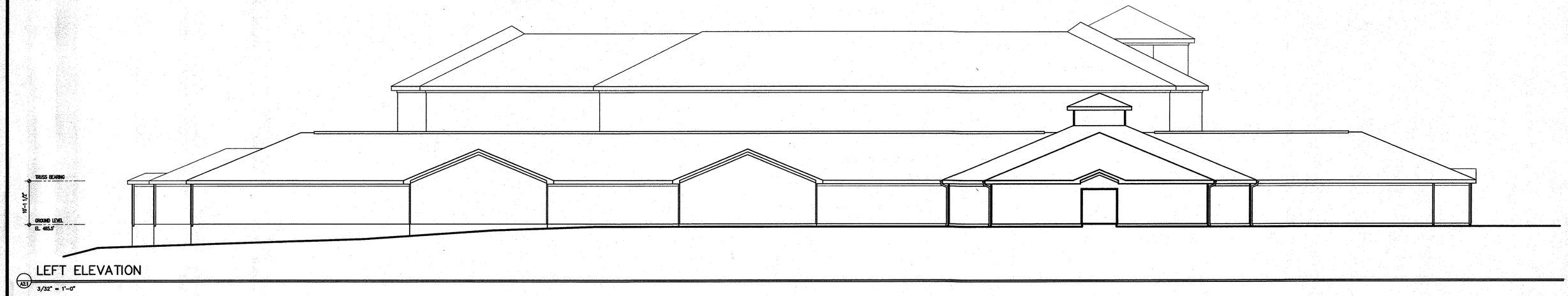

LEFT ELEVATION

A2-1 3/32" = 1'-0"

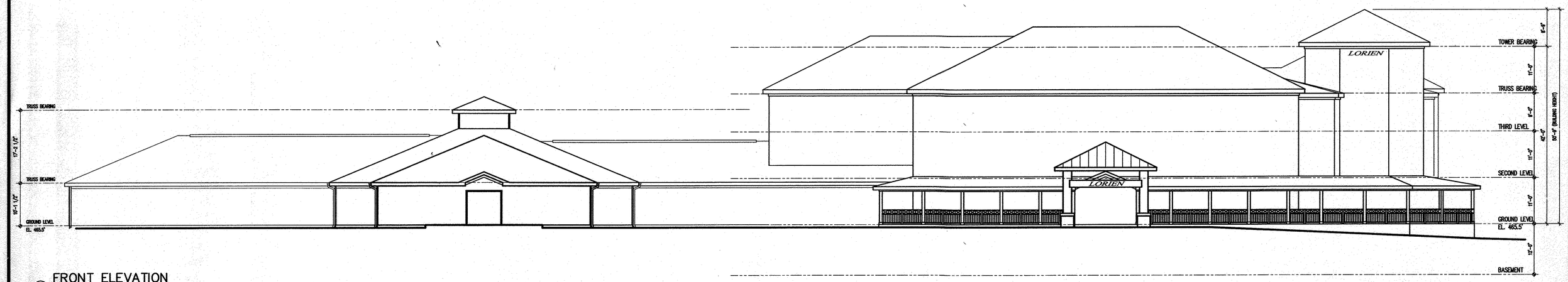

FRONT ELEVATION

A2-1 3/32" = 1'-0"

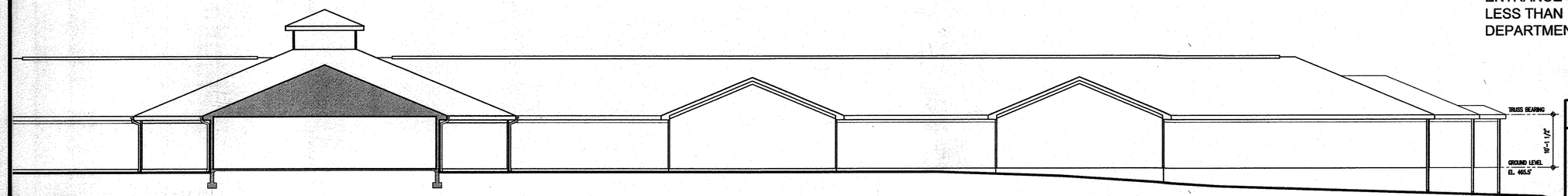

RIGHT ELEVATION – NURSING

A2-1 3/32" = 1'-0"

NOTE- THE CLEARANCE UNDER THE ENTRANCE CANOPY SHALL NOT BE LESS THAN 13'-6" FOR FIRE DEPARTMENT ACCESS.

OWNER
MANGIONE ENTERPRISES OF TURF VALLEY LIMITED PARTNERSHIP
1205 YORK ROAD, PENTHOUSE
LUTHERVILLE, MARYLAND 21093
PHONE (410) 825-8400

APPROVED
PLANNING BOARD
OF HOWARD COUNTY
DATE 3/27/08

APPROVED: DEPARTMENT OF PLANNING AND ZONING

Chief, Development Engineering Division — Date 6/25/08

Chief, Division of Land Development — Date 6/27/08

Director — Date 6/30/08

BUILDING ELEVATIONS

TURF VALLEY, LORIEN

NURSING HOME & ASSISTED LIVING FACILITY

OAKMONT AT TURF VALLEY
PARCEL Q
PLATS 18773 - 18775
TAX MAP 16 - P/O PARCEL 8- GRID 16 & 17;
POD I per S-86-13 (4th AMENDED)
THIRD ELECTION DISTRICT HOWARD COUNTY, MARYLAND

KCE ENGINEERING, INC.
EXECUTIVE CENTER
3300 NORTH RIDGE ROAD, SUITE 315
ELLICOTT CITY, MARYLAND 21043
PHONE (410) 203-9800 FAX (410) 203-9228

"Professional Certification. I hereby certify that these documents were prepared or approved by me, and that I am a duly licensed professional engineer under the laws of the State of Maryland, License NO. 8818, Expiration Date: 10/17/08."

STATE OF MARYLAND — DAVID V. KNOTTS — NO. 8818 — REGISTERED PROFESSIONAL ENGINEER

4/14/08

DRAWN BY: MG
CHECKED BY: DVK
SCALE: AS SHOWN
DATE: 04/30/2008

SHEET: 12 OF 36

SDP-07-084

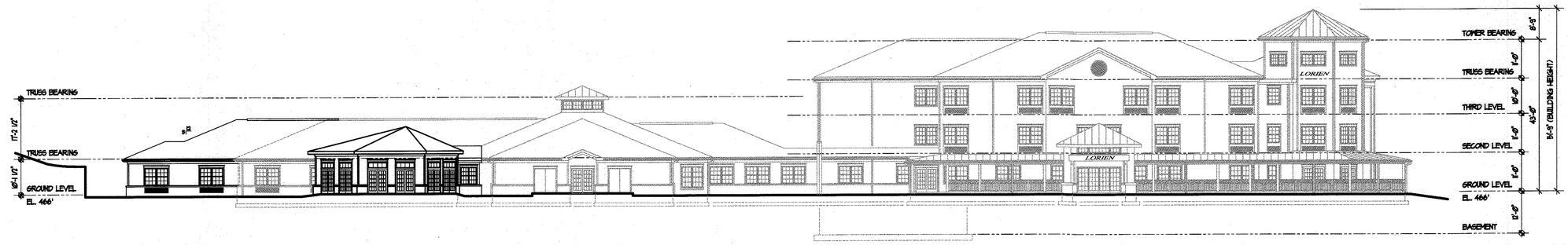

WEST ELEVATION

3/32" = 1'-0"

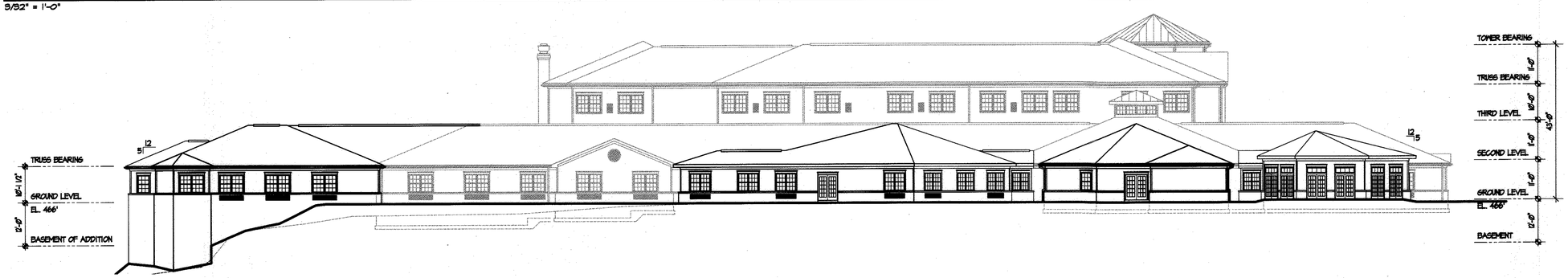

NORTH ELEVATION

3/32" = 1'-0"

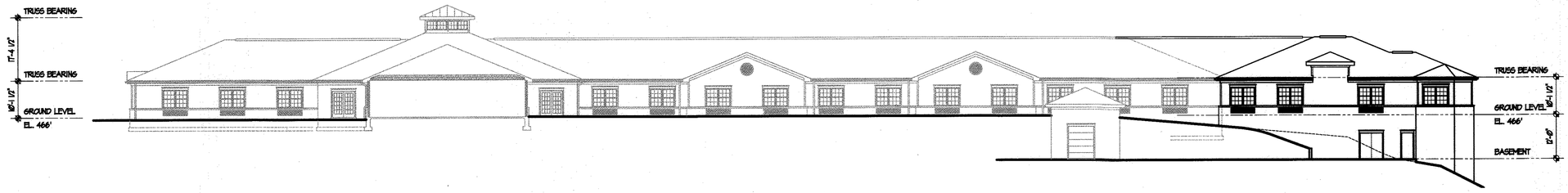

SOUTH ELEVATION

3/32" = 1'-0"

APPROVED
PLANNING BOARD
OF HOWARD COUNTY
DATE 3/27/2008
9/01/2016

APPROVED: DEPARTMENT OF PLANNING AND ZONING

Chief, Development Engineering Division — 11.28.16 Date

Chief, Division of Land Development — 12-6-16 Date

Director — 12-6-16 Date

BUILDING ELEVATIONS

TURF VALLEY, LORIEN

NURSING HOME & ASSISTED LIVING FACILITY

OAKMONT AT TURF VALLEY
PARCEL Q
PLATS 18773 - 18775
TAX MAP 16 - P/O PARCEL 8- GRID 16 & 17;
POD I per S-86-13 (4th AMENDED)
THIRD ELECTION DISTRICT HOWARD COUNTY, MARYLAND

BOARD OF EXAMINERS FOR ARCHITECTS 2002-E STATE OF MARYLAND

MEYERS + WILLIAMS P.C.
ARCHITECTS
PLANNERS
1600 West Joppa Road
Towson, MD 21204
Phone 410-321-6866
Fax 410-321-7749

DRAWN BY: JJS
CHECKED BY: WJM
SCALE: 1/16"=1'-0"
DATE: 08/10/2016

SHEET: 13 OF 36

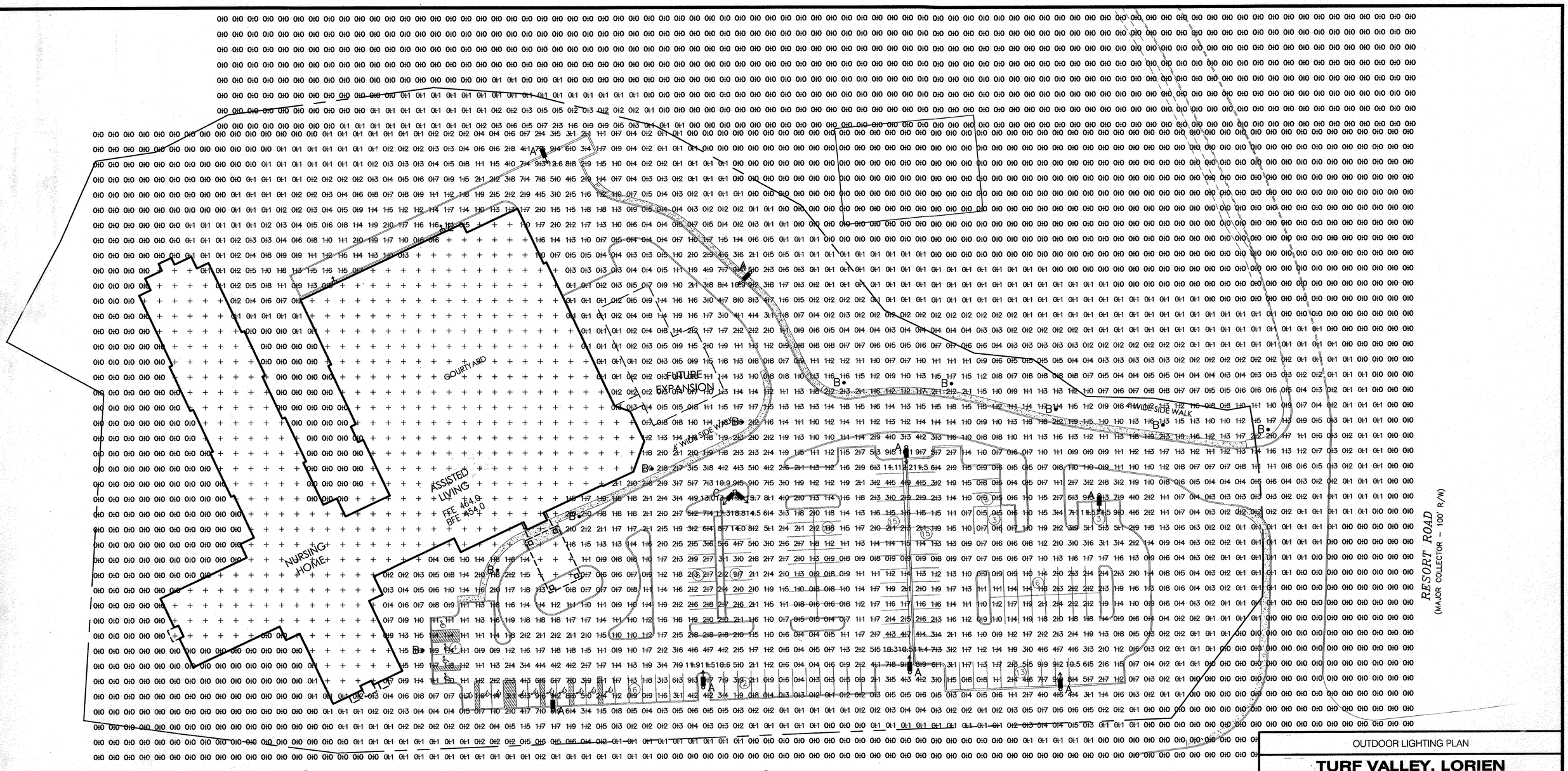

Target Point Set
3858 points at z=0, sp 10ft by 10ft

	A	B	C
Average	0.8	0.8	0.8
Maximum	19.4	19.4	19.4
Minimum	0.0	0.0	0.0
Avg:Min	N/A	N/A	N/A
Max:Min	N/A	N/A	N/A
Coef Var	2.03	2.03	2.03
UnifGrad	N/A	N/A	N/A

A HORIZONTAL FOOTCANDLES
B HORIZONTAL FOOTCANDLES
B HORIZONTAL FOOTCANDLES
C HORIZONTAL FOOTCANDLES

A	Streetworks MFT40Mw73D	400wMH	30'pole	277v
B	Streetworks ANE17MH733WHBF/STL	12'pole		
C	Streetworks (2)MFT40MHW73D	400WMH	30'pole	277v
E	Hubble 175w MH #PVL II 175H-128			

APPROVED
PLANNING BOARD
OF HOWARD COUNTY
DATE 3/27/08

APPROVED: DEPARTMENT OF PLANNING AND ZONING

Chief, Development Engineering Division — Date 6/25/08

Chief, Division of Land Development — Date 6/27/08

Director — Date 6/30/08

OWNER
MANGIONE ENTERPRISES OF TURF VALLEY
LIMITED PARTNERSHIP
1205 YORK ROAD, PENTHOUSE
LUTHERVILLE, MARYLAND 21093
PHONE (410) 825-8400

OUTDOOR LIGHTING PLAN

TURF VALLEY, LORIEN
NURSING HOME & ASSISTED LIVING FACILITY

OAKMONT AT TURF VALLEY
PARCEL Q
PLATS 18773 - 18775
TAX MAP 16 - P/O PARCEL 8- GRID 16 & 17;
POD I per S-86-13 (4th AMENDED)
THIRD ELECTION DISTRICT HOWARD COUNTY, MARYLAND

KCE ENGINEERING, INC.
EXECUTIVE CENTER
3300 NORTH RIDGE ROAD, SUITE 315
ELLICOTT CITY, MARYLAND 21043
PHONE (410) 203-9800 FAX (410) 203-9228

"Professional Certification. I hereby certify that these documents were prepared or approved by me, and that I am a duly licensed professional engineer under the laws of the State of Maryland, License NO. 8818, Expiration Date: 10/17/08."

STATE OF MARYLAND — NO. 8818 — REGISTERED PROFESSIONAL ENGINEER

4/24/08

DRAWN BY: MG
CHECKED BY: DVK
SCALE: AS SHOWN
DATE: 04/30/2008

SHEET: 14 OF 36

SDP-07-084

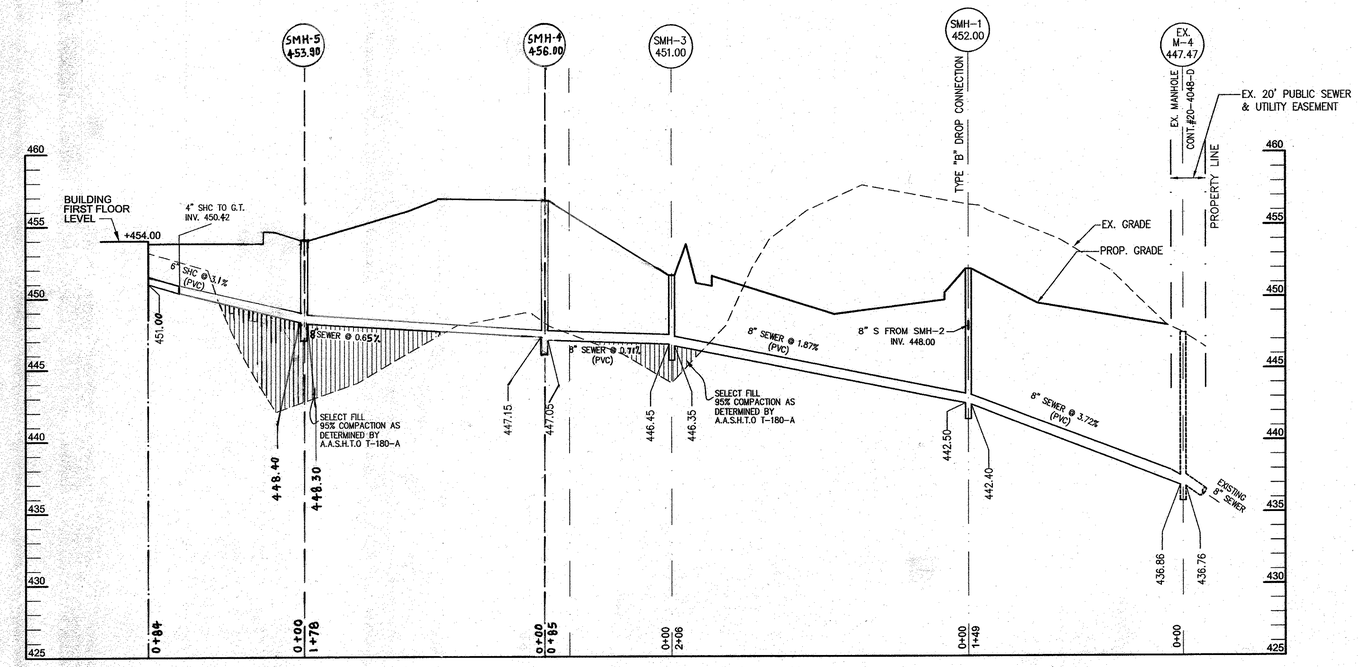

⚠ SEWER PROFILE
NURSING HOME SHC TO EX. MANHOLE M-4
SCALE 1"=50' H, 1"=5' V

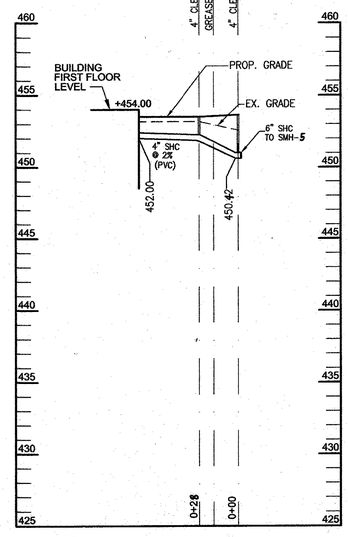

⚠ SEWER PROFILE
NURSING HOME SHC TO 6" SEWER SMH-5
SCALE 1"=50' H, 1"=5' V

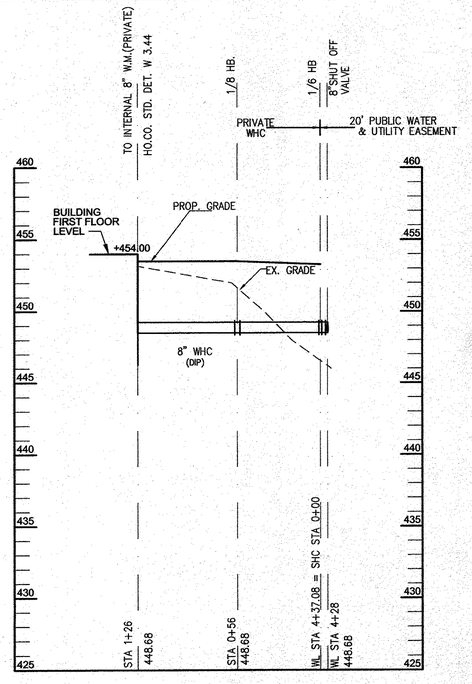

WHC PROFILE
SCALE 1"=50' H, 1"=5' V

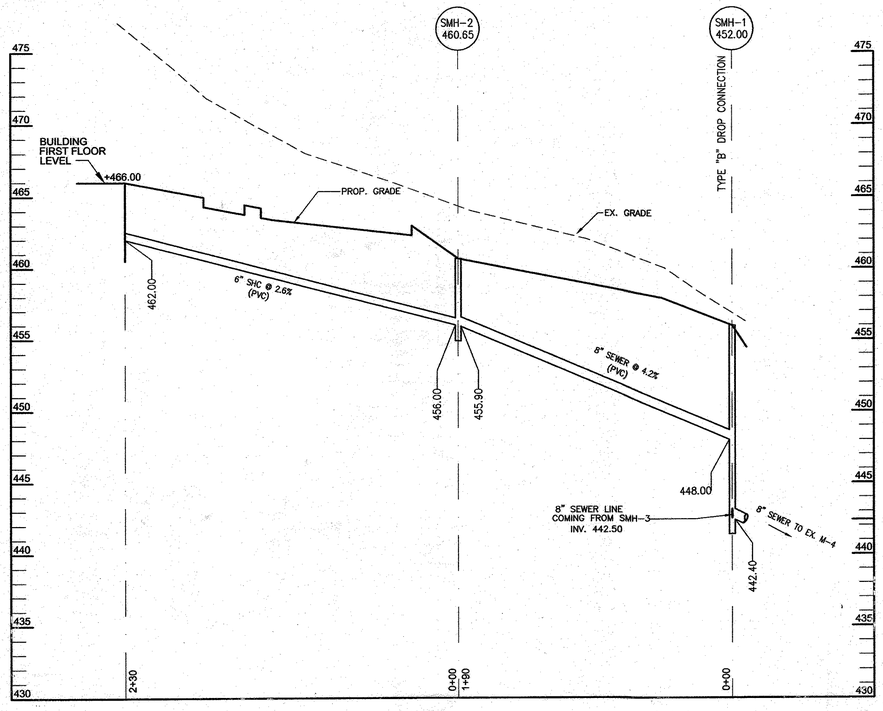

SEWER PROFILE
NURSING HOME SHC TO SMH-1
SCALE 1"=50' H, 1"=5' V

NO	BY	DATE	REVISION
1.	KCE	07/16/08	REVISED SEWER PROFILE FROM SMH 4 TO SMH 5 & SCHEDULE

SEWER MANHOLES SCHEDULE

	NO.	SYMBOL	TYPE	LOCATION	TOP ELEV.	INV. IN	INV. OUT
	1	SMH-1	TYPE "B" DROP MANHOLE HO. CO. STD DET S 1.32	N 595,139.49 E 1,340,647.27	452.00	448.00 442.50	442.40
	2	SMH-2	PRECAST MH HO. CO. STD DET G 5.12	N 595,321.46 E 1,340,704.53	460.65	456.00	455.90
	3	SMH-3	PRECAST MH HO. CO. STD DET G 5.12	N 595,076.19 E 1,340,847.92	451.00	446.45	446.35
⚠	4	SMH-4	PRECAST MH HO. CO. STD DET G 5.12	N 595,152.54 E 1,340,884.64	456.00	457.15	447.05
⚠	~~5~~	~~SMH-5~~	~~PRECAST MH HO. CO. STD DET G 5.12~~	~~N 595,178.06 E 1,340,949.35~~	~~456.87~~	~~447.61~~	~~447.51~~
⚠	5	SMH-5	PRECAST MH HO. CO. STD DET G 5.12	N 595,236.46 E 1,341,041.61	453.90	448.40	448.30

APPROVED
PLANNING BOARD
OF HOWARD COUNTY
DATE 3/27/08

APPROVED: DEPARTMENT OF PLANNING AND ZONING

Chief, Development Engineering Division — Date 10/25/08

Chief, Division of Land Development — Date 6/2/25

Director — Date 6/30/08

OWNER
MANGIONE ENTERPRISES OF TURF VALLEY
LIMITED PARTNERSHIP
1205 YORK ROAD, PENTHOUSE
LUTHERVILLE, MARYLAND 21093
PHONE (410) 825-8400

SEWER PROFILES

TURF VALLEY, LORIEN

NURSING HOME & ASSISTED LIVING FACILITY

OAKMONT AT TURF VALLEY
PARCEL Q
PLATS 18773 - 18775
TAX MAP 16 - P/O PARCEL 8- GRID 16 & 17;
POD I per S-86-13 (4th AMENDED)
THIRD ELECTION DISTRICT HOWARD COUNTY, MARYLAND

KCE ENGINEERING, INC.
EXECUTIVE CENTER
3300 NORTH RIDGE ROAD, SUITE 315
ELLICOTT CITY, MARYLAND 21043
PHONE (410) 203-9800 FAX (410) 203-9228

"Professional Certification. I hereby certify that these documents were prepared or approved by me, and that I am a duly licensed professional engineer under the laws of the State of Maryland, License NO. 8818, Expiration Date: 10/17/08"

STATE OF MARYLAND · DAVID VINCENT KNIGHT · NO. 8818 · REGISTERED PROFESSIONAL ENGINEER

6/24/08

DRAWN BY: MG
CHECKED BY: DVK
SCALE: AS SHOWN
DATE: 04/30/2008

SHEET: 15 OF 36

SDP-07-084

CURVE TABLE					
NO.	ARC LENGTH	CHORD LENGTH	CHORD BEARING	RADIUS	DELTA
C1	125.84'	125.61'	N 74°03'14" W	610.00'	11°49'11"

PROPERTY LINE TABLE		
NO.	LENGTH	BEARING
L1	74.34'	S 42°06'44" E
L2	58.40'	S 46°20'11" E
L3	39.62'	S 11°12'36" W
L4	53.61'	S 07°27'29" E
L5	135.80'	S 12°13'13" W
L6	62.18'	S 23°40'13" W
L7	86.37'	S 33°48'39" W
L8	109.12'	S 48°26'32" W
L9	88.27'	S 71°24'49" W
L10	65.27'	S 45°07'07" W
L11	38.60'	S 25°41'33" W
L12	43.15'	S 54°25'44" W
L13	44.38'	S 21°31'21" W
L14	48.85'	S 29°05'01" W
L15	15.00'	S 10°02'11" W
L16	52.43'	N 33°33'29" W
L17	47.38'	N 33°30'48" W

COORDINATE TABLE		
NO.	NORTHING	EASTING
668	595704.5297	1340842.4238
669	595031.8285	1340601.5238

LIMIT OF 100-YEAR FLOODPLAIN

OAKMONT AT TURF VALLEY
PARCEL X
PLAT 18773

OAKMONT AT TURF VALLEY
PARCEL Q
PLATS 18773-18775
6.07 acres

COURTYARD

ASSISTED LIVING
FFE 466.0
BFE 454.0

NURSING HOME
ONE STORY

FUTURE EXPANSION

0.09 / 0.74 D PGCC-C 66%
0.24 / 0.74 B PGCC-C 80%
0.85 / 0.74 C PGCC-C 20%
1.11 / 0.74 A PGCC 90%
0.41 / 0.74 I PGCC-C 85%
0.64 / 0.74 H PGCC-C 75%
0.45 / 0.74 G PGCC-C 95%
0.86 / 0.74 F PGCC-C 83%
0.52 / 0.74 E PGCC-C 18%
1.0 / 0.74 J PGCC-C 65%

MARRIOTTSVILLE ROAD
EX. INTERMEDIATE ARTERIAL (ULTIMATE 120' ROW)

RESORT ROAD
(MAJOR COLLECTOR - 100' R/W)
(F-02-74)

TURF VALLEY
PROFESSIONAL BLDGS
OPEN SPACE
PARCEL O
PLAT 18696

VEHICULAR INGRESS/EGRESS RESTRICTED

RETAINING WALL #1
RETAINING WALL #2
SWM FACILITY #1 WATER QUANTITY (CONV/STORM)
WQV (STORMVAULT)
OXYGEN TANK PAD
12.75'X 9.35' DUMPSTER PAD (SEE DET. ON SHT. 4)
75' STREAM BUFFER
25' WETLAND BUFFER
LOADING/UNLOADING AREA
GRAVEL DRIVEWAY (TO BE REMOVED)
EX. HOUSE (TO BE REMOVED)
5' WIDE SIDE WALK

APPROVED
PLANNING BOARD
OF HOWARD COUNTY
DATE 3/27/08

APPROVED: DEPARTMENT OF PLANNING AND ZONING

Chief, Development Engineering Division	Date 6/25/08
Chief, Division of Land Development	Date 6/27/08
Director	Date 6/30/08

SOIL LEGEND:

SOIL	TYPE	DESCRIPTION
EkB2	C	ELIOAK SILT LOAM, 3 TO 8% SLOPES, MODERATELY ERODED
EnB2	B	ELSINBORO LOAM, 8 TO 15% SLOPES, MODERATELY ERODED
GIC2	B	GLENELG LOAM, 8 TO 15% SLOPES, MODERATELY ERODED
CO	C	CODCRUS SILT LOAM

HOWARD COUNTY SOIL MAP # 9

OWNER
MANGIONE ENTERPRISES OF TURF VALLEY
LIMITED PARTNERSHIP
1205 YORK ROAD, PENTHOUSE
LUTHERVILLE, MARYLAND 21093
PHONE (410) 825-8400

LEGEND
- 25% SLOPES
- 15% - 24.9% SLOPES
- EX. WETLANDS
- EX. WETLAND BUFFER
- EX. STREAM
- EX. STREAM BUFFER
- EX. 100-YEAR FLOODPLAIN
- SOIL TYPES
- EXISTING EASEMENTS
- EX. WATER

STORM DRAIN- DRAINAGE AREA MAP

TURF VALLEY, LORIEN
NURSING HOME & ASSISTED LIVING FACILITY

OAKMONT AT TURF VALLEY
PARCEL Q
PLATS 18773 - 18775
TAX MAP 16 - P/O PARCEL 8- GRID 16 & 17;
POD I per S-86-13 (4th AMENDED)
THIRD ELECTION DISTRICT HOWARD COUNTY, MARYLAND

KCE ENGINEERING, INC.
EXECUTIVE CENTER
3300 NORTH RIDGE ROAD, SUITE 315
ELLICOTT CITY, MARYLAND 21043
PHONE (410) 203-9800 FAX (410) 203-9228

"Professional Certification. I hereby certify that these documents were prepared or approved by me, and that I am a duly licensed professional engineer under the laws of the State of Maryland, License NO. 8818, Expiration Date: 10/17/08"

STATE OF MARYLAND — NO. 8818 — REGISTERED PROFESSIONAL ENGINEER — 4/14/08

DRAWN BY: MG
CHECKED BY: DVK
SCALE: 1"=30'
DATE: 01/30/2008
SHEET: 16 OF 36

SDP-07-084

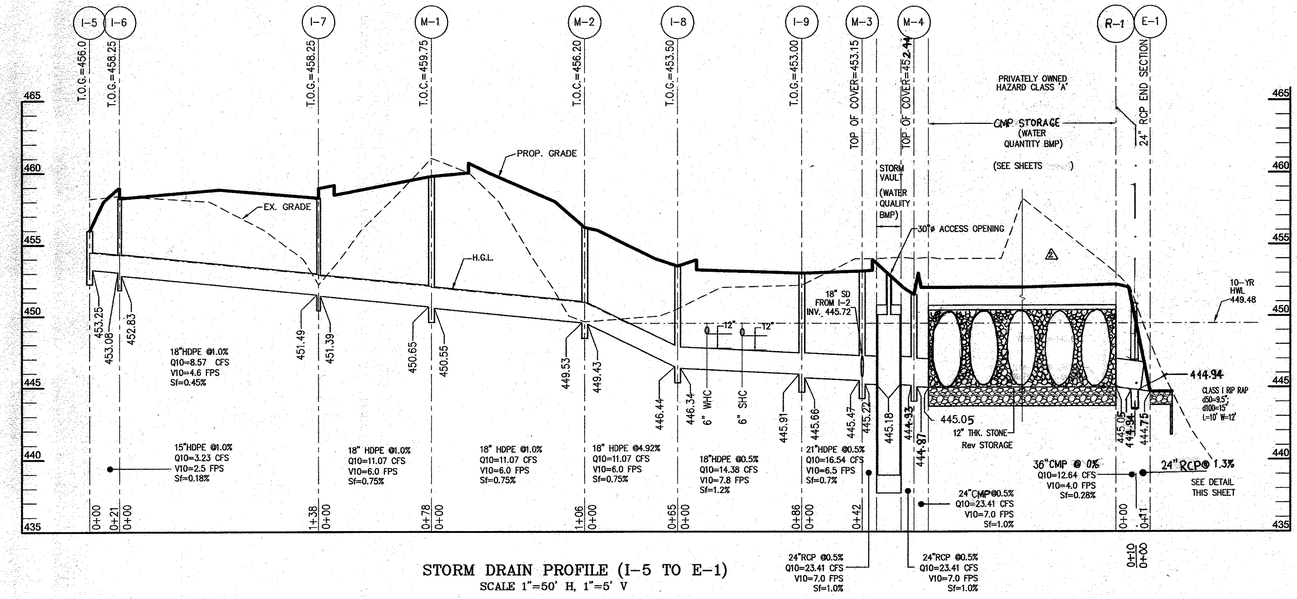

STORM DRAIN PROFILE (I-5 TO E-1)
SCALE 1"=50' H, 1"=5' V

STRUCTURE SCHEDULE

NO.	TYPE	LOCATION	INV. ELEV. (in)	INV. ELEV. (out)	WIDTH	TOP ELEVATION	STD. DETAIL
I-1	TYPE 'S' INLET	N 595,479.39, E 1,340,951.84	–	450.50		453.50	D 4.22
I-2	TYPE 'S' INLET	N 595,489.14, E 1,341,050.71	449.57	449.47		452.50	D 4.22
I-3	TYPE 'D' INLET	N 595,469.57, E 1,341,082.42	–	448.00		451.00	D 4.11
I-4	TYPE 'S' INLET	N 595,467.90, E 1,341,065.45	447.73	447.63		452.75	D 4.22
I-5	TYPE 'D' INLET	N 595,192.98, E 1,340,673.53	–	453.25		456.00	D 4.11
I-6	A-10 INLET	N 595,186.61, E 1,340,693.58	453.08	452.83	2'-6"	458.25	D 4.04
I-7	A-10 INLET	N 595,144.99, E 1,340,825.24	451.49	451.39	2'-6"	458.25	D 4.04
I-8	TYPE 'S' INLET	N 595,265.71, E 1,341,008.42	446.44	446.34		453.50	D 4.22
I-9	TYPE 'S' INLET	N 595,309.16, E 1,341,081.07	445.91	445.66		453.00	D 4.22
I-10	TYPE 'D' INLET	N 594,968.23, E 1,340,711.01	–	440.39		443.7	D 4.11
M-1	PRECAST CONCRETE MANHOLE	N 595,219.53, E 1,340,848.87	450.65	450.55	5'-0"	459.75	G 5.12
M-2	PRECAST CONCRETE MANHOLE	N 595,229.94, E 1,340,954.51	449.53	449.43	5'-0"	456.20	G 5.12
M-3	PRECAST CONCRETE MANHOLE	N 595,354.61, E 1,341,076.59	445.72	445.22	5'-0"	453.15	G 5.12
M-4	PRECAST CONCRETE MANHOLE	N 595,366.11, E 1,341,111.69	444.83	444.87	5'-0"	452.44	G 5.12
M-5	PRECAST CONCRETE MANHOLE	N 594,980.17, E 1,340,660.21	439.90	437.19	5'-0"	443.90	G 5.12
E-1	24" RCP END SECTION	N 595,349.78, E 1,341,126.71	–	444.75		–	D 5.51
R-1	CONCRETE RISER STR.	N 595,371.54, E 1341118.38	444.94	444.94	5'- 0"	452.11	—

PIPE SUMMARY

	SIZE	TYPE	LENGTH
PRIVATE	15"	HDPE	223'
	18"	HDPE	592'
	21"	HDPE	42'
	24"	RCP	18'
	15"	CMP	12'
	15"	RCP	10'
	24"	AL_2CMP	21'
	36"	AL_2CMP	10'

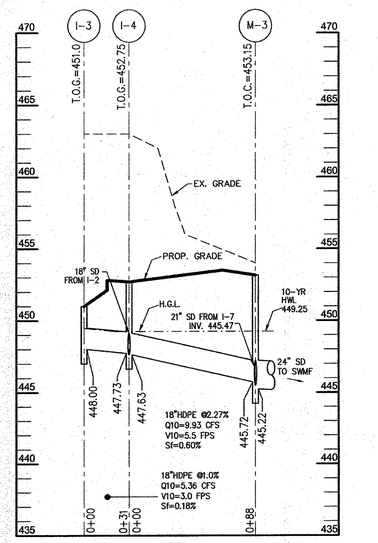

STORM DRAIN PROFILE (I-3 TO M-3)
SCALE 1"=50' H, 1"=5' V

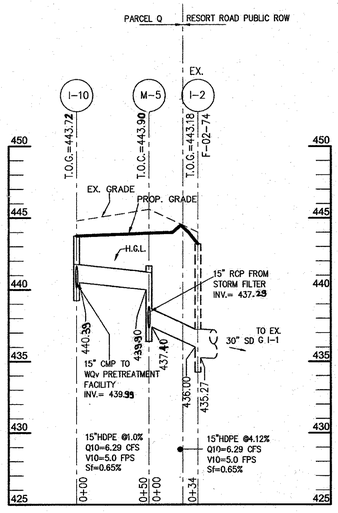

STORM DRAIN PROFILE (I-10 TO EX. I-2)
SCALE 1"=50' H, 1"=5' V

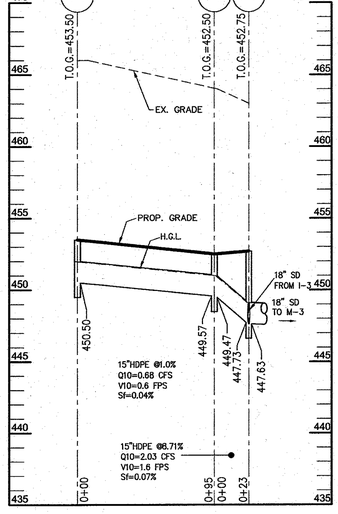

STORM DRAIN PROFILE (I-1 TO I-4)
SCALE 1"=50' H, 1"=5' V

DETAIL 27 - ROCK OUTLET PROTECTION III

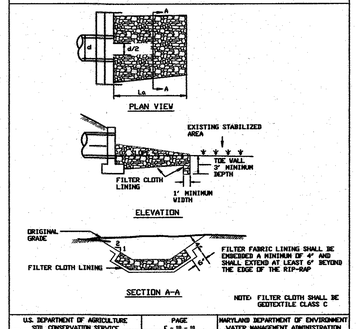

U.S. DEPARTMENT OF AGRICULTURE SOIL CONSERVATION SERVICE	PAGE F-18-10	MARYLAND DEPARTMENT OF ENVIRONMENT WATER MANAGEMENT ADMINISTRATION

ROCK OUTLET PROTECTION-III

Construction Specifications

1. The subgrade for the filter, rip-rap, or gabion shall be prepared to the required lines and grades. Any fill required in the subgrade shall be compacted to a density of approximately that of the surrounding undisturbed material.
2. The rock or gravel shall conform to the specified grading limits when installed respectively in the rip-rap or filter.
3. Geotextile shall be protected from punching, cutting, or tearing. Any damage other than an occasional small hole shall be repaired by placing another piece of geotextile over the damaged part or by completely replacing the geotextile. All overlaps whether for repairs or for joining two pieces of geotextile shall be a minimum of one foot.
4. Stone for the rip-rap or gabion outlets may be placed by equipment. They shall be constructed to the full course thickness in one operation and in such a manner as to avoid displacement of underlying materials. The stone for rip-rap or gabion outlets shall be delivered and placed in a manner that will ensure that it is reasonably homogeneous with the smaller stones and spalls filling the voids between the larger stones. Rip-rap shall be placed in a manner to prevent damage to the filter blanket or geotextile. Hand placement will be required to the extent necessary to prevent damage to the permanent works.
5. The stone shall be placed so that it blends in with the existing ground. If the stone is placed too high then the flow will be forced out of the channel and scour adjacent to the stone will occur.

U.S. DEPARTMENT OF AGRICULTURE SOIL CONSERVATION SERVICE	PAGE F-18-10A	MARYLAND DEPARTMENT OF ENVIRONMENT WATER MANAGEMENT ADMINISTRATION

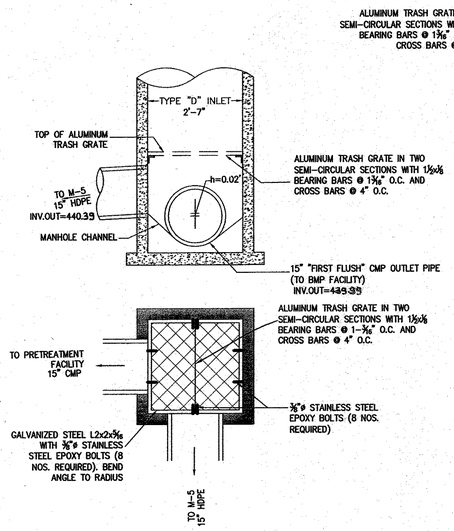

ISOLATION/DIVERSION INLET (I-10)

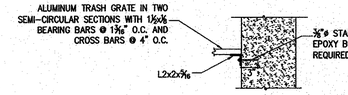

GRATE FIXING DETAIL

OWNER
MANGIONE ENTERPRISES OF TURF VALLEY LIMITED PARTNERSHIP
1205 YORK ROAD, PENTHOUSE
LUTHERVILLE, MARYLAND 21093
PHONE (410) 825-8400

NO	REVISION	BY	DATE
3	SWM AS-BUILT INFORMATION ADDED	KCE	03/01/10
2	REVISED PROFILE I-5 TO E-1, STRUCTURESCHEDULE, PIPESUM	KCE	09/02/08
1	REVISED LOCATION OF I-10	KCE	07/16/08

STORM DRAIN PROFILES & DETAILS

TURF VALLEY, LORIEN

NURSING HOME & ASSISTED LIVING FACILITY

OAKMONT AT TURF VALLEY
PARCEL Q
PLATS 18773 - 18775
TAX MAP 16 - P/O PARCEL 8- GRID 16 & 17;
POD I per S-86-13 (4th AMENDED)
THIRD ELECTION DISTRICT HOWARD COUNTY, MARYLAND

KCE ENGINEERING, INC.
EXECUTIVE CENTER
3300 NORTH RIDGE ROAD, SUITE 315
ELLICOTT CITY, MARYLAND 21043
PHONE (410) 203-9800 FAX (410) 203-9228

APPROVED
PLANNING BOARD
OF HOWARD COUNTY
DATE 3/27/08

APPROVED: DEPARTMENT OF PLANNING AND ZONING

Chief, Development Engineering Division — 6/25/08 Date
Chief, Division of Land Development — 6/27/08 Date
Director — 6/30/08 Date

"Professional Certification. I hereby certify that these documents were prepared or approved by me, and that I am a duly licensed professional engineer under the laws of the State of Maryland, License NO. 8818, Expiration Date: 10/17/08."

STATE OF MARYLAND — DAVID V. KNIGHT — NO. 8818 — REGISTERED PROFESSIONAL ENGINEER
4/24/08

DRAWN BY: MG
CHECKED BY: DVK
SCALE: AS SHOWN
DATE: 04/30/2008

SHEET: 17 OF 36

SDP-07-084

HILLIS - CARNES ENGINEERING ASSOCIATES, INC.

RECORD OF SOIL EXPLORATION

Project Name: Turf Valley Lorien — Boring No.: B-1
Location: Howard County, Maryland — Job #: 07018A

SAMPLER

Datum: — Hammer Wt.: 140 lbs. — Hole Diameter: 6" — Foreman: S. Wooden
Surf. Elev.: 446.87 Ft. — Hammer Drop: 30 in. — Rock Core Diameter: — Inspector: —
Date Started: 1/09/07 — Pipe Size: 2 in. — Boring Method: HSA — Date Completed: 1/09/07

Elevation/ Depth	SOIL SYMBOLS/ SAMPLE CONDITIONS	Description	Boring and Sampling Notes	Rec.	NM	SPT Blows	SPT Blows/Foot N	SPT Blows/Foot Curve (10 30 50)
0	D	Brown, moist, stiff, sandy silt, trace rock fragments, clay and organics (ML; FILL)	Topsoil-4"	8"		2-4-6	12	
4	D	Reddish brown, moist, stiff, clay (CL)		14"		9-10-12	22	
7	D	Light brown, moist, medium stiff, sandy silt (ML)		16"		3-3-4	7	
8	D	Light brown, moist, medium dense, silty sand (SM)	Note: 24 hour groundwater reading appears to have been affected by surface water	15"		3-5-6	12	
12	D	Light brown, wet, soft to medium stiff, sandy silt (ML)		13"		5-4-2	6	
16				16"		1-2-2	4	
20		Bottom of boring @ 20.0'	Groundwater encountered @ 18.0' while drilling	18"		3-3-3	6	

SAMPLER TYPE: DRIVEN SPLIT SPOON UNLESS OTHERWISE; PT - PRESSED SHELBY TUBE; CA - CONTINUOUS FLIGHT AUGER; RC - ROCK CORE

SAMPLE CONDITIONS: D - DISINTEGRATED; I - INTACT; U - UNDISTURBED; L - LOST

	GROUND WATER	CAVE IN DEPTH
AT COMPLETION	Dry ft.	ft.
AFTER 24 HRS.	6.0 ft.	10.5 ft.
AFTER 72 HRS.	10.0 ft.	10.5 ft.

BORING METHOD: HSA - HOLLOW STEM AUGERS; CFA - CONTINUOUS FLIGHT AUGERS; DC - DRIVING CASING; MD - MUD DRILLING

STANDARD PENETRATION TEST-DRIVING 2" O.D. SAMPLER 1' WITH 140# HAMMER FALLING 30"; COUNT MADE AT 6" INTERVALS.

HILLIS - CARNES ENGINEERING ASSOCIATES, INC.

RECORD OF SOIL EXPLORATION

Project Name: Turf Valley Lorien — Boring No.: B-2
Location: Howard County, Maryland — Job #: 07018A

SAMPLER

Datum: — Hammer Wt.: 140 lbs. — Hole Diameter: 6" — Foreman: S. Wooden
Surf. Elev.: 446.90 Ft. — Hammer Drop: 30 in. — Rock Core Diameter: — Inspector: —
Date Started: 1/09/07 — Pipe Size: 2 in. — Boring Method: HSA — Date Completed: 1/09/07

Elevation/ Depth	SOIL SYMBOLS/ SAMPLE CONDITIONS	Description	Boring and Sampling Notes	Rec.	NM	SPT Blows	SPT Blows/Foot N	SPT Blows/Foot Curve (10 30 50)
0	D	Brown to light brown, moist, medium stiff, sandy silt, trace clay and roots (ML)	Topsoil-3"	6"		2-3-3	6	
4	D		No groundwater encountered while drilling	13"		3-3-5	8	
8	D	Light brown, moist, medium stiff to stiff, micaceous sandy silt (ML)		14"		4-4-6	10	
12	D			10"		3-7-6	13	
16	D			15"		3-4-4	8	
20	D			15"		2-3-4	7	
24		Bottom of boring @ 20.0'		11"		3-4-4	8	

SAMPLER TYPE: DRIVEN SPLIT SPOON UNLESS OTHERWISE; PT - PRESSED SHELBY TUBE; CA - CONTINUOUS FLIGHT AUGER; RC - ROCK CORE

SAMPLE CONDITIONS: D - DISINTEGRATED; I - INTACT; U - UNDISTURBED; L - LOST

	GROUND WATER	CAVE IN DEPTH
AT COMPLETION	Dry ft.	9.0 ft.
AFTER 24 HRS.	ft.	ft.
AFTER ___ HRS.	ft.	ft.

BORING METHOD: HSA - HOLLOW STEM AUGERS; CFA - CONTINUOUS FLIGHT AUGERS; DC - DRIVING CASING; MD - MUD DRILLING

STANDARD PENETRATION TEST-DRIVING 2" O.D. SAMPLER 1' WITH 140# HAMMER FALLING 30"; COUNT MADE AT 6" INTERVALS.

HILLIS - CARNES ENGINEERING ASSOCIATES, INC.

RECORD OF SOIL EXPLORATION

Project Name: Turf Valley Lorien — Boring No.: B-5
Location: Howard County, Maryland — Job #: 07018A

SAMPLER

Datum: — Hammer Wt.: 140 lbs. — Hole Diameter: 6" — Foreman: Victor Smith
Surf. Elev.: 465.88 Ft. — Hammer Drop: 30 in. — Rock Core Diameter: — Inspector: —
Date Started: 1/11/07 — Pipe Size: 2 in. — Boring Method: HSA — Date Completed: 1/11/07

Elevation/ Depth	SOIL SYMBOLS/ SAMPLE CONDITIONS	Description	Boring and Sampling Notes	Rec.	NM	SPT Blows	SPT Blows/Foot N	SPT Blows/Foot Curve (10 30 50)
0	D	Brown, Gray, Tan, Moist, loose, Medium Sand, trace silt with rock fragments (SM)	Topsoil-4"	18"		2-2-5	7	
4	D		No groundwater encountered.	7"		25-51/2"	100+	
8	D	Brown, Gray, Tan, Moist, very dense, Medium Sand, trace silt with rock fragments (SM; Decomposed ROCK)		3"		51/3"	100+	
12	D			0"		51/0"	100+	
16	U	Auger refusal @ 9.0' Bottom of Boring @ 9.0'		0"		51/0"	100+	
20								
24								

SAMPLER TYPE: DRIVEN SPLIT SPOON UNLESS OTHERWISE; PT - PRESSED SHELBY TUBE; CA - CONTINUOUS FLIGHT AUGER; RC - ROCK CORE

SAMPLE CONDITIONS: D - DISINTEGRATED; I - INTACT; U - UNDISTURBED; L - LOST

	GROUND WATER	CAVE IN DEPTH
AT COMPLETION	Dry ft.	5.5 ft.
AFTER 24 HRS.	Dry ft.	5.5 ft.
AFTER ___ HRS.	ft.	ft.

BORING METHOD: HSA - HOLLOW STEM AUGERS; CFA - CONTINUOUS FLIGHT AUGERS; DC - DRIVING CASING; MD - MUD DRILLING

STANDARD PENETRATION TEST-DRIVING 2" O.D. SAMPLER 1' WITH 140# HAMMER FALLING 30"; COUNT MADE AT 6" INTERVALS.

HILLIS - CARNES ENGINEERING ASSOCIATES, INC.

RECORD OF SOIL EXPLORATION

Project Name: Turf Valley Lorien — Boring No.: B-6
Location: Howard County, Maryland — Job #: 07018A

SAMPLER

Datum: — Hammer Wt.: 140 lbs. — Hole Diameter: 6" — Foreman: L. Smith
Surf. Elev.: 470.45 Ft. — Hammer Drop: 30 in. — Rock Core Diameter: — Inspector: —
Date Started: 1/10/07 — Pipe Size: 2 in. — Boring Method: HSA — Date Completed: 1/10/07

Elevation/ Depth	SOIL SYMBOLS/ SAMPLE CONDITIONS	Description	Boring and Sampling Notes	Rec.	NM	SPT Blows	SPT Blows/Foot N	SPT Blows/Foot Curve (10 30 50)
0	D	Brown, moist, very loose, silty sand, some rock fragments, trace organics (SM; Possible FILL)	Topsoil-5"	4"		2-2-2	4	
4	D	Reddish brown, moist, medium dense to dense, micaceous silty sand, trace rock fragments (SM)	No groundwater encountered while drilling	18"		9-11-22	33	
8	D			18"		9-16-17	33	
12	D			18"		9-11-12	23	
16	L	(Decomposed ROCK)		17"		5-8-6	12	
20	U	Auger refusal @ 18.0' Bottom of boring @ 18.0'	Boring offset 15.0' towards SB-4	0"		51/0"	100+	
24								

SAMPLER TYPE: DRIVEN SPLIT SPOON UNLESS OTHERWISE; PT - PRESSED SHELBY TUBE; CA - CONTINUOUS FLIGHT AUGER; RC - ROCK CORE

SAMPLE CONDITIONS: D - DISINTEGRATED; I - INTACT; U - UNDISTURBED; L - LOST

	GROUND WATER	CAVE IN DEPTH
AT COMPLETION	Dry ft.	10.8 ft.
AFTER 24 HRS.	ft.	ft.
AFTER ___ HRS.	ft.	ft.

BORING METHOD: HSA - HOLLOW STEM AUGERS; CFA - CONTINUOUS FLIGHT AUGERS; DC - DRIVING CASING; MD - MUD DRILLING

STANDARD PENETRATION TEST-DRIVING 2" O.D. SAMPLER 1' WITH 140# HAMMER FALLING 30"; COUNT MADE AT 6" INTERVALS.

HILLIS - CARNES ENGINEERING ASSOCIATES, INC.

RECORD OF SOIL EXPLORATION

Project Name: Turf Valley Lorien — Boring No.: B-7
Location: Howard County, Maryland — Job #: 07018A

SAMPLER

Datum: — Hammer Wt.: 140 lbs. — Hole Diameter: 6" — Foreman: M. Stawas
Surf. Elev.: 464.05 Ft. — Hammer Drop: 30 in. — Rock Core Diameter: — Inspector: —
Date Started: 1/11/07 — Pipe Size: 2 in. — Boring Method: HSA — Date Completed: 1/11/07

Elevation/ Depth	SOIL SYMBOLS/ SAMPLE CONDITIONS	Description	Boring and Sampling Notes	Rec.	NM	SPT Blows	SPT Blows/Foot N	SPT Blows/Foot Curve (10 30 50)
0	D	Brown, moist, medium stiff, sandy silt, trace organics and rock fragments (ML)	Topsoil-3"	5"		4-3-3	6	
4	D		No groundwater encountered while drilling	13"		7-26-17	43	
8	D	Gray, moist to dry, dense to very dense, micaceous silty sand and rock fragments (GM-SM)		12"		26-41-20	61	
12	D	Gray, dry, medium dense, micaceous silty sand, trace rock fragments (SM)		14"		11-7-7	14	
16	D			5"		50/5"	100+	
20	D	Gray, dry, very dense, micaceous silty sand, trace rock fragments (SM; Decomposed ROCK)		14"		22-5-50/3"	100+	
24		Auger refusal @ 20.5' Bottom of boring @ 20.5'						

SAMPLER TYPE: DRIVEN SPLIT SPOON UNLESS OTHERWISE; PT - PRESSED SHELBY TUBE; CA - CONTINUOUS FLIGHT AUGER; RC - ROCK CORE

SAMPLE CONDITIONS: D - DISINTEGRATED; I - INTACT; U - UNDISTURBED; L - LOST

	GROUND WATER	CAVE IN DEPTH
AT COMPLETION	Dry ft.	15.0 ft.
AFTER 24 HRS.	Dry ft.	13.0 ft.
AFTER ___ HRS.	ft.	ft.

BORING METHOD: HSA - HOLLOW STEM AUGERS; CFA - CONTINUOUS FLIGHT AUGERS; DC - DRIVING CASING; MD - MUD DRILLING

STANDARD PENETRATION TEST-DRIVING 2" O.D. SAMPLER 1' WITH 140# HAMMER FALLING 30"; COUNT MADE AT 6" INTERVALS.

HILLIS - CARNES ENGINEERING ASSOCIATES, INC.

RECORD OF SOIL EXPLORATION

Project Name: Turf Valley Lorien — Boring No.: B-8
Location: Howard County, Maryland — Job #: 07018A

SAMPLER

Datum: — Hammer Wt.: 140 lbs. — Hole Diameter: 6" — Foreman: L. Smith
Surf. Elev.: 454.82 Ft. — Hammer Drop: 30 in. — Rock Core Diameter: — Inspector: —
Date Started: 1/09/07 — Pipe Size: 2 in. — Boring Method: HSA — Date Completed: 1/09/07

Elevation/ Depth	SOIL SYMBOLS/ SAMPLE CONDITIONS	Description	Boring and Sampling Notes	Rec.	NM	SPT Blows	SPT Blows/Foot N	SPT Blows/Foot Curve (10 30 50)
0	D	Brown, moist, dense, micaceous silty sand to sandy silt (SM-ML)	Topsoil-5"	18"		6-13-22	35	
4	D	Brown, moist, very dense, micaceous silty sand to sandy silt (SM-ML; Decomposed ROCK)	No groundwater encountered while drilling	18"		38-48-51	99	
8	D							
12	D	Auger refusal @ 5.1' Bottom of boring @ 5.1'	Boring B-8A was offset 5.0' from B-8 towards B-10 and met auger refusal @ 7.0	1"		51/1"	100+	
16								
20								
24								

SAMPLER TYPE: DRIVEN SPLIT SPOON UNLESS OTHERWISE; PT - PRESSED SHELBY TUBE; CA - CONTINUOUS FLIGHT AUGER; RC - ROCK CORE

SAMPLE CONDITIONS: D - DISINTEGRATED; I - INTACT; U - UNDISTURBED; L - LOST

	GROUND WATER	CAVE IN DEPTH
AT COMPLETION	Dry ft.	4.0 ft.
AFTER 24 HRS.	Dry ft.	4.5 ft.
AFTER ___ HRS.	ft.	ft.

BORING METHOD: HSA - HOLLOW STEM AUGERS; CFA - CONTINUOUS FLIGHT AUGERS; DC - DRIVING CASING; MD - MUD DRILLING

STANDARD PENETRATION TEST-DRIVING 2" O.D. SAMPLER 1' WITH 140# HAMMER FALLING 30"; COUNT MADE AT 6" INTERVALS.

HILLIS - CARNES ENGINEERING ASSOCIATES, INC.

RECORD OF SOIL EXPLORATION

Project Name: Turf Valley Lorien — Boring No.: B-9
Location: Howard County, Maryland — Job #: 07018A

SAMPLER

Datum: — Hammer Wt.: 140 lbs. — Hole Diameter: 6" — Foreman: L. Smith
Surf. Elev.: 451+/- Ft. — Hammer Drop: 30 in. — Rock Core Diameter: — Inspector: —
Date Started: 1/09/07 — Pipe Size: 2 in. — Boring Method: HSA — Date Completed: 1/09/07

Elevation/ Depth	SOIL SYMBOLS/ SAMPLE CONDITIONS	Description	Boring and Sampling Notes	Rec.	NM	SPT Blows	SPT Blows/Foot N	SPT Blows/Foot Curve (10 30 50)
0	D	Brown, moist, very loose, micaceous silty sand (SM; Possible FILL)	Topsoil-3"	5"		2-3-1	4	
4	D	Brown, damp, stiff, micaceous sandy silt, trace rock fragments and organics (ML)	No groundwater encountered while drilling	12"		5-10-11	21	
8	D			13"		12-27-51/4"	100+	
12	D	Brown to gray, moist, very dense, micaceous silty sand, trace to some rock fragments (SM; Decomposed ROCK)		4"		51/4"	100+	
16	D			10"		45-51/4"	100+	
20	L							
24	U	Bottom of boring @ 15.4'	Boring offset 5.0' towards B-10	0"		51/5"	100+	

SAMPLER TYPE: DRIVEN SPLIT SPOON UNLESS OTHERWISE; PT - PRESSED SHELBY TUBE; CA - CONTINUOUS FLIGHT AUGER; RC - ROCK CORE

SAMPLE CONDITIONS: D - DISINTEGRATED; I - INTACT; U - UNDISTURBED; L - LOST

	GROUND WATER	CAVE IN DEPTH
AT COMPLETION	Dry ft.	9.4 ft.
AFTER 24 HRS.	Dry ft.	10.0 ft.
AFTER ___ HRS.	ft.	ft.

BORING METHOD: HSA - HOLLOW STEM AUGERS; CFA - CONTINUOUS FLIGHT AUGERS; DC - DRIVING CASING; MD - MUD DRILLING

STANDARD PENETRATION TEST-DRIVING 2" O.D. SAMPLER 1' WITH 140# HAMMER FALLING 30"; COUNT MADE AT 6" INTERVALS.

APPROVED
PLANNING BOARD
OF HOWARD COUNTY
DATE 3/27/08

APPROVED: DEPARTMENT OF PLANNING AND ZONING

Chief, Development Engineering Division — Date 6/5/08
Chief, Division of Land Development — Date 6/27/08
Director — Date 6/30/08

OWNER
MANGIONE ENTERPRISES OF TURF VALLEY
LIMITED PARTNERSHIP
1205 YORK ROAD, PENTHOUSE
LUTHERVILLE, MARYLAND 21093
PHONE (410) 825-8400

NO	REVISION	DATE

BORING LOGS

TURF VALLEY, LORIEN
NURSING HOME & ASSISTED LIVING FACILITY

OAKMONT AT TURF VALLEY
PARCEL Q
PLATS 18773 - 18775
TAX MAP 16 - P/O PARCEL 8- GRID 16 & 17;
POD I per S-86-13 (4th AMENDED)
THIRD ELECTION DISTRICT HOWARD COUNTY, MARYLAND

KCE ENGINEERING, INC.
EXECUTIVE CENTER
3300 NORTH RIDGE ROAD, SUITE 315
ELLICOTT CITY, MARYLAND 21043
PHONE (410) 203-9800 FAX (410) 203-9228

"Professional Certification. I hereby certify that these documents were prepared or approved by me, and that I am a duly licensed professional engineer under the laws of the State of Maryland, License NO. 6818, Expiration Date: 10/17/08."

STATE OF MARYLAND — DONALD V. KAYHART — NO. 6818 — REGISTERED PROFESSIONAL ENGINEER

DRAWN BY: MG
CHECKED BY: DVK
SCALE: ____
DATE: 04/30/2008

SHEET: 18 OF 36

SDP-07-084

BILL OF MATERIALS						
PIECE	QTY	Ø	CORRUGATION	GAGE	FINISH	LENGTH
A	1	66	5X1	16	ALT2	27'-9"
B	1	66	5X1	16	ALT2	34'-11"
C	1	66	5X1	16	ALT2	21'-11"
D	2	66	5X1	16	ALT2	8'-11"
E	1	66	5X1	16	ALT2	22'-2"
F	1	66	5X1	16	ALT2	24'-2"
G	2	66	5X1	16	ALT2	20'-0"
H	18	66	5X1	16	ALT2	24'-0"
J	2	66	5X1	16	ALT2	17'-0"
TOTAL LENGTH						654'-9"

FITTINGS AND MISCELLANEOUS						
PIECE	QTY	Ø	CORRUGATION	GAGE	FINISH	LENGTH
A1	1	36	2⅔ x ½	16	ALT2	TBD
A2	1	36	2⅔ x ½	16	ALT2	10'
A3	1	24	2⅔ x ½	16	ALT2	9.5'

NOTES

GENERAL NOTES:

1. This bridge has been designed for general site conditions. The project engineer shall be responsible for the structure's suitability to the existing site conditions and for the hydraulic evaluation -- including scour and confirmation of soil conditions.
2. Prior to construction, contractor must verify all elevations shown through the engineer.
3. Only CONTECH Stormwater Solutions Inc. the CON/SPAN® approved precaster in Maryland may provide the structure designed in accordance with these plans.
4. Maximum weight of Precast Unit equals StormVault 22.1 Tons ~~CON/STORM 2.6 Tons~~
5. All debris shall be kept out of the facility during and after construction.

DESIGN DATA

Design Loading:
Vault Units: HS20-44
Design Fill Height: StormVault 10" min. to 2'-0" max.
~~CON/STORM 1'-3" min. to 2'-0" max.~~
from top of crown to top of pavement.
Design Method: Load factor per AASHTO Specification
Assumed net allowable soil bearing pressure: 3000 PSF

Pretreatment Volume Required = 0.026 Ac.ft.
Water Quality Volume Required = 0.21 Ac.ft.
Recharge Volume Required = 0.04 Ac.ft.
Storage Volume Required = 0.3 Ac.ft.

Pretreatment Volume Provided = 1303 cu.ft (0.03 Ac.ft).
Water Quality Volume Provided = 9780 cu.ft (0.22 Ac.ft).
Recharge Volume Provided = 1830 cu.ft (0.043 Ac.ft).
Storage Volume Provided = 23,028 cu.ft (0.367 Ac.ft).

*At the time of design, a geotechnical report for the project site was not available. It is the project engineer's, owner's and/or the contractor's responsibility to verify that the actual site conditions at the time of construction are consistent with the assumed allowable soil bearing pressure with a geotechnical investigation from a qualified geotechnical engineer.

MATERIALS

Precast units shall be constructed and installed in accordance with CON/SPAN® Specifications. Concrete for Footings shall have a minimum compressive strength of 4000 psi. Reinforcing steel for footings shall conform to ASTM A615 or A996-Grade 60.

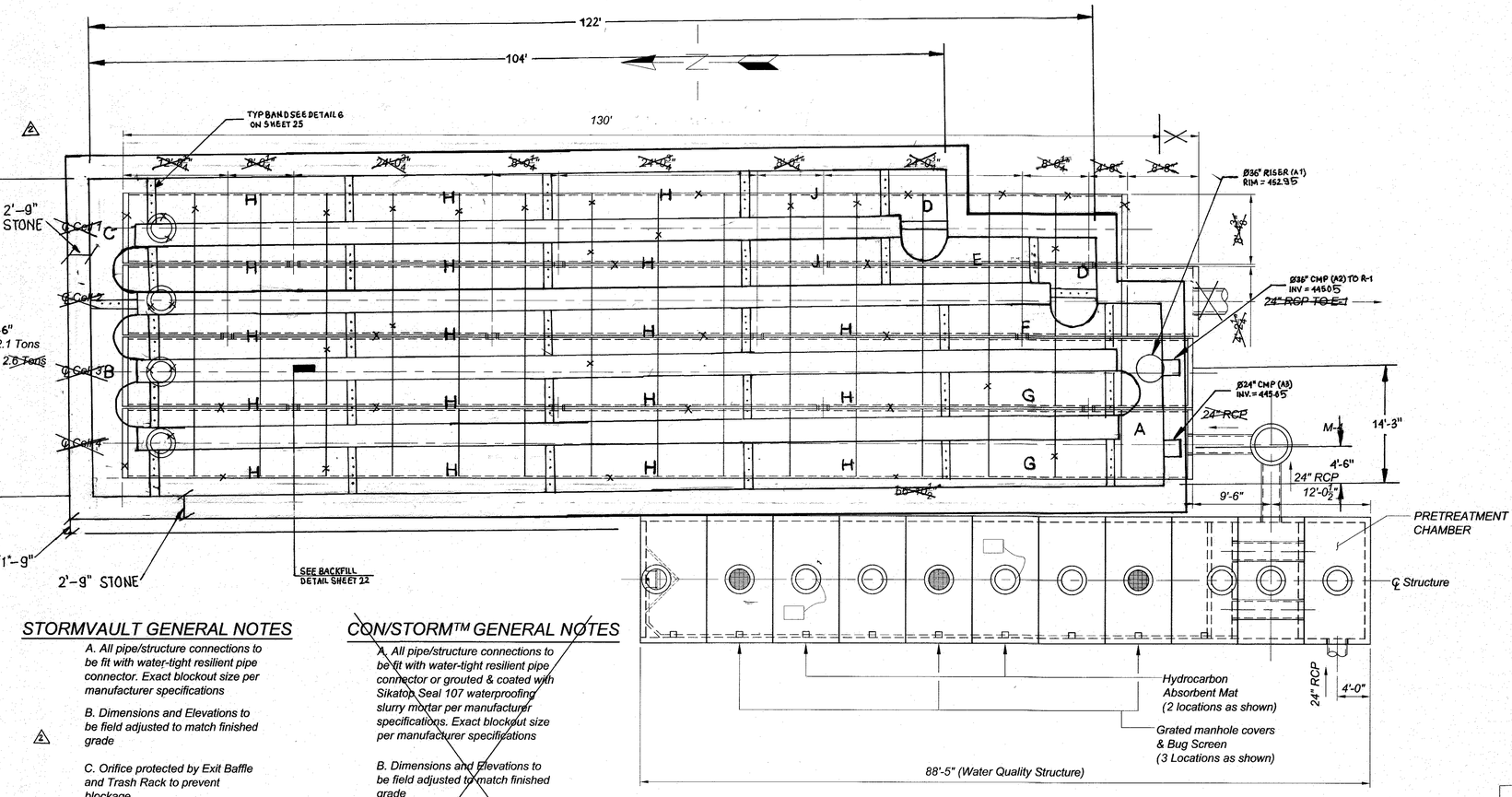

STORMVAULT GENERAL NOTES

A. All pipe/structure connections to be fit with water-tight resilient pipe connector. Exact blockout size per manufacturer specifications

B. Dimensions and Elevations to be field adjusted to match finished grade

C. Orifice protected by Exit Baffle and Trash Rack to prevent blockage

D. Maximum HGL Elevation for Stormvault located at T/Inside Arch Elev. 450.50

NOTE: FOR GENERAL NOTES ASSOCIATED WITH CMP STORAGE SYSTEM, SEE SHEET 24, FOR GENERAL DETAILS, SEE SHEET 25.

~~CON/STORM™ GENERAL NOTES~~

~~A. All pipe/structure connections to be fit with water-tight resilient pipe connector or grouted & coated with Sikatop Seal 107 waterproofing slurry mortar per manufacturer specifications. Exact blockout size per manufacturer specifications~~

~~B. Dimensions and Elevations to be field adjusted to match finished grade~~

~~C. Maximum HGL Elevation for Stormvault located at T/Inside Arch Elev. 450.50~~

~~D. CON/STORM System To Be Set From North End To South End~~

LOCATION PLAN

0 4' 8' 16'

NOTES FOR CMP STORAGE STRUCTURE

- ALL RISER AND STUB DIMENSIONS ARE TO CENTERLINE.
- ALL ELEVATIONS, DIMENSIONS, AND LOCATIONS OF RISERS AND INLETS, SHALL BE VERIFIED BY THE ENGINEER OF RECORD PRIOR TO RELEASING FOR FABRICATION.
- ALL FITTINGS AND REINFORCEMENT COMPLY WITH ASTM A998.
- ALL RISERS AND STUBS ARE 2⅔" x ½" CORRUGATION AND 16 GAGE UNLESS OTHERWISE NOTED.
- RISERS TO BE FIELD TRIMMED TO GRADE.
- PERFORATED SYSTEM.

NO.	BY	DATE	REVISION
2	KCE	08/02/08	REPLACE CON/STORM WITH CMP STORAGE
3	KCE	03/01/10	SWM AS-BUILT INFORMATION ADDED

APPROVED
PLANNING BOARD
OF HOWARD COUNTY
DATE 3/27/08

APPROVED: DEPARTMENT OF PLANNING AND ZONING

Chief, Development Engineering Division — Date 6/25/08
Chief, Division of Land Development — Date 6/24/08
Director — Date 6/26/08

STATE OF MARYLAND TIMOTHY T. RUEGGER No. 22201 PROFESSIONAL ENGINEER
4-30-08

Professional Certification: I hereby certify that these documents were prepared or approved by me, and that I am a duly licensed professional engineer under the laws of the State of Maryland, License No. 22201, Expiration Date: 12-22-08.

OWNER
MANGIONE ENTERPRISES OF TURF VALLEY
LIMITED PARTNERSHIP
1205 YORK ROAD, PENTHOUSE
LUTHERVILLE, MARYLAND 21093
PHONE (410) 825-8400

SWM FACILITY #1 - LOCATION PLAN & GENERAL NOTES

TURF VALLEY, LORIEN
NURSING HOME & ASSISTED LIVING FACILITY

OAKMONT AT TURF VALLEY
PARCEL Q
PLATS 18773 - 18775
TAX MAP 16 - P/O PARCEL 8- GRID 16 & 17;
POD I per S-86-13 (4th AMENDED)
THIRD ELECTION DISTRICT HOWARD COUNTY, MARYLAND

KCE ENGINEERING, INC.
EXECUTIVE CENTER
3300 NORTH RIDGE ROAD, SUITE 315
ELLICOTT CITY, MARYLAND 21043
PHONE (410) 203-9800 FAX (410) 203-9228

DRAWN BY: ___
CHECKED BY: ___
SCALE: AS SHOWN
DATE: 04/30/2008

SHEET: 19 OF 36

SDP-07-084

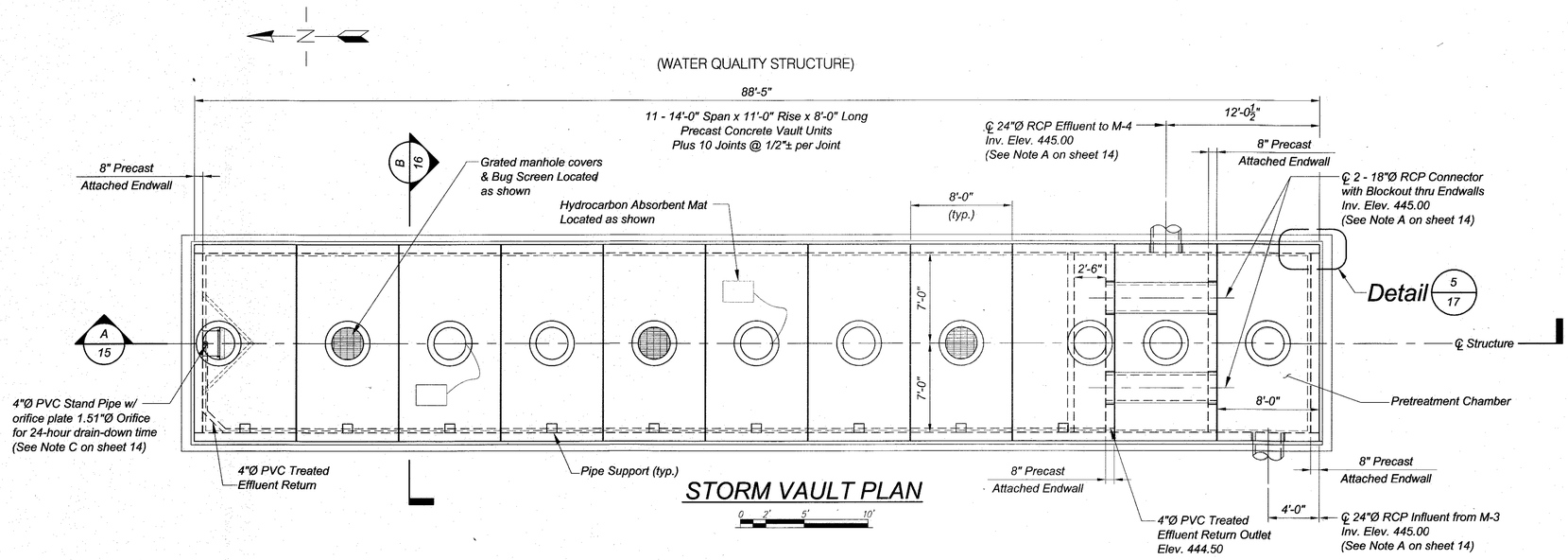

STORM VAULT PLAN

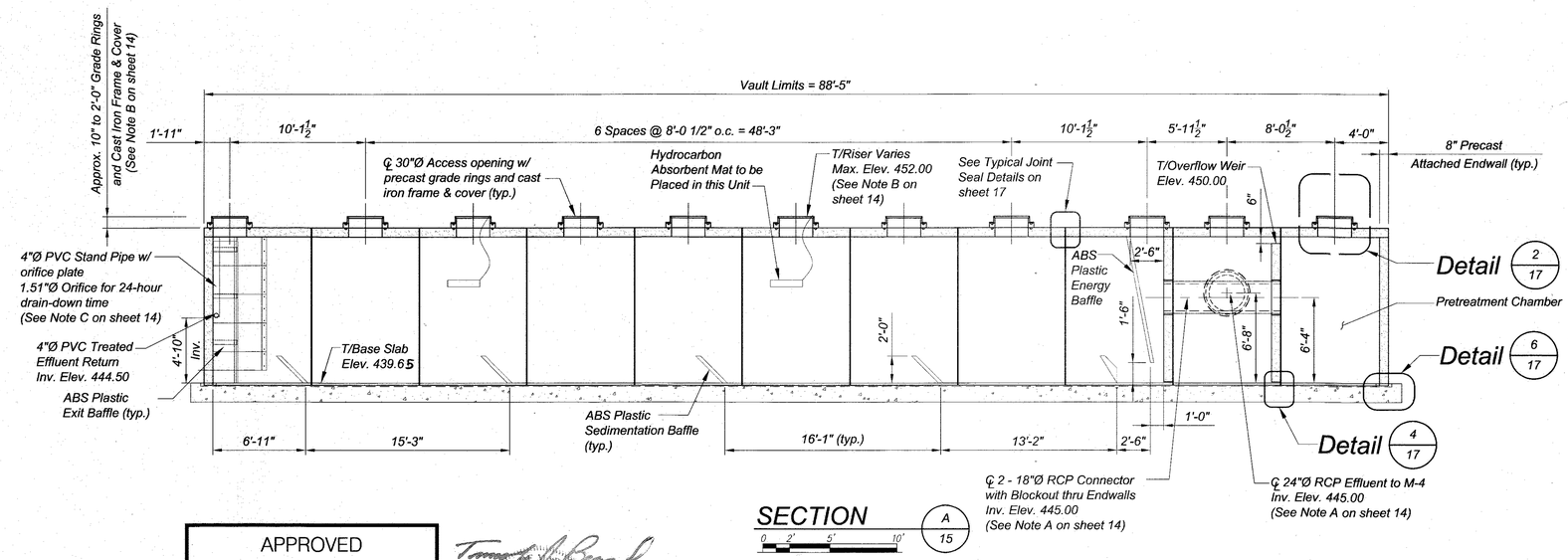

SECTION A/15

APPROVED
PLANNING BOARD
OF HOWARD COUNTY
DATE 3/27/08

STATE OF MARYLAND
TIMOTHY J. BEACH
No. 22201
PROFESSIONAL ENGINEER
4-30-08

Professional Certification: I hereby certify that these documents were prepared or approved by me, and that I am a duly licensed professional engineer under the laws of the State of Maryland, License No. 22201, Expiration Date: 12-22-08.

APPROVED: DEPARTMENT OF PLANNING AND ZONING

Chief, Development Engineering Division	6/25/08 Date
Chief, Division of Land Development	6/27/08 Date
Director	6/30/08 Date

OWNER
MANGIONE ENTERPRISES OF TURF VALLEY
LIMITED PARTNERSHIP
1205 YORK ROAD, PENTHOUSE
LUTHERVILLE, MARYLAND 21093
PHONE (410) 825-8400

No.	REVISION	BY	DATE
3	SWM AS-BUILT INFORMATION ADDED	KCE	03/01/10

STORMVAULT PLAN & SECTION

TURF VALLEY, LORIEN
NURSING HOME & ASSISTED LIVING FACILITY

OAKMONT AT TURF VALLEY
PARCEL Q
PLATS 18773 - 18775
TAX MAP 16 - P/O PARCEL 8- GRID 16 & 17;
POD I per S-86-13 (4th AMENDED)
THIRD ELECTION DISTRICT HOWARD COUNTY, MARYLAND

KCE ENGINEERING, INC.
EXECUTIVE CENTER
3300 NORTH RIDGE ROAD, SUITE 315
ELLICOTT CITY, MARYLAND 21043
PHONE (410) 203-9800 FAX (410) 203-9228

DRAWN BY: ___
CHECKED BY: ___
SCALE: AS SHOWN
DATE: 04/30/2008

SHEET: 20 OF 36

SDP-07-084

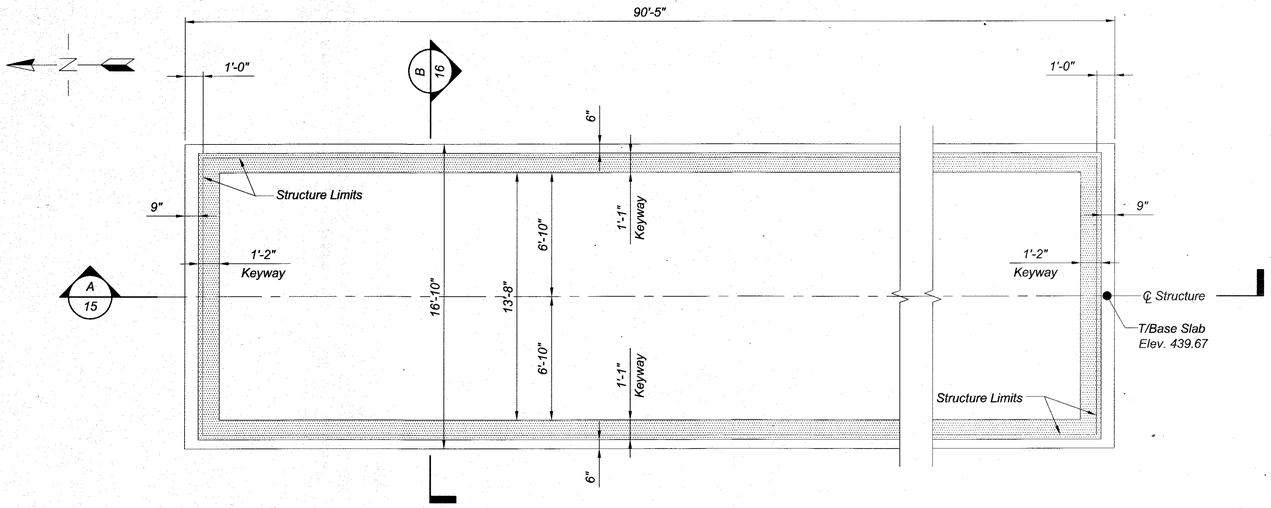

VAULT FOUNDATION PLAN

0 2' 4' 8'

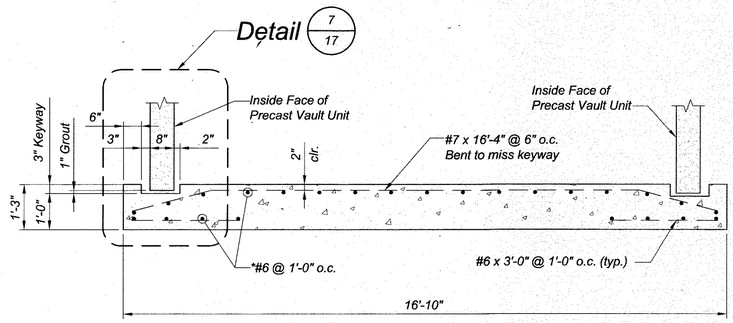

DETAIL 1/16

0 1' 2' 4'

*Bend all bars to miss keyways

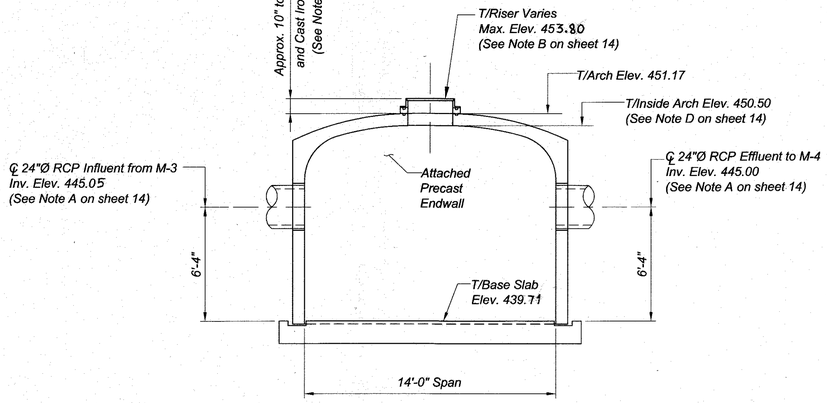

SOUTH END ELEVATION

0 2' 4' 8'

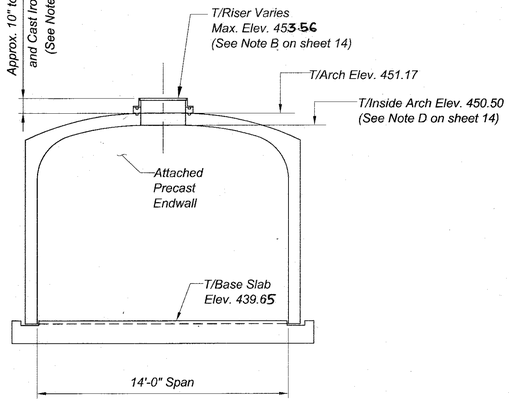

NORTH END ELEVATION

0 2' 4' 8'

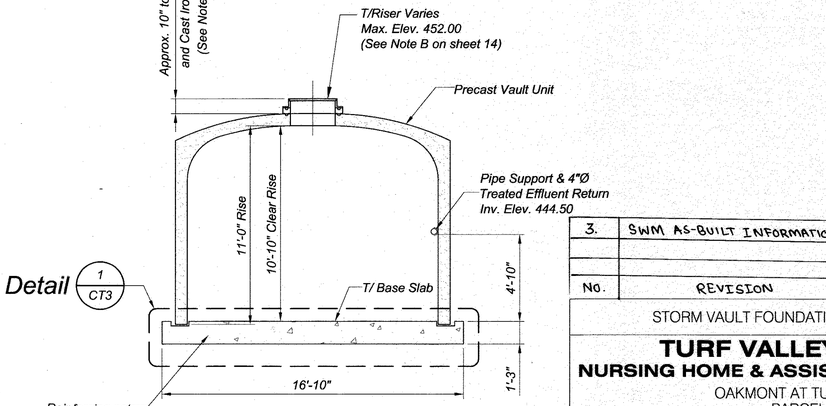

SECTION B 15, 16

0 2' 4' 8'

APPROVED
PLANNING BOARD
OF HOWARD COUNTY
DATE 3/27/08

APPROVED: DEPARTMENT OF PLANNING AND ZONING

Chief, Development Engineering Division	6/25/08 Date
Chief, Division of Land Development	6/27/08 Date
Director	6/30/08 Date

STATE OF MARYLAND
TIMOTHY E. BEARD
No. 22201
PROFESSIONAL ENGINEER
4-30-08

Professional Certification: I hereby certify that these documents were prepared or approved by me, and that I am a duly licensed professional engineer under the laws of the State of Maryland, License No. 22201, Expiration Date: 12-22-08.

OWNER
MANGIONE ENTERPRISES OF TURF VALLEY
LIMITED PARTNERSHIP
1205 YORK ROAD, PENTHOUSE
LUTHERVILLE, MARYLAND 21093
PHONE (410) 825-8400

NO.	REVISION	BY	DATE
3.	SWM AS-BUILT INFORMATION ADDED	KCE	03/01/10

STORM VAULT FOUNDATION PLAN & DETAILS

TURF VALLEY, LORIEN
NURSING HOME & ASSISTED LIVING FACILITY

OAKMONT AT TURF VALLEY
PARCEL Q
PLATS 18773 - 18775
TAX MAP 16 - P/O PARCEL 8- GRID 16 & 17;
POD I per S-86-13 (4th AMENDED)
THIRD ELECTION DISTRICT HOWARD COUNTY, MARYLAND

KCE ENGINEERING, INC.
EXECUTIVE CENTER
3300 NORTH RIDGE ROAD, SUITE 315
ELLICOTT CITY, MARYLAND 21043
PHONE (410) 203-9800 FAX (410) 203-9228

DRAWN BY: ___
CHECKED BY: ___
SCALE: AS SHOWN
DATE: 04/30/2008

SHEET: 21 OF 36

SDP-07-084

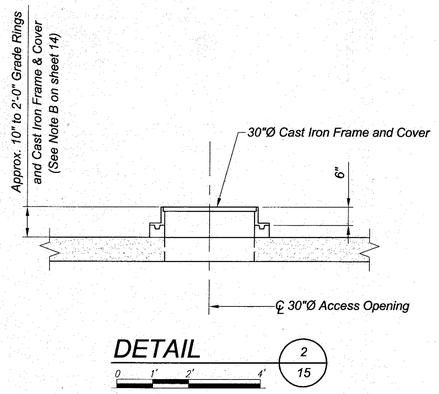

DETAIL 2/15

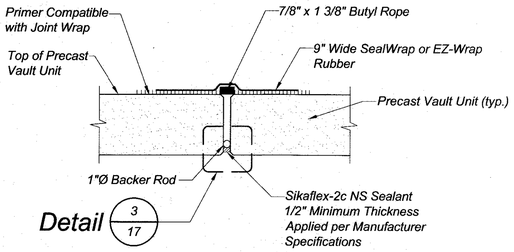

TYPICAL JOINT SEAL DETAIL
not to scale

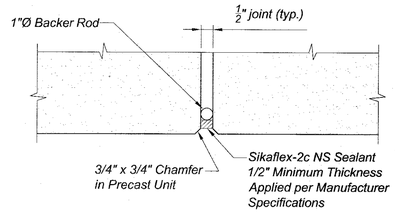

DETAIL 3/17

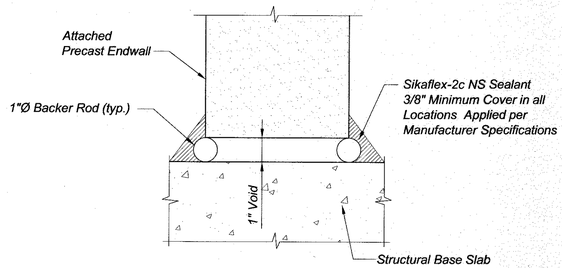

DETAIL 4/15

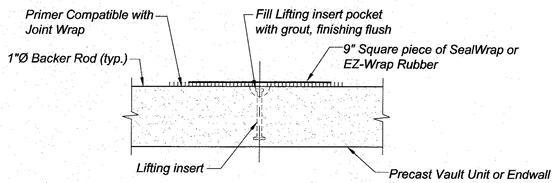

TYPICAL LIFT POINT SEALING DETAIL
not to scale

Note: Vertical and horizontal Sikaflex must bond in order to ensure continuous joint.

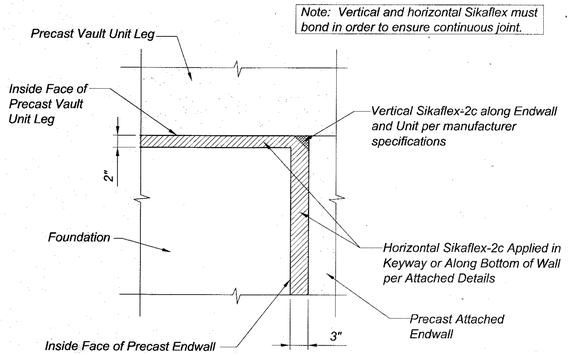

DETAIL 5/15

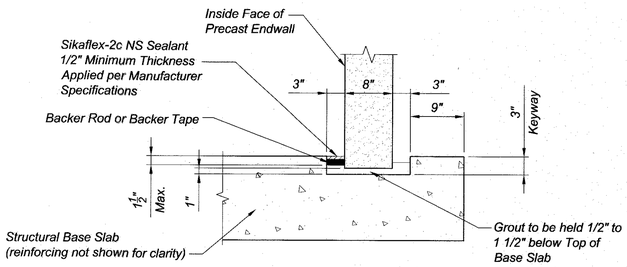

DETAIL 6/15

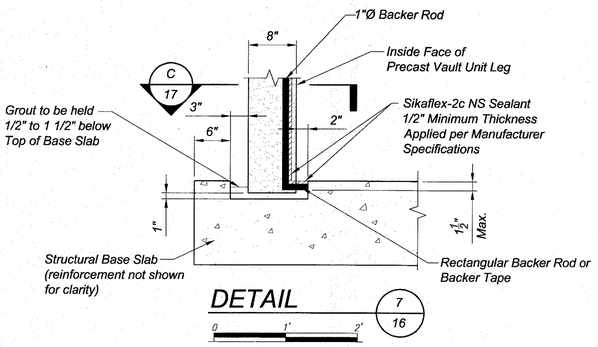

DETAIL 7/16

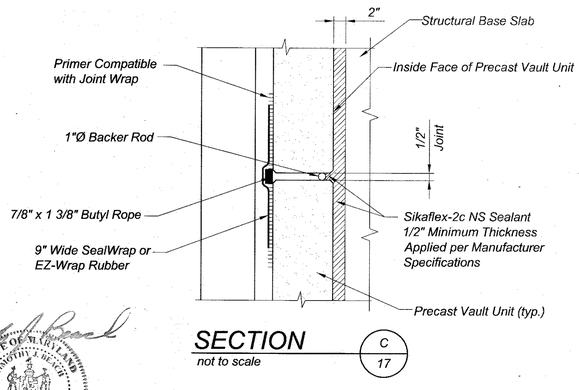

SECTION C/17
not to scale

APPROVED
PLANNING BOARD
OF HOWARD COUNTY
DATE 3/27/08

APPROVED: DEPARTMENT OF PLANNING AND ZONING

Chief, Development Engineering Division — Date 6/25/08

Chief, Division of Land Development — Date 6/27/08

Director — Date 6/30/08

STATE OF MARYLAND — TIMOTHY A. PECK — No. 22201 — PROFESSIONAL ENGINEER

4-30-08

Professional Certification: I hereby certify that these documents were prepared or approved by me, and that I am a duly licensed professional engineer under the laws of the State of Maryland, License No. 22201, Expiration Date: 12-22-08.

OWNER
MANGIONE ENTERPRISES OF TURF VALLEY
LIMITED PARTNERSHIP
1205 YORK ROAD, PENTHOUSE
LUTHERVILLE, MARYLAND 21093
PHONE (410) 825-8400

STORM VAULT DETAILS

TURF VALLEY, LORIEN
NURSING HOME & ASSISTED LIVING FACILITY

OAKMONT AT TURF VALLEY
PARCEL Q
PLATS 18773 - 18775
TAX MAP 16 - P/O PARCEL 8- GRID 16 & 17;
POD I per S-86-13 (4th AMENDED)
THIRD ELECTION DISTRICT HOWARD COUNTY, MARYLAND

KCE ENGINEERING, INC.
EXECUTIVE CENTER
3300 NORTH RIDGE ROAD, SUITE 315
ELLICOTT CITY, MARYLAND 21043
PHONE (410) 203-9800 FAX (410) 203-9228

DRAWN BY: ___
CHECKED BY: ___
SCALE: AS SHOWN
DATE: 04/30/2008

SHEET: 22 OF 36

SDP-07-084

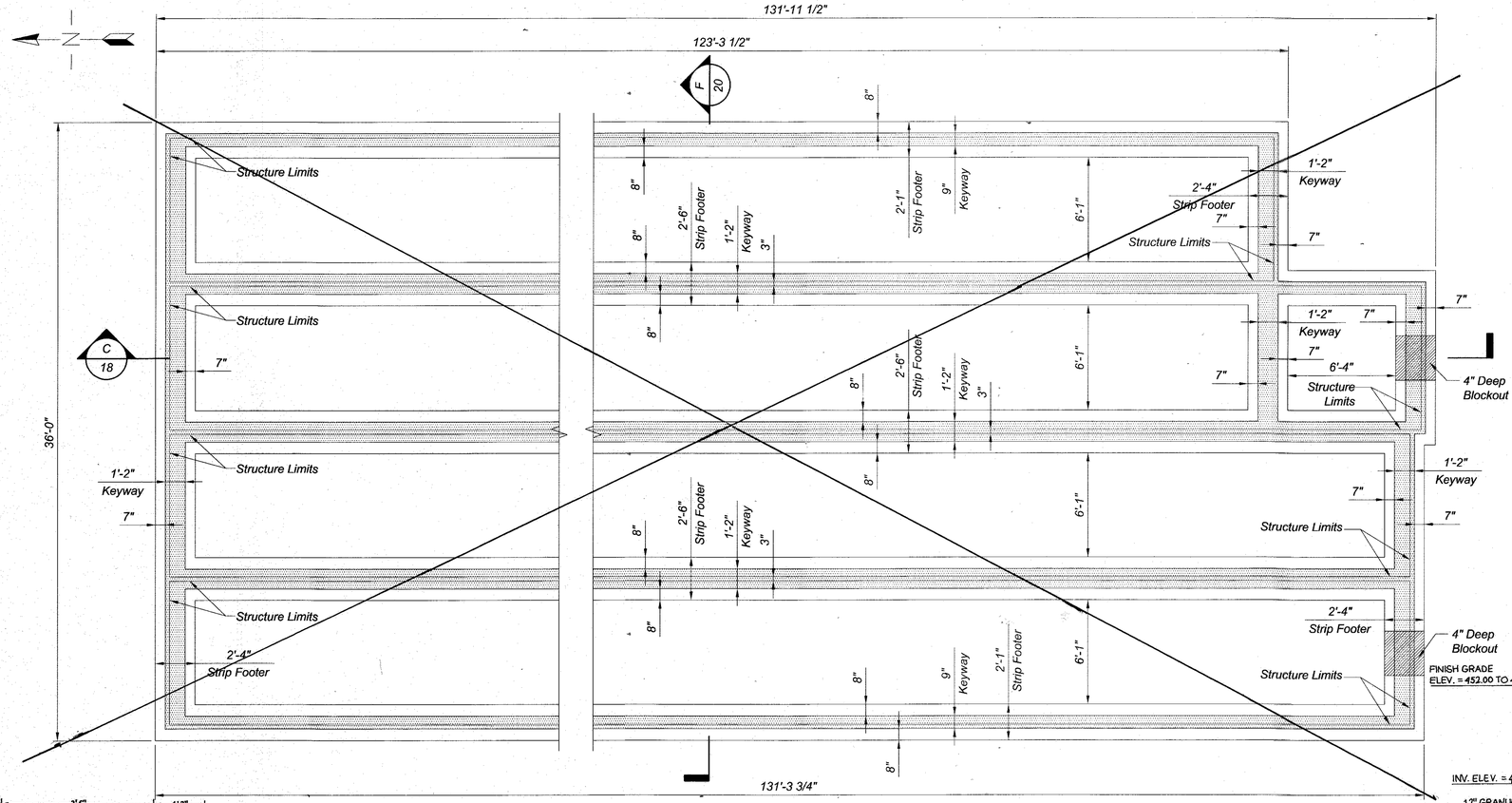

FOUNDATION PLAN

DETAIL 11/18

TYPICAL SECTION
SCALE: N.T.S.

MANHOLE CAP DETAIL (SWM F #1)
SCALE: N.T.S.

SECTION E/18

TYPICAL RISER DETAIL
SCALE: N.T.S.

NO.	BY	DATE	REVISION
2	KCE	09/02/08	REPLACE CON/STORM W/CMP STORAGE
3.	KCE	03/01/10	SWM AS-BUILT INFORMATION ADDED

CMP STORAGE SECTION & DETAILS

TURF VALLEY, LORIEN
NURSING HOME & ASSISTED LIVING FACILITY

OAKMONT AT TURF VALLEY
PARCEL Q
PLATS 18773 - 18775
TAX MAP 16 - P/O PARCEL 8- GRID 16 & 17;
POD I per S-86-13 (4th AMENDED)
THIRD ELECTION DISTRICT HOWARD COUNTY, MARYLAND

KCE ENGINEERING, INC.
EXECUTIVE CENTER
3300 NORTH RIDGE ROAD, SUITE 315
ELLICOTT CITY, MARYLAND 21043
PHONE (410) 203-9800 FAX (410) 203-9228

APPROVED
PLANNING BOARD
OF HOWARD COUNTY
DATE 3/27/08

APPROVED: DEPARTMENT OF PLANNING AND ZONING

Chief, Development Engineering Division — Date 6/25/08
Chief, Division of Land Development — Date 6/27/08
Director — Date 6/30/08

Professional Certification: I hereby certify that these documents were prepared or approved by me, and that I am a duly licensed professional engineer under the laws of the State of Maryland, License No. 22201, Expiration Date: 12-22-08.

STATE OF MARYLAND — TIMOTHY J. BEACH — No. 22201 — PROFESSIONAL ENGINEER
4-30-08

OWNER
MANGIONE ENTERPRISES OF TURF VALLEY
LIMITED PARTNERSHIP
1205 YORK ROAD, PENTHOUSE
LUTHERVILLE, MARYLAND 21093
PHONE (410) 825-8400

DRAWN BY: ___
CHECKED BY: ___
SCALE: AS SHOWN
DATE: 04/30/2008

SHEET: 23 OF 36

SDP-07-084

SPECIFICATIONS FOR MANUFACTURE AND INSTALLATION OF CON/SPAN® STORMWATER SYSTEMS

1. DESCRIPTION
This work shall consist of constructing a CON/SPAN ® vault in accordance with these specifications and in reasonably close conformity with the lines, grades, design and dimensions shown on the plans or as established by the Engineer. In situations where two or more specifications apply to this work, the most stringent requirements shall govern.

2. TYPES
Precast reinforced concrete CON/SPAN® vault units manufactured in accordance with this specification shall be designated by span and rise. Precast reinforced concrete CON/SPAN® endwalls manufactured in accordance with this specification shall be designated by length and height.

3. MATERIALS - CONCRETE
The concrete for the structures shall be air-entrained when installed in areas subject to freeze-thaw conditions, composed of portland cement, fine and coarse aggregates, admixtures and water. Air-entrained concrete shall contain 6 ± 2 percent air. The air entraining admixture shall conform to AASHTO M154.

3.1 Portland Cement - Shall conform to the requirements of ASTM Specifications C150-Type I, Type II, or Type III cement.

3.2 Coarse Aggregate - Shall consist of stone having a maximum size of 1 inch. Aggregate shall meet requirements for ASTM C33.

3.3 Water Reducing Admixture - The manufacturer may submit for approval by the Engineer, a water-reducing admixture for the purpose of increasing workability and reducing the water requirement for the concrete.

3.4 Calcium Chloride - The addition to the mix of calcium chloride or admixtures containing calcium chloride will not be permitted.

4. MATERIALS - STEEL REINFORCEMENT AND HARDWARE
All reinforcing steel for the structures shall be fabricated and placed in accordance with the detailed shop drawings submitted by the manufacturer.

4.1 Steel Reinforcement - Reinforcement shall consist of welded wire fabric conforming to ASTM Specification A 185 or A 497, or deformed billet steel bars conforming to ASTM Specification A 615, Grade 60. Longitudinal distribution reinforcement may consists of welded wire fabric or deformed billet-steel bars.

4.2 Hardware:
Inserts for endwall connections shall be AISI Type 304 stainless steel, F-58 Expanded Coil inserts as manufactured by Dayton/Richmond Concrete Accessories, Miamisburg, Ohio, (800) 745-3700. Coil rods and nuts used in endwall connections shall be AISI Type 304 stainless steel. Washers used in endwall connections shall be AISI Type 304 stainless steel plate washers.

Reinforcing bar splices shall be made using the Dowel Bar Splicer System as manufactured by Dayton/Richmond Concrete Accessories, Miamisburg, Ohio, (800) 745-3700, and shall consist of the Dowel Bar Splicer (DB-SAE) and Dowel-In (DI).

Ferrule Loop Inserts shall be F-64 Ferrule Loop Inserts as manufactured by Dayton/Richmond Concrete Accessories, Miamisburg, Ohio, (800) 745-3700.

Hook Bolts used in endwall connections shall be ASTM A 307.

5. MANUFACTURE
5.1 Mixture - The aggregates, cement and water shall be proportioned and mixed in a batch mixer to produce a homogeneous concrete meeting the strength requirements of this specification. The proportion of portland cement in the mixture shall not be less than 564 pounds (6 sacks) per cubic yard of concrete.

5.2 Curing - The precast concrete vault units shall be cured for a sufficient length of time so that the concrete will develop the specified compressive strength in 28 days or less. Any one of the following methods of curing or combinations thereof shall be used:

5.2.1 Steam Curing - The units may be low pressure, steam cured by a system that will maintain a moist atmosphere.

5.2.2 Water Curing - The units may be water cured by any method that will keep the sections moist.

5.2.3 Membrane Curing - A sealing membrane conforming to the requirements of ASTM Specification C 309 may be applied and shall be left intact until the required concrete compressive strength is attained. The concrete temperature at the time of application shall be within ± 10 degrees F of the atmospheric temperature. All surfaces shall be kept moist prior to the application of the compounds and shall be damp when the compound is applied.

5.3 Forms - the forms used in manufacture shall be sufficiently rigid and accurate to maintain the structure dimensions within the permissible variations given in Section 7 of these specifications. All casting surfaces shall be of a smooth material.

5.4 Handling - Handling devices or holes shall be permitted in each vault unit for the purpose of handling and setting.

5.5 Storage - The precast elements shall be stored in such a manner to prevent cracking or damage. The units shall not be moved until the concrete compressive strength has reached a minimum of 2500 psi, and they shall not be stored in an upright position until the concrete compressive strength is a minimum of 4,000 psi.

6. DESIGN
6.1 The precast element dimension and reinforcement details shall be as prescribed in the plan and the shop drawings provided by the manufacturer, subject to the provisions of Section 7, below. The minimum concrete compressive strength shall be as shown on the shop drawings. The minimum steel yield strength shall be 60,000 psi, unless otherwise noted on the shop drawings.

6.2 The precast elements are designed in accordance with the "Standard Specifications for Highway Bridges" 17th Edition, adopted by the American Association of State Highway and Transportation Officials, 2002. A minimum of one foot of cover above the crown of the vault units is required in the installed condition. (Unless noted otherwise on the shop drawings and designed accordingly.)

6.3 Placement of Reinforcement in Precast Vault Units - The cover of concrete over the outside circumferential reinforcement shall be 2 inches minimum. The cover of concrete over the inside circumferential reinforcement shall be 1 1/2 inches minimum, unless otherwise noted on the shop drawings. The clear distance of the end circumferential wires shall not be less than one inch nor more than two inches from the ends of each section. Reinforcement shall be assembled utilizing single or multiple layers of welded wire fabric (not to exceed 3 layers), supplemented with a single layer of deformed billet-steel bars, when necessary. Welded wire fabric shall be composed of circumferential and longitudinal wires meeting the spacing requirements of 6.6, below, and shall contain sufficient longitudinal wires extending through the vault unit to maintain the shape and position of the reinforcement. Longitudinal distribution reinforcement may be welded wire fabric or deformed billet-steel bars and shall meet the spacing requirements of 6.6, below. The ends of the longitudinal distribution reinforcement shall be not more than 3 inches and not less than 1 1/2 inches from the ends of the vault unit.

6.4 Placement of Reinforcement for Precast Endwalls -
The cover of concrete over the longitudinal and transverse reinforcement shall be 2 inches minimum. The clear distance from the end of each precast element to the end transverse reinforcing steel shall not be less than one inch nor more than two inches. Reinforcement shall be assembled utilizing a single layer of welded wire fabric, or a single layer of deformed billet-steel bars. Welded wire fabric shall be composed of transverse and longitudinal wires meeting the spacing requirements of 6.7, below, and shall contain sufficient longitudinal wires extending through the element to maintain the shape and position of the reinforcement. Longitudinal reinforcement may be welded wire fabric or deformed billet-steel bars and shall meet the spacing requirements of 6.7, below. The ends of the longitudinal reinforcement shall be not more than 3 inches and not less than 1 1/2 inches from the ends of the walls.

6.5 Bending of Reinforcement for Precast Vault Units - The outside and inside circumferential reinforcing steel for the corners of the vault shall be bent to such an angle that is approximately equal to the configuration of the vault's outside corner.

6.6 Laps, Welds, and Spacing for Precast Vault Units - Tension splices in the circumferential reinforcement shall be made by lapping. Laps may be tack welded together for assembly purposes. For smooth welded wire fabric, the overlap shall meet the requirements of AASHTO 8.30.2 and 8.32.6. For deformed welded wire fabric, the overlap shall meet the requirements of AASHTO 8.30.1 and 8.32.5. The overlap of welded wire fabric shall be measured between the outer most longitudinal wires of each fabric sheet. For deformed billet-steel bars, the overlap shall meet the requirements of AASHTO 8.25. For splices other than tension splices, the overlap shall be a minimum of 12" for welded wire fabric or deformed billet-steel bars. The spacing center to center of the circumferential wires in a wire fabric sheet shall be not less than 2 inches nor more than 4 inches. The spacing center to center of the longitudinal wires shall not be more than 8 inches. The spacing center to center of the longitudinal distribution steel for either line of reinforcing in the top slab shall be not more than 16 inches.

6.7 Laps, Welds, and Spacing for Precast Endwalls -
Splices in the reinforcement shall be made by lapping. Laps may be tack welded together for assembly purposes. For smooth welded wire fabric, the overlap shall meet the requirements of AASHTO 8.30.2 and 8.32.6. For deformed welded wire fabric, the overlap shall meet the requirements of AASHTO 8.30.1 and 8.32.5. For deformed billet-steel bars, the overlap shall meet the requirements of AASHTO 8.25. The spacing center-to-center of the wires in a wire fabric sheet shall be not less than 2 inches nor more than 8 inches.

7. PERMISSIBLE VARIATIONS
7.1 Vault Units

7.1.1 Internal Dimensions - The internal dimension shall vary not more than 1% from the design dimensions nor more than 1-1/2 inches whichever is less. The haunch dimensions shall vary not more than 3/4 inch from the design dimension.

7.1.2 Slab and Wall Thickness - The slab and wall thickness shall not be less than that shown in the design by more than 1/4 inch. A thickness more than that required in the design shall not be cause for rejection.

7.1.3 Length of Opposite Surfaces - Variations in laying lengths of two opposite surfaces of the vault unit shall not be more than 1/2 inch in any section, except where beveled ends for laying of curves are specified by the purchaser.

7.1.4 Length of Section - The underrun in length of a section shall not be more than 1/2 inch in any vault unit.

7.1.5 Position of Reinforcement - The maximum variation in position of the reinforcement shall be ± 1/2 inch. In no case shall the cover over the reinforcement be less than 1 1/2 inches for the outside circumferential steel or be less than 1 inch for the inside circumferential steel as measured to the external or internal surface of the vault. These tolerances or cover requirements do not apply to mating surfaces of the joints.

7.1.6 Area of Reinforcement - The areas of steel reinforcement shall be the design steel areas as shown in the manufacturer's shop drawings. Steel areas greater than those required shall not be cause for rejection. The permissible variation in diameter of any reinforcement shall conform to the tolerances prescribed in the ASTM Specification for that type of reinforcement.

7.2 Endwalls

7.2.1 Wall Thickness - The wall thickness shall not vary from that shown in the design by more than 1/2 inch.

7.2.2 Length/ Height of Wall sections - The length and height of the wall shall not vary from that shown in the design by more than 1/2 inch.

7.2.3 Position of Reinforcement - The maximum variation in the position of the reinforcement shall be ± 1/2 inch. In no case shall the cover over the reinforcement be less than 1 1/2 inches.

7.2.4 Size of Reinforcement - The permissible variation in diameter of any reinforcing shall conform to the tolerances prescribed in the ASTM Specification for that type of reinforcing. Steel area greater than that required shall not be cause for rejection.

8. TESTING AND INSPECTION
8.1 Type of Test Specimen - Concrete compressive strength shall be determined from compression tests made on cylinders or cores. For cylinder testing, a minimum of 4 cylinders shall be taken during each production run. For core testing, one core shall be cut from each of 3 precast elements selected at random from each production group. A production group shall be defined as 15 or fewer vault units (of a particular size), or endwalls in a continuous production run. For each continuous production run, each production group or fraction thereof shall be considered separately for the purpose of testing and acceptance. A production run shall be considered continuous if not interrupted for more than 3 consecutive days.

8.2 Compression Testing - Cylinders shall be made and tested as prescribed by the ASTM C 39 Specification. Cores shall be obtained and tested for compressive strength in accordance with the provisions of the ASTM C497 Specification.

8.3 Acceptability of Cylinder Tests - When the average compressive strength of all cylinders tested is equal to or greater than the design compressive strength, and not more than 10% of the cylinders tested have a compressive strength less than the design concrete strength, and no cylinder tested has a compressive strength less than 80% of the design compressive strength, then the lot shall be accepted. When the compressive strength of the cylinders tested does not conform to this acceptance criteria, the acceptability of the lot may be determined as described in section 8.4, below.

8.4 Acceptability of Core Tests - The compressive strength of the concrete in each production group as defined in 8.1 is acceptable when the average core test strength is equal to or greater than the design concrete strength. When the compressive strength of the core tested is less than the design concrete strength, the precast element from which that core was taken may be re-cored. When the compressive strength of the re-core is equal to or greater than the design concrete strength, the compressive strength of the concrete in that production group is acceptable.

8.4.1 When the compressive strength of any recore is less than the design concrete strength, the precast element from which that core was taken shall be rejected. Two precast elements from the remainder of the group shall be selected at random and one core shall be taken from each. If the compressive strength of both cores is equal to or greater than the design concrete strength, the compressive strength of the remainder of that group is acceptable. If the compressive strength of either of the two cores tested is less than the design concrete strength, the remainder of the group shall be rejected or, at the option of the manufacturer, each precast element of the remainder of the group shall be cored and accepted individually, and any of these elements that have cores with less than the design concrete strength shall be rejected.

8.4.2 Plugging Core Holes - The core holes shall be plugged and sealed by the manufacturer in a manner such that the elements will meet all of the test requirements of this specification. Precast elements so sealed shall be considered satisfactory for use.

8.4.3 Test Equipment - Every manufacturer furnishing vault structures under this specification shall furnish all facilities and personnel necessary to carryout the test required.

9. JOINTS
The vault units shall be produced with flat butt ends. The ends of the vault units shall be such that when the sections are laid together they will make a continuous line of with a smooth interior free of appreciable irregularities, all compatible with the permissible variations in Section 7, above. The joint width shall not exceed 3/4 inches.

10. WORKMANSHIP AND FINISH
The precast vault units and endwalls shall be substantially free of fractures. The ends of the vault units shall be normal to the walls and centerline of the vault section, within the limits of the variations given in section 7, above, except where beveled ends are specified. The faces of the endwalls and vault units shall be parallel to each other, within the limits of variations given in section 7, above. The surface of the precast elements shall be a smooth steel form or troweled surface. Trapped air pockets causing surface defects shall be considered as part of a smooth, steel form finish.

11. REPAIRS
Precast elements may be repaired, if necessary, because of imperfections in manufacture or handling damage and will be acceptable if, in the opinion of the purchaser, the repairs are sound, properly finished and cured, and the repaired section conforms to the requirements of this specification.

12. INSPECTION
The quality of materials, the process of manufacture, and the finished structures shall be subject to inspection by the purchaser.

13. REJECTION
The precast elements shall be subject to rejection on account of any of the specification requirements. Individual precast elements may be rejected because of any of the following:

13.1 Fractures or cracks passing through the wall, except for a single end crack that does not exceed one half the thickness of the wall.

13.2 Defects that indicate proportioning, mixing, and molding not in compliance with Section 5 of these specifications.

13.3 Honeycombed or open texture.

13.4 Damaged ends, where such damage would prevent making a satisfactory joint.

14. MARKING
Each vault unit shall be clearly marked by waterproof paint. The following shall be shown on the inside of the vertical leg of the vault section:
Vault Span X Vault Rise
Date of Manufacture
Name or trademark of the manufacturer

15. CONSTRUCTION REQUIREMENTS
15.1 Footings - The vault units and endwalls shall be installed on either precast or cast-in-place concrete footings. The design size and elevation of the footings shall be as determined by the Engineer. A three inch deep keyway shall be formed in the top surface of the vault footing three inches clear of the inside and outside faces of the bridge units, unless specified otherwise on the plans. A keyway is also required in the footings for the endwalls, unless otherwise specified. The footings shall be given a smooth float finish and shall reach a compressive strength of 2,000 psi before placement of the bridge and endwall elements. The completed footing surface shall be constructed in accordance with grades shown on the plans. When tested with a 10 foot straight edge, the surface shall not vary more than 1/4 inch in 10 feet. If a precast concrete footing is used, the contractor shall prepare a 4 inch thick base layer of compacted granular material the full width of the footing prior to placing the precast footing.

15.2 Placement of the Vault Units and Endwalls -
The vault units and endwalls shall be placed as shown on the Engineer's plan drawings. Special care shall be taken in setting the elements to the true line and grade. The vault units and endwalls shall be set on 6" x 6" masonite or steel shims. A minimum gap of 1/2 inch shall be provided between the footing and the bottom of the unit's vertical legs or the endwall. The gap shall be filled with cement grout (Portland cement and water or cement mortar composed of Portland cement, sand and water) with a minimum 28-day compressive strength of 3000 psi. If units have been set with temporary ties (cables, bars, etc.) grout must attain a minimum compressive strength of 1500 psi before ties may be removed.

15.3 External Protection of Joints - The butt joint made by two adjoining vault units shall be covered with a 7/8" x 1 3/8" preformed bituminous joint sealant and a minimum of a 9 inch wide joint wrap. The surface shall be free of dirt before applying the joint material. A primer compatible with the joint wrap to be used shall be applied for a minimum width of nine inches on each side of the joint. The external wrap shall be either EZ-WRAP RUBBER by PRESS-SEAL GASKET CORPORATION, SEAL WRAP by MAR MAC MANUFACTURING CO. INC. or approved equal. The joint shall be covered continuously from the bottom of one vault section leg, across the top of the arch and to the opposite vault section leg. Any laps that result in the joint wrap shall be a minimum of six inches long with the overlap running downhill.

In addition to the joints between vault units, the joint between the end vault unit and the endwall shall also be sealed as described above. Also, if lift holes are formed in the arch units, they shall be primed and covered with a 9" x 9" square of joint wrap.

During the backfilling operation, care shall be taken to keep the joint wrap in its proper location over the joint.

Internal Protection of Joints - Certain vaults may require additional joint protection to ensure that the structure is water-tight. Various joint sealing details including elastomaric, urethane, or liquid sealing may be shown on the plans. Any internal joint sealing shall be performed as indicated on the construction plans.

15.4 Backfill - Backfill shall be considered as all replaced excavation and new embankment adjacent to the CON/SPAN® vault units and endwalls. The project construction and material specifications which include the specifications for excavation for structures and roadway excavation and embankment construction, shall apply except as modified in this section.

No backfill shall be placed against any structural elements until they have been approved by the Engineer.

Backfill against a waterproofed surface shall be placed carefully to avoid damage to the waterproofing material.

Mechanical tampers or approved compacting equipment shall be used to compact all backfill and embankment immediately adjacent to each side and over the top of each vault unit until it is covered to a minimum depth of one foot, unless the design fill height is less than 1'-0". The backfill within the Critical Backfill Zone (shown in the diagrams below) shall be placed in lifts of eight inches or less (loose depth). Heavy compaction equipment shall not be operated in this area or over the bridge until it is covered to a depth of one foot, unless the design fill height is less than 1'-0".

Lightweight dozers and graders may be operated over vault units having one foot of compacted cover, but heavy earth moving equipment (larger than a D-4 Dozer weighing in excess of 12 tons and having track pressures of eight psi or greater) shall require two feet of cover unless the design cover is less than two feet. In no case shall equipment operating in excess of the design load (HS20 or HS25) be permitted over the vault units unless approved by CON/SPAN®.

Any additional fill and subsequent excavation required to provide this minimum cover shall be made at no additional cost to the project.

As a precaution against introducing unbalanced stresses in the vault, when placing backfill at no time shall the difference between the heights of fill on opposite sides of the vault exceed 24".

For fill heights over 12 feet, no backfilling may begin until a backfill compaction testing plan has been coordinated with and approved by CON/SPAN®. Cost of the backfill compaction testing shall be included in the cost of the precast units. This included cost applies only to projects with fill heights over 12 feet (as measured from top crown of arch to finished grade).

16. QUALITY ASSURANCE
The Precaster shall demonstrate adherence to the standards set forth in the NPCA Quality Control Manual. The Precaster shall meet either Section 16.1 or 16.2.

16.1 Certification: The Precaster shall be certified by the Precast/Prestressed Concrete Institute Plant Certification Program or the National Precast Concrete Association's Plant Certification Program prior to and during production of the products covered by this specification.

16.2 Qualifications, Testing and Inspection
16.2.1 The Precaster shall have been in the business of producing precast concrete products similar to those specified for a minimum of three years. He shall maintain a permanent quality control department or retain an independent testing agency on a continuing basis. The agency shall issue a report, certified by a licensed engineer, detailing the ability of the Precaster to produce quality products consistent with industry standards.

16.2.2 The Precaster shall show that the following tests are performed in accordance with the ASTM standards indicated. Tests shall be performed for each 150 cubic yards of concrete placed, but not less frequently than once per production run, as defined in §8 of these specifications.

16.2.2.1 Air Content: C231 or C173

16.2.2.2 Compressive Strength: C39, C497

16.2.3 The Precaster shall provide documentation demonstrating compliance with this section to CON/SPAN® at regular intervals or upon request.

16.2.4 The Owner may place an inspector in the plant when the products covered by this specification are being manufactured.

17. STORMVAULT® INSPECTION AND MAINTENANCE
The Stormvault® Mitigation System by CON/SPAN® is specifically designed to treat stormwater runoff to the Maximum Extent Practicable. The Stormvault® System is designed to capture and hold floatable debris, free oils and greases, settleable sediments and those dissolved pollutants including metals, nitrates and phosphates, which may adsorb or adhere to the surface of sediments and organic debris in stormwater. In order to insure efficient operation and achieve the desired pollutant removal rates, several important inspection and maintenance functions must periodically be performed. The inspection and maintenance are both to be performed during dry periods, in which no flow is entering the Stormvault® System and water has returned to the permanent pool elevation. These procedures are described more fully below.

INSPECTION
The Stormvault® Mitigation System by CON/SPAN® is to be inspected bi-annually to ensure the system is in proper working order. The twice-yearly observation should require less than four person-hours per visit, but depends upon the size of the Stormvault® System. The inspection includes opening each manhole cover and visually inspecting for excess floating debris. The effluent chamber is to be inspected to verify that the control orifice within the standpipe is free of any trash or debris. In addition to the visual inspection, the first several chambers should be probed to gain an estimate of the collected sediment in the bottom of the vault. It is important to record the depths in these chambers to estimate when the next required maintenance should be performed. The removal of collected sediments is to be performed once the average depth in the vault reaches 6 inches. The hydrocarbon mats, which float on the surface of the Stormvault® System, are designed to remove free oils and greases from stormwater runoff. The mats are attached to the manhole accesses using a lanyard. These mats must also be inspected as part of the bi-annual cycle. These mats will be a granular solid white when initially installed and will turn darker as they absorb free oils and greases. The mats should be inspected twice yearly to ensure that some white granular portions of the mat remain. The mats may collect some surface sediment; however, only when they change to a solid dark color uniformly throughout the granular medium do they need to be replaced.

MAINTENANCE
The removal of collected sediments is to be performed once an average depth of 6 inches has been reached in the vault. The hydrocarbon sorbent mats are to be replaced once the mats turn completely dark in color and can no longer absorb any free oils and greases. The maintenance cycle for each Stormvault® unit will vary as it is a function of the size, type, and volume of pollutants in the stormwater runoff for that particular site. Previous monitoring and investigation of existing Stormvault® units has resulted in a recommended maintenance cycle of 4-5 years for both removal of sediment and replacement of hydrocarbon sorbent mats. A site-specific maintenance cycle can easily be determined by the bi-annual inspections.

Removal of accumulated materials:
It is recommended that a professional pumping contractor, trained and licensed to remove and dispose of captured sediment material, perform this task. The contractor will lower a nozzle and hose into each chamber and pump the collected material into a vacuum truck. The contractor is to remove only the 6 inches of sediment and not the water in the permanent pool during vacuuming. This will minimize the amount of material, which the contractor must dispose.

Be aware that the captured sediments are by their nature easy to resuspend. Great care shall be taken to prevent any turbulence that may cause mixing and resuspension of the settled materials. The contractor must verify proper disposal with the local jurisdiction. An analysis of the materials may be required before disposal. Because of dilution by the water in the permanent pool, harmful pollutant concentrations are rarely reached.

Replacement of hydrocarbon sorbent mats:
To remove the mats, locate the lanyard attached to the inside of the access cover and pull them out. Care should be taken in lifting the mats out through the manholes, as the saturated mats can weigh up to five times as much as new mats. The used mats should be disposed of as directed by the local authority. Generally this is in a similar manner used to dispose of drain oil or similar materials. Replace the mats in like fashion by clipping the new mats to the keeper lines. New mats can be obtained by contacting the CON/SPAN® office nearest you.

NOTE:
The Stormvault® Mitigation System by CON/SPAN® is a confined space and entry is not recommended. Enter only when necessary and with the proper equipment, following OSHA confined space entry procedures.

BACKFILL DESCRIPTION (AASHTO M 145-91)

Group Classification	A-1		A-3	A-2				A-4
	A-1-a	A-1-b		A-2-4	A-2-5	A-2-6	A-2-7	
Sieve Analysis, Percent Passing (100% Passing 3" Sieve)								
No. 10	50 max.							
No. 40	30 max.	50 max.	51 min.					
No. 200	15 max.	25 max.	10 max.	35 max.	35 max.	35 max.	35 max.	36 min.
Characteristics of Fraction Passing No. 40								
Liquid Limit				40 max.	41 min.	40 max.	41 min.	40 max.
Plasticity Index	6 max.		N.P.	10 max.	10 max.	11 min.	11 min.	10 max.
Usual Types of Significant Constituent Materials	Stone Fragments, Gravel & Sand		Fine Sand	Silty or Clayey Gravel and Sand				Silty Soils
General Rating as Subgrade	Excellent to Good							Fair to Poor

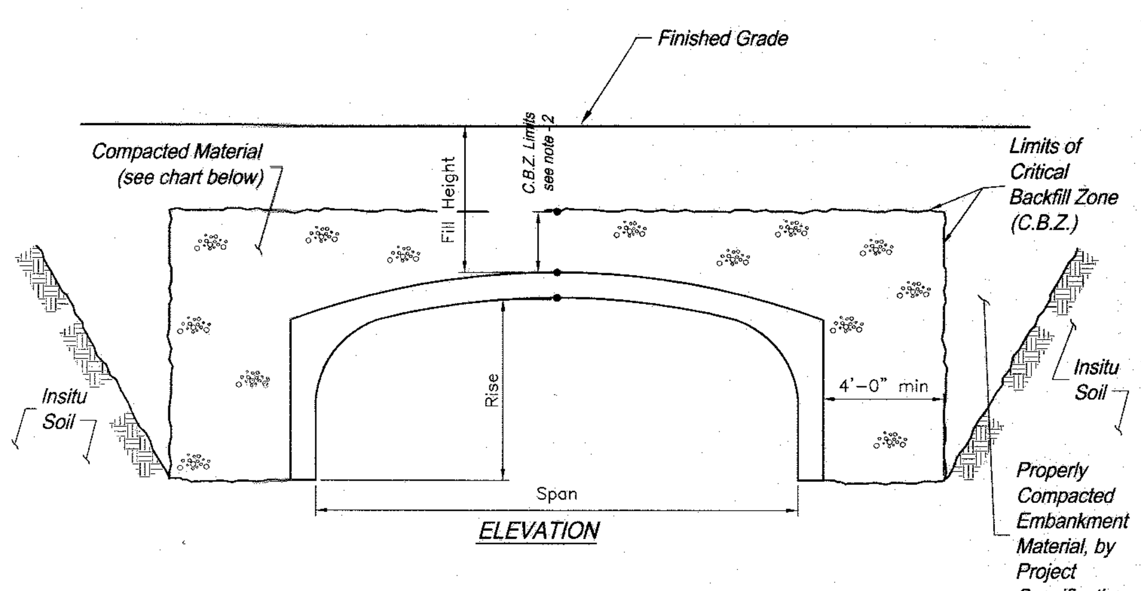

ELEVATION

NOTES
1. SEE CON/SPAN® SPECIFICATIONS SECTION 15.4 FOR BACKFILL SPECIFICATIONS.
2. FOR FILL HEIGHTS GREATER THAN 2'-0", C.B.Z. LIMIT SHALL BE 2'-0" ABOVE ARCH CROWN. FOR FILL HEIGHTS LESS THAN 2'-0", THE FINISHED GRADE SHALL BE THE BOUNDARY LINE FOR THE C.B.Z.
3. BACKFILLING OPERATIONS WITHIN THE C.B.Z. SHALL BE PERFORMED IN LIFTS OF 8" OR LESS (LOOSE DEPTH).
4. MAXIMUM DRY DENSITY SHALL BE DETERMINED BY AASHTO T-99 OR OTHER APPROVED METHODS.
5. BACKFILL SHALL BE COMPACTED IN LAYERS UNTIL THE DENSITY IS NOT LESS THAN 95% OF THE MAXIMUM DRY DENSITY.

SPAN	FILL HEIGHT	ACCEPTABLE MATERIAL INSIDE C.B.Z.	ACCEPTABLE MATERIAL OUTSIDE C.B.Z.
≤ 24'-0"	≥ 12'-0"	A1, A3	**
≤ 24'-0"	< 12'-0"	A1, A2, A3, A4	**
> 24'-0"	ALL	A1, A3	**

** EMBANKMENT MATERIAL PER PROJECT SPECIFICATIONS

BACKFILL REQUIREMENTS

APPROVED
PLANNING BOARD
OF HOWARD COUNTY
DATE 3/27/08

APPROVED: DEPARTMENT OF PLANNING AND ZONING

Chief, Development Engineering Division — Date 6/25/08

Chief, Division of Land Development — Date 6/27/08

Director — Date 6/30/08

4-30-08

Professional Certification: I hereby certify that these documents were prepared or approved by me, and that I am a duly licensed professional engineer under the laws of the State of Maryland, License No. 22201, Expiration Date: 12-22-08.

OWNER
MANGIONE ENTERPRISES OF TURF VALLEY
LIMITED PARTNERSHIP
1205 YORK ROAD, PENTHOUSE
LUTHERVILLE, MARYLAND 21093
PHONE (410) 825-8400

STORMVAULT INSTALLATION SPECIFICATIONS

TURF VALLEY, LORIEN
NURSING HOME & ASSISTED LIVING FACILITY
OAKMONT AT TURF VALLEY
PARCEL Q
PLATS 18773 - 18775
TAX MAP 16 - P/O PARCEL 8- GRID 16 & 17;
POD I per S-86-13 (4th AMENDED)
THIRD ELECTION DISTRICT HOWARD COUNTY, MARYLAND

KCE ENGINEERING, INC.
EXECUTIVE CENTER
3300 NORTH RIDGE ROAD, SUITE 315
ELLICOTT CITY, MARYLAND 21043
PHONE (410) 203-9800 FAX (410) 203-9228

DRAWN BY: ___
CHECKED BY: ___
SCALE: AS SHOWN
DATE: 04/30/2008

SDP-07-084

SPECIFICATIONS FOR MANUFACTURE AND INSTALLATION OF CON/STORM™ VAULT SYSTEMS

1. DESCRIPTION

This work shall consist of constructing a CON/STORM ™ vault in accordance with these specifications and in reasonably close conformity with the lines, grades, design and dimensions shown on the plans or as established by the Engineer. In situations where two or more specifications apply to this work, the most stringent requirements shall govern.

2. TYPES

Precast reinforced concrete CON/STORM ™ vault units manufactured in accordance with this specification shall be designated by span and rise. Precast reinforced concrete CONSTORM ™ endwalls shall be designated by length, height, and thickness.

3. MATERIALS - CONCRETE

The concrete for the vaults shall be air-entrained when installed in areas subject to freeze-thaw conditions, composed of portland cement, fine and coarse aggregates, admixtures and water. Air-entrained concrete shall contain 6 ± 2 percent air. The air entraining admixture shall conform to AASHTO M154.

3.1 *Portland Cement - Shall conform to the requirements of ASTM Specifications C150-Type I, Type II, or Type III cement.*

3.2 *Coarse Aggregate - Shall consist of stone having a maximum size of 1 inch. Aggregate shall meet requirements for ASTM C33.*

3.3 *Water Reducing Admixture - The manufacturer may submit for approval by the Engineer, a water-reducing admixture for the purpose of increasing workability and reducing the water requirement for the concrete.*

3.4 *Calcium Chloride - The addition to the mix of calcium chloride or admixtures containing calcium chloride will not be permitted.*

4. MATERIALS - STEEL REINFORCEMENT AND HARDWARE

All reinforcing steel for the vaults shall be fabricated and placed in accordance with the detailed shop drawings submitted by the manufacturer.

4.1 *Steel Reinforcement - Reinforcement shall consist of welded wire fabric conforming to ASTM Specification A 185 or A 497, or deformed billet steel bars conforming to ASTM Specification A 615, Grade 60. Longitudinal distribution reinforcement may consists of welded wire fabric or deformed billet-steel bars.*

4.2 *Hardware - Vault units and endwalls shall be connected by s ingle flared coil loop insert and coil rod as manufactured by Dayton/Richmond Concrete Asssesories in Miamisburgh, OH (800) 745-3700.*

4.3 *Steel Fiber Reinforcement as manufactured by Polyforx or Bekaert shall be Helix or Dramix RC65/60 BN, respectively. Minimum dosage as determined through full-scale load testing, shall be located on the shop drawings.*

5. MANUFACTURE

5.1 *Mixture - The aggregates, cement and water shall be proportioned and mixed in a batch mixer to produce a homogeneous concrete meeting the strength requirements of this specification. The proportion of portland cement in the mixture shall not be less than 564 pounds (6 sacks) per cubic yard of concrete.*

5.2 *Consolidation - self compacting concrete shall be used for all CON/STORM ™ units. At no time should internal vibration be performed. Precaster may apply external vibration by hand if necessary to assist in consolidation.*

5.3 *Curing - The precast concrete vault shall be cured for a sufficient length of time so that the concrete will develop the specified compressive strength in 28 days or less. Any one of the following methods of curing or combinations thereof shall be used:*

5.3.1 *Steam Curing - The vaults may be low pressure, steam cured by a system that will maintain a moist atmosphere.*

5.3.2 *Water Curing - The vaults may be water cured by any method that will keep the sections moist.*

5.3.3 *Membrane Curing - A sealing membrane conforming to the requirements of ASTM Specification C 309 may be applied and shall be left intact until the required concrete compressive strength is attained. The concrete temperature at the time of application shall be within ± 10 degrees F of the atmospheric temperature. All surfaces shall be kept moist prior to the application of the compounds and shall be damp when the compound is applied.*

5.4 *Forms - the forms used in manufacture shall be sufficiently rigid and accurate to maintain the vault dimensions within the permissible variations given in Section 7 of these specifications. All casting surfaces shall be of a smooth material.*

5.5 *Handling - Handling devices or holes shall be permitted in each vault for the purpose of handling and setting.*

5.6 *Storage - The precast elements shall be stored in such a manner to prevent cracking or damage. The units shall not be moved until the concrete compressive strength has reached a minimum of 2500 psi, and they shall not be stored in an upright position until the concrete compressive strength is a minimum of 4,000 psi.*

6. DESIGN

6.1 *The precast element dimension and reinforcement details shall be as prescribed in the plan and the shop drawings provided by the manufacturer, subject to the provisions of Section 7, below. The minimum concrete compressive strength shall be as shown on the shop drawings. The minimum steel yield strength shall be 60,000 psi, unless otherwise noted on the shop drawings.*

6.2 *The precast elements are designed in accordance with the "Standard Specifications for Highway Bridges" 17th Edition, adopted by the American Association of State Highway and Transportation Officials, 2002. A minimum of one foot of cover above the crown of the vault units is required in the installed condition. (Unless noted otherwise on the shop drawings and designed accordingly.)*

7. PERMISSIBLE VARIATIONS

7.1 *Vault Units and Endwalls*

7.1.1 *Internal Dimensions - The internal dimension shall vary not more than 1% from the design dimensions nor more than 1-1/2 inches whichever is less. The haunch dimensions shall vary not more than 3/4 inch from the design dimension.*

7.1.2 *Slab and Wall Thickness - The slab and wall thickness shall not be less than that shown in the design by more than 1/4 inch. A thickness more than that required in the design shall not be cause for rejection.*

7.1.3 *Length of Opposite Surfaces - Variations in laying lengths of two opposite surfaces of the vault unit shall not be more than 1/2 inch in any section, except where beveled ends for laying of curves are specified by the purchaser.*

7.1.4 *Area of Reinforcement - The areas of steel reinforcement shall be the design steel areas as shown in the manufacturer's shop drawings. Steel areas greater than those required shall not be cause for rejection. The permissible variation in diameter of any reinforcement shall conform to the tolerances prescribed in the ASTM Specification for that type of reinforcement.*

8. TESTING AND INSPECTION

8.1 *Type of Test Specimen - Concrete compressive strength shall be determined from compression tests made on cylinders or cores. For cylinder testing, a minimum of 4 cylinders shall be taken during each production run. For core testing, one core shall be cut from each of 3 precast elements selected at random from each production group. A production group shall be defined as 15 of lower vault units (of a particular size) or endwalls in a continuous production run. For each continuous production run, each production group or fraction thereof shall be considered separately for the purpose of testing and acceptance. A production run shall be considered continuous if not interrupted for more than 3 consecutive days.*

8.2 *Compression Testing - Cylinders shall be made and tested as prescribed by the ASTM C 39 Specification. Cores shall be obtained and tested for compressive strength in accordance with the provisions of the ASTM C497 Specification.*

8.3 *Acceptability of Cylinder Tests - When the average compressive strength of all cylinders tested is equal to or greater than the design compressive strength, and not more than 10% of the cylinders tested have a compressive strength less than the design concrete strength, and no cylinder tested has a compressive strength less than 80% of the design compressive strength, then the lot shall be accepted. When the compressive strength of the cylinders tested does not conform to this acceptance criteria, the acceptability of the lot may be determined as described in section 8.4, below.*

8.4 *Acceptability of Core Tests - The compressive strength of the concrete in each production group as defined in 8.1 is acceptable when the average core test strength is equal to or greater than the design concrete strength. When the compressive strength of the core tested is less than the design concrete strength, the precast element from which that core was taken may be re-cored. When the compressive strength of the re-core is equal to or greater than the design concrete strength, the compressive strength of the concrete in that production group is acceptable.*

8.4.1 *When the compressive strength of any recore is less than the design concrete strength, the precast element from which that core was taken shall be rejected. Two precast elements from the remainder of the group shall be selected at random and one core shall be taken from each. If the compressive strength of both cores is equal to or greater than the design concrete strength, the compressive strength of the remainder of that group is acceptable. If the compressive strength of either of the two cores tested is less than the design concrete strength, the remainder of the group shall be rejected or, at the option of the manufacturer, each precast element of the remainder of the group shall be cored and accepted individually, and any of these elements that have cores with less than the design concrete strength shall be rejected.*

8.4.2 *Plugging Core Holes - The core holes shall be plugged and sealed by the manufacturer in a manner such that the elements will meet all of the test requirements of this specification. Precast elements so sealed shall be considered satisfactory for use.*

8.4.3 *Test Equipment - Every manufacturer furnishing vaults under this specification shall furnish all facilities and personnel necessary to carryout the test required.*

8.5 *Fresh concrete properties - self compacting concrete to be tested by slump flow test and the VSI test per PCI interim guidelines for the use of self consolidating concrete in PCI member plants.*

9. JOINTS

The vault units shall be produced with flat butt ends. The ends of the vault units shall be such that when the sections are laid together they will make a continuous line of with a smooth interior free of appreciable irregularities, all compatible with the permissible variations in Section 7, above. The joint width shall not exceed 3/4 inches.

10. WORKMANSHIP AND FINISH

The vault units and endwalls shall be substantially free of fractures. The ends of the vault units and endwalls shall be normal to the walls and centerline of the vault section, within the limits of the variations given in section 7, above, except where beveled ends are specified. The surface of the precast elements shall be a smooth steel form or troweled surface. Trapped air pockets causing surface defects shall be considered as part of a smooth, steel form finish.

11. REPAIRS

Precast elements may be repaired, if necessary, because of imperfections in manufacture or handling damage and will be acceptable if, in the opinion of the purchaser, the repairs are sound, properly finished and cured, and the repaired section conforms to the requirements of this specification.

12. INSPECTION

The quality of materials, the process of manufacture, and the finished vaults shall be subject to inspection by the purchaser.

13. REJECTION

The precast elements shall be subject to rejection on account of any of the specification requirements. Individual precast elements may be rejected because of any of the following:

13.1 *Fractures or cracks passing through the wall, except for a single end crack that does not exceed one half the thickness of the wall.*

13.2 *Defects that indicate proportioning, mixing, and molding not in compliance with Section 5 of these specifications.*

13.3 *Honeycombed or open texture.*

13.4 *Damaged ends, where such damage would prevent making a satisfactory joint.*

14. MARKING

Each bridge unit shall be clearly marked by waterproof paint. The following shall be shown on the inside of the vertical leg of the bridge section:
Vault Span X Vault Rise
Date of Manufacture
Name or trademark of the manufacturer

15. CONSTRUCTION REQUIREMENTS

15.1 *Footings - The vault units and endwalls shall be installed on either precast or cast-in-place concrete footings. The design size and elevation of the footings shall be as determined by the Engineer. A keyway shall be formed in the top surface of the vaults footing three inches clear of the inside and outside faces of the vault units, unless specified otherwise on the plans. The footings shall be given a smooth float finish and shall reach a compressive strength of 2,000 psi before placement of the vault and headwall elements. The completed footing surface shall be constructed in accordance with grades shown on the plans. When tested with a 10 foot straight edge, the surface shall not vary more than 1/4 inch in 10 feet. If a precast concrete footing is used, the contractor shall prepare a 4 inch thick base layer of compacted granular material the full width of the footing prior to placing the precast footing.*

15.2 *Placement of the Vault Units and Endwalls - The vault units and endwalls shall be placed as shown on the Engineer's plan drawings. Special care shall be taken in setting the elements to the true line and grade. The vault units and endwalls shall be set on 6" x 4" rubber or masonite shims. A minimum gap of 1/2 inch shall be provided between the footing and the bottom of the vault unit and endwall. The gap shall be filled with cement grout (Portland cement and water or cement mortar composed of Portland cement, sand and water) with a minimum 28-day compressive strength of 3000 psi. If units have been set with temporary ties (cables, bars, etc.) grout must attain a minimum compressive strength of 1500 psi before ties may be removed.*

15.3 *External Protection of Joints - The butt joint made by two adjoining vault units shall be covered with a 7/8" x 11 3/8" preformed bituminous joint sealant and a minimum of a 9 inch wide joint wrap. The surface shall be free of dirt before applying the joint material. A primer compatible with the joint wrap to be used shall be applied for a minimum width of nine inches on each side of the joint. The external wrap shall be either EZ-WRAP RUBBER by PRESS-SEAL GASKET CORPORATION, SEAL WRAP by MAR MAC MANUFACTURING CO. INC., as shown on the installation drawings or approved equal. The joint shall be covered continuously from the bottom of one vault section leg, across the top of the arch and to the opposite vault section leg. Any taps that result in the joint wrap shall be a minimum of six inches long with the overlap running downhill.*

In addition to the joints between vault units, the joint between the end vault unit and the endwall shall also be sealed as described above. When precast endwalls are used, the exterior joint between the end vault unit and the endwall shall be sealed with a 2'-0" strip of filter fabric. Also, if lift holes are formed in the arch units, they shall be primed and covered with a 9" x 9" square of joint wrap.

During the backfilling operation, care shall be taken to keep the joint wrap in its proper location over the joint.

15.4 *Backfill - Backfill shall be considered as all replaced excavation and new embankment adjacent to the CONSTORM™ vault units and endwalls. The project construction and material specifications which include these specifications for excavation for structures and roadway excavation and embankment construction shall apply except as modified in this section.*

No backfill shall be placed against any structural elements until they have been approved by the Engineer.

Backfill against a waterproofed surface shall be placed carefully to avoid damage to the waterproofing material.

Lightweight mechanical tampers or approved compacting equipment shall be used to compact all backfill and embankment immediately adjacent to each side and over the top of each vault unit until it is covered to a minimum depth of one foot, unless the design fill height is less than 1'-0". The backfill within the Critical Backfill Zone (shown in the diagrams below) shall be placed in lifts of eight inches or less (loose depth). Heavy compaction equipment shall not be operated in this area or over the vault until it is covered to a depth of two feet, unless the design fill height is less than 2'0".

Lightweight dozers and graders may be operated over bridge units having one foot of compacted cover, but heavy earth moving equipment (larger than a D-4 Dozer weighing in excess of 12 tons and having track pressures of eight psi or greater) shall require two feet o' cover unless the design cover is less than two feet. In no case shall equipment operating in excess of the design load (HS20 or HS25) be permitted over the vault units unless approved by CONTECH STORMWATER SOLUTIONS Inc.

Any additional fill and subsequent excavation required to provide this minimum cover shall be made at no additional cost to the project.

As a precaution against introducing unbalanced stresses in the vault, when placing backfill at no time shall the difference between the heights of fill on opposite sides of the vault exceed 24".

For fill heights over 12 feet, no backfilling may begin until a backfill compaction testing plan has been coordinated with and approved by CONTECH STORMWATER SOLUTIONS. Cost of the backfill compaction testing shall be included in the cost of the precast units. This included cost applies only to projects with fill heights over 12 feet (as measured from top crown of arch to finished grade).

16. QUALITY ASSURANCE

The Precaster shall demonstrate adherence to the standards set forth in the NPCA Quality Control Manual. The Precaster shall meet either Section 16.1 or 16.2.

16.1 *Certification: The Precaster shall be certified by the Precast/Prestressed Concrete Institute Plant Certification Program or the National Precast Concrete Association's Plant Certification Program prior to and during production of the products covered by this specification.*

16.2 *Qualifications, Testing and Inspection*

16.2.1 *The Precaster shall have been in the business of producing precast concrete products similar to those specified for a minimum of three years. He shall maintain a permanent quality control department or retain an independent testing agency on a continuing basis. The agency shall issue a report, certified by a licensed engineer, detailing the ability of the Precaster to produce quality products consistent with industry standards.*

16.2.2 *The Precaster shall show that the following tests are performed in accordance with the ASTM standards indicated. Tests shall be performed for each 150 cubic yards of concrete placed, but not less frequently than once per production run, as defined in §8 of these specifications.*

16.2.2.1 *Air Content: C231 or C173*

16.2.2.2 *Compressive Strength: C39, C497*

16.2.2.3 *Slump flow spread (SCC mixes only)*

16.2.3 *The Precaster shall provide documentation demonstrating compliance with this section to CONTECH BRIDGE SOLUTIONS at regular intervals or upon request.*

16.2.4 *The Owner may place an inspector in the plant when the products covered by this specification are being manufactured.*

BACKFILL DESCRIPTION (AASHTO M 145-91)

Group Classification	A-1		A-3	A-2				A-4
	A-1-a	A-1-b		A-2-4	A-2-5	A-2-6	A-2-7	
Sieve Analysis, Percent Passing (100% Passing 3" Sieve)								
No. 10	50 max.							
No. 40	30 max.	50 max.	51 min.					
No. 200	15 max.	25 max.	10 max.	35 max.	35 max.	35 max.	35 max.	36 min.
Characteristics of Fraction Passing No. 40								
Liquid Limit				40 max.	41 min.	40 max.	41 min.	40 max.
Plasticity Index	6 max.		N.P.	10 max.	10 max.	11 min.	11 min.	10 max.
Usual Types of Significant Constituent Materials	Stone Fragments, Gravel & Sand		Fine Sand	Silty or Clayey Gravel and Sand				Silty Soils
General Rating as Subgrade	Excellent to Good							Fair to Poor

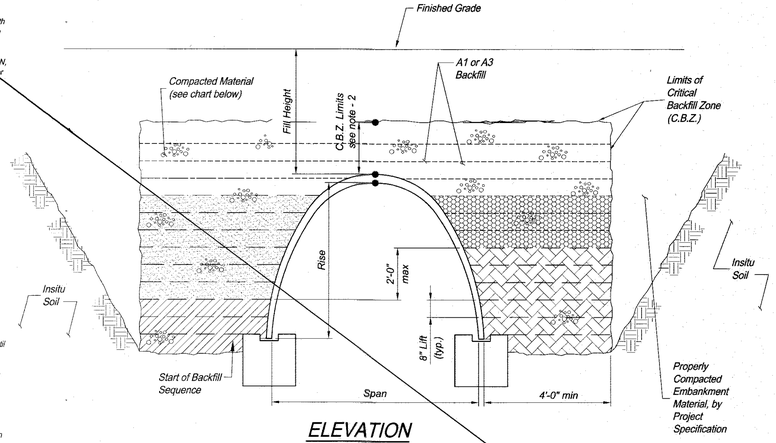

ELEVATION

NOTES
1. SEE CON/STORM ™ SPECIFICATIONS SECTION 15.4 FOR BACKFILL SPECIFICATIONS.
2. FOR FILL HEIGHTS GREATER THAN 2'-0", C.B.Z. LIMIT SHALL BE 2'-0" ABOVE ARCH CROWN. FOR FILL HEIGHTS LESS THAN 2'-0", THE FINISHED GRADE SHALL BE THE BOUNDARY LINE FOR THE C.B.Z.
3. BACKFILLING OPERATIONS WITHIN THE C.B.Z. SHALL BE PERFORMED IN LIFTS OF 8" OR LESS (LOOSE DEPTH).
4. MAXIMUM DRY DENSITY SHALL BE DETERMINED BY AASHTO T-99 OR OTHER APPROVED METHODS.
5. BACKFILL SHALL BE COMPACTED IN LAYERS UNTIL THE DENSITY IS NOT LESS THAN 95% OF THE MAXIMUM DRY DENSITY.
6. TO ENSURE BALANCED BACKFILL AND TO AVOID COMPACTION EQUIPMENT IN THE C.B.Z., IT IS RECOMMENDED TO PLACE CRUSHED STONE BETWEEN ADJACENT CELLS WITH BELT CONVEYOR SYSTEMS.

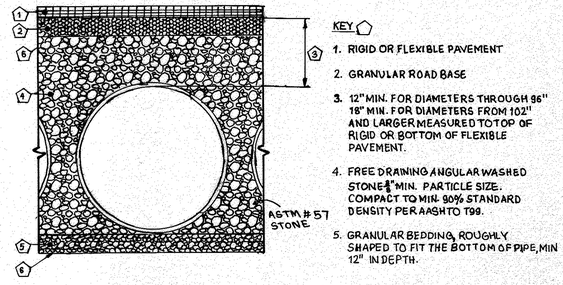

KEY
1. RIGID OR FLEXIBLE PAVEMENT
2. GRANULAR ROAD BASE
3. 12" MIN. FOR DIAMETERS THROUGH 96" 18" MIN. FOR DIAMETERS FROM 102" AND LARGER MEASURED TO TOP OF RIGID OR BOTTOM OF FLEXIBLE PAVEMENT.
4. FREE DRAINING ANGULAR WASHED STONE ⅜" MIN. PARTICLE SIZE. COMPACT TO MIN. 90% STANDARD DENSITY PER AASHTO T99.
5. GRANULAR BEDDING, ROUGHLY SHAPED TO FIT THE BOTTOM OF PIPE, MIN 12" IN DEPTH.

FOUNDATION/BEDDING PREPARATION

PRIOR TO PLACING THE BEDDING, THE FOUNDATION MUST BE CONSTRUCTED TO A UNIFORM AND STABLE GRADE. IN THE EVENT THAT UNSUITABLE FOUNDATION MATERIALS ARE ENCOUNTERED DURING EXCAVATION, THEY SHALL BE REMOVED AND BROUGHT BACK TO THE GRADE WITH A FILL MATERIAL AS APPROVED BY THE ENGINEER. ONCE THE FOUNDATION PREPARATION IS COMPLETE, THE 4 INCHES OF A WELL-GRADED GRANULAR MATERIAL SHALL BE PLACED AS THE BEDDING.

BACKFILL

FREE DRAINING ANGULAR WASHED STONE ⅜" MIN. PARTICLE SIZE. COMPACT TO MIN. 90% STANDARD DENSITY PER AASHTO T99 AS APPROVED BY THE ENGINEER (SEE INSTALLATION GUIDELINES). WHEN PLACING THE FIRST LIFTS OF BACKFILL IT IS IMPORTANT TO MAKE SURE THAT THE BACKFILL IS PROPERLY COMPACTED UNDER AND AROUND THE PIPE HAUNCHES. BACKFILL SHALL BE PLACED SUCH THAT THERE IS NO MORE THAN A TWO LIFT (16") DIFFERENTIAL BETWEEN ANY OF THE PIPES AT ANY TIME DURING THE BACKFILL PROCESS. THE BACKFILL SHALL BE ADVANCED ALONG THE LENGTH OF THE DETENTION SYSTEM AT THE SAME RATE TO AVOID DIFFERENTIAL LOADING ON THE PIPE.

OTHER ALTERNATE BACKFILL MATERIAL MAY BE ALLOWED DEPENDING ON SITE SPECIFIC CONDITIONS. REFER TO TYPICAL BACKFILL DETAIL FOR MATERIAL REQUIRED.

BACKFILL DETAIL (SWMF # 1)

SCALE: N.T.S.

NO.	BY	DATE	REVISION
2	KCE	09/02/08	REPLACE CON/STORM WITH CMP STORAGE
3	KCE	03/01/10	SWM AS-BUILT INFORMATION ADDED

APPROVED
PLANNING BOARD
OF HOWARD COUNTY
DATE 3/27/08

APPROVED: DEPARTMENT OF PLANNING AND ZONING

Chief, Development Engineering Division — Date 6/23/08

Chief, Division of Land Development — Date 6/23/08

Director — Date 6/30/08

Professional Certification: I hereby certify that these documents were prepared or approved by me, and that I am a duly licensed professional engineer under the laws of the State of Maryland, License No. 22201, Expiration Date: 12-22-08.

STATE OF MARYLAND — TIMOTHY E. BEACH — No. 22201 — PROFESSIONAL ENGINEER

4-30-08

OWNER
MANGIONE ENTERPRISES OF TURF VALLEY
LIMITED PARTNERSHIP
1205 YORK ROAD, PENTHOUSE
LUTHERVILLE, MARYLAND 21093
PHONE (410) 825-8400

SWMF#1 BACKFILL PLAN

TURF VALLEY, LORIEN
NURSING HOME & ASSISTED LIVING FACILITY

OAKMONT AT TURF VALLEY
PARCEL Q
PLATS 18773 - 18775
TAX MAP 16 - P/O PARCEL 8- GRID 16 & 17;
POD I per S-86-13 (4th AMENDED)
THIRD ELECTION DISTRICT HOWARD COUNTY, MARYLAND

KCE ENGINEERING, INC.
EXECUTIVE CENTER
3300 NORTH RIDGE ROAD, SUITE 315
ELLICOTT CITY, MARYLAND 21043
PHONE (410) 203-9800 FAX (410) 203-9228

DRAWN BY: ___
CHECKED BY: ___
SCALE: AS SHOWN
DATE: 04/30/2008

SHEET: 25 OF 36

SDP-07-084

EXAMPLE BACKFILL PLAN FOR CON/STORM ™ DETENTION SYSTEMS

Self-compacting material required to a height that allows for lightweight compaction equipment (flat faced mechanical tampers) between cells. It is recommended to use a belt conveyor system to place self compacting material.

Compacted Lift (Typ.)

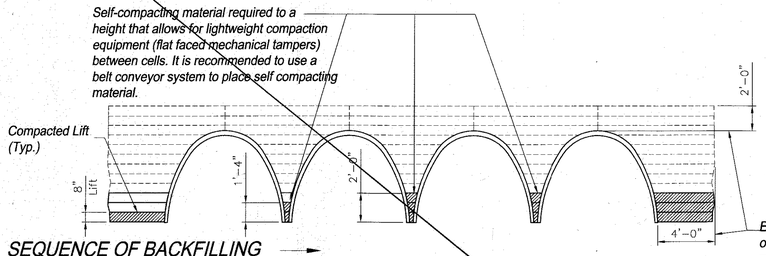

SEQUENCE OF BACKFILLING →

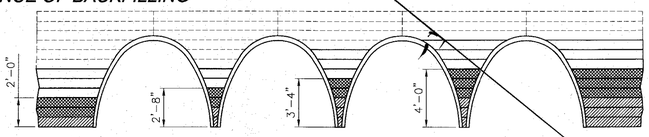

SEQUENCE OF BACKFILLING →

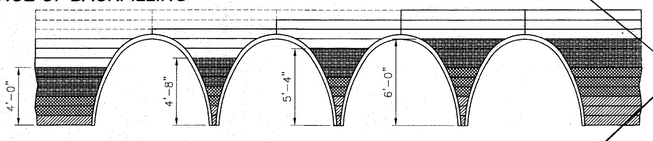

SEQUENCE OF BACKFILLING →

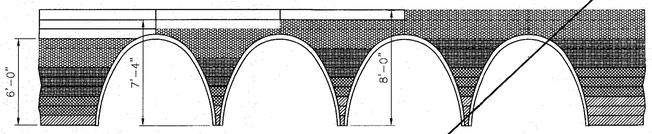

SEQUENCE OF BACKFILLING →

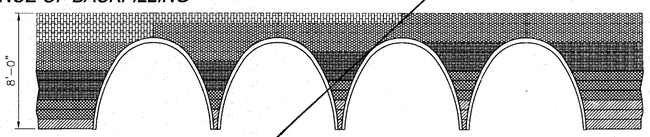

SEQUENCE OF BACKFILLING →

END ELEVATION

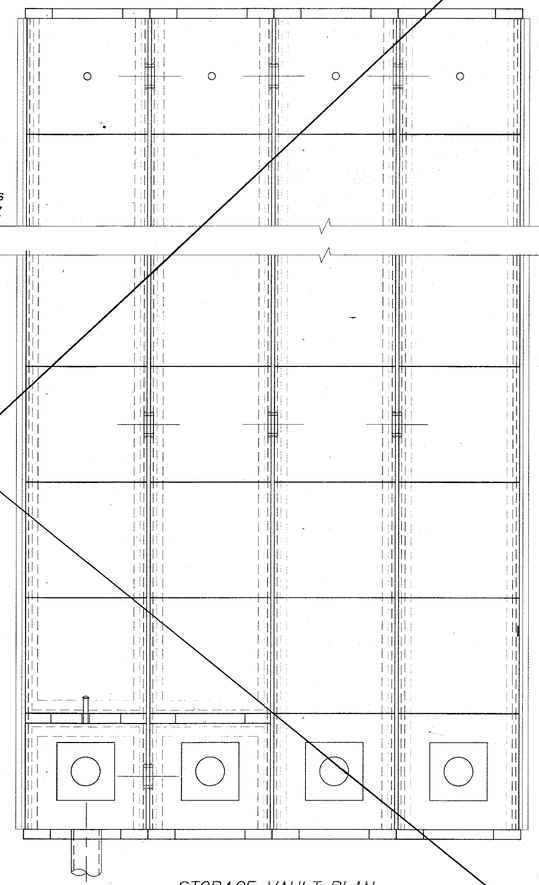

STORAGE VAULT PLAN

START OF SEQUENCE OF BACKFILLING

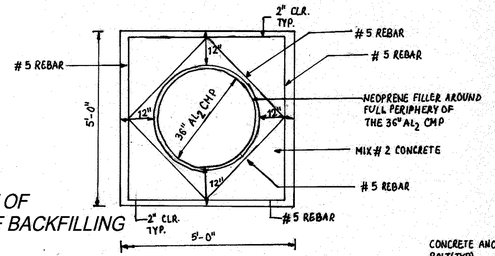

CONCRETE COLLAR DETAIL
SCALE: 1" = 2'

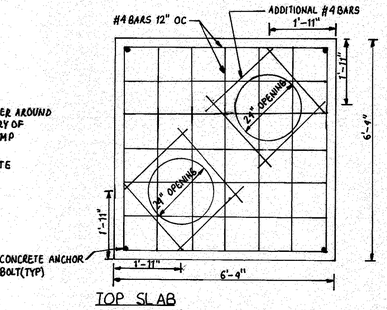

TOP SLAB
SCALE: 1" = 2'

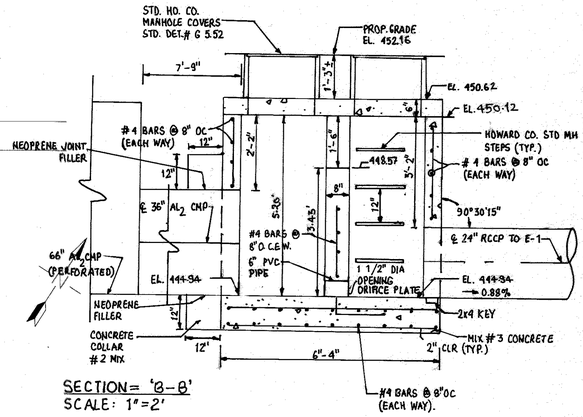

SECTION = 'B-B'
SCALE: 1" = 2'

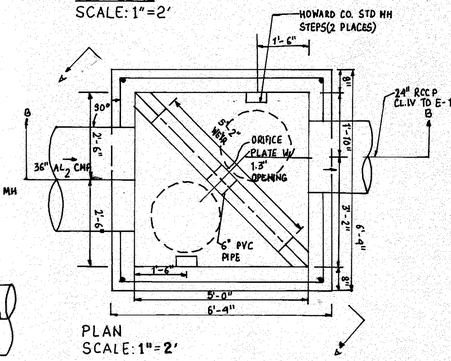

PLAN
SCALE: 1" = 2'

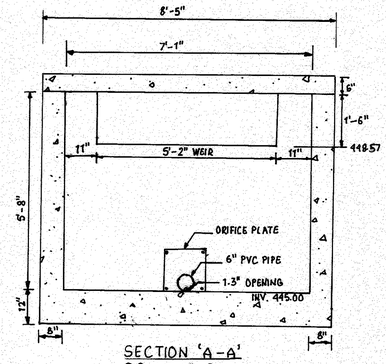

SECTION 'A-A'
SCALE: 1" = 2'

CONSTRUCTION REQUIREMENTS

Backfill - Backfill shall be considered as all replaced excavation and new embankment adjacent to the CON/STORM ™ vault units and endwalls. The project construction and material specifications which include the specifications for excavation for structures and roadway excavation and embankment construction, shall apply except as modified in this section.

No backfill shall be placed against any structural elements until they have been approved by the Engineer.

Backfill against a waterproofed surface shall be placed carefully to avoid damage to the waterproofing material.

Mechanical tampers shall be used to compact immediately adjacent to each side and over the top of each vault unit until it is covered to a minimum depth of one foot. Care shall be taken to avoid contact between the structure and compaction equipment at all times. The backfill within the Critical Backfill Zone (CBZ) shall be placed in lifts of eight inches or less (loose depth). Heavy compaction equipment shall not be operated in this area or over the bridge until it is covered to a depth of two feet.

Lightweight dozers and graders may be operated over vault units having one foot of compacted cover, but heavy earth moving equipment (larger than a D-4 Dozer weighing in excess of 12 tons and having track pressures of eight psi or greater) shall require two feet of cover unless the design cover is less than two feet. In no case shall equipment operating in excess of the design load (HS20) be permitted over the vault units unless approved by CONTECH Stormwater Solutions.

Any additional fill and subsequent excavation required to provide this minimum cover shall be made at no additional cost to the project.

As a precaution against introducing unbalanced stresses in the vault, when placing backfill at no time shall the difference between the heights of fill on opposite sides of the vault exceed 24".

APPROVED
PLANNING BOARD
OF HOWARD COUNTY
DATE 3/27/08

APPROVED: DEPARTMENT OF PLANNING AND ZONING

Chief, Development Engineering Division	Date 6/25/08
Chief, Division of Land Development	Date 6/27/08
Director	Date 6/30/08

Timothy J. Beard
STATE OF MARYLAND
TIMOTHY J. BEARD
No. 22201
PROFESSIONAL ENGINEER
4-30-08

Professional Certification: I hereby certify that these documents were prepared or approved by me, and that I am a duly licensed professional engineer under the laws of the State of Maryland, License No. 22201, Expiration Date: 12-22-08.

NO.	BY	DATE	REVISION
2	KCE	05/02/08	REVISED SHEET TITLE & ADDED DETAILS
3	KCE	03/01/10	SWM AS-BUILT INFORMATION ADDED

OWNER
MANGIONE ENTERPRISES OF TURF VALLEY
LIMITED PARTNERSHIP
1205 YORK ROAD, PENTHOUSE
LUTHERVILLE, MARYLAND 21093
PHONE (410) 825-8400

STORMWATER MANAGEMENT CONSTRUCTION DETAILS-1

TURF VALLEY, LORIEN
NURSING HOME & ASSISTED LIVING FACILITY
OAKMONT AT TURF VALLEY
PARCEL Q
PLATS 18773 - 18775
TAX MAP 16 - P/O PARCEL 8- GRID 16 & 17;
POD I per S-86-13 (4th AMENDED)
THIRD ELECTION DISTRICT HOWARD COUNTY, MARYLAND

KCE ENGINEERING, INC.
EXECUTIVE CENTER
3300 NORTH RIDGE ROAD, SUITE 315
ELLICOTT CITY, MARYLAND 21043
PHONE (410) 203-9800 FAX (410) 203-9228

DRAWN BY: ___
CHECKED BY: ___
SCALE: AS SHOWN
DATE: 04/30/2008

SHEET: 26 OF 36

SDP-07-084

NOTES:

1) ALL ELEVATIONS, DIMENSIONS AND LOCATIONS OF RISERS AND INLETS, SHALL BE VERIFIED BY THE ENGINEER PRIOR TO RELEASING FOR FABRICATION.

2) IN SITUATIONS WHERE A FINE-GRAINED BACKFILL MATERIAL IS USED ADJACENT TO THE PIPE SYSTEM, AND ESPECIALLY IN SITUATIONS INVOLVING HIGH GROUNDWATER TABLES, CONSIDERATION SHOULD BE GIVEN TO THE USE OF GASKETED PIPE JOINTS. AT THE VERY LEAST, THE PIPE JOINTS SHOULD BE WRAPPED IN A SUITABLE, NON-WOVEN GEOTEXTILE FABRIC TO PREVENT INFILTRATION OF FINES INTO THE PIPE SYSTEM.

3) ALL FITTINGS AND REINFORCEMENT COMPLY WITH ASTM A998.

(2) 4) SYSTEM MADE FROM: 66" ø, 5 x 1, ALT2, 16ga., PERFORATED AND NON-PERFORATED CMP.

5) MINIMUM COVER HEIGHT FOR PIPE DESCRIBED IN NOTE #4 IS 12".

6) CONSIDERATIONS FOR CONSTRUCTION EQUIPMENT LOADS MUST BE TAKEN INTO ACCOUNT. SEE DETAIL 5, SHEET 25.

7) ALL PIPE DIMENSIONS ARE SUBJECT TO MANUFACTURERS TOLERANCES.

8) ALL RISERS AND STUBS ARE 2 ⅔" X ½" CORRUGATION AND 16 GAGE, UNLESS OTHERWISE NOTED.

9) RISERS TO BE FIELD TRIMMED TO FINAL GRADE.

10) SYSTEM IS DESIGNED FOR H20 AND H25 LOADING.

SPECIFICATION FOR CORRUGATED STEEL PIPE–ALUMINIZED TYPE 2 STEEL:

SCOPE:
THIS SPECIFICATION COVERS THE MANUFACTURE AND INSTALLATION OF THE CORRUGATED STEEL PIPE (CSP) DETAILED IN THE PROJECT PLANS.

MATERIAL:
THE ALUMINIZED TYPE 2 STEEL COILS SHALL CONFORM TO THE APPLICABLE REQUIREMENTS OF AASHTO M 274 OR ASTM A 929.

PIPE:
THE CSP SHALL BE MANUFACTURED IN ACCORDANCE WITH THE APPLICABLE REQUIREMENTS OF AASHTO M–36 OR ASTM A760. THE PIPE SIZES, GAUGES AND CORRUGATIONS SHALL BE AS SHOWN ON THE PROJECT PLANS.

ALL FABRICATION OF THE PRODUCT SHALL OCCUR WITHIN THE UNITED STATES.

HANDLING & ASSEMBLY:
SHALL BE IN ACCORDANCE WITH NCSPA'S (NATIONAL CORRUGATED STEEL PIPE ASSOCIATION) RECOMMENDATIONS.

INSTALLATION:
SHALL BE IN ACCORDANCE WITH AASHTO STANDARD SPECIFICATIONS FOR HIGHWAY BRIDGES, SECTION 26, DIVISION II OR ASTM A 798 AND IN CONFORMANCE WITH THE PROJECT PLANS AND SPECIFICATIONS. IF THERE ARE ANY INCONSISTENCIES OR CONFLICTS THE CONTRACTOR SHOULD DISCUSS AND RESOLVE WITH THE PROJECT ENGINEER.

IT IS ALWAYS THE CONTRACTOR'S RESPONSIBILITY TO FOLLOW OSHA GUIDELINES FOR SAFE PRACTICES.

CONSTRUCTION LOADS:
CONSTRUCTION LOADS MAY BE HIGHER THAN FINAL LOADS. FOLLOW THE MANUFACTURER'S OR NCSPA GUIDELINES.

INSTALLATION SPECIFICATION

PRE–CONSTRUCTION MEETING

PRIOR TO INSTALLATION OF THE RETENTION SYSTEM A PRE–CONSTRUCTION MEETING SHALL BE CONDUCTED. THOSE REQUIRED TO ATTEND ARE THE SUPPLIER OF THE RETENTION SYSTEM, THE GENERAL CONTRACTOR, SUB CONTRACTORS AND THE ENGINEER.

FOUNDATION/BEDDING PREPARATION

PRIOR TO PLACING THE BEDDING, THE FOUNDATION MUST BE CONSTRUCTED TO A UNIFORM AND STABLE GRADE. IN THE EVENT THAT UNSUITABLE FOUNDATION MATERIALS ARE ENCOUNTERED DURING EXCAVATION, THEY SHALL BE REMOVED AND BROUGHT BACK TO THE GRADE WITH A FILL MATERIAL AS APPROVED BY THE ENGINEER. ONCE THE FOUNDATION PREPARATION IS COMPLETE, THE 4 INCHES OF A WELL–GRADED GRANULAR MATERIAL SHALL BE PLACED AS THE BEDDING.

BACKFILL

THE BACKFILL SHALL BE AN A1, A2 OR A3 GRANULAR FILL PER AASHTO M–145 OR A WELL–GRADED GRANULAR FILL AS APPROVED BY THE ENGINEER (SEE INSTALLATION GUIDELINES). THE MATERIAL SHALL BE PLACED IN 8–INCH LOOSE LIFTS AND COMPACTED TO 90% AASHTO T99 STANDARD PROCTOR DENSITY. WHEN PLACING THE FIRST LIFTS OF BACKFILL IT IS IMPORTANT TO MAKE SURE THAT THE BACKFILL IS PROPERLY COMPACTED UNDER AND AROUND THE PIPE HAUNCHES. BACKFILL SHALL BE PLACED SUCH THAT THERE IS NO MORE THAN A TWO LIFT DIFFERENTIAL BETWEEN ANY OF THE PIPES AT ANY TIME DURING THE BACKFILL PROCESS. THE BACKFILL SHALL BE ADVANCED ALONG THE LENGTH OF THE DETENTION SYSTEM AT THE SAME RATE TO AVOID DIFFERENTIAL LOADING ON THE PIPE.

OTHER ALTERNATE BACKFILL MATERIAL MAY BE ALLOWED DEPENDING ON SITE SPECIFIC CONDITIONS. REFER TO TYPICAL BACKFILL DETAIL WITHIN THIS SET OF PLANS FOR TYPE OF MATERIAL REQUIRED.

MINIMUM COVER

BACKFILL SHALL BE PLACED TO THE PROPER ELEVATION OVER THE SYSTEM AS OUTLINED IN THE PLANS. MINIMUM COVER FOR CONSTRUCTION LOADING NEEDS TO BE DETERMINED BASED ON THE TYPE OF EQUIPMENT THAT IS PLANNED FOR CONSTRUCTION. PROPER COVER FOR CONSTRUCTION EQUIPMENT SHALL BE DETERMINED PRIOR TO THE PRE–CONSTRUCTION MEETING BY THE ENGINEER.

CONTECH STORMWATER SOLUTIONS INC.

60" Ø UNDERGROUND RETENTION SYSTEM

TURF VALLEY LORIEN - DRAINAGE AREA 2

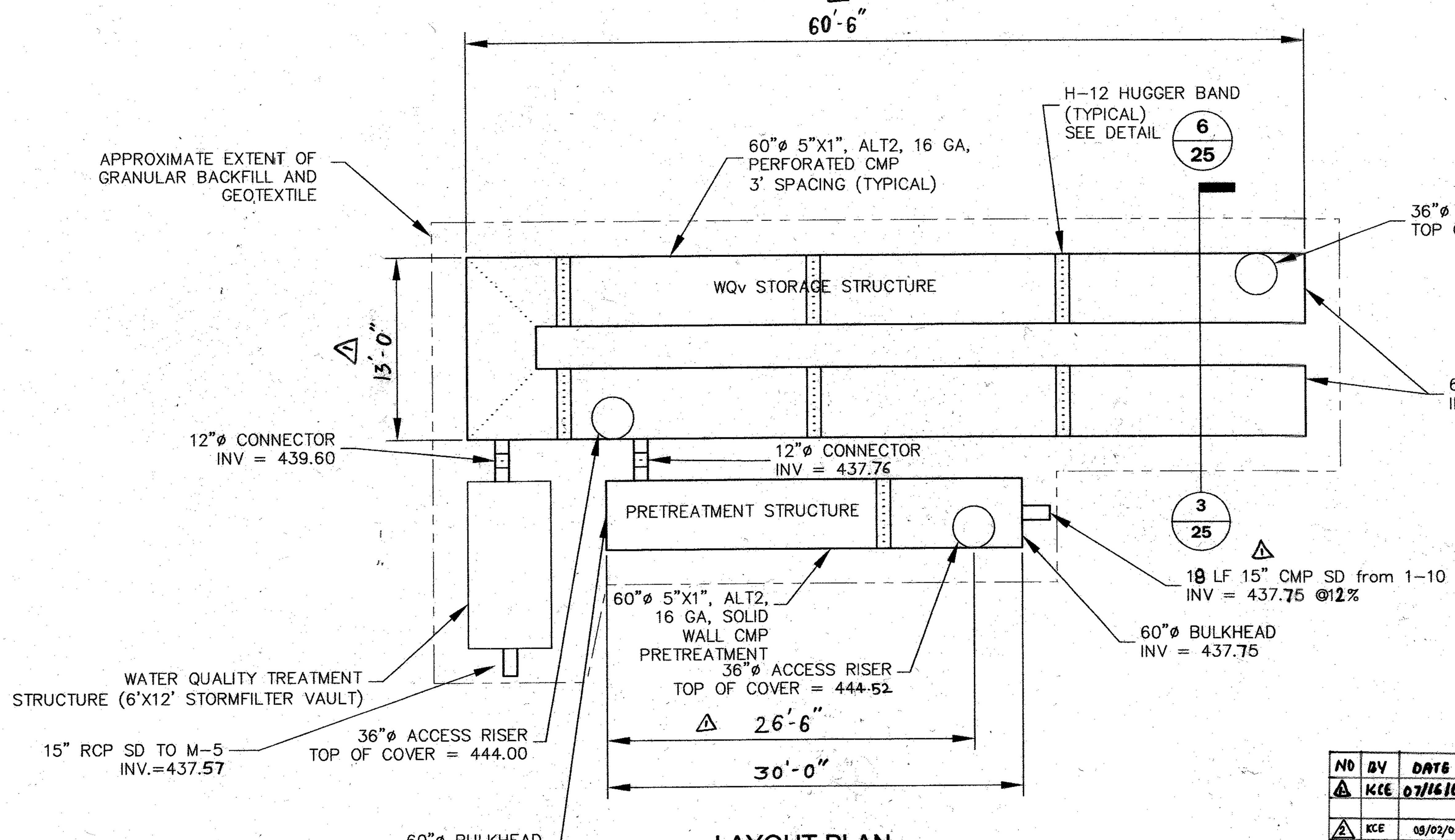

LAYOUT PLAN
SCALE 1"= 5'

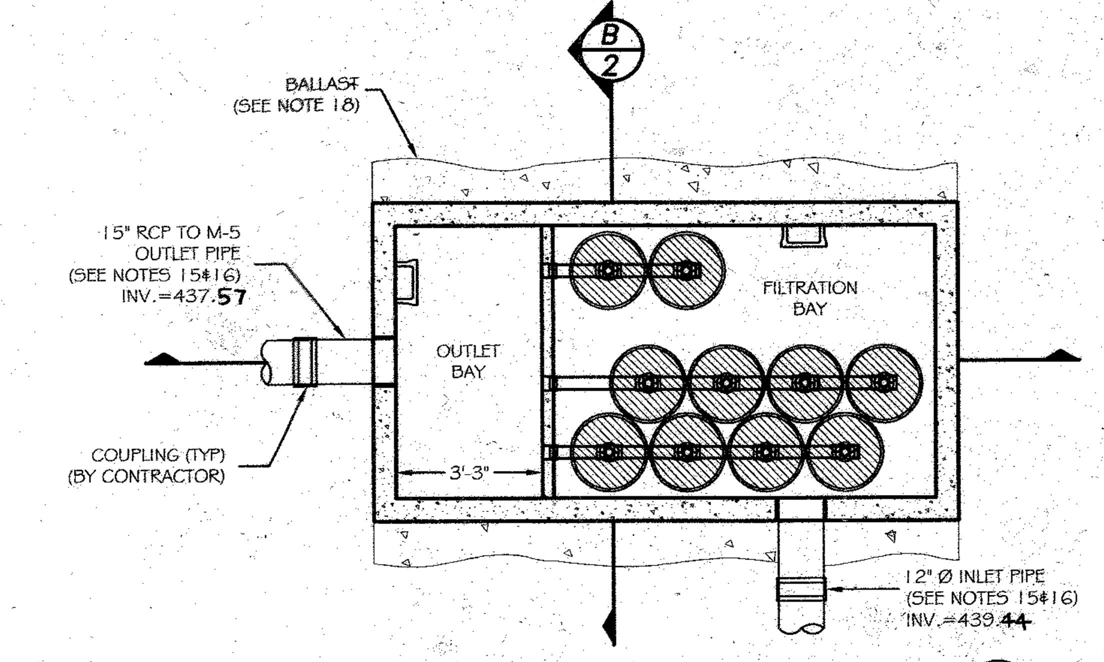

6' x 12' VOLUME STORMFILTER – PLAN VIEW (1/24) SCALE: N.T.S.

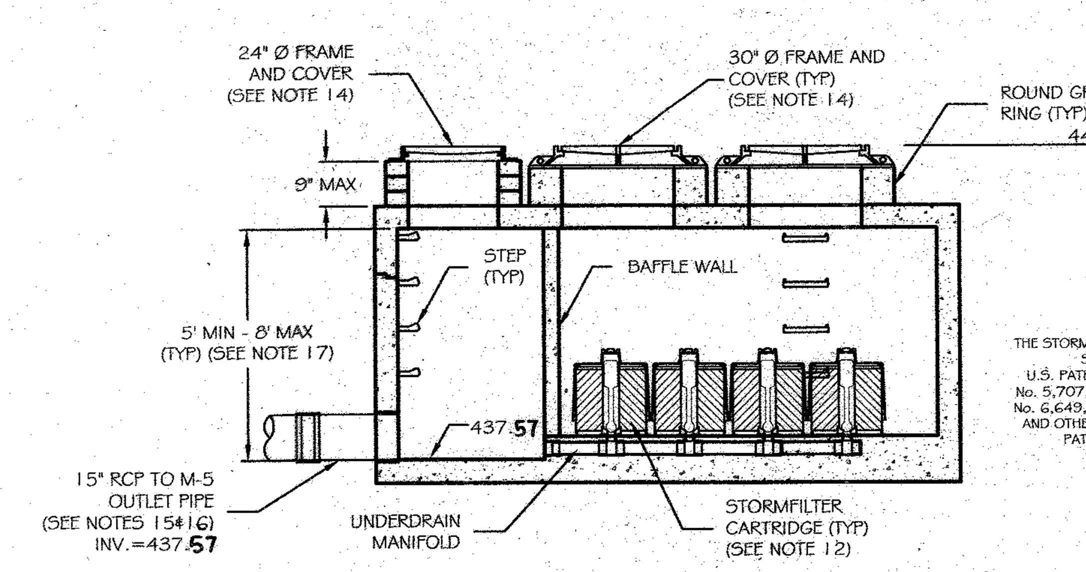

6' x 12' VOLUME STORMFILTER – SECTION VIEW (A/24) SCALE: N.T.S.

THE STORMWATER MANAGEMENT StormFilter® U.S. PATENT No. 5,322,629, No. 5,707,527, No. 6,027,639 No. 6,649,048, No. 5,624,576, AND OTHER U.S. AND FOREIGN PATENTS PENDING

6' x 12' PRECAST VOLUME STORMFILTER
PLAN AND SECTION VIEWS
STANDARD DETAIL

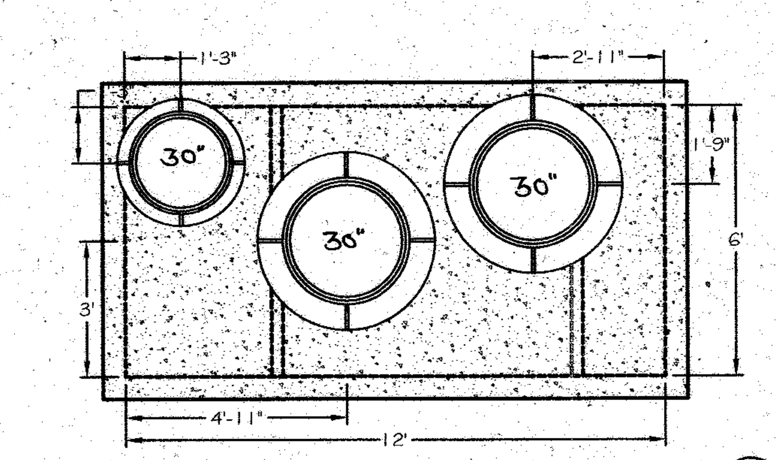

6' x 12' VOLUME STORMFILTER – TOP VIEW (2/24) SCALE: N.T.S.

TOP VIEW

NO	BY	DATE	REVISION
(1)	KCE	07/16/08	REVISED DIMENSION FOR UNDER GROUND SYSTEM
(2)	KCE	09/02/08	REVISED NOTE #4
3	KCE	03/01/10	SWM AS-BUILT INFORMATION ADDED

REQUIRED VOLUMES

WQv = 2,309 C.F.
Rev = 479 C.F.
PRETREATMENT = 280 C.F.

PROVIDED VOLUMES

WQv = 2,326 C.F.
STORMFILTER = 212 C.F.
60" PERFORATED SYSTEM = 1,525 C.F.
Rev = 909 C.F.
PRETREATMENT = 589 C.F.

GENERAL NOTES

11) VOLUME STORMFILTER BY CONTECH STORMWATER SOLUTIONS, PORTLAND, OREGON (800) 548-4667.
12) FILTER CARTRIDGE(S) TO BE SIPHON-ACTUATED AND SELF-CLEANING. STANDARD DETAIL DRAWING SHOWS MAXIMUM NUMBER OF CARTRIDGES. ACTUAL NUMBER REQUIRED TO BE SPECIFIED ON SITE PLANS OR IN DATA TABLE BELOW.
13) PRECAST VAULT TO BE CONSTRUCTED IN ACCORDANCE WITH ASTM C857 AND C858. DETAIL DRAWING REFLECTS DESIGN INTENT ONLY. ACTUAL DIMENSIONS AND CONFIGURATION OF STRUCTURE WILL BE SHOWN ON PRODUCTION SHOP DRAWING.
14) STRUCTURE AND ACCESS COVERS TO MEET AASHTO H-20 LOAD RATING.
15) VOLUME STORMFILTER REQUIRES 2.0 FEET OF DROP FROM INLET TO OUTLET. IF LESS DROP IS AVAILABLE, CONTACT CONTECH STORMWATER SOLUTIONS.
16) INLET AND OUTLET PIPING TO BE SPECIFIED BY ENGINEER AND PROVIDED BY CONTRACTOR. PRECAST VOLUME STORMFILTER VAULT EQUIPPED WITH CAST-IN BOOT CONNECTIONS AT INLET AND OUTLET LOCATIONS FOR WATER-TIGHT CONNECTIONS.
17) PROVIDE MINIMUM CLEARANCE FOR MAINTENANCE ACCESS. IF A SHALLOWER SYSTEM IS REQUIRED, CONTACT CONTECH STORMWATER SOLUTIONS FOR OTHER OPTIONS.
18) ANTI-FLOTATION BALLAST TO BE SPECIFIED BY ENGINEER AND PROVIDED BY CONTRACTOR, IF REQUIRED. BALLAST TO BE SET ALONG ENTIRE LENGTH OF BOTH SIDES OF THE STRUCTURE.
19) ALL STORMFILTERS REQUIRE REGULAR MAINTENANCE. REFER TO OPERATION AND MAINTENANCE GUIDELINES FOR MORE INFORMATION.

6' x 12' PRECAST VOLUME STORMFILTER DATA

STRUCTURE ID	SF1
WATER QUALITY VOLUME (ft^3)	2,309
STORAGE IN STORMFILTER (ft^3)	212
# OF CARTRIDGES REQUIRED	10
CARTRIDGE FLOW RATE (15 OR 7.5 gpm)	7.5
MEDIA TYPE	XFCSF

PIPE DATA:	I.E.	MATERIAL	DIAMETER
INLET PIPE #1	439.6'	CMP	12"
INLET PIPE #2	N/A	N/A	N/A
OUTLET PIPE	437.6'	RCP	15"

RIM: 444.00' / 444.00' / 444.00' FLOW

ANTI-FLOTATION BALLAST	WIDTH	HEIGHT
	N/A	N/A

NOTES/SPECIAL REQUIREMENTS:

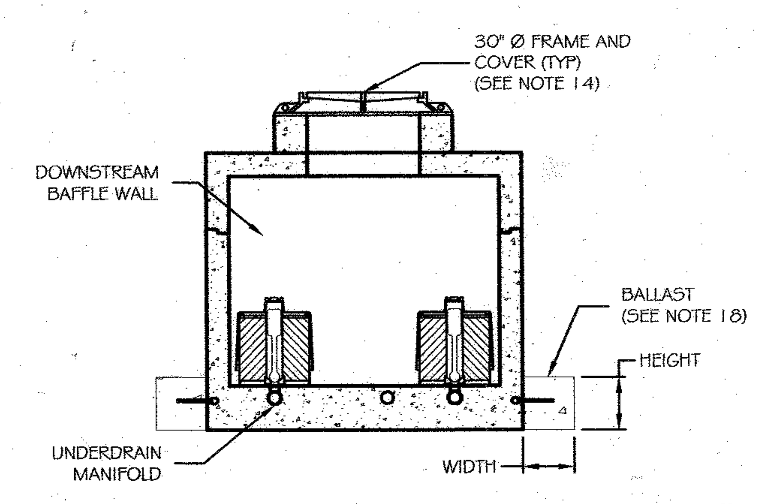

6' x 12' VOLUME STORMFILTER – SECTION VIEW (B/24) SCALE: N.T.S.

SECTION VIEW

APPROVED
PLANNING BOARD
OF HOWARD COUNTY
DATE 3/20/08

APPROVED: DEPARTMENT OF PLANNING AND ZONING

[signature] 6/25/08
Chief, Development Engineering Division — Date

[signature] 6/27/08
Chief, Division of Land Development — Date

[signature] 6/30/08
Director — Date

PRELIMINARY
NOT APPROVED FOR
FABRICATION OR CONSTRUCTION

NOTE:
1. LOCATION OF ALL MANHOLES, STUBS, INLETS, OUTLETS AND OUTLET CONTROL STRUCTURES, TO BE SPECIFIED BY PROJECT ENGINEER OF RECORD PRIOR TO FABRICATION.
2. ALL RECOMMENDED REINFORCING ON THE SYSTEM WILL BE DESIGNED BY MANUFACTURER TO CONFORM TO ASTM A998 AFTER PURCHASE ORDER IS ISSUED.

CONTECH ID# 10111

CONTECH STORMWATER SOLUTIONS INC.
9025 CENTRE POINTE DRIVE, SUITE 400
WEST CHESTER, OHIO 45069
PH: 1.800.338.1122 FAX: 513.645.7399

OWNER
MANGIONE ENTERPRISES OF TURF VALLEY LIMITED PARTNERSHIP
1205 YORK ROAD, PENTHOUSE
LUTHERVILLE, MARYLAND 21093
PHONE (410) 825–8400

STORM FILTER LAYOUT PLAN & NOTES

TURF VALLEY, LORIEN
NURSING HOME & ASSISTED LIVING FACILITY
OAKMONT AT TURF VALLEY
PARCEL Q
PLATS 18773 - 18775
TAX MAP 16 - P/O PARCEL 8- GRID 16 & 17;
POD I per S-86-13 (4th AMENDED)
THIRD ELECTION DISTRICT HOWARD COUNTY, MARYLAND

KCE ENGINEERING, INC.
EXECUTIVE CENTER
3300 NORTH RIDGE ROAD, SUITE 315
ELLICOTT CITY, MARYLAND 21043
PHONE (410) 203–9800 FAX (410) 203–9228

Professional Certification. I hereby certify that these documents were prepared or approved by me, and that I am a duly licensed professional engineer under the laws of the State of Maryland, License NO. 8818, Expiration Date: 10/17/08.

STATE OF MARYLAND — REGISTERED PROFESSIONAL ENGINEER — NO. 8818 [signature] 7/13/08

DRAWN BY: MG
CHECKED BY: DVK
SCALE: AS SHOWN
DATE: 04/30/2008

SDP-07-084

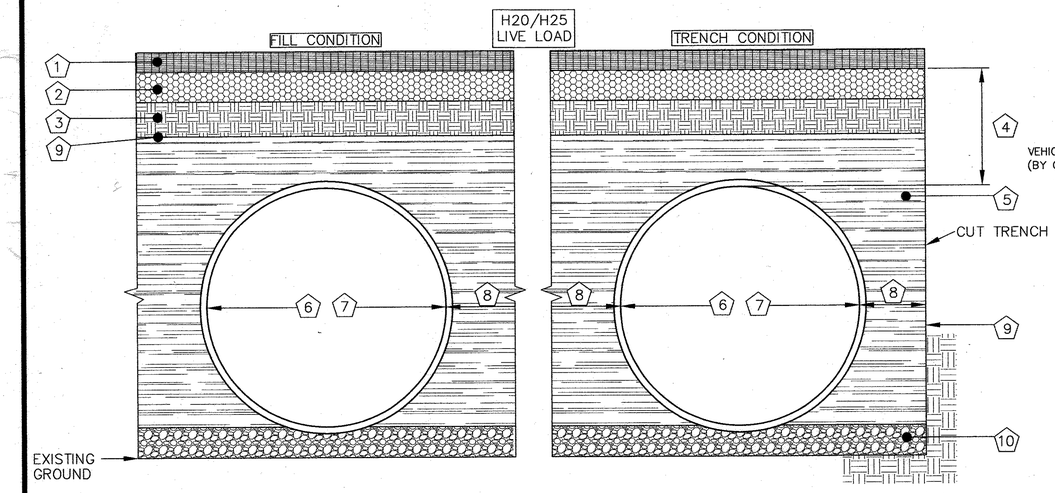

1.) RIGID OR FLEXIBLE PAVEMENT

2.) GRANULAR ROAD BASE

3.) NORMAL ROADWAY EMBANKMENT FILL PLACED IN 8" LIFTS AND COMPACTED TO MIN. 90% STANDARD DENSITY PER AASHTO T-99.

4.) 12" MIN. FOR DIAMETERS THROUGH 96" 18" MIN. FOR DIAMETERS FROM 102" AND UP MEASURED FROM TOP OF RIGID OR BOTT. OF FLEXIBLE PAVEMENT.

5.) SELECT GRANULAR FILL PER AASHTO M145 A-1, A-2 OR A-3 OR APPROVED EQUAL. (COMPACTED TO MIN. 90% STANDARD DENSITY PER AASHTO T-99.)

6.) 12"ø THRU 84"ø 2 2/3" X 1/2" CSP, GAGE PER AASHTO SECTION 12.

7.) 54"ø THRU 144"ø 3" X 1" OR 5" X 1" CSP GAGE PER AASHTO SECTION 12.

8.) STANDARD SPACING IN TABLE, SPECIAL SPACING IS SUBJECT TO APPROVAL BY CONTECH CONSTRUCTION PRODUCTS INC.

SPACING CHART PER AISI AND NCSPA GUIDELINES	
DIAMETER	REQUIRED SPACING
UP TO 24"	12"
24" – 72"	1/2 PIPE DIA
72" AND UP	36"

9.) CONTECH C45 NON-WOVEN GEOTEXTILE AS REQUIRED TO PREVENT SOIL MIGRATION.

10.) RELATIVELY LOOSE GRANULAR BEDDING, ROUGHLY SHAPED TO FIT BOTTOM OF PIPE, 4" TO 6" IN DEPTH. (#57 OR #8 OR OTHER SUITABLE GRANULAR) #57

BACKFILL DETAIL (SWM F #2)
3/25 SCALE: N.T.S.

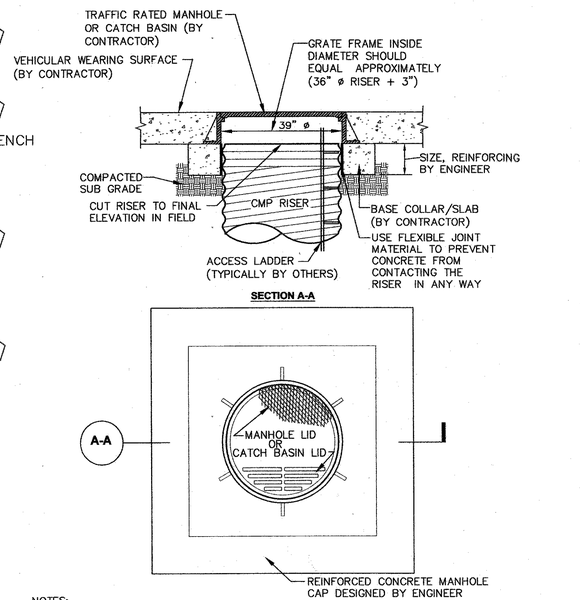

NOTES:
1. THE CONCRETE CAP SHALL BE SIZED AND DESIGNED BY OTHERS SO THAT THE LOADS ARE TRANSMITTED TO THE SOIL, AND NOT THE RISER.
2. THE CONCRETE CAP SHALL BE SIZED TO PROVIDE AN ADEQUATE BOTTOM AREA BASED ON THE ALLOWABLE BEARING CAPACITY OF THE SOIL.
3. THE FLEXIBLE JOINT MATERIAL (RECYCLED VINYL OR EQ.) TO BE STIFF ENOUGH SO THAT THE CONCRETE CAN NEVER ENGAGE WITH THE RISER CORRUGATIONS.

4/25 MANHOLE CAP DETAIL
SCALE: N.T.S.

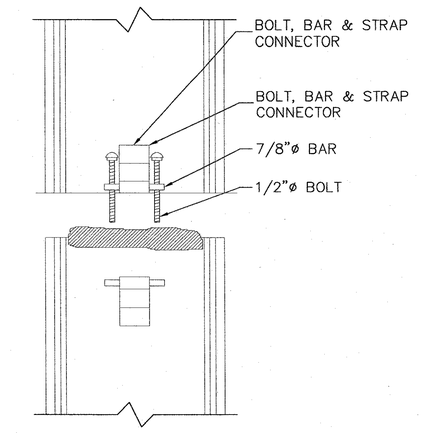

CONNECTION DETAIL
SINGLE
BOLT, BAR & STRAP

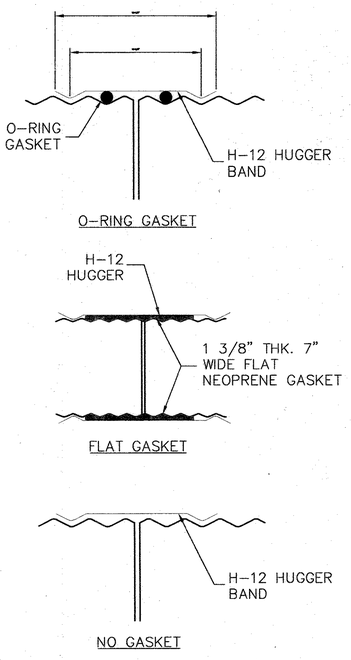

GASKETED SECTION

GENERAL NOTES:

1. REFER TO CONTECH BAND SELECTION GUIDE FOR BAND WIDTH, GAGE, AND FASTENER TYPES.
2. BANDS FOR PIPE-ARCH ARE THE SAME AS FOR EQUIVALENT DIAMETER ROUND PIPE.
3. BANDS ARE NORMALLY FURNISHED AS FOLLOWS:
   12" THRU 48" 1-PIECE
   54" THRU 96" 2-PIECE
   102" THRU 144" 3-PIECES.
4. BAND FASTENERS ARE ATTACHED WITH SPOT WELDS, RIVETS OR HAND WELDS. ALL ALUMINUM BANDS, BOTH SINGLE AND DOUBLE BB&S, ARE FURNISHED WITH A 14 GAGE ALUMINUM BACK-UP PLATE WELDED TO THE BAND AND THE STRAP.
5. REROLLED ANNULAR END CORRUGATIONS ARE NORMALLY 2-2/3" X 1/2". DIMENSIONS ARE SUBJECT TO MANUFACTURING TOLERANCES.
6. ORDER SHALL DESIGNATE GASKET OPTION.

6/25 H-12 HUGGER BAND DETAIL
SCALE: N.T.S.

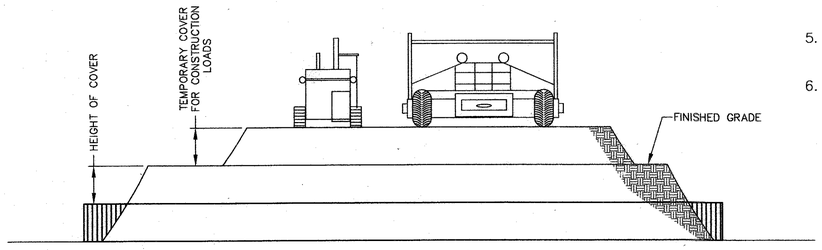

CONSTRUCTION LOADS:
FOR TEMPORARY CONSTRUCTION VEHICLE LOADS, AN EXTRA AMOUNT OF COMPACTED COVER MAY BE REQUIRED OVER THE TOP OF THE PIPE. THE HEIGHT-OF-COVER SHALL MEET THE MINIMUM REQUIREMENTS SHOWN IN THE TABLE BELOW. THE USE OF HEAVY CONSTRUCTION EQUIPMENT NECESSITATES GREATER PROTECTION FOR THE PIPE THAN FINISHED GRADE COVER MINIMUMS FOR NORMAL HIGHWAY TRAFFIC.

PIPE SPAN, INCHES	AXLE LOADS (kips)			
	18–50	50–75	75–110	110–150
	MINIMUM COVER (FT)			
12–42	2.0	2.5	3.0	3.0
48–72	3.0	3.0	3.5	4.0
78–120	3.0	3.5	4.0	4.0
126–144	3.5	4.0	4.5	4.5

MINIMUM COVER MAY VARY, DEPENDING ON LOCAL CONDITIONS. THE CONTRACTOR MUST PROVIDE THE ADDITIONAL COVER REQUIRED TO AVOID DAMAGE TO THE PIPE. MINIMUM COVER IS MEASURED FROM THE TOP OF THE PIPE TO THE TOP OF THE **MAINTAINED CONSTRUCTION ROADWAY SURFACE.*

5/25 CONSTRUCTION LOADING DIAGRAM
SCALE: N.T.S.

NO.	BY	DATE	REVISION
2	KCE	08/02/08	REVISED SHEET TITLE
3	KCE	03/01/10	SWM AS-BUILT INFORMATION ADDED

STORMWATER MANAGEMENT CONSTRUCTION DETAILS - II

TURF VALLEY, LORIEN
NURSING HOME & ASSISTED LIVING FACILITY
OAKMONT AT TURF VALLEY
PARCEL Q
PLATS 18773 - 18775
TAX MAP 16 - P/O PARCEL 8- GRID 16 & 17;
POD I per S-86-13 (4th AMENDED)
THIRD ELECTION DISTRICT HOWARD COUNTY, MARYLAND

PRELIMINARY
NOT APPROVED FOR FABRICATION OR CONSTRUCTION

APPROVED
PLANNING BOARD
OF HOWARD COUNTY
DATE 3/27/08

APPROVED: DEPARTMENT OF PLANNING AND ZONING

Chief, Development Engineering Division — Date 6/25/08

Chief, Division of Land Development — Date 6/23/08

Director — Date 6/20/08

NOTE:
1. LOCATION OF ALL MANHOLES, STUBS, INLETS, OUTLETS AND OUTLET CONTROL STRUCTURES, TO BE SPECIFIED BY PROJECT ENGINEER OF RECORD PRIOR TO FABRICATION.
2. ALL RECOMMENDED REINFORCING ON THE SYSTEM WILL BE DESIGNED BY MANUFACTURER TO CONFORM TO ASTM A998 AFTER PURCHASE ORDER IS ISSUED.

CONTECH ID# 10111

CONTECH STORMWATER SOLUTIONS INC.
9025 CENTRE POINTE DRIVE, SUITE 400
WEST CHESTER, OHIO 45069
PH: 1.800.338.1122 FAX: 513.645.7399

OWNER
MANGIONE ENTERPRISES OF TURF VALLEY
LIMITED PARTNERSHIP
1205 YORK ROAD, PENTHOUSE
LUTHERVILLE, MARYLAND 21093
PHONE (410) 825-8400

KCE ENGINEERING, INC.
EXECUTIVE CENTER
3300 NORTH RIDGE ROAD, SUITE 315
ELLICOTT CITY, MARYLAND 21043
PHONE (410) 203-9800 FAX (410) 203-9228

Professional Certification. I hereby certify that these documents were prepared or approved by me, and that I am a duly licensed professional engineer under the laws of the State of Maryland, License NO. 8818, Expiration Date: 10/17/08.

STATE OF MARYLAND — DAVID VINCENT KNIGHT — NO. 8818 — REGISTERED PROFESSIONAL ENGINEER
5/13/08

DRAWN BY: MC
CHECKED BY: DVK
SCALE: AS SHOWN
DATE: 04/30/2008

SHEET: 28 OF 36

SDP-07-084

MD-378 CONSTRUCTION SPECIFICATIONS

These specifications are appropriate to all ponds within the scope of the Standard for practice MD-378. All references to ASTM and AASHTO specifications apply to the most recent version.

Site Preparation

Areas designated for borrow areas, embankment, and structural works shall be cleared, grubbed and stripped of topsoil. All trees, vegetation, roots and other objectionable material shall be removed. Channel banks and sharp breaks shall be sloped to no steeper than 1:1. All trees shall be cleared and grubbed within 15 feet of the toe of the embankment.

Areas to be covered by the reservoir will be cleared of all trees, brush, logs, fences, rubbish and other objectionable material unless otherwise designated on the plans. Trees, brush, and stumps shall be cut approximately level with the ground surface. For dry stormwater management ponds, a minimum of a 25-foot radius around the inlet structure shall be cleared.

All cleared and grubbed material shall be disposed of outside and below the limits of the dam and reservoir as directed by the owner or his representative. When specified, a sufficient quantity of topsoil will be stockpiled in a suitable location for use on the embankment and other designated areas.

Earth Fill

Material - The fill material shall be taken from approved designated borrow areas. It shall be free of roots, stumps, wood, rubbish, stones greater than 6", frozen or other objectionable materials. Fill material for the center of the embankment, and cut off trench shall conform to Unified Soil Classification GC, SC, CH, or CL and must have at least 30% passing the #200 sieve. Consideration may be given to the use of other materials in the embankment if designed by a geotechnical engineer. Such special designs must have construction supervised by a geotechnical engineer.

Materials used in the outer shell of the embankment must have the capability to support vegetation of the quality required to prevent erosion of the embankment.

Placement - Areas on which fill is to be placed shall be scarified prior to placement of fill. Fill materials shall be placed in maximum 8 inch thick (before compaction) layers which are to be continuous over the entire length of the fill. The most permeable borrow material shall be placed in the downstream portions of the embankment. The principal spillway must be installed concurrently with fill placement and not excavated into the embankment.

Compaction - The movement of the hauling and spreading equipment over the fill shall be controlled so that the entire surface of each lift shall be traversed by not less than one tread track of heavy equipment or compaction shall be achieved by a minimum of four complete passes of a sheepsfoot, rubber tired or vibratory roller. Fill material shall contain sufficient moisture such that the required degree of compaction will be obtained with the equipment used. The fill material shall contain sufficient moisture so that if formed into a ball it will not crumble, yet not be so wet that water can be squeezed out.
When required by the reviewing agency the minimum required density shall not be less than 95% of maximum dry density with a moisture content within +-2% of the optimum. Each layer of fill shall be compacted as necessary to obtain that density, and is to be certified by the Engineer at the time of construction. All compaction is to be determined by AASHTO Method T-99 (Standard Proctor).

Cut Off Trench - The cutoff trench shall be excavated into impervious material along or parallel to the centerline of the embankment as shown on the plans. The bottom width of the trench shall be governed by the equipment used for excavation, with the minimum width being four feet. The depth shall be at least four feet below existing grade or as shown on the plans. The side slopes of the trench shall be 1 to 1 or flatter. The backfill shall be compacted with construction equipment, rollers, or hand tampers to assure maximum density and minimum permeability.

Embankment Core - The core shall be parallel to the centerline of the embankment as shown on the plans. The top width of the core shall be a minimum of four feet. The height shall extend up to at least the 10 year water elevation or as shown on the plans. The side slopes shall be 1 to 1 or flatter.

The core shall be compacted with construction equipment, rollers, or hand tampers to assure maximum density and minimum permeability. In addition, the core shall be placed concurrently with the outer shell of the embankment.

Structure Backfill

Backfill adjacent to pipes or structures shall be of the type and quality conforming to that specified for the adjoining fill material. The fill shall be placed in horizontal layers not to exceed four inches in thickness and compacted by hand tampers or other manually directed compaction equipment. The material needs to fill completely all spaces under and adjacent to the pipe. At no time during the backfilling operation shall driven equipment be allowed to operate closer than four feet, measured horizontally, to any part of a structure. Under no circumstances shall equipment be driven over any part of a concrete structure or pipe, unless there is a compacted fill of 24" or greater over the structure or pipe.
Structure backfill may be flowable fill meeting the requirements of Maryland Department of Transportation, State Highway Administration Standard Specifications for Construction and Materials, Section 313 as modified. The mixture shall have a 100-200 psi; 28 day unconfined compressive strength. The flowable fill shall have a minimum pH of 4.0 and a minimum resistivity of 2,000 ohm-cm. Material shall be placed such that a minimum of 6" (measured perpendicular to the outside of the pipe) of flowable fill shall be under (bedding), over and, on the sides of the pipe. It only needs to extend up to the spring line for rigid conduits. Average slump of the fill shall be 7" to assure flow ability of the material. Adequate measures shall be taken (sandbags, etc.) to prevent floating the pipe. When using flowable fill, all metal pipe shall be bituminous coated. Any adjoining soil fill shall be placed in horizontal layers not to exceed four inches in thickness and compacted by hand tampers or other manually directed compaction equipment. The material shall completely fill all voids adjacent to the flowable fill zone. At no time during the backfilling operation shall driven equipment be allowed to operate closer than four feet, measured horizontally, to any part of a structure. Under no circumstances shall equipment be driven over any part of a structure or pipe unless there is a compacted fill of 24" or greater over the structure or pipe.

Backfill material outside the structural backfill (flowable fill) zone shall be of the type and quality conforming to that specified for the core of the embankment or other embankment materials.

Pipe Conduits

All pipes shall be circular in cross section.
Corrugated Metal Pipe - All of the following criteria shall apply for corrugated metal pipe:

1. Materials - (Polymer Coated steel pipe) Steel pipes with polymeric coatings shall have a minimum coating thickness of 0.01 inch (10 mil) on both sides of the pipe. This pipe and its appurtenances shall conform to the requirements of AASHTO Specifications M-245 & M-246 with watertight coupling bands or flanges.
Materials - (Aluminum Coated Steel Pipe) - This pipe and its appurtenances shall conform to the requirements of AASHTO Specification M-274 with watertight coupling bands or flanges.
Aluminum Coated Steel Pipe, when used with flow able fill or when soil and/or water conditions warrant the need for increased durability, shall be fully bituminous coated per requirements of AASHTO Specification M-190 Type A. Any aluminum coating damaged or otherwise removed shall be replaced with cold applied bituminous coating compound. Aluminum surfaces that are to be in contact with concrete shall be painted with one coat of zinc chromate primer or two coats of asphalt.
Materials - (Aluminum Pipe) - This pipe and its appurtenances shall conform to the requirements of AASHTO Specification M-196 or M-211 with watertight coupling bands or flanges. Aluminum Pipe, when used with flowable fill or when soil and/or water conditions warrant for increased durability, shall be fully bituminous coated per / requirements of AASHTO Specification M -190 Type A. Aluminum surfaces that are to be in contact with concrete shall be painted with one coat of zinc chromate primer or two coats of asphalt. Hot dip galvanized bolts may be used for connections. The pH of the surrounding soils shall be between 4 and 9.

2. Coupling bands, anti-seep collars, end sections, etc., must be composed of the same material and coatings as the pipe. Metals must be insulated from dissimilar materials with use of rubber or plastic insulating materials at least 24 mils in thickness.

3. Connections - All connections with pipes must be completely watertight. The drain pipe or barrel connection to the riser shall be welded all around when the pipe and riser are metal. Anti-seep collars shall be connected to the pipe in such a manner as to be completely watertight. Dimple bands are not considered to be watertight.

All connections shall use a rubber or neoprene gasket when joining pipe sections. The end of each pipe shall be re-rolled an adequate number of corrugations to accommodate the bandwidth. The following type connections are acceptable for pipes less than 24 inches in diameter: flanges on both ends of the pipe with a circular 3/8 inch closed cell neoprene gasket, pre-punched to the flange bolt circle, sandwiched between adjacent flanges; a 12-inch wide standard lap type band with 12-inch wide by 3/8-inch thick closed cell circular neoprene gasket; and a 12-inch wide hugger type band with o-ring gaskets having a minimum diameter of 1/2 inch greater than the corrugation depth. Pipes 24 inches in diameter and larger shall be connected by a 24 inch long annular corrugated band using a minimum of 4 (four) rods and lugs, 2 on each connecting pipe end. A 24-inch wide by 3/8-inch thick closed cell circular neoprene gasket will be installed with 12 inches on the end of each pipe. Flanged joints with 3/8 inch closed cell gaskets the full width of the flange is also acceptable.
Helically corrugated pipe shall have either continuously welded seams or have lock seams with internal caulking or a neoprene bead.

4. Bedding - The pipe shall be firmly and uniformly bedded throughout its entire length. Where rock or soft, spongy or other unstable soil is encountered, all such material shall be removed and replaced with suitable earth compacted to provide adequate support.

5. Backfilling shall conform to "Structure Backfill".

6. Other details (anti-seep collars, valves, etc.) shall be as shown on the drawings.

Reinforced Concrete Pipe - All of the following criteria shall apply for reinforced concrete pipe:

1. Materials - Reinforced concrete pipe shall have bell and spigot joints with rubber gaskets and shall equal or exceed ASTM C-361.

2. Bedding - Reinforced concrete pipe conduits shall be laid in a concrete bedding / cradle for their entire length. This bedding I cradle shall consist of high slump concrete placed under the pipe and up the sides of the pipe at least 50% of its outside diameter with a minimum thickness of 6 inches. Where a concrete cradle is not needed for structural reasons, flowable fill may be used as described in the "Structure Backfill" section of this standard. Gravel bedding is not permitted.

3. Laying pipe - Bell and spigot pipe shall be placed with the bell end upstream. Joints shall be made in accordance with recommendations of the manufacturer of the material. After the joints are sealed for the entire line, the bedding shall be placed so that all spaces under the pipe are filled. Care shall be exercised to prevent any deviation from the original line and grade of the pipe. The first joint must be located within 4 feet from the riser.

4. Backfilling shall conform to "Structure Backfill".

5. Other details (anti-seep collars, valves, etc.) shall be as shown on the drawings.

Plastic Pipe - The following criteria shall apply for plastic pipe:

1. Materials - PVC pipe shall be PVC-1120 or PVC-1220 conforming to ASTM Dor ASTM D-2241. Corrugated High Density Polyethylene (HDPE) pipe, couplings and fittings shall conform to the following: 4" - 10" inch pipe shall meet the requirements of AASHTO M252 Type S, and 12" through 24" inch shall meet the requirements of AASHTO M294 Type S.

2. Joints and connections to anti-seep collars shall be completely watertight.

3. Bedding -The pipe shall be firmly and uniformly bedded throughout its entire length. Where rock or soft, spongy or other unstable soil is encountered, all such material shall be removed and replaced with suitable earth compacted to provide adequate support.

4. Backfilling shall conform to "Structure Backfill".

5. Other details (anti-seep collars, valves, etc.) shall be as shown on the drawings.

Drainage Diaphragms - When a drainage diaphragm is used, a registered professional engineer will supervise the design and construction inspection.

Concrete

Concrete shall meet the requirements of Maryland Department of Transportation, State Highway Administration Standard Specifications for Construction and Materials, Section 414, Mix No.3.

Rock Riprap

Rock riprap shall meet the requirements of Maryland Department of Transportation, State Highway Administration Standard Specifications for Construction and Materials, Section 311.

Geotextile shall be placed under all riprap and shall meet the requirements of Maryland Department of Transportation, State Highway Administration Standard Specifications for Construction and Materials, Section 921.09, Class C.

Care of Water during Construction

All work on permanent structures shall be carried out in areas free from water. The Contractor shall construct and maintain all temporary dikes, levees, cofferdams, drainage channels, and stream diversions necessary to protect the areas to be occupied by the permanent works. The contractor shall also furnish, install, operate, and maintain all necessary pumping and other equipment required for removal of water from various parts of the work and for maintaining the excavations, foundation, and other parts of the work free from water as required or directed by the engineer for constructing each part of the work. After having served their purpose, all temporary protective works shall be removed or leveled and graded to the extent required to prevent obstruction in any degree whatsoever of the flow of water to the spillway or outlet works and so as not to interfere in any way with the operation or maintenance of the structure. Stream diversions shall be maintained until the full flow can be passed through the permanent works. The removal of water from the required excavation and the foundation shall be accomplished in a manner and to the extent that will maintain stability of the excavated slopes and bottom required excavations and will allow satisfactory performance of all construction operations. During the placing and compacting of material in required excavations, the water level at the locations being refilled shall be maintained below the bottom of the excavation at such locations which may require draining the water sumps from which the water shall be pumped.

Stabilization

All borrow areas shall be graded to provide proper drainage and left in a sightly condition. All exposed surfaces of the embankment, spillway, spoil and borrow areas, and berms shall be stabilized by seeding, liming, fertilizing and mulching in accordance with the Natural Resources Conservation Service Standards and Specifications for Critical Area Planting (MD-342) or as shown on the accompanying drawings.

Erosion and Sediment Control

Construction operations will be carried out in such a manner that erosion will be controlled and water and air pollution minimized. State and local laws concerning pollution abatement will be followed. Construction plans shall detail erosion and sediment control measures.

CONTECH STORMWATER SOLUTIONS

Maintenance

Underground storm water detention and retention systems should be inspected at regular intervals and maintained when necessary to ensure optimum performance. The rate at which the system collects pollutants will depend more heavily on site activities than the size or configuration of the system.

Inspection

Inspection is the key to effective maintenance and is easily performed. CONTECH recommends ongoing quarterly inspections of the accumulated sediment. Sediment deposition and transport may vary from year to year and quarterly inspections will help insure that systems are cleaned out at the appropriate time. Inspections should be performed more often in the winter months in climates where sanding operations may lead to rapid accumulations, or in equipment washdown areas. It is very useful to keep a record of each inspection. A sample inspection log is included for your use.

Systems should be cleaned when inspection reveals that accumulated sediment or trash is clogging the discharge orifice. CONTECH suggests that all systems be designed with an access/inspection manhole situated at or near the inlet and the outlet orifice. Should it be necessary to get inside the system to perform maintenance activities, all appropriate precautions regarding confined space entry and OSHA regulations should be followed.

Cleaning

Maintaining an underground detention or retention system is easiest when there is no flow entering the system. For this reason, it is a good idea to schedule the cleanout during dry weather.

Accumulated sediment and trash can typically be evacuated through the manhole over the outlet orifice. If maintenance is not performed as recommended, sediment and trash may accumulate in front of the outlet orifice. Manhole covers should be securely seated following cleaning activities.

CONTECH STORMWATER SOLUTIONS

Inspection & Maintenance Log

__" Diameter System			Location: Anywhere, USA		
Date	Depth of Sediment	Accumulated Trash	Maintenance Performed	Maintenance Personnel	Comments
12/01/99	2"	None	Removed Sediment	B. Johnson	Installed
03/01/00	1"	Some	Removed Sediment and Trash	B. Johnson	Swept parking lot
06/01/00	0"	None	None		
09/01/00	0"	Heavy	Removed Trash	S. Riley	
12/01/00	1"	None	Removed Sediment	S. Riley	
4/01/01	0"	None	None	S. Riley	
04/15/01	2"	Some	Removed Sediment and Trash	ACE Environmental Services	

SAMPLE

APPROVED
PLANNING BOARD
OF HOWARD COUNTY
DATE 3/27/08

APPROVED: DEPARTMENT OF PLANNING AND ZONING

Chief, Development Engineering Division — Date 6/25/08

Chief, Division of Land Development — Date 6/27/08

Director — Date 6/30/08

OWNER
MANGIONE ENTERPRISES OF TURF VALLEY LIMITED PARTNERSHIP
1205 YORK ROAD, PENTHOUSE
LUTHERVILLE, MARYLAND 21093
PHONE (410) 825-8400

MD-378 CONSTRUCTION SPECIFICATIONS
OPERATION & MAINTENANCE SCHEDULE - I

TURF VALLEY, LORIEN
NURSING HOME & ASSISTED LIVING FACILITY
OAKMONT AT TURF VALLEY
PARCEL Q
PLATS 18773 - 18775
TAX MAP 16 - P/O PARCEL 8- GRID 16 & 17;
POD I per S-86-13 (4th AMENDED)
THIRD ELECTION DISTRICT HOWARD COUNTY, MARYLAND

KCE ENGINEERING, INC.
EXECUTIVE CENTER
3300 NORTH RIDGE ROAD, SUITE 315
ELLICOTT CITY, MARYLAND 21043
PHONE (410) 203-9800 FAX (410) 203-9228

"Professional Certification. I hereby certify that these documents were prepared or approved by me, and that I am a duly licensed professional engineer under the laws of the State of Maryland, License NO. 8818, Expiration Date: 10/17/08."

STATE OF MARYLAND — DHARAM VIR KATHURIA — NO. 8818 — REGISTERED PROFESSIONAL ENGINEER — 4/21/08

DRAWN BY: MG
CHECKED BY: DVK
SCALE: N/A
DATE: 04/30/2008

SHEET: 29 OF 36

SDP-07-084

STORMVAULT™ INSPECTION AND MAINTENANCE

The Stormvault™ Mitigation System by CON/SPAN® is specifically designed to treat stormwater runoff to the Maximum Extent Practicable. The Stormvault™ System is designed to capture and hold floatable debris, free oils and greases, settleable sediments and those dissolved pollutants including metals, nitrates and phosphates, which may adsorb or adhere to the surface of sediments and organic debris in stormwater. In order to insure efficient operation and achieve the desired pollutant removal rates, several important inspection and maintenance functions must periodically be performed. The inspection and maintenance are both to be performed during dry periods, in which no flow is entering the Stormvault™ System and water has returned to the permanent pool elevation. These procedures are described more fully below.

INSPECTION

The Stormvault™ Mitigation System by CON/SPAN® is to be inspected bi-annually to ensure the system is in proper working order. The twice-yearly observation should require less than four person-hours per visit, but depends upon the size of the Stormvault™ System. The inspection includes opening each manhole cover and visually inspecting for excess floating debris. The effluent chamber is to be inspected to verify that the control orifice within the standpipe is free of any trash or debris. In addition to the visual inspection, the first several chambers should be probed to gain an estimate of the collected sediment in the bottom of the vault. It is important to record the depths in these chambers to estimate when the next required maintenance should be performed. The removal of collected sediments is to be performed once the average depth in the vault reaches 6 inches. The hydrocarbon mats, which float on the surface of the Stormvault™ System, are designed to remove free oils and greases from stormwater runoff. The mats are attached to the manhole accesses using a lanyard. Location of the mats within the system is designed site-by-site basis. These mats must also be inspected as part of the bi-annual cycle. These mats will be a granular solid white when initially installed and will turn darker as they absorb free oils and greases. The mats should be inspected twice yearly to ensure that some white granular portions of the mat remain. The mats may collect some surface sediment; however, only when they change to a solid dark color uniformly throughout the granular medium do they need to be replaced.

MAINTENANCE

The removal of collected sediments is to be performed once an average depth of 6 inches has been reached in the vault. The hydrocarbon sorbent mats are to be replaced once the mats turn completely dark in color and can no longer absorb any free oils and greases. The maintenance cycle for each Stormvault™ unit will vary as it is a function of the size, type, and volume of pollutants in the stormwater runoff for that particular site. Previous monitoring and investigation of existing Stormvault™ units has resulted in a recommended maintenance cycle of 4-5 years for both removal of sediment and replacement of hydrocarbon sorbent mats. A site-specific maintenance cycle can easily be determined by the bi-annual inspections.

Removal of accumulated materials:

It is recommended that a professional pumping contractor, trained and licensed to remove and dispose of captured sediment material, perform this task. The contractor will lower a nozzle and hose into each chamber and pump the collected material into a vacuum truck. The contractor is to remove only the 6 inches of sediment and not the water in the permanent pool during vacuuming. This will minimize the amount of material, which the contractor must dispose.

Be aware that the captured sediments are by their nature easy to resuspend. Great care shall be taken to prevent any turbulence that may cause mixing and resuspension of the settled materials. The contractor must verify proper disposal with the local jurisdiction. An analysis of the materials may be required before disposal. Because of dilution by the water in the permanent pool, harmful pollutant concentrations are rarely reached.

Replacement of hydrocarbon sorbent mats:

To remove the mats, locate the lanyard attached to the inside of the access cover and pull them out. Care should be taken in lifting the mats out through the manholes, as the saturated mats can weigh up to five times as much as new mats. The used mats should be disposed of as directed by the local authority. Generally this is in a similar manner used to dispose of drain oil or similar materials. Replace the mats in like fashion by clipping the new mats to the keeper lines. New mats can be obtained by contacting the CON/SPAN® office nearest you.

NOTE:

The Stormvault™ Mitigation System by CON/SPAN® is a confined space and entry is not recommended. Enter only when necessary and with the proper equipment, following OSHA confined space entry procedures.

CONTECH® STORMWATER SOLUTIONS

Operation and Maintenance

The Stormwater Management StormFilter®

Vault, Cast-In-Place, and Linear Units

Important: These guidelines should be used as a part of your site stormwater management plan.

Description

The Stormwater Management StormFilter® (StormFilter) is a passive, flow-through, stormwater filtration system. The system is comprised of one or more vaults that house rechargeable, media-filled, filter cartridges. The StormFilter works by passing stormwater through the media-filled cartridges, which trap particulates and adsorb materials such as dissolved metals and hydrocarbons. Once filtered through the media, the treated stormwater is directed to a collection pipe or discharged into an open channel drainage way.

The StormFilter is offered in multiple configurations, including vault, linear, catch basin, manhole, and cast-in-place. The vault, linear, manhole, and catch basin models utilize pre-manufactured units to ease the design and installation processes. The cast-in-place units are customized for larger flows and may be either covered or uncovered underground units.

Purpose

The StormFilter is a passive, flow-through, stormwater filtration system designed to improve the quality of stormwater runoff from the urban environment before it enters receiving waterways. It is intended to function as a Best Management Practice (BMP) to meet federal, state, and local requirements for treating runoff in compliance with the Clean Water Act.

Through independent third party studies, it has been demonstrated that the StormFilter is highly effective for treatment of first flush flows and for treatment of flow-paced flows during the latter part of a storm. In general, the StormFilter's efficiency is highest when pollutant concentrations are highest. The primary non-point source pollutants targeted for removal by the StormFilter are: suspended solids (TSS), oil and grease, soluble metals, nutrients, organics, and trash and debris.

Sizing

The StormFilter is sized to treat the peak flow of a water quality design storm. The peak flow is determined from calculations based on the contributing watershed hydrology and from a design storm magnitude set by the local stormwater management agency. The particular size of a StormFilter unit is determined by the number of filter cartridges (see Figure 1) required to treat this peak flow.

The flow rate through each filter cartridge is adjustable, allowing control over the amount of contact time between the influent and the filter media. The maximum flow rate through each cartridge can be adjusted to between 5 and 15 gpm using a calibrated restrictor disc at the base of each filter cartridge. Adjustments to the cartridge flow rate will affect the number of cartridges required to treat the peak flow.

Basic Function

The StormFilter is designed to siphon stormwater runoff through a filter cartridge containing media. A variety of filter media is available and can be customized for each site to target and remove the desired levels of sediments, dissolved phosphorus, dissolved metals, organics, and oil and grease. In many cases, a combination of media is recommended to maximize the effectiveness of the stormwater pollutant removal.

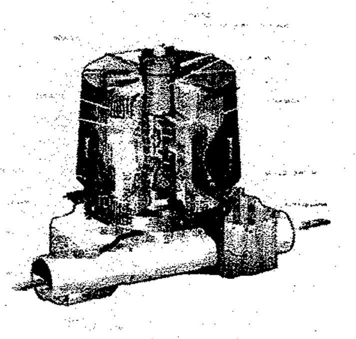

Figure 1. The StormFilter Cartridge

Priming System Function

When stormwater in the StormFilter unit enters a StormFilter cartridge, it percolates horizontally through the cartridge's filter media and collects in the center tube of the cartridge, where the float in the cartridge is in a closed (downward) position.

Water continues to pass through the filter media and into the cartridge's center tube. The air in the cartridge is displaced by the water and purged from beneath the filter hood through the one-way check valve located in the cap. Once the center tube is filled with water (approximately 18 inches deep), there is enough buoyant force on the float to open the float valve and allow the treated water in the center tube to flow into the under-drain manifold. This causes the check valve to close, initiating a siphon that draws polluted water throughout the full surface area and volume of the filter. Thus, the entire filter cartridge is used to filter water throughout the duration of the storm, regardless of the water surface elevation in the unit. This siphon continues until the water surface elevation drops to the elevation of the hood's scrubbing regulators.

The cartridges are connected to the under-drain manifold with a plastic connector. Since some media used is potentially buoyant, a threaded connector affixed to the under-drain manifold (with glue or other adhesive) is necessary to ensure that the cartridge isn't lifted out of place. For the heavier compost media, a slip connector is used.

The StormFilter is also equipped with flow spreaders that trap floating debris and surface films, even during overflow conditions. Depending on individual site characteristics, some systems are equipped with high and/or base flow bypasses. High flow bypasses are installed when the calculated peak storm event generates a flow that overcomes the overflow capacity of the system. This is especially important for precast systems. Base flow bypasses are sometimes installed to bypass continuous inflows caused by ground water seepage, which usually do not require treatment. All StormFilter units are designed with an overflow. The overflow operates when the inflow rate is greater than the treatment capacity of the filter cartridges.

Maintenance Guidelines

The primary purpose of the StormFilter is to filter out and prevent pollutants from entering our waterways. Like any effective filtration system, periodically these pollutants must be removed to restore the StormFilter to its full efficiency and effectiveness.

Maintenance requirements and frequency are dependent on the pollutant load characteristics of each site.

Maintenance activities may be required in the event of a chemical spill or due to excessive sediment loading from site erosion or extreme storms. It is also good practice to inspect the system after severe storm events.

Types of Maintenance

Presently, procedures have been developed for two levels of maintenance:

- Inspection/minor maintenance
- Major maintenance.

Inspection/minor maintenance activities are combined since minor maintenance does not require special equipment and typically little or no materials are in need of disposal.

Inspection/minor maintenance typically involves:

- Inspection of the vault itself
- Removal of vegetation and trash and debris.

Major maintenance typically includes:

- Cartridge replacement
- Sediment removal

Important: Applicable safety (OSHA) and disposal regulations should be followed during all maintenance activities.

Two scheduled inspections/maintenance activities should take place during the year.

First, an inspection/minor maintenance activity should be done. During the minor maintenance activity (routine inspection, debris removal), the need for major maintenance should be determined and, if disposal during major maintenance will be required, samples of the sediments and media should be obtained.

Second, if required, a major maintenance activity (replacement of the filter cartridges and associated sediment removal) should be performed.

In addition to these two scheduled activities, it is important to check the condition of the StormFilter unit after major storms for damage caused by high flows and for high sediment accumulation that may be caused by localized erosion in the drainage area. It may be necessary to adjust the maintenance activity schedule depending on the actual operating conditions encountered by the system.

In general, minor maintenance activities will occur late in the rainy season, and major maintenance will occur in late summer to early fall when flows into the system are not likely to be present.

Maintenance Activity Frequency

The primary factor controlling timing of maintenance for the StormFilter is sedimentation.

Maintenance Activity Timing

A properly functioning system will remove solids from water by trapping particulates in the porous structure of the filter media. The flow through the system will naturally decrease as more and more solids are trapped. Eventually the flow through the system will be low enough to require replacement of the cartridges. It may be possible to extend the usable span of the cartridges by removing sediment from upstream trapping devices on an as-needed basis in order to prevent material from being re-suspended and discharged to the system.

Site conditions greatly influence maintenance requirements. StormFilter units located in areas with erosion or active construction should be inspected and maintained more often than those in fully stabilized areas.

The maintenance frequency may be adjusted as additional monitoring information becomes available during the inspection program. Areas that develop known problems should be inspected more frequently than areas that demonstrate no problems, particularly after large storms.

Ultimately, inspection and maintenance activities should be scheduled based on the historic records and characteristics of an individual StormFilter system. It is recommended that the maintenance agency develop a database to properly manage StormFilter maintenance programs.

Prior to the development of the maintenance database, the following maintenance frequencies should be followed:

Inspection/minor maintenance
- One time per year
- After Major Storms

Major maintenance
- One time per year
- In the event of a chemical spill

Frequencies should be updated as required.

The recommended initial frequency for inspection/minor maintenance is two times per year for precast units. StormFilter units should be inspected after all major storms. Sediment removal and cartridge replacement on an annual basis is recommended until further knowledge is gained about a particular system.

Once an understanding of site characteristics has been established, maintenance may not be needed for one to two years, but inspection is warranted.

Maintenance Methods

Inspection/Minor Maintenance

The primary goal of a maintenance inspection is to assess the condition of the cartridges relative to the level of sediment loading. It may be desirable to conduct this inspection during a storm to observe the relative flow through the filter cartridges. If the submerged cartridges are severely plugged, large amounts of sediments will be present and very little flow will be discharged from the drainage pipes. If this is the case, it is likely that the cartridges need to be replaced.

> **Warning:** In the case of a spill, the worker should abort maintenance activities until the proper guidance is obtained. Notify the local hazard control agency and CONTECH Stormwater Solutions immediately.

To conduct an inspection and/or minor maintenance:

Important: Maintenance must be performed by a utility worker familiar with StormFilter units.

1. If applicable, set up safety equipment to protect pedestrians from fall hazards due to open vault doors or when work is being done near walkways or roadways.
2. Visually inspect the external condition of the unit and take notes concerning defects/problems.
3. Open the doors to the vault and allow the system to air out for 5-10 minutes.
4. Without entering the vault, inspect the inside of the unit, including components.
5. Take notes about the external and internal condition of the vault.

   Be sure to record the level of sediment build-up on the floor of the vault, in the forebay, and on top of the cartridges. If flow is occurring, note the level of water and estimate the flow rate per drainage pipe. Record all observations.
6. Remove large loose debris and trash using a pole with a grapple or net on the end.
7. Close and fasten the door.
8. Remove safety equipment.
9. Make notes about the local drainage area relative to ongoing construction, erosion problems, or high loading of other materials to the system.
10. Finally, review the condition reports from the previous minor and major maintenance visits, and schedule cartridge replacement if needed.

Major Maintenance

Depending on the configuration of the particular system, a worker may be required to enter the vault to perform some tasks.

Important: If vault entry is required, OSHA rules for confined space entry must be followed.

Filter cartridge replacement should occur during dry weather. It may be necessary to plug the filter inlet pipe if base flows exist. Standing water present in the vault should be regarded as polluted and should be contained during this operation by temporarily capping the manifold connectors.

Replacement cartridges will be delivered to the site. Information concerning how to obtain the replacement cartridges is available from CONTECH Stormwater Solutions.

> **Warning:** In the case of a spill, the worker should abort maintenance activities until the proper guidance is obtained. Notify the local hazard control agency and CONTECH Stormwater Solutions immediately.

To conduct cartridge replacement and sediment removal maintenance:

1. If applicable, set up safety equipment to protect pedestrians from fall hazards due to open vault doors or when work is being done near walkways or roadways.
2. Visually inspect the external condition of the unit and take notes concerning defects/problems.
3. Open the doors to the vault and allow the system to air out for 5-10 minutes.
4. Without entering the vault, give the inside of the unit, including components, a general condition inspection.
5. Make notes about the external and internal condition of the vault.

   Give particular attention to recording the level of sediment build-up on the floor of the vault, in the forebay, and on top of the internal components.
6. Remove large loose debris and trash using a pole with a grapple or net on the end.
7. Using a boom, crane, or other device (dolly and ramp), offload the replacement cartridges (up to 150 lbs. each) and set aside.
8. Remove used cartridges from the vault using one of the following methods:

Important: This activity will require that workers enter the vault to remove the cartridges from the drainage system.

Method 1:

a. Using an appropriate sling, attach the cable from the boom, crane, or tripod to the cartridge being removed. Contact CONTECH Stormwater Solutions for specifications on appropriate attachment devices.

This activity will require that workers enter the vault to remove the cartridges from the drainage system and place them under the vault opening for lifting.

Important: Note that cartridges containing media other than the leaf media require unscrewing from their threaded connectors. Take care not to damage the manifold connectors. This connector should remain installed in the manifold and capped if necessary.

b. Remove the used cartridges (250 lbs. each) from the vault.

Important: Care must be used to avoid damaging the cartridges during removal and installation. The cost of repairing components damaged during maintenance will be the responsibility of the owner unless CONTECH Stormwater Solutions performs the maintenance activities and damage is not related to discharges to the system.

c. Set the used cartridge aside or load onto the hauling truck.

d. Continue steps a through c until all cartridges have been removed.

Method 2:

a. Unscrew the cartridge cap.

b. Remove the cartridge hood.

c. Tip the cartridge on its side.

Important: Note that cartridges containing media other than the leaf media require unscrewing from their threaded connectors. Take care not to damage the manifold connectors. This connector should remain installed in the manifold and capped if necessary.

d. Empty the cartridge onto the vault floor.

e. Set the empty, used cartridge aside or load onto the hauling truck.

f. Continue steps a through e until all cartridges have been removed.

9. Remove deposited sediment from the floor of the vault and, if large amounts are present, from the forebay. This can usually be accomplished by shoveling the sediment into containers, which, once full, are lifted mechanically from the vault and placed onto the hauling truck. If Method 2 in Step 8 is used to empty the cartridges, or in cases of extreme sediment loading, a vactor truck may be required.
10. Once the sediments are removed, assess the condition of the vault and the condition of the manifold and connectors. The connectors are short sections of 2-inch schedule 40 PVC, or threaded schedule 80 PVC that should protrude above the floor of the vault.
    a. If required, apply a light coating of FDA approved silicon grease to the outside of the exposed portion of the connectors. This ensures a watertight connection between the cartridge and the drainage pipe.
    b. Replace any damaged connectors.
11. Using the boom, crane, or tripod, lower and install the new cartridges. Once again, take care not to damage connections.
12. Close and fasten the door.
13. Remove safety equipment.
14. Make notes about the local drainage area relative to ongoing construction, erosion problems, or high loadings of other materials to the system.
15. Finally, dispose of the residual materials in accordance with applicable regulations. Make arrangements to return the used cartridges to CONTECH Stormwater Solutions.

Related Maintenance Activities
(Performed on an as-needed basis)

StormFilter units are often just one of many components in a more comprehensive stormwater drainage and treatment system. The entire system may include catch basins, detention vaults, sedimentation vaults and manholes, detention/retention ponds, swales, artificial wetlands, and other miscellaneous components.
In order for maintenance of the StormFilter to be successful, it is imperative that all other components be properly maintained. The maintenance/repair of upstream facilities should be carried out prior to StormFilter maintenance activities.

In addition to considering upstream facilities, it is also important to correct any problems identified in the drainage area. Drainage area concerns may include: erosion problems, heavy oil and grease loading, and discharges of inappropriate materials.

Material Disposal

The accumulated sediment found in stormwater treatment and conveyance systems must be handled and disposed of in a manner that will not allow the material to affect surface or ground water. It is possible for sediments to contain measurable concentrations of heavy metals and organic chemicals (such as pesticides and petroleum products). Areas with the greatest potential for high pollutant loading include industrial areas and heavily traveled roads.

Sediments and water must be disposed of in accordance with all applicable waste disposal regulations. It is not appropriate to discharge untreated materials back to the stormwater drainage system.

Part of arranging for maintenance to occur should include coordination of disposal of solids (landfill coordination) and liquids (municipal vacuum truck decant facility, local wastewater treatment plant, on-site treatment and discharge).

Owners should contact the local public works department and inquire about how the department disposes of their street waste residuals. CONTECH Stormwater Solutions will determine disposal methods or reuse of the media contained in the cartridges. If the material has been contaminated with any unusual substance, the cost of special handling and disposal will be the responsibility of the owner.

APPROVED
PLANNING BOARD
OF HOWARD COUNTY
DATE 3/27/08

APPROVED: DEPARTMENT OF PLANNING AND ZONING

Chief, Development Engineering Division	Date 6/25/08
Chief, Division of Land Development	Date 6/27/08
Director	Date 6/30/08

OWNER
MANGIONE ENTERPRISES OF TURF VALLEY LIMITED PARTNERSHIP
1205 YORK ROAD, PENTHOUSE
LUTHERVILLE, MARYLAND 21093
PHONE (410) 825-8400

OPERATION & MAINTENANCE SCHEDULE - II

TURF VALLEY, LORIEN
NURSING HOME & ASSISTED LIVING FACILITY
OAKMONT AT TURF VALLEY
PARCEL Q
PLATS 18773 - 18775
TAX MAP 16 - P/O PARCEL 8- GRID 16 & 17
POD I per S-86-13 (4th AMENDED)
THIRD ELECTION DISTRICT HOWARD COUNTY, MARYLAND

KCE ENGINEERING, INC.
EXECUTIVE CENTER
3300 NORTH RIDGE ROAD, SUITE 315
ELLICOTT CITY, MARYLAND 21043
PHONE (410) 203-9800 FAX (410) 203-9228

"Professional Certification. I hereby certify that these documents were prepared or approved by me, and that I am a duly licensed professional engineer under the laws of the State of Maryland, License NO. 8818, Expiration Date: 10/17/08."

STATE OF MARYLAND — PROFESSIONAL ENGINEER — REGISTERED NO. 8818

DRAWN BY: MG
CHECKED BY: DVK
SCALE: N/A
DATE: 04/30/2008

SHEET: 30 OF 36

SDP-07-084

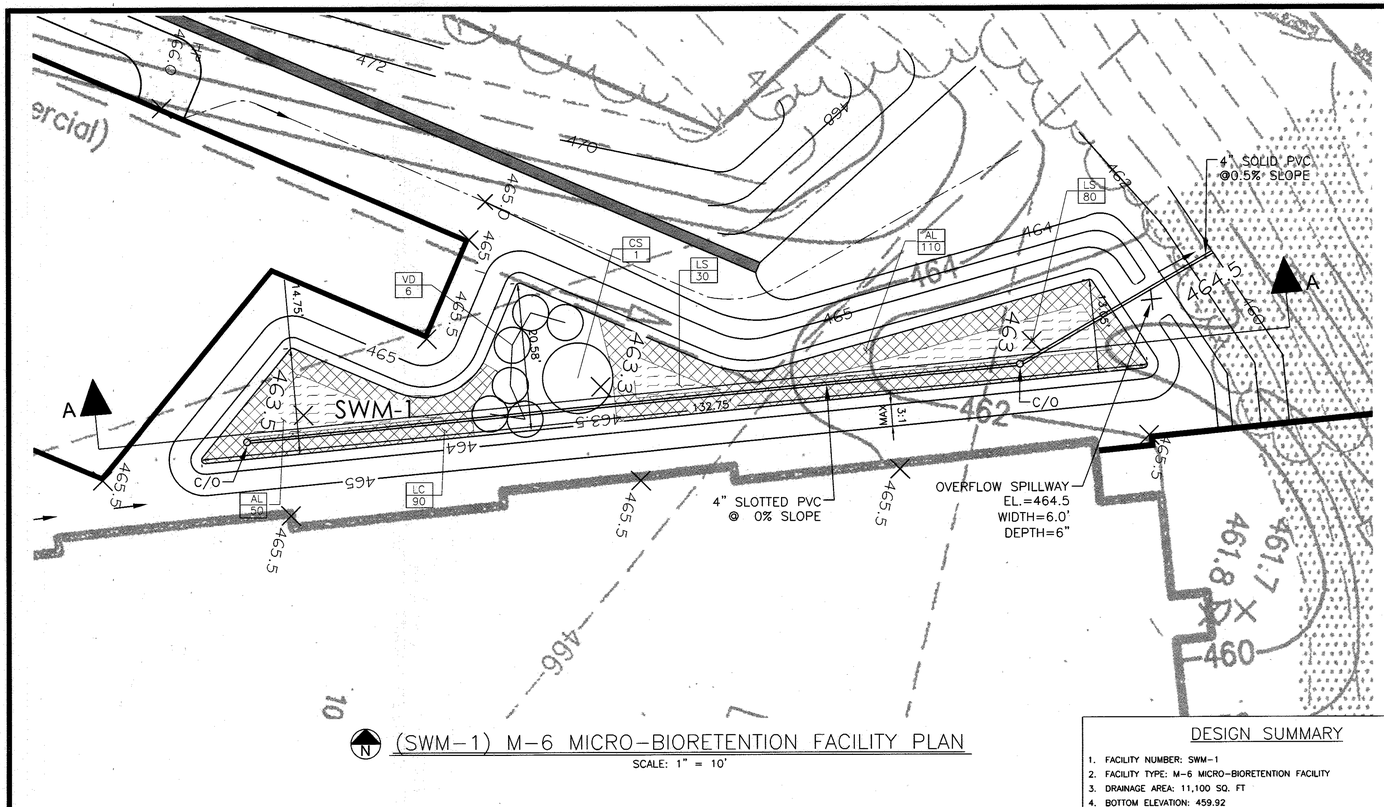

(SWM-1) M-6 MICRO-BIORETENTION FACILITY PLAN

SCALE: 1" = 10'

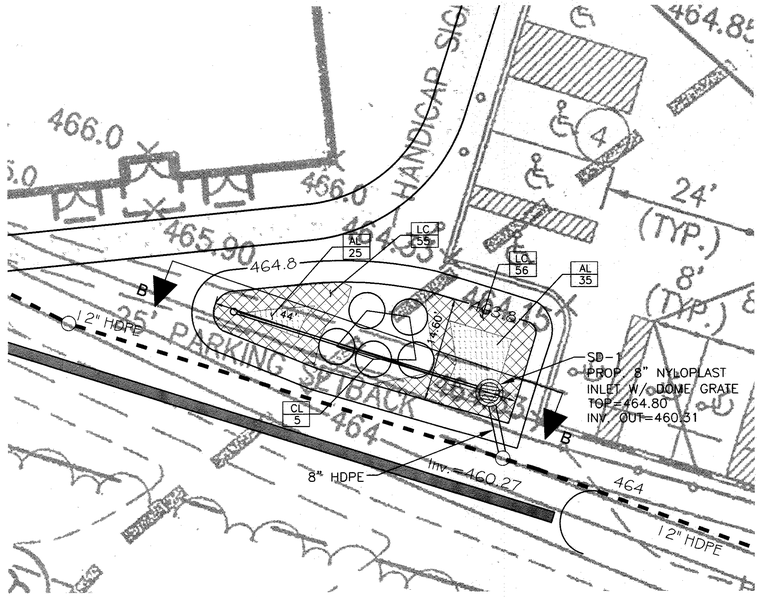

(SWM-2) M-6 MICRO-BIORETENTION FACILITY PLAN

SCALE: 1" = 10'

DESIGN SUMMARY

1. FACILITY NUMBER: SWM-1
2. FACILITY TYPE: M-6 MICRO-BIORETENTION FACILITY
3. DRAINAGE AREA: 11,100 SQ. FT
4. BOTTOM ELEVATION: 459.92
5. TOP OF BANK ELEVATION: 465.00
6. STORAGE VOLUME PROVIDED: 1,300 CU. FT
7. WATER SURFACE ELEVATION: 464.50
8. OVERFLOW SPILLWAY: 6' WIDE @ 0.5% SLOPE
9. FILTER FABRIC ADDED ON SIDES OF FACILITY ONLY.
10. MAINTENANCE RESPONSIBILITY: THIS IS A PRIVATE FACILITY TO BE OWNED & MAINTAINED BY THE OWNER.
11. THIS FACILITY IS EXEMPT FROM MD378 GUIDELINES IN THAT THE IMPOUNDED DESIGN HIGHWATER DEPTH IS LESS THAN 3 FEET AT THE EMBANKMENT

DESIGN SUMMARY

1. FACILITY NUMBER: SWM-2
2. FACILITY TYPE: M-6 MICRO-BIORETENTION FACILITY
3. DRAINAGE AREA: 6,000 SQ. FT
4. BOTTOM ELEVATION: 460.22
5. TOP OF BANK ELEVATION: 464.80
6. STORAGE VOLUME PROVIDED: 550 CU. FT
7. WATER SURFACE ELEVATION: 464.80
8. OVERFLOW INLET SIZE & TYPE: 8" NYLOPLAST INLET WITH DOME GRATE
9. FILTER FABRIC ADDED ON SIDES OF FACILITY ONLY.
10. MAINTENANCE RESPONSIBILITY: THIS IS A PRIVATE FACILITY TO BE OWNED & MAINTAINED BY THE OWNER.
11. THIS FACILITY IS EXEMPT FROM MD378 GUIDELINES IN THAT THE IMPOUNDED DESIGN HIGHWATER DEPTH IS LESS THAN 3 FEET AT THE EMBANKMENT

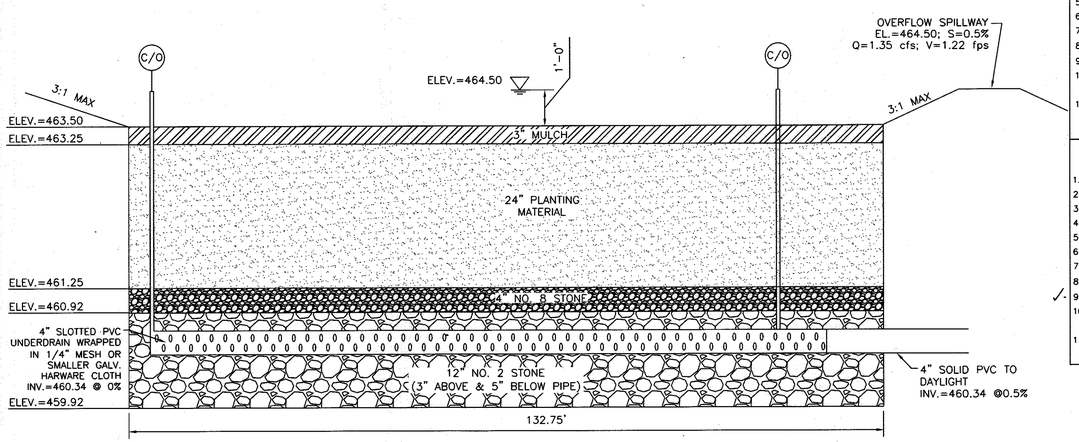

(SWM-1) M-6 MICRO-BIORETENTION FACILITY SECTION A-A

SCALE: NTS

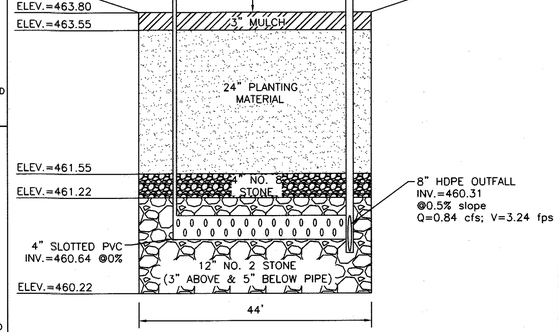

(SWM-2) M-6 MICRO-BIORETENTION FACILITY SECTION B-B

SCALE: NTS

OPERATION AND MAINTENANCE SCHEDULE FOR MICRO-BIORETENTION (M-6)

a. The Owner shall maintain the plant material, mulch layer and soil layer annually.Maintenance of mulch and soil is limited to correcting areas of erosion or washout. Any mulch replacement shall be done in the spring. Plant material shall bechecked for disease and insect infestation and maintenance will address deadmaterial and pruning. Acceptable replacement plant material is limited to thefollowing: 2000 Maryland Stormwater Design Manual Volume II, Table A.4.1 and2.
b. The Owner shall perform a plant in the spring and in the fall of each year. Duringthe inspection, the Owner shall remove dead and diseased vegetationconsidered beyond treatment, replace dead plant material with acceptablereplacement plant material, treat diseased trees and shrubs, and replace alldeficient stakes and wires.
c. The Owner shall inspect the mulch each spring. The mulch shall be replacedevery two to three yeors. The previous mulch layer shall be removed before thenew layer is applied.
d. The Owner shall correct soil erosion on an as needed basis, with a minimum ofonce per month and after each heavy storm.

OPERATION AND MAINTENANCE SCHEDULE FOR PRIVATELY OWNED AND MAINTAINED PERMEABLE PAVEMENT (A-2)

1. Pavement surfaces should be swept and vacuumed (if porous concrete) to reduce sediment accumulation and ensure continued surface porosity. Sweeping should be performed at least twice annually with a commercial cleaning unit. Washing or compressed air units should not be used to perform surface cleaning.
2. Drainage pipes, inlets, stone edge drains and other structures within or draining to the subbase should be cleaned out at regular intervals.
3. Deicers should be used in moderation. Deicers should be non-toxic and be applied either as calcium magnesium acetate or as pretreated salt. Snow plowing should be done carefully with blades set one-inch above the surface. Plowed snow piles and snowmelt should not be directed to permeable pavement.

(SWM-1) PLANT SCHEDULE

KEY	QTY	BOTANICAL NAME / COMMON NAME	SIZE	COND.	COMMENTS
SHRUBS					
CS	1	CORNUS SERICEA / REDOSIER DOGWOOD	18" HT.	CONT.	PLANT AT 5' O.C.
VD	6	VIBURNUM DENTATUM 'BLUE MUFFIN' / ARROWWOOD	18" HT.	CONT.	PLANT AT 5' O.C.
PERENNIALS / ORNAMENTAL GRASSES					
AL	160	ASCLEPIAS TUBEROSA / BUTTERFLY MILKWEED	2" HT.	PLUG	PLANT AT 18" O.C.
LC	90	LOBELIA CARDINALIS / CARDINAL FLOWER	2" HT.	PLUG	PLANT AT 18" O.C.
LS	110	LIATRIS SPICATA / BLAZING STAR	2" HT.	PLUG	PLANT AT 18" O.C.

(SWM-2) PLANT SCHEDULE

KEY	QTY	BOTANICAL NAME / COMMON NAME	SIZE	COND.	COMMENTS
PERENNIALS / ORNAMENTAL GRASSES					
AL	60	ASCLEPIAS TUBEROSA / BUTTERFLY MILKWEED	2" HT.	PLUG	PLANT AT 18" O.C.
LC	111	LOBELIA CARDINALIS / CARDINAL FLOWER	2" HT.	PLUG	PLANT AT 18" O.C.
CL	5	CHASMANTHIUM LATIFOLIUM / NORTHERN SEA OATS	1 GAL.	CONT.	PLANT AT 3' O.C.

GRAPHIC SCALE

10 0 5 10 20

SCALE: 1"=10'

APPROVED
PLANNING BOARD
OF HOWARD COUNTY
DATE 3/27/2008
9/01/2016

APPROVED: DEPARTMENT OF PLANNING AND ZONING

Chief, Development Engineering Division — 11.28.16 Date

Chief, Division of Land Development — 12-6-16 Date

Director — 12-6-16 Date

NO.	REVISION	DATE
4	ADDITION OF BUILDING, SWM FACILITIES, RETAINING WALL AND SERVICE LANE	10/4/2016

STORMWATER MANAGEMENT
DETAILS & SECTIONS

REVISED SITE DEVELOPMENT PLAN

TURF VALLEY, LORIEN

NURSING HOME & ASSISTED LIVING FACILITY

OAKMONT AT TURF VALLEY
PARCEL Q
PLATS 18773 - 18775
TAX MAP 16 - P/O PARCEL 8- GRID 16 & 17;
POD I per S-86-13 (4th AMENDED)
THIRD ELECTION DISTRICT HOWARD COUNTY, MARYLAND

ENGINEERS
PLANNERS
SCIENTISTS
CONSTRUCTION MANAGERS
KCI TECHNOLOGIES
3300 North Ridge Road
Suite 315
Ellicott City, MD 21043
Phone (410)203-9800
Fax (410)203 9228
www.kci.com

Professional Certification. I hereby certify that these documents were prepared or approved by me, and that I am a duly licensed professional engineer under the laws of the State of Maryland, License No. 8818, Expiration Date: 10/17/18.

STATE OF MARYLAND — DAVID V. KRAMER — REG. NO. 8818 — PROFESSIONAL ENGINEER
10/20/16

DRAWN BY: SK
CHECKED BY: DVK
SCALE: AS SHOWN
DATE: 10/4/2016

SHEET: 31 OF 36

SDP-07-084

NYLOPLAST DRAIN BASIN WITH DOME GRATE

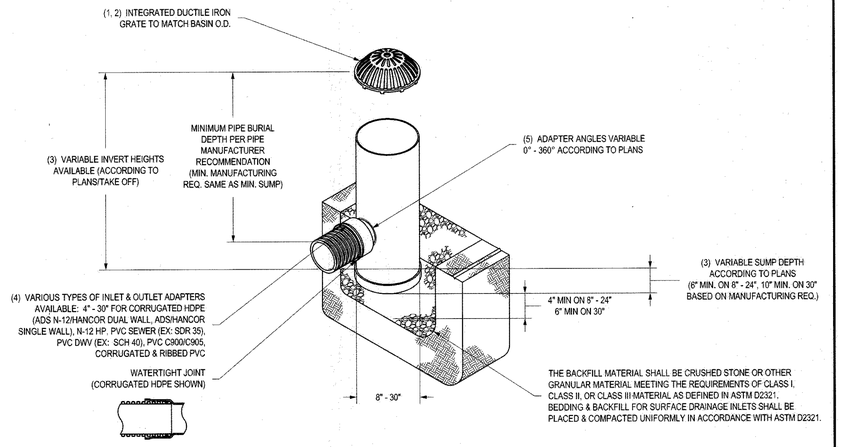

1 - 8" - 30" DOME GRATES SHALL BE DUCTILE IRON PER ASTM A536 GRADE 70-50-05.
2 - 8" & 10" DOME GRATES FIT ONTO THE DRAIN BASINS WITH THE USE OF A PVC BODY TOP. SEE DRAWING NO. 7001-110-045.
3 - DRAIN BASIN TO BE CUSTOM MANUFACTURED ACCORDING TO PLAN DETAILS. RISERS ARE NEEDED FOR BASINS OVER 84" DUE TO SHIPPING RESTRICTIONS. SEE DRAWING NO. 7001-110-095.
4 - DRAINAGE CONNECTION STUB JOINT TIGHTNESS SHALL CONFORM TO ASTM D3212 FOR CORRUGATED HDPE (ADS N-12/HANCOR DUAL WALL), N-12 I/P, & PVC SEWER (4" - 24").
5 - ADAPTERS CAN BE MOUNTED ON ANY ANGLE 0° TO 360°. TO DETERMINE MINIMUM ANGLE BETWEEN ADAPTERS SEE DRAWING NO. 7001-110-012.
6 - 8" - 30" DOME GRATES HAVE NO LOAD RATING.

THIS PRINT DISCLOSES SUBJECT MATTER IN WHICH NYLOPLAST HAS PROPRIETARY RIGHTS. THE RECEIPT OR POSSESSION OF THIS PRINT DOES NOT CONFER, TRANSFER, OR LICENSE THE USE OF THE DESIGN OR TECHNICAL INFORMATION SHOWN HEREIN REPRODUCTION OF THIS PRINT OR ANY INFORMATION CONTAINED HEREIN, OR MANUFACTURE OF ANY ARTICLE HEREFROM, FOR THE DISCLOSURE TO OTHERS IS FORBIDDEN, EXCEPT BY SPECIFIC WRITTEN PERMISSION FROM NYLOPLAST. ©2013 NYLOPLAST

DRAWN BY	EBC	MATERIAL	
DATE	03-25-10		
REVISED BY	NMH	PROJECT NO./NAME	
DATE	03-11-16		
DWG SIZE	A	SCALE 1:40 SHEET 1 OF 1	

Nyloplast — 3130 VERONA AVE, BUFORD, GA 30518, PHN (770) 932-2443, FAX (770) 932-2490, www.nyloplast-us.com

TITLE: DRAIN BASIN WITH DOME GRATE, QUICK SPEC INSTALLATION DETAIL

DWG NO. 7001-110-397 REV D

NYLOPLAST DRAIN BASIN WITH DOME GRATE
SCALE – NTS

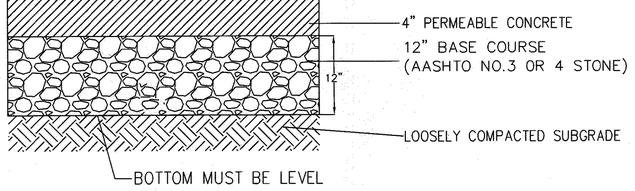

D10 PERMEABLE CONCRETE SIDEWALK
SCALE: NTS

PERMEABLE SIDEWALK CONSTRUCTION NOTES:

1. THE BOTTOM OF THE PERMEABLE SIDEWALK SUBBASE MUST BE LEVELED AT 0% SLOPE.
2. MATERIAL AND CONSTRUCTION OF PERMEABLE PAVEMENT MUST BE DONE IN ACCORDANCE WITH ACI 522.1.13.
3. SUB SOILS SHALL NOT BE COMPACTED DURING CONSTRUCTION OF PROPOSED PERMEABLE PAVEMENTS

APPROVED
PLANNING BOARD
OF HOWARD COUNTY
DATE 3/27/2008
9/01/2016

APPROVED: DEPARTMENT OF PLANNING AND ZONING

Chief, Development Engineering Division — Date 11-28-16

Chief, Division of Land Development — Date 12-6-16

Director — Date 12-6-16

Part#/Prefix	Product Description	Available Outlets
2812AG__X	12" Custom Basin	4" thru 12"
2815AG__X	15" Custom Basin	4" thru 15"

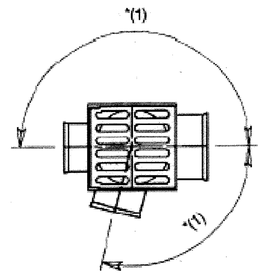

*(1) Adapters can be mounted on any angle 0° to 359°.

To determine minimum angle between adapters please see chart on page (1).

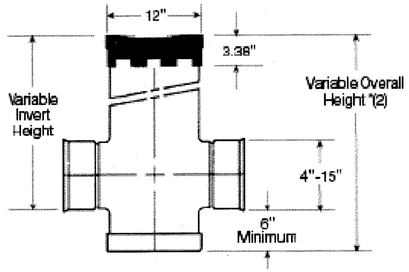

*(2) Maximum recommended overall height 10'

12" & 15" Grate Options — Light Duty Bronze Grate Available (see pg. 22-23)

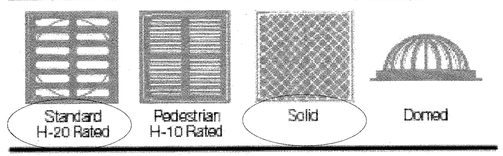

NYLOPLAST INLINE DRAIN INLET
SCALE – NTS

NON TRAFFIC INSTALLATION

DRAIN BASIN

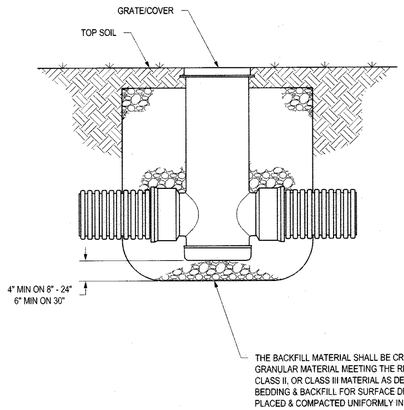

INLINE DRAIN

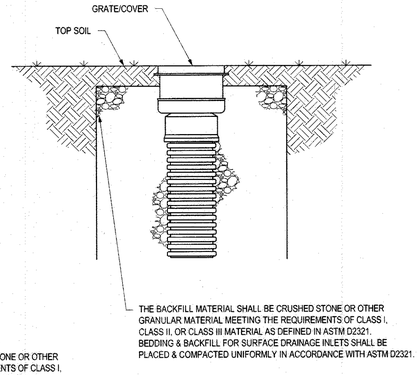

THIS PRINT DISCLOSES SUBJECT MATTER IN WHICH NYLOPLAST HAS PROPRIETARY RIGHTS. THE RECEIPT OR POSSESSION OF THIS PRINT DOES NOT CONFER, TRANSFER, OR LICENSE THE USE OF THE DESIGN OR TECHNICAL INFORMATION SHOWN HEREIN REPRODUCTION OF THIS PRINT OR ANY INFORMATION CONTAINED HEREIN, OR MANUFACTURE OF ANY ARTICLE HEREFROM, FOR THE DISCLOSURE TO OTHERS IS FORBIDDEN, EXCEPT BY SPECIFIC WRITTEN PERMISSION FROM NYLOPLAST. ©2017 NYLOPLAST

DRAWN BY	CJA	MATERIAL	
DATE	9-30-99		
REVISED BY	NMH	PROJECT NO./NAME	
DATE	03-11-16		
DWG SIZE	A	SCALE 1:25 SHEET 1 OF 1	

Nyloplast — 3130 VERONA AVE, BUFORD, GA 30518, PHN (770) 932-2443, FAX (770) 932-2490, www.nyloplast-us.com

TITLE: DRAIN BASIN & INLINE DRAIN, NON TRAFFIC INSTALLATION

DWG NO. 7001-110-111 REV E

NYLOPLAST INLINE DRAIN AND DRAIN BASIN
SCALE – NTS

Part#/Prefix	Product Description	Available Outlets
2808AG__X	8" Standard Basin *	4" & 6" ONLY max 2 outlets / max height 13"
2810AG__X	10" Standard Basin*	4", 6 & 8" ONLY max 2 outlets / max height 20"
2808AG__X	8" Custom Basin	4" thru 8"
2810AG__X	10" Custom Basin	4" thru 10"

* Fixed height and inverts

All custom & standard basins will have a drop-in grate

8" Drain Basin

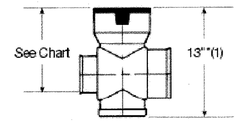

*(1) FIXED OVERALL HEIGHT
CUSTOM SIZES AVAILABLE

Adapter Size	Fixed Invert Height
4"	10.25"
6"	11.13"

10" Drain Basin

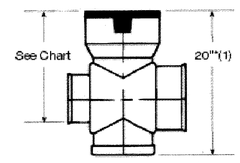

*(1) FIXED OVERALL HEIGHT
CUSTOM SIZES AVAILABLE

Adapter Size	Fixed Invert Height
4"	13.75"
6"	14.62"
8"	15.62"

8" & 10" Grate Options — Light Duty Bronze Grate Available (see pg. 22-23)

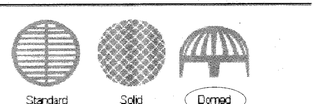

NYLOPLAST DRAIN BASIN (SD-1 & SD-2)
SCALE – NTS

NO.	REVISION	DATE
2	ADDITION OF BUILDING, SWM FACILITIES, RETAINING WALL AND SERVICE LANE	10/4/2016

SWM CONSTRUCTION DETAILS

REVISED SITE DEVELOPMENT PLAN
TURF VALLEY, LORIEN
NURSING HOME & ASSISTED LIVING FACILITY

OAKMONT AT TURF VALLEY
PARCEL Q
PLATS 18773 - 18775
TAX MAP 16 - P/O PARCEL 8- GRID 16 & 17;
POD I per S-86-13 (4th AMENDED)
THIRD ELECTION DISTRICT HOWARD COUNTY, MARYLAND

KCI TECHNOLOGIES
ENGINEERS
PLANNERS
SCIENTISTS
CONSTRUCTION MANAGERS
3300 North Ridge Road
Suite 315
Ellicott City, MD 21043
Phone (410)203-0900
Fax (410)203-9228
www.kci.com

Professional Certification. I hereby certify that these documents were prepared or approved by me, and that I am a duly licensed professional engineer under the laws of the State of Maryland, License No. 8818, Expiration Date: 10/17/18.

STATE OF MARYLAND — DAVID V. KIRAMIDJIAN — NO. 8818 — REGISTERED PROFESSIONAL ENGINEER — 10/25/16

DRAWN BY: SK
CHECKED BY: DVK
SCALE: AS SHOWN
DATE: 10/4/2016

SHEET: 32 OF 36

SDP-07-084

CURVE TABLE					
NO.	ARC LENGTH	CHORD LENGTH	CHORD BEARING	RADIUS	DELTA
C1	125.84'	125.61'	N 74°03'14" W	610.00'	11°49'11"

PROPERTY LINE TABLE		
NO.	LENGTH	BEARING
L1	74.34'	S 42°06'44" E
L2	58.40'	S 46°20'11" E
L3	39.62'	S 11°12'36" W
L4	53.61'	S 07°27'29" E
L5	135.80'	S 12°13'13" W
L6	62.18'	S 23°40'13" W
L7	86.37'	S 33°48'39" W
L8	109.12'	S 48°26'32" W
L9	88.27'	S 71°24'49" W
L10	65.27'	S 45°07'07" W
L11	38.60'	S 25°41'33" W
L12	43.15'	S 54°25'44" W
L13	44.38'	S 21°31'21" W
L14	48.85'	S 29°05'01" W
L15	15.00'	S 10°02'11" W
L16	52.43'	N 33°33'29" W
L17	47.38'	N 33°30'48" W

COORDINATE TABLE		
NO.	NORTHING	EASTING
668	595704.5297	1340842.4238
669	595031.8285	1340601.5238

OWNER
LORIEN AT TURF VALLEY, LLC
1205 YORK ROAD, PENTHOUSE
LUTHERVILLE, MARYLAND 21093
PHONE (410) 825-8400

SOIL LEGEND:

SOIL	TYPE	DESCRIPTION
EkB2	C	ELIOAK SILT LOAM, 3 TO 8% SLOPES, MODERATELY ERODED
EnB2	B	ELSINBORO LOAM, 8 TO 15% SLOPES, MODERATELY ERODED
GlC2	B	GLENELG LOAM, 8 TO 15% SLOPES, MODERATELY ERODED
CO	C	CODORUS SILT LOAM

HOWARD COUNTY SOIL MAP # 9

LEGEND

- 25% SLOPES
- 15% – 24.9% SLOPES
- EX. WETLANDS
- EX. WETLAND BUFFER
- EX. STREAM
- EX. STREAM BUFFER
- EX. 100–YEAR FLOODPLAIN
- SOIL TYPES
- EXISTING EASEMENTS
- EROSION CONTROL MATTING
- SIP STANDARD INLET PROTECTION
- SCE STABILIZATION CONSTRUCTION ENTRANCE (SCE) W/MOUNTABLE BERM
- EX. WATER
- LOD LIMIT OF DISTURBANCE
- SF SILT FENCE
- SSF SUPER SILT FENCE
- CIP CURB INLET PROTECTION
- AGIP AT GRADE INLET PROTECTION

NOTE: TO IMPROVE CLARITY, LIMIT OF DISTURBANCE (LOD) LINE IS NOT SHOWN AT LOCATIONS WHERE SILT FENCE IS USED. IN THESE AREAS, SILT FENCE (SF) LINE ALSO DENOTES THE LIMIT OF DISTURBANCE (LOD)

CONTRACTOR SHALL INSTALL AND/OR RESET ADDITIONAL LENGTH OF SILT FENCE IF REQUIRED BY THE SEDIMENT CONTROL INSPECTOR.

4	KCI	10/4/16	ADDITION OF BUILDING, SWM FACILITIES, RETAINING WALL AND SERVICE LANE

APPROVED: DEPARTMENT OF PLANNING AND ZONING

Chief, Development Engineering Division — 11-28-16 Date

Chief, Division of Land Development — 12-6-16 Date

Director — 12-6-16 Date

APPROVED
PLANNING BOARD
OF HOWARD COUNTY
DATE 3/27/2008
9/01/2016

REVIEWED FOR HOWARD SCD AND MEETS TECHNICAL REQUIREMENTS.

USDA-NATURAL RESOURCES CONSERVATION SERVICE — DATE

THIS DEVELOPMENT PLAN IS APPROVED FOR SOIL EROSION AND SEDIMENT CONTROL BY THE HOWARD SOIL CONSERVATION DISTRICT.

HOWARD SOIL CONSERVATION DISTRICT. — 11/18/16 DATE

ENGINEER'S CERTIFICATE

"I CERTIFY THAT THIS PLAN FOR SEDIMENT AND EROSION CONTROL REPRESENTS A PRACTICAL AND WORKABLE PLAN BASED ON MY PERSONAL KNOWLEDGE OF THE SITE CONDITIONS AND THAT IT WAS PREPARED IN ACCORDANCE WITH THE REQUIREMENTS OF THE HOWARD SOIL CONSERVATION DISTRICT."

SIGNATURE OF ENGINEER — 10/26/16 DATE
D. VIR KATHURIA, P.E.

DEVELOPER'S CERTIFICATE

"I CERTIFY THAT ALL DEVELOPMENT AND CONSTRUCTION WILL BE DONE ACCORDING TO THIS PLAN FOR SEDIMENT & EROSION CONTROL, AND THAT RESPONSIBLE PERSONNEL INVOLVED IN THE CONSTRUCTION PROJECT WILL HAVE A CERTIFICATE OF ATTENDANCE AT A DEPARTMENT OF THE ENVIRONMENT APPROVED TRAINING PROGRAM FOR THE CONTROL OF SEDIMENT AND EROSION BEFORE BEGINNING THE PROJECT. I ALSO AUTHORIZE PERIODIC ON-SITE INSPECTION BY THE HOWARD SOIL CONSERVATION DISTRICT."

SIGNATURE OF DEVELOPER — 11/1/16 DATE
LOUIS MANGIONE

SEDIMENT & EROSION CONTROL PLAN

REVISED SITE DEVELOPMENT PLAN

TURF VALLEY, LORIEN

NURSING HOME & ASSISTED LIVING FACILITY

OAKMONT AT TURF VALLEY
PARCEL Q
PLATS 18773 - 18775
TAX MAP 16 - P/O PARCEL 8- GRID 16 & 17;
POD I per S-86-13 (4th AMENDED)
THIRD ELECTION DISTRICT HOWARD COUNTY, MARYLAND

KCI TECHNOLOGIES
ENGINEERS
PLANNERS
SCIENTISTS
CONSTRUCTION MANAGERS
3300 North Ridge Road
Suite 315
Ellicott City, MD 21043
Phone (410)203-9800
Fax (410)203-9228
www.kci.com

Professional Certification, I hereby certify that these documents were prepared or approved by me, and that I am a duly licensed professional engineer under the laws of the State of Maryland, License No. 8818, Expiration Date: 10/17/18.

STATE OF MARYLAND — DHRUV VIR KATHURIA — No. 8818 — REGISTERED PROFESSIONAL ENGINEER — 10/26/16

DRAWN BY: SK
CHECKED BY: DVK
SCALE: 1"=40'
DATE: 10/4/2016

SHEET: 33 OF 36

DETAIL E-3 SUPER SILT FENCE

STANDARD SYMBOL
SSF

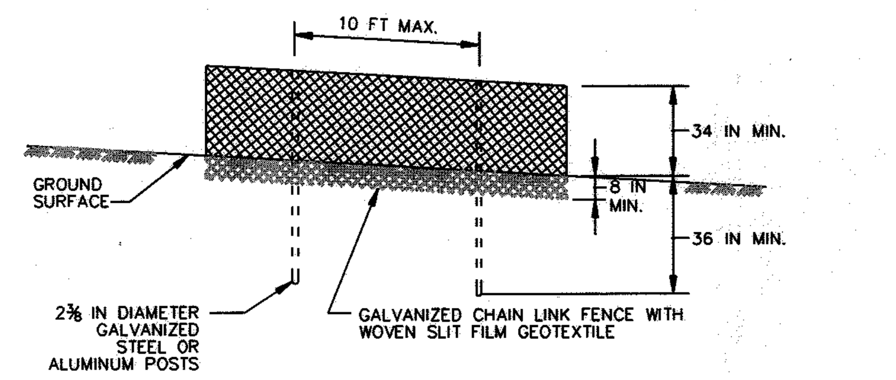

ELEVATION

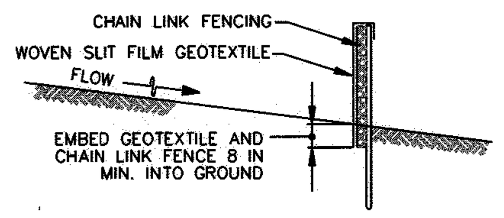

CROSS SECTION

CONSTRUCTION SPECIFICATIONS

1. INSTALL 2⅜ INCH DIAMETER GALVANIZED STEEL POSTS OF 0.095 INCH WALL THICKNESS AND SIX FOOT LENGTH SPACED NO FURTHER THAN 10 FEET APART. DRIVE THE POSTS A MINIMUM OF 36 INCHES INTO THE GROUND.
2. FASTEN 9 GAUGE OR HEAVIER GALVANIZED CHAIN LINK FENCE (2⅜ INCH MAXIMUM OPENING) 42 INCHES IN HEIGHT SECURELY TO THE FENCE POSTS WITH WIRE TIES OR HUG RINGS.
3. FASTEN WOVEN SLIT FILM GEOTEXTILE AS SPECIFIED IN SECTION H-1 MATERIALS, SECURELY TO THE UPSLOPE SIDE OF CHAIN LINK FENCE WITH TIES SPACED EVERY 24 INCHES AT THE TOP AND MID SECTION. EMBED GEOTEXTILE AND CHAIN LINK FENCE A MINIMUM OF 8 INCHES INTO THE GROUND.
4. WHERE ENDS OF THE GEOTEXTILE COME TOGETHER, THE ENDS SHALL BE OVERLAPPED BY 6 INCHES, FOLDED, AND STAPLED TO PREVENT SEDIMENT BY PASS.
5. EXTEND BOTH ENDS OF THE SUPER SILT FENCE A MINIMUM OF FIVE HORIZONTAL FEET UPSLOPE AT 45 DEGREES TO THE MAIN FENCE ALIGNMENT TO PREVENT RUNOFF FROM GOING AROUND THE ENDS OF THE SUPER SILT FENCE.
6. PROVIDE MANUFACTURER CERTIFICATION TO THE INSPECTION/ENFORCEMENT AUTHORITY SHOWING THAT GEOTEXTILE USED MEETS THE REQUIREMENTS IN SECTION H-1 MATERIALS.
7. REMOVE ACCUMULATED SEDIMENT AND DEBRIS WHEN BULGES DEVELOP IN FENCE OR WHEN SEDIMENT REACHES 25% OF FENCE HEIGHT. REPLACE GEOTEXTILE IF TORN. IF UNDERMINING OCCURS, REINSTALL CHAIN LINK FENCING AND GEOTEXTILE.

MARYLAND STANDARDS AND SPECIFICATIONS FOR SOIL EROSION AND SEDIMENT CONTROL

U.S. DEPARTMENT OF AGRICULTURE NATURAL RESOURCES CONSERVATION SERVICE	2011	MARYLAND DEPARTMENT OF ENVIRONMENT WATER MANAGEMENT ADMINISTRATION

DETAIL B-1 STABILIZED CONSTRUCTION ENTRANCE

STANDARD SYMBOL
SCE

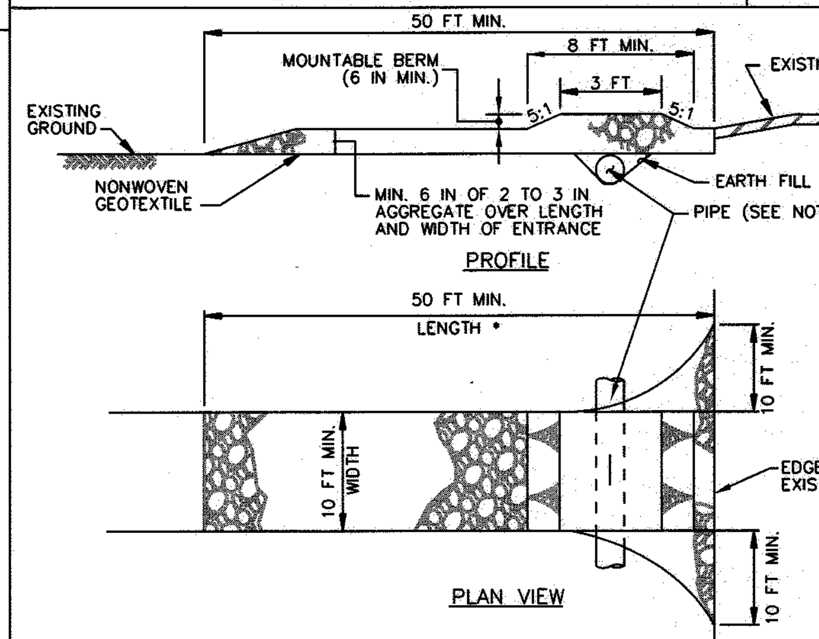

CONSTRUCTION SPECIFICATIONS

1. PLACE STABILIZED CONSTRUCTION ENTRANCE IN ACCORDANCE WITH THE APPROVED PLAN. VEHICLES MUST TRAVEL OVER THE ENTIRE LENGTH OF THE SCE. USE MINIMUM LENGTH OF 50 FEET (*30 FEET FOR SINGLE RESIDENCE LOT). USE MINIMUM WIDTH OF 10 FEET. FLARE SCE 10 FEET MINIMUM AT THE EXISTING ROAD TO PROVIDE A TURNING RADIUS.
2. PIPE ALL SURFACE WATER FLOWING TO OR DIVERTED TOWARD THE SCE UNDER THE ENTRANCE, MAINTAINING POSITIVE DRAINAGE. PROTECT PIPE INSTALLED THROUGH THE SCE WITH A MOUNTABLE BERM WITH 5:1 SLOPES AND A MINIMUM OF 12 INCHES OF STONE OVER THE PIPE. PROVIDE PIPE AS SPECIFIED ON APPROVED PLAN. WHEN THE SCE IS LOCATED AT A HIGH SPOT AND HAS NO DRAINAGE TO CONVEY, A PIPE IS NOT NECESSARY. A MOUNTABLE BERM IS REQUIRED WHEN SCE IS NOT LOCATED AT A HIGH SPOT.
3. PREPARE SUBGRADE AND PLACE NONWOVEN GEOTEXTILE, AS SPECIFIED IN SECTION H-1 MATERIALS.
4. PLACE CRUSHED AGGREGATE (2 TO 3 INCHES IN SIZE) OR EQUIVALENT RECYCLED CONCRETE (WITHOUT REBAR) AT LEAST 6 INCHES DEEP OVER THE LENGTH AND WIDTH OF THE SCE.
5. MAINTAIN ENTRANCE IN A CONDITION THAT MINIMIZES TRACKING OF SEDIMENT. ADD STONE OR MAKE OTHER REPAIRS AS CONDITIONS DEMAND TO MAINTAIN CLEAN SURFACE, MOUNTABLE BERM, AND SPECIFIED DIMENSIONS. IMMEDIATELY REMOVE STONE AND/OR SEDIMENT SPILLED, DROPPED, OR TRACKED ONTO ADJACENT ROADWAY BY VACUUMING, SCRAPING, AND/OR SWEEPING. WASHING ROADWAY TO REMOVE MUD TRACKED ONTO PAVEMENT IS NOT ACCEPTABLE UNLESS WASH WATER IS DIRECTED TO AN APPROVED SEDIMENT CONTROL PRACTICE.

MARYLAND STANDARDS AND SPECIFICATIONS FOR SOIL EROSION AND SEDIMENT CONTROL

U.S. DEPARTMENT OF AGRICULTURE NATURAL RESOURCES CONSERVATION SERVICE	2011	MARYLAND DEPARTMENT OF ENVIRONMENT WATER MANAGEMENT ADMINISTRATION

DETAIL E-9-2 AT-GRADE INLET PROTECTION

STANDARD SYMBOL
AGIP

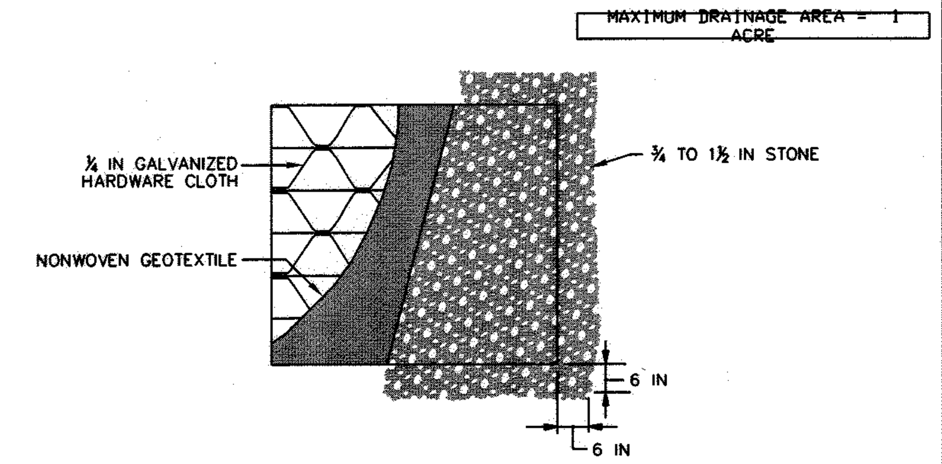

PLAN / CUT AWAY VIEW

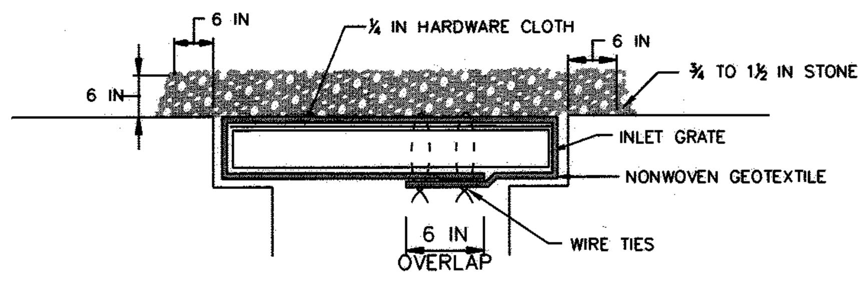

CROSS SECTION

CONSTRUCTION SPECIFICATIONS

1. USE NONWOVEN GEOTEXTILE AS SPECIFIED IN SECTION H-1 MATERIALS.
2. LIFT GRATE AND WRAP WITH NONWOVEN GEOTEXTILE TO COMPLETELY COVER ALL OPENINGS. SECURE WITH WIRE TIES AND SET GRATE BACK IN PLACE.
3. PLACE CLEAN ¾ TO 1½ INCH STONE OR EQUIVALENT RECYCLED CONCRETE 6 INCHES THICK ON THE GRATE.
4. STORM DRAIN INLET PROTECTION REQUIRES FREQUENT MAINTENANCE. REMOVE ACCUMULATED SEDIMENT AFTER EACH RAIN EVENT TO MAINTAIN FUNCTION AND AVOID PREMATURE CLOGGING. IF INLET PROTECTION DOES NOT COMPLETELY DRAIN WITHIN 24 HOURS AFTER A STORM EVENT, IT IS CLOGGED. WHEN THIS OCCURS, REMOVE ACCUMULATED SEDIMENT AND CLEAN, OR REPLACE GEOTEXTILE AND STONE.

MARYLAND STANDARDS AND SPECIFICATIONS FOR SOIL EROSION AND SEDIMENT CONTROL

U.S. DEPARTMENT OF AGRICULTURE NATURAL RESOURCES CONSERVATION SERVICE	2011	MARYLAND DEPARTMENT OF ENVIRONMENT WATER MANAGEMENT ADMINISTRATION

STOCKPILE AREA

PURPOSE

TO PROVIDE A DESIGNATED LOCATION FOR THE TEMPORARY STORAGE OF SOIL THAT CONTROLS THE POTENTIAL FOR EROSION, SEDIMENTATION, AND CHANGES TO DRAINAGE PATTERNS.

CRITERIA

1. THE STOCKPILE LOCATION AND ALL RELATED SEDIMENT CONTROL PRACTICES MUST BE CLEARLY INDICATED ON THE EROSION AND SEDIMENT CONTROL PLAN.
2. THE FOOTPRINT OF THE STOCKPILE MUST BE SIZED TO ACCOMMODATE THE ANTICIPATED VOLUME OF MATERIAL AND BASED ON A SIDE SLOPE RATIO NO STEEPER THAN 2:1. BENCHING MUST BE PROVIDED IN ACCORDANCE WITH SECTION B-3 LAND GRADING.
3. RUNOFF FROM THE STOCKPILE AREA MUST DRAIN TO A SUITABLE SEDIMENT CONTROL PRACTICE.
4. ACCESS THE STOCKPILE AREA FROM THE UPGRADE SIDE.
5. CLEAR WATER RUNOFF INTO THE STOCKPILE AREA MUST BE MINIMIZED BY USE OF A DIVERSION DEVICE SUCH AS AN EARTH DIKE, TEMPORARY SWALE OR DIVERSION FENCE. PROVISIONS MUST BE MADE FOR DISCHARGING CONCENTRATED FLOW IN A NON-EROSIVE MANNER.
6. WHERE RUNOFF CONCENTRATES ALONG THE TOE OF THE STOCKPILE FILL, AN APPROPRIATE EROSION/SEDIMENT CONTROL PRACTICE MUST BE USED TO INTERCEPT THE DISCHARGE.
7. STOCKPILES MUST BE STABILIZED IN ACCORDANCE WITH THE 3/7 DAY STABILIZATION REQUIREMENT AS WELL AS STANDARD B-4-1 INCREMENTAL STABILIZATION AND STANDARD B-4-4 TEMPORARY STABILIZATION.
8. IF THE STOCKPILE IS LOCATED ON AN IMPERVIOUS SURFACE, A LINER SHOULD BE PROVIDED BELOW THE STOCKPILE TO FACILITATE CLEANUP. STOCKPILES CONTAINING CONTAMINATED MATERIAL MUST BE COVERED WITH IMPERMEABLE SHEETING.

MAINTENANCE

THE STOCKPILE AREA MUST CONTINUOUSLY MEET THE REQUIREMENTS FOR ADEQUATE VEGETATIVE ESTABLISHMENT IN ACCORDANCE WITH SECTION B-4 VEGETATIVE STABILIZATION. SIDE SLOPES MUST BE MAINTAINED AT NO STEEPER THAN A 2:1 RATIO. THE STOCKPILE AREA MUST BE KEPT FREE OF EROSION. IF THE VERTICAL HEIGHT OF A STOCKPILE EXCEEDS 20 FEET FOR 2:1 SLOPES, 30 FEET FOR 3:1 SLOPES, OR 40 FEET FOR 4:1 SLOPES, BENCHING MUST BE PROVIDED IN ACCORDANCE WITH SECTION B-3 LAND GRADING.

HOWARD SOIL CONSERVATION DISTRICT (HSCD) STANDARD SEDIMENT CONTROL NOTES

1. A pre-construction meeting must occur with the Howard County Department of Public Works, Construction Inspection Division (CID), 410-313-1855 after the future LOD and protected areas are marked clearly in the field. A minimum of 48 hour notice to CID must be given at the following stages:
   a. Prior to the start of earth disturbance,
   b. Upon completion of the installation of perimeter erosion and sediment controls, but before proceeding with any other earth disturbance or grading,
   c. Prior to the start of another phase of construction or opening of another grading unit,
   d. Prior to the removal or modification of sediment control practices.
   Other building or grading inspection approvals may not be authorized until this initial approval by the inspection agency is made. Other related state and federal permits shall be referenced, to ensure coordination and to avoid conflicts with this plan.
2. All vegetative and structural practices are to be installed according to the provisions of this plan and are to be in conformance with the 2011 MARYLAND STANDARDS AND SPECIFICATIONS FOR SOIL EROSION AND SEDIMENT CONTROL, and revisions thereto.
3. Following initial soil disturbance or re-disturbance, permanent or temporary stabilization is required within three (3) calendar days as to the surface of all perimeter controls, dikes, swales, ditches, perimeter slopes, and all slopes steeper than 3 horizontal to 1 vertical (3:1); and seven (7) calendar days as to all other disturbed areas on the project site except for those areas under active grading.
4. All disturbed areas must be stabilized within the time period specified above in accordance with the 2011 MARYLAND STANDARDS AND SPECIFICATIONS FOR SOIL EROSION AND SEDIMENT CONTROL for topsoil (Sec. B-4-2), permanent seeding (Sec. B-4-5), temporary seeding (Sec. B-4-4) and mulching (Sec. B-4-3). Temporary stabilization with mulch alone can only be applied between the fall and spring seeding dates if the ground is frozen. Incremental stabilization (Sec. B-4-1) specifications shall be enforced in areas with >15' of cut and/or fill. Stockpiles (Sec. B-4-8) in excess of 20 ft. must be benched with stable outlet. All concentrated flow, steep slope, and highly erodible areas shall receive soil stabilization matting (Sec. B-4-6).
5. All sediment control structures are to remain in place, and are to be maintained in operative condition until permission for their removal has been obtained from the CID.
6. Site Analysis: (ADDITION)
   Total Area of Site: 6.07 Acres
   Area Disturbed: 1.04 Acres
   Area to be roofed or paved: 0.26 Acres
   Area to be vegetatively stabilized: 0.78 Acres
   Total Cut: balanced on site Cu. Yds.
   Total Fill: balanced on site Cu. Yds.
   Offsite waste/borrow area location: N/A
7. Any sediment control practice which is disturbed by grading activity for placement of utilities must be repaired on the same day of disturbance.
8. Additional sediment control must be provided, if deemed necessary by the CID. The site and all controls shall be inspected by the contractor weekly; and the next day after each rain event. A written report by the contractor, made available upon request, is part of every inspection and should include:
   - Inspection date
   - Inspection type (routine, pre-storm event, during rain event)
   - Name and title of inspector
   - Weather information (current conditions as well as time and amount of last recorded precipitation)
   - Brief description of project's status (e.g., percent complete) and/or current activities
   - Evidence of sediment discharges
   - Identification of plan deficiencies
   - Identification of sediment controls that require maintenance
   - Identification of missing or improperly installed sediment controls
   - Compliance status regarding the sequence of construction and stabilization requirements
   - Photographs
   - Monitoring/sampling
   - Maintenance and/or corrective action performed
   - Other inspection items as required by the General Permit for Stormwater Associated with Construction Activities (NPDES, MDE).
9. Trenches for the construction of utilities is limited to three pipe lengths or that which can and shall be back-filled and stabilized by the end of each workday, whichever is shorter.
10. Any major changes or revisions to the plan or sequence of construction must be reviewed and approved by the HSCD prior to proceeding with construction. Minor revisions may allowed by the CID per the list of HSCD-approved field changes.
11. Disturbance shall not occur outside the L.O.D. A project is to be sequenced so that grading activities begin on one grading unit (maximum acreage of 20 ac. per grading unit) at a time. Work may proceed to a subsequent grading unit when at least 50 percent of the disturbed area in the preceding grading unit has been stabilized and approved by the ~~CID.~~ HSCD Unless otherwise specified and approved by the CID, no more than 30 acres cumulatively may be disturbed at a given time.
12. Wash water from any equipment, vehicles, wheels, pavement, and other sources must be treated in a sediment basin or other approved washout structure.
13. Topsoil shall be stockpiled and preserved on-site for redistribution onto final grade.
14. All Silt Fence and Super Silt Fence shall be placed on-the-contour, and be imbricated at 25' minimum intervals, with lower ends curled uphill by 2' in elevation.
15. Stream channels must not be disturbed during the following restricted time periods (inclusive):
   - Use I and IP March 1 - June 15
   - Use III and IIIP October 1 - April 30
   - Use IV March 1 - May 31
16. A copy of this plan, the 2011 MARYLAND STANDARDS AND SPECIFICATIONS FOR SOIL EROSION AND SEDIMENT CONTROL, and associated permits shall be on-site and available when the site is active.

SEQUENCE OF CONSTRUCTION (ADDITION)

1. Obtain grading permit. (1 DAY)
2. Notify Howard County DPW, Construction Inspection Division (CID) (313-1855) at least 24 hours before starting any work. (1 DAY)
3. Construct stabilized construction entrance. (1 DAY)
4. Install perimeter super silt fence and inlet protection at existing I-3. (2 DAYS)
5. With Inspector's approvals, clear and grub site to LOD. (1 WEEK)
6. Rough grade site. (3 WEEKS)
7. Construct retaining wall and building additions. (6 MONTHS)
8. Install SD inlets & pipe except SD-1 & SD-2. Provide inlet protection at all inlets. (1 WEEK)
9. Construct Sidewalk. (1 WEEK)
10. Fine Grade and stabilize all disturbed areas with seed and mulch. (3 WEEKS)
11. Construct bioretention facility SWM-1, and stabilize any disturbed area. (1 WEEK)
12. Remove stabilized construction entrance and construct SWM-2 and service road. Stabilize remaining disturbed area. (1 WEEK)
13. With approval of Inspector, remove all ESC practices and stabilize. (1 DAY)

B-4-2 STANDARDS AND SPECIFICATIONS

FOR

SOIL PREPARATION, TOPSOILING, AND SOIL AMENDMENTS

Definition

The process of preparing the soils to sustain adequate vegetative stabilization.

Purpose

To provide a suitable soil medium for vegetative growth.

Conditions Where Practice Applies

Where vegetative stabilization is to be established.

Criteria

A. Soil Preparation
1. Temporary Stabilization
   a. Seedbed preparation consists of loosening soil to a depth of 3 to 5 inches by means of suitable agricultural or construction equipment, such as disc harrows or chisel plows or rippers mounted on construction equipment. After the soil is loosened, it must not be rolled or dragged smooth but left in the roughened condition. Slopes 3:1 or flatter are to be tracked with ridges running parallel to the contour of the slope.
   b. Apply fertilizer and lime as prescribed on the plans.
   c. Incorporate lime and fertilizer into the top 3 to 5 inches of soil by disking or other suitable means.
2. Permanent Stabilization
   a. A soil test is required for any earth disturbance of 5 acres or more. The minimum soil conditions required for permanent vegetative establishment are:
      i. Soil pH between 6.0 and 7.0.
      ii. Soluble salts less than 500 parts per million (ppm).
      iii. Soil contains less than 40 percent clay but enough fine grained material (greater than 30 percent silt plus clay) to provide the capacity to hold a moderate amount of moisture. An exception: if lovegrass will be planted, then a sandy soil (less than 30 percent silt plus clay) would be acceptable.
      iv. Soil contains 1.5 percent minimum organic matter by weight.
      v. Soil contains sufficient pore space to permit adequate root penetration.
   b. Application of amendments or topsoil is required if on-site soils do not meet the above conditions.
   c. Graded areas must be maintained in a true and even grade as specified on the approved plan, then scarified or otherwise loosened to a depth of 3 to 5 inches.
   d. Apply soil amendments as specified on the approved plan or as indicated by the results of a soil test.
   e. Mix soil amendments into the top 3 to 5 inches of soil by disking or other suitable means. Rake lawn areas to smooth the surface, remove large objects like stones and branches, and ready the area for seed application. Loosen surface soil by dragging with a heavy chain or other equipment to roughen the surface where site conditions will not permit normal seedbed preparation. Track slopes 3:1 or flatter with tracked equipment leaving the soil in an irregular condition with ridges running parallel to the contour of the slope. Leave the top 1 to 3 inches of soil loose and friable. Seedbed loosening may be unnecessary on newly disturbed areas.

B. Topsoiling
1. Topsoil is placed over prepared subsoil prior to establishment of permanent vegetation. The purpose is to provide a suitable soil medium for vegetative growth. Soils of concern have low moisture content, low nutrient levels, low pH, materials toxic to plants, and/or unacceptable soil gradation.
2. Topsoil salvaged from an existing site may be used provided it meets the standards as set forth in these specifications. Typically, the depth of topsoil to be salvaged for a given soil type can be found in the representative soil profile section in the Soil Survey published by USDA-NRCS.
3. Topsoiling is limited to areas having 2:1 or flatter slopes where:
   a. The texture of the exposed subsoil/parent material is not adequate to produce vegetative growth.
   b. The soil material is so shallow that the rooting zone is not deep enough to support plants or furnish continuing supplies of moisture and plant nutrients.
   c. The original soil to be vegetated contains material toxic to plant growth.
   d. The soil is so acidic that treatment with limestone is not feasible.
4. Areas having slopes steeper than 2:1 require special consideration and design.
5. Topsoil Specifications: Soil to be used as topsoil must meet the following criteria:
   a. Topsoil must be a loam, sandy loam, clay loam, silt loam, sandy clay loam, or loamy sand. Other soils may be used if recommended by an agronomist or soil scientist and approved by the appropriate approval authority. Topsoil must not be a mixture of contrasting textured subsoils and must contain less than 5 percent by volume of cinders, stones, slag, coarse fragments, gravel, sticks, roots, trash, or other materials larger than 1½ inches in diameter.
   b. Topsoil must be free of noxious plants or plant parts such as Bermuda grass, quack grass, Johnson grass, nut sedge, poison ivy, thistle, or others as specified.
   c. Topsoil substitutes or amendments, as recommended by a qualified agronomist or soil scientist and approved by the appropriate approval authority, may be used in lieu of natural topsoil.
6. Topsoil Application
   a. Erosion and sediment control practices must be maintained when applying topsoil.
   b. Uniformly distribute topsoil in a 5 to 8 inch layer and lightly compact to a minimum thickness of 4 inches. Spreading is to be performed in such a manner that sodding or seeding can proceed with a minimum of additional soil preparation and tillage. Any irregularities in the surface resulting from topsoiling or other operations must be corrected in order to prevent the formation of depressions or water pockets.
   c. Topsoil must not be placed if the topsoil or subsoil is in a frozen or muddy condition, when the subsoil is excessively wet or in a condition that may otherwise be detrimental to proper grading and seedbed preparation.

C. Soil Amendments (Fertilizer and Lime Specifications)
1. Soil tests must be performed to determine the exact ratios and application rates for both lime and fertilizer on sites having disturbed areas of 5 acres or more. Soil analysis may be performed by a recognized private or commercial laboratory. Soil samples taken for engineering purposes may also be used for chemical analyses.
2. Fertilizers must be uniform in composition, free flowing and suitable for accurate application by appropriate equipment. Manure may be substituted for fertilizer with prior approval from the appropriate approval authority. Fertilizers must all be delivered to the site fully labeled according to the applicable laws and must bear the name, trade name or trademark and warranty of the producer.
3. Lime materials must be ground limestone (hydrated or burnt lime may be substituted except when hydroseeding) which contains at least 50 percent total oxides (calcium oxide plus magnesium oxide). Limestone must be ground to such fineness that at least 50 percent will pass through a #100 mesh sieve and 98 to 100 percent will pass through a #20 mesh sieve.
4. Lime and fertilizer are to be evenly distributed and incorporated into the top 3 to 5 inches of soil by disking or other suitable means.
5. Where the subsoil is either highly acidic or composed of heavy clays, spread ground limestone at the rate of 4 to 8 tons/acre (200-400 pounds per 1,000 square feet) prior to the placement of topsoil.

B-4-3 STANDARDS AND SPECIFICATIONS

FOR

SEEDING AND MULCHING

Definition

The application of seed and mulch to establish vegetative cover.

Purpose

To protect disturbed soils from erosion during and at the end of construction.

Conditions Where Practice Applies

To the surface of all perimeter controls, slopes, and any disturbed area not under active grading.

Criteria

A. Seeding
1. Specifications
   a. All seed must meet the requirements of the Maryland State Seed Law. All seed must be subject to re-testing by a recognized seed laboratory. All seed used must have been tested within the 6 months immediately preceding the date of sowing such material on any project. Refer to Table B.4 regarding the quality of seed. Seed tags must be available upon request to the inspector to verify type of seed and seeding rate.
   b. Mulch alone may be applied between the fall and spring seeding dates only if the ground is frozen. The appropriate seeding mixture must be applied when the ground thaws.
   c. Inoculants: The inoculant for treating legume seed in the seed mixtures must be a pure culture of nitrogen fixing bacteria prepared specifically for the species. Inoculants must not be used later than the date indicated on the container. Add fresh inoculants as directed on the package. Use four times the recommended rate when hydroseeding. Note: It is very important to keep inoculant as cool as possible until used. Temperatures above 75 to 80 degrees Fahrenheit can weaken bacteria and make the inoculant less effective.
   d. Sod or seed must not be placed on soil which has been treated with soil sterilants or chemicals used for weed control until sufficient time has elapsed (14 days min.) to permit dissipation of phyto-toxic materials.
2. Application
   a. Dry Seeding: This includes use of conventional drop or broadcast spreaders.
      i. Incorporate seed into the subsoil at the rates prescribed on Temporary Seeding Table B.1, Permanent Seeding Table B.3, or site-specific seeding summaries.
      ii. Apply seed in two directions, perpendicular to each other. Apply half the seeding rate in each direction. Roll the seeded area with a weighted roller to provide good seed to soil contact.
   b. Drill or Cultipacker Seeding: Mechanized seeders that apply and cover seed with soil.
      i. Cultipacking seeders are required to bury the seed in such a fashion as to provide at least 1/4 inch of soil covering. Seedbed must be firm after planting.
      ii. Apply seed in two directions, perpendicular to each other. Apply half the seeding rate in each direction.
   c. Hydroseeding: Apply seed uniformly with hydroseeder (slurry includes seed and fertilizer).
      i. If fertilizer is being applied at the time of seeding, the application rates should not exceed the following: nitrogen, 100 pounds per acre total of soluble nitrogen; P_2O_5 (phosphorous), 200 pounds per acre; K_2O (potassium), 200 pounds per acre.
      ii. Lime: Use only ground agricultural limestone (up to 3 tons per acre may be applied by hydroseeding). Normally, not more than 2 tons are applied by hydroseeding at any one time. Do not use burnt or hydrated lime when hydroseeding.
      iii. Mix seed and fertilizer on site and seed immediately and without interruption.
      iv. When hydroseeding do not incorporate seed into the soil.

B. Mulching
1. Mulch Materials (in order of preference)
   a. Straw consisting of thoroughly threshed wheat, rye, oat, or barley and reasonably bright in color. Straw is to be free of noxious weed seeds as specified in the Maryland Seed Law and not musty, moldy, caked, decayed, or excessively dusty. **Note: Use only sterile straw mulch in areas where one species of grass is desired.**
   b. Wood Cellulose Fiber Mulch (WCFM) consisting of specially prepared wood cellulose processed into a uniform fibrous physical state.
      i. WCFM is to be dyed green or contain a green dye in the package that will provide an appropriate color to facilitate visual inspection of the uniformly spread slurry.
      ii. WCFM, including dye, must contain no germination or growth inhibiting factors.
      iii. WCFM materials are to be manufactured and processed in such a manner that the wood cellulose fiber mulch will remain in uniform suspension in water under agitation and will blend with seed, fertilizer and other additives to form a homogeneous slurry. The mulch material must form a blotter-like ground cover, on application, having moisture absorption and percolation properties and must cover and hold grass seed in contact with the soil without inhibiting the growth of the grass seedlings.
      iv. WCFM material must not contain elements or compounds at concentration levels that will be phyto-toxic.
      v. WCFM must conform to the following physical requirements: fiber length of approximately 10 millimeters, diameter approximately 1 millimeter, pH range of 4.0 to 8.5, ash content of 1.6 percent maximum and water holding capacity of 90 percent minimum.
2. Application
   a. Apply mulch to all seeded areas immediately after seeding.
   b. When straw mulch is used, spread it over all seeded areas at the rate of 2 tons per acre to a uniform loose depth of 1 to 2 inches. Apply mulch to achieve a uniform distribution and depth so that the soil surface is not exposed. When using a mulch anchoring tool, increase the application rate to 2.5 tons per acre.
   c. Wood cellulose fiber used as mulch must be applied at a net dry weight of 1500 pounds per acre. Mix the wood cellulose fiber with water to attain a mixture with a maximum of 50 pounds of wood cellulose fiber per 100 gallons of water.
3. Anchoring
   a. Perform mulch anchoring immediately following application of mulch to minimize loss by wind or water. This may be done by one of the following methods (listed by preference), depending upon the size of the area and erosion hazard:
      i. A mulch anchoring tool is a tractor drawn implement designed to punch and anchor mulch into the soil surface a minimum of 2 inches. This practice is most effective on large areas, but is limited to flatter slopes where equipment can operate safely. If used on sloping land, this practice should follow the contour.
      ii. Wood cellulose fiber may be used for anchoring straw. Apply the fiber binder at a net dry weight of 750 pounds per acre. Mix the wood cellulose fiber with water at a maximum of 50 pounds of wood cellulose fiber per 100 gallons of water.
      iii. Synthetic binders such as Acrylic DLR (Agro-Tack), DCA-70, Petroset, Terra Tax II, Terra Tack AR or other approved equal may be used. Follow application rates as specified by the manufacturer. Application of liquid binders needs to be heavier at the edges where wind catches mulch, such as in valleys and on crests of banks. **Use of asphalt binders is strictly prohibited.**
      iv. Lightweight plastic netting may be stapled over the mulch according to manufacturer recommendations. Netting is usually available in rolls 4 to 15 feet wide and 300 to 3,000 feet long.

Temporary Seeding Summary

Hardiness Zone (from Figure B.3): 6b / Seed Mixture (from Table B.1):					Fertilizer Rate (10-20-20)	Lime Rate
No.	Species	Application Rate (lb/ac)	Seeding Dates	Seeding Depths		
	Cereal Rye	112	3/15-5/31 8/1-10/31	1"	436 lb/ac (10 lb/1000 sf)	2 tons/ac (90 lb/1000 sf)
	Oats	72	3/15-5/31 8/1-9/30	1"		
	Foxtail Millet	30	6/1-7/31	0.5"		
	Pearl Millet	20	6/1-7/31	0.5"		

Permanent Seeding Summary

Hardiness Zone (from Figure B.3): 6b / Seed Mixture (from Table B.3):					Fertilizer Rate (10-20-20)			Lime Rate
No.	Species	Application Rate (lb/ac)	Seeding Dates	Seeding Depths	N	P_2O_5	K_2O	
9	Hard Fescue	40	3/1-5/15 8/1-10/15	¼- ½ in	45 pounds per acre (1.0 lb/ 1000 sf)	90 lb/ac (2 lb/ 1000 sf)	90 lb/ac (2 lb/ 1000 sf)	2 tons/ac (90 lb/ 1000 sf)
	Kentucky Bluegrass/40			¼- ½ in				
	Perennial Ryegrass/20			¼- ½ in				

HOWARD SCD SIGNATURE BLOCK

THIS PLAN IS APPROVED FOR SOIL EROSION AND SEDIMENT CONTROL BY THE HOWARD SOIL CONSERVATION DISTRICT.

[signature] 11/18/16
HOWARD SOIL CONSERVATION DISTRICT — DATE

APPROVED: DEPARTMENT OF PLANNING AND ZONING

[signature] 11-28-16
Chief, Development Engineering Division — Date

[signature] 12-6-16
Chief, Division of Land Development — Date

[signature] 12-6-16
Director — Date

APPROVED
PLANNING BOARD
OF HOWARD COUNTY
DATE 3/27/2008
9/01/2016

DEVELOPER'S CERTIFICATE

"I/WE HEREBY CERTIFY THAT ANY CLEARING, GRADING, CONSTRUCTION, OR DEVELOPMENT WILL BE DONE PURSUANT TO THIS APPROVED EROSION AND SEDIMENT CONTROL PLAN, INCLUDING INSPECTING AND MAINTAINING CONTROLS, AND THAT THE RESPONSIBLE PERSONNEL INVOLVED IN THE CONSTRUCTION PROJECT WILL HAVE A CERTIFICATE OF TRAINING AT A MARYLAND DEPARTMENT OF THE ENVIRONMENT (MDE) APPROVED TRAINING PROGRAM FOR THE CONTROL ON EROSION AND SEDIMENT PRIOR TO BEGINNING THE PROJECT. I CERTIFY RIGHT-OF-ENTRY FOR PERIODIC ON-SITE EVALUATION BY HOWARD COUNTY, THE HOWARD SOIL CONSERVATION DISTRICT AND/OR MDE."

[signature] 11/1/16
OWNER/DEVELOPER SIGNATURE — DATE

Louis Mangione
PRINTED NAME AND TITLE

DESIGN CERTIFICATION

"I HEREBY CERTIFY THAT THIS PLAN HAS BEEN DESIGNED IN ACCORDANCE WITH CURRENT MARYLAND EROSION AND SEDIMENT CONTROL LAWS, REGULATIONS, AND STANDARDS, THAT IT REPRESENTS A PRACTICAL AND WORKABLE PLAN BASED ON MY PERSONAL KNOWLEDGE OF THE SITE, AND THAT IT WAS PREPARED IN ACCORDANCE WITH THE REQUIREMENTS OF THE HOWARD SOIL CONSERVATION DISTRICT."

[signature] 10/26/16
DESIGNER SIGNATURE — DATE

D. VIR KATHURIA — MD REGISTRATION NO. 8818
PRINTED NAME — PRINTED NAME P.E., R.L.S., OR R.L.A. (CIRCLE ONE)

NO	REVISION	DATE
4	ADDITION OF BUILDING, SWM FACILITIES, RETAINING WALL AND SERVICE LANE	10/4/2016

EROSION AND SEDIMENT CONTROL NOTES AND DETAILS

REVISED SITE DEVELOPMENT PLAN

TURF VALLEY, LORIEN

NURSING HOME & ASSISTED LIVING FACILITY

OAKMONT AT TURF VALLEY
PARCEL Q
PLATS 18773 - 18775
TAX MAP 16 - P/O PARCEL 8- GRID 16 & 17;
POD I per S-86-13 (4th AMENDED)
THIRD ELECTION DISTRICT HOWARD COUNTY, MARYLAND

KCI TECHNOLOGIES
ENGINEERS
PLANNERS
SCIENTISTS
CONSTRUCTION MANAGERS
3300 North Ridge Road
Suite 315
Ellicott City, MD 21043
Phone (410)203-9800
Fax (410)203 9228
www.kci.com

Professional Certification. I hereby certify that these documents were prepared or approved by me, and that I am a duly licensed professional engineer under the laws of the State of Maryland, License No. 8818, Expiration Date: 10/17/18.

STATE OF MARYLAND — DHANNU VIR KATHURIA — NO. 8818 — PROFESSIONAL ENGINEER

DRAWN BY: SK
CHECKED BY: DVK
SCALE: AS SHOWN
DATE: 10/4/2016

SHEET: 34 OF 36

SDP-07-084

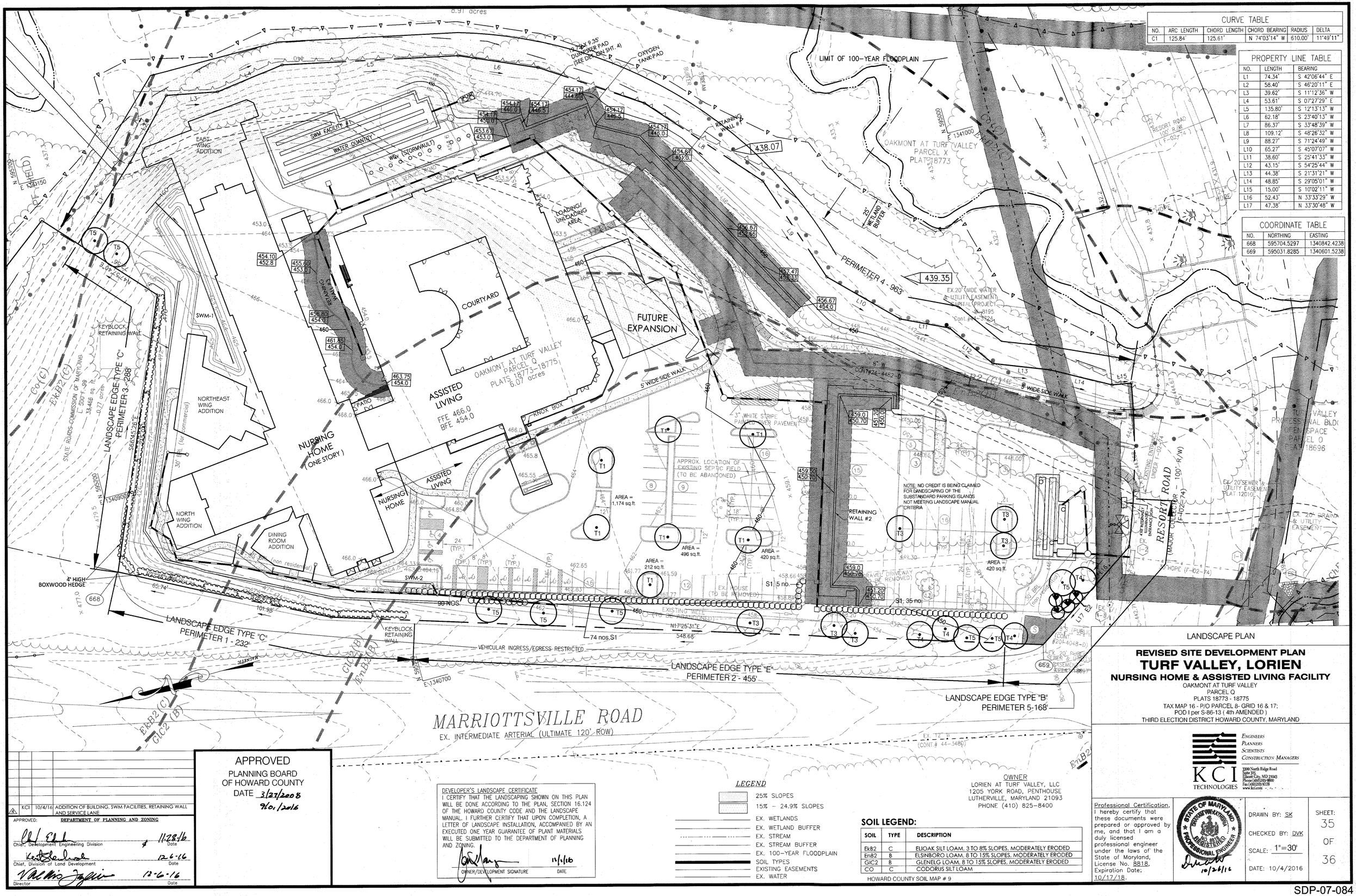

LANDSCAPE PLAN

REVISED SITE DEVELOPMENT PLAN
TURF VALLEY, LORIEN
NURSING HOME & ASSISTED LIVING FACILITY

OAKMONT AT TURF VALLEY
PARCEL Q
PLATS 18773 - 18775
TAX MAP 16 - P/O PARCEL 8- GRID 16 & 17;
POD I per S-86-13 (4th AMENDED)
THIRD ELECTION DISTRICT HOWARD COUNTY, MARYLAND

KCI TECHNOLOGIES
ENGINEERS
PLANNERS
SCIENTISTS
CONSTRUCTION MANAGERS
3300 North Ridge Road
Suite 395
Ellicott City, MD 21043
Phone (410)203-0900
Fax (410)203-9228
www.kci.com

⚠	KCI	10/4/16	ADDITION OF BUILDING, SWM FACILITIES, RETAINING WALL AND SERVICE LANE

APPROVED: DEPARTMENT OF PLANNING AND ZONING

Chief, Development Engineering Division — Date 11/28/16

Chief, Division of Land Development — Date 12-6-16

Director — Date 12-6-16

APPROVED
PLANNING BOARD
OF HOWARD COUNTY
DATE 3/27/2008
9/01/2016

DEVELOPER'S LANDSCAPE CERTIFICATE
I CERTIFY THAT THE LANDSCAPING SHOWN ON THIS PLAN WILL BE DONE ACCORDING TO THE PLAN, SECTION 16.124 OF THE HOWARD COUNTY CODE AND THE LANDSCAPE MANUAL. I FURTHER CERTIFY THAT UPON COMPLETION, A LETTER OF LANDSCAPE INSTALLATION, ACCOMPANIED BY AN EXECUTED ONE YEAR GUARANTEE OF PLANT MATERIALS WILL BE SUBMITTED TO THE DEPARTMENT OF PLANNING AND ZONING.

OWNER/DEVELOPER SIGNATURE — DATE 11/1/16

LEGEND

- 25% SLOPES
- 15% – 24.9% SLOPES
- EX. WETLANDS
- EX. WETLAND BUFFER
- EX. STREAM
- EX. STREAM BUFFER
- EX. 100-YEAR FLOODPLAIN
- SOIL TYPES
- EXISTING EASEMENTS
- EX. WATER

OWNER
LORIEN AT TURF VALLEY, LLC
1205 YORK ROAD, PENTHOUSE
LUTHERVILLE, MARYLAND 21093
PHONE (410) 825-8400

SOIL LEGEND:

SOIL	TYPE	DESCRIPTION
EkB2	C	ELIOAK SILT LOAM, 3 TO 8% SLOPES, MODERATELY ERODED
EnB2	B	ELSINBORO LOAM, 8 TO 15% SLOPES, MODERATELY ERODED
GlC2	B	GLENELG LOAM, 8 TO 15% SLOPES, MODERATELY ERODED
CO	C	CODORUS SILT LOAM

HOWARD COUNTY SOIL MAP # 9

Professional Certification. I hereby certify that these documents were prepared or approved by me, and that I am a duly licensed professional engineer under the laws of the State of Maryland, License No. 8818, Expiration Date: 10/17/18.

STATE OF MARYLAND — DONNA M. KATHMAN — NO. 8818 — REGISTERED PROFESSIONAL ENGINEER — 10/26/16

DRAWN BY: SK
CHECKED BY: DVK
SCALE: 1"=30'
DATE: 10/4/2016

SHEET: 35 OF 36

SDP-07-084

NOTES

1. NO RARE, THREATENED OR ENDANGERED SPECIES WERE OBSERVED ON THIS SITE.

2. THERE ARE NO ISOLATED FOREST STANDS ON THIS SITE.

3. THIS PLAN HAS BEEN PREPARED IN ACCORDANCE WITH THE PROVISIONS OF SECTION 16.124 OF THE HOWARD COUNTY CODE AND THE LANDSCAPE MANUAL. FINANCIAL SURETY FOR THE PROPOSED LANDSCAPING TO BE POSTED AS PART OF THE DEVELOPER'S AGREEMENT FOR 34 SHADE TREES, 30 EVERGREEN TREES AND 114 SHRUBS IN THE AMOUNT OF $18,120.

7. CONTRACTOR SHALL VERIFY LOCATION OF ALL UNDERGROUND UTILITIES PRIOR TO DIGGING.

8. FINAL LOCATION OF PLANT MATERIAL MAY NEED TO VARY TO MEET FINAL FIELD CONDITIONS. TREES SHALL NOT BE PLANTED IN THE BOTTOM OF DRAINAGE SWALES.

9. CONTRACTOR SHALL VERIFY PLANT QUANTITIES PRIOR TO BIDDING. IF PLAN DIFFERS FROM LANDSCAPE SCHEDULE, THE PLAN SHALL GOVERN.

10. AT THE TIME OF PLANT INSTALLATION, ALL TREES LISTED AND APPROVED ON THE LANDSCAPE PLAN, SHALL COMPLY WITH THE PROPER HEIGHT REQUIREMENT IN ACCORDANCE WITH THE HOWARD COUNTY LANDSCAPE MANUAL. IN addition, NO SUBSTITUTIONS OR RELOCATIONS OF THE REQUIRED PLANTINGS MAY BE MADE WITHOUT PRIOR REVIEW AND APPROVAL FROM THE DEPARTMENT OF PLANNING AND ZONING. ANY DEVIATIONS FROM THE APPROVED LANDSCAPE PLAN MAY RESULT IN DENIAL OR DELAY IN THE RELEASE OF LANDSCAPE SURETY UNTIL SUCH TIME AS ALL REQUIRED MATERIALS ARE PLANTED AND/OR REVISIONS ARE MADE TO THE PLANS.

SCHEDULE A
PERIMETER LANDSCAPE EDGE

	Category	Adjacent to Roadways	Parking Lot Perimeter	Adjacent to Perimeter Properties	Internal Perimeter	Adjacent to Eastbound I-70 ramp
	Landscape Type	B	E	C	–	C
	Linear Feet of Roadway Frontage/Perimeter	168'	455'	288'	963'	232'
	Credit for Existing Vegetation (Yes, No, Linear Feet) (Describe below if needed)	NO – –	NO – –	NO – –	NO – –	NO – –
3	Credit for Wall, Fence or Berm (Yes, No, Linear Feet) (Describe below if needed)	NO	YES 20' (1)	YES HEDGE, 208' (2)	NO	YES HEDGE, 232' (2)
	Number of Plants Required					
	Shade Trees	3	11	7	–	6
	Evergreen Trees	4	–	14	–	12
	Shrubs	–	109	–	–	–
3	Number of Plants Provided					
	Shade Trees	3	10	2	–	0
	Evergreen Trees	4	–	0	–	0
	Other Trees (2:1 substitution)	–	–	–	–	–
	Shrubs (10:1 substitution) (Describe plant substitution credits below if needed)	–	119	–	–	–

3 (1) GRADE MORE THAN 2' HIGHER THAN PARKING LOT, SUBSTITUTION CLAIMED FOR 20' OF PERIMETER E.
3 (2) HEDGE(BUXUS MICROPHYLLA/LITTLE LEAF BOXWOOD) 2' TO 2.5' HIGH, PLANT 3' APART
NO. OF PLANTS REQUIRED = (208'+232')/3' = 147 PLANTS

SCHEDULE B
PARKING LOT INTERNAL LANDSCAPING

Number of Parking Spaces	133
Number of trees required	7
Number of trees provided Shade trees Other trees (2:1 substitution)	10

NOTE: NO CREDIT IS BEING CLAIMED FOR LANDSCAPING OF THE SUBSTANDARD PARKING ISLANDS NOT MEETING LANDSCAPE MANUAL CRITERIA.

PERIMETER EDGE SUMMARY 3

Perimeter	Type	Linear Ft.	Plants Reqd.	Credit for ex. vegetation	Plants provided	Notes
1	C	232'	6 shade 12 Evergreen	–	0 shade 0 Evergreen	Adjacent to Roadway
2	E	455'	11 Shade 114 Shrubs	–	10 Shade 119 Shrubs	Parking lot perimeter
3	C	288'	7 Shade 14 Evergreen	–	0 Shade 0 Evergreen	Adjacent to Residential zoning
4	–	963'	–	–	–	Internal landscape edge
5	B	168'	3 Shade 4 Evergreen	–	3 Shade 4 Evergreen	Adjacent to Roadway

Landscape Requirement – 34 Shade trees; 30 Evergreen; 119 shrubs
Bonding–
Shrubs: 114 x 30 = $3,420
Evergreen trees: 30 x 150 = $4,500
Shade trees: 34 x 300 = $10,200
Total = $18,120
3 Shrubs: 6x30 = $150
3 Hedge plants: 147x15 = $2,205
Total = $2,355

3	KCE	10/13/16	Addition of Building, SWM facilities, Retaining Wall and Service Lane

APPROVED: DEPARTMENT OF PLANNING AND ZONING

Chief, Development Engineering Division — Date 6/25/08
Chief, Division of Land Development — Date 6/27/08
Director — Date 6/30/08

APPROVED
PLANNING BOARD
OF HOWARD COUNTY
DATE 3/27/08

PLANT LIST

KEY	SYMBOL	QTY	BOTANICAL NAME	COMMON NAME	ROOT	SPACING	SIZE
⊙	T1	10	Sophora japonica	Japanese Pagoda Tree	B&B	As shown on plan	2½"–3" cal.
	T2	3	Gleditsia triacanthos inermis 'Imperial'	Imperial Thornless Honeylocust	B&B	As shown on plan	2½"–3" cal.
	T3	6	Tilia cordata	Little Leaf Linden	B&B	As shown on plan	2½"–3" cal.
	T4	8	Quercus coccinea	Scarlet Oak	B&B	As shown on plan	2½"–3" cal.
	T5	10	Quercus acutissima	Sawtooth Oak	B&B	As shown on plan	2½"–3" cal.
	E1	6	Pinus strobus	Eastern White Pine	CONT.	As shown on plan	6'–8' ht.
	E2	10	Pinus thunbergiana	Japanese Black Pine	CONT.	As shown on plan	6'–8' ht.
	E3	14	Cuppressocyparis leylandi	Leyland Cypress	CONT.	As shown on plan	5'–6' ht.
◯	S1	114	Photinia x fraserii	Frasers Photinia	CONT.	4' o.c.	3'–3½' ht.

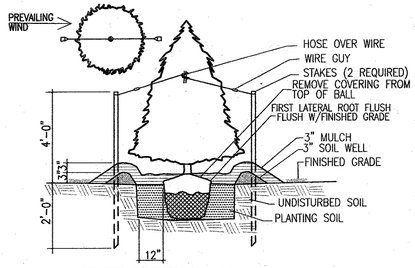

EVERGREEN TREE DETAIL

NOT TO SCALE

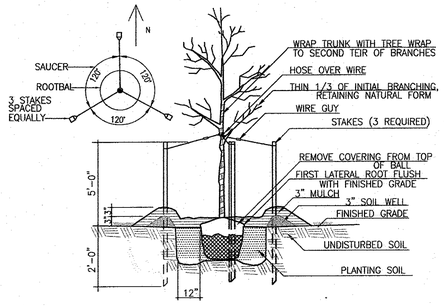

DECIDUOUS TREE DETAIL

NOT TO SCALE

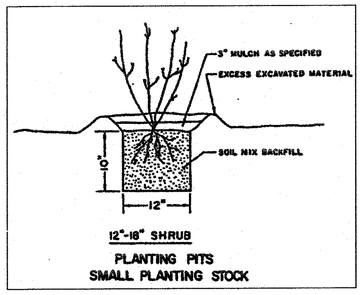

12"-18" SHRUB
PLANTING PITS
SMALL PLANTING STOCK

OWNER

3 LORIEN AT TURF VALLEY, LLC
1205 YORK ROAD, PENTHOUSE
LUTHERVILLE, MARYLAND 21093
PHONE (410) 825–8400

LANDSCAPE DETAILS

TURF VALLEY, LORIEN

NURSING HOME & ASSISTED LIVING FACILITY

OAKMONT AT TURF VALLEY
PARCEL Q
PLATS 18773 - 18775
TAX MAP 16 - P/O PARCEL 8- GRID 16 & 17;
POD I per S-86-13 (4th AMENDED)
THIRD ELECTION DISTRICT HOWARD COUNTY, MARYLAND

KCE ENGINEERING, INC.
EXECUTIVE CENTER
3300 NORTH RIDGE ROAD, SUITE 315
ELLICOTT CITY, MARYLAND 21043
PHONE (410) 203–9800 FAX (410) 203–9228

"Professional Certification. I hereby certify that these documents were prepared or approved by me, and that I am a duly licensed professional engineer under the laws of the State of Maryland, License NO. 8818, Expiration Date: 10/17/ 8."

STATE OF MARYLAND — DONALD V. KRAUSS — NO. 8818 — REGISTERED PROFESSIONAL ENGINEER
6/27/08

DRAWN BY: MC
CHECKED BY: DVK
SCALE: N/A
DATE: 04/30/2008

SHEET: 36 OF 36

SDP-07-084