COLUMBIA GATEWAY
PARCEL 'T-23'
SITE DEVELOPMENT PLAN

SIXTH ELECTION DISTRICT
HOWARD COUNTY, MARYLAND

GENERAL NOTES

1. ALL CONSTRUCTION SHALL BE IN ACCORDANCE WITH THE LATEST STANDARDS AND SPECIFICATIONS OF HOWARD COUNTY PLUS MSHA STANDARDS AND SPECIFICATIONS IF APPLICABLE.

2. THE CONTRACTOR SHALL NOTIFY THE BUREAU OF ENGINEERING/CONSTRUCTION INSPECTION DIVISION AT (410) 313-1880 AT LEAST FIVE (5) WORKING DAYS PRIOR TO START OF WORK.

3. THE CONTRACTOR SHALL NOTIFY "MISS UTILITY" AT 1-800-257-7777 AT LEAST 48-HOURS PRIOR TO ANY EXCAVATION WORK.

4. PROJECT BACKGROUND:

LOCATION:	TAX MAP 37, GRID 2
ZONING:	M-1 PER 2-2-04 COMPREHENSIVE ZONING PLAN AND THE "COMP LITE" ZONING AMENDMENTS EFFECTIVE 7/28/06
ELECTION DISTRICT:	6TH DISTRICT
SECTION/AREA:	N/A
SITE AREA:	7.6787± AC. (PARCEL T-23)

DEPT. OF PLANNING & ZONING APPROVED FILE NUMBERS FOR REFERENCES.:

P-86-22, S-84-44, S-85-28, WP-88-47, VP-84-150, VP-85-34, VP-85-35, VP-86-61, VP-86-73, VP-86-119, F-86-127, F-86-182, F-87-63, F-87-125, F-99-81, F-99-91, F-00-132, F-06-051 (PLAT 17744), F-07-016, F-07-108 (resub plat 18967) and F-07-174 (esm't plat).

5. TRAFFIC CONTROL DEVICES, MARKINGS, AND SIGNING SHALL BE IN ACCORDANCE WITH THE LATEST EDITION OF THE MANUAL ON UNIFORM TRAFFIC CONTROL DEVICES (MUTC). ALL STREET AND REGULATORY SIGNS SHALL BE IN PLACE PRIOR TO THE PLACEMENT OF ANY ASPHALT.

6. ALL PLAN DIMENSIONS ARE TO THE FACE OF CURB OR FACE OF BUILDING UNLESS OTHERWISE NOTED. DIMENSIONS ARE MEASURED PERPENDICULAR OF RADIALLY BETWEEN ITEMS UNLESS OTHERWISE NOTED.

7. EXISTING TOPOGRAPHY AND FEATURES WERE DERIVED FROM AVAILABLE PUBLIC RECORDS (F-00-132) and FROM FIELD SURVEY BY GLW IN FEB/07 AND BY SHANENBERGE-LANE IN JUL/06 & FEB/07. THIS SITE WAS MASS GRADED UNDER F-00-132.

8. COORDINATES ARE BASED ON HOWARD COUNTY GEODETIC CONTROL STA. NOs. 42CB AND 42CC. THE VERTICAL DATUM IS IN NGVD'29.

9. THIS SITE WILL BE SERVED BY PUBLIC WATER & SEWER UNDER THE EXISTING CONTRACT #24-3814-D, #24-4367-D AND #24-1629-D AND THE ON-SITE PUBLIC WATER & SEWER EXTENSION UNDER CONTRACT #24-4474-D TO BE CONSTRUCTED UNDER A DEVELOPER'S AGREEMENT PER THIS SDP.

10. STORMWATER MANAGEMENT (FOR 2 & 10 YR QUANTITY & QUALITY) IS PROVIDED BY THE SWM FACILITY CONSTRUCTED UNDER F-00-132, ON PARCELS T-10 AND T-15. TEMPORARY SWM FOR NEWLY GRADED LAND IS PROVIDED IN THE SAME POND (F-00-132)

11. ALL ON-SITE STORM DRAINS PROPOSED UNDER THIS SDP ARE PRIVATE.

12. THE EXISTING UTILITIES SHOWN HEREIN WERE DERIVED FROM AVAILABLE PUBLIC RECORDS. THE CONTRACTOR MUST HAND DIG TEST PITS AT ALL UTILITY CROSSINGS AND CONNECTION POINTS TO VERIFY EXACT LOCATION.

13. ALL PROPOSED RAMPS SHALL BE IN ACCORDANCE WITH CURRENT A.D.A. STANDARDS. MAXIMUM SIDEWALK CROSS SLOPE SHALL BE (2%) TWO PERCENT. PROVIDE A MINIMUM OF (5x5) FIVE BY FIVE FOOT LEVEL LANDING (2% MAX.) AT THE TOP AND BOTTOM OF ALL RAMPS AND BUILDING INGRESS/EGRESS POINTS.

14. ALL ON-SITE PAVING AND ROADWAYS ARE PRIVATELY OWNED AND MAINTAINED.

15. ANY DAMAGE TO COUNTY OWNED RIGHT-OF-WAY TO BE CORRECTED AT THE CONTRACTOR'S EXPENSE.

16. TRENCH BEDDING FOR STORM DRAINAGE STRUCTURES SHALL BE IN ACCORDANCE WITH HOWARD COUNTY STANDARD G2.01. CLASS "C" BEDDING, UNLESS OTHERWISE NOTED.

17. GUTTER PAN OF CURBS SHALL BE PITCHED TO CONFORM TO THE ADJACENT DRAINAGE PATTERN OF THE ADJOINING PAVING FOR VEHICULAR USE. FOR PAVING AND CURB DESIGNATION, SEE SHEET 3.

18. ALL CURB FILLETS ARE 5' RADIUS UNLESS NOTED OTHERWISE. SPOT ELEVATIONS ALONG CURB LINE ARE FOR THE FLOW LINE (BOTTOM OF CURB), UNLESS NOTED OTHERWISE.

19. THERE ARE NO KNOWN GRAVE SITES OR CEMETERIES ON THIS SITE.

20. OTHER TOPICS RELATED TO THIS SITE:
- TRAFFIC ANALYSIS PREPARED BY WELLS & ASSOCIATES, LLC. (DATED FEB/21/07)
- APFO STUDY ANALYSIS APPROVED AS SUBMITTED IN MARCH, 2007

21. ALL OUTSIDE LIGHTING SHALL COMPLY WITH ZONING REGULATION SECTION 134 WHICH REQUIRES LIGHTS TO BE INSTALLED TO DIRECT/REFLECT LIGHT DOWNWARDS AND INWARDS ON SITE AWAY FROM ALL ADJOINING PUBLIC STREETS AND RESIDENTIAL AREAS. SEE ELECTRICAL DRAWINGS WHICH IS PART OF THE ARCHITECTURAL PLAN SET SUBMITTED FOR BUILDING PERMIT REVIEW.

22. THE BUILDING SHALL HAVE AN INSIDE WATER METER SETTING AND IT SHALL BE EQUIPPED WITH AN AUTOMATIC FIRE PREVENTION SPRINKLER SYSTEM.

23. SEE ARCHITECTURAL DRAWINGS FOR CONSTRUCTION DETAILS FOR SERVICE AREA.

24. THIS SDP IS EXEMPT FROM THE FOREST CONSERVATION ORDINANCE IN ACCORDANCE WITH SECTION 16.1202(B)(1)(V), A PLANNED OFFICE PARK.

25. NO CLEARING, GRADING OR CONSTRUCTION IS PERMITTED WITHIN STREAMS, FOREST CONSERVATION AREAS, WETLANDS, WETLAND BUFFERS, STREAM BUFFERS OR FLOODPLAINS.

26. LANDSCAPE SURETY IN THE AMOUNT OF $26,430.00 IS POSTED AS PART OF THE DEVELOPER'S AGREEMENT FOR THIS SDP. FOR INFORMATION ON THE REQUIRED LANDSCAPE PLANTING AND ASSOCIATED SURETY, SEE SHEETS 9 & 10.

27. THIS PLAN HAS BEEN PREPARED IN ACCORDANCE WITH THE PROVISIONS OF SECTION 16.124 OF THE HOWARD COUNTY CODE AND THE LANDSCAPE MANUAL.

28. STREET LIGHT PLACEMENT AND THE TYPE OF FIXTURE AND POLE SHALL BE IN ACCORDANCE WITH THE HOWARD COUNTY DESIGN MANUAL, VOLUME III (1993) AND AS MODIFIED BY "GUIDELINES FOR STREET LIGHTS IN RESIDENTIAL DEVELOPMENTS (JUNE 1993)." A MINIMUM SPACING OF 20' SHALL BE MAINTAINED BETWEEN ANY STREETLIGHT AND ANY TREE.

29. ALL SIGN POSTS USED FOR TRAFFIC CONTROL SIGNS INSTALLED IN THE COUNTY RIGHT-OF-WAY SHALL BE MOUNTED ON A 2" GALVANIZED STEEL, PERFORATED, SQUARE TUBE POST (14 GAUGE) INSERTED INTO A 2-1/2" GALVANIZED STEEL, PERFORATED, SQUARE TUBE SLEEVE (12 GAUGE) - 3' LONG. A GALVANIZED STEEL POLE CAP SHALL BE MOUNTED ON TOP OF EACH POST.

30. THERE IS NO FLOODPLAIN ON THIS SITE.

31. THERE IS NO WETLANDS ON THIS SITE.

32. THIS SITE WAS PREVIOUSLY CLEARED AND MASS-GRADED UNDER F-00-132. THE SOIL IS THEREFORE "MAN-MADE". THERE ARE NO STEEP EXISTING SLOPES 25% AND GREATER OR 15%-24.9%. EXISTING STREET TREES ALONG COLUMBIA GATEWAY DRIVE THAT ARE IMPACTED BY THE DEVELOPMENT OF PARCEL T-23 SHALL BE RELOCATED PER THE LANDSCAPE PLAN (SHEET 9).

33. THE SHARED ACCESS AND PARKING REQUIREMENT FOR PARCELS "T-22" THRU "T-24" IS COVERED IN DECLARATION OF RECIPROCAL EASEMENTS AND RECORDED AMONG THE LAND RECORDS OF HOWARD COUNTY, MARYLAND IN LIBER 9707 AT FOLIO 368.

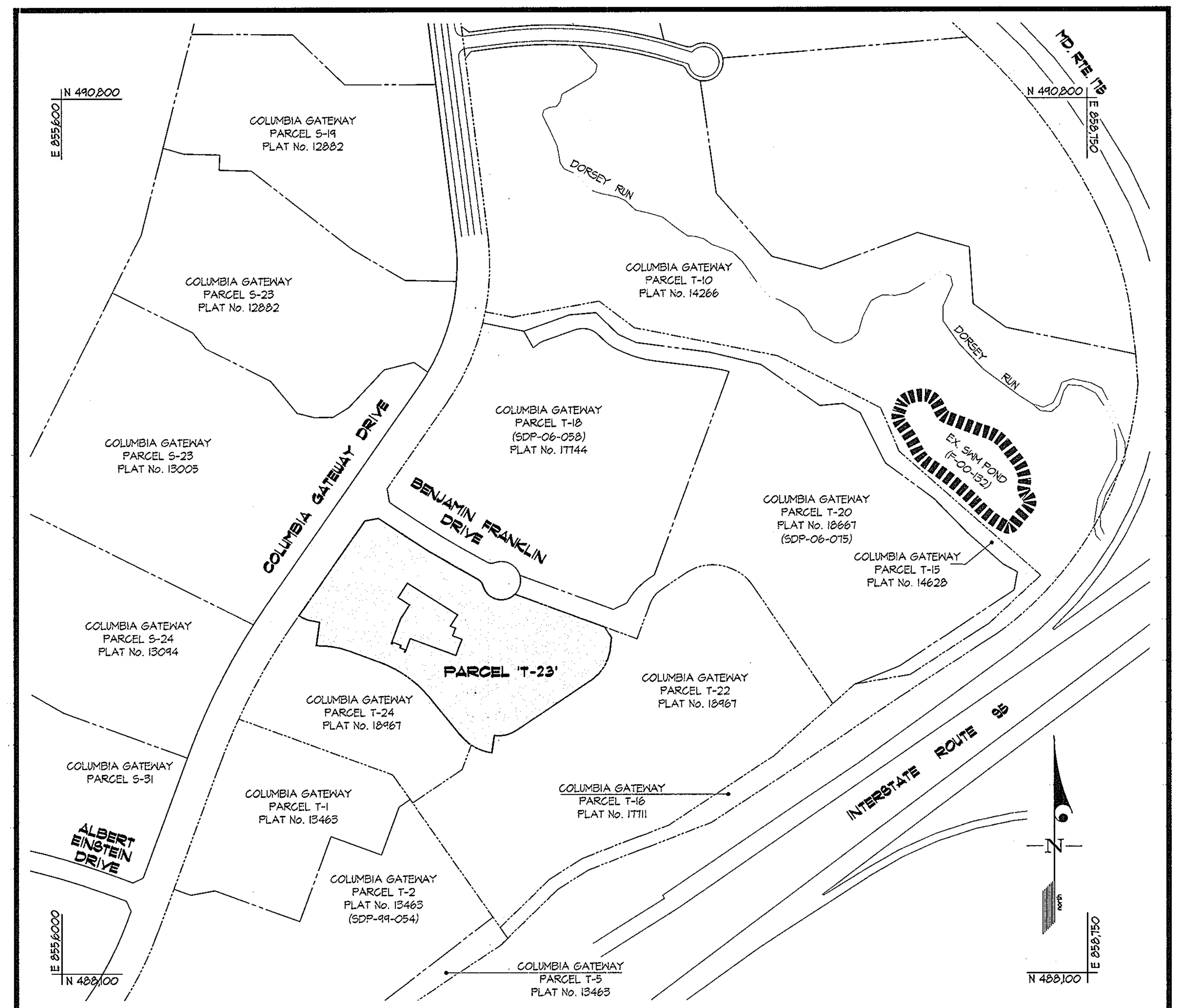

SITE OVERVIEW SCALE: 1" = 300'

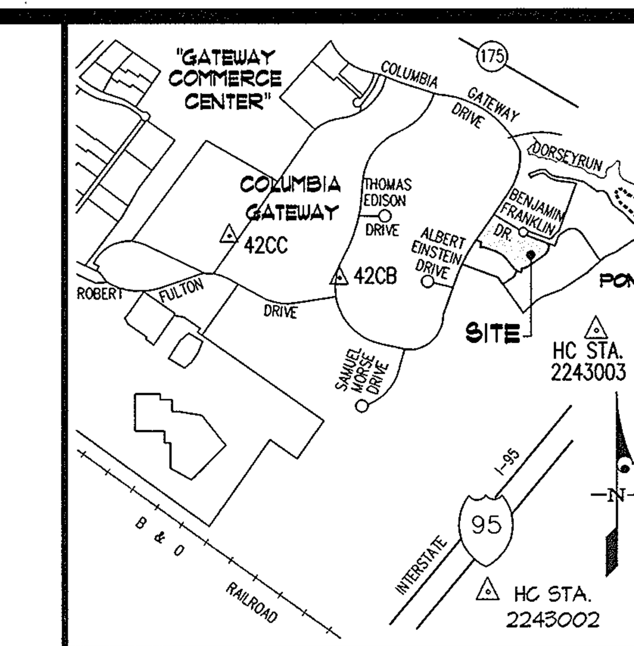

VICINITY MAP
SCALE 1" = 2000'
ADC MAP 16 F12 & F13

HOWARD COUNTY CONTROL

NAD27 HORIZONTAL DATA
& NGVD29 VERTICAL DATA

42CB N 488572.0
E 853908.9
ELV.=336.23

42CC N 489127.3
E 852454.6
ELV.=346.72

SITE ANALYSIS DATA CHART

1. GENERAL SITE DATA
   - A. PRESENT ZONING: M-1
   - B. PROPOSED USE OF SITE OR STRUCTURES: GENERAL OFFICE
   - C. SEE GENERAL NOTE #4 FOR APPLICABLE DPZ FILE NUMBERS.

2. AREA TABULATION
   - A. TOTAL PROJECT AREA: 7.6787± ACRES (AREA OF PARCEL T-23)
   - B. AREA OF THIS PLAN SUBMISSION: 10.7± ACRES (L.O.D.)
   - C. LIMIT OF DISTURBED AREA BY THIS SDP: 10.7± ACRES
   - D. BUILDING AREA (GFA) and EMPLOYEES:

	BLDG. AREA (SQ. FT.)	OCCUPANTS/EMPLOYEES
FIRST FLOOR	25,607	256
SECOND FLR.	25,811	258
THIRD FLR.	22,856	228
4TH & 5th FLR.	45,638 (22,819 ea.)	456 (228 ea.)
	119,912 TOTAL	1,198 TOTAL

   - E. BUILDING COVERAGE OF SITE: 0.62± ACRES OR 8.1% OF PARCEL T-23 SITE AREA
   - F. TOTAL PAVED SURFACES (PARKING, DRIVEWAYS, SIDEWALKS, SERVICE AREA, ETC.): 5.20± AC. (0.58 AC OFF-SITE AND 4.62 AC ON-SITE WHICH IS 60% OF THE PARCEL T-23 SITE).

3. OPEN SPACE DATA
   - A. OPEN SPACE REQUIRED ON SITE: N/A
   - B. OPEN SPACE PROPOSED: N/A

4. PARKING SPACE DATA
   - A. REQUIRED PARKING PER ZONING REGULATIONS SEC. 133D.3.A. ("GENERAL OFFICE USES" AT 3.3 SPACES PER 1000 S.F.):

     119,912 x 3.3/1000 = 396 SPACES MINIMUM

   - B. THE TOTAL NUMBER OF PARKING SPACES PROVIDED IS 460 (OR 3.83 PER 1000), OF WHICH 9 ARE ACCESSIBLE SPACES. THE PARKING SPACES PROVIDED ARE:

451	9'x18' STANDARD PARKING SPACES
6	REGULAR ACCESSIBLE SPACES
3	DESIGNATED VAN ACCESSIBLE SPACES
460	TOTAL PARKING SPACES

SHEET INDEX

1 COVER SHEET
2 SITE DEVELOPMENT PLAN
3 CURB AND PAVING DELINEATION PLAN
4 SITE DETAILS
5 STORM DRAIN PROFILES / UTILITY PROFILES
6 SEDIMENT CONTROL PLAN
7 SEDIMENT CONTROL NOTES AND DETAILS
8 DRAINAGE AREA MAP
9 LANDSCAPE PLAN
10 PLANTING NOTES, SCHEDULES & DETAILS
11 WORK ZONE TRAFFIC CONTROL PLAN / PAVEMENT MARKING PLAN

ADDRESS CHART
STREET ADDRESS
7001 COLUMBIA GATEWAY DRIVE

STATE OF MARYLAND — TODD MICHAEL REDDAN — REG. No. 17288 — REGISTERED PROFESSIONAL ENGINEER
5.25.07

WATER CODE:	SEWER CODE:				
E06	3380000				
PROJ. NAME:	COLUMBIA GATEWAY PARCEL T-23			SECTION/AREA N/A	PARCEL(S) T-23
PLAT 18967 & 19111	ZONE M-1	TAX MAP 43	BLOCK 2	ELEC. DIST. 6	CENSUS TRACT 6067.03

APPROVED: HOWARD COUNTY DEPARTMENT OF PLANNING & ZONING

Director	Date 6/1/07
Chief, Division of Land Development ✓TKM	Date 6/1/07
Chief, Development Engineering Division	Date 6/1/07

GLW GUTSCHICK LITTLE & WEBER, P.A.
CIVIL ENGINEERS, LAND SURVEYORS, LAND PLANNERS, LANDSCAPE ARCHITECTS
3909 NATIONAL DRIVE – SUITE 250 – BURTONSVILLE OFFICE PARK
BURTONSVILLE, MARYLAND 20866
TEL: 301-421-4024 BALT: 410-880-1820 DC/VA: 301-989-2524 FAX: 301-421-4186

L:\CADD\DRAWINGS\06077\SDP\06077-CS.dwg	DES. mbt	DRN. KLP	CHK. mbt

DATE	REVISION	BY	APP'R.

PREPARED FOR:

OWNER:
THE HOWARD RESEARCH AND DEVELOPMENT CORPORATION
10275 LITTLE PATUXENT PARKWAY
COLUMBIA, MD 21044
Phone: 410-992-6027
Attn.: PAUL CAVANAUGH

CONTRACT PURCHASER/DEVELOPER:
GATEWAY T23 LLC
c/o MANEKIN LLC
8601 ROBERT FULTON DRIVE, SUITE 200
COLUMBIA, MD 21046-2278
Phone: 410-423-2002
Attn.: ALEX KOPICKI

COVER SHEET

COLUMBIA GATEWAY
OFFICE BUILDING
PARCEL 'T-23'
PLAT Nos. 18967 & 19111

ELECTION DISTRICT No. 6
HOWARD COUNTY, MARYLAND

SCALE	ZONING	G. L. W. FILE No.
AS SHOWN	M-1	06-077
DATE	TAX MAP – GRID	SHEET
MAY/2007	43 2	1 OF 11

SDP-07-083

NOTES:

1. UNLESS NOTED OTHERWISE, PROPOSED SPOT ELEVATIONS ALONG THE CONCRETE CURB & GUTTER ARE TO THE FLOW LINE (BOTTOM OF CURB) AT THE PC'S/PT'S, CORNERS AND TERMINUSES.

2. ALL ON-SITE PAVING AND ROADWAYS ARE PRIVATE.

3. ALL ON-SITE STORM DRAIN ARE PRIVATE AND SHALL BE PRIVATELY MAINTAINED. THE ON-SITE WATER IS PRIVATELY MAINTAINED EXCEPT THE PORTION OF THE 8"W AND FIRE HYDRANTS THAT ARE WITHIN THE "PUBLIC WATER & UTILITY EASEMENT". ALL ON-SITE PRIVATE SEWER LINES AND STRUCTURES SHALL BE PRIVATELY MAINTAINED.

4. FOR INFORMATION OF THE PUBLIC PORTION OF THE ON-SITE WATER AND SEWER LINE, SEE DPW CONTRACT No. 24-4474-D.

6. UNLESS NOTED OTHERWISE, ALL PLAN DIMENSION ARE TO THE FACE OF STRUCTURE (BLDG, CURB, ETC.). DIMENSIONS ARE MEASURED PERPENDICULAR OR RADIAL BETWEEN ITEMS, UNLESS NOTED OTHERWISE.

7. ALL CURB RADII ARE 5' (FACE OF CURB @ FLOW LINE) UNLESS NOTED OTHERWISE.

8. DIRECT INGRESS AND EGRESS TO THIS PARCEL IS RESTRICTED TO ENTRANCE ON BENJAMIN FRANKLIN DRIVE CUL-DE-SAC. INGRESS AND EGRESS FROM THIS PARCEL TO COLUMBIA GATEWAY DRIVE IS PROVIDED BY THE RECIPROCAL EASEMENT RECORD AT L.9101 F. 568.

9. THE WATER METER IS LOCATED INSIDE BUILDING. THE BUILDING IS EQUIPPED WITH AN AUTOMATIC SPRINKLER SYSTEM.

10. SEE SHEETS 3 AND 4 FOR ADDITIONAL SITE DETAILS.

LIGHTING FIXTURE SCHEDULE

TYPE/SYMBOL	MANUFACTURER	WATTAGE	LAMP	POLE and FIXTURE
▪—▪	LITHONIA LIGHTING "AERIS" AS2	400	METAL HALIDE	FULL CUT-OFF FIXTURE COLOR-LIGHT GREY ON 30' POLES KM INDUSTRIES, ROUND TAPERED STEEL POLES, COLOR TO MATCH FIXTURE
⟷☼		250		SAG FIXTURE MOUNTED AT 30' ON A BRONZE FIBERGLASS POLE USING A 12' ARM

SITE DEVELOPMENT LEGEND

- 366 — EXISTING CONTOUR
- 300 — PROPOSED CONTOUR
- + 1159 — PROPOSED SPOT ELEVATION
- EX. 8"SD — EXISTING STORM DRAIN
- 8"HDPE — PROPOSED STORM DRAIN
- MH 18 — 18
- EX. 8"S — S — EXISTING SANITARY SEWER
- 118 — 119 — EASEMENT (SHADED AREA)
- 8"S — SANITARY SEWER (PUBLIC)
- SANITARY SEWER (PRIVATE)
- EASEMENT (SHADED AREA)
- 8"W — WATERLINE (PUBLIC)
- WAC (PRIVATE)
- EXISTING FIRE HYDRANT
- EXISTING CURB & GUTTER
- CONCRETE CURB & GUTTER (DET. 1/3)
- GUTTER PAN
- FACE OF CURB
- PT/PC
- BACK OF CURB
- SPILL (REVERSE) G&G PORTION
- CONCRETE/PAVER SIDEWALK (DET. 2/3)
- OVERLAY PAVING
- 6 — NUMBER OF PARKING SPACES
- HANDICAPPED PARKING DESIGNATION
- PROPOSED LIGHTS ON-SITE
- PROPOSED LIGHTS OFF-SITE
- MEX.=17.5 — MATCH EXISTING CURB = 17.5
- LIMIT OF DISTURBANCE

BENJAMIN FRANKLIN DRIVE
(60' R/W) P.N. 14628 (PUBLIC LOCAL ROAD)

COLUMBIA GATEWAY DRIVE
(100' PUBLIC LOCAL R/W, PLAT No. 6710 & 7540)

PARCEL T-23
7.6787 AC.

PROPOSED 5-STORY
OFFICE BUILDING
7001 Columbia Gateway Drive
F.F.E. = 328.5
INSIDE METER

INGRESS/EGRESS IS RESTRICTED (see note 8)

MATCH LINE A-A

COLUMBIA GATEWAY ASSOCIATES LLC
COLUMBIA GATEWAY
PARCEL T-20
(SDP-06-075)
PLAT No. 18667
ZONE-MI

AAK EASTRIDGE LLC.
COLUMBIA GATEWAY
PARCEL T-18
(SDP-06-058)
ZONE-MI
PLAT No. 17744

HOWARD RESEARCH & DEVELOPMENT
COLUMBIA GATEWAY
PARCEL T-24
PLAT No. 18467
ZONE-MI
(POSSIBLE FUTURE DEVELOPMENT)

HOWARD RESEARCH & DEVELOPMENT
COLUMBIA GATEWAY
PARCEL T-22
PLAT No. 18467
ZONE-MI
(POSSIBLE FUTURE DEVELOPMENT)

COLUMBIA GATEWAY ASSOCIATES LLC
COLUMBIA GATEWAY
PARCEL T-21-20
(SDP-06-075)
PLAT No. 18667
ZONE-MI

APPROVED: HOWARD COUNTY DEPARTMENT OF PLANNING & ZONING

Director — Date 6/4/07

Chief, Division of Land Development — Date 6/1/07

Chief, Development Engineering Division — Date 6/1/07

STATE OF MARYLAND — TODD MICHAEL PRUSH — REGISTERED PROFESSIONAL ENGINEER

6.25.07

GLW GUTSCHICK LITTLE & WEBER, P.A.
CIVIL ENGINEERS, LAND SURVEYORS, LAND PLANNERS, LANDSCAPE ARCHITECTS
3909 NATIONAL DRIVE – SUITE 250 – BURTONSVILLE OFFICE PARK
BURTONSVILLE, MARYLAND 20866
TEL: 301-421-4024 BALT: 410-880-1820 DC/VA: 301-989-2524 FAX: 301-421-4186

L:\CADD\DRAWINGS\06077\SDP\06077-SDP.dwg | DES. MBT | DRN. KLP | CHK.

DATE	REVISION	BY	APP'R.

PREPARED FOR:

OWNER:
THE HOWARD RESEARCH AND DEVELOPMENT CORPORATION
10275 LITTLE PATUXENT PARKWAY
COLUMBIA, MD 21044
Phone: 410-992-6027
Attn.: PAUL CAVANAUGH

CONTRACT PURCHASER/DEVELOPER:
GATEWAY 123 LLC
c/o MANEKIN LLC
8601 ROBERT FULTON DRIVE, SUITE 200
COLUMBIA, MD 21046-2278
Phone: 410-423-2002
Attn.: ALEX KOPICKI

SITE DEVELOPMENT PLAN

COLUMBIA GATEWAY
OFFICE BUILDING
PARCEL 'T-23'
PLAT Nos. 18967 & 19111

ELECTION DISTRICT No. 6 — HOWARD COUNTY, MARYLAND

SCALE	ZONING	G. L. W. FILE No.
1"=40'	M-1	06-077
DATE	TAX MAP – GRID	SHEET
MAY/2007	43 2	2 OF 11

SDP-07-083

CURB TYPE	A	B
6"-CURB	6"	1'-2 5/16"
7"-CURB	7 3/16"	1'-3 1/2"

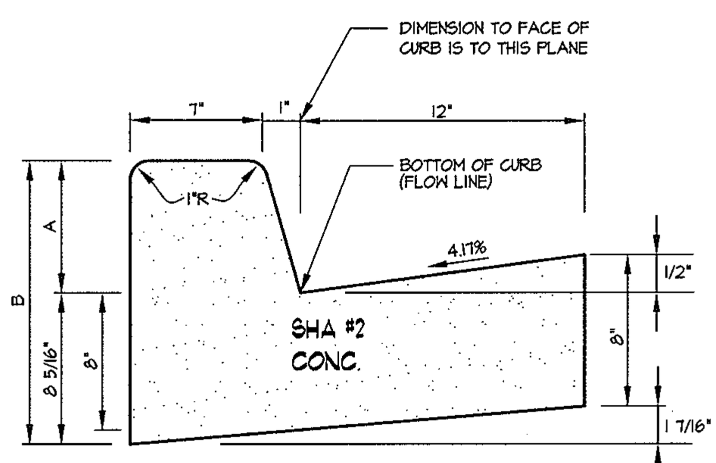

STANDARD COMBINATION CURB AND GUTTER

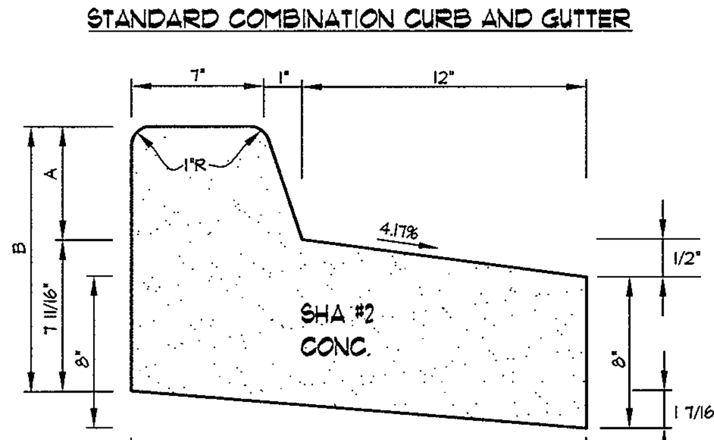

REVERSE COMBINATION CURB AND GUTTER

NOTES:
1. 50' MAX. BETWEEN EXPANSION JOINTS & 10' MAX. BETWEEN CONTROL JOINTS.

2. ALL ON-SITE CURB & GUTTER SHALL BE 6"-CURB. CURB & GUTTER IN AND THE PUBLIC R.O.W. SHALL BE 7"-CURB.

3. STANDARD (CATCH) CURB & GUTTER SHALL BE USED WHERE THE ADJACENT PAVEMENT SLOPES TOWARDS THE CURB & GUTTER. REVERSE (SPILL) CURB & GUTTER SHALL BE USED WHERE THE ADJACENT PAVEMENT SLOPES AWAY FROM THE CURB & GUTTER.

1 — TYPE-A CONCRETE CURB AND GUTTER (STANDARD AND REVERSE) — NO SCALE

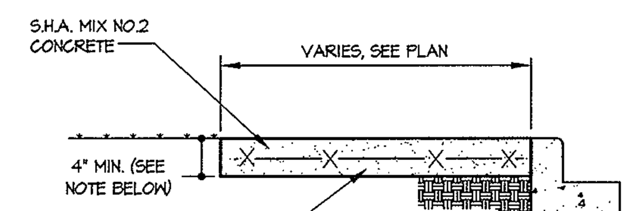

NOTES:

1. UNLESS SHOWN OTHERWISE, INSTALL EXPANSION JOINTS AT MAX. 20'-0" O.C. AND SCORING JOINTS AT MAX. 5'-0" O.C.

2. CONCRETE THICKNESS SHALL BE 7" WHERE THE SIDEWALK CROSSES THE LOADING DOCK AREA (SEE DPW R-6.10). ALL CONCRETE PAVEMENT FOR VEHICULAR USE SHALL BE IN ACCORDANCE WITH DPW R-6.10.

3. PROVIDE 1/2" PREFORMED BITUMINOUS EXPANSION JOINT WHERE SIDEWALK ABUTS AGAINST CURB AND SET SIDEWALK 1/4" ABOVE CURB PER HO. CO. DET. R-3.05.

2 — TYPICAL SIDEWALK SECTION — NO SCALE

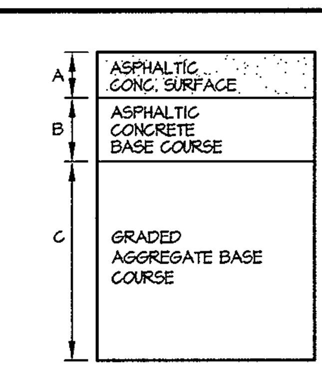

NOTE:

DEPENDING ON THE CBR VALUES OBTAINED IN THE FIELD, THE PAVING SECTIONS MAY BE REVISED, IF APPROVED BY A PROFESSIONAL SOILS ENGINEERS.

	A	B	C
P1	1"	2"	5"
P2	1.5"	2.5"	8"
P3	1.5"	4.5"	6"

3 — BITUMINOUS PAVEMENT SECTIONS — NO SCALE

APPROVED: HOWARD COUNTY DEPARTMENT OF PLANNING & ZONING

Director — Date 6/1/07

Chief, Division of Land Development — Date 6/1/07

Chief, Development Engineering Division — Date 6/1/07

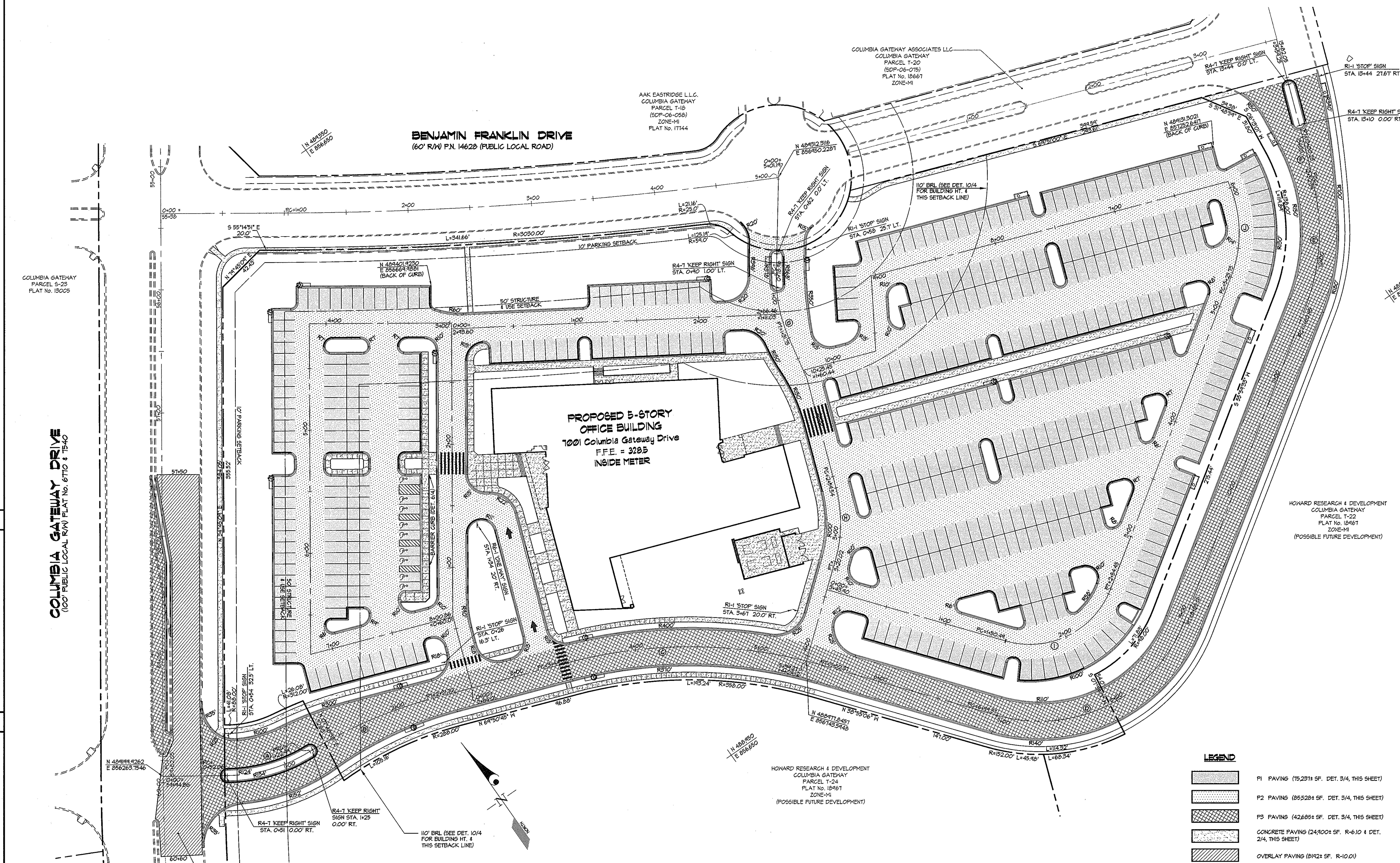

LEGEND

P1	P1 PAVING (75,231± SF. DET. 3/4, THIS SHEET)
P2	P2 PAVING (85,528± SF. DET. 3/4, THIS SHEET)
P3	P3 PAVING (42,685± SF. DET. 3/4, THIS SHEET)
	CONCRETE PAVING (24,900± SF. R-6.10 & DET. 2/4, THIS SHEET)
	OVERLAY PAVING (8192± SF. R-10.01)

CONCRETE CURB & GUTTER (9,897 LF; DET. 1/4 THIS SHEET)
REVERSED CURB & GUTTER
STANDARD CURB & GUTTER

NOTE:
ALL CURB RADII ARE 5' UNLESS OTHERWISE NOTED.

CURVE TABLE

CURVE	LENGTH	RADIUS	TANGENT	CHORD	BEARING	DELTA
A	70.43'	129.00'	36.12	69.56	S 71°15'20" E	31°16'54"
B	109.21'	367.00'	55.01	108.81	N 78°22'16" W	17°03'02"
C	207.82'	385.00'	106.51	205.30	N 54°22'55" W	30°55'39"
D	185.64'	125.00'	114.72	169.04	S 81°27'47" E	85°05'22"
E	91.94'	165.00'	47.20	90.76	N 40°01'44" E	31°55'36"
F	47.84'	700.00'	23.93	47.83	N 22°06'28" E	3°54'57"
G	52.79'	120.00'	26.83	52.37	S 23°42'50" W	25°12'24"
H	60.48'	112.00'	30.99	59.74	N 35°36'47" E	30°56'15"
I	103.96'	70.00'	64.24	94.66	S 81°27'47" E	85°05'21"
J	79.57'	100.00'	42.02	77.48	N 33°11'55" E	45°35'15"

STATE OF MARYLAND — TODD MICHAEL REDDAN — No. 17260 — REGISTERED — PROFESSIONAL ENGINEER
5.25.07

GLW GUTSCHICK LITTLE & WEBER, P.A.
CIVIL ENGINEERS, LAND SURVEYORS, LAND PLANNERS, LANDSCAPE ARCHITECTS
3909 NATIONAL DRIVE – SUITE 250 – BURTONSVILLE OFFICE PARK
BURTONSVILLE, MARYLAND 20866
TEL: 301-421-4024 BALT: 410-880-1820 DC/VA: 301-989-2524 FAX: 301-421-4186

L:\CADD\DRAWINGS\06077\SDP\06077-PAVING.dwg | DES. MBT | DRN. KLP | CHK.

DATE	REVISION	BY	APP'R.

PREPARED FOR:

OWNER:
THE HOWARD RESEARCH AND DEVELOPMENT CORPORATION
10275 LITTLE PATUXENT PARKWAY
COLUMBIA, MD 21044
Phone: 410-992-6027
Attn.: PAUL CAVANAUGH

CONTRACT PURCHASER/DEVELOPER:
GATEWAY T23 LLC
c/o MANEKIN LLC
8601 ROBERT FULTON DRIVE, SUITE 200
COLUMBIA, MD 21046-2278
Phone: 410-423-2002
Attn.: ALEX KOPICKI

CURB AND PAVING DELINEATION PLAN

COLUMBIA GATEWAY
OFFICE BUILDING
PARCEL 'T-23'
PLAT Nos. 18967 & 19111

ELECTION DISTRICT No. 6 — HOWARD COUNTY, MARYLAND

SCALE	ZONING	G. L. W. FILE No.
1"=40'	M-1	06-077
DATE	TAX MAP – GRID	SHEET
MAY/2007	43 2	3 OF 11

SDP-07-083

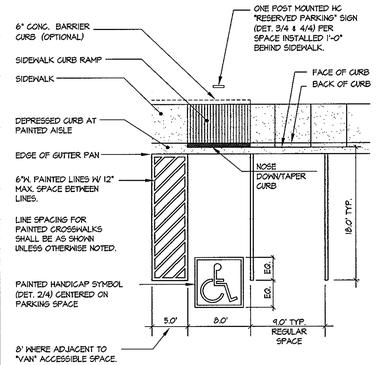

1 **PARKING SPACE LAYOUT**

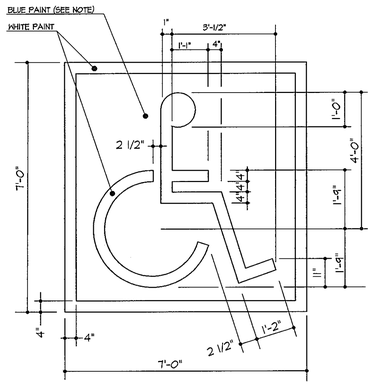

NOTE: SYMBOL IS REQUIRED TO CONTRAST WITH BACKGROUND (WHITE ON BLUE, COLOR NO. 105040 IN FED. STANDARD 5452-DOUBLE COAT TYP.)

2 **HANDICAP SPACE STENCIL LAYOUT** NO SCALE

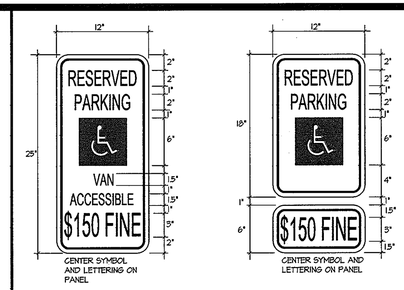

GENERAL NOTES:

1. SIGNS SHALL MEET DESIGN STANDARDS OF THE FEDERAL HIGHWAY ADMINISTRATION AND CONFORM TO THE STATE OF MARYLAND STANDARD HIGHWAY SIGN BOOKLET DETAIL R7-8.
2. ONE SIGN IS REQUIRED PER SPACE PLACED AS SHOWN ON SITE PLAN.
3. SPACES INDICATED ON SITE PLAN AS "VAN" ACCESSIBLE SHALL BE SIGNED ACCORDINGLY.
4. SIGNS SHALL BE POLE MOUNTED WITH HOT DIPPED GALVANIZED COUNTY APPROVED PERFORATED CHANNEL POSTS W/ THE TOP OF THE SIGN 9'-1" ABOVE FINISHED GRADE OR AS INDICATED ON SITE DRAWINGS.
5. SIGN SHALL BE ATTACHED TO FLANGED SIDE OF POST. POST SHALL EXTEND INTO GROUND 2'-6" MIN.
6. COLORS: LEGEND AND BORDER - GREEN
   SYMBOL - WHITE ON BLUE BACKGROUND
   BACKGROUND - WHITE

3 **HANDICAP PARKING SIGNS DETAIL** NO SCALE

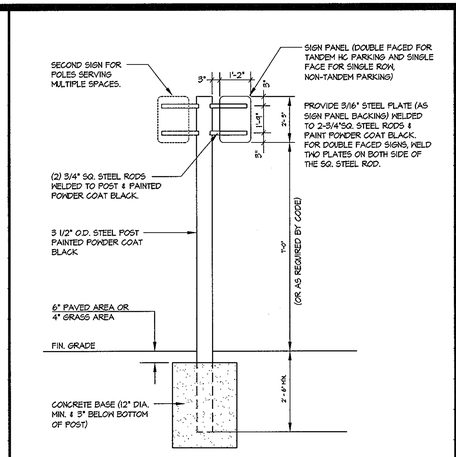

4 **POST and SIGN DETAIL FOR PARKING RESTRICTION SIGN**

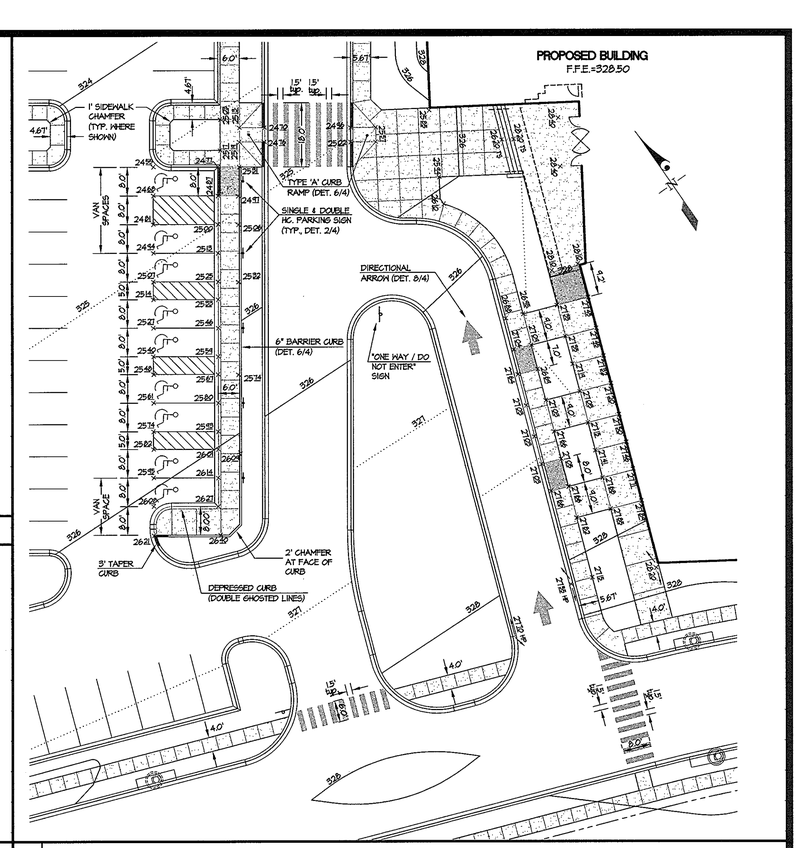

9 **HANDICAP ACCESSIBLE ROUTE FROM PARKING AREA TO THE FRONT ENTRANCE** SCALE: 1" = 20'

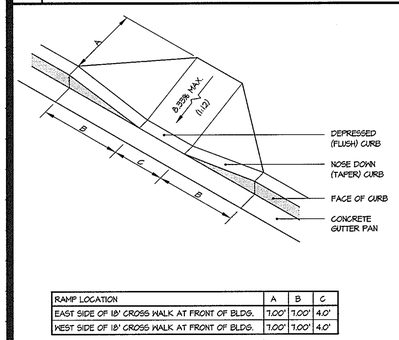

RAMP LOCATION	A	B	C
EAST SIDE OF 18' CROSS WALK AT FRONT OF BLDG.	7.00'	7.00'	4.0'
WEST SIDE OF 18' CROSS WALK AT FRONT OF BLDG.	7.00'	7.00'	4.0'

5 **TYPE-A SIDEWALK CURB RAMP** NO SCALE

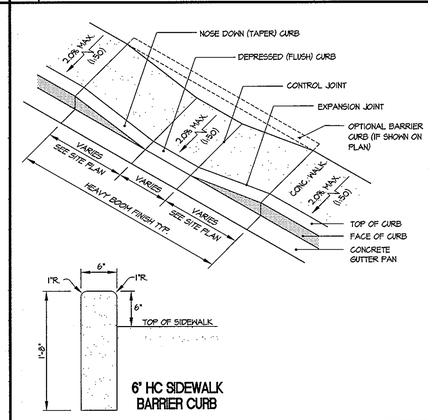

6 **TYPE-C SIDEWALK CURB RAMP** NO SCALE

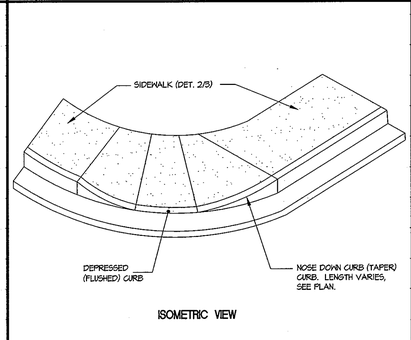

ISOMETRIC VIEW

7 **TYPICAL CURB/NOSE DOWN TAPER AT INTERSECTION** NO SCALE

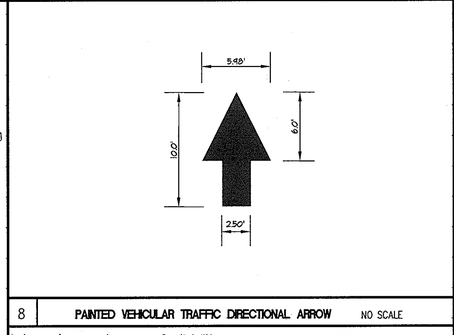

8 **PAINTED VEHICULAR TRAFFIC DIRECTIONAL ARROW** NO SCALE

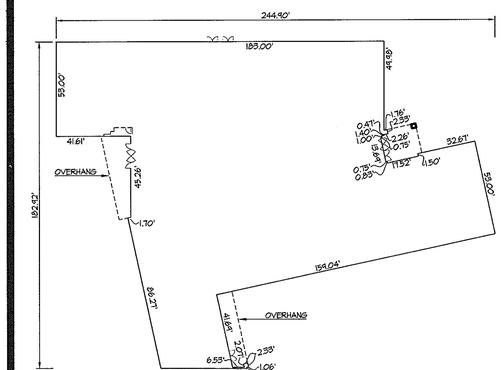

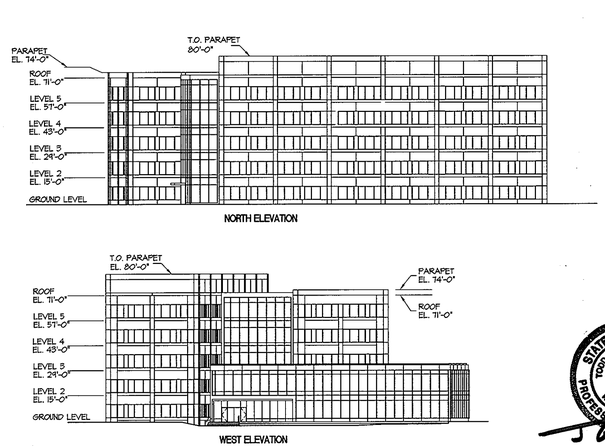

APPROVED: HOWARD COUNTY DEPARTMENT OF PLANNING & ZONING

Director	Date 6/1/07
Chief, Division of Land Development	Date 6/1/07
Chief, Development Engineering Division	Date 6/1/07

NOTES:

IN THE M-1 ZONING DISTRICT THE MAXIMUM BUILDING HEIGHT IS 50 FT. FOR THE MINIMUM STRUCTURE SETBACK OF 50 FEET FROM ANY EXTERNAL PUBLIC STREET RIGHT-OF-WAY (COLUMBIA GATEWAY DRIVE AND BENJAMIN FRANKLIN DRIVE FOR THE SUBJECT PROPERTY). A STRUCTURE THAT IS MORE THAN 50' HIGH (UP TO 100 FT. MAX.) REQUIRES AN ADDITIONAL 2 FT. OF SETBACK FOR EVERY FOOT OF BUILDING HEIGHT ABOVE 50 FEET. THE PROPOSED BUILDING ON PARCEL T-23 MUST BE SETBACK AT LEAST 110' (WHICH IS 50' + 30'x2) FROM THE NEAREST PUBLIC STREET R.O.W. (BENJAMIN FRANKLIN DRIVE).

10 **BUILDING FOOTPRINT and ELEVATIONS** SCALE: 1" = 40'

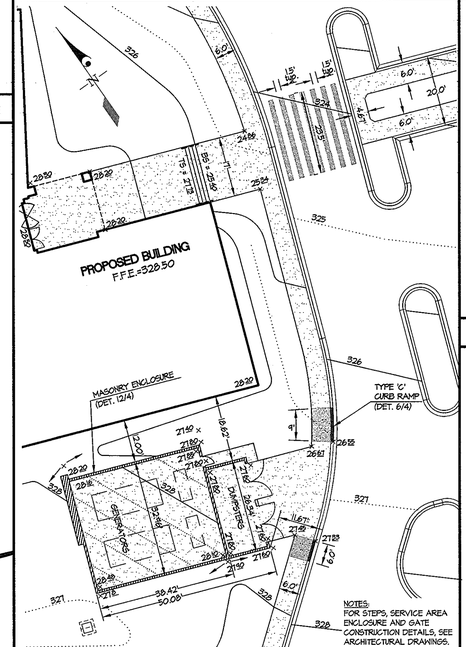

11 **SOUTH SERVICE AREA and EAST SIDE ENTRY AREA TO BUILDING** SCALE: 1"=20'

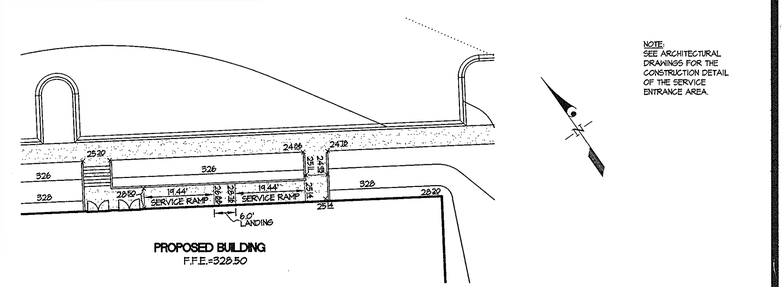

NOTE:
SEE ARCHITECTURAL DRAWINGS FOR THE CONSTRUCTION DETAIL OF THE SERVICE ENTRANCE AREA.

12 **NORTH SERVICE ENTRANCE AREA** SCALE: 1"=20'

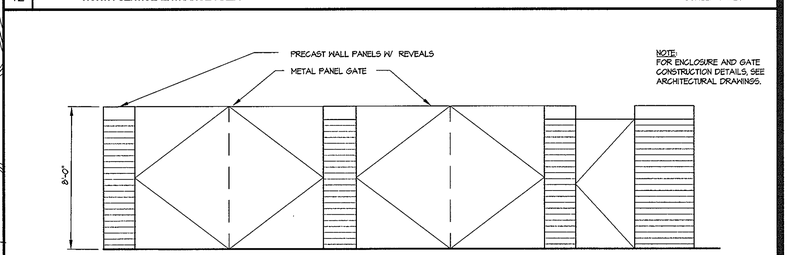

NOTE:
FOR ENCLOSURE AND GATE CONSTRUCTION DETAILS, SEE ARCHITECTURAL DRAWINGS.

13 **ELEVATION OF THE MASONRY ENCLOSURE and GATE** NO SCALE

GLW GUTSCHICK LITTLE & WEBER, P.A.
CIVIL ENGINEERS, LAND SURVEYORS, LAND PLANNERS, LANDSCAPE ARCHITECTS
3909 NATIONAL DRIVE – SUITE 250 – BURTONSVILLE OFFICE PARK
BURTONSVILLE, MARYLAND 20866
TEL: 301-421-4024 BALT: 410-880-1820 DC/VA: 301-989-2524 FAX: 301-421-4186

\Drawings\06077\SDP\06077-SDP-DET.dwg | DES. MBT | DRN. KLP | CHK.

DATE	REVISION	BY	APP'R.

PREPARED FOR:

OWNER:
THE HOWARD RESEARCH AND DEVELOPMENT CORPORATION
10275 LITTLE PATUXENT PARKWAY
COLUMBIA, MD 21044
Phone: 410-992-6027
Attn.: PAUL CAVANAUGH

CONTRACT PURCHASER/DEVELOPER:
GATEWAY TZ3 LLC
c/o MANKEN LLC
8601 ROBERT FULTON DRIVE, SUITE 200
COLUMBIA, MD 21046-2278
Phone: 410-423-2002
Attn.: ALEX KOPICKI

SITE DETAILS

COLUMBIA GATEWAY
OFFICE BUILDING
PARCEL 'T-23'
PLAT Nos. 18967 & 19111

ELECTION DISTRICT No. 6 — HOWARD COUNTY, MARYLAND

SCALE	ZONING	G. L. W. FILE No.
AS SHOWN	M-1	06-077
DATE	TAX MAP - GRID	SHEET
MAY/2007	43 2	4 OF 11

SDP-07-083

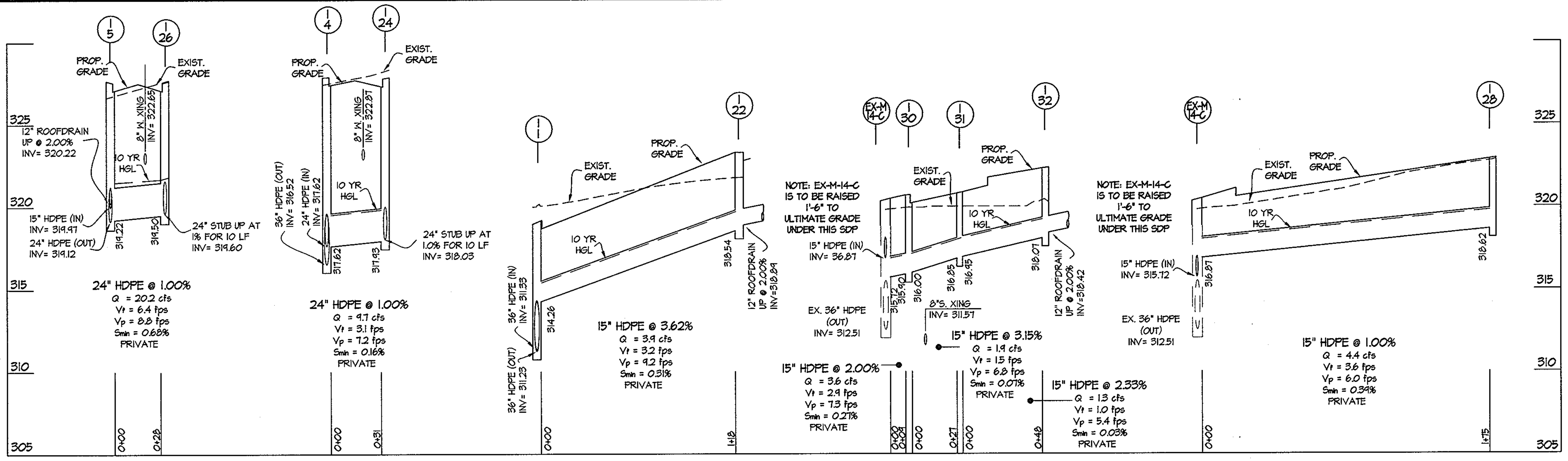

S.D. PIPE SUMMARY TABLE

SIZE (IN)	TYPE	QUANTITY (LF)	REMARKS
12	HDPE	182	AASHTO M294-90 TYPE 'S'
15	HDPE	976	AASHTO M294-90 TYPE 'S'
18	HDPE	47	AASHTO M294-90 TYPE 'S'
24	HDPE	292	AASHTO M294-90 TYPE 'S'
36	HDPE	388	AASHTO M294-90 TYPE 'S'

HDPE = HIGH DENSITY POLYETHYLENE - DOUBE WALL, SMOOTH INTERIOR PIPE BY ADS, INC, (N-12 PIPE) OR EQUIVALENT

S.D. STRUCTURE SCHEDULE

NO.	TYPE	DIAM. BASE	TOP ELEVATION UPPER	TOP ELEVATION LOWER	INVERT ELEVATION UPPER	INVERT ELEVATION LOWER	STANDARD DETAIL	LOCATIONS & REMARKS
I-1	COG-10	5'-0"	319.31	319.06	314.26	311.23	MD-374.62	
I-2	COG-10	5-0"	319.59	319.23	311.71	311.61	MD-374.62	
I-3	COG-10	5-0"	323.95	323.68	314.43	314.33	MD-374.62	
I-4	COS-10	5'-0"	327.88	---	317.62	316.52	MD-374.63	
I-5	COS-10	4'-0"	327.55	---	319.97	319.12	MD-374.63	
I-6	PVC DRAIN BASIN	1'-6"	326.00	---	321.60	321.25		Nyloplast Drain Basin or equivalant www.nyloplast-us.com
ES-9	END SECTION	---	311.29	---	309.29	-----	HOCO SD 5.52	
I-10	A-10	2'-6"	314.31	314.05	309.55	309.45	HOCO SD 4.02	
I-11	A-10	2'-6"	314.19	314.52	310.42	309.82	HOCO SD 4.02	
I-12	A-10	3'-0"	316.64	316.37	311.62	311.04	HOCO SD 4.02	
I-13	A-10	2'-6"	319.88	319.61	314.85	314.75	HOCO SD 4.02	
I-14	A-10	2'-6"	323.74	323.39	317.62	terminal	HOCO SD 4.02	
I-17	COG-10	4'-0"	321.69	321.41	316.66	terminal	MD-374.62	
I-18	A-10	2'-6"	316.79	316.59	311.87	311.52	HOCO SD 4.02	
I-19	A-10	2'-6"	318.77	318.63	313.60	terminal	HOCO SD 4.02	
I-22	COG-10	4'-0"	323.62	323.29	318.89	318.54	MD-374.62	
I-24	COS-15	4'-0"	327.80	---	318.03	317.93	MD-374.63	
I-26	COS-15	4'-0"	327.55	---	319.60	319.50	MD-374.63	
I-28	COG-10	4'-0"	323.48	323.37	318.62	terminal	MD-374.62	
I-30	COG-10	4'-0"	321.00	320.62	316.00	315.90	MD-374.62	
I-31	COMBINATION 'S'	3'-5"	321.40	321.20	316.95	316.85	HOCO SD 4.32	
I-32	COG-10	4'-0"	322.52	322.32	318.42	318.07	MD-374.62	

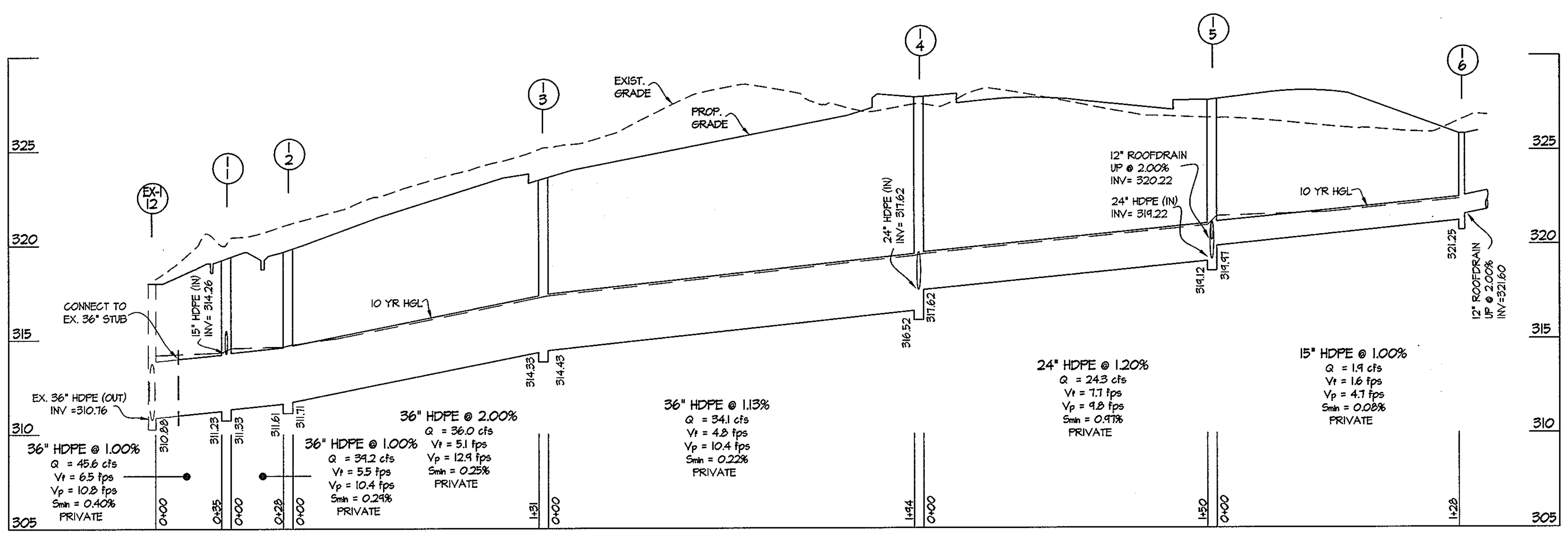

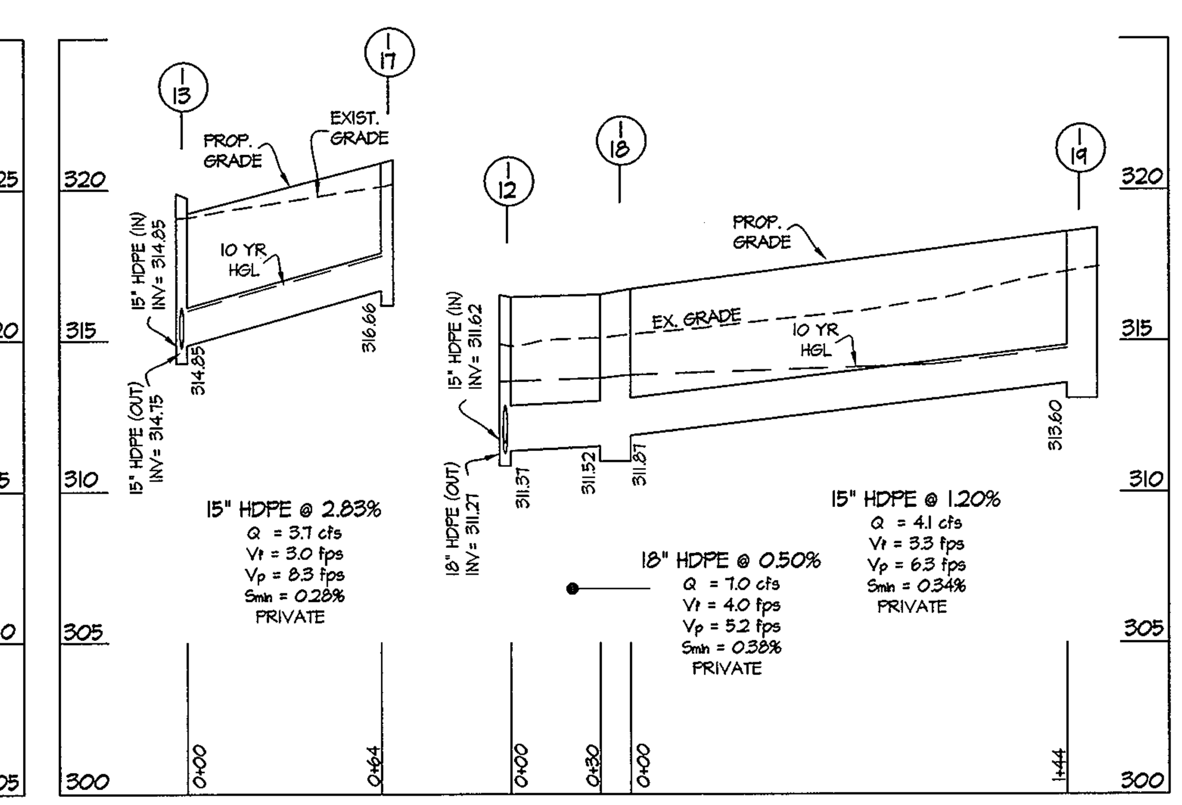

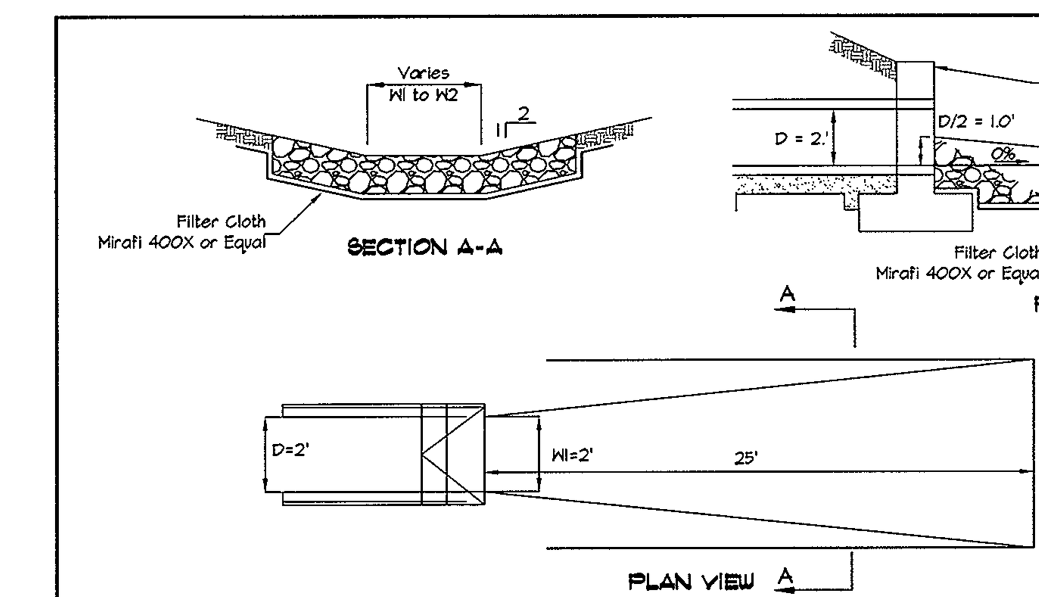

OUTLET PROTECTION DETAIL (ES 9) N.T.S.

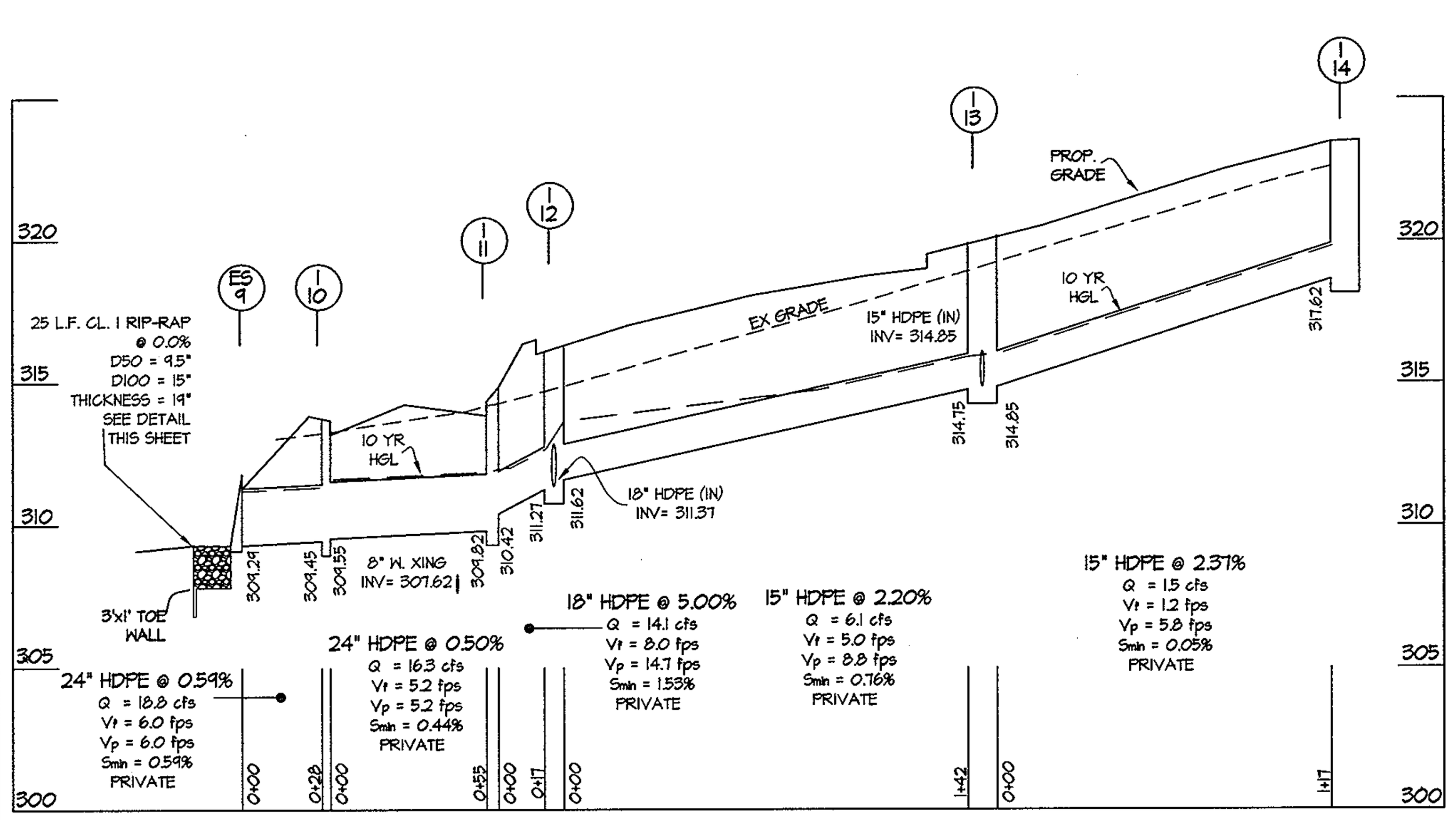

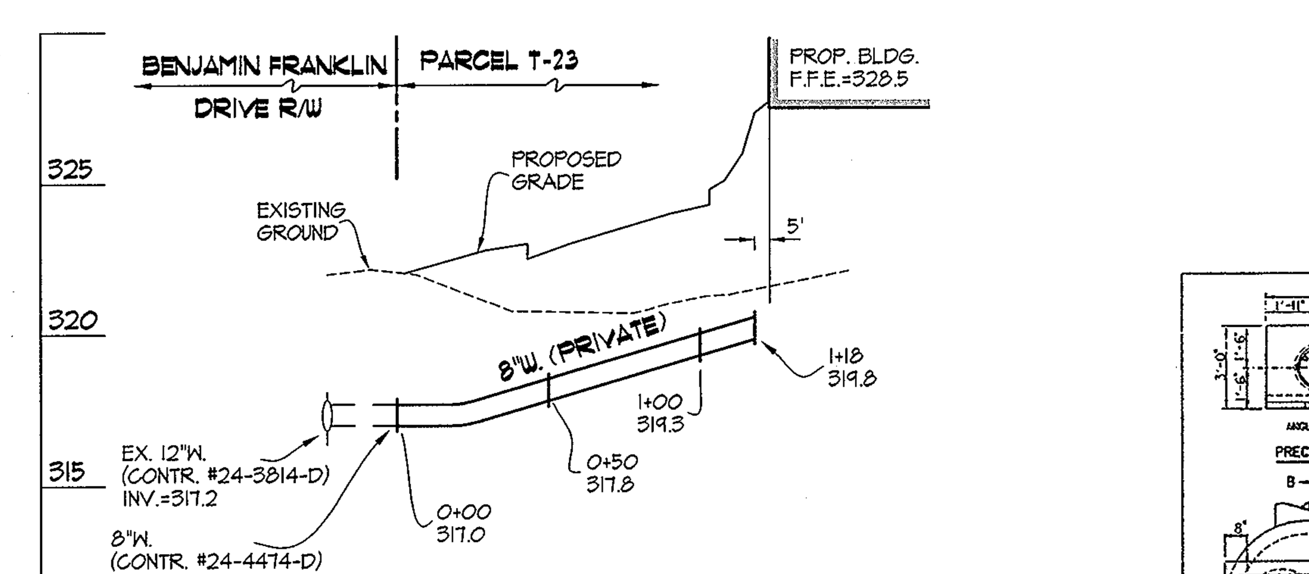

PRIVATE 8" WATER HOUSE CONNECTION PROFILE

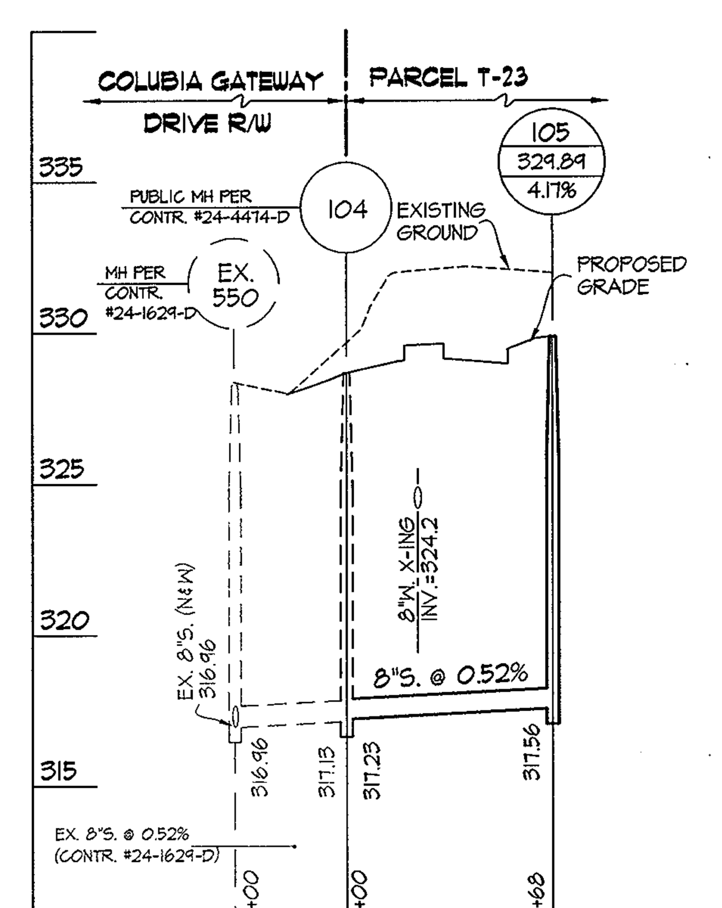

PRIVATE 8" SEWER HOUSE CONNECTION PROFILE

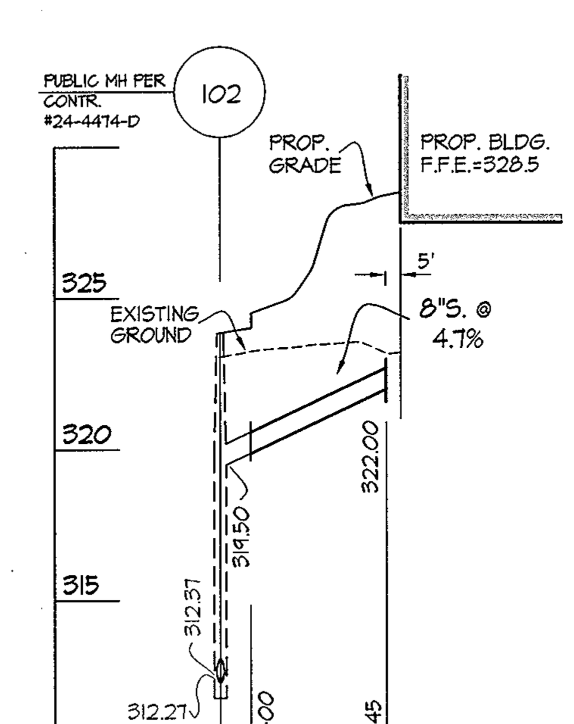

PRIVATE 8" SEWER HOUSE CONNECTION PROFILE

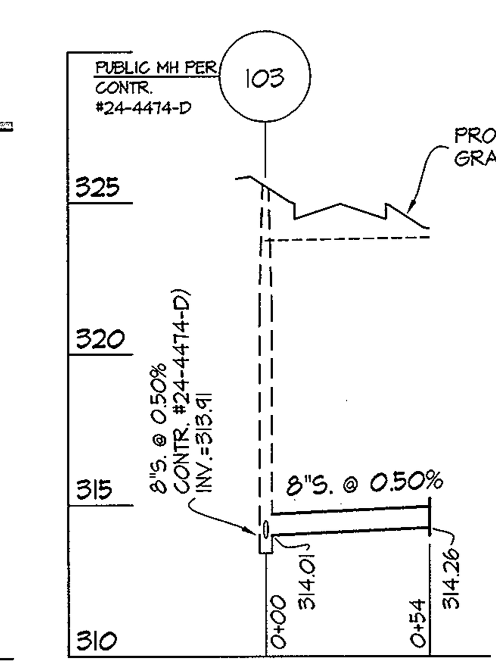

PRIVATE 8" SEWER HOUSE CONNECTION PROFILE

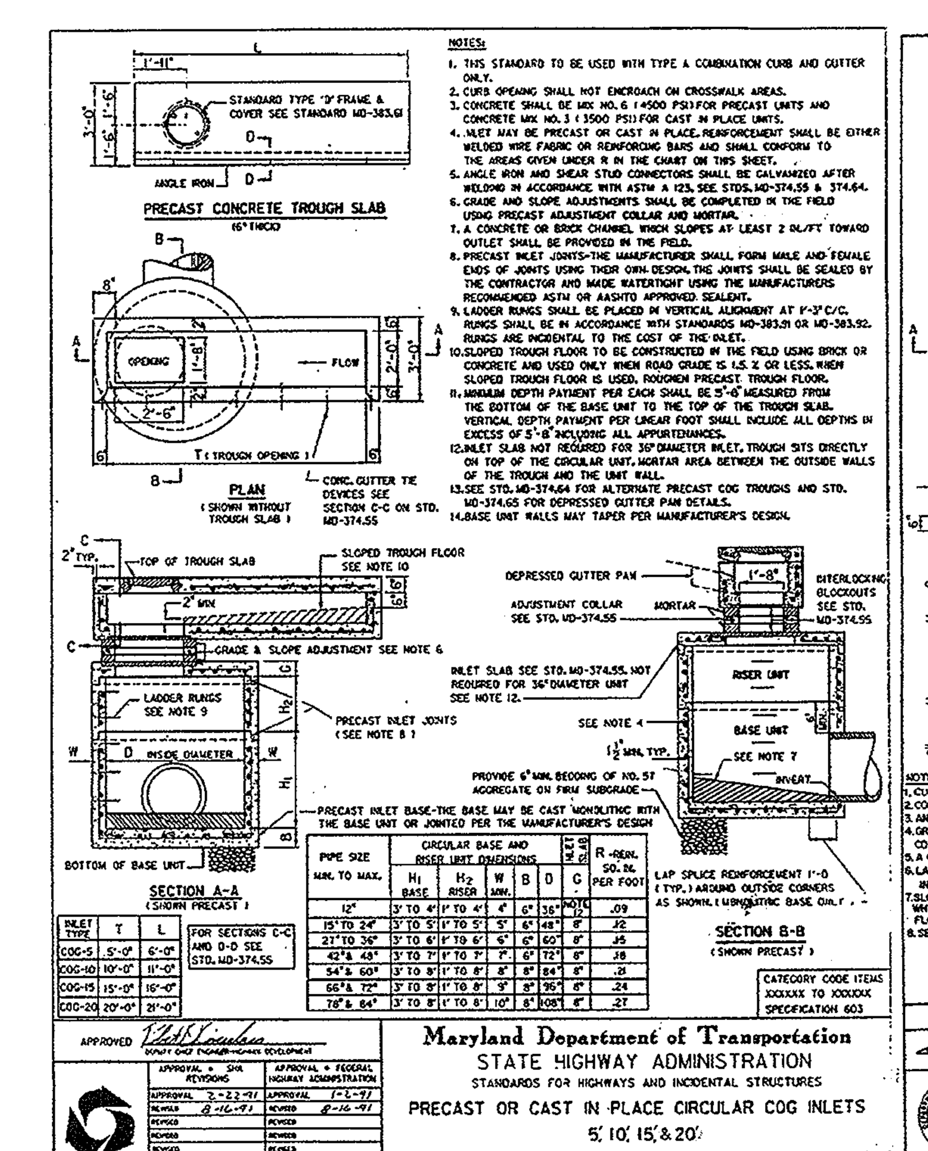

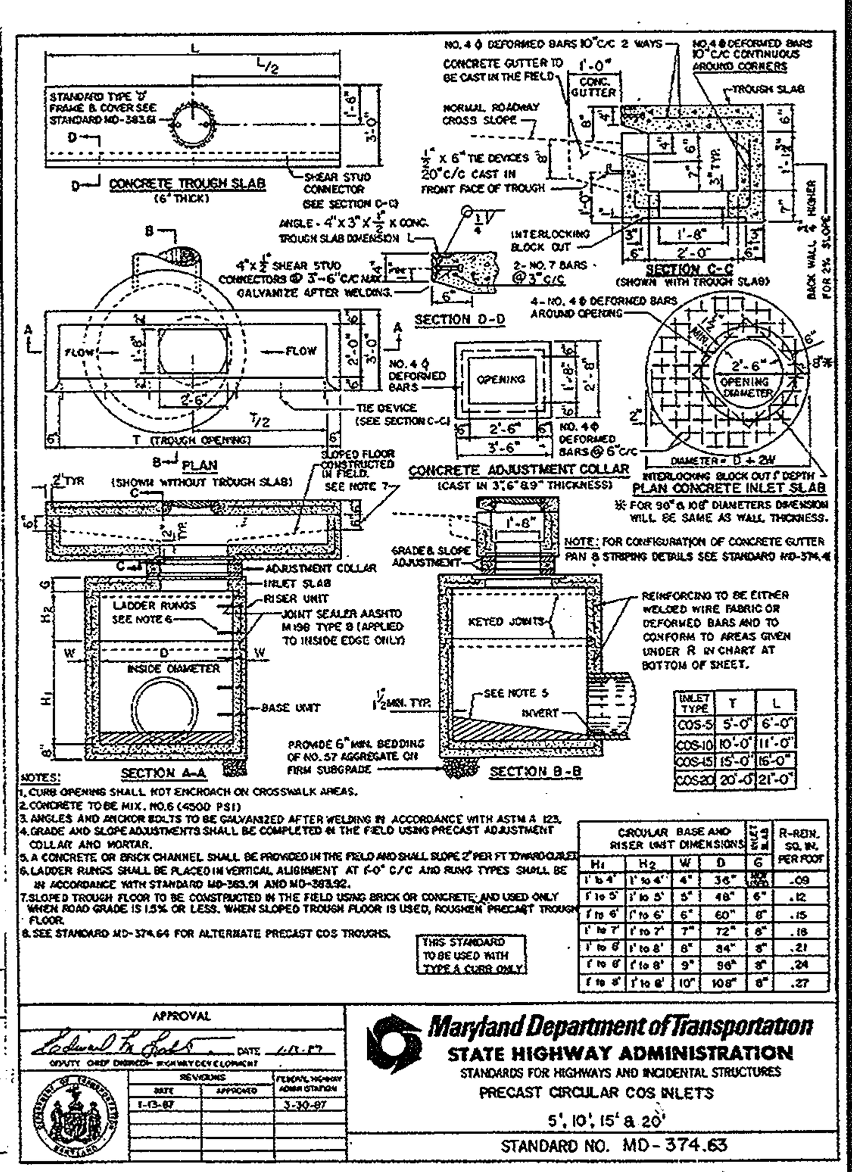

APPROVED: HOWARD COUNTY DEPARTMENT OF PLANNING & ZONING

Director — Date 6/1/07

Chief, Division of Land Development — Date 6/1/07

Chief, Development Engineering Division — Date 6/1/07

PROFILES
SCALES: 1" = 5' VERT.
1" = 50' HORZ.

GLW GUTSCHICK LITTLE & WEBER, P.A.
CIVIL ENGINEERS, LAND SURVEYORS, LAND PLANNERS, LANDSCAPE ARCHITECTS
3909 NATIONAL DRIVE - SUITE 250 - BURTONSVILLE OFFICE PARK
BURTONSVILLE, MARYLAND 20866
TEL: 301-421-4024 BALT: 410-880-1820 DC/VA: 301-989-2524 FAX: 301-421-4186

L:\CADD\DRAWINGS\06077\SDP\06077-PROFILES.dwg | DES. | DRN. | CHK.

DATE	REVISION	BY	APP'R.

PREPARED FOR:

OWNER:
THE HOWARD RESEARCH AND DEVELOPMENT CORPORATION
10275 LITTLE PATUXENT PARKWAY
COLUMBIA, MD 21044
Phone: 410-992-6027
Attn.: PAUL CAVANAUGH

CONTRACT PURCHASER/DEVELOPER:
GATEWAY T23 LLC
c/o MANEKIN LLC
8601 ROBERT FULTON DRIVE, SUITE 200
COLUMBIA, MD 21046-2278
Phone: 410-423-2002
Attn.: ALEX KOPICKI

STORM DRAIN PROFILES / UTILITY PROFILES

COLUMBIA GATEWAY
OFFICE BUILDING
PARCEL 'T-23'
PLAT Nos. 18967 & 19111

ELECTION DISTRICT No. 6 — HOWARD COUNTY, MARYLAND

SCALE	ZONING	G. L. W. FILE No.
AS SHOWN	M-1	06-077
DATE	TAX MAP - GRID	SHEET
MAY/2007	43 2	5 OF 11

SDP-07-083

SEDIMENT TRAP NO.2 DATA
RIP-RAP OUTLET TRAP ST-III

EXIST. DRAINAGE AREA	= 6.9 Ac.±
PROP. DRAINAGE AREA	= 6.4 Ac.±
STORAGE REQUIRED	
SEDIMENT CONTROL (WET)	= 37,260 c.f.
TEMP SWM	= EX. POND
STORAGE PROVIDED	
SEDIMENT CONTROL (WET)	= 40,900 c.f.
WEIR CREST ELEV.	= 317.50
WIDTH OF WEIR	= 16 ft.
MAX. SIDESLOPES	= 2:1
BOTTOM DIMENSIONS	= 145'x30'
BOTTOM ELEVATION	= 310.00
CLEANOUT ELEVATION	= 313.50
	a = 1.5
	b = 16.0

NOTE: TEMPORARY SWM IS PROVIDED BY THE EX. SWM POND. SEE LOCATION ON COVER SHEET.

BENJAMIN FRANKLIN DRIVE
(60' R/W P.N. 14628 (PUBLIC LOCAL ROAD)

COLUMBIA GATEWAY
(100' PUBLIC LOCAL R/W) PLAT No. 6710 & 7940

COLUMBIA GATEWAY ASSOCIATES LLC
COLUMBIA GATEWAY
PARCEL T-20
(SDP-06-075)
PLAT No. 18661
ZONE-MI

AAK EASTRIDGE L.L.C.
COLUMBIA GATEWAY
PARCEL T-18
(SDP-06-058)
ZONE-MI
PLAT No. 17744

20' PUBLIC WATER & UTILITY EASEMENT P.N. 18666

SEDIMENT TRAP No. 2

SEDIMENT TRAP No. 1

TEMPORARILY BLOCK THROAT OF INLET I-22. REMOVE WHEN REMAINDER OF STORM DRAIN IS BUILT.

TEMPORARILY TERMINATE PIPE IN TRAP (INV=312.3')

PROP. DIVIDE TO TRAP No.2

PROP. DIVIDE TO TRAP No.1

PROPOSED 8-STORY OFFICE BUILDING
F.F.E. = 328.5
NADE METER

FIRE DEPT. KNOX BOX

SIAMESE LOCATION (STAND PIPE)

P&D-18 (DA=0.3AC)

P&D-24 (DA=3.5AC)

P&D-24 (DA=5.0AC)

P&D-24 (DA=1.4AC)

P&D-24 (DA=0.4AC)

ED A-2

SCE

SSF

CIP

20' PUBLIC SEWER & UTILITY EASEMENT P.N. 19111

150' PUBLIC WATER & UTILITY EASEMENT P.N. 19111

HOWARD RESEARCH & DEVELOPMENT
COLUMBIA GATEWAY
PARCEL T-24
PLAT No. 18467
ZONE-MI
(POSSIBLE FUTURE DEVELOPMENT)

HOWARD RESEARCH & DEVELOPMENT
COLUMBIA GATEWAY
PARCEL T-22
PLAT No. 18467
ZONE-MI
(POSSIBLE FUTURE DEVELOPMENT)

COLUMBIA GATEWAY
PARCEL S-25
PLAT No. 10205

COLUMBIA GATEWAY
PARCEL S-24
PLAT No. 10204

MATCH LINE B-B

SEDIMENT TRAP NO.1 DATA
RIP-RAP OUTLET TRAP ST-III

EXIST. DRAINAGE AREA	= 5.5 Ac.±
PROP. DRAINAGE AREA	= 6.0 Ac.±
STORAGE REQUIRED	
SEDIMENT CONTROL (WET)	= 32,400 c.f.
TEMP SWM	= EX. POND
STORAGE PROVIDED	
SEDIMENT CONTROL (WET)	= 33,100 c.f.
ELEV.	= 311.00
WEIR CREST ELEV.	= 311.00
WIDTH OF WEIR	= 16.0 ft.
MAX. SIDESLOPES	= 2:1
BOTTOM DIMENSIONS	= 120'x25'
BOTTOM ELEVATION	= 305.00
CLEANOUT ELEVATION	= 308.00
	a = 1.5
	b = 16.0

SEDIMENT CONTROL LEGEND

- EXISTING CONTOUR
- PROPOSED CONTOUR
- PROPOSED SPOT ELEV.
- SEDIMENT TRAP CONTOUR
- SEDIMENT TRAP BAFFLES
- LOD — LIMIT OF GRADING DISTURBANCE
- SCE — STABILIZED CONSTRUCTION ENTRANCE
- PIPE SLOPE DRAIN
- ED-A2 — PROPOSED EARTH DIKE (ED)
- [ ] CIP/IP — INLET PROTECTION
- PROPOSED DRAINAGE DIVIDE
- SF — SILT FENCE
- SSF — SUPER SILT FENCE
- X — SAFETY FENCE
- TEMPORARY EDGE OF ASPHALT
- PROPOSED TEMPORARY STOCKPILE AREA

THIS PLAN IS FOR SEDIMENT CONTROL PURPOSES ONLY

APPROVED: HOWARD COUNTY DEPARTMENT OF PLANNING & ZONING

Director — Date 6/1/07

Chief, Division of Land Development — Date 6/1/07

Chief, Development Engineering Division — Date 6/1/07

DEVELOPER'S/BUILDER'S CERTIFICATE

"I/WE CERTIFY THAT ALL DEVELOPMENT AND/OR CONSTRUCTION WILL BE DONE ACCORDING TO THIS PLAN, AND THAT ANY RESPONSIBLE PERSONNEL INVOLVED IN THE CONSTRUCTION PROJECT WILL HAVE A CERTIFICATE OF ATTENDANCE AT A MARYLAND DEPARTMENT OF THE ENVIRONMENT APPROVED TRAINING PROGRAM FOR THE CONTROL OF SEDIMENT AND EROSION BEFORE BEGINNING THE PROJECT. I ALSO AUTHORIZE PERIODIC ON-SITE INSPECTION BY THE HSCD."

SIGNATURE OF DEVELOPER/BUILDER — 5/25/07 DATE

ENGINEER'S CERTIFICATE

"I CERTIFY THAT THIS PLAN FOR EROSION AND SEDIMENT CONTROL REPRESENTS A PRACTICAL AND WORKABLE PLAN BASED ON MY PERSONAL KNOWLEDGE OF THE SITE CONDITIONS AND THAT IT WAS PREPARED IN ACCORDANCE WITH THE REQUIREMENTS OF THE HOWARD SOIL CONSERVATION DISTRICT."

TODD REDDAN — 5.25.07 DATE

THESE PLANS HAVE BEEN REVIEWED FOR THE HOWARD SOIL CONSERVATION DISTRICT AND MEET THE TECHNICAL REQUIREMENTS.

NATURAL RESOURCES CONSERVATION SERVICE — 6-1-07 DATE

THIS DEVELOPMENT PLAN IS APPROVED FOR SOIL EROSION AND SEDIMENT CONTROL BY THE HOWARD SOIL CONSERVATION DISTRICT.

HOWARD S.C.D. — 6-1-07 DATE

GLW GUTSCHICK LITTLE & WEBER, P.A.
CIVIL ENGINEERS, LAND SURVEYORS, LAND PLANNERS, LANDSCAPE ARCHITECTS
3909 NATIONAL DRIVE – SUITE 250 – BURTONSVILLE OFFICE PARK
BURTONSVILLE, MARYLAND 20866
TEL: 301-421-4024 BALT: 410-880-1820 DC/VA: 301-989-2524 FAX: 301-421-4186

L:\CADD\DRAWINGS\06077\SDP\06077-SNE.dwg | DES. MBT | DRN. KLP | CHK.

DATE	REVISION	BY	APP'R.

PREPARED FOR:

OWNER:
THE HOWARD RESEARCH AND DEVELOPMENT CORPORATION
10275 LITTLE PATUXENT PARKWAY
COLUMBIA, MD 21044
Phone: 410-992-6027
Attn.: PAUL CAVANAUGH

CONTRACT PURCHASER/DEVELOPER:
GATEWAY T23 LLC
c/o MANEKIN LLC
8601 ROBERT FULTON DRIVE, SUITE 200
COLUMBIA, MD 21046-2278
Phone: 410-423-2002
Attn.: ALEX KOPKOW

SEDIMENT CONTROL PLAN

COLUMBIA GATEWAY
OFFICE BUILDING
PARCEL 'T-23'
PLAT Nos. 18967 & 19111

ELECTION DISTRICT No. 6 — HOWARD COUNTY, MARYLAND

SCALE	ZONING	G. L. W. FILE No.
1"=40'	M-1	06-077
DATE	TAX MAP – GRID	SHEET
MAY/2007	43 2	6 OF 11

SDP-07-083

DETAIL 24 – STABILIZED CONSTRUCTION ENTRANCE

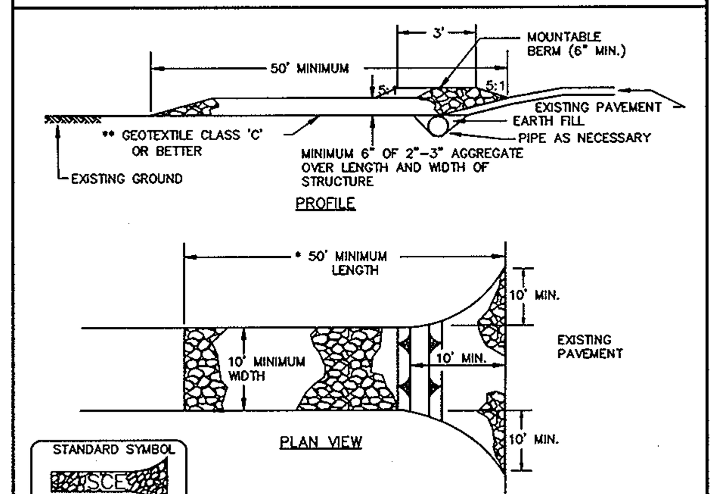

Construction Specification

1. Length – minimum of 50' (*30' for single residence lot).

2. Width – 10' minimum, should be flared at the existing road to provide a turning radius.

3. Geotextile fabric (filter cloth) shall be placed over the existing ground prior to placing stone. **The plan approval authority may not require single family residences to use geotextile.

4. Stone – crushed aggregate (2" to 3") or reclaimed or recycled concrete equivalent shall be placed at least 6" deep over the length and width of the entrance.

5. Surface Water – all surface water flowing to or diverted toward construction entrances shall be piped through the entrance, maintaining positive drainage. Pipe installed through the stabilized construction entrance shall be protected with a mountable berm with 5:1 slopes and a minimum of 6" of stone over the pipe. Pipe has to be sized according to the drainage. When the SCE is located at a high spot and has no drainage to convey a pipe will not be necessary. Pipe should be sized according to the amount of runoff to be conveyed. A 6" minimum will be required.

6. Location – A stabilized construction entrance shall be located at every point where construction traffic enters or leaves a construction site. Vehicles leaving the site must travel over the entire length of the stabilized construction entrance.

U.S. DEPARTMENT OF AGRICULTURE SOIL CONSERVATION SERVICE	PAGE F – 17 – 3	MARYLAND DEPARTMENT OF ENVIRONMENT WATER MANAGEMENT ADMINISTRATION

DETAIL 22 – SILT FENCE

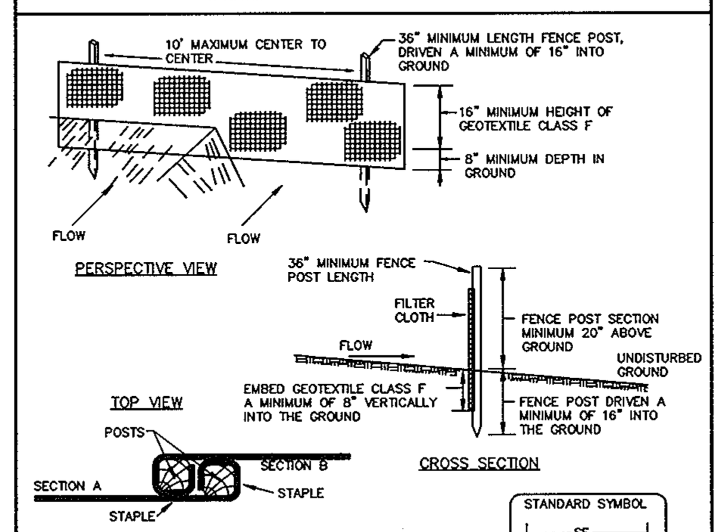

Construction Specifications

1. Fence posts shall be a minimum of 36" long driven 16" minimum into the ground. Wood posts shall be 1 1/2" x 1 1/2" square (minimum) cut, or 1 3/4" diameter (minimum) round and shall be of sound quality hardwood. Steel posts will be standard T or U section weighting not less than 1.00 pond per linear foot.

2. Geotextile shall be fastened securely to each fence post with wire ties or staples at top and mid-section and shall meet the following requirements for Geotextile Class F:

Tensile Strength	50 lbs/in (min.)	Test: MSMT 509
Tensile Modulus	20 lbs/in (min.)	Test: MSMT 509
Flow Rate	0.3 gal ft / minute (max.)	Test: MSMT 322
Filtering Efficiency	75% (min.)	Test: MSMT 322

3. Where ends of geotextile fabric come together, they shall be overlapped, folded and stapled to prevent sediment bypass.

4. Silt Fence shall be inspected after each rainfall event and maintained when bulges occur or when sediment accumulation reached 50% of the fabric height.

U.S. DEPARTMENT OF AGRICULTURE SOIL CONSERVATION SERVICE	PAGE E – 15 – 3	MARYLAND DEPARTMENT OF ENVIRONMENT WATER MANAGEMENT ADMINISTRATION

DETAIL 33 – SUPER SILT FENCE

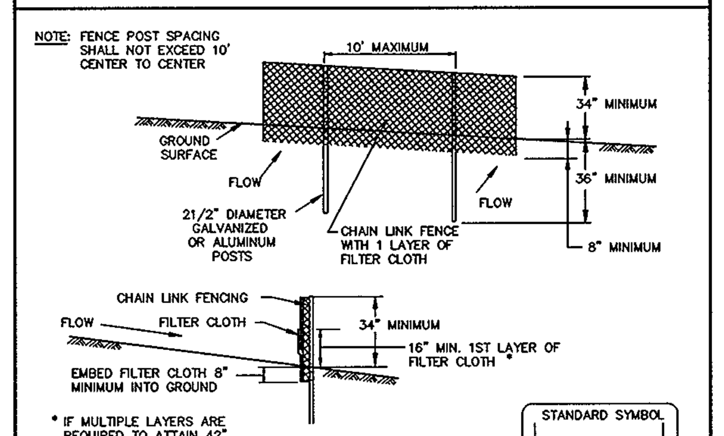

Construction Specifications

1. Fencing shall be 42" in height and constructed in accordance with the latest Maryland State Highway Details for Chain Link Fencing. The specification for a 6' fence shall be used, substituting 42" fabric and 6' length posts.

2. Chain link fence shall be fastened securely to the fence posts with wire ties. The lower tension wire, brace and truss rods, drive anchors and post caps are not required except on the ends of the fence.

3. Filter cloth shall be fastened securely to the chain link fence with ties spaced every 24" at the top and mid section.

4. Filter cloth shall be embedded a minimum of 8" into the ground.

5. When two sections of filter cloth adjoin each other, they shall be overlapped by 6" and folded.

6. Maintenance shall be performed as needed and silt buildups removed when "bulges" develop in the silt fence, or when silt reaches 50% of fence height

7. Filter cloth shall be fastened securely to each fence post with wire ties or staples at top and mid section and shall meet the following requirements for Geotextile Class F:

Tensile Strength	50 lbs/in (min.)	Test: MSMT 509
Tensile Modulus	20 lbs/in (min.)	Test: MSMT 509
Flow Rate	0.3 gal/ft /minute (max.)	Test: MSMT 322
Filtering Efficiency	75% (min.)	Test: MSMT 322

U.S. DEPARTMENT OF AGRICULTURE SOIL CONSERVATION SERVICE	PAGE H – 26 – 3	MARYLAND DEPARTMENT OF ENVIRONMENT WATER MANAGEMENT ADMINISTRATION

DETAIL 23C
CURB INLET PROTECTION (COG OR COS INLETS)

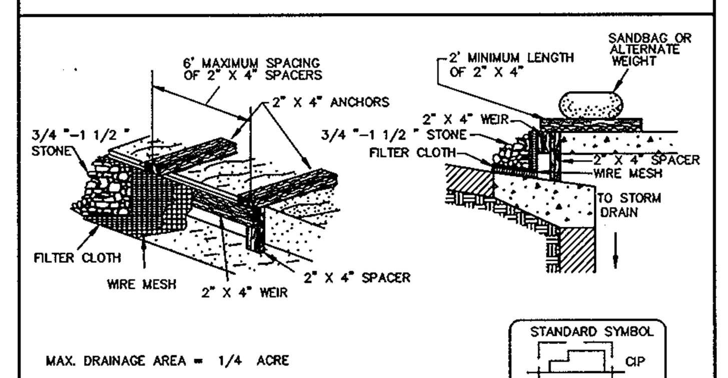

Construction Specifications

1. Attach a continuous piece of wire mesh (30" minimum width by throat length plus 4') to the 2" x 4" weir (measuring throat length plus 2') as shown on the standard drawing.

2. Place a continuous piece of Geotextile Class E the same dimensions as the wire mesh over the wire mesh and securely attach it to the 2" x 4" weir.

3. Securely nail the 2" X 4" weir to a 9" long vertical spacer to be located between the weir and the inlet face (max. 4' apart).

4. Place the assembly against the inlet throat and nail (minimum 2' lengths of 2" x 4" to the top of the weir at spacer locations). These 2" x 4" anchors shall extend across the inlet top and be held in place by sandbags or alternate weight.

5. The assembly shall be placed so that the end spacers are a minimum 1' beyond both ends of the throat opening.

6. Form the 1/2 " x 1/2 " wire mesh and the geotextile fabric to the concrete gutter and against the face of the curb on both sides of the inlet. Place clean 3/4 " x 1 1/2 " stone over the wire mesh and geotextile in such a manner to prevent water from entering the inlet under or around the geotextile.

7. This type of protection must be inspected frequently and the filter cloth and stone replaced when clogged with sediment.

8. Assure that storm flow does not bypass the inlet by installing a temporary earth or asphalt dike to direct the flow to the inlet.

U.S. DEPARTMENT OF AGRICULTURE SOIL CONSERVATION SERVICE	PAGE E – 16 – 5B	MARYLAND DEPARTMENT OF ENVIRONMENT WATER MANAGEMENT ADMINISTRATION

DETAIL 23B – AT GRADE INLET PROTECTION

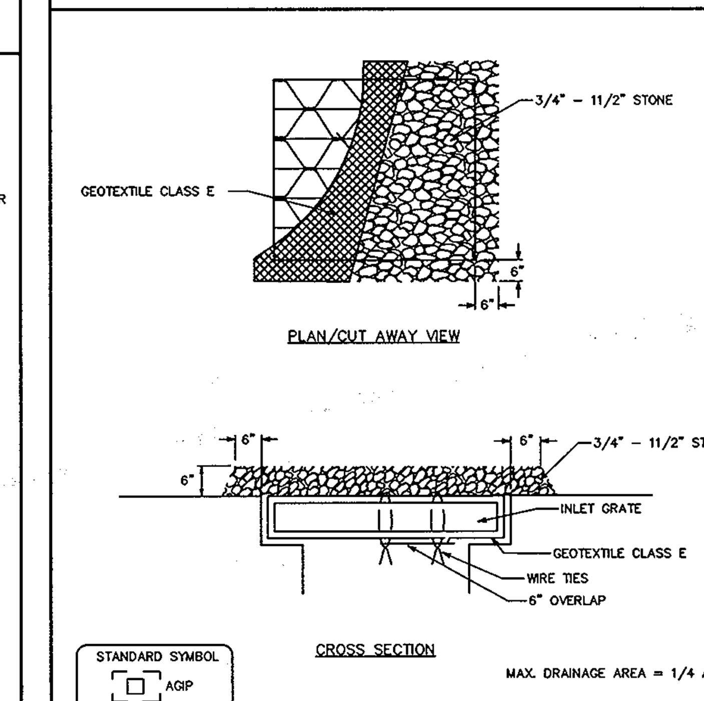

Construction Specifications

1. Lift grate and wrap with Geotextile Class E to completely cover all openings, then set grate back in place.

2. Place 3/4" to 11/2" stone, 4"–6" thick on the grate to secure the fabric and provide additional filtration.

U.S. DEPARTMENT OF AGRICULTURE SOIL CONSERVATION SERVICE	PAGE E – 16 – 5A	MARYLAND DEPARTMENT OF ENVIRONMENT WATER MANAGEMENT ADMINISTRATION

DETAIL 4 – PIPE SLOPE DRAIN

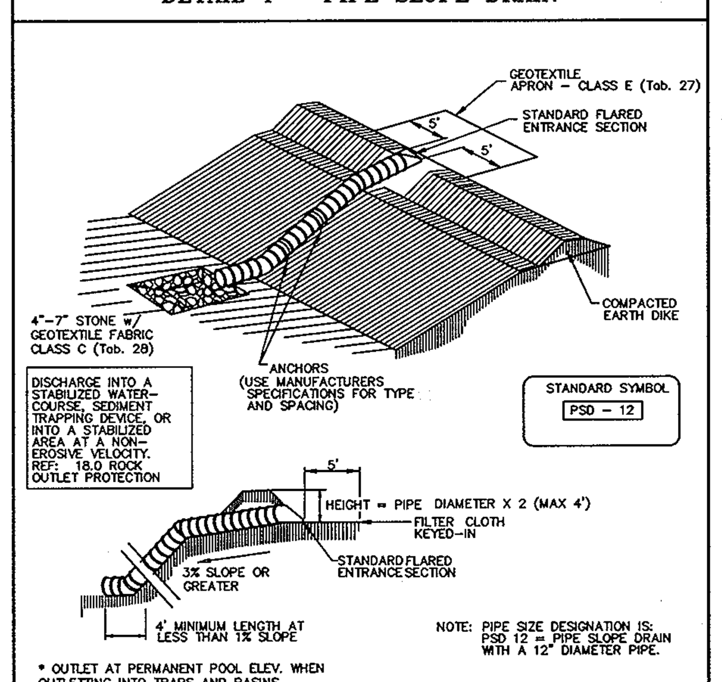

Table 6 Design Criteria for Pipe Slope Drain

Size	Pipe/Tubing Diameter (D) in	Maximum Drainage Area (Acres)
PSD–12	12	0.5
PSD–18	18	1.5
PSD–21	21	2.5
PSD–24	24	3.5
PSD–24 (2–PIPES WITH 4'–0" BETWEEN)	24	5.0

U.S. DEPARTMENT OF AGRICULTURE SOIL CONSERVATION SERVICE	PAGE B – 5 – 4	MARYLAND DEPARTMENT OF ENVIRONMENT WATER MANAGEMENT ADMINISTRATION

PIPE SLOPE DRAIN

Construction Specifications – Pipe Slope Drain

1. The Pipe Slope Drain (PSD) shall have a slope of 3 percent or steeper.

2. The top of the earth dike over the inlet pipe shall be at least 2 times the pipe diameter measured at the invert of the pipe.

3. Flexible tubing is preferred. However, corrugated metal pipe or equivalent PVC pipe can be used. All connections shall be watertight.

4. A flared end section shall be attached to the inlet end of pipe with a watertight connection. Filter cloth shall be placed under the inlet of the pipe slope drain and shall extend out 5' from the inlet. The filter cloth shall be "keyed in" on all sides.

5. The Pipe Slope Drain shall be securely anchored to the slope by staking at the grommets provided. Spacing for anchors shall be as provided by manufacturer's specification. In no case shall less than two (2) anchors be provided, equally spaced along the length of pipe. These details should be provided by pipe suppliers.

6. The soil around and under the pipe and end section shall be hand tamped in 4 inch lifts to the top of the earth dike.

7. All pipe connections shall be watertight.

8. Whenever possible where a PSD drains an unstabilized area, it shall outlet into a sediment trap or basin. If this is not possible then the slope drain will discharge into a stable conveyance that leads to a sediment trap or basin. When discharging into a trap or basin the PSD shall discharge at the same elevation as the wet pool elevation. The discharge from the PSD must be as far away from the sediment control outlet as possible.

9. When the drainage area is stabilized, the PSD shall discharge onto a stabilized area at a non-erosive velocity.

10. Inspection and any required maintenance shall be performed periodically and after each rain event.

11. The inlet must be kept open at all times.

U.S. DEPARTMENT OF AGRICULTURE SOIL CONSERVATION SERVICE	PAGE B – 5 – 4A	MARYLAND DEPARTMENT OF ENVIRONMENT WATER MANAGEMENT ADMINISTRATION

DETAIL 10
RIP-RAP OUTLET SEDIMENT TRAP – ST III

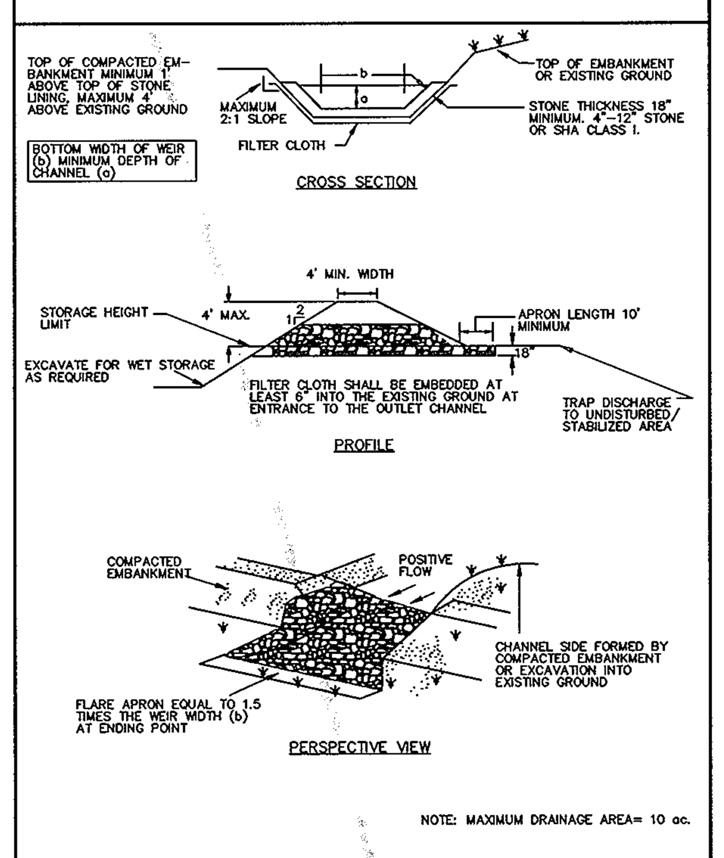

NOTE: MAXIMUM DRAINAGE AREA= 10 ac.

U.S. DEPARTMENT OF AGRICULTURE SOIL CONSERVATION SERVICE	PAGE C – 9 – 13	MARYLAND DEPARTMENT OF ENVIRONMENT WATER MANAGEMENT ADMINISTRATION

RIP-RAP OUTLET SEDIMENT TRAP – ST III

Construction Specifications

1. The area under embankment shall be cleared, grubbed and stripped of any vegetation and root mat. The pool area shall be cleared.

2. The fill material for the embankment shall be free of roots or other woody vegetation as well as over-sized stones, rocks, organic material or other objectionable material. The embankment shall be compacted by traversing with equipment while it is being constructed. Maximum height of embankment shall be 4', measured at centerline of embankment.

3. All cut and fill slopes shall be 2:1 or flatter.

4. Elevation of the top of any dike directing water into trap must equal or exceed the height of trap embankment.

5. Storage area provided shall be figured by computing the volume measured from top of excavation. (For storage requirements see Table 10).

6. Filter cloth shall be placed over the bottom and sides of the outlet channel prior to placement of stone. Section of fabric must overlap at least 1' with section nearest the entrance placed on top. Fabric shall be embedded at least 6" into existing ground at entrance of outlet channel.

7. Stone used in the outlet channel shall be 4" – 12" placed 18" thick.

8. Outlet – An outlet shall be provided, which includes a means of conveying the discharge in an erosion free manner to an existing stable channel. Protection against scour at the discharge end shall be provided as necessary.

9. Outlet channel must have positive drainage from the trap.

10. Sediment shall be removed and trap restored to its original dimensions when the sediment has accumulated to 1/4 of the wet storage depth of the trap (1350 cf/ac). Removed sediment shall be deposited in a suitable area and in such a manner that it will not erode.

11. The structure shall be inspected periodically after each rain and repaired as needed.

12. Construction of traps shall be carried out in such a manner that sediment pollution is abated. Once constructed, the top and outside face of the embankment shall be stabilized with seed and mulch. Points of concentrated inflow shall be protected in accordance with Grade Stabilization Structure criteria. The remainder of the interior slopes should be stabilized (one time) with seed and mulch upon trap completion and monitored and maintained erosion free during the life of the trap.

13. The structure shall be dewatered by approved methods, removed and the area stabilized when the drainage area has been properly stabilized.

U.S. DEPARTMENT OF AGRICULTURE SOIL CONSERVATION SERVICE	PAGE C – 9 – 13A	MARYLAND DEPARTMENT OF ENVIRONMENT WATER MANAGEMENT ADMINISTRATION

Dust Control

Definition

Controlling dust blowing and movement on construction sites and roads.

Purpose

To prevent blowing and movement of dust from exposed soil surfaces, reduce on and off-site damage, health hazards, and improve traffic safety.

Conditions Where Practice Applies

This practice is applicable to areas subject to dust blowing and movement where on and off-site damage is likely without treatment.

Specifications

Temporary Methods

1. Mulches – See standards for vegetative stabilization with mulches only. much should be crimped or tacked to prevent blowing.

2. Vegetative Cover – See standards for temporary vegetative cover.

3. Tillage – To roughen surface and bring clods to the surface. This is an emergency measure which should be used before soil blowing starts. Begin plowing on windward side of site. Chisel-type plows spaced about 12" apart, spring-toothed harrows, and similar plows are examples of equipment which may produce the desired effect.

4. Irrigation – This is generally done as an emergency treatment. Site is sprinkled with water until the surface is moist. Repeat as needed At no time should the site be irrigated to the point that runoff begins to flow.

5. Barriers – Solid board fences, silt fences, snow fences, straw bales, and similar material can be used to control air currents and soil blowing. Barriers placed at right angle to prevailing currents at intervals at about ten times their height are effective in controlling soil blowing.

6. Calcium Chloride – Apply at rates that will keep surface moist. May need treatment.

Permanent Methods

1. Permanent Vegetation – See standards for permanent vegetative cover, and permanent stabilization with sod. Existing trees or large shrubs may afford valuable protection if left in place.

2. Topsoiling – Covering with less erosive soil material. See standards for top soil.

3. Stone – Cover surface with crushed stone or gravel.

References

1. Agriculture Handbook 346. Wind Erosion Forces in the United States and Their Use in Predicting Soil Loss.

2. Agriculture Information Bulletin 354. How to Control Wind Erosion, USDA_ARS.

SEQUENCE OF CONSTRUCTION

1. APPLY FOR GRADING PERMIT.
2. OBTAIN GRADING PERMIT AT PRE-CONSTRUCTION MEETING (1 DAY)
3. INSTALL SEDIMENT CONTROL DEVICES. (7 DAYS)
   A. STABILIZED CONSTRUCTION ENTRANCE
   B. SEDIMENT TRAPS NO. 1 AND NO.2
   C. EARTH DIKES. INSTALL TRAPPING DEVICE PRIOR TO EARTH DIKE.
   D. SILT FENCE
4. ROUGH GRADE SITE WITHIN LIMITS OF DISTURBANCE. (2 WEEKS)
5. * CONSTRUCT BUILDINGS (9 MONTHS)
6. INSTALL WATER, SEWER AND STORM DRAIN. INSTALL TEMPORARY OUTFALL IN TRAP NO. 1 AND NO.2 AS SHOWN. INSTALL OTHER UNDERGROUND UTILITIES. (5 WEEKS)
7. INSTALL CURNB AND GUTTER, EXCEPT FOR AREA AROUND TRAP NO. 2 (4 WEEKS)
8. INSTALL BASE COURSE PAVING. PAVE UP TO TEMPORARY EDGE OF ASPHALT AT TRAP NO. 2 (1 WEEK)
9. INSTALL INLET PROTECTION DEVICES AROUND ALL INLETS AND FLUSH OUT STORM DRAIN PIPES. (2 DAYS)
10. WITH PRIOR APPROVAL OF SEDIMENT CONTROL INSPECTOR REMOVE SEDIMENT TRAP NO. 2 AND COMPLETE STORM DRAIN TO STR EX.-12 ON BENJAMIN FRANKLIN DRIVE (2 WEEKS)
11. WITH PRIOR APPROVAL OF SEDIMENT CONTROL INSPECTOR, REMOVE EARTH DIKE ALONG SOUTHERN PROPERTY LINE AND SEDIMENT TRAP NO. 1 AND COMPLETE STORM DRAIN TO STRUCTURE NO. ES-9. (1 WEEK) EARTH DIKE ALONG WESTERN PROPERTY LINE BORDERING T-21 TO REMAIN TO DIVERT OFF-SITE RUNOFF AROUND DISTURBED AREA.
12. INSTALL SILT FENCE AS SHOWN WHERE EARTH DIKE WAS REMOVED. (1 DAY)
13. COMPLETE REMAINING CURB AND GUTTER AND BASE COURSE PAVING IN VICINITY OF FORMER TRAP NO. 2 (2 WEEKS)
14. INSTALL LANDSCAPING AND SIDEWALK (2 WEEKS)
15. INSTALL SURFACE COURSE PAVING, STRIPE PARKING LOT (2 WEEKS)
16. PERMANENTLY STABILIZE ALL DISTURBED AREAS. (1 WEEK)
17. REMOVE REMAINING SEDIMENT CONTROL DEVICES WITH PRIOR APPROVAL OF SEDIMENT CONTROL INSPECTOR (2 DAYS)

NOTE:

AT THE CLOSE OF EACH DAY, THE CONTRACTOR IS RESPONSIBLE FOR THE REPAIR OR RE-INSTALLATION OF ANY SEDIMENT CONTROL DEVICES DAMAGED BY CONSTRUCTION ACTIVITY.

*CONSTRUCTION OF THE BUILDING CAN OCCUR SIMULTANEOUSLY FROM SEQUENCE NO. 5 THRU NO. 15.

DETAIL 1 – EARTH DIKE

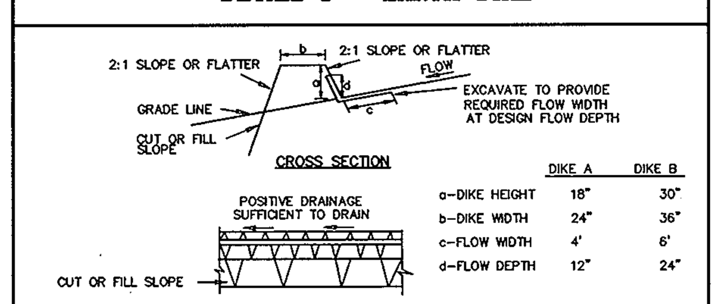

	DIKE A	DIKE B
a–DIKE HEIGHT	18"	30"
b–DIKE WIDTH	24"	36"
c–FLOW WIDTH	4'	6'
d–FLOW DEPTH	12"	24"

STANDARD SYMBOL A–2 B–3

FLOW CHANNEL STABILIZATION
GRADE 0.5% MIN. 10% MAX.

1. Seed and cover with straw mulch.
2. Seed and cover with Erosion Control Matting or line with sod.
3. 4" – 7" stone or recycled concrete equivalent pressed into the soil 7" minimum

Construction Specifications

1. All temporary earth dikes shall have uninterrupted positive grade to an outlet. Spot elevations may be necessary for grades less than 1%.

2. Runoff diverted from a disturbed area shall be conveyed to a sediment trapping device.

3. Runoff diverted from an undisturbed area shall outlet directly into an undisturbed, stabilized area at a non-erosive velocity.

4. All trees, brush, stumps, obstructions, and other objectionable material shall be removed and disposed of so as not to interfere with the proper functioning of the dike.

5. The dike shall be excavated or shaped to line, grade and cross section as required to meet the criteria specified herein and be free of bank projections or other irregularities which will impede normal flow.

6. Fill shall be compacted by earth moving equipment.

7. All earth removed and not needed for construction shall be placed so that it will not interfere with the functioning of the dike.

8. Inspection and maintenance must be provided periodically and after each rain event.

U.S. DEPARTMENT OF AGRICULTURE SOIL CONSERVATION SERVICE	PAGE A – 1 – 6	MARYLAND DEPARTMENT OF ENVIRONMENT WATER MANAGEMENT ADMINISTRATION

DETAIL 18 – SEDIMENT BASIN BAFFLES

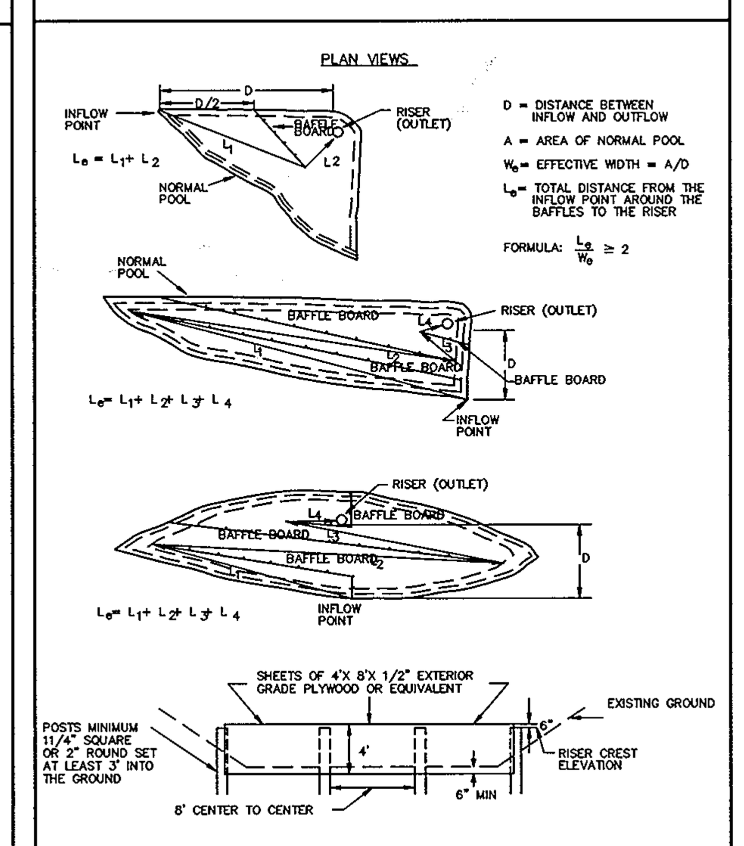

U.S. DEPARTMENT OF AGRICULTURE SOIL CONSERVATION SERVICE	PAGE C – 10 – 28	MARYLAND DEPARTMENT OF ENVIRONMENT WATER MANAGEMENT ADMINISTRATION

THIS DEVELOPMENT PLAN IS APPROVED FOR SOIL EROSION AND SEDIMENT CONTROL BY THE HOWARD SOIL CONSERVATION DISTRICT.

(signature) 6/1/07
HOWARD S.C.D. DATE

THESE PLANS HAVE BEEN REVIEWED FOR THE HOWARD SOIL CONSERVATION DISTRICT AND MEET THE TECHNICAL REQUIREMENTS.

(signature) 6/1/07
NATURAL RESOURCES CONSERVATION SERVICE DATE

APPROVED: HOWARD COUNTY DEPARTMENT OF PLANNING & ZONING

(signature) Director	6/6/07 Date
(signature) Chief, Division of Land Development	6/1/07 Date
(signature) Chief, Development Engineering Division	6/1/07 Date

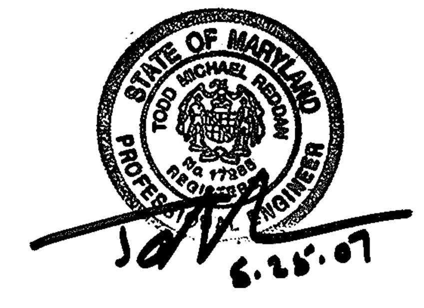

THIS PLAN IS FOR SEDIMENT CONTROL PURPOSES ONLY

STANDARD AND SPECIFICATIONS FOR TOPSOIL

DEFINITION

PLACEMENT OF TOPSOIL OVER A PREPARED SUBSOIL PRIOR TO ESTABLISHMENT OF PERMANENT VEGETATION.

PURPOSE

TO PROVIDE A SUITABLE SOIL MEDIUM FOR VEGETATIVE GROWTH. SOILS OF CONCERN HAVE LOW MOISTURE CONTENT, LOW NUTRIENT LEVELS, LOW PH, MATERIALS TOXIC TO PLANTS, AND/OR UNACCEPTABLE SOIL GRADATION.

CONDITIONS WHERE PRACTICE APPLIES

I. THIS PRACTICE IS LIMITED TO AREAS HAVING 2:1 OR FLATTER SLOPE WHERE:

A. THE TEXTURE OF THE EXPOSED SUBSOIL/PARENT MATERIAL IS NOT ADEQUATE TO PRODUCE VEGETATIVE GROWTH.

B. THE SOIL MATERIAL IS SO SHALLOW THAT THE ROOTING ZONE IS NOT DEEP ENOUGH TO SUPPORT PLANTS OR FURNISH CONTINUING SUPPLIED OF MOISTURE AND PLANT NUTRIENTS.

C. THE ORIGINAL SOIL TO BE VEGETATED CONTAINS MATERIAL TOXIC TO PLANT GROWTH.

D. THE SOIL IS SO ACIDIC THAT TREATMENT WITH LIMESTONE IS NOT FEASIBLE.

II. FOR THE PURPOSE OF THESE STANDARDS AND SPECIFICATIONS, AREAS HAVING SLOPES STEEPER THAN 2:1 REQUIRE SPECIAL CONSIDERATION AND DESIGN FOR ADEQUATE STABILIZATION. AREAS HAVING SLOPES STEEPER THAN 2:1 SHALL HAVE THE APPROPRIATE STABILIZATION SHOWN ON THE PLANS.

CONSTRUCTION AND MATERIAL SPECIFICATIONS

I. TOPSOIL SALVAGED FROM THE EXISTING SITE MAY BE USED PROVIDED THAT IT MEETS THE STANDARDS AS SET FORTH IN THESE SPECIFICATIONS. TYPICALLY, THE DEPTH OF TOPSOIL TO BE SALVAGED FOR A GIVEN SOIL TYPE CAN BE FOUND IN THE RESPECTIVE SOIL PROFILE SECTION IN THE SOIL SURVEY PUBLISHED BY USDA-SCS IN COOPERATION WITH MARYLAND AGRICULTURAL EXPERIMENTAL STATION.

II. TOPSOIL SPECIFICATIONS - SOIL TO BE USED AS TOPSOIL MUST MEET THE FOLLOWING:

A. TOPSOIL SHALL BE A LOAM, SANDY LOAM, CLAY LOAM, SILT LOAM, SANDY CLAY LOAM, LOAMY SAND. OTHER SOILS MAY BE USED IF RECOMMENDED BY A AGRONOMIST OR SOIL SCIENTIST AND APPROVED BY THE APPROPRIATE APPROVAL AUTHORITY. REGARDLESS, TOPSOIL SHALL NOT BE A MIXTURE OF CONTRASTING TEXTURED SUBSOILS AND SHALL CONTAIN LESS THAN 5% BY VOLUME OF CINDERS, STONES, SLAG, COARSE FRAGMENTS, GRAVEL, STICKS, ROOTS, TRASH, OR OTHER MATERIALS LARGER THAN 1 1/2" IN DIAMETER.

B. TOPSOIL MUST BE FREE OF PLANT PARTS SUCH AS BERMUDA GRASS, QUACKGRASS, JOHNSONGRASS, NUTSEDGE, POISON IVY, THISTLE, OR OTHERS AS SPECIFIED.

C. WHERE THE SUBSOIL IS EITHER HIGHLY ACIDIC OR COMPOSED OF HEAVY CLAYS, GROUND LIMESTONE SHALL BE SPREAD AT THE RATE IF 4-8 TONS/ACRE (200-400 POUNDS PER 1,000 SQUARE FEET) PRIOR TO THE PLACEMENT OF TOPSOIL. LIME SHALL BE DISTRIBUTED UNIFORMLY OVER DESIGNATED AREAS AND WORKED INTO THE SOIL IN CONJUNCTION WITH TILLAGE OPERATIONS AS DESCRIBED IN THE FOLLOWING PROCEDURES.

III. FOR SITES HAVING DISTURBED AREAS UNDER 5 ACRES:

A. PLACE TOPSOIL (IF REQUIRED) AND APPLY SOIL AMENDMENTS AS SPECIFIED IN 20.0 VEGETATIVE STABILIZATION - SECTION I - VEGETATIVE STABILIZATION METHODS AND MATERIALS (OR SEE SEEDING NOTES).

IV. FOR SITES HAVING DISTURBED AREAS OVER 5 ACRES:

A. ON SOIL MEETING TOPSOIL SPECIFICATIONS, OBTAIN TEST RESULTS DICTATING FERTILIZER & LIME AMENDMENTS REQUIRED TO BRING THE SOIL INTO COMPLIANCE WITH THE FOLLOWING:

1. PH FOR TOPSOIL SHALL BE BETWEEN 6.0 AND 7.5. IF THE TESTED SOIL DEMONSTRATES A PH OF LESS THAN 6.0, SUFFICIENT LIME SHALL BE PRESCRIBED TO RAISE THE PH TO 6.5 OR HIGHER.
2. ORGANIC CONTENT OF TOPSOIL SHALL BE NOT LESS THAN 1.5 PERCENT BY WEIGHT.
3. TOPSOIL HAVING SOLUBLE SALT GREATER THAN 500 PARTS PER MILL SHALL NOT BE USED.
4. NO SOD OR SEED SHALL BE PLACED ON SOIL WHICH HAS BEEN WITH SOIL STERILANTS OR CHEMICALS USED FOR WEED CONTROL UNTIL SUFFICIENT TIME HAS ELAPSED (14 DAYS MIN.) TO PERMIT DISSIPATION OF PHOTO-TOXIC MATERIALS.

NOTE: TOPSOIL SUBSTITUTES OR AMENDMENTS, AS RECOMMENDED BY A QUALIFIED AGRONOMIST OR SOIL SCIENTIST AND APPROVED BY THE APPROPRIATE APPROVAL AUTHORITY, MAY BE USED IN LIEU OF NATURAL TOPSOIL.

B. PLACE TOPSOIL (IF REQUIRED) AND APPLY SOIL AMENDMENTS AS SPECIFIED IN 2.0 VEGETATIVE STABILIZATION - SECTION 1 - VEGETATIVE STABILIZATION METHODS AND MATERIALS (OR SEE SEEDING NOTES).

V. TOPSOIL APPLICATION

A. WHEN TOPSOILLING, MAINTAIN NEEDED EROSION AND SEDIMENT CONTROL PRACTICES SUCH AS DIVERSION, GRADE STABILIZATION STRUCTURES, EARTH DIKES, SLOPE SILT FENCE AND SEDIMENT TRAPS AND BASINS.
B. GRADES ON THE AREAS TO BE TOPSOILED, WHICH HAVE BEEN PREVIOUSLY ESTABLISHED, SHALL BE MAINTAINED, ALBEIT 4"-8" HIGHER IN ELEVATION.

C. TOPSOIL SHALL BE UNIFORMLY DISTRIBUTED IN A 4' -8' LAYER AND LIGHTLY COMPACTED TO A MINIMUM THICKNESS OF 4". SPREADING SHALL BE PERFORMED IN SUCH A MANNER THAT SODDING OR SEEDING CAN PROCEED WITH A MINIMUM OF ADDITIONAL SOIL PREPARATION AND TILLAGE. ANY IRREGULARITIES IN THE SURFACE RESULTING FROM TOPSOILLING OR OTHER OPERATIONS SHALL BE CORRECTED IN ORDER TO PREVENT THE FORMATION OF DEPRESSIONS OR WATER
D. TOPSOIL SHALL NOT BE PLACED WHILE THE TOPSOIL OR SUBSOIL IS FROZEN OR MUDDY CONDITION, WHEN THE SUBSOIL IS EXCESSIVELY WET OR IN A CONDITION THAT MAY OTHERWISE BE DETRIMENTAL TO PROPER GRADING AND SEEDBED PREPARATION.

VI. ALTERNATIVE FOR PERMANENT SEEDING - INSTEAD OF APPLYING THE FULL AMOUNTS OF LIME AND COMMERCIAL FERTILIZER, COMPOSTED SLUDGE AND AMENDMENTS MAY BE APPLIED AS SPECIFIED BELOW:

A. COMPOSTED SLUDGE MATERIAL FOR USE AS A SOIL CONDITIONER FOR SITES HAVING DISTURBED AREAS OVER 5 ACRES SHALL BE TESTED TO PRESCRIBE AMENDMENTS AND FOR SITES HAVING DISTURBED AREAS UNDER 5 ACRES SHALL CONFORM TO THE FOLLOWING REQUIREMENTS:

1. COMPOSTED SLUDGE SHALL BE SUPPLIED BY, OR ORIGINATE FROM, A PERSON OR PERSONS THAT ARE PERMITTED (AT THE TIME OF ACQUISITION OF THE COMPOST) BY THE MARYLAND DEPARTMENT OF THE ENVIRONMENT UNDER COMAR 26.04.06.

2. COMPOSTED SLUDGE SHALL CONTAIN AT LEAST 1 PERCENT NITROGEN, 1.5 PERCENT PHOSPHORUS, AND 0.2 PERCENT POTASSIUM AND HAVE A PH OF 7.0 TO 8.0. IF COMPOST DOES NOT MEET THESE REQUIREMENTS, THE APPROPRIATE CONSTITUENTS MUST BE ADDED TO MEET THE REQUIREMENTS PRIOR TO USE.

3. COMPOSTED SLUDGE SHALL BE APPLIED AT A RATE OF 1 TON/1,000 SQUARE FEET.

B. COMPOSTED SLUDGE SHALL BE AMENDED WITH A POTASSIUM FERTILIZER APPLIED AT A RATE OF 4LB/1,000 SQUARE FEET, AND 1/3 THE NORMAL LIME APPLICATION RATE.

REFERENCES: GUIDELINE SPECIFICATIONS, SOIL PREPARATION AND SODDING. MD-VA PUB. #1, COOPERATIVE EXTENSION SERVICE, UNIVERSITY OF MARYLAND AND VIRGINIA POLYTECHNIC INSTITUTES. REVISED 1973.

SEDIMENT CONTROL NOTES

1. A MINIMUM OF 24 HOURS NOTICE MUST BE GIVEN TO THE HOWARD COUNTY OFFICE OF INSPECTION AND PERMITS PRIOR TO THE START OF ANY CONSTRUCTION. (410) 313-1855

2. ALL VEGETATIVE AND STRUCTURAL PRACTICES ARE TO BE INSTALLED ACCORDING TO THE PROVISIONS OF THIS PLAN AND ARE TO BE IN CONFORMANCE WITH THE 1994 MARYLAND STANDARDS AND SPECIFICATIONS FOR SOIL EROSION AND SEDIMENT CONTROL AND REVISIONS THERETO.

3. FOLLOWING INITIAL SOIL DISTURBANCE OR REDISTURBANCE, PERMANENT OR TEMPORARY STABILIZATION SHALL BE COMPLETED WITHIN: A) 7 CALENDAR DAYS FOR ALL PERIMETER SEDIMENT CONTROL STRUCTURES, DIKES AND PERIMETER SLOPES AND ALL SLOPES GREATER THAN 3:1, B) 14 DAYS AS TO ALL OTHER DISTURBED OR GRADED AREAS ON THE PROJECT SITE.

4. ALL SEDIMENT TRAPS/BASINS SHOWN MUST BE FENCED AND WARNING SIGNS POSTED AROUND THEIR PERIMETER IN ACCORDANCE WITH VOL. 1, CHAPTER 12, OF THE HOWARD COUNTY DESIGN MANUAL, STORM DRAINAGE.

5. ALL DISTURBED AREAS MUST BE STABILIZED WITHIN THE TIME PERIOD SPECIFIED ABOVE IN ACCORDANCE WITH THE 1994 MARYLAND STANDARDS AND SPECIFICATIONS FOR SOIL EROSION AND SEDIMENT CONTROL FOR PERMANENT SEEDINGS, SOD, TEMPORARY SEEDINGS AND MULCHING (SEC. 6). TEMPORARY STABILIZATION, WITH MULCH ALONE, CAN ONLY BE DONE WHEN RECOMMENDED SEEDING DATES DO NOT ALLOW FOR PROPER GERMINATION AND ESTABLISHMENT OF GRASSES.

6. ALL SEDIMENT CONTROL STRUCTURES ARE TO REMAIN IN PLACE AND ARE TO BE MAINTAINED IN OPERATIVE CONDITION UNTIL PERMISSION FOR THEIR REMOVAL HAS BEEN OBTAINED FROM THE HOWARD COUNTY SEDIMENT CONTROL INSPECTOR.

TOTAL AREA OF SITE	:	7.83 ± ACRES
AREA DISTURBED	:	10.7 ± ACRES
AREA TO BE ROOFED OR PAVED	:	6.17± ACRES
AREA TO BE VEGETATIVELY STABILIZED	:	4.53± ACRES
TOTAL CUT	:	6400 ± CU. YDS.
TOTAL FILL	:	6400± CU. YDS.
OFF-SITE WASTE/BORROW AREA LOCATION	:	N/A

8. ANY SEDIMENT CONTROL PRACTICE WHICH IS DISTURBED BY GRADING ACTIVITY FOR PLACEMENT OF UTILITIES MUST BE REPAIRED ON THE SAME DAY OF DISTURBANCE.

9. ADDITIONAL SEDIMENT CONTROL MUST BE PROVIDED, IF DEEMED NECESSARY BY THE HOWARD COUNTY DPW SEDIMENT CONTROL INSPECTOR.

10. ON ALL SITES WITH DISTURBED AREAS IN EXCESS OF 2 ACRES, APPROVAL OF THE INSPECTION AGENCY SHALL BE REQUESTED UPON COMPLETION OF INSTALLATION OF PERIMETER EROSION AND SEDIMENT CONTROLS, BUT BEFORE PROCEEDING WITH ANY OTHER EARTH DISTURBANCE OR GRADING. OTHER BUILDING OR GRADING INSPECTION APPROVALS MAY NOT BE AUTHORIZED UNTIL THIS INITIAL APPROVAL BY THE INSPECTION AGENCY IS MADE.

11. TRENCHES FOR THE CONSTRUCTION OF UTILITIES IS LIMITED TO 3 PIPE LENGTHS OR THAT WHICH SHALL BE BACKFILLED AND STABILIZED WITHIN 1 WORKING DAY, WHICHEVER IS SHORTER.

PERMANENT SEEDING NOTES

APPLY TO GRADED OR CLEARED AREA NOT SUBJECT TO IMMEDIATE FURTHER DISTURBANCE WHERE A PERMANENT LONG-LIVED VEGETATIVE COVER IS NEEDED.
SEEDBED PREPARATION: LOOSEN UPPER THREE INCHES OF SOIL BY RAKING, DISKING OR OTHER ACCEPTABLE MEANS BEFORE SEEDING (UNLESS PREVIOUSLY LOOSENED).

SOIL AMENDMENTS: IN LIEU OF SOIL TEST RECOMMENDATIONS, USE ONE OF THE FOLLOWING SCHEDULES

1) PREFERRED - APPLY 2 TONS PER ACRE DOLOMITIC LIMESTONE (92 LBS/1000 SQUARE FEET) AND 600 LBS PER ACRE 10-10-10 FERTILIZER (14 LBS/1000 SQ FT) BEFORE SEEDING. HARROW OR DISC INTO UPPER THREE INCHES OF SOIL. AT TIME OF SEEDING, APPLY 400 LBS PER ACRE 30-0-0 UREA-FORM FERTILIZER (9 LBS/1000 SQ FT).
2) ACCEPTABLE - APPLY 2 TONS PER ACRE DOLOMITIC LIMESTONE (92 LBS/1000 SQ FT) AND 1000 LBS PER ACRE OF 10-10-10 FERTILIZER (23 LBS/1000 SQ FT) BEFORE SEEDING. HARROW OR DISC INTO UPPER THREE INCHES OF SOIL.

SEEDING: FOR THE PERIODS MARCH 1 THRU APRIL 30, AND AUGUST 1 THRU OCTOBER 15, SEED WITH 60 LBS PER ACRE (1.4 LBS/1000 SQ FT) OF KENTUCKY 31 TALL FESCUE. FOR THE PERIOD MAY 1 THRU JULY 31, SEED WITH 60 LBS KENTUCKY 31 TALL FESCUE PER ACRE AND 2 LBS PER ACRE (.05 LBS/1000 SQ FT) OF WEEPING LOVEGRASS. DURING THE PERIOD OF OCTOBER 16 THRU FEBRUARY 28, PROTECT SITE BY: OPTION (1) 2 TONS PER ACRE OF WELL ANCHORED STRAW MULCH AND SEED AS SOON AS POSSIBLE IN THE SPRING. OPTION (2) USE SOD. OPTION (3) SEED WITH 60 LBS/ACRE KENTUCKY 31 TALL FESCUE AND MULCH WITH 2 TONS/ACRE WELL ANCHORED STRAW.

MULCHING: APPLY 1-1/2 TO 2 TONS PER ACRE (70 TO 90 LBS/1000 SQ FT) OF UNROTTED SMALL GRAIN STRAW IMMEDIATELY AFTER SEEDING. ANCHOR MULCH IMMEDIATELY AFTER APPLICATION USING MULCH ANCHORING TOOL OR 218 GALLONS PER ACRE (5 GAL/1000 SQ FT) OF EMULSIFIED ASPHALT ON FLAT AREAS. ON SLOPES 8 FEET OR HIGHER, USE 348 GALLONS PER ACRE (8 GAL/1000 SQ FT) FOR ANCHORING.

MAINTENANCE: INSPECT ALL SEEDED AREAS AND MAKE NEEDED REPAIRS, REPLACEMENTS AND RESEEDINGS.

TEMPORARY SEEDING NOTES

APPLY TO GRADED OR CLEARED AREAS LIKELY TO BE REDISTURBED WHERE A SHORT-TERM VEGETATIVE COVER IS NEEDED.

SEEDBED PREPARATION: LOOSEN UPPER THREE INCHES OF SOIL BY RAKING, DISKING OR OTHER ACCEPTABLE MEANS BEFORE SEEDING (UNLESS PREVIOUSLY LOOSENED).

SOIL AMENDMENTS: APPLY 600 LBS PER ACRE 10-10-10 FERTILIZER (14 LBS/1000 SQ FT).

SEEDING: FOR PERIODS MARCH 1 THRU APRIL 30 AND FROM AUGUST 15 THRU OCTOBER 15, SEED WITH 2-1/2 BUSHEL PER ACRE OF ANNUAL RYE (3.2 LBS./1000 SQ.FT.). FOR THE PERIOD MAY 1 THRU AUGUST 14, SEED WITH 3 LBS PER ACRE OF WEEPING LOVEGRASS (.07 LBS/1000 SQ FT). FOR THE PERIOD NOVEMBER 16 THRU FEBRUARY 28, PROTECT SITE BY APPLYING 2 TONS PER ACRE OF WELL ANCHORED STRAW MULCH AND SEED AS SOON AS POSSIBLE IN THE SPRING, OR USE SOD.

MULCHING: APPLY 1-1/2 TO 2 TONS PER ACRE (70 TO 90 LBS/1000 SQ FT) OF UNROTTED, WEED-FREE, SMALL GRAIN STRAW IMMEDIATELY AFTER SEEDING. ANCHOR MULCH IMMEDIATELY AFTER APPLICATION USING MULCH ANCHORING TOOL OR 218 GAL PER ACRE (5 GAL/1000 SQ FT) OF EMULSIFIED ASPHALT ON FLAT AREAS. ON SLOPES, 8 FT OR HIGHER, USE 348 GAL PER ACRE (8 GAL/1000 SQ FT) FOR ANCHORING.

DEVELOPER'S/BUILDER'S CERTIFICATE

"I/WE CERTIFY THAT ALL DEVELOPMENT AND/OR CONSTRUCTION WILL BE DONE ACCORDING TO THIS PLAN, AND THAT ANY RESPONSIBLE PERSONNEL INVOLVED IN THE CONSTRUCTION PROJECT WILL HAVE A CERTIFICATE OF ATTENDANCE AT A MARYLAND DEPARTMENT OF THE ENVIRONMENT APPROVED TRAINING PROGRAM FOR THE CONTROL OF SEDIMENT AND EROSION BEFORE BEGINNING THE PROJECT. I ALSO AUTHORIZE PERIODIC ON-SITE INSPECTION BY THE HSCD."

(signature) 5/25/07
SIGNATURE OF DEVELOPER/BUILDER DATE

ENGINEER'S CERTIFICATE

"I CERTIFY THAT THIS PLAN FOR EROSION AND SEDIMENT CONTROL REPRESENTS A PRACTICAL AND WORKABLE PLAN BASED ON MY PERSONAL KNOWLEDGE OF THE SITE CONDITIONS AND THAT IT WAS PREPARED IN ACCORDANCE WITH THE REQUIREMENTS OF THE HOWARD SOIL CONSERVATION DISTRICT."

(signature) 5.25.07
TODD REDDAN DATE

GLW GUTSCHICK LITTLE & WEBER, P.A.
CIVIL ENGINEERS, LAND SURVEYORS, LAND PLANNERS, LANDSCAPE ARCHITECTS
3909 NATIONAL DRIVE – SUITE 250 – BURTONSVILLE OFFICE PARK
BURTONSVILLE, MARYLAND 20866
TEL: 301-421-4024 BALT: 410-880-1820 DC/VA: 301-989-2524 FAX: 301-421-4186

L:\CADD\DRAWINGS\06077\SDP\06077-SNE-DET.dwg	DES. MBT	DRN. KLP	CHK.

DATE	REVISION	BY	APP'R.

PREPARED FOR:

OWNER:	CONTRACT PURCHASER/DEVELOPER:
THE HOWARD RESEARCH AND DEVELOPMENT CORPORATION 10275 LITTLE PATUXENT PARKWAY COLUMBIA, MD 21044 Phone: 410-992-6027 Attn.: PAUL CAVANAUGH	GATEWAY T23 LLC c/o MANEKIN LLC 8601 ROBERT FULTON DRIVE, SUITE 200 COLUMBIA, MD 21046-2278 Phone: 410-423-2002 Attn.: ALEX KOPICKI

SEDIMENT CONTROL NOTES & DETAILS

COLUMBIA GATEWAY
OFFICE BUILDING
PARCEL 'T-23'
PLAT Nos. 18967 & 19111

ELECTION DISTRICT No. 6 HOWARD COUNTY, MARYLAND

SCALE	ZONING	G. L. W. FILE No.
NO SCALE	M–1	06–077
DATE	TAX MAP – GRID	SHEET
MAY/2007	43 2	7 OF 11

SDP-07-083

LEGEND

- EXISTING CONTOUR (300)
- PROPOSED CONTOUR (300)
- EXISTING DRAINAGE DIVIDE
- PROPOSED STORM DRAIN DRAINAGE DIVIDE
- STORM DRAIN DRAINAGE DIVIDE PER SDP-06-075
- DRAINAGE AREA DESIGNATION (I-33 / ST-33) (same as inlet & pipe stub number)
- PROPOSED NEW CURB & GUTTER (double parallel line)
- ANTICIPATED FUTURE CURB & GUTTER (single dash line)

DRAINAGE AREA INFORMATION		
INLET	AREA (ACRES)	'C' VALUE
I-1	0.48	0.75
I-2	0.60	0.75
I-3	0.40	0.75
I-4	0.14	0.75
I-5	0.24	0.75
I-6	0.21	0.75
I-10	0.44	0.75
I-11	0.35	0.75
I-12	0.19	0.75
I-13	0.16	0.75
I-14	0.24	0.75
I-17	0.58	0.75
I-18	0.48	0.75
I-19	0.64	0.75
I-22	0.42	0.75
I-24	0.18	0.75
I-26	0.22	0.75
I-28	0.69	0.75
I-30	0.28	0.75
I-31	0.10	0.75
I-32	0.20	0.75
ST-40	1.34	0.75
ST-41	2.45	0.75
EX-I-19A	0.45	0.75

NOTE:

1. THIS SITE WAS PREVIOUSLY MASS GRADED UNDER F-00-132 (ASSUME C-SOIL).

TOTAL DESIGN DRAINAGE AREA TO STR. ES-57 UNDER SDP-06-075 =10.0 AC.

TOTAL DRAINAGE AREA TO ES-57, THIS PLAN = 9.7 AC.

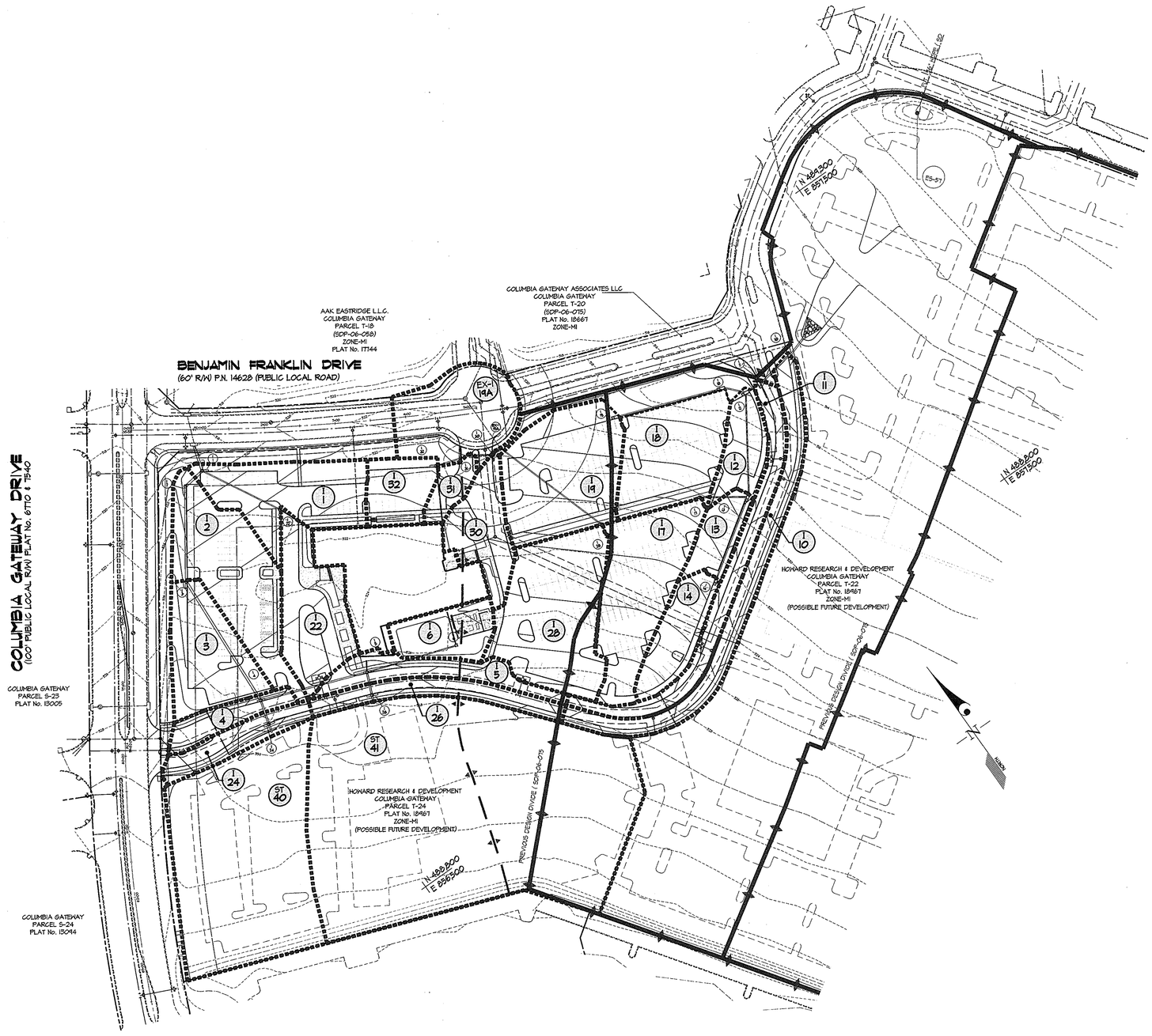

APPROVED: HOWARD COUNTY DEPARTMENT OF PLANNING & ZONING

Director — Date 6/1/07

Chief, Division of Land Development — Date 6/1/07

Chief, Development Engineering Division — Date 6/1/07

GLW GUTSCHICK LITTLE & WEBER, P.A.

CIVIL ENGINEERS, LAND SURVEYORS, LAND PLANNERS, LANDSCAPE ARCHITECTS
3909 NATIONAL DRIVE – SUITE 250 – BURTONSVILLE OFFICE PARK
BURTONSVILLE, MARYLAND 20866
TEL: 301-421-4024 BALT: 410-880-1820 DC/VA: 301-989-2524 FAX: 301-421-4186

L:\CADD\DRAWINGS\06077\SDP\06077-DAM.dwg | DES. MBT | DRN. KLP | CHK.

DATE	REVISION	BY	APP'R.

PREPARED FOR:

OWNER:
THE HOWARD RESEARCH AND DEVELOPMENT CORPORATION
10275 LITTLE PATUXENT PARKWAY
COLUMBIA, MD 21044
Phone: 410-992-6027
Attn.: PAUL CAVANAUGH

CONTRACT PURCHASER/DEVELOPER:
GATEWAY T23 LLC
c/o MANEKIN LLC
8601 ROBERT FULTON DRIVE, SUITE 200
COLUMBIA, MD 21046-2278
Phone: 410-423-2002
Attn.: ALEX KOPKOW

DRAINAGE AREA MAP

COLUMBIA GATEWAY
OFFICE BUILDING
PARCEL 'T-23'
PLAT Nos. 18967 & 19111

ELECTION DISTRICT No. 6 — HOWARD COUNTY, MARYLAND

SCALE	ZONING	G. L. W. FILE No.
1"=80'	M-1	06-077
DATE	TAX MAP – GRID	SHEET
MAY/2007	43 2	8 OF 11

STATE OF MARYLAND — TODD MICHAEL MEMMO — 17755 — REGISTERED PROFESSIONAL ENGINEER

5.25.07

SDP-07-083

PLANT LEGEND

- PROPOSED LANDSCAPE SHADE TREE
- PROPOSED PRIVATE ROADWAY STREET TREE
- PROPOSED SHRUBS
- EXISTING STREET TREE BENJAMIN FRANKLIN DR. (F-00-132) & COLUMBIA GATEWAY DR.
- EXISTING STREET TREE TO BE RELOCATED
- EXISTING STREET TREE AT NEW LOCATION

SEE SHEET 10 FOR LANDSCAPE NOTES, SCHEDULES, DETAILS AND REQUIRED SURETY.

STATE OF MARYLAND
Michael B. Tran
No. 985
REGISTERED LANDSCAPE ARCHITECT

DEVELOPER'S / BUILDER'S CERTIFICATE

I/WE CERTIFY THAT THE LANDSCAPING SHOWN ON THIS PLAN WILL BE DONE ACCORDING TO THE PLAN AND SECTION 16.124 OF THE HOWARD COUNTY CODE AND THE HOWARD COUNTY LANDSCAPE MANUAL. I/WE FURTHER CERTIFY THAT UPON COMPLETION, A LETTER OF LANDSCAPE INSTALLATION, ACCOMPANIED BY AN EXECUTED ONE-YEAR GUARANTEE OF PLANT MATERIALS, WILL BE SUBMITTED TO THE DEPARTMENT OF PLANNING AND ZONING.

NAME (DEVELOPER'S /BUILDER'S) — DATE 5/25/07

APPROVED: HOWARD COUNTY DEPARTMENT OF PLANNING & ZONING

Director — Date 6/6/07

Chief, Division of Land Development — Date 6/1/07

Chief, Development Engineering Division — Date 6/1/07

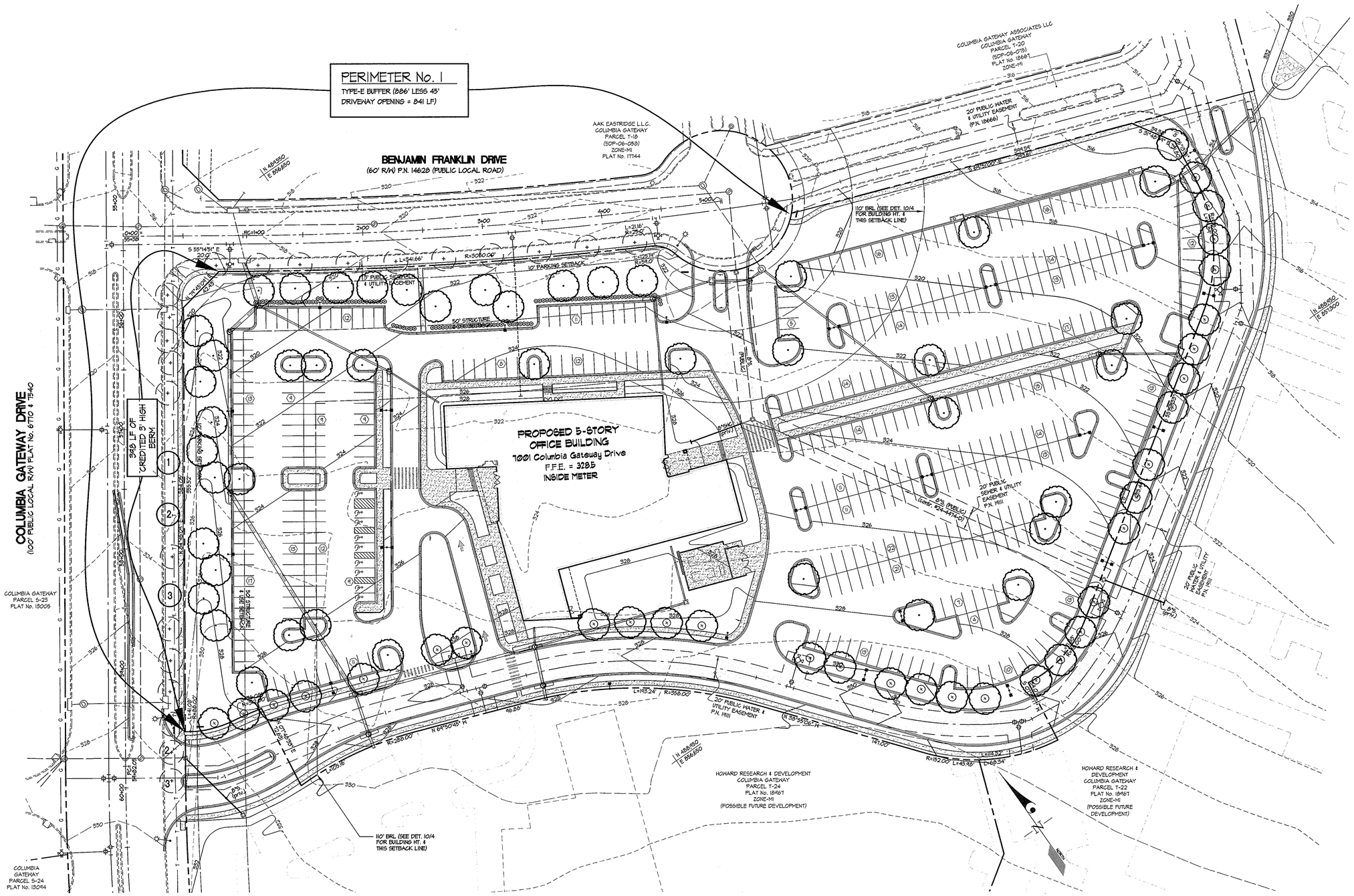

THIS PLAN IS FOR PLANTING PURPOSES ONLY

GLW GUTSCHICK LITTLE & WEBER, P.A.
CIVIL ENGINEERS, LAND SURVEYORS, LAND PLANNERS, LANDSCAPE ARCHITECTS
3909 NATIONAL DRIVE – SUITE 250 – BURTONSVILLE OFFICE PARK
BURTONSVILLE, MARYLAND 20866
TEL: 301-421-4024 BALT: 410-880-1820 DC/VA: 301-989-2524 FAX: 301-421-4186

L:\CADD\DRAWINGS\06077\SDP\06077-LS.dwg | DES. lbk | DRN. lbk | CHK. mbt

DATE	REVISION	BY	APP'R.

PREPARED FOR:

OWNER:
THE HOWARD RESEARCH AND DEVELOPMENT CORPORATION
10275 LITTLE PATUXENT PARKWAY
COLUMBIA, MD 21044
Phone: 410-992-6027
Attn.: PAUL CAVANAUGH

CONTRACT PURCHASER/DEVELOPER:
GATEWAY 123 LLC
c/o MANEKIN LLC
8601 ROBERT FULTON DRIVE, SUITE 200
COLUMBIA, MD 21046-2278
Phone: 410-423-2002
Attn.: ALEX KOPICKI

LANDSCAPE PLAN

COLUMBIA GATEWAY
OFFICE BUILDING
PARCEL 'T-23'
PLAT Nos. 18967 & 19111

ELECTION DISTRICT No. 6 — HOWARD COUNTY, MARYLAND

SCALE	ZONING	G. L. W. FILE No.
1"=40'	M-1	06-077
DATE	TAX MAP - GRID	SHEET
MAY/2007	43 2	9 OF 11

SDP-07-083

SPECIFICATIONS: PLANT MATERIALS AND PLANTING METHODS

A. PLANT MATERIALS

THE LANDSCAPE CONTRACTOR SHALL FURNISH AND INSTALL AND/OR DIG, BALL, BURLAP AND TRANSPLANT ALL OF THE PLANT MATERIALS CALLED FOR ON DRAWINGS AND/OR LISTED IN THE PLANT SCHEDULE.

1. PLANT NAMES

PLANT NAMES USED IN THE PLANT SCHEDULE SHALL CONFORM WITH "STANDARDIZED PLANT NAMES," LATEST EDITION.

2. PLANT STANDARDS

ALL PLANT MATERIAL SHALL BE EQUAL TO OR BETTER THAN THE REQUIREMENTS OF THE "USA STANDARD FOR NURSERY STOCK" LATEST EDITION, AS PUBLISHED BY THE AMERICAN ASSOCIATION OF NURSERYMEN (HERE- AFTER REFERRED TO AS AAN STANDARDS). ALL PLANTS SHALL BE TYPICAL OF THEIR SPECIES AND VARIETY, SHALL HAVE A NORMAL HABIT OF GROWTH AND SHALL BE FIRST QUALITY, SOUND, VIGOROUS, WELL-BRANCHED AND WITH HEALTHY, WELL-FURNISHED ROOT SYSTEMS. THEY SHALL BE FREE OF DISEASE, INSECT PESTS AND MECHANICAL INJURIES.

ALL PLANTS SHALL BE NURSERY GROWN AND SHALL HAVE BEEN GROWN UNDER THE SAME CLIMATE CONDITIONS AS THE LOCATION OF THIS PROJECT FOR AT LEAST TWO YEARS BEFORE PLANTING. NEITHER HEELED-IN PLANTS NOR PLANTS FROM COLD STORAGE WILL BE ACCEPTED.

3. PLANT MEASUREMENTS

ALL PLANTS SHALL CONFORM TO THE MEASUREMENTS SPECIFIED IN THE PLANT SCHEDULE AS APPROVED BY THE DESIGN REVIEW COMMITTEE (DRC).

A. CALIPER MEASUREMENTS SHALL BE TAKEN SIX INCHES (6") ABOVE GRADE FOR TREES UNDER FOUR-INCH (4") CALIPER AND TWELVE (12") ABOVE GRADE FOR TREES FOUR INCHES (4") IN CALIPER AND OVER.

B. MINIMUM BRANCHING HEIGHT FOR ALL SHADE TREES SHALL BE SIX FEET (6'), MAXIMUM EIGHT FEET (8').

C. CALIPER, HEIGHT, SPREAD AND SIZE OF BALL SHALL BE GENERALLY AS FOLLOWS:

CALIPER	HEIGHT	SPREAD	SIZE OF BALL
3" - 3.5"	14'-16'	6'-8'	32" DIAMETER
3.5"- 4"	14'-16'	8'-10'	36" DIAMETER
4" - 4.5"	16'-18'	8'-10'	40" DIAMETER
4.5"- 5"	16'-17'	10'-12'	44" DIAMETER
5" - 5.5"	16'-20'	10'-12'	48" DIAMETER
5.5"- 6"	18'-20'	12'-14'	52" DIAMETER

ALL PLANT MATERIAL SHALL GENERALLY AVERAGE THE MEDIAN FOR THE SIZE RANGES INDICATED ABOVE AS INDICATED IN THE "AAN STANDARDS".

4. PLANT IDENTIFICATION

LEGIBLE LABELS SHALL BE ATTACHED TO ALL SHADE TREES, MINOR TREES, SPECIMEN SHRUBS AND BUNDLES OR BOXES OF OTHER PLANT MATERIAL GIVING THE BOTANICAL AND COMMON NAMES, SIZE AND QUANTITY OF EACH. EACH SHIPMENT OF PLANTS SHALL BEAR CERTIFICATES OF INSPECTION AS REQUIRED BY FEDERAL, STATE AND COUNTY AUTHORITIES.

5. PLANT INSPECTION

THE DESIGN REVIEW COMMITTEE MAY, UPON REQUEST BY THE BUILDER OR DEVELOPER, AT LEAST TEN (10) DAYS PRIOR TO THE INSTALLATION OF ANY PROPOSED PLANT MATERIAL, INSPECT ALL PROPOSED PLANT MATERIAL AT THE SOURCE OF ORIGIN.

B. PLANTING METHODS

ALL PROPOSED PLANT MATERIALS THAT MEET THE SPECIFICATIONS IN SECTION A ARE TO BE PLANTED IN ACCORDANCE WITH THE FOLLOWING METHODS DURING THE PROPER PLANTING SEASONS AS DESCRIBED IN THE FOLLOWING:

1. PLANTING SEASONS

THE PLANTING OF DECIDUOUS TREES, SHRUBS AND VINES SHALL BE FROM MARCH 1ST TO JUNE 15TH AND FROM SEPTEMBER 15TH TO DECEMBER 15TH. PLANTING OF DECIDUOUS MATERIAL MAY BE CONTINUED DURING THE WINTER MONTHS PROVIDING THERE IS NO FROST IN THE GROUND AND FROST-FREE TOPSOIL PLANTING MIXTURES ARE USED.

THE PLANTING OF EVERGREEN MATERIAL SHALL BE FROM MARCH 15TH TO JUNE 15TH AND FROM AUGUST 15TH TO DECEMBER 1ST. NO PLANTING SHALL BE DONE WHEN THE GROUND IS FROZEN OR EXCESSIVELY MOIST. NO FROZEN OR WET TOPSOIL SHALL BE USED AT ANY TIME.

2. DIGGING

ALL PLANT MATERIAL SHALL BE DUG, BALLED AND BURLAPPED (B&B) IN ACCORDANCE WITH THE "AAN STANDARDS".

3. EXCAVATION OF PLANT PITS

THE LANDSCAPING CONTRACTOR SHALL EXCAVATE ALL PLANT PITS, VINE PITS, HEDGE TRENCHES AND SHRUB BEDS IN ACCORDANCE WITH THE FOLLOWING SCHEDULE:

A. LOCATIONS OF ALL PROPOSED PLANT MATERIAL SHALL BE STAKED AND APPROVED IN THE FIELD BY THE LANDSCAPE ARCHITECT BEFORE ANY OF THE PROPOSED PLANT MATERIAL IS INSTALLED BY THE LANDSCAPE CONTRACTOR.

B. ALL PITS SHALL BE GENERALLY CIRCULAR IN OUTLINE, VERTICAL SIDES; DEPTH SHALL NOT BE LESS THAN 6" DEEPER THAN THE ROOT BALL DIAMETER SHALL NOT BE LESS THAN TWO TIMES THE DIAMETER OF THE ROOT BALL AS SET FORTH IN THE FOLLOWING SCHEDULE.

C. IF AREAS ARE DESIGNATED AS SHRUB BEDS OR HEDGE TRENCHES, THEY SHALL BE EXCAVATED TO AT LEAST 18" DEPTH MINIMUM. AREAS DESIGNATED FOR GROUND COVERS AND VINES SHALL BE EXCAVATED TO AT LEAST 12" IN DEPTH MINIMUM.

D. DIAMETER AND DEPTH OF TREE PITS SHALL GENERALLY BE AS FOLLOWS:

PLANT SIZE	ROOT BALL	PIT DIA.	PIT DEPTH
3" - 3.5"CAL.	32"	64"	28"
3.5"- 4" CAL.	36"	72"	32"
4" - 4.5"CAL.	40"	80"	36"
4.5"- 5" CAL.	44"	88"	40"
5" - 5.5"CAL.	48"	96"	44"
5.5"- 6" CAL.	52"	104"	48"

A 20% COMPACTION FIGURE OF THE SOIL TO BE REMOVED IS ASSUMED AND WILL BE ALLOWED IN CALCULATION OF EXTRA TOPSOIL. THE TABULATED PIT SIZES ARE FOR PURPOSES OF UNIFORM CALCULATION AND SHALL NOT OVERRIDE THE SPECIFIED DEPTHS BELOW THE BOTTOMS OF THE ROOT BALLS.

4. STAKING, GUYING AND WRAPPING

ALL PLANT MATERIAL SHALL BE STAKED OR GUYED, AND WRAPPED IN ACCORDANCE WITH THE FOLLOWING SPECIFICATIONS:

A. STAKES: SHALL BE SOUND WOOD 2" X 2" ROUGH SAWN OAK OR SIMILAR DURABLE WOODS, OR LENGTHS, MINIMUM 7'-0" FOR MAJOR TREES AND 5'-0" MINIMUM FOR MINOR TREES.

B. WIRE AND CABLE: WIRE SHALL BE #10 GA. GALVANIZED OR BETHANIZED ANNEALED STEEL WIRE. FOR TREES OVER 3" CALIPER, PROVIDE 5/16" TURN BUCKLES, EYE AND EYE WITH 4" TAKE-UP. FOR TREES OVER 5" CALIPER, PROVIDE 3/16", 7 STRAND CABLE CADMIUM PLATED STEEL, WITH GALVANIZED "EYE" THIMBLES OF WIRE AND HOSE ON TREES UP TO 3" IN CALIPER.

C. HOSE: SHALL BE NEW, 2 PLY REINFORCED RUBBER HOSE, MINIMUM 1/2" I.D. "PLASTIC LOCK TIES" OR "PAUL'S TREES BRACES" MAY BE USED IN PLACE OF WIRE AND HOSE ON TREES UP TO 3" IN CALIPER.

D. ALL TREES UNDER 3" IN CALIPER ARE TO BE PLANTED AND STAKED IN ACCORDANCE WITH THE ATTACHED PLANTING DETAILS.

5. PLANT PRUNING, EDGING AND MULCHING

A. EACH TREE, SHRUB OR VINE SHALL BE PRUNED IN AN APPROPRIATE MANNER TO ITS PARTICULAR REQUIREMENTS, IN ACCORDANCE WITH ACCEPTED STANDARD PRACTICE. BROKEN OR BRUISED BRANCHES SHALL BE REMOVED WITH CLEAN CUTS FLUSH WITH THE ADJACENT TRUNK OR BRANCHES. ALL CUTS OVER 1" IN DIAMETER SHALL BE PAINTED WITH AN APPROVED ANTISEPTIC TREE WOUND DRESSING.

B. ALL TRENCHES AND SHRUB BEDS SHALL BE EDGED AND CULTIVATED TO THE LINES SHOWN ON THE DRAWING. THE AREAS AROUND ISOLATED PLANTS SHALL BE EDGED AND CULTIVATED TO THE FULL DIAMETER OF THE PIT. SOD WHICH HAS BEEN REMOVED AND STACKED SHALL BE USED TO TRIM THE EDGES OF ALL EXCAVATED AREAS TO THE NEAT LINES OF THE PLANT PIT SAUCERS, THE EDGES OF SHRUB AREAS, HEDGE TRENCHES AND VINE POCKETS.

C. AFTER CULTIVATION, ALL PLANT MATERIALS SHALL BE MULCHED WITH A 3" LAYER OF FINE, SHREDDED PINE BARK, PEAT MOSS, OR ANOTHER APPROVED MATERIAL OVER THE ENTIRE AREA OF THE BED OR SAUCER.

6. PLANT INSPECTION AND ACCEPTANCE

THE DESIGN REVIEW COMMITTEE SHALL BE RESPONSIBLE FOR INSPECTING ALL PLANTING PROJECTS ON A PERIODIC BASIS TO ASSURE THAT ALL WORK IS PROCEEDING IN ACCORDANCE WITH THE APPROVED PLANS AND SPECIFICATIONS.

7. PLANT GUARANTEE

ALL PLANT MATERIAL SHALL BE GUARANTEED FOR THE DURATION OF ONE FULL GROWING SEASON, AFTER FINAL INSPECTION AND ACCEPTANCE OF THE WORK IN THE PLANTING PROJECT. PLANTS SHALL BE ALIVE AND IN SATISFACTORY GROWING CONDITION AT THE END OF THE GUARANTEE PERIOD.

A. FOR THIS PURPOSE, THE "GROWING SEASON" SHALL BE THAT PERIOD BETWEEN THE END OF THE "SPRING" PLANTING SEASON, AND THE COMMENCEMENT OF THE "FALL" PLANTING SEASON.

B. GUARANTEE FOR PLANTING PERFORMED AFTER THE SPECIFIED END OF THE "SPRING" PLANTING SEASON, SHALL BE EXTENDED THROUGH THE END OF THE NEXT FOLLOWING "SPRING" PLANTING SEASON.

SODDING

ALL SODDING SHALL BE IN ACCORDANCE TO THE "LANDSCAPE SPECIFICATION GUIDELINES FOR BALTIMORE-WASHINGTON METROPOLITAN AREAS" LATEST EDITION, APPROVED BY THE LANDSCAPE CONTRACTORS ASSOCIATION OF METROPOLITAN WASHINGTON AND THE AMERICAN SOCIETY OF LANDSCAPE ARCHITECTS.

ALL SOD SHALL BE STRONGLY ROOTED SOD, NOT LESS THAN TWO YEARS OLD AND FREE OF WEEDS AND UNDESIRABLE NATIVE GRASSES. PROVIDE ONLY SOD CAPABLE OF GROWTH DEVELOPMENT WHEN PLANTED AND IN STRIPS NOT MORE THAN 18" WIDE X 4" LONG. PROVIDE SOD COMPOSED PRINCIPALLY OF IMPROVED STRAIN KENTUCKY BLUEGRASS, SUCH AS, COLUMBIA, VICTA, OR ESCORT.

DEVELOPER'S / BUILDER'S CERTIFICATE

I/WE CERTIFY THAT THE LANDSCAPING SHOWN ON THIS PLAN WILL BE DONE ACCORDING TO THE PLAN AND SECTION 16.124 OF THE HOWARD COUNTY CODE AND THE HOWARD COUNTY LANDSCAPE MANUAL. I/WE FURTHER CERTIFY THAT UPON COMPLETION, A LETTER OF LANDSCAPE INSTALLATION, ACCOMPANIED BY AN EXECUTED ONE-YEAR GUARANTEE OF PLANT MATERIALS, WILL BE SUBMITTED TO THE DEPARTMENT OF PLANNING AND ZONING.

NAME (DEVELOPER'S /BUILDER'S) — DATE 5/25/07

APPROVED: HOWARD COUNTY DEPARTMENT OF PLANNING & ZONING

Director — Date 6/1/07

Chief, Division of Land Development — Date 6/1/07

Chief, Development Engineering Division — Date 6/1/07

LANDSCAPE NOTES

1. THIS PLAN HAS BEEN PREPARED IN ACCORDANCE WITH SECTION 16.124 OF THE HOWARD COUNTY CODE & THE HOWARD COUNTY LANDSCAPE MANUAL.

2. CONTRACTOR SHALL NOTIFY ALL UTILITIES AT LEAST (5) FIVE DAYS BEFORE STARTING WORK. ALL GENERAL NOTES, ESPECIALLY THOSE REGARDING UTILITIES, ON SHEET No.1 SHALL APPLY.

3. FIELD VERIFY UNDERGROUND UTILITY LOCATIONS AND EXISTING CONDITIONS BEFORE STARTING PLANTING WORK. CONTACT CONSTRUCTION MANAGER OR OWNER IF ANY RELOCATIONS ARE REQUIRED.

4. PLANT QUANTITIES SHOWN ON THE PLAN LIST ARE PROVIDED FOR THE CONVENIENCE OF THE CONTRACTOR ONLY. IF DISCREPANCIES EXIST BETWEEN QUANTITIES SHOWN ON THE PLAN AND THOSE SHOWN ON THE PLANT LIST, THE QUANTITIES ON THE PLAN SHALL TAKE PRECEDENCE.

5. ALL PLANT MATERIAL SHALL BE FULL, HEAVY, WELL FORMED, SYMMETRICAL, AND CONFORM TO THE A.A.N. SPECIFICATIONS. IN ADDITION, ALL REQUIRED PLANTING FOR THE LANDSCAPE ISLANDS IN THE PARKING LOT SHALL CONFORM TO THE HOWARD COUNTY LANDSCAPE MANUAL. ALL PLANT MATERIAL SHALL BE INSTALLED IN ACCORDANCE WITH THE PROJECT SPECIFICATIONS AND THIS PLAN.

6. NO SUBSTITUTION SHALL BE MADE WITHOUT PRIOR APPROVAL FROM HOWARD COUNTY DPZ AND THE OWNER OR HIS REPRESENTATIVE.

7. ALL AREAS DISTURBED BY CONSTRUCTION ACTIVITIES BUT NOT OTHERWISE PLANTED, PAVED, OR MULCHED SHALL BE SODDED OR SEEDED IN ACCORDANCE WITH THE PERMANENT SEEDING SPECIFICATION. A MINIMUM OF 4" OF TOPSOIL SHALL BE PROVIDED TO ALL PLANTING AREAS.

8. THE CONTRACTOR SHALL NOTIFY THE OWNER IN WRITING IF HE/SHE ENCOUNTERS SOIL DRAINAGE CONDITIONS THAT MAY BE DETRIMENTAL TO THE GROWTH OF THE PLANTS.

9. ALL EXPOSED EARTH WITHIN THE LIMITS OF PLANTING BEDS SHALL BE MULCHED WITH SHREDDED HARDWOOD MULCH PER THE PLANTING DETAILS.

10. DO NOT PLANT WITHIN THE PUBLIC WATER, SEWER AND UTILITY EASEMENT.

11. COORDINATE THE PLANTING UNDER F-00-132 THE WORK ON THIS SITE DEVELOPMENT PLAN.

12. AT THE TIME OF INSTALLMENT, ALL SHRUBS AND OTHER PLANTINGS HEREWITH LISTED AND APPROVED FOR THIS SITE, SHALL BE OF PROPER HEIGHT REQUIREMENTS IN ACCORDANCE WITH THE HOWARD COUNTY LANDSCAPING MANUAL. IN ADDITION, NO SUBSTITUTIONS OR RELOCATION OF REQUIRED PLANTINGS MAY BE MADE WITHOUT PRIOR REVIEW AND APPROVAL FROM THE DEPARTMENT OF PLANNING AND ZONING.

13. THE OWNER, TENANT AND/OR THEIR AGENTS SHALL BE RESPONSIBLE FOR MAINTENANCE OF THE REQUIRED LANDSCAPING, INCLUDING BOTH PLANT MATERIALS AND BERMS, FENCES AND WALLS. ALL PLANT MATERIALS SHALL BE MAINTAINED IN GOOD GROWING CONDITION, AND WHEN NECESSARY, REPLACED WITH NEW MATERIALS TO ENSURE CONTINUED COMPLIANCE WITH APPLICABLE REGULATIONS. ALL OTHER REQUIRED LANDSCAPING SHALL BE PERMANENTLY MAINTAINED IN GOOD CONDITION AND WHEN NECESSARY, REPAIRED OR REPLACED.

14. SCHEDULES 'A' AND 'B' AND STREET TREE SCHEDULE ARE PROVIDED FOR LANDSCAPE SURETY CALCULATION PURPOSES. FINANCIAL SURETY FOR THE REQUIRED LANDSCAPING SHALL BE POSTED AS PART OF THE DPW DEVELOPER'S AGREEMENT IN THE AMOUNT OF $26,450.00 FOR THE FOLLOWING PLANTS:

33 PRIVATE STREET TREES AT $300/TREE	= $ 9,900.00
44 LANDSCAPE SHADE TREES AT $300/TREE	= $13,200.00
III SHRUBS AT $30/SHRUB	= $ 3,330.00

FOR LANDSCAPE INSPECTION TO OBTAIN THE RELEASE OF THE SURETY, CONTACT HOWARD COUNTY DEPT. OF PLANNING & ZONING AT 410-313-2350.

PLANT SCHEDULE

TYPE & SYMBOL	QUANT.	SELECT FROM THE FOLLOWING NAME (BOTANICAL/COMMON)	MINIMUM SIZE	REMARK
CANOPY SHADE TREE	77	ACER RUBRUM 'OCTOBER GLORY / OCTOBER GLORY RED MAPLE	2.5"-3.0" CAL.	B&B, FULL
		LIQUIDAMBAR STRACIFLUA / SWEETGUM	2.5"-3.0" CAL.	B&B, FULL
		PLATANUS OCCIDENTILIS/ SYCAMORE	2.5"-3.0" CAL.	B&B, FULL
		QUERCUS COCCINEA / SCARLET OAK	2.5"-3.0" CAL.	B&B, FULL
		QUERCUS PHELLOS / WILLOW OAK	2.5"-3.0" CAL.	B&B, FULL
		QUERCUS PALUSTRIS / PIN OAK	2.5"-3.0" CAL.	B&B, FULL
		ZELKOVA SERRATA 'VILLAGE GREEN'/ VILLAGE GREEN ZELKOVA *	2.5"-3.0" CAL.	B&B, FULL
SHRUBS ⊙	III	TAXUS MEDIA 'DENSIFORMIS' / DENSE YEW	2' - 2.5' HT.	CONT.

* THE VILLAGE GREEN ZELKOVA SHALL BE PLANTED AS THE PRIVATE STREET TREES

SCHEDULE-A: PERIMETER LANDSCAPE EDGE

PERIMETER LOCATION	COLUMBIA GATEWAY DRIVE AND BENJAMIN FRANKLIN DRIVE, PERIMETER ①	INTERNAL (ALL OTHERS)
USE SITUATION	Parking adjacent to public road	INTERNAL
LANDSCAPE BUFFER TYPE	E	N/A
LINEAR FEET OF ROADWAY FRONTAGE/PERIMETER	886' LESS 45' DRIVEWAY OPENING = 841'	N/A
CREDIT FOR EXISTING VEGETATION	NONE	N/A
CREDIT FOR WALL, FENCE OR BERM	348 LF OF 3' HIGH BERM ALONG COLUMBIA GATEWAY DRIVE	N/A
LENGTH OF PERIMETER TO BE BUFFERED	841' (FOR SHADE TREES @ 1:40) 443' (FOR SHRUBS @ 1:4, 841 - 348 = 443)	
NUMBER OF PLANTS REQUIRED SHADE TREES EVERGREEN TREES SHRUBS	21 NONE III	N/A
NUMBER OF PLANTS PROVIDED SHADE TREES EVERGREEN TREES OTHER TREES (@ 2:1 substitution) SHRUBS (10:1 substitution)	21 0 0 III	N/A

SCHEDULE B -- PARKING LOT INTERNAL LANDSCAPING

NUMBER OF PARKING SPACES	460 SPACES
NUMBER OF TREES REQUIRED	23 (1 SHADE TREE PER 20 COMMERCIAL PARKING SPACES)
NUMBER OF TREES PROVIDED SHADE TREES OTHER TREES (2:1 substitution)	23 SHADE TREES

STREET TREE SCHEDULE

LENGTH OF ROADWAY	1,317 LF (PRIVATE DRIVE BETWEEN PARCELS T23 AND T21/24)
NUMBER OF TREES REQUIRED (AT 1:40)	33* (ON EACH SIDE OR THE PRIVATE DRIVE, 66 TOTAL)
NUMBER OF TREES PROVIDED SHADE TREES OTHER TREES (2:1 substitution)	33* SHADE TREES ON THE LEFT SIDE OF THE PRIVATE DRIVE ----

* THE REMAINING 33 ON THE RIGHT SIDE OF THE PRIVATE ROAD ARE DEFERRED TO THE FUTURE SITE DEVELOPMENT PLANS FOR PARCELS T21 AND T24. THE TREES ALONG THE PRIVATE ROADWAY SHALL BE VILLAGE GREEN ZELKOVA.

THE LANDSCAPE SURETY FOR THE REQUIRED QUANTITY OF PLANTS PER SCHEDULES A & B IS $16,530.00 FOR THE FOLLOWING:

44 SHADE TREES AT $300/TREE	= $13,200.00
III SHRUBS AT $30/SHRUB	= $ 3,330.00
TOTAL SURETY	= $16,530.00

THE SURETY FOR THE 33 PRIVATE STREET TREES IS $9,900.00.

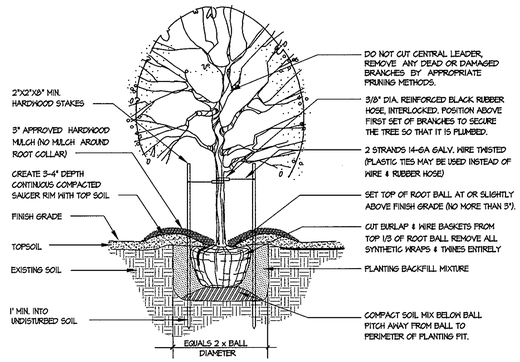

NOTE: ALL SUPPORTING DEVICES (STAKES, WIRES, ETC.) SHALL BE REMOVED AFTER 2 GROWING SEASONS.

DECIDUOUS TREE PLANTING DETAIL

FOR PLANTING MATERIAL UP TO 3 1/2" CALIPER — NTS

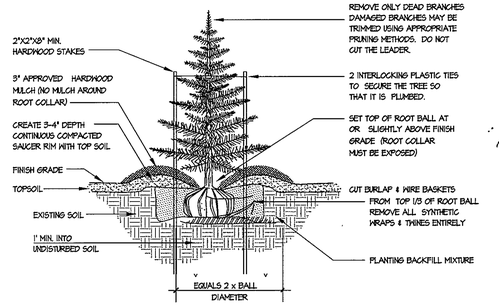

NOTE: ALL SUPPORTING DEVICES (STAKES, TIES, ETC.) SHALL BE REMOVED AFTER 2 GROWING SEASONS.

EVERGREEN TREE PLANTING DETAIL

NTS

NOTE:
SET ROOT BALL AT OR SLIGHTLY ABOVE FINISH GRADE.

CONTAINERS TO BE REMOVED PRIOR TO PLANTING. SCARIFY ROOT EDGES TO STIMULATE GROWTH.

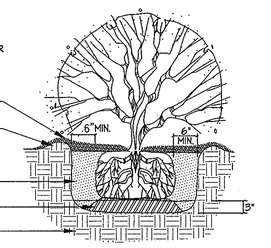

SHRUB PLANTING DETAIL

NTS

STATE OF MARYLAND
Michael B. Tran
REGISTERED LANDSCAPE ARCHITECT
989

GLW GUTSCHICK LITTLE & WEBER, P.A.
CIVIL ENGINEERS, LAND SURVEYORS, LAND PLANNERS, LANDSCAPE ARCHITECTS
3909 NATIONAL DRIVE – SUITE 250 – BURTONSVILLE OFFICE PARK
BURTONSVILLE, MARYLAND 20866
TEL: 301-421-4024 BALT: 410-880-1820 DC/VA: 301-989-2524 FAX: 301-421-4186

\DRAWINGS\05105\SDP\05105-LS-NOTES.dwg | DES. lbk | DRN. lbk | CHK. mbt

DATE	REVISION	BY	APP'R.

PREPARED FOR:

OWNER:
THE HOWARD RESEARCH AND DEVELOPMENT CORPORATION
10275 LITTLE PATUXENT PARKWAY
COLUMBIA, MD 21044
Phone: 410-992-6027
Attn.: PAUL CAVANAUGH

CONTRACT PURCHASER/DEVELOPER:
GATEWAY T23 LLC
c/o MANEKIN LLC
8601 ROBERT FULTON DRIVE, SUITE 200
COLUMBIA, MD 21046-2278
Phone: 410-423-2002
Attn.: ALEX KOPICKI

LANDSCAPING DETAILS AND NOTES

COLUMBIA GATEWAY
OFFICE BUILDING
PARCEL 'T-23'
PLAT Nos. 18967 & 19111

ELECTION DISTRICT No. 6 — HOWARD COUNTY, MARYLAND

SCALE	ZONING	G. L. W. FILE No.
AS SHOWN	M-1	06-077
DATE	TAX MAP - GRID	SHEET
MAY/2007	43 2	10 OF 11

SDP-07-083

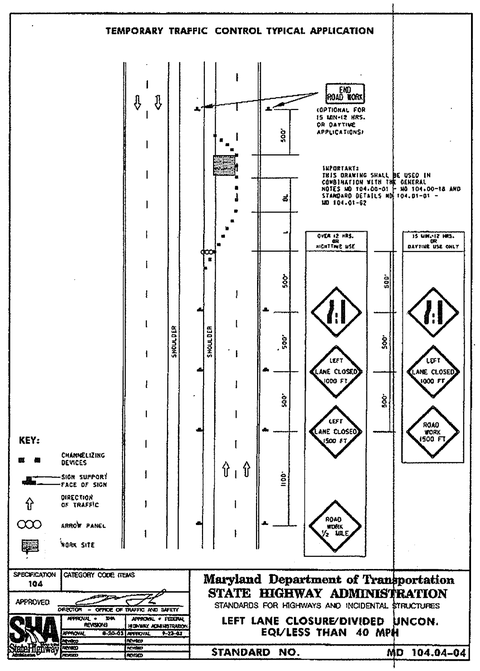

SPECIFICATION	CATEGORY CODE ITEMS
104	

APPROVED
DIRECTOR - OFFICE OF TRAFFIC AND SAFETY

	APPROVAL + SHA REVISIONS	APPROVAL + FEDERAL HIGHWAY ADMINISTRATION
APPROVAL	8-30-83	APPROVAL 7-23-93
REVISED		REVISED
REVISED		REVISED
REVISED		REVISED

Maryland Department of Transportation
STATE HIGHWAY ADMINISTRATION
STANDARDS FOR HIGHWAYS AND INCIDENTAL STRUCTURES
LEFT LANE CLOSURE/DIVIDED UNCON. EQL/LESS THAN 40 MPH
STANDARD NO. MD 104.04-04

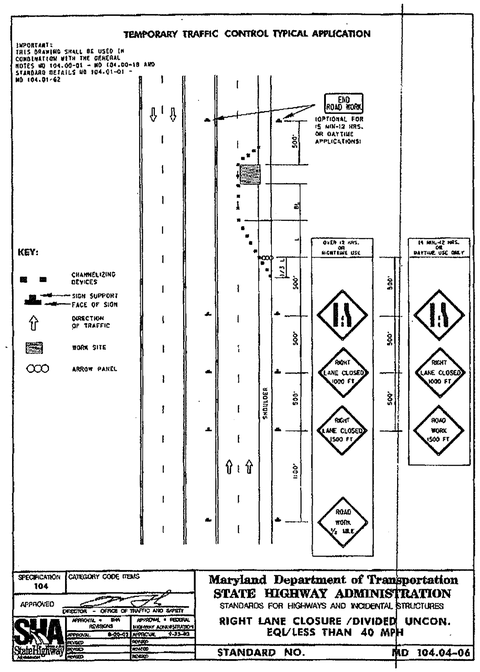

SPECIFICATION	CATEGORY CODE ITEMS
104	

APPROVED
DIRECTOR - OFFICE OF TRAFFIC AND SAFETY

	APPROVAL + SHA REVISIONS	APPROVAL + FEDERAL HIGHWAY ADMINISTRATION
APPROVAL	8-30-83	APPROVAL 7-23-93
REVISED		REVISED
REVISED		REVISED
REVISED		REVISED

Maryland Department of Transportation
STATE HIGHWAY ADMINISTRATION
STANDARDS FOR HIGHWAYS AND INCIDENTAL STRUCTURES
RIGHT LANE CLOSURE /DIVIDED UNCON. EQL/LESS THAN 40 MPH
STANDARD NO. MD 104.04-06

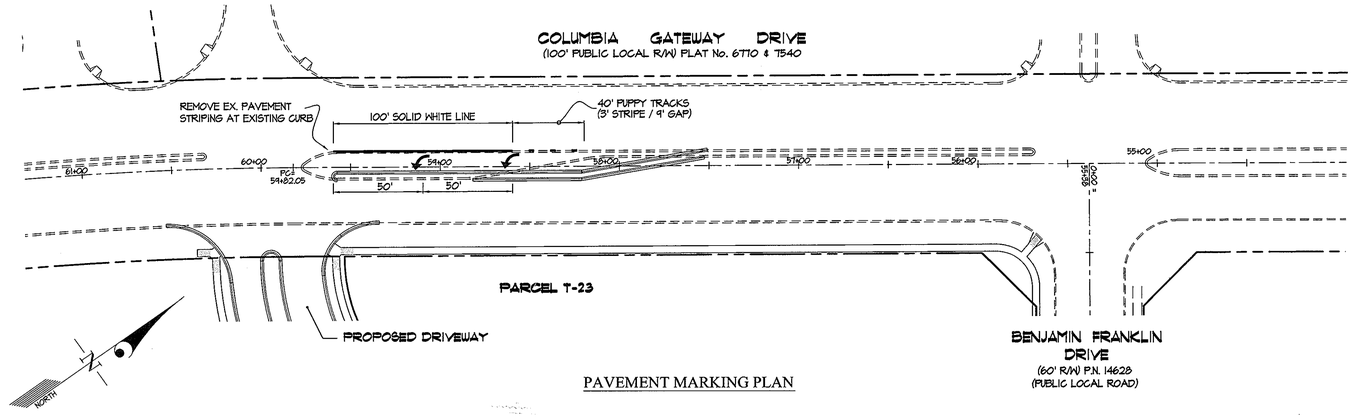

PAVEMENT MARKING PLAN

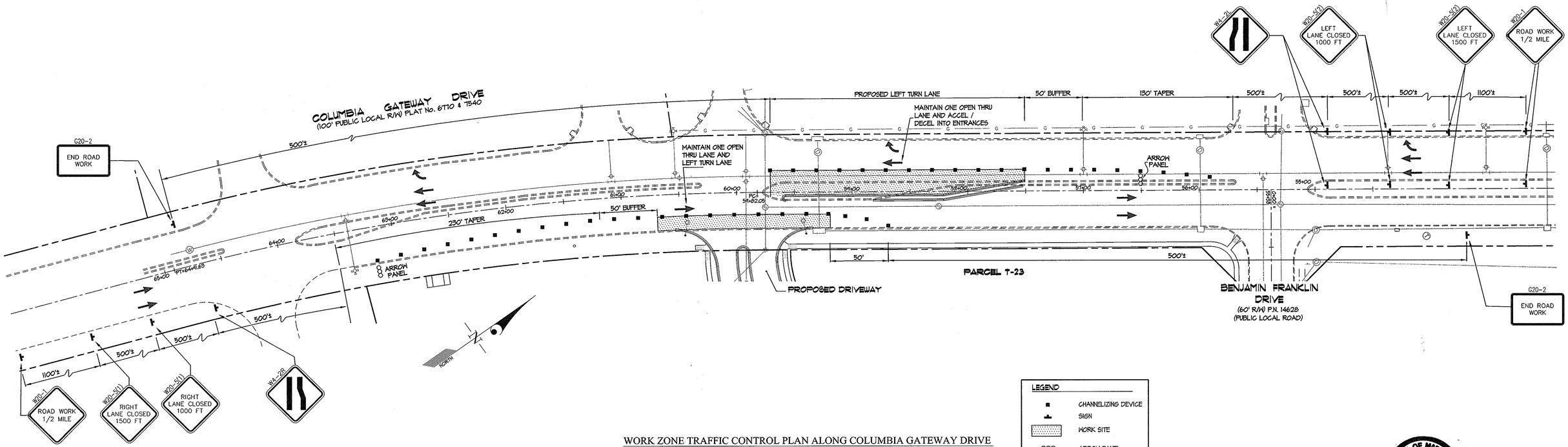

WORK ZONE TRAFFIC CONTROL PLAN ALONG COLUMBIA GATEWAY DRIVE
FOR PROPOSED LEFT TURN LANE AND PROPOSED ENTRANCE FOR PARCEL T-23

LEGEND
- CHANNELIZING DEVICE
- SIGN
- WORK SITE
- ARROW PANEL

APPROVED: HOWARD COUNTY DEPARTMENT OF PLANNING & ZONING

Director	Date 6/1/07
Chief, Division of Land Development	Date 6/1/07
Chief, Development Engineering Division	Date 6/1/07

STATE OF MARYLAND — TODD HOWARD ROSUM — No. 17906 — REGISTERED PROFESSIONAL ENGINEER
5.25.07

GLW GUTSCHICK LITTLE & WEBER, P.A.
CIVIL ENGINEERS, LAND SURVEYORS, LAND PLANNERS, LANDSCAPE ARCHITECTS
3909 NATIONAL DRIVE – SUITE 250 – BURTONSVILLE OFFICE PARK
BURTONSVILLE, MARYLAND 20866
TEL: 301-421-4024 BALT: 410-880-1820 DC/VA: 301-989-2524 FAX: 301-421-4186

L:\CADD\DRAWINGS\06077\SDP\06077-MOT.dwg | DES. TMR | DRN. KLP | CHK.

DATE	REVISION	BY	APP'R.

PREPARED FOR:

OWNER:
THE HOWARD RESEARCH AND DEVELOPMENT CORPORATION
10275 LITTLE PATUXENT PARKWAY
COLUMBIA, MD 21044
Phone: 410-992-6027
Attn.: PAUL CAVANAUGH

CONTRACT PURCHASER/DEVELOPER:
GATEWAY 123 LLC
c/o MANEKIN LLC
8501 ROBERT FULTON DRIVE, SUITE 200
COLUMBIA, MD 21046-2278
Phone: 410-423-2002
Attn.: ALEX KOPICKI

WORK ZONE TRAFFIC CONTROL PLAN / PAVEMENT MARKING PLAN

COLUMBIA GATEWAY
OFFICE BUILDING
PARCEL 'T-23'
PLAT Nos. 18967 & 19111

ELECTION DISTRICT No. 6 — HOWARD COUNTY, MARYLAND

SCALE	ZONING	G. L. W. FILE No.
1"=40'	M-1	06-077
DATE	TAX MAP – GRID	SHEET
MAY/2007	43 2	11 OF 11

SDP-07-083