# COSTCO GASOLINE

## COSTCO GASOLINE OF COLUMBIA, MARYLAND
## GATEWAY OVERLOOK SHOPPING CENTER
## PARCEL U, BENSON EAST (F 06-102)

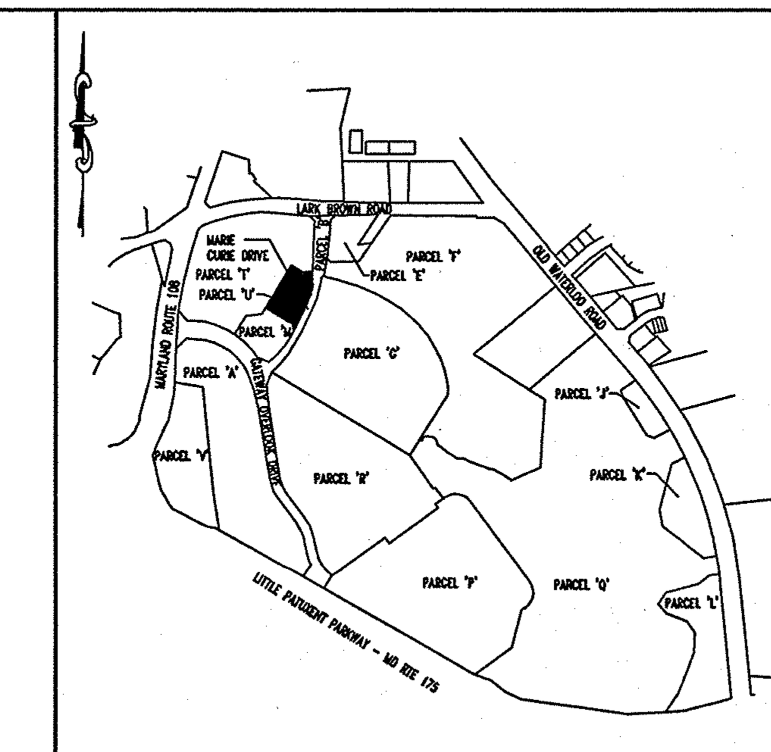


OVERALL PLAN VIEW
SCALE: 1"=700'

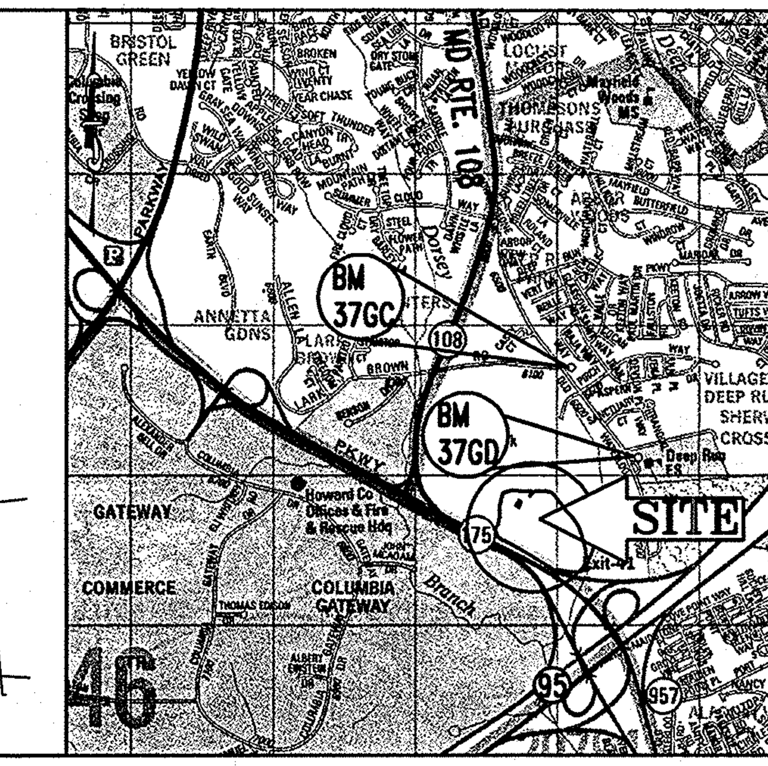


LOCATION MAP
COPYRIGHT ADC THE MAP PEOPLE
PERMIT USE NO. 20602153-5
SCALE: 1"=2000'

## LEGEND
FOR ENTIRE PLAN SET
(NOT TO SCALE)

| EXISTING | | PROPOSED |
|---|---|---|
| | ONSITE PROPERTY LINE / R.O.W. LINE | |
| | NEIGHBORING PROPERTY LINE / INTERIOR PARCEL LINE | |
| | EASEMENT LINE | |
| | SETBACK LINE | |
| | CONCRETE CURB & GUTTER | TYPICAL SPILL TRANSITION DEPRESSED |
| | STORM SEWER | |
| | SANITARY SEWER MAIN | |
| S | SANITARY SEWER LATERAL | S S |
| W | UG WATER LINE | W W |
| E | UG ELECTRIC LINE | E E |
| G | UG GAS LINE | G G |
| OH | OVERHEAD WIRE | OH OH |
| T | UG TELEPHONE LINE | T T |
| C | UG CABLE LINE | C C |
| TC 516.4 OR 516.4 | SPOT ELEVATIONS | TC 516.00 OR X 51 6 / TC 516.00 BC 515.55 |
| 516 | CONTOUR LINE | 123 |
| | HYDRANT | |
| | SANITARY MANHOLE | |
| | STORM MANHOLE | |
| WM | WATER METER | |
| | WATER VALVE | |
| GV | GAS VALVE | |
| GM | GAS METER | |
| | TYPICAL END SECTION | |
| OR | HEADWALL OR ENDWALL | OR |
| | YARD INLET | |
| | CURB INLET | |
| | CLEAN OUT | |
| SAN XXX | SANITARY LABEL | SAN XXX |
| XXX | STORM LABEL | XXX |
| | TYPICAL LIGHT | |
| | ACORN LIGHT | |
| | TRAFFIC LIGHT | |
| | UTILITY POLE | |
| | TYPICAL SIGN | |
| EXISTING NOTE | TYPICAL NOTE TEXT | PROPOSED NOTE |
| XX | PARKING COUNTS | # |
| | ELECTRIC MANHOLE | |
| | TELEPHONE MANHOLE | |
| | ELECTRIC BOX | |
| | ELECTRIC PEDESTAL | |
| | MONITORING WELL | |
| TP | TEST PIT | TP |
| | BENCHMARK | |
| | BORING | |
| | UTILITY POLE W/LIGHT | |
| | POLE LIGHT | |
| | LIMITS OF DISTURBANCE | LOD LOD |

## GENERAL NOTES:

1. THE TOPOGRAPHY FOR PARCEL U IS BASED ON A PLAN PREPARED BY PATTON HARRIS RUST AND ASSOCIATES, P.C. ENTITLED "DEVELOPERS MASS GRADING PLAN", DATED JUNE 28, 2005.
2. THE SUBJECT PROPERTY IS ZONED NEW TOWN PER THE HOWARD COUNTY COMPREHENSIVE ZONING PLAN DATED 2/2/04.
3. EXISTING USE: VACANT LOT
   PROPOSED USE: COSTCO GASOLINE STATION WITH KIOSK.
4. BUILDING HEIGHT: 8'-1-1/4" CANOPY HEIGHT: 17'-6"
   **PLEASE REFER TO KIOSK ELEVATIONS, SHEET 22.
5. REFUSE SHALL BE DISPOSED OF DAILY IN TRASH RECEPTICALS. TRASH REMOVAL WILL BE PRIVATELY CONTRACTED.
6. UTILITIES:
   WATER, PUBLIC – AN 8" WATER LINE IS LOCATED ON THE EAST SIDE OF MARIE CURIE DRIVE WITH AN 8" STUB FOR THIS SITE. CONTRACT # 24-4284 D.
   SEWER, PUBLIC – AN 8" SANITARY SEWER LINE IS LOCATED ON THE WEST SIDE OF MARIE CURIE DRIVE WITH AN 8" STUB FOR THIS SITE. CONTRACT# 24-4284 D.
   STORM DRAIN – A 15" STORM DRAINAGE LINE IS LOCATED ON THE SOUTHWEST CORNER OF THE SITE AND OUTLETS INTO A REGIONAL SWM FACILITY.
7. ELECTION DISTRICT: 6
8. DEED REFERENCE:
   PARCEL 482: LIBER 1151, FOLIO 56 LIBER 5289, FOLIO 330
   PARCEL 587: LIBER 9266, FOLIO 229
9. TAX MAP: 37, GRID: 1 & 2, PARCEL: U
10. PROPERTY IS OUTSIDE THE 100-YEAR FLOOD PLAIN (FEMA FIRM# 240044 0038 B MAP 12/4/88).
11. ALL CONSTRUCTION SHALL BE IN ACCORDANCE WITH THE LATEST STANDARDS AND SPECIFICATIONS OF HOWARD COUNTY, MDSHA STANDARDS AND SPECIFICATIONS, AND COSTCO WHOLESALE STANDARD SPECIFICATIONS.
12. THE CONTRACTOR SHALL NOTIFY THE DEPARTMENT OF PUBLIC WORKS/BUREAU OF ENGINEERING/CONSTRUCTION INSPECTION DIVISION AT (410) 313-1880 AT LEAST FIVE (5) WORKING DAYS PRIOR TO THE START OF WORK.
13. THE CONTRACTOR SHALL NOTIFY "MISS UTILITY" AT 1-800-257-7777 AT LEAST 48 HOURS PRIOR TO ANY EXCAVATION WORK.
14. TRAFFIC CONTROL DEVICES, MARKINGS, AND SIGNING SHALL BE IN ACCORDANCE WITH THE LATEST EDITION OF THE MANUAL OF UNIFORM TRAFFIC CONTROL DEVICES (MUTCD). ALL STREET AND REGULATORY SIGNS SHALL BE IN PLACE PRIOR TO THE PLACEMENT OF ANY ASPHALT.
15. ALL PLAN DIMENSIONS ARE TO FACE OF CURB UNLESS OTHERWISE NOTED.
16. THE COORDINATES SHOWN HEREON ARE BASED UPON THE HOWARD COUNTY GEODETIC CONTROL WHICH IS BASED UPON THE MARYLAND STATE PLAN COORDINATE SYSTEM. HOWARD COUNTY MONUMENT NOS. 37GD AND 37GC WERE USED FOR THIS PROJECT.
17. THERE ARE NO WETLANDS OR FLOOD PLAINS LOCATED ON THE SUBJECT SITE.
18. THERE ARE NO KNOWN BURIAL GROUNDS ON SITE.
19. THE LOCATION AND ELEVATIONS OF THE EXISTING UTILITIES SHOWN ARE APPROXIMATE. THE CONTRACTOR SHALL VERIFY THE EXISTENCE, LOCATION, AND DEPTH OF EXISTING UTILITIES IN THE WORK AREA AND NOTIFY THE ARCHITECT OF RECORD AND BOHLER ENGINEERING, P.C. OF ANY DISCREPANCIES PRIOR TO BEGINNING WORK.
20. THE CONTRACTOR WILL BE RESPONSIBLE FOR NOTIFYING THE ARCHITECT OF RECORD AND BOHLER ENGINEERING, P.C. IN THE EVENT OF ANY DISCREPANCIES ON THE PLAN OR IN THE RELATIONSHIP OF EXISTING GRADES WITH PROPOSED GRADES PRIOR TO BEGINNING WORK.
21. CONTRACTOR SHALL CONTACT THE HOWARD COUNTY CONSTRUCTION INSPECTION DIVISION 24 HOURS IN ADVANCE OF COMMENCEMENT OF WORK AT (410) 313-1880.
22. PUBLIC WATER AND SEWER ARE PROVIDED FOR THIS SITE.
23. EXISTING UTILITIES (PUBLIC WATER & PUBLIC SANITARY SEWER) ARE BY PATTON, HARRIS, RUST, AND ASSOCIATES, P.C. TITLED "WATER AND SEWER EXTENSION PLANS FOR BENSON EAST", DATED 6/08/05 (CONTRACT #24-4284-D), REVISED 4/06/06.
24. THE TRAFFIC IMPACT STUDY FOR THE OVERALL GATEWAY OVERLOOK SHOPPING CENTER WAS PREPARED BY WELLS & ASSOCIATES, LLC DATED 10/07/02 AND REVISED ON 02/20/03 AND FURTHER REVISED ON 4/13/05.
25. PRELIMINARY PLAN APPROVAL FOR THIS PROJECT WAS GRANTED PRIOR TO 12/31/92 THEREFORE, THIS PROJECT IS EXEMPT FROM FOREST CONSERVATION OBLIGATIONS IN ACCORDANCE WITH SECTION 16.1202(b)(1)(iv) OF THE FOREST CONSERVATION MANUAL.
26. LANDSCAPING IN ACCORDANCE WITH SECTION 16.124 OF THE HOWARD COUNTY CODE AND LANDSCAPE MANUAL SHALL BE PROVIDED AS SHOWN ON THE LANDSCAPE SHEET. SURETY SHALL BE POSTED WITH THE DEVELOPERS AGREEMENT, IN THE AMOUNT OF $7,200.
27. OUTDOOR LIGHTING SHALL CONFORM TO SECTION 134 OF THE ZONING REGULATIONS. (SEE SHEET NO. 20 FOR DETAILS)
28. IN ACCORDANCE WITH THE "FINAL DEVELOPMENT PLAN CRITERIA PHASE 240-A-I BENSON EAST" THERE ARE NO BUILDING SETBACKS WITHIN THE PARCEL.
29. ALL HOWARD COUNTY STORM WATER QUANTITY AND QUALITY REQUIREMENTS WILL BE MET BY AN EX. REGIONAL STORMWATER MANAGEMENT FACILITY COMPLETED UNDER SDP-04-163, DATED OCT. 18, 2004. THE STORMWATER MANAGEMENT FACILITIES PROPOSED FOR THIS SITE ARE ALL PRIVATELY OWNED AND MAINTAINED. WATER QUALITY VOLUME AND CHANNEL PROTECTION WILL BE PROVIDED IN TWO WET PONDS AND ONE MICROPOOL EXTENDED DETENTION POND. NO STORMWATER MANAGEMENT IS PROVIDED FOR RESIDENTIAL USE PARCELS ALONG OLD WATERLOO ROAD. ALL FACILITIES ARE OFFSITE EXCEPT FOR THE UNDERGROUND RECHARGE FACILITY SHOWN ONSITE AND WILL BE PRIVATELY OWNED AND MAINTAINED.
30. A KNOX BOX (FIRE DEPARTMENT ACCESS BOX) IS REQUIRED TO BE PLACED ON THE FRONT OF THE BUILDING. IT SHALL BE PLACED TO THE RIGHT OF THE MAIN ENTRANCE AT A RANGE OF 4-5' IN HEIGHT AND NO MORE THEN 6' LATERALLY FROM THE DOOR. THE BOX SHALL BE ELECTRONICALLY SUPERVISED TO NOTIFY THE OWNER THAT IT IS BEING ACCESSED (INTEGRATED WITH THE FIRE ALARM SYSTEM NFPA-1 10.12.1.)
31. SHARED ACCESS EASEMENTS BETWEEN PARCEL U AND PARCELS M AND T SHALL BE RECORDED IN THE LAND RECORDS OF HOWARD COUNTY, MARYLAND FOR THIS SITE.
32. IN ACCORDANCE WITH FDP 240-A-I, THIS SITE MAY ONLY BE FOR A COSTCO GASOLINE STATION AND SHALL ONLY BE UTILIZED BY CUSTOMERS WITH A MEMBER CARD TO ACCESS GAS. THE NUMBER OF GAS PUMPS SHALL NOT EXCEED SIX (6) PUMPS AND THE GAS STATION SHALL NOT PROVIDE AUTOMOBILE SERVICES, CONVENIENCE STORE OR A CAR WASH.
33. LIMIT OF DISTURBANCE FOR REV. 3 UPDATES: 12,150 SF.

## BENCHMARK

BM 37GD — GEODETIC SURVEY CONTROL #37GD
N 553,237.204
E 1,372,353.605
ELEV. 290.931'
LOCATED 30' EAST OF FIRE HYDRANT ACROSS FROM DEEP RUN ELEMENTARY SCHOOL

BM 37GC — GEODETIC SURVEY CONTROL #37GC
N 553,250.791
E 1,370,946.348
ELEV. 331.855'
LOCATED ON THE SOUTH SIDE OF WATERLOO ROAD ACROSS FROM DEEP RUN PARKWAY

## SHEET INDEX


1 COVER SHEET
2 GENERAL NOTES
3 OVERALL SITE PLAN
4 EXISTING CONDITIONS AND DEMOLITION PLAN
5 DETAILED SITE PLAN
6 GRADING AND DRAINAGE PLAN
7 UTILITY PLAN
8-9 UTILITY PROFILES
10 SWM DRAINAGE AREA MAPS
11 STORMDRAIN DRAINAGE AREA MAPS
12 STORMWATER MANAGEMENT DETAILS
13 EROSION AND SEDIMENT CONTROL PLAN
14 EROSION AND SEDIMENT CONTROL NOTES AND DETAILS
15 EROSION AND SEDIMENT CONTROL NOTES AND DETAILS
16 CONSTRUCTION DETAILS
17 CONSTRUCTION DETAILS
18 LANDSCAPE PLAN
19 LANDSCAPE NOTES AND DETAILS
20 LIGHTING PLAN
21 IRRIGATION PLAN
22 ARCHITECTURAL ELEVATIONS
23 JELLYFISH ® FILTER STORMWATER DETAILS


## APPLICANT

COSTCO WHOLESALE
45940 HORSESHOE DRIVE, SUITE 150
STERLING, VA 20166
ATTN: ERICH BRANN
PHONE: (703) 406-6862

## SITE ANALYSIS DATA CHART

A. TOTAL PROJECT AREA: 46,157 S.F. OR 1.0596 AC.
B. LIMIT OF DISTURBED AREA: 42,880 S.F. OR 0.98 AC.
C. PRESENT ZONING: NT (NEW TOWN) DISTRICT – EMPLOYMENT CENTER COMMERCIAL
D. PROPOSED USE: COSTCO GASOLINE WITH KIOSK.
E. KIOSK FLOOR AREA: 196 S.F.
F. TOTAL NUMBER OF UNITS ALLOWED FOR PROJECT: N/A.
G. TOTAL NUMBER OF UNITS PROPOSED ON SUBMISSION: N/A.
H. MAXIMUM NUMBER OF EMPLOYEES: ONE (1).
   MAXIMUM NUMBER OF TENANTS: ONE (1).
I. PARKING SPACES REQUIRED:
   ONE PER EMPLOYEE
J. PARKING SPACES PROVIDED:
   2 SPACES PROVIDED ON-SITE (INCLUDING 1 HANDICAP SPACE).
K. GREEN SPACE ON SITE: 0.37 AC. OR 35.0% OF SITE AREA.
K. AREA OF RECREATION OPEN SPACE REQUIRED: N/A.
L. BUILDING COVERAGE ON SITE: 196 S.F. OR 0.4% OF SITE AREA.
M. APPLICABLE DPZ FILE REFERENCE: F-05-58, SDP-04-163/24-4284-D, F-06 102, S03-05, PB 373 AND FDP-240-A, SDP # 06-111, SDP-06-072, SDP-06-108, FDP 240-A-I, PB 375

| ADDRESS CHART | |
|---|---|
| LOT/PARCEL # | STREET ADDRESS |
| U | 6670 MARIE CURIE DRIVE |
| | |
| | |

PERMIT INFORMATION CHART

| PROJECT NAME: BENSON EAST | | | SECTION/AREA: X | | LOT/PARCEL #: PARCEL U |
|---|---|---|---|---|---|
| PLAT RECORDATION: 18444 TO 18450 | BLOCK #: 20 | ZONING: NEW TOWN | TAX MAP #: 37 | ELECT. DISTR.: 6TH | CENSUS TRACT: 6067.03 |
| WATER CODE: D 06 | | | SEWER CODE: 3390000 | | |

| REV. | DATE | DESCRIPTION | BY |
|---|---|---|---|
| 3 | 1/20/14 | REVISED LAYOUT: NEW PUMPS & CANOPY, RELOC. BUS STOP & WALK. UTILITY UPDATES | AJG |
| 2 | 10/31/11 | 400 L,500 FUEL ADDITIVE TANK | Bohler |
| 1 | 9/12/07 | EX. ELEC. LINE & TRANSFORMER; PROP. SCREEN WALL | Bohler |
| 1 | 9/12/07 | IRRIGATION WATERLINE AND METER | Bohler |

OWNER/DEVELOPER: HRD LAND HOLDINGS, INC.
HOWARD RESEARCH AND DEVELOPMENT CORPORATION
THE ROUSE BUILDING
10275 LITTLE PATUXENT PARKWAY
COLUMBIA, MARYLAND 21044
PHONE: (410) 992-6000

PROJECT: BENSON EAST
PARCEL U; GASOLINE STATION WITH KIOSK (COSTCO GASOLINE); GATEWAY OVERLOOK SHOPPING CENTER

AREA: TAX MAP 37 GRID 1 & 2 ZONED NEW TOWN
PARCEL U
BENSON EAST
6TH ELECTION DISTRICT
HOWARD COUNTY, MARYLAND

TITLE: COVER SHEET

BOHLER ENGINEERING, P.C.
• PROFESSIONAL ENGINEERING SERVICES •
• 22630 DAVIS DRIVE, SUITE 200 STERLING, VIRGINIA, 20164 •
• CONTACT: DAVID B. NEMECEK
• (703) 709-9500 FAX: (703) 709-9501 | • WWW.BOHLERENG.COM

6/26/07
ADAM J. VOLANTH
PROFESSIONAL ENGINEER NO. 21342

| | |
|---|---|
| DESIGNED BY: | J.A.D. |
| DRAWN BY: | R.F.G. |
| PROJECT NO.: | S040011.01 |
| DATE: | 6/25/07 |
| SCALE: | AS SHOWN |
| DRAWING NO.: | 1 OF 23 |

PROFESSIONAL CERTIFICATION
I, MICHAEL J. GESELL, HEREBY CERTIFY THAT THESE DOCUMENTS WERE PREPARED OR APPROVED BY ME AND THAT I AM A DULY LICENCED PROFESSIONAL ENGINEER UNDER THE LAWS OF THE STATE OF MARYLAND LICENSE NO. 44097, EXPIRATION DATE: 6/9/15
FOR REVISION 3 ONLY:
9/20/14

△2 FOR REVISION 2
BOHLER ENGINEERING
11/8/11

PROFESSIONAL CERTIFICATION
I, MATTHEW T. ALLEN, CERTIFY THAT THESE DOCUMENTS WERE PREPARED OR APPROVED BY ME, AND THAT I AM A DULY LICENSED PROFESSIONAL ENGINEER UNDER THE LAWS OF THE STATE OF MARYLAND, LICENSE NO. 28567, EXPIRATION DATE 4/16/13.

△1 FOR REVISION 1
BOHLER ENGINEERING P.C.

PLANNING BOARD APPROVAL STAMP

APPROVED
PLANNING BOARD
of HOWARD COUNTY
DATE 2-08-07

APPROVED: DEPARTMENT OF PLANNING AND ZONING
CHIEF-DEVELOPMENT ENGINEERING DIVISION 7/5/07 DATE
CHIEF-DIVISION OF LAND DEVELOPMENT 7/16/07 DATE
DIRECTOR 7/17/07 DATE

APPROVED: FOR PUBLIC WATER AND PUBLIC SEWERAGE SYSTEMS.
COUNTY HEALTH OFFICER 7/13/07 DATE
HOWARD COUNTY HEALTH DEPARTMENT

## ISSUED FOR CONSTRUCTION

SIGNATURE DATE SIGNATURE DATE SIGNATURE DATE

THIS DOCUMENT IS NOT ISSUED BY BOHLER ENGINEERING, P.C. FOR CONSTRUCTION WITHOUT (3) SIGNATURES

BEPC PROJECT # ________ REVISION #/DATE ________

GENERAL NOTE:
IT IS THE RESPONSIBILITY OF THE CONTRACTOR TO REVIEW ALL OF THE DRAWINGS AND SPECIFICATIONS ASSOCIATED WITH THIS PROJECT WORK SCOPE PRIOR TO THE INITIATION OF CONSTRUCTION. SHOULD THE CONTRACTOR FIND A CONFLICT WITH THE DOCUMENTS RELATIVE TO THE SPECIFICATIONS OR APPLICABLE CODES, IT IS THE CONTRACTORS RESPONSIBILITY TO NOTIFY BOHLER ENGINEERING, P.C. IN WRITING PRIOR TO THE START OF CONSTRUCTION. FAILURE BY THE CONTRACTOR TO NOTIFY BOHLER ENGINEERING, P.C. SHALL CONSTITUTE ACCEPTANCE OF FULL RESPONSIBILITY BY THE CONTRACTOR TO COMPLETE THE SCOPE OF THE WORK AS DEFINED BY THE DRAWINGS AND IN FULL CONFORMANCE WITH LOCAL REGULATIONS AND CODES.

PREPARED BY:
# BOHLER ENGINEERING, P.C.
22630 DAVIS DRIVE, SUITE 200
STERLING, VIRGINIA 20164
(703) 709-9500

MISS UTILITY
DIG WITH C.A.R.E. — CALL MISS UTILITY — KEEP MARYLAND SAFE
BEFORE YOU DIG CALL
1-800-257-7777
PROTECT YOURSELF, GIVE TWO WORKING DAYS NOTICE

THIS DRAWING DOES NOT INCLUDE NECESSARY COMPONENTS FOR CONSTRUCTION SAFETY. ALL CONSTRUCTION MUST BE DONE IN COMPLIANCE WITH THE OCCUPATIONAL SAFETY AND HEALTH ACT OF 1970 AND ALL RULES AND REGULATIONS THERETO APPURTENANT.

THE CONTRACTOR TO CALL MISS UTILITY TO HAVE ALL EXISTING UTILITIES MARKED 48 HOURS PRIOR TO ANY CONSTRUCTION.

SDP 07-36

## DEMOLITION NOTES

1. ALL DEMOLITION ACTIVITIES ARE TO BE PERFORMED IN ACCORDANCE WITH THESE PLANS AND SPECIFICATIONS AS WELL AS ALL FEDERAL, STATE AND LOCAL REGULATIONS. ANY DISCREPANCIES OR DEVIATIONS SHALL BE IDENTIFIED BY THE CONTRACTOR TO BOHLER ENGINEERING, P.C. IN WRITING FOR RESOLUTION PRIOR TO INITIATION OF SITE ACTIVITY.

2. PRIOR TO STARTING ANY DEMOLITION CONTRACTOR IS RESPONSIBLE FOR/TO:

   A. ENSURING THAT COPIES OF ALL APPLICABLE PERMITS AND APPROVALS ARE MAINTAINED ON SITE AND AVAILABLE FOR REVIEW.

   B. INSTALLING THE REQUIRED SOIL EROSION AND SEDIMENT CONTROL AND/OR TREE PROTECTION MEASURES PRIOR TO SITE DISTURBANCE.

   C. LOCATING (VERTICALLY AND HORIZONTALLY) ALL UTILITIES AND SERVICES, INCLUDING, BUT NOT LIMITED TO GAS, WATER, ELECTRIC, SANITARY AND STORM SEWER, TELEPHONE, CABLE, FIBER OPTIC CABLE, ETC. WITHIN THE LIMITS OF DISTURBANCE. THE CONTRACTOR SHALL USE AND COMPLY WITH THE REQUIREMENTS OF THE APPLICABLE UTILITY NOTIFICATION SYSTEM TO LOCATE ALL THE UNDERGROUND UTILITIES.

   D. PROTECTING AND MAINTAINING IN OPERATION, ALL ACTIVE SYSTEM THAT ARE NOT BEING REMOVED DURING ALL DEMOLITION ACTIVITIES.

   E. FAMILIARIZING THEMSELVES WITH THE APPLICABLE UTILITY SERVICE PROVIDER AND IS RESPONSIBLE FOR ALL COORDINATION REGARDING UTILITY DEMOLITION REQUIRED FOR THE PROJECT. THE CONTRACTOR SHALL PROVIDE THE OWNER WRITTEN NOTIFICATION THAT THE EXISTING UTILITIES AND SERVICES HAVE BEEN TERMINATED AND ABANDONED IN ACCORDANCE WITH JURISDICTION AND UTILITY COMPANY REQUIREMENTS.

   F. COORDINATION WITH UTILITY COMPANIES REGARDING WORKING "OFF-PEAK" HOURS OR ON WEEKENDS AS MAY BE REQUIRED TO MINIMIZE THE IMPACT ON THE AFFECTED PARTIES.

   G. A COMPLETE INSPECTION FOR CONTAMINANTS BY A LICENSED ENVIRONMENTAL TESTING AGENCY, OF ALL BUILDINGS AND/OR STRUCTURES TO BE REMOVED. SAME SHALL BE PERFORMED IN ACCORDANCE WITH ALL APPLICABLE LOCAL, STATE, AND FEDERAL ENVIRONMENTAL REGULATIONS. ANY/ALL CONTAMINANTS SHALL BE REMOVED AND DISPOSED OF BY A FEDERALLY LICENSED CONTRACTOR IN ACCORDANCE WITH FEDERAL, STATE, AND LOCAL REGULATIONS. ALL ENVIRONMENTAL WORK INCLUDING HAZARDOUS MATERIAL, SOILS, ASBESTOS, OR OTHER REFERENCED OR IMPLIED HEREIN IS THE SOLE RESPONSIBILITY OF THE OWNER'S ENVIRONMENTAL CONSULTANT.

3. BOHLER ENGINEERING P.C. IS NOT RESPONSIBLE FOR JOB SITE SAFETY OR SUPERVISION. CONTRACTOR IS TO PROCEED WITH THE DEMOLITION IN A SYSTEMATIC AND SAFE MANNER, FOLLOWING ALL THE OSHA REQUIREMENTS, TO ENSURE PUBLIC AND CONTRACTOR SAFETY.

4. THE CONTRACTOR SHALL PROVIDE ALL THE "MEANS AND METHODS" NECESSARY TO PREVENT MOVEMENT, SETTLEMENT, OR COLLAPSE OF EXISTING STRUCTURES, AND ANY OTHER IMPROVEMENTS THAT ARE REMAINING ON OR OFF SITE. THE DEMOLITION CONTRACTOR IS RESPONSIBLE FOR ALL REPAIRS OF DAMAGE TO ALL ITEMS THAT ARE TO REMAIN AS A RESULT OF HIS ACTIVITIES. ALL REPAIRS SHALL USE NEW MATERIAL. THE REPAIRS SHALL RESTORE THE ITEM TO THE PRE-DEMOLITION CONDITION.

5. IN THE ABSENCE OF SPECIFICATIONS, THE CONTRACTOR SHALL PERFORM EARTH MOVEMENT ACTIVITIES, DEMOLITION AND REMOVAL OF ALL FOUNDATION WALLS, FOOTINGS, AND OTHER MATERIALS WITHIN THE LIMITS OF DISTURBANCE IN ACCORDANCE WITH DIRECTION BY OWNER'S STRUCTURAL OR GEOTECHNICAL ENGINEER.

6. EXPLOSIVES SHALL NOT BE USED WITHOUT PRIOR WRITTEN CONSENT OF BOTH THE OWNER AND APPLICABLE GOVERNMENTAL AUTHORITIES. ALL THE REQUIRED PERMITS AND EXPLOSIVE CONTROL MEASURES THAT ARE REQUIRED BY THE FEDERAL, STATE, AND LOCAL GOVERNMENTS SHALL BE IN PLACE PRIOR TO STARTING AN EXPLOSIVE PROGRAM. THE CONTRACTOR IS ALSO RESPONSIBLE FOR ALL INSPECTION AND SEISMIC VIBRATION TESTING THAT IS REQUIRED TO MONITOR THE EFFECTS ON ALL LOCAL STRUCTURES.

7. CONTRACTOR SHALL PROVIDE TRAFFIC CONTROL AND GENERALLY ACCEPTED SAFE PRACTICES IN CONFORMANCE WITH: THE "MANUAL ON UNIFORM TRAFFIC CONTROL," AS WELL AS FEDERAL, STATE, AND LOCAL REGULATIONS WHEN DEMOLITION RELATED ACTIVITIES IMPACT ROADWAYS OR ROADWAY RIGHTS – OF – WAY.

8. CONDUCT DEMOLITION ACTIVITIES IN SUCH A MANNER TO ENSURE MINIMUM INTERFERENCE WITH ROADS, STREETS, SIDEWALKS, WALKWAYS, AND OTHER ADJACENT FACILITIES. STREET CLOSURE PERMITS MUST BE RECEIVED FROM THE APPROPRIATE GOVERNMENTAL AUTHORITY.

9. DEMOLITION ACTIVITIES AND EQUIPMENT SHALL NOT USE AREAS OUTSIDE THE DEFINED PROPERTY LINE WITHOUT WRITTEN PERMISSION OF THE APPLICABLE PROPERTY OWNER, AND/OR APPROPRIATE GOVERNMENT AGENCY.

10. USE DUST CONTROL MEASURES TO LIMIT AIRBORNE DUST AND DIRT RISING AND SCATTERING IN THE AIR IN ACCORDANCE WITH FEDERAL, STATE, AND/OR LOCAL STANDARDS. AFTER THE DEMOLITION IS COMPLETE, ADJACENT STRUCTURES AND IMPROVEMENTS SHALL BE CLEANED OF ALL DUST AND DEBRIS CAUSED BY THE DEMOLITION OPERATIONS. THE CONTRACTOR IS RESPONSIBLE FOR RETURNING ALL ADJACENT AREAS TO THEIR "PRE-DEMOLITION" CONDITION.

11. CONTRACTOR IS RESPONSIBLE TO SAFEGUARD SITE AS NECESSARY TO PERFORM THE DEMOLITION IN SUCH A MANNER AS TO PREVENT THE ENTRY OF UNAUTHORIZED PERSONS AT ANY TIME.

12. THIS DEMOLITION PLAN IS INTENDED TO IDENTIFY THOSE EXISTING ITEMS/CONDITIONS WHICH ARE TO BE REMOVED. IT IS NOT INTENDED TO PROVIDE DIRECTION OTHER THAN THAT ALL METHODS AND MEANS ARE TO BE IN ACCORDANCE WITH STATE, FEDERAL, LOCAL, AND JURISDICTIONAL REQUIREMENTS. THE CONTRACTOR SHALL BE RESPONSIBLE FOR ALL OSHA AND OTHER SAFETY PRECAUTIONS NECESSARY TO PROVIDE A SAFE WORK SITE.

13. DEBRIS SHALL NOT BE BURIED ON THE SUBJECT SITE. ALL DEMOLITION WASTES AND DEBRIS (SOLID WASTE) SHALL BE DISPOSED OF IN ACCORDANCE WITH ALL TOWN, COUNTY, STATE, AND FEDERAL LAWS AND APPLICABLE CODES.

## GRADING & UTILITY NOTES

1. LOCATION OF ALL EXISTING AND PROPOSED SERVICES ARE APPROXIMATE AND MUST BE CONFIRMED INDEPENDENTLY WITH LOCAL UTILITY COMPANIES PRIOR TO COMMENCEMENT OF ANY CONSTRUCTION OR EXCAVATION. SANITARY SEWER AND ALL OTHER UTILITY SERVICE CONNECTION POINTS SHALL BE CONFIRMED INDEPENDENTLY BY THE CONTRACTOR IN FIELD PRIOR TO THE COMMENCEMENT OF CONSTRUCTION. ALL DISCREPANCIES SHALL BE REPORTED IMMEDIATELY IN WRITING TO BOHLER ENGINEERING, P.C.. CONSTRUCTION SHALL COMMENCE BEGINNING AT THE LOWEST INVERT (POINT OF CONNECTION) AND PROGRESS UP GRADIENT. ALL PROPOSED INTERFACE POINTS (CROSSINGS) WITH EXISTING UNDERGROUND UTILITIES SHALL BE FIELD VERIFIED BY TEST PIT PRIOR TO COMMENCEMENT OF CONSTRUCTION.

2. ALL UTILITIES AND SERVICES INCLUDING BUT NOT LIMITED TO GAS, WATER, ELECTRIC, SANITARY AND STORM SEWER, TELEPHONE, CABLE, FIBER OPTIC CABLE, ETC. WITHIN THE LIMITS OF DISTURBANCE SHALL BE VERTICALLY AND HORIZONTALLY LOCATED. THE CONTRACTOR SHALL USE AND COMPLY WITH THE REQUIREMENTS OF THE APPLICABLE UTILITY NOTIFICATION SYSTEM TO LOCATE ALL THE UNDERGROUND UTILITIES. THE CONTRACTOR IS RESPONSIBLE FOR REPAIRS OF DAMAGE TO ANY EXISTING UTILITIES DURING CONSTRUCTION AT NO COST TO THE OWNER.

3. IT IS THE RESPONSIBILITY OF THE CONTRACTOR TO REVIEW ALL OF THE DRAWINGS AND SPECIFICATIONS ASSOCIATED WITH THE PROJECT WORK SCOPE PRIOR TO THE INITIATION OF CONSTRUCTION. SHOULD THE CONTRACTOR FIND A CONFLICT WITH THE DOCUMENTS RELATIVE TO THE SPECIFICATIONS OR THE RELATIVE CODES, IT IS THE CONTRACTOR'S RESPONSIBILITY TO NOTIFY BOHLER ENGINEERING, P.C. OF RECORD IN WRITING PRIOR TO THE START OF CONSTRUCTION. FAILURE BY THE CONTRACTOR TO NOTIFY BOHLER ENGINEERING, P.C. SHALL CONSTITUTE ACCEPTANCE OF FULL RESPONSIBILITY BY THE CONTRACTOR TO COMPLETE THE SCOPE OF WORK AS DEFINED BY THE DRAWINGS AND IN FULL COMPLIANCE WITH LOCAL REGULATIONS AND CODES.

4. DEFINE AND LOCATE VERTICALLY AND HORIZONTALLY ALL ACTIVE UTILITY AND/OR SERVICE SYSTEMS THAT ARE TO BE REMOVED. THE CONTRACTOR IS RESPONSIBLE TO PROTECT AND MAINTAIN ALL ACTIVE SYSTEMS THAT ARE NOT BEING REMOVED/RELOCATED DURING SITE ACTIVITY.

5. THE CONTRACTOR SHALL FAMILIARIZE THEMSELVES WITH THE APPLICABLE UTILITY SERVICE PROVIDER REQUIREMENTS AND IS RESPONSIBLE FOR ALL COORDINATION REGARDING UTILITY DEMOLITION AS IDENTIFIED OR REQUIRED FOR PROJECT. THE CONTRACTOR SHALL PROVIDE THE OWNER WRITTEN NOTIFICATION THAT THE EXISTING UTILITIES AND SERVICES HAVE BEEN TERMINATED AND ABANDONED IN ACCORDANCE WITH JURISDICTION AND UTILITY COMPANY REQUIREMENTS.

6. CONTRACTOR IS RESPONSIBLE FOR COORDINATION OF SITE PLAN DOCUMENTS AND ARCHITECTURAL DESIGN FOR EXACT BUILDING UTILITY CONNECTION LOCATIONS, OIL/WATER SEPERATOR REQUIREMENTS/DETAILS, DOOR ACCESS, AND EXTERIOR GRADING. THE UTILITY SERVICE SIZES ARE TO BE DETERMINED BY THE ARCHITECT. THE CONTRACTOR SHALL COORDINATE INSTALLATION OF UTILITIES/SERVICES WITH THE INDIVIDUAL COMPANIES, TO AVOID CONFLICTS AND ENSURE PROPER DEPTHS ARE ACHIEVED. THE JURISDICTION UTILITY REQUIREMENTS SHALL ALSO BE MET, AS WELL AS COORDINATING THE UTILITY TIE-INS/CONNECTIONS PRIOR TO CONNECTING TO THE EXISTING UTILITY/SERVICE. WHERE CONFLICTS EXIST WITH THESE SITE PLANS, BOHLER ENGINEERING, P.C. IS TO BE NOTIFIED PRIOR TO CONSTRUCTION TO RESOLVE SAME.

7. WATER SERVICE MATERIALS, BURIAL DEPTH, AND COVER REQUIREMENTS SHALL BE SPECIFIED BY THE LOCAL UTILITY COMPANY. CONTRACTOR'S PRICE FOR WATER SERVICE SHALL INCLUDE ALL FEES AND APPURTENANCES REQUIRED BY THE UTILITY TO PROVIDE A COMPLETE WORKING SERVICE.

8. ALL NEW UTILITIES/SERVICES, INCLUDING ELECTRIC, TELEPHONE, CABLE TV, ETC. ARE TO BE INSTALLED UNDERGROUND. ALL NEW UTILITIES/SERVICES SHALL BE INSTALLED IN ACCORDANCE WITH THE UTILITY/SERVICE PROVIDER INSTALLATION SPECIFICATIONS AND STANDARDS.

9. SITE GRADING SHALL BE PERFORMED IN ACCORDANCE WITH THESE PLANS AND SPECIFICATIONS AND THE RECOMMENDATIONS SET FORTH IN THE GEOTECHNICAL REPORT PREPARE BY WHITESTONE ASSOCIATES, INC.; DATED OCTOBER 20,2005; ENTITLED: REPORT OF GEOTECHNICAL INVESTIGATION-PROPOSED COSTCO WHOLESALE SITE-MARYLAND INTERSATE I-95 AND LITTLE PATUXENT-PARKWAY (MARYLAND ROUTE 175)-COLUMBIA, HOWARD COUNTY, MARYLAND; PROJECT NO.: WP05-7961. THE CONTRACTOR SHALL BE RESPONSIBLE FOR REMOVING AND REPLACING WITH SUITABLE MATERIALS AS SPECIFIED IN THE GEOTECHNICAL REPORT. ALL EXCAVATED OR FILLED AREAS SHALL BE COMPACTED AS OUTLINED IN THE GEOTECHNICAL REPORT. MOISTURE CONTENT AT TIME OF PLACEMENT SHALL BE SUBMITTED IN COMPACTION REPORT PREPARED BY A QUALIFIED GEOTECHNICAL ENGINEER, REGISTERED WITH THE STATE WHERE THE WORK IS PERFORMED, VERIFYING THAT ALL FILLED AREAS AND SUBGRADE AREAS WITHIN THE BUILDING PAD AREA AND AREAS TO BE PAVED HAVE BEEN COMPACTED IN ACCORDANCE WITH THESE PLANS AND SPECIFICATIONS AND THE RECOMMENDATIONS SET FORTH IN THE GEOTECHNICAL REPORT. SUBBASE MATERIAL FOR SIDEWALKS, CURB, OR ASPHALT SHALL BE FREE OF ORGANICS AND OTHER UNSUITABLE MATERIALS. SHOULD SUBBASE BE DEEMED UNSUITABLE BY OWNER OR OWNER'S REPRESENTATIVE, SUBBASE IS TO BE REMOVED AND FILLED WITH APPROVED FILL MATERIAL COMPACTED AS DIRECTED BY THE GEOTECHNICAL REPORT.

10. ALL FILL, COMPACTION, AND BACKFILL MATERIALS REQUIRED FOR UTILITY INSTALLATION SHALL BE IN CONFORMANCE WITH THE GEOTECHNICAL REPORT AND SHALL ALSO BE COORDINATED WITH THE APPLICABLE UTILITY COMPANY SPECIFICATIONS.

11. THE CONTRACTOR SHALL COMPLY TO THE FULLEST EXTENT WITH THE LATEST OSHA STANDARDS AND REGULATIONS, OR ANY OTHER AGENCY HAVING JURISDICTION FOR EXCAVATION AND TRENCHING PROCEDURES. THE CONTRACTOR IS RESPONSIBLE FOR DETERMINING THE "MEANS AND METHODS" REQUIRED TO MEET THE INTENT AND PERFORMANCE CRITERIA OF OSHA, AS WELL AS ANY OTHER ENTITY THAT HAS JURISDICTION FOR EXCAVATION AND/OR TRENCHING PROCEDURES.

12. PAVEMENT SHALL BE SAW CUT IN STRAIGHT LINES TO THE FULL DEPTH OF THE EXISTING PAVEMENT. ALL DEBRIS FROM REMOVAL OPERATIONS SHALL BE REMOVED FROM THE SITE AT THE TIME OF EXCAVATION. STOCKPILING OF DEBRIS WILL NOT BE PERMITTED.

13. THE TOPS OF EXISTING MANHOLES, INLET STRUCTURES, AND SANITARY CLEANOUT TOPS SHALL BE ADJUSTED, IF REQUIRED, TO MATCH PROPOSED GRADES IN ACCORDANCE WITH ALL APPLICABLE STANDARDS.

14. THE CONTRACTOR IS RESPONSIBLE FOR VERIFICATION OF EXISTING TOPOGRAPHIC INFORMATION AND UTILITY INVERT ELEVATIONS PRIOR TO COMMENCEMENT OF ANY CONSTRUCTION. CONTRACTOR TO ENSURE 0.75% MINIMUM SLOPE AGAINST ALL ISLANDS, GUTTERS, AND CURBS; 1.0% ON ALL CONCRETE SURFACES; AND 1.5% MINIMUM ON ASPHALT, TO PREVENT PONDING. ANY DISCREPANCIES THAT MAY AFFECT THE PUBLIC SAFETY OR PROJECT COST MUST BE IDENTIFIED TO BOHLER ENGINEERING, P.C. IN WRITING IMMEDIATELY. PROCEEDING WITH CONSTRUCTION WITHOUT NOTIFICATION IS DONE SO AT THE CONTRACTOR'S OWN RISK.

15. IN CASE OF DISCREPANCIES BETWEEN PLANS OR RELATIVE TO OTHER PLANS, THE SITE PLAN WILL TAKE PRECEDENCE. IMMEDIATELY NOTIFY THE ARCHITECT OF RECORD AND BOHLER ENGINEERING, P.C. IN WRITING OF ANY CONFLICTS.

16. CONTRACTOR SHALL BE REQUIRED TO SECURE ALL NECESSARY PERMITS AND APPROVALS FOR ALL OFF-SITE MATERIAL SOURCES AND DISPOSAL FACILITIES. CONTRACTOR SHALL SUPPLY A COPY OF APPROVALS TO THE ARCHITECT OF RECORD AND BOHLER ENGINEERING, P.C. AND OWNER PRIOR TO INITIATING WORK.

## SITE PLAN/DOCUMENT REFERENCES:

1. DEVELOPER/OWNERS PLANS:

A. BENSON EAST EROSION AND SEDIMENT CONTROL AND LANDSCAPE PLANS PREPARED BY PATTON, HARRIS, RUST, AND ASSOCIATES, P.C. DATED 08/03/2004 (SDP-04-163).

B. WATER AND SEWER EXTENSION PLANS FOR BENSON EAST PREPARED BY PATTON, HARRIS, RUST, AND ASSOCIATES, P.C. DATED 6/8/05 REVISED 4/6/06 (CONTRACT #24-4284-D).

C. ROADWAY AND STORM DRAIN PLANS PREPARED BY PATTON, HARRIS, RUST, AND ASSOCIATES, P.C. DATED 8/18/05 REVISED 4/20/06 (REFERENCE #F-05-058).

D. ALL EXISTING CONDITIONS AND EXISTING TOPOGRAPHY ARE TAKEN FROM THE "DEVELOPER'S MASS GRADING PLAN" PREPARED BY PATTON, HARRIS, RUST, AND ASSOCIATES, P.C. DATED 06/28/05.

CONTACT INFORMATION:
PATTON, HARRIS, RUST, AND ASSOCIATES, P.C.
8818 CENTRE PARK DRIVE
COLUMBIA, MD 21045
TELEPHONE: (610) 395-7033
FAX: (610) 395-5811
CONTACT: DOMENICK COLANGELO

2. GEOTECHNICAL INFORMATION:
DATED: 10/20/05
PROJECT NO.: WJP05-7961
ENTITLED:
REPORT OF GEOTECHNICAL INVESTIGATION
PROPOSED COSTCO WHOLESALE SITE
MARYLAND INTERSATE I-95 AND LITTLE PATUXENT
PARKWAY (MARYLAND ROUTE 175)
COLUMBIA, HOWARD COUNTY, MARYLAND
PREPARED BY:
WHITESTONE ASSOCIATES, INC.
1600 MANOR DRIVE, SUITE 220
CHALFONT, PA 18914
TELEPHONE: (215) 393-8200
FAX: (215) 393-8574
CONTACT: JEFFREY SCHAUMBURG, P.E.

## WATER LINE NOTES:

1. PLEASE REFER TO "WATER AND SEWER EXTENSIONS PLAN SET" CONTRACT NO. 24-4284-D PREPARED BY PATTON, HARRIS, RUST, AND ASSOCIATES, P.C. P.C DATED 6/8/05, REVISED 4/6/06 FOR INFORMATION ON THE EXISTING 8" WATER MAIN ON-SITE.

2. ALL WATER MAINS ON SITE SHALL BE D.I.P. (CLASS 52 UNLESS OTHERWISE NOTED.)

### SANITARY SEWER NOTES:

1. PLEASE REFER TO "WATER AND SEWER PLAN SET" CONTRACT NO. 24-4284-D PREPARED BY PATTON, HARRIS, RUST, AND ASSOCIATES, P.C. DATED 6/8/05, REVISED 4/6/06 FOR INFORMATION ON THE EXISTING 8" PUBLIC SANITARY SEWER MAIN ON SITE.

2. ALL SANITARY SEWER LINES SHALL BE D.I.P. OR PVC UNLESS OTHERWISE NOTED.

## BENCHMARK

BM 37GD — GEODETIC SURVEY CONTROL #37GD
N 553,237.204
E 1,372,353.605
ELEV. 290.931'
LOCATED 30' EAST OF FIRE HYDRANT ACROSS FROM DEEP RUN ELEMENTARY SCHOOL

BM 37GC — GEODETIC SURVEY CONTROL #37GC
N 553,250.791
E 1,370,946.348
ELEV. 331.855'
LOCATED ON THE SOUTH SIDE OF WATERLOO ROAD ACROSS FROM DEEP RUN PARKWAY

## APPLICANT

COSTCO WHOLESALE
45940 HORSESHOE DRIVE, SUITE 150
STERLING, VA 20166
ATTN: ERICH BRANN
PHONE: (703) 406-6862

ADDRESS CHART

| LOT/PARCEL # | STREET ADDRESS |
|---|---|
| U | 6670 MARIE CURIE DRIVE |
| | |
| | |

PERMIT INFORMATION CHART

| PROJECT NAME: | | | SECTION/AREA: | | LOT/PARCEL #: |
|---|---|---|---|---|---|
| BENSON EAST | | | X | | PARCEL U |
| PLAT RECORDATION: | BLOCK #: | ZONING: | TAX MAP #: | ELECT. DISTR.: | CENSUS TRACT: |
| 18444 TO 18450 | 20 | NEW TOWN | 37 | 6TH | 6067.03 |
| WATER CODE: | | | SEWER CODE: | | |
| D 06 | | | 3390000 | | |

| REV. | DATE | DESCRIPTION | BY |
|---|---|---|---|
| | | | |
| | | | |
| | | | |
| 3 | 1/2014 | REVISED LAYOUT: NEW PUMPS + CANOPY, RELOC. BUS STOP + WALK, UTILITY UPDTS | MSG |

OWNER/DEVELOPER: HRD LAND HOLDINGS, INC.
HOWARD RESEARCH AND DEVELOPMENT CORPORATION
THE ROUSE BUILDING
10275 LITTLE PATUXENT PARKWAY
COLUMBIA, MARYLAND 21044
PHONE: (410) 992-6000

PROJECT: BENSON EAST
PARCEL U; GASOLINE STATION WITH KIOSK (COSTCO GASOLINE); GATEWAY OVERLOOK SHOPPING CENTER

AREA: TAX MAP 37 GRID 1 & 2 ZONED NEW TOWN
PARCEL U
BENSON EAST
6TH ELECTION DISTRICT
HOWARD COUNTY, MARYLAND

TITLE: GENERAL NOTES

**BOHLER ENGINEERING, P.C.**
• PROFESSIONAL ENGINEERING SERVICES •
• 22630 DAVIS DRIVE, SUITE 200 STERLING, VIRGINIA, 20164 •
• CONTACT: DAVID B. NEMECEK
• (703) 709-9500 FAX: (703) 709-9501 | • WWW.BOHLERENG.COM

6/26/07
ADAM J. VOLANTH
PROFESSIONAL ENGINEER NO. 21342

| DESIGNED BY: | J.A.D. |
|---|---|
| DRAWN BY: | R.F.G. |
| PROJECT NO.: | S040011.01 |
| DATE: | 6/25/07 |
| SCALE: | AS SHOWN |
| DRAWING NO.: | 2 OF 23 |

FOR REVISION 3 ONLY:

PROFESSIONAL CERTIFICATION
I, MICHAEL J. GESELL, HEREBY CERTIFY THAT THESE DOCUMENTS WERE PREPARED OR APPROVED BY ME, AND THAT I AM A DULY LICENSED PROFESSIONAL ENGINEER UNDER THE LAWS OF THE STATE OF MARYLAND, LICENSE NO. 44097, EXPIRATION DATE: 6/9/15

MISS UTILITY
DIG WITH C.A.R.E. — CALL MISS UTILITY — KEEP MARYLAND SAFE
BEFORE YOU DIG CALL 1-800-257-7777
PROTECT YOURSELF, GIVE TWO WORKING DAYS NOTICE

THIS DRAWING DOES NOT INCLUDE NECESSARY COMPONENTS FOR CONSTRUCTION SAFETY. ALL CONSTRUCTION MUST BE DONE IN COMPLIANCE WITH THE OCCUPATIONAL SAFETY AND HEALTH ACT OF 1970 AND ALL RULES AND REGULATIONS THERETO APPURTENANT.

THE CONTRACTOR TO CALL MISS UTILITY TO HAVE ALL EXISTING UTILITIES MARKED 48 HOURS PRIOR TO ANY CONSTRUCTION.

PLANNING BOARD APPROVAL STAMP

APPROVED
PLANNING BOARD
of HOWARD COUNTY
DATE 2-08-07

APPROVED: DEPARTMENT OF PLANNING AND ZONING

CHIEF-DEVELOPMENT ENGINEERING DIVISION — DATE 7/5/07

CHIEF-DIVISION OF LAND DEVELOPMENT — DATE 7/16/07

DIRECTOR — DATE 7/12/07

APPROVED: FOR PUBLIC WATER AND PUBLIC SEWERAGE SYSTEMS.

COUNTY HEALTH OFFICER, HOWARD COUNTY HEALTH DEPARTMENT — DATE 7/13/07

GENERAL NOTE:
IT IS THE RESPONSIBILITY OF THE CONTRACTOR TO REVIEW ALL OF THE DRAWINGS AND SPECIFICATIONS ASSOCIATED WITH THIS PROJECT WORK SCOPE PRIOR TO THE INITIATION OF CONSTRUCTION. SHOULD THE CONTRACTOR FIND A CONFLICT WITH THE DOCUMENTS RELATIVE TO THE SPECIFICATIONS OR APPLICABLE CODES, IT IS THE CONTRACTORS RESPONSIBILITY TO NOTIFY BOHLER ENGINEERING, P.C. IN WRITING PRIOR TO THE START OF CONSTRUCTION. FAILURE BY THE CONTRACTOR TO NOTIFY BOHLER ENGINEERING, P.C. SHALL CONSTITUTE ACCEPTANCE OF FULL RESPONSIBILITY BY THE CONTRACTOR TO COMPLETE THE SCOPE OF THE WORK AS DEFINED BY THE DRAWINGS AND IN FULL CONFORMANCE WITH LOCAL REGULATIONS AND CODES.

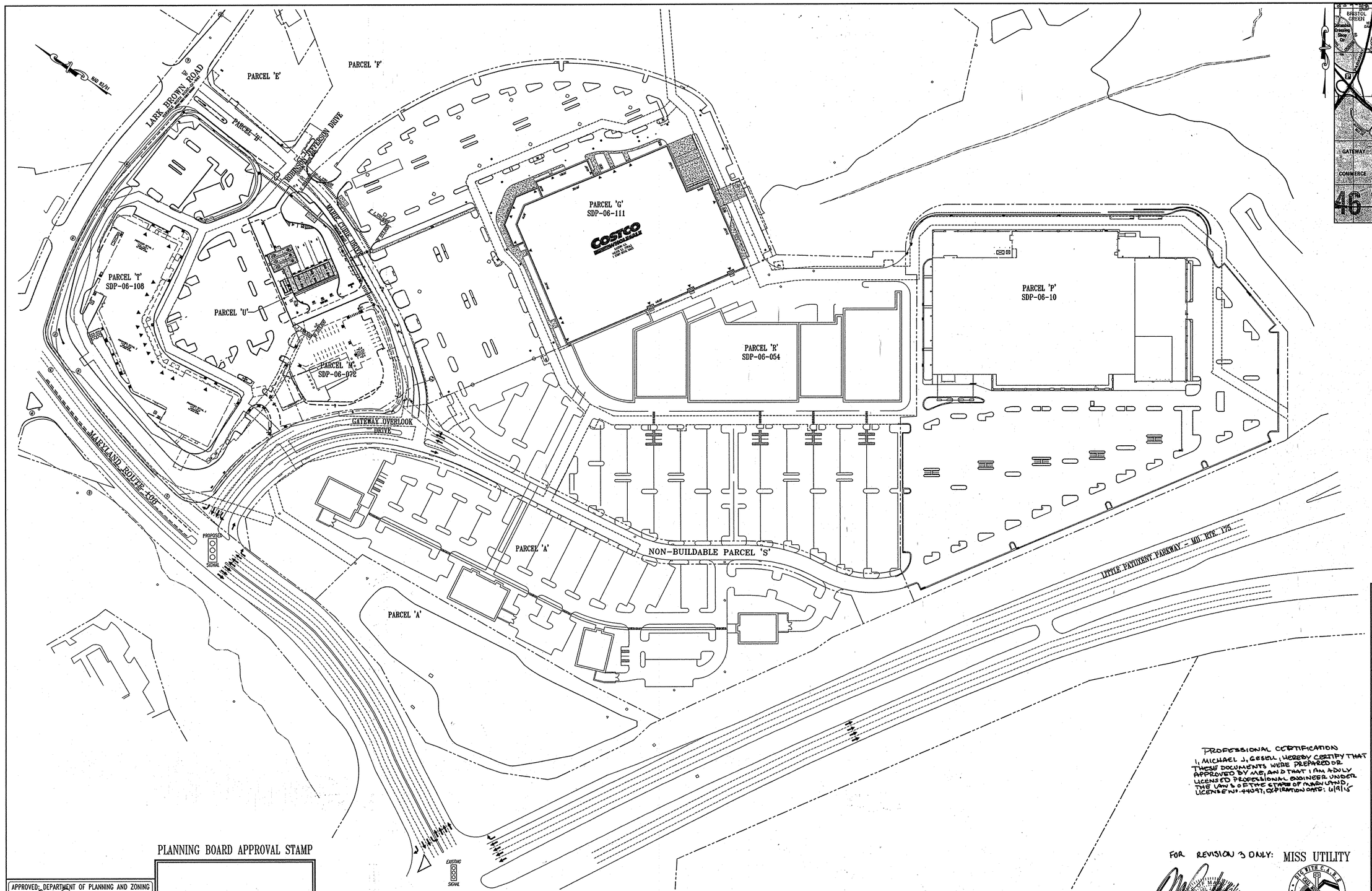


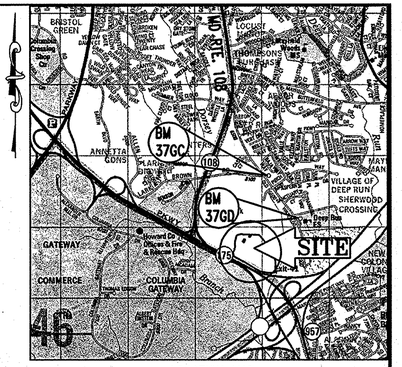


LOCATION MAP

COPYRIGHT ADC THE MAP PEOPLE
PERMIT USE NO. 20602153-5
SCALE: 1"=2000'

PROFESSIONAL CERTIFICATION

I, MICHAEL J. GESELL, HEREBY CERTIFY THAT THESE DOCUMENTS WERE PREPARED OR APPROVED BY ME, AND THAT I AM A DULY LICENSED PROFESSIONAL ENGINEER UNDER THE LAWS OF THE STATE OF MARYLAND, LICENSE NO. 44097, EXPIRATION DATE: 6/9/15

FOR REVISION 3 ONLY:

MISS UTILITY

BEFORE YOU DIG CALL
1-800-257-7777
PROTECT YOURSELF, GIVE TWO WORKING DAYS NOTICE

THIS DRAWING DOES NOT INCLUDE NECESSARY COMPONENTS FOR CONSTRUCTION SAFETY. ALL CONSTRUCTION MUST BE DONE IN COMPLIANCE WITH THE OCCUPATIONAL SAFETY AND HEALTH ACT OF 1970 AND ALL RULES AND REGULATIONS THERETO APPURTENANT.

THE CONTRACTOR TO CALL MISS UTILITY TO HAVE ALL EXISTING UTILITIES MARKED 48 HOURS PRIOR TO ANY CONSTRUCTION.

GRAPHIC SCALE

100 0 50 100 200 400

( IN FEET )
1 inch = 100 ft.

PLANNING BOARD APPROVAL STAMP

APPROVED
PLANNING BOARD
of HOWARD COUNTY
DATE 2-08-07

APPROVED: DEPARTMENT OF PLANNING AND ZONING

CHIEF-DEVELOPMENT ENGINEERING DIVISION — DATE 7/9/07
CHIEF-DIVISION OF LAND DEVELOPMENT — DATE 7/16/07
DIRECTOR — DATE 7/16/07

APPROVED: FOR PUBLIC WATER AND PUBLIC SEWERAGE SYSTEMS.

COUNTY HEALTH OFFICER — DATE 7/13/07
HOWARD COUNTY HEALTH DEPARTMENT

GENERAL NOTE:
IT IS THE RESPONSIBILITY OF THE CONTRACTOR TO REVIEW ALL OF THE DRAWINGS AND SPECIFICATIONS ASSOCIATED WITH THIS PROJECT WORK SCOPE PRIOR TO THE INITIATION OF CONSTRUCTION. SHOULD THE CONTRACTOR FIND A CONFLICT WITH THE DOCUMENTS RELATIVE TO THE SPECIFICATIONS OR APPLICABLE CODES, IT IS THE CONTRACTORS RESPONSIBILITY TO NOTIFY BOHLER ENGINEERING, P.C. IN WRITING PRIOR TO THE START OF CONSTRUCTION. FAILURE BY THE CONTRACTOR TO NOTIFY BOHLER ENGINEERING, P.C. SHALL CONSTITUTE ACCEPTANCE OF FULL RESPONSIBILITY BY THE CONTRACTOR TO COMPLETE THE SCOPE OF THE WORK AS DEFINED BY THE DRAWINGS AND IN FULL CONFORMANCE WITH LOCAL REGULATIONS AND CODES.

LEGEND

SOIL TYPE DIVIDES

| REV. | DATE | DESCRIPTION | BY |
|---|---|---|---|
| 3 | 11/20/14 | REVISED LAYOUT: ADD PUMPS, CANOPY & REDIRECTED BUS STOP & UTILITY UPDATE | AJG |

OWNER/DEVELOPER:
HRD LAND HOLDINGS, INC.
HOWARD RESEARCH AND DEVELOPMENT CORPORATION
THE ROUSE BUILDING
10275 LITTLE PATUXENT PARKWAY
COLUMBIA, MARYLAND 21044
PHONE: (410) 992-6000

PROJECT:
BENSON EAST
PARCEL U; GASOLINE STATION WITH KIOSK (COSTCO GASOLINE); GATEWAY OVERLOOK SHOPPING CENTER

AREA: TAX MAP 37 GRID 1 &-2 ZONED NEW TOWN
PARCEL U
BENSON EAST
6TH ELECTION DISTRICT
HOWARD COUNTY, MARYLAND

TITLE:
OVERALL SITE PLAN

BOHLER ENGINEERING, P.C.
• PROFESSIONAL ENGINEERING SERVICES •
• 22630 DAVIS DRIVE, SUITE 200 STERLING, VIRGINIA, 20164 •
• CONTACT: DAVID B. NEMECEK •
• (703) 709-9500 FAX: (703) 709-9501 • WWW.BOHLER.COM •

6/26/07
DATE
ADAM J. VOCANTI
PROFESSIONAL ENGINEER NO. 21342

| | |
|---|---|
| DESIGNED BY: | J.A.D. |
| DRAWN BY: | R.F.G. |
| PROJECT NO.: | S040011.01 |
| DATE: | 6/25/07 |
| SCALE: | AS SHOWN |
| DRAWING NO.: | 3 OF 23 |

SDP 07-36

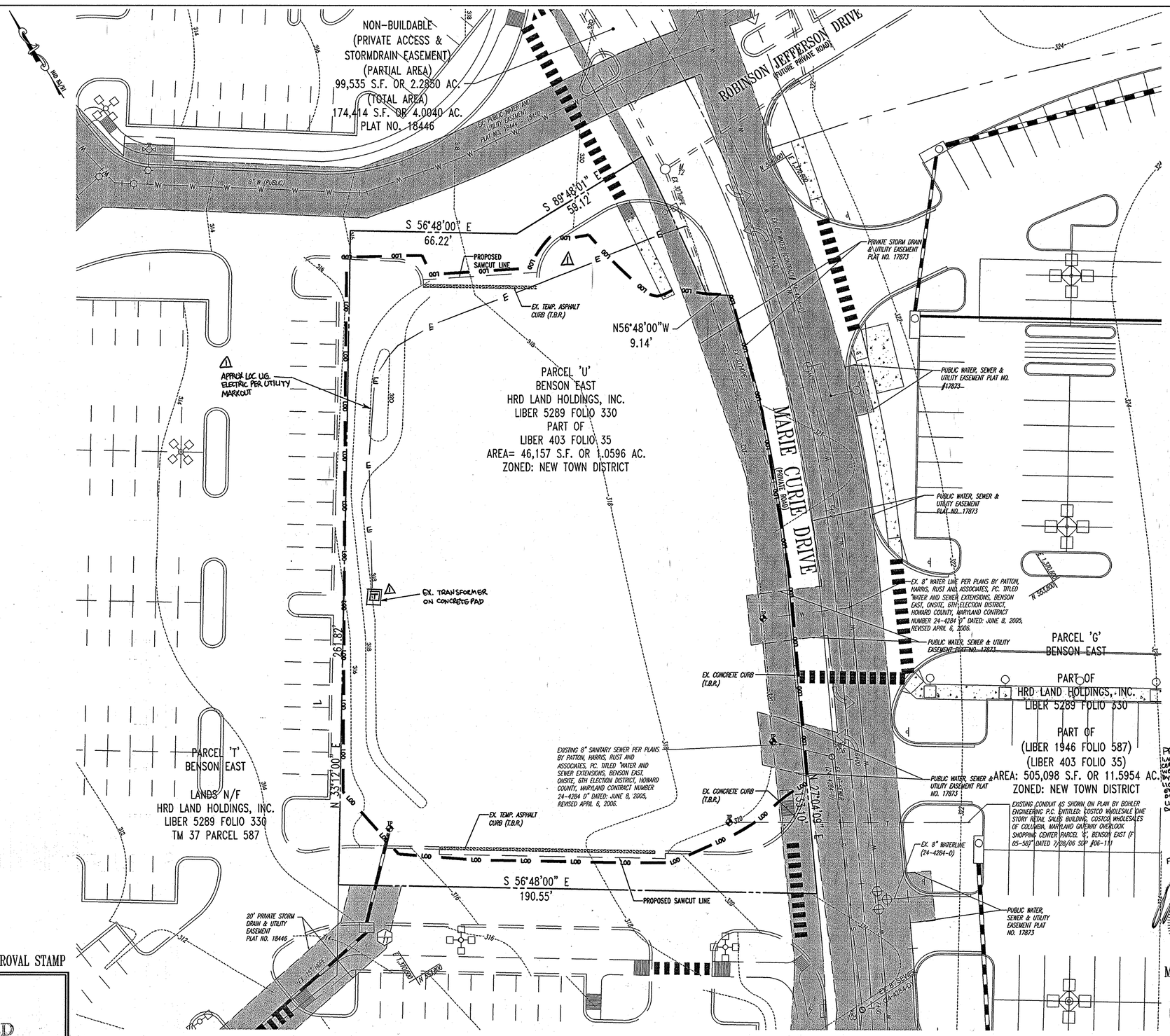


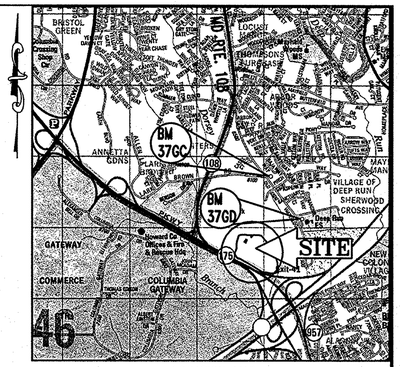


LOCATION MAP

COPYRIGHT ADC THE MAP PEOPLE
PERMIT USE NO. 20602153-5
SCALE: 1"=2000'

## ON-SITE SOILS INFORMATION:

1. SfC2 – SASSAFRAS GRAVELLY SANDY LOAM, 5%-10% SLOPES, MODERATELY ERODED.
2. CnB2 – CHILLUM FAIRFAX LOAMS, 1%-5% SLOPES, MODERATELY ERODED.

## REFERENCE:

SOIL SURVEY
HOWARD COUNTY, MD
PERPARED BY:
UNITED STATES DEPARTMENT OF AGRICULTURE
DATED: JULY 1968

### LEGEND

SOIL TYPE DIVIDES

### BENCHMARK

BM 37GD — GEODETIC SURVEY CONTROL #37GD
N 553,237.204
E 1,372,353.605
ELEV. 290.931'
LOCATED 30' EAST OF FIRE HYDRANT ACROSS FROM DEEP RUN ELEMENTARY SCHOOL

BM 37GC — GEODETIC SURVEY CONTROL #37GC
N 553,250.791
E 1,370,946.348
ELEV. 331.855'
LOCATED ON THE SOUTH SIDE OF WATERLOO ROAD ACROSS FROM DEEP RUN PARKWAY

PROFESSIONAL CERTIFICATION
I HEREBY CERTIFY THAT THESE DOCUMENTS WERE PREPARED OR APPROVED BY ME, AND THAT I AM A DULY LICENSED PROFESSIONAL ENGINEER UNDER THE LAWS OF THE STATE OF MARYLAND LICENSE NO. 21342 EXPIRATION DATE: 6/4/11

| REV. | DATE | DESCRIPTION | BY |
|---|---|---|---|
| 3 | 1/20/14 | REVISED LAYOUT AND PLANS • GRADING, ROAD, SIDEWALK, UTILITY UPDATES | MJB |
| 1 | 9/21/07 | EX. ELEC. LINE & TRANSFORMER, PROP SCREEN WALL | BOHLER |
| 1 | 9/21/07 | IRRIGATION WATERLINE AND METER | BOHLER |

OWNER/DEVELOPER: HRD LAND HOLDINGS, INC.
HOWARD RESEARCH AND DEVELOPMENT CORPORATION
THE ROUSE BUILDING
10275 LITTLE PATUXENT PARKWAY
COLUMBIA, MARYLAND 21044
PHONE: (410) 992-6000

PROJECT: BENSON EAST
PARCEL U; GASOLINE STATION WITH KIOSK (COSTCO GASOLINE); GATEWAY OVERLOOK SHOPPING CENTER

AREA: TAX MAP 37 GRID 1 & 2 ZONED NEW TOWN
PARCEL U
BENSON EAST
6TH ELECTION DISTRICT
HOWARD COUNTY, MARYLAND

TITLE: EXISTING CONDITIONS AND DEMOLITION PLAN

BOHLER ENGINEERING, P.C.
• PROFESSIONAL ENGINEERING SERVICES •
• 22630 DAVIS DRIVE, SUITE 200 STERLING, VIRGINIA, 20164 •
• CONTACT: DAVID B. NEMECEK
• (703) 709-9500 FAX: (703) 709-9501 • WWW.BOHLER.COM

6/26/07
STATE OF MARYLAND
ADAM J. VOLANTH
REGISTERED PROFESSIONAL ENGINEER
ADAM J. VOLANTH
PROFESSIONAL ENGINEER NO. 21342

| | |
|---|---|
| DESIGNED BY: | J.A.D. |
| DRAWN BY: | R.F.G. |
| PROJECT NO.: | S040011.01 |
| DATE: | 6/25/07 |
| SCALE: | AS SHOWN |
| DRAWING NO.: | 4 OF 23 |

FOR REVISION 3 ONLY:
STATE OF MARYLAND
ADAM J. VOLANTH
PROFESSIONAL ENGINEER
2/20/14

MISS UTILITY
BIG BLUE C.A.R.E.
CALL BEFORE YOU DIG
BEFORE YOU DIG CALL 1-800-257-7777
PROTECT YOURSELF, GIVE TWO WORKING DAYS NOTICE

THIS DRAWING DOES NOT INCLUDE NECESSARY COMPONENTS FOR CONSTRUCTION SAFETY. ALL CONSTRUCTION MUST BE DONE IN COMPLIANCE WITH THE OCCUPATIONAL SAFETY AND HEALTH ACT OF 1970 AND ALL RULES AND REGULATIONS THERETO APPURTENANT.

THE CONTRACTOR TO CALL MISS UTILITY TO HAVE ALL EXISTING UTILITIES MARKED 48 HOURS PRIOR TO ANY CONSTRUCTION.

GRAPHIC SCALE
20 0 10 20 40 80
( IN FEET )
1 inch = 20 ft.

1 FOR REVISION 1
BOHLER ENGINEERING P.C.

STATE OF MARYLAND
ADAM J. VOLANTH
REGISTERED PROFESSIONAL ENGINEER

GENERAL NOTE:
IT IS THE RESPONSIBILITY OF THE CONTRACTOR TO REVIEW ALL OF THE DRAWINGS AND SPECIFICATIONS ASSOCIATED WITH THIS PROJECT WORK SCOPE PRIOR TO THE INITIATION OF CONSTRUCTION. SHOULD THE CONTRACTOR FIND A CONFLICT WITH THE DOCUMENTS RELATIVE TO THE SPECIFICATIONS OR APPLICABLE CODES, IT IS THE CONTRACTORS RESPONSIBILITY TO NOTIFY BOHLER ENGINEERING, P.C. IN WRITING PRIOR TO THE START OF CONSTRUCTION. FAILURE BY THE CONTRACTOR TO NOTIFY BOHLER ENGINEERING, P.C. SHALL CONSTITUTE ACCEPTANCE OF FULL RESPONSIBILITY BY THE CONTRACTOR TO COMPLETE THE SCOPE OF THE WORK AS DEFINED BY THE DRAWINGS AND IN FULL CONFORMANCE WITH LOCAL REGULATIONS AND CODES.

PLANNING BOARD APPROVAL STAMP

APPROVED
PLANNING BOARD
of HOWARD COUNTY.
DATE 2-08-07

APPROVED: DEPARTMENT OF PLANNING AND ZONING
CHIEF-DEVELOPMENT ENGINEERING DIVISION — DATE 7/5/07
CHIEF-DIVISION OF LAND DEVELOPMENT — DATE 7/6/07
DIRECTOR — DATE 7/9/07

APPROVED: FOR PUBLIC WATER AND PUBLIC SEWERAGE SYSTEMS.
COUNTY HEALTH OFFICER — DATE 7/13/07
HOWARD COUNTY HEALTH DEPARTMENT

SDP 07-36

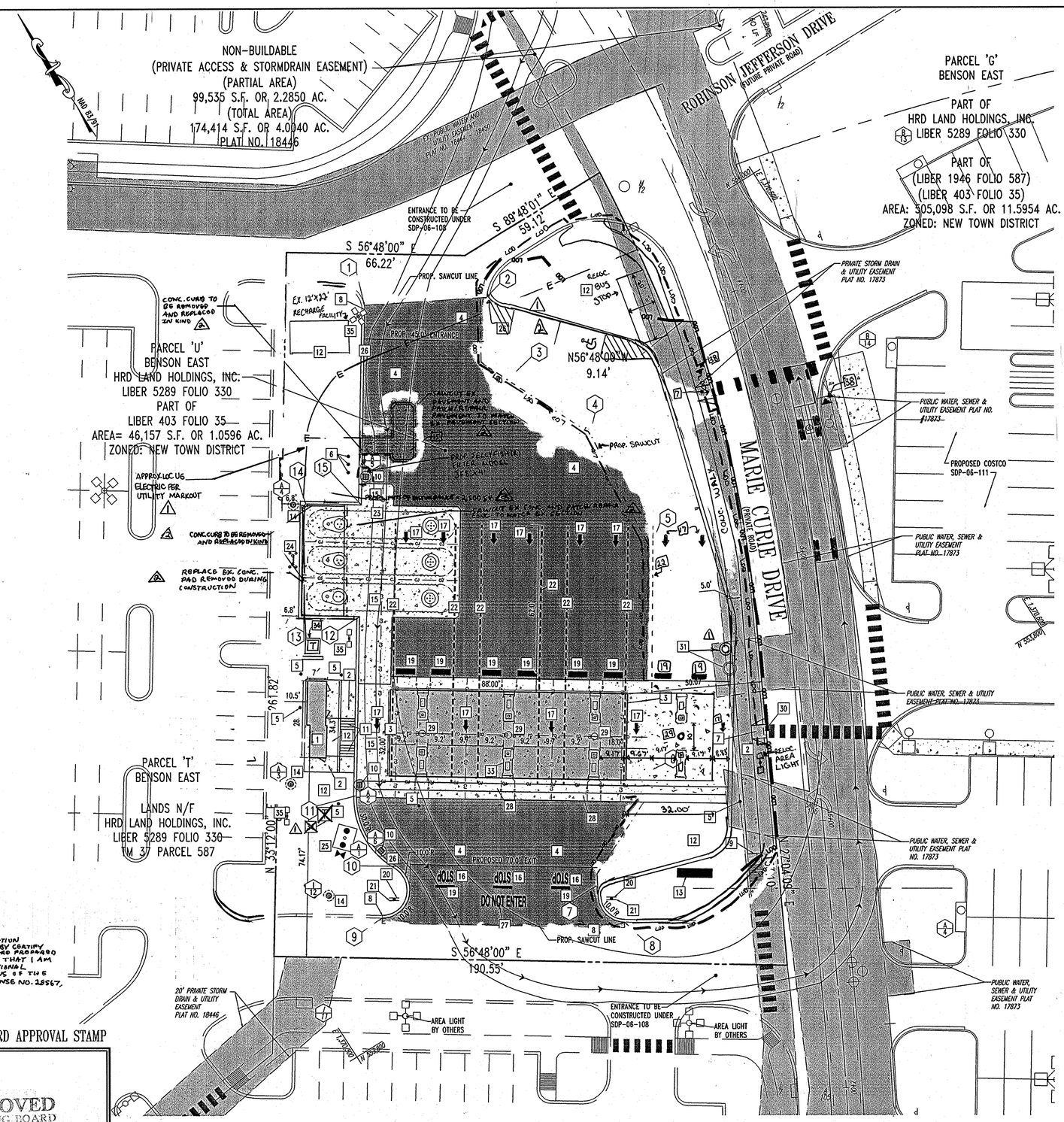


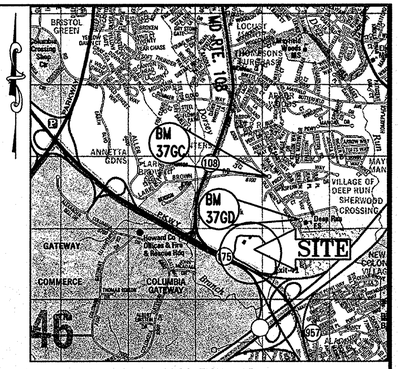


LOCATION MAP

COPYRIGHT ADC THE MAP PEOPLE
PERMIT USE NO. 20602151-S
SCALE: 1"=2000'

## ITEM DESCRIPTION

| | |
|---|---|
| 1 | 7'x28' CONTROLLER ENCLOSURE WITH RESTROOMS (196 S.F.) HEIGHT = 8'-1 1/4" (SEE SHEET 22 AND AG-2 FOR DETAIL) |
| 2 | PROPOSED CONCRETE SIDEWALK |
| 3 | 32'x88' PUMP ISLAND CANOPY WITH 6 MPD'S PER CANOPY PLANS HEIGHT = 17'-6" (SEE SHEET 22 AND AG-2 FOR DETAIL) |
| 4 | HEAVY DUTY ASPHALT PAVEMENT |
| 5 | SANITARY CLEANOUT |
| 6 | STORM DRAIN CLEANOUT |
| 7 | PROPOSED HANDICAP RAMP (SEE SHEET 17 FOR DETAIL) |
| 8 | MATCH EXISTING CURB FOR GRADE AND LOCATION |
| 9 | PROPOSED CONNECTION TO EXISTING SIDEWALK |
| 10 | TYPE 'S' INLET SINGLE GRATE (HOWARD COUNTY STD. DETAIL SD 4.22) |
| 11 | HANDICAP RAMP (SEE SHEET 17 FOR DETAIL) |
| 12 | LANDSCAPE AREA |
| 13 | PROPOSED OWNER MONUMENT SIGN (TO BE APPROVED BY SIGN CODE ADMINISTRATION) |
| 14 | PRECAST MANHOLE (HOWARD COUNTY STD. DETAIL G 5.12) |
| 15 | REINFORCED CONCRETE SLAB |
| 16 | "STOP" PAINT GRAPHIC (PER ARCHITECT) |
| 17 | DIRECTIONAL ARROW (PER ARCHITECT) |
| 18 | PROPOSED 6" CONCRETE PAD (TO BE USED FOR BUS STOP) |
| 19 | STOP BAR (PER ARCHITECT) |
| 20 | STOP SIGN (PER ARCHITECT) |
| 21 | "DO NOT ENTER" SIGN (PER ARCHITECT) |
| 22 | PAINTED LINE STRIPING |
| 23 | THREE (3) 30,000 GALLON UNDERGROUND GASOLINE STORAGE TANKS |
| 24 | TANK VENT WITH (4) BOLLARDS PER TANK AND ARCHITECTURAL PLANS |
| 25 | OIL/WATER SEPARATOR |
| 26 | ON-SITE CURB |
| 27 | "DO NOT ENTER" PAINT GRAPHIC |
| 28 | 3' CONCRETE SWALE |
| 29 | TRASH RECEPTACLE (SEE SHEET 22 FOR DETAIL) |
| 30 | PROPOSED DEPRESSED CURB |
| 31 | PROPOSED 1 1/2" WATER METER (HOWARD COUNTY STD W-3.34) |
| 32 | PROPOSED STRIPING |
| 33 | PROPOSED GAS PUMP (TYPICAL) (SEE SHEET 22 AND AG-2 FOR DETAIL) |
| 34 | ~~PROPOSED~~ ELECTRICAL TRANSFORMER AND CONCRETE PAD |
| 35 | PROPOSED AREA LIGHT |
| 36 | PROPOSED PAINTED HANDICAP SYMBOL |
| 37 | PROPOSED HANDICAP PARKING SIGN |

38 PROP. CROSSWALK SIGN (MD SHA DETAIL W11-2)

## NOTE:

1. REFER TO SHEET 3 FOR APPLICABLE SITE NOTES.

3b PROPOSED 8' SCREEN WALL (REFER TO DETAIL ON SHEET 7 OF 22)

2. THE PLANNING BOARD HAS REVIEWED AND APPROVED THE REVISIONS TO ADD TWO NEW PUMPS, CANOPY EXTENSION AND SITE UPGRADES ON 08/21/14.
3. LANDSCAPE SURETY FOR PERIMETER LANDSCAPING AS SHOWN ON SHEET 18 IN THE AMOUNT OF $4350.00 SHALL BE POSTED WITH THE GRADING PERMIT FOR REVISION 3 REQ LINE.
4. THE PROPOSED REVISIONS ARE IN ACCORDANCE WITH THE REVISED FINAL DEVELOPMENT PLAN 290-A-III.

## COORDINATES TABLE

| POINT NUMBER | NORTHING | EASTING |
|---|---|---|
| 1 | 554035.1865 | 1370451.4029 |
| 2 | 554013.4971 | 1370491.3677 |
| 3 | 553983.7349 | 1370482.8697 |
| 4 | 553950.9191 | 1370497.7848 |
| 5 | 553902.8523 | 1370494.1041 |
| 6 | 553832.4394 | 1370448.0273 |
| 7 | 553806.5609 | 1370410.0902 |
| 8 | 553789.5960 | 1370410.9395 |
| 9 | 553838.8766 | 1370335.6306 |
| 10 | 553852.3320 | 1370350.2838 |
| 11 | 553882.6120 | 1370351.7908 |
| 12 | 553938.2361 | 1370388.1899 |
| 13 | 553949.5552 | 1370370.9235 |
| 14 | 553984.2810 | 1370393.6473 |
| 15 | 553972.9619 | 1370410.9137 |

FOR REVISION 2
BOHLER ENGINEERING

PROFESSIONAL CERTIFICATION
I, MATTHEW T. ALLEN, HEREBY CERTIFY THAT THESE DOCUMENTS WERE PREPARED OR APPROVED BY ME, AND THAT I AM A DULY LICENSED PROFESSIONAL ENGINEER UNDER THE LAWS OF THE STATE OF MARYLAND, LICENSE NO. 28567, EXPIRATION DATE 4/16/13.

PLANNING BOARD APPROVAL STAMP

APPROVED
PLANNING BOARD
of HOWARD COUNTY
DATE 2-08-07

APPROVED: DEPARTMENT OF PLANNING AND ZONING

| | |
|---|---|
| CHIEF-DEVELOPMENT ENGINEERING DIVISION | DATE 7/5/07 |
| CHIEF-DIVISION OF LAND DEVELOPMENT | DATE 7/16/07 |
| DIRECTOR | DATE 7/17/07 |

APPROVED: FOR PUBLIC WATER AND PUBLIC SEWERAGE SYSTEMS.

| | |
|---|---|
| COUNTY HEALTH OFFICER HOWARD COUNTY HEALTH DEPARTMENT | DATE 3/13/07 |

GENERAL NOTE:
IT IS THE RESPONSIBILITY OF THE CONTRACTOR TO REVIEW ALL OF THE DRAWINGS AND SPECIFICATIONS ASSOCIATED WITH THIS PROJECT WORK SCOPE PRIOR TO THE INITIATION OF CONSTRUCTION. SHOULD THE CONTRACTOR FIND A CONFLICT WITH THE DOCUMENTS RELATIVE TO THE SPECIFICATIONS OR APPLICABLE CODES, IT IS THE CONTRACTORS RESPONSIBILITY TO NOTIFY BOHLER ENGINEERING, P.C. IN WRITING PRIOR TO THE START OF CONSTRUCTION. FAILURE BY THE CONTRACTOR TO NOTIFY BOHLER ENGINEERING, P.C. SHALL CONSTITUTE ACCEPTANCE OF FULL RESPONSIBILITY BY THE CONTRACTOR TO COMPLETE THE SCOPE OF THE WORK AS DEFINED BY THE DRAWINGS AND IN FULL CONFORMANCE WITH LOCAL REGULATIONS AND CODES.

GRAPHIC SCALE
20 0 10 20 40 80
( IN FEET )
1 inch = 20 ft.

FOR REVISION 1
BOHLER ENGINEERING, P.C.

FOR REVISION 3 ONLY:

PROFESSIONAL CERTIFICATION
I, MICHAEL J. GEBELL, HEREBY CERTIFY THAT THESE DOCUMENTS WERE PREPARED OR APPROVED BY ME, AND THAT I AM A DULY LICENSED PROFESSIONAL ENGINEER, UNDER THE LAWS OF THE STATE OF MARYLAND, LICENSE NO. 44097, EXPIRATION DATE: 6/9/15

8/20/14

MISS UTILITY
BEFORE YOU DIG CALL
1-800-257-7777
PROTECT YOURSELF, GIVE TWO WORKING DAYS NOTICE

THIS DRAWING DOES NOT INCLUDE NECESSARY COMPONENTS FOR CONSTRUCTION SAFETY. ALL CONSTRUCTION MUST BE DONE IN COMPLIANCE WITH THE OCCUPATIONAL SAFETY AND HEALTH ACT OF 1970 AND ALL RULES AND REGULATIONS THERETO APPURTENANT.

THE CONTRACTOR TO CALL MISS UTILITY TO HAVE ALL EXISTING UTILITIES MARKED 48 HOURS PRIOR TO ANY CONSTRUCTION.

## LEGEND

| | |
|---|---|
| S | SANITARY SEWER STRUCTURE LABEL |
| A | STORM DRAIN STRUCTURE LABEL |
| 1 | ITEM "CALL OUT" LABEL |
| | HEAVY DUTY PAVING |

| REV. | DATE | DESCRIPTION | BY |
|---|---|---|---|
| 3 | 12/01/14 | REVISED CANOPY, NEW PUMPS, CANOPY, RELOC. ACTS AND SIDEWALK, UTILITY UPDATE | |
| 2 | 10/01/11 | ADD 6,500 FUEL ADDITIVE TANK | |
| 1 | 9/21/07 | EX. ELEC. LINE & TRANSFORMER, PROP. SCREEN WALL | |
| 1 | 9/12/07 | IRRIGATION WATER LINE AND METER | |

OWNER/DEVELOPER: HRD LAND HOLDINGS, INC.
HOWARD RESEARCH AND DEVELOPMENT CORPORATION
THE ROUSE BUILDING
10275 LITTLE PATUXENT PARKWAY
COLUMBIA, MARYLAND 21044
PHONE: (410) 992-6000

PROJECT: BENSON EAST
PARCEL U; GASOLINE STATION WITH KIOSK (COSTCO GASOLINE); GATEWAY OVERLOOK SHOPPING CENTER

AREA: TAX MAP 37 GRID 1 & 2 PARCEL U ZONED NEW TOWN
BENSON EAST
6TH ELECTION DISTRICT
HOWARD COUNTY, MARYLAND

TITLE: DETAILED SITE PLAN

BOHLER ENGINEERING, P.C.
• PROFESSIONAL ENGINEERING SERVICES •
• 22630 DAVIS DRIVE, SUITE 200 STERLING, VIRGINIA, 20164 •
• CONTACT: DAVID B. NEMECEK
• (703) 709-9500 FAX: (703) 709-9501 • WWW.BOHLERENG.COM

6/25/07
DATE
ADAM J. VOLANTH
PROFESSIONAL ENGINEER NO. 21342

| | |
|---|---|
| DESIGNED BY: | J.A.D. |
| DRAWN BY: | R.F.G. |
| PROJECT NO.: | S040011.01 |
| DATE: | 6/25/07 |
| SCALE: | AS SHOWN |
| DRAWING NO.: | 5 OF 23 |

SDP 07-36

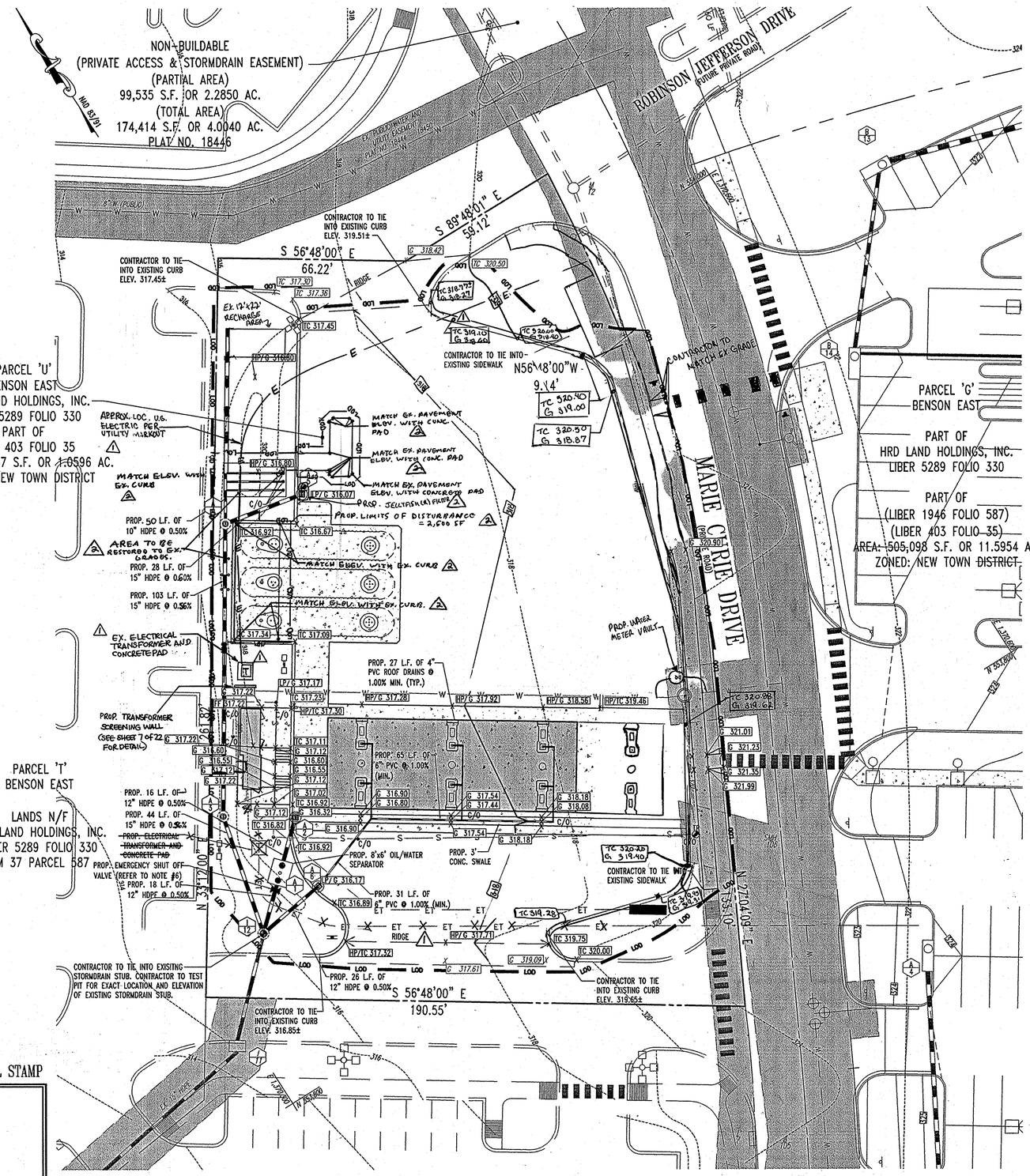


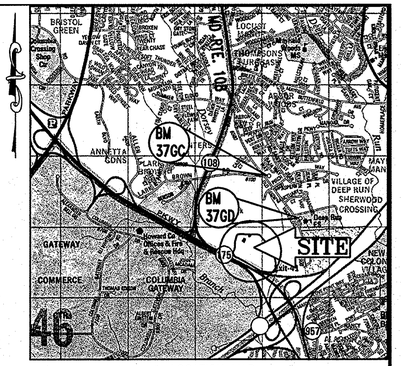


LOCATION MAP

COPYRIGHT ADC THE MAP PEOPLE
PERMIT USE NO. 20002153-5
SCALE: 1"=2000'

## NOTE

1. THIS PROPERTY IS LOCATED WITHIN THE GATEWAY OVERLOOK STOPPING CENTER.
2. HOWARD COUNTY REFERENCE NUMBERS:
   SITE PLAN DEVELOPMENT PREPARED BY:
   PATTON, HARRIS, RUST AND ASSOCIATES, P.C.
   DATED: APRIL 22, 2005

   WATER AND SEWER PLANS PREPARED BY:
   PATTON, HARRIS, RUST AND ASSOCIATES, P.C.
   DATED: 6/8/05 REVISED 4/6/06
   SDP-04-163

   ROADWAY AND STORM DRAIN PLANS PREPARED BY:
   PATTON, HARRIS, RUST AND ASSOCIATES, P.C.
   DATED: 8/18/05 REVISED 4/20/06
   SDP-04-163
3. REFER TO THE COVER SHEET FOR THE LEGEND.
4. REFER TO GENERAL NOTES SHEET FOR STANDARD GRADING NOTES.
5. REFER TO GENERAL NOTES SHEET FOR STORMDRAIN STRUCTURE SCHEDULE.
6. THE EMERGENCY SHUT OFF VALVE LOCATED DOWNSTREAM OF THE OIL/WATER SEPERATOR IS PROVIDED FOR USE IN THE EVENT THAT THERE IS A GAS SPILL AND THE STORMDRAIN NEEDS TO BE CUT OFF SO THAT THE SPILL DOES NOT REACH THE REGIONAL FACILITY.

PROFESSIONAL CERTIFICATION

I, MICHAEL J. GESELL, HEREBY CERTIFY THAT THESE DOCUMENTS WERE PREPARED OR APPROVED BY ME AND THAT I AM A DULY LICENSED PROFESSIONAL ENGINEER UNDER THE LAWS OF THE STATE OF MARYLAND, LICENSE NO. 44097, EXPIRATION DATE: 6/9/15

## STORMDRAIN PIPE SCHEDULE

| SIZE | DESCRIPTION | LENGTH |
|---|---|---|
| 6" | PVC | 240' |
| 10" | HDPE | 50' |
| 12" | HDPE | 60' |
| 15" | HDPE | 175' |

## BENCHMARK

GEODETIC SURVEY CONTROL #37GD
N 553,237.204
E 1,372,353.605
ELEV. 290.931'
LOCATED 30' EAST OF FIRE HYDRANT ACROSS FROM DEEP RUN ELEMENTARY SCHOOL

GEODETIC SURVEY CONTROL #37GC
N 553,250.791
E 1,370,946.348
ELEV. 331.855'
LOCATED ON THE SOUTH SIDE OF WATERLOO ROAD ACROSS FROM DEEP RUN PARKWAY

## STRUCTURE SCHEDULE

| STRUCTURE NUMBER | DESCRIPTION | INV. IN | INV. OUT | TOP |
|---|---|---|---|---|
| 1/2 | OIL/WATER SEPERATOR | 312.77 (12") | 312.97 (12") | VARIES |
| 3/2 | TYPE 'S' INLET (HOWARD COUNTY STD. DETAIL SD 4.22) | -- | 313.05 (12") | 316.32 |
| 4/5 | PRECAST MANHOLE (HOWARD CO. STD. G 5.12) | 312.77 (15") | 312.69 (15") | 316.15 |
| 4/4 | PRECAST MANHOLE (HOWARD CO. STD. G 5.12) | 312.04 (15") | 313.35 (15")<br>311.21 (10") | 316.65 |
| 4/5 | TYPE 'S' INLET (HOWARD COUNTY STD. DETAIL SD 4.22) | -- | 312.21 (15") | 316.07 |
| 4/6 | TYPE 'S' INLET (HOWARD COUNTY STD. DETAIL SD 4.22) | 313.32 (6") | 313.82 (12") | 316.17 |
| 7/7 | EXISTING INLET (HOWARD COUNTY STD. DETAIL SD 4.40) | 311.22 (15") | 310.73 (EX-15") | 314.50 |
| 12 | PRECAST MANHOLE (HOWARD CO. STD. G 5.13) | 312.44 (15")<br>312.69 (2-12") | 312.34 (15") | 316.30 |

PROFESSIONAL CERTIFICATION

I, MATTHEW T. ALLEN, HEREBY CERTIFY THAT THESE DOCUMENTS WERE PREPARED OR APPROVED BY ME, AND THAT I AM A DULY LICENSED PROFESSIONAL ENGINEER UNDER THE LAWS OF THE STATE OF MARYLAND, LICENCE NO. 28563, EXPIRATION DATE 4/6/10.

⚠ FOR REVISION 2
BOHLER ENGINEERING

⚠ FOR REVISION 1
BOHLER ENGINEERING, P.C.

FOR REVISION 3 ONLY:

PLANNING BOARD APPROVAL STAMP

APPROVED
PLANNING BOARD
of HOWARD COUNTY
DATE 2-08-07

APPROVED: DEPARTMENT OF PLANNING AND ZONING

| | |
|---|---|
| CHIEF-DEVELOPMENT ENGINEERING DIVISION | DATE 7/5/07 |
| CHIEF-DIVISION OF LAND DEVELOPMENT | DATE 7/16/07 |
| DIRECTOR | DATE 7/12/07 |

APPROVED: FOR PUBLIC WATER AND PUBLIC SEWERAGE SYSTEMS.

| | |
|---|---|
| COUNTY HEALTH OFFICER<br>HOWARD COUNTY HEALTH DEPARTMENT | DATE 7/12/07 |

GENERAL NOTE:
IT IS THE RESPONSIBILITY OF THE CONTRACTOR TO REVIEW ALL OF THE DRAWINGS AND SPECIFICATIONS ASSOCIATED WITH THIS PROJECT WORK SCOPE PRIOR TO THE INITIATION OF CONSTRUCTION. SHOULD THE CONTRACTOR FIND A CONFLICT WITH THE DOCUMENTS RELATIVE TO THE SPECIFICATIONS OR APPLICABLE CODES, IT IS THE CONTRACTORS RESPONSIBILITY TO NOTIFY BOHLER ENGINEERING, P.C. IN WRITING PRIOR TO THE START OF CONSTRUCTION. FAILURE BY THE CONTRACTOR TO NOTIFY BOHLER ENGINEERING, P.C. SHALL CONSTITUTE ACCEPTANCE OF FULL RESPONSIBILITY BY THE CONTRACTOR TO COMPLETE THE SCOPE OF THE WORK AS DEFINED BY THE DRAWINGS AND IN FULL CONFORMANCE WITH LOCAL REGULATIONS AND CODES.

MISS UTILITY

BEFORE YOU DIG CALL
1-800-257-7777
PROTECT YOURSELF, GIVE TWO WORKING DAYS NOTICE

THIS DRAWING DOES NOT INCLUDE NECESSARY COMPONENTS FOR CONSTRUCTION SAFETY. ALL CONSTRUCTION MUST BE DONE IN COMPLIANCE WITH THE OCCUPATIONAL SAFETY AND HEALTH ACT OF 1970 AND ALL RULES AND REGULATIONS THERETO APPURTENANT.

THE CONTRACTOR TO CALL MISS UTILITY TO HAVE ALL EXISTING UTILITIES MARKED 48 HOURS PRIOR TO ANY CONSTRUCTION.

GRAPHIC SCALE

( IN FEET )
1 inch = 20 ft.

| REV. | DATE | DESCRIPTION | BY |
|---|---|---|---|
| 3 | 1/24/08 | REVISED TO CONFORM TO ADDED PUBLIC WORKS & CONSTRUCTION BUS. SUPPORT SERVICES UTILITIES APPROVAL | MJG |
| 2 | 10/26/11 | ADD 1,500 FUEL ADDITIVE TANK | DAWN |
| 1 | 9/12/07 | EX. ELEC LINE & TRANSFORMER, PROP SCREEN WALL | Bohler |
| 1 | 9/12/07 | IRRIGATION WATERLINE AND METER | Bohler |

OWNER/DEVELOPER: HRD LAND HOLDINGS, INC.
HOWARD RESEARCH AND DEVELOPMENT CORPORATION
THE ROUSE BUILDING
10275 LITTLE PATUXENT PARKWAY
COLUMBIA, MARYLAND 21044
PHONE: (410) 992-6000

PROJECT: BENSON EAST
PARCEL U; GASOLINE STATION WITH KIOSK (COSTCO GASOLINE); GATEWAY OVERLOOK SHOPPING CENTER

AREA: TAX MAP 37 GRID 1 & 2 PARCEL U ZONED NEW TOWN
BENSON EAST
6TH ELECTION DISTRICT
HOWARD COUNTY, MARYLAND

TITLE: GRADING AND DRAINAGE PLAN

BOHLER ENGINEERING, P.C.
• PROFESSIONAL ENGINEERING SERVICES •
• 22630 DAVIS DRIVE, SUITE 200 STERLING, VIRGINIA, 20164 •
• CONTACT: DAVID B. NUMBOCK
• (703) 709-9500 FAX: (703) 709-9501 • WWW.BOHLERENG.COM

STATE OF MARYLAND
ADAM J. VOLANTH
PROFESSIONAL ENGINEER
NO. 21342
6/24/07

| | |
|---|---|
| DESIGNED BY: | J.A.D. |
| DRAWN BY: | R.F.G. |
| PROJECT NO.: | S040011.01 |
| DATE: | 6/25/07 |
| SCALE: | AS SHOWN |
| DRAWING NO.: | 6 OF 23 |

SDP 07-36

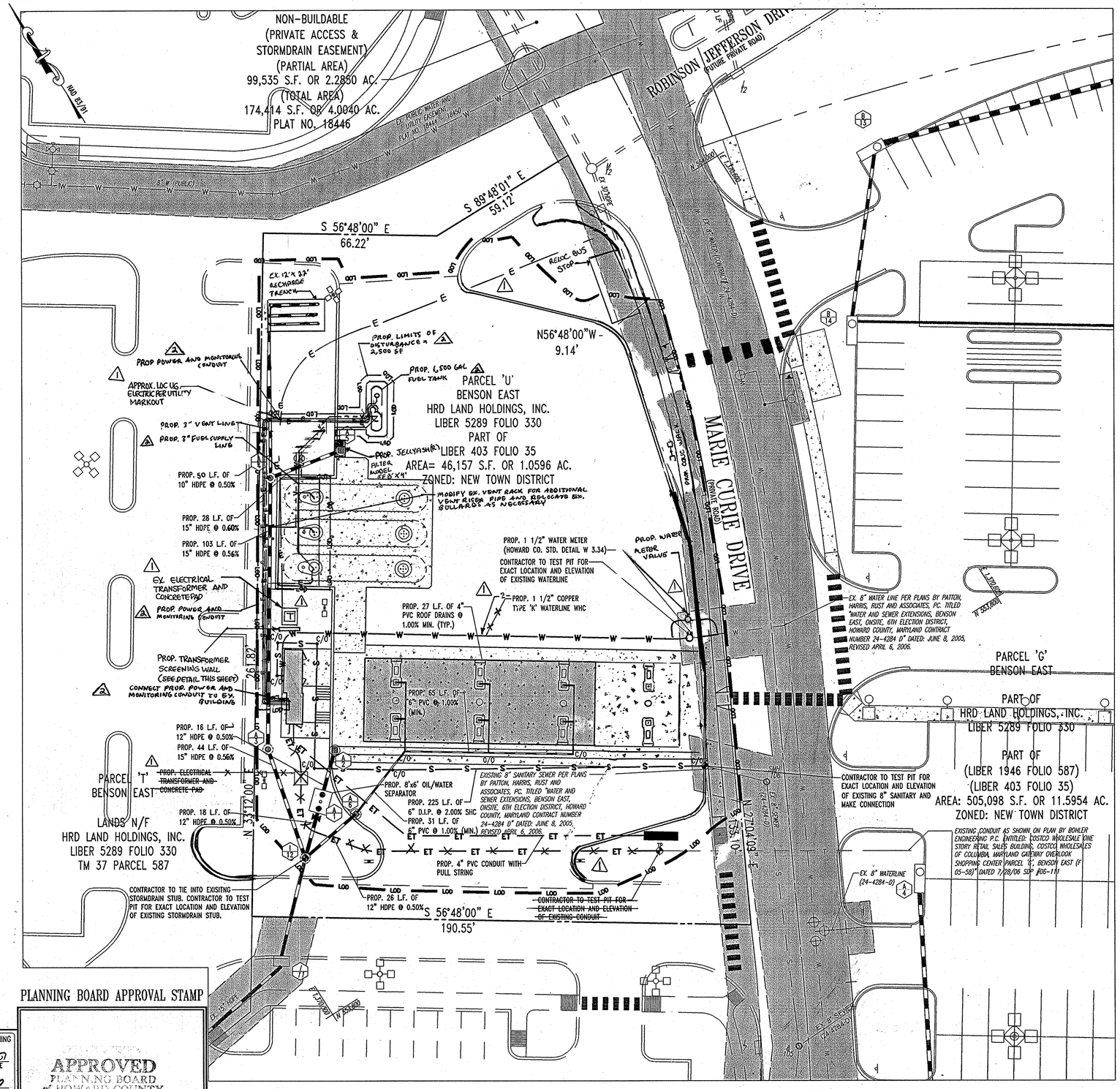
NON-BUILDABLE
(PRIVATE ACCESS &
STORMDRAIN EASEMENT)
(PARTIAL AREA)
99,535 S.F. OR 2.2850 AC.
(TOTAL AREA)
174,414 S.F. OR 4.0040 AC.
PLAT NO. 18446
ROBINSON JEFFERSON DRIVE
(FUTURE PRIVATE ROAD)
MARIE CURIE DRIVE
(PRIVATE ROAD)
S 89°48'01" E
59.12'
S 56°48'00" E
66.22'
N56°48'00"W -
9.14'
S 56°48'00" E
190.55'
N 33°12'00" E
261.87'
PARCEL 'U'
BENSON EAST
HRD LAND HOLDINGS, INC.
LIBER 5289 FOLIO 330
PART OF
LIBER 403 FOLIO 35
AREA= 46,157 S.F. OR 1.0596 AC.
ZONED: NEW TOWN DISTRICT
PARCEL 'G'
BENSON EAST
PART OF
HRD LAND HOLDINGS, INC.
LIBER 5289 FOLIO 330
PART OF
(LIBER 1946 FOLIO 587)
(LIBER 403 FOLIO 35)
AREA: 505,098 S.F. OR 11.5954 AC.
ZONED: NEW TOWN DISTRICT
PARCEL 'T'
BENSON EAST
LANDS N/F
HRD LAND HOLDINGS, INC.
LIBER 5289 FOLIO 330
TM 37 PARCEL 587
EX. 12'x 22' RECHARGE TRENCH
PROP. LIMITS OF DISTURBANCE = 2,500 SF
PROP. 6,500 GAL FUEL TANK
PROP. POWER AND MONITORING CONDUIT
APPROX. LOC UG ELECTRIC PER UTILITY MARKOUT
PROP. 2" VENT LINE
PROP. 2" FUEL SUPPLY LINE
PROP. JELLYFISH FILTER MODEL SFD X4'
PROP. 50 L.F. OF 10" HDPE @ 0.50%
PROP. 28 L.F. OF 15" HDPE @ 0.60%
PROP. 103 L.F. OF 15" HDPE @ 0.56%
MODIFY EX. VENT RACK FOR ADDITIONAL VENT RISER PIPE AND RELOCATE EX. BOLLARDS AS NECESSARY
EX. ELECTRICAL TRANSFORMER AND CONCRETE PAD
PROP. POWER AND MONITORING CONDUIT
PROP. TRANSFORMER SCREENING WALL (SEE DETAIL THIS SHEET)
CONNECT PROP. POWER AND MONITORING CONDUIT TO EX. BUILDING
PROP. 16 L.F. OF 12" HDPE @ 0.50%
PROP. 44 L.F. OF 15" HDPE @ 0.56%
~~PROP. ELECTRICAL TRANSFORMER AND CONCRETE PAD~~
PROP. 18 L.F. OF 12" HDPE @ 0.50%
PROP. 1 1/2" WATER METER (HOWARD CO. STD. DETAIL W 3.34)
CONTRACTOR TO TEST PIT FOR EXACT LOCATION AND ELEVATION OF EXISTING WATERLINE
PROP. 27 L.F. OF 4" PVC ROOF DRAINS @ 1.00% MIN. (TYP.)
PROP. 1 1/2" COPPER TYPE 'K' WATERLINE WHC
PROP. WATER METER VALVE
PROP. 65 L.F. OF 6" PVC @ 1.00% (MIN.)
PROP. 8'x6' OIL/WATER SEPARATOR
PROP. 225 L.F. OF 6" D.I.P. @ 2.00% SHC
PROP. 31 L.F. OF 6" PVC @ 1.00% (MIN.)
PROP. 4" PVC CONDUIT WITH PULL STRING
PROP. 26 L.F. OF 12" HDPE @ 0.50%
~~CONTRACTOR TO TEST PIT FOR EXACT LOCATION AND ELEVATION OF EXISTING CONDUIT~~
CONTRACTOR TO TIE INTO EXISITNG STORMDRAIN STUB. CONTRACTOR TO TEST PIT FOR EXACT LOCATION AND ELEVATION OF EXISTING STORMDRAIN STUB.
EXISTING 8" SANITARY SEWER PER PLANS BY PATTON, HARRIS, RUST AND ASSOCIATES, PC. TITLED "WATER AND SEWER EXTENSIONS, BENSON EAST, ONSITE, 6TH ELECTION DISTRICT, HOWARD COUNTY, MARYLAND CONTRACT NUMBER 24-4284 D" DATED: JUNE 8, 2005, REVISED APRIL 6, 2006.
EX. 8" WATER LINE PER PLANS BY PATTON, HARRIS, RUST AND ASSOCIATES, PC. TITLED "WATER AND SEWER EXTENSIONS, BENSON EAST, ONSITE, 6TH ELECTION DISTRICT, HOWARD COUNTY, MARYLAND CONTRACT NUMBER 24-4284 D" DATED: JUNE 8, 2005, REVISED APRIL 6, 2006.
CONTRACTOR TO TEST PIT FOR EXACT LOCATION AND ELEVATION OF EXISTING 8" SANITARY AND MAKE CONNECTION
EXISTING CONDUIT AS SHOWN ON PLAN BY BOHLER ENGINEERING P.C. ENTITLED: "COSTCO WHOLESALE ONE STORY RETAIL SALES BUILDING, COSTCO WHOLESALES OF COLUMBIA, MARYLAND GATEWAY OVERLOOK SHOPPING CENTER PARCEL 'G', BENSON EAST (F 05-58)" DATED 7/28/06 SDP 06-111
EX. 8" WATERLINE (24-4284-D)
EX. 12" WATERLINE
EX. 8" SANITARY (24-4284-D)
RELOC. BUS STOP
EX. 8" WATER CONTRACT 24-4284-D
EX. PUBLIC WATER AND UTILITY EASEMENT PLAT NO. 18446 (ZB-1)
N 553,800
N 553,600
N 553,400
N 553,200
N 553,000
N 552,800
N 552,600
N 552,400
N 552,200
N 552,000
N 551,800
N 551,600
N 551,400
N 551,200
N 551,000
N 550,800
N 550,600
N 550,400
N 550,200
N 550,000
N

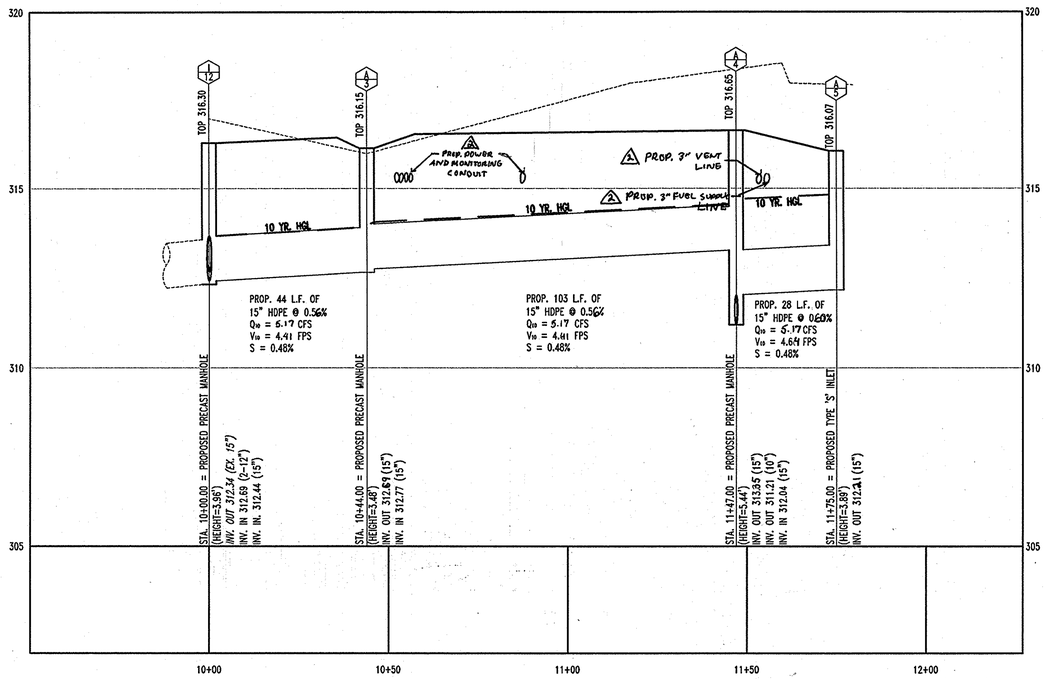


*STUB TO I-12 WAS CONSTRUCTED UNDER SDP 06-108

## STORMDRAIN PROFILE I12-A5

SCALE: HORZ. 1"=20'
VERT. 1"=2'

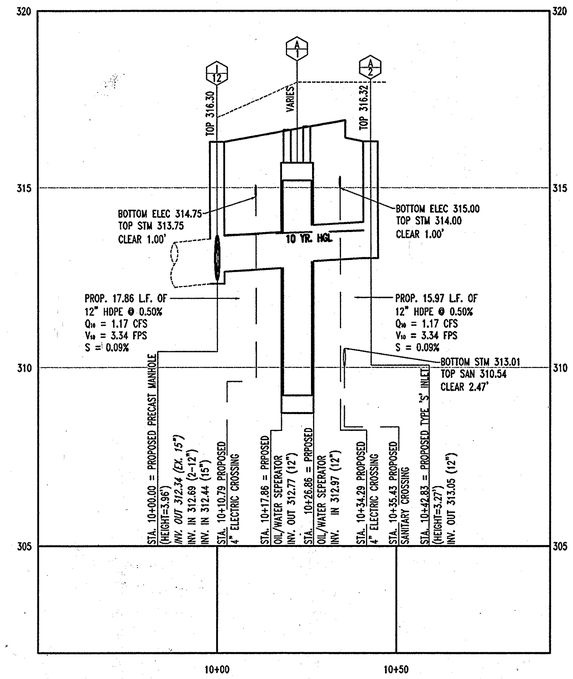


## STORMDRAIN PROFILE I12-A2

SCALE: HORZ. 1"=20'
VERT. 1"=2'

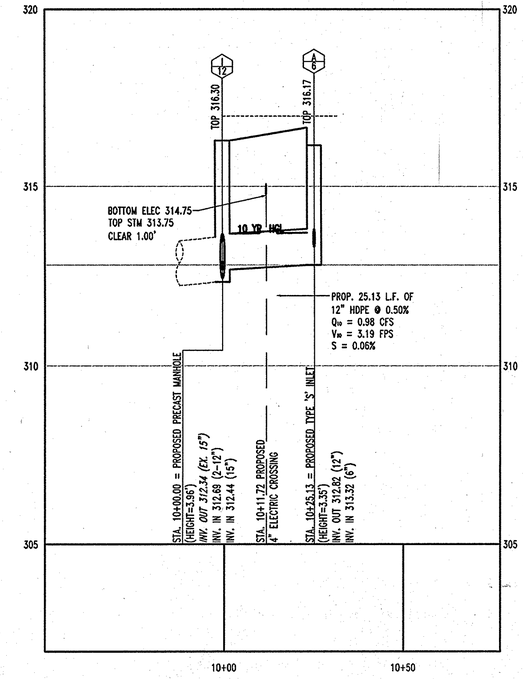


## STORMDRAIN PROFILE I12-A6

SCALE: HORZ. 1"=20'
VERT. 1"=2'

PROFESSIONAL CERTIFICATION
I, MATTHEW T. ALLEN, HEREBY CERTIFY THAT THESE DOCUMENTS WERE PREPARED OR APPROVED BY ME, AND THAT I AM A DULY LICENSED PROFESSIONAL ENGINEER UNDER THE LAWS OF THE STATE OF MARYLAND, LICENSE NO. 28567, EXPIRATION DATE 1/1/13.

PROFESSIONAL CERTIFICATION
I, MICHAEL J. PUSZELL, HEREBY CERTIFY THAT THESE DOCUMENTS WERE PREPARED OR APPROVED BY ME, AND THAT I AM A DULY LICENSED PROFESSIONAL ENGINEER UNDER THE LAWS OF THE STATE OF MARYLAND, LICENSE NO. 44097, EXPIRATION DATE: 12/9/15

FOR REVISION 3 ONLY:
8/20/14

FOR REVISION 2
BOHLER ENGINEERING
11/6/10

| REV. | DATE | DESCRIPTION | BY |
|---|---|---|---|
| 3 | 11/20/14 | REVISED LAYOUT: ADD PUMPS + CANOPY, RELOC. BOS STOP/WALK, UTILITY UPDATE | MSC |
| 2 | 10/04/11 | ADD 6500 FUEL ADDITIVE TANK | MSC |
| 1 | | | |

OWNER/DEVELOPER: HRD LAND HOLDINGS, INC.
HOWARD RESEARCH AND DEVELOPMENT CORPORATION
THE ROUSE BUILDING
10275 LITTLE PATUXENT PARKWAY
COLUMBIA, MARYLAND 21044
PHONE: (410) 992-6000

PROJECT: BENSON EAST
PARCEL U; GASOLINE STATION WITH KIOSK (COSTCO GASOLINE); GATEWAY OVERLOOK SHOPPING CENTER

AREA: TAX MAP 37 GRID 1 & 2 ZONED NEW TOWN
PARCEL U
BENSON EAST
6TH ELECTION DISTRICT
HOWARD COUNTY, MARYLAND

TITLE: UTILITY PROFILES

BOHLER ENGINEERING, P.C.
• PROFESSIONAL ENGINEERING SERVICES •
• 22630 DAVIS DRIVE, SUITE 200 STERLING, VIRGINIA, 20164 •
• CONTACT: DAVID B. NEMECEK •
• (703) 708-9600 FAX: (703) 708-9601 • WWW.BOHLER.COM

6/29/07
ADAM J. VOLANTH
PROFESSIONAL ENGINEER
PROFESSIONAL ENGINEER NO. 21342

| | |
|---|---|
| DESIGNED BY: | J.A.D. |
| DRAWN BY: | R.F.G. |
| PROJECT NO.: | S040011.01 |
| DATE: | 6/25/07 |
| SCALE: | AS SHOWN |
| DRAWING NO.: | 8 OF 23 |

MISS UTILITY

BEFORE YOU DIG CALL
1-800-257-7777
PROTECT YOURSELF, GIVE TWO WORKING DAYS NOTICE

THIS DRAWING DOES NOT INCLUDE NECESSARY COMPONENTS FOR CONSTRUCTION SAFETY. ALL CONSTRUCTION MUST BE DONE IN COMPLIANCE WITH THE OCCUPATIONAL SAFETY AND HEALTH ACT OF 1970 AND ALL RULES AND REGULATIONS THERETO APPURTENANT.

THE CONTRACTOR TO CALL MISS UTILITY TO HAVE ALL EXISTING UTILITIES MARKED 48 HOURS PRIOR TO ANY CONSTRUCTION.

PLANNING BOARD APPROVAL STAMP

APPROVED
PLANNING BOARD
of HOWARD COUNTY
DATE 2-08-07

APPROVED: DEPARTMENT OF PLANNING AND ZONING
CHIEF-DEVELOPMENT ENGINEERING DIVISION — DATE 7/6/07
CHIEF-DIVISION OF LAND DEVELOPMENT — DATE 7/16/07
DIRECTOR — DATE 7/16/07

APPROVED: FOR PUBLIC WATER AND PUBLIC SEWERAGE SYSTEMS.
COUNTY HEALTH OFFICER — DATE 7/13/07
HOWARD COUNTY HEALTH DEPARTMENT

SDP 07-36

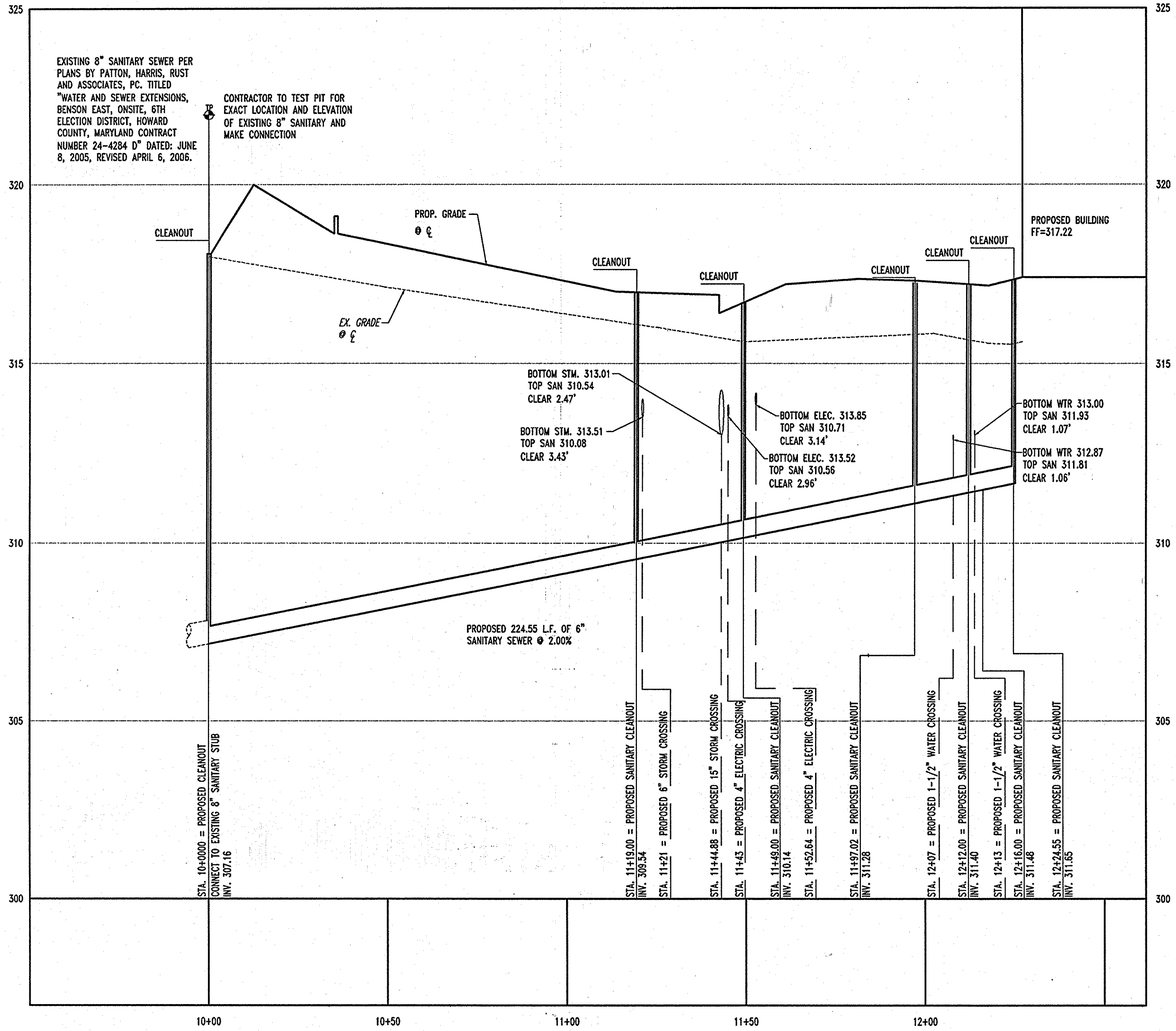


## PROPOSED 6" SANITARY PROFILE

SCALE: HORZ. 1"=20'
VERT. 1"=2'

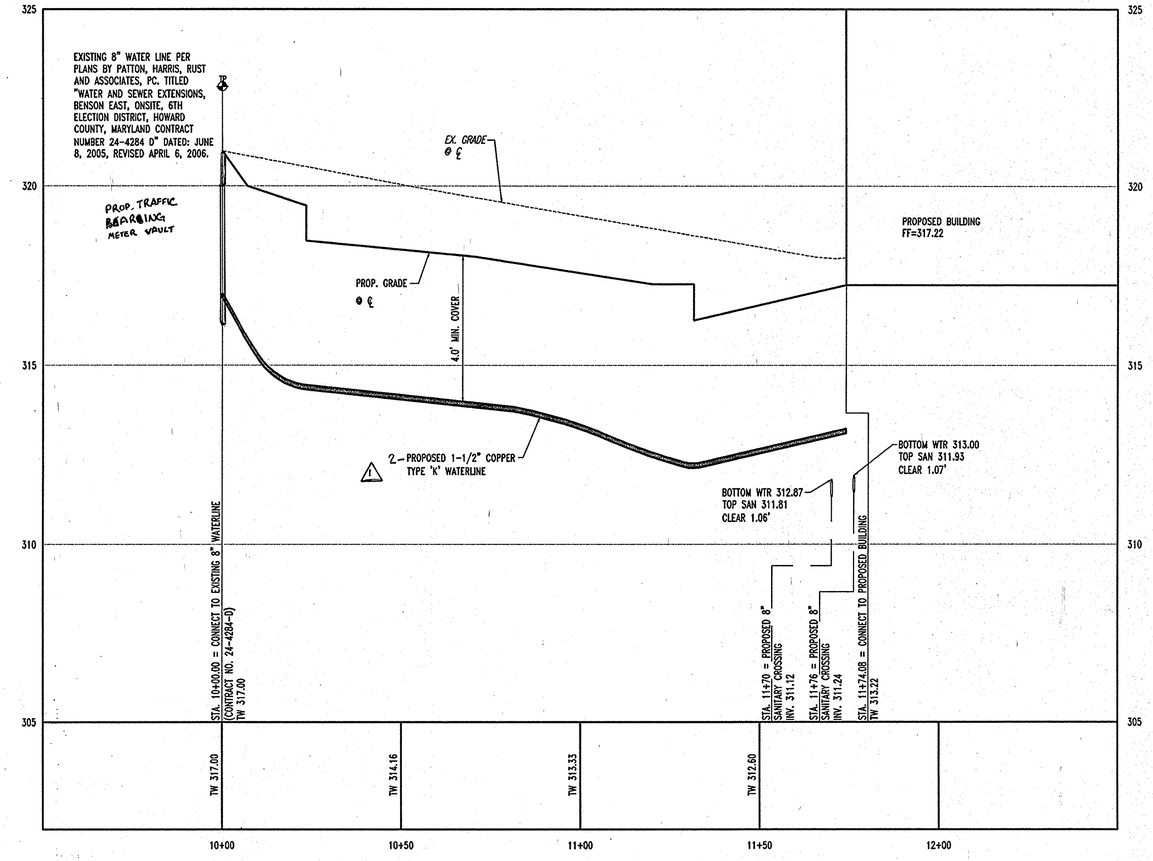


## PROPOSED 1-1/2" WATERLINE PROFILE

SCALE: HORZ. 1"=20'
VERT. 1"=2'

| REV. | DATE | DESCRIPTION | BY |
|---|---|---|---|
| 3 | 1/29/14 | REVISED SITE LAYOUT: NEW BUILDING, CANOPY, REDIR. WALKS, BUS STOP, UTILITY MOD | AJG |
| 1 | 9/21/07 | EX. ELEC. LINE & TRANSFORMER, PROP. SCREEN WALL | BOHLER |
| 1 | 9/12/07 | IRRIGATION WATER LINE AND METER | BOHLER |

OWNER/DEVELOPER: HRD LAND HOLDINGS, INC.
HOWARD RESEARCH AND DEVELOPMENT CORPORATION
THE ROUSE BUILDING
10275 LITTLE PATUXENT PARKWAY
COLUMBIA, MARYLAND....21044
PHONE: (410) 992-6000

PROJECT: BENSON EAST
PARCEL U; GASOLINE STATION WITH KIOSK (COSTCO GASOLINE); GATEWAY OVERLOOK SHOPPING CENTER

AREA: TAX MAP 37 GRID 1 & 2 ZONED NEW TOWN
PARCEL U
BENSON EAST
6TH ELECTION DISTRICT
HOWARD COUNTY, MARYLAND

TITLE: UTILITY PROFILES

BOHLER ENGINEERING, P.C.
• PROFESSIONAL ENGINEERING SERVICES •
• 22820 DAVIS DRIVE, SUITE 200 STERLING, VIRGINIA, 20164 •
• CONTACT: DAVID B. NEMECEK
• (703) 708-9500 FAX: (703) 708-9501 • WWW.BOHLER.COM

STATE OF MARYLAND REGISTERED PROFESSIONAL ENGINEER ADAM J. VOLANTH PROFESSIONAL ENGINEER NO. 21342
6/26/07

| | |
|---|---|
| DESIGNED BY: | J.A.D. |
| DRAWN BY: | R.F.G. |
| PROJECT NO.: | S040011.01 |
| DATE: | 6/25/07 |
| SCALE: | AS SHOWN |
| DRAWING NO.: | 9 OF 23 |

SDP 07-36

PLANNING BOARD APPROVAL STAMP

APPROVED: DEPARTMENT OF PLANNING AND ZONING
CHIEF-DEVELOPMENT ENGINEERING DIVISION — DATE 7/5/07
CHIEF-DIVISION OF LAND DEVELOPMENT — DATE 7/6/07
DIRECTOR — DATE 7/12/07

APPROVED: FOR PUBLIC WATER AND PUBLIC SEWERAGE SYSTEMS.
COUNTY HEALTH OFFICER — DATE 7/13/07
HOWARD COUNTY HEALTH DEPARTMENT

APPROVED
PLANNING BOARD
of HOWARD COUNTY
DATE 2-08-07

STATE OF MARYLAND REGISTERED PROFESSIONAL ENGINEER

1 FOR REVISION 1
BOHLER ENGINEERING, P.C.

FOR REVISION 3 ONLY:
STATE OF MARYLAND REGISTERED PROFESSIONAL ENGINEER
1/29/14

PROFESSIONAL CERTIFICATION
I, MICHAEL J. GEBEL, HEREBY CERTIFY THAT THESE DOCUMENTS WERE PREPARED OR APPROVED BY ME, AND THAT I AM A DULY LICENSED PROFESSIONAL ENGINEER UNDER THE LAWS OF THE STATE OF MARYLAND, LICENSE NO. 44497 EXPIRATION DATE: 6/9/15

MISS UTILITY
BEFORE YOU DIG CALL 1-800-257-7777
PROTECT YOURSELF, GIVE TWO WORKING DAYS NOTICE

THIS DRAWING DOES NOT INCLUDE NECESSARY COMPONENTS FOR CONSTRUCTION SAFETY. ALL CONSTRUCTION MUST BE DONE IN COMPLIANCE WITH THE OCCUPATIONAL SAFETY AND HEALTH ACT OF 1970 AND ALL RULES AND REGULATIONS THERETO APPURTENANT.

THE CONTRACTOR TO CALL MISS UTILITY TO HAVE ALL EXISTING UTILITIES MARKED 48 HOURS PRIOR TO ANY CONSTRUCTION.

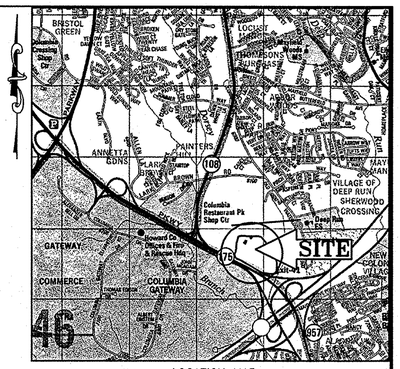


LOCATION MAP

COPYRIGHT ADC THE MAP PEOPLE
PERMIT USE NO. 20602153-5
SCALE: 1"=2000'

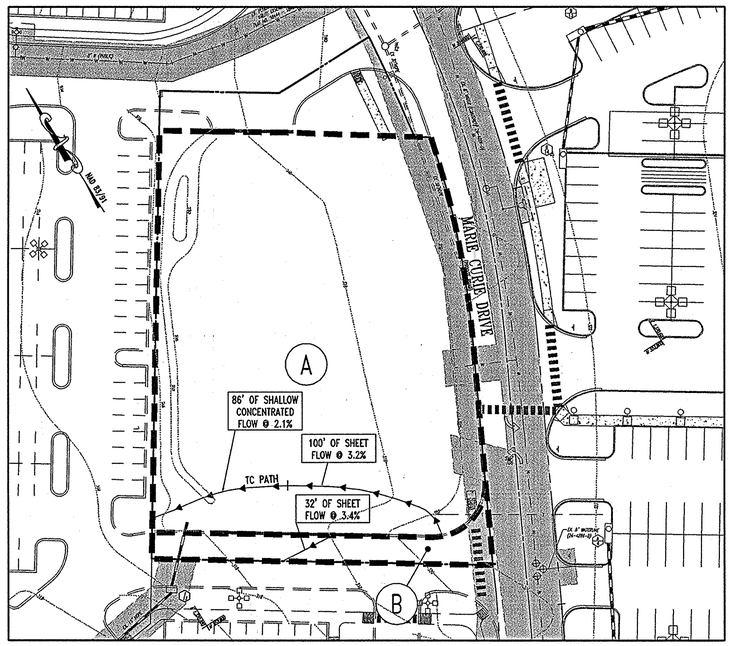


EXISTING SWM DRAINAGE AREAS
SCALE: 1"=40'

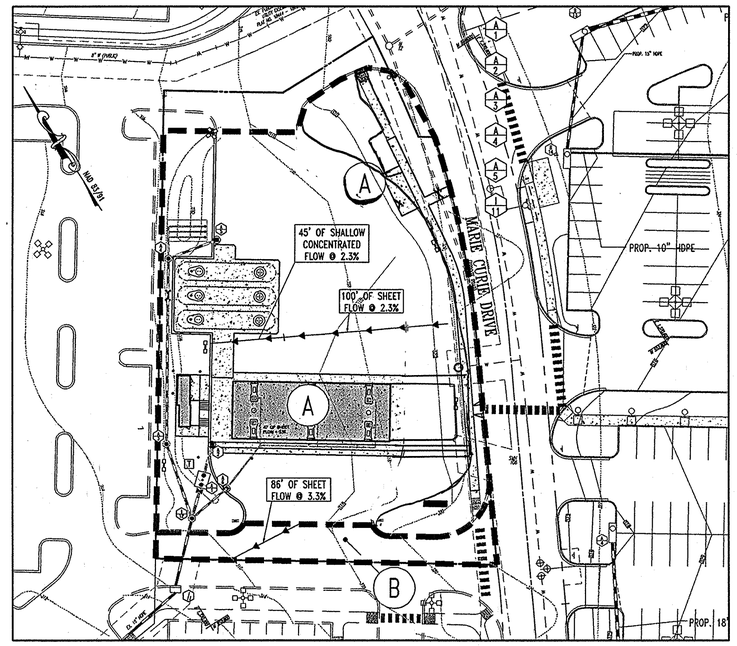


PROPOSED SWM DRAINAGE AREAS
SCALE: 1"=40'

(A) IMPERVIOUS AREA = 1,307 S.F. OR 0.03 AC.
PERVIOUS AREA = 40,946 S.F. OF 0.94 AC.
TOTAL AREA = 42,253 S.F. OR 0.97 AC.
"C" FACTOR = 62

(B) IMPERVIOUS AREA = 3,920 S.F. OR 0.09 AC.
PERVIOUS AREA = 0 S.F. OF 0 AC.
TOTAL AREA = 3,920 S.F. OR 0.09 AC.
"C" FACTOR = 98

(A) IMPERVIOUS AREA = 32,912 S.F. OR 0.76 AC.
PERVIOUS AREA = 8,906 S.F. OF 0.20 AC.
TOTAL AREA = 41,818 S.F. OR 0.96 AC.
"C" FACTOR = 93

(B) IMPERVIOUS AREA = 4,356 S.F. OR 0.10 AC.
PERVIOUS AREA = 0 S.F. OF 0 AC.
TOTAL AREA = 4,356 S.F. OR 0.10 AC.
"C" FACTOR = 98

## NOTE:

PROPOSED STORMWATER MANAGEMENT DRAINAGE AREAS USED A TIME OF CONCENTRATION OF 0.10 HOURS. THE ACTUAL TIME OF CONCENTRATION WAS CALCULATED TO BE LESS THAN THE MINIMUM REQUIREMENT OF 0.10 HOURS.

PROFESSIONAL CERTIFICATION

I, MICHAEL J. CESELL, HEREBY CERTIFY THAT THESE DOCUMENTS WERE PREPARED OR APPROVED BY ME AND THAT I AM A DULY LICENSED PROFESSIONAL ENGINEER UNDER THE LAWS OF THE STATE OF MARYLAND. LICENSE NO. 44097, EXPIRATION DATE: 6/9/15

FOR REVISION 3 ONLY:

MICHAEL J. CESELL
No. 44097
6/20/14
PROFESSIONAL ENGINEER

MISS UTILITY

BEFORE YOU DIG CALL
1-800-257-7777
PROTECT YOURSELF, GIVE TWO WORKING DAYS NOTICE

THIS DRAWING DOES NOT INCLUDE NECESSARY COMPONENTS FOR CONSTRUCTION SAFETY. ALL CONSTRUCTION MUST BE DONE IN COMPLIANCE WITH THE OCCUPATIONAL SAFETY AND HEALTH ACT OF 1970 AND ALL RULES AND REGULATIONS THERETO APPURTENANT.

THE CONTRACTOR TO CALL MISS UTILITY TO HAVE ALL EXISTING UTILITIES MARKED 48 HOURS PRIOR TO ANY CONSTRUCTION.

PLANNING BOARD APPROVAL STAMP

APPROVED
PLANNING BOARD
of HOWARD COUNTY
DATE 2·08·07

APPROVED: DEPARTMENT OF PLANNING AND ZONING

CHIEF-DEVELOPMENT ENGINEERING DIVISION — DATE 7/5/07
CHIEF-DIVISION OF LAND DEVELOPMENT — DATE 7/6/07
DIRECTOR — DATE 7/3/07

APPROVED: FOR PUBLIC WATER AND PUBLIC SEWERAGE SYSTEMS.

COUNTY HEALTH OFFICER — DATE 7/13/07
HOWARD COUNTY HEALTH DEPARTMENT

GENERAL NOTE:
IT IS THE RESPONSIBILITY OF THE CONTRACTOR TO REVIEW ALL OF THE DRAWINGS AND SPECIFICATIONS ASSOCIATED WITH THIS PROJECT WORK SCOPE PRIOR TO THE INITIATION OF CONSTRUCTION. SHOULD THE CONTRACTOR FIND A CONFLICT WITH THE DOCUMENTS RELATIVE TO THE SPECIFICATIONS OR APPLICABLE CODES, IT IS THE CONTRACTORS RESPONSIBILITY TO NOTIFY BOHLER ENGINEERING, P.C. IN WRITING PRIOR TO THE START OF CONSTRUCTION. FAILURE BY THE CONTRACTOR TO NOTIFY BOHLER ENGINEERING, P.C. SHALL CONSTITUTE ACCEPTANCE OF FULL RESPONSIBILITY BY THE CONTRACTOR TO COMPLETE THE SCOPE OF THE WORK AS DEFINED BY THE DRAWINGS AND IN FULL CONFORMANCE WITH LOCAL REGULATIONS AND CODES.

| REV. | DATE | DESCRIPTION | BY |
|---|---|---|---|
| 3 | 1/20/14 | REVISED CANOPY/NEW PUMPS + CANOPY, REDOC AND STORM WALK, UTILITY UPDATE | MJC |

OWNER/DEVELOPER: HRD LAND HOLDINGS, INC.
HOWARD RESEARCH AND DEVELOPMENT CORPORATION
THE ROUSE BUILDING
10275 LITTLE PATUXENT PARKWAY
COLUMBIA, MARYLAND 21044
PHONE: (410) 992-6000

PROJECT: BENSON EAST
PARCEL U; GASOLINE STATION WITH KIOSK (COSTCO GASOLINE); GATEWAY OVERLOOK SHOPPING CENTER

AREA: TAX MAP 37 GRID 1 & 2 ZONED NEW TOWN
PARCEL U
BENSON EAST
6TH ELECTION DISTRICT
HOWARD COUNTY, MARYLAND

TITLE: SWM DRAINAGE AREA MAPS

BOHLER ENGINEERING, P.C.
• PROFESSIONAL ENGINEERING SERVICES •
• 22630 DAVIS DRIVE, SUITE 200 STERLING, VIRGINIA, 20164 •
• CONTACT: DAVID B. NEMECEK •
• (703) 709-9600 FAX: (703) 709-9501 • BOHLERENG.COM

6/20/07
STATE OF MARYLAND
ADAM J. VOLANTH
PROFESSIONAL ENGINEER
PROFESSIONAL ENGINEER NO. 21342

| | |
|---|---|
| DESIGNED BY: | J.A.D. |
| DRAWN BY: | R.F.G. |
| PROJECT NO.: | S040011.01 |
| DATE: | 6/25/07 |
| SCALE: | AS SHOWN |
| DRAWING NO.: | 10 OF 23 |

SDP 07-36

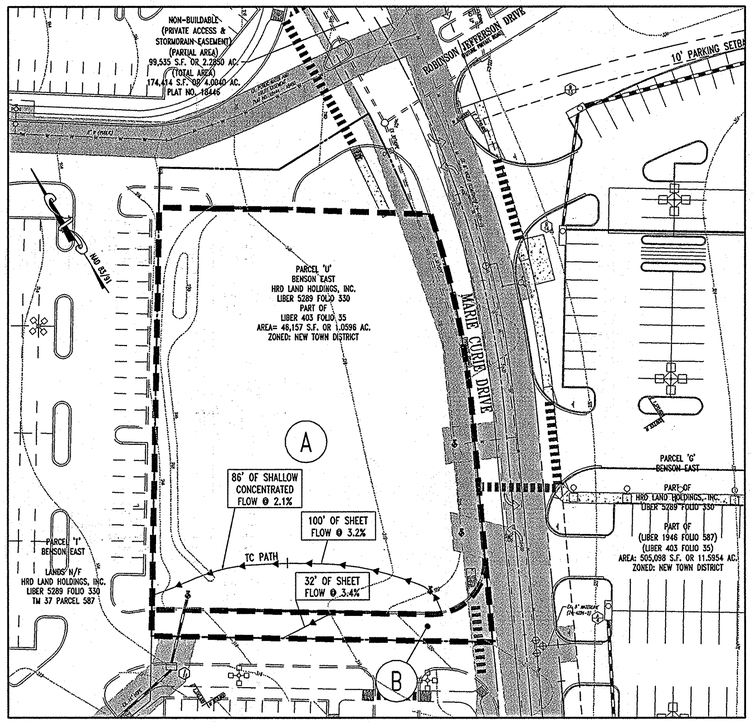


EXISTING STORMDRAIN DRAINAGE AREAS

SCALE: 1"=40'

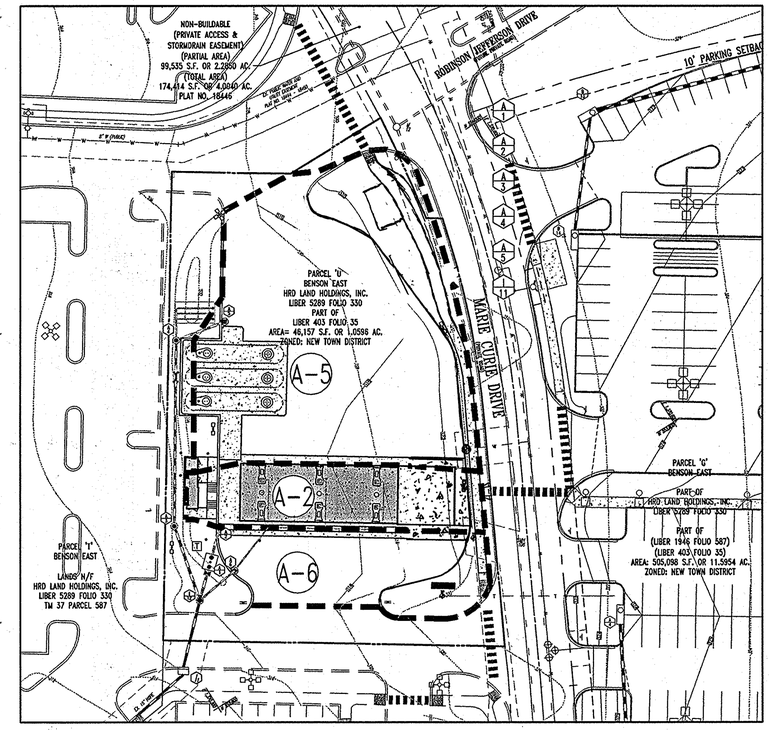


PROPOSED STORMDRAIN DRAINAGE AREAS

SCALE: 1"=40'

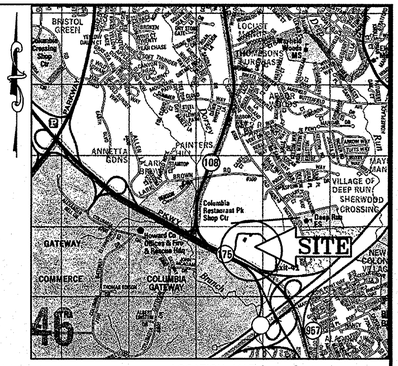


LOCATION MAP

COPYRIGHT ADC THE MAP PEOPLE
PERMIT USE NO. 20602153-5
SCALE: 1"=2000'

(A) IMPERVIOUS AREA = 1,307 S.F. OR 0.03 AC.
PERVIOUS AREA = 40,946 S.F. OF 0.94 AC.
TOTAL AREA = 42,253 S.F. OR 0.97 AC.
"C" FACTOR = 62

(B) IMPERVIOUS AREA = 3,920 S.F. OR 0.09 AC.
PERVIOUS AREA = 0 S.F. OF 0 AC.
TOTAL AREA = 3,920 S.F. OR 0.09 AC.
"C" FACTOR = 98

(A-2) IMPERVIOUS AREA = 5,927 S.F. OR 0.14 AC.
PERVIOUS AREA = 657 S.F. OF 0.02 AC.
TOTAL AREA = 6,584 S.F. OR 0.15 AC.
"C" FACTOR = 95

(A-5) IMPERVIOUS AREA = 24,954 S.F. OR 0.57 AC.
PERVIOUS AREA = 3,238 S.F. OF 0.07 AC.
TOTAL AREA = 28,192 S.F. OR 0.64 AC.
"C" FACTOR = 95

(A-6) IMPERVIOUS AREA = 4950 S.F. OR 0.11 AC.
PERVIOUS AREA = 978 S.F. OF 0.02 AC.
TOTAL AREA = 5,928 S.F. OR 0.13 AC.
"C" FACTOR = 94

PLANNING BOARD APPROVAL STAMP

APPROVED: DEPARTMENT OF PLANNING AND ZONING

CHIEF-DEVELOPMENT ENGINEERING DIVISION — DATE 7/5/07

CHIEF-DIVISION OF LAND DEVELOPMENT — DATE 7/10/07

DIRECTOR — DATE 7/12/07

APPROVED: FOR PUBLIC WATER AND PUBLIC SEWERAGE SYSTEMS.

COUNTY HEALTH OFFICER — DATE 7/5/07
HOWARD COUNTY HEALTH DEPARTMENT

APPROVED
PLANNING BOARD
of HOWARD COUNTY
DATE 2-08-07

GENERAL NOTE:
IT IS THE RESPONSIBILITY OF THE CONTRACTOR TO REVIEW ALL OF THE DRAWINGS AND SPECIFICATIONS ASSOCIATED WITH THIS PROJECT WORK SCOPE PRIOR TO THE INITIATION OF CONSTRUCTION. SHOULD THE CONTRACTOR FIND A CONFLICT WITH THE DOCUMENTS RELATIVE TO THE SPECIFICATIONS OR APPLICABLE CODES, IT IS THE CONTRACTORS RESPONSIBILITY TO NOTIFY BOHLER ENGINEERING, P.C. IN WRITING PRIOR TO THE START OF CONSTRUCTION. FAILURE BY THE CONTRACTOR TO NOTIFY BOHLER ENGINEERING, P.C. SHALL CONSTITUTE ACCEPTANCE OF FULL RESPONSIBILITY BY THE CONTRACTOR TO COMPLETE THE SCOPE OF THE WORK AS DEFINED BY THE DRAWINGS AND IN FULL CONFORMANCE WITH LOCAL REGULATIONS AND CODES.

FOR REVISION 3 ONLY:

PROFESSIONAL CERTIFICATION
I, MICHAEL J. GERZILL, HEREBY CERTIFY THAT THESE DOCUMENTS WERE PREPARED OR APPROVED BY ME, AND THAT I AM A DULY LICENSED PROFESSIONAL ENGINEER UNDER THE LAWS OF THE STATE OF MARYLAND
LICENSE NO. 44097, EXPIRATION DATE: 6/9/15

MISS UTILITY

BEFORE YOU DIG CALL
1-800-257-7777
PROTECT YOURSELF, GIVE TWO WORKING DAYS NOTICE

THIS DRAWING DOES NOT INCLUDE NECESSARY COMPONENTS FOR CONSTRUCTION SAFETY. ALL CONSTRUCTION MUST BE DONE IN COMPLIANCE WITH THE OCCUPATIONAL SAFETY AND HEALTH ACT OF 1970 AND ALL RULES AND REGULATIONS THERETO APPURTENANT.

THE CONTRACTOR TO CALL MISS UTILITY TO HAVE ALL EXISTING UTILITIES MARKED 48 HOURS PRIOR TO ANY CONSTRUCTION.

| REV. | DATE | DESCRIPTION | BY |
|---|---|---|---|
| 3 | 1/20/14 | REVISED LAYOUT: NEW SWMP, CANOPY, FAR MJS STOP + WALK, UTILITY UPDATE | MJS |

OWNER/DEVELOPER: HRD LAND HOLDINGS, INC.
HOWARD RESEARCH AND DEVELOPMENT CORPORATION
THE ROUSE BUILDING
10275 LITTLE PATUXENT PARKWAY
COLUMBIA, MARYLAND 21044
PHONE: (410) 992-6000

PROJECT: BENSON EAST
PARCEL U; GASOLINE STATION WITH KIOSK (COSTCO GASOLINE); GATEWAY OVERLOOK SHOPPING CENTER

AREA: TAX MAP 37 GRID 1 & 2 ZONED NEW TOWN
PARCEL 'U'
BENSON EAST
6TH ELECTION DISTRICT
HOWARD COUNTY, MARYLAND

TITLE: STORMDRAIN DRAINAGE AREA MAPS

BOHLER ENGINEERING, P.C.
• PROFESSIONAL ENGINEERING SERVICES •
• 22630 DAVIS DRIVE, SUITE 200 STERLING, VIRGINIA, 20164 •
• CONTACT: DAVID B. NEMECEK •
• (703) 709-9500 FAX: (703) 709-9501 • WWW.BOHLERENG.COM

6/26/07
STATE OF MARYLAND
ADAM J. VOLANTH
PROFESSIONAL ENGINEER
PROFESSIONAL ENGINEER NO. 21342

| | |
|---|---|
| DESIGNED BY: | J.A.D. |
| DRAWN BY: | R.F.G. |
| PROJECT NO.: | S040011.01 |
| DATE: | 6/25/07 |
| SCALE: | AS SHOWN |
| DRAWING NO.: | 11 OF 23 |

SDP 07-36

Appendix D.8. Miscellaneous Details for Compliance with Performance Criteria

Detail 1 Trash Rack Protection for Low Flow Orifice

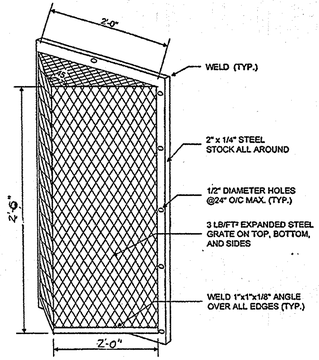


NOTES FOR TRASH RACK

1. TRASH RACK TO BE CENTERED OVER OPENING.
2. STEEL TO CONFORM TO ASTM A-36.
3. ALL SURFACES TO BE COATED WITH ZRC COLD GALVANIZING COMPOUND AFTER WELDING.
4. TRASH RACK TO BE FASTENED TO THE WALL WITH 1/2" MASONRY ANCHORS. TRASH RACK TO BE REMOVABLE.

**TRASH RACK DETAIL (NTS)**

D.8.2

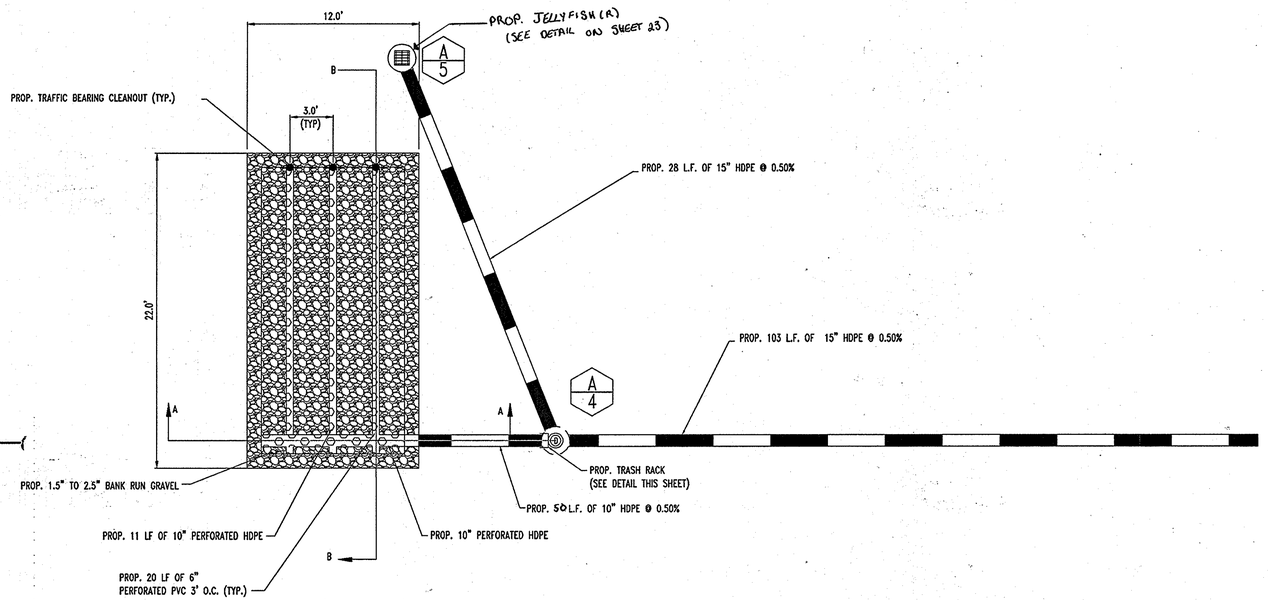


RECHARGE FACILITY

SCALE: NTS

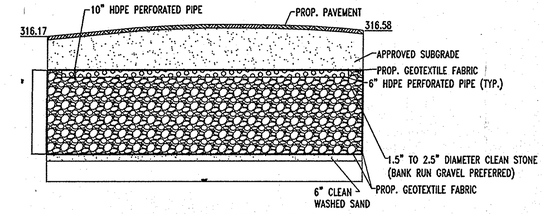


PROFILE VIEW SECTION B-B

SCALE: 1"=5'

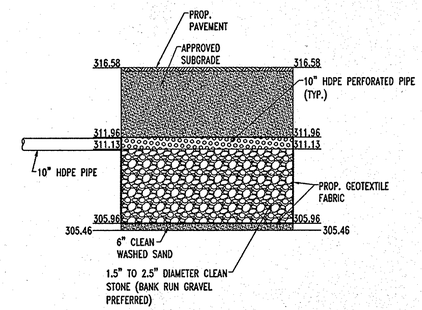


PROFILE VIEW SECTION A-A

SCALE: 1"=5'

## OPERATION AND MAINTENANCE SCHEDULE FOR PRIVATETLY OWNED AND MAINTAINED UNDERGROUND STORMWATER RECHARGE TRENCHES

1. THE MONITORING WELLS AND STRUCTURES SHALL BE INSPECTED ON A QUARTERLY BASIS AND AFTER EVERY LARGE STORM EVENT.
2. WATER LEVELS AND SEDIMENT BUILD UP IN THE MONITORING WELLS SHALL BE RECORDED OVER A PERIOD OF SEVERAL DAYS TO INSURE TRENCH DRAINAGE.
3. A LOGBOOK SHALL BE MAINTAINED TO DETERMINE THE RATE AT WHICH THE FACILITY DRAINS.
4. WHEN A FACILITY BECOMES CLOGGED SO THAT IT DOES NOT DRAIN DOWN WITHIN 72 HOURS TIME PERIOD, CORRECTIVE ACTION SHALL BE TAKEN.
5. THE MAINTENANCE LOGBOOK SHALL BE AVAILABLE TO HOWARD COUNTY FOR INSPECTION TO INSURE COMPLIANCE WITH OPERATION AND MAINTENANCE CRITERIA.
6. ONCE THE PERFORMANCE CHARACTERISTICS OF THE INFILTRATION FACILITY HAVE BEEN VERIFIED, THE MONITORING SCHEDULE CAN BE REDUCED TO AN ANNUAL BASIS UNLESS THE PERFORMANCE DATA INDICATES THAT A MORE FREQUENT SCHEDULE IS REQUIRED.

PLANNING BOARD APPROVAL STAMP

APPROVED: DEPARTMENT OF PLANNING AND ZONING

CHIEF-DEVELOPMENT ENGINEERING DIVISION — DATE 7/5/07

CHIEF-DIVISION OF LAND DEVELOPMENT — DATE 7/18/07

DIRECTOR — DATE 7/12/07

APPROVED: FOR PUBLIC WATER AND PUBLIC SEWERAGE SYSTEMS.

COUNTY HEALTH OFFICER, HOWARD COUNTY HEALTH DEPARTMENT — DATE 7/13/07

APPROVED
PLANNING BOARD
HOWARD COUNTY
DATE 2-08-07

GENERAL NOTE:
IT IS THE RESPONSIBILITY OF THE CONTRACTOR TO REVIEW ALL OF THE DRAWINGS AND SPECIFICATIONS ASSOCIATED WITH THIS PROJECT WORK SCOPE PRIOR TO THE INITIATION OF CONSTRUCTION. SHOULD THE CONTRACTOR FIND A CONFLICT WITH THE DOCUMENTS RELATIVE TO THE SPECIFICATIONS OR APPLICABLE CODES, IT IS THE CONTRACTORS RESPONSIBILITY TO NOTIFY BOHLER ENGINEERING, P.C. IN WRITING PRIOR TO THE START OF CONSTRUCTION. FAILURE BY THE CONTRACTOR TO NOTIFY BOHLER ENGINEERING, P.C. SHALL CONSTITUTE ACCEPTANCE OF FULL RESPONSIBILITY BY THE CONTRACTOR TO COMPLETE THE SCOPE OF THE WORK AS DEFINED BY THE DRAWINGS AND IN FULL CONFORMANCE WITH LOCAL REGULATIONS AND CODES.

FOR REVISION 3 ONLY:

PROFESSIONAL CERTIFICATION
I, MICHAEL J. HELBIG, HEREBY CERTIFY THAT THESE DOCUMENTS WERE PREPARED OR APPROVED BY ME, AND THAT I AM A DULY LICENSED PROFESSIONAL ENGINEER UNDER THE LAWS OF THE STATE OF MARYLAND, LICENSE No. 44834, EXPIRATION DATE: 6/9/15

STATE OF MARYLAND — MICHAEL J. HELBIG — No. 44834 — PROFESSIONAL ENGINEER — 8/20/14

MISS UTILITY

DIG WITH C.A.R.E. — CALL BEFORE YOU DIG — MISS UTILITY — MARYLAND

BEFORE YOU DIG CALL 1-800-257-7777
PROTECT YOURSELF, GIVE TWO WORKING DAYS NOTICE

THIS DRAWING DOES NOT INCLUDE NECESSARY COMPONENTS FOR CONSTRUCTION SAFETY. ALL CONSTRUCTION MUST BE DONE IN COMPLIANCE WITH THE OCCUPATIONAL SAFETY AND HEALTH ACT OF 1970 AND ALL RULES AND REGULATIONS THERETO APPURTENANT.

THE CONTRACTOR TO CALL MISS UTILITY TO HAVE ALL EXISTING UTILITIES MARKED 48 HOURS PRIOR TO ANY CONSTRUCTION.

| REV. | DATE | DESCRIPTION | BY |
|---|---|---|---|
| 3 | 1/20/14 | REVISED LAYOUT AND PLANS & CLEANUP, ADDC AND STORMWATER UTILITY UPDATES | AJG |

OWNER/DEVELOPER: HRD LAND HOLDINGS, INC.
HOWARD RESEARCH AND DEVELOPMENT CORPORATION
THE ROUSE BUILDING
10275 LITTLE PATUXENT PARKWAY
COLUMBIA, MARYLAND 21044
PHONE: (410) 992-6000

PROJECT: BENSON EAST
PARCEL U: GASOLINE STATION WITH KIOSK (COSTCO GASOLINE); GATEWAY OVERLOOK SHOPPING CENTER

AREA: TAX MAP 37 GRID 1 & 2 ZONED NEW TOWN
PARCEL U
BENSON EAST
6TH ELECTION DISTRICT
HOWARD COUNTY, MARYLAND

TITLE: STORMWATER MANAGEMENT DETAILS

BOHLER ENGINEERING, P.C.
• PROFESSIONAL ENGINEERING SERVICES •
• 22630 DAYTS DRIVE, SUITE 200 STERLING, VIRGINIA, 20164 •
• CONTACT: DAVID B. NEWCOMER •
• (703) 709-9500 FAX: (703) 709-9501 | WWW.BOHLERENG.COM

6/26/07
STATE OF MARYLAND — ADAM J. VOLANTH — No. 21342 — PROFESSIONAL ENGINEER
ADAM J. VOLANTH
PROFESSIONAL ENGINEER NO. 21342

| | |
|---|---|
| DESIGNED BY: | J.A.D. |
| DRAWN BY: | R.F.G. |
| PROJECT NO.: | S040011.01 |
| DATE: | 6/25/07 |
| SCALE: | AS SHOWN |
| DRAWING NO.: | 12 OF 23 |

SDP 07-36

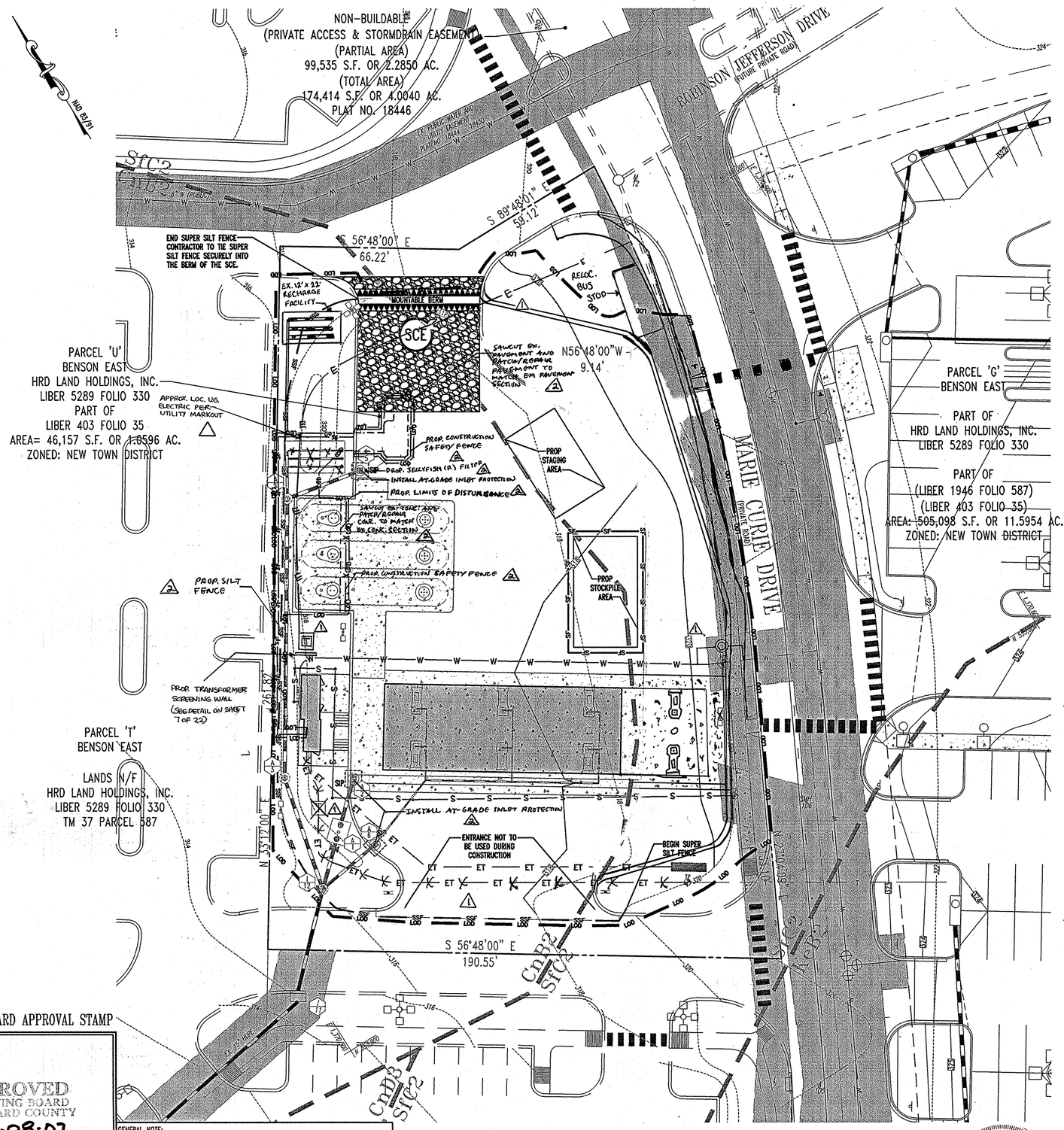


## EROSION AND SEDIMENT CONTROL LEGEND

- PROPERTY LINE
- EXISTING CONTOUR
- LIMIT OF DISTURBANCE
- SILT FENCE
- SUPER SILT FENCE
- STABILIZED CONSTRUCTION ENTRANCE
- STANDARD INLET PROTECTION

## ON-SITE SOILS INFORMATION:

1. SlC2 - SASSAFRAS GRAVELLY SANDY LOAM, 5%-10% SLOPES, MODERATELY ERODED.
2. CnB2 - CHILLUM FAIRFAX LOAMS, 1%-5% SLOPES, MODERATELY ERODED.

## REFERENCE:

SOIL SURVEY
HOWARD COUNTY, MD
PERPARED BY:
UNITED STATES DEPARTMENT OF AGRICULTURE
DATED: JULY 1968

REVIEWED FOR HOWARD SCD AND MEETS THE TECHNICAL REQUIREMENT
USDA - NATURAL RESOURCES CONSERVATION SERVICE — DATE 6/29/07

THIS DEVELOPMENT PLAN IS APPROVED FOR SOIL EROSION AND SEDIMENT CONTROL BY THE HOWARD SOIL CONSERVATION DISTRICT.
HOWARD SCD — DATE 6/29/07

### ENGINEER'S CERTIFICATE

"I CERTIFY THAT THIS PLAN FOR SEDIMENT AND EROSION CONTROL A PRACTICAL AND WORKABLE PLAN BASED ON MY PERSONAL KNOWLEDGE OF THE SITE CONDITIONS AND THAT IT WAS PREPARED IN ACCORDANCE WITH THE OF REQUIREMENT OF THE HOWARD SOIL CONSERVATION DISTRICT."

SIGNATURE OF ENGINEER — DATE
ADAM J. VOLANTH P.E.

### DEVELOPER'S CERTIFICATE

"I/WE CERTIFY THAT ALL DEVELOPMENT AND CONSTRUCTION WILL BE DONE ACCORDING TO THIS PLAN FOR SEDIMENT AND EROSION CONTROL, AND THAT ALL RESPONSIBLE PERSONNEL INVOLVED IN THE CONSTRUCTION PROJECT WILL HAVE A CERTIFICATE OF ATTENDANCE AT A DEPARTMENT OF THE ENVIRONMENT APPROVED TRAINING PROGRAM FOR THE CONTROL OF SEDIMENT AND EROSION BEFORE BEGINNING THE PROJECT. I ALSO AUTHORIZE PERIODIC ON-SITE INSPECTION BY THE HOWARD SOIL CONSERVATION DISTRICT."

SIGNATURE OF DEVELOPER — DATE

### NOTES

1. THE OWNER OF THE SHOPPING CENTER IS RESPONSIBLE FOR ALL ROUGH GRADING AND EROSION AND SEDIMENT CONTROL ONSITE, PER PLANS PREPARED BY PATTON, HARRIS, RUST AND ASSOCIATES, P.C. (SEE SHEET 1 NOTE 1).
2. REFER TO GENERAL NOTES SHEET FOR ANY APPLICABLE EROSION AND SEDIMENTION NOTES.

### BENCHMARK

GEODETIC SURVEY CONTROL #37GD
N 553,237.204
E 1,372,353.605
ELEV. 290.931'
LOCATED 30' EAST OF FIRE HYDRANT ACROSS FROM DEEP RUN ELEMENTARY SCHOOL

GEODETIC SURVEY CONTROL #37GC
N 553,250.791
E 1,370,946.348
ELEV. 331.855'
LOCATED ON THE SOUTH SIDE OF WATERLOO ROAD ACROSS FROM DEEP RUN PARKWAY

FOR REVISION 3 ONLY:

8/20/14

PROFESSIONAL CERTIFICATION
I, MICHAEL J. GESELL, HEREBY CERTIFY THAT THESE DOCUMENTS WERE PREPARED OR APPROVED BY ME, AND THAT I AM A DULY LICENSED PROFESSIONAL ENGINEER UNDER THE LAWS OF THE STATE OF MARYLAND, LICENSE NO: 44091, EXPIRATION DATE: 6/9/15

FOR REVISION 2
BOHLER ENGINEERING

PROFESSIONAL CERTIFICATION
I, MATTHEW T. ALGAL, HEREBY CERTIFY THAT THESE DOCUMENTS WERE PREPARED OR APPROVED BY ME, AND THAT I AM A DULY LICENSED PROFESSIONAL ENGINEER UNDER THE LAWS OF THE STATE OF MARYLAND, LICENSE NO. 28567, EXPIRATION DATE 4/16/13.

THIS PLAN IS FOR EROSION AND SEDIMENT CONTROL PURPOSES ONLY

SEE SHEET 14 FOR E&S NOTES

| REV. | DATE | DESCRIPTION | BY |
|---|---|---|---|
| 3 | 11/20/14 | REVISED CATV POLE/NEW PUMPS & CANOPY, RELOC. GAS STA. & TANKER, UTILITY VERIF. | MSG |
| 2 | 10/04/11 | ADD 6,500 FUEL ADDITIVE TANK | BOHLER |
| 1 | 9/12/01 | EX. ELEC. LINE & TRANSFORMER, PROP. SCREEN WALL | BOHLER |
| 1 | 9/12/07 | IRRIGATION WATERLINE AND METER. | BOHLER |

OWNER/DEVELOPER: HRD LAND HOLDINGS, INC.
HOWARD RESEARCH AND DEVELOPMENT CORPORATION
THE ROUSE BUILDING
10275 LITTLE PATUXENT PARKWAY
COLUMBIA, MARYLAND 21044
PHONE: (410) 992-6000

PROJECT: BENSON EAST
PARCEL U: GASOLINE STATION WITH KIOSK (COSTCO GASOLINE); GATEWAY OVERLOOK SHOPPING CENTER

AREA: TAX MAP 37 GRID 1 & 2 ZONED NEW TOWN
PARCEL U
BENSON EAST
6TH ELECTION DISTRICT
HOWARD COUNTY, MARYLAND

TITLE: EROSION AND SEDIMENT CONTROL PLAN

BOHLER ENGINEERING, P.C.
• PROFESSIONAL ENGINEERING SERVICES •
• 22630 DAVIS DRIVE, SUITE 200 STERLING, VIRGINIA, 20164 •
• CONTACT: DAVID B. MERCER •
• (703) 709-9500 FAX: (703) 709-9501 • WWW.BOHLERENG.COM

6/26/07
STATE OF MARYLAND
ADAM J. VOLANTH
No. 21342
REGISTERED PROFESSIONAL ENGINEER
ADAM J. VOLANTH
PROFESSIONAL ENGINEER NO. 21342

| | |
|---|---|
| DESIGNED BY: | J.A.D. |
| DRAWN BY: | R.F.G. |
| PROJECT NO.: | S040011.01 |
| DATE: | 6/25/07 |
| SCALE: | AS SHOWN |
| DRAWING NO.: | 13 OF 23 |

## SITE ANALYSIS

| | |
|---|---|
| DISTURBED AREA | 42,880 S.F. OR 0.98 AC. |
| TOTAL SITE AREA | 46,157 S.F. OR 1.0596 AC. |

TOTAL CUT - 8 CU. YDS.
TOTAL FILL - 1,145 CU. YDS.

EARTH QUANTITIES LISTED ABOVE ARE BASED ON A GRADING PLAN PREPARED BY BOHLER ENGINEERING, P.C. ENTITLED: "GRADING AND DRAINAGE PLAN", DATED 10/10/06, PROJECT NUMBER S040011.01.

SILT FENCE - 146 L.F.
SUPER SILT FENCE - 358 L.F.
STANDARD INLET PROTECTION - 3 EA.
STABILIZED CONSTRUCTION ENTRANCE - 1 EA.

## MISS UTILITY

BEFORE YOU DIG CALL
1-800-257-7777
PROTECT YOURSELF, GIVE TWO WORKING DAYS NOTICE

THIS DRAWING DOES NOT INCLUDE NECESSARY COMPONENTS FOR CONSTRUCTION SAFETY. ALL CONSTRUCTION MUST BE DONE IN COMPLIANCE WITH THE OCCUPATIONAL SAFETY AND HEALTH ACT OF 1970 AND ALL RULES AND REGULATIONS THERETO APPURTENANT.

THE CONTRACTOR TO CALL MISS UTILITY TO HAVE ALL EXISTING UTILITIES MARKED 48 HOURS PRIOR TO ANY CONSTRUCTION.

APPROVED: DEPARTMENT OF PLANNING AND ZONING
CHIEF-DEVELOPMENT ENGINEERING DIVISION — DATE 7/5/07
CHIEF-DIVISION OF LAND DEVELOPMENT — DATE 7/6/07
DIRECTOR — DATE 7/10/07

APPROVED: FOR PUBLIC WATER AND PUBLIC SEWERAGE SYSTEMS.
COUNTY HEALTH OFFICER — DATE 7/13/07
HOWARD COUNTY HEALTH DEPARTMENT

PLANNING BOARD APPROVAL STAMP

APPROVED
PLANNING BOARD
of HOWARD COUNTY
DATE 2-08-07

GENERAL NOTE:
IT IS THE RESPONSIBILITY OF THE CONTRACTOR TO REVIEW ALL OF THE DRAWINGS AND SPECIFICATIONS ASSOCIATED WITH THIS PROJECT WORK SCOPE PRIOR TO THE INITIATION OF CONSTRUCTION. SHOULD THE CONTRACTOR FIND A CONFLICT WITH THE DOCUMENTS RELATIVE TO THE SPECIFICATIONS OR APPLICABLE CODES, IT IS THE CONTRACTORS RESPONSIBILITY TO NOTIFY BOHLER ENGINEERING, P.C. IN WRITING PRIOR TO THE START OF CONSTRUCTION. FAILURE BY THE CONTRACTOR TO NOTIFY BOHLER ENGINEERING, P.C. SHALL CONSTITUTE ACCEPTANCE OF FULL RESPONSIBILITY BY THE CONTRACTOR TO COMPLETE THE SCOPE OF THE WORK AS DEFINED BY THE DRAWINGS AND IN FULL CONFORMANCE WITH LOCAL REGULATIONS AND CODES.

GRAPHIC SCALE
20 0 10 20 40 80
( IN FEET )
1 inch = 20 ft.

1 FOR REVISION 1
BOHLER ENGINEERING, P.C.

STATE OF MARYLAND
MATTHEW T. ALGAL
No. 28567
REGISTERED PROFESSIONAL ENGINEER

SDP 07-36

## DETAIL 23A – STANDARD INLET PROTECTION

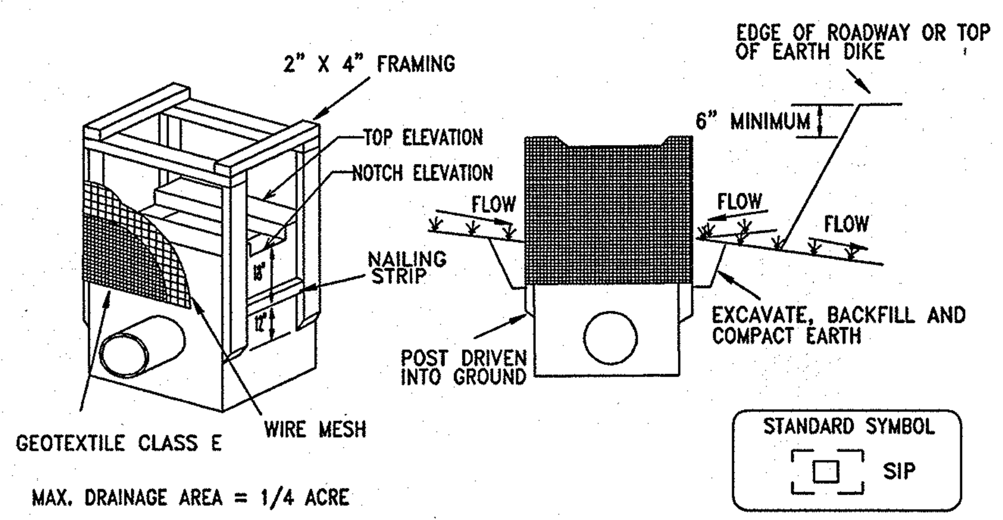


MAX. DRAINAGE AREA = 1/4 ACRE

**Construction Specifications**

1. Excavate completely around the inlet to a depth of 18" below the notch elevation.
2. Drive the 2" x 4" construction grade lumber posts 1' into the ground at each corner of the inlet. Place nail strips between the posts on the ends of the inlet. Assemble the top portion of the 2" x 4" frame using the overlap joint shown on Detail 23A. The top of the frame (weir) must be 6" below adjacent roadways where flooding and safety issues may arise.
3. Stretch the 1/2" x 1/2" wire mesh tightly around the frame and fasten securely. The ends must meet and overlap at a post.
4. Stretch the Geotextile Class E tightly over the wire mesh with the geotixtile extending from the top of the frame to 18" below the inlet notch elevation. Fasten the geotextile firmly to the frame. The ends of the geotextile must meet at a post, be overlapped and folded, then fastened down.
5. Backfill around the inlet in compacted 6" layers until the layer of earth is level with the notch elevation on the ends and top elevation on the sides.
6. If the inlet is not in a sump, construct a compacted earth dike across the ditch line directly below it. The top of the earth dike should be at least 6" higher than the top of the frame.
7. The structure must be inspected periodically and after each rain and the geotextile replaced when it becomes clogged.

| U.S. DEPARTMENT OF AGRICULTURE SOIL CONSERVATION SERVICE | PAGE E - 16 - 5 | MARYLAND DEPARTMENT OF ENVIRONMENT WATER MANAGEMENT ADMINISTRATION |
|---|---|---|

## DETAIL 22 – SILT FENCE

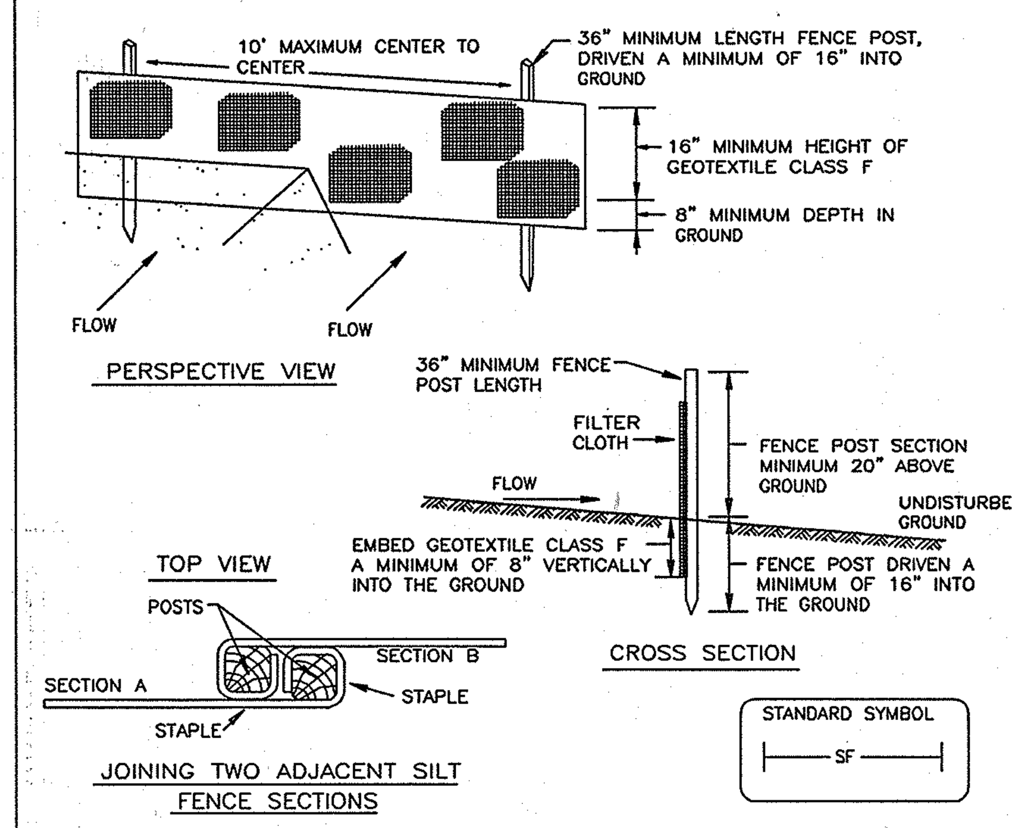


CONSTRUCTION SPECIFICATIONS

1. FENCE POSTS SHALL BE A MINIMUM OF 36" LONG DRIVEN 16" MINIMUM INTO THE GROUND. WOOD POSTS SHALL BE 11/2" X 11/2" SQUARE (MINIMUM) CUT, OR 13/4" DIAMETER (MINIMUM) ROUND AND SHALL BE OF SOUND QUALITY HARDWOOD. STEEL POSTS WILL BE STANDARD T OR U SECTION WEIGHTING NOT LESS THAN 1.00 POND PER LINEAR FOOT.
2. GEOTEXTILE SHALL BE FASTENED SECURELY TO EACH FENCE POST WITH WIRE TIES OR STAPLES AT TOP AND MID-SECTION AND SHALL MEET THE FOLLOWING REQUIREMENTS FOR GEOTEXTILE CLASS F:

| | | |
|---|---|---|
| TENSILE STRENGTH | 50 LBS/IN (MIN.) | TEST: MSMT 509 |
| TENSILE MODULUS | 20 LBS/IN (MIN.) | TEST: MSMT 509 |
| FLOW RATE | 0.3 GAL FT / MINUTE (MAX.) | TEST: MSMT 322 |
| FILTERING EFFICIENCY | 75% (MIN.) | TEST: MSMT 322 |

3. WHERE ENDS OF GEOTEXTILE FABRIC COME TOGETHER, THEY SHALL BE OVERLAPPED, FOLDED AND STAPLED TO PREVENT SEDIMENT BYPASS.
4. SILT FENCE SHALL BE INSPECTED AFTER EACH RAINFALL EVENT AND MAINTAINED WHEN BULGES OCCUR OR WHEN SEDIMENT ACCUMULATION REACHED 50% OF THE FABRIC HEIGHT.

| U.S. DEPARTMENT OF AGRICULTURE SOIL CONSERVATION SERVICE | PAGE E - 15 - 3 | MARYLAND DEPARTMENT OF ENVIRONMENT WATER MANAGEMENT ADMINISTRATION |
|---|---|---|

## DETAIL 24 – STABILIZED CONSTRUCTION ENTRANCE

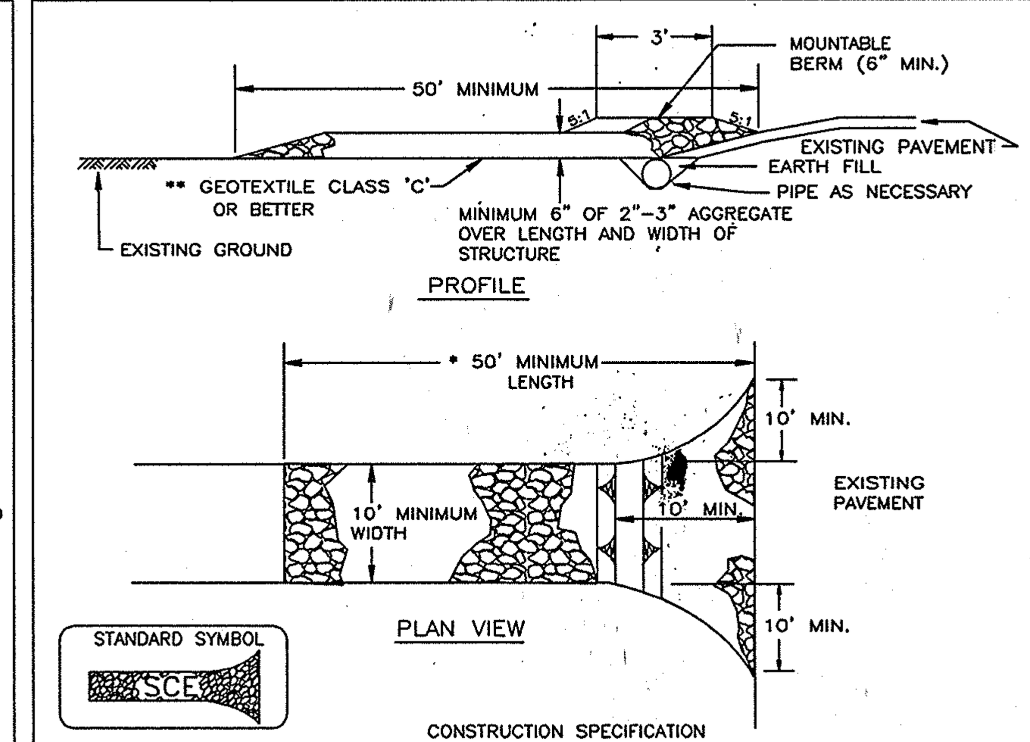


CONSTRUCTION SPECIFICATION

1. LENGTH – MINIMUM OF 50' (*30' FOR SINGLE RESIDENCE LOT).
2. WIDTH – 10' MINIMUM, SHOULD BE FLARED AT THE EXISTING ROAD TO PROVIDE A TURNING RADIUS.
3. GEOTEXTILE FABRIC (FILTER CLOTH) SHALL BE PLACED OVER THE EXISTING GROUND PRIOR TO PLACING STONE. **THE PLAN APPROVAL AUTHORITY MAY NOT REQUIRE SINGLE FAMILY RESIDENCES TO USE GEOTEXTILE.
4. STONE – CRUSHED AGGREGATE (2" TO 3") OR RECLAIMED OR RECYCLED CONCRETE EQUIVALENT SHALL BE PLACED AT LEAST 6" DEEP OVER THE LENGTH AND WIDTH OF THE ENTRANCE.
5. SURFACE WATER – ALL SURFACE WATER FLOWING TO OR DIVERTED TOWARD CONSTRUCTION ENTRANCES SHALL BE PIPED THROUGH THE ENTRANCE, MAINTAINING POSITIVE DRAINAGE. PIPE INSTALLED THROUGH THE STABILIZED CONSTRUCTION ENTRANCE SHALL BE PROTECTED WITH A MOUNTABLE BERM WITH 5:1 SLOPES AND A MINIMUM OF 6" OF STONE OVER THE PIPE. PIPE HAS TO BE SIZED ACCORDING TO THE DRAINAGE. WHEN THE SCE IS LOCATED AT A HIGH SPOT AND HAS NO DRAINAGE TO CONVEY A PIPE WILL NOT BE NECESSARY. PIPE SHOULD BE SIZED ACCORDING TO THE AMOUNT OF RUNOFF TO BE CONVEYED. A 6" MINIMUM WILL BE REQUIRED.
6. LOCATION – A STABILIZED CONSTRUCTION ENTRANCE SHALL BE LOCATED AT EVERY POINT WHERE CONSTRUCTION TRAFFIC ENTERS OR LEAVES A CONSTRUCTION SITE. VEHICLES LEAVING THE SITE MUST TRAVEL OVER THE ENTIRE LENGTH OF THE STABILIZED CONSTRUCTION ENTRANCE.

| U.S. DEPARTMENT OF AGRICULTURE SOIL CONSERVATION SERVICE | PAGE F - 17 - 3 | MARYLAND DEPARTMENT OF ENVIRONMENT WATER MANAGEMENT ADMINISTRATION |
|---|---|---|

## DETAIL 33 – SUPER SILT FENCE

NOTE: FENCE POST SPACING SHALL NOT EXCEED 10' CENTER TO CENTER

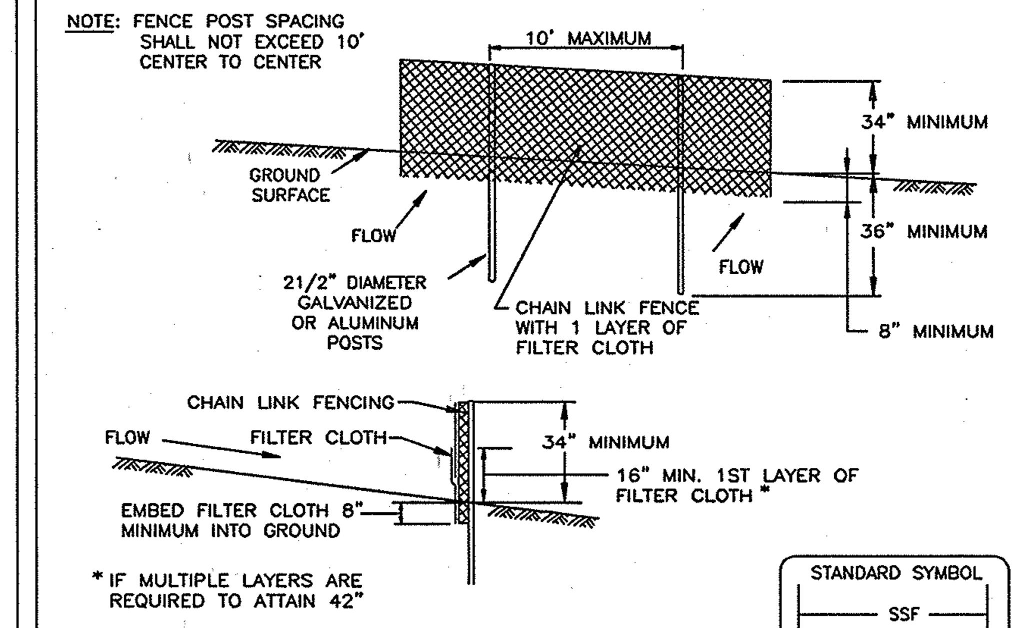


Construction Specifications

1. Fencing shall be 42" in height and constructed in accordance with the latest Maryland State Highway Details for Chain Link Fencing. The specification for a 6' fence shall be used, substituting 42" fabric and 6' length posts.
2. Chain link fence shall be fastened securely to the fence posts with wire ties. The lower tension wire, brace and truss rods, drive anchors and post caps are not required except on the ends of the fence.
3. Filter cloth shall be fastened securely to the chain link fence with ties spaced every 24" at the top and mid section.
4. Filter cloth shall be embedded a minimum of 8" into the ground.
5. When two sections of filter cloth adjoin each other, they shall be overlapped by 6" and folded.
6. Maintenance shall be performed as needed and silt buildups removed when "bulges" develop in the silt fence, or when silt reaches 50% of fence height
7. Filter cloth shall be fastened securely to each fence post with wire ties or staples at top and mid section and shall meet the following requirements for Geotextile Class F:

| | | |
|---|---|---|
| Tensile Strength | 50 lbs/in (min.) | Test: MSMT 509 |
| Tensile Modulus | 20 lbs/in (min.) | Test: MSMT 509 |
| Flow Rate | 0.3 gal/ft ²/minute (max.) | Test: MSMT 322 |
| Filtering Efficiency | 75% (min.) | Test: MSMT 322 |

| U.S. DEPARTMENT OF AGRICULTURE SOIL CONSERVATION SERVICE | PAGE H - 26 - 3 | MARYLAND DEPARTMENT OF ENVIRONMENT WATER MANAGEMENT ADMINISTRATION |
|---|---|---|

## SILT FENCE

SILT FENCE DESIGN CRITERIA

| SLOPE STEEPNESS | (MAXIMUM) SLOPE LENGTH | (MAXIMUM) SILT FENCE LENGTH |
|---|---|---|
| FLATTER THAN 50:1 | UNLIMITED | UNLIMITED |
| 50:1 TO 10:1 | 125 FEET | 1,000 FEET |
| 10:1 TO 5:1 | 100 FEET | 750 FEET |
| 5:1 TO 3:1 | 60 FEET | 500 FEET |
| 3:1 TO 2:1 | 40 FEET | 250 FEET |
| 2:1 AND STEEPER | 20 FEET | 125 FEET |

NOTE: IN AREAS OF LESS THAN 2% SLOPE AND SANDY SOILS (USDA GENERAL CLASSIFICATION SYSTEM, SOIL CLASS A) MAXIMUM SLOPE LENGTH AND SILT FENCE LENGTH WILL BE UNLIMITED. IN THESE AREAS A SILT FENCE MAY BE THE ONLY PERIMETER CONTROL REQUIRED.

| U.S. DEPARTMENT OF AGRICULTURE SOIL CONSERVATION SERVICE | PAGE E - 15 - 3A | MARYLAND DEPARTMENT OF ENVIRONMENT WATER MANAGEMENT ADMINISTRATION |
|---|---|---|

## SUPER SILT FENCE

Design Criteria

| Slope | Slope Steepness | Slope Length (maximum) | Silt Fence Length (maximum) |
|---|---|---|---|
| 0 – 10% | 0 – 10:1 | Unlimited | Unlimited |
| 10 – 20% | 10:1 – 5:1 | 200 feet | 1,500 feet |
| 20 – 33% | 5:1 – 3:1 | 100 feet | 1,000 feet |
| 33 – 50% | 3:1 – 2:1 | 100 feet | 500 feet |
| 50% + | 2:1 + | 50 feet | 250 feet |

| U.S. DEPARTMENT OF AGRICULTURE SOIL CONSERVATION SERVICE | PAGE H - 26 - 3A | MARYLAND DEPARTMENT OF ENVIRONMENT WATER MANAGEMENT ADMINISTRATION |
|---|---|---|

## SEQUENCE OF CONSTRUCTION

1. NOTIFY HOWARD COUNTY'S SEDIMENT CONTROL INSPECTOR AT 410-313-1855 AT LEAST 48 HOURS PRIOR TO THE START OF CONSTRUCTION. (1 DAY)
2. THE GENERAL CONTRACTOR SHALL NOT COMMENCE ANY LAND DISTURBING ACTIVITIES PRIOR TO OBTAINING A GRADING PERMIT. (1 DAY)
3. THE CONTRACTOR SHALL HOLD A PRE-CONSTRUCTION MEETING WITH COSTCO'S CONSTRUCTION MANAGER AND THE HOWARD COUNTY EROSION AND SEDIMENT CONTROL INSPECTOR PRIOR TO COMMENCING ANY LAND DISTURBANCE ACTIVITIES. (1 DAY)
4. ALL AREAS WHICH ARE TO BE DISTURBED SHALL BE CLEARLY MARKED IN THE FIELD PRIOR TO CONSTRUCTION. DISTURBED AREAS WITHIN THE SITE WHERE CONSTRUCTION ACTIVITY HAS CEASED SHALL BE PERMANENTLY OR TEMPORARILY STABILIZED WITHIN: (2 DAYS)
   - A. SEVEN CALENDAR DAYS ON SLOPES GREATER THAN 3:1, ALL WATERWAYS AND TO THE SURFACE OF ALL PERIMETER CONTROLS.
   - B. FOURTEEN CALENDAR DAYS AS TO ALL OTHER DISTURBED OR GRADED AREAS OF THE PROJECT.
5. INSTALL STABILIZED CONSTRUCTION ENTRANCE. ALL HARD SURFACE PUBLIC ROADS SHALL BE CLEANED AT THE END OF EACH WORK DAY. (2 DAYS)
6. INSTALL PERIMETER SUPER SILT FENCE. THIS MUST BE INSPECTED AND APPROVED BY HOWARD COUNTY'S SEDIMENT CONTROL INSPECTOR. NO ADDITIONAL CONSTRUCTION ACTIVITY WILL BE AUTHORIZED WITHOUT APPROVAL. (2 DAYS)
7. INSTALL UTILITIES AS SHOWN, GENERAL CONTRACTOR SHALL COORDINATE WITH THE RESPECTIVE UTILITY COMPANIES. INSTALL UNDERGROUND STORAGE TANKS AND ASSOCIATED PIPING (4 WEEKS)
8. BEGIN BUILDING CONSTRUCTION. (3 WEEKS)
9. INSTALL CURB AND APPLY BASE STONE FOR ALL PARKING AREAS. (4 WEEKS)
10. FLUSH THE PROPOSED STORM DRAIN SYSTEM TO REMOVE ANY SEDIMENT AND CLEAN THE RECEIVING POND. THIS MUST BE INSPECTED AND APPROVED BY HOWARD COUNTY'S SEDIMENT CONTROL INSPECTOR. (1 DAY)
11. AS THE SITE IS BROUGHT TO FINAL GRADE, PERMANENTLY STABILIZE ALL DISTURBED AREAS WITHIN FOURTEEN (14) DAYS. (2 WEEKS)
12. INSTALL ALL PERMANENT LANDSCAPING. (2 WEEKS)
13. AFTER CONSTRUCTION OPERATIONS HAVE ENDED AND ALL DISTURBED AREAS HAVE BEEN STABILIZED, SEDIMENT CONTROL DEVICES CAN BE REMOVED UPON COORDINATION WITH COSTCO'S, AND THE HOWARD COUNTY SEDIMENT CONTROL INSPECTOR. (2 DAYS)

REVIEWED FOR HOWARD SCD AND MEETS THE TECHNICAL REQUIREMENT
Jim Myers 6/29/07
USDA – NATURAL RESOURCES CONSERVATION SERVICE DATE

THIS DEVELOPMENT PLAN IS APPROVED FOR SOIL EROSION AND SEDIMENT CONTROL BY THE HOWARD SOIL CONSERVATION DISTRICT.
John R Robertson 6/29/07
HOWARD SCD DATE

### ENGINEER'S CERTIFICATE

"I CERTIFY THAT THIS PLAN FOR SEDIMENT AND EROSION CONTROL A PRACTICAL AND WORKABLE PLAN BASED ON MY PERSONAL KNOWLEDGE OF THE SITE CONDITIONS AND THAT IT WAS PREPARED IN ACCORDANCE WITH THE OF REQUIREMENT OF THE HOWARD SOIL CONSERVATION DISTRICT."

SIGNATURE OF ENGINEER DATE
ADAM J. VOLANTH P.E.

### DEVELOPER'S CERTIFICATE

"I/WE CERTIFY THAT ALL DEVELOPMENT AND CONSTRUCTION WILL BE DONE ACCORDING TO THIS PLAN FOR SEDIMENT AND EROSION CONTROL, AND THAT ALL RESPONSIBLE PERSONNEL INVOLVED IN THE CONSTRUCTION PROJECT WILL HAVE A CERTIFICATE OF ATTENDANCE AT A DEPARTMENT OF THE ENVIRONMENT APPROVED TRAINING PROGRAM FOR THE CONTROL OF SEDIMENT AND EROSION BEFORE BEGINNING THE PROJECT. I ALSO AUTHORIZE PERIODIC ON-SITE INSPECTION BY THE HOWARD SOIL CONSERVATION DISTRICT."

SIGNATURE OF DEVELOPER DATE

| REV. | DATE | DESCRIPTION | BY |
|---|---|---|---|
| 3 | 1/20/14 | REVISED LAYOUT: NEW PUMPS + CANOPY, RELOC. BUS STA + UTILITY UPDATES | MJG |

PROFESSIONAL CERTIFICATION
I, MICHAEL J. GESELL, HEREBY CERTIFY THAT THESE DOCUMENTS WERE PREPARED OR APPROVED BY ME, AND THAT I AM A DULY LICENSED PROFESSIONAL ENGINEER UNDER THE LAWS OF THE STATE OF MARYLAND, LICENSE NO. 44097, EXPIRATION DATE: 6/9/15

FOR REVISION 3 ONLY: 8/20/14

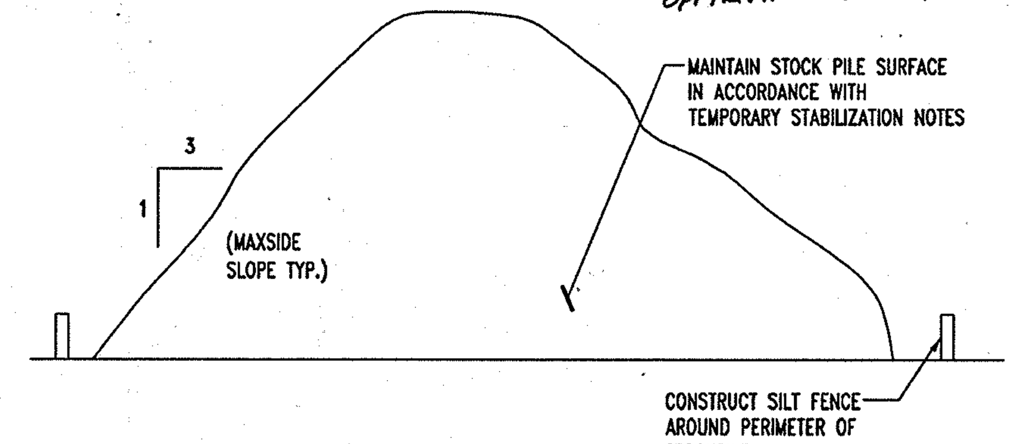


TEMPORARY STOCKPILE DETAIL
NOT TO SCALE

MISS UTILITY

BEFORE YOU DIG CALL 1-800-257-7777 PROTECT YOURSELF, GIVE TWO WORKING DAYS NOTICE

THIS DRAWING DOES NOT INCLUDE NECESSARY COMPONENTS FOR CONSTRUCTION SAFETY. ALL CONSTRUCTION MUST BE DONE IN COMPLIANCE WITH THE OCCUPATIONAL SAFETY AND HEALTH ACT OF 1970 AND ALL RULES AND REGULATIONS THERETO APPURTENANT.

THE CONTRACTOR TO CALL MISS UTILITY TO HAVE ALL EXISTING UTILITIES MARKED 48 HOURS PRIOR TO ANY CONSTRUCTION.

OWNER/DEVELOPER: HRD LAND HOLDINGS, INC.
HOWARD RESEARCH AND DEVELOPMENT CORPORATION
THE ROUSE BUILDING
10275 LITTLE PATUXENT PARKWAY
COLUMBIA, MARYLAND 21044
PHONE: (410) 992-6000

PROJECT: BENSON EAST
PARCEL U; GASOLINE STATION WITH KIOSK (COSTCO GASOLINE); GATEWAY OVERLOOK SHOPPING CENTER

AREA: TAX MAP 37 GRID 1 & 2 ZONED NEW TOWN
PARCEL U
BENSON EAST
6TH ELECTION DISTRICT
HOWARD COUNTY, MARYLAND

TITLE: EROSION AND SEDIMENT CONTROL NOTES AND DETAILS

**BOHLER ENGINEERING, P.C.**
• PROFESSIONAL ENGINEERING SERVICES •
• 22630 DAVIS DRIVE, SUITE 200 STERLING, VIRGINIA, 20164 •
• CONTACT: DAVID B. NEMECEK
• (703) 709-9500 FAX: (703) 709-9501 | WWW.BOHLERENG.COM

6/26/07
DATE
ADAM J. VOLANTH
PROFESSIONAL ENGINEER NO. 21342

| | |
|---|---|
| DESIGNED BY: | J.A.D. |
| DRAWN BY: | R.F.G. |
| PROJECT NO.: | S040011.01 |
| DATE: | 6/25/07 |
| SCALE: | AS SHOWN |
| DRAWING NO.: | 14 OF 23 |

PLANNING BOARD APPROVAL STAMP

APPROVED
PLANNING BOARD
of HOWARD COUNTY
DATE 2-08-07

APPROVED: DEPARTMENT OF PLANNING AND ZONING
7/5/07
CHIEF-DEVELOPMENT ENGINEERING DIVISION DATE
7/16/07
CHIEF-DIVISION OF LAND DEVELOPMENT DATE
7/13/07
DIRECTOR DATE

APPROVED: FOR PUBLIC WATER AND PUBLIC SEWERAGE SYSTEMS.
7/13/07
COUNTY HEALTH OFFICER DATE
HOWARD COUNTY HEALTH DEPARTMENT

GENERAL NOTE:
IT IS THE RESPONSIBILITY OF THE CONTRACTOR TO REVIEW ALL OF THE DRAWINGS AND SPECIFICATIONS ASSOCIATED WITH THIS PROJECT WORK SCOPE PRIOR TO THE INITIATION OF CONSTRUCTION. SHOULD THE CONTRACTOR FIND A CONFLICT WITH THE DOCUMENTS RELATIVE TO THE SPECIFICATIONS OR APPLICABLE CODES, IT IS THE CONTRACTORS RESPONSIBILITY TO NOTIFY BOHLER ENGINEERING, P.C. IN WRITING PRIOR TO THE START OF CONSTRUCTION. FAILURE BY THE CONTRACTOR TO NOTIFY BOHLER ENGINEERING, P.C. SHALL CONSTITUTE ACCEPTANCE OF FULL RESPONSIBILITY BY THE CONTRACTOR TO COMPLETE THE SCOPE OF THE WORK AS DEFINED BY THE DRAWINGS AND IN FULL CONFORMANCE WITH LOCAL REGULATIONS AND CODES.

## STANDARD AND SPECIFICATIONS FOR VEGETATIVE STABILIZATION WITH SOD

SPECIFICATIONS:

1. CLASS OF TURFGRASS SOD SHALL BE MARYLAND STATE CERTIFIED, OR MARYLAND STATE APPROVED SOD.
2. SOD SHALL BE MACHINE CUT AT A UNIFORM SOIL THICKNESS OF 3/4 INCH PLUS OR MINUS 1/4 INCH, AT THE TIME OF CUTTING. MEASUREMENT FOR THICKNESS SHALL EXCLUDE TOP GROWTH AND THATCH.
3. STANDARD SIZE SECTIONS OF SOD SHALL BE STRONG ENOUGH TO SUPPORT THEIR OWN WEIGHT AND RETAIN THEIR SHAPE WHEN SUSPENDED VERTICALLY WITH A FIRM GRASP ON THE UPPER 10 PERCENT OF THE SECTION.
4. INDIVIDUAL PIECES OF SOD SHALL BE CUT TO THE SUPPLIERS WIDTH AND LENGTH. MAXIMUM ALLOWABLE DEVIATION FROM STANDARD WIDTHS AND LENGTHS SHALL BE 5 PERCENT. BROKEN PADS AND TORN OR UNEVEN ENDS WILL NOT BE ACCEPTABLE.
5. SOD SHALL NOT BE HARVESTED OR TRANSPLANTED WHEN MOISTURE CONTENT (EXCESSIVELY DRY OR WET) MAY ADVERSELY AFFECT ITS SURVIVAL.
6. SOD SHALL BE HARVESTED, DELIVERED AND INSTALLED WITHIN A PERIOD OF 36 HOURS. SOD NOT TRANSPLANTED WITHIN THIS PERIOD SHALL BE INSPECTED AND APPROVED PRIOR TO INSTALLATION.

SITE PREPARATION:

FERTILIZER AND LIME APPLICATION RATES SHALL BE DETERMINED BY SOIL TEST. UNDER UNUSUAL CIRCUMSTANCES WHERE THERE IS INSUFFICIENT TIME FOR A COMPLETE SOIL TEST, FERTILIZER AND LIME MATERIALS MAY BE APPLIED IN AMOUNTS SHOWN UNDER B, BELOW.

A. PRIOR TO SODDING, THE SURFACE SHALLBE CLEARED OF ALL TRASH, DEBRIS AND OF ALL ROOTS, BRUSH, WIRE, GRADE STAKES AND OTHER OBJECTS THAT WOULD INTERFERE WITH PLANTING, FERTILIZING OR MAINTENANCE OPERATIONS.

B. WHERE THE SOIL IS ACID OR COMPOSED OF HEAVY CLAYS, GROUND LIMESTONE SHALL BE SPREAD AT THE RATE OF 2 TONS PER ACRE (100 LBS./1000 SQ. FT.) IN ALL SOILS 1,000 POUNDS PER ACRE OR 25 POUNDS PER 1,000 SQUARE FEET OF 10-10-10 FERTILIZER OR EQUIVALENT SHALL BE UNIFORMLY APPLIED AND MIXED INTO THE TOP 3 INCHES OF SOIL WITH THE REQUIRED LIME.

C. ALL AREAS RECEIVING SOD SHALL BE UNIFORMLY FINE GRADED. HARD PACKED EARTH SHALL BE SCARIFIED PRIOR TO PLACEMENT OF SOD.

SOD INSTALLATION:

A. DURING PERIODS OF EXCESSIVELY HIGH TEMPERATURE THE SOIL SHALL BE LIGHTLY IRRIGATED IMMEDIATELY PRIOR TO LAYING SOD.

B. THE FIRST ROW OF SOD SHALL BE LAID IN A STRAIGHT LINE WITH

EACH OTHER. LATERAL JOINTS SHALL BE STAGGERED TO PROMOTE MORE UNIFORM GROWTH AND STRENGTH. INSURE THAT SOD IS NOT

ORDER TO PREVENT VOIDS WHICH COULD CAUSE AIR DRYING OF THE ROOTS.

LAID WITH THE LONG EDGES PARALLEL TO THE CONTOUR AND WITH STAGGERED JOINTS. SECURE THE SOD BY TAMPING AND PEGGING OR OTHER APPROVED METHODS.

D. AS SODDING IS COMPLETED IN ANY ONE SECTION, THE ENTIRE AREA SHALL BE ROLLED OR TAMPED TO INSURE SOLID CONTACT OF ROOTS WITH THE SOIL SURFACE. SOD SHALL BE WATERED IMMEDIATELY AFTER OF LAYING, TAMPING AND IRRIGATING FOR ANY PIECE OF SOD SHALL BE COMPLETED WITHIN EIGHT HOURS.

SOD MAINTENANCE:

A. IN THE ABSENCE OF ADEQUATE RAINFALL, WATERING SHALL BE PERFORMED DAILY OR AS OFTEN AS NECESSARY DURING THE FIRST WEEK AND IN SUFFICIENT QUANTITIES TO MAINTAIN MOIST SOIL TO A THE DAY TO PREVENT WILTING.

B. AFTER THE FIRST WEEK, SOD SHALL BE WATERED AS NECESSARY TO MAINTAIN ADEQUATE MOISTURE AND INSURE ESTABLISHMENT.

C. FIRST MOWING SHOULD NOT BE ATTEMPTED UNTIL SOD IS FIRMLY ROOTED. NO MORE THAN 1/3 OF THE GRASS LEAF SHALL BE REMOVED BY THE INITIAL CUTTING OR SUBSEQUENT CUTTINGS. GRASS HEIGHT SHALL BE MAINTAINED BETWEEN 2 AND 3 INCHES UNLESS OTHERWISE SPECIFIED.

D. MAINTENANCE OF ESTABLISHED SOD SHOULD FOLLOW SPECIFICATIONS OUTLINED IN TABLE 54-1.

## TOPSOIL CONSTRUCTION AND MATERIAL SPECIFICATIONS

I. TOPSOIL SALVAGED FROM THE EXISTING SITE MAY BE USED PROVIDED THAT IT MEETS THE STANDARDS AS SET FORTH IN THESE SPECIFICATIONS. TYPICALLY, THE DEPTH OF TOPSOIL TO BE SALVAGED FOR A GIVEN SOIL TYPE CAN BE FOUND IN THE REPRESENTATIVE SOIL PROFILE SECTION IN THE SOIL SURVEY PUBLISHED BY USDA-SCS IN COOPERATION WITH MARYLAND AGRICULTURAL EXPERIMENTAL STATION.

II. TOPSOIL SPECIFICATIONS - SOIL TO BE USED AS TOPSOIL MUST MEET THE FOLLOWING:

i. TOPSOIL SHALL BE LOAM, SANDY LOAM, CLAY LOAM, SILT LOAM, SANDY CLAY LOAM, LOAMY SAND. OTHER SOILS MAY BE USED IF RECOMMENDED BY AN AGRONOMIST OR SOIL SCIENTIST AND APPROVED BY THE APPROPRIATE APPROVAL AUTHORITY. REGARDLESS, TOPSOIL SHALL NOT BE A MIXTURE OF CONTRASTING TEXTURED SUBSOILS AND SHALL CONTAIN LESS THAN 5% BY VOLUME OF CINDERS, STONES, SLAG, COARSE FRAGMENTS, GRAVEL, STICKS, ROOTS, TRASH, OR OTHER MATERIALS LARGER THAN 1 1/2' IN DIAMETER.

ii. TOPSOIL MUST BE FREE OF PLANTS OR PLANT PARTS SUCH AS BERMUDA GRASS, QUACKGRASS, JOHNSON GRASS, NUTSEDGE, POISON IVY, THISTLE, OR OTHERS AS SPECIFIED.

iii. WHERE THE SUBSOIL IS EITHER HIGHLY ACIDIC OR COMPOSED OF HEAVY CLAYS, GROUND LIMESTONE SHALL BE SPREAD AT THE RATE OF 4-8 TONS PER ACRE (200-400 LBS./1000 SQ. FT.) PRIOR TO PLACEMENT OF TOPSOIL. LIME SHALL BE DISTURBED UNIFORMLY OVER DESIGNATED AREAS AND WORKED INTO THE SOIL IN CONJUCTION WITH TILLAGE OPERATIONS AS DESCRIBED IN THE FOLLOWING PROCEDURES.

III. FOR SITES HAVING DISTURBED AREAS UNDER 5 ACRES:

i. PLACE TOPSOIL (IF REQUIRED) AND APPLY SOIL AMENDMENTS AS SPECIFIED IN 20.0 VEGETATIVE STABILIZATION - SECTION I - VEGETATIVE STABILIZATION METHODS AND MATERIALS.

IV. TOPSOIL APPLICATION

i. WHEN TOPSOILING, MAINTAIN NEEDED EROSION AND SEDIMENT CONTROL PRACTICES SUCH AS DIVERSIONS, GRADE STABILIZATION STRUCTURES, EARTH DIKES, SLOPE SILT FENCE AND SEDIMENT TRAPS AND BASINS.

ii. GRADES ON THE AREAS TO BE TOPSOILED, WHICH HAVE BEEN PREVIOUSLY ESTABLISHED, SHALL BE MAINTAINED, ALBEIT 4" - 8" HIGHER IN ELEVATION.

iii. TOPSOIL SHALL BE UNIFORMLY DISTRIBUTED IN A 4" - 8" LAYER AND LIGHTLY COMPACTED TO A MINIMUM THICKNESS OF 4". SPREADING SHALL BE PERFORMED IN SUCH A MANNER THAT SODDING OR SEEDING CAN PROCEED WITH A MINIMUM OF ADDITIONAL SOIL PREPARATION AND TILLAGE. ANY IRREGULARITIES IN THE SURFACE RESULTING FROM TOPSOILING OR OTHER OPERATIONS SHALL BE CORRECTED IN ORDER TO PREVENT THE FORMATION OF DEPRESSIONS OR WATER POCKETS.

V. THESE TOPSOIL SPECIFICATIONS HAVE BEEN EDITED FROM THE 1994 EROSION AND SEDIMENT CONTROL STANDARDS TO FIT THIS PROJECT. IT IS STILL THE INTENTION TO FOLLOW THE REFERENCED 1994 EROSION AND SEDIMENT CONTROLS STANDARDS IN THEIR ENTIRETY.

## PERMANENT SEEDING NOTES

APPLY TO GRADED OR CLEARED AREA NOT SUBJECT TO IMMEDIATE FURTHER DISTURBANCE WHERE A PERMANENT LONG-LIVED VEGETATIVE COVER IS NEEDED.

SEEDBED PREPARATION: LOOSEN UPPER 3 INCHES OF SOIL BY RAKING, DISCING OR OTHER ACCEPTABLE MEANS BEFORE SEEDING (UNLESS PREVIOUSLY LOOSENED).

SOIL AMENDMENTS: IN LIEU OF SOIL TEST RECOMMENDATIONS, USE ONE OF THE FOLLOWING SCHEDULES:

1. PREFERRED - APPLY 2 TONS PER ACRE DOLOMITIC LIMESTONE (92 LBS./1000 SQ. FT.) AND 600 LBS. PER ACRE 10-10-10 FERTILIZER (14 LBS./1000 SQ. FT.) BEFORE SEEDING. HARROW OR DISC INTO UPPER THREE INCHES OF SOIL. AT TIME OF SEEDING, APPLY 400 LBS. PER ACRE 30-0-0 AREAFORM FERTILIZER (9 LBS./1000 SQ. FT.)
2. ACCEPTABLE - APPLY 2 TONS PER ACRE DOLOMITIC LIMESTONE (92 LBS./1000 SQ. FT.) AND 1000 LBS. PER ACRE 10-10-10 FERTILIZER (23 LBS./1000 SQ. FT.) BEFORE SEEDING. HARROW OR DISC INTO UPPER THREE INCHES OF SOILS.

SEEDING: FOR THE PERIODS MARCH 1 THROUGH APRIL 30, AND AUGUST 1 THROUGH OCTOBER 15, SEED WITH 60 LBS. PER ACRE (1.4 LBS./1000 SQ. FT.) OF KENTUCKY 31 TALL FESCUE PER ACRE AND 2 LBS. PER ACRE (.05 LBS./1000 SQ. FT.) OF WEEPING LOVEGRASS. DURING THE PERIOD OF OCTOBER 16 THROUGH FEBRUARY 28, PROTECT SITE BY: OPTION (1) 2 TONS PER ACRE OF WELL ANCHORED STRAW MULCH AND SEED AS SOON AS POSSIBLE IN THE SPRING. OPTION (2) USE SOD. OPTION (3) SEED WITH 60 LBS./ACRE KENTUCKY 31 TALL FESCUE AND MULCH WITH 2 TONS/ACRE WELL ANCHORED STRAW.

MULCHING: APPLY 1 1/2 TO 2 TONS PER ACRE (70 TO 90 LBS./1000 SQ. FT.) OF UNROTTED SMALL GRAIN STRAW IMMEDIATELY AFTER SEEDING. ANCHOR MULCH IMMEDIATELY AFTER APPLICATION USING MULCH ANCHORING TOOL OR 218 GALLONS PER ACRE (5 GALS./1000 SQ. FT.) OF EMULSIFIED ASPHALT ON FALT AREA. ON SLOPES 8 FEET OR HIGHER, USE 348 GALLONS PER ACRE (8 GALS./1000 SQ. FT.) FOR ANCHORING.

MAINTENANCE: INSPECT ALL SEEDED AREAS AND MAKE NEEDED REPAIRS, REPLACEMENTS AND RESEEDINGS.

## TEMPORARY SEEDING NOTES

APPLY TO GRADED OR CLEARED AREA LIKELY TO REDISTURBED WHERE A SHORT-TERM VEGETATIVE COVER IS NEEDED.

SEEDBED PREPARATION: LOOSEN UPPER 3 INCHES OF SOIL BY RAKING, DISCING OR OTHER ACCEPTABLE MEANS BEFORE SEEDING (UNLESS PREVIOUSLY LOOSENED).

SOILS AMENDMENTS: APPLY 600 LBS. PER ACRE 10-10-10 FERTILIZER (14 LBS./1000 SQ. FT.)

SEEDING: FOR PERIODS MARCH 1 THROUGH APRIL 30 AND FROM AUGUST 15 THROUGH NOVEMBER 15, SEED WITH 2 1/3 BU. PER ACRE OF ANNUAL RYE (3.2 LBS./1000 SQ. FT.). FOR THE PERIOD MAY 1 THROUGH AUGUST 14, SEED WITH 3 LBS. PER ACRE OF WEEPING LOVEGRASS (.07 LBS./1000 SQ. FT.). FOR THE PERIOD NOVEMBER 16 THROUGH FEBRUARY 28, PROTECT SITE BY APPLYING 2 TONS PER ACRE OF WELL ANCHORED STRAW MULCH AND SEED AS SOON AS POSSIBLE IN THE SPRING, OR USE SOD.

MULCHING: APPLY 1 1/2 TO 2 TONS PER ACRE (70-90 LBS./1000 SQ. FT.) OF UNROTTED SMALL GRAIN STRAW IMMEDIATELY AFTER SEEDING. ANCHOR MULCH IMMEDIATELY AFTER APPLICATION USING MULCH ANCHORING TOOL OR 218 GALLONS PER ACRE (5 GALS./1000 SQ. FT.) OF EMULSIFIED ASPHALT ON FLAT AREAS. ON SLOPES, 8 FT. OR HIGHER, USE 348 GALLONS PER ACRE (8 GALS./1000 SQ. FT.) FOR ANCHORING.

## UTILITY CONTACT INFORMATION:

**NATURAL GAS AND ELECTRIC**
BALTIMORE GAS AND ELECTRIC
7317 PARKWAY DRIVE
SOUTH HANOVER, MD 21076
PHONE: (410) 859-9383

**WATER AND SANITARY SEWER**
HOWARD COUNTY PUBLIC WORKS BUREAU OF UTILITIES
8250 OLD MONTGOMERY ROAD
COLUMBIA, MD 21045
PHONE: (410) 313-4910

**TELEPHONE**
VERIZON
7133 RUTHERFORD ROAD
BALTIMORE, MD 21244
PHONE: (410) 224-5286

**EROSION AND SEDIMENT CONTROL**
DEPARTMENT OF INSPECTIONS, LICENSES & PERMITS
3430 COURTHOUSE DRIVE
ELLICOTT CITY, MD 21043
PHONE: (410) 313-2455

**STORMWATER MANAGEMENT**
HOWARD COUNTY PLANNING AND ZONING DEPARTMENT
3430 COURTHOUSE DRIVE
ELLICOTT CITY, MD 21043
PHONE: (410) 313-2350

**PLANNING AND ZONING**
HOWARD COUNTY PLANNING AND ZONING DEPARTMENT
3430 COURTHOUSE DRIVE
ELLICOTT CITY, MD 21043
PHONE: (410) 313-2350

## STANDARD AND SPECIFICATIONS FOR TOPSOIL

DEFINITION

PLACEMENT OF TOPSOIL OVER A PREPARED SUBSOIL PRIOR TO ESTABLISHMENT OF PERMANENT VEGETATION. PURPOSE

PURPOSE

TO PROVIDE A SUITABLE SOIL MEDIUM FOR VEGETATION GROWTH. SOILS OF CONCERN HAVE LOW MOISTURE CONTENT, LOW NUTRIENT LEVELS, LOW PH, MATERIALS TOXIC TO PLANTS, AND/OR UNACCEPTABLE SOIL GRADATION.

CONDITIONS WHERE PRACTICE APPLIES

1. THIS PRACTICE IS LIMITED TO AREAS HAVING 2:1 OR FLATTER SLOPES WHERE:
   - A. THE TEXTURE OF THE EXPOSED SUBSOIL/PARENT MATERIAL IS NOT ADEQUATE TO PRODUCE VEGETATIVE GROWTH.
   - B. THE SOIL MATERIAL IS SO SHALLOW THAT THE ROOTING ZONE IS NOT DEEP ENOUGH TO SUPPORT PLANTS OR FURNISH CONTINUING SUPPLIES OF MOISTURE AND PLANT NUTRIENTS.
   - C. THE ORIGINAL SOIL TO BE VEGETATED CONTAINS MATERIAL TOXIC TO PLANT GROWTH.
   - D. THE SOIL IS SO ACIDIC THAT TREATMENT WITH LIMESTONE IS NOT FEASIBLE.
2. FOR THE PURPOSE OF THESE STANDARDS AND SPECIFICATIONS, AREAS HAVING SLOPES STEEPER THAN 2:1 REQUIRE SPECIAL CONSIDERATION AND DESIGN FOR ADEQUATE STABILIZATIION THAN 2:1 SHALL HAVE THE APPROPRIATE STABILIZATION SHOWN ON THE PLANS.

CONSTRUCTION AND MATERIAL SPECIFICATIONS

1. TOPSOIL SALVAGED FROM THE EXISTING SITE MAY BE USED PROVIDED THAT IT MEETS THE STANDARDS AS SPECIFIED. TYPICALLY, THE DEPTH OF TOPSOIL TO BE SALVAGED FOR A GIVEN SET FORTH IN THE REPRESENTATIVE SOIL PROFILE SECTION IN THE SOIL SURVEY PUBLISHED BY USDA-SCS IN COOPERATION WITH MARYLAND AGRICULTURAL EXPERIMENTAL STATION.

2. TOPSOIL SPECIFICATIONS- SOIL TO BE USED AS TOPSOIL MUST MEET THE FOLLOWING:

   A. TOPSOIL SHALL BE A LOAM, SANDY LOAM, CLAY LOAM, SILT LOAM, SANDY CLAY LOAM, LOAMY SAND. OTHER SOILS MAY BE USED IF RECOMMENDED BY AN AGRONOMIST OR SOIL SCIENTIST AND APPROVED BY THE APPROPRIATE APPROVAL AUTHORITY. REGARDLESS, TOPSOIL SHALL NOT BE A MIXTURE OF CONTRASTING TEXTURED SUBSOIL'S AND SHALL CONTAIN LESS THAN 5% BY VOLUME OF CINDERS, STONES, SLAG, COARSE FRAGMENTS, GRAVEL, STICKS, ROOTS, TRASH, OR OTHER MATERIALS LARGER THAN 1 1/2" IN DIAMETER.

   B. TOPSOIL MUST BE FREE OF PLANTS OR PLANT PARTS SUCH AS BERMUDA GRASS, JOHNSON GRASS, NUT SEDGE, POISON IVY, THISTLE, OR OTHERS AS SPECIFIED.

   C. WHERE THE SUBSOIL IS EITHER HIGHLY ACIDIC OR COMPOSED OF HEAVY CLAYS, GROUND LIMESTONE SHALL BE SPREAD AT THE RATE OF 4-8 TONS/ACRE (200-400 POUNDS PER 1,000 SQUARE FEET) PRIOR TO THE PLACEMENT OF TOPSOIL. LIME SHALL BE DISTRIBUTED UNIFORMLY OVER DESIGNATED AREAS AND WORKED INTO THE SOIL IN CONJUNCTION WITH TILLAGE OPERATIONS AS DESCRIBED IN THE FOLLOWING PROCEDURES.

3. FOR SITES HAVING DISTURBED AREAS UNDER 5 ACRES.

   A. PLACE TOPSOIL (IF REQUIRED) AND APPLY SOIL AMENDMENTS AS SPECIFIED IN 20.0 VEGETATIVE STABILIZATION SECTION I-VEGEATIVE STABILIZATION METHODS AND MATERIALS.

4. FOR SITES HAVING DISTURBED AREAS OVER 5 ACRES:

   A. ON SOIL MEETING TOPSOIL SPECIFICATIONS, OBTAIN TEST RESULTS DICTATING FERTILIZER AND LIME AMENDMENTS REQUIRED TO BRING THE SOIL INTO COMPLIANCE WITH THE FOLLOWING:

   A.1. PH FOR TOPSOIL SHALL BE BETWEEN 6.0 THAN 7.5. IF THE TESTED SOIL DEMONSTRATES A PH OF LESS THAN 6.0, SUFFICIENT LIME SHALL BE PRESCRIBED TO RAISE THE PH TO 6.5 OR HIGHER.

   A.2. ORGANIC CONTENT OF TOPSOIL SHALL BE NOT LESS THAN 1.5 PERCENT BY WEIGHT.

   A.3. TOPSOIL HAVING SOLUBLE SALT CONTENT GREATER THAN 500 PARTS PER MILLION SHALL NOT BE USED.

   A.4. NO SOD OR SEED SHALL BE PLACED ON SOIL WHICH HAS BEEN TREATED WITH SOIL STERILANTS OR CHEMICALS USED FOR WEED CONTROL UNTIL SUFFICIENT TIME HAS ELAPSED (14 DAYS MIN.) TO PERMIT DISSIPATION OF PHYTO-TOXIC MATERIALS.

   NOTE: TOPSOIL SUBSTITUTES OR AMENDMENTS, AS RECOMMENDED BY A QUALIFIED AGRONOMIST OR SOIL SCIENTIST AND APPROVED BY THE APPROPRIATE APPROVAL AUTHORITY, MAY BE USED IN LIEU OF NATURAL TOPSOIL.

   B. PLACE TOPSOIL (IF REQUIRED) AND APPLY SOIL AMENDMENTS AS SPECIFIED IN 20.0 VEGETATIVE STABILIZATION - SECTION I - VEGETATIVE STABILIZATION METHODS AND MATERIALS.

5. TOPSOIL APPLICATION

   A. WHEN TOP SOILING, MAINTAIN NEEDED EROSION AND SEDIMENT CONTROL PRACTICES SUCH AS DIVERSIONS, GRADE STABILIZATION STRUCTURES, EARTH DIKES, SLOPE SILT FENCE AND SEDIMENT TRAPS AND BASINS.

   B. GRADES ON THE AREAS TO BE TOP SOILED, WHICH HAVE BEEN PREVIOUSLY ESTABLISHED, SHALL BE MAINTAINED, ALBEIT 4" - 8" HIGHER IN ELEVATION.

   C. TOPSOIL SHALL BE UNIFORMLY DISTRIBUTED IN A 4"-8" LAYER AND LIGHTLY COMPACTED TO A MINIMUM THICKNESS OF 4". SPREADING SHALL BE PERFORMED IN SUCH A MANNER THAT SODDING OR SEEDING CAN PROCEED WITH A MINIMUM OF ADDITIONAL SOIL PREPARATION AND TILLAGE. ANY IRREGULARITIES IN THE RESULTING FROM SURFACE TOP SOILING OR OTHER OPERATIONS SHALL BE CORRECTED IN ORDER TO PREVENT THE FORMATION OF DEPRESSIONS OR WATER POCKETS.

   D. TOPSOIL SHALL NOT BE PLACED WHILE THE TOPSOIL OR SUBSOIL IS IN A FROZEN OR MUDDY CONDITION, WHEN THE SUBSOIL IS EXCESSIVELY WET OR IN A CONDITION THAT MAY OTHERWISE BE DETRIMENTAL TO PROPER GRADING AND SEEDBED PREPARATION.

6. ALTERNATIVE FOR PERMANENT SEEDING - INSTEAD OF APPLYING THE FULL AMOUNTS OF LIME AND COMMERCIAL FERTILIZER, COMPOSTED SLUDGE AND AMENDMENTS COMMERCIAL BELOW:

   A. COMPOSTED SLUDGE MATERIAL FOR USE AS A SOIL CONDITIONER FOR SITES HAVING DISTURBED AREAS OVER 5 ACRES SHALL BE TESTED TO PRESCRIBE AMENDMENTS AND FOR SITES HAVING DISTURBED AREAS UNDER 5 ACRES SHALL CONFORM TO THE FOLLOWING REQUIREMENTS:

   A.1. COMPOSTED SLUDGE SHALL BE SUPPLIED BY, OR ORIGINATE FROM, A PERSON OR PERSONS THAT ARE PERMITTED (AT THE TIME OF ACQUISITION OF THE COMPOST) BY THE MARYLAND DEPARTMENT OF THE ENVIRONMENT UNDER COMAR 26.04.06.

   A.2. COMPOSTED SLUDGE SHALL CONTAIN AT LEAST 1 PERCENT NITROGEN, 1.5 PERCENT PHOSPHORUS, AND 0.2 PERCENT POTASSIUM AND HAVE A PH OF 7.0 TO 8.0. IF COMPOST DOES NOT MEET THESE REQUIREMENTS, THE APPROPRIATE CONSTITUENTS MUST BE ADDED TO MEET THE REQUIREMENTS PRIOR TO USE.

   A.3. COMPOSTED SLUDGE SHALL BE APPLIED AT A RATE OF 1 TON/1,000 SQUARE FEET.

   B. COMPOSTED SLUDGE SHALL BE AMENDED WITH A POTASSIUM FERTILIZER APPLIED AT THE RATE OF 4LB/1,000 SQUARE FEET, AND 1/3 THE NORMAL LIME APPLICATION RATE.

REFERENCES: GUIDELINE SPECIFICATIONS, SOIL PREPARATION AND SODDING. MD-VA, PUB. #1, COOPERATIVE EXTENSION SERVICE, UNIVERSITY OF MARYLAND AND VIRGINIA POLYTECHNIC INSTITUTE. REVISED 1973.

## HOWARD SOIL CONSERVATION DISTRICT STANDARD SEDIMENT CONTROL NOTES

1. A MINIMUM OF 48 HOURS NOTICE MUST BE GIVEN TO THE HOWARD COUNTY DEPARTMENT OF INSPECTIONS, LICENSES AND PERMITS, SEDIMENT CONTROL DIVISION, PRIOR TO THE START OF ANY CONSTRUCTION. (313-1855)
2. ALL VEGETATIVE AND STRUCTURAL PRACTICES ARE TO BE INSTALLED ACCORDING TO THE PROVISIONS OF THIS PLAN AND ARE TO BE IN CONFORMANCE WITH THE "1994 MARYLAND STANDARDS AND SPECIFICATIONS FOR SOIL EROSION AND SEDIMENT CONTROL", AND REVISIONS THERETO.
3. FOLLOWING INITIAL SOIL DISTURBANCE OR REDISTURBANCE, PERMANENT OR TEMPORARY STABILIZATION SHALL BE COMPLETED WITHIN: A) 7 CALENDAR DAYS FOR ALL PERIMETER SEDIMENT CONTROL STRUCTURES, DIKES, PERIMETER SLOPES AND ALL SLOPES STEEPER THAN 3:1, B) 14 DAYS AS TO ALL OTHER DISTURBED OR GRADED AREAS ON THE PROJECT SITE.
4. ALL SEDIMENT TRAPS/BASINS SHOWN MUST BE FENCED AND WARNING SIGNS POSTED AROUND THE PERIMETER IN ACCORDANCE WITH VOL. 1, CHAPTER 7 OF "HOWARD COUNTY DESIGN MANUAL", STORM DRAINAGE.
5. ALL DISTURBED AREAS MUST BE STABILIZED WITHIN THE TIME PERIOD SPECIFIED ABOVE IN ACCORDANCE WITH THE "1994 MARYLAND STANDARDS AND SPECIFICATIONS FOR SOIL EROSION AND SEDIMENT CONTROL" FOR PERMANENT SEEDING, SOD, TEMPORARY SEEDING, AND MULCHING (SEC. G) TEMPORARY STABILIZATION WITH MULCH ALONE SHALL ONLY BE DONE WHEN RECOMMENDED SEEDING DATES DO NOT ALLOW FOR PROPER GERMINATION AND ESTABLISHMENT OF GRASSES.
6. ALL SEDIMENT CONTROL STRUCTURES ARE TO REMAIN IN PLACE AND ARE TO BE MAINTAINED IN OPERATIVE CONDITION UNTIL PERMISSION FOR THEIR REMOVAL HAS BEEN OBTAINED FROM THE HOWARD COUNTY SEDIMENT CONTROL INSPECTOR.
7. SITE ANALYSIS:

   TOTAL SITE AREA - 46,157 S.F. OR 1.0596 AC.
   AREA DISTURBED - 42,880 S.F. OR 0.98 AC.
8. ANY SEDIMENT CONTROL PRACTICE WHICH IS DISTURBED BY GRADING ACTIVITY FOR PLACEMENT OF UTILITIES MUST BE REPAIRED ON THE SAME DAY OF DISTURBANCE.
9. ADDITIONAL SEDIMENT CONTROL MUST BE PROVIDED, IF DEEMED NECESSARY BY THE HOWARD COUNTY SEDIMENT CONTROL INSPECTOR.
10. ON ALL SITES WITH DISTURBED AREAS EXCESS OF 2 ACRES, APPROVAL OF THE INSPECTION AGENCY SHALL BE REQUESTED UPON COMPLETION OF INSTALLATION OF PERIMETER EROSION AND SEDIMENT CONTROLS, BUT BEFORE PROCEEDING WITH ANY OTHER EARTH DISTURBANCE OR GRADING. OTHER BUILDING OR GRADING INSPECTION APPROVALS MAY NOT BE AUTHORIZED UNTIL INITIAL APPROVAL BY THE INSPECTION AGENCY IS MADE.
11. TRENCHES FOR THE CONSTRUCTION OF UTILITIES IS LIMITED TO THREE PIPE LENGTHS OR THAT WHICH SHALL BE BACK FILLED AND STABILIZED WITHIN ONE WORKING DAY, WHICHEVER IS SHORTER.

## STANDARDS SEDIMENT CONTROL PLAN NOTES FOR UTILITIES

1. ONLY ENOUGH TRENCH WILL BE EXCAVATED THAT CAN BE BACKFILLED DAILY.
2. EXCAVATED TRENCH MATERIALS SHALL BE PLACED ON THE HIGH SIDE OF THE TRENCH.
3. IMMEDIATELY FOLLOWING PIPE INSTALLATION, THE TRENCH SHALL BE BACKFILLED, COMPACTED AND STABILIZED AT THE END OF EACH WORKING DAY.
4. FULL TRENCH COMPACTION IS REQUIRED.
5. MULCHING TO HOWARD SCD SPECIFICATIONS OF ALL DISTURBED AREAS AND DAILY ON BACKFILL WILL BE REQUIRED.
6. SUPER SILT FENCE OR STRAW BALE DIKES SHALL BE INSTALLED TEMPORARILY IMMEDIATELY DOWNSTREAM OF ANY DISTURBED AREA INTENDED TO REMAIN DISTURBED LONGER THAN ONE (1) WORKING DAY.
7. STAGING AREAS FOR EQUIPMENT AND SUPPLIES SHALL BE PROTECTED WITH SILT FENCE.
8. ANY SEDIMENT CONTROL PRACTICES WHICH ARE DISTURBED DURING UTILITY CONSTRUCTION SHALL BE REPAIRED OR REPLACED AT THE END OF EACH WORKING DAY.
9. ANY DITCHES OR DRAINAGE WAYS DISTURBED DURING CONSTRUCTION WILL BE RESTORED TO ORIGINAL CONDITION.

## GENERAL NOTES

A. THE DEVELOPER IS RESPONSIBLE FOR THE ACQUISITION OF ALL REQUIRED EASEMENTS, RIGHT AND/OR RIGHTS-OF-WAY PURSUANT TO THE DISCHARGE FROM THE SEDIMENT AND EROSION CONTROL PRACTICES, STORMWATER MANAGEMENT PRACTICES AND THE DISCHARGE OF STORMWATER ONTO OR ACROSS AND GRADING OR OTHER WORK TO BE PERFORMED ON ADJACENT OR DOWNSTREAM PROPERTIES AFFECTED BY THIS PLAN.

B. FOLLOWING INITIAL SOIL DISTURBANCES OR REDISTURBANCE, PERMANENT OR TEMPORARY STABILIZATION SHALL BE COMPLETED WITHIN:
A) SEVEN (7) CALENDAR DAYS AS TO THE SURFACE OF ALL PERIMETER CONTROLS, DIKES, SWALES, DITCHES, PERIMETER SLOPES, AND ALL SLOPES GREATER THAN THREE HORIZONTAL TO ONE VERTICAL (3:1) AND
B) 14 DAYS FOR ALL OTHER DISTURBED OR GRADED AREAS ON THE PROJECT SITE. THE IN-PLACE SEDIMENT CONTROL MEASURES WILL BE MAINTAINED ON A CONTINUING BASIS UNTIL THE SITE IS PERMANENTLY STABILIZED AND ALL PERMIT REQUIREMENTS ARE MET.

C. ON ALL SITES WITH DISTURBED AREAS IN EXCESS OF TWO (2) ACRES, APPROVAL OF THE INSPECTION AGENCY IS REQUESTED UPON COMPLETION OF INSTALLATION OF PERIMETER EROSION AND SEDIMENT CONTROLS BEFORE PROCEEDING WITH ANY OTHER EARTH DISTURBANCES OR GRADING. OTHER GUIDING OR GRADING INSPECTION APPROVALS WILL NOT BE AUTHORIZED UNTIL THIS INITIAL APPROVAL BY THE INSPECTION AGENCY IS MADE.

D. APPROVAL SHALL BE REQUESTED UPON FINAL STABILIZATION OF ALL SITES WITH DISTURBED AREAS IN EXCESS OF TWO (2) ACRES BEFORE REMOVAL OF EROSION AND SEDIMENT CONTROL MEASURES.

REVIEWED FOR HOWARD SCD AND MEETS THE TECHNICAL REQUIREMENTS
Jim Myers (signature) 6/29/07
USDA - NATURAL RESOURCES CONSERVATION SERVICE — DATE

THIS DEVELOPMENT PLAN IS APPROVED FOR SOIL EROSION AND SEDIMENT CONTROL BY THE HOWARD SOIL CONSERVATION DISTRICT.
John R Robertson (signature) 6/29/07
HOWARD SCD — DATE

### ENGINEER'S CERTIFICATE

"I CERTIFY THAT THIS PLAN FOR SEDIMENT AND EROSION CONTROL A PRACTICAL AND WORKABLE PLAN BASED ON MY PERSONAL KNOWLEDGE OF THE SITE CONDITIONS AND THAT IT WAS PREPARED IN ACCORDANCE WITH THE OF REQUIREMENT OF THE HOWARD SOIL CONSERVATION DISTRICT."

SIGNATURE OF ENGINEER — DATE
ADAM J. VOLANTH P.E.

### DEVELOPER'S CERTIFICATE

"I/WE CERTIFY THAT ALL DEVELOPMENT AND CONSTRUCTION WILL BE DONE ACCORDING TO THIS PLAN FOR SEDIMENT AND EROSION CONTROL, AND THAT ALL RESPONSIBLE PERSONNEL INVOLVED IN THE CONSTRUCTION PROJECT WILL HAVE A CERTIFICATE OF ATTENDANCE AT A DEPARTMENT OF THE ENVIRONMENT APPROVED TRAINING PROGRAM FOR THE CONTROL OF SEDIMENT AND EROSION BEFORE BEGINNING THE PROJECT. I ALSO AUTHORIZE PERIODIC ON-SITE INSPECTION BY THE HOWARD SOIL CONSERVATION DISTRICT."

SIGNATURE OF DEVELOPER — DATE

## PLANNING BOARD APPROVAL STAMP

APPROVED
PLANNING BOARD
of HOWARD COUNTY
DATE 2·08·07

APPROVED: DEPARTMENT OF PLANNING AND ZONING
(signature) 7/5/07
CHIEF-DEVELOPMENT ENGINEERING DIVISION — DATE
(signature) 7/16/07
CHIEF-DIVISION OF LAND DEVELOPMENT — DATE
(signature) 7/12/07
DIRECTOR — DATE

APPROVED: FOR PUBLIC WATER AND PUBLIC SEWERAGE SYSTEMS.
for (signature) 7/13/07
COUNTY HEALTH OFFICER — DATE
HOWARD COUNTY HEALTH DEPARTMENT

GENERAL NOTE:
IT IS THE RESPONSIBILITY OF THE CONTRACTOR TO REVIEW ALL OF THE DRAWINGS AND SPECIFICATIONS ASSOCIATED WITH THIS PROJECT WORK SCOPE PRIOR TO THE INITIATION OF CONSTRUCTION. SHOULD THE CONTRACTOR FIND A CONFLICT WITH THE DOCUMENTS RELATIVE TO THE SPECIFICATIONS OR APPLICABLE CODES, IT IS THE CONTRACTORS RESPONSIBILITY TO NOTIFY BOHLER ENGINEERING, P.C. IN WRITING PRIOR TO THE START OF CONSTRUCTION. FAILURE BY THE CONTRACTOR TO NOTIFY BOHLER ENGINEERING, P.C. SHALL CONSTITUTE ACCEPTANCE OF FULL RESPONSIBILITY BY THE CONTRACTOR TO COMPLETE THE SCOPE OF THE WORK AS DEFINED BY THE DRAWINGS AND IN FULL CONFORMANCE WITH LOCAL REGULATIONS AND CODES.

## PERMANENT SEEDING SUMMARY

| SEED MIXTURE (HARDNESS ZONE 6b) (FROM TABLE 25) | | | | | FERTILIZER RATE (10-10-10) | | | LIME RATE |
|---|---|---|---|---|---|---|---|---|
| NO. | SPECIES | APPLICATION RATE (LBS./AC.) | SEEDING DATES | SEEDING DEPTHS | N | P205 | K20 | |
| 1 | 85% TALL FESCUE<br>10% PER. RYEGRASS<br>5% KENT. BLUEGRASS | 125<br>15<br>10 | 3/1-5/15<br>5/16-8/14<br>8/15-11/15 | — | 90 LBS./AC. (2.0 LBS./ 1,000 S.F.) | 175 LBS./AC. (4.0 LBS./ 1,000 S.F.) | 175 LBS./AC. (4.0 LBS./ 1,000 S.F.) | 2 TONS/AC. (100 LBS./ 1,000 S.F.) |
| 2 | 83% TALL FESCUE<br>2% WEEPING LOVEGRASS<br>15% SERECIA LESPEDEZA | 110<br>3<br>20 | 3/1-5/15<br>5/16-8/14<br>8/15-11/15 | — | | | | |
| 3 | 17% WEEPING LOVEGRASS<br>83% SERICIA LESPEPEDEZA | 4<br>20 | 3/1-5/15<br>5/16-8/14 | — | | | | |

## TEMPORARY SEEDING SUMMARY

| SEED MIXTURE (HARDNESS ZONE 6b) (FROM TABLE 26) | | | | | FERTILIZER RATE (10-10-10) | LIME RATE |
|---|---|---|---|---|---|---|
| NO. | SPECIES | APPLICATION RATE (LBS./AC.) | SEEDING DATES | SEEDING DEPTHS | | |
| 1 | RYE PLUS BARLEY | 150 | YEAR ROUND | 1" | 600 LBS./AC. (15 LB./ 1,000 S.F.) | 2 TONS/AC. (100 LB./ 1,000 S.F.) |
| 2 | WEEPING LOVEGRASS | 4 | 5/1-8/14 | 1/4"=1/2" | | |
| 3 | ANNUAL RYGRASS | 50 | 8/15-11/15 | 1/4"=1/2" | | |

PROFESSIONAL CERTIFICATION
I, MICHAEL J. GESELL, HEREBY CERTIFY THAT THESE DOCUMENTS WERE PREPARED OR APPROVED BY ME, AND THAT I AM A DULY LICENSED PROFESSIONAL ENGINEER UNDER THE LAWS OF THE STATE OF MARYLAND, LICENSE NO. 44097, EXPIRATION DATE: 6/9/15

FOR REVISION 3 ONLY:

MISS UTILITY

BEFORE YOU DIG CALL 1-800-257-7777
PROTECT YOURSELF, GIVE TWO WORKING DAYS NOTICE

THIS DRAWING DOES NOT INCLUDE NECESSARY COMPONENTS FOR CONSTRUCTION SAFETY. ALL CONSTRUCTION MUST BE DONE IN COMPLIANCE WITH THE OCCUPATIONAL SAFETY AND HEALTH ACT OF 1970 AND ALL RULES AND REGULATIONS THERETO APPURTENANT.

THE CONTRACTOR TO CALL MISS UTILITY TO HAVE ALL EXISTING UTILITIES MARKED 48 HOURS PRIOR TO ANY CONSTRUCTION.

| REV. | DATE | DESCRIPTION | BY |
|---|---|---|---|
| 3 | 1/20/14 | REVISED LAYOUT: NEW PUMPS + CANOPY, RELOC. BUS STOP + WALK, UTILITY UPDT. | MJG |

OWNER/DEVELOPER: HRD LAND HOLDINGS, INC.
HOWARD RESEARCH AND DEVELOPMENT CORPORATION
THE ROUSE BUILDING
10275 LITTLE PATUXENT PARKWAY
COLUMBIA, MARYLAND 21044
PHONE: (410) 992-6000

PROJECT: BENSON EAST
PARCEL U; GASOLINE STATION WITH KIOSK (COSTCO GASOLINE); GATEWAY OVERLOOK SHOPPING CENTER

AREA: TAX MAP 37 — GRID 1 & 2 — ZONED NEW TOWN
PARCEL U
BENSON EAST
6TH ELECTION DISTRICT
HOWARD COUNTY, MARYLAND

TITLE: EROSION AND SEDIMENT CONTROL NOTES AND DETAILS

BOHLER ENGINEERING, P.C.
• PROFESSIONAL ENGINEERING SERVICES •
•22630 DAVIS DRIVE, SUITE 200 STERLING, VIRGINIA, 20164•
•CONTACT: DAVID B. NEMECEK
•(703) 709-9500 FAX: (703) 709-9501 |• WWW.BOHLERENG.COM

DATE: 6/26/07
ADAM J. VOLANTH
PROFESSIONAL ENGINEER NO. 21342

| | |
|---|---|
| DESIGNED BY: | J.A.D. |
| DRAWN BY: | R.F.G. |
| PROJECT NO.: | S040011.01 |
| DATE: | 6/25/07 |
| SCALE: | AS SHOWN |
| DRAWING NO.: | 15 OF 23 |

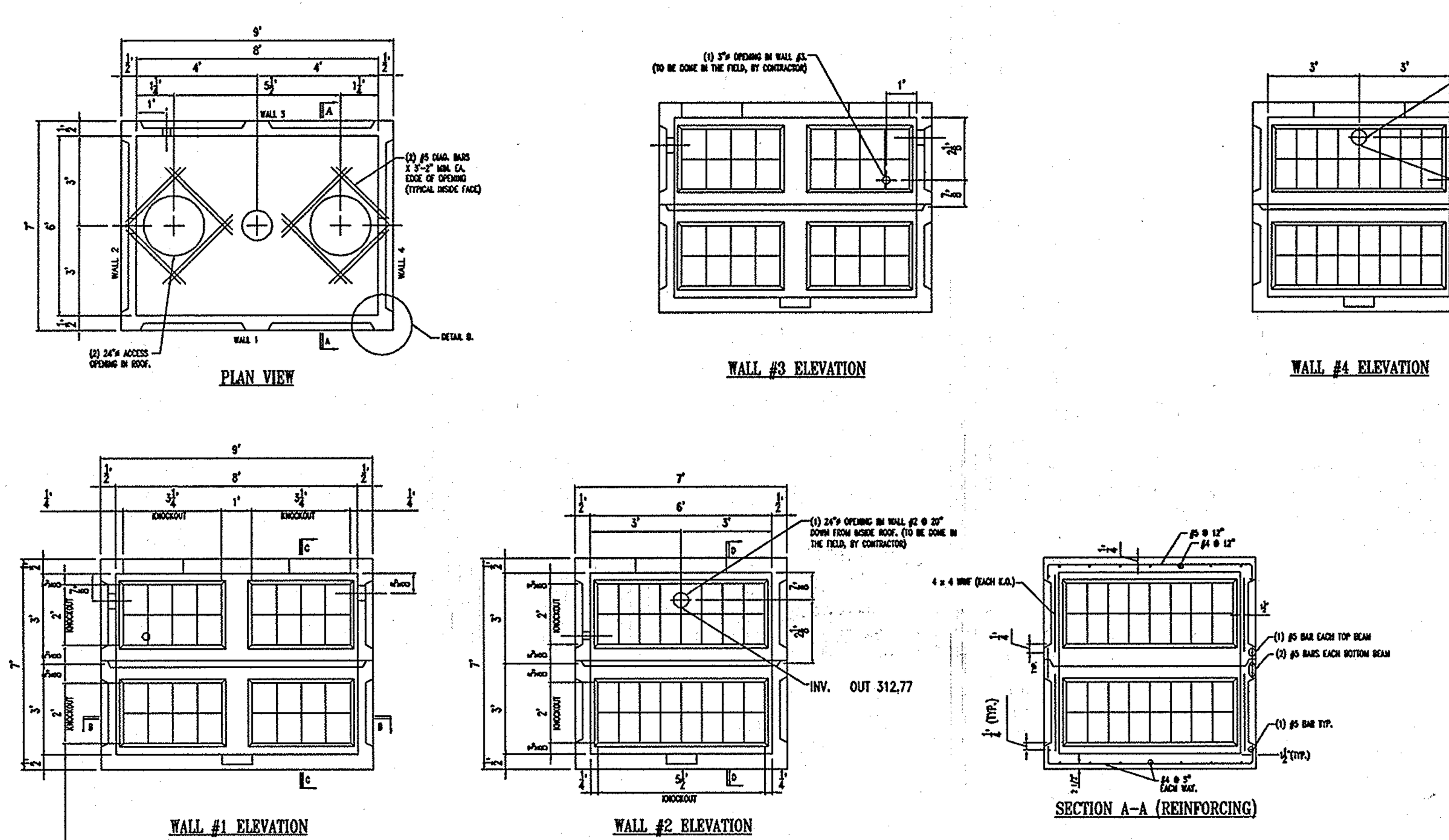


DESIGN NOTES

CONCRETE MINIMUM STRENGTH - 5000 PSI @ 28 DAYS
STEEL REINFORCEMENT - ASTM A-615, GRADE 60
COVER TO STEEL: 1" UNLESS OTHERWISE NOTED
DESIGN LOADING - AASHTO HS20-44 (30% IMPACT ALLOWANCE)
CONSTRUCTION JOINT - SEALED W/1" DIA. BUTYL RUBBER
DESIGN SPECIFICATION - ACI 318 & AASHTO LOAD FACTOR DESIGN METHOD

ASSUMPTIONS

GROUND WATER @ 3'-0" BELOW FINISHED GRADE
EARTH COVER 0'-0" MIN. 1'-0" MAX.
2'-0" LIVE LOAD SURCHARGE APPLIED TO 8'-0" DEPTH
LIVE LOAD IMPACT 0" TO 1'-0" COVER I=30%
COEFFICIENT OF ACTIVE EARTH PRESSURE Ka= .27
DRY EARTH DENSITY - 120 PCF
DRY EARTH LATERAL PRESSURE= 120 (.27) = 32.4 PSF
SATURATED EARTH DENSITY - 132.4 PCF
132.4 PCF - 62.4 = 70.0 PCF
70.0 PCF (.27) = 18.9 + 62.4 = 81.3 PSF
SATURATED EARTH LATERAL PRESSURE = 19.0 + 62.4 = 81.4 PSF

APPROX. WT.:

TOP SECTION = 4.64 TONS (2.29 CU.YDS.)
BASE SECTION = 4.88 TONS (2.41 CU.YDS.)
BAFFLE WALL = 0.76 TONS (0.37 CU.YDS.)
BASE W/ BAFFLE = 5.64 TONS (2.79 CU.YDS.)

24" KNOCKOUTS FOR THE 15" IN AND OUTFLOW PIPES SHALL BE SEALED SO AS TO BE WATERTIGHT

## 6'-0" x 8'-0" x 6'-0" PRECAST CONCRETE MODIFIED KNOCKOUT MANHOLE

*SEE 6x8x6-DETAILS FOR BAFFLE WALL AND SECTION DETAILS*
(1 STRUCTURE REQUIRED)

ROTONDO PRECAST — A DIVISION OF OLDCASTLE PRECAST
MANUFACTURERS OF QUALITY PRE-CAST CONCRETE PRODUCTS
5115 MASSAPONAX CHURCH RD. FREDERICKSBURG, VA. 22407

| | | |
|---|---|---|
| DATE: 03/22/02 | | DRWN BY: |
| SCALE: 1/4"=1'-0" | | JOB NO. |
| PROJECT: 6'-0" x 8'-0" x 6'-0" PRECAST CONCRETE TANK (1) COMPLETE STRUCTURE REQUIRED | | |
| CUSTOMER: | | DWG. NO. |

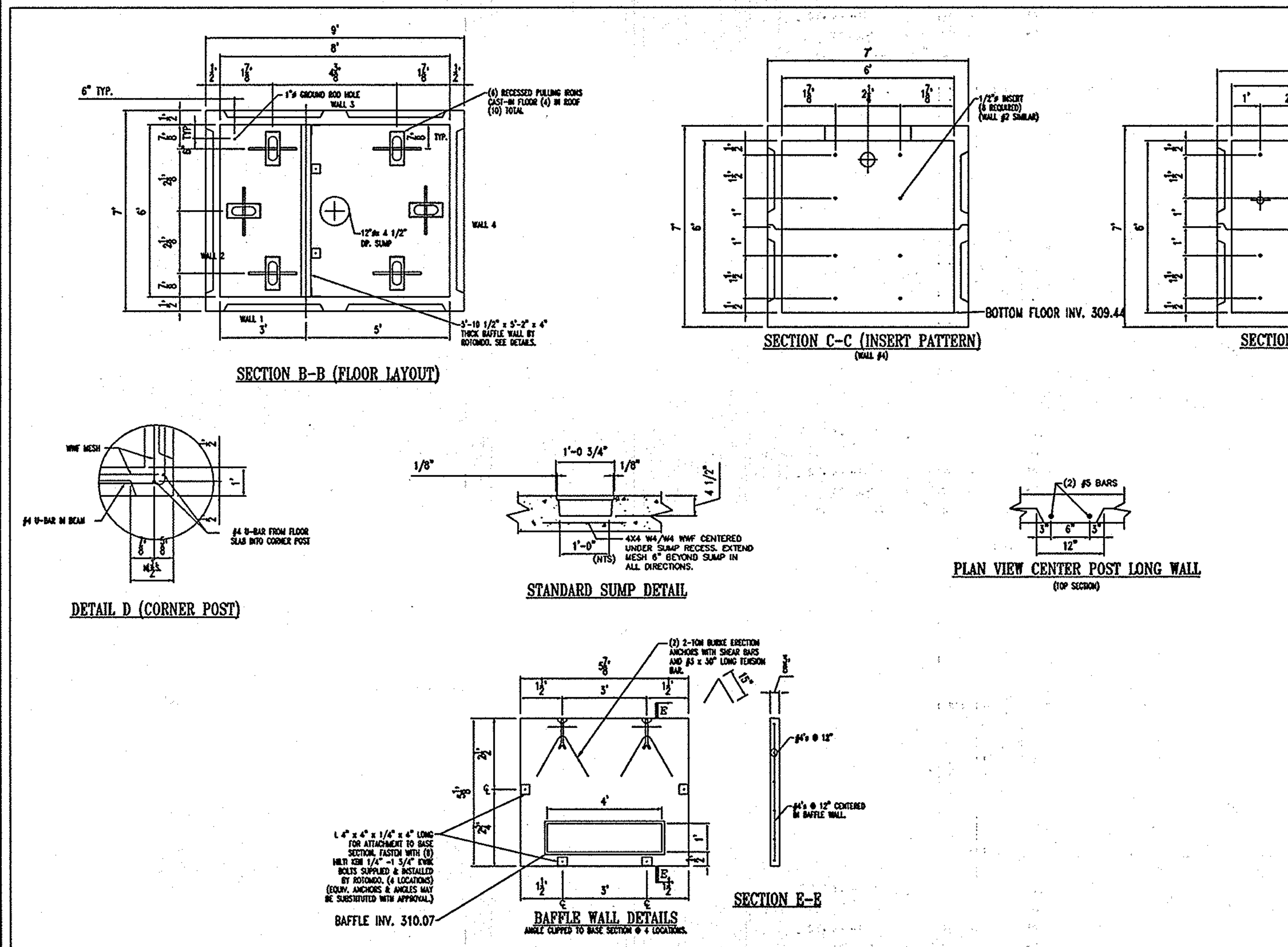


DESIGN NOTES

CONCRETE MINIMUM STRENGTH - 5000 PSI @ 28 DAYS
STEEL REINFORCEMENT - ASTM A-615, GRADE 60
COVER TO STEEL: 1" UNLESS OTHERWISE NOTED
DESIGN LOADING - AASHTO HS20-44 (30% IMPACT ALLOWANCE)
CONSTRUCTION JOINT - SEALED W/1" DIA. BUTYL RUBBER
DESIGN SPECIFICATION - ACI 318 & AASHTO LOAD FACTOR DESIGN METHOD

ASSUMPTIONS

GROUND WATER @ 3'-0" BELOW FINISHED GRADE
EARTH COVER 0-0" MIN. 1'-0" MAX.
2'-0" LIVE LOAD SURCHARGE APPLIED TO 8'-0" DEPTH
LIVE LOAD IMPACT 0" TO 1'-0" COVER I=30%
COEFFICIENT OF ACTIVE EARTH PRESSURE Ka= .27
DRY EARTH DENSITY = 120 PCF
DRY EARTH LATERAL PRESSURE= 120 (.27) = 32.4 PSF
SATURATED EARTH DENSITY - 132.4 PCF
132.4 PCF - 62.4 = 70.0 PCF
70.0 PCF (.27) = 18.9 + 62.4 = 81.3 PSF
SATURATED EARTH LATERAL PRESSURE = 19.0 + 62.4 = 81.4 PSF

APPROX. WT.:

TOP SECTION = 4.64 TONS (2.29 CU.YDS.)
BASE SECTION = 4.88 TONS (2.41 CU.YDS.)
BAFFLE WALL = 0.76 TONS (0.37 CU.YDS.)
BASE W/ BAFFLE = 5.64 TONS (2.79 CU.YDS.)

## 6'-0" x 8'-0" x 6'-0" PRECAST CONCRETE MODIFIED KNOCKOUT MANHOLE DETAILS

ROTONDO PRECAST — A DIVISION OF OLDCASTLE PRECAST
MANUFACTURERS OF QUALITY PRE-CAST CONCRETE PRODUCTS
5115 MASSAPONAX CHURCH RD. FREDERICKSBURG, VA. 22407

| | | |
|---|---|---|
| DATE: 03/22/02 | | DRAWN BY |
| SCALE: 1/4"=1'-0" | | JOB NO. |
| PROJECT: 6'-0" x 8'-0" x 6'-0" PRECAST CONCRETE TANK (1) COMPLETE STRUCTURE REQUIRED | | |
| CUSTOMER: | | DWG. NO. PROJECT LINE 3 |

## PLANNING BOARD APPROVAL STAMP

APPROVED
PLANNING BOARD
of HOWARD COUNTY
DATE 2-08-07

APPROVED: DEPARTMENT OF PLANNING AND ZONING

CHIEF-DEVELOPMENT ENGINEERING DIVISION — 7/5/07 DATE
CHIEF-DIVISION OF LAND DEVELOPMENT — 7/16/07 DATE
DIRECTOR — 7/13/07 DATE

APPROVED: FOR PUBLIC WATER AND PUBLIC SEWERAGE SYSTEMS.

for COUNTY HEALTH OFFICER — 7/13/07 DATE
HOWARD COUNTY HEALTH DEPARTMENT

## OIL/WATER SEPARATOR DETAIL

NOT TO SCALE

CONTRACTOR IS RESPONSIBLE FOR ENSURING THE CONCRETE FOOTING AND REINFORCING MATERIAL ARE DESIGNED BY A QUALIFIED STRUCTURAL ENGINEER.

K&E BALTIMORE 19 1253 HERCULENE MC2176•

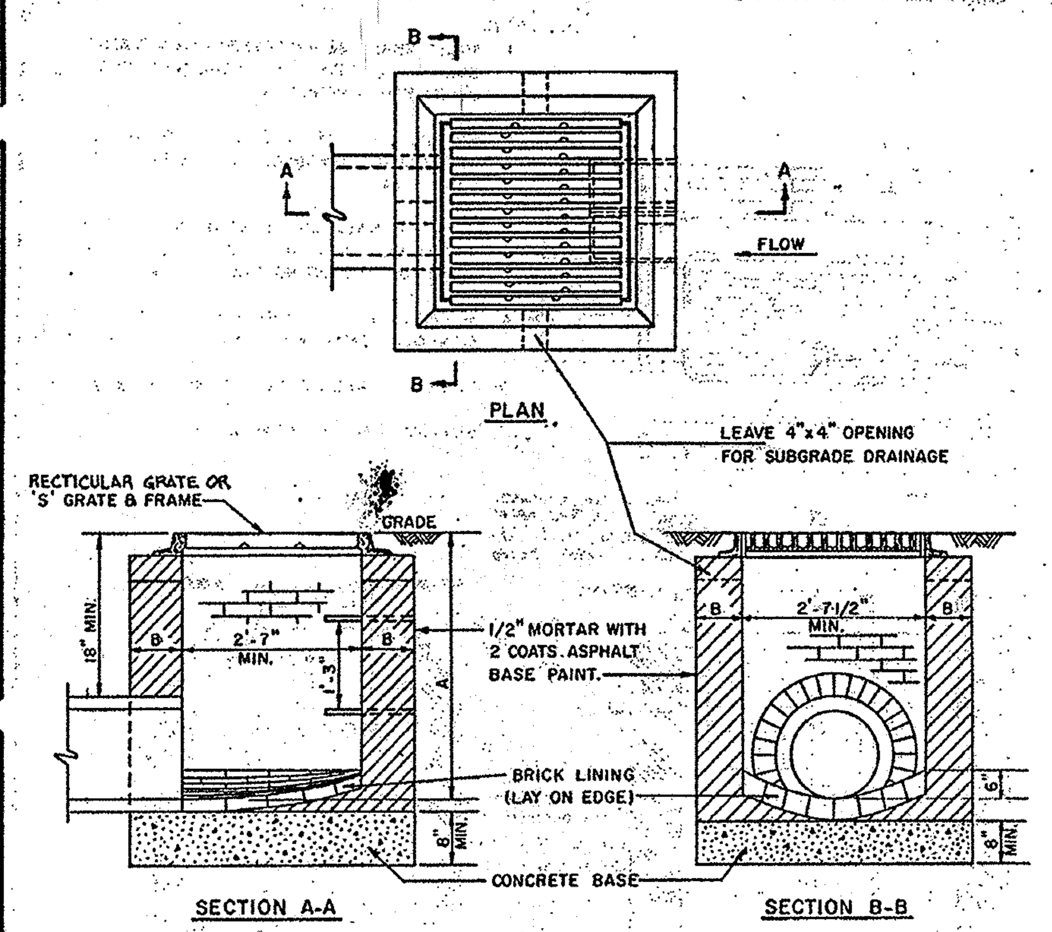


NOTES:
1. BOTTOM SHALL BE MIX NO.3 CONCRETE.
2. WALLS CAN BE BRICK OR MIX NO. 3 CONCRETE.
3. B=8" WHERE A IS LESS THAN 8'.
   B=12" WHERE A IS 8' TO 14'.
4. TOP 4" OF WALLS SHALL BE BRICK MASONRY. ADDITIONAL BRICK SHALL BE USED TO BRING THE GRATE TO EXISTING GRADE IF REQUIRED.
5. INVERTS SHALL BE BRICK, GRADE SM (ASTM C32)
6. WHERE A IS 3'-6" OR GREATER STANDARD MANHOLE STEPS SHALL BE INSTALLED AS SHOWN.

REV. JAN. 1989
REV. OCT. 1982
REV. JAN. 1982

| HOWARD COUNTY, MARYLAND DEPARTMENT OF PUBLIC WORKS | TYPE 'S' INLET | DRAWN BY R.K.H. |
|---|---|---|
| Approved — Chief - Bureau of Engineering | | CHECKED BY J.L.R. |
| | | SCALE NONE |
| | | SD-4.22 |

K&E 19 1253 8-60 MC1469•

NOTES:
1. ALL FITTINGS TO BE BRASS
2. CONTRACTOR TO PROVIDE A.W.G. 18-2 COPPER THERMOSTAT OF BELL WIRE FOR REMOTE READOUT. WIRE RUN WITHIN CONDUIT, MAX. LENGTH TO BUILDING 500'.

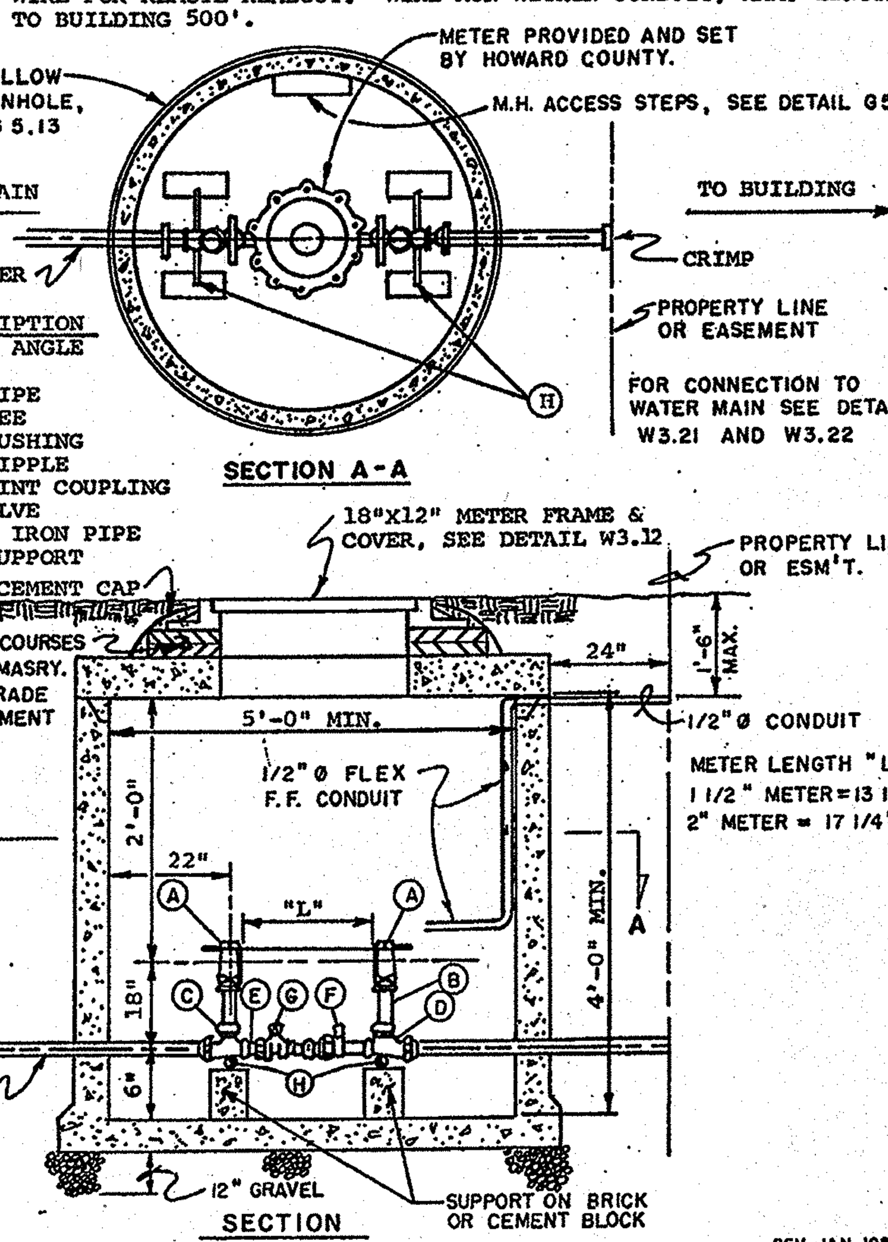


PARTS DESCRIPTION
- A. FLANGED ANGLE VALVE.
- B. BRASS PIPE
- C. BRASS TEE
- D. BRASS BUSHING
- E. BRASS NIPPLE
- F. PACK JOINT COUPLING
- G. BALL VALVE
- H. 1" O.C. IRON PIPE BRACE SUPPORT

REV. JAN. 198

| HOWARD COUNTY, MARYLAND DEPARTMENT OF PUBLIC WORKS | STANDARD WATER DETAILS STANDARD INSTALLATION FOR 1 1/2" AND 2" OUTSIDE METER SETTINGS | DRN. BY: W |
|---|---|---|
| Approved — Chief - Bureau of Engineering | | CHK'D. BY: Y.P. |
| | | NO SCALE |
| | | W3.34 |

PROFESSIONAL CERTIFICATION

I, MICHAEL J. GESELL HEREBY CERTIFY THAT THESE DOCUMENTS WERE PREPARED OR APPROVED BY ME, AND THAT I AM A DULY LICENSED PROFESSIONAL ENGINEER UNDER THE LAWS OF THE STATE OF MARYLAND, LICENSE NO: 44097, EXPIRATION DATE: 6/9/15

FOR REVISION 3 ONLY:

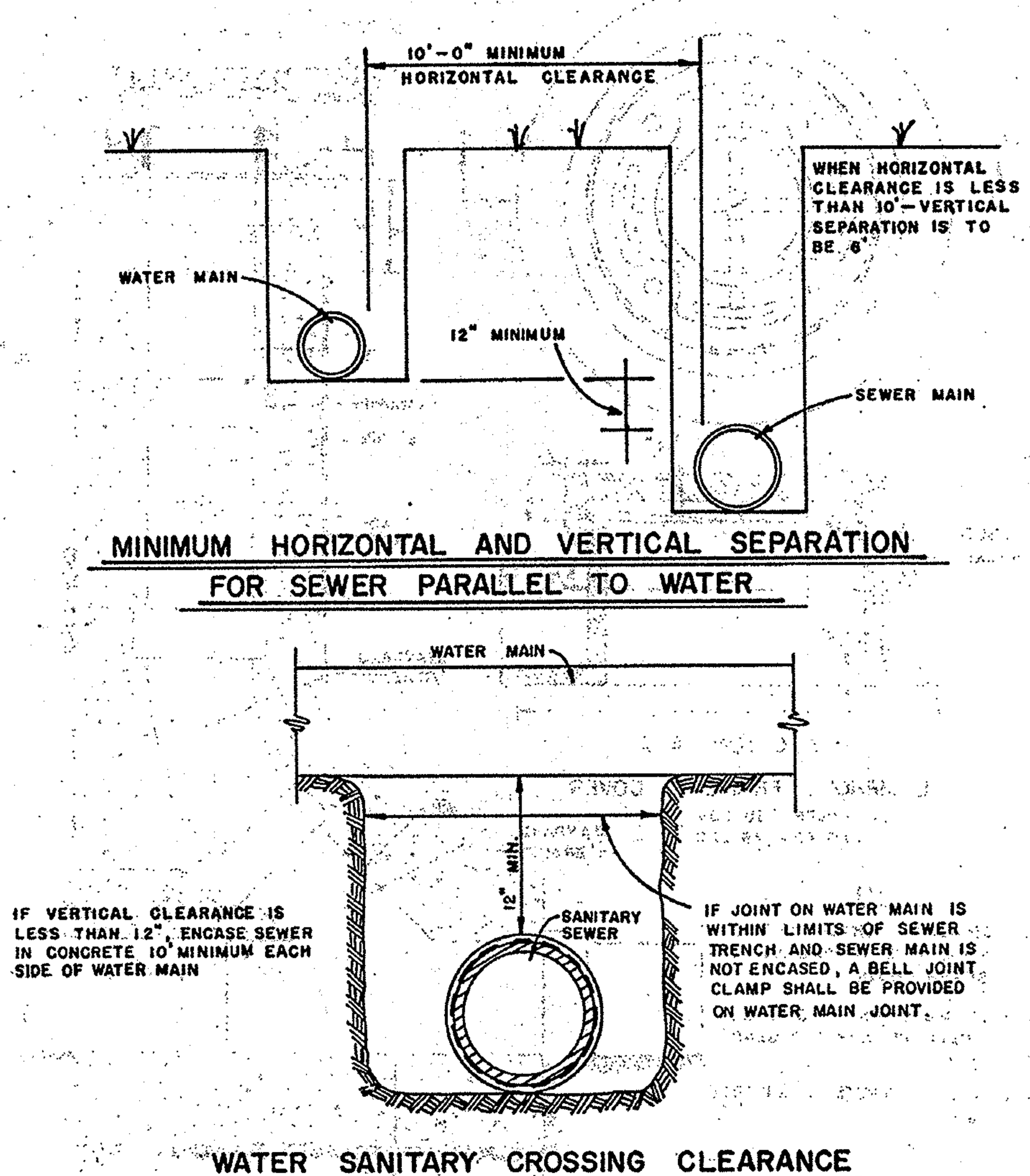


| HOWARD COUNTY, MARYLAND DEPARTMENT OF PUBLIC WORKS | STANDARD SANITARY SEWER DETAILS WATER SEWER CLEARANCE REQUIREMENTS | DRAWN BY: D.M.B. |
|---|---|---|
| Approved — 2-10-81 Chief - Bureau of Engineering | | CHECKED BY: F.A.W. |
| | | SCALE: NONE |
| | | S 3.13 |

NOTES:
1. SEE GENERAL NOTES APPLICABLE TO ALL PRECAST MANHOLES ON DETAIL G 5.11.
2. FOR PIPE SIZES 42" AND LARGER USE DETAIL G 5.03
3. WHERE "A" (COVER) IS MORE THAN 4.5 FEET USE STANDARD PRECAST MANHOLE.

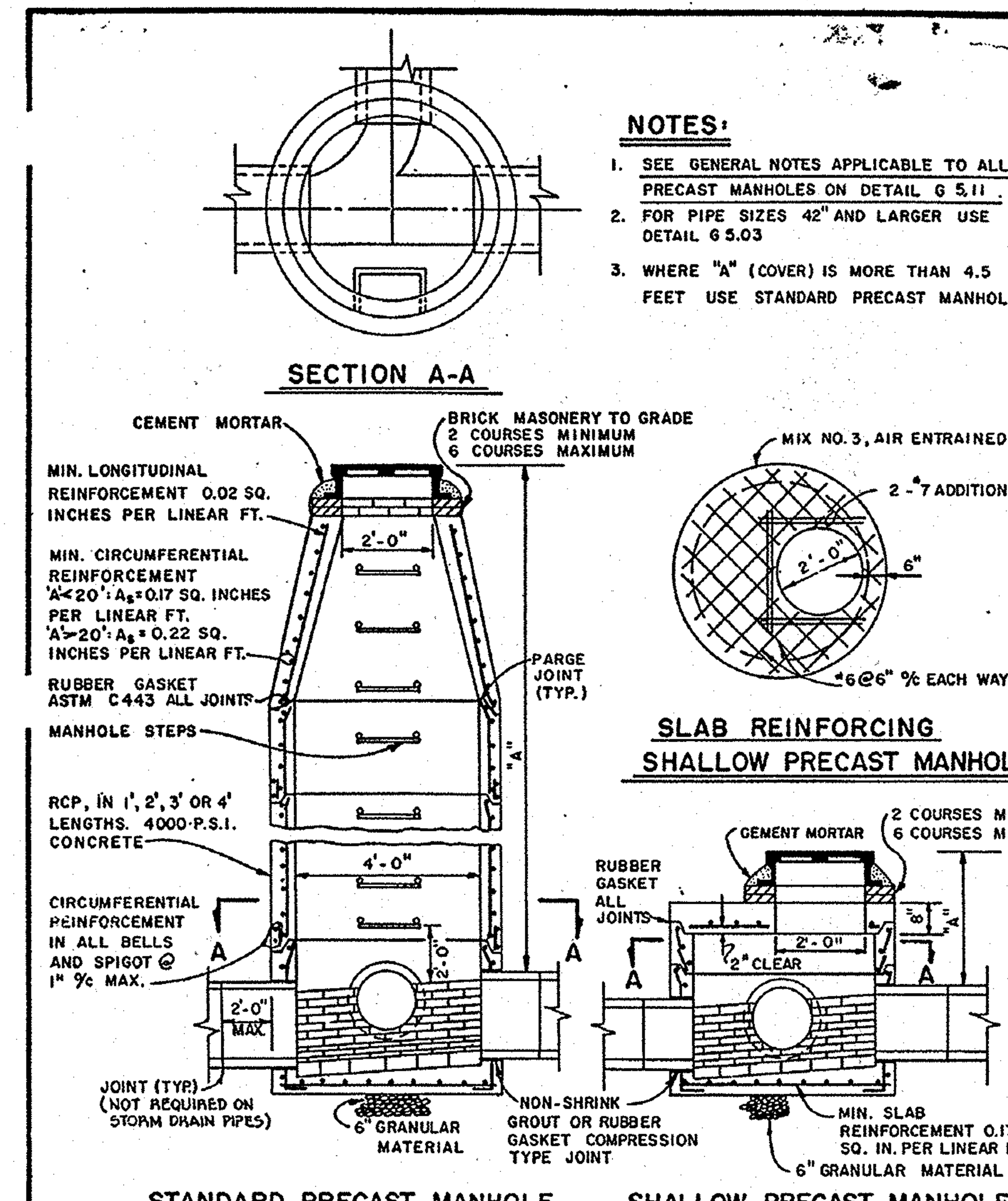


REV. MAR. 1986/REV. JAN. 1985 / REV. JAN. 1982

| HOWARD COUNTY, MARYLAND DEPARTMENT OF PUBLIC WORKS | 4'-0" STANDARD AND SHALLOW PRECAST MANHOLE FOR USE WITH 24" AND SMALLER PIPE | DRAWN BY: J.M.C. |
|---|---|---|
| Approved — 2-10-81 Chief - Bureau of Engineering | | CHECKED BY: F.A.W. |
| | | SCALE: NONE |
| | | G5.12 |

| REV. | DATE | DESCRIPTION | BY |
|---|---|---|---|
| 3 | 1/20/14 | REVISED LAYOUT: NEW PUMPS + CANOPY, RELOC. BUS STA. + WALK, UTILITIES | MSC |

OWNER/DEVELOPER: HRD LAND HOLDINGS, INC.
HOWARD RESEARCH AND DEVELOPMENT CORPORATION
THE ROUSE BUILDING
10275 LITTLE PATUXENT PARKWAY
COLUMBIA, MARYLAND 21044
PHONE: (410) 992-6000

PROJECT: BENSON EAST
PARCEL U; GASOLINE STATION WITH KIOSK (COSTCO GASOLINE); GATEWAY OVERLOOK SHOPPING CENTER

AREA: TAX MAP 37 GRID 1 & 2 ZONED NEW TOWN
PARCEL U
BENSON EAST
6TH ELECTION DISTRICT
HOWARD COUNTY, MARYLAND

TITLE: CONSTRUCTION DETAILS

BOHLER ENGINEERING, P.C.
• PROFESSIONAL ENGINEERING SERVICES •
• 22630 DAVIS DRIVE, SUITE 200 STERLING, VIRGINIA, 20164 •
• CONTACT: DAVID B. NEMECEK
• (703) 709-9500 FAX: (703) 709-9501 | • WWW.BOHLERENG.COM

DATE: 6/26/07
ADAM J. VOLANTH
PROFESSIONAL ENGINEER NO. 21342

| | |
|---|---|
| DESIGNED BY: | J.A.D. |
| DRAWN BY: | R.F.G. |
| PROJECT NO.: | S040011.01 |
| DATE: | 6/25/07 |
| SCALE: | AS SHOWN |
| DRAWING NO.: | 16 OF 23 |

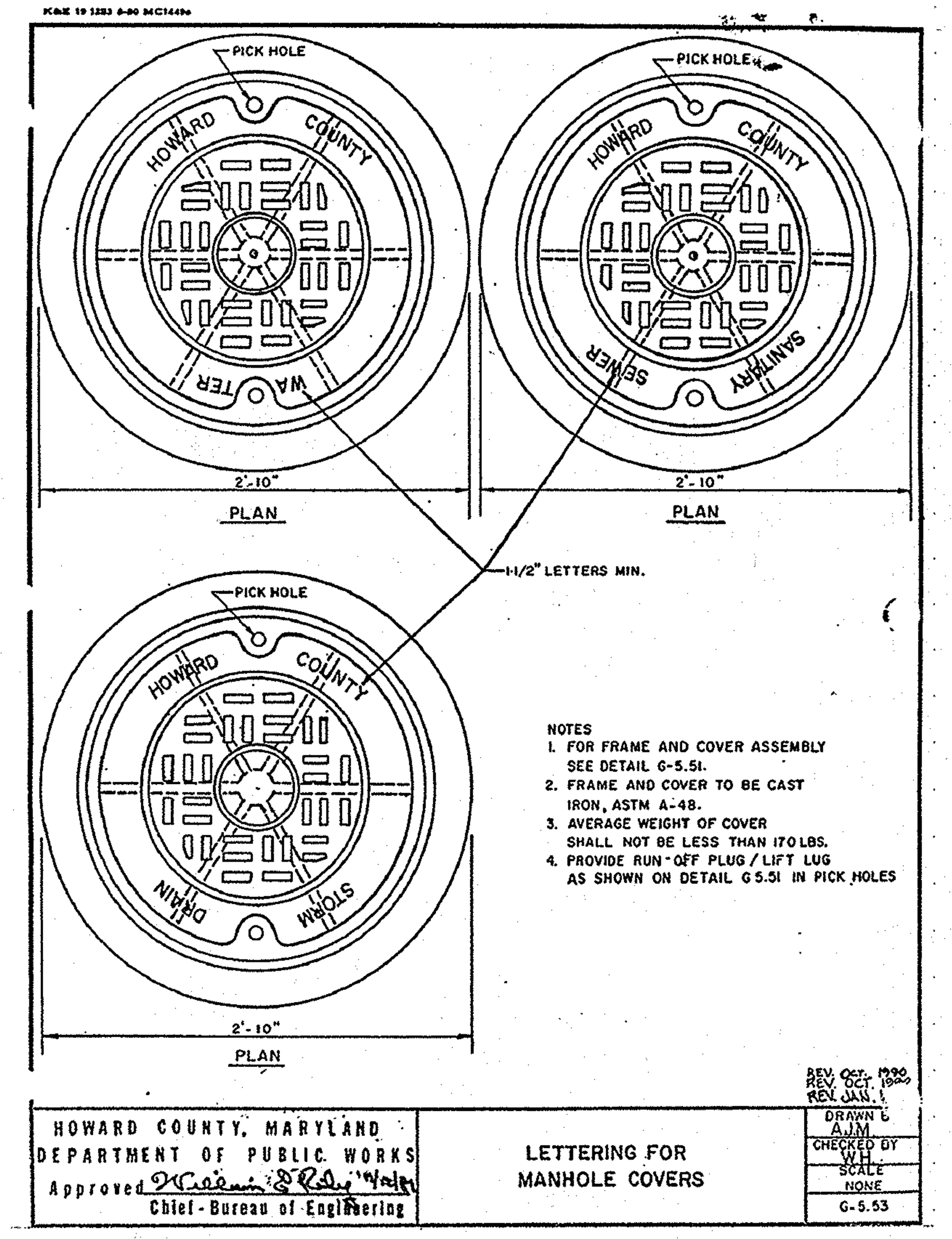


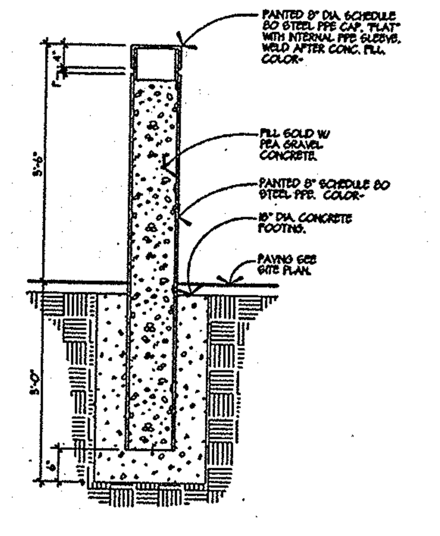


## SERVICE AREA BOLLARD DETAIL
NOT TO SCALE

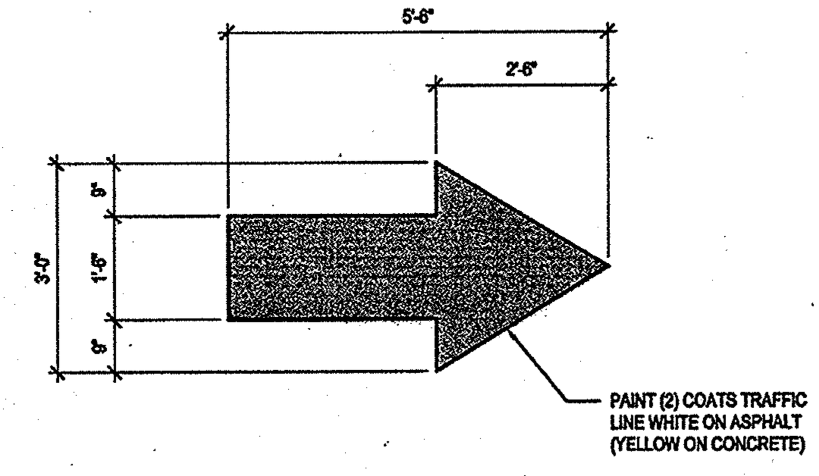


NOTE:
PROVIDE PAINTED DIRECTIONAL ARROW AT ALL LOCATIONS INDICATED ON SITE PLAN

## DIRECTIONAL ARROW
NOT TO SCALE

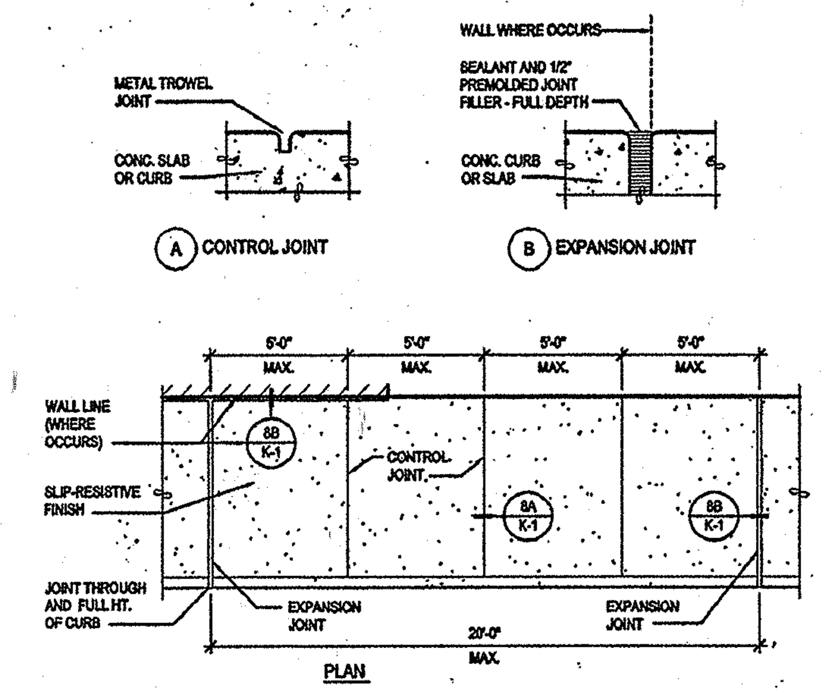


## CONCRETE SIDEWALK DETAIL
NOT TO SCALE

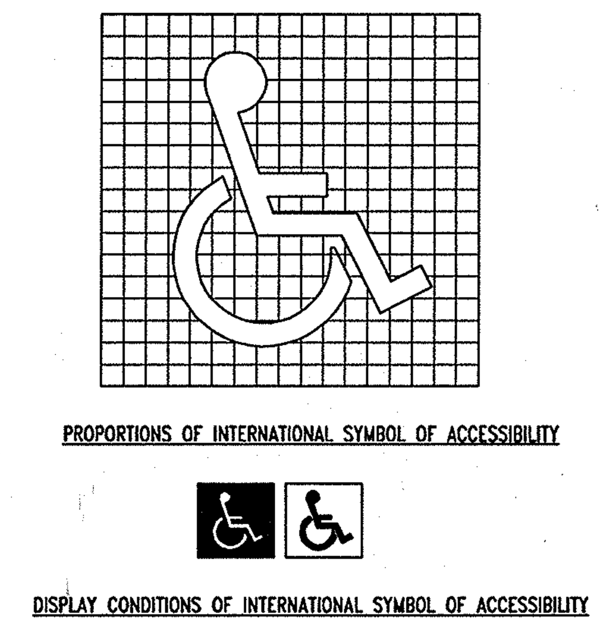


## HANDICAP SYMBOL DETAIL
NOT TO SCALE

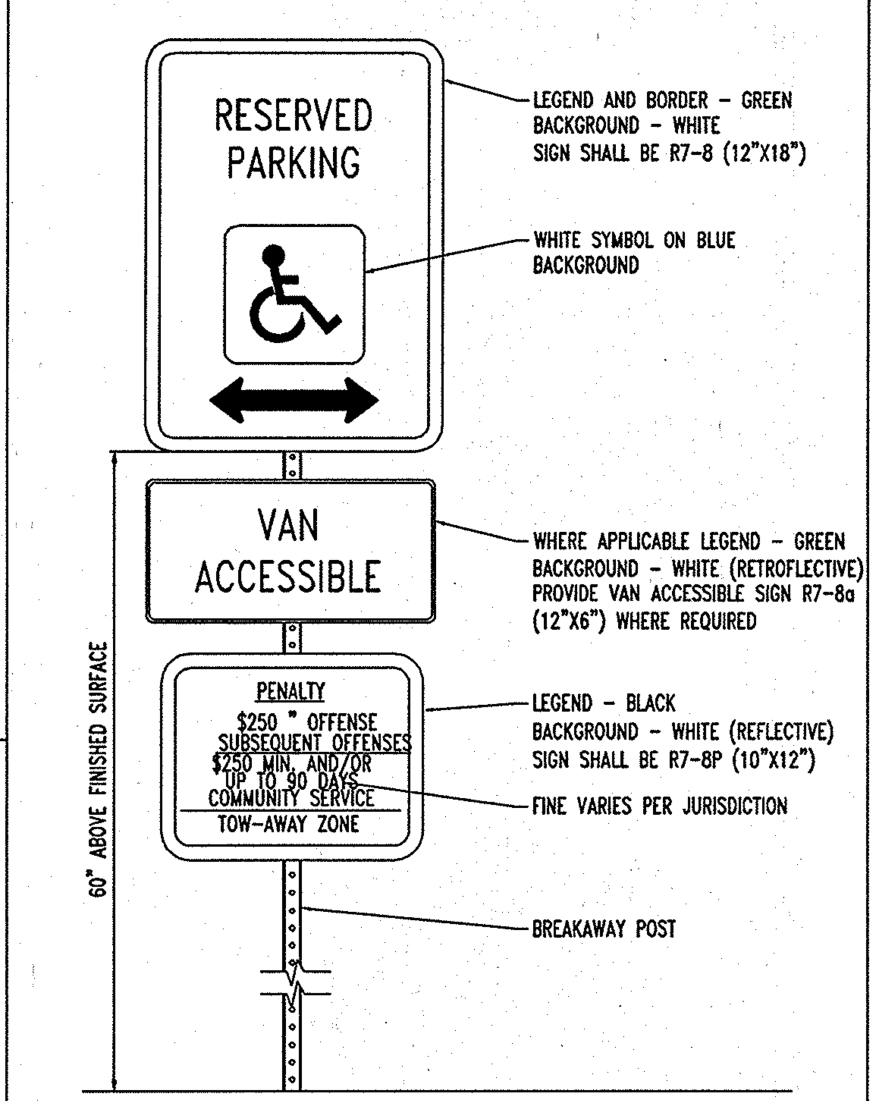


NOTE:
1. SIGNS SHALL MEET THE REQUIREMENTS OF THE MANUAL ON UNIFORM TRAFFIC CONTROL DEVICES.
2. SIGNS ATTACHED WITH ACORN NUT TYPE FASTENERS.

## HANDICAP PARKING SIGN DETAIL
NOT TO SCALE

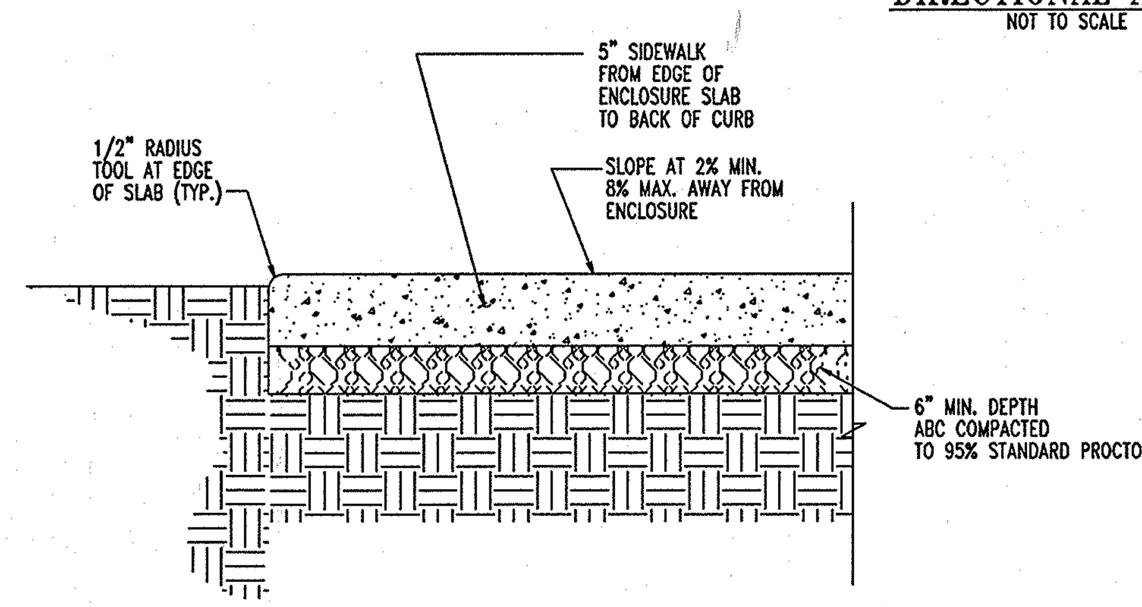


## SIDEWALK AT CONTROLLER ENCLOSURE
NOT TO SCALE

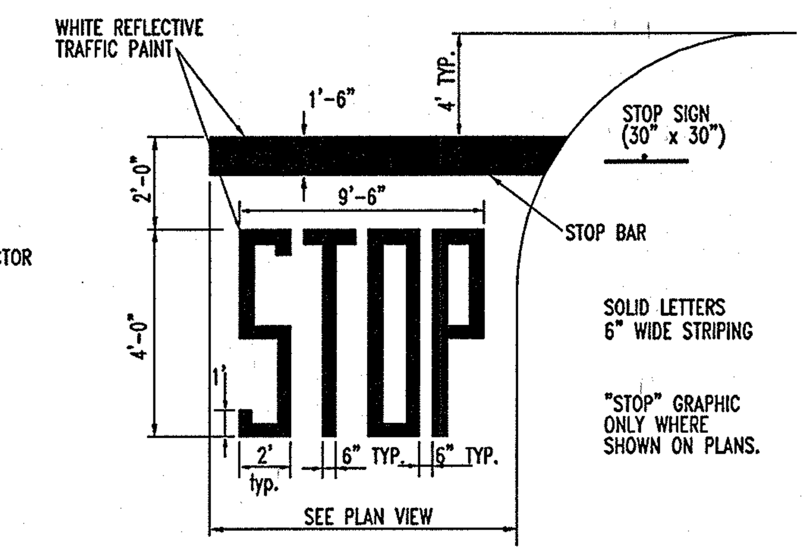


## STOP LINE GRAPHIC DETAIL
NOT TO SCALE

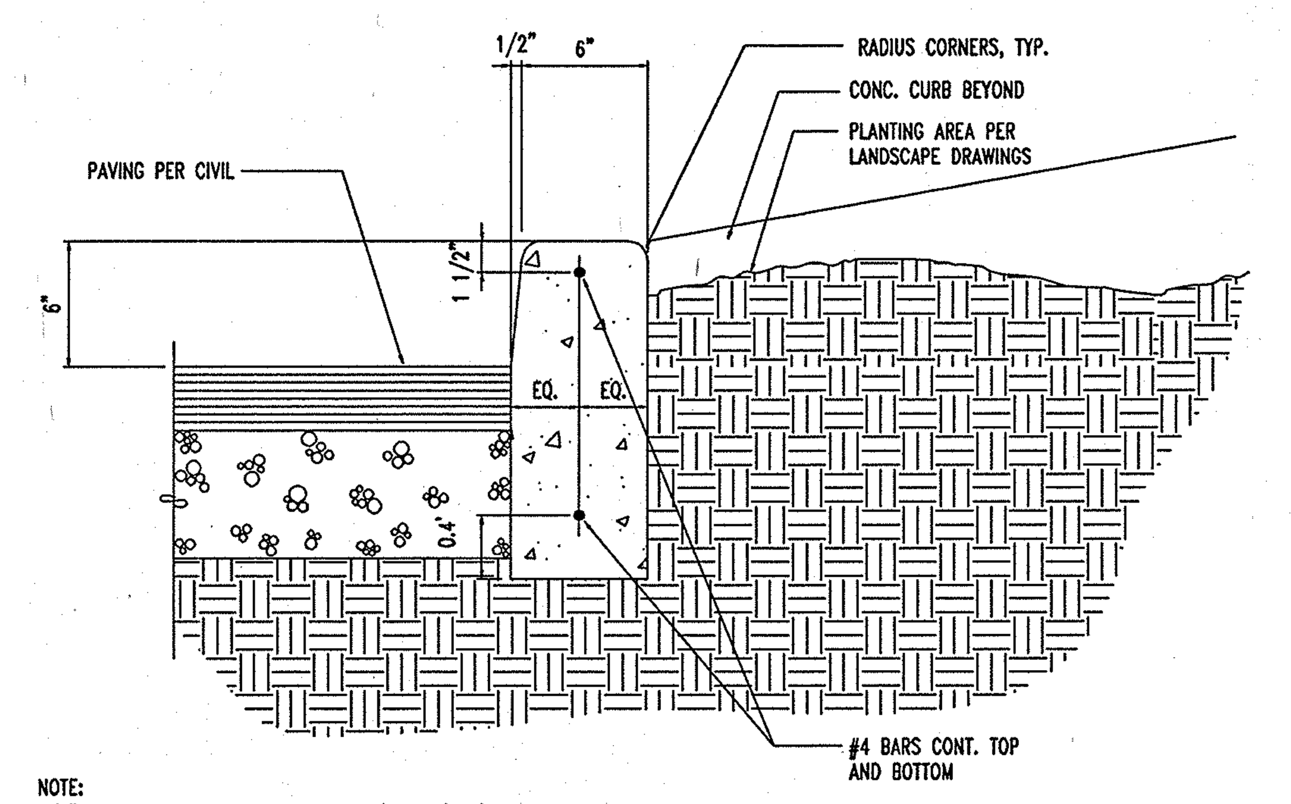


NOTE:
1/2" PRE-MOULDED JOINT FILLER AT 25' O.C. (MAX) AND AT START AND FINISH OF ALL CURVED SECTIONS.

## CONCRETE CURB DETAIL
NOT TO SCALE

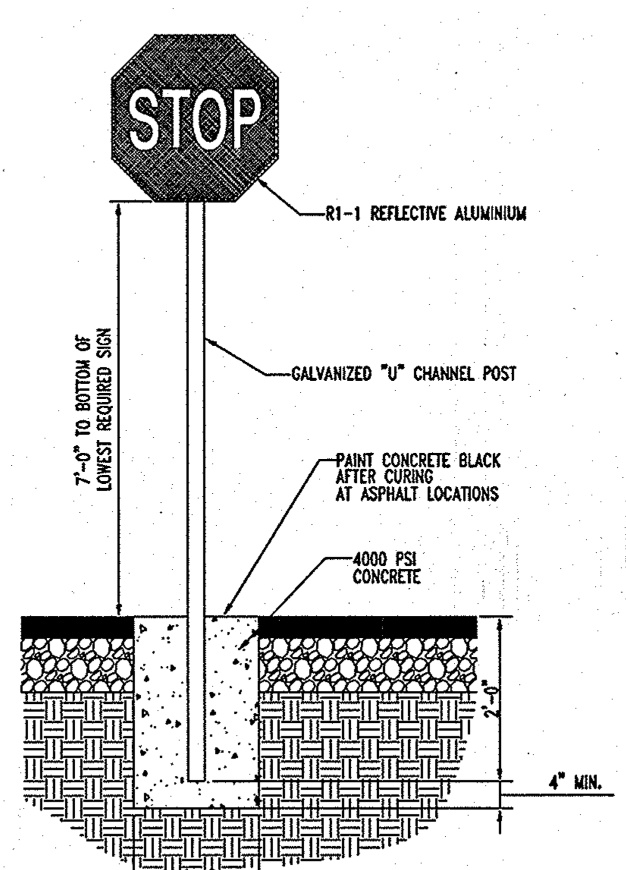


NOTE: DETAIL PROVIDED BY OTHERS. BOHLER ENGINEERING DOES NOT CERTIFY STRUCTURAL INTEGRITY OR DIMENSIONS. FINAL STRUCTURAL DESIGN TO BE PROVIDED BY STRUCTURAL ENGINEER PRIOR TO CONSTRUCTION.

## STOP SIGN DETAIL
NOT TO SCALE

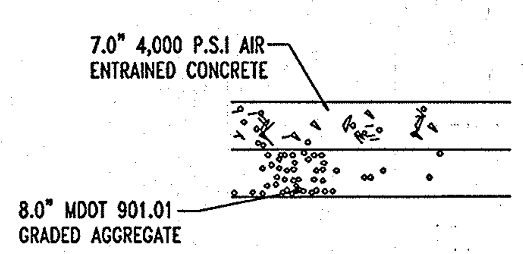


## HEAVY DUTY CONCRETE PAVING DETAIL
NOT TO SCALE

NOTES: REFER TO GEOTECHNICAL REPORT PREPARED BY WHITESTONE ASSOCIATES, INC. ENTITLED: "COSTCO WHOLESALE SITE, MARYLAND INTERSTATE I-95 AND LITTLE PATUXENT PARKWAY, COLUMBIA, HOWARD COUNTY, MARYLAND" DATED 10/20/05, PROJECT NO. WP05-7961.
PERLIMINARY PAVEMENT DESIGN BASED ON AS ESTIMATED CBR VALUE OF 3.0. FINAL PAVEMENT DESIGN WILL BE DETERMINED ONCE ACTUAL CBR TEST RESULTS FOR SUB BASE ARE MADE AVAILABLE.

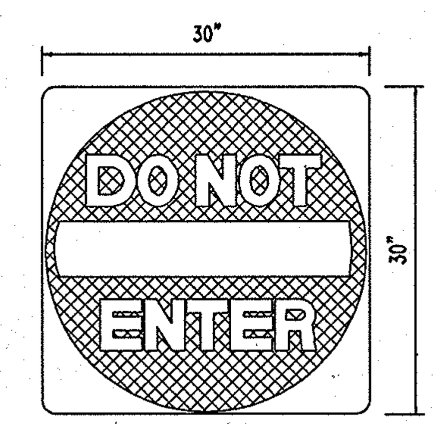


STANDARD RED AND WHITE SIGN (R1-1)

## "DO NOT ENTER" SIGN
NOT TO SCALE

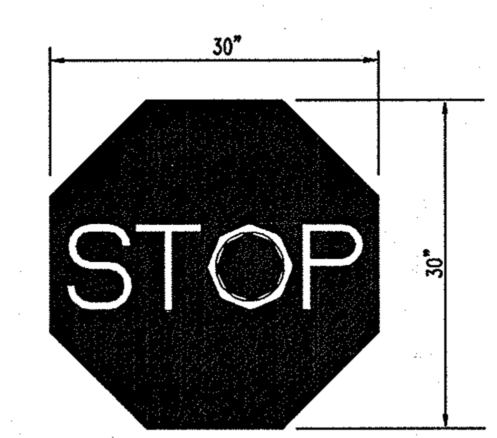


WHITE LEGEND RED BACKGROUND (R1-1)

## "STOP" SIGN
NOT TO SCALE

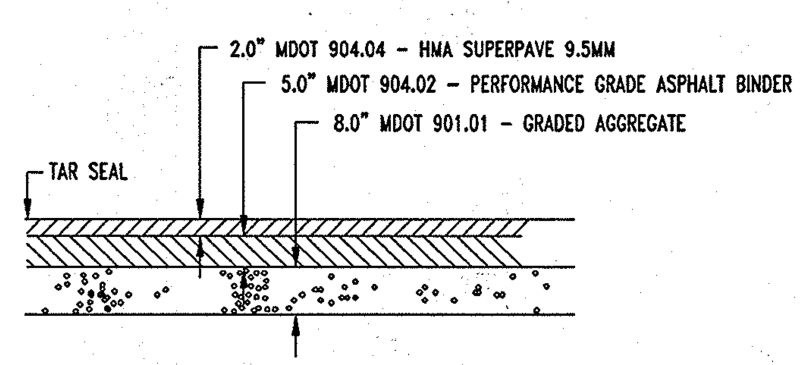


NOTES: REFER TO GEOTECHNICAL REPORT PREPARED BY WHITESTONE ASSOCIATES, INC. ENTITLED: "COSTCO WHOLESALE SITE, MARYLAND INTERSTATE I-95 AND LITTLE PATUXENT PARKWAY, COLUMBIA, HOWARD COUNTY, MARYLAND" DATED 10/20/05, PROJECT NO. WP05-7961.
PRELIMINARY PAVEMENT DESIGN BASED ON AS ESTIMATED CBR VALUE OF 3.0. FINAL PAVEMENT DESIGN WILL BE DETERMINED ONCE ACTUAL CBR TEST RESULTS FOR SUB BASE ARE MADE AVAILABLE.

## HEAVY DUTY ASPHALT PAVING DETAIL
NOT TO SCALE

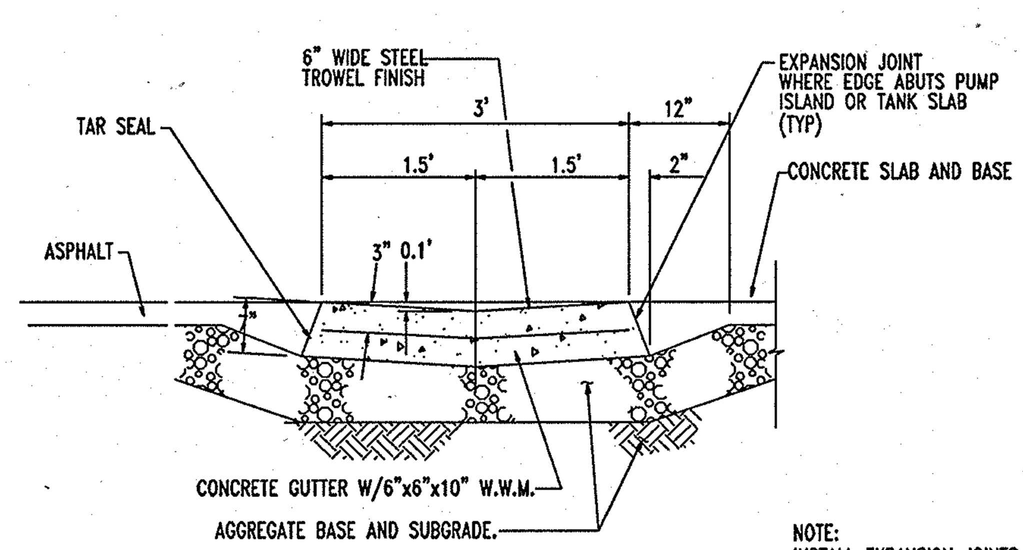


NOTE:
INSTALL EXPANSION JOINTS AT 20'-0" O.C. MAX.

## 3' CONCRETE SWALE DETAIL
NOT TO SCALE

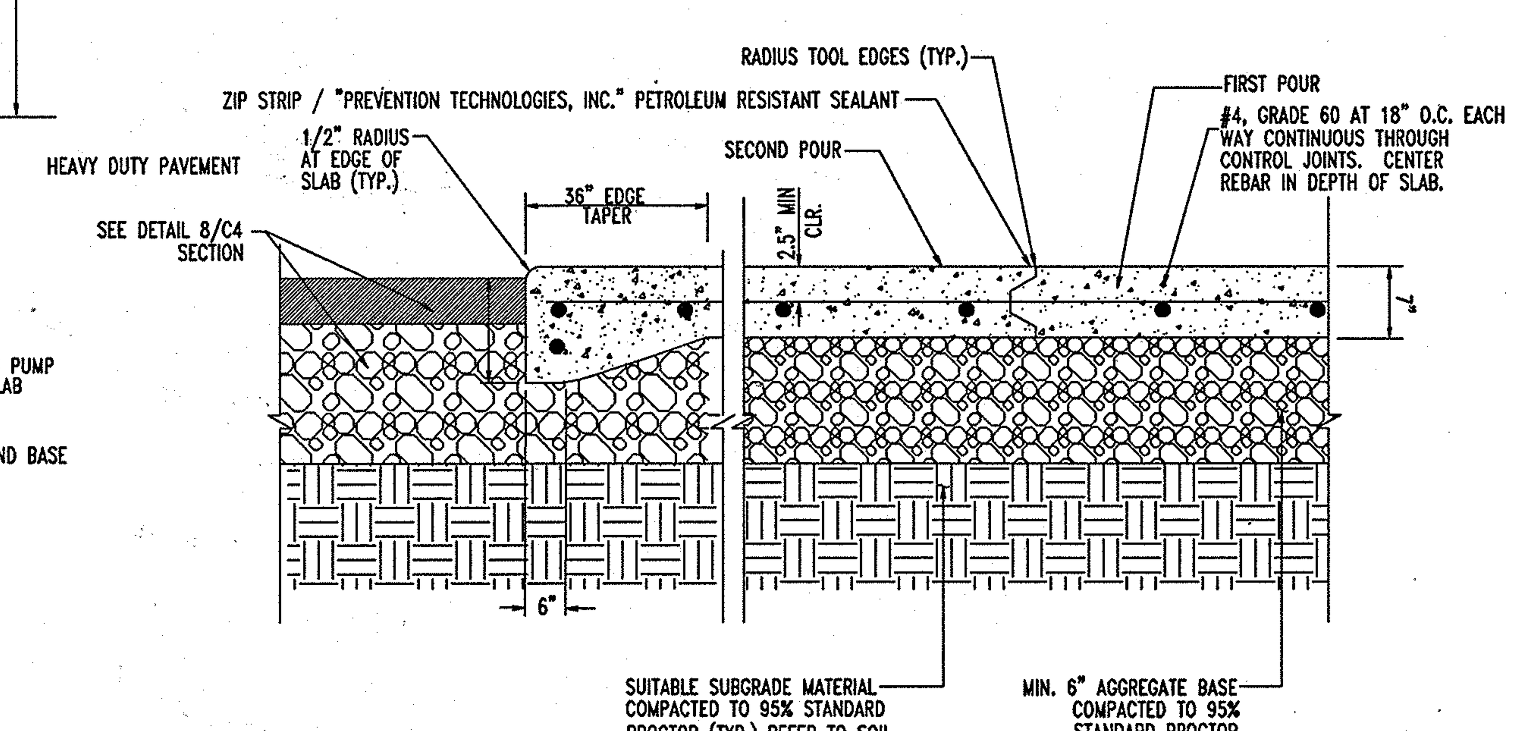


## NEW ISLAND CONCRETE SLAB SECTION AND SLAB CONTROL JOINT (TYPICAL)
NOT TO SCALE

PROFESSIONAL CERTIFICATION
I, MICHAEL J. GEBELL, HEREBY CERTIFY THAT THESE DOCUMENTS WERE PREPARED OR APPROVED BY ME, AND THAT I AM A DULY LICENSED PROFESSIONAL ENGINEER UNDER THE LAWS OF THE STATE OF MARYLAND, LICENSE NO. 44097, EXPIRATION DATE: 6/4/15

FOR REVISION 3 ONLY:
STATE OF MARYLAND — MICHAEL J. GEBELL — PROFESSIONAL ENGINEER
8/20/14

## PLANNING BOARD APPROVAL STAMP

APPROVED
PLANNING BOARD
of HOWARD COUNTY
DATE 2-08-07

APPROVED: DEPARTMENT OF PLANNING AND ZONING
CHIEF-DEVELOPMENT ENGINEERING DIVISION — DATE 7/5/07
CHIEF-DIVISION OF LAND DEVELOPMENT — DATE 7/16/07
DIRECTOR — DATE 7/17/07

APPROVED: FOR PUBLIC WATER AND PUBLIC SEWERAGE SYSTEMS.
For COUNTY HEALTH OFFICER — DATE 7/13/07
HOWARD COUNTY HEALTH DEPARTMENT

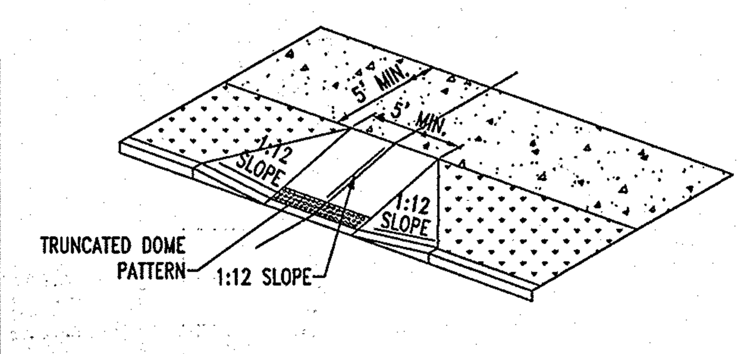


NOTE:
1. HANDICAP RAMP CONSTRUCTION SHALL CONFORM TO CURRENT ADA GUIDELINES.

## HANDICAP RAMP DETAIL #2
NOT TO SCALE

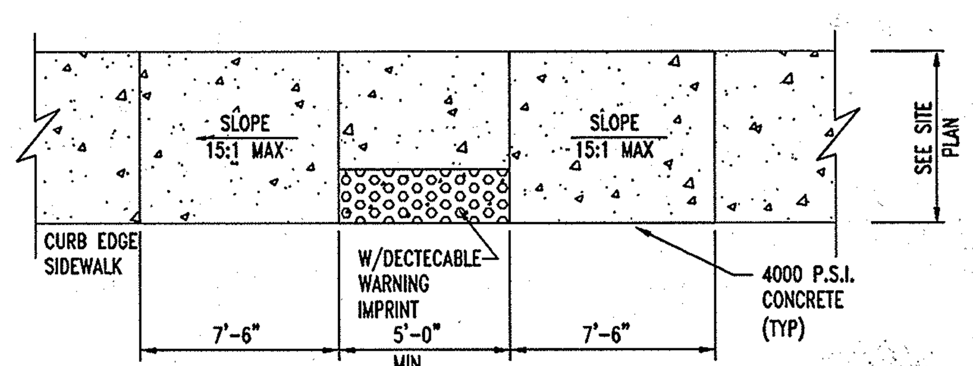


## HANDICAP RAMP DETAIL #1
NOT TO SCALE

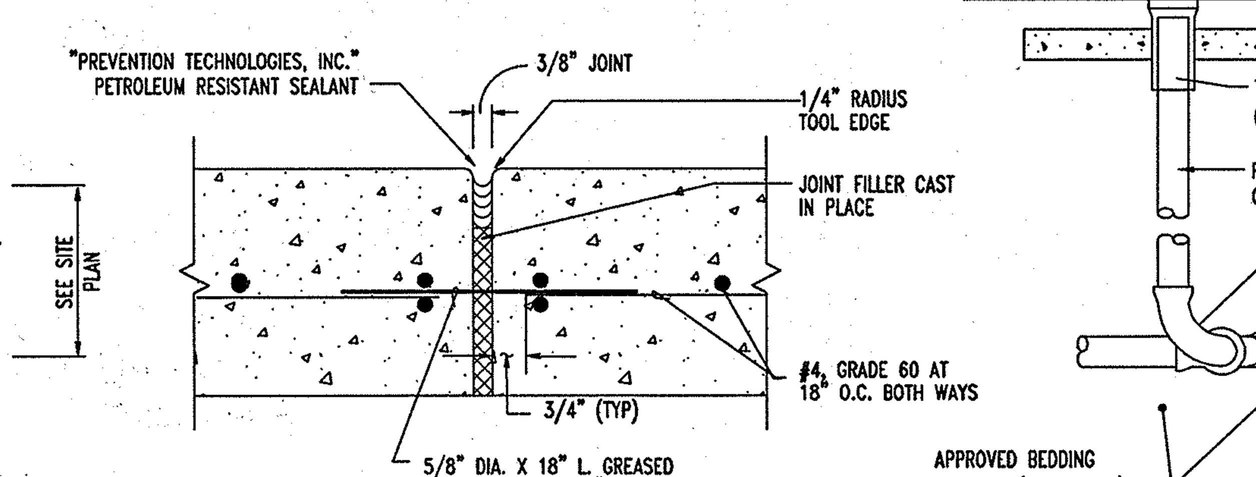


## EXPANSION JOINT (TYPICAL)
NOT TO SCALE

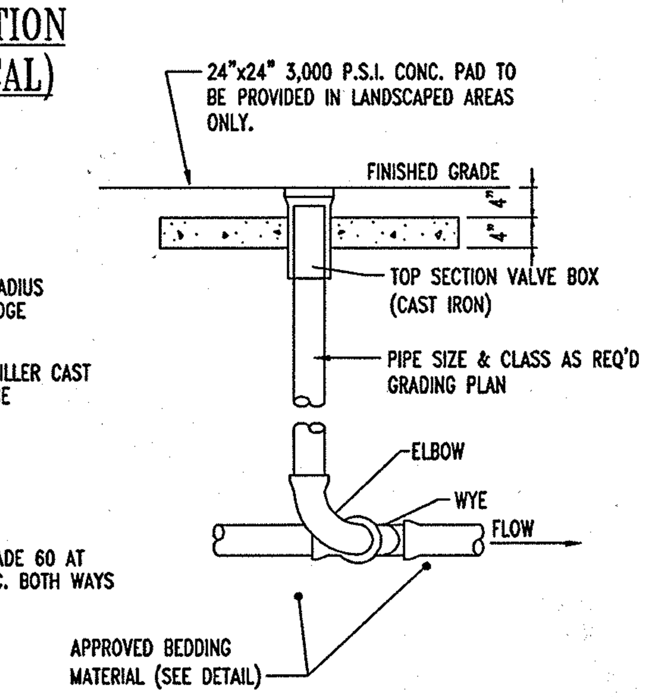


## TYPICAL CLEANOUT DETAIL
NOT TO SCALE

MISS UTILITY
DIG WITH C.A.R.E. — CALL MISS UTILITY — KEEP MARYLAND SAFE
BEFORE YOU DIG CALL
1-800-257-7777
PROTECT YOURSELF, GIVE TWO WORKING DAYS NOTICE

THIS DRAWING DOES NOT INCLUDE NECESSARY COMPONENTS FOR CONSTRUCTION SAFETY. ALL CONSTRUCTION MUST BE DONE IN COMPLIANCE WITH THE OCCUPATIONAL SAFETY AND HEALTH ACT OF 1970 AND ALL RULES AND REGULATIONS THERETO APPURTENANT.

THE CONTRACTOR TO CALL MISS UTILITY TO HAVE ALL EXISTING UTILITIES MARKED 48 HOURS PRIOR TO ANY CONSTRUCTION.

| REV. | DATE | DESCRIPTION | BY |
|---|---|---|---|
| 3 | 1/20/14 | REVISED LAYOUT: NEW PUMPS & CANOPY RELOC. BUS STA. & WALK & UTILITY OBSTS | MJG |

OWNER/DEVELOPER: HRD LAND HOLDINGS, INC.
HOWARD RESEARCH AND DEVELOPMENT CORPORATION
THE ROUSE BUILDING
10275 LITTLE PATUXENT PARKWAY
COLUMBIA, MARYLAND 21044
PHONE: (410) 992-6000

PROJECT: BENSON EAST
PARCEL U; GASOLINE STATION WITH KIOSK (COSTCO GASOLINE); GATEWAY OVERLOOK SHOPPING CENTER

AREA: TAX MAP 37 — GRID 1 & 2 — ZONED NEW TOWN
PARCEL U
BENSON EAST
6TH ELECTION DISTRICT
HOWARD COUNTY, MARYLAND

TITLE: CONSTRUCTION DETAILS

BOHLER ENGINEERING, P.C.
• PROFESSIONAL ENGINEERING SERVICES •
• 22630 DAVIS DRIVE, SUITE 200 STERLING, VIRGINIA, 20164 •
• CONTACT: DAVID B. NEMECEK
• (703) 709-9500 FAX: (703) 709-9501 | • WWW.BOHLERENG.COM

DATE: 6/26/07
STATE OF MARYLAND — ADAM J. VOLANTH — PROFESSIONAL ENGINEER
ADAM J. VOLANTH
PROFESSIONAL ENGINEER NO. 21342

| | |
|---|---|
| DESIGNED BY: | J.A.D. |
| DRAWN BY: | R.F.G. |
| PROJECT NO.: | S040011.01 |
| DATE: | 6/25/07 |
| SCALE: | AS SHOWN |
| DRAWING NO.: | 17 OF 23 |

# COMPLIANCE CHART:

| SCHEDULE A | PERIMETER LANDSCAPE EDGE – NORTH PROPERTY LINE | | |
|---|---|---|---|
| CATEGORY | | ADJACENT TO ROADWAYS | ADJACENT TO PERIMETER PROPERTIES |
| LANDSCAPE TYPE: | C | REAR | |
| LINEAR FEET OF PROPERTY LINE: | 107 L.F. | | |
| CREDIT FOR EXISTING VEGETATION | NO | | |
| CREDIT FOR WALL, FENCE, OR BERM | NO | | |
| NUMBER OF PLANTS REQUIRED:<br>SHADE TREE(S): 1:40<br>EVERGREEN TREE(S): 1:20<br>SHRUB(S): | <br>3<br>6<br>0 | | |
| NUMBER OF PLANTS PROVIDED:<br>SHADE TREE(S):<br>EVERGREEN TREE(S):<br>OTHER TREE(S): (2:1 SUBSTITUTION)<br>SHRUB(S): (10:1 SUBSTITUTION) | <br>3<br>6<br>0<br>0 | | |
| "~" INDICATES PLANT MATERIAL UTILIZED TO FULFILL REQUIREMENT | | | |

| SCHEDULE A | PERIMETER LANDSCAPE EDGE – SOUTH PROPERTY LINE | | |
|---|---|---|---|
| CATEGORY | | ADJACENT TO ROADWAYS | ADJACENT TO PERIMETER PROPERTIES |
| LANDSCAPE TYPE: | C | REAR | |
| LINEAR FEET OF PROPERTY LINE: | 120 L.F. | | |
| CREDIT FOR EXISTING VEGETATION | NO | | |
| NUMBER OF PLANTS REQUIRED:<br>SHADE TREE(S): 1:40<br>EVERGREEN TREE(S): 1:20<br>SHRUB(S): | <br>3<br>6<br>0 | | |
| NUMBER OF PLANTS PROVIDED:<br>SHADE TREE(S):<br>EVERGREEN TREE(S):<br>OTHER TREE(S): (2:1 SUBSTITUTION)<br>SHRUB(S): (10:1 SUBSTITUTION) | <br>2<br>6<br>2<br>0 | | |
| COMMENTS: TWO (2) UNDERSTORY TREES PROPOSED IN LIEU OF THREE (1) SHADE TREES. | | | |
| "*" INDICATES PLANT MATERIAL UTILIZED TO FULFILL REQUIREMENT | | | |

| SCHEDULE A | PERIMETER LANDSCAPE EDGE – WEST PROPERTY LINE | | |
|---|---|---|---|
| CATEGORY | | ADJACENT TO ROADWAYS | ADJACENT TO PERIMETER PROPERTIES |
| LANDSCAPE TYPE: | A | PARKING LOT | |
| LINEAR FEET OF ROADWAY:<br>FRONTAGE | 224 L.F. | | |
| CREDIT FOR EXISTING VEGETATION | NO | | |
| CREDIT FOR WALL, FENCE, OR BERM | NO | | |
| NUMBER OF PLANTS REQUIRED:<br>SHADE TREE(S): 1:60<br>EVERGREEN TREE(S):<br>SHRUB(S): | <br>4<br>0<br>0 | | |
| NUMBER OF PLANTS PROVIDED:<br>SHADE TREE(S):<br>EVERGREEN TREE(S):<br>OTHER TREE(S): (2:1 SUBSTITUTION)<br>SHRUB(S): (10:1 SUBSTITUTION) | <br>2<br>4<br>0<br>0 | | |
| COMMENTS: NONE | | | |
| "^" INDICATES PLANT MATERIAL UTILIZED TO FULFILL REQUIREMENT | | | |

| SCHEDULE A | PERIMETER LANDSCAPE EDGE – EAST PROPERTY LINE | | |
|---|---|---|---|
| CATEGORY | | ADJACENT TO ROADWAYS | ADJACENT TO PERIMETER PROPERTIES |
| LANDSCAPE TYPE: | B | FRONT/SIDE | |
| LINEAR FEET OF ROADWAY:<br>FRONTAGE | 224 | | |
| CREDIT FOR EXISTING VEGETATION | NO | | |
| CREDIT FOR WALL, FENCE, OR BERM | NO | | |
| NUMBER OF PLANTS REQUIRED:<br>SHADE TREE(S): 1:50<br>EVERGREEN TREE(S): 1:40<br>SHRUB(S): | <br>5<br>6<br>0 | | |
| NUMBER OF PLANTS PROVIDED:<br>SHADE TREE(S):<br>EVERGREEN TREE(S):<br>OTHER TREE(S): (2:1 SUBSTITUTION)<br>SHRUB(S): (10:1 SUBSTITUTION) | <br>4<br>6<br>2<br>0 | | |
| COMMENTS: NONE | | | |
| "+" INDICATES PLANT MATERIAL UTILIZED TO FULFILL REQUIREMENT | | | |

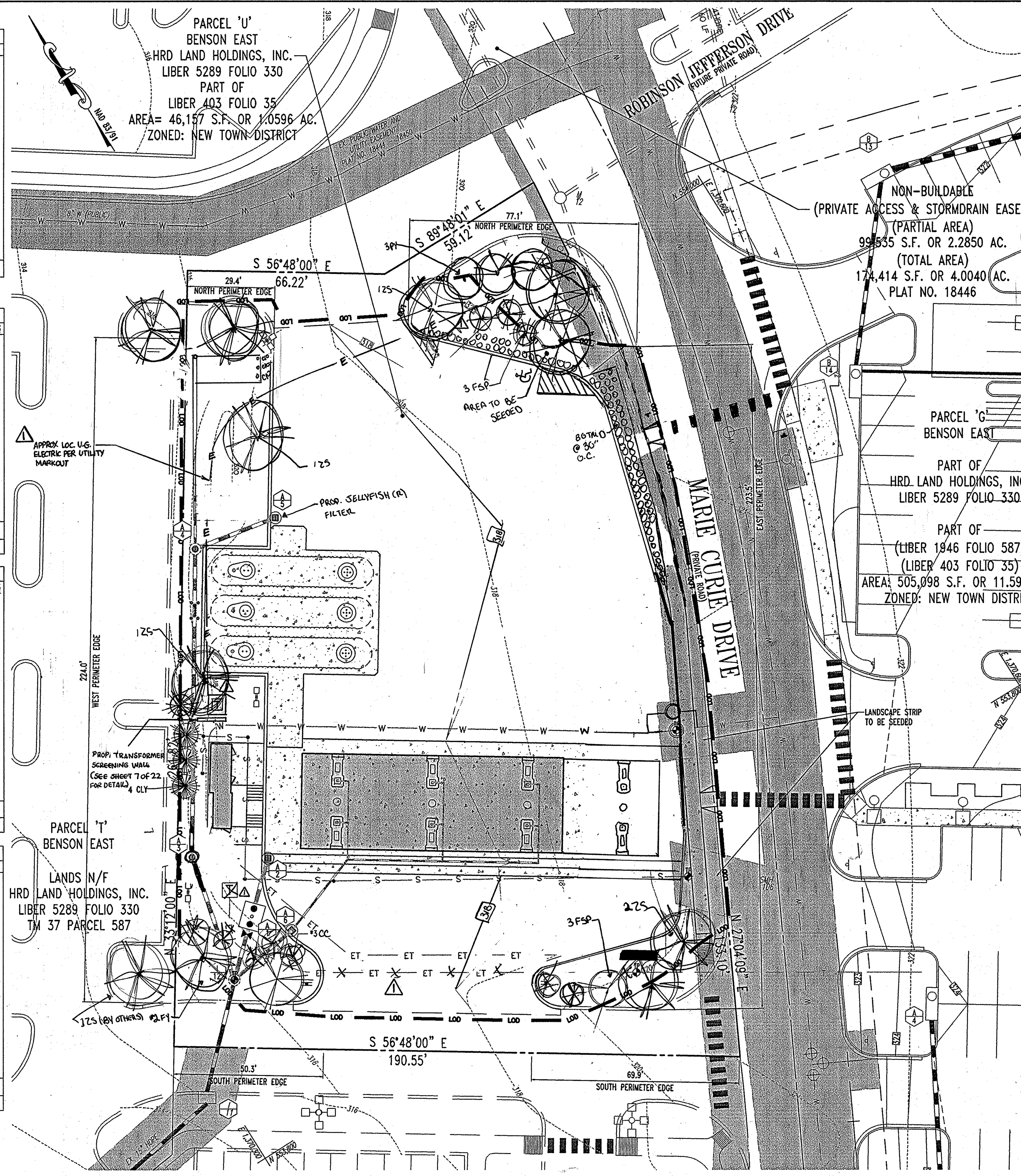


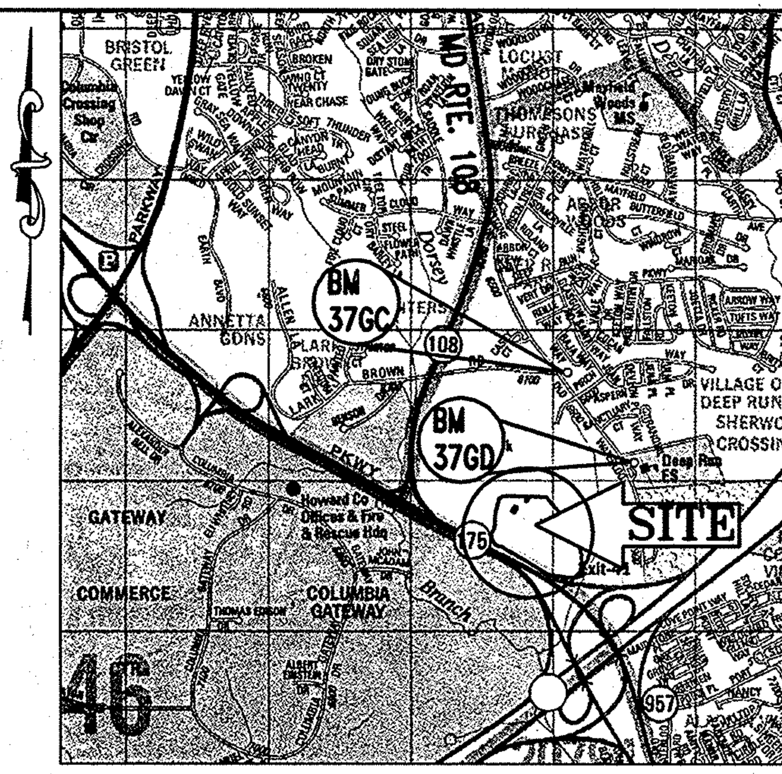


LOCATION MAP
COPYRIGHT ADC THE MAP PEOPLE
PERMIT USE NO. 20602153-5
SCALE: 1"=2000'

| GATEWAY OVERLOOK DESIGN AND DEVELOPMENT CRITERIA |
|---|
| V. LANDSCAPE DESIGN CRITERIA<br>BASED UPON THE GATEWAY OVERLOOK DESIGN AND DEVELOPMENT CRITERIA THE SUBSTITUTION OF TWO (2) FLOWERING TREES OR TWO (2) EVERGREEN TREES FOR EACH "SHADE TREE" IS REQUIRED FOR 25% TO 50% OF THE REQUIRED NUMBER OF SHADE TREES SHOWN IN THE TABLE.<br>TOTAL NUMBER OF SHADE TREES REQUIRED: 15<br>15 X .25 = AT LEAST 8 SHADE TREES MUST BE SUBSTITUTED WITH FLOWERING OR EVERGREEN TREES AT A 2:1 RATIO.<br>TOTAL NUMBER OF FLOWERING OR EVERGREEN TREES REQUIRED: 8<br>TOTAL NUMBER OF FLOWERING OR EVERGREEN TREES PROVIDED: 8 |

## NOTES:

1. PERIMETER LANDSCAPING HAS BEEN PROVIDED IN ACCORDANCE WITH SECTION 16.124 OF THE LANDSCAPE MANUAL. SURETY IN THE AMOUNT OF $7,200.00 FOR 11 SHADE AND 4 ORNAMENTAL TREES AND 22 EVERGREENS SHALL BE POSTED WITH THE DEVELOPER'S AGREEMENT FOR THIS SITE PLAN, SDP 07-36.

## NOTE

1. THIS LANDSCAPE PLAN IS PREPARED TO BE IN CONFORMANCE WITH THE LANDSCAPE DESIGN CRITERIA OF THE GATEWAY OVERLOOK SHOPPING CENTER DESIGN AND DEVELOPMENT CRITERIA.
2. THIS LANDSCAPE PLAN IS BASED ON THE APPROVED CONCEPTUAL LANDSCAPE PLAN FOR THE GATEWAY OVERLOOK SHOPPING CENTER PREPARED BY SLATER ASSOCIATES, INC. DATED 05/18/05 AND A LANDSCAPE PLAN PREPARED BY PATTON, HARRIS, RUST, AND ASSOCIATES, P.C. DATED 08/03/04 (REFERENCE #SDP-04-163).

## BENCHMARK

GEODETIC SURVEY CONTROL #37GD
N 553,237.204
E 1,372,353.605
ELEV. 290.931'
LOCATED 30' EAST OF FIRE HYDRANT ACROSS FROM DEEP RUN ELEMENTARY SCHOOL

GEODETIC SURVEY CONTROL #37GC
N 553,250.791
E 1,370,946.348
ELEV. 331.855'
LOCATED ON THE SOUTH SIDE OF WATERLOO ROAD ACROSS FROM DEEP RUN PARKWAY

| REV. | DATE | DESCRIPTION | BY |
|---|---|---|---|
| 3 | 1/20/14 | REVISED LAYOUT: NEW PUMPS & CANOPY RELOC. BUS STOP/WALK. UTILITY UPDTS | MJG |
| 1 | 9/12/07 | EX. ELEC. LINE & TRANSFORMER; PROP. SCREEN WALL | Bohler |
| 1 | 9/12/07 | IRRIGATION WATERLINE AND METER | Bohler |

FOR REVISION 3 ONLY:

STATE OF MARYLAND MICHAEL J. GESELL No. 44097 PROFESSIONAL ENGINEER
8/20/14

PROFESSIONAL CERTIFICATION
I, MICHAEL J. GESELL, HEREBY CERTIFY THAT THESE DOCUMENTS WERE PREPARED OR APPROVED BY ME, AND THAT I AM A DULY LICENSED PROFESSIONAL ENGINEER UNDER THE LAWS OF THE STATE OF MARYLAND, LICENSE NO. 44097, EXPIRATION DATE: 6/9/15

OWNER/DEVELOPER: HRD LAND HOLDINGS, INC.
HOWARD RESEARCH AND DEVELOPMENT CORPORATION
THE ROUSE BUILDING
10275 LITTLE PATUXENT PARKWAY
COLUMBIA, MARYLAND 21044
PHONE: (410) 992-6000

PROJECT: BENSON EAST
PARCEL U; GASOLINE STATION WITH KIOSK (COSTCO GASOLINE); GATEWAY OVERLOOK SHOPPING CENTER

AREA: TAX MAP 37 GRID 1 & 2 ZONED NEW TOWN
PARCEL U
BENSON EAST
6TH ELECTION DISTRICT
HOWARD COUNTY, MARYLAND

TITLE: LANDSCAPE PLAN

**BOHLER ENGINEERING, P.C.**
• PROFESSIONAL ENGINEERING SERVICES •
• 22630 DAVIS DRIVE, SUITE 200 STERLING, VIRGINIA, 20164 •
• CONTACT: DAVID B. NEMECEK
• (703) 709-9500 FAX: (703) 709-9501 | • WWW.BOHLERENG.COM

MISS UTILITY
DIG WITH C.A.R.E. CALL MISS UTILITY KEEP MARYLAND SAFE
BEFORE YOU DIG CALL
1-800-257-7777
PROTECT YOURSELF, GIVE TWO WORKING DAYS NOTICE

THIS DRAWING DOES NOT INCLUDE NECESSARY COMPONENTS FOR CONSTRUCTION SAFETY. ALL CONSTRUCTION MUST BE DONE IN COMPLIANCE WITH THE OCCUPATIONAL SAFETY AND HEALTH ACT OF 1970 AND ALL RULES AND REGULATIONS THERETO APPURTENANT.

THE CONTRACTOR TO CALL MISS UTILITY TO HAVE ALL EXISTING UTILITIES MARKED 48 HOURS PRIOR TO ANY CONSTRUCTION.

DATE: 6/26/07
STATE OF MARYLAND ADAM J. VOLANTH PROFESSIONAL ENGINEER
ADAM J. VOLANTH
PROFESSIONAL ENGINEER NO. 21342

| | |
|---|---|
| DESIGNED BY: | J.A.D. |
| DRAWN BY: | R.F.G. |
| PROJECT NO.: | S040011.01 |
| DATE: | 6/25/07 |
| SCALE: | AS SHOWN |
| DRAWING NO.: | 18 OF 23 |

PLANNING BOARD APPROVAL STAMP

APPROVED
PLANNING BOARD
of HOWARD COUNTY
DATE 2-08-07

APPROVED: DEPARTMENT OF PLANNING AND ZONING
CHIEF-DEVELOPMENT ENGINEERING DIVISION 7/5/07 DATE
CHIEF-DIVISION OF LAND DEVELOPMENT 7/16/07 DATE
DIRECTOR 7/17/07 DATE

APPROVED: FOR PUBLIC WATER AND PUBLIC SEWERAGE SYSTEMS.
COUNTY HEALTH OFFICER 7/13/07 DATE
HOWARD COUNTY HEALTH DEPARTMENT

GENERAL NOTE:
IT IS THE RESPONSIBILITY OF THE CONTRACTOR TO REVIEW ALL OF THE DRAWINGS AND SPECIFICATIONS ASSOCIATED WITH THIS PROJECT WORK SCOPE PRIOR TO THE INITIATION OF CONSTRUCTION. SHOULD THE CONTRACTOR FIND A CONFLICT WITH THE DOCUMENTS RELATIVE TO THE SPECIFICATIONS OR APPLICABLE CODES, IT IS THE CONTRACTORS RESPONSIBILITY TO NOTIFY BOHLER ENGINEERING, P.C. IN WRITING PRIOR TO THE START OF CONSTRUCTION. FAILURE BY THE CONTRACTOR TO NOTIFY BOHLER ENGINEERING, P.C. SHALL CONSTITUTE ACCEPTANCE OF FULL RESPONSIBILITY BY THE CONTRACTOR TO COMPLETE THE SCOPE OF THE WORK AS DEFINED BY THE DRAWINGS AND IN FULL CONFORMANCE WITH LOCAL REGULATIONS AND CODES.

## LANDSCAPE SCHEDULE

| KEY | QTY | BOTANICAL NAME | COMMON NAME | SIZE | ROOT |
|---|---|---|---|---|---|
| ZS | 4 | ZELICOVA SERRATA | GREEN VASE ZELKOVA | 2 1/2-3" CAL. | B+B |
| ORNAMENTAL TREE(S) | | | | | |
| CC | 5 | CERCIS CANADENSIS | EASTERN REDBUD | 2-2 1/2" CAL. | B+B |
| PY | 5/10 | PRUNUS X YEDOENSIS | YOSHINO CHERRY | 2½"-3" CAL. | B+B |
| EVERGREEN TREE(S) | | | | | |
| IXF | 3 | ILEX X FOSTERI | FOSTER'S HOLLY | 5-6' | B+B |
| TMD | 52/55 | TAXUS X MEDIA (DENSIFORMIS) | DENSIFORMIS YEW | 24-30" | B+B |

NOTE: IF ANY DISCREPENCIES OCCUR BETWEEN AMOUNTS SHOWN IN THE PLAN AND THE PLANT LIST, THE PLAN SHALL DICTATE.

STATE OF MARYLAND NO. 28567 REGISTERED PROFESSIONAL ENGINEER

FOR REVISION 1
BOHLER ENGINEERING, P.C.

GRAPHIC SCALE
20 0 10 20 40 80
( IN FEET )
1 inch = 20 ft.

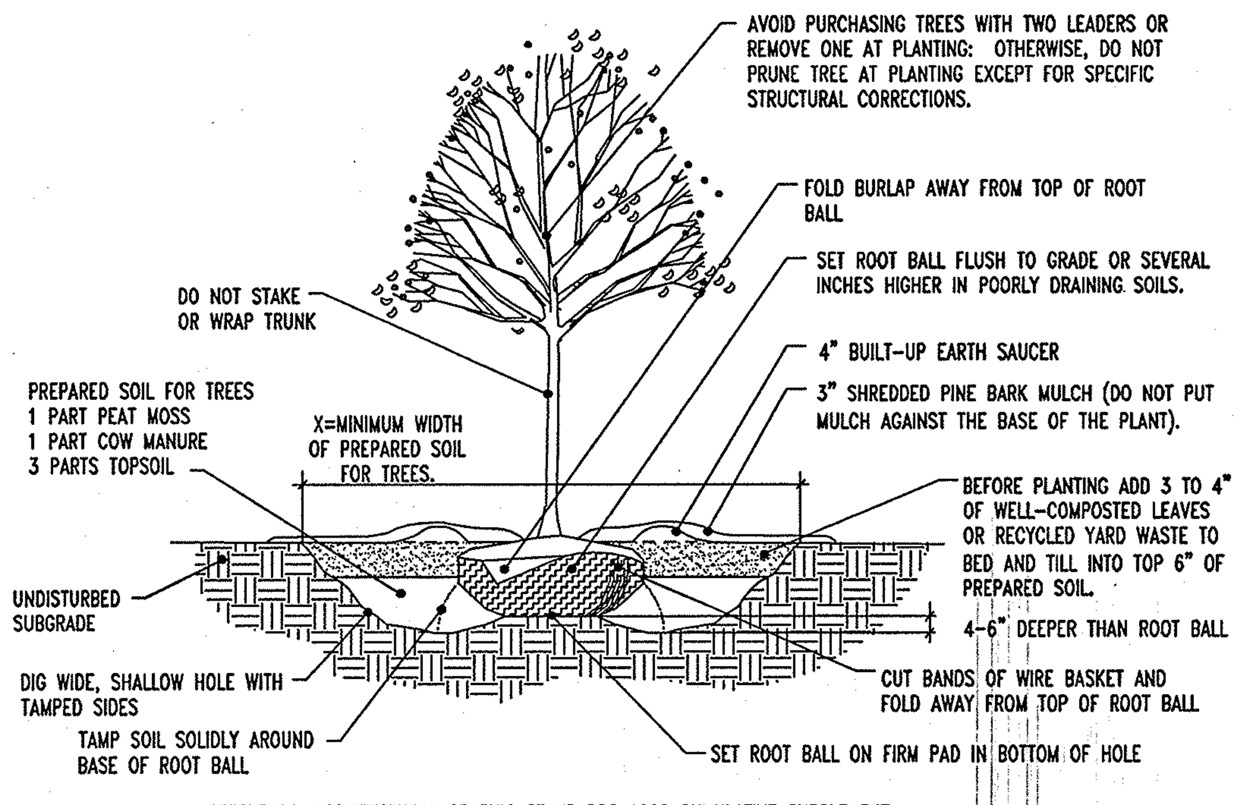


REFERENCE: ARCHITECTURAL GRAPHIC STANDARDS 1998 CUMULATIVE SUPPLEMENT.

## DECIDUOUS TREE PLANTING DETAIL

NOT TO SCALE

### NOTES FOR DECIDUOUS AND EVERGREEN TREE PLANTINGS:

1. NO SOIL OR MULCH SHALL BE PLACED AGAINST ROOT COLLAR OF PLANT.
2. REMOVE ALL ROPE FROM TRUNK & TOP OF ROOT BALL. FOLD BURLAP BACK 1/3 FROM TOP OF ROOT BALL.
3. PLANTING DEPTH SHALL BE THE SAME AS GROWN IN NURSERY.
4. THOUROUGHLY SOAK THE TREE ROOT BALL AND ADJACENT PREPARED SOIL SEVERAL TIMES DURING THE FIRST MONTH AFTER PLANTING AND REGULARLY THROUGHOUT THE FOLLOWING TWO SUMMERS.
5. THE BOTTOM OF PLANTING PIT EXCAVATIONS SHOULD BE ROUGH TO AVOID MATTING OF SOIL LAYERS AS NEW SOIL IS ADDED. IT IS PREFERABLE TO TILL THE FIRST LIFT (2 TO 3 IN.) OF PLANTING SOIL INTO THE SUBSOIL.

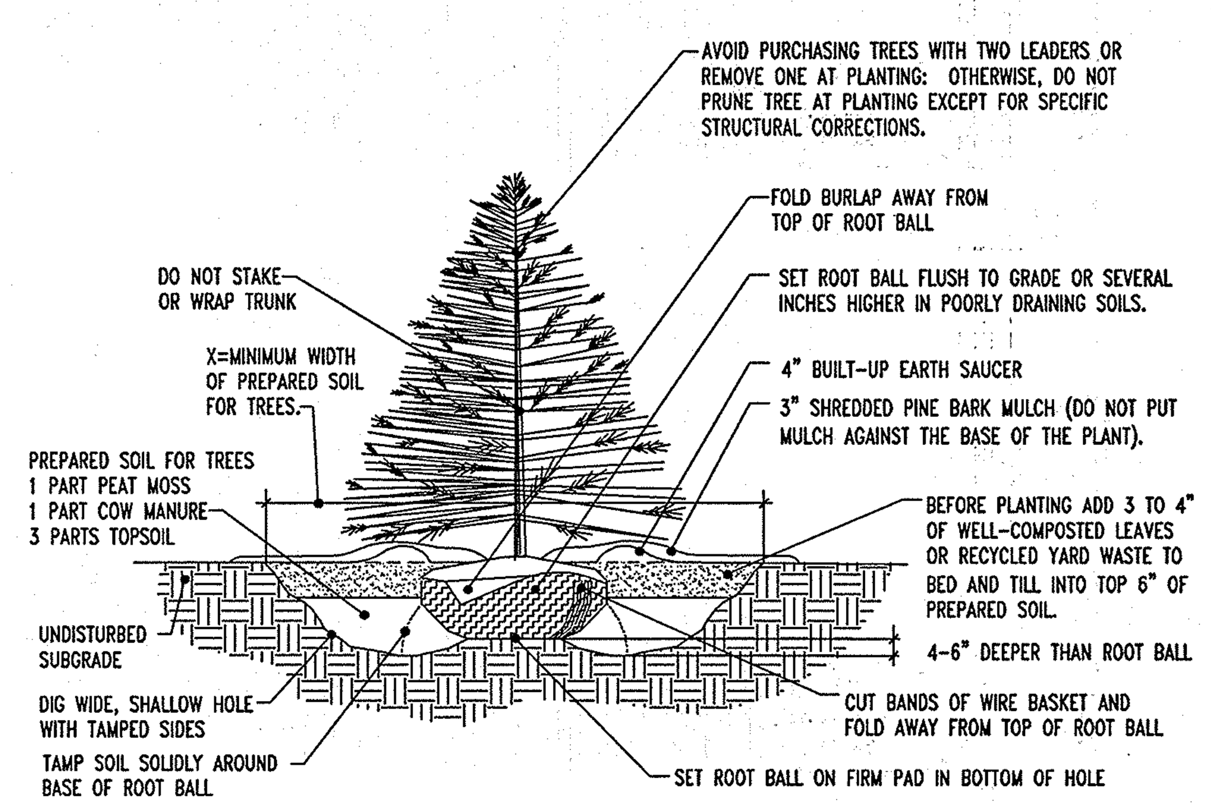


REFERENCE: ARCHITECTURAL GRAPHIC STANDARDS 1998 CUMULATIVE SUPPLEMENT.

## EVERGREEN TREE PLANTING DETAIL

NOT TO SCALE

PLANNING BOARD APPROVAL STAMP

APPROVED: DEPARTMENT OF PLANNING AND ZONING
CHIEF-DEVELOPMENT ENGINEERING DIVISION 7/5/07 DATE
CHIEF-DIVISION OF LAND DEVELOPMENT 7/16/07 DATE
DIRECTOR 7/12/07 DATE

APPROVED: FOR PUBLIC WATER AND PUBLIC SEWERAGE SYSTEMS.
COUNTY HEALTH OFFICER 7/13/07 DATE
HOWARD COUNTY HEALTH DEPARTMENT

APPROVED
PLANNING BOARD
of HOWARD COUNTY
DATE 2-08-07

GENERAL NOTE:
IT IS THE RESPONSIBILITY OF THE CONTRACTOR TO REVIEW ALL OF THE DRAWINGS AND SPECIFICATIONS ASSOCIATED WITH THIS PROJECT WORK SCOPE PRIOR TO THE INITIATION OF CONSTRUCTION. SHOULD THE CONTRACTOR FIND A CONFLICT WITH THE DOCUMENTS RELATIVE TO THE SPECIFICATIONS OR APPLICABLE CODES, IT IS THE CONTRACTORS RESPONSIBILITY TO NOTIFY BOHLER ENGINEERING, P.C. IN WRITING PRIOR TO THE START OF CONSTRUCTION. FAILURE BY THE CONTRACTOR TO NOTIFY BOHLER ENGINEERING, P.C. SHALL CONSTITUTE ACCEPTANCE OF FULL RESPONSIBILITY BY THE CONTRACTOR TO COMPLETE THE SCOPE OF THE WORK AS DEFINED BY THE DRAWINGS AND IN FULL CONFORMANCE WITH LOCAL REGULATIONS AND CODES.

# LANDSCAPE SPECIFICATIONS

**1. SCOPE OF WORK:**
THE LANDSCAPE CONTRACTOR SHALL BE REQUIRED TO PERFORM ALL CLEARING, FINISHED GRADING, SOIL PREPARATION, PERMANENT SEEDING OR SODDING, PLANTING AND MULCHING INCLUDING ALL LABOR, MATERIALS, TOOLS AND EQUIPMENT NECESSARY FOR THE COMPLETION OF THIS PROJECT, UNLESS OTHERWISE CONTRACTED BY THE GENERAL CONTRACTOR.

**2. MATERIALS**
A. GENERAL – ALL HARDSCAPE MATERIALS SHALL MEET OR EXCEED SPECIFICATIONS AS OUTLINED IN THE STATE DEPARTMENT OF TRANSPORTATION'S SPECIFICATIONS.

B. TOPSOIL – NATURAL, FRIABLE, LOAMY SILT SOIL HAVING AN ORGANIC CONTENT NOT LESS THAN 5%, A PH RANGE BETWEEN 4.5-7.0. IT SHALL BE FREE OF DEBRIS, ROCKS LARGER THAN ONE INCH (1"), WOOD, ROOTS, VEGETABLE MATTER AND CLAY CLODS.

C. LAWN – ALL DISTURBED AREAS ARE TO BE TREATED WITH A MINIMUM SIX INCH (6") THICK LAYER OF TOPSOIL, OR AS DIRECTED BY THE LOCAL ORDINANCE OR CLIENT, AND SEEDED OR SODDED IN ACCORDANCE WITH THE PERMANENT STABILIZATION METHODS INDICATED WITHIN THE SOIL EROSION AND SEDIMENT CONTROL NOTES.
I. LAWN SEED MIXTURE SHALL BE FRESH, CLEAN NEW CROP SEED.
II. SOD SHALL BE STRONGLY ROOTED, WEED AND DISEASE/PEST FREE WITH A UNIFORM THICKNESS. SOD INSTALLED ON SLOPES GREATER THAN 4:1 SHALL BE PEGGED TO HOLD SOD IN PLACE.

D. MULCH – ALL PLANTING BEDS SHALL BE MULCHED WITH A 3" THICK LAYER OF DOUBLE SHREDDED HARDWOOD BARK MULCH, UNLESS OTHERWISE STATED ON THE LANDSCAPE PLAN.

E. FERTILIZER
I. FERTILIZER SHALL BE DELIVERED TO THE SITE MIXED AS SPECIFIED IN THE ORIGINAL UNOPENED STANDARD BAGS SHOWING WEIGHT, ANALYSIS AND NAME OF MANUFACTURER. FERTILIZER SHALL BE STORED IN A WEATHERPROOF PLACE SO THAT IT CAN BE KEPT DRY PRIOR TO USE.
II. FOR THE PURPOSE OF BIDDING, ASSUME THAT FERTILIZER SHALL BE 10% NITROGEN, 6% PHOSPHORUS AND 4% POTASSIUM BY WEIGHT. A FERTILIZER SHOULD NOT BE SELECTED WITHOUT A SOIL TEST PERFORMED BY A CERTIFIED SOIL LABORATORY.

F. PLANT MATERIAL
I. ALL PLANTS SHALL IN ALL CASES CONFORM TO THE REQUIREMENTS OF THE "AMERICAN STANDARD FOR NURSERY STOCK" (ANSI Z60.1), LATEST EDITION, AS PUBLISHED BY THE AMERICAN NURSERY & LANDSCAPE ASSOCIATION.
II. IN ALL CASES, BOTANICAL NAMES SHALL TAKE PRECEDENCE OVER COMMON NAMES FOR ANY AND ALL PLANT MATERIAL.
III. PLANTS SHALL BE LEGIBLY TAGGED WITH THE PROPER NAME AND SIZE. TAGS ARE TO REMAIN ON AT LEAST ONE PLANT OF EACH SPECIES FOR VERIFICATION PURPOSES DURING THE FINAL INSPECTION.
IV. TREES WITH ABRASION OF THE BARK, SUN SCALDS, DISFIGURATION OR FRESH CUTS OF LIMBS OVER 1¼", WHICH HAVE NOT BEEN COMPLETELY CALLUSED, SHALL BE REJECTED. PLANTS SHALL NOT BE BOUND WITH WIRE OR ROPE AT ANY TIME SO AS TO DAMAGE THE BARK OR BREAK BRANCHES.
V. ALL PLANTS SHALL BE TYPICAL OF THEIR SPECIES OR VARIETY AND SHALL HAVE A NORMAL HABIT OF GROWTH: WELL DEVELOPED BRANCHES, DENSELY FOLIATED, VIGOROUS ROOT SYSTEMS AND BE FREE OF DISEASE, INSECTS, PESTS, EGGS OR LARVAE.
VI. CALIPER MEASUREMENTS OF NURSERY GROWN TREES SHALL BE TAKEN AT A POINT ON THE TRUNK SIX INCHES (6") ABOVE THE NATURAL GRADE FOR TREES UP TO AND INCLUDING A FOUR INCH (4") CALIPER SIZE. IF THE CALIPER AT SIX INCHES (6") ABOVE THE GROUND EXCEEDS FOUR INCHES (4") IN CALIPER, THE CALIPER SHOULD BE MEASURED AT A POINT 12" ABOVE THE NATURAL GRADE.
VII. SHRUBS SHALL BE MEASURED TO THE AVERAGE HEIGHT OR SPREAD OF THE SHRUB, AND NOT TO THE LONGEST BRANCH.
VIII. TREES AND SHRUBS SHALL BE HANDLED WITH CARE BY THE ROOT BALL.

**3. GENERAL WORK PROCEDURES**
A. CONTRACTOR TO UTILIZE WORKMANLIKE INDUSTRY STANDARDS IN PERFORMING ALL LANDSCAPE CONSTRUCTION. THE SITE IS TO BE LEFT IN A CLEAN STATE AT THE END OF EACH WORKDAY. ALL DEBRIS, MATERIALS AND TOOLS SHALL BE PROPERLY STORED, STOCKPILED OR DISPOSED OF.

B. WASTE MATERIALS AND DEBRIS SHALL BE COMPLETELY DISPOSED OF AT THE CONTRACTOR'S EXPENSE. DEBRIS SHALL NOT BE BURIED, INCLUDING ORGANIC MATERIALS, BUT SHALL BE REMOVED COMPLETELY FROM THE SITE.

**4. SITE PREPARATIONS**
A. BEFORE AND DURING PRELIMINARY GRADING AND FINISHED GRADING, ALL WEEDS AND GRASSES SHALL BE DUG OUT BY THE ROOTS AND DISPOSED OF IN ACCORDANCE WITH GENERAL WORK PROCEDURES OUTLINED HEREIN.

B. ALL EXISTING TREES TO REMAIN SHALL BE PRUNED TO REMOVE ANY DAMAGED BRANCHES. THE ENTIRE LIMB OF ANY DAMAGED BRANCH SHALL BE CUT OFF AT THE TRUNK. CONTRACTOR SHALL ENSURE THAT CUTS ARE SMOOTH AND STRAIGHT. ANY EXPOSED ROOTS SHALL BE CUT BACK WITH CLEAN, SHARP TOOLS AND TOPSOIL SHALL BE PLACED AROUND THE REMAINDER OF THE ROOTS. EXISTING TREES SHALL BE MONITORED ON A REGULAR BASIS FOR ADDITIONAL ROOT OR BRANCH DAMAGE AS A RESULT OF CONSTRUCTION. ROOTS SHALL NOT BE LEFT EXPOSED FOR MORE THAN ONE (1) DAY. CONTRACTOR SHALL WATER EXISTING TREES AS NEEDED TO PREVENT SHOCK OR DECLINE.

C. CONTRACTOR SHALL ARRANGE TO HAVE A UTILITY STAKE-OUT TO LOCATE ALL UNDERGROUND UTILITIES PRIOR TO INSTALLATION OF ANY LANDSCAPE MATERIAL. UTILITY COMPANIES SHALL BE CONTACTED THREE (3) DAYS PRIOR TO THE BEGINNING OF WORK.

**5. TREE PROTECTION**
A. CONTRACTOR SHALL BE RESPONSIBLE FOR THE PROTECTION OF ALL EXISTING TREES TO REMAIN. A TREE PROTECTION ZONE SHALL BE ESTABLISHED AT THE DRIP LINE OR 15 FEET FROM THE TRUNK OR AT THE LIMIT OF CONSTRUCTION DISTURBANCE, WHICHEVER IS GREATER. LOCAL STANDARDS THAT MAY REQUIRE A MORE STRICT TREE PROTECTION ZONE SHALL BE HONORED.

B. A FORTY-EIGHT INCH (48") HIGH WOODEN SNOW FENCE OR ORANGE COLORED HIGH-DENSITY 'VISI-FENCE', OR APPROVED EQUAL, MOUNTED ON STEEL POSTS SHALL BE PLACED ALONG THE BOUNDARY OF THE TREE PROTECTION ZONE. POSTS SHALL BE LOCATED AT A MAXIMUM OF EIGHT FEET (8') ON CENTER OR AS INDICATED WITHIN THE TREE PROTECTION DETAIL.

C. WHEN THE TREE PROTECTION FENCING HAS BEEN INSTALLED, IT SHALL BE INSPECTED BY THE APPROVING AGENCY PRIOR TO DEMOLITION, GRADING, TREE CLEARING OR ANY OTHER CONSTRUCTION. THE FENCING ALONG THE TREE PROTECTION ZONE SHALL BE REGULARLY INSPECTED BY THE LANDSCAPE CONTRACTOR AND MAINTAINED UNTIL ALL CONSTRUCTION ACTIVITY HAS BEEN COMPLETED.

D. AT NO TIME SHALL MACHINERY, DEBRIS, FALLEN TREES OR OTHER MATERIALS BE PLACED, STOCKPILED OR LEFT STANDING IN THE TREE PROTECTION ZONE.

**6. SOIL MODIFICATIONS**
A. CONTRACTOR SHALL ATTAIN A SOIL TEST FOR ALL AREAS OF THE SITE PRIOR TO CONDUCTING ANY PLANTING. SOIL TESTS SHALL BE PERFORMED BY A CERTIFIED SOIL LABORATORY.

B. LANDSCAPE CONTRACTOR SHALL REPORT ANY SOIL OR DRAINAGE CONDITIONS CONSIDERED DETRIMENTAL TO THE GROWTH OF PLANT MATERIAL. SOIL MODIFICATIONS, AS SPECIFIED HEREIN, MAY NEED TO BE CONDUCTED BY THE LANDSCAPE CONTRACTOR DEPENDING ON SITE CONDITIONS.

C. THE FOLLOWING AMENDMENTS AND QUANTITIES ARE APPROXIMATE AND ARE FOR BIDDING PURPOSES ONLY. COMPOSITION OF AMENDMENTS SHOULD BE REVISED DEPENDING ON THE OUTCOME OF A TOPSOIL ANALYSIS PERFORMED BY A CERTIFIED SOIL LABORATORY.
I. TO INCREASE A SANDY SOIL'S ABILITY TO RETAIN WATER AND NUTRIENTS, THOROUGHLY TILL ORGANIC MATTER INTO THE TOP 6-12". USE COMPOSTED BARK, COMPOSTED LEAF MULCH OR PEAT MOSS. ALL PRODUCTS SHOULD BE COMPOSTED TO A DARK COLOR AND BE FREE OF PIECES WITH IDENTIFIABLE LEAF OR WOOD STRUCTURE. AVOID MATERIAL WITH A PH HIGHER THAN 7.5.
II. TO INCREASE DRAINAGE, MODIFY HEAVY CLAY OR SILT (MORE THAN 40% CLAY OR SILT) BY ADDING COMPOSTED PINE BARK (UP TO 30% BY VOLUME) AND/OR AGRICULTURAL GYPSUM. COARSE SAND MAY BE USED IF ENOUGH IS ADDED TO BRING THE SAND CONTENT TO MORE THAN 60% OF THE TOTAL MIX. SUBSURFACE DRAINAGE LINES MAY NEED TO BE ADDED TO INCREASE DRAINAGE.
III. MODIFY EXTREMELY SANDY SOILS (MORE THAN 85%) BY ADDING ORGANIC MATTER AND/OR DRY, SHREDDED CLAY LOAM UP TO 30% OF THE TOTAL MIX.

**7. FINISHED GRADING**
A. UNLESS OTHERWISE CONTRACTED, THE LANDSCAPE CONTRACTOR SHALL BE RESPONSIBLE FOR THE INSTALLATION OF TOPSOIL AND THE ESTABLISHMENT OF FINE-GRADING WITHIN THE DISTURBANCE AREA OF THE SITE.

B. LANDSCAPE CONTRACTOR SHALL VERIFY THAT SUBGRADE FOR INSTALLATION OF TOPSOIL HAS BEEN ESTABLISHED. THE SUBGRADE OF THE SITE MUST MEET THE FINISHED GRADE LESS THE REQUIRED TOPSOIL THICKNESS (1"±).

C. ALL LAWN AND PLANTING AREAS SHALL BE GRADED TO A SMOOTH, EVEN AND UNIFORM PLANE WITH NO ABRUPT CHANGE OF SURFACE AS DEPICTED WITHIN THIS SET OF CONSTRUCTION PLANS, UNLESS OTHERWISE DIRECTED BY THE PROJECT ENGINEER OR LANDSCAPE ARCHITECT.

D. ALL PLANTING AREAS SHALL BE GRADED AND MAINTAINED TO ALLOW FREE FLOW OF SURFACE WATER IN AND AROUND THE PLANTING BEDS. STANDING WATER SHALL NOT BE PERMITTED IN PLANTING BEDS.

**8. TOPSOILING**
A. CONTRACTOR SHALL PROVIDE A SIX INCH (6") THICK MINIMUM LAYER OF TOPSOIL, OR AS DIRECTED BY THE LOCAL ORDINANCE OR CLIENT, IN ALL PLANTING AREAS. TOPSOIL SHOULD BE SPREAD OVER A PREPARED SURFACE IN A UNIFORM LAYER TO ACHIEVE THE DESIRED COMPACTED THICKNESS.

B. ON-SITE TOPSOIL MAY BE USED TO SUPPLEMENT THE TOTAL AMOUNT REQUIRED. TOPSOIL FROM THE SITE MAY BE REJECTED IF IT HAS NOT BEEN PROPERLY REMOVED, STORED AND PROTECTED PRIOR TO CONSTRUCTION.

C. CONTRACTOR SHALL FURNISH TO THE APPROVING AGENCY AN ANALYSIS OF BOTH IMPORTED AND ON-SITE TOPSOIL TO BE UTILIZED IN ALL PLANTING AREAS. THE PH AND NUTRIENT LEVELS MAY NEED TO BE ADJUSTED THROUGH SOIL MODIFICATIONS AS NEEDED TO ACHIEVE THE REQUIRED LEVELS AS SPECIFIED IN THE MATERIALS SECTION ABOVE.

D. ALL PLANTING AND LAWN AREAS ARE TO BE CULTIVATED TO A DEPTH OF SIX INCHES (6"). ALL DEBRIS EXPOSED FROM EXCAVATION AND CULTIVATION SHALL BE DISPOSED OF IN ACCORDANCE WITH GENERAL WORK PROCEDURES SECTION ABOVE. THE FOLLOWING SHALL BE TILLED INTO THE TOP FOUR INCHES (4") IN TWO DIRECTIONS (QUANTITIES BASED ON A 1,000 SQUARE FOOT AREA):
I. 20 POUNDS 'GROW POWER' OR APPROVED EQUAL
II. 20 POUNDS NITRO-FORM (COURSE) 38-0-0 BLUE CHIP

E. THE SPREADING OF TOPSOIL SHALL NOT BE CONDUCTED UNDER MUDDY OR FROZEN CONDITIONS.

**9. PLANTING**
A. INSOFAR THAT IT IS FEASIBLE, PLANT MATERIAL SHALL BE PLANTED ON THE DAY OF DELIVERY. IN THE EVENT THAT THIS IS NOT POSSIBLE, LANDSCAPE CONTRACTOR SHALL PROTECT UNINSTALLED PLANT MATERIAL. PLANTS SHALL NOT REMAIN UNPLANTED FOR LONGER THAN A THREE DAY PERIOD AFTER DELIVERY. PLANTS THAT WILL NOT BE PLANTED FOR A PERIOD OF TIME GREATER THAN THREE DAYS SHALL BE HEALED IN WITH TOPSOIL OR MULCH TO HELP PRESERVE ROOT MOISTURE.

B. PLANTING OPERATIONS SHALL BE PERFORMED DURING PERIODS WITHIN THE PLANTING SEASON WHEN WEATHER AND SOIL CONDITIONS ARE SUITABLE AND IN ACCORDANCE WITH ACCEPTED LOCAL PRACTICE. PLANTS SHALL NOT BE INSTALLED IN TOPSOIL THAT IS IN A MUDDY OR FROZEN CONDITION.

C. ANY INJURED ROOTS OR BRANCHES SHALL BE PRUNED TO MAKE CLEAN-CUT ENDS PRIOR TO PLANTING UTILIZING CLEAN, SHARP TOOLS. ONLY INJURED OR DISEASED BRANCHING SHALL BE REMOVED.

D. ALL PLANTING CONTAINERS, BASKETS AND NON-BIODEGRADABLE MATERIALS SHALL BE REMOVED FROM ROOT BALLS DURING PLANTING. NATURAL FIBER BURLAP MUST BE CUT FROM AROUND THE TRUNK OF THE TREE AND FOLDED DOWN AGAINST THE ROOT BALL PRIOR TO BACKFILLING.

E. POSITION TREES AND SHRUBS AT THEIR INTENDED LOCATIONS AS PER THE PLANS AND SECURE THE APPROVAL OF THE LANDSCAPE ARCHITECT PRIOR TO EXCAVATING PITS, MAKING NECESSARY ADJUSTMENTS AS DIRECTED.

F. PRIOR TO THE ISSUANCE OF ANY CERTIFICATE OF OCCUPANCY, THE PROPOSED LANDSCAPE, AS SHOWN ON THE APPROVED LANDSCAPE PLAN, MUST BE INSTALLED, INSPECTED AND APPROVED BY THE APPROVING AGENCY. THE APPROVING AGENCY SHALL TAKE INTO ACCOUNT SEASONAL CONSIDERATIONS IN THIS REGARD AS FOLLOWS. THE PLANTING OF TREES, SHRUBS, VINES OR GROUND COVER SHALL OCCUR ONLY DURING THE FOLLOWING PLANTING SEASONS:
I. PLANTS: MARCH 15 TO DECEMBER 15
II. LAWN: MARCH 15 TO JUNE 15 OR SEPT. 1 TO DECEMBER 1

PLANTINGS REQUIRED FOR A CERTIFICATE OF OCCUPANCY SHALL BE PROVIDED DURING THE NEXT APPROPRIATE SEASON AT THE MUNICIPALITY'S DISCRETION. CONTRACTOR SHOULD CONTACT APPROVING AGENCY FOR POTENTIAL SUBSTITUTIONS.

G. FURTHERMORE, THE FOLLOWING TREE VARIETIES ARE UNUSUALLY SUSCEPTIBLE TO WINTER DAMAGE. WITH TRANSPLANT SHOCK AND THE SEASONAL LACK OF NITROGEN AVAILABILITY, THE RISK OF PLANT DEATH IS GREATLY INCREASED. IT IS NOT RECOMMENDED THAT THESE SPECIES BE PLANTED DURING THE FALL PLANTING SEASON:

| | |
|---|---|
| ACER RUBRUM | PLATANUS X ACERIFOLIA |
| BETULA VARIETIES | POPULOUS VARIETIES |
| CARPINUS VARIETIES | PRUNUS VARIETIES |
| CRATAEGUS VARIETIES | PYRUS VARIETIES |
| KOELREUTERIA | QUERCUS VARIETIES |
| LIQUIDAMBER STYRACIFLUA | TILIA TOMENTOSA |
| LIRIODENDRON TULIPIFERA | ZELKOVA VARIETIES |

H. PLANTING PITS SHALL BE DUG WITH LEVEL BOTTOMS, WITH THE WIDTH TWICE THE DIAMETER OF ROOT BALL. THE ROOT BALL SHALL REST ON UNDISTURBED GRADE. EACH PLANT PIT SHALL BE BACKFILLED IN LAYERS WITH THE FOLLOWING PREPARED SOIL MIXED THOROUGHLY:
I. 1 PART PEAT MOSS
II. 1 PART COMPOSTED COW MANURE BY VOLUME
III. 3 PARTS TOPSOIL BY VOLUME
IV. 21 GRAMS 'AGRIFORM' PLANTING TABLETS (OR APPROVED EQUAL) AS FOLLOWS:
A) 2 TABLETS PER 1 GALLON PLANT
B) 3 TABLETS PER 5 GALLON PLANT
C) 4 TABLETS PER 15 GALLON PLANT
D) LARGER PLANTS: 2 TABLETS PER ½" CALIPER OF TRUNK

I. FILL PREPARED SOIL AROUND BALL OF PLANT HALF-WAY AND INSERT PLANT TABLETS. COMPLETE BACKFILL AND WATER THOROUGHLY.

J. ALL PLANTS SHALL BE PLANTED SO THAT THE TOP OF THE ROOT BALL, THE POINT AT WHICH THE ROOT FLARE BEGINS, IS SET AT GROUND LEVEL AND IN THE CENTER OF THE PIT. NO SOIL IS TO BE PLACED DIRECTLY ON TOP OF THE ROOT BALL.

K. ALL PROPOSED TREES DIRECTLY ADJACENT TO WALKWAYS OR DRIVEWAYS SHALL BE PRUNED AND MAINTAINED TO A MINIMUM BRANCHING HEIGHT OF 7' FROM GRADE.

L. GROUND COVER AREAS SHALL RECEIVE A ¼" LAYER OF HUMUS RAKED INTO THE TOP 1" OF PREPARED SOIL PRIOR TO PLANTING. ALL GROUND COVER AREAS SHALL BE WEEDED AND TREATED WITH A PRE-EMERGENT CHEMICAL AS PER MANUFACTURER'S RECOMMENDATION.

M. NO PLANT, EXCEPT GROUND COVERS, GRASSES OR VINES, SHALL BE PLANTED LESS THAN TWO FEET (2') FROM EXISTING STRUCTURES AND SIDEWALKS.

N. ALL PLANTING AREAS AND PLANTING PITS SHALL BE MULCHED AS SPECIFIED HEREIN TO FILL THE ENTIRE BED AREA OR SAUCER. NO MULCH IS TO TOUCH THE TRUNK OF THE TREE OR SHRUB.

O. ALL PLANTING AREAS SHALL BE WATERED IMMEDIATELY UPON INSTALLATION IN ACCORDANCE WITH THE WATERING SPECIFICATIONS AS LISTED HEREIN.

**10. TRANSPLANTING (WHEN REQUIRED)**
A. ALL TRANSPLANTS SHALL BE DUG WITH INTACT ROOT BALLS CAPABLE OF SUSTAINING THE PLANT.

B. IF PLANTS ARE TO BE STOCKPILED BEFORE REPLANTING, THEY SHALL BE HEALED IN WITH MULCH OR SOIL, ADEQUATELY WATERED AND PROTECTED FROM EXTREME HEAT, SUN AND WIND.

C. PLANTS SHALL NOT BE DUG FOR TRANSPLANTING BETWEEN APRIL 10 AND JUNE 30.

D. UPON REPLANTING, BACKFILL SOIL SHALL BE AMENDED WITH FERTILIZER AND ROOT GROWTH HORMONE.

E. TRANSPLANTS SHALL BE GUARANTEED FOR THE LENGTH OF THE GUARANTEE PERIOD SPECIFIED HEREIN.

F. IF TRANSPLANTS DIE, SHRUBS AND TREES LESS THAN SIX INCHES (6") DBH SHALL BE REPLACED IN KIND. TREES GREATER THAN SIX INCHES (6") DBH MAY BE REQUIRED TO BE REPLACED IN ACCORDANCE WITH THE MUNICIPALITY'S TREE REPLACEMENT GUIDELINES.

**11. WATERING**
A. NEW PLANTINGS OR LAWN AREAS SHALL BE ADEQUATELY IRRIGATED BEGINNING IMMEDIATELY AFTER PLANTING. WATER SHALL BE APPLIED TO EACH TREE AND SHRUB IN SUCH MANNER AS NOT TO DISTURB BACKFILL AND TO THE EXTENT THAT ALL MATERIALS IN THE PLANTING HOLE ARE THOROUGHLY SATURATED. WATERING SHALL CONTINUE AT LEAST UNTIL PLANTS ARE ESTABLISHED.

B. SITE OWNER SHALL PROVIDE WATER IF AVAILABLE ON SITE AT TIME OF PLANTING. IF WATER IS NOT AVAILABLE ON SITE, CONTRACTOR SHALL SUPPLY ALL NECESSARY WATER. THE USE OF WATERING BAGS IS RECOMMENDED FOR ALL NEWLY PLANTED TREES.

C. IF AN IRRIGATION SYSTEM HAS BEEN INSTALLED ON THE SITE, IT SHALL BE USED TO WATER PROPOSED PLANT MATERIAL, BUT ANY FAILURE OF THE SYSTEM DOES NOT ELIMINATE THE CONTRACTOR'S RESPONSIBILITY OF MAINTAINING THE DESIRED MOISTURE LEVEL FOR VIGOROUS, HEALTHY GROWTH.

**12. GUARANTEE**
A. THE LANDSCAPE CONTRACTOR SHALL GUARANTEE ALL PLANTS FOR A PERIOD OF ONE (1) YEAR FROM APPROVAL OF LANDSCAPE INSTALLATION BY THE APPROVING AGENCY. CONTRACTOR SHALL SUPPLY THE OWNER WITH A MAINTENANCE BOND FOR TEN PERCENT (10%) OF THE VALUE OF THE LANDSCAPE INSTALLATION WHICH WILL BE RELEASED AT THE CONCLUSION OF THE GUARANTEE PERIOD AND WHEN A FINAL INSPECTION HAS BEEN COMPLETED AND APPROVED BY THE OWNER OR AUTHORIZED REPRESENTATIVE.

B. ANY DEAD OR DYING PLANT MATERIAL SHALL BE REPLACED FOR THE LENGTH OF THE GUARANTEE PERIOD. REPLACEMENT OF PLANT MATERIAL SHALL BE CONDUCTED AT THE FIRST SUCCEEDING PLANTING SEASON. ANY DEBRIS SHALL BE DISPOSED OF OFF-SITE, WITHOUT EXCEPTION.

C. TREES AND SHRUBS SHALL BE MAINTAINED BY THE CONTRACTOR DURING CONSTRUCTION AND THROUGHOUT THE 90 DAY MAINTENANCE PERIOD AS SPECIFIED HEREIN. CULTIVATION, WEEDING, WATERING AND THE PREVENTATIVE TREATMENTS SHALL BE PERFORMED AS NECESSARY TO KEEP PLANT MATERIAL IN GOOD CONDITION AND FREE OF INSECTS AND DISEASE.

D. LAWNS SHALL BE MAINTAINED THROUGH WATERING, FERTILIZING, WEEDING, MOWING, TRIMMING AND OTHER OPERATIONS SUCH AS ROLLING, REGARDING AND REPLANTING AS REQUIRED TO ESTABLISH A SMOOTH, ACCEPTABLE LAWN, FREE OF ERODED OR BARE AREAS.

**13. CLEANUP**
A. UPON THE COMPLETION OF ALL LANDSCAPE INSTALLATION AND BEFORE THE FINAL ACCEPTANCE, THE CONTRACTOR SHALL REMOVE ALL UNUSED MATERIALS, EQUIPMENT AND DEBRIS FROM THE SITE. ALL PAVED AREAS ARE TO BE CLEANED.

B. THE SITE SHALL BE CLEANED AND LEFT IN A NEAT AND ACCEPTABLE CONDITION AS APPROVED BY THE OWNER OR AUTHORIZED REPRESENTATIVE.

**14. MAINTENANCE (ALTERNATIVE BID):**
A 90 DAY MAINTENANCE PERIOD SHALL COMMENCE AT THE END OF ALL LANDSCAPE INSTALLATION OPERATIONS. THE 90 DAY MAINTENANCE PERIOD ENSURES TO THE OWNER/OPERATOR THAT THE NEWLY INSTALLED LANDSCAPING HAS BEEN MAINTAINED AS SPECIFIED ON THE APPROVED LANDSCAPE PLAN. ONCE THE INITIAL 90 DAY MAINTENANCE PERIOD HAS EXPIRED, THE OWNER/OPERATOR MAY REQUEST THAT BIDDERS SUBMIT AN ALTERNATE MAINTENANCE BID FOR A MONTHLY MAINTENANCE CONTRACT. THE ALTERNATE MAINTENANCE CONTRACT WILL ENCOMPASS ANY WORK THAT IS CONSIDERED APPROPRIATE TO ENSURE THAT PLANT AND LAWN AREAS ARE HEALTHY AND MANICURED TO THE APPROVAL OF THE OWNER/OPERATOR.

FOR REVISION 3 ONLY:
STATE OF MARYLAND — MICHAEL J. GESELL — PROFESSIONAL ENGINEER — 8/20/14

PROFESSIONAL CERTIFICATION
I, MICHAEL J. GESELL, HEREBY CERTIFY THAT THESE DOCUMENTS WERE PREPARED OR APPROVED BY ME, AND THAT I AM A DULY LICENSED PROFESSIONAL ENGINEER UNDER THE LAWS OF THE STATE OF MARYLAND, LICENSE NO: 44097, EXPIRATION DATE: 6/9/15

# GATEWAY OVERLOOK

**DESIGN AND DEVELOPMENT CRITERIA**

PLANTING SPECIFICATIONS
A. PLANT MATERIALS

THE LANDSCAPE CONTRACTOR SHALL FURNISH AND INSTALL AND/OR DIG, BALL, BURLAP AND TRANSPLANT ALL OF THE PLANT MATERIALS CALL FOR ON DRAWINGS AND/OR LISTED IN THE PLANT SCHEDULE.

1. PLANT NAMES

PLANT NAMES USED IN THE PLANT SCHEDULE SHALL CONFORM TO "STANDARDIZED PLANT NAMES," LATEST EDITION.

2. PLANT STANDARDS
ALL PLANT MATERIAL SHALL BE EQUAL TO OR BETTER THAN THE REQUIREMENTS OF THE "USA STANDARD FOR NURSERY STOCK" LATEST EDITION, AS PUBLISHED BY THE AMERICAN ASSOCIATION OF NURSERYMENT (HERE-AFTER REFERRED TO AS AAN STANDARDS). ALL PLANTS SHALL BE TYPICAL OF THEIR SPECIES AND VARIETY, SHALL HAVE A NORMAL HABIT OF GROWTH AND SHALL BE FIRST QUALITY, SOUND, VIGOROUS, WELL-BRANCHED AND WITH HEALTHY, WELL-FURNISHED ROOT SYSTEM. THEY SHALL BE FREE OF DISEASE, INSECT PESTS AND MECHANICAL INJURIES.

a. ALL PLANTS SHALL BE NURSERY GROWN AND SHALL HAVE BEEN GROWN UNDER THE SAME CLIMATE CONDITIONS AS THE LOCATION OF THIS PROJECT FOR AT LEAST TWO YEARS BEFORE PLANTING. NEITHER HEELED-IN PLANTS NOR PLANTS FROM COLD STORAGE WILL BE ACCEPTED.

3. PLANT MEASUREMENTS

ALL PLANTS SHALL CONFORM TO THE MEASURES SPECIFIED IN THE PLANT SCHEDULE AS APPROVED BY THE ARC.
a. CALIPER MEASUREMENTS SHALL BE TAKEN SIX INCHES (6") ABOVE GRADE FOR TREES UNDER FOUR-INCH (4") CALIPER AND TWELVE INCHES (12") ABOVE GRADE FOR TREES FOUR INCHES (4") IN CALIPER AND OVER.

b. MINIMUM BRANCHING HEIGHT FOR ALL TREES SHALL BE SIX FEET (6') MAXIMUM EIGHT FEET (8').

c. MINIMUM SIZE FOR PLANTING SHADE TREES SHALL BE 3" – 31/2" CALIPER, 14' – 16' IN HEIGHT.

d. MINIMUM SIZE FOR PLANTING MINOR OR INTERMEDIATE FOCUS TREES (PINES, CRABAPPLES, ETC.) SHALL BE 3" – 3 1/2" CALIPER, 10' – 12' IN HEIGHT.

e. MINIMUM SIZE FOR PLANTING SHRUBS SHALL BE 18" – 24" SPREAD UNLESS NOTED OTHERWISE.

f. CALIPER, HEIGHT, SPREAD AND SIZE OF BALL SHALL BE GENERALLY AS FOLLOWS:

| CALIPER | HEIGHT | SPREAD | SIZE OF BALL |
|---|---|---|---|
| 3" – 3-1/2" | 14' – 16' | 6' – 8' | 32" DIAMETER |
| 3-1/2" – 4" | 14' – 16' | 8' –10' | 36" DIAMETER |
| 4" – 4-1/2" | 16' – 18' | 8' – 10' | 40" DIAMETER |
| 4-1/2" – 5" | 16' – 17' | 10' – 12' | 44" DIAMETER |
| 5" – 5-1/2" | 16' –20' | 10' – 12' | 48" DIAMETER |
| 5-1/2" – 6" | 18' – 20' | 12' – 14' | 52" DIAMETER |

ALL PLANT MATERIAL SHALL GENERALLY AVERAGE THE MEDIAN FOR THE SIZE RANGES INDICATED ABOVE AS INDICATED IN THE "AAN STANDARDS"

4. PLANT IDENTIFICATION

LEGIBLE LABELS SHALL BE ATTACHED TO ALL SHADE TREES, MINOR TREES, SPECIMEN SHRUBS AND BUNDLES OR BOXES OF OTHER PLANT MATERIAL GIVING THE BOTANICAL AND COMMON NAMES, SIZE AND QUANTITY OF EACH. EACH SHIPMENT OF PLANTS SHALL BEAR CERTIFICATES OF INSPECTION AS REQUIRED BY FEDERAL, STATE AND COUNTY AUTHORITIES.

5. PLANT INSPECTION

THE ARC MAY, UPON REQUEST BY THE BUILDER OR DEVELOPER, AT LEAST TEN (10) DAYS PRIOR TO THE INSTALLATION OF ANY PROPOSED PLANT MATERIAL AT THE SOURCE OF ORIGIN.

B. PLANTING METHODS

ALL PROPOSED PLANT MATERIALS THAT MEET THE SPECIFICATIONS IN SECTION A (PRECEDING PAGE) ARE TO BE PLANTED IN ACCORDANCE WITH THE FOLLOWING PLANTING METHODS DURING THE PROPER PLANTING SEASONS AS DESCRIBED IN THE FOLLOWING:

1. PLANTING SEASONS

THE PLANTING OF DECIDUOUS TREES, SHRUBS AND VINES SHALL BE FROM MARCH 1ST TO JUNE 15TH AND FROM SEPTEMBER 15TH TO DECEMBER 15TH. PLANTING OF DECIDUOUS MATERIAL MAY BE CONTINUED DURING THE WINTER MONTHS PROVIDING THERE IS NO FROST IN THE GROUND AND FROST-FREE TOPSOIL PLANTING MIXES ARE USED.

THE PLANTING OF EVERGREEN MATERIAL SHALL BE FROM MARCH 15TH TO JUNE 15TH AND FROM AUGUST 15TH TO DECEMBER 1ST. NO PLANTING SHALL BE DONE WHEN THE GROUND IS FROZEN OR EXCESSIVELY MOIST. NO FROZEN OR WET TOPSOIL SHALL BE USED AT ANY TIME.

2. DIGGING

ALL PLANT MATERIAL SHALL BE DUG, BALLED, AND BURLAPPED (B+B) IN ACCORDANCE WITH THE "AAN STANDARDS".

3. EXCAVATION OF PLANT PITS

THE LANDSCAPING CONTRACTOR SHALL EXCAVATE ALL PLANT PITS, VINE PITS, HEDGE TRENCHES AND SHRUB BEDS IN ACCORDANCE WITH THE FOLLOWING SCHEDULE:

a. LOCATIONS OF ALL PROPOSED PLANT MATERIAL SHALL BE STAKED AND APPROVED IN THE FIELD BY THE LANDSCAPE ARCHITECT BEFORE ANY OF THE PROPOSED PLANT MATERIAL IS INSTALLED BY THE LANDSCAPE CONTRACTOR

b. ALL PITS SHALL BE GENERALLY CIRCULAR IN OUTLINE, VERTICAL SIDES; DEPTH SHALL NOT BE LESS THAT 6" DEEPER THAN THE ROOT BALL, DIAMETER SHALL NOT BE LESS THAN TWO TIMES THE DIAMETER OF THE ROOT BALL AS SET FORTH IN THE FOLLOWING SCHEDULE.

c. IF AREAS ARE DESIGNATED AS SHRUB BEDS OR HEDGE TRENCHES, THEY SHALL BE EXCAVATED TO AT LEAST 18" DEPTH MINIMUM. AREAS DESIGNATED FOR GROUND COVERS AND VINES SHALL BE EXCAVATED TO AT LEAST 12" IN DEPTH MINIMUM.

d. DIAMETER AND DEPTH OF TREE PITS SHALL GENERALLY BE AS FOLLOWS:

| PIT PLANT SIZE | PIT ROOT BALL | DIAMETER | DEPTH |
|---|---|---|---|
| 3" – 3-1/2" cal. | 32" | 64" | 28" |
| 3-12" – 4" cal. | 36" | 72" | 32" |
| 4" – 4-1/2" cal. | 40" | 80" | 36" |
| 4-1/2" – 5" cal. | 44" | 88" | 40" |
| 5" – 5-1/2" cal. | 48" | 96" | 44" |
| 5-1/2" – 6" cal. | 52" | 104" | 48" |

A 20% COMPACTION FIGURE OF THE SOIL TO BE REMOVED IS ASSUMED AND WILL BE ALLOWED IN CALCULATION OF EXTRA TOPSOIL. THE TABULATED PIT SIZES ARE FOR PURPOSES OF UNIFORM CALCULATION AND SHALL NOT OVERRIDE THE SPECIFIED DEPTHS BELOW THE BOTTOM OF THE ROOT BALLS.

4. STAKING, GUYING AND WRAPPING

ALL PLANT MATERIAL SHALL BE STAKED OR GUYED, AND WRAPPED IN ACCORDANCE WITH THE FOLLOWING SPECIFICATIONS:

a. STAKES: SHALL BE SOUND WOOD 2" x 2" ROUGH SAWN OAK OR SIMILAR DURABLE WOODS, OR LENGTHS, MINIMUM 7' – 0" FOR MAJOR TREES AND 5' – 0" MINIMUM FOR MINOR TREES.

b. WIRE AND CABLE: WIRE SHALL BE #10 ga. GALVANIZED OR BETHANIZED ANNEALED STEEL WIRED. FOR TREES OVER 3" CALIPER, PROVIDE 5/16" TURN BUCKLES, EYE AND EYE WITH 4" TAKEUP. FOR TREES OVER 5" CALIPER PROVIDE 3/16", 7 STRAND CABLE CADMIUM PLATED STEEL, WITH GALVANIZED "EYE" THIMBLES OF WIRE AND HOSE ON TREES UP TO 3" IN CALIPER.

c. HOSE: SHALL BE NEW, 2 PLY REINFORCED RUBBER HOSE, MINIMUM 1/2" I.D. "PLASTIC LOCK TIES" OR " PAUL'S TREES BRACES" MAY BE USED IN PLACE OF WIRE AND HOSE ON TREES UP TO 3" IN CALIPER.

d. ALL TREES UNDER 3" IN CALIPER AR TO BE PLANTED AND STAKED IN ACCORDANCE WITH THE ATTACHED "TYPICAL TREE STAKING DETAIL". ALL TREES OVER 3" IN CALIPER ARE TO BE PLANTED AND GUYED IN ACCORDANCE WITH THE ATTACHED "TYPICAL TREE GUYING DETAIL".

5. PLANTING PRUNING, EDGING AND MULCHING

a. EACH TREE, SHRUB OR VINE SHALL BE PRUNED IN AN APPROPRIATE MANNER TO ITS PARTICULAR REQUIREMENTS, IN ACCORDANCE WITH ACCEPTED STANDARD PRACTICE. BROKEN OR BRUISED BRANCHES SHALL BE REMOVED WITH CLEAN CUTS FLUSH WITH THE ADJACENT TRUNK OR BRANCHES. ALL CUTS OVER 1" IN DIAMETER SHALL BE PAINTED WITH AN APPROVED ANTISEPTIC TREE WOUND DRESSING.

b. ALL TRENCHES AND SHRUB BEDS SHALL BE EDGED AND CULTIVATED TO THE LINES SHOWN ON THE DRAWING. THE AREAS AROUND ISOLATED PLANTS SHALL BE EDGED AND CULTIVATED TO THE FULL DIAMETER OF THE PIT. SOD WHICH HAS BEEN REMOVED AND STACKED SHALL BE USED TO TRIM THE EDGES OF ALL EXCAVATED AREAS TO THE NEAT LINES OF THE PLANT PIT SAUCERS, THE EDGES OF SHRUB AREAS, HEDGE TRENCHES AND VINE POCKETS.

c. AFTER CULTIVATION, ALL PLANT MATERIALS SHALL BE MULCHED WITH A 2" LAYER OF FINE, SHREDDED PINE BARK, PEAT MOSS, OR ANOTHER APPROVED MATERIAL OVER THE ENTIRE AREA OF THE BED OR SAUCER.

6. PLANT INSPECTION AND ACCEPTANCE

THE ARC SHALL BE RESPONSIBLE FOR INSPECTING ALL PLANTING PROJECTS ON A PERIODIC BASIS TO ASSURE THAT ALL WORK IS PROCEEDING IN ACCORDANCE WITH THE APPROVED PLANS SPECIFICATIONS.

7. PLANT GUARANTEE

ALL PLANT MATERIAL SHALL BE GUARANTEED FOR THE DURATION OF ONE FULL GROWING SEASON, AFTER FINAL INSPECTION AND ACCEPTANCE OF THE WORK IN THE PLANTING PROJECT. PLANTS SHALL BE ALIVE AND IN SATISFACTORY GROWING CONDITION AT THE END OF THE GUARANTEE PERIOD.

a. FOR THIS PURPOSE, THE "GROWING SEASON" SHALL BE THAT PERIOD BETWEEN THE END OF THE "SPRING" PLANTING SEASON, AND THE COMMENCEMENT OF THE "FALL" PLANTING SEASON.

b. GUARANTEE FOR PLANTING PERFORMED AFTER THE SPECIFIED END OF THE "SPRING" PLANTING SEASON, SHALL BE EXTENDED THROUGH THE END OF THE NEXT FOLLOWING "SPRING" PLANTING SEASON.

# IRRIGATION NOTE:

CONTRACTOR TO PROVIDE AN IRRIGATION DESIGN FOR BOTH LAWN & BED AREAS. DESIGN IS TO BE SUBMITTED TO THE PROJECT LANDSCAPE ARCHITECT FOR REVIEW AND APPROVAL. CONTRACTOR TO VERIFY STATIC PRESSURE PRIOR TO DESIGN. CONTRACTOR IS ALSO RESPONSIBLE FOR ANY PRESSURE REDUCING DEVICES REQUIRED TO MEET MAXIMUM PRESSURE REQUIREMENT. SYSTEM DESIGN TO SHOW ALL VALVES, PIPING, HEADS, BACK FLOW PREVENTION, METERS AND CONTROLLERS. ALL SLEEVES IN PAVEMENT AREAS MUST BE SHOWN.

# SEEDING SPECIFICATIONS

1. PRIOR TO SEEDING, AREA IS TO BE TOPSOILED, FINE GRADED, AND RAKED OF ALL DEBRIS LARGER THAN 2" DIAMETER.
2. PRIOR TO SEEDING, CONSULT MANUFACTURER'S RECOMMENDATIONS AND INSTRUCTIONS.
3. SEEDING RATES:

| | |
|---|---|
| PERENNIAL RYEGRASS | 1/2 LB/1,000 SQ FT |
| KENTUCKY BLUEGRASS | 1 LB/1,000 SQ FT |
| RED FESCUE | 1 1/2 LBS/1,000 SQ FT |
| SPREADING FESCUE | 1 1/2 LBS/1,000 SQ FT |
| FERTILIZER (20:10:10) | 14 LBS/1,000 SQ FT |
| MULCH | 90 LBS/1,000 SQ FT |

4. GERMINATION RATES WILL VARY AS TO TIME OF YEAR FOR SOWING. CONTRACTOR TO IRRIGATE SEEDED AREA UNTIL AN ACCEPTABLE STAND OF COVER IS ESTABLISHED BY OWNER.

## NOTE

1. THIS PROPERTY IS LOCATED WITHIN THE GATEWAY OVERLOOK STOPPING CENTER.
2. HOWARD COUNTY REFERENCE NUMBERS:
SITE PLAN DEVELOPMENT PREPARED BY:
PATTON, HARRIS, RUST AND ASSOCIATES, P.C.
DATED: APRIL 22, 2005

WATER AND SEWER PLANS PREPARED BY:
PATTON, HARRIS, RUST AND ASSOCIATES, P.C.
DATED: 6/8/05 REVISED 4/6/06
SDP-04-163

ROADWAY AND STORM DRAIN PLANS PREPARED BY:
PATTON, HARRIS, RUST AND ASSOCIATES, P.C.
DATED: 8/18/05 REVISED 4/20/06
SDP-04-163
3. REFER TO THE COVER SHEET FOR THE LEGEND.
4. REFER TO GENERAL NOTES SHEET FOR STANDARD GRADING NOTES.
5. REFER TO GENERAL NOTES SHEET FOR STORMDRAIN STRUCTURE SCHEDULE.

## BENCHMARK

GEODETIC SURVEY CONTROL #37GD
N 553,237.204
E 1,372,353.605
ELEV. 290.931'
LOCATED 30' EAST OF FIRE HYDRANT ACROSS FROM DEEP RUN ELEMENTARY SCHOOL

GEODETIC SURVEY CONTROL #37GC
N 553,250.791
E 1,370,946.348
ELEV. 331.855'
LOCATED ON THE SOUTH SIDE OF WATERLOO ROAD ACROSS FROM DEEP RUN PARKWAY

| REV. | DATE | DESCRIPTION | BY |
|---|---|---|---|
| | | | |
| | | | |
| | | | |
| 3 | 1/20/14 | REVISED LAYOUT: NEW PUMPS + CANOPY, RELOC. BUS STOP + WALK, UTILITY UPDATE | MJG |

OWNER/DEVELOPER: HRD LAND HOLDINGS, INC.
HOWARD RESEARCH AND DEVELOPMENT CORPORATION
THE ROUSE BUILDING
10275 LITTLE PATUXENT PARKWAY
COLUMBIA, MARYLAND 21044
PHONE: (410) 992-6000

PROJECT: BENSON EAST
PARCEL U; GASOLINE STATION WITH KIOSK (COSTCO GASOLINE); GATEWAY OVERLOOK SHOPPING CENTER

AREA: TAX MAP 37 GRID 1 & 2 ZONED NEW TOWN
PARCEL U
BENSON EAST
6TH ELECTION DISTRICT
HOWARD COUNTY, MARYLAND

TITLE: LANDSCAPE NOTES AND DETAILS

BOHLER ENGINEERING, P.C.
• PROFESSIONAL ENGINEERING SERVICES •
• 22630 DAVIS DRIVE, SUITE 200 STERLING, VIRGINIA, 20164 •
• CONTACT: DAVID B. NEMECEK
• (703) 709-9500 FAX: (703) 709-9501 | • WWW.BOHLERENG.COM

DATE: 6/26/07
STATE OF MARYLAND — ADAM J. VOLANTH — REGISTERED PROFESSIONAL ENGINEER
ADAM J. VOLANTH
PROFESSIONAL ENGINEER NO. 21342

| | |
|---|---|
| DESIGNED BY: | J.A.D. |
| DRAWN BY: | R.F.G. |
| PROJECT NO.: | S040011.01 |
| DATE: | 6/25/07 |
| SCALE: | AS SHOWN |
| DRAWING NO.: | 19 OF 23 |

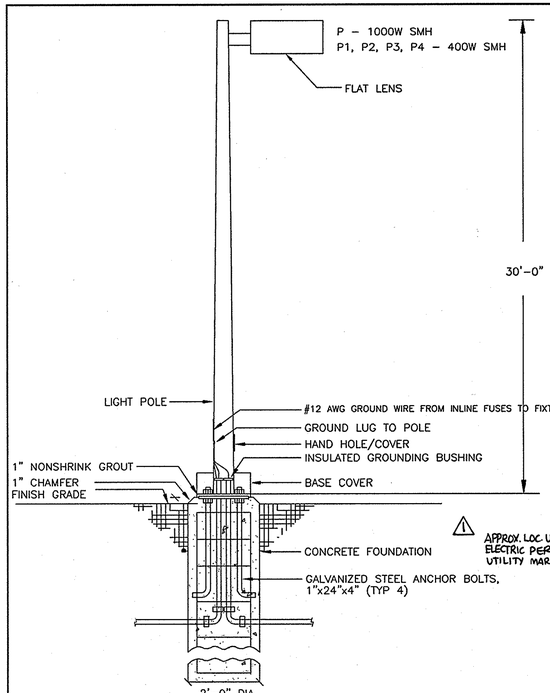


NOTE: PROVIDE CONCRETE J-BOX AS REQUIRED.
THIS DETAIL IS FOR ELECTRICAL CONDUITS ROUTING ONLY.
SEE STRUCTURAL DRAWINGS FOR CONSTRUCTION DETAIL.

## POLE BASE DETAIL

NO SCALE

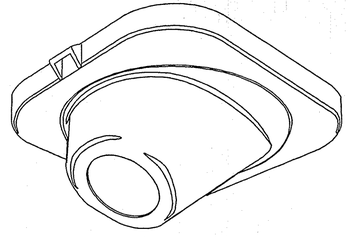

## FUEL STATION FOCUS LIGHT – GA

NO SCALE

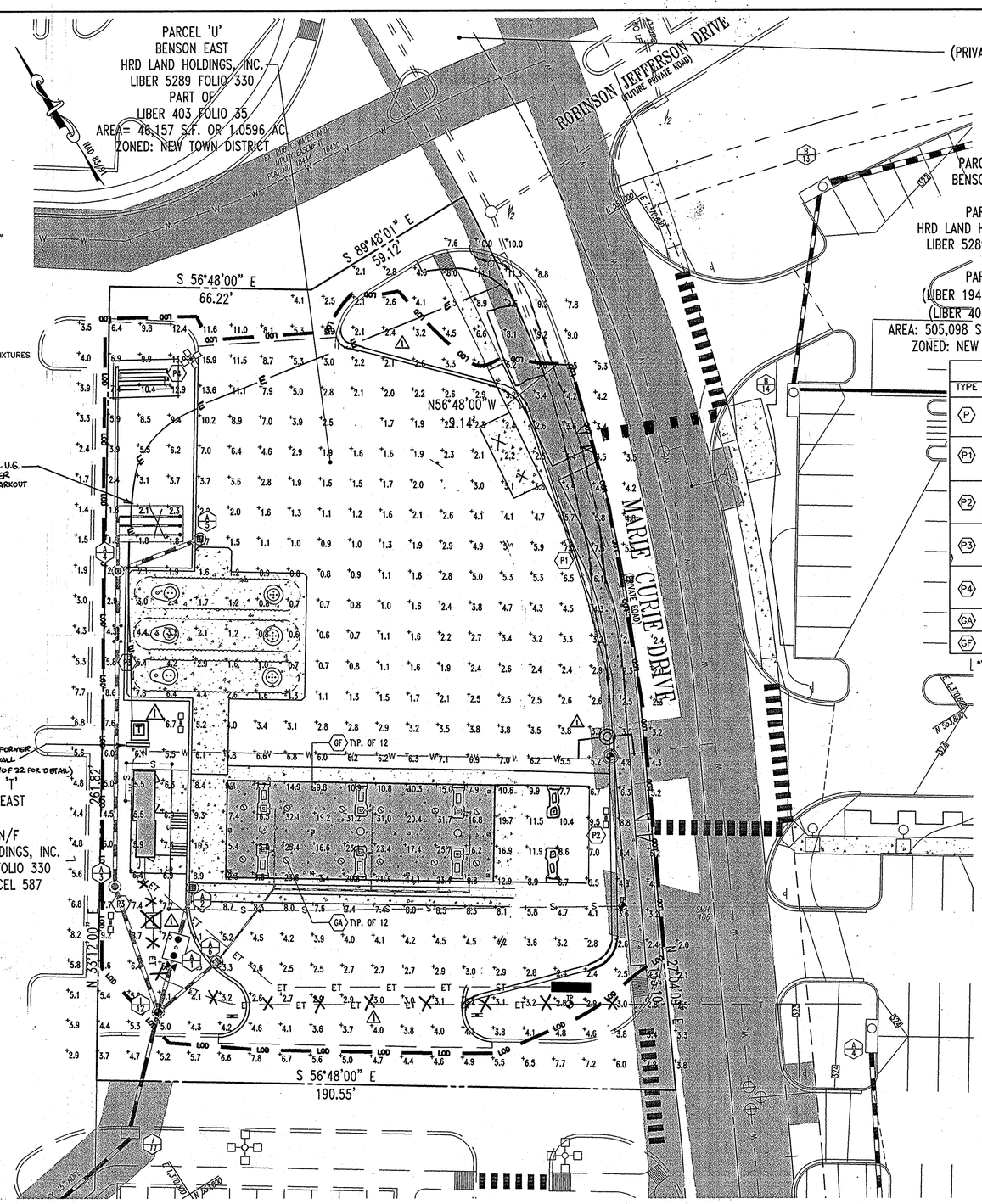


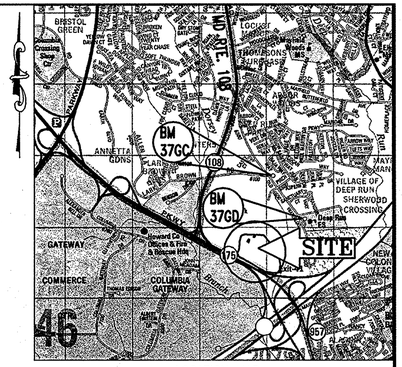


LOCATION MAP

COPYRIGHT ADC THE MAP PEOPLE
PERMIT USE NO. 20602153-5
SCALE: 1"=2000'

## LIGHTING FIXTURE SCHEDULE

| TYPE | MANUFACTURER | NUMBER | LAMPS | MOUNT | WATT | REMARKS | DEVELOPER REF. NUMBER |
|---|---|---|---|---|---|---|---|
| (P) | EMCO* | ECA–231–3H–1000MH–480V–SC/PTF–3–EC23–DM1–SC/KWI RTSP30–8.0–11–xx–3.5–BC | 1–1000W MH | 30' POLE | 1070 | ROUND TAPERED STEEL EPOXY ENAMEL POLE TO MATCH FIXTURE. NUMBER OF HEADS SHALL BE PER PLAN. SEE SHEET SE–1. FIXTURE SHALL BE POWDER PAINTED, ELECTRO–STATIC APPLICATION. PROVIDE POLE BASE COVER. ROTATE OPTICS PER ARROW ON PLAN. POLE AND FIXTURES SHALL BE COLOR SW 6255 'MORNING FOG' | P1–1–30 |
| (P1) | EMCO* | ECA–182–0H–400MH–480V–SC/PTF–3–EC18–DM2180–SC/KWI RTSP30–8.0–11–xx–3.5–BC | 1–400W MH | 30' POLE | 455 | | P4–2A–30 |
| (P2) | EMCO* | ECA–182–3H–400MH–480V–SC/PTF–3–EC18–DM2180–SC/KWI RTSP30–8.0–11–xx–3.5–BC | 1–400W MH | 30' POLE | 455 | | P4–2B–30 |
| (P3) | EMCO* | ECA–182–3H–400MH–480V–SC/PTF–3–EC18–DM2180–SC/KWI RTSP30–8.0–11–xx–3.5–BC | 1–400W MH | 30' POLE | 455 | | P4–2C–30 |
| (P4) | EMCO* | ECA–184–3H–400MH–480V–SC/PTF–3–EC18–DM4090–SC/KWI RTSP30–8.0–11–xx–3.5–BC | 1–400W MH | 30' POLE | 455 | | P4–4C–30 |
| (GA) | LSI | EC–SP–100P–38–FO | 1–100W PSMV BU | RECESS | 130 | | |
| (GF) | LSI | ECTA–S–320–PSMV–MT–F | 1–320W PSMV–CLEAR BU | RECESS | 375 | | |

*VERIFY POLES & FIXTURES MATCH DEVELOPMENT 'CENTER STANDARD'.

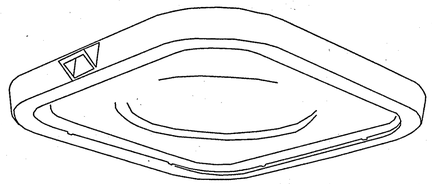

## FUEL FACILITY – FLAT LENS ENCORE – GF

NO SCALE

PROFESSIONAL CERTIFICATION
I, MICHAEL J. GESELL, HEREBY CERTIFY THAT THESE DOCUMENTS WERE PREPARED OR APPROVED BY ME, AND THAT I AM A DULY LICENSED PROFESSIONAL ENGINEER UNDER THE LAWS OF THE STATE OF MARYLAND, LICENSE NO. 44097
EXPIRATION DATE: 6/9/08

FOR REVISION 3 ONLY:

STATE OF MARYLAND MICHAEL J. GESELL No. 44097 PROFESSIONAL ENGINEER
8/20/14

MISS UTILITY

BEFORE YOU DIG CALL 1-800-257-7777
PROTECT YOURSELF, GIVE TWO WORKING DAYS NOTICE

THIS DRAWING DOES NOT INCLUDE NECESSARY COMPONENTS FOR CONSTRUCTION SAFETY. ALL CONSTRUCTION MUST BE DONE IN COMPLIANCE WITH THE OCCUPATIONAL SAFETY AND HEALTH ACT OF 1970 AND ALL RULES AND REGULATIONS THERETO APPURTENANT.

THE CONTRACTOR TO CALL MISS UTILITY TO HAVE ALL EXISTING UTILITIES MARKED 48 HOURS PRIOR TO ANY CONSTRUCTION.

GRAPHIC SCALE

20 0 10 20 40 80

( IN FEET )
1 inch = 20 ft.

### BENCHMARK

GEODETIC SURVEY CONTROL #37GD
N 553,237.204
E 1,372,353.605
ELEV. 290.931'
LOCATED 30' EAST OF FIRE HYDRANT ACROSS FROM DEEP RUN ELEMENTARY SCHOOL

GEODETIC SURVEY CONTROL #37GC
N 553,250.791
E 1,370,946.348
ELEV. 331.855'
LOCATED ON THE SOUTH SIDE OF WATERLOO ROAD ACROSS FROM DEEP RUN PARKWAY

| REV. | DATE | DESCRIPTION | BY |
|---|---|---|---|
| 3 | 1/2014 | REVISED LAYOUT AND LANDSCAPE SUMMARY TABLE AND REMOVED UTILITY UP-013 | MSG |
| 1 | 9/12/07 | EX. ELEC. LINE & TRANSFORMER, PROP. SCREEN WALL | Bohler |
| 1 | 9/12/07 | IRRIGATION WATERLINE AND METER | Bohler |

OWNER/DEVELOPER: HRD LAND HOLDINGS, INC.
HOWARD RESEARCH AND DEVELOPMENT CORPORATION
THE ROUSE BUILDING
10275 LITTLE PATUXENT PARKWAY
COLUMBIA, MARYLAND 21044
PHONE: (410) 992-6000

PROJECT: BENSON EAST
PARCEL U: GASOLINE STATION WITH KIOSK (COSTCO GASOLINE); GATEWAY OVERLOOK SHOPPING CENTER

AREA: TAX MAP 37 GRID 1 & 2 ZONED NEW TOWN
PARCEL U
BENSON EAST
6TH ELECTION DISTRICT
HOWARD COUNTY, MARYLAND

TITLE: LIGHTING PLAN

BOHLER ENGINEERING, P.C.
• PROFESSIONAL ENGINEERING SERVICES •
• 22630 DAVIS DRIVE, SUITE 200 STERLING, VIRGINIA, 20164 •
• CONTACT: DAVID B. NEMECEK •
• (703) 709-9500 FAX: (703) 709-9501 • WWW.BOHLERENG.COM

6/25/07
DATE
STATE OF MARYLAND ADAM J. VOLANTH No. 21342 PROFESSIONAL ENGINEER
ADAM J. VOLANTH
PROFESSIONAL ENGINEER NO. 21342

| | |
|---|---|
| DESIGNED BY: | J.A.D. |
| DRAWN BY: | R.F.G. |
| PROJECT NO.: | S040011.01 |
| DATE: | 6/25/07 |
| SCALE: | AS SHOWN |
| DRAWING NO.: | 20 OF 23 |

SDP 07-36

PLANNING BOARD APPROVAL STAMP

APPROVED
PLANNING BOARD
of HOWARD COUNTY
DATE 2-08-07

APPROVED: DEPARTMENT OF PLANNING AND ZONING

| | |
|---|---|
| CHIEF–DEVELOPMENT ENGINEERING DIVISION | DATE 7/5/07 |
| CHIEF–DIVISION OF LAND DEVELOPMENT | DATE 7/16/07 |
| DIRECTOR | DATE 7/17/07 |

APPROVED: FOR PUBLIC WATER AND PUBLIC SEWERAGE SYSTEMS.

| | |
|---|---|
| COUNTY HEALTH OFFICER HOWARD COUNTY HEALTH DEPARTMENT | DATE 7/13/07 |

GENERAL NOTE:
IT IS THE RESPONSIBILITY OF THE CONTRACTOR TO REVIEW ALL OF THE DRAWINGS AND SPECIFICATIONS ASSOCIATED WITH THIS PROJECT WORK SCOPE PRIOR TO THE INITIATION OF CONSTRUCTION. SHOULD THE CONTRACTOR FIND A CONFLICT WITH THE DOCUMENTS RELATIVE TO THE SPECIFICATIONS OR APPLICABLE CODES, IT IS THE CONTRACTORS RESPONSIBILITY TO NOTIFY BOHLER ENGINEERING, P.C. IN WRITING PRIOR TO THE START OF CONSTRUCTION. FAILURE BY THE CONTRACTOR TO NOTIFY BOHLER ENGINEERING, P.C. SHALL CONSTITUTE ACCEPTANCE OF FULL RESPONSIBILITY BY THE CONTRACTOR TO COMPLETE THE SCOPE OF THE WORK AS DEFINED BY THE DRAWINGS AND IN FULL CONFORMANCE WITH LOCAL REGULATIONS AND CODES.

STATE OF MARYLAND MATTHEW T. ALLEN No. 27321 REGISTERED PROFESSIONAL ENGINEER

FOR REVISION 1
BOHLER ENGINEERING, P.C.

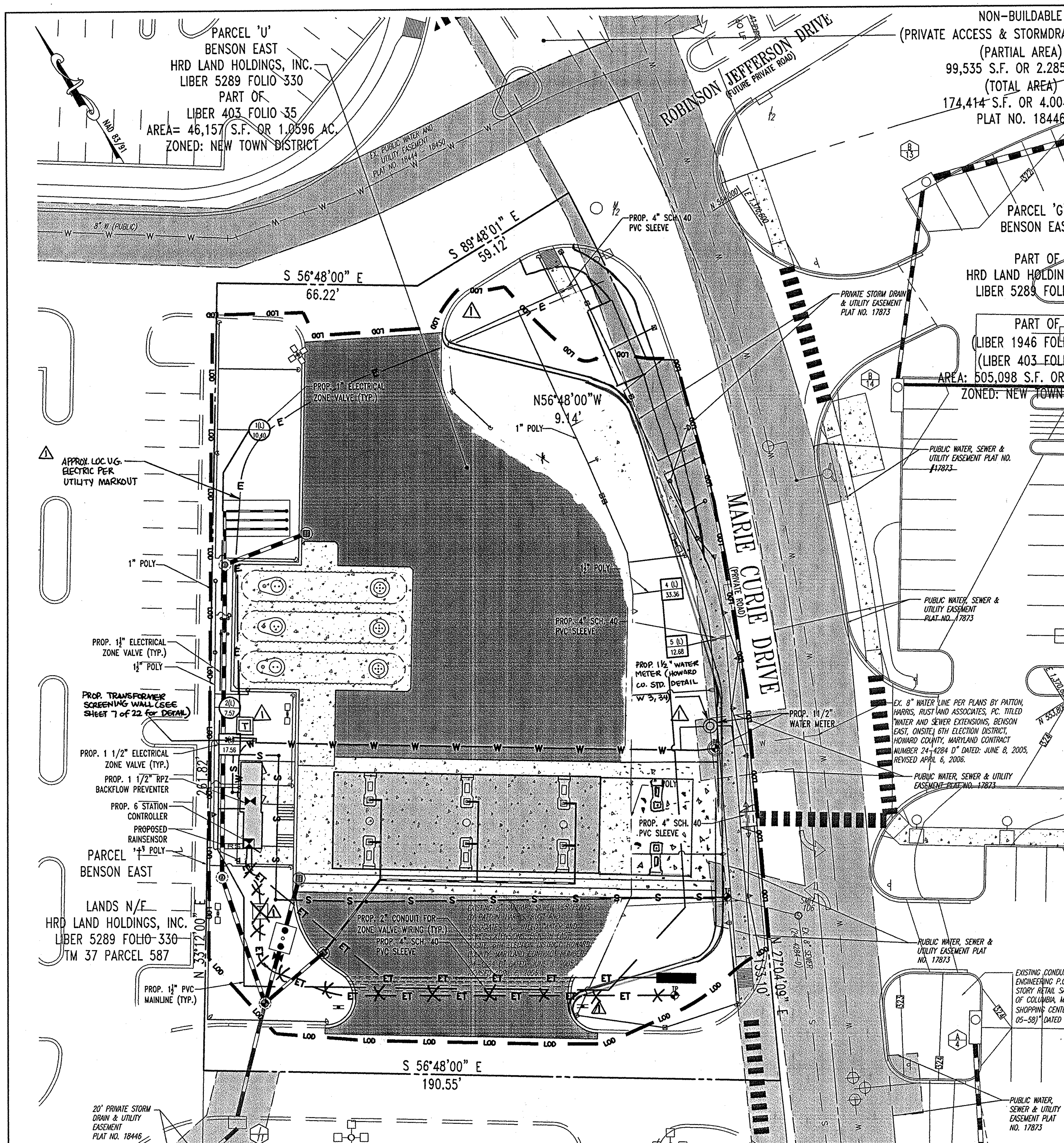


## PLANNING BOARD APPROVAL STAMP

APPROVED
PLANNING BOARD
of HOWARD COUNTY
DATE 2-08-07

APPROVED: DEPARTMENT OF PLANNING AND ZONING

CHIEF-DEVELOPMENT ENGINEERING DIVISION — 7/5/07 DATE

CHIEF-DIVISION OF LAND DEVELOPMENT — 7/16/07 DATE

DIRECTOR — 7/12/07 DATE

APPROVED: FOR PUBLIC WATER AND PUBLIC SEWERAGE SYSTEMS.

COUNTY HEALTH OFFICER — 7/13/07 DATE
HOWARD COUNTY HEALTH DEPARTMENT

**GENERAL NOTE:**
IT IS THE RESPONSIBILITY OF THE CONTRACTOR TO REVIEW ALL OF THE DRAWINGS AND SPECIFICATIONS ASSOCIATED WITH THIS PROJECT WORK SCOPE PRIOR TO THE INITIATION OF CONSTRUCTION. SHOULD THE CONTRACTOR FIND A CONFLICT WITH THE DOCUMENTS RELATIVE TO THE SPECIFICATIONS OR APPLICABLE CODES, IT IS THE CONTRACTORS RESPONSIBILITY TO NOTIFY BOHLER ENGINEERING, P.C. IN WRITING PRIOR TO THE START OF CONSTRUCTION. FAILURE BY THE CONTRACTOR TO NOTIFY BOHLER ENGINEERING, P.C. SHALL CONSTITUTE ACCEPTANCE OF FULL RESPONSIBILITY BY THE CONTRACTOR TO COMPLETE THE SCOPE OF THE WORK AS DEFINED BY THE DRAWINGS AND IN FULL CONFORMANCE WITH LOCAL REGULATIONS AND CODES.

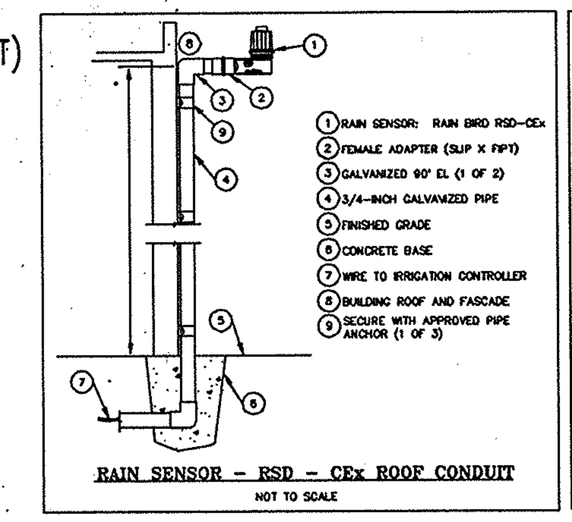


RAIN SENSOR – RSD – CEx ROOF CONDUIT
NOT TO SCALE

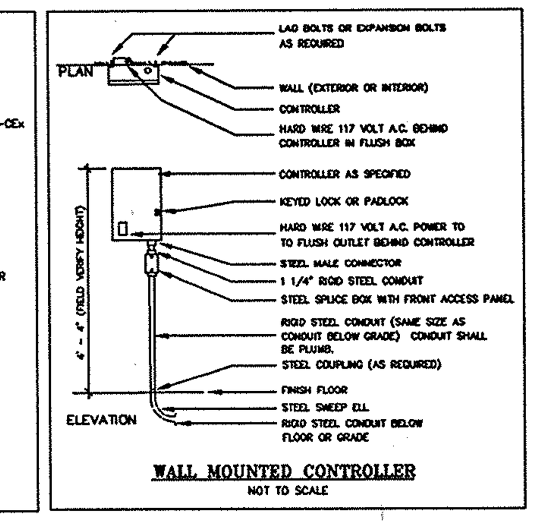


WALL MOUNTED CONTROLLER
NOT TO SCALE

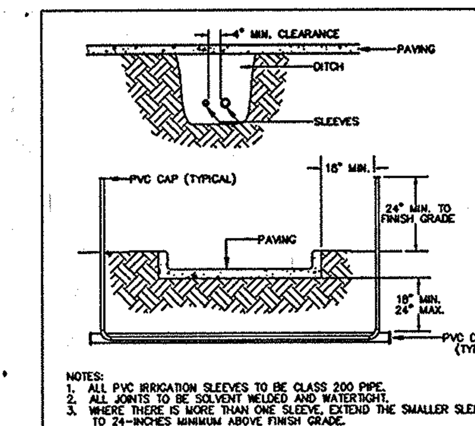


NOTES:
1. ALL PVC IRRIGATION SLEEVES TO BE CLASS 200 PIPE.
2. ALL JOINTS TO BE SOLVENT WELDED AND WATERTIGHT.
3. WHERE THERE IS MORE THAN ONE SLEEVE, EXTEND THE SMALLER SLEEVE TO 24-INCHES MINIMUM ABOVE FINISH GRADE.
4. MECHANICALLY TAMP TO 95% PROCTOR.

SLEEVING
NOT TO SCALE

## IRRIGATION SCHEDULE

| QUANTITY | SYMBOL | DESCRIPTION |
|---|---|---|
| 1 | ⧗ | RAINBIRD INDOOR 6 STATION CONTROLLER (ESP-6LXi PLUS) |
| 1 | ⋈ | WILKINS REDUCED PRESSURE 1 1/2" RPZ BACKFLOW PREVENTER (975XL) |
| 1 | ▣ | 1 1/2" COUNTY APPROVED WATER METER |
| 1 | RS | RAINBIRD RAINSENSOR W/ROOF CONDUIT (RSD-CEx) |
| 1 | ZONE GPM | 1" RAINBIRD ELECTRIC ZONE VALVE WITH FLOW CONTROL (100-PEB-PRS-D) |
| 2 | ZONE GPM | 1 1/2" RAINBIRD ELECTRIC ZONE VALVE WITH FLOW CONTROL (150-PEB-PRS-D) |
| 640 ±L.F. | ———— | 1 1/2" PVC MAINLINE CLASS 200 IPS PLASTIC PIPE |
| 20 ±L.F. | ========== | 4" SCHEDULE 40 PVC SLEEVE |
| 20 ±L.F. | ============== | 2" SCHEDULE 40 PVC CONDUIT |
| ------ | ———— | POLYETHYLENE SDR-PRESSURE RATED TUBE (SIZE AS NOTED) |
| 2 | ○ | RAINBIRD MPR SERIES POP UP SPRAY HEAD – 8' RADIUS (1804-8Q) |
| 1 | ◎ | RAINBIRD MPR SERIES POP UP SPRAY HEAD – 8' RADIUS (1804-8H) |
| 2 | ⊎ | RAINBIRD MPR SERIES POP UP SPRAY HEAD – 15' RADIUS (1804-15H) |
| 6 | ⊠ | RAINBIRD 3500 SERIES ROTOR – NOZZLE .75/17' RADIUS (3504-PC) |
| 1 | ⋈ | RAINBIRD 3500 SERIES ROTOR – NOZZLE 1.0/21' RADIUS (3504-PC) |
| 5 | ◊ | RAINBIRD 3500 SERIES ROTOR – NOZZLE 1.5/23' RADIUS (3504-PC) |
| 1 | ◊ | RAINBIRD 3500 SERIES ROTOR – NOZZLE 2.0/27' RADIUS (3504-PC) |
| 14 | ♡ | RAINBIRD 3500 SERIES ROTOR – NOZZLE 3.0/31' RADIUS (3504-PC) |
| 2 | ◊ | RAINBIRD 3500 SERIES ROTOR – NOZZLE 4.0/33' RADIUS (3504-PC) |

IRRIGATION CONTRACTOR SHALL UTILIZE IRRIGATION COMPONENTS FROM MANUFACTURER'S LISTED ABOVE OR APPROVED EQUAL. SCHEDULE EXCLUDES FITTINGS, SOLVENT CEMENTS, ELECTRICAL WIRE, AND MISCELLANEOUS IRRIGATION COMPONENTS.

KEY:
1(L) / 50 — ZONE NUMBER; L=LAWN ZONE, B=BED ZONE; GALLONAGE

## IRRIGATION SPECIFICATIONS

PART 1 – GENERAL

1.01 SCOPE
A. Provide complete sprinkler installation as detailed and specified herein, including furnishing all labor, materials, and equipment for the proper installation. Work includes but is not limited to:
1. Trenching and backfill.
2. Automatic controlled system.
3. Upon completion of installation, supply drawings showing details of construction including location of mainline piping, manual and automatic valves, electrical supply to valves, and specifically exact location of automatic valves.
B. NOTE: All sleeves as shown on plans will be furnished by General Contractor. Meter and power source to be provided by General Contractor.

1.02 APPLICABLE STANDARDS
A. ASTM
B. D2464 – Poly (Vinyl Chloride) (PVC) Plastic Pipe Fittings Threaded, Schedule 40
C. D2466 – Poly (Vinyl Chloride) (PVC) Plastic Pipe Fittings Socket Type, Schedule 40
D. D2564 – Solvent Cements for Poly (Vinyl Chloride) (PVC) Plastic Pipe Fittings
E. Standard recommended practice for:
1. D2855 – Making Solvent – Cemented Joints with Poly (Vinyl Chloride) (PVC) Pipe and Fittings.

1.03 MAINTENANCE AND GUARANTEE
A. Materials and workmanship shall be fully guaranteed for one (1) year after final acceptance.
B. Provide maintenance of system, including raising and lowering of heads to compensate for lawn growth, cleaning and adjustment of heads, raising and lowering of shrub heads to compensate for shrub growth, for one (1) year after completion of installation.
C. Contractor shall blowout, close and open the system once during the guarantee system.
D. Guarantee is limited to repair and replacement of defective materials or workmanship, including repair of backfill settlement.

1.04 SUBMITTALS
A. Use of materials differing in quality, size, or performance from those specified will only be allowed upon written approval of Owner/Landscape Architect. The decision will be based on comparative ability of material or article to perform fully all purposes of mechanics and general design considered to be possessed by item specified.
Bidders desiring to make a substitution for specified sprinklers shall submit manufacturer's catalog sheet showing full specification of each type of sprinkler proposed as a substitute, including discharge in GPM maximum allowable operating pressure at sprinkler.
Approval of substitute sprinkler shall not relieve Contractor of his responsibility to demonstrate that final installed sprinkler system will operate according to intent of originally designed and specified system.
B. It is the responsibility of the Irrigation Contractor to demonstrate that final installed sprinkler system will operate according to intent of originally designed and specified system. If Irrigation Contractor notes any problems in head spacing or potential coverage, it is his responsibility to notify the Landscape Architect in writing, before proceeding with work. Irrigation Contractor guarantees 100% coverage of all areas to be irrigated.
C. Contractor to furnish an as built drawing of entire system for review prior to acceptance.

1.05 TESTING
A. Perform testing required with other trades, including earthwork, paving, and plumbing, to avoid unnecessary cutting, patching and boring.

1.06 COORDINATION
A. Coordinate installation with other trades, including earthwork, paving, and plumbing, to avoid unnecessary cutting, patching and boring.

PART 2 – PRODUCTS

2.01 GENERAL
A. Sprinkler Mains: Sprinkler Mains are that portion of piping from water source to operating valves. This portion of piping is subject to surges, being a closed portion of sprinkler system. Hydrant lines are considered a part of sprinkler main.
B. Lateral Piping: Lateral piping is that portion of piping from operating valve to sprinkler heads. This portion of piping is not subject to surges, being an "open end" portion of sprinkler system.

2.02 POLY VINYL CHLORIDE PIPE (PVC)
A. PVC pipe shall be manufactured in accordance with commercial standards noted herein.
B. Marking and Identification: PVC pipe shall be continuously and permanently marked with the following information: manufacturer's name, pipe size, type of pipe, and material, SDR number, product standard number, and the NSF (National Sanitation Foundation) seal.
C. PVC Pipe Fittings: Shall be of the same material as the PVC pipe specified and shall be compatible with PVC pipe furnished.

2.03 POLYETHYLENE PIPE
A. Polyethylene pipe to be manufactured and supplied in accordance with commercial standards by a reputable dealer.

2.04 COPPER TUBING
A. Hard, straight, lengths of domestic manufacture only. No copper tube of foreign extrusion or any so-called irrigation tubing (thin wall) shall be used.

2.05 COPPER TUBE FITTINGS
A. Cast brass or wrought copper, sweat-solder type.

2.06 WIRE
A. Type UF with 4-64" insulation which is Underwriter's Laboratory approved for direct underground burial when used in a National Electric Code Class II Circuit (30 volts AC or less).

2.07 SCHEDULE 80 PVC NIPPLES
A. Composed of Standard Schedule 40 PVC Fittings and PVC meeting noted standards. No clamps or wires may be used. Nipples for heads and shrub risers, where applicable, to be nominal one-half (1/2") inch diameter by eight (8") inches long.
B. Polyethylene nipples six (6") inches long to be used on all pop-up spray heads.

2.08 MATERIALS – See Irrigation Plan
A. Sprinkler heads in lawn area as specified on plan.
B. PVC Pipe: Class 200, SPR 21
Copper Tubing (City Connection): Type "M"
24V Wire: Size 14, Type U.F.
C. Electric valves to be all plastic construction as indicated on plans.
D. Refer to drawing for backflow prevention requirements and flow valve. Coordinate exact location with Landscape Architect.

PART 3 EXECUTION

3.01 INSTALLATION – GENERAL
A. Contractor is to verify pressure and flow rates prior to beginning installation. System shall be designed at 65psi. Contractor to provide any pressure reducing valves or booster pumps to achieve static pressure as stated.
B. Staking: Before installation is started, place a stake where each sprinkler is to be located, in accordance with drawing. Staking shall be approved by Landscape Architect before proceeding.
C. Excavations: Excavations are unclassified and include earth, loose rock, rock or any combination thereof, in wet or dry state. Backfill trenches with material that is suitable for compaction and contains no lumps, clods, rock, debris, etc. Special backfill specifications, if furnished take preference over this general specification.
D. Backfill: Flood or hand-tamp to prevent after settling. Hand rake trenches and adjoining area to leave grade in as good or better condition than before installation.
E. Piping Layout: Piping layout is diagrammatic. Route piping around trees and shrubs in such a manner as to avoid damage to plantings. Do not dig within ball of newly planted trees or shrubs.

3.02 PIPE INSTALLATION
A. Sprinkler Mains: Install a four (4") inch minimum width trench with a minimum of twelve (12") inches of cover.
B. Lateral Piping: Install a four (4") inch wide minimum trench deep enough to allow for installation of sprinkler heads and valves, but in no case, with less than eight (8") inches of cover.
C. Trenching: Remove lumber, rubbish, and large rocks from trenches. Provide firm, uniform bearing for entire length of each pipe line to prevent uneven settlement. Wedging or blocking of pipe will not be permitted. Remove foreign matter or dirt from inside of pipe before welding, and keep piping clean by approved means during and after laying of pipe.

3.03 PVC PIPE AND FITTING ASSEMBLY
A. Solvent: Use only solvent recommended by manufacturer to make solvent-welded joints. Thoroughly clean pipe and fittings of dirt, dust and moisture before applying solvent.
B. PVC to metal connection: Work metal connections first. Use a non-hardening pipe dope such as Permatex No. 2 on threaded PVC adapters into which pipe may be welded.

3.04 COPPER TUBING AND FITTING ASSEMBLY
A. Clean pipe and fitting thoroughly and lightly sand pipe connections to remove residue from pipe. Attach fittings to tubing in an approved manner using 50-50 soft solid core solder.

3.05 SHRUB SPRAY HEADS (FIXED)
A. Shrub Spray Heads: Supply in accordance with materials list, with nozzling in accordance with drawings. Drawings indicate size of nozzling and degree of arc. Determine correct degree of arc of nozzle (if conditions warrant) by area to be covered and by wind conditions that may affect coverage.
B. Height: Install heads on PVC Schedule 80 risers sufficiently high to water under shrubs and plants, or as directed by the Landscape Architect.

3.06 POP-UP SPRAY HEADS
A. Supply pop-up spray heads in accordance with materials list and plan. Attach sprinkler to lateral piping with a semi-flexible polyethylene nipple not less than tree (3") inches or more than six (6") inches long.

3.07 VALVES
A. Supply valves in accordance with materials list and sized according to drawings. Install valves in a level position in accordance with Manufacturer's Specifications. See plan for typical installation of electric valve, valve box.

3.08 WIRING
A. Supply wiring from the automatic sprinkler controls to the valves. No conduit will be required for U.F. wire unless otherwise noted on the plan. Wire shall be tucked under the piping.
B. A separate wire is required from the control to each electric valve. A common neutral wire is also required from each control to each of the valves served by each particular control.
C. Bundle multiple wires and tape them together at ten (10') foot intervals. Install ten (10") inch expansion coil at not more than one hundred (100') foot intervals. Make splices waterproof.

3.09 AUTOMATIC SPRINKLER CONTROLS
A. Supply in accordance with Irrigation Plan. Install according to manufacturer's recommendations.

3.10 TESTING
A. Sprinkler Mains: Test sprinkler main only for a period of twelve (12) to fourteen (14) hours under normal pressure. If leaks occur, replace joint or joints and repeat test.
B. Complete tests prior to backfilling. Sufficient backfill material may be placed in trenches between fittings to insure stability of line under pressure. In each case, leave fittings and couplings open to visual inspection for full period of test.

3.11 FINAL ADJUSTMENT
A. After installation has been completed, make final adjustment of sprinkler system in preparation for Landscape Architect's final inspection. Completely flush system to remove debris from lines and turning on system. Check sprinklers for proper operation and proper alignment for direction of flow. Check each section of spray heads for operating pressure and balance to other sections by use of flow adjustment and top of each valve. Check nozzling for proper coverage. Prevailing wind conditions may indicate that arch of angle of spray should be other than shown on drawings. In this case, change nozzles to provide correct coverage.

## GENERAL IRRIGATION NOTES

1. ADJUST HEIGHTS OF 4" TALL RAINBIRD MPR SERIES POP UP SPRAY HEADS IN CORRELATION WITH INSTALLED PLANT MATERIAL AND FIELD CONDITIONS.
2. ALL PVC SLEEVING SHALL EXTEND 18" INTO PERVIOUS LANDSCAPE AREAS.
3. DEPICTION OF ELECTRIC ZONE VALVES, PVC MAINLINE, AND POLYETHYLENE LATERAL LINES ARE SHOWN SCHEMATIC FOR CLARITY PURPOSES. VALVES AND PIPING SHALL BE INSTALLED WITHIN THE LIMIT OF DISTURBANCE FOR OTHER WORK AND IN CORRELATION WITH FIELD CONDITIONS.
4. IRRIGATION CONTRACTOR TO ENSURE ADEQUATE COVER OVER ALL PIPING.
5. IRRIGATION SYSTEM REQUIRES A MINIMUM OF 65 PSI TO FUNCTION PROPERLY. IF THERE IS INSUFFICIENT PRESSURE AT THE POINT OF CONNECTION, A BOOSTER PUMP MAY BE REQUIRED.
6. LOCATION OF IRRIGATION COMPONENTS WITHIN THE BUILDING ARE SHOWN SCHEMATIC AND SHOULD CORRELATE WITH ARCHITECTURAL PLAN SET.
7. THE WATER USED FOR SITE IRRIGATION SHALL ME METERED ONSITE.

PROFESSIONAL CERTIFICATION
I, MICHAEL J. GESELL HEREBY CERTIFY THAT THESE DOCUMENTS WERE PREPARED OR APPROVED BY ME, AND THAT I AM A DULY LICENSED PROFESSIONAL ENGINEER UNDER THE LAWS OF THE STATE OF MARYLAND, LICENSE NO: 44097, EXPIRATION DATE: 6/9/15

FOR REVISION 3 ONLY:
8/20/14

**THIS PLAN TO BE UTILIZED FOR IRRIGATION PURPOSES ONLY**

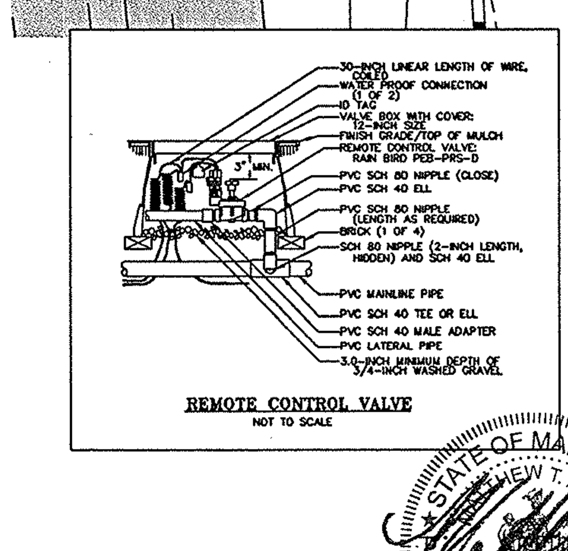


REMOTE CONTROL VALVE
NOT TO SCALE

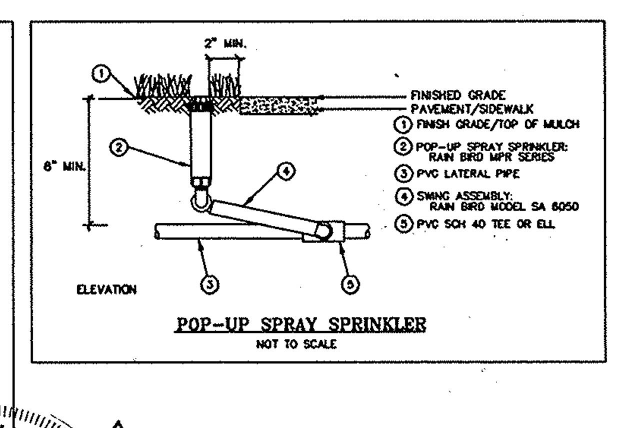


POP-UP SPRAY SPRINKLER
NOT TO SCALE

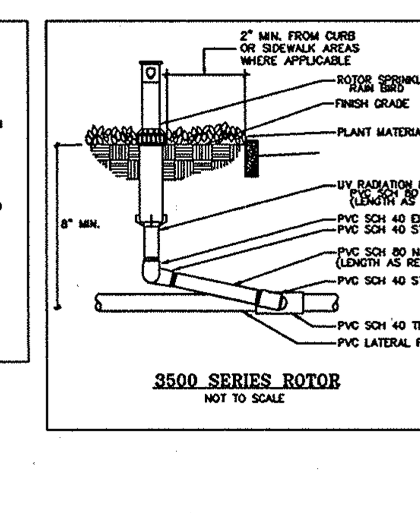


3500 SERIES ROTOR
NOT TO SCALE

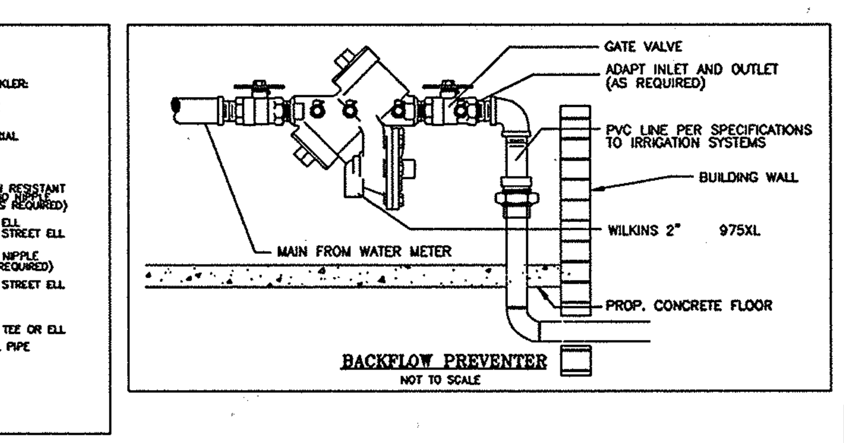


BACKFLOW PREVENTER
NOT TO SCALE

FOR REVISION 1
BOHLER ENGINEERING, P.C.

GRAPHIC SCALE
20 0 10 20 40 80
( IN FEET )
1 inch = 20 ft.

MISS UTILITY
DIG WITH C.A.R.E. — CALL MISS UTILITY — KEEP MARYLAND SAFE
BEFORE YOU DIG CALL
1-800-257-7777
PROTECT YOURSELF, GIVE TWO WORKING DAYS NOTICE

THIS DRAWING DOES NOT INCLUDE NECESSARY COMPONENTS FOR CONSTRUCTION SAFETY. ALL CONSTRUCTION MUST BE DONE IN COMPLIANCE WITH THE OCCUPATIONAL SAFETY AND HEALTH ACT OF 1970 AND ALL RULES AND REGULATIONS THERETO APPURTENANT.

THE CONTRACTOR TO CALL MISS UTILITY TO HAVE ALL EXISTING UTILITIES MARKED 48 HOURS PRIOR TO ANY CONSTRUCTION.

### BENCHMARK

GEODETIC SURVEY CONTROL #37GD
N 553,237.204
E 1,372,353.605
ELEV. 290.931'
LOCATED 30' EAST OF FIRE HYDRANT ACROSS FROM DEEP RUN ELEMENTARY SCHOOL

GEODETIC SURVEY CONTROL #37GC
N 553,250.791
E 1,370,946.348
ELEV. 331.855'
LOCATED ON THE SOUTH SIDE OF WATERLOO ROAD ACROSS FROM DEEP RUN PARKWAY

| REV. | DATE | DESCRIPTION | BY |
|---|---|---|---|
| 3 | 1/12/019 | REVISED LAYOUT: NEW PUMPS + CANOPY. RELOC. BUS STOP + WALK. UTILITY UPDTS. | MJG |
| 1 | 9/12/07 | EX. ELEC LINE & TRANSFORMER, PROP. SCREEN WALL | Bohler |
| 1 | 9/12/07 | IRRIGATION WATERLINE AND METER | Bohler |

OWNER/DEVELOPER: HRD LAND HOLDINGS, INC.
HOWARD RESEARCH AND DEVELOPMENT CORPORATION
THE ROUSE BUILDING
10275 LITTLE PATUXENT PARKWAY
COLUMBIA, MARYLAND 21044
PHONE: (410) 992-6000

PROJECT: BENSON EAST
PARCEL U; GASOLINE STATION WITH KIOSK (COSTCO GASOLINE); GATEWAY OVERLOOK SHOPPING CENTER

AREA: TAX MAP 37 GRID 1 & 2 ZONED NEW TOWN
PARCEL U
BENSON EAST
6TH ELECTION DISTRICT
HOWARD COUNTY, MARYLAND

TITLE: IRRIGATION PLAN

BOHLER ENGINEERING, P.C.
• PROFESSIONAL ENGINEERING SERVICES •
• 22630 DAVIS DRIVE, SUITE 200 STERLING, VIRGINIA, 20164 •
• CONTACT: DAVID B. NEMECEK
• (703) 709-9500 FAX: (703) 709-9501 | • WWW.BOHLERENG.COM

DATE: 6/26/07
ADAM J. VOLANTH
PROFESSIONAL ENGINEER NO. 21342

| | |
|---|---|
| DESIGNED BY: | J.A.D. |
| DRAWN BY: | R.F.G. |
| PROJECT NO.: | S040011.01 |
| DATE: | 6/25/07 |
| SCALE: | AS SHOWN |
| DRAWING NO.: | 21 OF 23 |

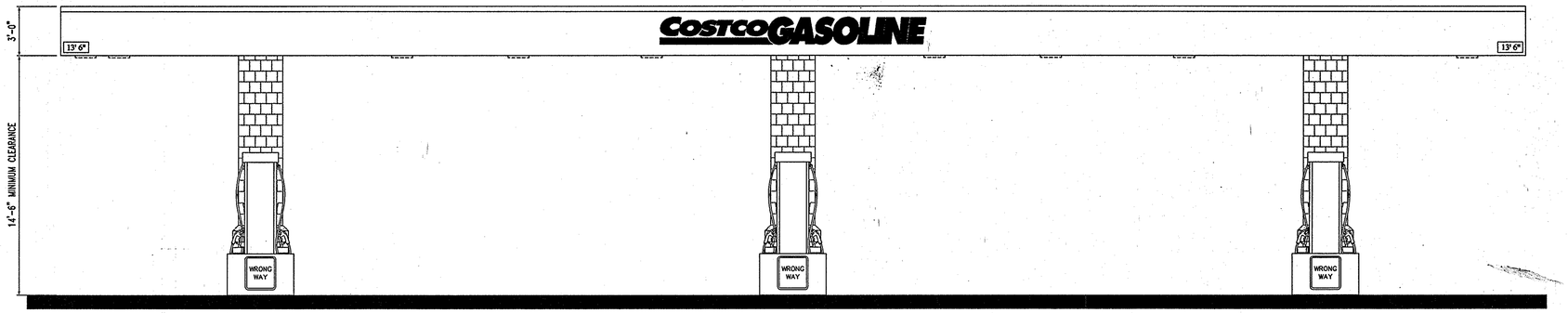


SOUTH ELEVATION (NORTH ELEVATION SIMILAR)
NOT TO SCALE

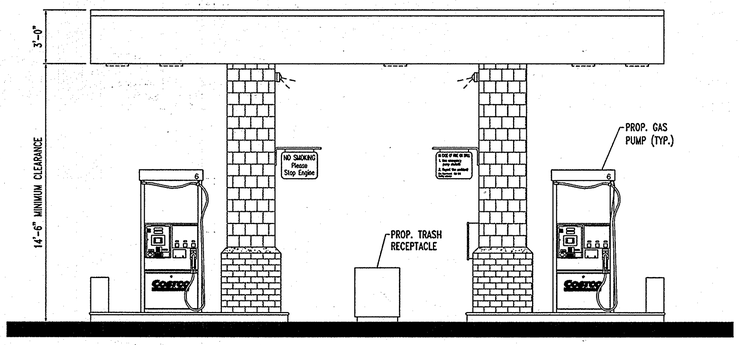


EAST ELEVATION (WEST ELEVATION SIMILAR)
NOT TO SCALE

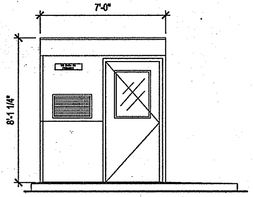


FRONT ELEVATION
NOT TO SCALE

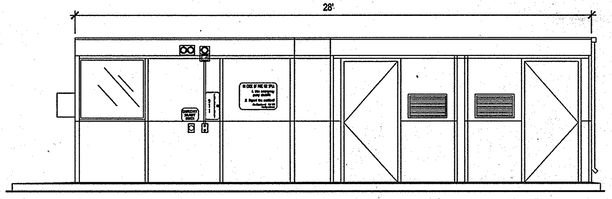


SIDE ELEVATION
NOT TO SCALE

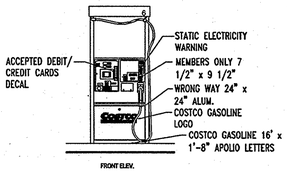


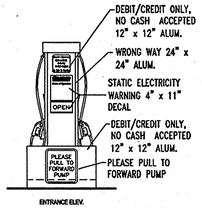


TYPICAL GAS PUMP DETAIL
NOT TO SCALE

PROFESSIONAL CERTIFICATION

I, MICHAEL J. GEZELL, HEREBY CERTIFY THAT THESE DOCUMENTS WERE PREPARED OR APPROVED BY ME, AND THAT I AM A DULY LICENSED PROFESSIONAL ENGINEER UNDER THE LAWS OF THE STATE OF MARYLAND. LICENSE NO: 44097, EXPIRATION DATE: 6/9/15

FOR REVISIONS 3 ONLY:

8/20/14

MISS UTILITY

BEFORE YOU DIG CALL 1-800-257-7777 PROTECT YOURSELF, GIVE TWO WORKING DAYS NOTICE

THIS DRAWING DOES NOT INCLUDE NECESSARY COMPONENTS FOR CONSTRUCTION SAFETY. ALL CONSTRUCTION MUST BE DONE IN COMPLIANCE WITH THE OCCUPATIONAL SAFETY AND HEALTH ACT OF 1970 AND ALL RULES AND REGULATIONS THERETO APPURTENANT.

THE CONTRACTOR TO CALL MISS UTILITY TO HAVE ALL EXISTING UTILITIES MARKED 48 HOURS PRIOR TO ANY CONSTRUCTION.

| REV. | DATE | DESCRIPTION | BY |
|---|---|---|---|
| 3 | 11/20/14 | REVISED LAYOUT: NEW PUMPS, CANOPY, ENG. BLDG. AND STA. LINES, UTILITY INFO. | |

OWNER/DEVELOPER: HRD LAND HOLDINGS, INC.
HOWARD RESEARCH AND DEVELOPMENT CORPORATION
THE ROUSE BUILDING
10275 LITTLE PATUXENT PARKWAY
COLUMBIA, MARYLAND 21044
PHONE: (410) 992-6000

PROJECT: BENSON EAST
PARCEL U; GASOLINE STATION WITH KIOSK (COSTCO GASOLINE); GATEWAY OVERLOOK SHOPPING CENTER

AREA: TAX MAP 37 GRID 1 & 2 ZONED NEW TOWN
PARCEL U
BENSON EAST
6TH ELECTION DISTRICT
HOWARD COUNTY, MARYLAND

TITLE: ARCHITECTURAL ELEVATIONS

BOHLER ENGINEERING, P.C.
• PROFESSIONAL ENGINEERING SERVICES •
• 22630 DAVIS DRIVE, SUITE 200 STERLING, VIRGINIA, 20164 •
• CONTACT: DAVID B. NEMECEK
• (703) 709-9500 FAX: (703) 709-9501 • www.bohlerengineering.com

6/26/07
DATE
ADAM J. VOLANTH
PROFESSIONAL ENGINEER NO. 21342

| | |
|---|---|
| DESIGNED BY: | J.A.D. |
| DRAWN BY: | R.F.G. |
| PROJECT NO.: | S040011.01 |
| DATE: | 6/25/07 |
| SCALE: | AS SHOWN |
| DRAWING NO.: | 22 OF 23 |

PLANNING BOARD APPROVAL STAMP

APPROVED
PLANNING BOARD
of HOWARD COUNTY
DATE 2-08-07

APPROVED: DEPARTMENT OF PLANNING AND ZONING

CHIEF-DEVELOPMENT ENGINEERING DIVISION — DATE 7/5/07
CHIEF-DIVISION OF LAND DEVELOPMENT — DATE 7/6/07
DIRECTOR — DATE 7/9/07

APPROVED: FOR PUBLIC WATER AND PUBLIC SEWERAGE SYSTEMS.

COUNTY HEALTH OFFICER — DATE 7/13/07
HOWARD COUNTY HEALTH DEPARTMENT

GENERAL NOTE:
IT IS THE RESPONSIBILITY OF THE CONTRACTOR TO REVIEW ALL OF THE DRAWINGS AND SPECIFICATIONS ASSOCIATED WITH THIS PROJECT WORK SCOPE PRIOR TO THE INITIATION OF CONSTRUCTION. SHOULD THE CONTRACTOR FIND A CONFLICT WITH THE DOCUMENTS RELATIVE TO THE SPECIFICATIONS OR APPLICABLE CODES, IT IS THE CONTRACTORS RESPONSIBILITY TO NOTIFY BOHLER ENGINEERING, P.C. IN WRITING PRIOR TO THE START OF CONSTRUCTION. FAILURE BY THE CONTRACTOR TO NOTIFY BOHLER ENGINEERING, P.C. SHALL CONSTITUTE ACCEPTANCE OF FULL RESPONSIBILITY BY THE CONTRACTOR TO COMPLETE THE SCOPE OF THE WORK AS DEFINED BY THE DRAWINGS AND IN FULL CONFORMANCE WITH LOCAL REGULATIONS AND CODES.

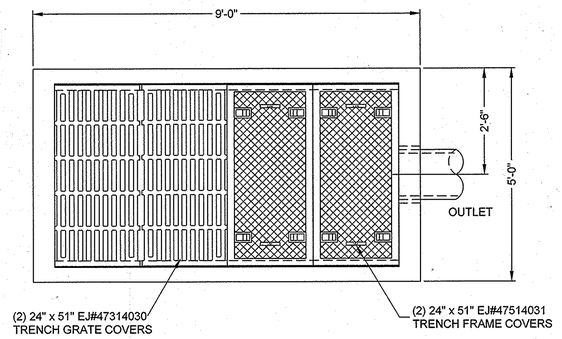


## PLAN VIEW
NOT TO SCALE

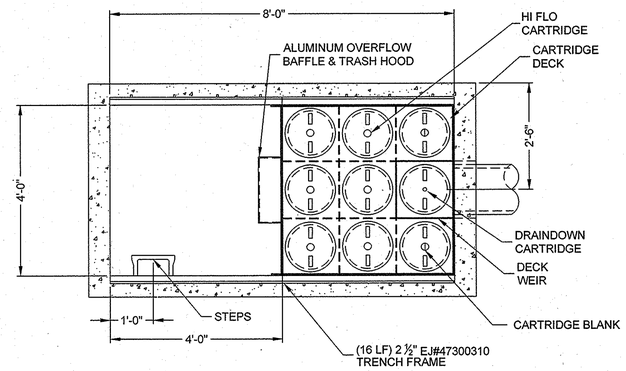


## PLAN VIEW
(COVERS REMOVED)
NOT TO SCALE

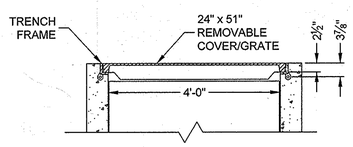


## SECTION A-A
NOT TO SCALE

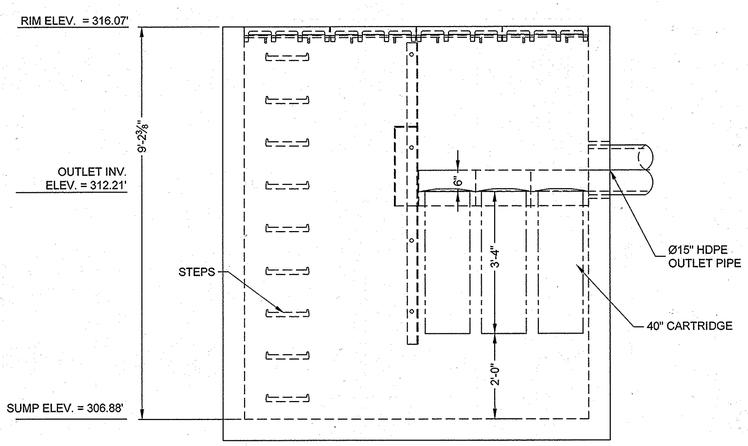


## ELEVATION VIEW
NOT TO SCALE

Owner:
Costco Wholesale.
45940 Horseshoe Drive, Suite 150
Sterling, VA 21066
Att: Erich Brann

PROFESSIONAL CERTIFICATION

I, MICHAEL J. GESELL, HEREBY CERTIFY THAT THESE DOCUMENTS WERE PREPARED OR APPROVED BY ME, AND THAT I AM A DULY LICENSED PROFESSIONAL ENGINEER UNDER THE LAWS OF THE STATE OF MARYLAND, LICENSE NO. 44097, EXPIRATION DATE: 6/9/15

8/21/14

MATERIAL LIST - PROVIDED BY CONTECH

| COUNT | DESCRIPTION | INSTALLED BY |
|---|---|---|
| 6 | 40" HI-FLO CARTRIDGE (60 mm ORIFICE) | CONTECH |
| 1 | 40" HI-FLO CARTRIDGE (60 mm ORIFICE) | CONTECH |
| 2 | CARTRIDGE BLANK (NO ORIFICE) | CONTECH |
| 1 | JELLYFISH VAULT CARTRIDGE DECK | CONTECH |
| 1 | JELLYFISH VAULT BAFFLE & TRASH HOOD (12" x 11" ORIFICE) | CONTECH |
| 16 LF | 2 ½" TRENCH FRAME EJ#47300310 | CONTECH |
| 2 | 24" x 51" TRENCH COVER EJ#47514031 | CONTECH |
| 2 | 24" x 51" TRENCH GRATE EJ#47314030 | CONTECH |
| 1 PLC | STEPS | CONTECH |

SITE DESIGN DATA

| | |
|---|---|
| WATER QUALITY FLOW RATE | 0.81 CFS |
| PEAK FLOW RATE | 4.4 CFS MAX |
| RETURN PERIOD OF PEAK FLOW | 10 YRS |

GENERAL NOTES:
1. CONTECH TO PROVIDE ALL MATERIALS UNLESS NOTED OTHERWISE.
2. FOR FABRICATION DRAWINGS WITH DETAILED STRUCTURE DIMENSIONS AND WEIGHT, PLEASE CONTACT YOUR CONTECH ENGINEERED SOLUTIONS REPRESENTATIVE. WWW.ContechES.COM
3. JELLYFISH WATER QUALITY STRUCTURE SHALL BE IN ACCORDANCE WITH ALL DESIGN DATA AND INFORMATION CONTAINED IN THIS DRAWING. CONTRACTOR TO CONFIRM STRUCTURE MEETS REQUIREMENTS OF PROJECT.
4. STRUCTURE SHALL MEET AASHTO HS-20, ASSUMING EARTH COVER OF 0' - 1', AND GROUNDWATER ELEVATION AT, OR BELOW, THE OUTLET PIPE INVERT ELEVATION. ENGINEER OF RECORD TO CONFIRM ACTUAL GROUNDWATER ELEVATION. CASTINGS SHALL MEET AASHTO M306 LOAD RATING AND BE CAST WITH THE CONTECH LOGO.
5. STRUCTURE SHALL BE PRECAST CONCRETE CONFORMING TO ASTM C-478 AND AASHTO LOAD FACTOR DESIGN METHOD.

INSTALLATION NOTES
A. ANY SUB-BASE, BACKFILL DEPTH, AND/OR ANTI-FLOTATION PROVISIONS ARE SITE-SEPCIFIC DESIGN CONSIDERATIONS AND SHALL BE SPECIFIED BY ENGINEER OF RECORD.
B. CONTRACTOR TO PROVIDE EQUIPMENT WITH SUFFICIENT LIFTING AND REACH CAPACITY TO LIFT AND SET THE STRUCTURE (LIFTING CLUTCHES PROVIDED)
C. CONTRACTOR WILL INSTALL AND LEVEL THE STRUCTURE, SEALING THE JOINTS, LINE ENTRY AND EXIT POINTS (NON-SHRINK GROUT WITH APPROVED WATERSTOP OR FLEXIBLE BOOT)
D. CONTRACTOR TO TAKE APPROPRIATE MEASURES TO PROTECT CARTRIDGES FROM CONSTRUCTION-RELATED EROSION RUNOFF.
E. CARTRIDGE INSTALLATION, BY CONTECH, SHALL OCCUR ONLY AFTER SITE HAS BEEN STABILIZED AND THE JELLYFISH UNIT IS CLEAN AND FREE OF DEBRIS. CONTACT CONTECH TO COORDINATE CARTRIDGE INSTALLATION WITH SITE STABILIZATION AT (866) 740-3318.

STRUCTURE WEIGHT
APPROXIMATE HEAVIEST PICK = TBD LBS.

PLANNING BOARD APPROVAL STAMP

APPROVED
PLANNING BOARD
of HOWARD COUNTY
DATE: 8/21/14

APPROVED: DEPARTMENT OF PLANNING AND ZONING

| | |
|---|---|
| CHIEF-DEVELOPMENT ENGINEERING DIVISION | DATE 9-23-14 |
| CHIEF-DIVISION OF LAND DEVELOPMENT | DATE 9-24-14 |
| DIRECTOR | DATE 9/24/14 |

APPROVED: FOR PUBLIC WATER AND PUBLIC SEWERAGE SYSTEMS.

| | |
|---|---|
| COUNTY HEALTH OFFICER<br>HOWARD COUNTY HEALTH DEPARTMENT | DATE 9/8/2014 |

| REV. | DATE | DESCRIPTION | BY |
|---|---|---|---|
| 3 | 8/21/14 | REVISED LAYOUT, NEW PUMPS AND CANOPY, RELOCATED BUS STOP AND SIDEWALK, AND STREET UPGRADES | MJG |

OWNER/DEVELOPER:
HRD LAND HOLDINGS, INC.
HOWARD RESEARCH AND DEVELOPMENT CORPORATION
THE ROUSE BUILDING
10275 LITTLE PATUXENT PARKWAY
COLUMBIA, MARYLAND 21044
PHONE: (410) 992-6000

PROJECT:
BENSON EAST
PARCEL V, GASOLINE STATION WITH KIOSK
(COSTCO GASOLINE): GATEWAY OVERLOOK SHOPPING CENTER

AREA: TAX MAP 37 GRID 1 & 2 ZONED NEW TOWN
PARCEL
BENSON EAST
6TH ELECTION DISTRICT
HOWARD COUNTY, MARYLAND

TITLE:
JELLYFISH FILTER STORMWATER DETAIL

BOHLER ENGINEERING, P.C.
PROFESSIONAL ENGINEERING SERVICES
22630 DAVIS DRIVE, SUITE 200 STERLING, VIRGINIA, 20164
CONTACT: DAVID B. NEMECEK
(703) 709-9500 FAX: (703) 709-9501 WWW.BOHLERENG.COM

MICHAEL J. GESELL
PROFESSIONAL ENGINEER NO. 44097

| | |
|---|---|
| DESIGNED BY: | MJG |
| DRAWN BY: | MDD |
| PROJECT NO.: | MD130004 |
| DATE: | 7/24/14 |
| SCALE: | |
| DRAWING NO.: | 23 OF 23 |

SDP-07-036