SHEET INDEX	
SHEET NO.	DESCRIPTION
1	TITLE SHEET
2	SITE DEVELOPMENT PLAN
3	SITE DEVELOPMENT PLAN
4	SEDIMENT CONTROL PLAN
5	SEDIMENT CONTROL PLAN
6	DRAINAGE AREA MAP AND SOILS MAP
7	DRAINAGE AREA MAP AND SOILS MAP
8	GEOMETRY PLAN
9	GEOMETRY PLAN
10	LANDSCAPE PLAN
11	LANDSCAPE PLAN
12	HANDICAP RAMP DETAILS AND SCHEMATIC BUILDING PROFILES
13	DETAILS
14	STORM DRAIN PROFILES AND STRUCTURE SCHEDULE
15	STORM DRAIN PROFILES
16	SEDIMENT CONTROL NOTES AND DETAILS
17	SIGHT DISTANCE PLAN AND PROFILE
18	WATER AND SEWER PROFILES
19	TRUCK MANUEVERING PLAN AND MAINTENANCE OF TRAFFIC PLAN
20	DUMPSTER PLAN, ELEVATIONS AND DETAILS
21	STREAM CROSSING NOTES & DETAILS

SITE DEVELOPMENT PLAN
PATAPSCO VALLEY OFFICE CAMPUS
PARCELS C-1, C-2 AND C-3

ZONED: M-2

TAX MAP No. 38 GRID No. 14,15,20,21 PARCEL No. 285

FIRST ELECTION DISTRICT HOWARD COUNTY, MARYLAND

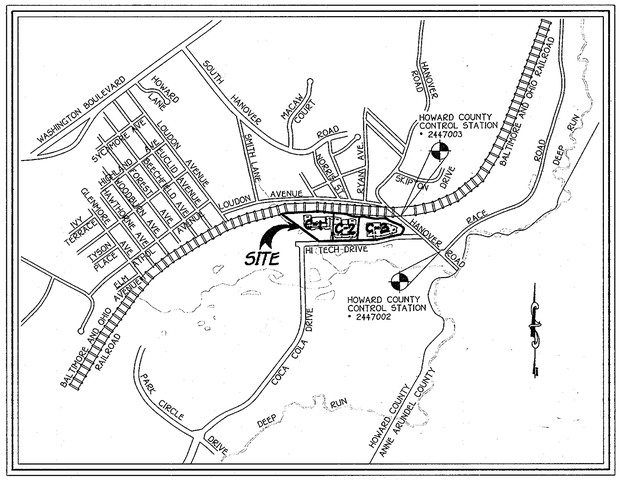

VICINITY MAP
SCALE: 1"= 1200'

GENERAL NOTES:

1. ALL CONSTRUCTION SHALL BE IN ACCORDANCE WITH THE LATEST STANDARDS AND SPECIFICATIONS OF HOWARD COUNTY PLUS MSHA STANDARDS AND SPECIFICATIONS IF APPLICABLE
2. THE CONTRACTOR SHALL NOTIFY THE BUREAU OF ENGINEERING/CONSTRUCTION INSPECTION DIVISION AT (410) 313-1880 AT LEAST (5) FIVE WORKING DAYS PRIOR TO THE START OF WORK.
3. THE CONTRACTOR SHALL NOTIFY "MISS UTILITY" AT 1-800-257-7777 AT LEAST 48 HOURS PRIOR TO ANY DIGGING AND EXCAVATION WORK.
4. PROJECT BACKGROUND:
   A. LOCATION: TAX MAP 38, GRID 20, PARCEL 285
   B. THE SUBJECT PROPERTY IS ZONED M-2 PER 2/2/2004 COMPREHENSIVE ZONING PLAN.
   C. ELECTION DISTRICT: FIRST
   D. SECTION: N/A AREA: N/A
   E. SITE AREA: 15.64 AC.±
   F. PROPOSED USE FOR THIS SITE AND STRUCTURES: GENERAL OFFICES USE
   G. PARKING REQUIREMENTS: (SEE PARKING CHART THIS SHEET)
5. TRAFFIC CONTROL DEVICES, MARKINGS AND SIGNING SHALL BE IN ACCORDANCE WITH THE LATEST EDITION OF THE MANUAL ON UNIFORM TRAFFIC CONTROL DEVICES (MUTCD). ALL STREET AND REGULATORY SIGNS SHALL BE IN PLACE PRIOR TO PLACEMENT OF ANY ASPHALT.
6. ALL PLAN DIMENSIONS ARE TO THE FACE OF CURB OR FACE OF BUILDING UNLESS OTHERWISE NOTED. DIMENSIONS ARE MEASURED PERPENDICULAR OR RADIAL BETWEEN ITEMS UNLESS OTHERWISE NOTED.
7. THE EXISTING TOPOGRAPHY AND FEATURES WERE DERIVED FROM A FIELD RUN MONUMENTAL BOUNDARY SURVEY BY FISHER COLLINS & CARTER INC. AND HARFORD AERIAL SURVEYS, INC. ON OR ABOUT FEBRUARY 2006
8. HORIZONTAL AND VERTICAL CONTROL DATUM IS BASED ON HOWARD COUNTY GEODETIC CONTROL STATIONS: (NAD 27 MARYLAND COORDINATE SYSTEM)
   HOWARD COUNTY MONUMENT 2447002 - (N 494376.0470 E 879030.1730 ELEV. 89.819)
   HOWARD COUNTY MONUMENT 2447003 - (N 494994.5460 E 878209.6580 ELEV. 46.266)
9. PUBLIC WATER AND SEWER IS TO BE UTILIZED FOR THIS PROJECT.
10. ALL ON-SITE STORM DRAINS UNDER THIS SITE DEVELOPMENT PLAN ARE PRIVATE.
11. THE EXISTING UTILITIES SHOWN HEREON WERE DERIVED FROM AVAILABLE PUBLIC RECORDS. THE CONTRACTOR MUST DIG TEST PITS BY HAND AT ALL UTILITY CROSSINGS AND CONNECTION POINTS TO VERIFY THE EXACT LOCATIONS.
12. ALL PROPOSED RAMPS SHALL BE IN ACCORDANCE WITH CURRENT A.D.A STANDARDS ACCESSIBILITY GUIDELINES. MAXIMUM SIDEWALK CROSS SLOPE SHALL BE TWO PRECENT. PROVIDED A (5'x5') FIVE FOOT BY FIVE FOOT LEVEL LANDING (MAX. SLOPE 2%) AT THE TOP AND BOTTOM OF ALL RAMPS AND BUILDING ENTRANCES AND EXITS. HANDRAILS SHALL BE PROVIDED ON ALL RAMPS IN ACCORDANCE WITH SECTION 4.8.5 OF THE A.D.A. STANDARDS ACCESSIBILITY GUIDELINES.
13. ALL DRIVEWAYS AND PARKING TO BE PRIVATELY OWNED AND MAINTAINED.
14. ANY DAMAGE TO COUNTY AND OR STATE OWNED RIGHT OF WAY TO BE CORRECTED AT THE CONTRACTOR'S EXPENSE.
15. TRENCH BEDDING FOR STORM DRAIN STRUCTURES SHALL BE IN ACCORDANCE WITH THE HOWARD COUNTY STANDARD G2.01 CLASS C BEDDING UNLESS OTHERWISE NOTED.
16. GUTTER PAN OF CURBS SHALL BE PITCHED TO CONFORM TO THE ADJACENT DRAINAGE PATTERNS OF THE ADJOINING PAVING FOR VEHICULAR USE. SEE DETAIL
17. FOR DETAILS OF BUILDING PROFILE, PARKING, ROAD SECTION, HANDICAP, CURB AND GUTTER SEE SHEETS 12 AND 13. (3/13) (4/13)
18. THERE ARE NO KNOWN GRAVE SITES OR CEMETERIES ON THIS SITE BASED ON A VISUAL SITE VISIT AND BASED ON AN EXAMINATION OF THE HOWARD COUNTY CEMETARY INVENTORY MAP.
19. THIS PROJECT IS RECORDED AMONG THE LAND RECORDS IN HOWARD COUNTY, MARYLAND AS PLAT #18110 AND #18111 (F 06-127).
20. ALL OUTDOOR LIGHTING SHALL COMPLY WITH ZONING REGULATIONS SECTION 134 WHICH REQUIRES LIGHTS TO BE INSTALLED TO DIRECT/REFLECT LIGHT DOWNWARDS AND INWARDS ON THE SITE AND AWAY FROM ALL PUBLIC STREETS AND RESIDENTIAL AREAS. SEE EXTERIOR LIGHT DETAIL ON SHEET 13.
21. THE BUILDINGS SHALL BE EQUIPPED WITH AN AUTOMATIC FIRE PREVENTION SPRINKLER SYSTEM.
22. PREVIOUS FILE NUMBERS: S 91-19, P 91-13, P 91-14, WP 91-98, F 94-24, F 06-127, F 02-164, F-07-144, F-08-198.
23. THIS SDP IS SUBJECT TO THE FIRST AMENDMENT TO THE FIFTH EDITION OF THE SUBDIVISION AND LAND DEVELOPMENT REGULATIONS DATED OCTOBER 2, 2003 AND THE AMENDED ZONING REGULATIONS, PER COUNCIL BILL 75-2003.
24. ALL SIGN POSTS USED FOR TRAFFIC CONTROL SIGNS INSTALLED IN THE COUNTY RIGHT-OF-WAY SHALL BE MOUNTED ON A 2" GALVANIZED STEEL, PERFORATED, SQUARE TUBE POST (14 GAUGE) INSERTED INTO A 2-1/2" GALVANIZED STEEL, PERFORATED, SQUARE TUBE SLEEVE (12 GAUGE) - 3' LONG. A GALVANIZED STEEL POLE CAP SHALL BE MOUNTED ON TOP OF EACH POST.
25. THIS SDP IS SUBJECT TO THE AMENDED FIFTH EDITION OF THE SUBDIVISION AND LAND DEVELOPMENT REGULATIONS PER COUNCIL BILL NO. 45-2003 AND THE AMENDED ZONING REGULATIONS, PER COUNCIL BILL 75-2003. DEVELOPMENT OR CONSTRUCTION ON THIS PROPERTY MUST COMPLY WITH SETBACKS AND BUFFER REGULATIONS IN EFFECT AT THE TIME OF SUBMISSION OF THE SITE DEVELOPMENT PLAN, WAIVER PETITION APPLICATION OR BUILDING/GRADING PERMIT APPLICATIONS.
26. FINANCIAL SURETY FOR THE REQUIRED LANDSCAPING HAS BEEN POSTED AS PART OF THE DPW DEVELOPERS AGREEMENT IN THE AMOUNT OF $29,070.00.
27. THE TRAFFIC STUDY WAS PERFORMED BY THE TRAFFIC GROUP AND APPROVED ON OCTOBER 1, 1992 UNDER P 91-14. THE MARS GROUP INC. PREPARED AN UPDATED TRAFFIC STUDY ON NOVEMBER 2006.
28. NOISE STUDY IS NOT REQUIRED FOR THIS INDUSTRIAL ZONED PROPERTY.
29. STORM WATER MANAGEMENT FOR THE ENTIRE SUBDIVISION WAS PROVIDED UNDER F 94-24. EXTENDED DETENTION FACILITIES WERE SIZED TO MANAGE ULTIMATE SITE CONDITIONS THAT ARE OWNED BY C&S PARTNERSHIP, LLC AND JOINTLY MAINTAINED WITH C&S PARTNERSHIP, LLC AND HOWARD COUNTY DEPARTMENT OF PUBLIC WORKS.
30. THIS PLAN IS EXEMPT FROM COMPLIANCE WITH THE REQUIREMENTS OF THE FOREST CONSERVATION ACT PER SUBDIVISION SECTION 16.1202 (b)(1)(iii) BECAUSE THIS SUBDIVISION HAD PRELIMINARY PLANS (P 91-13 AND P 91-14) APPROVED PRIOR TO DEC. 31, 1992 AND THIS SITE DEVELOPMENT PLAN DOES NOT EXCEED THE LIMIT OF DISTURBANCE SHOWN ON P 91-13 OR P 91-14.
31. THE FLOODPLAIN STUDY AND WETLANDS DELINEATION WAS COMPLETED, REVIEWED AND APPROVED UNDER P 91-14 ON OCTOBER 1, 1992.
32. IMPACT TO NON-TIDAL WETLANDS AND WATERWAYS WAS APPROVED ON JANUARY 13, 1994 BY MARYLAND DEPARTMENT OF NATURAL RESOUCES WATER RESOURCES ADMINISTRATION TRACKING NO. 199401198 DIVISION NO. 93-NT-0858.
33. THERE ARE NO HISTORIC STRUCTURES LOCATED ON THIS SITE.
34. SNOW REMOVAL AND ROAD MAINTENANCE TO BE PRIVATE.
35. STD - DENOTES STANDARD CURB AND GUTTER.
36. REV - DENOTES REVERSE CURB AND GUTTER.
37. CONTRACTOR TO VERIFY THE SIZE, LOCATION AND ELEVATION OF ALL WATER, SEWER AND STORM DRAIN CONNECTIONS PRIOR TO CONSTRUCTION. EXISTING UTILITIES SHOWN IS FROM BEST AVAILABLE INFORMATION.
38. STREET LIGHT PLACEMENT AND THE TYPE OF FIXTURE AND POLE SHALL BE IN ACCORDANCE WITH THE HOWARD COUNTY DESIGN MANUAL, VOLUME III (1993) AND AS MODIFIED BY GUIDELINES FOR STREET LIGHTS IN RESIDENTIAL DEVELOPMENTS (JUNE 1993)". A MINIMUM SPACING OF 20' SHALL BE MAINTAINED BETWEEN ANY STREETLIGHT AND ANY TREE.
39. THE KNOX BOX LOCATION SHOWN ON SHEETS 2 AND 3 SHALL BE PLACED TO THE RIGHT OF THE MAIN ENTRANCE AT A RANGE OF 4-5 FEET IN HEIGHT AND NO MORE THAN 6 FEET LATERALLY FROM THE DOOR. THE KNOX BOX SHALL BE ELECTRONICALLY SUPERVISED TO NOTIFY THE OWNER THAT IT IS BEING ACCESSED AND INTEGRATED WITH THE FIRE ALARM SYSTEM (NFPA-1 10.12.1).

Professional Certification. I hereby certify that these documents were prepared or approved by me, and that I am a duly licensed professional engineer under the laws of the State of Maryland. License No. 16547 Expiration Date: 8/15/13

9/11/12
FOR REV. 4 ONLY

STREET ADDRESS CHART		
BUILDING	PARCEL	STREET ADDRESS
A	C-2	7030 HI TECH DRIVE
B	C-1	7050 HI TECH DRIVE
C	C-3	7010 HI TECH DRIVE

SITE ANALYSIS DATA:

1. TOTAL SITE AREA: 15.64 AC. ± PARCEL C-1 (6.716 AC.), PARCEL C-2 (4.520 AC.), PARCEL C-3 (4.968 AC.)
2. PLAN SUBMISSION AREA: 15.64 AC ±
3. AREA DISTURBED: 10.90 AC. ±
4. BUILDING COVERAGE OF SITE: A - 24,444 SF (0.56 AC.) = 12.44% (C-2)
   B - 20,499 SF (0.47 AC.) = 7.56% (C-1)
   C - 20,499 SF (0.47 AC.) = 9.64% (C-3)
   TOTAL - 65,442 SF (1.50 AC.) = 9.6±

PARKING DATA CHART:

GENERAL OFFICE USE
BUILDING A = 48,888 SF - PARCEL C-2
BUILDING B = 40,998 SF - PARCEL C-1
BUILDING C = 40,998 SF - PARCEL C-3
TOTAL AREA = 130,884 SF

NUMBER OF PARKING SPACES REQUIRED: 434
NUMBER OF HANDICAP PARKING SPACES REQUIRED: 19
NUMBER OF PARKING SPACES PROVIDED ON SITE (INCLUDING HANDICAP PARKING) = 544
NUMBER OF HANDICAP PARKING SPACES PROVIDED (INCLUDING HANDICAP VAN SPACES) = 19

NOTE:

A DECLARATION OF EASEMENTS HAS BEEN RECORDED AMONG THE LAND RECORDS OF HOWARD COUNTY MARYLAND IN LIBER 11164 AT FOLIO 599. 1.) FOR CONSTRUCTION, USE, OPERATION AND MAINTENANCE OF A DRIVEWAY TO PROVIDE INGRESS AND EGRESS TO AND FROM HI TECH DRIVE FOR PARCELS C-1 AND C-2 AS SHOWN ON PLAT NO. 20001. 2.) FOR THE INSTALLATION, CONSTRUCTION, USE, OPERATION AND MAINTENANCE OF UTILITIES AS SHOWN ON PLAT NO. 20001 AS A PRIVATE DRAINAGE AND UTILITY EASEMENT TO SERVICE PARCELS C-1 AND C-2.

BUILDING 'A': (PARCEL C-2)

GENERAL OFFICE USE
1st FLOOR AREA = 24,444 SF
2nd FLOOR AREA = 24,444 SF
TOTAL AREA = 48,888 SF

NUMBER OF PARKING SPACES REQUIRED: 48,888 SF x 3.3 SPACES/1000 SF = 162
NUMBER OF HANDICAP PARKING SPACES REQUIRED: 7
NUMBER OF PARKING SPACES PROVIDED ON SITE (INCLUDING HANDICAP PARKING) = 215
NUMBER OF HANDICAP PARKING SPACES PROVIDED (INCLUDING HANDICAP VAN SPACES) = 7

BUILDING 'B': (PARCEL C-1)

GENERAL OFFICE USE
1st FLOOR AREA = 20,499 SF
2nd FLOOR AREA = 20,499 SF
TOTAL AREA = 40,998 SF

NUMBER OF PARKING SPACES REQUIRED: 40,998 SF x 3.3 SPACES/1000 SF = 136
NUMBER OF HANDICAP PARKING SPACES REQUIRED: 6
NUMBER OF PARKING SPACES PROVIDED ON SITE (INCLUDING HANDICAP PARKING) = 156
NUMBER OF HANDICAP PARKING SPACES PROVIDED (INCLUDING HANDICAP VAN SPACES) = 6

BUILDING 'C': (PARCEL C-3)

GENERAL OFFICE USE
1st FLOOR AREA = 20,499 SF
2nd FLOOR AREA = 20,499 SF
TOTAL AREA = 40,998 SF

NUMBER OF PARKING SPACES REQUIRED: 40,998 SF x 3.3 SPACES/1000 SF = 136
NUMBER OF HANDICAP PARKING SPACES REQUIRED: 6
NUMBER OF PARKING SPACES PROVIDED ON SITE (INCLUDING HANDICAP PARKING) = 173
NUMBER OF HANDICAP PARKING SPACES PROVIDED (INCLUDING HANDICAP VAN SPACES) = 6

FISHER, COLLINS & CARTER, INC.
CIVIL ENGINEERING CONSULTANTS & LAND SURVEYORS
CENTENNIAL SQUARE OFFICE PARK - 10272 BALTIMORE NATIONAL PIKE
ELLICOTT CITY, MARYLAND 21042
(410) 461 - 2855

DATE	DESCRIPTION
	REVISION BLOCK
08-23-12	4 ADDITION OF LOADING RAMP ON BUILDING A AND ELIMINATE 7 SPACES, AN ISLAND & LIGHT POLE.
3/10/08	3 RESUBDIVIDED PARCEL C INTO PARCELS C-1, C-2 AND C-3, REVISED DATA CHARTS AND TITLE BLOCK.

OWNER/DEVELOPER
CSG PATAPSCO, LLC
5024 CAMPBELL BOULEVARD, SUITE G
WHITE MARSH, MARYLAND 21236
410-933-2091

APPROVED: DEPARTMENT OF PLANNING AND ZONING

Director - Department of Planning and Zoning — Date 6/5/07
Chief, Division of Land Development — Date 6/5/07
Chief, Development Engineering Division J.P. — Date 5/30/07

SUBDIVISION			SECTION/AREA		PARCEL NO.
PATAPSCO VALLEY BUSINESS CENTER			N/A		C-1, C-2 AND C-3
PLAT NO.	BLOCK NO.	ZONE	TAX MAP	ELEC. DIST.	CENSUS TR.
18773 & 18980 F 07-144	14, 15, 20, 21	M-2	38	FIRST	601201
WATER CODE	PLAT NO. 20000 & 20001 F-08-198		SEWER CODE		
A04			2150500, 2150501, 2150300		

TITLE SHEET

PATAPSCO VALLEY BUSINESS CENTER
PATAPSCO VALLEY OFFICE CAMPUS
PARCELS C-1, C-2 AND C-3
ZONED: M-2
TAX MAP No. 38 PARCEL No. 285 GRID No. 14,15,20,21
FIRST ELECTION DISTRICT HOWARD COUNTY, MARYLAND
SCALE: AS SHOWN
DATE: MARCH 15, 2007
SHEET 1 OF 21

SDP-07-028

SDP-07-028

I:\08003\dwg\SITE DEVELOPMENT PLAN\08003-8001 TITLE SHEET.dwg, TITLE SHEET, 3/16/2007 7:47:23 AM, 1:1

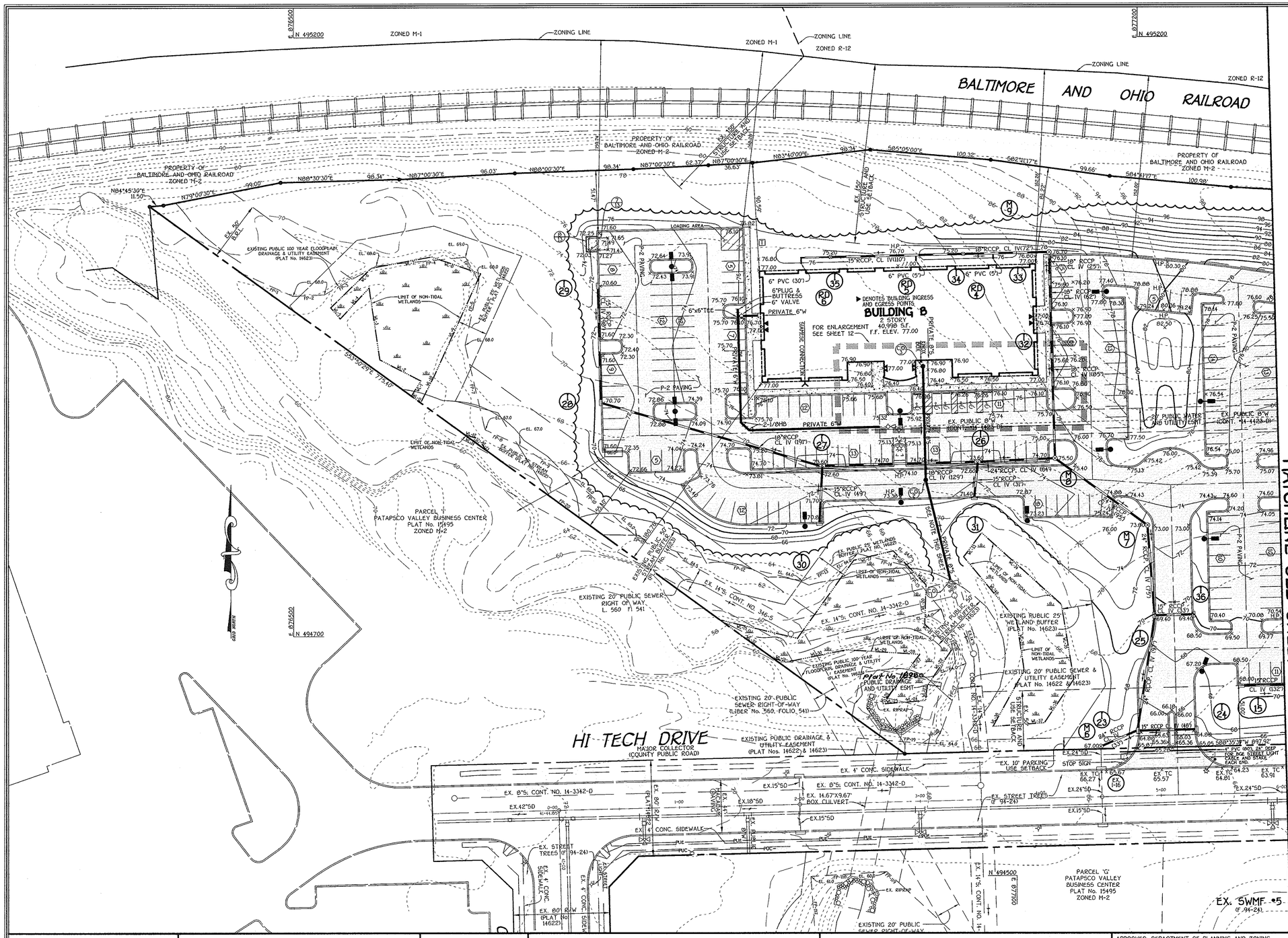

LEGEND

SYMBOL	DESCRIPTION
	EXISTING STORM DRAIN LINE
	BOUNDARY/RIGHT OF WAY LINE
B.R.L.	BUILDING RESTRICTION LINE
	PROPOSED CURB TRANSITION
	PROPOSED STORM DRAIN PIPE
	PROPOSED WATER PIPE
	PROPOSED SEWER PIPE
	PROPOSED CONCRETE
	PROPOSED PAVING
	PROPOSED LIGHT
	EXISTING TREELINE
	PROPOSED TREELINE

Existing Wetland Limits Metes And Bounds Plat No. 14623

Line	Bearing & Distance	Line	Bearing & Distance	Line	Bearing & Distance
WL-1	N31°46'23"E 14.95	WL-19	S43°51'31"E 18.04	WL-37	S85°54'51"W 42.78
WL-2	N62°36'37"W 38.29	WL-20	S01°56'48"W 32.85	WL-38	N29°03'34"E 53.24
WL-3	N08°28'18"W 60.73	WL-21	S47°29'11"E 30.82	WL-39	N08°18'24"W 42.45
WL-4	S42°46'36"W 35.19	WL-22	S34°01'15"W 37.08	WL-40	N39°40'33"W 68.93
WL-5	N39°50'15"W 12.24	WL-23	S06°05'44"W 12.25	WL-41	N76°20'50"E 41.54
WL-6	N45°32'16"E 47.13	WL-24	S85°24'25"W 15.96	WL-42	N03°11'14"E 56.05
WL-7	N79°24'15"E 50.85	WL-25	S85°24'25"W 20.02	WL-43	N70°39'37"E 10.38
WL-8	S70°55'01"E 42.99	WL-26	N36°47'06"E 34.85	WL-44	S12°58'58"E 75.35
WL-9	S24°16'00"W 94.15	WL-27	N36°47'07"E 16.93	WL-45	S01°22'22"E 46.29
WL-10	S26°48'22"W 24.64	WL-28	N85°19'08"W 9.67	WL-46	S28°01'56"E 80.37
WL-11	N53°50'29"W 9.44	WL-29	N86°19'11"W 51.22	WL-47	S16°07'15"W 70.15
WL-12	S74°34'17"E 12.11	WL-30	S78°20'20"W 51.25	WL-48	S00°04'25"E 22.00
WL-13	S31°30'24"E 11.28	WL-31	N72°33'42"W 11.75	WL-49	S71°51'27"W 6.72
WL-14	N53°50'29"W 21.75	WL-32	N53°50'29"W 54.04	WL-50	N06°51'37"W 24.24
WL-15	S76°26'25"E 66.03	WL-33	N36°34'32"E 24.94	WL-51	N84°13'47"W 28.60
WL-16	N35°45'10"E 80.31	WL-34	S48°00'10"E 89.07	WL-52	N25°00'00"W 93.83
WL-17	N76°41'29"E 33.59	WL-35	S09°16'28"E 63.54	WL-53	N04°12'44"W 102.49
WL-18	S43°51'32"E 21.34	WL-36	S33°52'09"W 43.68		

Existing 100 Year Floodplain, Drainage & Utility Easement Plat No. 14623

Line	Bearing & Distance
FP-1	S65°26'20"E 47.49
FP-2	N87°25'53"E 26.19
FP-3	N60°43'27"E 49.26
FP-4	N84°26'13"E 74.34
FP-5	S28°24'40"E 23.38
FP-6	S12°14'13"W 54.29
FP-7	S13°12'19"E 72.52
FP-8	S65°41'57"E 31.53
FP-9	S57°36'18"E 50.68
FP-10	S47°32'53"E 73.50
FP-11	S69°48'38"E 35.25
FP-12	S76°43'30"E 107.29
FP-13	N63°22'23"E 51.12
FP-14	S75°48'06"E 40.90
FP-15	S38°53'18"E 46.59
FP-16	S24°53'54"E 50.21
FP-17	S20°06'14"W 59.64
FP-18	S56°15'36"W 18.97
FP-19	N85°33'26"W 30.08
FP-20	N53°50'29"W 662.94

STREET LIGHT CHART

STREET NAME	STATION	OFFSET	FIXTURE/POLE TYPE	LEGEND
HI TECH DRIVE	C.L. STA. 5+45	29' LT	250-WATT "SAG" H.P.S. VAPOR FIXTURE, 12' ARM MOUNTED ON A 30-FOOT BLACK FIBERGLASS POLE.	
HI TECH DRIVE	C.L. STA. 8+52	29' LT	250-WATT "SAG" H.P.S. VAPOR FIXTURE, 12' ARM MOUNTED ON A 30-FOOT BLACK FIBERGLASS POLE.	
HI TECH DRIVE	C.L. STA. 12+49	29' LT	250-WATT "SAG" H.P.S. VAPOR FIXTURE, 12' ARM MOUNTED ON A 30-FOOT BLACK FIBERGLASS POLE.	
HI TECH DRIVE	C.L. STA. 15+48	29' LT	250-WATT "SAG" H.P.S. VAPOR FIXTURE, 12' ARM MOUNTED ON A 30-FOOT BLACK FIBERGLASS POLE.	

NOTE: FOR THE PRIVATE 8" SEWER MAIN INSTALLATION FROM THE EX. 8" PLUG TO CO #1, SEE SHEET 21 OF 21 FOR "BEST MANAGEMENT PRACTICES FOR WORK IN NONTIDAL WETLANDS AND WETLAND BUFFERS"

STATE OF MARYLAND — CHRISTOPHER T. FISHER — No. 21436 — PROFESSIONAL ENGINEER

FISHER, COLLINS & CARTER, INC.
CIVIL ENGINEERING CONSULTANTS & LAND SURVEYORS
CENTENNIAL SQUARE OFFICE PARK - 10272 BALTIMORE NATIONAL PIKE
ELLICOTT CITY, MARYLAND 21042
(410) 461 - 2855

DATE	DESCRIPTION
	REVISION BLOCK

OWNER/DEVELOPER
CSG PATAPSCO, LLC
5024 CAMPBELL BOULEVARD, SUITE G
WHITE MARSH, MARYLAND 21236
410-933-2091

APPROVED: DEPARTMENT OF PLANNING AND ZONING

Director - Department of Planning and Zoning — Date 6/5/07
Chief, Division of Land Development — Date 6/5/07
Chief, Development Engineering Division J.P. — Date 5/30/07

SUBDIVISION	SECTION/AREA	PARCEL NO.
PATAPSCO VALLEY BUSINESS CENTER	N/A	C

PLAT NO.	BLOCK NO.	ZONE	TAX MAP	ELEC. DIST.	CENSUS TR.
18974 & 18980 F.O.T. 144	14, 15, 20, 21	M-2	38	FIRST	601201

WATER CODE	SEWER CODE
A04	2150500, 2150501, 2150300

SITE DEVELOPMENT PLAN

PATAPSCO VALLEY BUSINESS CENTER
PATAPSCO VALLEY OFFICE CAMPUS
PARCEL 'C'
ZONED: M-2

TAX MAP No. 38 PARCEL No. 285 GRID No. 14,15,20,21
FIRST ELECTION DISTRICT HOWARD COUNTY, MARYLAND
SCALE: 1" = 40'
DATE: MARCH 15, 2007
SHEET 2 OF 21 SDP-07-028

I:\06009dwg\SITE DEVELOPMENT PLAN\06003-6001 SITE PLAN.dwg, SITE PLAN SHEET-1, 3/16/2007 7:48:12 AM, 1:1

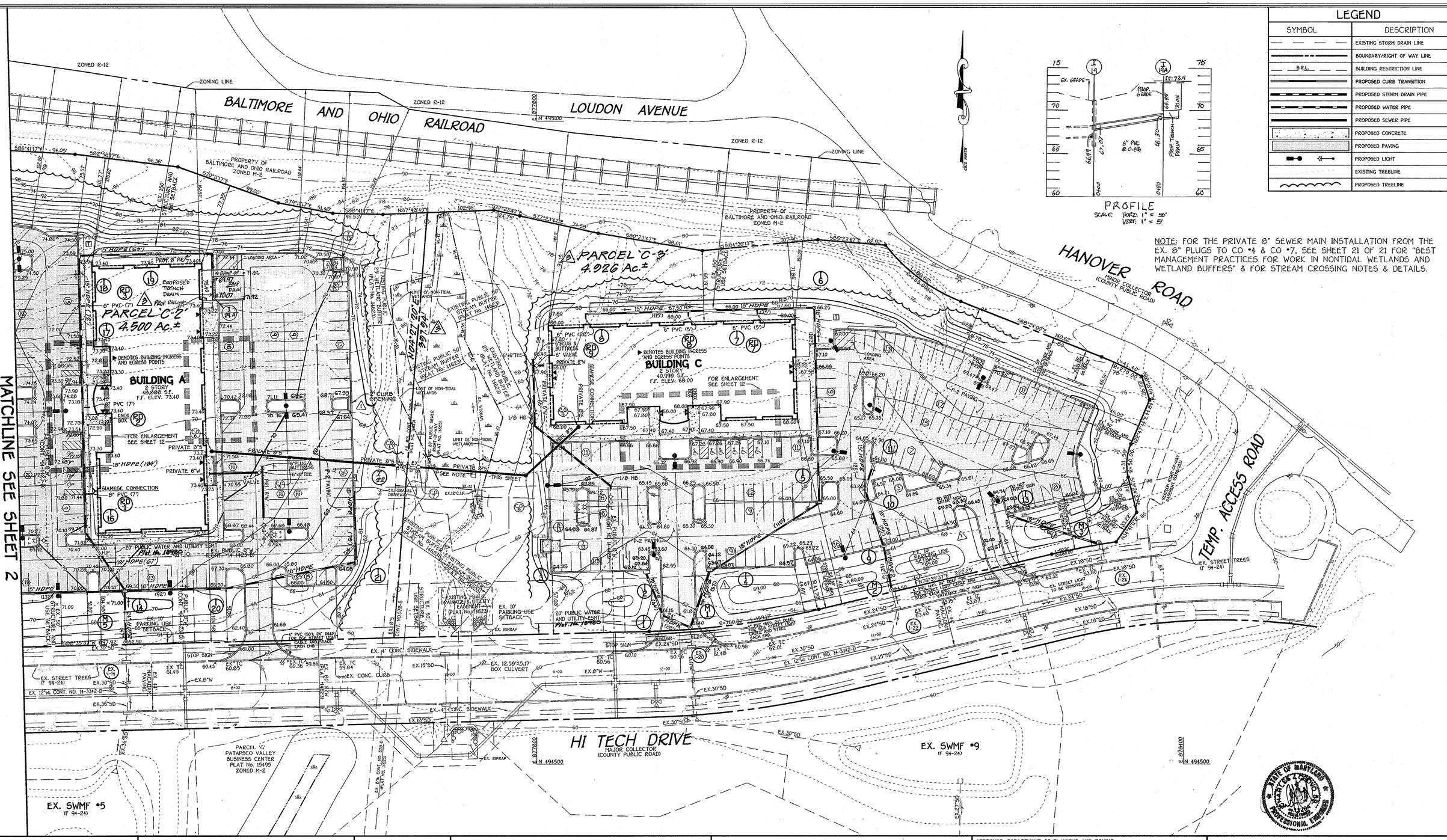

LEGEND

SYMBOL	DESCRIPTION
	EXISTING STORM DRAIN LINE
	BOUNDARY/RIGHT OF WAY LINE
B.R.L.	BUILDING RESTRICTION LINE
	PROPOSED CURB TRANSITION
	PROPOSED STORM DRAIN PIPE
	PROPOSED WATER PIPE
	PROPOSED SEWER PIPE
	PROPOSED CONCRETE
	PROPOSED PAVING
	PROPOSED LIGHT
	EXISTING TREELINE
	PROPOSED TREELINE

NOTE: FOR THE PRIVATE 8" SEWER MAIN INSTALLATION FROM THE EX. 8" PLUGS TO CO #4 & CO #7, SEE SHEET 21 OF 21 FOR "BEST MANAGEMENT PRACTICES FOR WORK IN NONTIDAL WETLANDS AND WETLAND BUFFERS" & FOR STREAM CROSSING NOTES & DETAILS.

FISHER, COLLINS & CARTER, INC.
CIVIL ENGINEERING CONSULTANTS & LAND SURVEYORS
CENTENNIAL SQUARE OFFICE PARK - 10272 BALTIMORE NATIONAL PIKE
ELLICOTT CITY, MARYLAND 21042
(410) 461 - 2855

DATE	DESCRIPTION
08-23-12	4 ADDITION OF LOADING RAMP ON BUILDING A AND ELIMINATE 7 SPACES, AN ISLAND & LIGHT POLE.
3-10-08	3 Resubdivided Parcel C into Parcels C-1, C-2 & C-3. Revised Title Block.
9.25.07	2 Changed all storm drain pipe from RCCP to HDPE.
6/8/07	1 REVISED STORM DRAINS AND GRADING

REVISION BLOCK

Professional Certification. I hereby certify that these documents were prepared or approved by me, and that I am a duly licensed professional engineer under the laws of the State of Maryland.

License No. 16597, Expiration Date: 8/15/13

STATE OF MARYLAND — REGISTERED PROFESSIONAL ENGINEER

9/11/12
FOR REV. 4 ONLY

OWNER/DEVELOPER
CSG PATAPSCO, LLC
5024 CAMPBELL BOULEVARD, SUITE G
WHITE MARSH, MARYLAND 21236
410-933-2091

APPROVED: DEPARTMENT OF PLANNING AND ZONING

Director - Department of Planning and Zoning — Date 6/5/07
Chief, Division of Land Development — Date 6/5/07
Chief, Development Engineering Division — J.P. — Date 5/30/07

SUBDIVISION	SECTION/AREA	PARCEL NO.
PATAPSCO VALLEY BUSINESS CENTER	N/A	C-1, C-2 & C-3

PLAT NO.	BLOCK NO.	ZONE	TAX MAP	ELEC. DIST.	CENSUS TR.
18979 & 18' F-07-144	14, 15, 20, 21	M-2	38	FIRST	601201

WATER CODE: A04 — PLAT NO. 20000 & 20001 F-08-138
SEWER CODE: 2150500, 2150501, 2150300

SITE DEVELOPMENT PLAN

PATAPSCO VALLEY BUSINESS CENTER
PATAPSCO VALLEY OFFICE CAMPUS
PARCELS C-1, C-2 AND C-3 3
ZONED: M-2
TAX MAP No. 38 PARCEL No. 285 GRID No. 14,15,20,21
FIRST ELECTION DISTRICT HOWARD COUNTY, MARYLAND
SCALE: 1" = 40'
DATE: MARCH 15, 2007
SHEET 3 OF 21
SDP-07-028

I:\06003\dwg\SITE DEVELOPMENT PLAN\06003-6001 SITE PLAN.dwg, SITE PLAN SHEET-2, 3/16/2007 7:50:17 AM, 1:1

LEGEND

SYMBOL	DESCRIPTION
	EXISTING STORM DRAIN LINE
	BOUNDARY/RIGHT OF WAY LINE
B.R.L.	BUILDING RESTRICTION LINE
	PROPOSED CURB TRANSITION
	PROPOSED STORM DRAIN PIPE
	PROPOSED WATER PIPE
	PROPOSED SEWER PIPE
	PROPOSED CONCRETE
	EXISTING PAVING
	PROPOSED LIGHT
	LIMIT OF DISTURBANCE
SSF SSF	SUPER SILT FENCE
TP TP	TREE PROTECTION FENCE
	EXISTING TREELINE
	PROPOSED TREELINE

SEQUENCE OF CONSTRUCTION

1. OBTAIN GRADING PERMIT. (1 DAY)
2. NOTIFY "MISS UTILITY" AT LEAST 48 HOURS BEFORE BEGINNING ANY WORK AT 1-800-257-7777. NOTIFY THE HOWARD COUNTY OFFICE OF CONSTRUCTION/INSPECTION DIVISION AT 410-313-1870 AT LEAST 24 HOURS BEFORE STARTING ANY WORK.
3. INSTALL STABILIZED CONSTRUCTION ENTRANCES. (3 DAYS)
4. CLEAR FOR AND INSTALL/CONSTRUCT ALL PERIMETER TEMPORARY SEDIMENT CONTROLS. (3 WEEKS)
5. INSTALL SUPER SILT FENCE. (1 WEEK)
6. UPON PERMISSION FROM THE SEDIMENT CONTROL INSPECTOR BEGIN ROUGH GRADING THE SITE AND IMMEDIATELY STABILIZE ALL SLOPES UPON COMPLETION OF GRADING WITH TEMPORARY SEEDING. (6 WEEKS)
7. INSTALL STORM DRAINS, SEWER AND WATER. (6 WEEKS)
8. PROVIDE INLET PROTECTIONS ON ALL NEWLY INSTALLED STORM DRAIN INLETS. (1 WEEK)
10. BEGIN CONSTRUCTION OF PROPOSED BUILDINGS. (6 MONTHS)
11. INSTALL CURB AND PAVING. (3 WEEKS)
12. FINE GRADE SITE. (2 WEEKS)
13. INSTALL SIDEWALKS, LANDSCAPING AND LIGHTING. (2 WEEKS)
14. FOLLOWING SUCCESSFUL STABILIZATION (i.e. FULLY-ESTABLISHED VEGETATION OR PAVING) OF ALL DISTURBED AREAS, OBTAIN PERMISSION FROM THE HOWARD COUNTY SEDIMENT CONTROL INSPECTOR TO REMOVE ALL REMAINING SEDIMENT & EROSION CONTROL DEVICES AND THEN STABILIZE THOSE AREAS DISTURBED BY THIS PROCESS WITH PERMENANT SEEDING. (2 WEEKS)
15. NOTIFY HOWARD COUNTY OFFICE OF INSPECTIONS AND PERMITS FOR A FINAL INSPECTION OF THE COMPLETED SITE.

MATCHLINE SEE SHEET 5

NOTE THIS PLAN IS INTENDED ONLY FOR SEDIMENT CONTROL.

FISHER, COLLINS & CARTER, INC.
CIVIL ENGINEERING CONSULTANTS & LAND SURVEYORS
CENTENNIAL SQUARE, OFFICE PARK - 10272 BALTIMORE NATIONAL PIKE
ELLICOTT CITY, MARYLAND 21042
(410) 461 - 2855

DATE	DESCRIPTION
	REVISION BLOCK

ENGINEER'S CERTIFICATE

"I certify that this plan for sediment and erosion control represents a practical and workable plan based on my personal knowledge of the site conditions and that it was prepared in accordance with the requirements of the Howard Soil Conservation District."

Signature of Engineer — Date 4/1/07

DEVELOPER'S CERTIFICATE

"I/We certify that all development and construction will be done according to this plan for sediment and erosion control, and that all responsible personnel involved in the construction project will have a Certificate of Attendance at a Department of the Environment Approved Training Program for the Control of Sediment and Erosion before beginning the project. I also authorize periodic on-site inspection by the Howard Soil Conservation District."

Signature of Developer C. PATRICK CREANEY — Date 3/26/07

Reviewed for HOWARD SCD and meets Technical Requirements.

U.S.D.A.-Natural Resources Conservation Service — Date 5/23/07

This development plan is approved for soil erosion and sediment control by the HOWARD SOIL CONSERVATION DISTRICT.

Howard SCD — Date 5/23/07

OWNER/DEVELOPER

CSG PATAPSCO, LLC
5024 CAMPBELL BOULEVARD, SUITE G
WHITE MARSH, MARYLAND 21236
410-933-2091

APPROVED: DEPARTMENT OF PLANNING AND ZONING

Director - Department of Planning and Zoning — Date 6/5/07

Chief, Division of Land Development — Date 6/5/07

Chief, Development Engineering Division J.P. — Date 5/30/07

SUBDIVISION	SECTION/AREA	PARCEL NO.
PATAPSCO VALLEY BUSINESS CENTER	N/A	C

PLAT NO.	BLOCK NO.	ZONE	TAX MAP	ELEC. DIST.	CENSUS TR.
18979 & 18980 F-07-144	14, 15, 20, 21	M-2	38	FIRST	601201

WATER CODE	SEWER CODE
A04	2150500, 2150501, 2150300

SEDIMENT CONTROL PLAN

PATAPSCO VALLEY BUSINESS CENTER
PATAPSCO VALLEY OFFICE CAMPUS
PARCEL 'C'
ZONED: M-2

TAX MAP No. 38 PARCEL No. 285 GRID No. 14,15,20,21
FIRST ELECTION DISTRICT HOWARD COUNTY, MARYLAND
SCALE: 1" = 40'
DATE: MARCH 15, 2007
SHEET 4 OF 21 SDP-07-028

I:\06\06003\dwg\SITE DEVELOPMENT PLAN\06003-SD01 SEDIMENT CONTROL PLAN.dwg, SEDIMENT CONTROL PLAN SHEET-1, 3/16/2007 8:07:57 AM, 1:1

LEGEND

SYMBOL	DESCRIPTION
— — — —	EXISTING STORM DRAIN LINE
——— - - ———	BOUNDARY/RIGHT OF WAY LINE
— B.R.L. —	BUILDING RESTRICTION LINE
	PROPOSED CURB TRANSITION
	PROPOSED STORM DRAIN PIPE
— - — - —	PROPOSED WATER PIPE
	PROPOSED SEWER PIPE
	PROPOSED CONCRETE
	EXISTING PAVING
	PROPOSED LIGHT
	LIMIT OF DISTURBANCE
— SSF — SSF —	SUPER SILT FENCE
— TP — TP —	TREE PROTECTION FENCE
	EXISTING TREELINE
	PROPOSED TREELINE

NOTE: FOR THE PRIVATE 8" SEWER MAIN INSTALLATION FROM THE EX. 8" PLUGS TO CO •4 & CO •7, SEE SHEET 21 OF 21 FOR "BEST MANAGEMENT PRACTICES FOR WORK IN NONTIDAL WETLANDS AND WETLAND BUFFERS" & FOR STREAM CROSSING NOTES & DETAILS.

Professional Certification. I hereby certify that these documents were prepared or approved by me, and that I am a duly licensed professional engineer under the laws of the State of Maryland.
License No. 16597, Expiration Date: 8/15/13

9/11/12
FOR REV. 4 ONLY

NOTE THIS PLAN IS INTENDED ONLY FOR SEDIMENT CONTROL.

FISHER, COLLINS & CARTER, INC.
CIVIL ENGINEERING CONSULTANTS & LAND SURVEYORS
CENTENNIAL SQUARE OFFICE PARK - 10272 BALTIMORE NATIONAL PIKE
ELLICOTT CITY, MARYLAND 21042
(410) 461 - 2855

DATE	DESCRIPTION
08-23-12	4 ADDITION OF LOADING RAMP ON BUILDING A AND ELIMINATE 7 SPACES, AN ISLAND & LIGHT POLE.
3.10.08	3 Resubdivided Parcel C into Parcels C-1, C-2 & C-3. Revised Title Block.
9.25.07	2 Changed all storm drain pipe from RCCP to HDPE.
6/8/07	1 REVISED STORM DRAINS AND GRADING
	REVISION BLOCK

ENGINEER'S CERTIFICATE

"I certify that this plan for sediment and erosion control represents a practical and workable plan based on my personal knowledge of the site conditions and that it was prepared in accordance with the requirements of the Howard Soil Conservation District."

Signature of Engineer — 4/1/07 Date

DEVELOPER'S CERTIFICATE

"I/We certify that all development and construction will be done according to this plan for sediment and erosion control, and that all responsible personnel involved in the construction project will have a Certificate of Attendance at a Department of the Environment Approved Training Program for the Control of Sediment and Erosion before beginning the project. I also authorize periodic on-site inspection by the Howard Soil Conservation District."

Signature of Developer — 3/29/07 Date
C. PATRICK CREANEY

Reviewed for HOWARD SCD and meets Technical Requirements.
U.S.D.A.-Natural Resources Conservation Service — 5/23/07 Date

This development plan is approved for soil erosion and sediment control by the HOWARD SOIL CONSERVATION DISTRICT.
Howard SCD — 5/23/07 Date

OWNER/DEVELOPER

CSG PATAPSCO, LLC
5024 CAMPBELL BOULEVARD, SUITE G
WHITE MARSH, MARYLAND 21236
410-933-2091

APPROVED: DEPARTMENT OF PLANNING AND ZONING
Director - Department of Planning and Zoning — 6/5/07 Date
Chief, Division of Land Development — 6/5/07 Date
Chief, Development Engineering Division — J.P. — 5/30/07 Date

SUBDIVISION		SECTION/AREA		PARCEL NO.	
PATAPSCO VALLEY BUSINESS CENTER		N/A		C-1, C-2 & C-3	
PLAT NO.	BLOCK NO.	ZONE	TAX MAP	ELEC. DIST.	CENSUS TR.
18979 & 18980 F-07-144	14, 15, 20, 21	M-2	38	FIRST	601201
WATER CODE PLAT NO. 20000 & 20001 F-08-138 A04		SEWER CODE 2150500, 2150501, 2150300			

SEDIMENT CONTROL PLAN

PATAPSCO VALLEY BUSINESS CENTER
PATAPSCO VALLEY OFFICE CAMPUS
PARCELS C-1, C-2 AND C-3 3
ZONED: M-2
TAX MAP No. 38 PARCEL No. 285 GRID No. 14,15,20,21
FIRST ELECTION DISTRICT HOWARD COUNTY, MARYLAND
SCALE: 1" = 40'
DATE: MARCH 15, 2007
SHEET 5 OF 21
SDP-07-028

I:\06003\dwg\SITE DEVELOPMENT PLAN\06003-6001 SEDIMENT CONTROL PLAN.dwg, SEDIMENT CONTROL PLAN SHEET-2, 3/16/2007 8:09:20 AM, 1:1

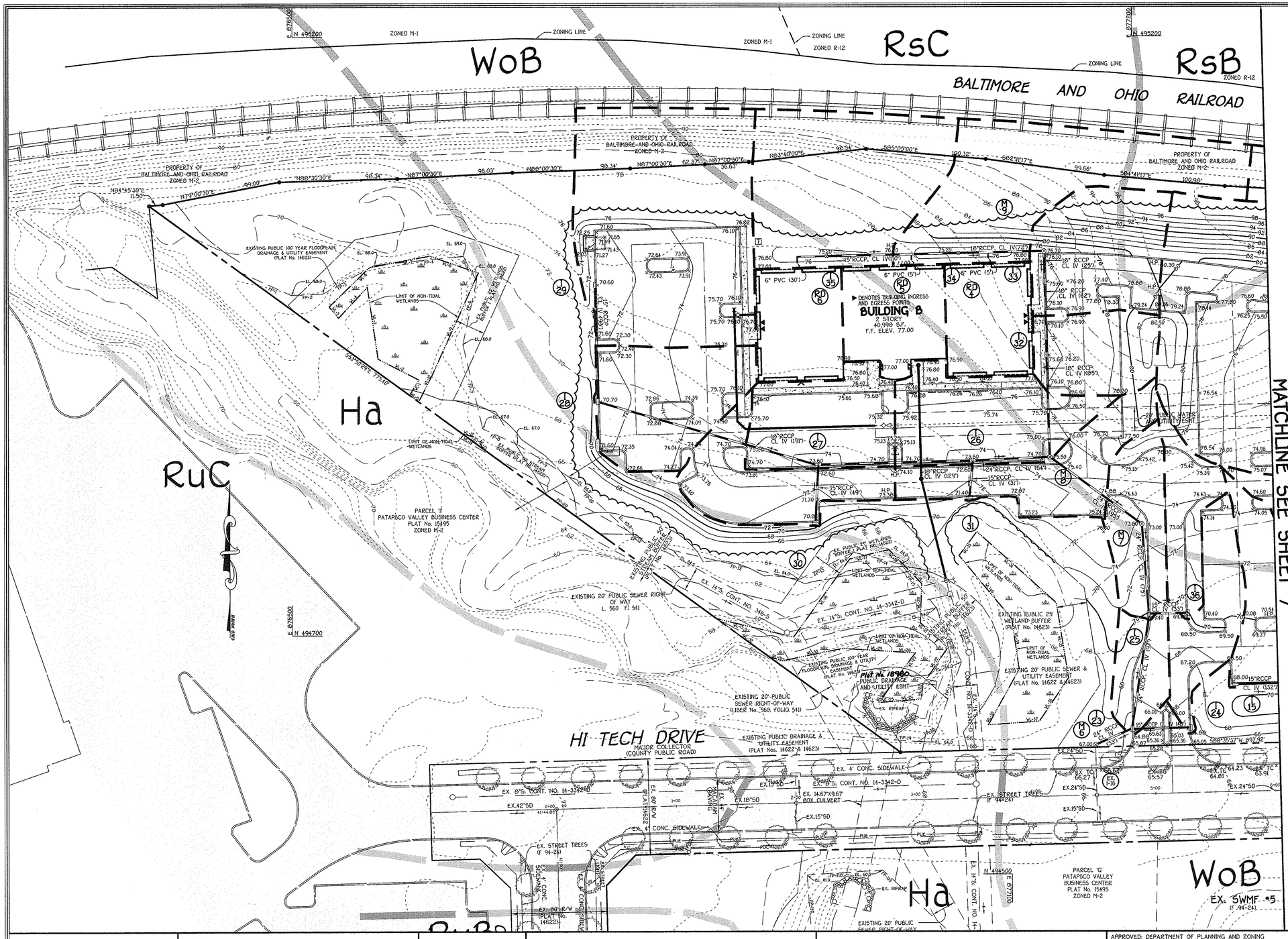

LEGEND

SYMBOL	DESCRIPTION
	EXISTING STORM DRAIN LINE
	BOUNDARY/RIGHT OF WAY LINE
B.R.L.	BUILDING RESTRICTION LINE
	PROPOSED CURB TRANSITION
	PROPOSED STORM DRAIN PIPE
	PROPOSED WATER PIPE
	PROPOSED SEWER PIPE
	PROPOSED CONCRETE
	EXISTING PAVING
	PROPOSED LIGHT
	SOILS LINE
	DRAINAGE AREA LIMITS
	EXISTING TREELINE
	PROPOSED TREELINE

SOILS LEGEND

SOIL	NAME
Co	Codorus and Hatboro silt loams, 0 to 3 percent slopes
Fa	Fallingston sandy loam, 0 to 2 percent slopes
Ha	Hatboro-Codorus silt loams, 0 to 3 percent slopes
RsB	Russett fine sandy loam, 2 to 5 percent slopes
RsD	Russett fine sandy loam, 10 to 15 percent slopes
RuC	Russett and Beltsville soils, 5 to 10 percent slopes
SrD	Sassafras and Croom soils, 10 to 15 percent slopes
WoB	Woodstown sandy loam, 1 to 5 percent slopes, moderately eroded

DRAINAGE AREA DATA

STRUCTURE NO.	AREA (AC.)	'C'	% IMP.
I-1	0.05	062	60
I-2	0.05	0.74	80
I-3	0.40	0.76	83
I-4	0.26	0.72	77
I-5	0.07	0.78	86
I-6	0.29	0.24	0
I-7	0.38	0.23	0
I-8	0.31	0.22	0
I-9	0.27	0.57	52
I-10	0.41	0.64	63
I-11	0.19	0.70	74
I-12	0.17	0.68	71
I-13	0.38	0.54	47
I-14	0.02	0.87	100
I-15	0.24	0.84	96
I-16	0.18	0.72	78
I-17	0.72	0.64	61
I-18	0.11	0.39	18
I-19	0.20	0.21	0
I-20	0.13	0.82	92
I-21	0.46	0.82	92
I-22	0.90	0.49	43
I-23	0.04	0.87	100
I-24	0.15	0.78	87
I-25	0.10	0.74	80
I-26	0.26	0.82	92
I-27	0.22	0.82	91
I-28	0.26	0.82	92
I-29	0.65	0.53	42
I-30	0.18	0.80	89
I-31	0.19	0.81	89
I-32	0.16	0.65	63
I-33	0.25	0.49	36
I-34	0.45	0.28	0
I-35	0.44	0.28	0
I-36	0.12	0.60	58
RD-1	0.30	0.87	100
RD-2	0.30	0.87	100
RD-3	0.24	0.87	100
RD-4	0.24	0.87	100
RD-5	0.24	0.87	100
RD-6	0.24	0.87	100

FISHER, COLLINS & CARTER, INC.
CIVIL ENGINEERING CONSULTANTS & LAND SURVEYORS
CENTENNIAL SQUARE OFFICE PARK - 10272 BALTIMORE NATIONAL PIKE
ELLICOTT CITY, MARYLAND 21042
(410) 461 - 2855

DATE	DESCRIPTION
	REVISION BLOCK

OWNER/DEVELOPER
CSG PATAPSCO, LLC
5024 CAMPBELL BOULEVARD, SUITE G
WHITE MARSH, MARYLAND 21236
410-933-2091

APPROVED: DEPARTMENT OF PLANNING AND ZONING

Director - Department of Planning and Zoning — Date 6/15/07
Chief, Division of Land Development — Date 6/15/07
Chief, Development Engineering Division J.P. — Date 5/30/07

SUBDIVISION			SECTION/AREA		PARCEL NO.
PATAPSCO VALLEY BUSINESS CENTER			N/A		C
PLAT NO.	BLOCK NO.	ZONE	TAX MAP	ELEC. DIST.	CENSUS TR.
18978, 18980 F. 97-144	14, 15, 20, 21	M-2	38	FIRST	601201
WATER CODE			SEWER CODE		
A04			2150500, 2150501, 2150300		

DRAINAGE AREAS AND SOILS MAP

PATAPSCO VALLEY BUSINESS CENTER
PATAPSCO VALLEY OFFICE CAMPUS
PARCEL 'C'
ZONED: M-2

TAX MAP No. 38 PARCEL No. 285 GRID No. 14,15,20,21
FIRST ELECTION DISTRICT HOWARD COUNTY, MARYLAND
SCALE: 1" = 40'
DATE: MARCH 15, 2007
SHEET 6 OF 21 SDP-07-028

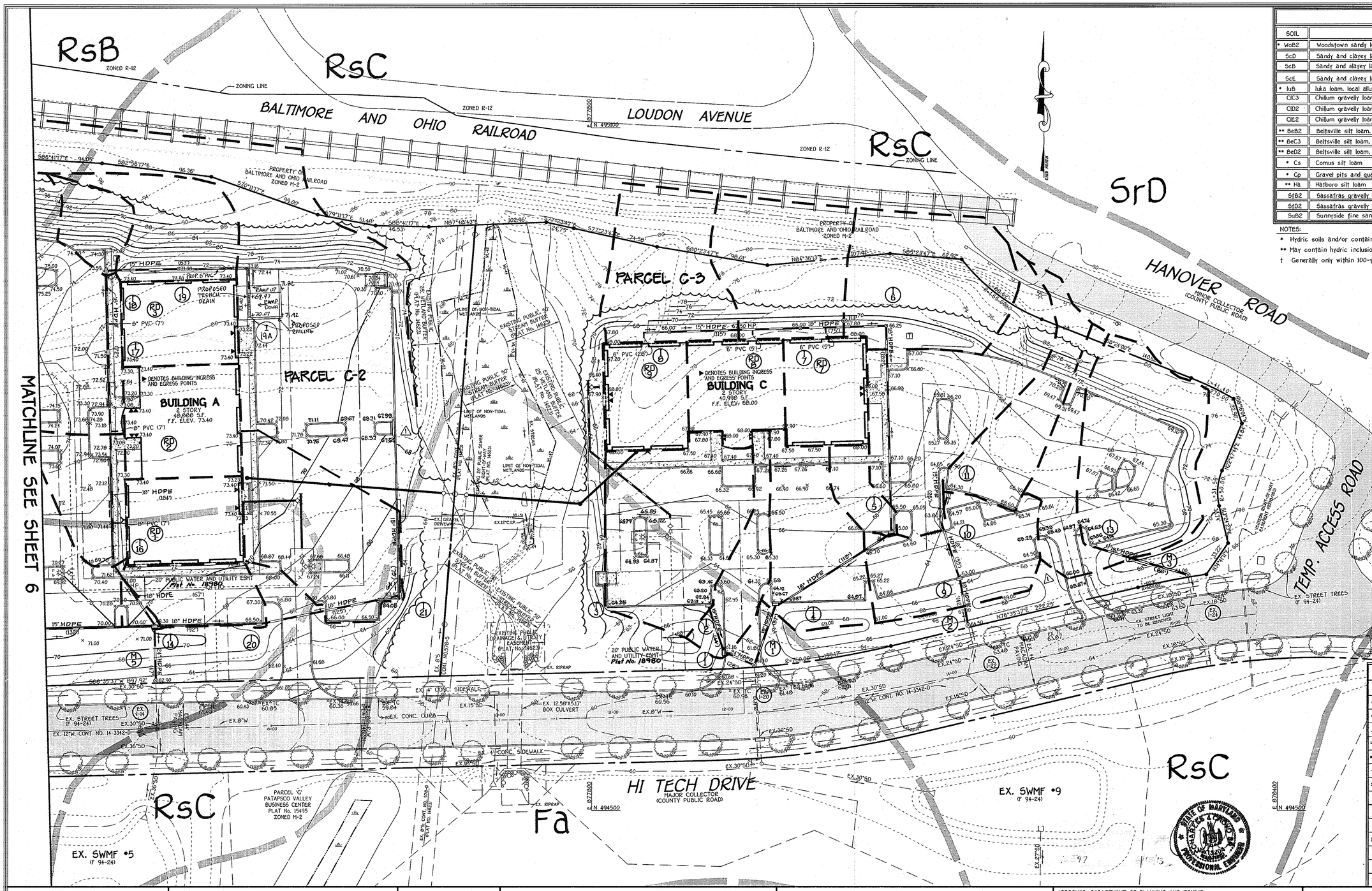

SOILS LEGEND

SOIL	NAME	CLASS
* WoB2	Woodstown sandy loam, 1 to 5 percent slopes, moderately eroded	C
ScD	Sandy and clayey land, moderately sloping	C
ScB	Sandy and clayey land, gently sloping	C
ScE	Sandy and clayey land, moderately steep	C
* IuB	Iuka loam, local alluvium, 1 to 5 percent slopes	C
ClC3	Chillum gravelly loam, 5 to 10 percent slopes, severely eroded	C
ClD2	Chillum gravelly loam, 10 to 15 percent slopes, moderately eroded	C
ClE2	Chillum gravelly loam, 15 to 30 percent slopes, moderately eroded	C
** BeB2	Beltsville silt loam, 1 to 5 percent slopes, moderately eroded	C
** BeC3	Beltsville silt loam, 5 to 10 percent slopes, severely eroded	C
** BeD2	Beltsville silt loam, 10 to 15 percent slopes, moderately eroded	C
* Cs	Comus silt loam	B
* Gp	Gravel pits and quarries	C
** Ha	Hatboro silt loam	D
SfB2	Sassafras gravelly sandy loam, 1 to 5 percent slopes, moderately eroded	B
SfD2	Sassafras gravelly sandy loam, 10 to 15 percent slopes, moderately eroded	B
SuB2	Sunnyside fine sandy loam, 1 to 5 percent slopes, moderately eroded	B

NOTES:
* Hydric soils and/or contains hydric inclusions
** May contain hydric inclusions
† Generally only within 100-year floodplain areas

LEGEND

SYMBOL	DESCRIPTION
	EXISTING STORM DRAIN LINE
	BOUNDARY/RIGHT OF WAY LINE
B.R.L.	BUILDING RESTRICTION LINE
	PROPOSED CURB TRANSITION
	PROPOSED STORM DRAIN PIPE
	PROPOSED WATER PIPE
	PROPOSED SEWER PIPE
	PROPOSED CONCRETE
	EXISTING PAVING
	PROPOSED LIGHT
	SOILS LINE
	DRAINAGE AREA LIMITS
	EXISTING TREELINE
	PROPOSED TREELINE

FISHER, COLLINS & CARTER, INC.
CIVIL ENGINEERING CONSULTANTS & LAND SURVEYORS
CENTENNIAL SQUARE OFFICE PARK - 10272 BALTIMORE NATIONAL PIKE
ELLICOTT CITY, MARYLAND 21042
(410) 461 - 2855

DATE	DESCRIPTION
08-23-12	4 ADDITION OF LOADING RAMP ON BUILDING A AND ELIMINATE 7 SPACES, AN ISLAND & LIGHT POLE.
3/10/08	3 RESUBDIVIDED PARCEL C INTO PARCELS C-1, C-2 AND C-3 REVISED TITLE BLOCK
9-25-07	2 Changed all storm drain pipe from RCCP to HDPE.
6/8/07	1 REVISED STORM DRAINS AND GRADING

REVISION BLOCK

Professional Certification. I hereby certify that these documents were prepared or approved by me, and that I am a duly licensed professional engineer under the laws of the State of Maryland.

License No. 16597, Expiration Date: 8/15/13

STATE OF MARYLAND · JOHN C. RICHARDSON · 16597 · REGISTERED PROFESSIONAL ENGINEER

9/11/12
FOR REV. 4 ONLY

OWNER/DEVELOPER
CSG PATAPSCO, LLC
5024 CAMPBELL BOULEVARD, SUITE G
WHITE MARSH, MARYLAND 21236
410-933-2091

APPROVED: DEPARTMENT OF PLANNING AND ZONING

Director - Department of Planning and Zoning — Date 6/5/07
Chief, Division of Land Development — Date 6/5/07
Chief, Development Engineering Division — J.P. — Date 5/30/07

SUBDIVISION	SECTION/AREA	PARCEL NO.
PATAPSCO VALLEY BUSINESS CENTER	N/A	C-1, C-2 AND C-3

PLAT NO.	BLOCK NO.	ZONE	TAX MAP	ELEC. DIST.	CENSUS TR.
18979 & 18980 F-07-144	14, 15, 20, 21	M-2	38	FIRST	601201

WATER CODE	SEWER CODE
PLAT NO. 20000 & 20001 F-08-138 A04	2150500, 2150501, 2150300

DRAINAGE AREAS AND SOILS MAP

PATAPSCO VALLEY BUSINESS CENTER
PATAPSCO VALLEY OFFICE CAMPUS
PARCELS C-1, C-2 AND C-3
ZONED: M-2

TAX MAP No. 38 PARCEL No. 285 GRID No. 14,15,20,21
FIRST ELECTION DISTRICT HOWARD COUNTY, MARYLAND

SCALE: 1" = 40'
DATE: MARCH 15, 2007
SHEET 7 OF 21

SDP-07-028

I:\06003\dwg\SITE DEVELOPMENT PLAN\06003-6001 DRAINAGE AREA MAP.dwg, DRAINAGE AREA MAP-2, 3/16/2007 8:11:39 AM, 1:1

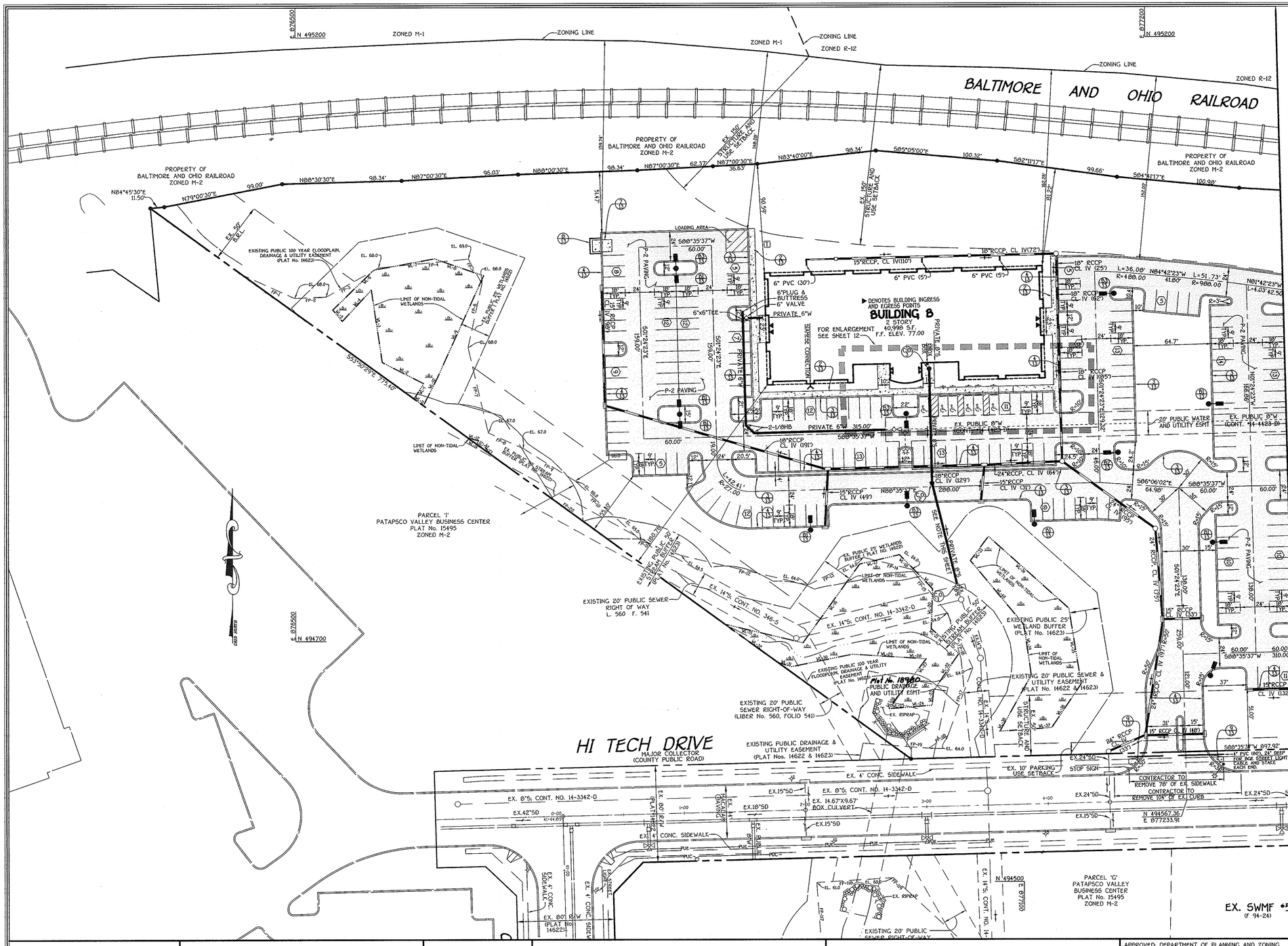

LEGEND

SYMBOL	DESCRIPTION
	EXISTING STORM DRAIN LINE
	BOUNDARY/RIGHT OF WAY LINE
B.R.L.	BUILDING RESTRICTION LINE
	PROPOSED CURB TRANSITION
	PROPOSED STORM DRAIN PIPE
	PROPOSED WATER PIPE
	PROPOSED SEWER PIPE
	PROPOSED CONCRETE
	PROPOSED PAVING
	PROPOSED LIGHT

NOTES:

1. ALL CURB RADII TO BE 5' UNLESS OTHERWISE NOTED.
2. ALL DIMENSIONS ARE TO FACE OF CURB.

FISHER, COLLINS & CARTER, INC.
CIVIL ENGINEERING CONSULTANTS & LAND SURVEYORS
CENTENNIAL SQUARE OFFICE PARK - 10272 BALTIMORE NATIONAL PIKE
ELLICOTT CITY, MARYLAND 21042
(410) 461 - 2855

DATE	DESCRIPTION
	REVISION BLOCK

OWNER/DEVELOPER
CSG PATAPSCO, LLC
5024 CAMPBELL BOULEVARD, SUITE G
WHITE MARSH, MARYLAND 21236
410-933-2091

APPROVED: DEPARTMENT OF PLANNING AND ZONING

Director - Department of Planning and Zoning — Date 6/5/07
Chief, Division of Land Development — Date 6/5/07
Chief, Development Engineering Division J.P. — Date 5/30/07

SUBDIVISION	SECTION/AREA	PARCEL NO.
PATAPSCO VALLEY BUSINESS CENTER	N/A	C

PLAT NO.	BLOCK NO.	ZONE	TAX MAP	ELEC. DIST.	CENSUS TR.
15979 & 18980 F-07-144	14, 15, 20, 21	M-2	38	FIRST	601201

WATER CODE	SEWER CODE
A04	2150500, 2150501, 2150300

GEOMETRY PLAN

PATAPSCO VALLEY BUSINESS CENTER
PATAPSCO VALLEY OFFICE CAMPUS PARCEL 'C'
ZONED: M-2

TAX MAP No. 38 PARCEL No. 285 GRID No. 14,15,20,21
FIRST ELECTION DISTRICT HOWARD COUNTY, MARYLAND
SCALE: 1" = 40'
DATE: MARCH 15, 2007
SHEET 8 OF 21 SDP-07-028

I:\06003\dwg\SITE DEVELOPMENT PLAN\06003-8001 GEOMETRY PLAN.dwg, GEOMETRY PLAN-1, 3/16/2007 8:13:10 AM, 1:1

LEGEND

SYMBOL	DESCRIPTION
	EXISTING STORM DRAIN LINE
	BOUNDARY/RIGHT OF WAY LINE
B.R.L.	BUILDING RESTRICTION LINE
	PROPOSED CURB TRANSITION
	PROPOSED STORM DRAIN PIPE
	PROPOSED WATER PIPE
	PROPOSED SEWER PIPE
	PROPOSED CONCRETE
	PROPOSED PAVING
	PROPOSED LIGHT

NOTE: FOR THE PRIVATE 8" SEWER MAIN INSTALLATION FROM THE EX. 8" PLUGS TO CO #4 & CO #7, SEE SHEET 21 OF 21 FOR "BEST MANAGEMENT PRACTICES FOR WORK IN NONTIDAL WETLANDS AND WETLAND BUFFERS" & FOR STREAM CROSSING NOTES & DETAILS.

FISHER, COLLINS & CARTER, INC.
CIVIL ENGINEERING CONSULTANTS & LAND SURVEYORS
CENTENNIAL SQUARE OFFICE PARK - 10272 BALTIMORE NATIONAL PIKE
ELLICOTT CITY, MARYLAND 21042
(410) 461 - 2855

DATE	DESCRIPTION
08-23-12	4 ADDITION OF LOADING RAMP ON BUILDING A AND ELIMINATE 7 SPACES, AN ISLAND & LIGHT POLE.
3/10/08	3 RESUBDIVIDED PARCEL C INTO PARCELS C-1, C-2 AND C-3, REVISED TITLE BLOCK
9-25-07	2 Changed all storm drain pipe from RCCP to HDPE.
6/8/07	1 REVISED STORM DRAINS AND GRADING

REVISION BLOCK

Professional Certification. I hereby certify that these documents were prepared or approved by me, and that I am a duly licensed professional engineer under the laws of the State of Maryland.
License No. 16597, Expiration Date: 8/15/13

9/11/12
For Revision 4 only

OWNER/DEVELOPER
CSG PATAPSCO, LLC
5024 CAMPBELL BOULEVARD, SUITE G
WHITE MARSH, MARYLAND 21236
410-933-2091

APPROVED: DEPARTMENT OF PLANNING AND ZONING

Director - Department of Planning and Zoning — Date 6/5/07
Chief, Division of Land Development — Date 6/5/07
Chief, Development Engineering Division J.P. — Date 5/30/07

SUBDIVISION		SECTION/AREA	PARCEL NO.	
PATAPSCO VALLEY BUSINESS CENTER		N/A	C-1, C-2 AND C-3	

PLAT NO.	BLOCK NO.	ZONE	TAX MAP	ELEC. DIST.	CENSUS TR.
18979 & 18980 F-07-144	14, 15, 20, 21	M-2	38	FIRST	601201

WATER CODE	PLAT NO. 20000 & 20001 F-08-138	SEWER CODE
A04		2150500, 2150501, 2150300

GEOMETRY PLAN

PATAPSCO VALLEY BUSINESS CENTER
PATAPSCO VALLEY OFFICE CAMPUS
PARCELS C-1, C-2 AND C-3
ZONED: M-2

TAX MAP No. 38 PARCEL No. 285 GRID No. 14,15,20,21
FIRST ELECTION DISTRICT HOWARD COUNTY, MARYLAND
SCALE: 1" = 40'
DATE: MARCH 15, 2007
SHEET 9 OF 21
SDP-07-028

I:\06003\dwg\SITE DEVELOPMENT PLAN\06003-6001 GEOMETRY PLAN.dwg, GEOMETRY PLAN-2, 3/16/2007 8:14:14 AM, 1:1

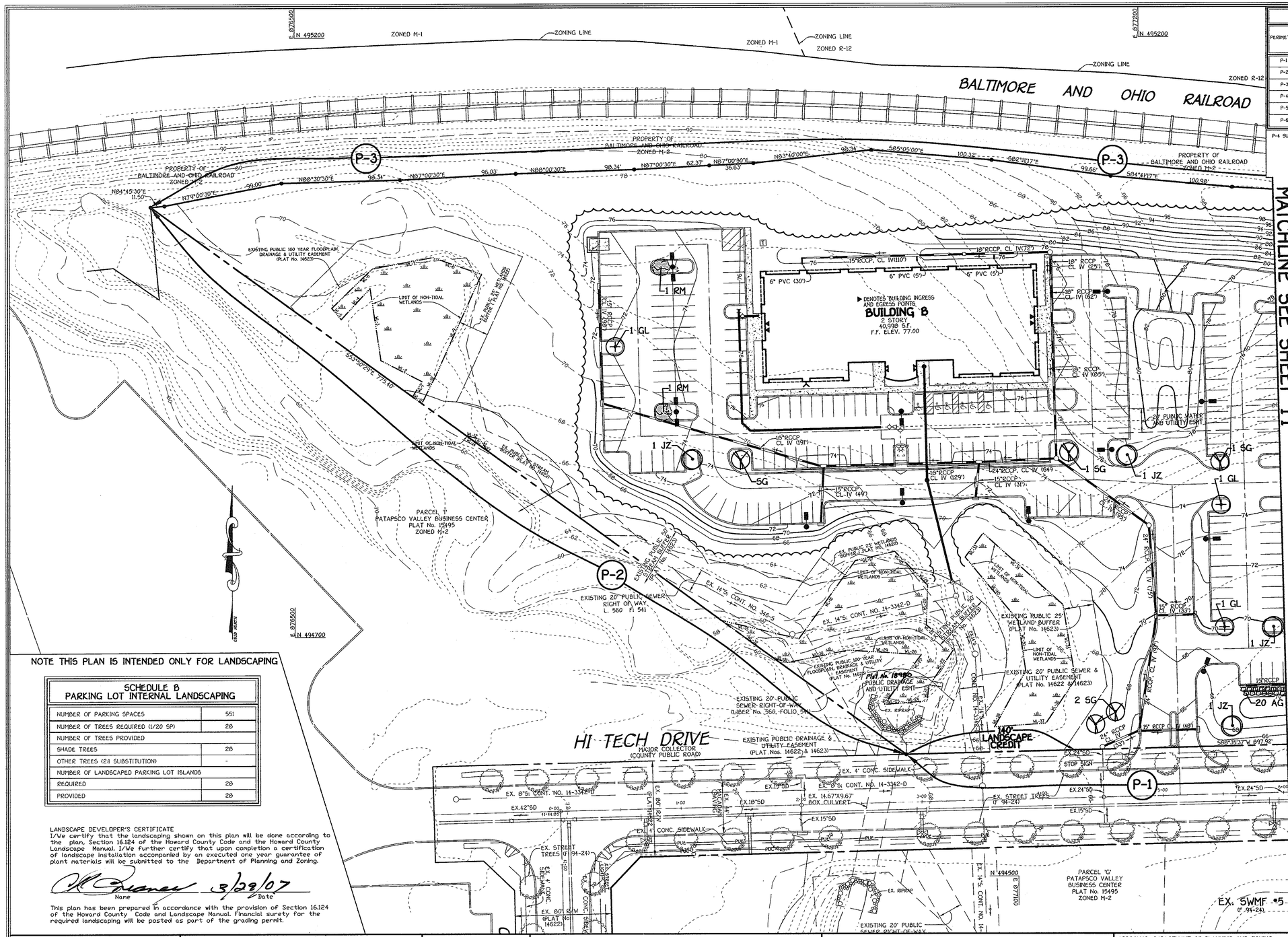

MATCHLINE SEE SHEET 11

SCHEDULE A PERIMETER LANDSCAPE EDGE

PERIMETER	CATEGORY (PROPERTIES/ ROADWAYS)	LANDSCAPE TYPE	LINEAR FEET OF ROADWAY FRONTAGE PERIMETER	CREDIT FOR EXISTING VEGETATION (YES, NO, LINEAR FEET) (DESCRIBE BELOW IF NEEDED)	CREDIT FOR WALL, FENCE OR BERM (YES, NO, LINEAR FEET) (DESCRIBE BELOW IF NEEDED)	NUMBER OF PLANTS REQUIRED			NUMBER OF PLANTS PROVIDED		
						SHADE TREES	EVERGREEN TREES	SHRUBS	SHADE TREES	EVERGREEN TREES	SHRUBS
P-1	PARKING TO ROADWAY	E	1265'	YES, 25% (308')	NO	23	-	234	24	-	234
P-2	ADJACENT TO PERIMETER	N/A	775'	YES, 100%	NO	-	-	-	-	-	-
P-3	ADJACENT TO PERIMETER	A	1765'	YES, 100%	NO	-	-	-	-	-	-
P-4	PARKING TO ROADWAY	E	325'	YES, 18% (60')	NO	7	-	67	5	4	70
P-5	PARKING TO ROADWAY	E	130'	NO	NO	3	-	33	3	-	33
P-6	DUMPSTER	D	34'	NO	NO	1	3	-	1	3	-

P-4 SUBSTITUTES ARE PER THE HOWARD COUNTY LANDSCAPE MANUAL CHAPTER IV ALLOWING 2 EVERGREEN TREES IN PLACE OF 1 SHADE TREE.

LANDSCAPE LEGEND

SYMBOL	QTY.	BOTANICAL AND COMMON NAME	SIZE	COMMENTS
EA	111	EUONYMUS ALATUS 'COMPACTA' DWARF WINGED EUONYMUS	24" - 30" HEIGHT	18" - 24" SPACING
AG	64	ABELIA X GRANDIFLORA GLOSSY ABELIA	24" - 30" HEIGHT	18" - 24" SPACING
AZ	162	AZALEA 'GUMPO PINK' GUMPO PINK AZALEA	24" - 30" HEIGHT	18" - 24" SPACING
RM	9	ACER RUBRUM 'OCTOBER GLORY' RED MAPLE	2 1/2-3" CAL.	-
LP	4	PLATANUS OCCIDENTALIS 'BLOODGOOD' LONDON PLANETREE	2 1/2-3" CAL.	-
GM	9	ACER SACCHARUM 'GREEN MOUNTAIN' GREEN MOUNTAIN SUGAR MAPLE	2 1/2-3" CAL.	-
JZ	13	ZELKOVA SERRATA 'VILLAGE GREEN' VILLAGE GREEN JAPANAZE ZELKOVA	2 1/2-3" CAL.	-
SG	11	LIQUIDAMBAR STRYACIFLUA SWEET GUM	2 1/2-3" CAL.	-
GL	15	TILIA CORDATA 'GREENSPIRE' 'GREENSPIRE' LITTLELEAF LINDEN	2 1/2-3" CAL.	-
PS	7	PINUS STROBUS EASTERN WHITE PINE	6' - 8' HEIGHT	-

NOTE: TREE AND SHRUB TYPES ARE ONLY AN RECOMMENDATION, THESE MAY BE REVISED TO A COUNTY APPROVED EQUIVALENT FROM THE HOWARD COUNTY LANDSCAPE MANUAL. THIS PLAN HAS BEEN PREPARED IN ACCORDANCE WITH THE PROVISIONS OF SECTION 16.124 OF THE HOWARD COUNTY CODE AND THE LANDSCAPE MANUAL. LANDSCAPE SURETY IN THE AMOUNT OF $29,070.00 HAS BEEN POSTED AS A PART OF THE DEVELOPER'S AGREEMENT.

PLANTING SPECIFICATIONS

Plants, related material, and operations shall meet the detailed description as given on the plans and as described herein.

All plant material, unless otherwise specified, shall be nursery grown, uniformly branched, have a vigorous root system, and shall conform to the species, size, root and shape shown on the plant list and the American Association of Nurserymen (AAN) Standards. Plant material shall be healthy, vigorous, free from defects, decay, disfiguring roots, sun scald injuries, abrasions of the bark, plant disease, insect pest eggs, borers and all forms of insect infestations or objectionable disfigurements. Plant material that is weak or which has been cut back from larger grades to meet specified requirements will be rejected. Trees with forked leaders will not be accepted. All plants shall be freshly dug; no healed-in plants from cold storage will be accepted.

Unless otherwise specified, all general conditions, planting operations, details and planting specification shall conform to 'Landscape Specification Guidelines for Baltimore-Washington Metropolitan Areas', (hereinafter 'Landscape Guidelines') approved by the Landscape Contractors Association of Metropolitan Washington and the Potomac Chapter of the American Society of Landscape Architect, latest edition, including all agenda.

Contractor shall be required to guarantee all plant material for a period of one year after date of acceptance in accordance with the appropriate section of the Landscape Guidelines Contractor's attention is directed to the maintenance requirements found within the one year specifications including watering and replacement of specified plant material.

Contractor shall be responsible for notifying utility companies, utility contractors and 'Miss Utility' a minimum of 48 hours prior to beginning any work. Contractor may make minor adjustments in spacing and location of plant material to avoid conflicts with utilities. Damage to existing structure and utilities shall be repaired at the expense of the Contractor.

Protection of existing vegetation to remain shall be accomplished by the temporary installation of 4 foot high snow fence or blaze orange safety fence at the drip line.

Contractor id responsible for installing all material in the proper planting season for each plant type. All planting is to be completed within the growing season of completion of site construction.

Bid shall be base on actual site conditions. No extra payment shall be made for work arising fron site conditions differing fron those indicated on drawings and specifications

Plant quantities are provided for the convenience of the contractor only. If discrepancies exist between quantities shown on plan and those shown on the plant list, the quantities on the plan take precedence

All shrubs shall be planted in continuous trenches or prepared planting beds and mulched with composted hardwood mulch as details and specified except where noted on plans.

Positive drainage shall be maintained in planting beds 2 percent slope).

Planting mix shall be as follows: Deciduous Plants - Two parts topsoil, one part well-rotted cow or horse manure. Add 3 lbs. of standard fertilizer per cubic yard of planting mix. Evergreen Plants - two parts topsoil, one part humus or other approved organic material. Add 3 lbs. of evergreen (acidic) fertilizer per cubic yard of planting mix. Topsoil shall conform to the Landscape Guidelines.

Weed Control: Incorporate a pre-emergent herbicide into the planting bed following recommended rates on the label. Caution: Be sure to carefully check the chemical used to assure its adaptability to the specific ground cover to be treated.

All areas within contract limits disturbed during or prior to construction not designated to receive plants and mulch shall be fine graded and seeded.

This plan is intended for landscape use only. see other plan sheets for more information on grading, sediment control, layout, etc.

NOTE THIS PLAN IS INTENDED ONLY FOR LANDSCAPING

SCHEDULE B PARKING LOT INTERNAL LANDSCAPING

NUMBER OF PARKING SPACES	551
NUMBER OF TREES REQUIRED (1/20 SP)	28
NUMBER OF TREES PROVIDED	
SHADE TREES	28
OTHER TREES (2:1 SUBSTITUTION)	-
NUMBER OF LANDSCAPED PARKING LOT ISLANDS	
REQUIRED	28
PROVIDED	28

LANDSCAPE DEVELOPER'S CERTIFICATE

I/We certify that the landscaping shown on this plan will be done according to the plan, Section 16.124 of the Howard County Code and the Howard County Landscape Manual. I/We further certify that upon completion a certification of landscape installation accompanied by an executed one year guarantee of plant materials will be submitted to the Department of Planning and Zoning.

Name — Date 3/28/07

This plan has been prepared in accordance with the provision of Section 16.124 of the Howard County Code and Landscape Manual. Financial surety for the required landscaping will be posted as part of the grading permit.

FISHER, COLLINS & CARTER, INC.
CIVIL ENGINEERING CONSULTANTS & LAND SURVEYORS
CENTENNIAL SQUARE OFFICE PARK - 10272 BALTIMORE NATIONAL PIKE
ELLICOTT CITY, MARYLAND 21042
(410) 461 - 2855

DATE	DESCRIPTION
	REVISION BLOCK

OWNER/DEVELOPER
CSC PATAPSCO, LLC
5024 CAMPBELL BOULEVARD, SUITE G
WHITE MARSH, MARYLAND 21236
410-933-2091

APPROVED: DEPARTMENT OF PLANNING AND ZONING

Director - Department of Planning and Zoning — DATE 6/5/07
Chief, Division of Land Development — DATE 6/5/07
Chief, Development Engineering Division J.F. — DATE 5/30/07

SUBDIVISION			SECTION/AREA		PARCEL NO.
PATAPSCO VALLEY BUSINESS CENTER			N/A		C
PLAT NO.	BLOCK NO.	ZONE	TAX MAP	ELEC. DIST.	CENSUS TR.
10980 & 10980 F-97-144	14, 15, 20, 21	M-2	38	FIRST	601201
WATER CODE			SEWER CODE		
A04			2150500, 2150501, 2150300		

LANDSCAPE PLAN

PATAPSCO VALLEY BUSINESS CENTER
PATAPSCO VALLEY OFFICE CAMPUS PARCEL 'C'
ZONED: M-2

TAX MAP No. 38 PARCEL No. 285 GRID No. 14,15,20,21
FIRST ELECTION DISTRICT HOWARD COUNTY, MARYLAND
SCALE: 1" = 40'
DATE: MARCH 15, 2007
SHEET 10 OF 21 SDP-07-028

I:\05003\dwg\SITE DEVELOPMENT PLAN\05003-SDP01 LANDSCAPE PLAN.dwg, LANDSCAPE PLAN-1, 3/16/2007 8:15:27 AM, 1:1

LANDSCAPE DEVELOPER'S CERTIFICATE
I/We certify that the landscaping shown on this plan will be done according to the plan, Section 16.124 of the Howard County Code and the Howard County Landscape Manual. I/We further certify that upon completion a certification of landscape installation accompanied by an executed one year guarantee of plant materials will be submitted to the Department of Planning and Zoning.

Name 3/29/07 Date

This plan has been prepared in accordance with the provision of Section 16.124 of the Howard County Code and Landscape Manual. Financial surety for the required landscaping will be posted as part of the grading permit.

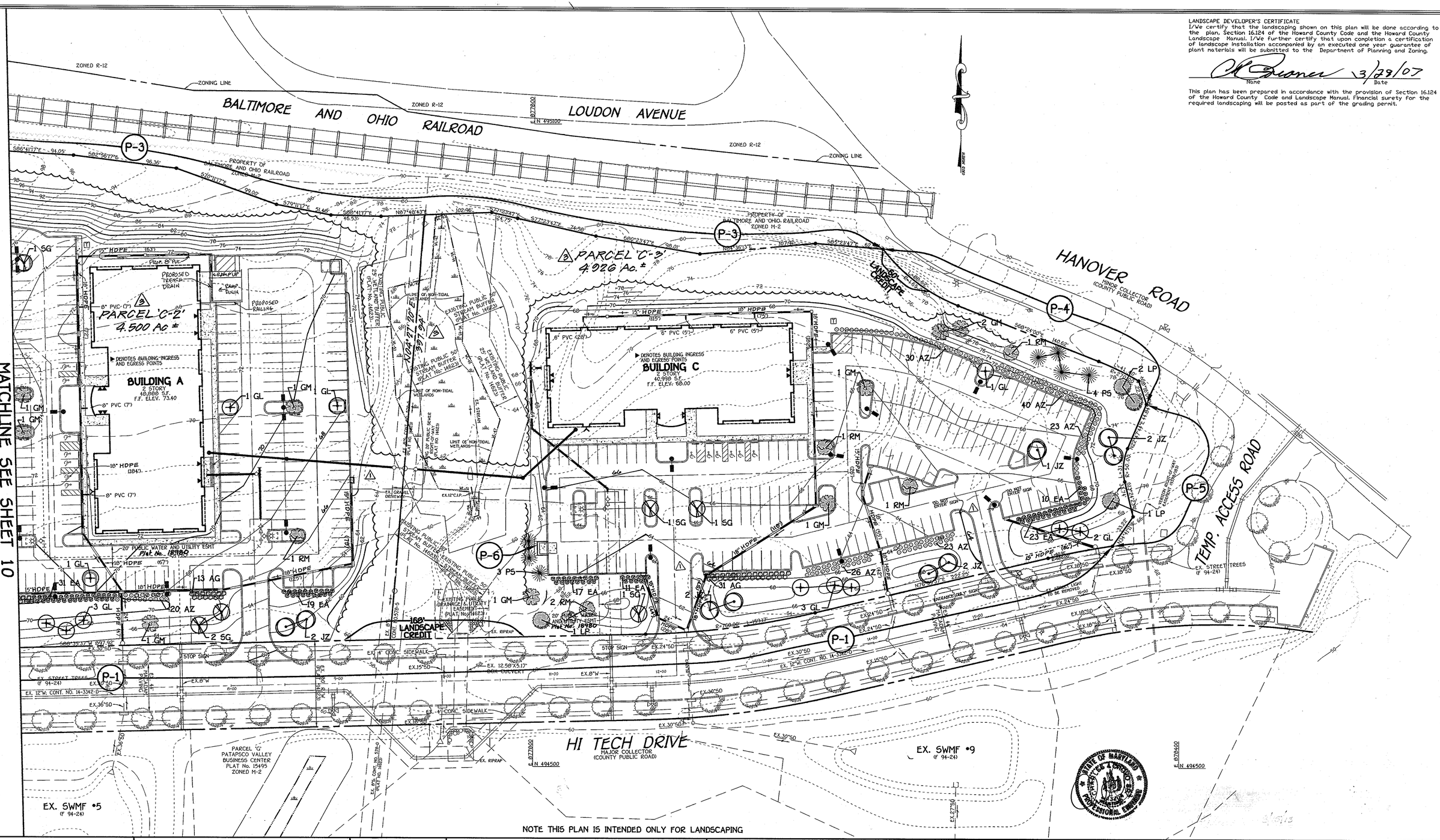

NOTE THIS PLAN IS INTENDED ONLY FOR LANDSCAPING

FISHER, COLLINS & CARTER, INC.
CIVIL ENGINEERING CONSULTANTS & LAND SURVEYORS
CENTENNIAL SQUARE OFFICE PARK - 10272 BALTIMORE NATIONAL PIKE
ELLICOTT CITY, MARYLAND 21042
(410) 461 - 2855

DATE	DESCRIPTION
08-23-12	⚠4 ADDITION OF LOADING RAMP ON BUILDING A AND ELIMINATE 7 SPACES, AN ISLAND & LIGHT POLE.
3-10-08	⚠3 Resubdivided Parcel C into Parcels C-1, C-2 & C-3. Revised Title Block.
9-26-07	⚠2 Changed all storm drain pipe from RCCP to HDPE.
6/8/07	⚠1 REVISED STORM DRAINS AND GRADING

REVISION BLOCK

Professional Certification. I hereby certify that these documents were prepared or approved by me, and that I am a duly licensed professional engineer under the laws of the State of Maryland.
License No. 16597, Expiration Date: 8/15/13

9/11/12 FOR REV. 4 ONLY

OWNER/DEVELOPER
CSG PATAPSCO, LLC
5024 CAMPBELL BOULEVARD, SUITE G
WHITE MARSH, MARYLAND 21236
410-933-2091

APPROVED: DEPARTMENT OF PLANNING AND ZONING

Director - Department of Planning and Zoning — Date 6/5/07
Chief, Division of Land Development — Date 6/5/07
Chief, Development Engineering Division J.P. — Date 5/30/07

SUBDIVISION	SECTION/AREA	PARCEL NO.
PATAPSCO VALLEY BUSINESS CENTER	N/A	C-1, C-2 & C-3

PLAT NO.	BLOCK NO.	ZONE	TAX MAP	ELEC. DIST.	CENSUS TR.
19979 & 18980 F-07-188	14, 15, 20, 21	M-2	38	FIRST	601201

WATER CODE A04 — PLAT NO. 20000 & 20001 F-08-138 — SEWER CODE 2150500, 2150501, 2150300

LANDSCAPE PLAN

PATAPSCO VALLEY BUSINESS CENTER
PATAPSCO VALLEY OFFICE CAMPUS
PARCELS C-1, C-2 AND C-3 ⚠2
ZONED: M-2

TAX MAP No. 38 PARCEL No. 285 GRID No. 14,15,20,21
FIRST ELECTION DISTRICT HOWARD COUNTY, MARYLAND
SCALE: 1" = 40'
DATE: MARCH 15, 2007
SHEET 11 OF 21

SDP-07-028

I:\06003\dwg\SITE DEVELOPMENT PLAN\06003-SD01 LANDSCAPE PLAN.dwg, LANDSCAPE PLAN-2, 3/16/2007 8:16:35 AM, 1:1

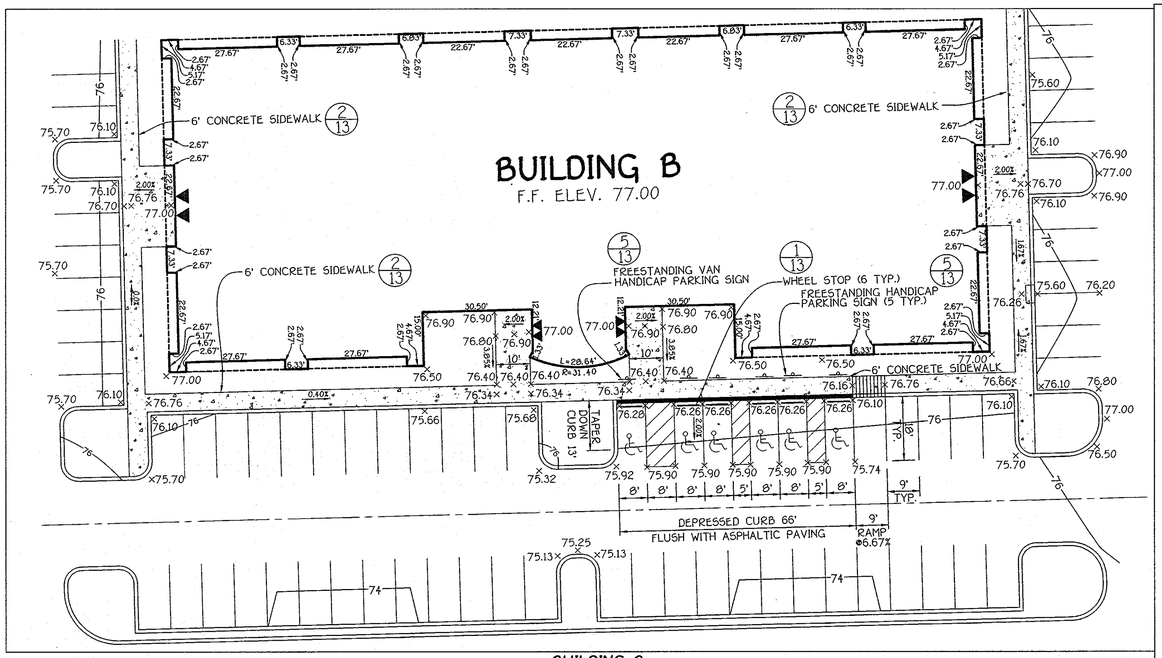

BUILDING B
HANDICAP RAMP DETAIL
SCALE: 1" = 20'

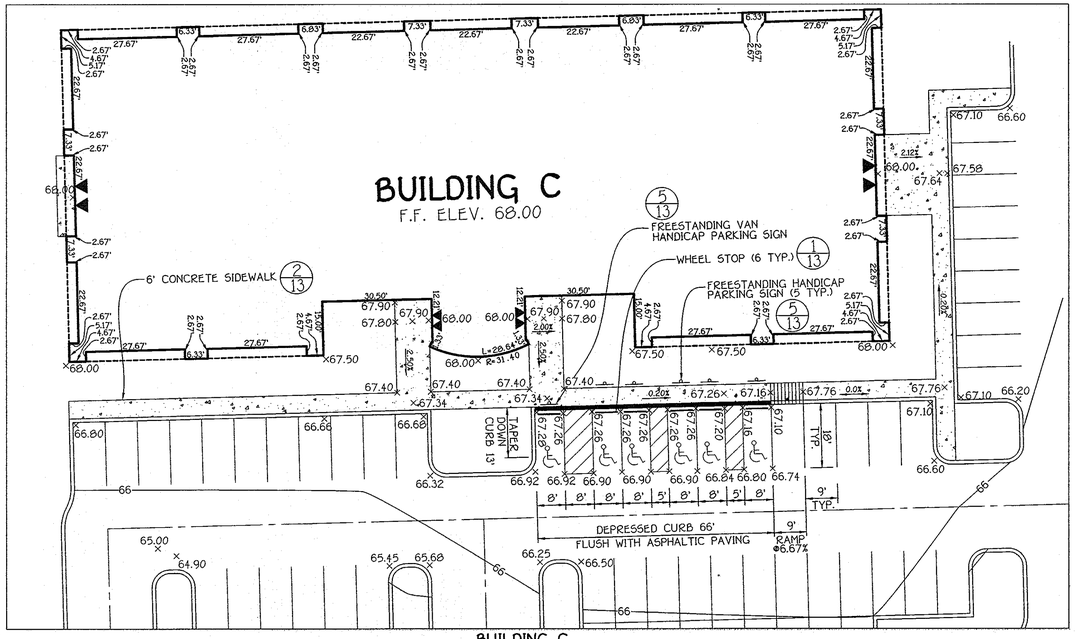

BUILDING C
HANDICAP RAMP DETAIL
SCALE: 1" = 20'

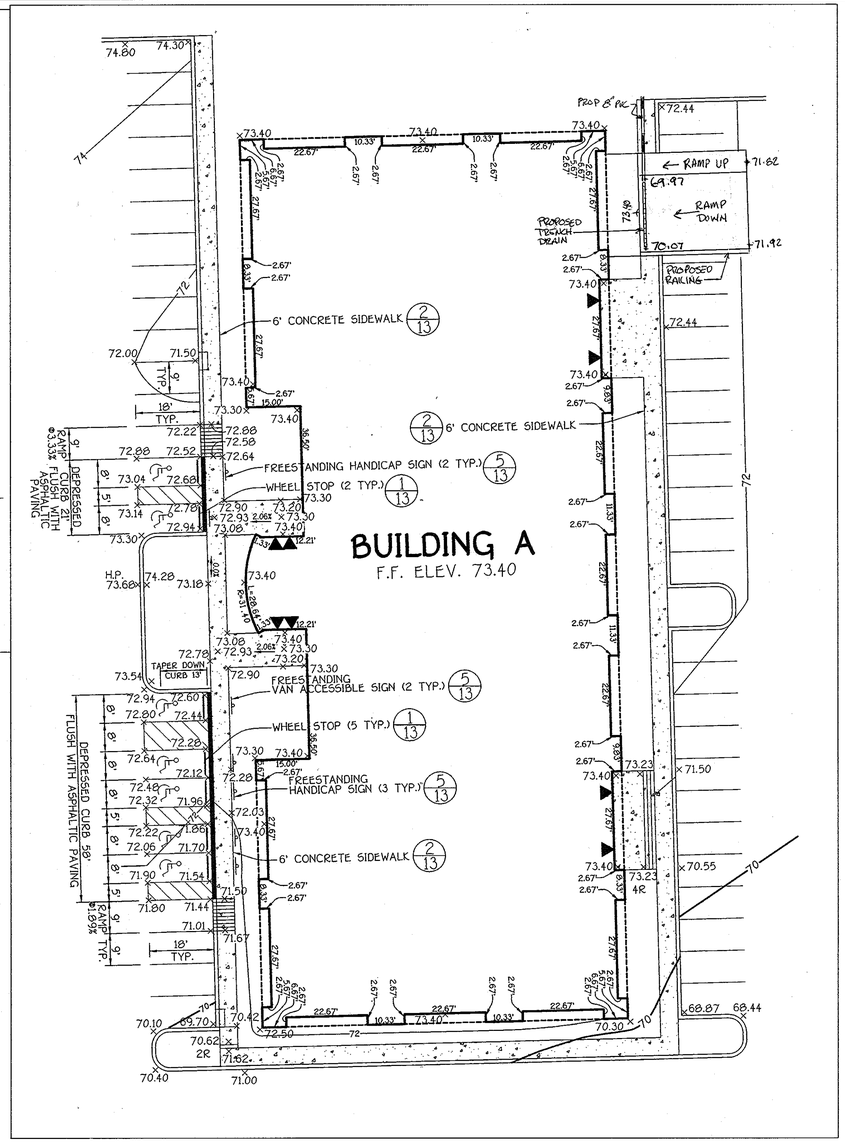

BUILDING A
HANDICAP RAMP DETAIL
SCALE: 1" = 20'

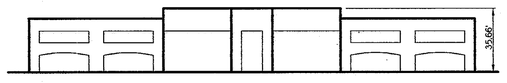

BUILDING A – FRONT ELEVATION
SCALE: 1" = 40'

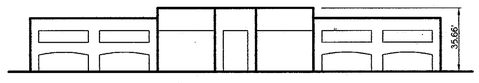

BUILDING B & C – FRONT ELEVATION
SCALE: 1" = 40'

FISHER, COLLINS & CARTER, INC.
CIVIL ENGINEERING CONSULTANTS & LAND SURVEYORS
CENTENNIAL SQUARE OFFICE PARK - 10272 BALTIMORE NATIONAL PIKE
ELLICOTT CITY, MARYLAND 21042
(410) 461 - 2855

DATE	DESCRIPTION
08-23-12	4 ADDITION OF LOADING RAMP ON BUILDING A AND ELIMINATE T SPACES, AN ISLAND & LIGHT POLE.
3-10-08	1 Revise Title Block.
REVISION BLOCK	

Professional Certification. I hereby certify that these documents were prepared or approved by me, and that I am a duly licensed professional engineer under the laws of the State of Maryland.
License No. 16597, Expiration Date: 8/15/13

9/11/12
FOR REV 4 ONLY

OWNER/DEVELOPER
CSG PATAPSCO, LLC
5024 CAMPBELL BOULEVARD, SUITE G
WHITE MARSH, MARYLAND 21236
410-933-2091

APPROVED: DEPARTMENT OF PLANNING AND ZONING

Director - Department of Planning and Zoning — Date 6/15/07
Chief, Division of Land Development — Date 6/15/07
Chief, Development Engineering Division — J.P. — Date 5/30/07

SUBDIVISION	SECTION/AREA	PARCEL NO.
PATAPSCO VALLEY BUSINESS CENTER	N/A	C-1, C-2 & C-3

PLAT NO.	BLOCK NO.	ZONE	TAX MAP	ELEC. DIST.	CENSUS TR.
19779 & 19980 F. 07-144	14, 15, 20, 21	M-2	38	FIRST	601201

WATER CODE	SEWER CODE
PLAT NO. 20000 & 20001 F-05-188 A04	2150500, 2150501, 2150300

HANDICAP RAMP DETAILS AND SCHEMATIC BUILDING PROFILES

PATAPSCO VALLEY BUSINESS CENTER
PATAPSCO VALLEY OFFICE CAMPUS
PARCELS C-1, C-2 AND C-3 1
ZONED: M-2

TAX MAP No. 38 PARCEL No. 285 GRID No. 14,15,20,21
FIRST ELECTION DISTRICT HOWARD COUNTY, MARYLAND
SCALE: AS SHOWN
DATE: MARCH 15, 2007
SHEET 12 OF 21 SDP-07-028

I:\00600\dwg\SITE DEVELOPMENT PLAN\06003-6001 DETAILS.dwg, HC DETAILS, 3/16/2007 8:22:27 AM, 1:1

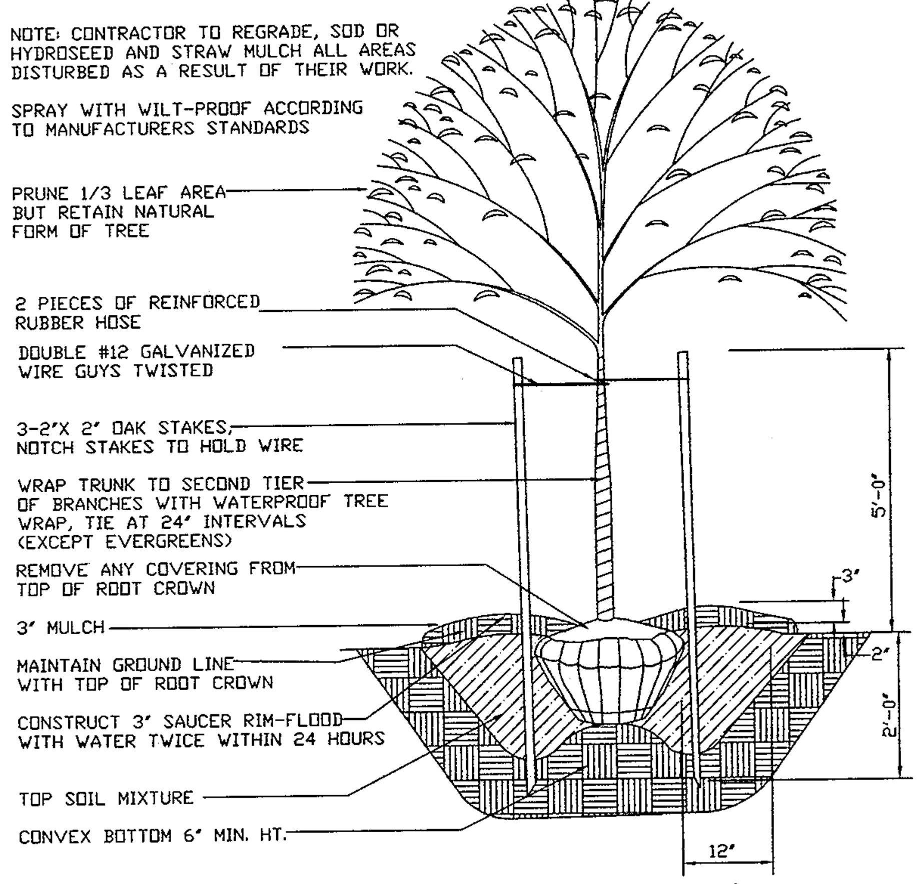

TREE PLANTING DETAIL

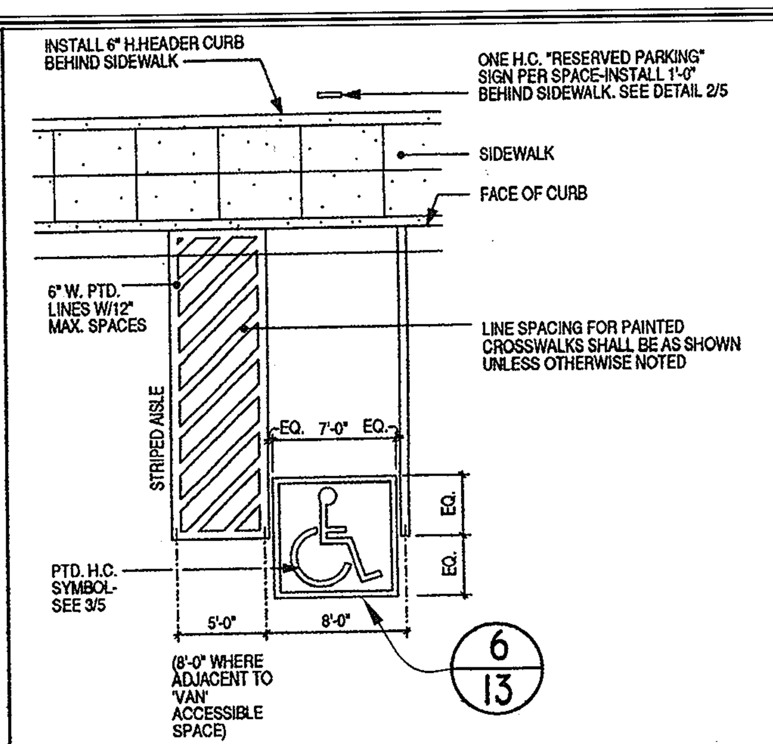

ACCESSIBLE SPACE LAYOUT

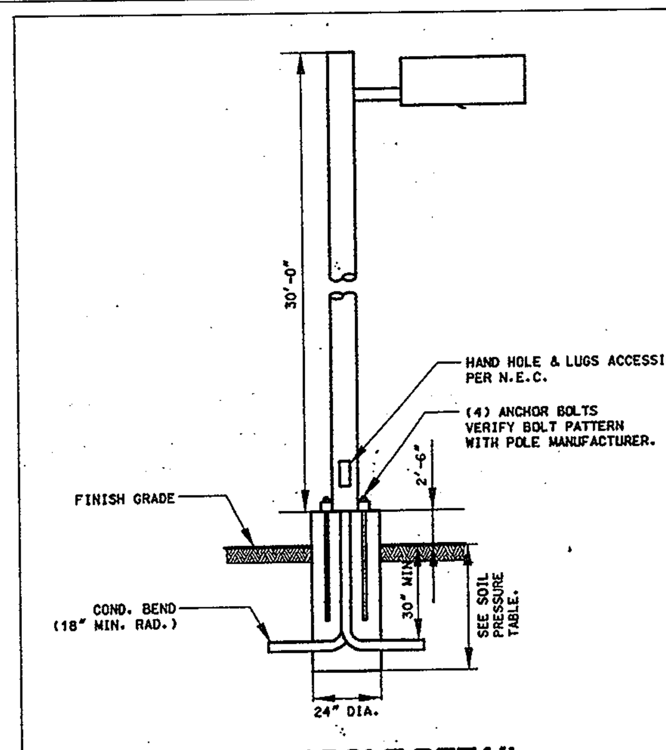

LIGHT POLE DETAIL

N.T.S.

LIGHTING FIXTURE SCHEDULE

TYPE	DESCRIPTION	LAMP	SHIELDING
B1/13	POLE MOUNTED FIXTURE MOUNTED ON 30'-0" POLE.	250 WATT METAL HALIDE (40,000) LUMENS	FULL CUTOFF TYPE IV SC DISTRIBUTION
B2/13	POLE MOUNTED FIXTURE MOUNTED ON 30'-0" POLE.	250 WATT METAL HALIDE (40,000) LUMENS	FULL CUTOFF TYPE III DISTRIBUTION
B3/13	POLE MOUNTED FIXTURE MOUNTED ON 30'-0" POLE.	250 WATT METAL HALIDE (40,000) LUMENS	FULL CUTOFF TYPE II DISTRIBUTION

5/13 HANDICAP PARKING SIGN DETAIL

NOT TO SCALE

GENERAL NOTES:

1. SIGNS SHALL MEET DESIGN STANDARDS OF THE FEDERAL HIGHWAY ADMINISTRATION AND CONFORM TO THE STATE OF MARYLAND STANDARD HIGHWAY SIGN BOOKLET DETAIL R7-8.
2. ONE SIGN IS REQUIRED PER SPACE PLACED AS SHOWN ON SITE IMPROVEMENT PLAN.
3. SIGNS SHALL BE POLE MOUNTED WITH HOT DIPPED GALVANIZED COUNTY APPROVED PERFORATED CHANNEL POSTS W/TOP OF SIGNS 9'-1" ABOVE FINISHED GRADE OR AS INDICATED ON SITE DRAWINGS.
4. SIGN SHALL BE ATTACHED TO FLANGED SIDE OF POST. POST SHALL EXTEND INTO GROUND 2'-6" MIN.
5. COLORS: LEGEND AND BORDER-GREEN
SYMBOL-WHITE ON BLUE BACKGROUND
BACKGROUND-WHITE
6. CONTRACTOR SHALL COORDINATE ARROW DIRECTION WITH LOCATION OF ADJACENT AISLE.

7/13 SOLID WASTE SERVICE PAD

NOT TO SCALE

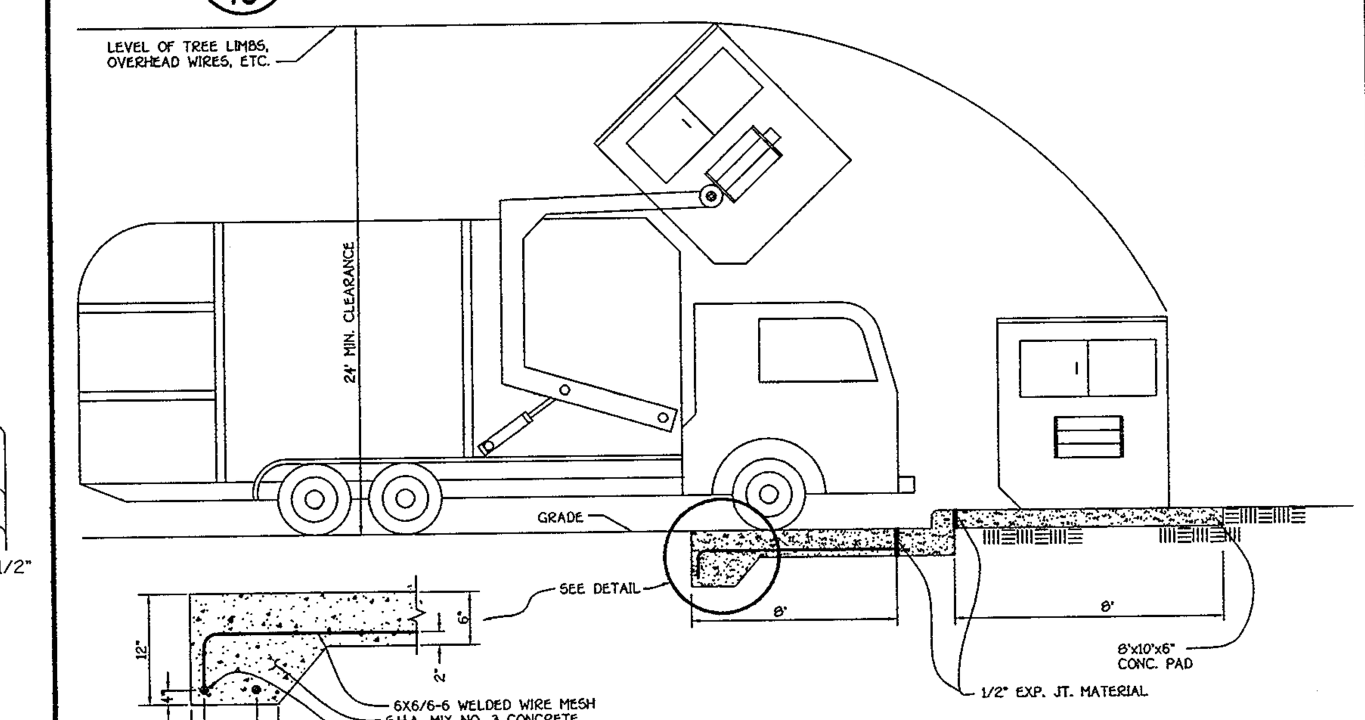

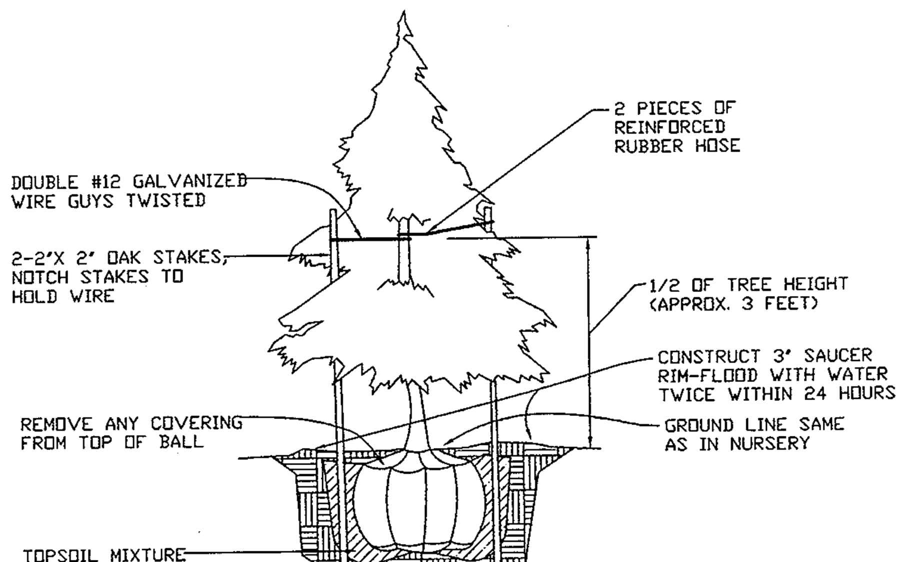

EVERGREEN PLANTING DETAIL

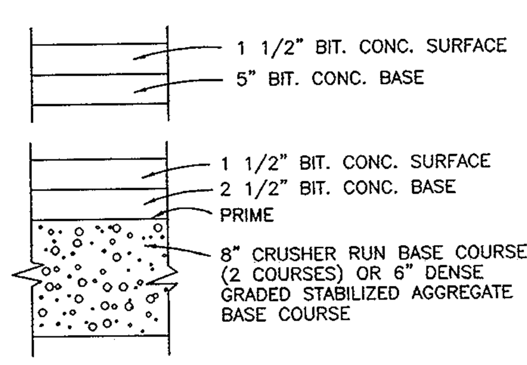

PAVING SECTION P-2

NO SCALE

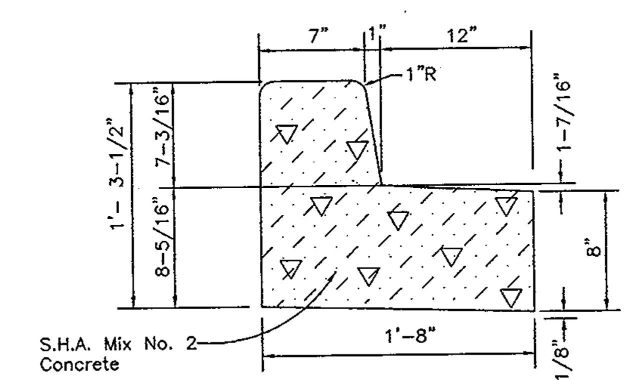

3/13 *REVERSE 7" COMB. CONC. CURB AND GUTTER*

NO SCALE

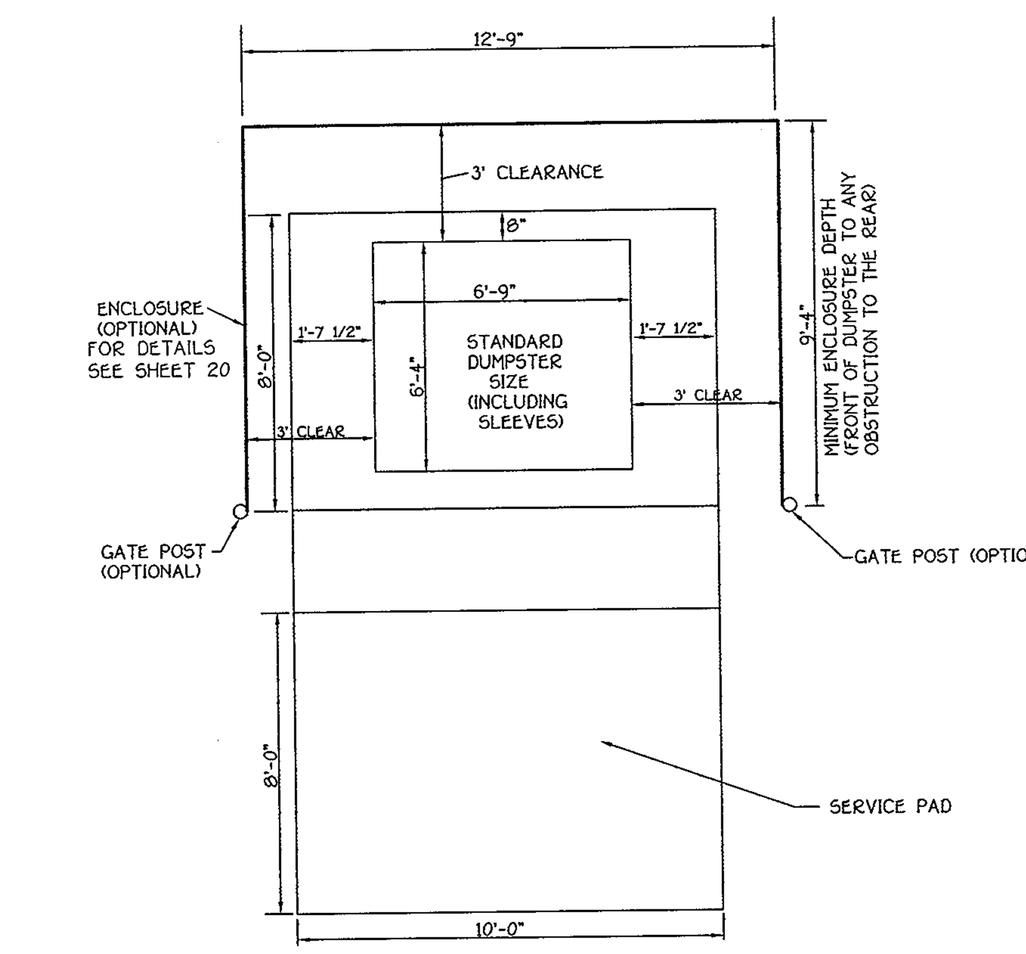

8/13 SOLID WASTE OPTIONAL CONTAINER ENCLOSURE

NOT TO SCALE

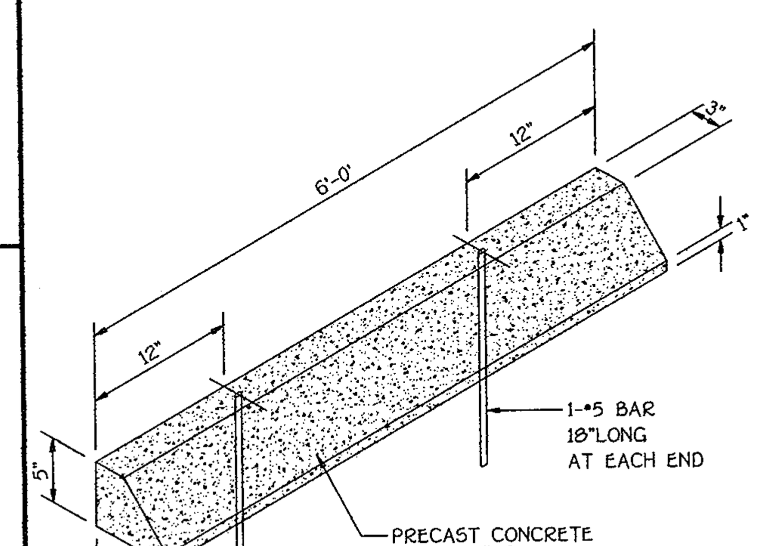

NOTES:

1. WHEEL STOP FORM SIZES MAY VARY DEPENDING ON MANUFACTURER
2. CONCRETE STRENGTH SHALL BE 4,000 P.S.I. AIR ENTRAINED

1/13 WHEEL STOP DETAIL

NO SCALE

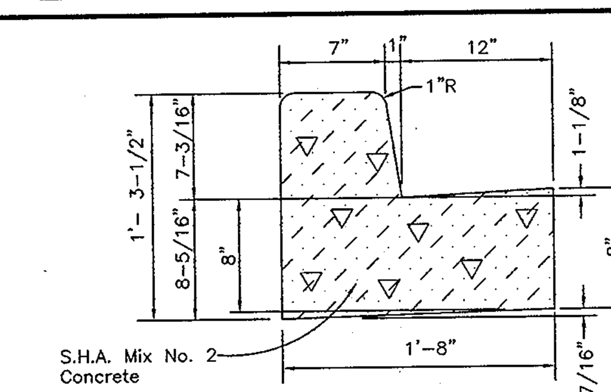

4/13 *STANDARD 7" COMB. CONC. CURB AND GUTTER*

NO SCALE

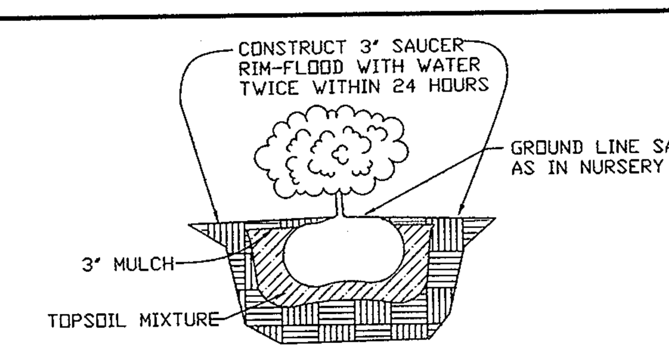

SHRUB PLANTING DETAIL

CONCRETE SIDEWALK DETAIL

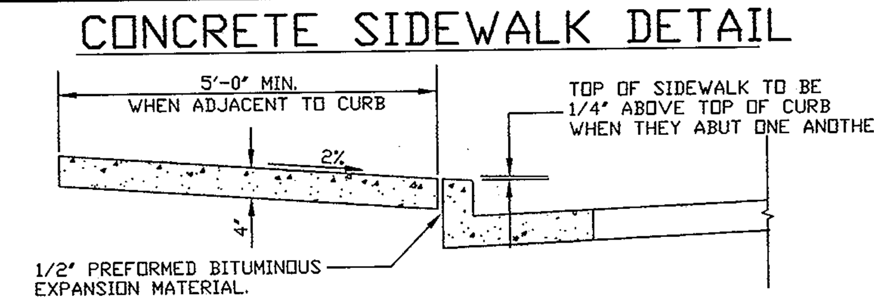

NOTES:

1. SIDEWALK TO BE SCRIBED IN 5'-0" MAXIMUM SQUARES.
2. EXPANSION JOINTS ACROSS THE SIDEWALK NOT TO MORE THAN 15' APART.
3. 1/2" PREFORMED BITUMINOUS EXPANSION MATERIAL IN EXPANSION JOINTS TO BE KEPT 1/4" BELOW SURFACE OF SIDEWALK.
4. CONCRETE TO BE MIX NO. 2.
5. WHEN SIDEWALK ABUTS CURB, WALK SHALL BE 1/4" ABOVE CURB WITH 1/2" PREFORMED BITUMINOUS EXPANSION MATERIAL BETWEEN SIDEWALK AND CURB.
6. ON LONGITUDINAL SIDEWALK GRADES OF 5% OR GREATER, A CONCRETE HEADER, 6" THICK AND 6" DEEP BELOW THE NORMAL 4" SIDEWLAK THICKNESS SHALL BE CONSTRUCTED FOR THE FULL WIDTH OF THE SIDEWALK AT INTERVALS OF 48 FEET. THE HEADERS SHALL BE PLACED AT EXPANSION JOINT LOCATIONS AND SHALL BE MONOLITHIC WITH THE SIDEWALK.
7. SIDEWALK WIDTH ADJACENT TO CURB SHALL BE 5'-0" MIN.
8. SIDEWALK LOCATED 2' OR MORE FROM CURB MAY BE 4'-0" IN WIDTH WITH A 5' X 5' PAVED SECTION PLACED 200' APART.

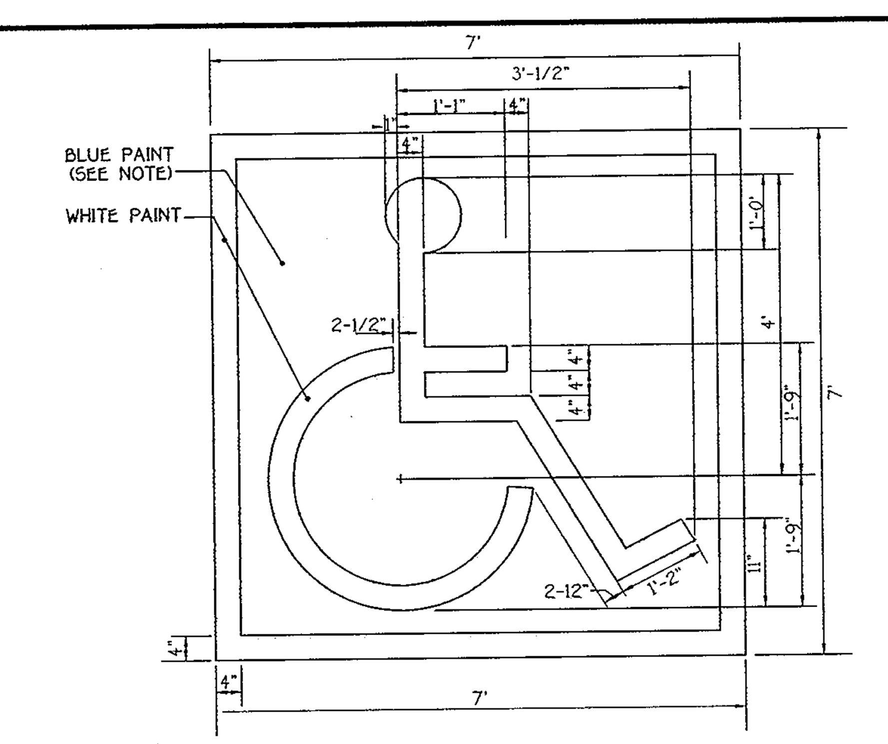

NOTE:
SYMBOL IS REQUIRED TO CONTRAST WITH BACKGROUND (WHITE ON BLUE: COLOR NO. 105090 IN FED. STANDARD 5952-DOUBLE COAT TYP.)

6/13 HANDICAP SPACE STENCIL LAYOUT

SCALE: 1" = 20'

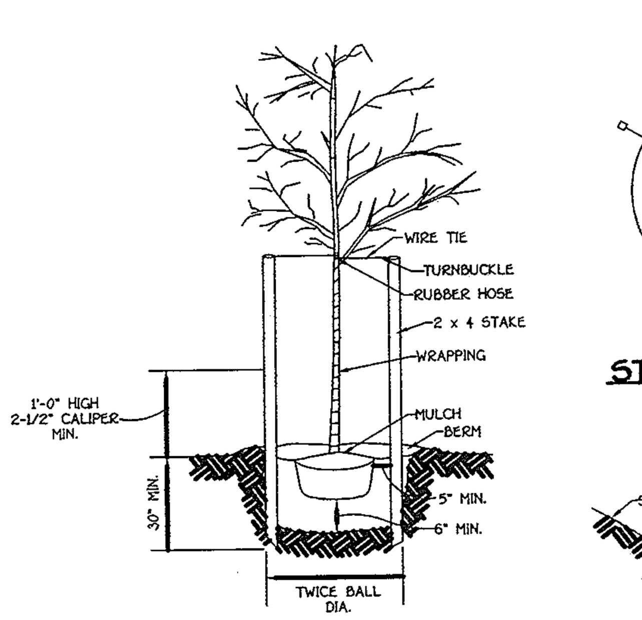

NOTE: REMOVE BURLAP FROM TOP 1/3 OF BALL

TREE PLANTING

NOT TO SCALE

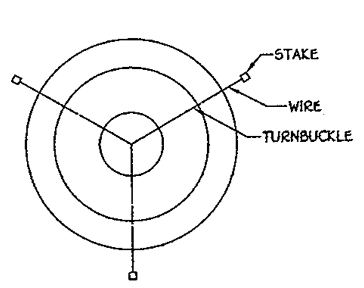

STAKING DETAIL

NOT TO SCALE

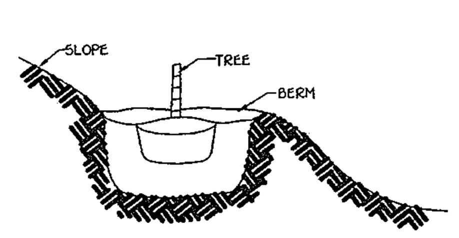

GRADING FOR PLANTING ON SLOPES

NOT TO SCALE

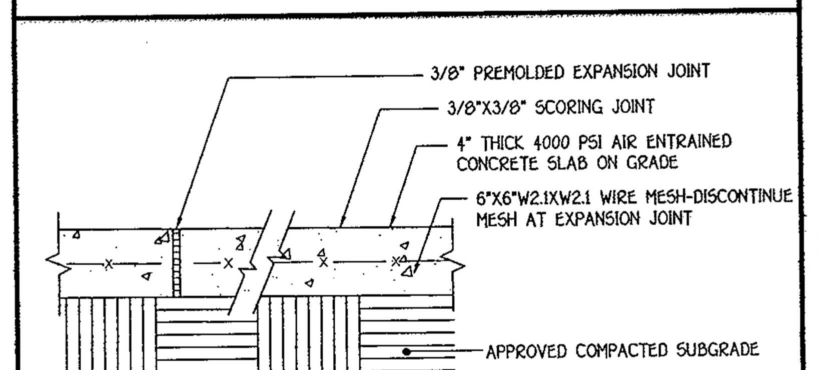

NOTE: INSTALL EXPANSION JOINTS AT MAX. 15'-0" O.C. AND INSTALL SCORING JOINTS AT MAX. 5'-0" O.C.

SLOPE ACROSS SIDEWALK SHALL BE MIN. 1/8"/FT.

2/13 CONCRETE WALK DETAIL

HOWARD COUNTY DETAIL NOTED IS FOR REFERENCE ONLY
SCALE: 1 1/2"=1'-0"

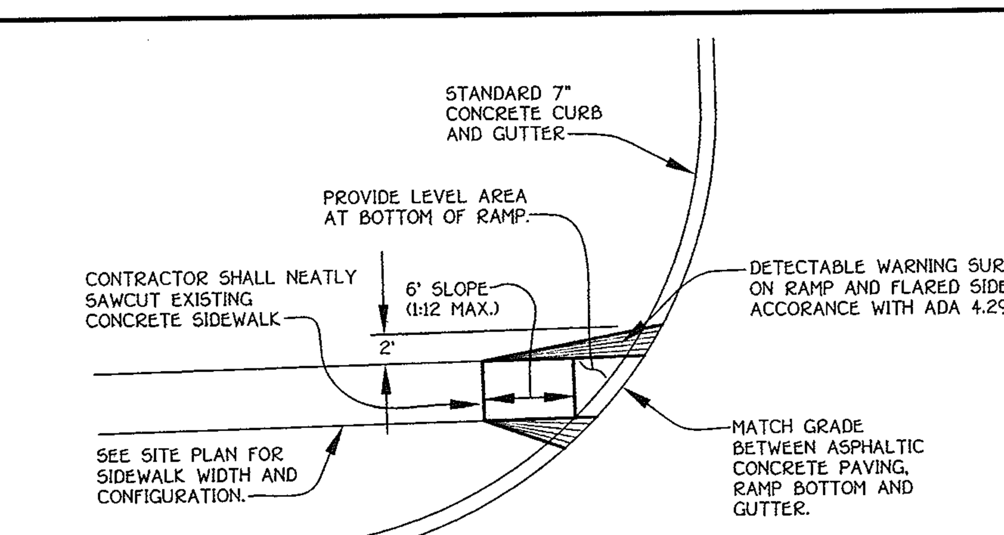

9/13 HANDICAP RAMP DETAIL

NO SCALE

FISHER, COLLINS & CARTER, INC.
CIVIL ENGINEERING CONSULTANTS & LAND SURVEYORS
CENTENNIAL SQUARE OFFICE PARK - 10272 BALTIMORE NATIONAL PIKE
ELLICOTT CITY, MARYLAND 21042
(410) 461 - 2855

DATE	DESCRIPTION
	REVISION BLOCK

STATE OF MARYLAND — CHARLES J. CRONEO — No. 13... REGISTERED PROFESSIONAL ENGINEER

OWNER/DEVELOPER
CSG PATAPSCO, LLC
5024 CAMPBELL BOULEVARD, SUITE G
WHITE MARSH, MARYLAND 21236
410-933-2091

APPROVED: DEPARTMENT OF PLANNING AND ZONING

Director - Department of Planning and Zoning — Date 6/5/07
Chief, Division of Land Development — Date 6/5/07
Chief, Development Engineering Division J.P. — Date 5/30/07

SUBDIVISION			SECTION/AREA		PARCEL NO.
PATAPSCO VALLEY BUSINESS CENTER			N/A		C
PLAT NO.	BLOCK NO.	ZONE	TAX MAP	ELEC. DIST.	CENSUS TR.
18979& 18980 F-07-144	14, 15, 20, 21	M-2	38	FIRST	601201
WATER CODE A04		SEWER CODE 2150500, 2150501, 2150300			

DETAILS

PATAPSCO VALLEY BUSINESS CENTER
PATAPSCO VALLEY OFFICE CAMPUS
PARCEL 'C'
ZONED: M-2
TAX MAP No. 38 PARCEL No. 285 GRID No. 14,15,20,21
FIRST ELECTION DISTRICT HOWARD COUNTY, MARYLAND
SCALE: AS SHOWN
DATE: MARCH 15, 2007
SHEET 13 OF 21 SDP-07-028

I:\06003\dwg\SITE DEVELOPMENT PLAN\06003-6001 DETAILS.dwg, DETAILS, 3/16/2007 8:21:24 AM, 1:1

STRUCTURE SCHEDULE

STRUCTURE NO.	TOP ELEVATION	INV.IN	INV.OUT	COORDINATES	WIDTH	TYPE	REMARKS
I-1	61.76	57.05 (24")	56.95 (24")	494638.66	877917.28	2.50'	A-5	S.D. - 4.40
I-2	63.55	58.01 (15") 59.46 (18")	57.26 (24")	494680.53	877916.24	2.50'	A-5	S.D. - 4.40
I-3	61.80	-	58.50 (15")	494679.38	877816.74	2.50'	A-5	S.D. - 4.40
I-4	64.35	59.97 (18")	59.87 (18")	494683.85	877935.68	2.50'	A-5	S.D. - 4.40
I-5	65.60	60.53 (18")	60.43 (18")	494745.53	878062.16	2.50'	A-5	S.D. - 4.40
I-6	66.25 *	61.54 (18")	61.44 (18")	494925.74	878057.89	2.58'	D	S.D. - 4.39
I-7	66.00 *	62.17 (15")	61.92 (18")	494923.01	877982.68	2.58'	D	S.D. - 4.39
I-8	66.00 *	-	62.75 (15")	494920.53	877867.99	2.58'	D	S.D. - 4.39
I-9	63.60	59.46 (18")	59.36 (18")	494704.65	878121.55	2.50'	A-5	S.D. - 4.40
I-10	64.40	60.84 (15")	60.59 (18")	494756.02	878104.60	2.50'	A-5	S.D. - 4.40
I-11	64.90	-	61.10 (15")	494782.80	878113.15	2.50'	A-5	S.D. - 4.40
I-12	63.29	-	59.94 (15")	494699.90	878232.67	2.50'	A-5	S.D. - 4.40
I-13	64.60	-	61.25 (15")	494734.34	878239.37	2.50'	A-5	S.D. - 4.40
I-14	69.90	64.66(15") 65.86(18") 59.21(18")	58.71 (24")	494662.89	877417.50	2.50'	A-5	S.D. - 4.40
I-15	68.60	-	65.32 (15")	494659.67	877226.16	2.50'	A-5	S.D. - 4.40
I-16	70.30	66.30 (18")	66.20 (18")	494718.50	877380.24	2.50'	A-5	S.D. - 4.40
I-17	72.10	67.32 (18")	67.22 (18")	494902.88	877375.72	2.50'	A-5	S.D. - 4.40
I-18	74.19	67.93 (15")	67.68 (18")	494974.49	877373.96	2.50'	A-5	S.D. - 4.40
I-19	71.00 *	-	68.25 (15")	494976.18	877430.62	2.58'	D	S.D. - 4.39
I-20	67.10	59.77 (18")	59.67 (18")	494665.14	877509.09	2.50'	A-5	S.D. - 4.40
I-21	64.00	60.65 (15")	60.40 (18")	494688.64	877631.05	2.50'	A-5	S.D. - 4.40
I-22	69.24	-	66.49 (15")	494905.08	877625.74	2.50'	A-5	S.D. - 4.40
I-23	65.48	61.89 (15") 61.87 (24")	61.77 (24")	494621.08	877201.58	2.50'	A-5	S.D. - 4.40
I-24	65.48	-	62.13 (15")	494622.21	877247.57	2.50'	A-5	S.D. - 4.40
I-25	70.00	64.98 (15") 63.62 (24")	63.52 (24")	494717.44	877215.22	2.50'	A-5	S.D. - 4.40
I-26	74.20	68.00 (15") 65.50 (18")	65.00 (24")	494844.36	877067.36	3.42'	S COMBINATION	S.D. - 4.32
I-27	74.20	67.50 (15") 66.25 (18")	66.15 (18")	494841.20	876938.40	3.42'	S COMBINATION	S.D. - 4.32
I-28	71.30	67.46 (15")	67.21 (18")	494895.24	876756.02	2.50'	A-5	S.D. - 4.40
I-29	71.20	-	67.95 (15")	494992.71	876753.63	2.50'	A-5	S.D. - 4.40
I-30	71.40	-	67.75 (15")	494795.12	876936.03	2.50'	A-5	S.D. - 4.40
I-31	72.00	-	68.15 (15")	494816.29	877064.64	2.50'	A-5	S.D. - 4.40
I-32	76.20	70.20 (18")	70.10 (18")	494933.70	877130.19	2.50'	A-5	S.D. - 4.40
I-33	76.20	70.61 (18")	70.51 (18")	494995.18	877128.68	2.50'	A-5	S.D. - 4.40
I-34	75.20 *	71.45 (15")	71.20 (18")	495019.18	877055.45	2.58'	D	S.D. - 4.39
I-35	75.20 *	-	72.00 (15")	495016.54	876945.44	2.58'	D	S.D. - 4.39
I-36	70.00	-	65.15 (15")	494718.18	877245.21	2.50'	A-5	S.D. - 4.40
M-1	61.40	56.67 (24")	53.85 (24")	494627.73	877942.46	4'	4' STD. MANHOLE	G - 5.12
M-2	64.50	58.94 (18")	58.16 (24")	494662.42	878129.57	4'	4' STD. MANHOLE	G - 5.12
M-3	64.00	58.59 (18")	58.43 (18")	494706.73	878321.07	4'	4' STD. MANHOLE	G - 5.12
M-4	66.40	61.08 (15") 59.86 (15")	59.61 (18")	494701.77	878248.72	4'	4' STD. MANHOLE	G - 5.12
M-5	62.90	57.90 (24")	57.40 (30")	494613.91	877418.66	5'	5' STD. MANHOLE	G - 5.13
M-6	67.00	61.60 (24")	61.50 (24")	494607.79	877169.54	4'	4' STD. MANHOLE	G - 5.12
M-7	73.80	64.10 (24")	64.00 (24")	494792.51	877208.23	4'	4' STD. MANHOLE	G - 5.12
M-8	75.50	69.67 (18") 64.68 (24")	64.58 (24")	494848.55	877131.54	4'	4' STD. MANHOLE	G - 5.12
M-9	76.70	70.84 (18")	70.74 (18")	495020.63	877126.81	4'	4' STD. MANHOLE	G - 5.12

* - DENOTES THROAT OPENING ELEVATION

PIPE SCHEDULE

SIZE	CLASS	LENGTH
15"	RCCP, CLASS IV	1068 L.F.
18"	RCCP, CLASS IV	1703 L.F.
24"	RCCP, CLASS IV	481 L.F.

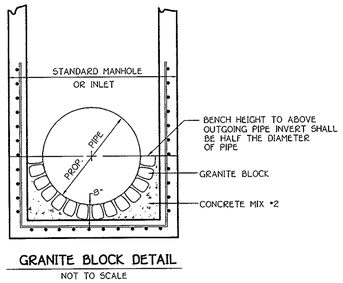

GRANITE BLOCK DETAIL

NOT TO SCALE

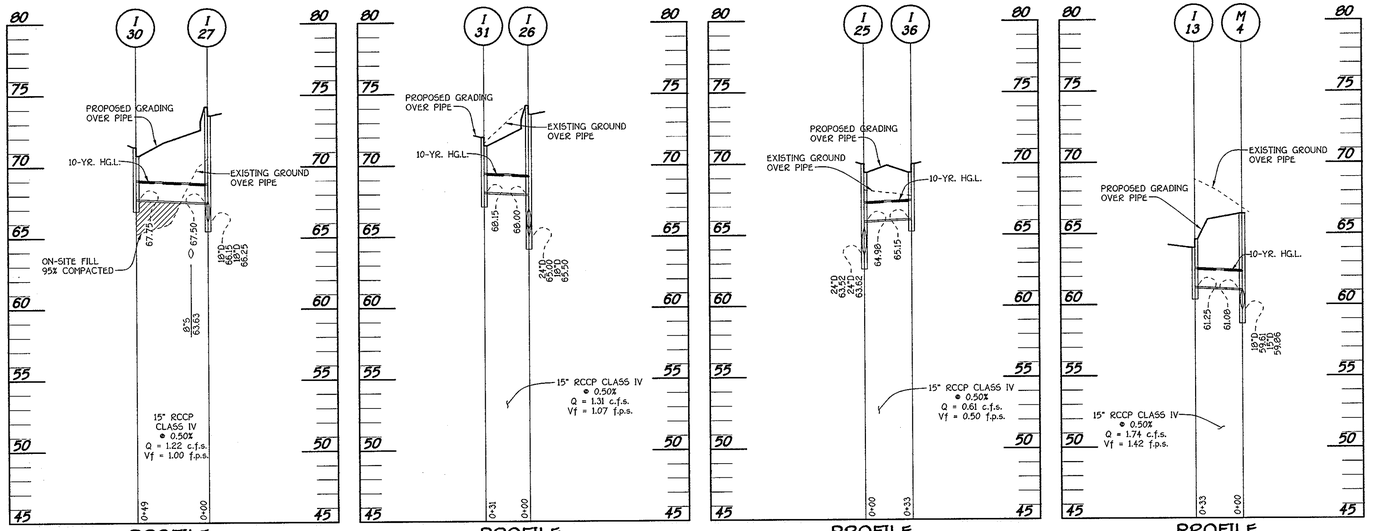

PROFILE

SCALE: HORIZ. : 1" = 50'
VERT. : 1" = 5'

PROFILE

SCALE: HORIZ. : 1" = 50'
VERT. : 1" = 5'

FISHER, COLLINS & CARTER, INC.
CIVIL ENGINEERING CONSULTANTS & LAND SURVEYORS
CENTENNIAL SQUARE OFFICE PARK - 10272 BALTIMORE NATIONAL PIKE
ELLICOTT CITY, MARYLAND 21042
(410) 461 - 2855

DATE	DESCRIPTION
	REVISION BLOCK

STATE OF MARYLAND — PATRICK T. CROWE — 21577 — PROFESSIONAL ENGINEER

OWNER/DEVELOPER

CSG PATAPSCO, LLC
5024 CAMPBELL BOULEVARD, SUITE G
WHITE MARSH, MARYLAND 21236
410-933-2091

APPROVED: DEPARTMENT OF PLANNING AND ZONING

Director - Department of Planning and Zoning — Date 6/5/07

Chief, Division of Land Development — No. Date 6/5/07

Chief, Development Engineering Division J.R. — Date 5/30/07

SUBDIVISION			SECTION/AREA		PARCEL NO.
PATAPSCO VALLEY BUSINESS CENTER			N/A		C
PLAT NO.	BLOCK NO.	ZONE	TAX MAP	ELEC. DIST.	CENSUS TR.
19479 & 19480 F. 07-144	14, 15, 20, 21	M-2	38	FIRST	601201
WATER CODE			SEWER CODE		
A04			2150500, 2150501, 2150300		

STORM DRAIN PROFILES AND STRUCTURE SCHEDULE

PATAPSCO VALLEY BUSINESS CENTER

PATAPSCO VALLEY OFFICE CAMPUS PARCEL 'C'

ZONED: M-2

TAX MAP No. 38 PARCEL No. 285 GRID No. 14,15,20,21
FIRST ELECTION DISTRICT HOWARD COUNTY, MARYLAND

SCALE: AS SHOWN
DATE: MARCH 15, 2007
SHEET 14 OF 21

SDP-07-028

I:\06003\dwg\SITE DEVELOPMENT PLAN\06003-6001 STORM DRAIN PROFILES.dwg, Model, 3/16/2007 3:43:17 PM, 1:50

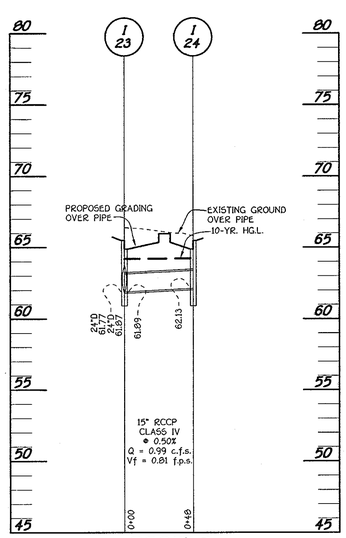

PROFILE

SCALE: HORIZ. : 1" = 50'
VERT. : 1" = 5'

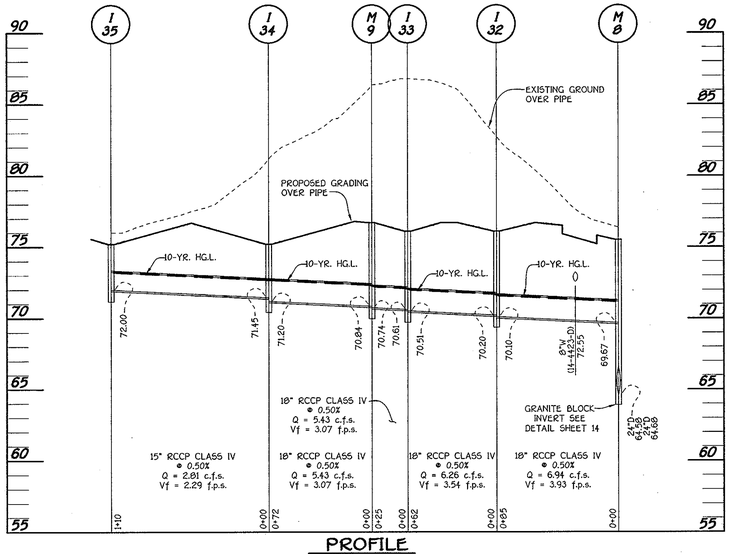

PROFILE

SCALE: HORIZ. : 1" = 50'
VERT. : 1" = 5'

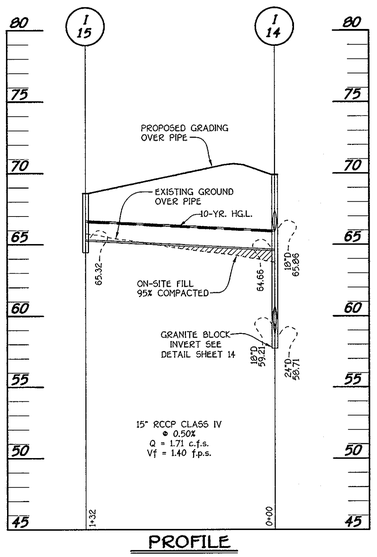

PROFILE

SCALE: HORIZ. : 1" = 50'
VERT. : 1" = 5'

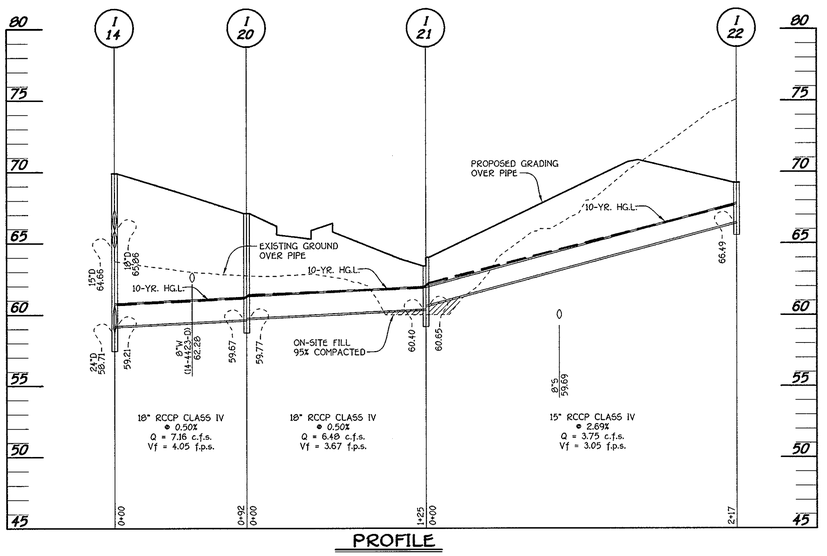

PROFILE

SCALE: HORIZ. : 1" = 50'
VERT. : 1" = 5'

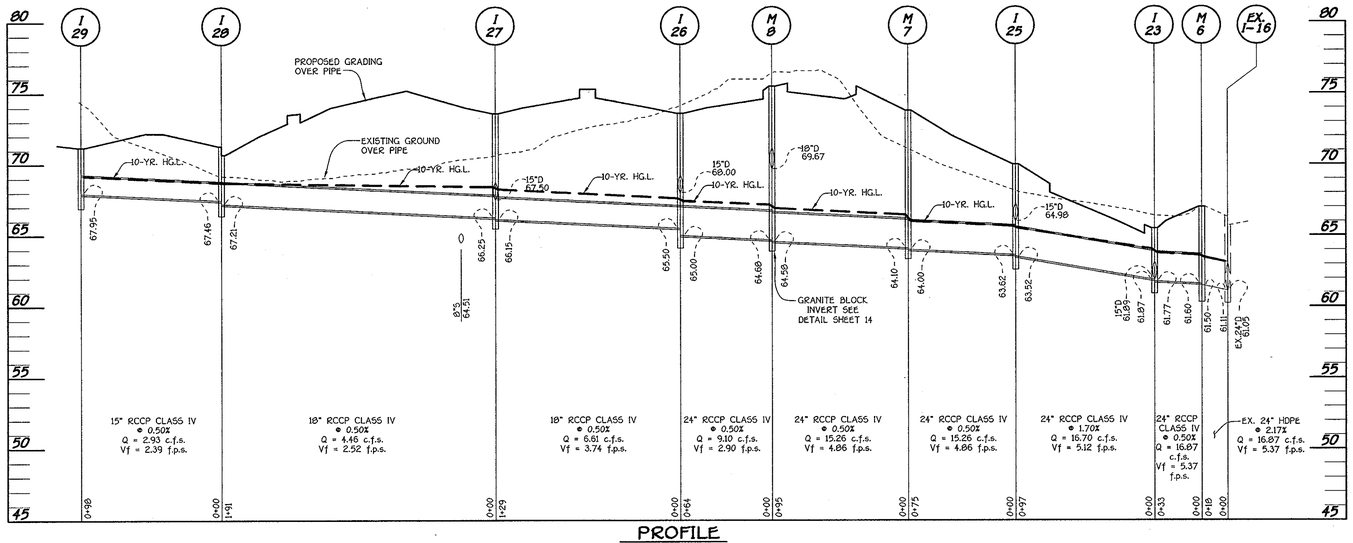

PROFILE

SCALE: HORIZ. : 1" = 50'
VERT. : 1" = 5'

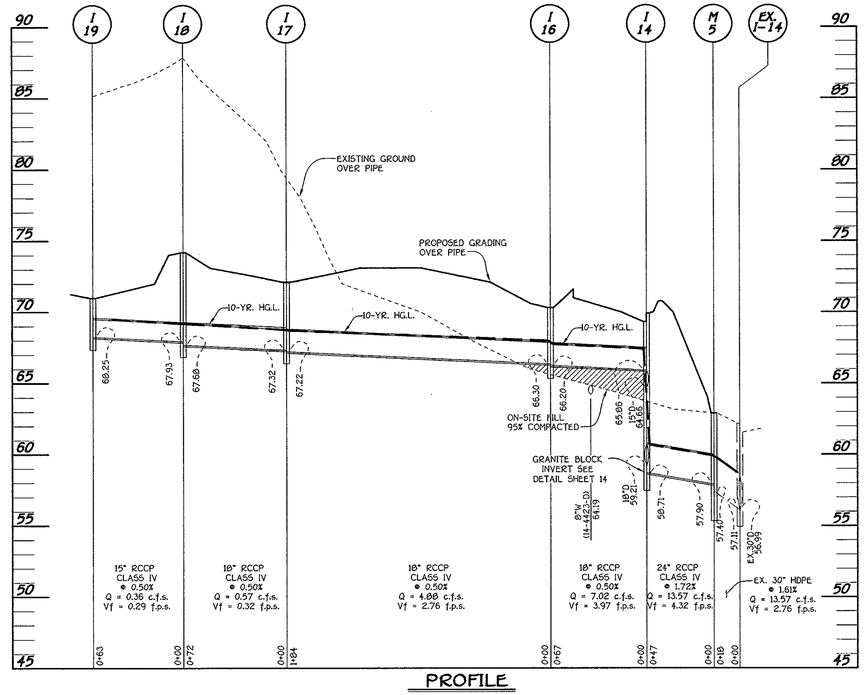

PROFILE

SCALE: HORIZ. : 1" = 50'
VERT. : 1" = 5'

FISHER, COLLINS & CARTER, INC.
CIVIL ENGINEERING CONSULTANTS & LAND SURVEYORS
CENTENNIAL SQUARE OFFICE PARK - 10272 BALTIMORE NATIONAL PIKE
ELLICOTT CITY, MARYLAND 21042
(410) 461 - 2855

DATE	DESCRIPTION
	REVISION BLOCK

STATE OF MARYLAND — CHARLES L. CROSS, JR. — 13304 — REGISTERED PROFESSIONAL ENGINEER

OWNER/DEVELOPER

CSG PATAPSCO, LLC
5024 CAMPBELL BOULEVARD, SUITE G
WHITE MARSH, MARYLAND 21236
410-933-2091

APPROVED: DEPARTMENT OF PLANNING AND ZONING

Director - Department of Planning and Zoning — Date 6/6/07

Chief, Division of Land Development — Date 6/5/07

Chief, Development Engineering Division — J.P. — Date 5/30/07

SUBDIVISION		SECTION/AREA	PARCEL NO.
PATAPSCO VALLEY BUSINESS CENTER		N/A	C
PLAT NO. 18979 & 18980 F. 07-144	BLOCK NO. 14, 15, 20, 21	ZONE M-2	TAX MAP 38	ELEC. DIST. FIRST	CENSUS TR. 601201
WATER CODE	A04	SEWER CODE	2150500, 2150501, 2150300

STORM DRAIN PROFILES

PATAPSCO VALLEY BUSINESS CENTER
PATAPSCO VALLEY OFFICE CAMPUS
PARCEL 'C'
ZONED: M-2

TAX MAP No. 38 PARCEL No. 285 GRID No. 14,15,20,21
FIRST ELECTION DISTRICT HOWARD COUNTY, MARYLAND
SCALE: AS SHOWN
DATE: MARCH 15, 2007
SHEET 15 OF 21

SDP-07-028

I:\06003\dwg\SITE DEVELOPMENT PLAN\06003-8001 STORM DRAIN PROFILES.dwg, Model, 3/19/2007 2:25:03 PM, 1:50

20.0 STANDARDS AND SPECIFICATIONS FOR VEGETATIVE STABILIZATION

DEFINITION

Using vegetation as cover for barren soil to protect it from forces that cause erosion.

PURPOSE

Vegetative stabilization specifications are used to promote the establishment of vegetation on exposed soil. When soil is stabilized with vegetation, the soil is less likely to erode and more likely to allow infiltration of rainfall, thereby reducing sediment loads and run-off to downstream areas, and improving wildlife habitat and visual resources.

CONDITIONS WHERE PRACTICE APPLIES

This practice shall be used on denuded areas as specified on the plans and may be used on highly erodible or critically eroding areas. This specification is divided into Temporary Seeding, to quickly establish vegetative cover for short duration O(up to one year), and Permanent Seeding, for long term vegetative cover. Examples of applicable areas for Temporary Seeding are temporary Soil Stockpiles, cleared areas being left idle between construction phases, earth dikes, etc. and for Permanent Seeding are lawns, dams, cut and fill slopes and other areas at final grade, former stockpile and staging areas, etc.

EFFECTS ON WATER QUALITY AND QUANTITY

Planting vegetation in disturbed areas will have an effect on the water budget, especially on volumes and rates of runoff, infiltration evaporation, transpiration, percolation, and groundwater recharge. Vegetation, over time, will increase organic matter content and improve the water holding capacity of the soil and subsequent plant growth.
Vegetation will help reduce the movement of sediment, nutrients, and other chemicals carried by runoff to receiving waters. Plants will also help protect groundwater supplies by assimilating those substances present within the root zone.
Sediment control devices must remain in place during grading, seedbed preparation, seeding, mulching and vegetative establishment to prevent large quantities of sediment and associated chemicals and nutrients from washing into surface waters.

SECTION 1 - VEGETATIVE STABILIZATION METHODS AND MATERIALS

A. Site Preparation
  i. Install erosion and sediment control structures (either temporary of permanent) such as diversions, grade stabilization structures, berms, waterways, or sediment control basins.
  ii. Perform all grading operations at right angles to the slope. Final grading and shaping is not usually necessary for temporary seeding.
  iii. Schedule required soil tests to determine soil amendment composition and application rates for sites having disturbed area over 5 acres.

B. Soil Amendments (Fertilizer and Lime Specifications)
  i. Soil tests must be performed to determine the exact ratios and application rates for both lime and fertilizer on sites having disturbed areas over 5 acres. Soil analysis may be performed by the University of Maryland or a recognized commercial laboratory. Soil samples taken for engineering purposes may also be used for chemical analyses.
  ii. Fertilizers shall be uniform in composition, free flowing and suitable for accurate application by approved equipment. Manure may be substituted for fertilizer with prior approval from the appropriate approval authority. Fertilizers shall all be delivered to the site fully labeled according to the applicable state fertilizer laws and shall bear the name, trade name or trademark and warrantee of the producer.
  iii. Lime materials shall be ground limestone (hydrated or burnt lime may be substituted) which contains at least 50% total oxides (calcium oxide plus magnesium oxide). Limestone shall be ground to such fineness that at least 50% will pass through a #100 mesh sieve and 98-100% will pass through a #20 mesh sieve.
  iv. Incorporate lime and fertilizer into the top 3-5" of soil by disking or other suitable means.

C. Seedbed Preparation
  i. Temporary Seeding
    a. Seedbed preparation shall consist of loosening soil to a depth of 3" to 5" by means of suitable agricultural or construction equipment, such as disc harrows or chisel plows or rippers mounted on construction equipment. After the soil is loosened it should not be rolled or dragged smooth, but left in the roughened condition. Sloped areas (greater than 3:1) should be tracked leaving the surface in an irregular condition with ridges running parallel to the contour of the slope.
    b. Apply fertilizer and lime as prescribed on the plans.
    c. In corporate lime and fertilizer into the top 3-5" of soil by disking or other suitable means.
  ii. Permanent Seeding
    a. Minimum soil conditions required for permanent vegetative establishment:
      1. Soil pH shall be between 6.0 and 7.0.
      2. Soluble salts shall be less than 500 parts per million (ppm).
      3. The soil shall contain less than 40% clay, but enough fine grained material (>30% silt plus clay) to provide the capacity to hold a moderate amount of moisture. An exception is if lovegrass or serecia lespedezas is to be planted, then a sandy soil (<30% silt plus clay) would be acceptable.
      4. Soil shall contain 1.5% minimum organic matter by weight.
      5. Soil must contain sufficient pore space to permit adequate root penetration.
      6. If these conditions cannot be met by soils on site, adding topsoil is required in accordance with Section 21 Standard and Specification for Topsoil.
    b. Areas previously graded in conformance with the drawings shall be maintained in a true and even grade, then scarified or otherwise loosened to a depth of 3-5" to permit bonding of the topsoil to the surface area and to create horizontal erosion check slots to prevent topsoil to the surface area and to create horizontal erosion check slots to prevent topsoil from sliding down a slope.
    c. Apply soil amendments as per soil test or as included on the plans.
    d. Mix soil amendments into the top 3-5" of topsoil by disking or other suitable means. Lawn areas should be raked to smooth the surface, remove large objects like stones and branches, and ready the area for seed and application. Where site conditions will not permit normal seedbed preparation, loosen surface soil by dragging with a heavy chain or other equipment to roughen the surface. Steep slopes (steeper than 3:1) should be tracked by a dozer leaving the soil in an irregular condition with ridges running parallel to the contour of the slope. The top 1-3" of soil should be loose and friable. Seedbed loosening may not be necessary on newly disturbed areas.

D. Seed Specifications
  i. All seed must meet the requirements of the Maryland State Seed Law. All seed shall be subject to re-testing by a recognized seed laboratory. All seed used shall have been tested within the 6 months immediately preceding the date of sowing such material on this job.
  Note: Seed tags shall be made available to the inspector to verify type and rate of seed used.
  ii. Inoculant - The inoculant for treating legume seed in the seed mixtures shall be a pure culture of nitrogen-fixing bacteria prepared specifically for the species. Inoculants shall not be used later than the date indicated on the container. Add fresh inoculant as directed on package. Use four times the recommended rate when hydroseeding. Note: It is very important to keep inoculant as cool as possible until used. Temperatures above 75°-80° F. can weaken bacteria and make the inoculant less effective.

E. Methods of Seeding
  i. Hydroseeding: Apply seed uniformly with hydroseeder (slurry includes seed and fertilizer), broadcast or drop seeded, or a cultipacker seeder.
    a. If fertilizer is being applied at the time of seeding, the application rates amounts will not exceed the following: nitrogen; maximum of 100 lbs. per acre total of soluble nitrogen; P205 (phosphorous): 200 lbs/ac; K20 (potassium): 200 lbs/ac.
    b. Lime - use only ground agricultural limestone, (Up to 3 tons per acre may be applied by hydroseeding). Normally, not more than 2 tons are applied by hydroseeding at any one time. Do not use burnt or hydrated lime when hydroseeding.
    c. Seed and fertilizer shall be mixed on site and seeding shall be done immediately and without interruption.
  ii. Dry Seeding: This includes use of conventional drop or broadcast spreaders.
    a. Seed spread dry shall be incorporated into the subsoil at the rates prescribed on the Temporary or Permanent Seeding Summaries or Tables 265 or 26. The seeded area shall then be rolled with a weighted roller to provide good seed to soil contact.
    b. Where practical, seed should be applied in two directions perpendicular to each other. Apply half the seeding rate in each direction.
  iii. Drill or Cultipacker Seeding: Mechanized seeders that apply and cover seed with soil.
    a. Cultipacking seeders are required to bury the seed in such a fashion as to provide at least 1/4 inch of soil covering. Seedbed must be firm after planting.
    b. Where practical, seed should be applied in two directions perpendicular to each other. Apply half the seeding rate in each direction.

F. Mulch Specifications (In order of preference)
  i. Straw shall consist of thoroughly threshed wheat, rye or oat straw, reasonable bright in color, and shall not be musty, moldy, caked, decayed, or excessively dusty and shall be free of noxious weed seeds as specified in the Maryland Seed Law.
  ii. Wood Cellulose Fiber Mulch (WCFM)
    a. WCFM shall consist of specially prepared wood cellulose processed into a uniform fibrous physical state.
    b. WCFM shall be dyed green or contain a green dye in the package that will provide an appropriate color to facilitate visual inspection of the uniformly spread slurry.
    c. WCFM, including dye, shall contain no germination or growth inhibiting factors.
    d. WCFM materials shall be manufactured and processed in such a manner that the wood cellulose fiber mulch will remain in uniform suspension in water under agitation and will blend with seed, fertilizer and other additives to form a homogeneous slurry. The mulch material shall form a blotter-like ground cover, on application, having moisture absorption and percolation properties and shall cover and hold grass seed in contact with the soil without inhibiting the growth of the grass seedlings.
    e. WCFM material shall contain no elements or compounds at concentration levels that will be phytol-toxic.
    f. WCFM must conform to the following physical requirements: fiber length to approximately 10 mm., diameter approximately 1 mm., pH range of 4.0 to 8.5, ash content of 1.6% maximum and water holding capacity of 90% minimum.
  Note: Only sterile straw mulch should be used in areas where one species of grass is desired.

G. Mulching Seeded Areas - Mulch shall be applied to all seeded areas immediately after seeding.
  i. If grading is completed outside of the seeding season, mulch along shall be applied as prescribed in this section and maintained until the seeding season returns and seeding can be performed in accordance with these specifications.
  ii. When straw mulch is used, it shall be spread over all seeded areas at the rate of 2 tons/acre. Mulch shall be applied to a uniform loose depth of between 1" and 2". Mulch applied shall achieve a uniform distribution and depth so that the soil surface is not exposed. If a mulch anchoring tool is to be used, the rate should be increased to 2.5 tons/acre.
  iii. Wood cellulose fiber used as a mulch shall be applied at a net dry weight of 1,500 lbs. per acre. The wood cellulose fiber shall be mixed with water, and the mixture shall contain a maximum of 50 lbs. of wood cellulose fiber per 100 gallons of water.

H. Securing Straw Mulch (Mulch Anchoring): Mulch anchoring shall be performed immediately following mulch application to minimize loss by wind or water. This may be done by one of the following methods (listed by preference), depending upon size of area and erosion hazard:
  i. A mulch anchoring tool is a tractor drawn implement designed to punch and anchor mulch into the soil surface a minimum of two (2) inches. This practice is most effective on large areas, but is limited to flatter slopes where equipment can operate safely. If used on sloping land, this practice should be used on the contour if possible.
  ii. Wood cellulose fiber may be used for anchoring straw. The fiber binder shall be applied at a net dry weight of 750 pounds/acre. The wood cellulose fiber shall be mixed with water and the mixture shall contain a maximum of 50 pounds of wood cellulose fiber per 100 gallons of water.
  iii. Application of liquid binders should be heavier at the edges where wind catches mulch, such as in valleys and crest of banks. The remainder of area should be appear uniform after binder application. Synthetic binders - such as Acrylic DLR (Agro-Tack), DCA-70 Petroset, Terra Tax II, Terra Tack AR or other approved equal may be used at rates recommended by the manufacturer to anchor mulch.
  iv. Lightweight plastic netting may be stapled over the mulch according to manufacturer's recommendations. Netting is usually available in rolls 4' to 15' feet wide and 300 to 3,000 feet long.

I. Incremental Stabilization - Cut Slopes
  i. All cuts slopes shall be dressed, prepared, seeded and mulched as the work progresses. Slopes shall be excavated and stabilized in equal increments not to exceed 15'.
  ii. Construction sequence (Refer to Figure 3 below):
    a. Excavate and stabilize all temporary swales, side ditches, or berms that will be used to convey runoff from the excavation.
    b. Perform Phase 1 excavation, dress, and stabilize.
    c. Perform Phase 2 excavation, dress and stabilize. Overseed Phase 1 areas as necessary.
    d. Perform final phase excavation, dress and stabilize. Overseed previously seeded areas as necessary.
Note: Once excavation has begun the operation should be continuous from grubbing through the completion of grading and placement of topsoil (if required) and permanent seed and mulch. Any interruptions int he operation of completing the operation out of the seeding season will necessitate the application of temporary stabilization.

J. Incremental Stabilization of Embankments - Fill Slopes
  i. Embankments shall be constructed in lifts as prescribed on the plans.
  ii. Slopes shall be stabilized immediately when the vertical height of the multiple lifts reaches 15", or when the grading operation ceases as prescribed in the plans.
  iii. At the end of each day, temporary berms and pipe slope drains should be constructed along the top edge of the embankment to intercept surface runoff and convey it down the slope in a non-erosive manner to a sediment trapping device.
  iv. Construction sequence: Refer to Figure 4 (below).
    a. Excavate and stabilize all temporary swales, side ditches, or berms that will be used to divert runoff around the fill. Construct slope silt fence on low side of fill as shown in Figure 5, unless other methods shown on the plans address this area.
    b. Place Phase 1 embankment, dress and stabilize.
    c. Place Phase 2 embankment, dress and stabilize.
    d. Place final phase embankment, dress and stabilize. Overseed previously seeded areas as necessary.
Note: Once the placement of fill has begun the operation should be continuous from grubbing through the completion of grading and placement of topsoil (if required) and permanent seed and mulch. any interruptions in the operation or completing the operation out of the seeding season will necessitate the application of temporary stabilization.

SECTION 2 - TEMPORARY SEEDING

Vegetation - annual grass or grain used to provide cover on disturbed areas for up to 12 months. For longer duration of vegetative cover, Permanent Seeding is required.

A. Seed mixtures - Temporary Seeding

  i. Select one or more of the species or mixtures listed in Table 26 for the appropriate Plant Hardiness Zone (from Figure 5) and enter them in the Temporary seeding summary below, along with application rates, seeding dates and seeding depths. If this summary is not put on the plans and completed, then Table 26 must be put on the plans.

  ii. For sites having soil tests performed, the rates shown on this table shall be deleted and the rates recommended by the testing agency shall be written in. Soil tests are not required for Temporary Seeding.

Seed Mixture (Hardiness Zone __6a___) From Table 26					Fertilizer Rate (10-10-10)	Lime Rate
No.	Species	Application Rate (lb/ac)	Seeding Dates	Seeding Depths		
1	RYE	140	3/15 - 5/31, 8/1 - 10/31	1" - 2"	600 lb/ac (15 lb/1000sf)	2 tons/ac (100 lb/1000sf)
2	BARLEY OR RYE PLUS FOXTAIL MILLOT	150	6/1 - 7/31	1"		

SECTION 3 - PERMANENT SEEDING

Seeding grass and legumes to establish groung cover for a minimum of one year on disturbed areas generally receiving low maintenance.

A. Seed mixtures - Permanent Seeding

  i. Select one or more of the species or mixtures listed in Table 25 for the appropriate Plant Hardiness Zone (from Figure 5) and enter them in the Permanent Seeding Summary below, along with application rates and seeding dates. Seeding depths can be estimated using Table 26. If this summary is not put on the construction plans and completed, then Table 25 must be put on the plans. Additional planting specifications for exceptional sites such as shorelines, streambanks, or dunes or for special purposes such as wildlife or aesthetic treatment may be found in USDA-SCS Techinical Field Office Guide, Section 342 - Critical Area Planting. For special lawn maintenance areas, see Sections IV Sod and V Turfgrass.

  ii. For sites having disturbed area over 5 areas, the rates shown on this table shall be deleted and the rates recommended by the soil testing agency shall be written in.

  iii. For areas receiving low maintenance, apply ureaform fertilizer (46-0-0) at 3 1/2 lbs/1000 sq. ft. (150 lbs/ac), in addition to the above soil amendments shown in the table below, to be performed at the time of seeding.

Seed Mixture (Hardiness Zone __6a___) From Table 25					Fertilizer Rate (10-20-20)			Lime Rate
No.	Species	Application Rate (lb/ac)	Seeding Dates	Seeding Depths	N	P205	K20	
1	TALL FESCUE (85%) KENTUCKY BLUEGRASS (5%) PERENNIAL RYEGRASS (10%)	125 15 10	3/15 - 6/1, 8/1 - 10/1	1" - 2"	90 lb/ac (2.0 lb/ 1000sf)	175 lb/ac (4 lb/ 1000sf)	175 lb/ac (4 lb/ 1000sf)	2 tons/ac (100 lb/ 1000sf)
2	TALL FESCUE (80%) HARD FESCUE (20%)	120 30	3/15 - 6/1, 8/1 - 10/1	1" - 2"				

TOPSOIL SPECIFICATIONS

Definition

Placement of topsoil over a prepared subsoil prior to establishment of permanent vegetation.

Purpose

To provide a suitable soil medium for vegetative growth. Soils of concern have low moisture content, low nutrient levels, low pH, materials toxic to plants, and/or unacceptable soil gradation.

Conditions Where Practice Applies

I. This practice is limited to areas having 2:1 or flatter slopes where:

a. The texture of the exposed subsoil/parent material is not adequate to produce vegetative growth.

b. The soil material is so shallow that the rooting zone is not deep enough to support plants or furnish continuing supplies of moisture and plant growth.

c. The original soil to be vegetated contains material toxic to plant growth.

d. The soil is so acidic that treatment with limestone is not feasible.

II. For the purpose of these Standards and Specifications, areas having slopes steeper than 2:1 require special consideration and design for adequate stabilization. Areas having slopes steeper than 2:1 shall have the appropriate stabilization shown on the plans.

Construction and Material Specifications

I. Topsoil salvaged from the existing site may be used provided that it meets the standards as set forth in these specifications. Typically, the depth of topsoil to be salvaged for a given soil type can be found in the representative soil profile section in the Soil Survey published by USDA-SCS in cooperation with Maryland Agricultural Experimental Station.

II. Topsoil Specifications - Soil to be used as topsoil must meet the following:

 i. Topsoil shall be a loam, sandy loam, clay loam, silt loam, sandy clay loam, loamy sand. Other soils may be used if recommended by an agronomist or soil scientist and approved by the appropriate approval authority. Regardless,topsoil shall not be a mixture of contrasting textured subsoils and shall contain less than 5% by volume of cinders, stones, slag, coarse fragments, gravel, sticks, roots, trash, or other materials larger than 1 1/2" in diameter.

 ii. Topsoil must be free of plants or plant parts such as Bermuda grass, quackgrass, Johnsongrass, nutsedge, poison ivy, thistle, or others as specified.

 iii. Where the subsoil is either highly acidic or composed of heavy clays, ground limestone shall be spread at a rate of 4-8 tons/acre (200-400 pounds per 1,000 square feet) prior to the placement of topsoil. Lime shall be distributed uniformly over designated areas and worked into the soil in conjunction with tillage operations as described in the following procedures.

II. For sites having disturbed areas under 5 acres:

 i. Place topsoil (if required) and apply soil amendments as specified in 10.0 Vegetative Stabilization - Section I - Vegetative Stabilization Methods and Materials.

III. For sites having disturbed areas over 5 acres:

 i. On soil meeting Topsoil specifications, obtain test results dictating fertilizer and lime amendments required to bring the soil into compliance with the following:

  a. pH for topsoil shall be between 6.0 and 7.5. If the tested soil demonstrates a pH of less than 6.0, sufficient lime shall be prescribed to raise the pH to 6.5 or higher.

  b. Organic content of topsoil shall be not less than 1.5 percent by weight.

  c. Topsoil having soluble salt content greater than 500 parts per million shall not be used.

  d. No sod or seed shall be placed on soil which has been treated with soil sterilants or chemicals used for weed control until sufficient time has elapsed (14 days min.) to permit dissipation of phyto-toxic materials.

 Note: Topsoil substitutes or amendments, as recommended by a qualified agronomist or soil scientist and approved by the appropriate approval authority, may be used in lieu of natural topsoil.

 ii. Place topsoil (if required) and apply soil amendments as specified in 10.0 Vegetative Stabilization - Section I - Vegetative Stabilization Methods and Materials.

V. Topsoil Application

 i. When topsoiling, maintain needed erosion and sediment control practices such as diversions, Grade Stabilization Structures, Earth Dikes, Slope Silt Fence and Sediment Traps and Basins.

 ii. Grades on the areas to be topsoiled, which have been previously established, shall be maintained, albeit 4" - 8" higher in elevation.

 iii. Topsoil shall be uniformly distributed in a 4" - 8" layer and lightly compacted to a minimum thickness of 4". Spreading shall be performed in such a manner that sodding or seeding can proceed with a minimum of additional soil preparation and tillage. any irregularities in the surface resulting from topsoiling or other operations shall be corrected in order to prevent the formation of depressions or water pockets.

 iv. Topsoil shall not be placed while the topsoil or subsoil is in a frozen or muddy condition, when the subsoil is excessively wet or in a condition that may otherwise be detrimental to proper grading and seedbed preparation.

VI. Alternative for Permanent Seeding - Instead of applying the full amounts of lime and commercial fertilizer, composted sludge and amendments may be applied as specified below:

 i. Composted Sludge Material for use as a soil conditioner for sites having disturbed areas over 5 acres shall be tested to prescribe amendments and for sites having disturbed areas under 5 acres shall conform to the following requirements.

 a. Composted sludge shall be supplied by, or originate from, a person or persons that are permitted (at the time of acquisition of the compost) bt the Maryland Department of the Environment under COMAR 26.04.06.

 b. Composted sludge shall contain at least 1 percent nitrogen, 1.5 percent phosphorus, and 0.2 percent potassium and have a Ph of 7.0 to 8.0. If compost does not meet these requirements, the appropriate constituents must be added to meet the requirements prior to use.

  c. Composted sludge shall be applied at a rate of 1 ton/1,000 square feet.

 iv. Composted sludge shall be amended with a potassium fertilizer applied at the rate of 4 lb/1,000 square feet, and 1/3 the normal lime application rate.

STABILIZED CONSTRUCTION ENTRANCE

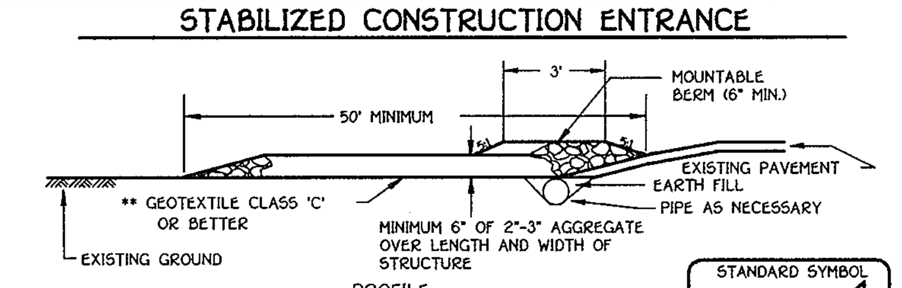

PROFILE

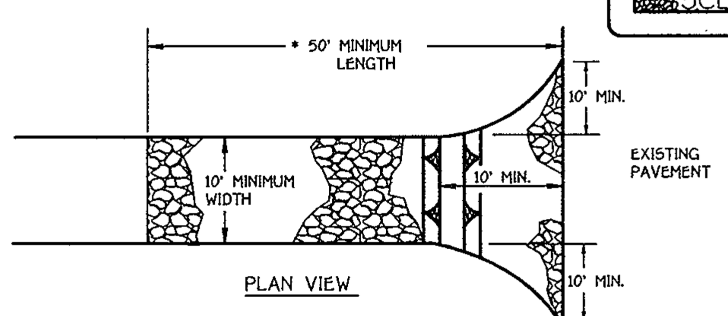

PLAN VIEW

Construction Specification

1. Length - minimum of 50' (*30' for single residence lot).
2. Width - 10' minimum, should be flared at the existing road to provide a turning radius.
3. Geotextile fabric (filter cloth) shall be placed over the existing ground prior to placing stone. **The plan approval authority may not require single family residences to use geotextile.
4. Stone - crushed aggregate (2" to 3") or reclaimed or recycled concrete equivalent shall be placed at least 6" deep over the length and width of the entrance.
5. Surface Water - all surface water flowing to or diverted toward construction entrances shall be piped through the entrance, maintaining positive drainage. Pipe installed through the stabilized construction entrance shall be protected with a mountable berm with 5:1 slopes and a minimum of 6" of stone over the pipe. Pipe has to be sized according to the drainage. When the SCE is located at a high spot and has no drainage to convey a pipe will not be necessary. Pipe should be sized according to the amount of runoff to be conveyed. A 6" minimum will be required.
6. Location - A stabilized construction entrance shall be located at every point where construction traffic enters or leaves a construction site. Vehicles leaving the site must travel over the entire length of the stabilized construction entrance.

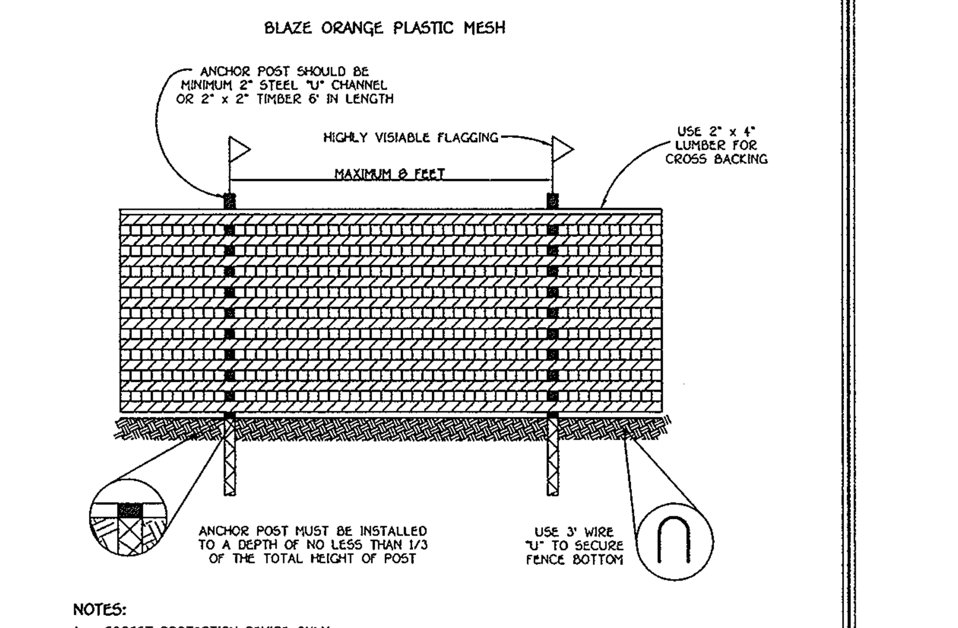

NOTES:

1. FOREST PROTECTION DEVICE ONLY.
2. RETENTION AREA WILL BE SET AS PART OF THE REVIEW PROCESS.
3. BOUNDARIES OF RETENTION AREA SHOULD BE STAKED AND FLAGGED PRIOR TO INSTALLING DEVICE.
4. ROOT DAMAGE SHOULD BE AVOIDED.
5. PROTECTIVE SIGNAGE MAY ALSO BE USED.
6. DEVICE SHOULD BE MAINTAINED THROUGHOUT CONSTRUCTION.

TREE PROTECTION DETAIL

NOT TO SCALE

SEDIMENT CONTROL NOTES

1) A MINIMUM OF 48 HOURS NOTICE MUST BE GIVEN TO THE HOWARD COUNTY DEPARTMENT OF INSPECTIONS, LISCENSES AND PERMITS, SEDIMENT CONTROL DIVISION PRIOR TO THE START OF ANY CONSTRUCTION (313-1855).

2) ALL VEGETATIVE AND STRUCTURAL PRACTICES ARE TO BE INSTALLED ACCORDING TO THE PROVISIONS OF THIS PLAN AND ARE TO BE IN CONFORMANCE WITH THE MOST CURRENT MARYLAND STANDARDS AND SPECIFICATIONS FOR SOIL EROSION AND SEDIMENT CONTROL AND REVISIONS THERETO.

3) FOLLOWING INITIAL SOIL DISTURBANCE OR RE-DISTURBANCE, PERMANENT OR TEMPORARY STABILIZATION SHALL BE COMPLETED WITHIN:
a) 7 CALENDAR DAYS FOR ALL PERIMETER SEDIMENT CONTROL STRUCTURES, DIKES, PERIMETER SLOPES AND ALL SLOPES STEEPER THAN 3:1,
b) 14 DAYS AS TO ALL OTHER DISTURBED OR GRADED AREAS ON THE PROJECT SITE.

4) ALL SEDIMENT TRAPS/BASINS SHOWN MUST BE FENCED AND WARNING SIGNS POSTED AROUND THEIR PERIMETER IN ACCORDANCE WITH VOL. 1, CHAPTER 12, OF THE HOWARD COUNTY DESIGN MANUAL, STORM DRAINAGE.

5) ALL DISTURBED AREAS MUST BE STABILIZED WITHIN THE TIME PERIOD SPECIFIED ABOVE IN ACCORDANCE WITH THE 1994 MARYLAND STANDARDS AND SPECIFICATIONS FOR SOIL EROSION AND SEDIMENT CONTROL FOR PERMANENT SEEDING (SEC. 51), SOD (SEC. 54), TEMPORARY SEEDING (SEC. 50), AND MULCHING (SEC. 52). TEMPORARY STABILIZATION WITH MULCH ALONE CAN ONLY BE DONE WHEN RECOMMENDED SEEDING DATES DO NOT ALLOW FOR PROPER GERMINATION AND ESTABLISHMENT OF GRASSES.

6) ALL SEDIMENT CONTROL STRUCTURES ARE TO REMAIN IN PLACE AND ARE TO BE MAINTAINED IN OPERATIVE CONDITION UNTIL PERMISSION FOR THEIR REMOVAL HAS BEEN OBTAINED FROM THE HOWARD COUNTY SEDIMENT CONTROL INSPECTOR.

7) SITE ANALYSIS:

TOTAL AREA OF SITE	15.64 ACRES
AREA DISTURBED	10.90 ACRES
AREA TO BE ROOFED OR PAVED	7.21 ACRES
AREA TO BE VEGETATIVELY STABILIZED	3.69 ACRES
TOTAL CUT	39900 CU.YDS.
TOTAL FILL	39900 CU.YDS.
ONSITE BORROW AREA LOCATION	N/A CU.YDS.

8) ANY SEDIMENT CONTROL PRACTICE WHICH IS DISTURBED BY GRADING ACTIVITY FOR PLACEMENT OF UTILITIES MUST BE REPAIRED ON THE SAME DAY OF DISTURBANCE.

9) ADDITIONAL SEDIMENT CONTROLS MUST BE PROVIDED, IF DEEMED NECESSARY BY THE HOWARD COUNTY SEDIMENT CONTROL INSPECTOR.

10) ON ALL SITES WITH DISTURBED AREAS IN EXCESS OF 2 ACRES, APPROVAL OF THE INSPECTION AGENCY SHALL BE REQUESTED UPON COMPLETION OF INSTALLATION OF PERIMETER EROSION AND SEDIMENT CONTROLS, BUT BEFORE PROCEEDING WITH ANY OTHER EARTH DISTURBANCE OR GRADING. OTHER BUILDING OR GRADING INSPECTION APPROVALS MAY NOT BE AUTHORIZED UNTIL THIS INITIAL APPROVAL BY THE INSRECTION AGENCY IS MADE.

11) TRENCHES FOR THE CONSTRUCTION OF UTILITIES IS LIMITED TO THREE PIPE LENGTHS OR THAT WHICH SHALL BE BACK-FILLED AND STABILIZED WITHIN ONE WORKING DAY, WHICHEVER IS SHORTER.

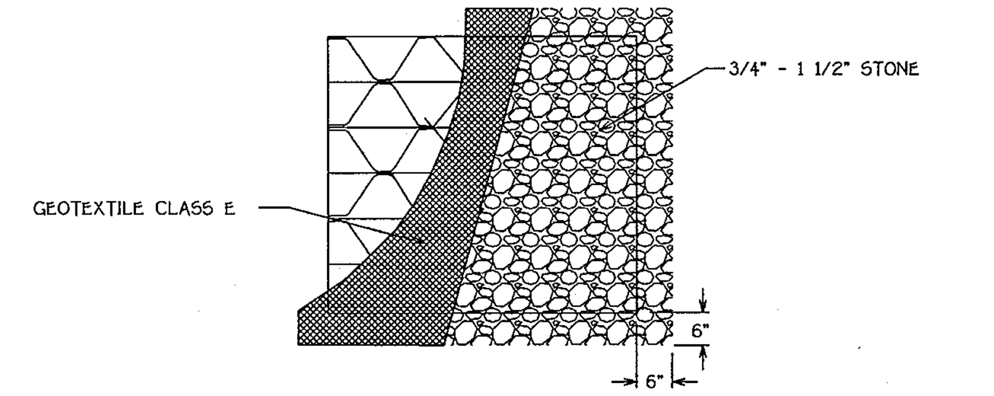

PLAN/CUT AWAY VIEW

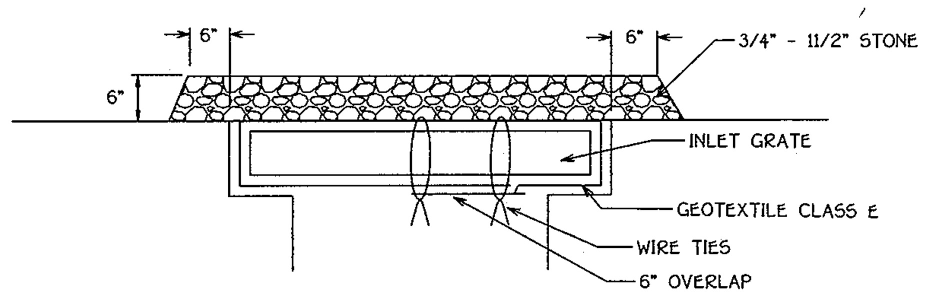

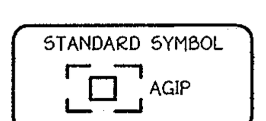

CROSS SECTION

MAX. DRAINAGE AREA = 1/4 ACRE

Construction Specifications

1. Lift grate and wrap with Geotextile Class E to completely cover all openings, then set grate back in place.
2. Place 3/4" to 11/2" stone, 4"-6" thick on the grate to secure the fabric and provide additional filtration.

AT GRADE INLET PROTECTION

SUPER SILT FENCE

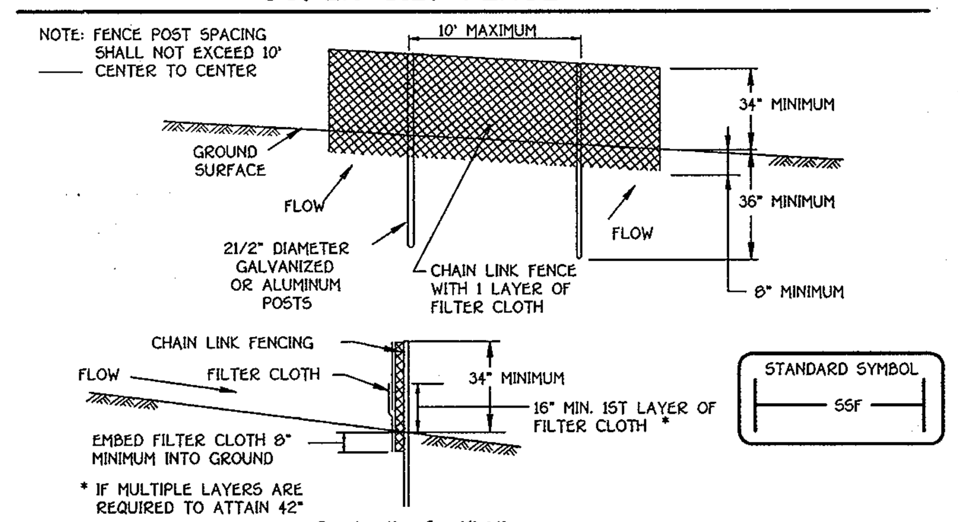

Construction Specifications

1. Fencing shall be 42" in height and constructed in accordance with the latest Maryland State Highway Details for Chain Link Fencing. The specification for a 6' fence shall be used, substituting 42" fabric and 6' length posts.
2. Chain link fence shall be fastened securely to the fence posts with wire ties. The lower tension wire, brace and truss rods, drive anchors and post caps are not required except on the ends of the fence.
3. Filter cloth shall be fastened securely to the chain link fence with ties spaced every 24" at the top and mid section.
4. Filter cloth shall be embedded a minimum of 8" into the ground.
5. When two sections of filter cloth adjoin each other, they shall be overlapped by 6" and folded.
6. Maintenance shall be performed as needed and silt buildups removed when "bulges" develop in the silt fence, or when silt reaches 50% of fence height
7. Filter cloth shall be fastened securely to each fence post with wire ties or staples at top and mid section and shall meet the following requirements for Geotextile Class F:

Tensile Strength	50 lbs/in (min.)	Test: MSMT 509
Tensile Modulus	20 lbs/in (min.)	Test: MSMT 509
Flow Rate	0.3 gal/ft /minute (max.)	Test: MSMT 322
Filtering Efficiency	75% (min.)	Test: MSMT 322

Design Criteria

Slope	Slope Steepness	Slope Length (maximum)	Silt Fence Length (maximum)
0 - 10%	0 - 10:1	Unlimited	Unlimited
10 - 20%	10:1 - 5:1	200 feet	1,500 feet
20 - 33%	5:1 - 3:1	100 feet	1,000 feet
33 - 50%	3:1 - 2:1	100 feet	500 feet
50% +	2:1 +	50 feet	250 feet

STATE OF MARYLAND PROFESSIONAL ENGINEER

CURB INLET PROTECTION WITH SUPER SILT FENCE

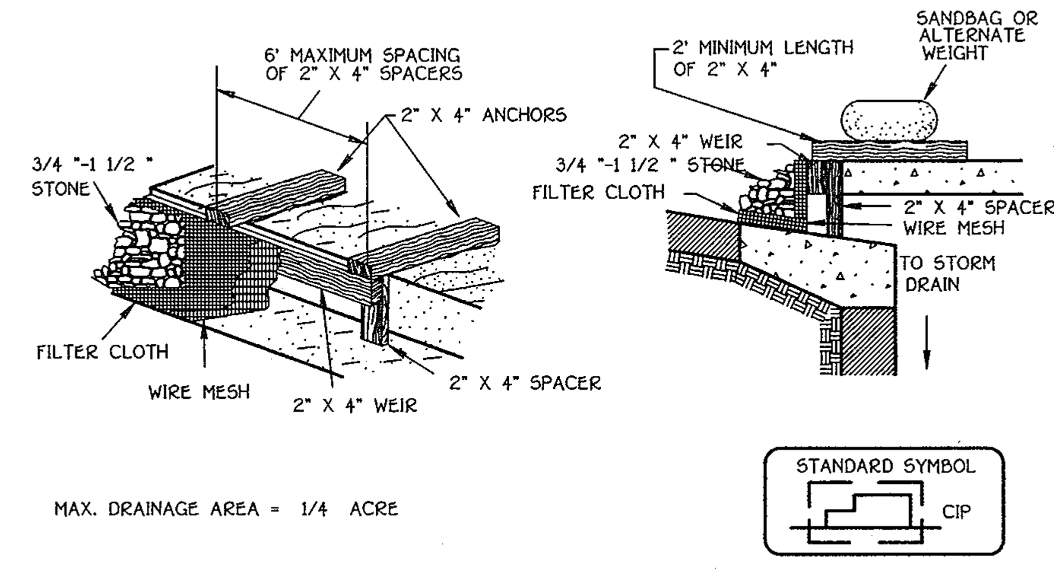

MAX. DRAINAGE AREA = 1/4 ACRE

Construction Specifications

1. Attach a continuous piece of wire mesh (30" minimum width by throat length plus 4') to the 2" x 4" weir (measuring throat length plus 2') as shown on the standard drawing.
2. Place a continuous piece of Geotextile Class E the same dimensions as the wire mesh over the wire mesh and securely attach it to the 2" x 4" weir.
3. Securely nail the 2" X 4" weir to a 9" long vertical spacer to be located between the weir and the inlet face (max. 4' apart).
4. Place the assembly against the inlet throat and nail (minimum 2' lengths of 2" x 4" to the top of the weir at spacer locations). These 2" x 4" anchors shall extend across the inlet top and be held in place by sandbags or alternate weight.
5. The assembly shall be placed so that the end spacers are a minimum 1' beyond both ends of the throat opening.
6. Form the 1/2 " x 1/2 " wire mesh and the geotextile fabric to the concrete gutter and against the face of the curb on both sides of the inlet. Place clean 3/4 " x 1 1/2 " stone over the wire mesh and geotextile in such a manner to prevent water from entering the inlet under or around the geotextile.
7. This type of protection must be inspected frequently and the filter cloth and stone replaced when clogged with sediment.
8. Assure that storm flow does not bypass the inlet by installing a temporary earth or asphalt dike to direct the flow to the inlet.

CURB INLET PROTECTION (COG OR COS INLETS)

FISHER, COLLINS & CARTER, INC.
CIVIL ENGINEERING CONSULTANTS & LAND SURVEYORS
CENTENNIAL SQUARE OFFICE PARK - 10272 BALTIMORE NATIONAL PIKE
ELLICOTT CITY, MARYLAND 21042
(410) 461 - 2855

DATE	DESCRIPTION
	REVISION BLOCK

ENGINEER'S CERTIFICATE

"I certify that this plan for sediment and erosion control represents a practical and workable plan based on my personal knowledge of the site conditions and that it was prepared in accordance with the requirements of the Howard Soil Conservation District."

Signature of Engineer — Date 4/1/07

DEVELOPER'S CERTIFICATE

"I/We certify that all development and construction will be done according to this plan for sediment and erosion control, and that all responsible personnel involved in the construction project will have a Certificate of Attendance at a Department of the Environment Approved Training Program for the Control of Sediment and Erosion before beginning the project. I also authorize periodic on-site inspection by the Howard Soil Conservation District."

Signature of Developer — Date 3/29/07
C. PATRICK CREANEY

Reviewed for HOWARD SCD and meets Technical Requirements.

U.S.D.A.-Natural Resources Conservation Service — Date 5/23/07

This development plan is approved for soil erosion and sediment control by the HOWARD SOIL CONSERVATION DISTRICT.

Howard SCD — Date 5/23/07

OWNER/DEVELOPER

CSG PATAPSCO, LLC
5024 CAMPBELL BOULEVARD, SUITE G
WHITE MARSH, MARYLAND 21236
410-933-2091

APPROVED: DEPARTMENT OF PLANNING AND ZONING

Director - Department of Planning and Zoning — Date 6/5/07

Chief, Division of Land Development — Date 6/5/07

Chief, Development Engineering Division J.P. — Date 5/30/07

SUBDIVISION			SECTION/AREA	PARCEL NO.
PATAPSCO VALLEY BUSINESS CENTER			N/A	C
PLAT NO. 18979 & 18980 F-07-144	BLOCK NO. 14, 15, 20, 21	ZONE M-2	TAX MAP 38	ELEC. DIST. FIRST	CENSUS TR. 601201
WATER CODE A04			SEWER CODE 2150500, 2150501, 2150300	

SEDIMENT CONTROL NOTES AND DETAILS

PATAPSCO VALLEY BUSINESS CENTER

PATAPSCO VALLEY OFFICE CAMPUS

PARCEL 'C'

ZONED: M-2

TAX MAP No. 38 PARCEL No. 285 GRID No. 14,15,20,21

FIRST ELECTION DISTRICT HOWARD COUNTY, MARYLAND

SCALE: AS SHOWN

DATE: MARCH 15, 2007

SHEET 16 OF 21

SDP-07-028

I:\06003\dwg\SITE DEVELOPMENT PLAN\06003-6001 SED CON NOTES.dwg, SED CON NOTES & DETAILS, 3/16/2007 8:25:19 AM, 1:1

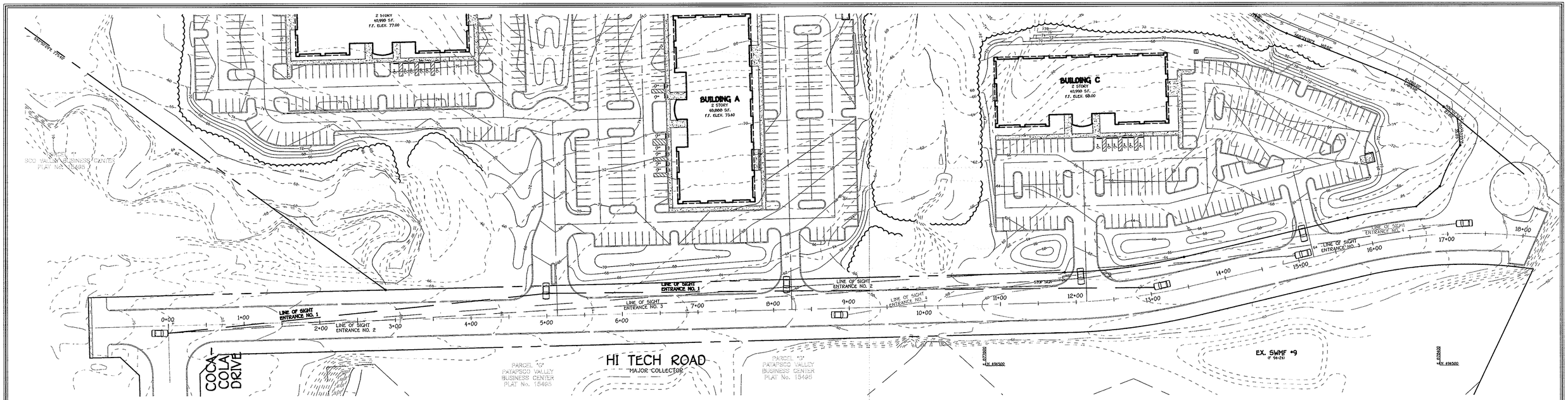

PLAN

SCALE: 1" = 60'

HI TECH ROAD

MAJOR COLLECTOR
DESIGN SPEED = 40 M.P.H.

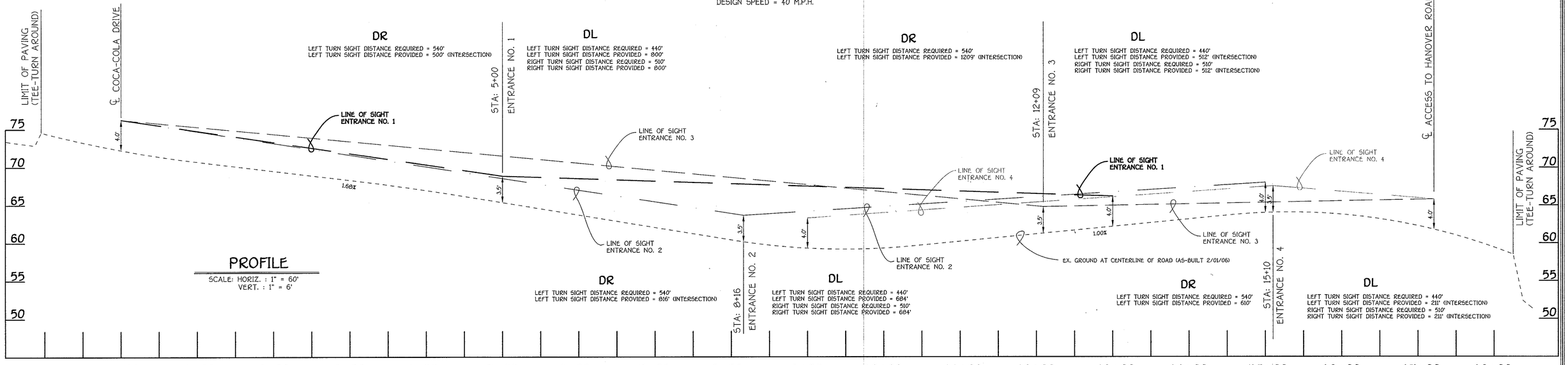

PROFILE

SCALE: HORIZ. : 1" = 60'
VERT. : 1" = 6'

FISHER, COLLINS & CARTER, INC.
CIVIL ENGINEERING CONSULTANTS & LAND SURVEYORS
CENTENNIAL SQUARE OFFICE PARK - 10272 BALTIMORE NATIONAL PIKE
ELLICOTT CITY, MARYLAND 21042
(410) 461 - 2855

DATE	DESCRIPTION
	REVISION BLOCK

STATE OF MARYLAND — JAMES R. SCHLABACH — No. 13610 — PROFESSIONAL ENGINEER

OWNER/DEVELOPER
CSG PATAPSCO, LLC
5024 CAMPBELL BOULEVARD, SUITE G
WHITE MARSH, MARYLAND 21236
410-933-2091

APPROVED: DEPARTMENT OF PLANNING AND ZONING

Director - Department of Planning and Zoning — Date 6/5/07

Chief, Division of Land Development — Date 6/5/07

Chief, Development Engineering Division — Date 5/30/07

SUBDIVISION	SECTION/AREA	PARCEL NO.
PATAPSCO VALLEY BUSINESS CENTER	N/A	C

PLAT NO.	BLOCK NO.	ZONE	TAX MAP	ELEC. DIST.	CENSUS TR.
18979 & 18980 F. 07-144	14, 15, 20, 21	M-2	38	FIRST	601201

WATER CODE	SEWER CODE
A04	2150500, 2150501, 2150300

SIGHT DISTANCE PLAN AND PROFILE

PATAPSCO VALLEY BUSINESS CENTER
PATAPSCO VALLEY OFFICE CAMPUS
PARCEL 'C'
ZONED: M-2

TAX MAP No. 38 PARCEL No. 285 GRID No. 14,15,20,21
FIRST ELECTION DISTRICT HOWARD COUNTY, MARYLAND
SCALE: AS SHOWN
DATE: MARCH 15, 2007
SHEET 17 OF 21

SDP-07-028

I:\06003\dwg\SITE DEVELOPMENT PLAN\06003-SD01 SIGHT DISTANCE PLAN AND PROFILE.dwg, SIGHT DISTANCE, 3/16/2007 8:28:37 AM, 1:1

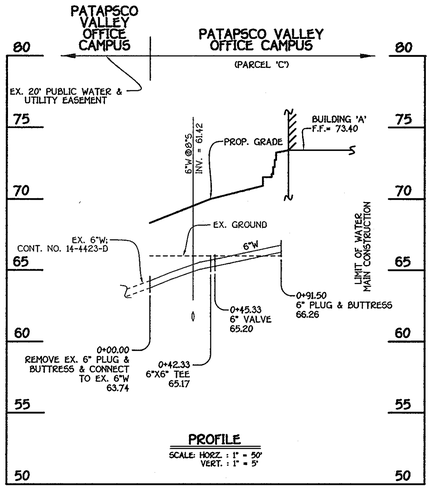

6" WATER MAIN; BUILDING 'A'

WATER MAIN TABULATION CHART			
W.M. STA.	APPURTENANCE	NORTHING	EASTING
6" WATER MAIN; BUILDING 'A'			
0+00.00	EX. 6" PLUG & BUTTRESS	555479.20	1389964.82
0+42.33	6"X6" TEE	555521.52	1389963.79
0+45.33	6" VALVE	555521.52	1389960.79
0+91.50	6" PLUG & BUTTRESS	555520.32	1389914.64

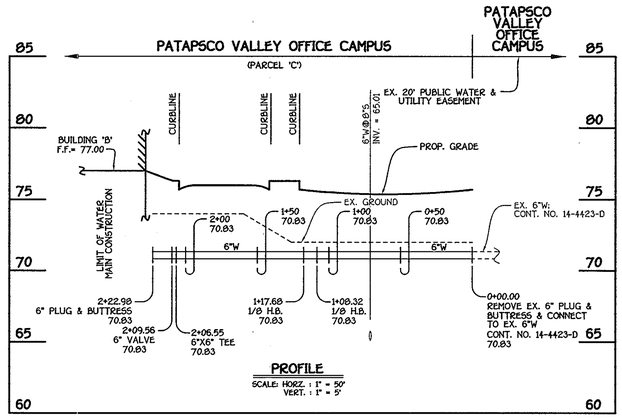

6" WATER MAIN; BUILDING 'B'

WATER MAIN TABULATION CHART			
W.M. STA.	APPURTENANCE	NORTHING	EASTING
6" WATER MAIN; BUILDING 'B'			
0+00.00	EX. 6" PLUG & BUTTRESS	555623.91	1389404.41
1+08.32	1/Ø H.B.	555621.25	1389296.12
1+17.68	1/Ø H.B.	555627.69	1389289.32
2+06.55	6"X6" TEE	555716.53	1389286.85
2+09.56	6" VALVE	555716.61	1389289.84
2+22.98	6" PLUG & BUTTRESS	555716.97	1389303.26

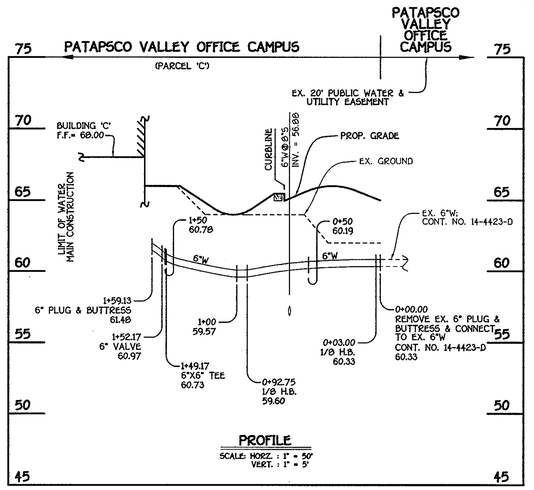

6" WATER MAIN; BUILDING 'C'

WATER MAIN TABULATION CHART			
W.M. STA.	APPURTENANCE	NORTHING	EASTING
6" WATER MAIN; BUILDING 'C'			
0+00.00	EX. 6" PLUG & BUTTRESS	555505.82	1390287.02
0+03.00	1/Ø H.B.	555508.82	1390286.95
0+92.75	1/Ø H.B.	555564.63	1390216.66
1+49.17	6"X6" TEE	555621.03	1390215.33
1+52.17	6" VALVE	555621.11	1390218.33
1+59.13	6" PLUG & BUTTRESS	555621.27	1390225.28

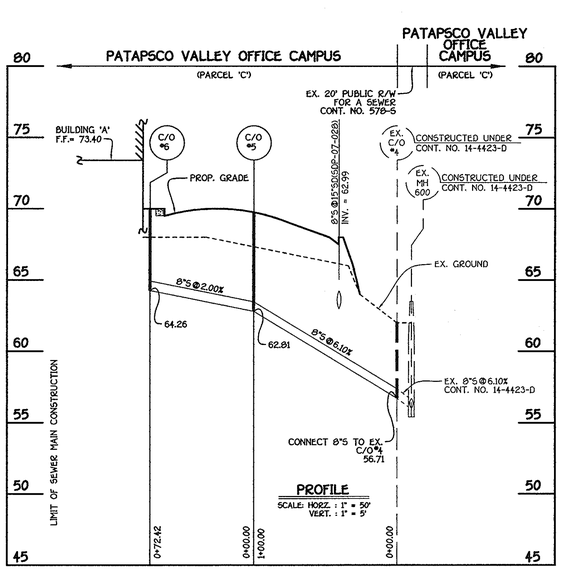

8" SEWER MAIN; BUILDING 'A'

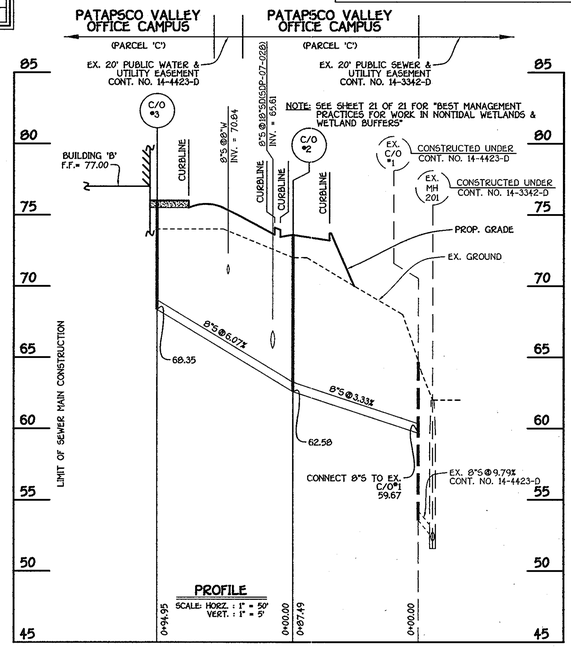

8" SEWER MAIN; BUILDING 'B'

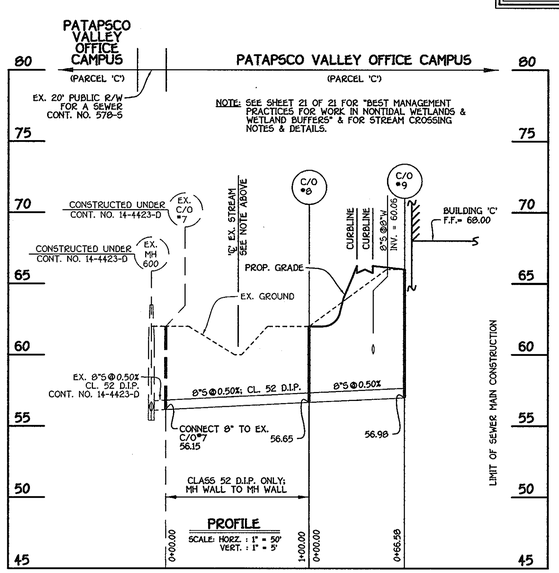

8" SEWER MAIN; BUILDING 'C'

M.C.E. CHART	
BUILDING	M.C.E.
'A'	71.51
'B'	74.27
'C'	66.65

MANHOLE TABULATION CHART			
NO.	NORTHING	EASTING	RIM ELEVATION
C.O. #2	555579.49	1389442.71	73.60
C.O. #3	555674.40	1389440.37	76.00
C.O. #5	555535.60	1389980.97	69.75
C.O. #6	555541.19	1389916.77	70.00
C.O. #8	555518.41	1390210.06	62.00
C.O. #9	555563.76	1390257.18	66.00

NOTE: SET ALL TOPS OF CLEAN-OUTS FLUSH W/ PROPOSED FINISHED GRADE.

8"S INVERT @ 5' FROM BUILDING		
STATION	BUILDING	ELEVATION
	C.O. #2 TO C.O. #3	
0+94.95	'A'	65.85
	C.O. #5 TO C.O. #6	
0+74.42	'B'	64.36
	C.O. #8 TO C.O. #9	
0+66.58	'C'	57.08

FISHER, COLLINS & CARTER, INC.
CIVIL ENGINEERING CONSULTANTS & LAND SURVEYORS
CENTENNIAL SQUARE OFFICE PARK - 10272 BALTIMORE NATIONAL PIKE
ELLICOTT CITY, MARYLAND 21042
(410) 461 - 2855

DATE	DESCRIPTION
	REVISION BLOCK

STATE OF MARYLAND — JAMES R. HARRIS — No. 13408 — PROFESSIONAL ENGINEER

OWNER/DEVELOPER
CSG PATAPSCO, LLC
5024 CAMPBELL BOULEVARD, SUITE G
WHITE MARSH, MARYLAND 21236
410-933-2091

APPROVED: DEPARTMENT OF PLANNING AND ZONING

Director - Department of Planning and Zoning — Date 6/5/07

Chief, Division of Land Development — Date 6/15/07

Chief, Development Engineering Division — Date 5/30/07

SUBDIVISION			SECTION/AREA		PARCEL NO.
PATAPSCO VALLEY BUSINESS CENTER			N/A		C
PLAT NO. 18798, 18980 F-07-144	BLOCK NO. 14, 15, 20, 21	ZONE M-2	TAX MAP 38	ELEC. DIST. FIRST	CENSUS TR. 601201
WATER CODE A04			SEWER CODE 2150500, 2150501, 2150300		

PRIVATE WATER & SEWER MAIN PROFILES

PATAPSCO VALLEY BUSINESS CENTER
PATAPSCO VALLEY OFFICE CAMPUS
PARCEL 'C'
ZONED: M-2

TAX MAP No. 38 PARCEL No. 285 GRID No. 14,15,20,21
FIRST ELECTION DISTRICT HOWARD COUNTY, MARYLAND

SCALE: AS SHOWN
DATE: MARCH 15, 2007
SHEET 18 OF 21 SDP-07-028

I:\06003\dwg\SITE DEVELOPMENT PLAN\06003-6001 Water And Sewer Base Plan Parcel 'C' dwg, PRIVATE PROFILE SHEET, 3/16/2007 8:27:41 AM, 1:1

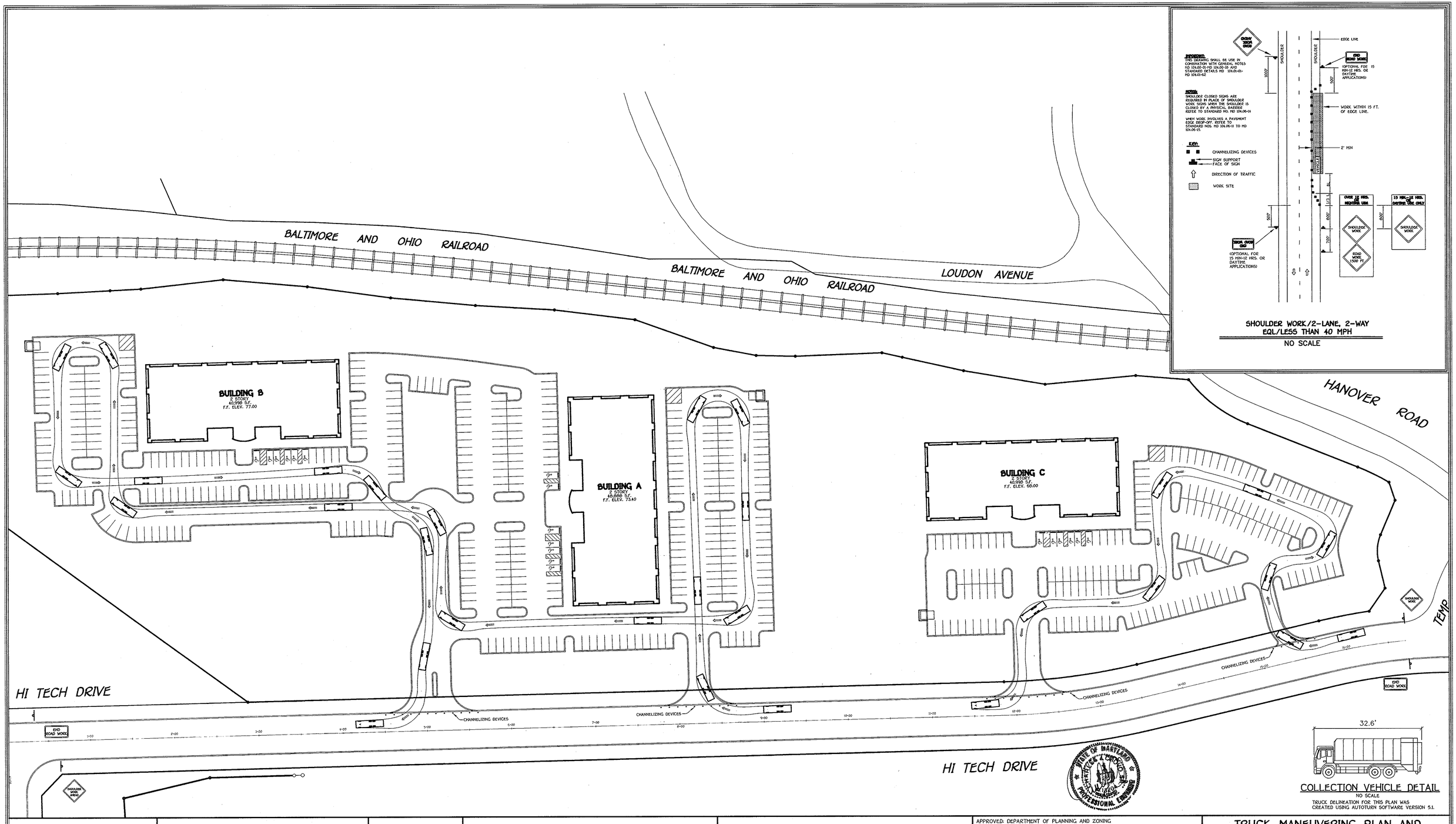

REFERENCE:
THIS DRAWING SHALL BE USE IN CONJUNCTION WITH GENERAL NOTES MD 104.00-01,MD 104.00-13 AND STANDARD DETAILS MD 104.01-01- MD 104.01-02

NOTES:
SHOULDER CLOSED SIGNS ARE REQUIRED IN PLACE OF SHOULDER WORK SIGNS WHEN THE SHOULDER IS CLOSED BY A PHYSICAL BARRIER REFER TO STANDARD NO. MD 104.06-14

WHEN WORK INVOLVES A PAVEMENT EDGE DROP-OFF REFER TO STANDARD NOS. MD 104.06-11 TO MD 104.06-13.

SHOULDER WORK/2-LANE, 2-WAY EQL/LESS THAN 40 MPH
NO SCALE

COLLECTION VEHICLE DETAIL
NO SCALE
TRUCK DELINEATION FOR THIS PLAN WAS CREATED USING AUTOTURN SOFTWARE VERSION 5.1.

STATE OF MARYLAND
STEVE I. PEREGO
PROFESSIONAL ENGINEER

FISHER, COLLINS & CARTER, INC.
CIVIL ENGINEERING CONSULTANTS & LAND SURVEYORS
CENTENNIAL SQUARE OFFICE PARK - 10272 BALTIMORE NATIONAL PIKE
ELLICOTT CITY, MARYLAND 21042
(410) 461 - 2855

DATE	DESCRIPTION
	REVISION BLOCK

OWNER/DEVELOPER
CSG PATAPSCO, LLC
5024 CAMPBELL BOULEVARD, SUITE G
WHITE MARSH, MARYLAND 21236
410-933-2091

APPROVED: DEPARTMENT OF PLANNING AND ZONING

Director - Department of Planning and Zoning — Date 6/5/07

Chief, Division of Land Development — Date 6/5/07

Chief, Development Engineering Division — Date 5/30/07

SUBDIVISION			SECTION/AREA		PARCEL NO.
PATAPSCO VALLEY BUSINESS CENTER			N/A		C
PLAT NO.	BLOCK NO.	ZONE	TAX MAP	ELEC. DIST.	CENSUS TR.
19774 & 19780 F-87-144	14, 15, 20, 21	M-2	38	FIRST	601201
WATER CODE			SEWER CODE		
A04			2150500, 2150501, 2150300		

TRUCK MANEUVERING PLAN AND MAINTENANCE OF TRAFFIC PLAN

PATAPSCO VALLEY BUSINESS CENTER

PATAPSCO VALLEY OFFICE CAMPUS PARCEL 'C'

ZONED: M-2

TAX MAP No. 38 PARCEL No. 285 GRID No. 14,15,20,21
FIRST ELECTION DISTRICT HOWARD COUNTY, MARYLAND
SCALE: 1" = 50'
DATE: MARCH 15, 2007
SHEET 19 OF 21

SDP-07-028

I:\06003\dwg\SITE DEVELOPMENT PLAN\06003-6001 TRUCK TURNING PLAN.dwg, TRUCK TURNING-1, 3/16/2007 8:28:32 AM, 1:1

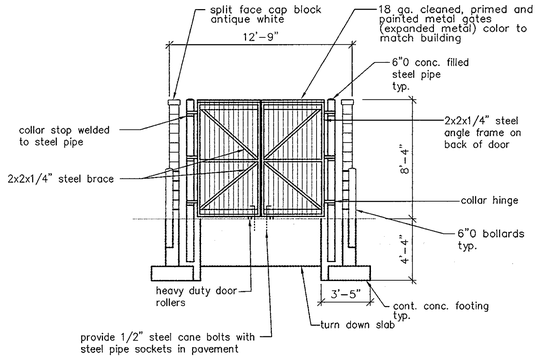

DUMPSTER ENCLOSURE FRONT ELEVATION

SCALE: 1/4" = 1'-0"

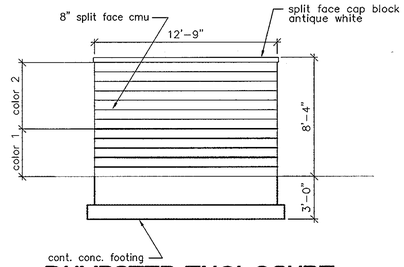

DUMPSTER ENCLOSURE REAR ELEVATION

SCALE: 1/4" = 1'-0"

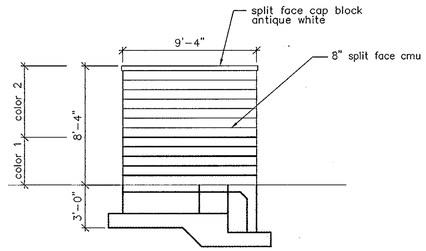

DUMPSTER ENCLOSURE LEFT SIDE ELEVATION

SCALE: 1/4" = 1'-0"

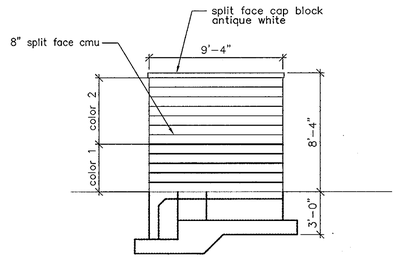

DUMPSTER ENCLOSURE RIGHT SIDE ELEVATION

SCALE: 1/4" = 1'-0"

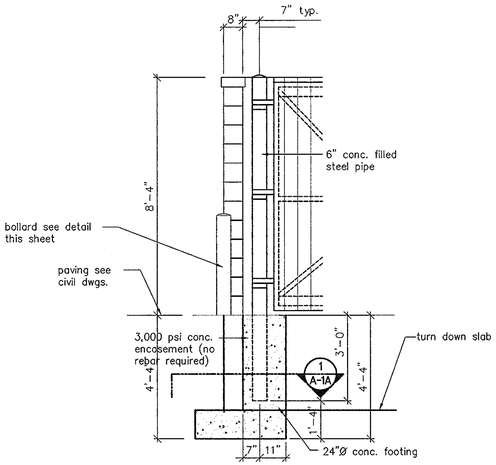

STEEL PIPE DETAIL

SCALE: 1/2" = 1'-0"

FOOTING/CONCRETE NOTES:
1. ASSUMED SOIL BEARING VALUE = 2,000 PSF & SHALL BE FIELD VERIFIED BY REGISTERED MD. GEOTECHNICAL ENGINEER.
2. ALL CONCRETE FOR FOOTINGS SHALL BE 3,000 PSI @ 28 DAYS.
3. ALL CONCRETE FOR SLAB ON GRADE SHALL BE 3,500 PSI AIR-ENTRAINED @ 28 DAYS.

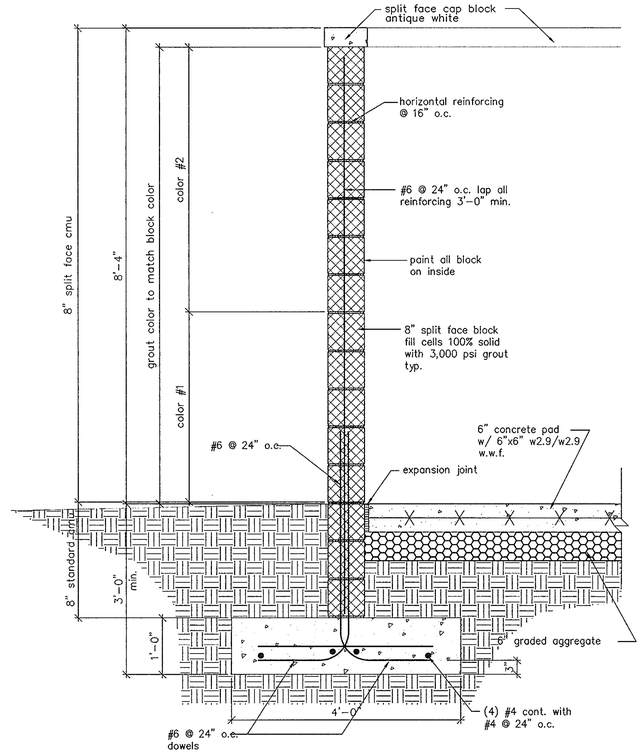

SECTION THRU DUMPSTER WALL

SCALE: 1" = 1'-0"

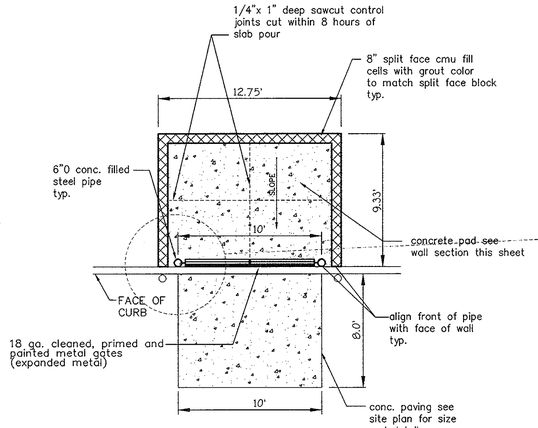

DUMPSTER PLAN

SCALE: 1/4" = 1'-0"

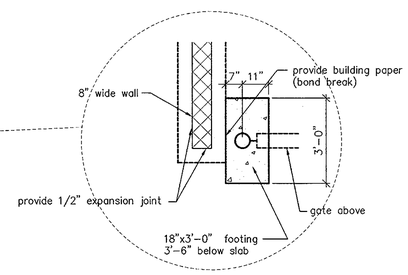

1 A-1 **SECTION THRU FOOTING**

SCALE: 1/2" = 1'-0"

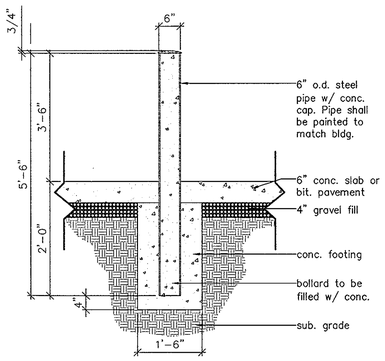

BOLLARD DETAIL

SCALE: 3/4"=1'-0"

STATE OF MARYLAND — CHARLES L. PROVOST III — 21708 — PROFESSIONAL ENGINEER

FISHER, COLLINS & CARTER, INC.
CIVIL ENGINEERING CONSULTANTS & LAND SURVEYORS
CENTENNIAL SQUARE OFFICE PARK - 10272 BALTIMORE NATIONAL PIKE
ELLICOTT CITY, MARYLAND 21042
(410) 461 - 2855

DATE	DESCRIPTION
	REVISION BLOCK

OWNER/DEVELOPER
CSG PATAPSCO, LLC
5024 CAMPBELL BOULEVARD, SUITE G
WHITE MARSH, MARYLAND 21236
410-933-2091

APPROVED: DEPARTMENT OF PLANNING AND ZONING

Director - Department of Planning and Zoning — Date 6/5/07

Chief, Division of Land Development — Date 6/6/07

Chief, Development Engineering Division J.P. — Date 5/30/07

SUBDIVISION	SECTION/AREA	PARCEL NO.
PATAPSCO VALLEY BUSINESS CENTER	N/A	C

PLAT NO.	BLOCK NO.	ZONE	TAX MAP	ELEC. DIST.	CENSUS TR.
10796 10980 F-07-162	14, 15, 20, 21	M-2	38	FIRST	601201

WATER CODE	SEWER CODE
A04	2150500, 2150501, 2150300

DUMPSTER PLAN, ELEVATIONS AND DETAILS

PATAPSCO VALLEY BUSINESS CENTER
PATAPSCO VALLEY OFFICE CAMPUS
PARCEL 'C'
ZONED: M-2

TAX MAP No. 38 PARCEL No. 285 GRID No. 14,15,20,21
FIRST ELECTION DISTRICT HOWARD COUNTY, MARYLAND
SCALE: AS SHOWN
DATE: MARCH 15, 2007
SHEET 20 OF 21 SDP-07-028

I:\06003\dwg\SITE DEVELOPMENT PLAN\06003-8001 DETAILS-DUMPSTER.dwg, DUMP, 3/16/2007 8:30:56 AM, 1:60

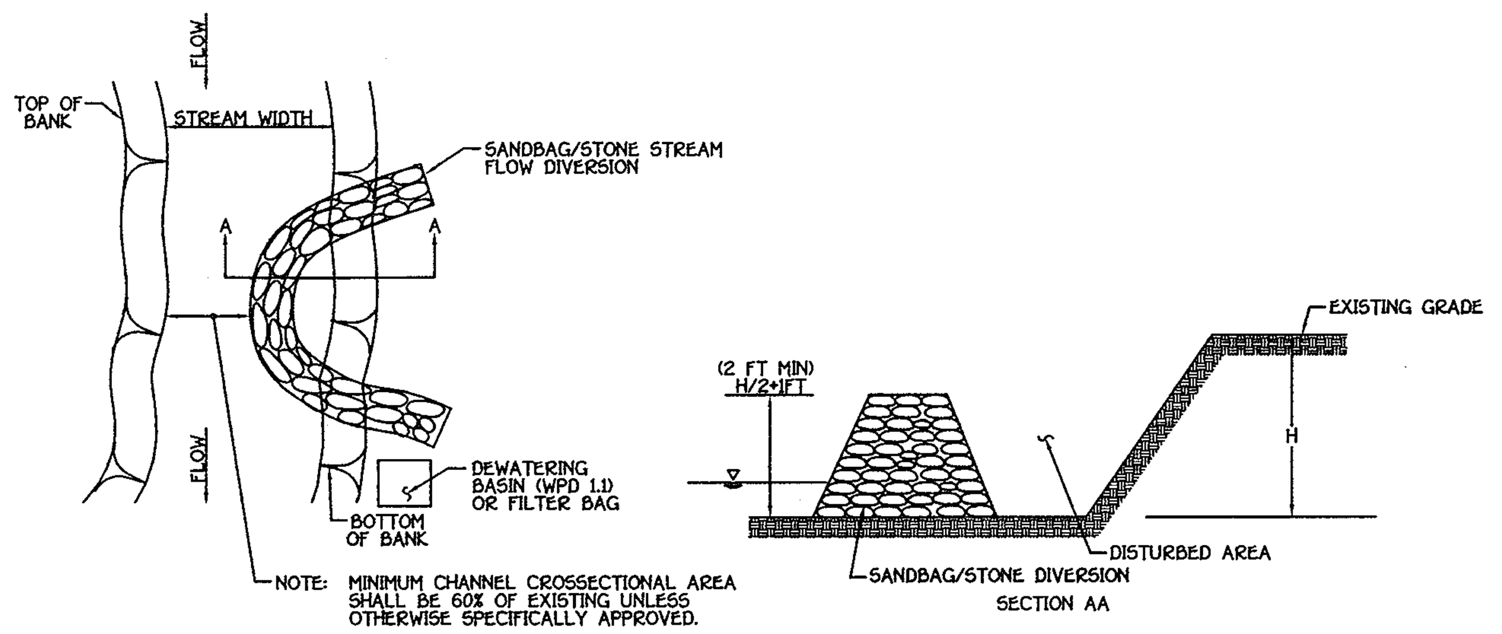

SANDBAG/STONE STREAM FLOW DIVERSION DETAIL

NO SCALE

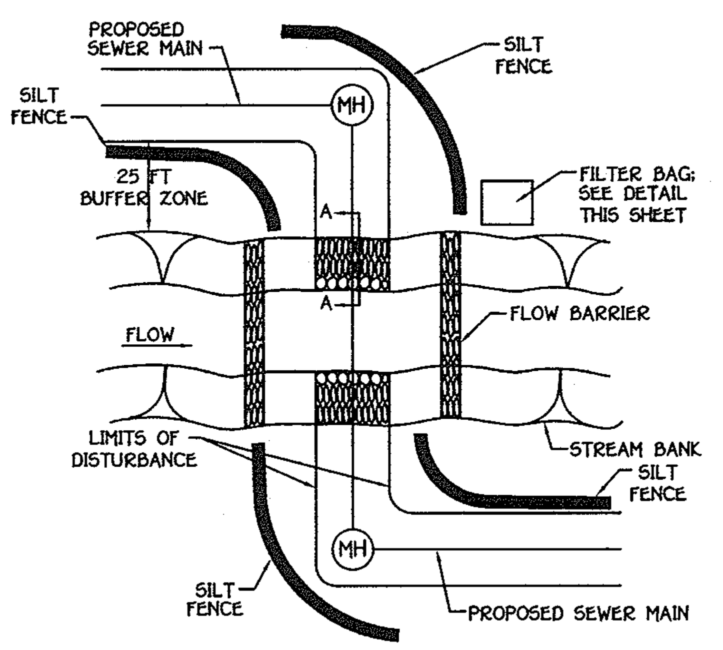

PLAN VIEW

NO SCALE

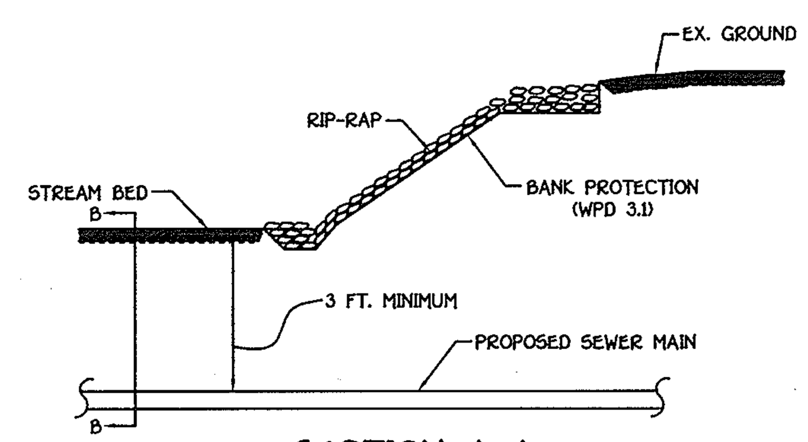

SECTION A-A

NO SCALE

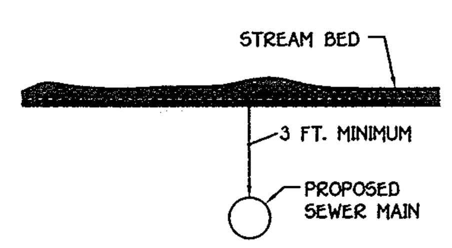

SECTION B-B

NO SCALE

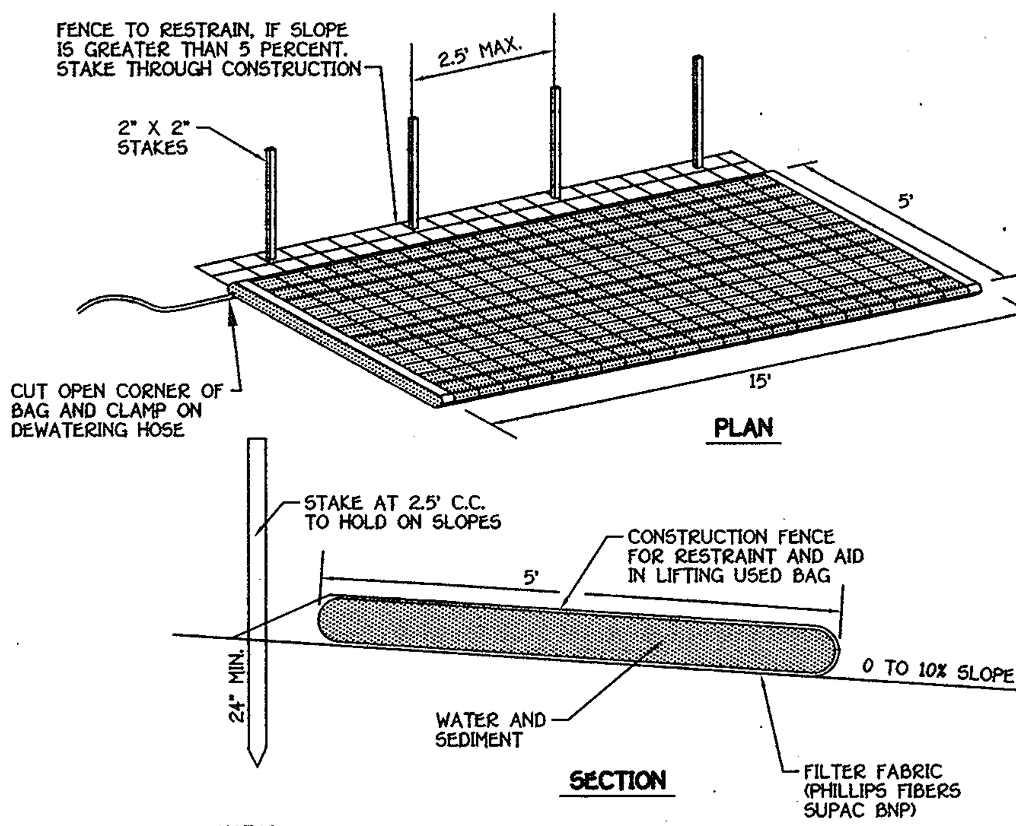

NOTES
1. FILTER BAG SHALL BE PLACED ON A SLOPING OR LEVEL, WELL GRADED VEGETATED SITE SUCH THAT WATER WILL FLOW AWAY FROM DEVICE AND ANY WORK AREAS.
2. WITDH AND LENGTH SHALL BE AS SHOWN.
3. THE FILTER BAG MUST BE STAKED IN PLACE AND SECURED TO THE PUMP DISHARGE LINE.
4. FILTER BAG SHALL NOT BE USED FOR DISCHARGE FLOWS GREATER THAN 300 GPM.
5. DEVICE SHALL BE REMOVED AND DISPOSED OF AFTER BAG IS FILLED WITH SEDIMENT. SEDIMENT FROM BAG SHALL BE SPREAD IN AN UPLAND AREA.

AVAILABLE FROM:
INDIAN VALLEY INDUSTRIES, INC.
P.O. BOX 810
JOHNSON CITY, NEW YORK 13790
(800) 659-5111

OR

A.C.F. ENVIRONMENTAL
1801-A WILLIS ROAD
RICHMOND, VIRGINIA 23237
TOLL FREE 1-800-448-3636

OR

PRICE AND COMPANY, INC.
425 36TH STREET
WYOMING, MI. 49548
(616) 530-8230

FILTER BAG DETAIL

NO SCALE

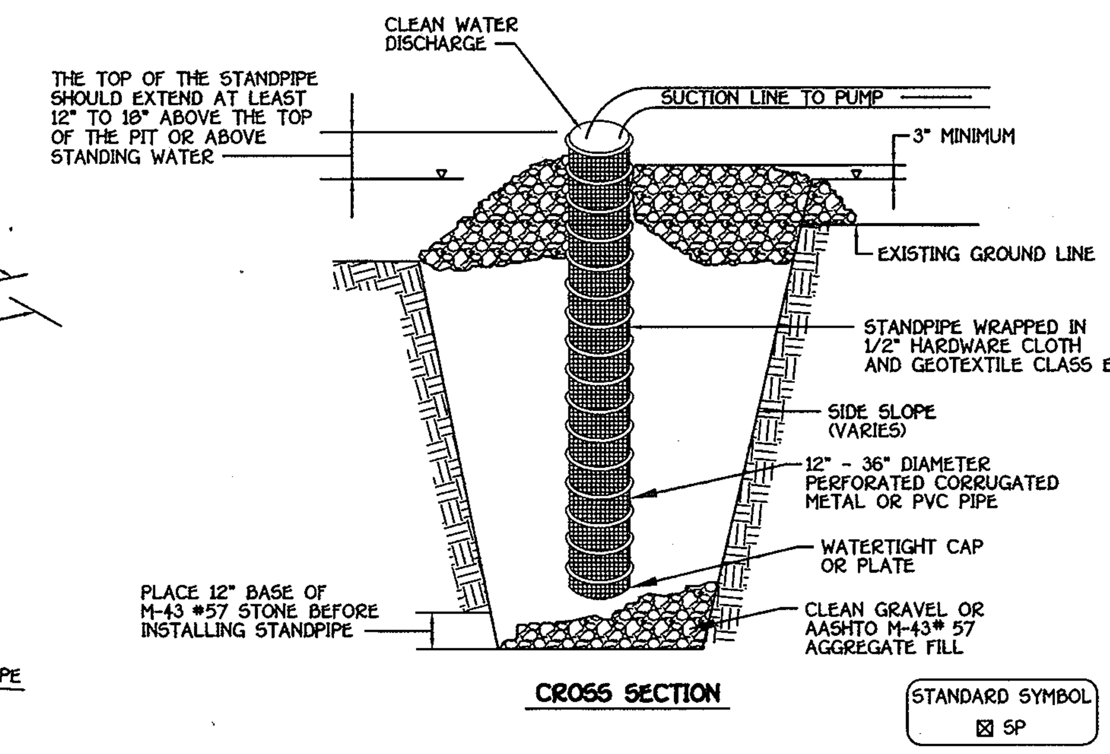

STANDARD SYMBOL
⊠ SP

1. PIT DIMENSIONS ARE VARIABLE, WITH THE MINIMUM DIAMETER BEING 2 TIMES THE STANDPIPE DIAMETER.
2. THE STANDPIPE SHALL BE CONSTRUCTED BY PERFORATING A 12" TO 24" DIAMETER CORRUGATED OR PVC PIPE; THEN WRAPPING WITH 1/2" HARDWARE CLOTH AND GEOTEXTILE CLASS E. THE PERFORATIONS SHALL BE 1/2" X 6" SLITS OR 1" DIAMETER HOLES.
3. A BASE OR FILTER MATERIAL CONSISTING OF CLEAN GRAVEL OR 57 STONE SHALL BE PLACED IN THE PIT TO A DEPTH OF 12". AFTER INSTALLING THE STANDPIPE, THE PIT SURROUNDING THE STANDPIPE SHALL THEN BE BACKFILLED WITH THE SAME FILTER MATERIAL. *
4. THE STANDPIPE SHALL EXTEND 12" TO 18" ABOVE THE LIP OF THE PIT OR THE RISER CREST ELEVATION (BASIN DEWATERING ONLY) AND THE FILTER MATERIAL SHALL EXTEND 3" MINIMUM ABOVE THE ANTICIPATED STANDING WATER ELEVATION.

DETAIL 20B - SUMP PIT

NO SCALE

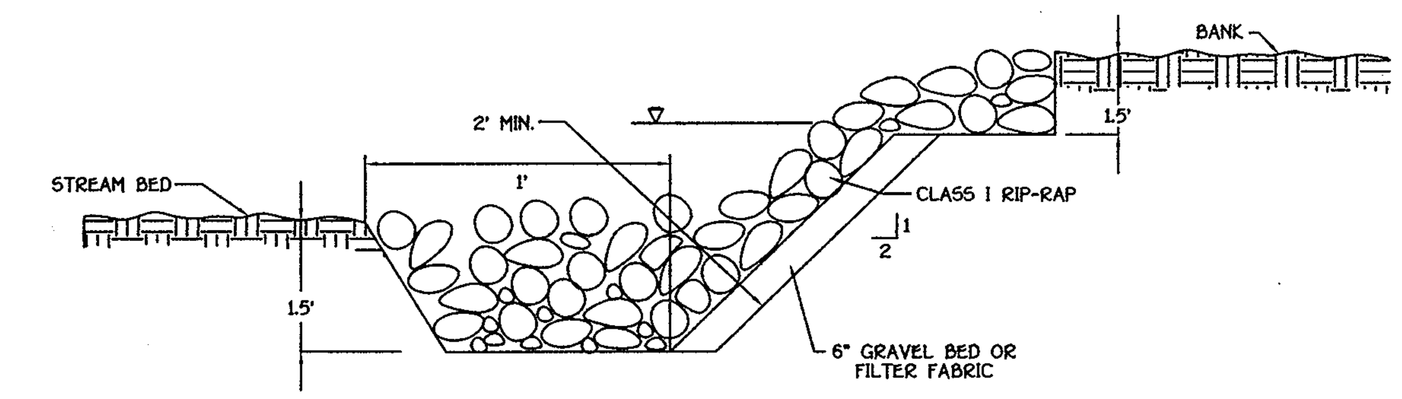

DESCRIPTION

I. THIS WORK SHALL CONSIST OF PROTECTING SLOPES & CHANNELS FROM EROSION WITH COVERINGS OF STONE IN ACCORDANCE WITH THE PLANS & SPECIFICATIONS SHOWN ON THIS DRAWING.

II. MATERIAL SPECIFICATIONS

1. BEDDING:
A. BANK RUN GRAVEL SHALL MEET THE FOLLOWING REQUIREMENTS:

% LESS THAN	U.S. STANDARD SIEVE SIZE
100	2 1/2 IN.
85-100	1 IN.
60-100	1/2 IN.
35-70	NO. 10
20-50	NO. 40
3-20	NO. 200

B. GEOTEXTILE FILTER FABRIC SHALL MEET THE FOLLOWING REQUIREMENTS:

TENSILE STRENGTH	200 LBS.
BURST STRENGTH	350 LBS.
PUNCTURE STRENGTH	70 LBS.
PERMEABILITY	.02 CM/SEC.
ELONGATION AT FAILURE	30%
MINIMUM LAP LENGTH	24 IN.

III. CONSTRUCTION REQUIREMENTS

1. THE CONTRACTOR SHALL INSTALL SEDIMENT & EROSION CONTROL DEVICES AS A FIRST ORDER OF BUSINESS.
2. PROVISIONS MUST BE MADE TO ANCHOR THE RIP-RAP AT THE STREAM BED SO AS TO PROVIDE PROTECTION AGAINST UNDERMINING. IF THIS CANNOT BE ACCOMPLISHED BY EXTENDING THE TOE TRENCH AS INDICATED IN CROSS SECTION, AN ALTERNATIVE METHOD OF PROTECTION MUST RECEIVE PRIOR WRITTEN APPROVAL OF THE ADMINISTRATION.
3. EXCAVATION FOR RIP-RAP SHALL BE MADE IN REASONABLY CLOSE CONFORMITY WITH THE EXISTING STREAM SLOPE & BED.
4. A FILTER BEDDING IS REQUIRED UNDER ALL RIP-RAP. BEDDING MATERIAL SHALL CONSIST OF EITHER A BANK RUN GRAVEL OR A GEOTEXTILE FILTER FABRIC MEETING THE SPECIFICATIONS OF II. 1. B.
5. THE PLACEMENT OF RIP-RAP SHALL BEGIN WITH THE TOE. THE LARGER STONES SHALL BE PLACED IN THE TOE ALONG THE OUTSIDE EDGES OF THE LIMITS OF THE SLOPE & CHANNEL PROTECTION. THE RIP-RAP SHALL BE PLACED WITH SUITABLE EQUIPMENT IN SUCH A MANNER AS TO PRODUCE A REASONABLY GRADED MASS OF STONES WITH ZERO DROP HEIGHT. THE PLACING OF STONES THAT CAUSE EXTENSIVE SEGREGATION IS NOT ALLOWED.
6. ANY EXCAVATION VOIDS EXISTING ALONG THE EDGES OF THE COMPLETED SLOPE & CHANNEL PROTECTION SHALL BE BACKFILLED.
7. ALL DISTURBED AREAS SHALL BE PERMANENTLY STABILIZED IN ACCORDANCE WITH AN APPROVED SEDIMENT & EROSION CONTROL PLAN.

RIP RAP STREAM BANK PROTECTION DETAIL; WPD 3.1

NO SCALE

NOTE: SEE SHEET 5 FOR EROSION & SEDIMENT CONTROL MEASURES

I. DESCRIPTION

THIS WORK SHALL CONSIST OF INSTALLING EROSION CONTROL DEVICES IN & ADJACENT TO TEMPORARY STREAM CONSTRUCTION SUCH AS UTILITY CROSSINGS.

II. CONSTRUCTION REQUIREMENTS

1. ALL EROSION & SEDIMENT CONTROL DEVICES SHALL BE INSTALLED AS THE FIRST ORDER OF WORK.
2. THE CONTRACTOR SHALL INSURE THAT A CONTINUOUS PERIMETER CONTROL BARRIER IS IN PLACE SO AS TO MINIMIZE POLLUTANTS ENTERING THE WATER.
3. EXCAVATED TOPSOIL & SUBSOIL SHALL BE KEPT SEPARATE & REPLACED IN THEIR NATURAL ORDER.
4. ALL EXCAVATED MATERIALS SHALL BE PLACED ON THE UPLAND SIDE OF THE EXCAVATION.
5. ALL CONSTRUCTION SHALL TAKE PLACE DURING STREAM LOW FLOWS. THE LENGTH OF CONSTRUCTION TIME SHALL BE LIMITED TO A MAXIMUM OF 5 DAYS FOR EACH CROSSING.
6. ALL UTILITY CROSSINGS SHALL BE PLACED AT LEAST THREE FEET BENEATH THE STREAM BED UNLESS AN ALTERNATIVE SECTION IS SPECIFICALLY APPROVED BY THE ADMINISTRATION.
7. THE CONTRACTOR MAY ELECT TO CONSTRUCT THE UTILITY CROSSING IN TWO STAGES. IN THIS CASE A WRA APPROVED FLOW BARRIER MAY BE CONSTRUCTED TO KEEP THE CONSTRUCTION AREA DRY.
8. SEDIMENT CONTROL DEVICES ARE TO REMAIN IN PLACE UNTIL ALL DISTURBED AREAS ARE STABILIZED IN ACCORDANCE WITH AN APPROVED SEDIMENT & EROSION CONTROL PLAN & THE INSPECTION AUTHORITY APPROVES THEIR REMOVAL.

UTILITY CROSSING DETAIL; WPD 5.1

NO SCALE

STREAM CROSSING NOTES:

1. DELAY ALL WORK IN THE STREAM UNTIL START OF A 5-DAY CLEAR-WEATHER FORECAST. COMPLETE ALL WORK IN THE STREAM WITHIN THESE 5-DAYS.
2. FOLLOW THE SEQUENCE OF CONSTRUCTION: STREAM CROSSING FOR ALL WORK IN THE STREAM. (SEE THIS SHEET)
3. FOR THE STREAM CROSSING, THE CONTRACTOR SHALL USE THE FOLLOWING CONSTRUCTION DETAILS:

DETAIL	DESCRIPTION	SIZE
WPD 5.1	UTILITY CROSSING	N/A
WPD 2.3	SANDBAG/STONE FLOW DIVERSION	24"
WPD 3.1	RIP-RAP OUTLET PROTECTION	CLASS I
SCS DETAIL 20B	SUMP PIT	N/A
FB	FILTER BAG	N/A

4. SEE THIS SHEET FOR BEST MANAGEMENT PRACTICES FOR WORK IN NON-TIDAL WETLANDS AND WETLAND BUFFERS.

SEQUENCE OF CONSTRUCTION: STREAM CROSSING

1. OBTAIN THE REQUIRED PERMITS/APPROVALS FROM THE APPROPRIATE AGENCIES. NTW & WD LETTER OF AUTHORIZATION NO. 20060372/05-NT-3247
2. NOTIFY THE COMPLIANCE DIVISION OF THE MARYLAND WATER MANAGEMENT ADMINISTRATION AT LEAST FIVE (5) DAYS PRIOR TO THE INITIATION OF CONSTRUCTION AND FIVE (5) DAYS AFTER WORK ENDS. THE CITY OF BALTIMORE OFFICE PHONE NUMBER IS (410) 631-3510.
3. CONTRACTOR SHALL NOTE THE TIME OF YEAR RESTRICTIONS ON WORK WITHIN THE STREAM AS SHOWN ON THE PERMITS.
4. INSTALL THE SANDBAG/STONE DIVERSION, THE FILTER BAG AND THE SUMP PIT. THE SEDIMENT CONTROL INSPECTOR MUST APPROVE ALL CONTROLS BEFORE COMMENCING WORK.
5. INSTALL SEWER MAIN AND THE RIP-RAP BANK PROTECTION ACCORDING TO THE DRAWINGS AND SPECIFICATIONS DURING A TIME OF FAVORABLE WEATHER FORCAST.
6. WITH MINIMAL DISTURBANCE, REMOVE DIVERSION CONTROLS AND FILTER BAG AND STABLIZE ALL DISTURBED AREAS.

BEST MANAGEMENT PRACTICES FOR WORK IN NONTIDAL WETLANDS AND WETLAND BUFFERS

NTW & WD LETTER OF AUTHORIZATION NO.

1. CONDUCT ALL CONSTRUCTION ACTIVITIES SO AS NOT TO CAUSE OR CONTRIBUTE TO A DEGRADATION OF WATER QUALITY AS DETERMINED BY THE MARYLAND DEPARTMENT OF THE ENVIRONMENT.
2. CONDUCT THE REGULATED CONSTRUCTION ACTIVITY SO AS NOT TO RESTRICT OR IMPEDE THE FOLLOWING:
   a. MOVEMENT OF WILDLIFE INDIGENOUS TO THE NONTIDAL WETLANDS OR ADJACENT WATERS.
   b. PASSAGE OF NORMAL OR EXPECTED HIGH WATER FLOWS.
3. STREAMS ARE CLASSIFIED AS USE I WATERS: NO IN-STREAM WORK SHALL BE CONDUCTED DURING THE PERIOD MARCH 1st THRU JUNE 15th.
4. MAINTAIN THE HYDROLOGIC REGIME OF ALL ADJACENT NONTIDAL WETLANDS.
5. NO EXCESS FILL, CONSTRUCTION MATERIAL, OR DEBRIS SHALL BE STOCKPILED OR STORED IN THE WETLANDS OR BUFFERS.
6. PLACE MATERIALS IN A LOCATION AND MANNER WHICH DOES NOT ADVERSELY IMPACT SURFACE OR SUBSURFACE WATER FLOW INTO OR OUT OF THE NONTIDAL WETLANDS & BUFFERS.
7. DO NOT USE THE EXCAVATED MATERIAL AS BACKFILL IF IT CONTAINS WASTE METAL PRODUCTS, UNSIGHTLY DEBRIS, TOXIC MATERIAL OR ANY OTHER DELETERIOUS SUBSTANCE. IF ADDITIONAL BACKFILL IS REQUIRED, USE CLEAN MATERIAL FREE OF ANY DELETERIOUS SUBSTANCES.
8. PLACE HEAVY EQUIPMENT ON MATS OR SUITABLY OPERATE THE EQUIPMENT TO PREVENT DAMAGE TO THE NONTIDAL WETLANDS AND BUFFERS.
9. REPAIR AND MAINTAIN ANY SERVICEABLE STRUCTURE OR FILL SO THERE IS NO PERMANENT LOSS OF NONTIDAL WETLANDS IN EXCESS OF NONTIDAL WETLANDS LOST UNDER THE ORIGINAL CONSTRUCTION OR FILL.
10. RECTIFY ANY NONTIDAL WETLANDS TEMPORARILY IMPACTED BY ANY CONSTRUCTION OR MAINTENANCE ACTIVITY.
11. ALL STABILIZATION IN THE WETLANDS AND BUFFERS SHALL BE OF THE FOLLOWING RECOMMENDED SPECIES: ANNUAL RYEGRASS (LOLIUIN MULTIFLORUM), MILLET (SETARIA ITALICA), BARLEY (HORDEUM SP.), OATS (UNIOLA SP.), AND OR RYE (SECALE CEREALE). THESE SPECIES WILL ALLOW FOR THE STABILIZATION OF THE SITE WHILE ALSO ALLOWING FOR THE VOLUNTARY REVEGETATION OF NATURAL WETLAND SPECIES. OTHER NON-PERSISTENT VEGETATION MAY BE ACCEPTABLE, BUT MUST BE APPROVED BY THE DIVISION. KENTUCKY 33 FESCUE SHALL NOT BE UTILIZED IN THE WETLAND OR BUFFER AREAS. THE AREA SHOULD BE SEEDED AND MULCHED TO REDUCE EROSION AFTER CONSTRUCTION ACTIVITIES HAVE BEEN COMPLETED.
12. AFTER INSTALLATION HAS BEEN COMPLETED, MAKE POST CONSTRUCTION GRADES AND ELEVATIONS OF NONTIDAL WETLANDS THE SAME AS THE ORIGINAL GRADES AND ELEVATIONS.
13. STORMWATER RUNOFF FROM ADJACENT IMPERVIOUS SURFACES SHALL BE CONTROLLED TO PREVENT THE WASHING OF DEBRIS INTO THE STREAM.

STATE OF MARYLAND
CHARLES J. CROVO SR.
No. 13204
REGISTERED
PROFESSIONAL ENGINEER

FISHER, COLLINS & CARTER, INC.
CIVIL ENGINEERING CONSULTANTS & LAND SURVEYORS
CENTENNIAL SQUARE OFFICE PARK - 10272 BALTIMORE NATIONAL PIKE
ELLICOTT CITY, MARYLAND 21042
(410) 461 - 2855

DATE	DESCRIPTION
	REVISION BLOCK

OWNER/DEVELOPER
CSG PATAPSCO, LLC
5024 CAMPBELL BOULEVARD, SUITE G
WHITE MARSH, MARYLAND 21236
410-933-2091

APPROVED: DEPARTMENT OF PLANNING AND ZONING
Director - Department of Planning and Zoning — Date 6/5/07
Chief, Division of Land Development — Date 6/5/07
Chief, Development Engineering Division — J.P. — Date 5/30/07

SUBDIVISION	SECTION/AREA	PARCEL NO.
PATAPSCO VALLEY BUSINESS CENTER	N/A	C

PLAT NO.	BLOCK NO.	ZONE	TAX MAP	ELEC. DIST.	CENSUS TR.
18979 & 18980 F-07-144	14, 15, 20, 21	M-2	38	FIRST	601201

WATER CODE	SEWER CODE
A04	2150500, 2150501, 2150300

STREAM CROSSING NOTES & DETAILS

PATAPSCO VALLEY BUSINESS CENTER
PATAPSCO VALLEY OFFICE CAMPUS
PARCEL 'C'
ZONED: M-2
TAX MAP No. 38 PARCEL No. 285 GRID No. 14,15,20,21
FIRST ELECTION DISTRICT HOWARD COUNTY, MARYLAND
SCALE: 1" = 50'
DATE: MARCH 15, 2007
SHEET 21 OF 21 **SDP-07-028**

I:\06003\dwg\SITE DEVELOPMENT PLAN\06003-6001 Water And Sewer Base Plan Parcel 'C'.dwg, PRIVATE NOTES & DETAILS, 3/16/2007 8:28:26 AM, 1:1

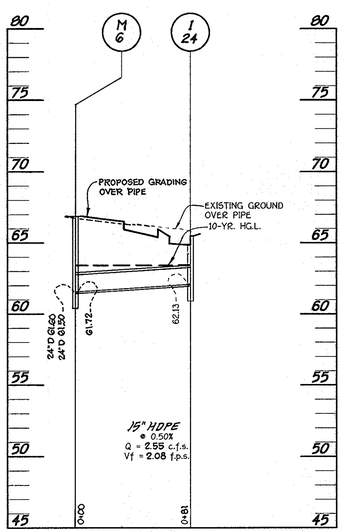

PROFILE

SCALE: HORIZ. : 1" = 50'
VERT. : 1" = 5'

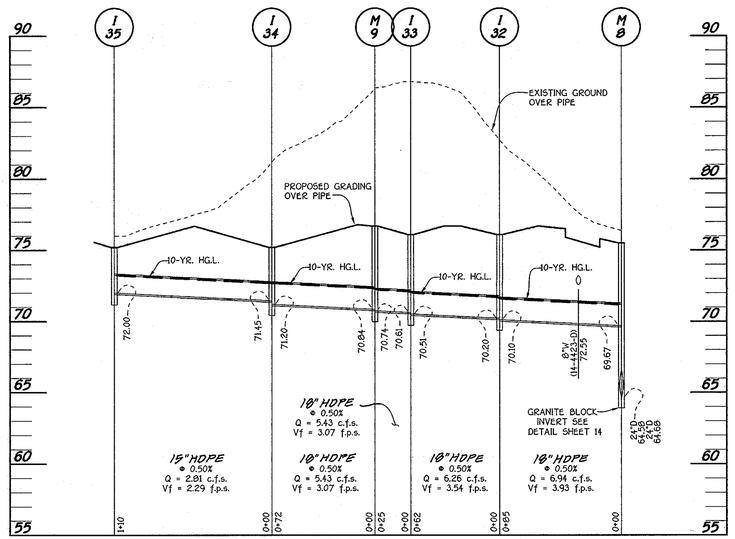

PROFILE

SCALE: HORIZ. : 1" = 50'
VERT. : 1" = 5'

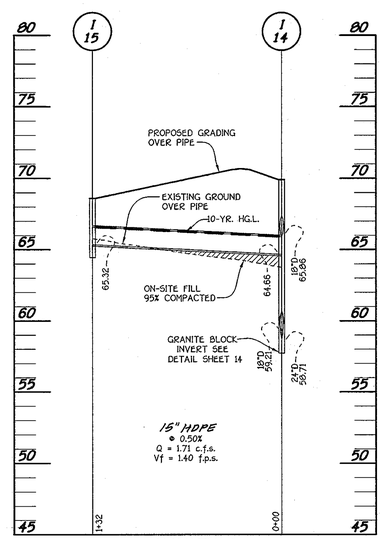

PROFILE

SCALE: HORIZ. : 1" = 50'
VERT. : 1" = 5'

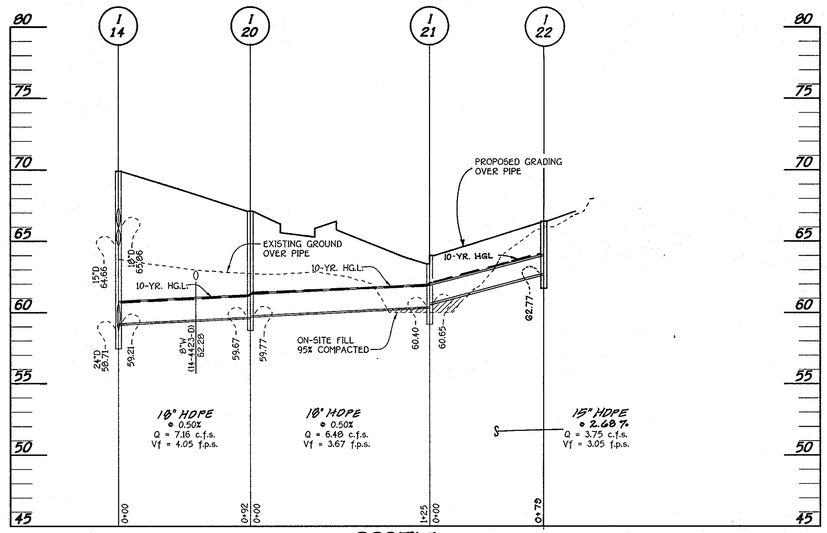

PROFILE

SCALE: HORIZ. : 1" = 50'
VERT. : 1" = 5'

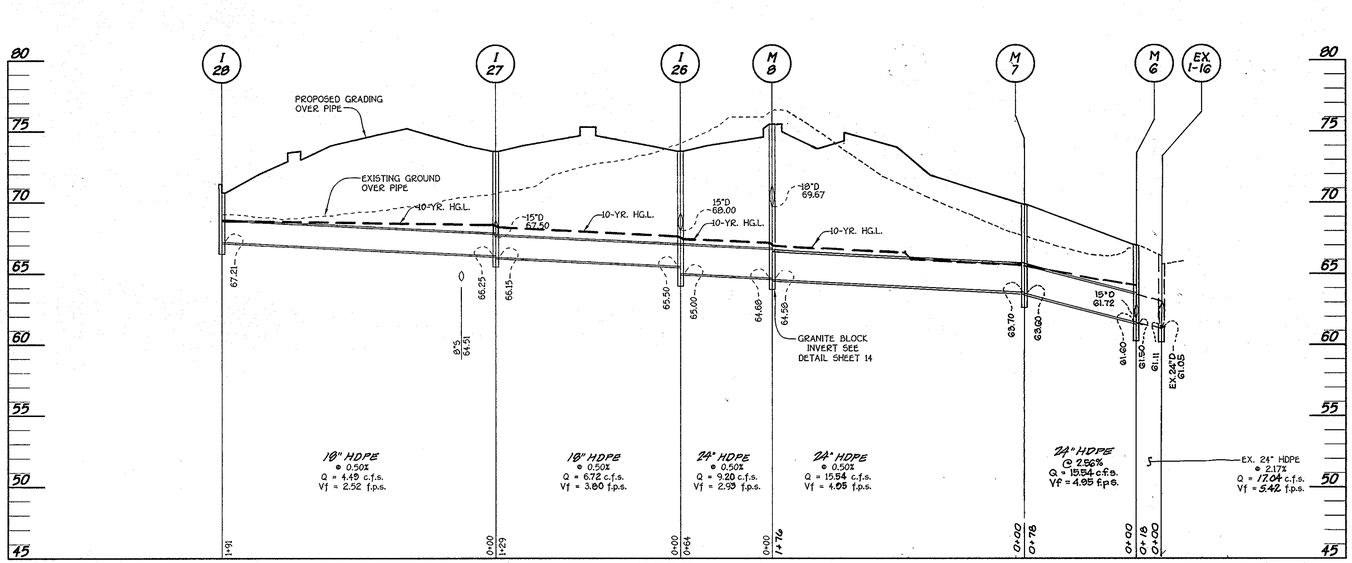

PROFILE

SCALE: HORIZ. : 1" = 50'
VERT. : 1" = 5'

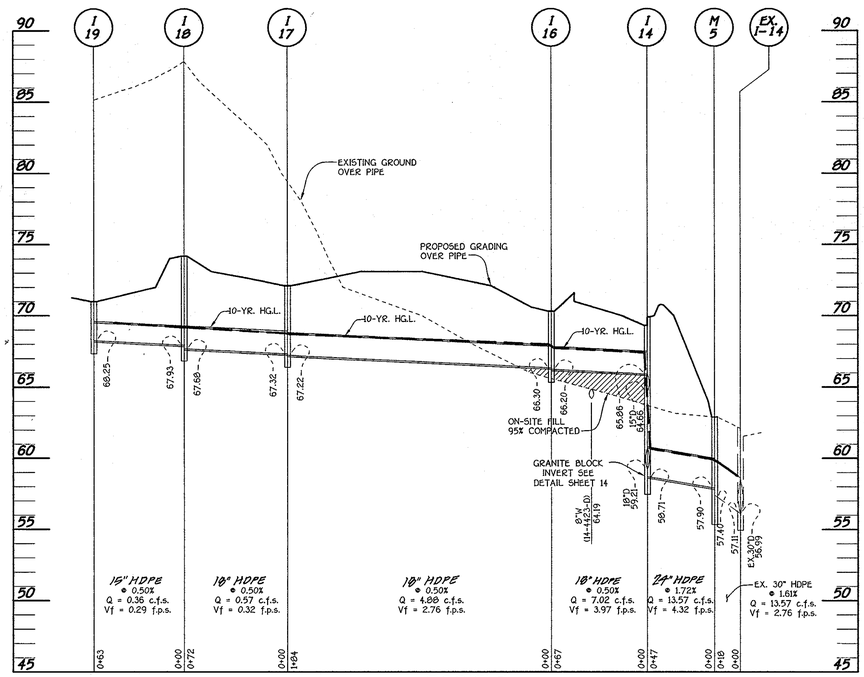

PROFILE

SCALE: HORIZ. : 1" = 50'
VERT. : 1" = 5'

FISHER, COLLINS & CARTER, INC.
CIVIL ENGINEERING CONSULTANTS & LAND SURVEYORS
CENTENNIAL SQUARE OFFICE PARK - 10272 BALTIMORE NATIONAL PIKE
ELLICOTT CITY, MARYLAND 21042
(410) 461 - 2855

DATE	DESCRIPTION
9.25.07	2 Changed all storm drain pipe from RCCP to HDPE
6/8/07	1 REVISED STORM DRAIN PROFILES

REVISION BLOCK

OWNER/DEVELOPER
CSG PATAPSCO, LLC
5024 CAMPBELL BOULEVARD, SUITE G
WHITE MARSH, MARYLAND 21236
410-933-2091

APPROVED: DEPARTMENT OF PLANNING AND ZONING

Director - Department of Planning and Zoning — Date 6/15/07

Chief, Division of Land Development — Date 6/15/07

Chief, Development Engineering Division — Date 5/30/07

SUBDIVISION		SECTION/AREA		PARCEL NO.
PATAPSCO VALLEY BUSINESS CENTER		N/A		C
PLAT NO.	BLOCK NO.	ZONE	TAX MAP	ELEC. DIST.	CENSUS TR.
12779 & 12780 F-97-144	14, 15, 20, 21	M-2	38	FIRST	601201
WATER CODE		SEWER CODE	
A04		2150500, 2150501, 2150300	

STORM DRAIN PROFILES

PATAPSCO VALLEY BUSINESS CENTER
PATAPSCO VALLEY OFFICE CAMPUS
PARCEL 'C'

ZONED: M-2

TAX MAP No. 38 PARCEL No. 285 GRID No. 14,15,20,21
FIRST ELECTION DISTRICT HOWARD COUNTY, MARYLAND
SCALE: AS SHOWN
DATE: MARCH 15, 2007
SHEET 15 OF 21

SDP-07-028

I:\06003\dwg\SITE DEVELOPMENT PLAN\06003-6001 STORM DRAIN PROFILES.dwg, Model, 3/16/2007 2:25:03 PM, 1:50

STRUCTURE SCHEDULE

STRUCTURE NO.	TOP ELEVATION	INV.IN	INV.OUT	COORDINATES		WIDTH	TYPE	REMARKS
I-1	61.76	57.91 (15")	57.66 (18")	494638.66	877917.28	2.50'	A-5	S.D. - 4.40
I-2	63.44		58.58 (15")	494681.50	877901.71	2.50'	A-5	S.D. - 4.40
I-4	64.27	59.83 (18")	59.73 (18")	494682.98	877920.69	2.50'	A-5	S.D. - 4.40
I-5	65.60	60.53 (18")	60.43 (18")	494745.53	878082.16	2.50'	A-5	S.D. - 4.40
I-6	66.25 *	61.54 (18")	61.44 (18")	494925.74	878057.89	2.58'	D	S.D. - 4.39
I-7	66.00 *	62.17 (15")	61.92 (18")	494923.81	877982.68	2.58'	D	S.D. - 4.39
I-8	66.00 *	-	62.75 (15")	494920.53	877867.99	2.58'	D	S.D. - 4.39
I-9	63.60	59.46 (18")	59.36 (18")	494704.65	878121.55	2.50'	A-5	S.D. - 4.40
I-10	64.40	60.84 (15")	60.59 (18")	494755.02	878104.60	2.50'	A-5	S.D. - 4.40
I-11	64.90	-	61.10 (15")	494782.80	878113.15	2.50'	A-5	S.D. - 4.40
I-13	64.46	-	61.00 (15")	494734.34	878239.37	2.50'	A-5	S.D. - 4.40
I-14	69.90	64.66(15") 65.86(18") 59.21(18")	58.71 (24")	494662.89	877417.50	2.50'	A-5	S.D. - 4.40
I-15	68.60	-	65.32 (15")	494659.67	877286.16	2.50'	A-5	S.D. - 4.40
I-16	70.30	66.30 (18")	66.20 (18")	494718.50	877380.24	2.50'	A-5	S.D. - 4.40
I-17	72.10	67.32 (18")	67.22 (18")	494902.80	877375.72	2.50'	A-5	S.D. - 4.40
I-18	74.19	67.93 (15")	67.68 (18")	494974.49	877373.96	2.50'	A-5	S.D. - 4.40
I-19	71.00 *	-	68.25 (15")	494976.18	877438.62	2.58'	D	S.D. - 4.39
I-20	67.10	59.77 (18")	59.67 (18")	494665.14	877509.09	2.50'	A-5	S.D. - 4.40
I-21	64.00	60.65 (15")	60.40 (18")	494688.64	877631.05	2.50'	A-5	S.D. - 4.40
I-22	66.43		62.77 (15")	494767.12	877629.19	2.50'	A-10	S.D. - 4.41
I-24	65.48		62.13 (15")	494622.21	877247.57	2.50'	A-5	S.D. - 4.40
I-26	74.20	68.00 (15") 65.50 (18")	65.00 (24")	494044.36	877067.36	3.42'	S COMBINATION	S.D. - 4.32
I-27	74.20	67.50 (15") 66.25 (18")	66.15 (18")	494841.20	876930.40	3.42'	S COMBINATION	S.D. - 4.32
I-28	71.03		67.21 (18")					
				494992.71	876753.63	2.50'	A-5	S.D. - 4.40
I-30	71.40	-	67.75 (15")	494795.12	876936.03	2.50'	A-5	S.D. - 4.40
I-31	72.00	-	68.15 (15")	494816.29	877064.64	2.50'	A-5	S.D. - 4.40
I-32	76.20	70.20 (18")	70.10 (18")	494933.70	877130.19	2.50'	A-5	S.D. - 4.40
I-33	76.20	70.61 (18")	70.51 (18")	494995.18	877228.68	2.50'	A-5	S.D. - 4.40
I-34	75.20 *	71.45 (15")	71.20 (18")	495015.18	877055.45	2.58'	D	S.D. - 4.39
I-35	75.20 *	-	72.00 (15")	495016.54	876945.44	2.58'	D	S.D. - 4.39
M-1	61.40	57.88 (18") 57.38 (18")	53.85 (24")	494627.73	877942.46	4'	4' STD. MANHOLE	G - 5.12
M-2	64.50	58.94 (18")	58.16 (24")	494662.42	878129.57	4'	4' STD. MANHOLE	G - 5.12
M-3	64.00	58.68 (18")	58.43 (18")	494706.73	878321.87	4'	4' STD. MANHOLE	G - 5.12
M-5	62.90	57.90 (24")	57.40 (30")	494613.91	877418.66	5'	5' STD. MANHOLE	G - 5.13
M-6	67.00	61.20 (24") 61.72 (15")	61.50 (24")	494607.79	877169.54	4'	4' STD. MANHOLE	G - 5.12
M-7	69.90	63.70 (24")	63.60 (24")	494683.32	877190.78	4'	4' STD. MANHOLE	G - 5.12
M-8	75.50	69.67 (18") 64.66 (24")	64.56 (24")	494848.55	877131.54	4'	4' STD. MANHOLE	G - 5.12
M-9	76.70	70.84 (18")	70.74 (18")	495020.63	877126.81	4'	4' STD. MANHOLE	G - 5.12

* - DENOTES THROAT OPENING ELEVATION

PIPE SCHEDULE

SIZE	CLASS	LENGTH
15"	HDPE	816 L.F.
18"	HDPE	1471 L.F.
24"	HDPE	265 L.F.

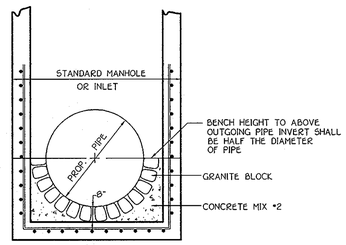

GRANITE BLOCK DETAIL
NOT TO SCALE

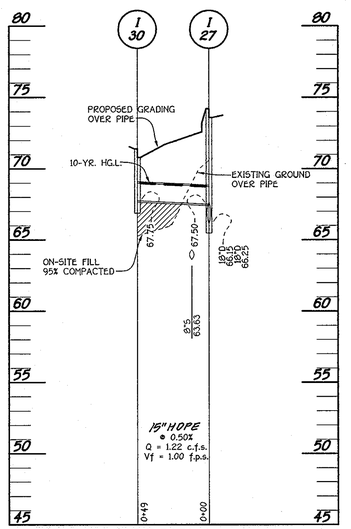

PROFILE

SCALE: HORIZ. : 1" = 50'
VERT. : 1" = 5'

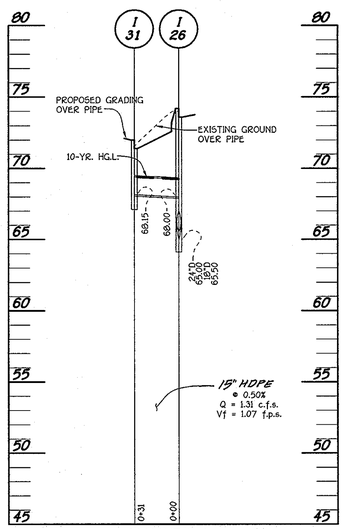

PROFILE

SCALE: HORIZ. : 1" = 50'
VERT. : 1" = 5'

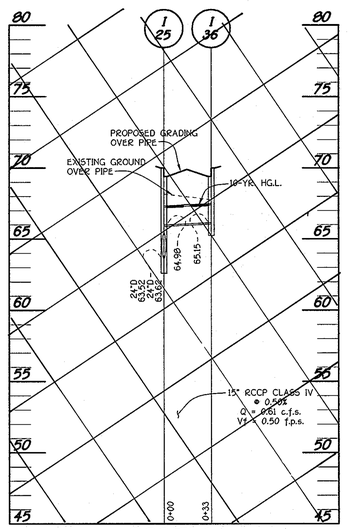

PROFILE ⚠1

SCALE: HORIZ. : 1" = 50'
VERT. : 1" = 5'

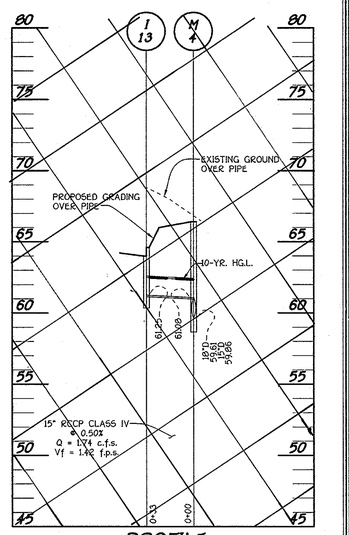

PROFILE ⚠1

SCALE: HORIZ. : 1" = 50'
VERT. : 1" = 5'

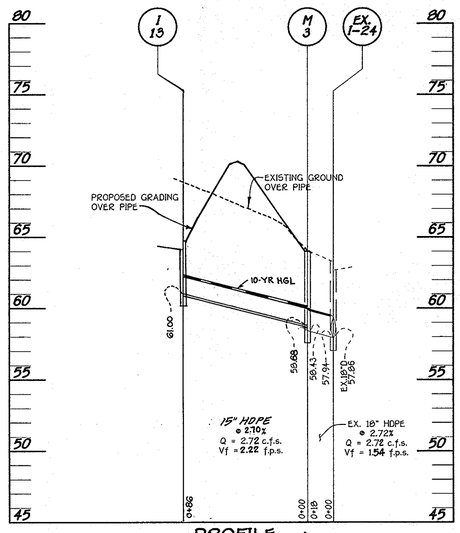

PROFILE ⚠1

SCALE: HORIZ. : 1" = 50'
VERT. : 1" = 5'

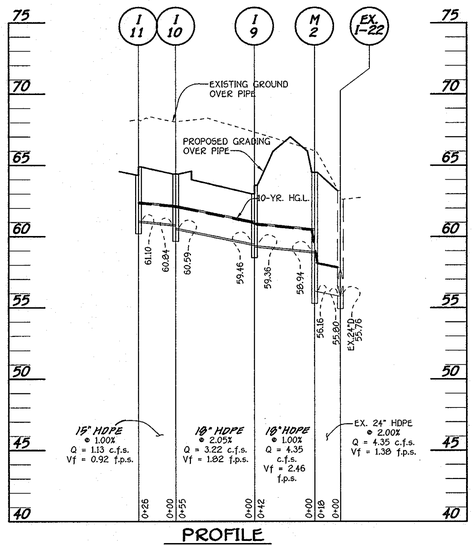

PROFILE

SCALE: HORIZ. : 1" = 50'
VERT. : 1" = 5'

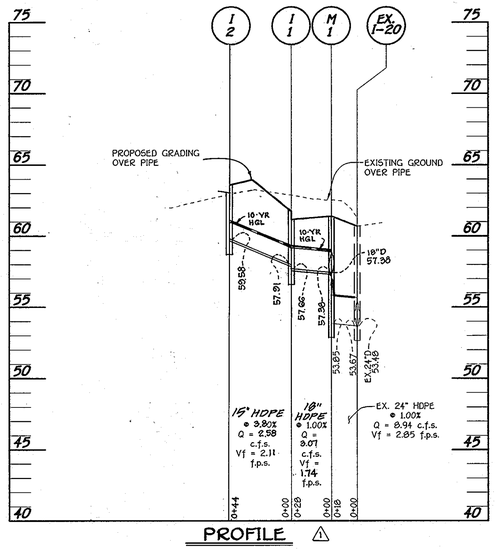

PROFILE ⚠1

SCALE: HORIZ. : 1" = 50'
VERT. : 1" = 5'

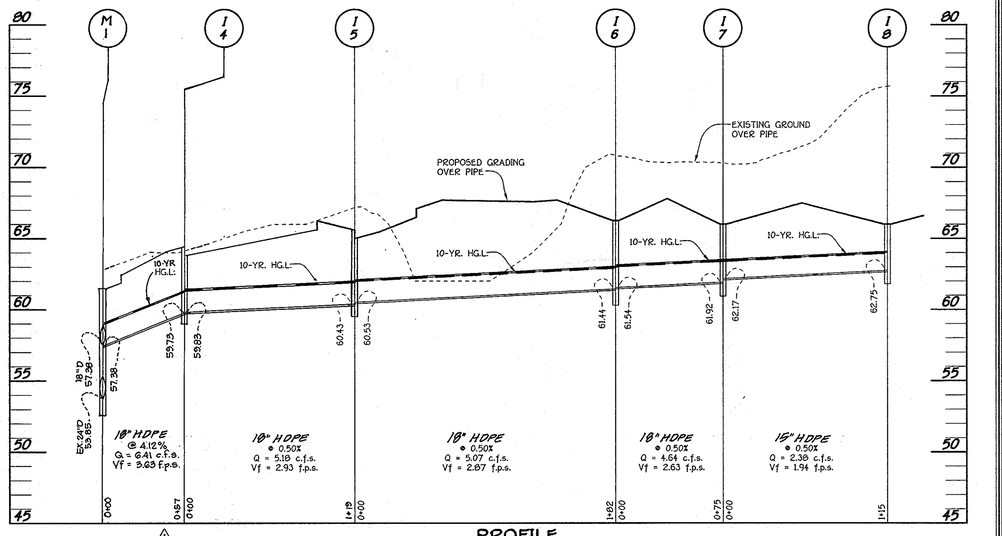

PROFILE

SCALE: HORIZ. : 1" = 50'
VERT. : 1" = 5'

I:\06003\dwg\SITE DEVELOPMENT PLAN\06003-6001 STORM DRAIN PROFILES.dwg, Model, 3/16/2007 3:43:17 PM, 1:50

FISHER, COLLINS & CARTER, INC.
CIVIL ENGINEERING CONSULTANTS & LAND SURVEYORS
CENTENNIAL SQUARE OFFICE PARK - 10272 BALTIMORE NATIONAL PIKE
ELLICOTT CITY, MARYLAND 21042
(410) 461 - 2855

DATE	DESCRIPTION
9.25.07	⚠2 Changed all storm drain pipe from RCCP to HDPE.
6/8/07	⚠1 REVISED STORM DRAIN PROFILES AND STRUCTURE SCHEDULE
REVISION BLOCK	

OWNER/DEVELOPER

CSG PATAPSCO, LLC
5024 CAMPBELL BOULEVARD, SUITE G
WHITE MARSH, MARYLAND 21236
410-933-2091

STATE OF MARYLAND — ROGER A. CHEDID — 21598 — REGISTERED PROFESSIONAL ENGINEER

APPROVED: DEPARTMENT OF PLANNING AND ZONING

Director - Department of Planning and Zoning — Date 6/5/07

Chief, Division of Land Development — Date 6/5/07

Chief, Development Engineering Division J.P. — Date 5/30/07

SUBDIVISION	SECTION/AREA	PARCEL NO.
PATAPSCO VALLEY BUSINESS CENTER	N/A	C

PLAT NO.	BLOCK NO.	ZONE	TAX MAP	ELEC. DIST.	CENSUS TR.
19496 19980 E-07-144	14, 15, 20, 21	M-2	38	FIRST	601201

WATER CODE	SEWER CODE
A04	2150500, 2150501, 2150300

STORM DRAIN PROFILES AND STRUCTURE SCHEDULE

PATAPSCO VALLEY BUSINESS CENTER
PATAPSCO VALLEY OFFICE CAMPUS
PARCEL 'C'
ZONED: M-2

TAX MAP No. 38 PARCEL No. 285 GRID No. 14,15,20,21
FIRST ELECTION DISTRICT HOWARD COUNTY, MARYLAND
SCALE: AS SHOWN
DATE: MARCH 15, 2007
SHEET 14 OF 21

SDP-07-028

LANDSCAPE DEVELOPER'S CERTIFICATE
I/We certify that the landscaping shown on this plan will be done according to the plan, Section 16.124 of the Howard County Code and the Howard County Landscape Manual. I/We further certify that upon completion a certification of landscape installation accompanied by an executed one year guarantee of plant materials will be submitted to the Department of Planning and Zoning.

Name — Date 3/28/07

This plan has been prepared in accordance with the provision of Section 16.124 of the Howard County Code and Landscape Manual. Financial surety for the required landscaping will be posted as part of the grading permit.

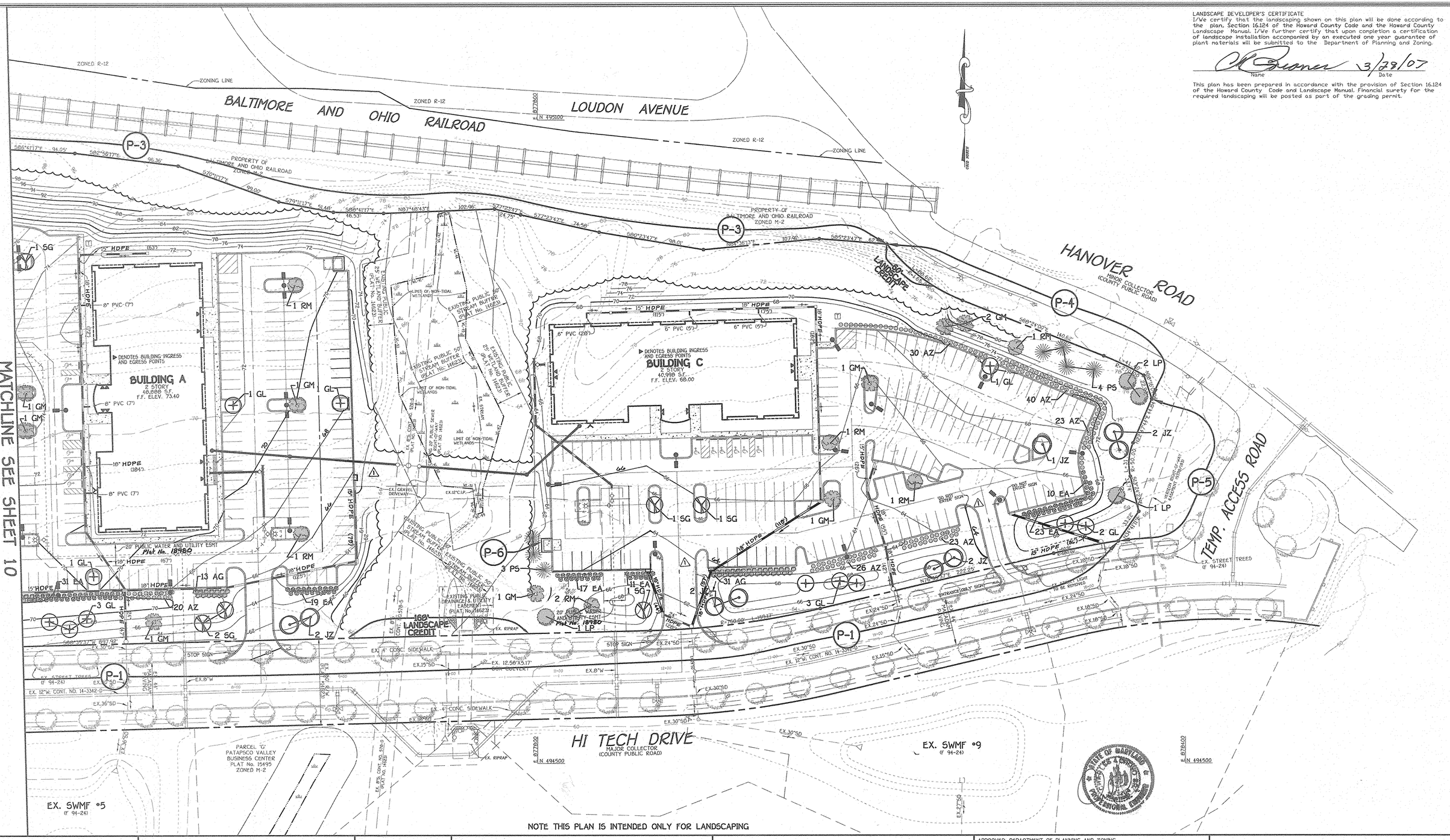

NOTE THIS PLAN IS INTENDED ONLY FOR LANDSCAPING

FISHER, COLLINS & CARTER, INC.
CIVIL ENGINEERING CONSULTANTS & LAND SURVEYORS
CENTENNIAL SQUARE OFFICE PARK - 10272 BALTIMORE NATIONAL PIKE
ELLICOTT CITY, MARYLAND 21042
(410) 461 - 2855

DATE	DESCRIPTION
	REVISION BLOCK
6/18/07	⚠1 REVISED STORMDRAINS AND GRADING
9.25.07	⚠2 Changed all storm drain pipe from RCCP to HDPE.

OWNER/DEVELOPER
CSG PATAPSCO, LLC
5024 CAMPBELL BOULEVARD, SUITE G
WHITE MARSH, MARYLAND 21236
410-933-2091

APPROVED: DEPARTMENT OF PLANNING AND ZONING

Director - Department of Planning and Zoning — Date 6/15/07
Chief, Division of Land Development — Date 6/15/07
Chief, Development Engineering Division J.P. — Date 5-30-07

SUBDIVISION	SECTION/AREA	PARCEL NO.
PATAPSCO VALLEY BUSINESS CENTER	N/A	C

PLAT NO.	BLOCK NO.	ZONE	TAX MAP	ELEC. DIST.	CENSUS TR.
18979 & 18980 F. 07-144	14, 15, 20, 21	M-2	38	FIRST	601201

WATER CODE	SEWER CODE
A04	2150500, 2150501, 2150300

LANDSCAPE PLAN

PATAPSCO VALLEY BUSINESS CENTER
PATAPSCO VALLEY OFFICE CAMPUS
PARCEL 'C'
ZONED: M-2

TAX MAP No. 38 PARCEL No. 285 GRID No. 14,15,20,21
FIRST ELECTION DISTRICT HOWARD COUNTY, MARYLAND
SCALE: 1" = 40'
DATE: MARCH 15, 2007
SHEET 11 OF 21 SDP-07-028

I:\08003\dwg\SITE DEVELOPMENT PLAN\08003-8001 LANDSCAPE PLAN.dwg, LANDSCAPE PLAN-2, 3/16/2007 8:16:35 AM, 1:1

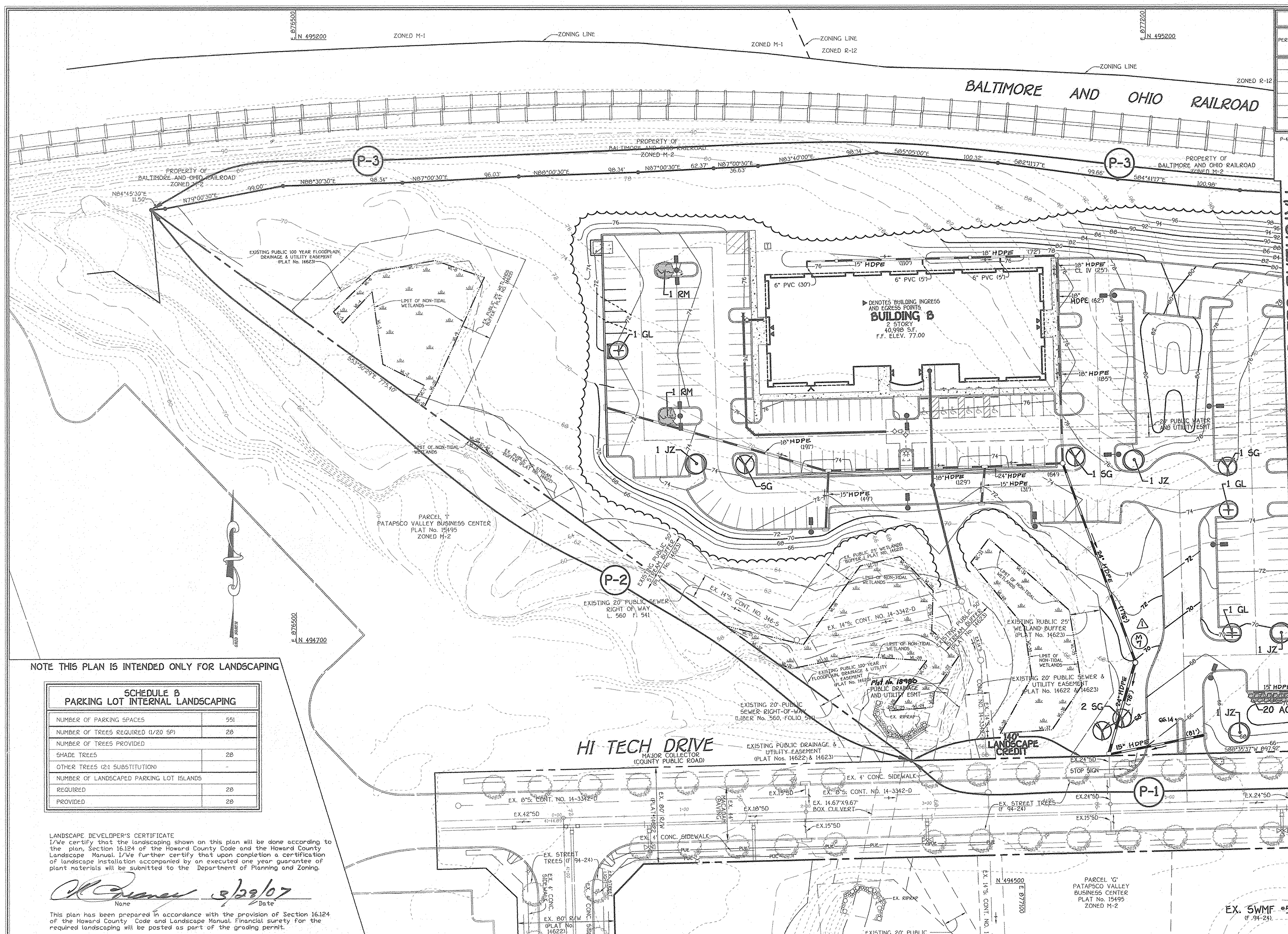

SCHEDULE A PERIMETER LANDSCAPE EDGE

PERIMETER	CATEGORY (PROPERTIES/ ROADWAYS)	LANDSCAPE TYPE	LINEAR FEET OF ROADWAY FRONTAGE PERIMETER	CREDIT FOR EXISTING VEGETATION (YES, NO, LINEAR FEET) (DESCRIBE BELOW IF NEEDED)	CREDIT FOR WALL, FENCE OR BERM (YES, NO, LINEAR FEET) (DESCRIBE BELOW IF NEEDED)	NUMBER OF PLANTS REQUIRED: SHADE TREES	EVERGREEN TREES	SHRUBS	NUMBER OF PLANTS PROVIDED: SHADE TREES	EVERGREEN TREES	SHRUBS
P-1	PARKING TO ROADWAY	E	1246'	YES, 25% (308')	NO	23	-	234	24	-	234
P-2	ADJACENT TO PERIMETER	N/A	775'	YES, 100%	NO	-	-	-	-	-	-
P-3	ADJACENT TO PERIMETER	A	1765'	YES, 100%	NO	-	-	-	-	-	-
P-4	PARKING TO ROADWAY	E	325'	YES, 18% (60')	NO	7	-	67	5	4	70
P-5	PARKING TO ROADWAY	E	130'	NO	NO	3	-	33	3	-	33
P-6	DUMPSTER	D	34'	NO	NO	1	3	-	1	3	-

P-4 SUBSTITUTES ARE PER THE HOWARD COUNTY LANDSCAPE MANUAL CHAPTER IV ALLOWING 2 EVERGREEN TREES IN PLACE OF 1 SHADE TREE.

LANDSCAPE LEGEND

SYMBOL	QTY.	BOTANICAL AND COMMON NAME	SIZE	COMMENTS
EA	111	EUONYMUS ALATUS 'COMPACTA' DWARF WINGED EUONYMUS	24" - 30" HEIGHT	18" - 24" SPACING
AG	64	ABELIA X GRANDIFLORA GLOSSY ABELIA	24" - 30" HEIGHT	18" - 24" SPACING
AZ	162	AZALEA 'GUMPO PINK' GUMPO PINK AZALEA	24" - 30" HEIGHT	18" - 24" SPACING
RM	9	ACER RUBRUM 'OCTOBER GLORY' RED MAPLE	2 1/2-3" CAL.	-
LP	4	PLATANUS OCCIDENTALIS 'BLOODGOOD' LONDON PLANETREE	2 1/2-3" CAL.	-
GM	9	ACER SACCHARUM 'GREEN MOUNTAIN' GREEN MOUNTAIN SUGAR MAPLE	2 1/2-3" CAL.	-
JZ	13	ZELKOVA SERRATA 'VILLAGE GREEN' VILLAGE GREEN JAPANAZE ZELKOVA	2 1/2-3" CAL.	-
SG	11	LLIQUIDAMBAR STRYACIFLUA SWEET GUM	2 1/2-3" CAL.	-
GL	15	TILIA CORDATA 'GREENSPIRE' 'GREENSPIRE' LITTLELEAF LINDEN	2 1/2-3" CAL.	-
PS	7	PINUS STROBUS EASTERN WHITE PINE	6' - 8' HEIGHT	-

NOTE: TREE AND SHRUB TYPES ARE ONLY AN RECOMMENDATION, THESE MAY BE REVISED TO A COUNTY APPROVED EQUIVALENT FROM THE HOWARD COUNTY LANDSCAPE MANUAL. "THIS PLAN HAS BEEN PREPARED IN ACCORDANCE WITH THE PROVISIONS OF SECTION 16.124 OF THE HOWARD COUNTY CODE AND THE LANDSCAPE MANUAL." LANDSCAPE SURETY IN THE AMOUNT OF $29,070.00 HAS BEEN POSTED AS A PART OF THE DEVELOPER'S AGREEMENT.

NOTE THIS PLAN IS INTENDED ONLY FOR LANDSCAPING

SCHEDULE B PARKING LOT INTERNAL LANDSCAPING

NUMBER OF PARKING SPACES	551
NUMBER OF TREES REQUIRED (1/20 SP)	28
NUMBER OF TREES PROVIDED	
SHADE TREES	28
OTHER TREES (2:1 SUBSTITUTION)	-
NUMBER OF LANDSCAPED PARKING LOT ISLANDS	
REQUIRED	28
PROVIDED	28

LANDSCAPE DEVELOPER'S CERTIFICATE
I/We certify that the landscaping shown on this plan will be done according to the plan, Section 16.124 of the Howard County Code and the Howard County Landscape Manual. I/We further certify that upon completion a certification of landscape installation accompanied by an executed one year guarantee of plant materials will be submitted to the Department of Planning and Zoning.

[signature] 3/29/07
Name Date

This plan has been prepared in accordance with the provision of Section 16.124 of the Howard County Code and Landscape Manual. Financial surety for the required landscaping will be posted as part of the grading permit.

PLANTING SPECIFICATIONS

Plants, related material, and operations shall meet the detailed description as given on the plans and as described herein.

All plant material, unless otherwise specified, shall be nursery grown, uniformly branched, have a vigorous root system, and shall conform to the species, size, root and shape shown on the plant list and the American Association of Nurserymen (AAN) Standards. Plant material shall be healthy, vigorous, free from defects, decay, disfiguring roots, sun scald injuries, abrasions of the bark, plant disease, insect pest eggs, borers and all forms of insect infestations or objectionable disfigurements. Plant material that is weak or which has been cut back from larger grades to meet specified requirements will be rejected. Trees with forked leaders will not be accepted. All plants shall be freshly dug; no healed-in plants from cold storage will be accepted.

Unless otherwise specified, all general conditions, planting operations, details and planting specification shall conform to 'Landscape Specification Guidelines for Baltimore-Washington Metropolitan Areas', (hereinafter 'Landscape Guidelines') approved by the Landscape Contractors Association of Metropolitan Washington and the Potomac Chapter of the American Society of Landscape Architect, latest edition, including all agenda.

Contractor shall be required to guarantee all plant material for a period of one year after date of acceptance in accordance with the appropriate section of the Landscape Guidelines Contractor's attention is directed to the maintenance requirements found within the one year specifications including watering and replacement of specified plant material.

Contractor shall be responsible for notifying utility companies, utility contractors and 'Miss Utility' a minimum of 48 hours prior to beginning any work. Contractor may make minor adjustments in spacing and location of plant material to avoid conflicts with utilities. Damage to existing structure and utilities shall be repaired at the expense of the Contractor.

Protection of existing vegetation to remain shall be accomplished by the temporary installation of 4 foot high snow fence or blaze orange safety fence at the drip line.

Contractor id responsible for installing all material in the proper planting season for each plant type. All planting is to be completed within the growing season of completion of site construction.

Bid shall be base on actual site conditions. No extra payment shall be made for work arising from site conditions differing from those indicated on drawings and specifications

Plant quantities are provided for the convenience of the contractor only. If discrepancies exist between quantities shown on plan and those shown on the plant list, the quantities on the plan take precedence

All shrubs shall be planted in continuous trenches or prepared planting beds and mulched with composted hardwood mulch as details and specified except where noted on plans.

Positive drainage shall be maintained in planting beds 2 percent slope).

Planting mix shall be as follows: Deciduous Plants - Two parts topsoil, one part well-rotted cow or horse manure. Add 3 lbs. of standard fertilizer per cubic yard of planting mix. Evergreen Plants - two parts topsoil, one part humus or other approved organic material. Add 3 lbs. of evergreen (acidic) fertilizer per cubic yard of planting mix. Topsoil shall conform to the Landscape Guidelines.

Weed Control: Incorporate a pre-emergent herbicide into the planting bed following recommended rates on the label. Caution: Be sure to carefully check the chemical used to assure its adaptability to the specific ground cover to be treated.

All areas within contract limits disturbed during or prior to construction not designated to receive plants and mulch shall be fine graded and seeded.

This plan is intended for landscape use only. see other plan sheets for more information on grading, sediment control, layout, etc.

FISHER, COLLINS & CARTER, INC.
CIVIL ENGINEERING CONSULTANTS & LAND SURVEYORS
CENTENNIAL SQUARE OFFICE PARK - 10272 BALTIMORE NATIONAL PIKE
ELLICOTT CITY, MARYLAND 21042
(410) 461 - 2855

DATE	DESCRIPTION
9.25.07	2 Changed all storm drain pipe from RCCP to HDPE.
6/8/07	1 REVISED STORMDRAINS AND GRADING

REVISION BLOCK

OWNER/DEVELOPER
CSG PATAPSCO, LLC
5024 CAMPBELL BOULEVARD, SUITE G
WHITE MARSH, MARYLAND 21236
410-933-2091

APPROVED: DEPARTMENT OF PLANNING AND ZONING

[signature] Director - Department of Planning and Zoning — Date 6/5/07
[signature] Chief, Division of Land Development — Date 6/5/07
[signature] Chief, Development Engineering Division J.P. — Date 5/30/07

SUBDIVISION			SECTION/AREA		PARCEL NO.
PATAPSCO VALLEY BUSINESS CENTER			N/A		C
PLAT NO.	BLOCK NO.	ZONE	TAX MAP	ELEC. DIST.	CENSUS TR.
18979& 18980 F-07-144	14, 15, 20, 21	M-2	38	FIRST	601201
WATER CODE			SEWER CODE		
A04			2150500, 2150501, 2150300		

LANDSCAPE PLAN

PATAPSCO VALLEY BUSINESS CENTER
PATAPSCO VALLEY OFFICE CAMPUS
PARCEL 'C'
ZONED: M-2
TAX MAP No. 38 PARCEL No. 285 GRID No. 14,15,20,21
FIRST ELECTION DISTRICT HOWARD COUNTY, MARYLAND
SCALE: 1" = 40'
DATE: MARCH 15, 2007
SHEET 10 OF 21 SDP-07-028

I:\06003\dwg\SITE DEVELOPMENT PLAN\06003-6001 LANDSCAPE PLAN.dwg, LANDSCAPE PLAN-1, 3/16/2007 8:15:27 AM, 1:1

LEGEND	
SYMBOL	DESCRIPTION
	EXISTING STORM DRAIN LINE
	BOUNDARY/RIGHT OF WAY LINE
B.R.L.	BUILDING RESTRICTION LINE
	PROPOSED CURB TRANSITION
	PROPOSED STORM DRAIN PIPE
	PROPOSED WATER PIPE
	PROPOSED SEWER PIPE
	PROPOSED CONCRETE
	PROPOSED PAVING
	PROPOSED LIGHT

NOTE: FOR THE PRIVATE 8" SEWER MAIN INSTALLATION FROM THE EX. 8" PLUGS TO CO #4 & CO #7, SEE SHEET 21 OF 21 FOR "BEST MANAGEMENT PRACTICES FOR WORK IN NONTIDAL WETLANDS AND WETLAND BUFFERS" & FOR STREAM CROSSING NOTES & DETAILS.

BALTIMORE AND OHIO RAILROAD

LOUDON AVENUE

HANOVER ROAD
MINOR COLLECTOR
(COUNTY PUBLIC ROAD)

HI TECH DRIVE
MAJOR COLLECTOR
(COUNTY PUBLIC ROAD)

TEMP. ACCESS ROAD

MATCHLINE SEE SHEET 8

BUILDING A
2 STORY
49,980 S.F.
F.F. ELEV. 73.40

BUILDING C
2 STORY
49,998 S.F.
F.F. ELEV. 68.00

PARCEL 'G'
PATAPSCO VALLEY
BUSINESS CENTER
PLAT No. 15499
ZONED M-2

EX. SWMF #5
(F 94-24)

EX. SWMF #9
(F 94-24)

FISHER, COLLINS & CARTER, INC.
CIVIL ENGINEERING CONSULTANTS & LAND SURVEYORS
CENTENNIAL SQUARE OFFICE PARK - 10272 BALTIMORE NATIONAL PIKE
ELLICOTT CITY, MARYLAND 21042
(410) 461 - 2855

DATE	DESCRIPTION
	REVISION BLOCK
6/8/07	⚠1 REVISED STORM DRAINS AND GRADING
9.25.07	⚠2 Changed all storm drain pipe from RCCP to HDPE.

OWNER/DEVELOPER
CSG PATAPSCO, LLC
5024 CAMPBELL BOULEVARD, SUITE G
WHITE MARSH, MARYLAND 21236
410-933-2091

APPROVED: DEPARTMENT OF PLANNING AND ZONING

Director - Department of Planning and Zoning — Date 6/15/07

Chief, Division of Land Development — Date 6/15/07

Chief, Development Engineering Division — J.F. — Date 6/30/07

SUBDIVISION		SECTION/AREA		PARCEL NO.
PATAPSCO VALLEY BUSINESS CENTER		N/A		C
PLAT NO. 10478 & 18980 F-97-142	BLOCK NO. 14, 15, 20, 21	ZONE M-2	TAX MAP 38	ELEC. DIST. FIRST	CENSUS TR. 601201
WATER CODE A04		SEWER CODE 2150500, 2150501, 2150300		

GEOMETRY PLAN

PATAPSCO VALLEY BUSINESS CENTER

PATAPSCO VALLEY OFFICE CAMPUS
PARCEL 'C'

ZONED: M-2

TAX MAP No. 38 PARCEL No. 285 GRID No. 14,15,20,21

FIRST ELECTION DISTRICT HOWARD COUNTY, MARYLAND

SCALE: 1" = 40'

DATE: MARCH 15, 2007

SHEET 9 OF 21 SDP-07-028

I:\06\03\dwg\SITE DEVELOPMENT PLAN\06003-6001 GEOMETRY PLAN.dwg, GEOMETRY PLAN-2, 3/16/2007 8:14:14 AM, 1:1

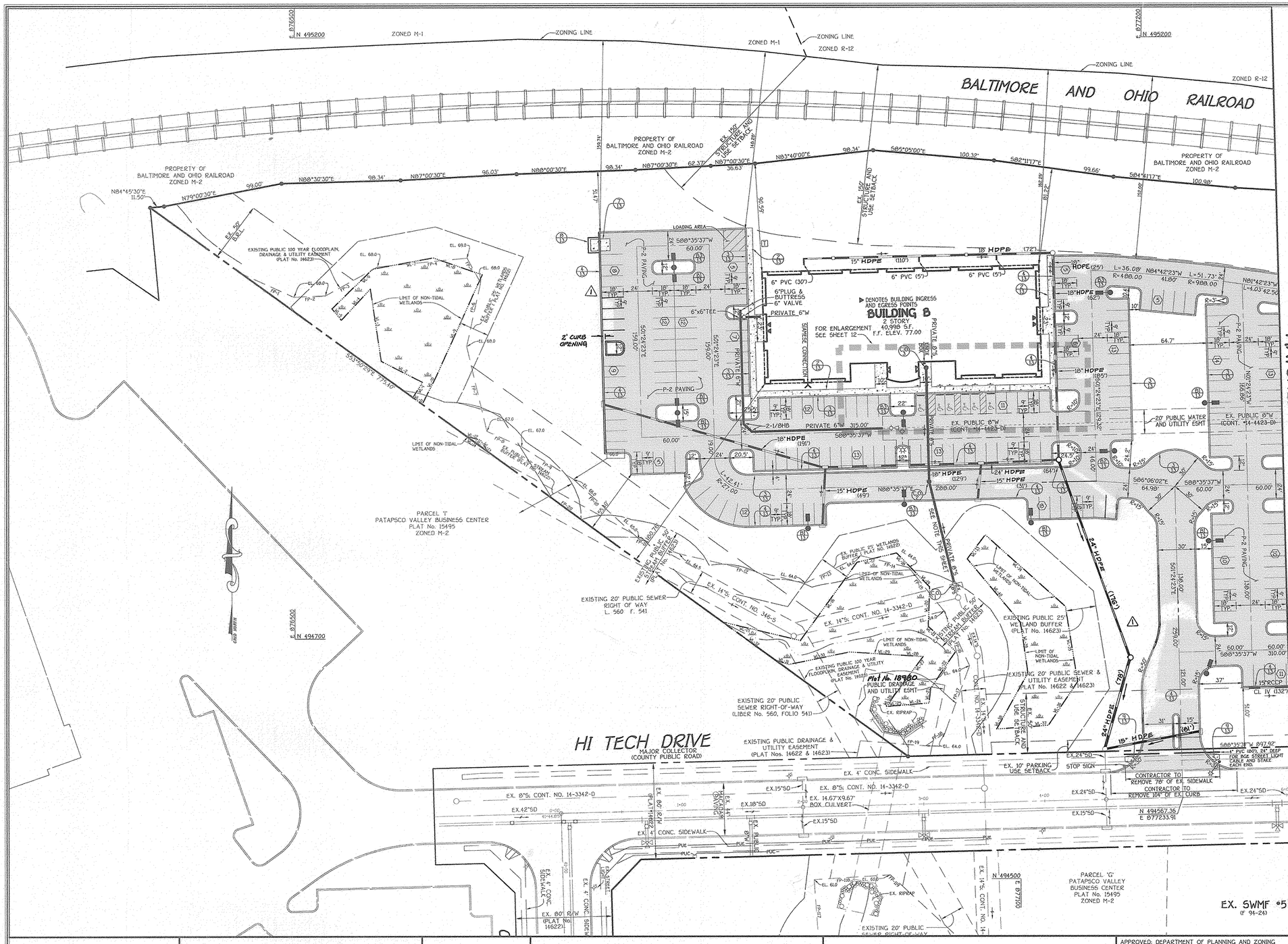

LEGEND

SYMBOL	DESCRIPTION
	EXISTING STORM DRAIN LINE
	BOUNDARY/RIGHT OF WAY LINE
B.R.L.	BUILDING RESTRICTION LINE
	PROPOSED CURB TRANSITION
	PROPOSED STORM DRAIN PIPE
	PROPOSED WATER PIPE
	PROPOSED SEWER PIPE
	PROPOSED CONCRETE
	PROPOSED PAVING
	PROPOSED LIGHT

NOTES:

1. ALL CURB RADII TO BE 5' UNLESS OTHERWISE NOTED.
2. ALL DIMENSIONS ARE TO FACE OF CURB.

FISHER, COLLINS & CARTER, INC.
CIVIL ENGINEERING CONSULTANTS & LAND SURVEYORS
CENTENNIAL SQUARE OFFICE PARK - 10272 BALTIMORE NATIONAL PIKE
ELLICOTT CITY, MARYLAND 21042
(410) 461 - 2855

DATE	DESCRIPTION
9-25-07	2 Changed all storm drain pipe from RCCP to HDPE.
6/8/07	1 REVISED STORM DRAINS AND GRADING

REVISION BLOCK

OWNER/DEVELOPER
CSG PATAPSCO, LLC
5024 CAMPBELL BOULEVARD, SUITE G
WHITE MARSH, MARYLAND 21236
410-933-2091

APPROVED: DEPARTMENT OF PLANNING AND ZONING

Director - Department of Planning and Zoning — Date 6/5/07
Chief, Division of Land Development — Date 6/5/07
Chief, Development Engineering Division J.P. — Date 5/30/07

SUBDIVISION	SECTION/AREA	PARCEL NO.
PATAPSCO VALLEY BUSINESS CENTER	N/A	C

PLAT NO.	BLOCK NO.	ZONE	TAX MAP	ELEC. DIST.	CENSUS TR.
18979 & 18980 F-07-144	14, 15, 20, 21	M-2	38	FIRST	601201

WATER CODE	SEWER CODE
A04	2150500, 2150501, 2150300

GEOMETRY PLAN

PATAPSCO VALLEY BUSINESS CENTER
PATAPSCO VALLEY OFFICE CAMPUS
PARCEL 'C'
ZONED: M-2

TAX MAP No. 38 PARCEL No. 285 GRID No. 14,15,20,21
FIRST ELECTION DISTRICT HOWARD COUNTY, MARYLAND
SCALE: 1" = 40'
DATE: MARCH 15, 2007
SHEET 8 OF 21

SDP-07-028

I:\06003\dwg\SITE DEVELOPMENT PLAN\06003-6001 GEOMETRY PLAN.dwg, GEOMETRY PLAN-1, 3/16/2007 8:13:10 AM, 1:1

SOILS LEGEND

SOIL	NAME	CLASS
* WoB2	Woodstown sandy loam, 1 to 5 percent slopes, moderately eroded	C
ScD	Sandy and clayey land, moderately sloping	C
ScB	Sandy and clayey land, gently sloping	C
ScE	Sandy and clayey land, moderately steep	C
* IuB	Iuka loam, local alluvium, 1 to 5 percent slopes	C
ClC3	Chillum gravelly loam, 5 to 10 percent slopes, severely eroded	C
ClD2	Chillum gravelly loam, 10 to 15 percent slopes, moderately eroded	C
ClE2	Chillum gravelly loam, 15 to 30 percent slopes, moderately eroded	C
** BeB2	Beltsville silt loam, 1 to 5 percent slopes, moderately eroded	C
** BeC3	Beltsville silt loam, 5 to 10 percent slopes, severely eroded	C
** BeD2	Beltsville silt loam, 10 to 15 percent slopes, moderately eroded	C
* Cs	Cornus silt loam	B
* Gp	Gravel pits and quarries	C
** Ha	Hatboro silt loam	D
SfB2	Sassafras gravelly sandy loam, 1 to 5 percent slopes, moderately eroded	B
SfD2	Sassafras gravelly sandy loam, 10 to 15 percent slopes, moderately eroded	B
SuB2	Sunnyside fine sandy loam, 1 to 5 percent slopes, moderately eroded	B

NOTES:

* Hydric soils and/or contains hydric inclusions

** May contain hydric inclusions

† Generally only within 100-year floodplain areas

LEGEND

SYMBOL	DESCRIPTION
	EXISTING STORM DRAIN LINE
	BOUNDARY/RIGHT OF WAY LINE
B.R.L.	BUILDING RESTRICTION LINE
	PROPOSED CURB TRANSITION
	PROPOSED STORM DRAIN PIPE
	PROPOSED WATER PIPE
	PROPOSED SEWER PIPE
	PROPOSED CONCRETE
	EXISTING PAVING
	PROPOSED LIGHT
	SOILS LINE
	DRAINAGE AREA LIMITS
	EXISTING TREELINE
	PROPOSED TREELINE

FISHER, COLLINS & CARTER, INC.
CIVIL ENGINEERING CONSULTANTS & LAND SURVEYORS
CENTENNIAL SQUARE OFFICE PARK - 10272 BALTIMORE NATIONAL PIKE
ELLICOTT CITY, MARYLAND 21042
(410) 461 - 2855

DATE	DESCRIPTION
9.25.07	12 Changed all storm drain pipe from RCCP to HDPE.
6/18/07	11 REVISED STORM DRAINS AND GRADING
DATE	DESCRIPTION
	REVISION BLOCK

OWNER/DEVELOPER

CSG PATAPSCO, LLC
5024 CAMPBELL BOULEVARD, SUITE G
WHITE MARSH, MARYLAND 21236
410-933-2091

APPROVED: DEPARTMENT OF PLANNING AND ZONING

Director - Department of Planning and Zoning — Date 6/15/07

Chief, Division of Land Development — Date 6/15/07

Chief, Development Engineering Division J.P. — Date 5/30/07

SUBDIVISION	SECTION/AREA	PARCEL NO.
PATAPSCO VALLEY BUSINESS CENTER	N/A	C

PLAT NO.	BLOCK NO.	ZONE	TAX MAP	ELEC. DIST.	CENSUS TR.
18979 & 18980	14, 15, 20, 21	M-2	38	FIRST	601201

WATER CODE	SEWER CODE
A04	2150500, 2150501, 2150300

DRAINAGE AREAS AND SOILS MAP

PATAPSCO VALLEY BUSINESS CENTER

PATAPSCO VALLEY OFFICE CAMPUS PARCEL 'C'

ZONED: M-2

TAX MAP No. 38 PARCEL No. 285 GRID No. 14,15,20,21

FIRST ELECTION DISTRICT HOWARD COUNTY, MARYLAND

SCALE: 1" = 40'

DATE: MARCH 15, 2007

SHEET 7 OF 21 SDP-07-028

I:\60024\dwg\SITE DEVELOPMENT PLAN\60003-6001 DRAINAGE AREA MAP.dwg, DRAINAGE AREA MAP-2, 3/16/2007 8:11:39 AM, 1:1

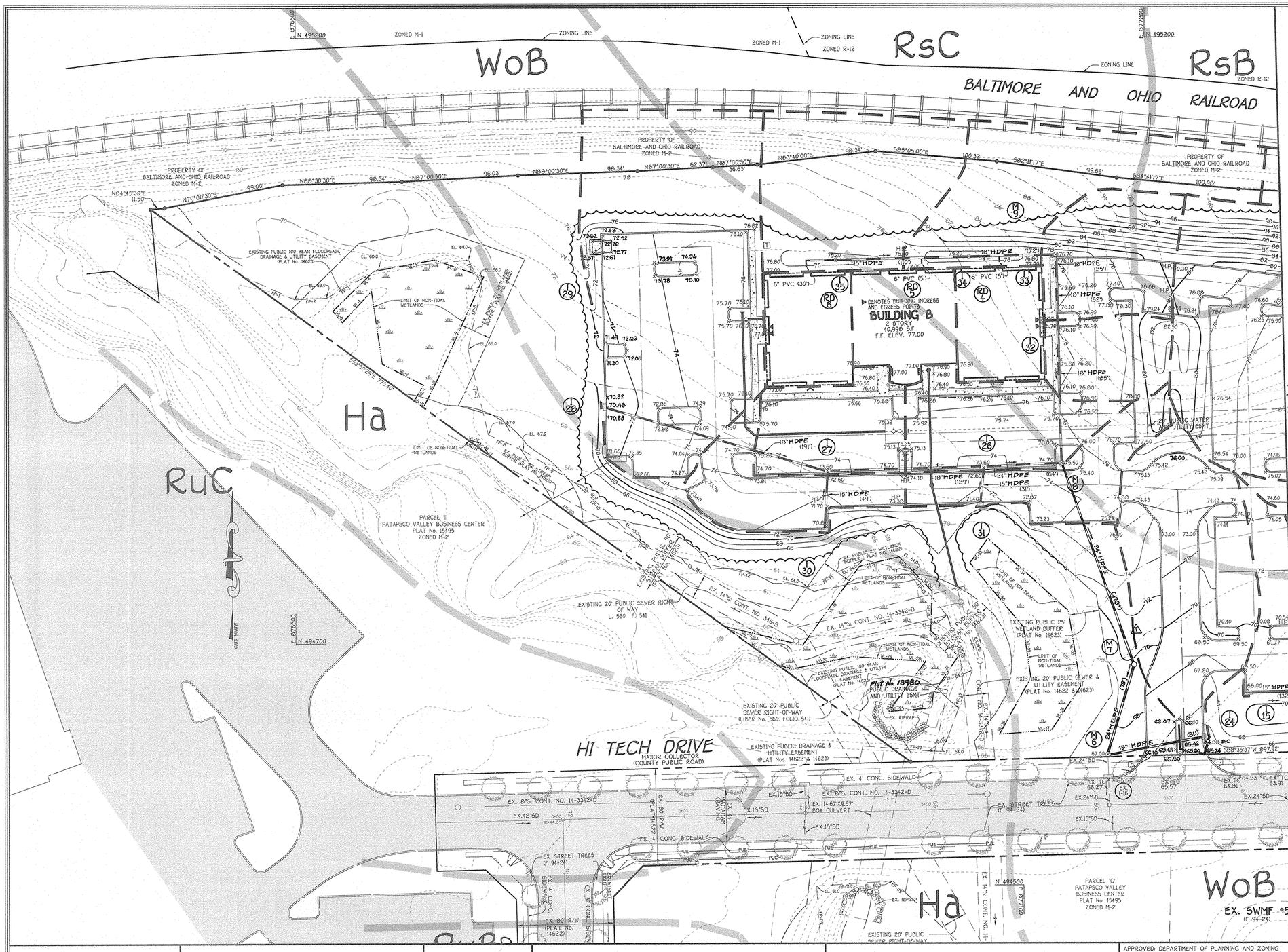

LEGEND

SYMBOL	DESCRIPTION
	EXISTING STORM DRAIN LINE
	BOUNDARY/RIGHT OF WAY LINE
B.R.L.	BUILDING RESTRICTION LINE
	PROPOSED CURB TRANSITION
	PROPOSED STORM DRAIN PIPE
	PROPOSED WATER PIPE
	PROPOSED SEWER PIPE
	PROPOSED CONCRETE
	EXISTING PAVING
	PROPOSED LIGHT
	SOILS LINE
	DRAINAGE AREA LIMITS
	EXISTING TREELINE
	PROPOSED TREELINE

SOILS LEGEND

SOIL	NAME
Co	Codorus and Hatboro silt loams, 0 to 3 percent slopes
Fa	Fallingston sandy loam, 0 to 2 percent slopes
Ha	Hatboro-Codorus silt loams, 0 to 3 percent slopes
RsB	Russett fine sandy loam, 2 to 5 percent slopes
RsD	Russett fine sandy loam, 10 to 15 percent slopes
RuC	Russett and Beltsville soils, 5 to 10 percent slopes
SrD	Sassafras and Croom soils, 10 to 15 percent slopes
WoB	Woodstown sandy loam, 1 to 5 percent slopes, moderately eroded

DRAINAGE AREA DATA

STRUCTURE NO.	AREA (AC.)	'C'	% IMP.
I-1	0.10	0.68	70
I-2	0.33	0.76	18
I-4	0.26	0.72	23
I-5	0.07	0.78	86
I-6	0.29	0.24	0
I-7	0.38	0.23	0
I-8	0.31	0.22	0
I-9	0.27	0.57	52
I-10	0.41	0.64	63
I-11	0.19	0.70	74
I-13	0.55	0.58	45
I-14	0.02	0.87	100
I-15	0.24	0.84	96
I-16	0.18	0.72	78
I-17	0.72	0.64	61
I-18	0.11	0.39	18
I-19	0.20	0.21	0
I-20	0.13	0.82	92
I-21	0.36	0.82	8
I-22	1.00	0.52	53
I-24	0.47	0.63	36
I-26	0.26	0.82	92
I-27	0.22	0.82	91
I-28	0.91	0.58	44
I-30	0.18	0.80	89
I-31	0.19	0.81	89
I-32	0.16	0.65	63
I-33	0.25	0.49	36
I-34	0.45	0.28	0
I-35	0.44	0.28	0
RD-1	0.30	0.87	100
RD-2	0.30	0.87	100
RD-3	0.24	0.87	100
RD-4	0.24	0.87	100
RD-5	0.24	0.87	100
RD-6	0.24	0.87	100

FISHER, COLLINS & CARTER, INC.
CIVIL ENGINEERING CONSULTANTS & LAND SURVEYORS
CENTENNIAL SQUARE OFFICE PARK - 10272 BALTIMORE NATIONAL PIKE
ELLICOTT CITY, MARYLAND 21042
(410) 461 - 2855

DATE	DESCRIPTION
	REVISION BLOCK
9.25.07	2 Changed all storm drain pipe from RCCP to HDPE.
6/8/07	1 REVISED STORM DRAINS AND GRADING

OWNER/DEVELOPER
CSG PATAPSCO, LLC
5024 CAMPBELL BOULEVARD, SUITE G
WHITE MARSH, MARYLAND 21236
410-933-2091

APPROVED: DEPARTMENT OF PLANNING AND ZONING

Director - Department of Planning and Zoning	Date 6/5/07
Chief, Division of Land Development	Date 6/5/07
Chief, Development Engineering Division J.F.	Date 5/30/07

SUBDIVISION			SECTION/AREA		PARCEL NO.
PATAPSCO VALLEY BUSINESS CENTER			N/A		C
PLAT NO.	BLOCK NO.	ZONE	TAX MAP	ELEC. DIST.	CENSUS TR.
18978, 18980 F-07-144	14, 15, 20, 21	M-2	38	FIRST	601201
WATER CODE			SEWER CODE		
A04			2150500, 2150501, 2150300		

DRAINAGE AREAS AND SOILS MAP

PATAPSCO VALLEY BUSINESS CENTER
PATAPSCO VALLEY OFFICE CAMPUS
PARCEL 'C'
ZONED: M-2

TAX MAP No. 38 PARCEL No. 285 GRID No. 14,15,20,21
FIRST ELECTION DISTRICT HOWARD COUNTY, MARYLAND
SCALE: 1" = 40'
DATE: MARCH 15, 2007
SHEET 6 OF 21 SDP-07-028

STATE OF MARYLAND
CHRISTOPHER J. CARTER
No. 21431
PROFESSIONAL ENGINEER

I:\06\06003\dwg\SITE DEVELOPMENT PLAN\06003-6001 DRAINAGE AREA MAP.dwg, DRAINAGE AREA MAP-1, 3/16/2007 8:10:40 AM, 1:1

LEGEND

SYMBOL	DESCRIPTION
	EXISTING STORM DRAIN LINE
	BOUNDARY/RIGHT OF WAY LINE
B.R.L.	BUILDING RESTRICTION LINE
	PROPOSED CURB TRANSITION
	PROPOSED STORM DRAIN PIPE
	PROPOSED WATER PIPE
	PROPOSED SEWER PIPE
	PROPOSED CONCRETE
	EXISTING PAVING
	PROPOSED LIGHT
	LIMIT OF DISTURBANCE
SSF — SSF	SUPER SILT FENCE
TP — TP	TREE PROTECTION FENCE
	EXISTING TREELINE
	PROPOSED TREELINE

NOTE: FOR THE PRIVATE 8" SEWER MAIN INSTALLATION FROM THE EX. 8" PLUGS TO CO #4 & CO #7, SEE SHEET 21 OF 21 FOR "BEST MANAGEMENT PRACTICES FOR WORK IN NONTIDAL WETLANDS AND WETLAND BUFFERS" & FOR STREAM CROSSING NOTES & DETAILS.

NOTE THIS PLAN IS INTENDED ONLY FOR SEDIMENT CONTROL.

FISHER, COLLINS & CARTER, INC.
CIVIL ENGINEERING CONSULTANTS & LAND SURVEYORS
CENTENNIAL SQUARE OFFICE PARK - 10272 BALTIMORE NATIONAL PIKE
ELLICOTT CITY, MARYLAND 21042
(410) 461 - 2855

DATE	DESCRIPTION
9.25.07	⚠2 Changed all storm drain pipe from RCCP to HDPE.
6/8/07	⚠1 REVISED STORM DRAINS AND GRADING

REVISION BLOCK

ENGINEER'S CERTIFICATE

"I certify that this plan for sediment and erosion control represents a practical and workable plan based on my personal knowledge of the site conditions and that it was prepared in accordance with the requirements of the Howard Soil Conservation District."

Signature of Engineer — Date 4/1/07

DEVELOPER'S CERTIFICATE

"I/We certify that all development and construction will be done according to this plan for sediment and erosion control, and that all responsible personnel involved in the construction project will have a Certificate of Attendance at a Department of the Environment Approved Training Program for the Control of Sediment and Erosion before beginning the project. I also authorize periodic on-site inspection by the Howard Soil Conservation District."

Signature of Developer — Date 3/29/07
C. PATRICK CREANEY

Reviewed for HOWARD SCD and meets Technical Requirements.
U.S.D.A.-Natural Resources Conservation Service — Date 5/23/07

This development plan is approved for soil erosion and sediment control by the HOWARD SOIL CONSERVATION DISTRICT.
Howard SCD — Date 5/23/07

OWNER/DEVELOPER

CSG PATAPSCO, LLC
5024 CAMPBELL BOULEVARD, SUITE G
WHITE MARSH, MARYLAND 21236
410-933-2091

APPROVED: DEPARTMENT OF PLANNING AND ZONING

Director - Department of Planning and Zoning — Date 6/5/07
Chief, Division of Land Development — Date 6/5/07
Chief, Development Engineering Division — J.P. — Date 5/30/07

SUBDIVISION			SECTION/AREA		PARCEL NO.
PATAPSCO VALLEY BUSINESS CENTER			N/A		C
PLAT NO.	BLOCK NO.	ZONE	TAX MAP	ELEC. DIST.	CENSUS TR.
18979& 18980 F-07-144	14, 15, 20, 21	M-2	38	FIRST	601201
WATER CODE			SEWER CODE		
A04			2150500, 2150501, 2150300		

SEDIMENT CONTROL PLAN

PATAPSCO VALLEY BUSINESS CENTER
PATAPSCO VALLEY OFFICE CAMPUS
PARCEL 'C'
ZONED: M-2
TAX MAP No. 38 PARCEL No. 285 GRID No. 14,15,20,21
FIRST ELECTION DISTRICT HOWARD COUNTY, MARYLAND
SCALE: 1" = 40'
DATE: MARCH 15, 2007
SHEET 5 OF 21 SDP-07-028

I:\06003\dwg\SITE DEVELOPMENT PLAN\06003-6001 SEDIMENT CONTROL PLAN.dwg, SEDIMENT CONTROL PLAN SHEET-2, 3/16/2007 8:09:20 AM, 1:1

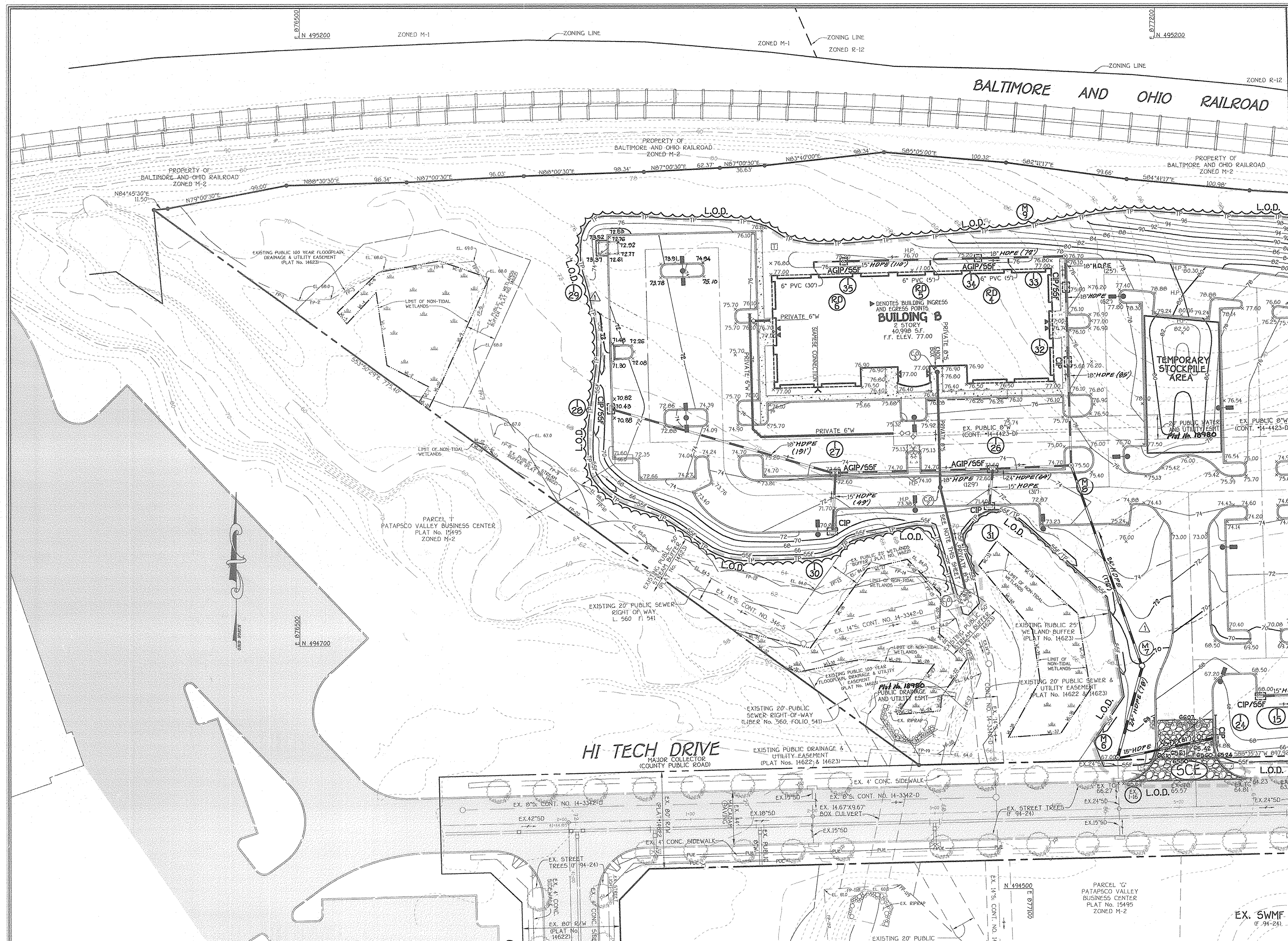

LEGEND	
SYMBOL	DESCRIPTION
	EXISTING STORM DRAIN LINE
	BOUNDARY/RIGHT OF WAY LINE
B.R.L.	BUILDING RESTRICTION LINE
	PROPOSED CURB TRANSITION
	PROPOSED STORM DRAIN PIPE
	PROPOSED WATER PIPE
	PROPOSED SEWER PIPE
	PROPOSED CONCRETE
	EXISTING PAVING
	PROPOSED LIGHT
	LIMIT OF DISTURBANCE
SSF SSF	SUPER SILT FENCE
TP TP	TREE PROTECTION FENCE
	EXISTING TREELINE
	PROPOSED TREELINE

SEQUENCE OF CONSTRUCTION

1. OBTAIN GRADING PERMIT. (1 DAY)

2. NOTIFY "MISS UTILITY" AT LEAST 48 HOURS BEFORE BEGINNING ANY WORK AT 1-800-257-7777. NOTIFY THE HOWARD COUNTY OFFICE OF CONSTRUCTION/INSPECTION DIVISION AT 410-313-1870 AT LEAST 24 HOURS BEFORE STARTING ANY WORK.

3. INSTALL STABILIZED CONSTRUCTION ENTRANCES. (3 DAYS)

4. CLEAR FOR AND INSTALL/CONSTRUCT ALL PERIMETER TEMPORARY SEDIMENT CONTROLS. (3 WEEKS)

5. INSTALL SUPER SILT FENCE. (1 WEEK)

6. UPON PERMISSION FROM THE SEDIMENT CONTROL INSPECTOR BEGIN ROUGH GRADING THE SITE AND IMMEDIATELY STABILIZE ALL SLOPES UPON COMPLETION OF GRADING WITH TEMPORARY SEEDING. (6 WEEKS)

7. INSTALL STORM DRAINS, SEWER AND WATER. (6 WEEKS)

8. PROVIDE INLET PROTECTIONS ON ALL NEWLY INSTALLED STORM DRAIN INLETS. (1 WEEK)

10. BEGIN CONSTRUCTION OF PROPOSED BUILDINGS. (6 MONTHS)

11. INSTALL CURB AND PAVING. (3 WEEKS)

12. FINE GRADE SITE. (2 WEEKS)

13. INSTALL SIDEWALKS, LANDSCAPING AND LIGHTING. (2 WEEKS)

14. FOLLOWING SUCCESSFUL STABILIZATION (i.e. FULLY-ESTABLISHED VEGETATION OR PAVING) OF ALL DISTURBED AREAS, OBTAIN PERMISSION FROM THE HOWARD COUNTY SEDIMENT CONTROL INSPECTOR TO REMOVE ALL REMAINING SEDIMENT & EROSION CONTROL DEVICES AND THEN STABILIZE THOSE AREAS DISTURBED BY THIS PROCESS WITH PERMENANT SEEDING. (2 WEEKS)

15. NOTIFY HOWARD COUNTY OFFICE OF INSPECTIONS AND PERMITS FOR A FINAL INSPECTION OF THE COMPLETED SITE.

STATE OF MARYLAND PROFESSIONAL ENGINEER

NOTE THIS PLAN IS INTENDED ONLY FOR SEDIMENT CONTROL.

FISHER, COLLINS & CARTER, INC.
CIVIL ENGINEERING CONSULTANTS & LAND SURVEYORS
CENTENNIAL SQUARE OFFICE PARK - 10272 BALTIMORE NATIONAL PIKE
ELLICOTT CITY, MARYLAND 21042
(410) 461 - 2855

DATE	DESCRIPTION
9.25.07	⚠2 Changed all storm drain pipe from RCCP to HDPE.
6/8/07	⚠1 REVISED STORM DRAINS AND GRADING

REVISION BLOCK

ENGINEER'S CERTIFICATE

"I certify that this plan for sediment and erosion control represents a practical and workable plan based on my personal knowledge of the site conditions and that it was prepared in accordance with the requirements of the Howard Soil Conservation District."

Signature of Engineer — 4/1/07 Date

DEVELOPER'S CERTIFICATE

"I/We certify that all development and construction will be done according to this plan for sediment and erosion control, and that all responsible personnel involved in the construction project will have a Certificate of Attendance at a Department of the Environment Approved Training Program for the Control of Sediment and Erosion before beginning the project. I also authorize periodic on-site inspection by the Howard Soil Conservation District."

Signature of Developer — 3/29/07 Date
C. PATRICK CREANEY

Reviewed for HOWARD SCD and meets Technical Requirements.

U.S.D.A.-Natural Resources Conservation Service — 5/23/07 Date

This development plan is approved for soil erosion and sediment control by the HOWARD SOIL CONSERVATION DISTRICT.

Howard SCD — 5/23/07 Date

OWNER/DEVELOPER

CSG PATAPSCO, LLC
5024 CAMPBELL BOULEVARD, SUITE G
WHITE MARSH, MARYLAND 21236
410-933-2091

APPROVED: DEPARTMENT OF PLANNING AND ZONING

Director - Department of Planning and Zoning — 6/5/07 Date

Chief, Division of Land Development — 6/5/07 Date

Chief, Development Engineering Division J.P. — 5/30/07 Date

SUBDIVISION			SECTION/AREA		PARCEL NO.
PATAPSCO VALLEY BUSINESS CENTER			N/A		C
PLAT NO.	BLOCK NO.	ZONE	TAX MAP	ELEC. DIST.	CENSUS TR.
18979 & 18980 F-07-144	14, 15, 20, 21	M-2	38	FIRST	601201
WATER CODE			SEWER CODE		
A04			2150500, 2150501, 2150300		

SEDIMENT CONTROL PLAN

PATAPSCO VALLEY BUSINESS CENTER
PATAPSCO VALLEY OFFICE CAMPUS
PARCEL 'C'
ZONED: M-2

TAX MAP No. 38 PARCEL No. 285 GRID No. 14,15,20,21
FIRST ELECTION DISTRICT HOWARD COUNTY, MARYLAND

SCALE: 1" = 40'
DATE: MARCH 15, 2007
SHEET 4 OF 21 SDP-07-028

I:\06003\dwg\SITE DEVELOPMENT PLAN\06003-6001 SEDIMENT CONTROL PLAN.dwg, SEDIMENT CONTROL PLAN SHEET-1, 3/16/2007 8:07:57 AM, 1:1

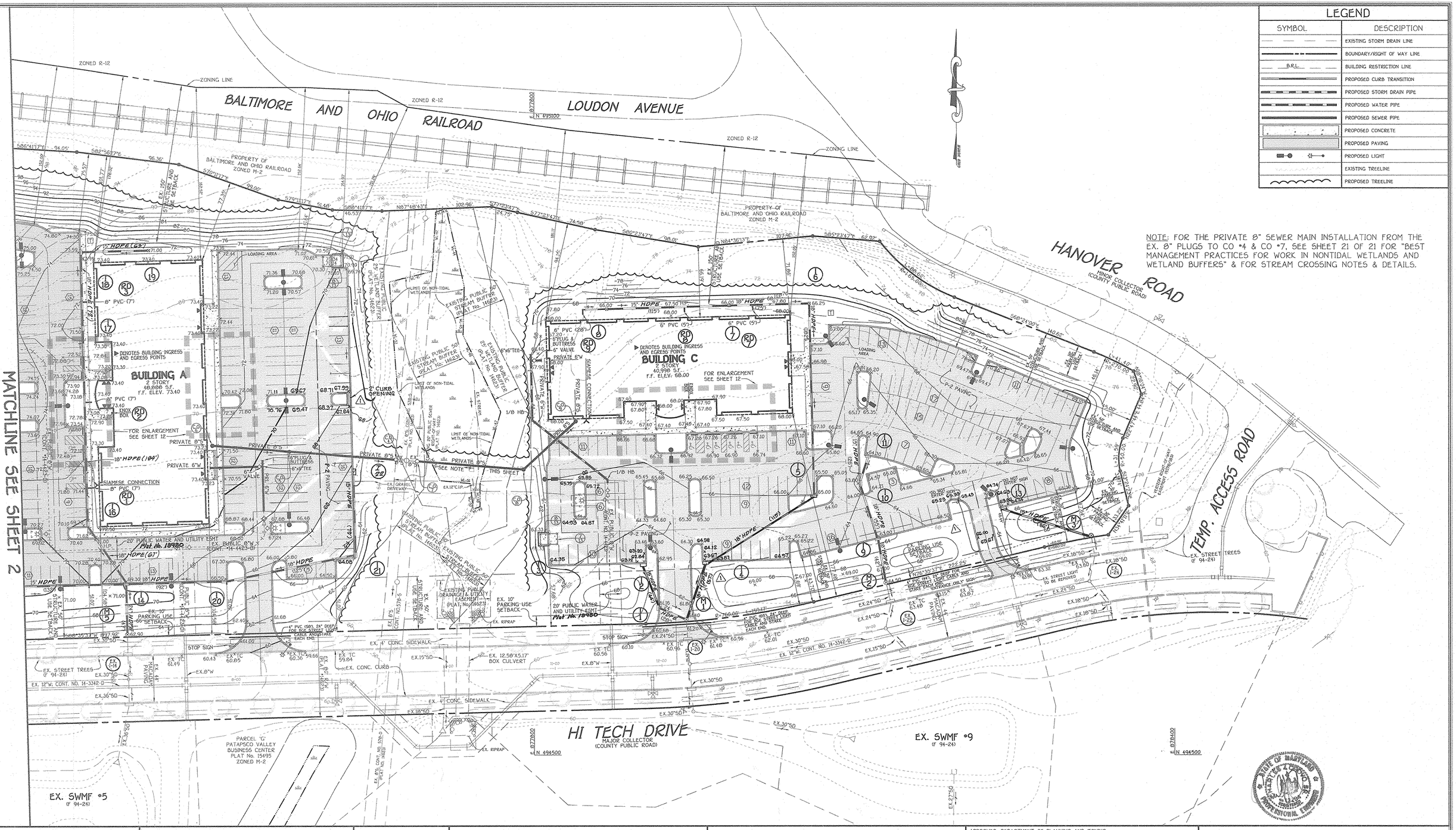

LEGEND

SYMBOL	DESCRIPTION
	EXISTING STORM DRAIN LINE
	BOUNDARY/RIGHT OF WAY LINE
B.R.L.	BUILDING RESTRICTION LINE
	PROPOSED CURB TRANSITION
	PROPOSED STORM DRAIN PIPE
	PROPOSED WATER PIPE
	PROPOSED SEWER PIPE
	PROPOSED CONCRETE
	PROPOSED PAVING
	PROPOSED LIGHT
	EXISTING TREELINE
	PROPOSED TREELINE

NOTE: FOR THE PRIVATE 8" SEWER MAIN INSTALLATION FROM THE EX. 8" PLUGS TO CO #4 & CO #7, SEE SHEET 21 OF 21 FOR "BEST MANAGEMENT PRACTICES FOR WORK IN NONTIDAL WETLANDS AND WETLAND BUFFERS" & FOR STREAM CROSSING NOTES & DETAILS.

FISHER, COLLINS & CARTER, INC.
CIVIL ENGINEERING CONSULTANTS & LAND SURVEYORS
CENTENNIAL SQUARE OFFICE PARK - 10272 BALTIMORE NATIONAL PIKE
ELLICOTT CITY, MARYLAND 21042
(410) 461 - 2855

DATE	DESCRIPTION
9.25.07	2 Changed all storm drain pipe from RCCP to HDPE.
6/8/07	1 REVISED STORM DRAINS AND GRADING

REVISION BLOCK

OWNER/DEVELOPER
CSG PATAPSCO, LLC
5024 CAMPBELL BOULEVARD, SUITE G
WHITE MARSH, MARYLAND 21236
410-933-2091

APPROVED: DEPARTMENT OF PLANNING AND ZONING

Director - Department of Planning and Zoning — Date 6/5/07
Chief, Division of Land Development — Date 6/5/07
Chief, Development Engineering Division — J.P. — Date 5/30/07

SUBDIVISION	SECTION/AREA	PARCEL NO.
PATAPSCO VALLEY BUSINESS CENTER	N/A	C

PLAT NO.	BLOCK NO.	ZONE	TAX MAP	ELEC. DIST.	CENSUS TR.
18979 & 18 F-07-144	14, 15, 20, 21	M-2	38	FIRST	601201

WATER CODE	SEWER CODE
A04	2150500, 2150501, 2150300

SITE DEVELOPMENT PLAN

PATAPSCO VALLEY BUSINESS CENTER
PATAPSCO VALLEY OFFICE CAMPUS
PARCEL 'C'
ZONED: M-2
TAX MAP No. 38 PARCEL No. 285 GRID No. 14,15,20,21
FIRST ELECTION DISTRICT HOWARD COUNTY, MARYLAND
SCALE: 1" = 40'
DATE: MARCH 15, 2007
SHEET 3 OF 21
SDP-07-028

I:\06003\dwg\SITE DEVELOPMENT PLAN\06003-6001 SITE PLAN.dwg, SITE PLAN SHEET 2, 3/16/2007 7:50:17 AM, 1:1

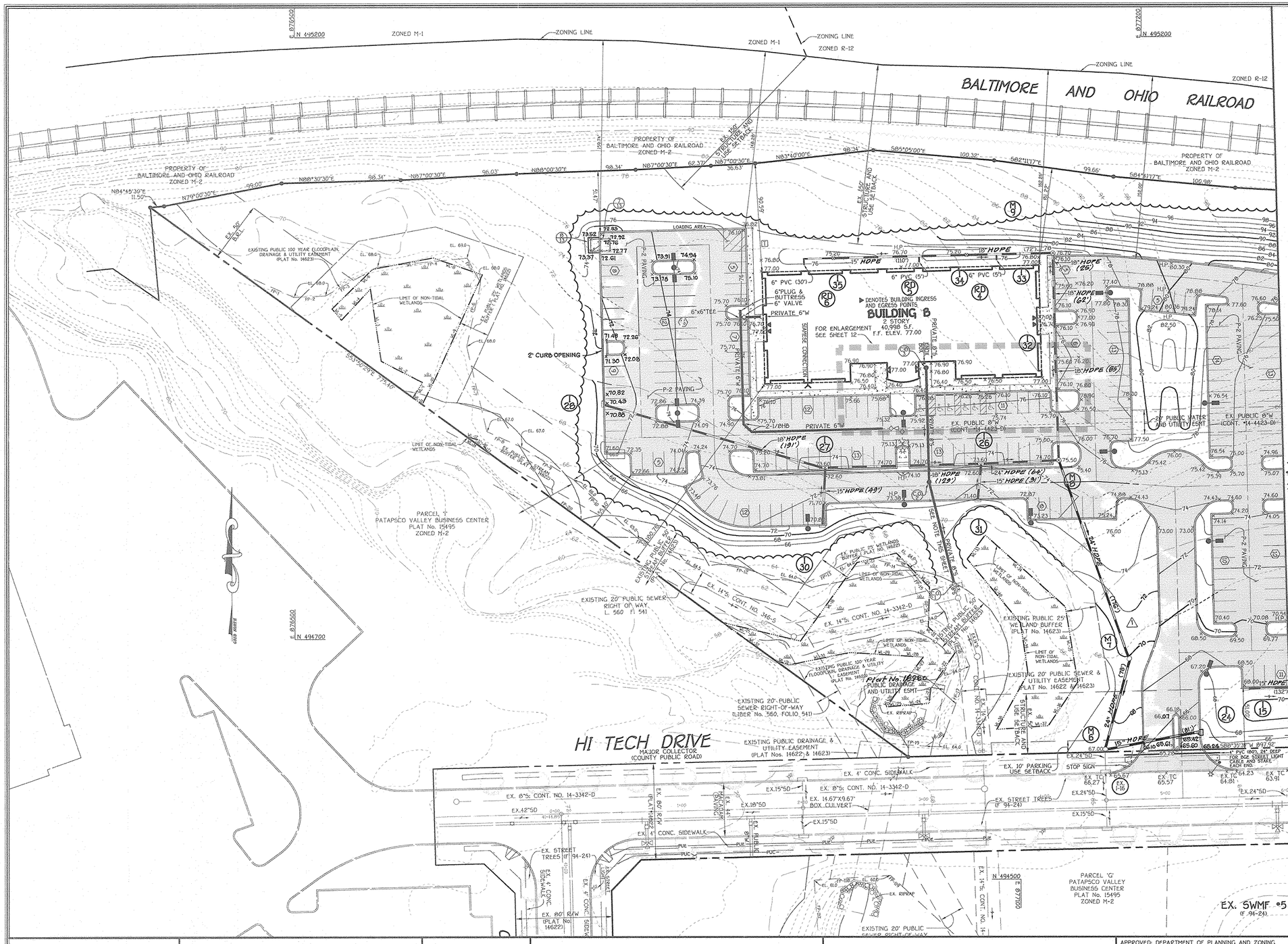

LEGEND

SYMBOL	DESCRIPTION
	EXISTING STORM DRAIN LINE
	BOUNDARY/RIGHT OF WAY LINE
B.R.L.	BUILDING RESTRICTION LINE
	PROPOSED CURB TRANSITION
	PROPOSED STORM DRAIN PIPE
	PROPOSED WATER PIPE
	PROPOSED SEWER PIPE
	PROPOSED CONCRETE
	PROPOSED PAVING
	PROPOSED LIGHT
	EXISTING TREELINE
	PROPOSED TREELINE

Existing Wetland Limits Metes And Bounds Plat No. 14623

Line	Bearing & Distance	Line	Bearing & Distance	Line	Bearing & Distance
WL-1	N31°46'23"E 14.95	WL-19	S43°51'31"E 18.04	WL-37	S85°54'51"W 42.76
WL-2	N62°36'37"W 38.29	WL-20	S01°56'48"W 32.85	WL-38	N29°03'34"E 53.24
WL-3	N08°28'18"W 60.73	WL-21	S47°29'11"E 30.82	WL-39	N08°18'24"W 42.45
WL-4	S42°46'36"W 35.19	WL-22	S34°01'15"W 37.08	WL-40	N39°40'33"W 68.93
WL-5	N39°50'15"W 12.24	WL-23	S06°05'44"W 12.25	WL-41	N76°20'50"E 41.54
WL-6	N45°32'16"E 47.13	WL-24	S85°24'26"W 15.96	WL-42	N03°11'14"E 56.05
WL-7	N79°24'15"E 50.85	WL-25	S85°24'25"W 20.02	WL-43	N70°39'37"E 10.38
WL-8	S70°55'01"E 42.99	WL-26	N36°47'06"E 34.85	WL-44	S12°58'58"E 75.35
WL-9	S24°16'00"W 94.15	WL-27	N36°47'07"E 16.93	WL-45	S01°22'22"W 46.29
WL-10	S26°48'22"W 24.64	WL-28	N86°19'08"W 9.67	WL-46	S26°01'56"E 80.37
WL-11	N53°50'29"W 9.44	WL-29	N86°19'11"W 51.22	WL-47	S16°07'15"W 70.15
WL-12	S74°34'17"E 12.11	WL-30	S78°20'20"W 51.25	WL-48	S00°04'25"E 22.00
WL-13	S31°30'24"E 11.28	WL-31	N72°33'42"W 11.75	WL-49	S71°51'27"W 6.72
WL-14	N53°50'29"W 21.75	WL-32	N53°50'29"W 54.04	WL-50	N06°51'37"W 24.24
WL-15	S76°26'25"E 66.03	WL-33	N36°34'32"E 24.94	WL-51	N84°13'47"W 28.60
WL-16	N35°45'10"E 80.31	WL-34	S46°00'10"E 89.07	WL-52	N25°00'00"W 93.83
WL-17	N76°41'29"E 33.59	WL-35	S09°16'28"E 63.54	WL-53	N04°12'44"W 102.49
WL-18	S43°51'32"E 21.34	WL-36	S33°52'09"W 43.68		

Existing 100 Year Floodplain, Drainage & Utility Easement Plat No. 14623

Line	Bearing & Distance
FP-1	S65°26'20"E 47.49
FP-2	N87°25'53"E 26.19
FP-3	N60°43'27"E 49.26
FP-4	N84°26'13"E 74.34
FP-5	S28°24'40"E 23.38
FP-6	S12°14'13"W 54.29
FP-7	S13°12'19"E 72.52
FP-8	S65°41'57"E 31.53
FP-9	S57°38'18"E 50.68
FP-10	S47°32'53"E 73.50
FP-11	S69°48'38"E 35.25
FP-12	S76°43'30"E 107.29
FP-13	N63°22'23"E 51.12
FP-14	S75°48'06"E 40.90
FP-15	S38°53'18"E 46.59
FP-16	S24°53'54"E 50.21
FP-17	S20°06'14"W 59.64
FP-18	S56°15'36"W 18.97
FP-19	N85°33'26"W 30.08
FP-20	N53°50'29"W 662.94

STREET LIGHT CHART

STREET NAME	STATION	OFFSET	FIXTURE/POLE TYPE	LEGEND
HI TECH DRIVE	C.L. STA. 5+45	29' LT	250-WATT "SAG" H.P.S. VAPOR FIXTURE, 12' ARM MOUNTED ON A 30-FOOT BLACK FIBERGLASS POLE.	
HI TECH DRIVE	C.L. STA. 8+52	29' LT	250-WATT "SAG" H.P.S. VAPOR FIXTURE, 12' ARM MOUNTED ON A 30-FOOT BLACK FIBERGLASS POLE.	
HI TECH DRIVE	C.L. STA. 12+49	29' LT	250-WATT "SAG" H.P.S. VAPOR FIXTURE, 12' ARM MOUNTED ON A 30-FOOT BLACK FIBERGLASS POLE.	
HI TECH DRIVE	C.L. STA. 15+68	29' LT	250-WATT "SAG" H.P.S. VAPOR FIXTURE, 12' ARM MOUNTED ON A 30-FOOT BLACK FIBERGLASS POLE.	

NOTE: FOR THE PRIVATE 8" SEWER MAIN INSTALLATION FROM THE EX. 8" PLUG TO CO #1, SEE SHEET 21 OF 21 FOR "BEST MANAGEMENT PRACTICES FOR WORK IN NONTIDAL WETLANDS AND WETLAND BUFFERS"

STATE OF MARYLAND — KEVIN A. CARTER — 14220 — REGISTERED PROFESSIONAL ENGINEER

FISHER, COLLINS & CARTER, INC.
CIVIL ENGINEERING CONSULTANTS & LAND SURVEYORS
CENTENNIAL SQUARE OFFICE PARK - 10272 BALTIMORE NATIONAL PIKE
ELLICOTT CITY, MARYLAND 21042
(410) 461 - 2855

DATE	DESCRIPTION
	REVISION BLOCK
6/18/07	⚠1 REVISED STORM DRAINS AND GRADING
9-25-07	⚠2 Changed all storm drain pipe from RCCP to HDPE.

OWNER/DEVELOPER
CSG PATAPSCO, LLC
5024 CAMPBELL BOULEVARD, SUITE G
WHITE MARSH, MARYLAND 21236
410-933-2091

APPROVED: DEPARTMENT OF PLANNING AND ZONING

Director - Department of Planning and Zoning — Date 6/27/07
Chief, Division of Land Development — Date 6/15/07
Chief, Development Engineering Division J.P. — Date 5/30/07

SUBDIVISION	SECTION/AREA	PARCEL NO.
PATAPSCO VALLEY BUSINESS CENTER	N/A	C

PLAT NO.	BLOCK NO.	ZONE	TAX MAP	ELEC. DIST.	CENSUS TR.
18978 & 18980 F-07-144	14, 15, 20, 21	M-2	38	FIRST	601201

WATER CODE	SEWER CODE
A04	2150500, 2150501, 2150300

SITE DEVELOPMENT PLAN

PATAPSCO VALLEY BUSINESS CENTER
PATAPSCO VALLEY OFFICE CAMPUS PARCEL 'C'
ZONED: M-2

TAX MAP No. 38 PARCEL No. 285 GRID No. 14,15,20,21
FIRST ELECTION DISTRICT HOWARD COUNTY, MARYLAND
SCALE: 1" = 40'
DATE: MARCH 15, 2007
SHEET 2 OF 21 SDP-07-028

I:\06003\dwg\SITE DEVELOPMENT PLAN\06003-6001 SITE PLAN.dwg, SITE PLAN SHEET-1, 3/16/2007 7:49:12 AM, 1:1

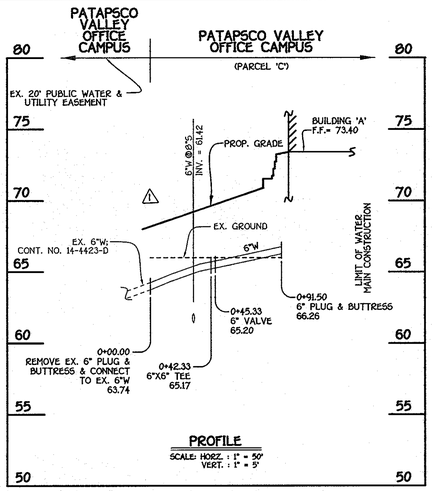

6" WATER MAIN; BUILDING 'A'

WATER MAIN TABULATION CHART			
W.M. STA.	APPURTENANCE	NORTHING	EASTING
6" WATER MAIN; BUILDING 'A'			
0+00.00	EX. 6" PLUG & BUTTRESS	555479.20	1389964.82
0+42.33	6"X6" TEE	555521.52	1389963.79
0+45.33	6" VALVE	555521.52	1389960.79
0+91.50	6" PLUG & BUTTRESS	555520.32	1389914.64

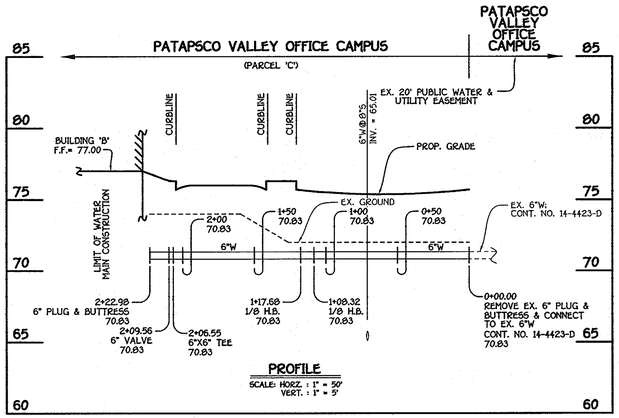

6" WATER MAIN; BUILDING 'B'

WATER MAIN TABULATION CHART			
W.M. STA.	APPURTENANCE	NORTHING	EASTING
6" WATER MAIN; BUILDING 'B'			
0+00.00	EX. 6" PLUG & BUTTRESS	555623.91	1389404.41
1+08.32	1/8 H.B.	555621.25	1389296.12
1+17.68	1/8 H.B.	555627.69	1389289.32
2+06.55	6"X6" TEE	555716.53	1389286.85
2+09.56	6" VALVE	555716.61	1389289.84
2+22.98	6" PLUG & BUTTRESS	555716.97	1389303.26

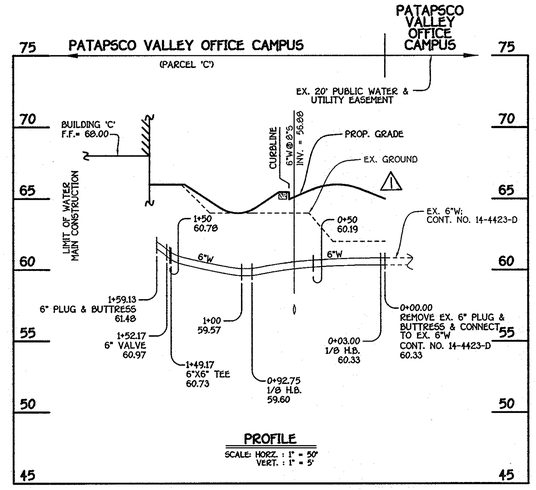

6" WATER MAIN; BUILDING 'C'

WATER MAIN TABULATION CHART			
W.M. STA.	APPURTENANCE	NORTHING	EASTING
6" WATER MAIN; BUILDING 'C'			
0+00.00	EX. 6" PLUG & BUTTRESS	555505.82	1390287.02
0+03.00	1/8 H.B.	555508.82	1390286.95
0+92.75	1/8 H.B.	555564.63	1390216.66
1+49.17	6"X6" TEE	555621.03	1390215.33
1+52.17	6" VALVE	555621.11	1390218.33
1+59.13	6" PLUG & BUTTRESS	555621.27	1390225.28

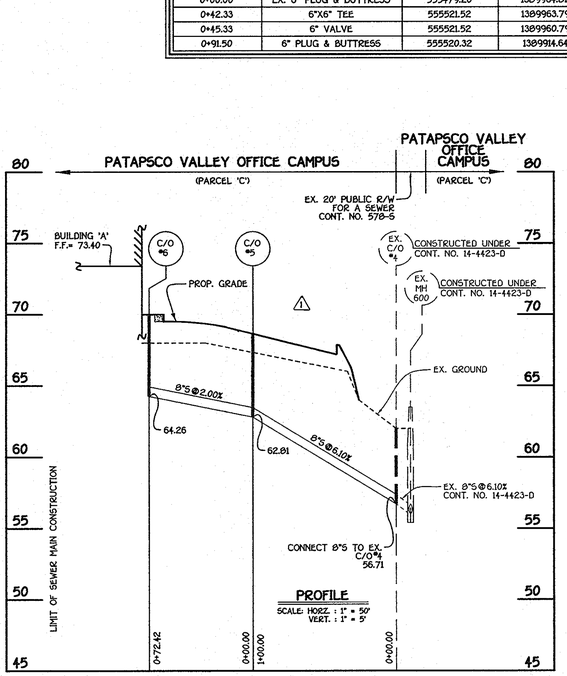

8" SEWER MAIN; BUILDING 'A'

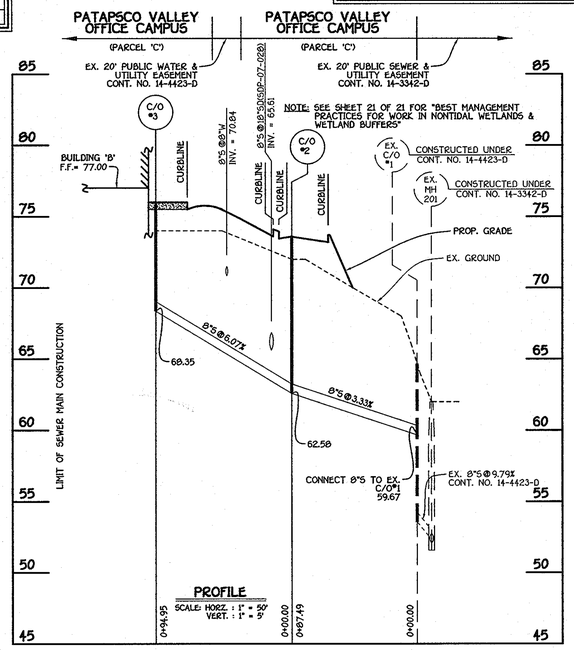

8" SEWER MAIN; BUILDING 'B'

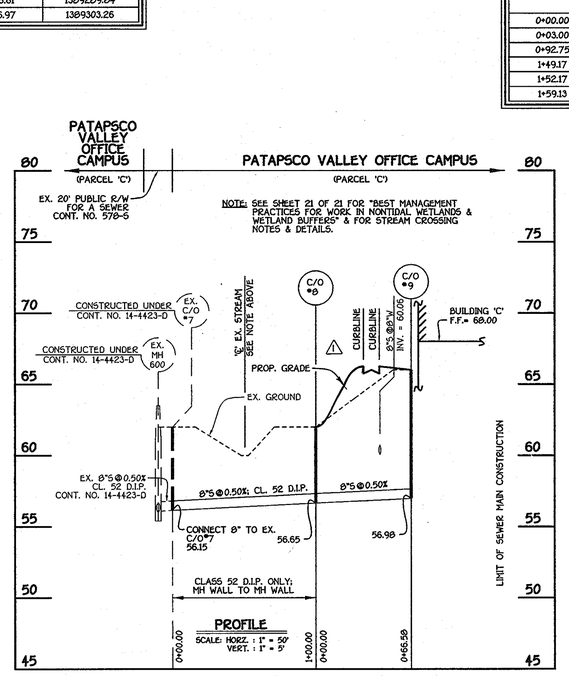

8" SEWER MAIN; BUILDING 'C'

M.C.E. CHART	
BUILDING	M.C.E.
'A'	71.51
'B'	74.27
'C'	66.65

MANHOLE TABULATION CHART			
NO.	NORTHING	EASTING	RIM ELEVATION
C.O. #2	555579.49	1389442.71	73.60
C.O. #3	555674.40	1389440.37	76.00
C.O. #5	555535.60	1389980.97	69.75
C.O. #6	555541.19	1389916.77	70.00
C.O. #8	555518.41	1390210.06	62.00
C.O. #9	555563.76	1390257.18	66.00

NOTE: SET ALL TOPS OF CLEAN-OUTS FLUSH W/ PROPOSED FINISHED GRADE.

8"S INVERT @ 5' FROM BUILDING		
STATION	BUILDING	ELEVATION
	C.O. #2 TO C.O. #3	
0+94.95	'A'	65.85
	C.O. #5 TO C.O. #6	
0+74.42	'B'	64.36
	C.O. #8 TO C.O. #9	
0+66.58	'C'	57.08

FISHER, COLLINS & CARTER, INC.
CIVIL ENGINEERING CONSULTANTS & LAND SURVEYORS
CENTENNIAL SQUARE OFFICE PARK - 10272 BALTIMORE NATIONAL PIKE
ELLICOTT CITY, MARYLAND 21042
(410) 461 - 2855

DATE	DESCRIPTION
6/12/07	⚠1 REVISED WATER & SEWER PROFILES
	REVISION BLOCK

STATE OF MARYLAND — CHARLES A. HANCOCK — No. 21676 — REGISTERED PROFESSIONAL ENGINEER

OWNER/DEVELOPER
CSG PATAPSCO, LLC
5024 CAMPBELL BOULEVARD, SUITE G
WHITE MARSH, MARYLAND 21236
410-933-2091

APPROVED: DEPARTMENT OF PLANNING AND ZONING

Director - Department of Planning and Zoning — Date 6/15/07
Chief, Division of Land Development — Date 6/15/07
Chief, Development Engineering Division — J.R. — Date 6/20/07

SUBDIVISION		SECTION/AREA		PARCEL NO.
PATAPSCO VALLEY BUSINESS CENTER		N/A		C
PLAT NO. 19119A 19980 F-07-144	BLOCK NO. 14, 15, 20, 21	ZONE M-2	TAX MAP 38	ELEC. DIST. FIRST	CENSUS TR. 601201
WATER CODE A04		SEWER CODE 2150500, 2150501, 2150300		

PRIVATE WATER & SEWER MAIN PROFILES

PATAPSCO VALLEY BUSINESS CENTER
PATAPSCO VALLEY OFFICE CAMPUS
PARCEL 'C'
ZONED: M-2

TAX MAP No. 38 PARCEL No. 285 GRID No. 14,15,20,21
FIRST ELECTION DISTRICT HOWARD COUNTY, MARYLAND
SCALE: AS SHOWN
DATE: MARCH 15, 2007
SHEET 18 OF 21 **SDP-07-028**

I:\06003\dwg\SITE DEVELOPMENT PLAN\06003-6001 Water And Sewer Base Plan Parcel 'C' dwg, PRIVATE PROFILE SHEET, 3/16/2007 8:27:41 AM, 1:1

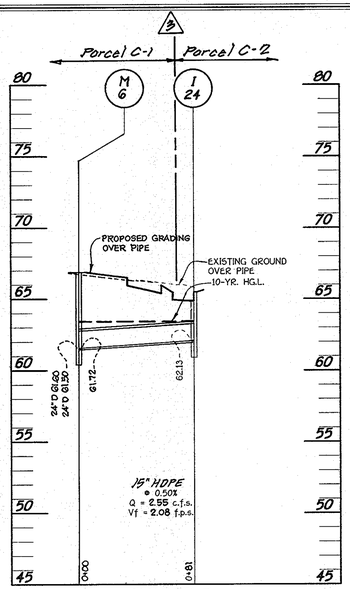

PROFILE

SCALE: HORIZ. : 1" = 50'
VERT. : 1" = 5'

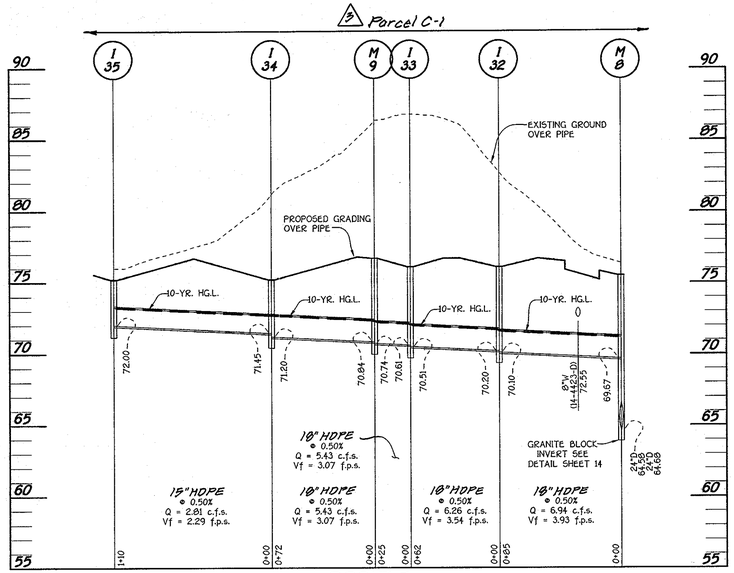

PROFILE

SCALE: HORIZ. : 1" = 50'
VERT. : 1" = 5'

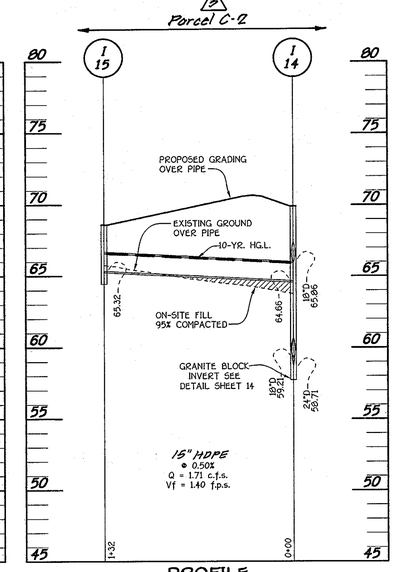

PROFILE

SCALE: HORIZ. : 1" = 50'
VERT. : 1" = 5'

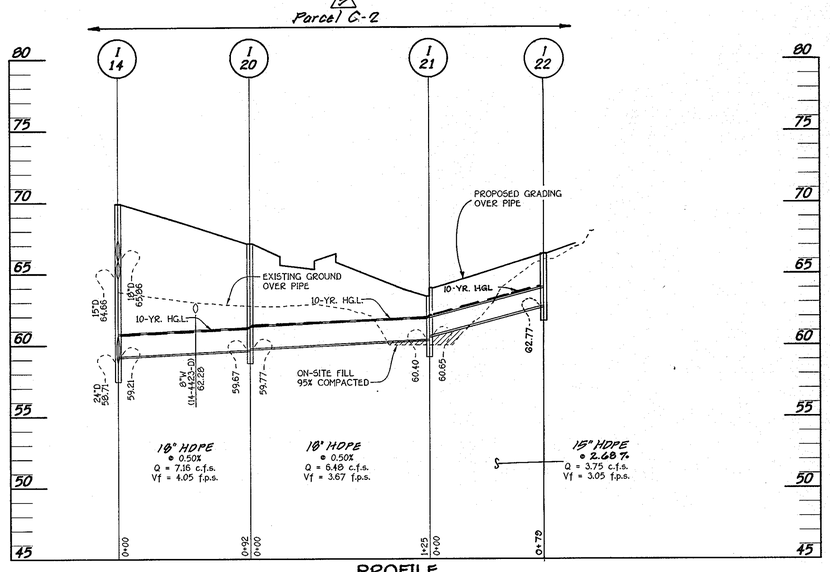

PROFILE

SCALE: HORIZ. : 1" = 50'
VERT. : 1" = 5'

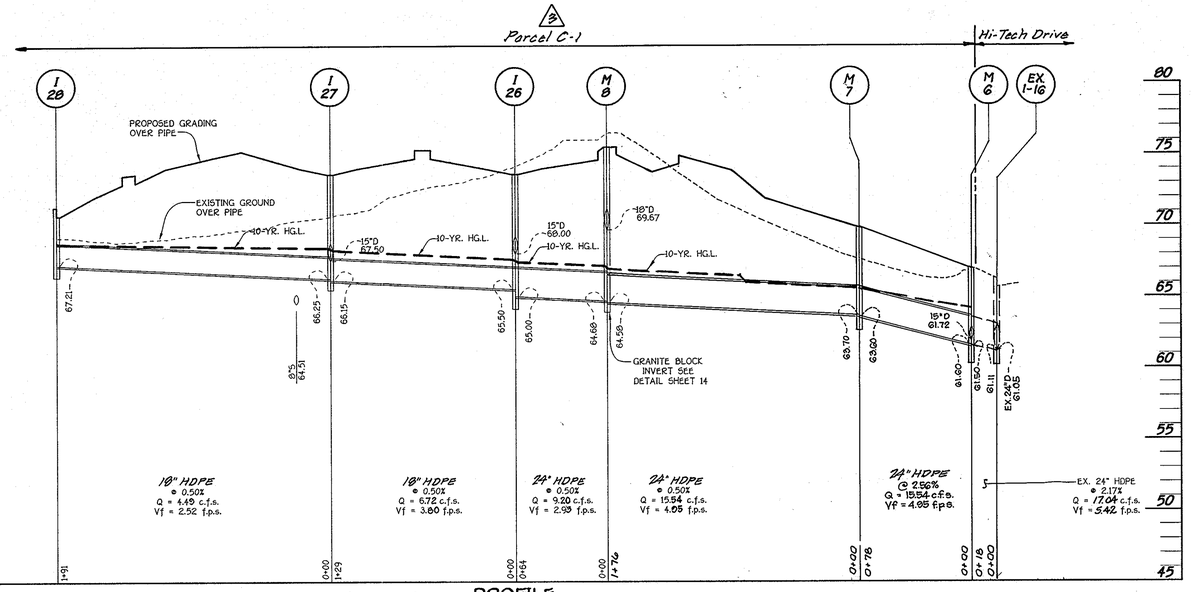

PROFILE

SCALE: HORIZ. : 1" = 50'
VERT. : 1" = 5'

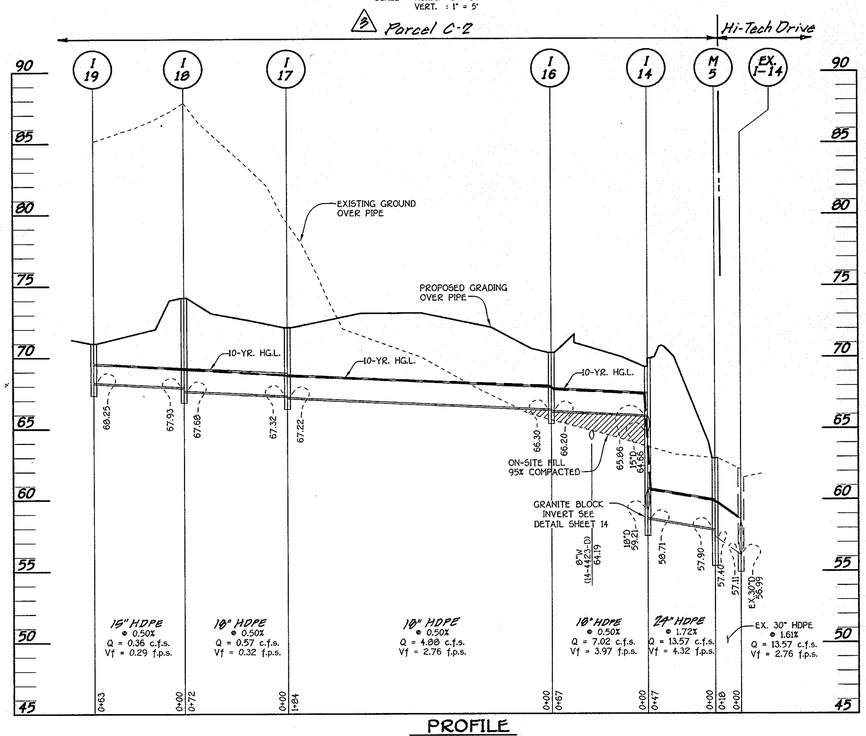

PROFILE

SCALE: HORIZ. : 1" = 50'
VERT. : 1" = 5'

FISHER, COLLINS & CARTER, INC.
CIVIL ENGINEERING CONSULTANTS & LAND SURVEYORS
CENTENNIAL SQUARE OFFICE PARK - 10272 BALTIMORE NATIONAL PIKE
ELLICOTT CITY, MARYLAND 21042
(410) 461 - 2855

DATE	DESCRIPTION
3.10.08	3 Resubdivided Parcel C into Parcels C-1, C-2 & C-3. Revised Title Block..
9.25.07	2 Changed all storm drain pipe from RCCP to HDPE
6/8/07	1 REVISED STORM DRAIN PROFILES

REVISION BLOCK

STATE OF MARYLAND — JAMES E. CARROLL — No. 21705 — PROFESSIONAL ENGINEER

OWNER/DEVELOPER

CSG PATAPSCO, LLC
5024 CAMPBELL BOULEVARD, SUITE G
WHITE MARSH, MARYLAND 21236
410-933-2091

APPROVED: DEPARTMENT OF PLANNING AND ZONING

Director - Department of Planning and Zoning — Date 6/20/07

Chief, Division of Land Development — Date 6/5/07

Chief, Development Engineering Division — J.F. — Date 6/5/07

SUBDIVISION	SECTION/AREA	PARCEL NO.
PATAPSCO VALLEY BUSINESS CENTER	N/A	C-1, C-2 & C-3

PLAT NO.	BLOCK NO.	ZONE	TAX MAP	ELEC. DIST.	CENSUS TR.
18479 & 18980 F-97-144	14, 15, 20, 21	M-2	38	FIRST	601201

WATER CODE PLAT NO. 20000 & 20001 F-08-138 — A04

SEWER CODE 2150500, 2150501, 2150300

STORM DRAIN PROFILES

PATAPSCO VALLEY BUSINESS CENTER
PATAPSCO VALLEY OFFICE CAMPUS
PARCELS C-1, C-2 AND C-3 3
ZONED: M-2

TAX MAP No. 38 PARCEL No. 285 GRID No. 14,15,20,21
FIRST ELECTION DISTRICT HOWARD COUNTY, MARYLAND
SCALE: AS SHOWN
DATE: MARCH 15, 2007
SHEET 15 OF 21

SDP-07-028

I:\06\06003\dwg\SITE DEVELOPMENT PLAN\06003-6001 STORM DRAIN PROFILES.dwg, Model, 3/19/2007 2:26:03 PM, 1:50

STRUCTURE SCHEDULE

STRUCTURE NO.	TOP ELEVATION	INV.IN	INV.OUT	COORDINATES	WIDTH	TYPE	REMARKS
I-1	61.76	57.91 (15")	57.66 (18")	494638.66 877917.28	2.50'	A-5	S.D. - 4.40
I-2	63.44		58.58 (15")	494681.50 877901.71	2.50'	A-5	S.D. - 4.40
I-4	64.27	59.83 (18")	59.73 (18")	494682.98 877920.69	2.50'	A-5	S.D. - 4.40
I-5	65.60	60.53 (18")	60.43 (18")	494745.53 878062.16	2.50'	A-5	S.D. - 4.40
I-6	66.25 *	61.54 (18")	61.44 (18")	494925.74 878057.89	2.50'	D	S.D. - 4.39
I-7	66.00 *	62.17 (15")	61.92 (18")	494923.81 877982.68	2.50'	D	S.D. - 4.39
I-8	66.00 *	-	62.75 (15")	494920.53 877867.99	2.50'	D	S.D. - 4.39
I-9	63.60	59.46 (18")	59.35 (18")	494704.65 878121.55	2.50'	A-5	S.D. - 4.40
I-10	64.40	60.84 (15")	60.59 (18")	494756.02 878104.60	2.50'	A-5	S.D. - 4.40
I-11	64.90	-	61.10 (15")	494782.80 878113.15	2.50'	A-5	S.D. - 4.40
I-13	64.46	-	61.00 (15")	494734.34 878239.37	2.50'	A-5	S.D. - 4.40
I-14	69.90	64.66(15") 65.86(18")	59.21(18")	494662.89 877417.50	2.50'	A-5	S.D. - 4.40
I-15	68.60	-	65.32 (15")	494659.67 877226.16	2.50'	A-5	S.D. - 4.40
I-16	70.30	66.30 (18")	66.20 (18")	494718.50 877380.24	2.50'	A-5	S.D. - 4.40
I-17	72.10	67.32 (18")	67.22 (18")	494902.80 877375.72	2.50'	A-5	S.D. - 4.40
I-18	74.19	67.93 (15")	67.68 (18")	494974.49 877373.96	2.50'	A-5	S.D. - 4.40
I-19	71.00 *	-	68.25 (15")	494976.18 877430.62	2.50'	D	S.D. - 4.39
I-20	67.10	59.77 (18")	59.67 (18")	494665.14 877509.09	2.50'	A-5	S.D. - 4.40
I-21	64.00	60.65 (15")	60.40 (18")	494680.64 877631.05	2.50'	A-5	S.D. - 4.40
I-22	66.43		62.77 (15")	494767.12 877629.13	2.50'	A-10	S.D. - 4.41
I-24	65.48		62.13 (15")	494622.21 877247.57	2.50'	A-5	S.D. - 4.40
I-26	74.20	68.00 (15") 65.50 (18")	65.00 (24")	494644.36 877067.36	3.42'	5 COMBINATION	S.D. - 4.32
I-27	74.20	67.50 (15") 66.25 (18")	66.15 (18")	494641.20 876938.40	3.42'	5 COMBINATION	S.D. - 4.32
I-28	71.03		67.21 (18")				
				494992.71 876753.63	2.50'	A-5	S.D. - 4.40
I-30	71.40	-	67.75 (15")	494795.12 876936.03	2.50'	A-5	S.D. - 4.40
I-31	72.00	-	68.15 (15")	494816.29 877064.64	2.50'	A-5	S.D. - 4.40
I-32	76.20	70.20 (18")	70.10 (18")	494933.70 877113.19	2.50'	A-5	S.D. - 4.40
I-33	76.20	70.61 (18")	70.51 (18")	494995.18 877128.68	2.50'	A-5	S.D. - 4.40
I-34	75.20 *	71.45 (15")	71.20 (18")	495015.18 877055.45	2.50'	D	S.D. - 4.39
I-35	75.20 *	-	72.00 (15")	495016.54 876945.44	2.50'	D	S.D. - 4.39
M-1	61.40	57.38 (18") 57.38 (18")	53.85 (24")	494627.73 877942.46	4'	4' STD. MANHOLE	G - 5.12
M-2	64.50	58.94 (18")	56.16 (24")	494662.42 878029.57	4'	4' STD. MANHOLE	G - 5.12
M-3	64.00	58.68 (18")	58.43 (18")	494706.73 878321.87	4'	4' STD. MANHOLE	G - 5.12
M-5	62.90	57.90 (24")	57.40 (30")	494613.91 877410.65	5'	5' STD. MANHOLE	G - 5.13
M-6	67.00	61.20 (24") 61.72 (15")	61.50 (24")	494607.79 877169.54	4'	4' STD. MANHOLE	G - 5.12
M-7	69.90	63.70 (24")	63.60 (24")	494683.32 877130.79	4'	4' STD. MANHOLE	G - 5.12
M-8	75.50	69.67 (18") 64.68 (24")	64.58 (24")	494648.55 877131.54	4'	4' STD. MANHOLE	G - 5.12
M-9	76.70	70.84 (18")	70.74 (18")	495020.63 877126.81	4'	4' STD. MANHOLE	G - 5.12

* - DENOTES THROAT OPENING ELEVATION

PIPE SCHEDULE

SIZE	CLASS	LENGTH
15"	HDPE	816 L.F.
18"	HDPE	1471 L.F.
24"	HDPE	365 L.F.

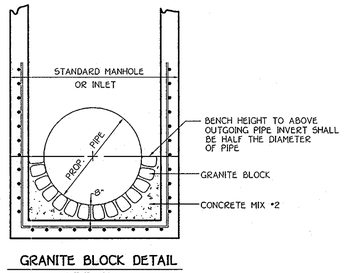

GRANITE BLOCK DETAIL
NOT TO SCALE

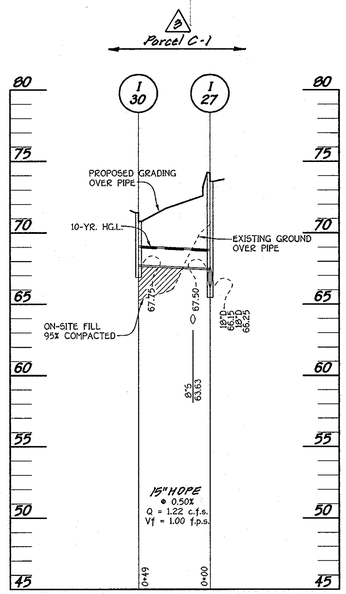

PROFILE
SCALE: HORIZ. : 1" = 50'
VERT. : 1" = 5'

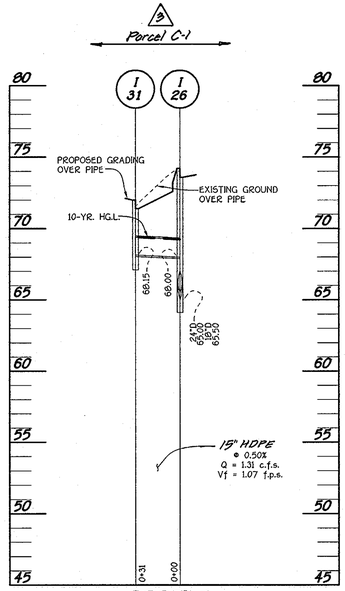

PROFILE
SCALE: HORIZ. : 1" = 50'
VERT. : 1" = 5'

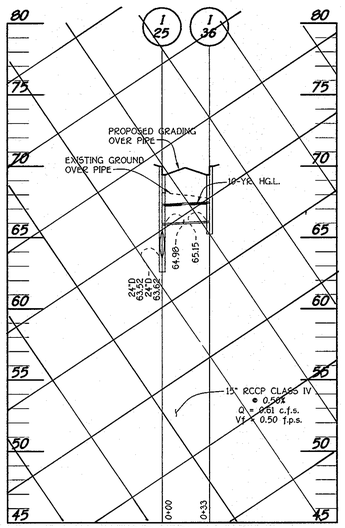

PROFILE ⚠1
SCALE: HORIZ. : 1" = 50'
VERT. : 1" = 5'

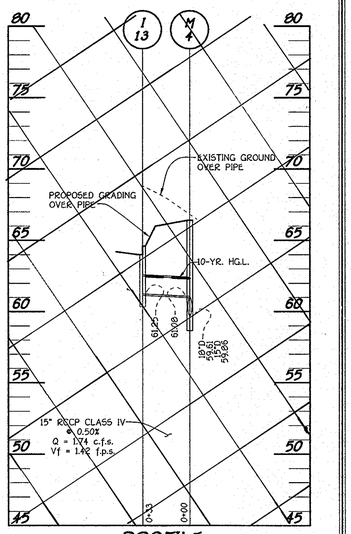

PROFILE ⚠1
SCALE: HORIZ. : 1" = 50'
VERT. : 1" = 5'

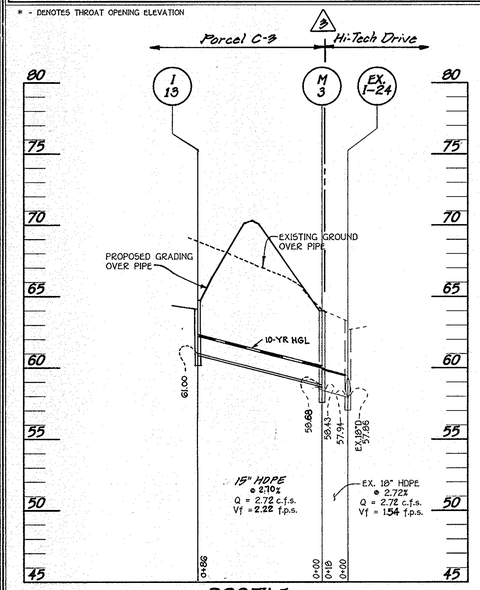

PROFILE ⚠1
SCALE: HORIZ. : 1" = 50'
VERT. : 1" = 5'

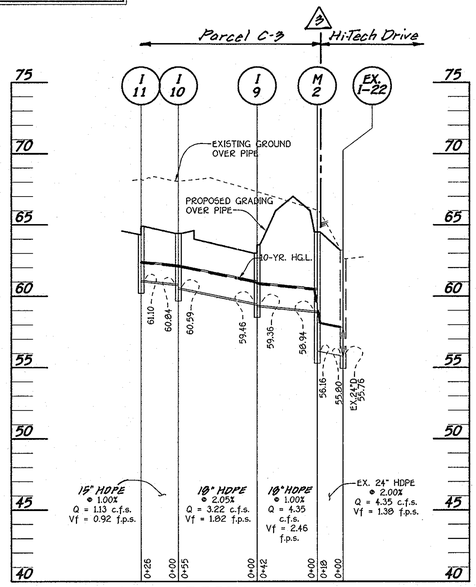

PROFILE
SCALE: HORIZ. : 1" = 50'
VERT. : 1" = 5'

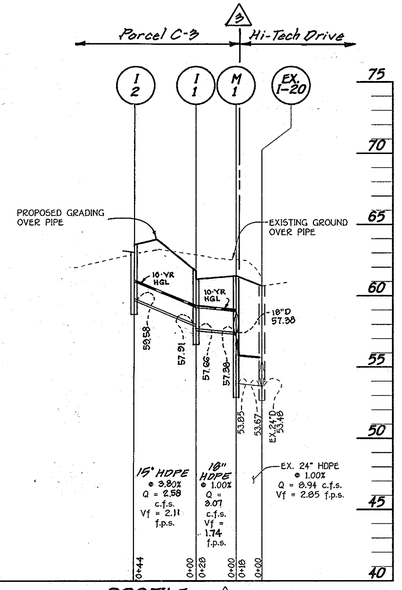

PROFILE ⚠1
SCALE: HORIZ. : 1" = 50'
VERT. : 1" = 5'

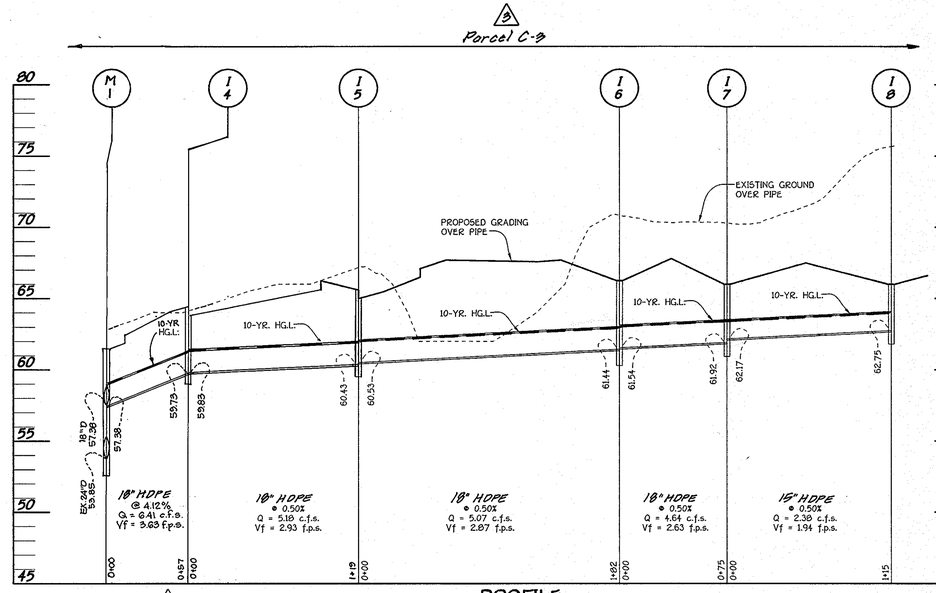

PROFILE
SCALE: HORIZ. : 1" = 50'
VERT. : 1" = 5'

FISHER, COLLINS & CARTER, INC.
CIVIL ENGINEERING CONSULTANTS & LAND SURVEYORS
CENTENNIAL SQUARE OFFICE PARK - 10272 BALTIMORE NATIONAL PIKE
ELLICOTT CITY, MARYLAND 21042
(410) 461 - 2855

DATE	DESCRIPTION
9-10-08	⚠3 Resubdivided Parcel C into Parcels C-1, C-2 & C-3, Revised Title Block.
9-25-07	⚠2 Changed all storm drain pipe from RCCP to HDPE.
6/8/07	⚠1 REVISED STORM DRAIN PROFILES AND STRUCTURE SCHEDULE
	REVISION BLOCK

OWNER/DEVELOPER
CSG PATAPSCO, LLC
5024 CAMPBELL BOULEVARD, SUITE G
WHITE MARSH, MARYLAND 21236
410-933-2091

APPROVED: DEPARTMENT OF PLANNING AND ZONING

Director - Department of Planning and Zoning — Date 6/5/07

Chief, Division of Land Development — Date 6/5/07

Chief, Development Engineering Division J.R. — Date 5/30/07

SUBDIVISION	SECTION/AREA	PARCEL NO.
PATAPSCO VALLEY BUSINESS CENTER	N/A	C-1, C-2 & C-3

PLAT NO.	BLOCK NO.	ZONE	TAX MAP	ELEC. DIST.	CENSUS TR.
18979 & 18980 F. 07-194	14, 15, 20, 21	M-2	38	FIRST	601201

WATER CODE PLAT NO. 20000+20001 F08-135 A04 — SEWER CODE 2150500, 2150501, 2150300

STORM DRAIN PROFILES AND STRUCTURE SCHEDULE

PATAPSCO VALLEY BUSINESS CENTER
PATAPSCO VALLEY OFFICE CAMPUS
PARCELS C-1, C-2 AND C-3 ⚠3
ZONED: M-2
TAX MAP No. 38 PARCEL No. 285 GRID No. 14,15,20,21
FIRST ELECTION DISTRICT HOWARD COUNTY, MARYLAND
SCALE: AS SHOWN
DATE: MARCH 15, 2007
SHEET 14 OF 21

SDP-07-028

I:\06003\dwg\SITE DEVELOPMENT PLAN\06003-8001 STORM DRAIN PROFILES.dwg, Model, 3/16/2007 3:43:17 PM, 1:50

LANDSCAPE DEVELOPER'S CERTIFICATE
I/We certify that the landscaping shown on this plan will be done according to the plan, Section 16.124 of the Howard County Code and the Howard County Landscape Manual. I/We further certify that upon completion a certification of landscape installation accompanied by an executed one year guarantee of plant materials will be submitted to the Department of Planning and Zoning.

Name — Date 3/28/07

This plan has been prepared in accordance with the provision of Section 16.124 of the Howard County Code and Landscape Manual. Financial surety for the required landscaping will be posted as part of the grading permit.

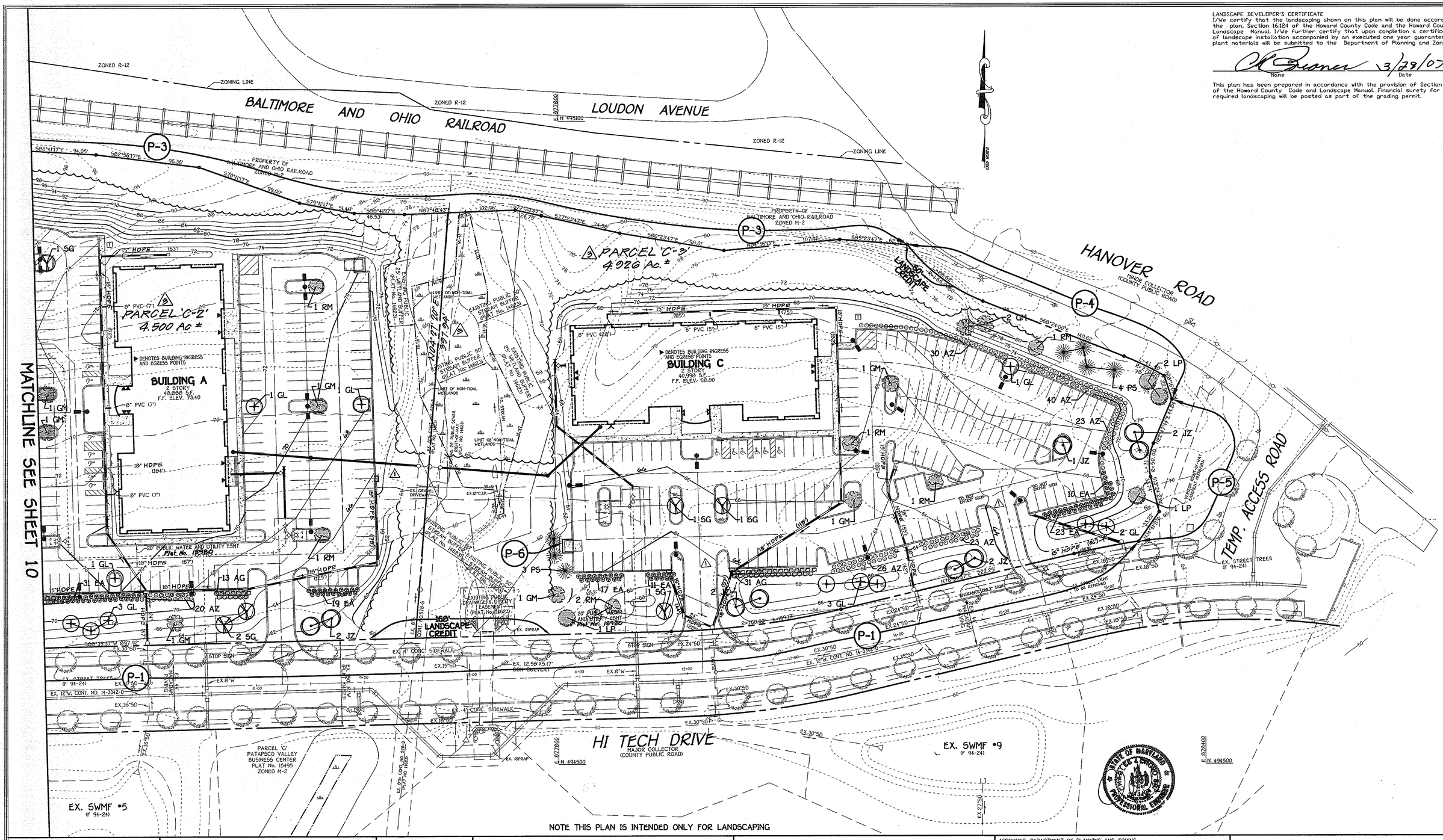

NOTE THIS PLAN IS INTENDED ONLY FOR LANDSCAPING

FISHER, COLLINS & CARTER, INC.
CIVIL ENGINEERING CONSULTANTS & LAND SURVEYORS
CENTENNIAL SQUARE OFFICE PARK - 10272 BALTIMORE NATIONAL PIKE
ELLICOTT CITY, MARYLAND 21042
(410) 461 - 2855

DATE	DESCRIPTION / REVISION BLOCK
3.10.08	3 Resubdivided Parcel C into Parcels C-1, C-2 & C-3. Revised Title Block.
9.26.07	2 Changed all storm drain pipe from RCCP to HDPE.
6/18/07	1 REVISED STORM DRAINS AND GRADING

OWNER/DEVELOPER
CSG PATAPSCO, LLC
5024 CAMPBELL BOULEVARD, SUITE G
WHITE MARSH, MARYLAND 21236
410-933-2091

APPROVED: DEPARTMENT OF PLANNING AND ZONING

Director - Department of Planning and Zoning — Date 6/15/07
Chief, Division of Land Development — Date 6/15/07
Chief, Development Engineering Division J.P. — Date 5/30/07

SUBDIVISION	SECTION/AREA	PARCEL NO.
PATAPSCO VALLEY BUSINESS CENTER	N/A	C-1, C-2 & C-3

PLAT NO.	BLOCK NO.	ZONE	TAX MAP	ELEC. DIST.	CENSUS TR.
18979 & 18980 F. 07-144	14, 15, 20, 21	M-2	38	FIRST	601201

WATER CODE A04 — PLAT NO. 20000 & 20001 F-08-138
SEWER CODE 2150500, 2150501, 2150300

LANDSCAPE PLAN

PATAPSCO VALLEY BUSINESS CENTER
PATAPSCO VALLEY OFFICE CAMPUS
PARCELS C-1, C-2 AND C-3 3
ZONED: M-2
TAX MAP No. 38 PARCEL No. 285 GRID No. 14,15,20,21
FIRST ELECTION DISTRICT HOWARD COUNTY, MARYLAND
SCALE: 1" = 40'
DATE: MARCH 15, 2007
SHEET 11 OF 21 SDP-07-028

I:\08003\dwg\SITE DEVELOPMENT PLAN\08003-8001 LANDSCAPE PLAN.dwg, LANDSCAPE PLAN-2, 3/16/2007 8:16:35 AM, 1:1

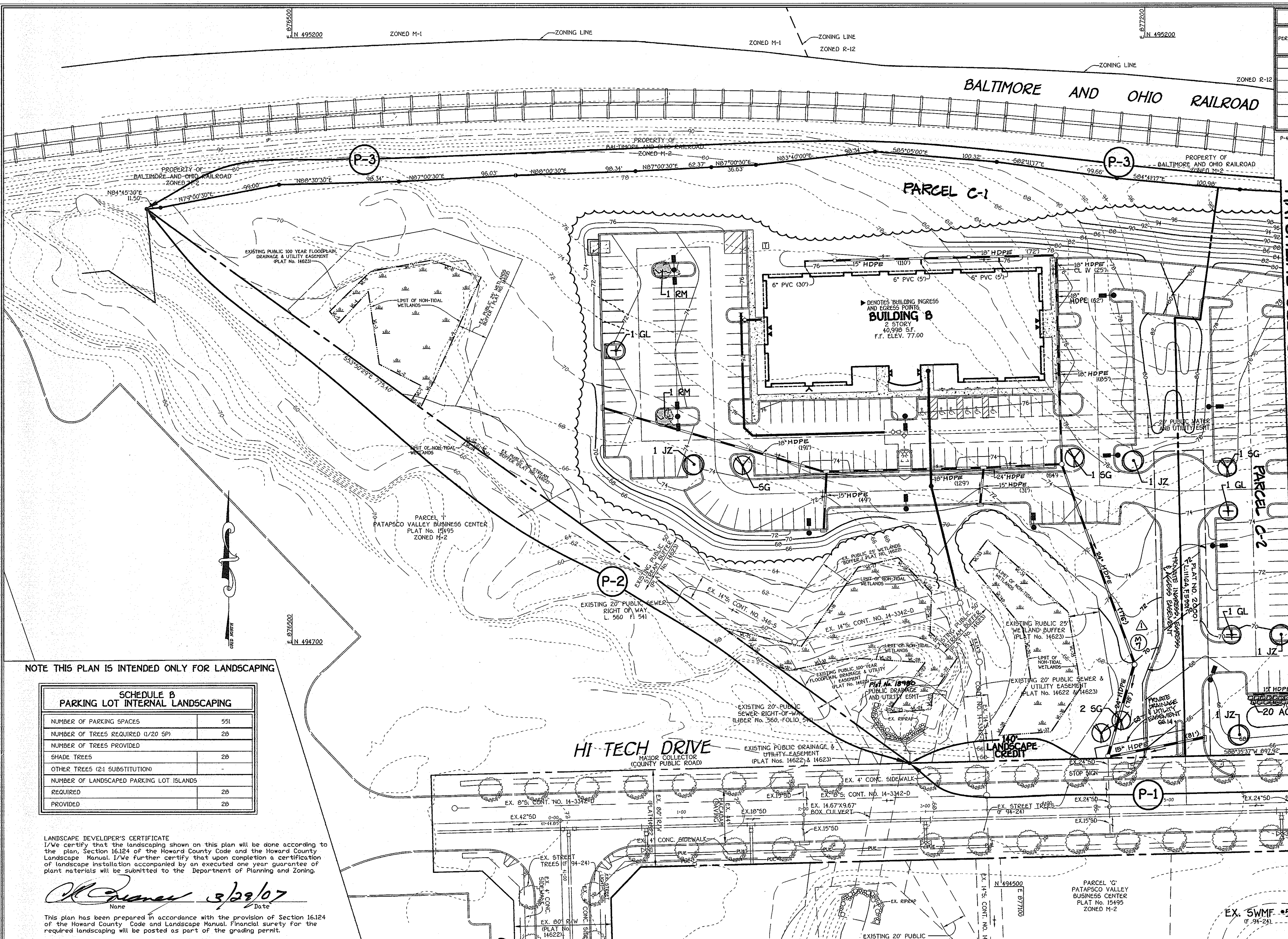

SCHEDULE A PERIMETER LANDSCAPE EDGE

PERIMETER	CATEGORY (PROPERTIES/ ROADWAYS)	LANDSCAPE TYPE	LINEAR FEET OF ROADWAY FRONTAGE PERIMETER	CREDIT FOR EXISTING VEGETATION (YES, NO, LINEAR FEET) (DESCRIBE BELOW IF NEEDED)	CREDIT FOR WALL, FENCE OR BERM (YES, NO, LINEAR FEET) (DESCRIBE BELOW IF NEEDED)	NUMBER OF PLANTS REQUIRED: SHADE TREES	NUMBER OF PLANTS REQUIRED: EVERGREEN TREES	NUMBER OF PLANTS REQUIRED: SHRUBS	NUMBER OF PLANTS PROVIDED: SHADE TREES	NUMBER OF PLANTS PROVIDED: EVERGREEN TREES	NUMBER OF PLANTS PROVIDED: SHRUBS
P-1	PARKING TO ROADWAY	E	1246'	YES, 25% (308')	NO	23	-	234	24	-	234
P-2	ADJACENT TO PERIMETER	N/A	775'	YES, 100%	NO	-	-	-	-	-	-
P-3	ADJACENT TO PERIMETER	A	1765'	YES, 100%	NO	-	-	-	-	-	-
P-4	PARKING TO ROADWAY	E	325'	YES, 18% (60')	NO	7	-	67	5	4	70
P-5	PARKING TO ROADWAY	E	130'	NO	NO	3	-	33	3	-	33
P-6	DUMPSTER	D	34'	NO	NO	1	3	-	1	3	-

P-4 SUBSTITUTES ARE PER THE HOWARD COUNTY LANDSCAPE MANUAL CHAPTER IV ALLOWING 2 EVERGREEN TREES IN PLACE OF 1 SHADE TREE.

LANDSCAPE LEGEND

SYMBOL	QTY.	BOTANICAL AND COMMON NAME	SIZE	COMMENTS
EA	111	EUONYMUS ALATUS 'COMPACTA' DWARF WINGED EUONYMUS	24" - 30" HEIGHT	18" - 24" SPACING
AG	64	ABELIA X GRANDIFLORA GLOSSY ABELIA	24" - 30" HEIGHT	18" - 24" SPACING
AZ	162	AZALEA 'GUMPO PINK' GUMPO PINK AZALEA	24" - 30" HEIGHT	18" - 24" SPACING
RM	9	ACER RUBRUM 'OCTOBER GLORY' RED MAPLE	2 1/2-3" CAL.	-
LP	4	PLATANUS OCCIDENTALIS 'BLOODGOOD' LONDON PLANETREE	2 1/2-3" CAL.	-
GM	9	ACER SACCHARUM 'GREEN MOUNTAIN' GREEN MOUNTAIN SUGAR MAPLE	2 1/2-3" CAL.	-
JZ	13	ZELKOVA SERRATA 'VILLAGE GREEN' VILLAGE GREEN JAPANAZE ZELKOVA	2 1/2-3" CAL.	-
SG	11	LLIQUIDAMBAR STRYACIFLUA SWEET GUM	2 1/2-3" CAL.	-
GL	15	TILIA CORDATA 'GREENSPIRE' 'GREENSPIRE' LITTLELEAF LINDEN	2 1/2-3" CAL.	-
PS	7	PINUS STROBUS EASTERN WHITE PINE	6' - 8' HEIGHT	-

NOTE: TREE AND SHRUB TYPES ARE ONLY AN RECOMMENDATION, THESE MAY BE REVISED TO A COUNTY APPROVED EQUIVALENT FROM THE HOWARD COUNTY LANDSCAPE MANUAL. "THIS PLAN HAS BEEN PREPARED IN ACCORDANCE WITH THE PROVISIONS OF SECTION 16.124 OF THE HOWARD COUNTY CODE AND THE LANDSCAPE MANUAL." LANDSCAPE SURETY IN THE AMOUNT OF $29,070.00 HAS BEEN POSTED AS A PART OF THE DEVELOPER'S AGREEMENT.

PLANTING SPECIFICATIONS

Plants, related material, and operations shall meet the detailed description as given on the plans and as described herein.

All plant material, unless otherwise specified, shall be nursery grown, uniformly branched, have a vigorous root system, and shall conform to the species, size, root and shape shown on the plant list and the American Association of Nurserymen (AAN) Standards. Plant material shall be healthy, vigorous, free from defects, decay, disfiguring roots, sun scald injuries, abrasions of the bark, plant disease, insect pest eggs, borers and all forms of insect infestations or objectionable disfigurements. Plant material that is weak or which has been cut back from larger grades to meet specified requirements will be rejected. Trees with forked leaders will not be accepted. All plants shall be freshly dug; no healed-in plants from cold storage will be accepted.

Unless otherwise specified, all general conditions, planting operations, details and planting specification shall conform to 'Landscape Specification Guidelines for Baltimore-Washington Metropolitan Areas', (hereinafter 'Landscape Guidelines') approved by the Landscape Contractors Association of Metropolitan Washington and the Potomac Chapter of the American Society of Landscape Architect, latest edition, including all agenda.

Contractor shall be required to guarantee all plant material for a period of one year after date of acceptance in accordance with the appropriate section of the Landscape Guidelines Contractor's attention is directed to the maintenance requirements found within the one year specifications including watering and replacement of specified plant material.

Contractor shall be responsible for notifying utility companies, utility contractors and 'Miss Utility' a minimum of 48 hours prior to beginning any work. Contractor may make minor adjustments in spacing and location of plant material to avoid conflicts with utilities. Damage to existing structure and utilities shall be repaired at the expense of the Contractor.

Protection of existing vegetation to remain shall be accomplished by the temporary installation of 4 foot high snow fence or blaze orange safety fence at the drip line.

Contractor id responsible for installing all material in the proper planting season for each plant type. All planting is to be completed within the growing season of completion of site construction.

Bid shall be base on actual site conditions. No extra payment shall be made for work arising from site conditions differing from those indicated on drawings and specifications

Plant quantities are provided for the convenience of the contractor only. If discrepancies exist between quantities shown on plan and those shown on the plant list, the quantities on the plan take precedence

All shrubs shall be planted in continuous trenches or prepared planting beds and mulched with composted hardwood mulch as details and specified except where noted on plans.

Positive drainage shall be maintained in planting beds 2 percent slope).

Planting mix shall be as follows: Deciduous Plants - Two parts topsoil, one part well-rotted cow or horse manure. Add 3 lbs. of standard fertilizer per cubic yard of planting mix. Evergreen Plants - two parts topsoil, one part humus or other approved organic material. Add 3 lbs. of evergreen (acidic) fertilizer per cubic yard of planting mix. Topsoil shall conform to the Landscape Guidelines.

Weed Control: Incorporate a pre-emergent herbicide into the planting bed following recommended rates on the label. Caution: Be sure to carefully check the chemical used to assure its adaptability to the specific ground cover to be treated.

All areas within contract limits disturbed during or prior to construction not designated to receive plants and mulch shall be fine graded and seeded.

This plan is intended for landscape use only. see other plan sheets for more information on grading, sediment control, layout, etc.

NOTE THIS PLAN IS INTENDED ONLY FOR LANDSCAPING

SCHEDULE B PARKING LOT INTERNAL LANDSCAPING

NUMBER OF PARKING SPACES	551
NUMBER OF TREES REQUIRED (1/20 SP)	28
NUMBER OF TREES PROVIDED	
SHADE TREES	28
OTHER TREES (2:1 SUBSTITUTION)	-
NUMBER OF LANDSCAPED PARKING LOT ISLANDS	
REQUIRED	28
PROVIDED	28

LANDSCAPE DEVELOPER'S CERTIFICATE
I/We certify that the landscaping shown on this plan will be done according to the plan, Section 16.124 of the Howard County Code and the Howard County Landscape Manual. I/We further certify that upon completion a certification of landscape installation accompanied by an executed one year guarantee of plant materials will be submitted to the Department of Planning and Zoning.

[signature] 3/29/07
Name Date

This plan has been prepared in accordance with the provision of Section 16.124 of the Howard County Code and Landscape Manual. Financial surety for the required landscaping will be posted as part of the grading permit.

FISHER, COLLINS & CARTER, INC.
CIVIL ENGINEERING CONSULTANTS & LAND SURVEYORS
CENTENNIAL SQUARE OFFICE PARK - 10272 BALTIMORE NATIONAL PIKE
ELLICOTT CITY, MARYLAND 21042
(410) 461 - 2855

DATE	DESCRIPTION
3/10/08	3 RESUBDIVIDED PARCEL C INTO PARCELS C-1, C-2 AND C-3 REVISED TITLE BLOCK
9-25-07	2 Changed all storm drain pipe from RCCP to HDPE.
6/8/07	1 REVISED STORMDRAINS AND GRADING

REVISION BLOCK

OWNER/DEVELOPER
CSG PATAPSCO, LLC
5024 CAMPBELL BOULEVARD, SUITE G
WHITE MARSH, MARYLAND 21236
410-933-2091

APPROVED: DEPARTMENT OF PLANNING AND ZONING
[signature] 6/5/07 Director - Department of Planning and Zoning Date
[signature] 6/5/07 Chief, Division of Land Development Date
[signature] J.P. 5/30/07 Chief, Development Engineering Division Date

SUBDIVISION			SECTION/AREA		PARCEL NO.
PATAPSCO VALLEY BUSINESS CENTER			N/A		C-1, C-2 AND C-3
PLAT NO. 18979 & 18980 F-07-144	BLOCK NO. 14, 15, 20, 21	ZONE M-2	TAX MAP 38	ELEC. DIST. FIRST	CENSUS TR. 601201
WATER CODE PLAT NO. 20000 & 20001 A04 F-08-138			SEWER CODE 2150500, 2150501, 2150300		

LANDSCAPE PLAN

PATAPSCO VALLEY BUSINESS CENTER
PATAPSCO VALLEY OFFICE CAMPUS
PARCELS C-1, C-2 AND C-3
ZONED: M-2
TAX MAP No. 38 PARCEL No. 285 GRID No. 14,15,20,21
FIRST ELECTION DISTRICT HOWARD COUNTY, MARYLAND
SCALE: 1" = 40'
DATE: MARCH 15, 2007
SHEET 10 OF 21 SDP-07-028

I:\06003\dwg\SITE DEVELOPMENT PLAN\06003-6001 LANDSCAPE PLAN.dwg, LANDSCAPE PLAN-1, 3/16/2007 8:15:27 AM, 1:1

LEGEND	
SYMBOL	DESCRIPTION
	EXISTING STORM DRAIN LINE
	BOUNDARY/RIGHT OF WAY LINE
B.R.L.	BUILDING RESTRICTION LINE
	PROPOSED CURB TRANSITION
	PROPOSED STORM DRAIN PIPE
	PROPOSED WATER PIPE
	PROPOSED SEWER PIPE
	PROPOSED CONCRETE
	PROPOSED PAVING
	PROPOSED LIGHT

NOTE: FOR THE PRIVATE 8" SEWER MAIN INSTALLATION FROM THE EX. 8" PLUGS TO CO #4 & CO #7, SEE SHEET 21 OF 21 FOR "BEST MANAGEMENT PRACTICES FOR WORK IN NONTIDAL WETLANDS AND WETLAND BUFFERS" & FOR STREAM CROSSING NOTES & DETAILS.

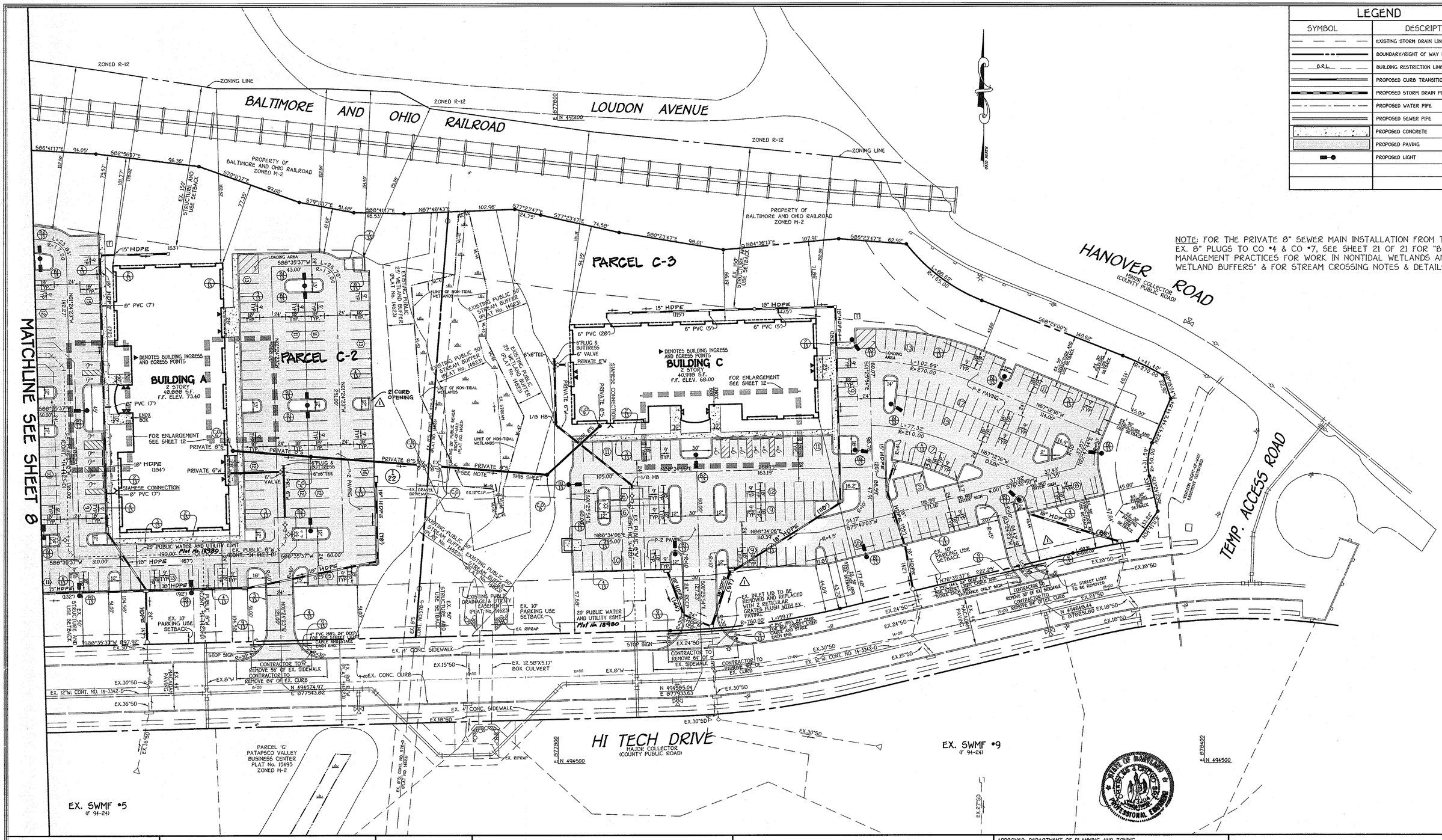

FISHER, COLLINS & CARTER, INC.
CIVIL ENGINEERING CONSULTANTS & LAND SURVEYORS
CENTENNIAL SQUARE OFFICE PARK - 10272 BALTIMORE NATIONAL PIKE
ELLICOTT CITY, MARYLAND 21042
(410) 461 - 2855

DATE	DESCRIPTION
	REVISION BLOCK
9/10/08	3 RESUBDIVIDED PARCEL C INTO PARCELS C-1, C-2 AND C-3, REVISED TITLE BLOCK
9.25.07	2 Changed all storm drain pipe from RCCP to HDPE.
6/8/07	1 REVISED STORM DRAINS AND GRADING

OWNER/DEVELOPER

CSG PATAPSCO, LLC
5024 CAMPBELL BOULEVARD, SUITE G
WHITE MARSH, MARYLAND 21236
410-933-2091

APPROVED: DEPARTMENT OF PLANNING AND ZONING

Director - Department of Planning and Zoning — Date 6/15/07

Chief, Division of Land Development — Date 6/15/07

Chief, Development Engineering Division — J.P. — Date 5/30/07

SUBDIVISION			SECTION/AREA	PARCEL NO.
PATAPSCO VALLEY BUSINESS CENTER			N/A	C-1, C-2 AND C-3
PLAT NO. 18978 & 18980 F-07-146	BLOCK NO. 14, 15, 20, 21	ZONE M-2	TAX MAP 38	ELEC. DIST. FIRST	CENSUS TR. 601201
WATER CODE PLAT NO. 20000 & 20001 F-08-138 A04			SEWER CODE 2150500, 2150501, 2150300		

GEOMETRY PLAN

PATAPSCO VALLEY BUSINESS CENTER

PATAPSCO VALLEY OFFICE CAMPUS

PARCELS C-1, C-2 AND C-3

ZONED: M-2

TAX MAP No. 38 PARCEL No. 285 GRID No. 14,15,20,21

FIRST ELECTION DISTRICT HOWARD COUNTY, MARYLAND

SCALE: 1" = 40'

DATE: MARCH 15, 2007

SHEET 9 OF 21 SDP-07-028

I:\06\0306\dwg\SITE DEVELOPMENT PLAN\06003-6001 GEOMETRY PLAN.dwg, GEOMETRY PLAN-2, 3/16/2007 8:14:14 AM, 1:1

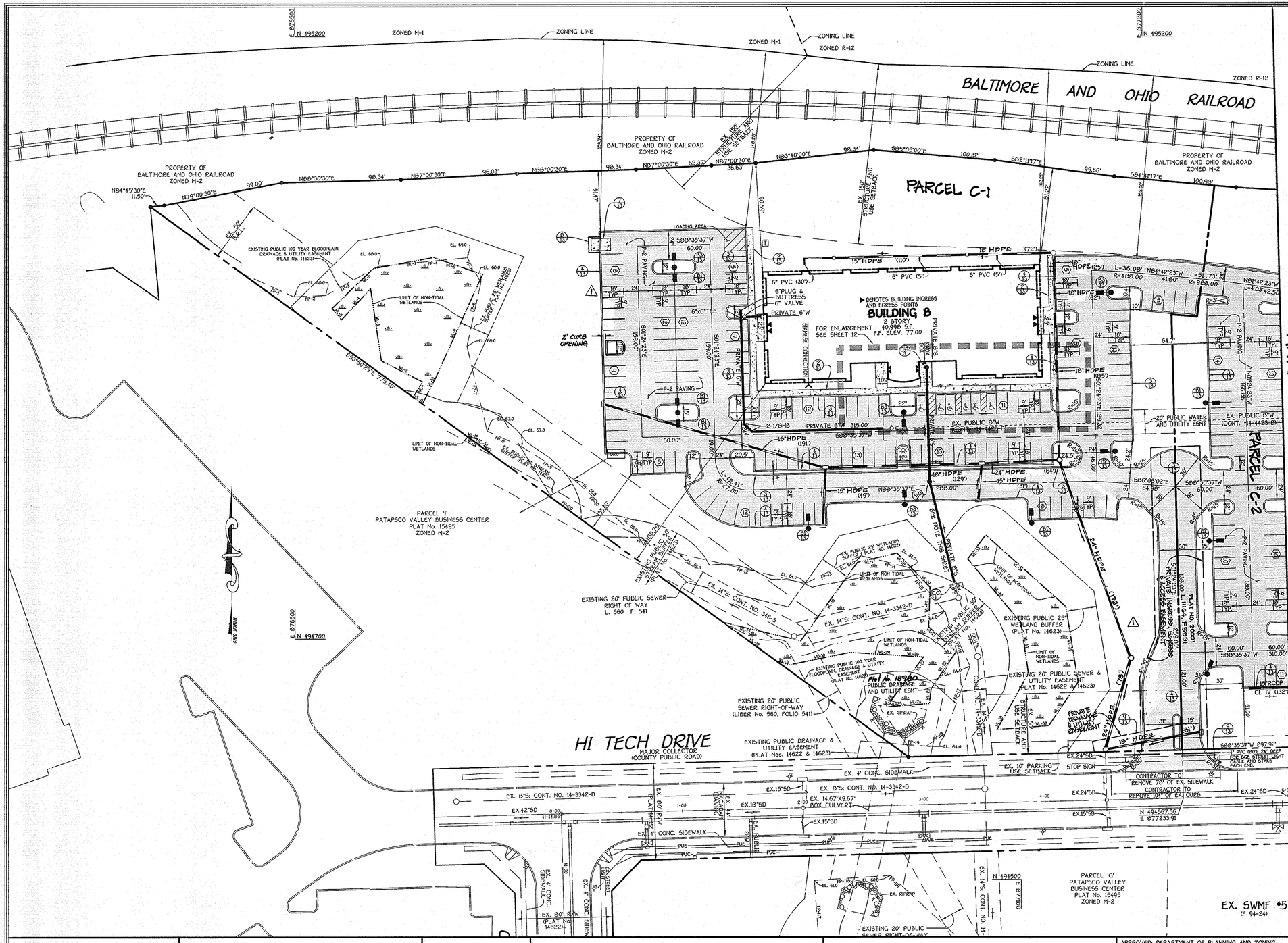

LEGEND	
SYMBOL	DESCRIPTION
	EXISTING STORM DRAIN LINE
	BOUNDARY/RIGHT OF WAY LINE
B.R.L.	BUILDING RESTRICTION LINE
	PROPOSED CURB TRANSITION
	PROPOSED STORM DRAIN PIPE
	PROPOSED WATER PIPE
	PROPOSED SEWER PIPE
	PROPOSED CONCRETE
	PROPOSED PAVING
	PROPOSED LIGHT

NOTES:

1. ALL CURB RADII TO BE 5' UNLESS OTHERWISE NOTED.
2. ALL DIMENSIONS ARE TO FACE OF CURB.

MATCHLINE SEE SHEET 9

I:\06003\dwg\SITE DEVELOPMENT PLAN\06003-6001 GEOMETRY PLAN.dwg, GEOMETRY PLAN-1, 3/16/2007 8:13:10 AM, 1:1

FISHER, COLLINS & CARTER, INC.
CIVIL ENGINEERING CONSULTANTS & LAND SURVEYORS
CENTENNIAL SQUARE OFFICE PARK - 10272 BALTIMORE NATIONAL PIKE
ELLICOTT CITY, MARYLAND 21042
(410) 461 - 2855

DATE	DESCRIPTION
	REVISION BLOCK
3/10/08	⚠3 RESUBDIVIDED PARCEL C INTO PARCELS C-1, C-2 AND C-3 REVISED TITLE BLOCK
9.25.07	⚠2 Changed all storm drain pipe from RCCP to HDPE.
6/8/07	⚠1 REVISED STORM DRAINS AND GRADING

OWNER/DEVELOPER
CSG PATAPSCO, LLC
5024 CAMPBELL BOULEVARD, SUITE G
WHITE MARSH, MARYLAND 21236
410-933-2091

APPROVED: DEPARTMENT OF PLANNING AND ZONING

Director - Department of Planning and Zoning — Date 6/5/07
Chief, Division of Land Development — Date 6/5/07
Chief, Development Engineering Division J.P. — Date 5/30/07

SUBDIVISION	SECTION/AREA	PARCEL NO.
PATAPSCO VALLEY BUSINESS CENTER	N/A	C-1, C-2 AND C-3

PLAT NO.	BLOCK NO.	ZONE	TAX MAP	ELEC. DIST.	CENSUS TR.
19979 & 19980 F-07-144	14, 15, 20, 21	M-2	38	FIRST	601201

WATER CODE PLAT No. 20000 & 20001 A04 F-08-138
SEWER CODE 2150500, 2150501, 2150300

GEOMETRY PLAN

PATAPSCO VALLEY BUSINESS CENTER
PATAPSCO VALLEY OFFICE CAMPUS
PARCELS C-1, C-2 AND C-3

ZONED: M-2
TAX MAP No. 38 PARCEL No. 285 GRID No. 14,15,20,21
FIRST ELECTION DISTRICT HOWARD COUNTY, MARYLAND
SCALE: 1" = 40'
DATE: MARCH 15, 2007
SHEET 8 OF 21 SDP-07-028

SOILS LEGEND

SOIL	NAME	CLASS
* WoB2	Woodstown sandy loam, 1 to 5 percent slopes, moderately eroded	C
ScD	Sandy and clayey land, moderately sloping	C
ScB	Sandy and slayey land, gently sloping	C
ScE	Sandy and clayey land, moderately steep	C
* IuB	Iuka loam, local alluvium, 1 to 5 percent slopes	C
ClC3	Chillum gravelly loam, 5 to 10 percent slopes, severely eroded	C
ClD2	Chillum gravelly loam, 10 to 15 percent slopes, moderately eroded	C
ClE2	Chillum gravelly loam, 15 to 30 percent slopes, moderately eroded	C
** BeB2	Beltsville silt loam, 1 to 5 percent slopes, moderately eroded	C
** BeC3	Beltsville silt loam, 5 to 10 percent slopes, severely eroded	C
** BeD2	Beltsville silt loam, 10 to 15 percent slopes, moderately eroded	C
* Cs	Comus silt loam	B
* Gp	Gravel pits and quarries	C
** Ha	Hatboro silt loam	D
SfB2	Sassafras gravelly sandy loam, 1 to 5 percent slopes, moderately eroded	B
SfD2	Sassafras gravelly sandy loam, 10 to 15 percent slopes, moderately eroded	B
SuB2	Sunnyside fine sandy loam, 1 to 5 percent slopes, moderately eroded	B

NOTES:

* Hydric soils and/or contains hydric inclusions

** May contain hydric inclusions

† Generally only within 100-year floodplain areas

LEGEND

SYMBOL	DESCRIPTION
	EXISTING STORM DRAIN LINE
	BOUNDARY/RIGHT OF WAY LINE
B.R.L.	BUILDING RESTRICTION LINE
	PROPOSED CURB TRANSITION
	PROPOSED STORM DRAIN PIPE
	PROPOSED WATER PIPE
	PROPOSED SEWER PIPE
	PROPOSED CONCRETE
	EXISTING PAVING
	PROPOSED LIGHT
	SOILS LINE
	DRAINAGE AREA LIMITS
	EXISTING TREELINE
	PROPOSED TREELINE

FISHER, COLLINS & CARTER, INC.
CIVIL ENGINEERING CONSULTANTS & LAND SURVEYORS
CENTENNIAL SQUARE OFFICE PARK - 10272 BALTIMORE NATIONAL PIKE
ELLICOTT CITY, MARYLAND 21042
(410) 461 - 2855

DATE	DESCRIPTION
3/10/08	3 RESUBDIVIDED PARCEL C INTO PARCELS C-1, C-2 AND C-3 REVISED TITLE BLOCK
9-25-07	2 Changed all storm drain pipe from RCCP to HDPE.
6/8/07	1 REVISED STORM DRAINS AND GRADING

REVISION BLOCK

OWNER/DEVELOPER
CSG PATAPSCO, LLC
5024 CAMPBELL BOULEVARD, SUITE G
WHITE MARSH, MARYLAND 21236
410-933-2091

APPROVED: DEPARTMENT OF PLANNING AND ZONING

Director - Department of Planning and Zoning — Date 6/5/07
Chief, Division of Land Development — Date 6/5/07
Chief, Development Engineering Division J.P. — Date 5/30/07

SUBDIVISION	SECTION/AREA	PARCEL NO.
PATAPSCO VALLEY BUSINESS CENTER	N/A	C-1, C-2 AND C-3

PLAT NO.	BLOCK NO.	ZONE	TAX MAP	ELEC. DIST.	CENSUS TR.
18979 & 18980 F-07-144	14, 15, 20, 21	M-2	38	FIRST	601201

WATER CODE	PLAT NO. 20000 & 20001 F-08-138	SEWER CODE
A04		2150500, 2150501, 2150300

DRAINAGE AREAS AND SOILS MAP

PATAPSCO VALLEY BUSINESS CENTER
PATAPSCO VALLEY OFFICE CAMPUS
PARCELS C-1, C-2 AND C-3
ZONED: M-2
TAX MAP No. 38 PARCEL No. 285 GRID No. 14,15,20,21
FIRST ELECTION DISTRICT HOWARD COUNTY, MARYLAND
SCALE: 1" = 40'
DATE: MARCH 15, 2007
SHEET 7 OF 21
SDP-07-028

I:\06003\dwg\SITE DEVELOPMENT PLAN\06003-6001 DRAINAGE AREA MAP.dwg, DRAINAGE AREA MAP-2, 3/16/2007 8:11:39 AM, 1:1

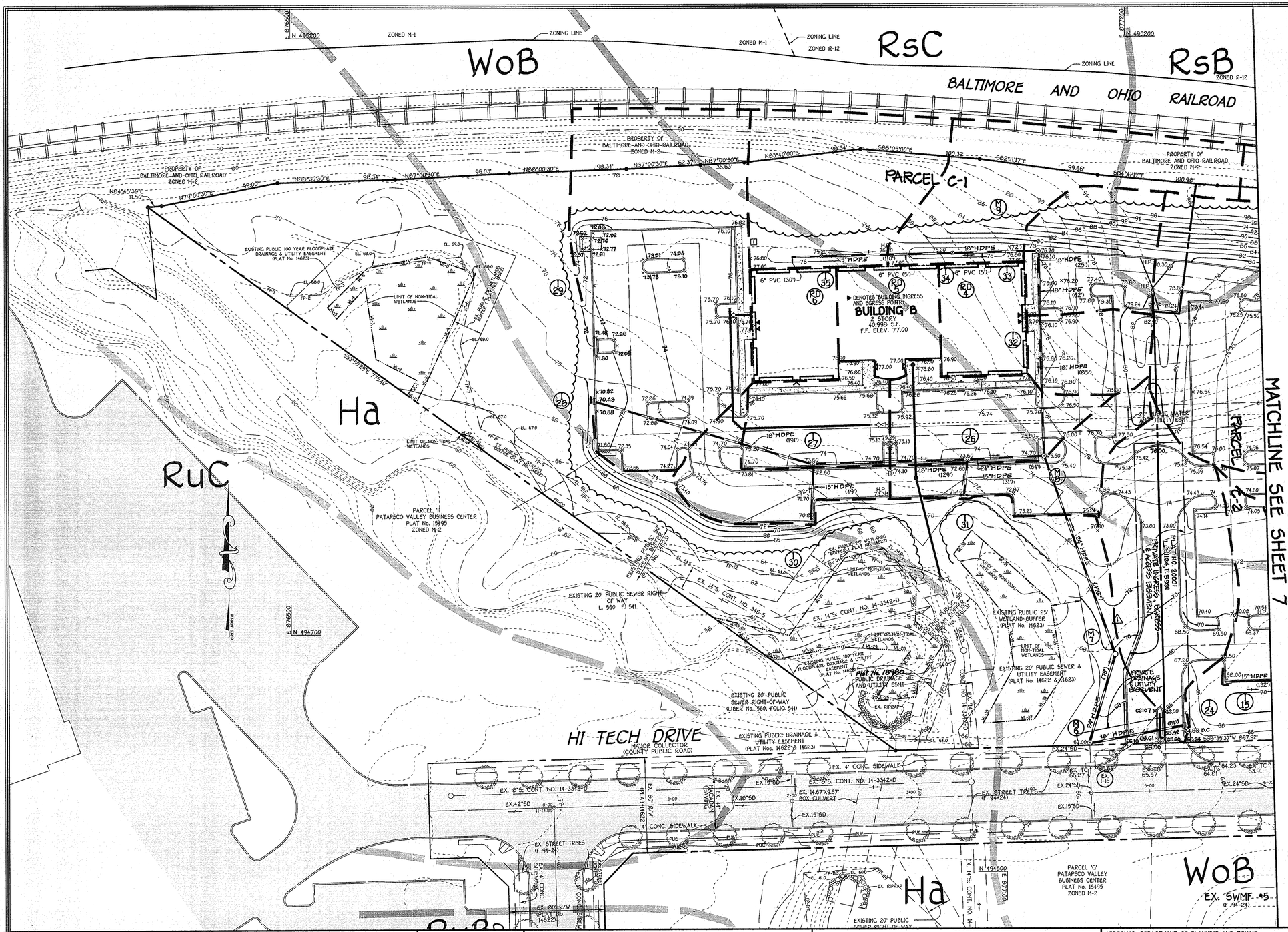

LEGEND

SYMBOL	DESCRIPTION
	EXISTING STORM DRAIN LINE
	BOUNDARY/RIGHT OF WAY LINE
B.R.L.	BUILDING RESTRICTION LINE
	PROPOSED CURB TRANSITION
	PROPOSED STORM DRAIN PIPE
	PROPOSED WATER PIPE
	PROPOSED SEWER PIPE
	PROPOSED CONCRETE
	EXISTING PAVING
	PROPOSED LIGHT
	SOILS LINE
	DRAINAGE AREA LIMITS
	EXISTING TREELINE
	PROPOSED TREELINE

SOILS LEGEND

SOIL	NAME
Co	Codorus and Hatboro silt loams, 0 to 3 percent slopes
Fa	Fallingston sandy loam, 0 to 2 percent slopes
Ha	Hatboro-Codorus silt loams, 0 to 3 percent slopes
RsB	Russett fine sandy loam, 2 to 5 percent slopes
RsD	Russett fine sandy loam, 10 to 15 percent slopes
RuC	Russett and Beltsville soils, 5 to 10 percent slopes
SrD	Sassafras and Croom soils, 10 to 15 percent slopes
WoB	Woodstown sandy loam, 1 to 5 percent slopes, moderately eroded

DRAINAGE AREA DATA

STRUCTURE NO.	AREA (AC.)	"C"	% IMP.
I-1	0.10	0.68	70
I-2	0.33	0.76	18
I-4	0.26	0.72	23
I-5	0.07	0.78	86
I-6	0.29	0.24	0
I-7	0.38	0.23	0
I-8	0.31	0.22	0
I-9	0.27	0.57	52
I-10	0.41	0.64	63
I-11	0.19	0.70	74
I-13	0.55	0.58	45
I-14	0.02	0.87	100
I-15	0.24	0.84	96
I-16	0.18	0.72	78
I-17	0.72	0.64	61
I-18	0.11	0.39	18
I-19	0.20	0.21	0
I-20	0.15	0.82	92
I-21	0.36	0.82	8
I-22	1.00	0.52	53
I-24	0.47	0.63	36
I-26	0.26	0.82	92
I-27	0.22	0.82	91
I-28	0.91	0.58	44
I-30	0.18	0.80	89
I-31	0.19	0.81	89
I-32	0.16	0.65	63
I-33	0.25	0.49	36
I-34	0.45	0.28	0
I-35	0.44	0.28	0
RD-1	0.30	0.87	100
RD-2	0.30	0.87	100
RD-3	0.24	0.87	100
RD-4	0.24	0.87	100
RD-5	0.24	0.87	100
RD-6	0.24	0.87	100

STATE OF MARYLAND — THOMAS A. CROWL — No. 21609 — PROFESSIONAL ENGINEER

DATE	DESCRIPTION
	REVISION BLOCK
9/10/06	⚠1 RESUBDIVIDED PARCEL C INTO PARCELS C-1, C-2 AND C-3, REVISED TITLE BLOCK
9.25.07	⚠2 Changed all storm drain pipe from RCCP to HDPE.
6/18/07	⚠3 REVISED STORM DRAINS AND GRADING

FISHER, COLLINS & CARTER, INC.
CIVIL ENGINEERING CONSULTANTS & LAND SURVEYORS
CENTENNIAL SQUARE OFFICE PARK - 10272 BALTIMORE NATIONAL PIKE
ELLICOTT CITY, MARYLAND 21042
(410) 461 - 2855

OWNER/DEVELOPER
CSG PATAPSCO, LLC
5024 CAMPBELL BOULEVARD, SUITE G
WHITE MARSH, MARYLAND 21236
410-933-2091

APPROVED: DEPARTMENT OF PLANNING AND ZONING

Director - Department of Planning & Zoning — Date 6/5/07
Chief, Division of Land Development — Date 6/5/07
Chief, Development Engineering Division J.P. — Date 5/30/07

SUBDIVISION	SECTION/AREA	PARCEL NO.
PATAPSCO VALLEY BUSINESS CENTER	N/A	C-1, C-2 AND C-3

PLAT NO.	BLOCK NO.	ZONE	TAX MAP	ELEC. DIST.	CENSUS TR.
18978, 18980 F. 07-184	14, 15, 20, 21	M-2	38	FIRST	601201

WATER CODE PLAT NO. 20000420001 F-08-138 A04 — SEWER CODE 2150500, 2150501, 2150300

DRAINAGE AREAS AND SOILS MAP

PATAPSCO VALLEY BUSINESS CENTER
PATAPSCO VALLEY OFFICE CAMPUS
PARCELS C-1, C-2 AND C-3
ZONED: M-2

TAX MAP No. 38 PARCEL No. 285 GRID No. 14,15,20,21
FIRST ELECTION DISTRICT HOWARD COUNTY, MARYLAND
SCALE: 1" = 40'
DATE: MARCH 15, 2007
SHEET 6 OF 21 SDP-07-028

I:\06000\dwg\SITE DEVELOPMENT PLAN\06003-6001 DRAINAGE AREA MAP.dwg, DRAINAGE AREA MAP-1, 3/16/2007 8:10:40 AM, 1:1

LEGEND

SYMBOL	DESCRIPTION
	EXISTING STORM DRAIN LINE
	BOUNDARY/RIGHT OF WAY LINE
B.R.L.	BUILDING RESTRICTION LINE
	PROPOSED CURB TRANSITION
	PROPOSED STORM DRAIN PIPE
	PROPOSED WATER PIPE
	PROPOSED SEWER PIPE
	PROPOSED CONCRETE
	EXISTING PAVING
	PROPOSED LIGHT
	LIMIT OF DISTURBANCE
SSF SSF	SUPER SILT FENCE
TP TP	TREE PROTECTION FENCE
	EXISTING TREELINE
	PROPOSED TREELINE

NOTE: FOR THE PRIVATE 8" SEWER MAIN INSTALLATION FROM THE EX. 8" PLUGS TO CO #4 & CO #7, SEE SHEET 21 OF 21 FOR "BEST MANAGEMENT PRACTICES FOR WORK IN NONTIDAL WETLANDS AND WETLAND BUFFERS" & FOR STREAM CROSSING NOTES & DETAILS.

NOTE THIS PLAN IS INTENDED ONLY FOR SEDIMENT CONTROL.

FISHER, COLLINS & CARTER, INC.
CIVIL ENGINEERING CONSULTANTS & LAND SURVEYORS
CENTENNIAL SQUARE OFFICE PARK - 10272 BALTIMORE NATIONAL PIKE
ELLICOTT CITY, MARYLAND 21042
(410) 461 - 2855

DATE	DESCRIPTION
3.10.08	△3 Resubdivided Parcel C into Parcels C-1, C-2 & C-3. Revised Title Block.
9.25.07	△2 Changed all storm drain pipe from RCCP to HDPE.
6/8/07	△1 REVISED STORM DRAINS AND GRADING

REVISION BLOCK

ENGINEER'S CERTIFICATE

"I certify that this plan for sediment and erosion control represents a practical and workable plan based on my personal knowledge of the site conditions and that it was prepared in accordance with the requirements of the Howard Soil Conservation District."

Signature of Engineer — Date 4/1/07

DEVELOPER'S CERTIFICATE

"I/We certify that all development and construction will be done according to this plan for sediment and erosion control, and that all responsible personnel involved in the construction project will have a Certificate of Attendance at a Department of the Environment Approved Training Program for the Control of Sediment and Erosion before beginning the project. I also authorize periodic on-site inspection by the Howard Soil Conservation District."

Signature of Developer — Date 3/29/07
C. PATRICK CREANEY

Reviewed for HOWARD SCD and meets Technical Requirements.
U.S.D.A.-Natural Resources Conservation Service — Date 5/23/07

This development plan is approved for soil erosion and sediment control by the HOWARD SOIL CONSERVATION DISTRICT.
Howard SCD — Date 5/23/07

OWNER/DEVELOPER

CSG PATAPSCO, LLC
5024 CAMPBELL BOULEVARD, SUITE G
WHITE MARSH, MARYLAND 21236
410-933-2091

APPROVED: DEPARTMENT OF PLANNING AND ZONING

Director - Department of Planning and Zoning — Date 6/5/07
Chief, Division of Land Development — Date 6/5/07
Chief, Development Engineering Division J.P. — Date 5/30/07

SUBDIVISION			SECTION/AREA		PARCEL NO.
PATAPSCO VALLEY BUSINESS CENTER			N/A		C-1, C-2 & C-3
PLAT NO. 18979 & 18980 F-07-144	BLOCK NO. 14, 15, 20, 21	ZONE M-2	TAX MAP 38	ELEC. DIST. FIRST	CENSUS TR. 601201
WATER CODE PLAT NO. 20000 & 20001 F-08-138 A04			SEWER CODE 2150500, 2150501, 2150300		

SEDIMENT CONTROL PLAN

PATAPSCO VALLEY BUSINESS CENTER
PATAPSCO VALLEY OFFICE CAMPUS
PARCELS C-1, C-2 AND C-3 △3
ZONED: M-2
TAX MAP No. 38 PARCEL No. 285 GRID No. 14,15,20,21
FIRST ELECTION DISTRICT HOWARD COUNTY, MARYLAND
SCALE: 1" = 40'
DATE: MARCH 15, 2007
SHEET 5 OF 21
SDP-07-028

I:\06003\dwg\SITE DEVELOPMENT PLAN\06003-6001 SEDIMENT CONTROL PLAN.dwg, SEDIMENT CONTROL PLAN SHEET-2, 3/16/2007 8:09:20 AM, 1:1

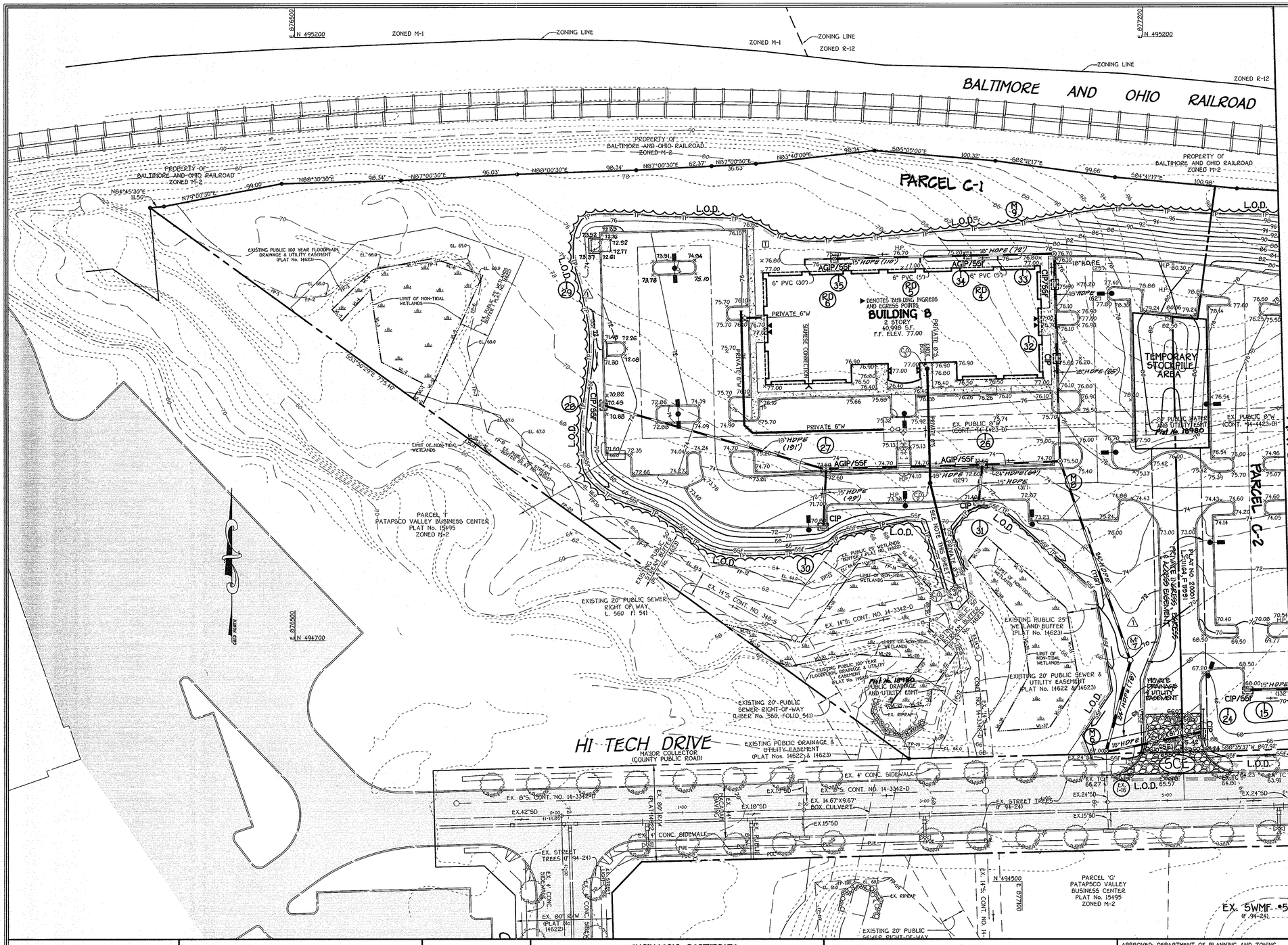

LEGEND

SYMBOL	DESCRIPTION
	EXISTING STORM DRAIN LINE
	BOUNDARY/RIGHT OF WAY LINE
B.R.L.	BUILDING RESTRICTION LINE
	PROPOSED CURB TRANSITION
	PROPOSED STORM DRAIN PIPE
	PROPOSED WATER PIPE
	PROPOSED SEWER PIPE
	PROPOSED CONCRETE
	EXISTING PAVING
	PROPOSED LIGHT
	LIMIT OF DISTURBANCE
SSF SSF	SUPER SILT FENCE
TP TP	TREE PROTECTION FENCE
	EXISTING TREELINE
	PROPOSED TREELINE

SEQUENCE OF CONSTRUCTION

1. OBTAIN GRADING PERMIT. (1 DAY)
2. NOTIFY "MISS UTILITY" AT LEAST 48 HOURS BEFORE BEGINNING ANY WORK AT 1-800-257-7777. NOTIFY THE HOWARD COUNTY OFFICE OF CONSTRUCTION/INSPECTION DIVISION AT 410-313-1870 AT LEAST 24 HOURS BEFORE STARTING ANY WORK.
3. INSTALL STABILIZED CONSTRUCTION ENTRANCES. (3 DAYS)
4. CLEAR FOR AND INSTALL/CONSTRUCT ALL PERIMETER TEMPORARY SEDIMENT CONTROLS. (3 WEEKS)
5. INSTALL SUPER SILT FENCE. (1 WEEK)
6. UPON PERMISSION FROM THE SEDIMENT CONTROL INSPECTOR BEGIN ROUGH GRADING THE SITE AND IMMEDIATELY STABILIZE ALL SLOPES UPON COMPLETION OF GRADING WITH TEMPORARY SEEDING. (6 WEEKS)
7. INSTALL STORM DRAINS, SEWER AND WATER. (6 WEEKS)
8. PROVIDE INLET PROTECTIONS ON ALL NEWLY INSTALLED STORM DRAIN INLETS. (1 WEEK)
10. BEGIN CONSTRUCTION OF PROPOSED BUILDINGS. (6 MONTHS)
11. INSTALL CURB AND PAVING. (3 WEEKS)
12. FINE GRADE SITE. (2 WEEKS)
13. INSTALL SIDEWALKS, LANDSCAPING AND LIGHTING. (2 WEEKS)
14. FOLLOWING SUCCESSFUL STABILIZATION (i.e. FULLY-ESTABLISHED VEGETATION OR PAVING) OF ALL DISTURBED AREAS, OBTAIN PERMISSION FROM THE HOWARD COUNTY SEDIMENT CONTROL INSPECTOR TO REMOVE ALL REMAINING SEDIMENT & EROSION CONTROL DEVICES AND THEN STABILIZE THOSE AREAS DISTURBED BY THIS PROCESS WITH PERMENANT SEEDING. (2 WEEKS)
15. NOTIFY HOWARD COUNTY OFFICE OF INSPECTIONS AND PERMITS FOR A FINAL INSPECTION OF THE COMPLETED SITE.

NOTE THIS PLAN IS INTENDED ONLY FOR SEDIMENT CONTROL.

FISHER, COLLINS & CARTER, INC.
CIVIL ENGINEERING CONSULTANTS & LAND SURVEYORS
CENTENNIAL SQUARE OFFICE PARK - 10272 BALTIMORE NATIONAL PIKE
ELLICOTT CITY, MARYLAND 21042
(410) 461 - 2855

DATE	DESCRIPTION
3/10/00	RESUBDIVIDED PARCEL C INTO PARCELS C-1,C-2 AND C-3, REVISED TITLE BLOCK
9.25.07	Changed all storm drain pipe from RCCP to HDPE.
6/8/07	REVISED STORM DRAINS AND GRADING

REVISION BLOCK

ENGINEER'S CERTIFICATE

"I certify that this plan for sediment and erosion control represents a practical and workable plan based on my personal knowledge of the site conditions and that it was prepared in accordance with the requirements of the Howard Soil Conservation District."

Signature of Engineer — 4/1/07 Date

DEVELOPER'S CERTIFICATE

"I/We certify that all development and construction will be done according to this plan for sediment and erosion control, and that all responsible personnel involved in the construction project will have a Certificate of Attendance at a Department of the Environment Approved Training Program for the Control of Sediment and Erosion before beginning the project. I also authorize periodic on-site inspection by the Howard Soil Conservation District."

Signature of Developer
C. PATRICK CREANEY — 3/26/07 Date

Reviewed for HOWARD SCD and meets Technical Requirements.

Jim Moglia — 5/23/07 Date
U.S.D.A.-Natural Resources Conservation Service

This development plan is approved for soil erosion and sediment control by the HOWARD SOIL CONSERVATION DISTRICT.

John R. Robertson — 5/23/07 Date
Howard SCD

OWNER/DEVELOPER

CSG PATAPSCO, LLC
5024 CAMPBELL BOULEVARD, SUITE G
WHITE MARSH, MARYLAND 21236
410-933-2091

APPROVED: DEPARTMENT OF PLANNING AND ZONING

Director - Department of Planning and Zoning — 6/15/07 Date

Chief, Division of Land Development — 6/5/07 Date

Chief, Development Engineering Division — J.P. — 5/30/07 Date

SUBDIVISION	SECTION/AREA	PARCEL NO.
PATAPSCO VALLEY BUSINESS CENTER	N/A	C-1, C-2 AND C-3

PLAT NO.	BLOCK NO.	ZONE	TAX MAP	ELEC. DIST.	CENSUS TR.
18979 & 18980 F-07-188	14, 15, 20, 21	M-2	38	FIRST	601201

WATER CODE PLAT NO. 20000 & 20001 F-08-138 A04
SEWER CODE 2150500, 2150501, 2150300

SEDIMENT CONTROL PLAN

PATAPSCO VALLEY BUSINESS CENTER
PATAPSCO VALLEY OFFICE CAMPUS
PARCELS C-1, C-2 AND C-3
ZONED: M-2

TAX MAP No. 38 PARCEL No. 285 GRID No. 14,15,20,21
FIRST ELECTION DISTRICT HOWARD COUNTY, MARYLAND
SCALE: 1" = 40'
DATE: MARCH 15, 2007
SHEET 4 OF 21 SDP-07-028

K:\06003\dwg\SITE DEVELOPMENT PLAN\06003-8001 SEDIMENT CONTROL PLAN.dwg, SEDIMENT CONTROL PLAN SHEET-1, 3/16/2007 8:07:57 AM, 1:1

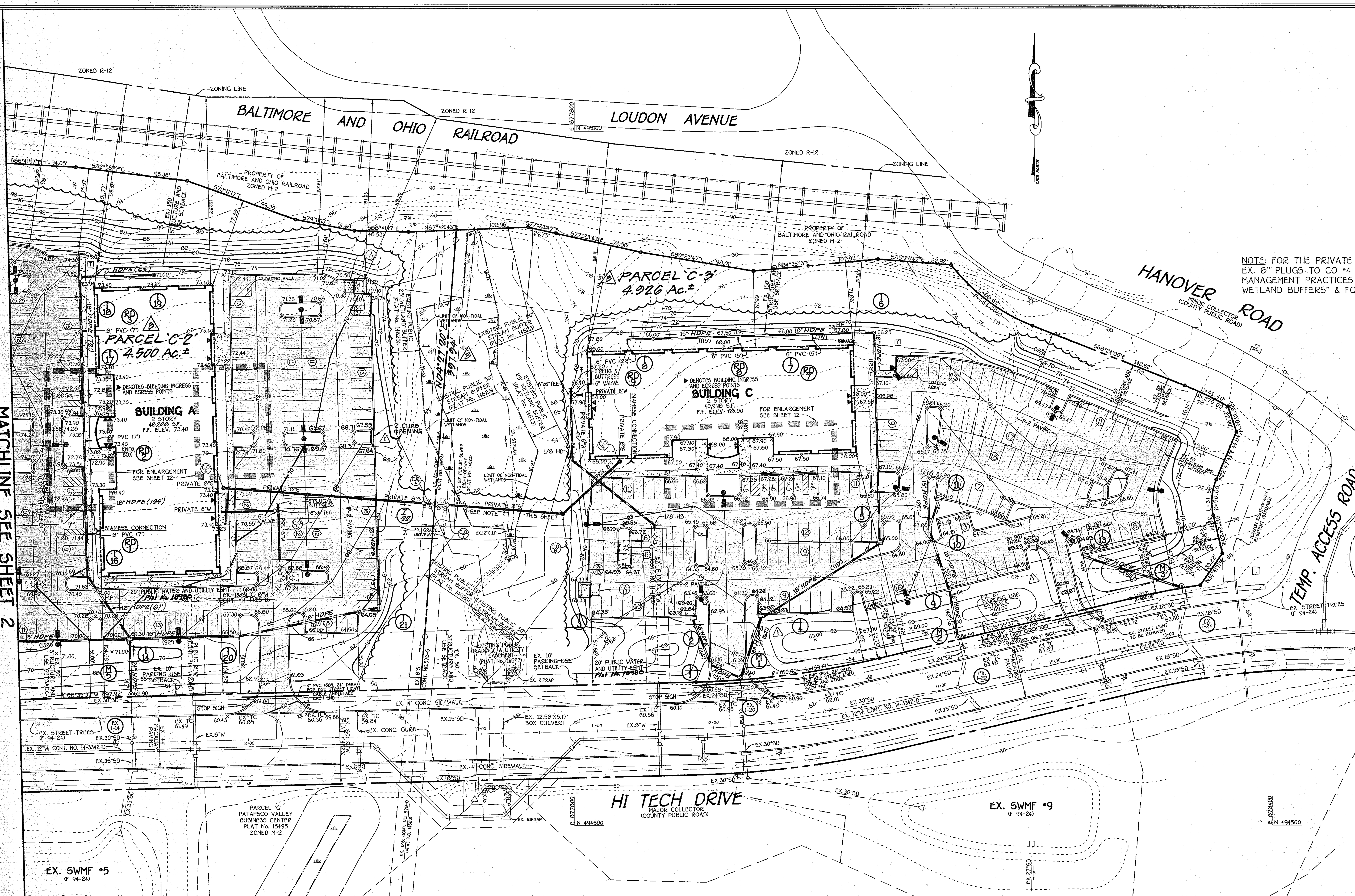

LEGEND

SYMBOL	DESCRIPTION
	EXISTING STORM DRAIN LINE
	BOUNDARY/RIGHT OF WAY LINE
B.R.L.	BUILDING RESTRICTION LINE
	PROPOSED CURB TRANSITION
	PROPOSED STORM DRAIN PIPE
	PROPOSED WATER PIPE
	PROPOSED SEWER PIPE
	PROPOSED CONCRETE
	PROPOSED PAVING
	PROPOSED LIGHT
	EXISTING TREELINE
	PROPOSED TREELINE

NOTE: FOR THE PRIVATE 8" SEWER MAIN INSTALLATION FROM THE EX. 8" PLUGS TO CO #4 & CO #7, SEE SHEET 21 OF 21 FOR "BEST MANAGEMENT PRACTICES FOR WORK IN NONTIDAL WETLANDS AND WETLAND BUFFERS" & FOR STREAM CROSSING NOTES & DETAILS.

FISHER, COLLINS & CARTER, INC.
CIVIL ENGINEERING CONSULTANTS & LAND SURVEYORS
CENTENNIAL SQUARE OFFICE PARK - 10272 BALTIMORE NATIONAL PIKE
ELLICOTT CITY, MARYLAND 21042
(410) 461 - 2855

DATE	DESCRIPTION
3.10.08	△3 Resubdivided Parcel C into Parcels C-1, C-2 & C-3. Revised Title Block.
9.25.07	△2 Changed all storm drain pipe from RCCP to HDPE.
6/8/07	△1 REVISED STORM DRAINS AND GRADING

REVISION BLOCK

OWNER/DEVELOPER
CSG PATAPSCO, LLC
5024 CAMPBELL BOULEVARD, SUITE G
WHITE MARSH, MARYLAND 21236
410-933-2091

APPROVED: DEPARTMENT OF PLANNING AND ZONING

Director - Department of Planning and Zoning — Date 6/5/07
Chief, Division of Land Development — Date 6/5/07
Chief, Development Engineering Division — J.P. — Date 5/30/07

SUBDIVISION	SECTION/AREA	PARCEL NO.
PATAPSCO VALLEY BUSINESS CENTER	N/A	C-1, C-2 & C-3

PLAT NO.	BLOCK NO.	ZONE	TAX MAP	ELEC. DIST.	CENSUS TR.
18979 & 18 F-07-144	14, 15, 20, 21	M-2	38	FIRST	601201

WATER CODE	SEWER CODE
A04 PLAT NO. 20000 & 20001 F-08-138	2150500, 2150501, 2150300

SITE DEVELOPMENT PLAN

PATAPSCO VALLEY BUSINESS CENTER
PATAPSCO VALLEY OFFICE CAMPUS
PARCELS C-1, C-2 AND C-3 △3
ZONED: M-2

TAX MAP No. 38 PARCEL No. 285 GRID No. 14,15,20,21
FIRST ELECTION DISTRICT HOWARD COUNTY, MARYLAND
SCALE: 1" = 40'
DATE: MARCH 15, 2007
SHEET 3 OF 21 SDP-07-028

I:\06003\dwg\SITE DEVELOPMENT PLAN\06003-6001 SITE PLAN SHEET-2, 3/16/2007 7:50:17 AM, 1:1

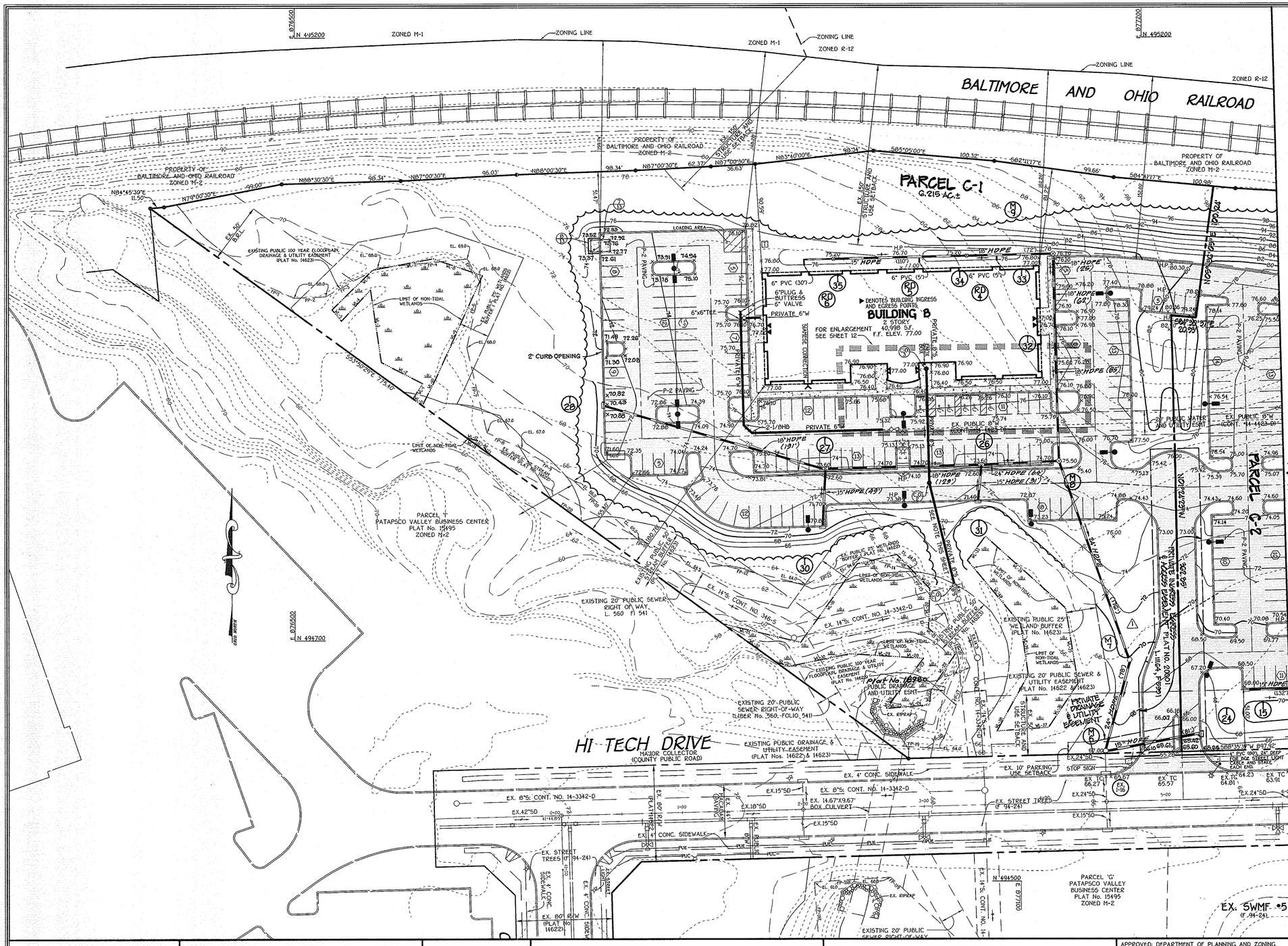

LEGEND

SYMBOL	DESCRIPTION
	EXISTING STORM DRAIN LINE
	BOUNDARY/RIGHT OF WAY LINE
B.R.L.	BUILDING RESTRICTION LINE
	PROPOSED CURB TRANSITION
	PROPOSED STORM DRAIN PIPE
	PROPOSED WATER PIPE
	PROPOSED SEWER PIPE
	PROPOSED CONCRETE
	PROPOSED PAVING
	PROPOSED LIGHT
	EXISTING TREELINE
	PROPOSED TREELINE

Existing Wetland Limits Metes And Bounds Plat No. 14623

Line	Bearing & Distance	Line	Bearing & Distance	Line	Bearing & Distance
WL-1	N31°46'23"E 14.95	WL-19	S43°51'31"E 18.04	WL-37	S85°54'51"W 42.78
WL-2	N62°36'37"W 38.29	WL-20	S01°56'48"W 32.85	WL-38	N29°03'34"E 53.24
WL-3	N08°28'18"W 60.73	WL-21	S47°29'11"E 30.82	WL-39	N08°18'24"W 42.45
WL-4	S42°46'36"W 35.19	WL-22	S34°01'15"W 37.08	WL-40	N39°40'33"W 68.93
WL-5	N39°50'15"W 12.24	WL-23	S06°05'44"W 12.25	WL-41	N76°20'50"E 41.54
WL-6	N45°32'16"E 47.13	WL-24	S85°24'26"W 15.96	WL-42	N03°11'14"E 56.05
WL-7	N79°24'15"E 50.85	WL-25	S85°24'25"W 20.02	WL-43	N70°39'37"E 10.38
WL-8	S70°55'01"E 42.99	WL-26	N36°47'06"E 34.85	WL-44	S12°58'58"E 75.35
WL-9	S24°16'00"W 94.15	WL-27	N36°47'07"E 16.93	WL-45	S01°22'22"W 46.29
WL-10	S26°48'22"W 24.64	WL-28	N86°19'08"W 9.67	WL-46	S26°01'56"E 80.37
WL-11	N53°50'29"W 9.44	WL-29	N86°19'11"W 51.22	WL-47	S16°07'15"W 70.15
WL-12	S74°34'17"E 12.11	WL-30	S78°20'20"W 51.25	WL-48	S00°04'25"E 22.00
WL-13	S31°30'24"E 11.28	WL-31	N72°33'42"W 11.75	WL-49	S71°51'27"W 6.72
WL-14	N53°50'29"W 21.75	WL-32	N53°50'29"W 54.04	WL-50	N06°51'37"W 24.24
WL-15	S76°26'25"E 66.03	WL-33	N36°34'32"E 24.94	WL-51	N84°13'47"W 28.60
WL-16	N35°45'10"E 90.31	WL-34	S48°00'10"E 89.07	WL-52	N25°00'00"W 93.83
WL-17	N76°41'29"E 33.59	WL-35	S09°16'28"E 63.54	WL-53	N04°12'44"W 102.49
WL-18	S43°51'32"E 21.34	WL-36	S33°52'09"W 43.68		

Existing 100 Year Floodplain, Drainage & Utility Easement Plat No. 14623

Line	Bearing & Distance
FP-1	S65°26'20"E 47.49
FP-2	N87°25'53"E 26.19
FP-3	N60°43'27"E 49.26
FP-4	N84°26'13"E 74.34
FP-5	S28°24'40"E 23.38
FP-6	S12°14'13"W 54.29
FP-7	S13°12'19"E 72.52
FP-8	S65°41'57"E 31.53
FP-9	S57°38'18"E 50.68
FP-10	S47°32'53"E 73.50
FP-11	S69°48'38"E 35.25
FP-12	S76°43'30"E 107.29
FP-13	N63°22'23"E 51.12
FP-14	S75°48'06"E 40.90
FP-15	S38°53'18"E 46.59
FP-16	S24°53'54"E 50.21
FP-17	S20°06'14"W 59.64
FP-18	S56°15'36"W 18.97
FP-19	N85°33'26"W 30.08
FP-20	N53°50'29"W 662.94

STREET LIGHT CHART

STREET NAME	STATION	OFFSET	FIXTURE/POLE TYPE	LEGEND
HI TECH DRIVE	C.L. STA. 5+45	29' LT	250-WATT "SAG" M.P.S. VAPOR FIXTURE, 12' ARM MOUNTED ON A 30-FOOT BLACK FIBERGLASS POLE.	
HI TECH DRIVE	C.L. STA. 8+52	29' LT	250-WATT "SAG" M.P.S. VAPOR FIXTURE, 12' ARM MOUNTED ON A 30-FOOT BLACK FIBERGLASS POLE.	
HI TECH DRIVE	C.L. STA. 12+49	29' LT	250-WATT "SAG" M.P.S. VAPOR FIXTURE, 12' ARM MOUNTED ON A 30-FOOT BLACK FIBERGLASS POLE.	
HI TECH DRIVE	C.L. STA. 15+48	29' LT	250-WATT "SAG" M.P.S. VAPOR FIXTURE, 12' ARM MOUNTED ON A 30-FOOT BLACK FIBERGLASS POLE.	

NOTE: FOR THE PRIVATE 8" SEWER MAIN INSTALLATION FROM THE EX. 8" PLUG TO CO #1, SEE SHEET 21 OF 21 FOR "BEST MANAGEMENT PRACTICES FOR WORK IN NONTIDAL WETLANDS AND WETLAND BUFFERS"

STATE OF MARYLAND — CHRISTOPHER J. CARTER — 21704 — REGISTERED PROFESSIONAL ENGINEER

FISHER, COLLINS & CARTER, INC.
CIVIL ENGINEERING CONSULTANTS & LAND SURVEYORS
CENTENNIAL SQUARE OFFICE PARK - 10272 BALTIMORE NATIONAL PIKE
ELLICOTT CITY, MARYLAND 21042
(410) 461 - 2855

DATE	DESCRIPTION
	REVISION BLOCK
3/10/08	RESUBDIVIDED PARCEL C INTO PARCELS C-1, C-2 AND C-3 REVISED TITLE BLOCK.
9-25-07	Changed all storm drain pipes from RCP to HDPE.
6/18/07	REVISED STORM DRAINS AND GRADING

OWNER/DEVELOPER
CSG PATAPSCO, LLC
5024 CAMPBELL BOULEVARD, SUITE G
WHITE MARSH, MARYLAND 21236
410-933-2091

APPROVED: DEPARTMENT OF PLANNING AND ZONING

Director - Department of Planning and Zoning — Date 6/27/07

Chief, Division of Land Development — Date 6/15/07

Chief, Development Engineering Division J.P. — Date 5/30/07

SUBDIVISION	SECTION/AREA	PARCEL NO.
PATAPSCO VALLEY BUSINESS CENTER	N/A	C-1, C-2 AND C-3

PLAT NO.	BLOCK NO.	ZONE	TAX MAP	ELEC. DIST.	CENSUS TR.
19174 & 19980 F-07-144	14, 15, 20, 21	M-2	38	FIRST	601201

WATER CODE PLAT NO.20000 & 20001 P 08-138 A04 — SEWER CODE 2150500, 2150501, 2150300

SITE DEVELOPMENT PLAN

PATAPSCO VALLEY BUSINESS CENTER
PATAPSCO VALLEY OFFICE CAMPUS
PARCELS C-1, C-2 AND C-3
ZONED: M-2

TAX MAP No. 38 PARCEL No. 285 GRID No. 14,15,20,21
FIRST ELECTION DISTRICT HOWARD COUNTY, MARYLAND
SCALE: 1" = 40'
DATE: MARCH 15, 2007
SHEET 2 OF 21 SDP-07-028

I:\06\03\dwg\SITE DEVELOPMENT PLAN\06003-6001 SITE PLAN.dwg, SITE PLAN SHEET-1, 3/16/2007 7:48:12 AM, 1:1

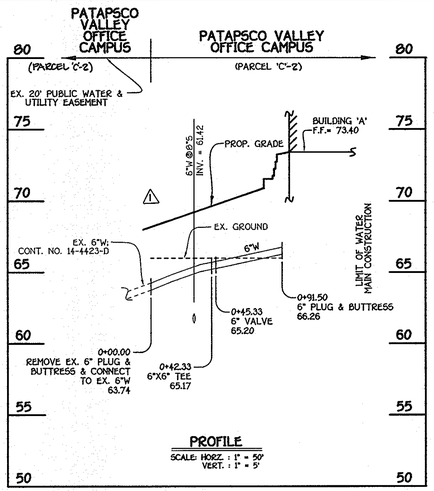

6" WATER MAIN; BUILDING 'A'

WATER MAIN TABULATION CHART			
W.M. STA.	APPURTENANCE	NORTHING	EASTING
6" WATER MAIN; BUILDING 'A'			
0+00.00	EX. 6" PLUG & BUTTRESS	555479.20	1389964.82
0+42.33	6"X6" TEE	555521.52	1389963.79
0+45.33	6" VALVE	555521.52	1389960.79
0+91.50	6" PLUG & BUTTRESS	555520.32	1389914.64

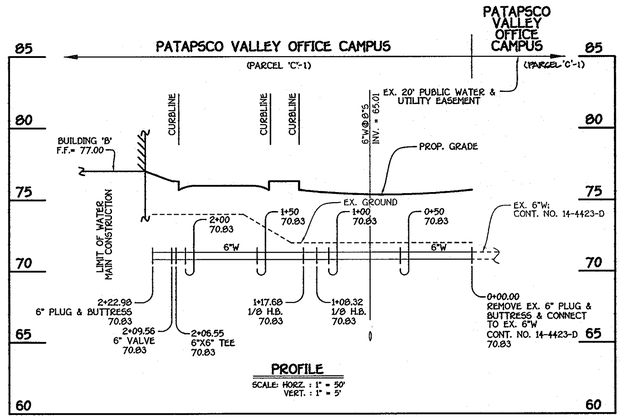

6" WATER MAIN; BUILDING 'B'

WATER MAIN TABULATION CHART			
W.M. STA.	APPURTENANCE	NORTHING	EASTING
6" WATER MAIN; BUILDING 'B'			
0+00.00	EX. 6" PLUG & BUTTRESS	555623.91	1389404.41
1+08.32	1/8 H.B.	555621.25	1389296.12
1+17.68	1/8 H.B.	555627.69	1389289.32
2+06.55	6"X6" TEE	555716.53	1389286.85
2+09.56	6" VALVE	555716.61	1389289.84
2+22.98	6" PLUG & BUTTRESS	555716.97	1389303.26

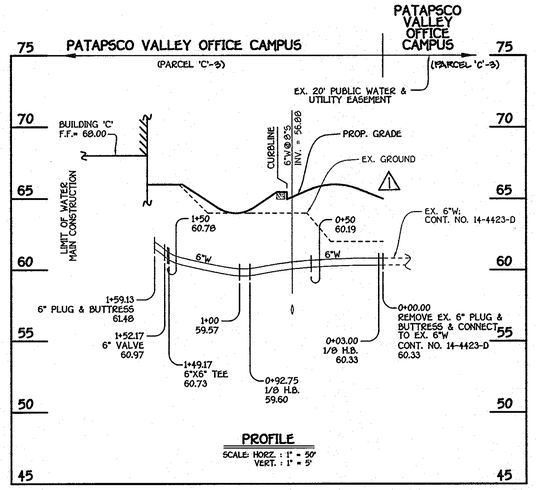

6" WATER MAIN; BUILDING 'C'

WATER MAIN TABULATION CHART			
W.M. STA.	APPURTENANCE	NORTHING	EASTING
6" WATER MAIN; BUILDING 'C'			
0+00.00	EX. 6" PLUG & BUTTRESS	555505.82	1390287.02
0+03.00	1/8 H.B.	555508.82	1390286.95
0+92.75	1/8 H.B.	555564.63	1390216.66
1+49.17	6"X6" TEE	555621.03	1390215.33
1+52.17	6" VALVE	555621.11	1390218.33
1+59.13	6" PLUG & BUTTRESS	555621.27	1390225.28

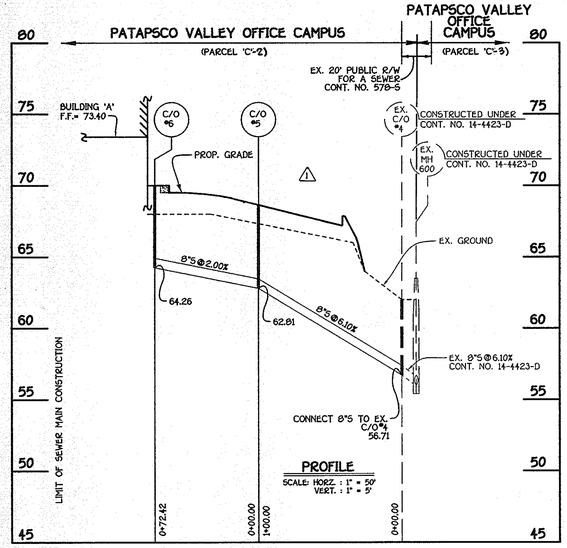

8" SEWER MAIN; BUILDING 'A'

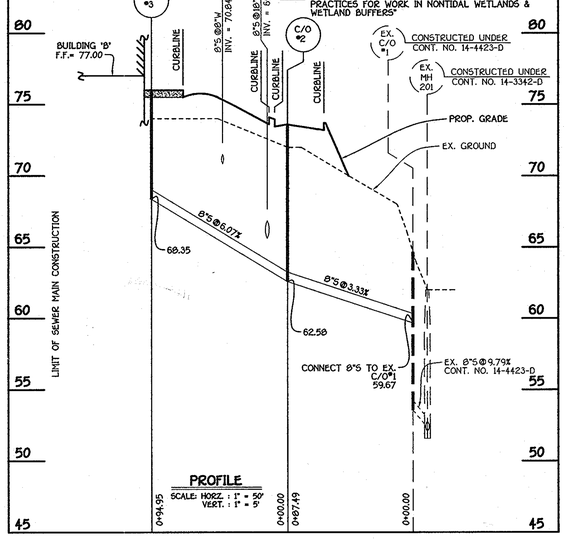

8" SEWER MAIN; BUILDING 'B'

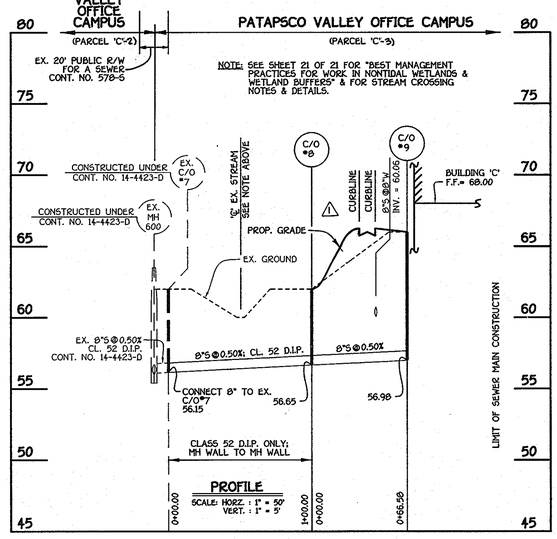

8" SEWER MAIN; BUILDING 'C'

M.C.E. CHART	
BUILDING	M.C.E.
'A'	71.51
'B'	74.27
'C'	66.65

MANHOLE TABULATION CHART			
NO.	NORTHING	EASTING	RIM ELEVATION
C.O.#2	555579.49	1389442.71	73.60
C.O.#3	555674.40	1389440.37	76.00
C.O.#5	555535.60	1389988.97	69.75
C.O.#6	555541.19	1389916.77	70.00
C.O.#8	555518.41	1390210.06	62.00
C.O.#9	555563.76	1390257.18	66.00

NOTE: SET ALL TOPS OF CLEAN-OUTS FLUSH W/ PROPOSED FINISHED GRADE.

8"S INVERT@ 5' FROM BUILDING		
STATION	BUILDING	ELEVATION
	C.O.#2 TO C.O.#3	
0+94.95	'A'	65.85
	C.O.#5 TO C.O.#6	
0+74.42	'B'	64.36
	C.O.#8 TO C.O.#9	
0+66.58	'C'	57.08

FISHER, COLLINS & CARTER, INC.
CIVIL ENGINEERING CONSULTANTS & LAND SURVEYORS
CENTENNIAL SQUARE OFFICE PARK - 10272 BALTIMORE NATIONAL PIKE
ELLICOTT CITY, MARYLAND 21042
(410) 461 - 2855

DATE	DESCRIPTION
	REVISION BLOCK
6/12/07	1 REVISED WATER & SEWER PROFILES
3/10/06	2 RESUBDIVIDED PARCEL C INTO PARCELS C-1, C-2 AND C-3 REVISED TITLE BLOCK

STATE OF MARYLAND — JAMES T. FISHER — No. 13248 — PROFESSIONAL ENGINEER

OWNER/DEVELOPER
CSG PATAPSCO, LLC
5024 CAMPBELL BOULEVARD, SUITE G
WHITE MARSH, MARYLAND 21236
410-933-2091

APPROVED: DEPARTMENT OF PLANNING AND ZONING

Director - Department of Planning and Zoning — Date 6/5/07

Chief, Division of Land Development — Date 6/6/07

Chief, Development Engineering Division — J.F. — Date 5/30/07

SUBDIVISION	SECTION/AREA	PARCEL NO.
PATAPSCO VALLEY BUSINESS CENTER	N/A	C-1, C-2 AND C-3

PLAT NO.	BLOCK NO.	ZONE	TAX MAP	ELEC. DIST.	CENSUS TR.
18778 & 18980 F-07-164	14, 15, 20, 21	M-2	38	FIRST	601201

WATER CODE PLAT NO. 20000 & 20001 F-08-138 — A04

SEWER CODE 2150500, 2150501, 2150300

PRIVATE WATER & SEWER MAIN PROFILES

PATAPSCO VALLEY BUSINESS CENTER
PATAPSCO VALLEY OFFICE CAMPUS
PARCELS C-1, C-2 AND C-3
ZONED: M-2

TAX MAP No. 38 PARCEL No. 285 GRID No. 14,15,20,21
FIRST ELECTION DISTRICT HOWARD COUNTY, MARYLAND
SCALE: AS SHOWN
DATE: MARCH 15, 2007
SHEET 18 OF 21

SDP-07-028

I:\06003\dwg\SITE DEVELOPMENT PLAN\06003-8001 Water And Sewer Base Plan Parcel 'C'.dwg, PRIVATE PROFILE SHEET, 3/16/2007 8:27:41 AM, 1:1

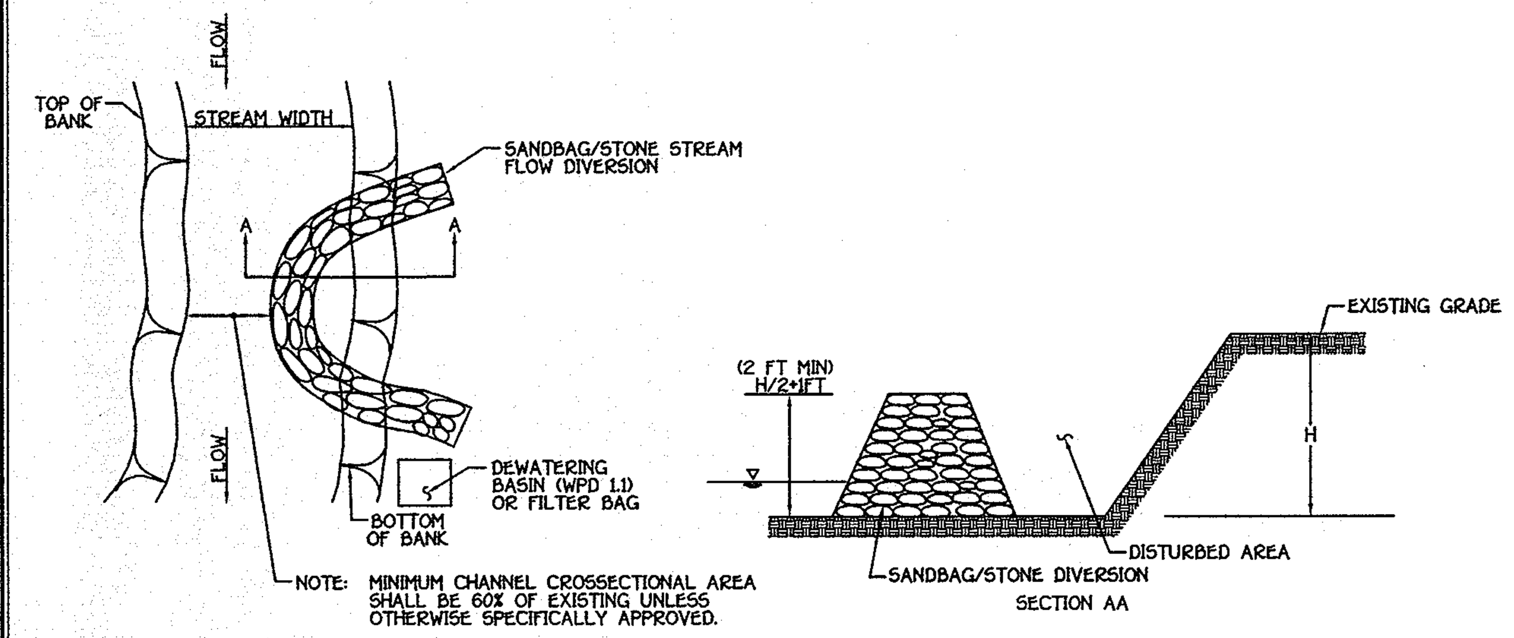

SANDBAG/STONE STREAM FLOW DIVERSION DETAIL

NO SCALE

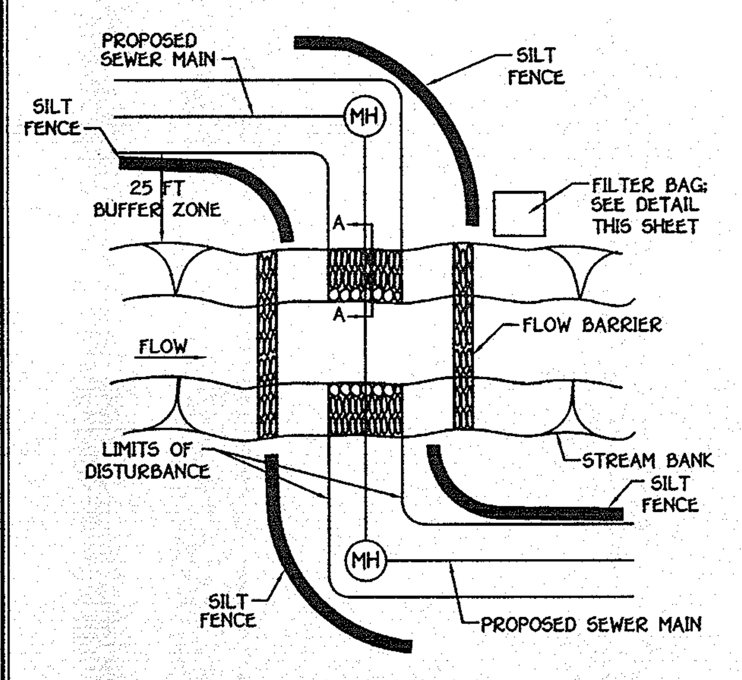

PLAN VIEW

NO SCALE

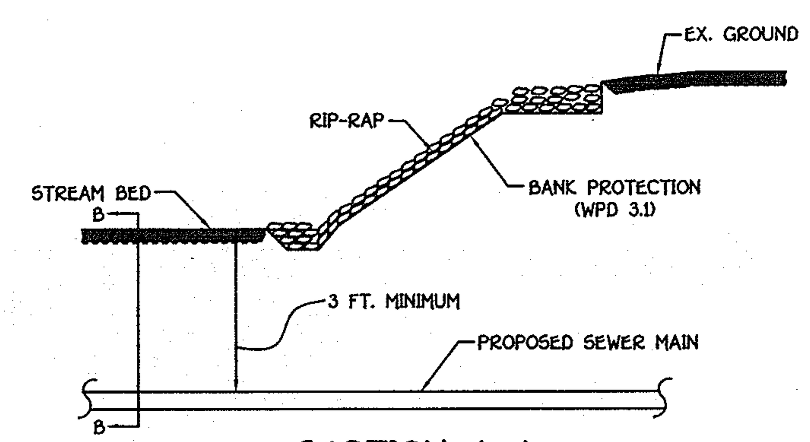

SECTION A-A

NO SCALE

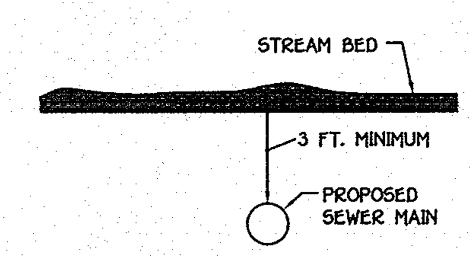

SECTION B-B

NO SCALE

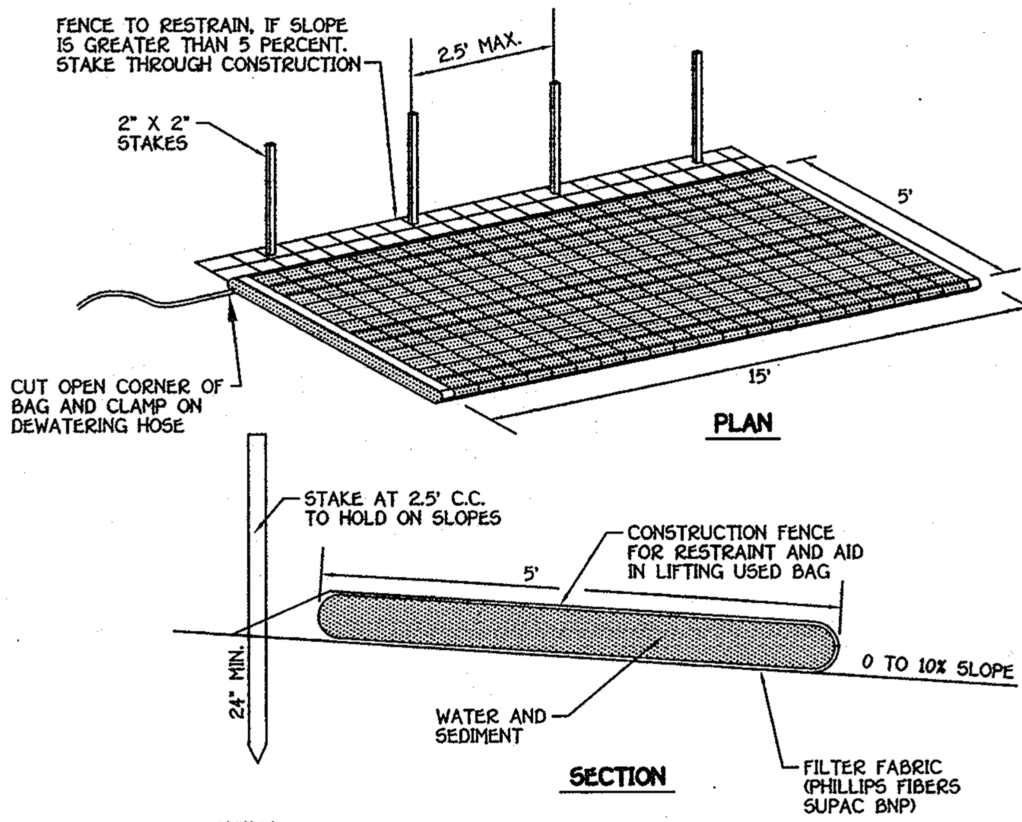

NOTES
1. FILTER BAG SHALL BE PLACED ON A SLOPING OR LEVEL, WELL GRADED VEGETATED SITE SUCH THAT WATER WILL FLOW AWAY FROM DEVICE AND ANY WORK AREAS.
2. WITDH AND LENGTH SHALL BE AS SHOWN.
3. THE FILTER BAG MUST BE STAKED IN PLACE AND SECURED TO THE PUMP DISHARGE LINE.
4. FILTER BAG SHALL NOT BE USED FOR DISCHARGE FLOWS GREATER THAN 300 GPM.
5. DEVICE SHALL BE REMOVED AND DISPOSED OF AFTER BAG IS FILLED WITH SEDIMENT. SEDIMENT FROM BAG SHALL BE SPREAD IN AN UPLAND AREA.

AVAILABLE FROM:
INDIAN VALLEY INDUSTRIES, INC.
P.O. BOX 810
JOHNSON CITY, NEW YORK 13790
(800) 659-5111

OR

A.C.F. ENVIRONMENTAL
1801-A WILLIS ROAD
RICHMOND, VIRGINIA 23237
TOLL FREE 1-800-448-3636

OR

PRICE AND COMPANY, INC.
425 36TH STREET
WYOMING, MI. 49548
(616) 530-8230

FILTER BAG DETAIL

NO SCALE

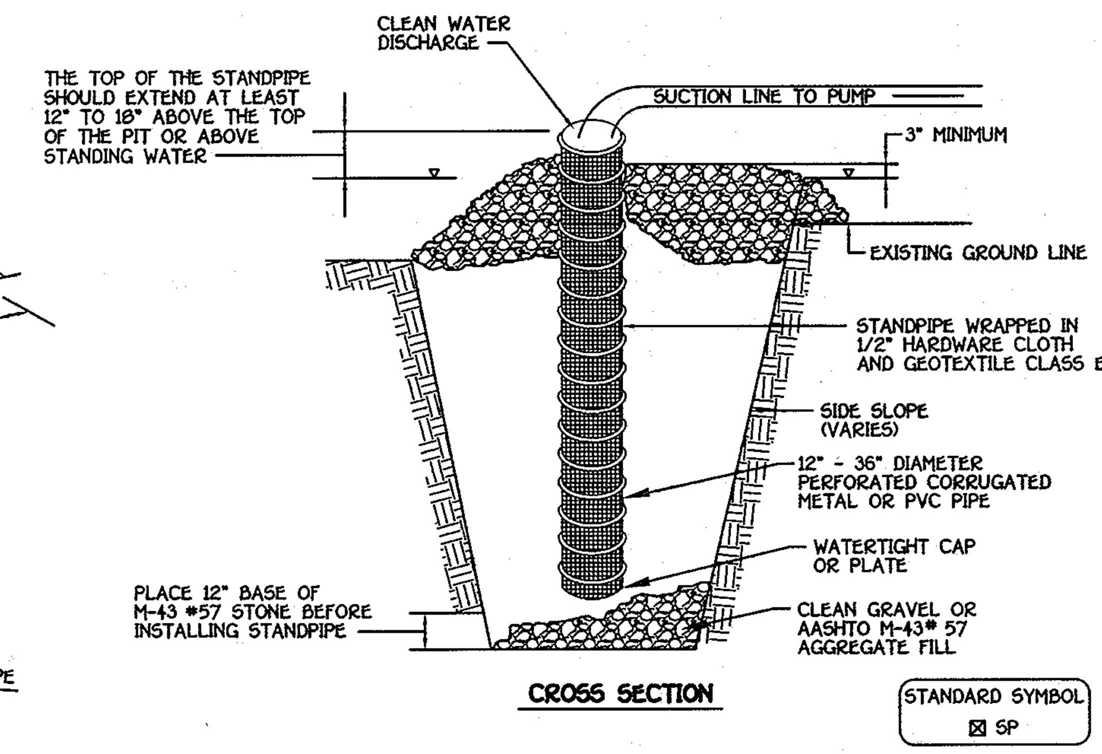

1. PIT DIMENSIONS ARE VARIABLE, WITH THE MINIMUM DIAMETER BEING 2 TIMES THE STANDPIPE DIAMETER.

2. THE STANDPIPE SHALL BE CONSTRUCTED BY PERFORATING A 12" TO 24" DIAMETER CORRUGATED OR PVC PIPE; THEN WRAPPING WITH 1/2" HARDWARE CLOTH AND GEOTEXTILE CLASS E. THE PERFORATIONS SHALL BE 1/2" X 6" SLITS OR 1" DIAMETER HOLES.

3. A BASE OR FILTER MATERIAL CONSISTING OF CLEAN GRAVEL OR 57 STONE SHALL BE PLACED IN THE PIT TO A DEPTH OF 12". AFTER INSTALLING THE STANDPIPE, THE PIT SURROUNDING THE STANDPIPE SHALL THEN BE BACKFILLED WITH THE SAME FILTER MATERIAL. *

4. THE STANDPIPE SHALL EXTEND 12" TO 18" ABOVE THE LIP OF THE PIT OR THE RISER CREST ELEVATION (BASIN DEWATERING ONLY) AND THE FILTER MATERIAL SHALL EXTEND 3" MINIMUM ABOVE THE ANTICIPATED STANDING WATER ELEVATION.

DETAIL 20B - SUMP PIT

NO SCALE

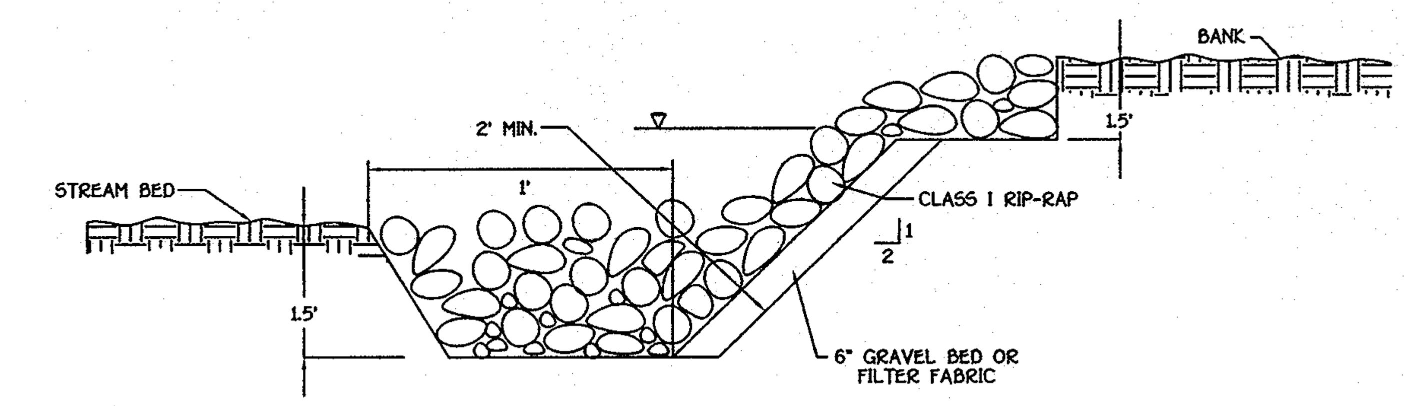

DESCRIPTION

I. THIS WORK SHALL CONSIST OF PROTECTING SLOPES & CHANNELS FROM EROSION WITH COVERINGS OF STONE IN ACCORDANCE WITH THE PLANS & SPECIFICATIONS SHOWN ON THIS DRAWING.

II. MATERIAL SPECIFICATIONS

1. BEDDING:
A. BANK RUN GRAVEL SHALL MEET THE FOLLOWING REQUIREMENTS:

% LESS THAN	U.S. STANDARD SIEVE SIZE
100	2 1/2 IN.
85-100	1 IN.
60-100	1/2 IN.
35-70	NO. 10
20-50	NO. 40
3-20	NO. 200

B. GEOTEXTILE FILTER FABRIC SHALL MEET THE FOLLOWING REQUIREMENTS:

TENSILE STRENGTH	200 LBS.
BURST STRENGTH	350 LBS.
PUNCTURE STRENGTH	70 LBS.
PERMEABILITY	.02 CM/SEC.
ELONGATION AT FAILURE	30%
MINIMUM LAP LENGTH	24 IN.

III. CONSTRUCTION REQUIREMENTS

1. THE CONTRACTOR SHALL INSTALL SEDIMENT & EROSION CONTROL DEVICES AS A FIRST ORDER OF BUSINESS.
2. PROVISIONS MUST BE MADE TO ANCHOR THE RIP-RAP AT THE STREAM BED SO AS TO PROVIDE PROTECTION AGAINST UNDERMINING. IF THIS CANNOT BE ACCOMPLISHED BY EXTENDING THE TOE TRENCH AS INDICATED IN CROSS SECTION, AN ALTERNATIVE METHOD OF PROTECTION MUST RECEIVE PRIOR WRITTEN APPROVAL OF THE ADMINISTRATION.
3. EXCAVATION FOR RIP-RAP SHALL BE MADE IN REASONABLY CLOSE CONFORMITY WITH THE EXISTING STREAM SLOPE & BED.
4. A FILTER BEDDING IS REQUIRED UNDER ALL RIP-RAP. BEDDING MATERIAL SHALL CONSIST OF EITHER A BANK RUN GRAVEL OR A GEOTEXTILE FILTER FABRIC MEETING THE SPECIFICATIONS OF II. 1. B.
5. THE PLACEMENT OF RIP-RAP SHALL BEGIN WITH THE TOE. THE LARGER STONES SHALL BE PLACED IN THE TOE ALONG THE OUTSIDE EDGES OF THE LIMITS OF THE SLOPE & CHANNEL PROTECTION. THE RIP-RAP SHALL BE PLACED WITH SUITABLE EQUIPMENT IN SUCH A MANNER AS TO PRODUCE A REASONABLY GRADED MASS OF STONES WITH ZERO DROP HEIGHT. THE PLACING OF STONES THAT CAUSE EXTENSIVE SEGREGATION IS NOT ALLOWED.
6. ANY EXCAVATION VOIDS EXISTING ALONG THE EDGES OF THE COMPLETED SLOPE & CHANNEL PROTECTION SHALL BE BACKFILLED.
7. ALL DISTURBED AREAS SHALL BE PERMANENTLY STABILIZED IN ACCORDANCE WITH AN APPROVED SEDIMENT & EROSION CONTROL PLAN.

RIP RAP STREAM BANK PROTECTION DETAIL; WPD 3.1

NO SCALE

NOTE: SEE SHEET 5 FOR EROSION & SEDIMENT CONTROL MEASURES

I. DESCRIPTION

THIS WORK SHALL CONSIST OF INSTALLING EROSION CONTROL DEVICES IN & ADJACENT TO TEMPORARY STREAM CONSTRUCTION SUCH AS UTILITY CROSSINGS.

II. CONSTRUCTION REQUIREMENTS

1. ALL EROSION & SEDIMENT CONTROL DEVICES SHALL BE INSTALLED AS THE FIRST ORDER OF WORK.
2. THE CONTRACTOR SHALL INSURE THAT A CONTINUOUS PERIMETER CONTROL BARRIER IS IN PLACE SO AS TO MINIMIZE POLLUTANTS ENTERING THE WATER.
3. EXCAVATED TOPSOIL & SUBSOIL SHALL BE KEPT SEPARATE & REPLACED IN THEIR NATURAL ORDER.
4. ALL EXCAVATED MATERIALS SHALL BE PLACED ON THE UPLAND SIDE OF THE EXCAVATION.
5. ALL CONSTRUCTION SHALL TAKE PLACE DURING STREAM LOW FLOWS. THE LENGTH OF CONSTRUCTION TIME SHALL BE LIMITED TO A MAXIMUM OF 5 DAYS FOR EACH CROSSING.
6. ALL UTILITY CROSSINGS SHALL BE PLACED AT LEAST THREE FEET BENEATH THE STREAM BED UNLESS AN ALTERNATIVE SECTION IS SPECIFICALLY APPROVED BY THE ADMINISTRATION.
7. THE CONTRACTOR MAY ELECT TO CONSTRUCT THE UTILITY CROSSING IN TWO STAGES. IN THIS CASE A WRA APPROVED FLOW BARRIER MAY BE CONSTRUCTED TO KEEP THE CONSTRUCTION AREA DRY.
8. SEDIMENT CONTROL DEVICES ARE TO REMAIN IN PLACE UNTIL ALL DISTURBED AREAS ARE STABILIZED IN ACCORDANCE WITH AN APPROVED SEDIMENT & EROSION CONTROL PLAN & THE INSPECTION AUTHORITY APPROVES THEIR REMOVAL.

UTILITY CROSSING DETAIL; WPD 5.1

NO SCALE

STREAM CROSSING NOTES:

1. DELAY ALL WORK IN THE STREAM UNTIL START OF A 5-DAY CLEAR-WEATHER FORECAST. COMPLETE ALL WORK IN THE STREAM WITHIN THESE 5-DAYS.

2. FOLLOW THE SEQUENCE OF CONSTRUCTION: STREAM CROSSING FOR ALL WORK IN THE STREAM. (SEE THIS SHEET)

3. FOR THE STREAM CROSSING, THE CONTRACTOR SHALL USE THE FOLLOWING CONSTRUCTION DETAILS:

DETAIL	DESCRIPTION	SIZE
WPD 5.1	UTILITY CROSSING	N/A
WPD 2.3	SANDBAG/STONE FLOW DIVERSION	24"
WPD 3.1	RIP-RAP OUTLET PROTECTION	CLASS I
SCS DETAIL 20B	SUMP PIT	N/A
FB	FILTER BAG	N/A

4. SEE THIS SHEET FOR BEST MANAGEMENT PRACTICES FOR WORK IN NON-TIDAL WETLANDS AND WETLAND BUFFERS.

SEQUENCE OF CONSTRUCTION: STREAM CROSSING

1. OBTAIN THE REQUIRED PERMITS/APPROVALS FROM THE APPROPRIATE AGENCIES. NTW & WD LETTER OF AUTHORIZATION NO. 20060372/05-NT-3247

2. NOTIFY THE COMPLIANCE DIVISION OF THE MARYLAND WATER MANAGEMENT ADMINISTRATION AT LEAST FIVE (5) DAYS PRIOR TO THE INITIATION OF CONSTRUCTION AND FIVE (5) DAYS AFTER WORK ENDS. THE CITY OF BALTIMORE OFFICE PHONE NUMBER IS (410) 631-3510.

3. CONTRACTOR SHALL NOTE THE TIME OF YEAR RESTRICTIONS ON WORK WITHIN THE STREAM AS SHOWN ON THE PERMITS.

4. INSTALL THE SANDBAG/STONE DIVERSION, THE FILTER BAG AND THE SUMP PIT. THE SEDIMENT CONTROL INSPECTOR MUST APPROVE ALL CONTROLS BEFORE COMMENCING WORK.

5. INSTALL SEWER MAIN AND THE RIP-RAP BANK PROTECTION ACCORDING TO THE DRAWINGS AND SPECIFICATIONS DURING A TIME OF FAVORABLE WEATHER FORCAST.

6. WITH MINIMAL DISTURBANCE, REMOVE DIVERSION CONTROLS AND FILTER BAG AND STABLIZE ALL DISTURBED AREAS.

BEST MANAGEMENT PRACTICES FOR WORK IN NONTIDAL WETLANDS AND WETLAND BUFFERS

NTW & WD LETTER OF AUTHORIZATION NO.

1. CONDUCT ALL CONSTRUCTION ACTIVITIES SO AS NOT TO CAUSE OR CONTRIBUTE TO A DEGRADATION OF WATER QUALITY AS DETERMINED BY THE MARYLAND DEPARTMENT OF THE ENVIRONMENT.

2. CONDUCT THE REGULATED CONSTRUCTION ACTIVITY SO AS NOT TO RESTRICT OR IMPEDE THE FOLLOWING:
   a. MOVEMENT OF WILDLIFE INDIGENOUS TO THE NONTIDAL WETLANDS OR ADJACENT WATERS.
   b. PASSAGE OF NORMAL OR EXPECTED HIGH WATER FLOWS.

3. STREAMS ARE CLASSIFIED AS USE I WATERS: NO IN-STREAM WORK SHALL BE CONDUCTED DURING THE PERIOD MARCH 1st THRU JUNE 15th.

4. MAINTAIN THE HYDROLOGIC REGIME OF ALL ADJACENT NONTIDAL WETLANDS.

5. NO EXCESS FILL, CONSTRUCTION MATERIAL, OR DEBRIS SHALL BE STOCKPILED OR STORED IN THE WETLANDS OR BUFFERS.

6. PLACE MATERIALS IN A LOCATION AND MANNER WHICH DOES NOT ADVERSELY IMPACT SURFACE OR SUBSURFACE WATER FLOW INTO OR OUT OF THE NONTIDAL WETLANDS & BUFFERS.

7. DO NOT USE THE EXCAVATED MATERIAL AS BACKFILL IF IT CONTAINS WASTE METAL PRODUCTS, UNSIGHTLY DEBRIS, TOXIC MATERIAL OR ANY OTHER DELETERIOUS SUBSTANCE. IF ADDITIONAL BACKFILL IS REQUIRED, USE CLEAN MATERIAL FREE OF ANY DELETERIOUS SUBSTANCES.

8. PLACE HEAVY EQUIPMENT ON MATS OR SUITABLY OPERATE THE EQUIPMENT TO PREVENT DAMAGE TO THE NONTIDAL WETLANDS AND BUFFERS.

9. REPAIR AND MAINTAIN ANY SERVICEABLE STRUCTURE OR FILL SO THERE IS NO PERMANENT LOSS OF NONTIDAL WETLANDS IN EXCESS OF NONTIDAL WETLANDS LOST UNDER THE ORIGINAL CONSTRUCTION OR FILL.

10. RECTIFY ANY NONTIDAL WETLANDS TEMPORARILY IMPACTED BY ANY CONSTRUCTION OR MAINTENANCE ACTIVITY.

11. ALL STABILIZATION IN THE WETLANDS AND BUFFERS SHALL BE OF THE FOLLOWING RECOMMENDED SPECIES: ANNUAL RYEGRASS (LOLIUIN MULTIFLORUM), MILLET (SETARIA ITALICA), BARLEY (HORDEUM SP.), OATS (UNIOLA SP.), AND OR RYE (SECALE CEREALE). THESE SPECIES WILL ALLOW FOR THE STABILIZATION OF THE SITE WHILE ALSO ALLOWING FOR THE VOLUNTARY REVEGETATION OF NATURAL WETLAND SPECIES. OTHER NON-PERSISTENT VEGETATION MAY BE ACCEPTABLE, BUT MUST BE APPROVED BY THE DIVISION. KENTUCKY 33 FESCUE SHALL NOT BE UTILIZED IN THE WETLAND OR BUFFER AREAS. THE AREA SHOULD BE SEEDED AND MULCHED TO REDUCE EROSION AFTER CONSTRUCTION ACTIVITIES HAVE BEEN COMPLETED.

12. AFTER INSTALLATION HAS BEEN COMPLETED, MAKE POST CONSTRUCTION GRADES AND ELEVATIONS OF NONTIDAL WETLANDS THE SAME AS THE ORIGINAL GRADES AND ELEVATIONS.

13. STORMWATER RUNOFF FROM ADJACENT IMPERVIOUS SURFACES SHALL BE CONTROLLED TO PREVENT THE WASHING OF DEBRIS INTO THE STREAM.

STATE OF MARYLAND CHARLES J. CROVO SR. No. 13204 REGISTERED PROFESSIONAL ENGINEER

FISHER, COLLINS & CARTER, INC.
CIVIL ENGINEERING CONSULTANTS & LAND SURVEYORS
CENTENNIAL SQUARE OFFICE PARK - 10272 BALTIMORE NATIONAL PIKE
ELLICOTT CITY, MARYLAND 21042
(410) 461 - 2855

DATE	DESCRIPTION
3-10-08	⚠1 Revised Title Block.

REVISION BLOCK

OWNER/DEVELOPER
CSG PATAPSCO, LLC
5024 CAMPBELL BOULEVARD, SUITE G
WHITE MARSH, MARYLAND 21236
410-933-2091

APPROVED: DEPARTMENT OF PLANNING AND ZONING

Director - Department of Planning and Zoning	Date 6/5/07
Chief, Division of Land Development	Date 6/5/07
Chief, Development Engineering Division J.P.	Date 5/30/07

SUBDIVISION			SECTION/AREA		PARCEL NO.
PATAPSCO VALLEY BUSINESS CENTER			N/A		C-1, C-2 & C-3
PLAT NO.	BLOCK NO.	ZONE	TAX MAP	ELEC. DIST.	CENSUS TR.
18979 & 18980 F-07-144	14, 15, 20, 21	M-2	38	FIRST	601201
WATER CODE	PLAT NO. 20000 & 20001 F-08-138		SEWER CODE		
A04			2150500, 2150501, 2150300		

STREAM CROSSING NOTES & DETAILS

PATAPSCO VALLEY BUSINESS CENTER
PATAPSCO VALLEY OFFICE CAMPUS
PARCELS C-1, C-2 AND C-3 ⚠1
ZONED: M-2
TAX MAP No. 38 PARCEL No. 285 GRID No. 14,15,20,21
FIRST ELECTION DISTRICT HOWARD COUNTY, MARYLAND
SCALE: 1" = 50'
DATE: MARCH 15, 2007
SHEET 21 OF 21
SDP-07-028

I:\06003\dwg\SITE DEVELOPMENT PLAN\06003-6001 Water And Sewer Base Plan Parcel 'C'.dwg, PRIVATE NOTES & DETAILS, 3/16/2007 8:28:26 AM, 1:1

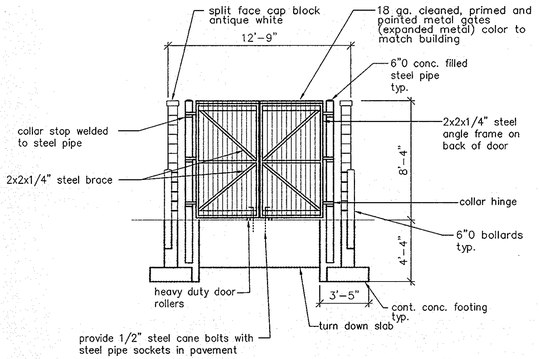

DUMPSTER ENCLOSURE FRONT ELEVATION

SCALE: 1/4" = 1'-0"

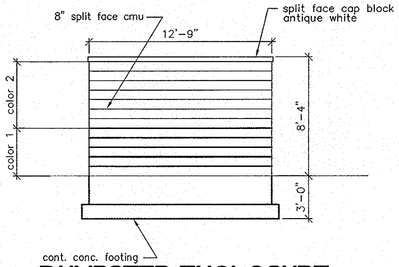

DUMPSTER ENCLOSURE REAR ELEVATION

SCALE: 1/4" = 1'-0"

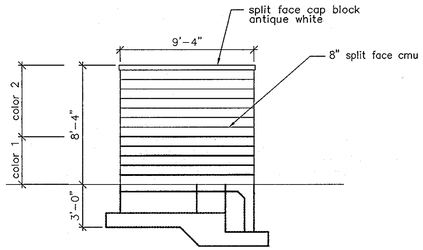

DUMPSTER ENCLOSURE LEFT SIDE ELEVATION

SCALE: 1/4" = 1'-0"

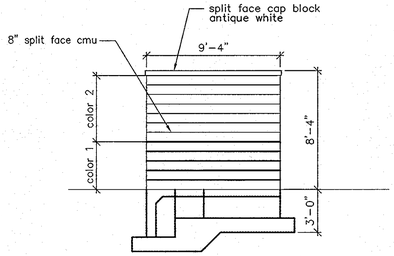

DUMPSTER ENCLOSURE RIGHT SIDE ELEVATION

SCALE: 1/4" = 1'-0"

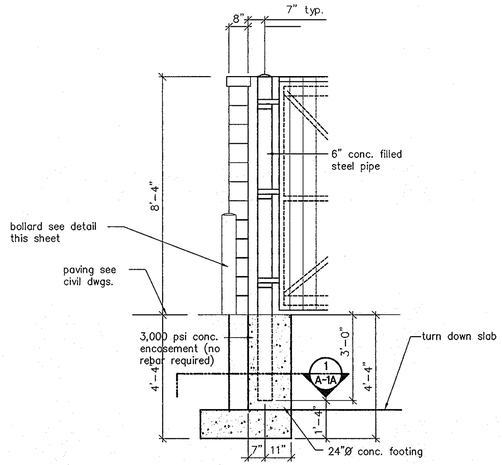

STEEL PIPE DETAIL

SCALE: 1/2" = 1'-0"

FOOTING/CONCRETE NOTES:
1. ASSUMED SOIL BEARING VALUE = 2,000 PSF & SHALL BE FIELD VERIFIED BY REGISTERED MD. GEOTECHNICAL ENGINEER.
2. ALL CONCRETE FOR FOOTINGS SHALL BE 3,000 PSI @ 28 DAYS.
3. ALL CONCRETE FOR SLAB ON GRADE SHALL BE 3,500 PSI AIR-ENTRAINED @ 28 DAYS.

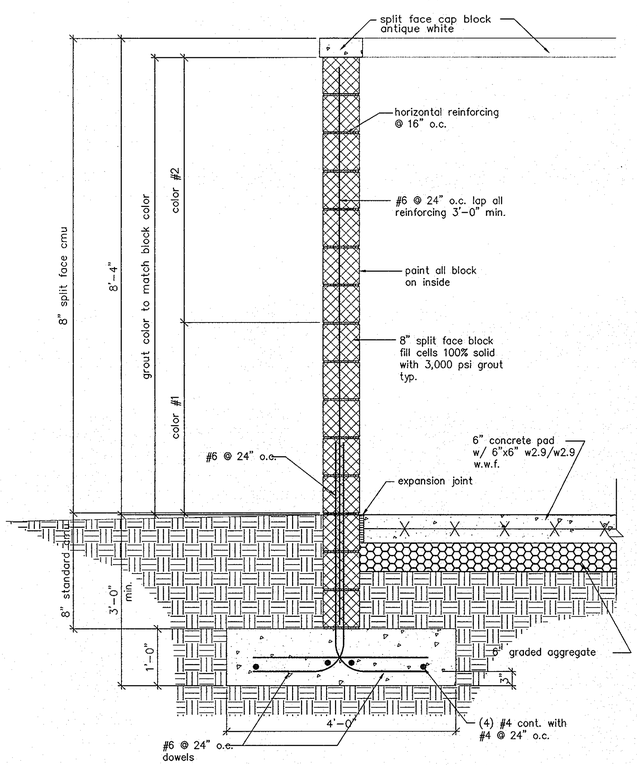

SECTION THRU DUMPSTER WALL

SCALE: 1" = 1'-0"

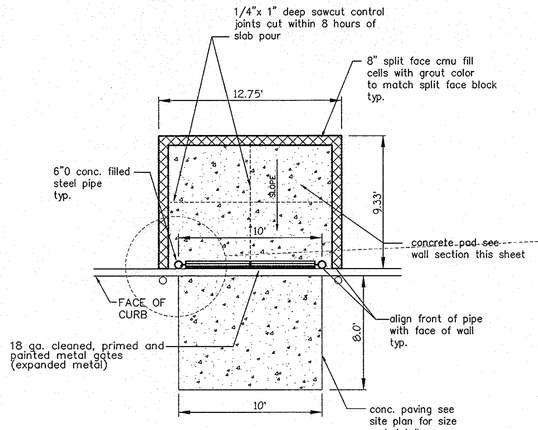

DUMPSTER PLAN

SCALE: 1/4" = 1'-0"

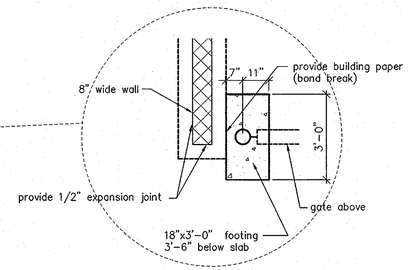

1 A-1 SECTION THRU FOOTING

SCALE: 1/2" = 1'-0"

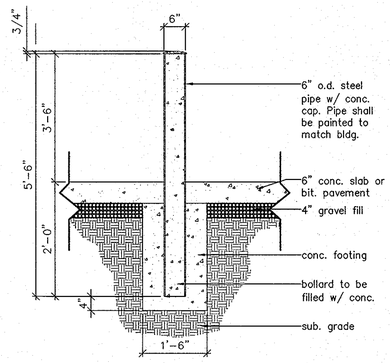

BOLLARD DETAIL

SCALE: 3/4"=1'-0"

STATE OF MARYLAND — CHARLES L. CROVO — No. 22361 — REGISTERED PROFESSIONAL ENGINEER

FISHER, COLLINS & CARTER, INC.
CIVIL ENGINEERING CONSULTANTS & LAND SURVEYORS
CENTENNIAL SQUARE OFFICE PARK - 10272 BALTIMORE NATIONAL PIKE
ELLICOTT CITY, MARYLAND 21042
(410) 461 - 2855

DATE	DESCRIPTION
3/10/08	⚠1 REVISED TITLE BLOCK

REVISION BLOCK

OWNER/DEVELOPER
CSG PATAPSCO, LLC
5024 CAMPBELL BOULEVARD, SUITE G
WHITE MARSH, MARYLAND 21236
410-933-2091

APPROVED: DEPARTMENT OF PLANNING AND ZONING

Director - Department of Planning and Zoning — Date 6/5/07

Chief, Division of Land Development — Date 6/5/07

Chief, Development Engineering Division J.R. — Date 5/30/07

SUBDIVISION	SECTION/AREA	PARCEL NO.
PATAPSCO VALLEY BUSINESS CENTER	N/A	C-1, C-2 AND C-3

PLAT NO.	BLOCK NO.	ZONE	TAX MAP	ELEC. DIST.	CENSUS TR.
18978 & 18980 F-07-182	14, 15, 20, 21	M-2	38	FIRST	601201

WATER CODE PLAT NO. 20000 & 20001 F-08-188 — A04

SEWER CODE — 2150500, 2150501, 2150300

DUMPSTER PLAN, ELEVATIONS AND DETAILS

PATAPSCO VALLEY BUSINESS CENTER
PATAPSCO VALLEY OFFICE CAMPUS
PARCELS C-1, C-2 AND C-3
ZONED: M-2

TAX MAP No. 38 PARCEL No. 285 GRID No. 14,15,20,21
FIRST ELECTION DISTRICT HOWARD COUNTY, MARYLAND
SCALE: AS SHOWN
DATE: MARCH 15, 2007
SHEET 20 OF 21

SDP-07-028

I:\06003\dwg\SITE DEVELOPMENT PLAN\06003-8001 DETAILS-DUMPSTER.dwg, DUMP, 3/16/2007 8:30:55 AM, 1:60

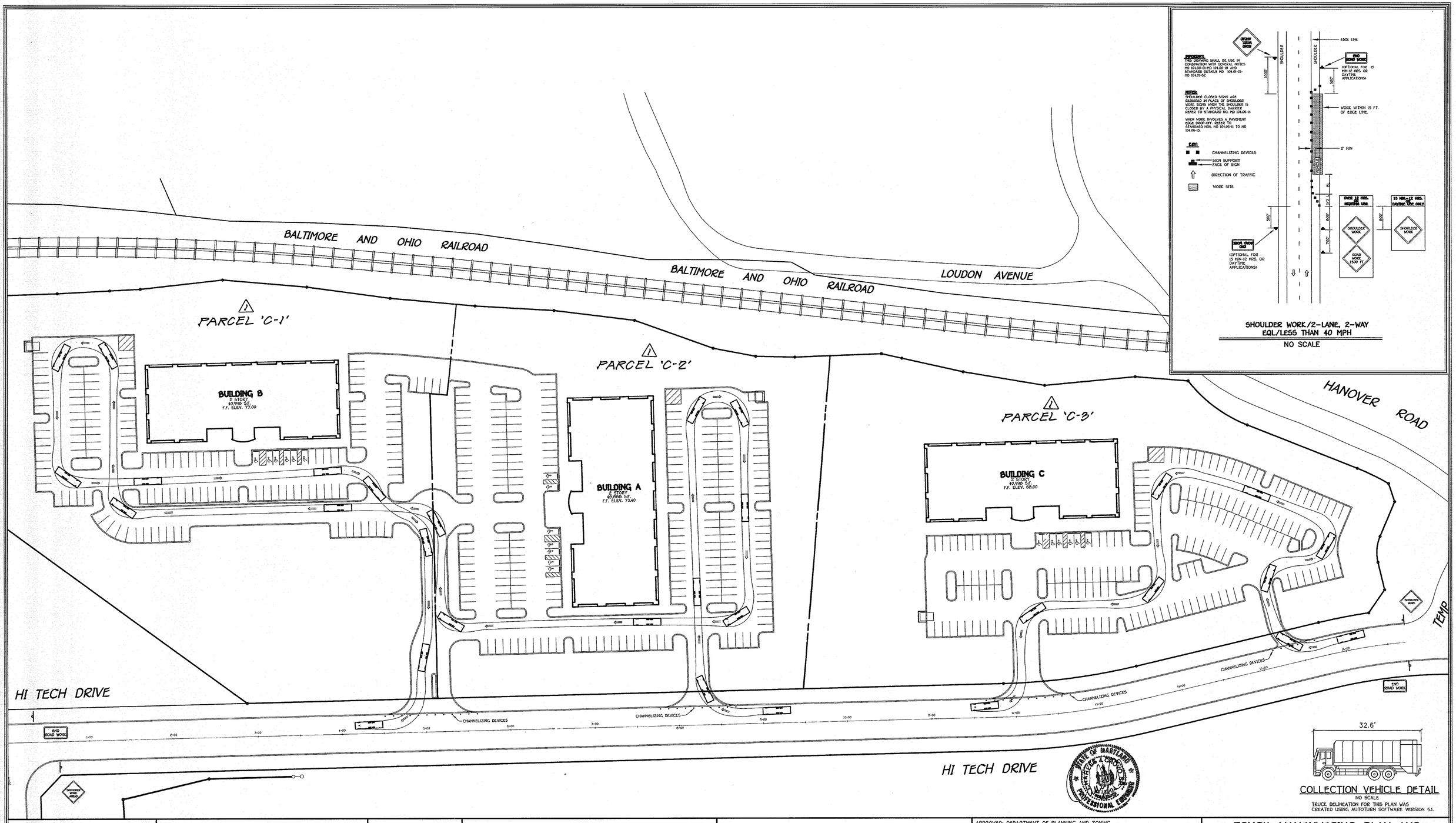

SHOULDER WORK/2-LANE, 2-WAY
EQL/LESS THAN 40 MPH
NO SCALE

COLLECTION VEHICLE DETAIL
NO SCALE
TRUCK DELINEATION FOR THIS PLAN WAS CREATED USING AUTOTURN SOFTWARE VERSION 5.1.

FISHER, COLLINS & CARTER, INC.
CIVIL ENGINEERING CONSULTANTS & LAND SURVEYORS
CENTENNIAL SQUARE OFFICE PARK - 10272 BALTIMORE NATIONAL PIKE
ELLICOTT CITY, MARYLAND 21042
(410) 461 - 2855

DATE	DESCRIPTION
3-10-08	1 Resubdivided Parcel C into Parcels C-1, C-2 & C-3. Revised Title Block.

REVISION BLOCK

OWNER/DEVELOPER
CSG PATAPSCO, LLC
5024 CAMPBELL BOULEVARD, SUITE G
WHITE MARSH, MARYLAND 21236
410-933-2091

APPROVED: DEPARTMENT OF PLANNING AND ZONING

Director - Department of Planning and Zoning — Date 6/5/07

Chief, Division of Land Development — Date 6/5/07

Chief, Development Engineering Division — Date 5/30/07

SUBDIVISION	SECTION/AREA	PARCEL NO.
PATAPSCO VALLEY BUSINESS CENTER	N/A	C-1, C-2 & C-3

PLAT NO.	BLOCK NO.	ZONE	TAX MAP	ELEC. DIST.	CENSUS TR.
19778 & 19780 F.27-124	14, 15, 20, 21	M-2	38	FIRST	601201

WATER CODE PLAT NO. 20000 & 20001 F-08-138 A04
SEWER CODE 2150500, 2150501, 2150300

TRUCK MANEUVERING PLAN AND MAINTENANCE OF TRAFFIC PLAN

PATAPSCO VALLEY BUSINESS CENTER

PATAPSCO VALLEY OFFICE CAMPUS

PARCELS C-1, C-2 AND C-3 1

ZONED: M-2

TAX MAP No. 38 PARCEL No. 285 GRID No. 14,15,20,21
FIRST ELECTION DISTRICT HOWARD COUNTY, MARYLAND
SCALE: 1" = 50'
DATE: MARCH 15, 2007
SHEET 19 OF 21

SDP-07-028

I:\06003\dwg\SITE DEVELOPMENT PLAN\06003-5001 TRUCK TURNING PLAN.dwg, TRUCK TURNING-1, 3/16/2007 8:29:32 AM, 1:1

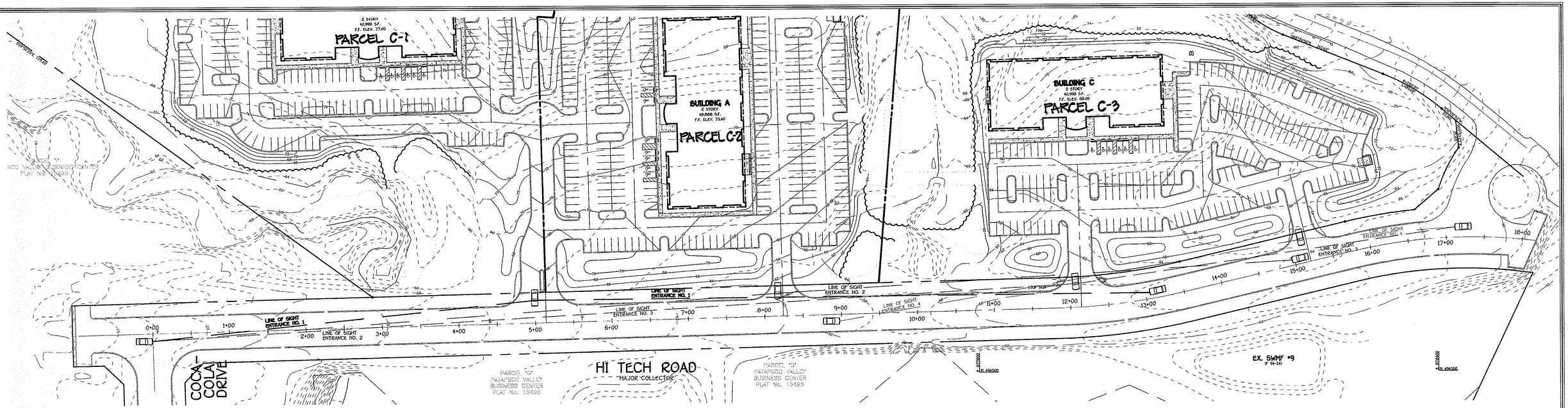

PLAN

SCALE: 1" = 60'

HI TECH ROAD

MAJOR COLLECTOR
DESIGN SPEED = 40 M.P.H.

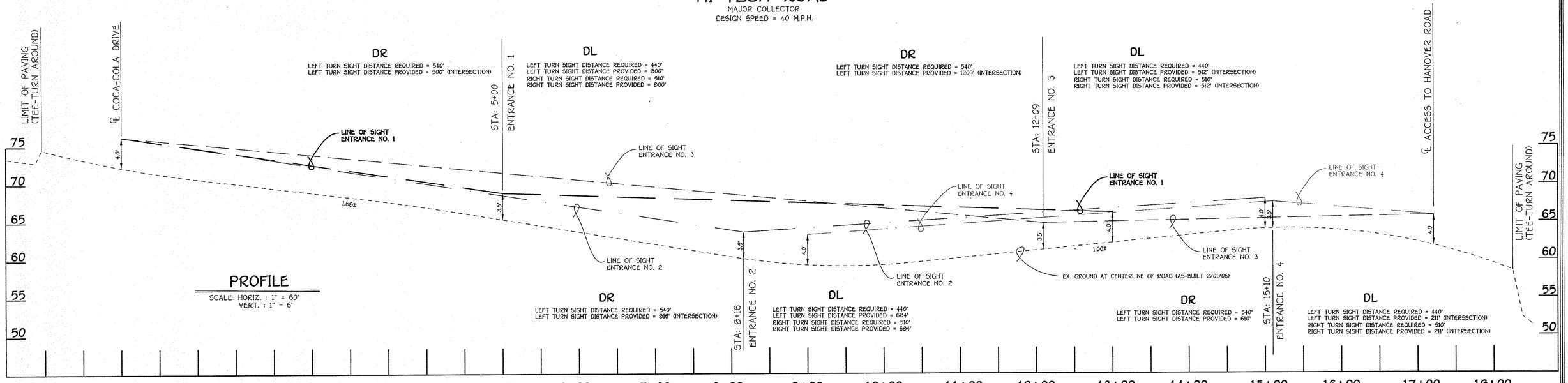

PROFILE

SCALE: HORIZ. : 1" = 60'
VERT. : 1" = 6'

FISHER, COLLINS & CARTER, INC.
CIVIL ENGINEERING CONSULTANTS & LAND SURVEYORS
CENTENNIAL SQUARE OFFICE PARK - 10272 BALTIMORE NATIONAL PIKE
ELLICOTT CITY, MARYLAND 21042
(410) 461 - 2855

DATE	DESCRIPTION
3/10/08	⚠1 RESUBDIVIDED PARCEL C INTO PARCELS C-1, C-2 AND C-3 REVISED TITLE BLOCK.
	REVISION BLOCK

STATE OF MARYLAND — JAMES L. CARTER — No. 13611 — PROFESSIONAL ENGINEER

OWNER/DEVELOPER
CSG PATAPSCO, LLC
5024 CAMPBELL BOULEVARD, SUITE G
WHITE MARSH, MARYLAND 21236
410-933-2091

APPROVED: DEPARTMENT OF PLANNING AND ZONING

Director - Department of Planning and Zoning — Date 6/5/07
Chief, Division of Land Development — Date 6/5/07
Chief, Development Engineering Division — Date 5/30/07

SUBDIVISION	SECTION/AREA	PARCEL NO.
PATAPSCO VALLEY BUSINESS CENTER	N/A	C-1, C-2 AND C-3

PLAT NO.	BLOCK NO.	ZONE	TAX MAP	ELEC. DIST.	CENSUS TR.
19798, 19780 F. 07-144	14, 15, 20, 21	M-2	38	FIRST	601201

WATER CODE PLAT NO. 20000 & 20001 F 08-138 A04 — SEWER CODE 2150500, 2150501, 2150300

SIGHT DISTANCE PLAN AND PROFILE

PATAPSCO VALLEY BUSINESS CENTER
PATAPSCO VALLEY OFFICE CAMPUS
PARCELS C-1, C-2 AND C-3
ZONED: M-2
TAX MAP No. 38 PARCEL No. 285 GRID No. 14,15,20,21
FIRST ELECTION DISTRICT HOWARD COUNTY, MARYLAND
SCALE: AS SHOWN
DATE: MARCH 15, 2007
SHEET 17 OF 21 SDP-07-028

I:\08003\dwg\SITE DEVELOPMENT PLAN\08003-8001 SIGHT DISTANCE PLAN AND PROFILE.dwg, SIGHT DISTANCE, 3/16/2007 8:28:37 AM, 1:1

20.0 STANDARDS AND SPECIFICATIONS FOR VEGETATIVE STABILIZATION

DEFINITION

Using vegetation as cover for barren soil to protect it from forces that cause erosion.

PURPOSE

Vegetative stabilization specifications are used to promote the establishment of vegetation on exposed soil. When soil is stabilized with vegetation, the soil is less likely to erode and more likely to allow infiltration of rainfall, thereby reducing sediment loads and run-off to downstream areas, and improving wildlife habitat and visual resources.

CONDITIONS WHERE PRACTICE APPLIES

This practice shall be used on denuded areas as specified on the plans and may be used on highly erodible or critically eroding areas. This specification is divided into Temporary Seeding, to quickly establish vegetative cover for short duration O(up to one year), and Permanent Seeding, for long term vegetative cover. Examples of applicable areas for Temporary Seeding are temporary Soil Stockpiles, cleared areas being left idle between construction phases, earth dikes, etc. and for Permanent Seeding are lawns, dams, cut and fill slopes and other areas at final grade, former stockpile and staging areas, etc.

EFFECTS ON WATER QUALITY AND QUANTITY

Planting vegetation in disturbed areas will have an effect on the water budget, especially on volumes and rates of runoff, infiltration evaporation, transpiration, percolation, and groundwater recharge. Vegetation, over time, will increase organic matter content and improve the water holding capacity of the soil and subsequent plant growth.

Vegetation will help reduce the movement of sediment, nutrients, and other chemicals carried by runoff to receiving waters. Plants will also help protect groundwater supplies by assimilating those substances present within the root zone.

Sediment control devices must remain in place during grading, seedbed preparation, seeding, mulching and vegetative establishment to prevent large quantities of sediment and associated chemicals and nutrients from washing into surface waters.

SECTION 1 - VEGETATIVE STABILIZATION METHODS AND MATERIALS

A. Site Preparation
  i. Install erosion and sediment control structures (either temporary of permanent) such as diversions, grade stabilization structures, berms, waterways, or sediment control basins.
  ii. Perform all grading operations at right angles to the slope. Final grading and shaping is not usually necessary for temporary seeding.
  iii. Schedule required soil tests to determine soil amendment composition and application rates for sites having disturbed area over 5 acres.

B. Soil Amendments (Fertilizer and Lime Specifications)
  i. Soil tests must be performed to determine the exact ratios and application rates for both lime and fertilizer on sites having disturbed areas over 5 acres. Soil analysis may be performed by the University of Maryland or a recognized commercial laboratory. Soil samples taken for engineering purposes may also be used for chemical analyses.
  ii. Fertilizers shall be uniform in composition, free flowing and suitable for accurate application by approved equipment. Manure may be substituted for fertilizer with prior approval from the appropriate approval authority. Fertilizers shall all be delivered to the site fully labeled according to the applicable state fertilizer laws and shall bear the name, trade name or trademark and warrantee of the producer.
  iii. Lime materials shall be ground limestone (hydrated or burnt lime may be substituted) which contains at least 50% total oxides (calcium oxide plus magnesium oxide). Limestone shall be ground to such fineness that at least 50% will pass through a •100 mesh sieve and 98-100% will pass through a •20 mesh sieve.
  iv. Incorporate lime and fertilizer into the top 3-5" of soil by disking or other suitable means.

C. Seedbed Preparation
  i. Temporary Seeding
    a. Seedbed preparation shall consist of loosening soil to a depth of 3" to 5" by means of suitable agricultural or construction equipment, such as disc harrows or chisel plows or rippers mounted on construction equipment. After the soil is loosened it should not be rolled or dragged smooth, but left in the roughened condition. Sloped areas (greater than 3:1) should be tracked leaving the surface in an irregular condition with ridges running parallel to the contour of the slope.
    b. Apply fertilizer and lime as prescribed on the plans.
    c. In corporate lime and fertilizer into the top 3-5" of soil by disking or other suitable means.
  ii. Permanent Seeding
    a. Minimum soil conditions required for permanent vegetative establishment:
      1. Soil pH shall be between 6.0 and 7.0.
      2. Soluble salts shall be less than 500 parts per million (ppm).
      3. The soil shall contain less than 40% clay, but enough fine grained material (>30% silt plus clay) to provide the capacity to hold a moderate amount of moisture. An exception is if lovegrass or serecia lespedezas is to be planted, then a sandy soil (<30% silt plus clay) would be acceptable.
      4. Soil shall contain 1.5% minimum organic matter by weight.
      5. Soil must contain sufficient pore space to permit adequate root penetration.
      6. If these conditions cannot be met by soils on site, adding topsoil is required in accordance with Section 21 Standard and Specification for Topsoil.
    b. Areas previously graded in conformance with the drawings shall be maintained in a true and even grade, then scarified or otherwise loosened to a depth of 3-5" to permit bonding of the topsoil to the surface area and to create horizontal erosion check slots to prevent topsoil to the surface area and to create horizontal erosion check slots to prevent topsoil from sliding down a slope.
    c. Apply soil amendments as per soil test or as included on the plans.
    d. Mix soil amendments into the top 3-5" of topsoil by disking or other suitable means. Lawn areas should be raked to smooth the surface, remove large objects like stones and branches, and ready the area for seed and application. Where site conditions will not permit normal seedbed preparation, loosen surface soil by dragging with a heavy chain or other equipment to roughen the surface. Steep slopes (steeper than 3:1) should be tracked by a dozer leaving the soil in an irregular condition with ridges running parallel to the contour of the slope. The top 1-3" of soil should be loose and friable. Seedbed loosening may not be necessary on newly disturbed areas.

D. Seed Specifications
  i. All seed must meet the requirements of the Maryland State Seed Law. All seed shall be subject to re-testing by a recognized seed laboratory. All seed used shall have been tested within the 6 months immediately preceding the date of sowing such material on this job.
  Note: Seed tags shall be made available to the inspector to verify type and rate of seed used.
  ii. Inoculant - The inoculant for treating legume seed in the seed mixtures shall be a pure culture of nitrogen-fixing bacteria prepared specifically for the species. Inoculants shall not be used later than the date indicated on the container. Add fresh inoculant as directed on package. Use four times the recommended rate when hydroseeding. Note: It is very important to keep inoculant as cool as possible until used. Temperatures above 75°-80° F. can weaken bacteria and make the inoculant less effective.

E. Methods of Seeding
  i. Hydroseeding: Apply seed uniformly with hydroseeder (slurry includes seed and fertilizer), broadcast or drop seeded, or a cultipacker seeder.
    a. If fertilizer is being applied at the time of seeding, the application rates amounts will not exceed the following: nitrogen; maximum of 100 lbs. per acre total of soluble nitrogen; P205 (phosphorous): 200 lbs/ac; K20 (potassium): 200 lbs/ac.
    b. Lime - use only ground agricultural limestone, (Up to 3 tons per acre may be applied by hydroseeding). Normally, not more than 2 tons are applied by hydroseeding at any one time. Do not use burnt or hydrated lime when hydroseeding.
    c. Seed and fertilizer shall be mixed on site and seeding shall be done immediately and without interruption.
  ii. Dry Seeding: This includes use of conventional drop or broadcast spreaders.
    a. Seed spread dry shall be incorporated into the subsoil at the rates prescribed on the Temporary or Permanent Seeding Summaries or Tables 265 or 26. The seeded area shall then be rolled with a weighted roller to provide good seed to soil contact.
    b. Where practical, seed should be applied in two directions perpendicular to each other. Apply half the seeding rate in each direction.
  iii. Drill or Cultipacker Seeding: Mechanized seeders that apply and cover seed with soil.
    a. Cultipacking seeders are required to bury the seed in such a fashion as to provide at least 1/4 inch of soil covering. Seedbed must be firm after planting.
    b. Where practical, seed should be applied in two directions perpendicular to each other. Apply half the seeding rate in each direction.

F. Mulch Specifications (In order of preference)
  i. Straw shall consist of thoroughly threshed wheat, rye or oat straw, reasonable bright in color, and shall not be musty, moldy, caked, decayed, or excessively dusty and shall be free of noxious weed seeds as specified in the Maryland Seed Law.
  ii. Wood Cellulose Fiber Mulch (WCFM)
    a. WCFM shall consist of specially prepared wood cellulose processed into a uniform fibrous physical state.
    b. WCFM shall be dyed green or contain a green dye in the package that will provide an appropriate color to facilitate visual inspection of the uniformly spread slurry.
    c. WCFM, including dye, shall contain no germination or growth inhibiting factors.
    d. WCFM materials shall be manufactured and processed in such a manner that the wood cellulose fiber mulch will remain in uniform suspension in water under agitation and will blend with seed, fertilizer and other additives to form a homogeneous slurry. The mulch material shall form a blotter-like ground cover, on application, having moisture absorption and percolation properties and shall cover and hold grass seed in contact with the soil without inhibiting the growth of the grass seedlings.
    e. WCFM material shall contain no elements or compounds at concentration levels that will be phytol-toxic.
    f. WCFM must conform to the following physical requirements: fiber length to approximately 10 mm. , diameter approximately 1 mm., pH range of 4.0 to 8.5, ash content of 1.6% maximum and water holding capacity of 90% minimum.
  Note: Only sterile straw mulch should be used in areas where one species of grass is desired.

G. Mulching Seeded Areas - Mulch shall be applied to all seeded areas immediately after seeding.
  i. If grading is completed outside of the seeding season, mulch along shall be applied as prescribed in this section and maintained until the seeding season returns and seeding can be performed in accordance with these specifications.
  ii. When straw mulch is used, it shall be spread over all seeded areas at the rate of 2 tons/acre. Mulch shall be applied to a uniform loose depth of between 1" and 2". Mulch applied shall achieve a uniform distribution and depth so that the soil surface is not exposed. If a mulch anchoring tool is to be used, the rate should be increased to 2.5 tons/acre.
  iii. Wood cellulose fiber used as a mulch shall be applied at a net dry weight of 1,500 lbs. per acre. The wood cellulose fiber shall be mixed with water, and the mixture shall contain a maximum of 50 lbs. of wood cellulose fiber per 100 gallons of water.

H. Securing Straw Mulch (Mulch Anchoring): Mulch anchoring shall be performed immediately following mulch application to minimize loss by wind or water. This may be done by one of the following methods (listed by preference), depending upon size of area and erosion hazard:
  i. A mulch anchoring tool is a tractor drawn implement designed to punch and anchor mulch into the soil surface a minimum of two (2) inches. This practice is most effective on large areas, but is limited to flatter slopes where equipment can operate safely. If used on sloping land, this practice should be used on the contour if possible.
  ii. Wood cellulose fiber may be used for anchoring straw. The fiber binder shall be applied at a net dry weight of 750 pounds/acre. The wood cellulose fiber shall be mixed with water and the mixture shall contain a maximum of 50 pounds of wood cellulose fiber per 100 gallons of water.
  iii. Application of liquid binders should be heavier at the edges where wind catches mulch, such as in valleys and crest of banks. The remainder of area should be appear uniform after binder application. Synthetic binders - such as Acrylic DLR (Agro-Tack), DCA-70 Petroset, Terra Tax II, Terra Tack AR or other approved equal may be used at rates recommended by the manufacturer to anchor mulch.
  iv. Lightweight plastic netting may be stapled over the mulch according to manufacturer's recommendations. Netting is usually available in rolls 4' to 15' feet wide and 300 to 3,000 feet long.

I Incremental Stabilization - Cut Slopes
  i. All cuts slopes shall be dressed, prepared, seeded and mulched as the work progresses. Slopes shall be excavated and stabilized in equal increments not to exceed 15'.
  ii. Construction sequence (Refer to Figure 3 below):
    a. Excavate and stabilize all temporary swales, side ditches, or berms that will be used to convey runoff from the excavation.
    b. Perform Phase 1 excavation, dress, and stabilize.
    c. Perform Phase 2 excavation, dress and stabilize. Overseed Phase 1 areas as necessary.
    d. Perform final phase excavation, dress and stabilize. Overseed previously seeded areas as necessary.

Note: Once excavation has begun the operation should be continuous from grubbing through the completion of grading and placement of topsoil (if required) and permanent seed and mulch. Any interruptions int he operation of completing the operation out of the seeding season will necessitate the application of temporary stabilization.

J. Incremental Stabilization of Embankments - Fill Slopes
  i. Embankments shall be constructed in lifts as prescribed on the plans.
  ii. Slopes shall be stabilized immediately when the vertical height of the multiple lifts reaches 15", or when the grading operation ceases as prescribed in the plans.
  iii. At the end of each day, temporary berms and pipe slope drains should be constructed along the top edge of the embankment to intercept surface runoff and convey it down the slope in a non-erosive manner to a sediment trapping device.
  iv. Construction sequence: Refer to Figure 4 (below).
    a. Excavate and stabilize all temporary swales, side ditches, or berms that will be used to divert runoff around the fill. Construct slope silt fence on low side of fill as shown in Figure 5, unless other methods shown on the plans address this area.
    b. Place Phase 1 embankment, dress and stabilize.
    c. Place Phase 2 embankment, dress and stabilize.
    d. Place final phase embankment, dress and stabilize. Overseed previously seeded areas as necessary.

Note: Once the placement of fill has begun the operation should be continuous from grubbing through the completion of grading and placement of topsoil (if required) and permanent seed and mulch. any interruptions in the operation or completing the operation out of the seeding season will necessitate the application of temporary stabilization.

SECTION 2 - TEMPORARY SEEDING

Vegetation - annual grass or grain used to provide cover on disturbed areas for up to 12 months. For longer duration of vegetative cover, Permanent Seeding is required.

A. Seed mixtures - Temporary Seeding

i. Select one or more of the species or mixtures listed in Table 26 for the appropriate Plant Hardiness Zone (from Figure 5) and enter them in the Temporary seeding summary below, along with application rates, seeding dates and seeding depths. If this summary is not put on the plans and completed, then Table 26 must be put on the plans.

ii. For sites having soil tests performed, the rates shown on this table shall be deleted and the rates recommended by the testing agency shall be written in. Soil tests are not required for Temporary Seeding.

Seed Mixture (Hardiness Zone __6a___) From Table 26					Fertilizer Rate (10-10-10)	Lime Rate
No.	Species	Application Rate (lb/ac)	Seeding Dates	Seeding Depths		
1	RYE	140	3/15 - 5/31, 8/1 - 10/31	1" - 2"	600 lb/ac (15 lb/1000sf)	2 tons/ac (100 lb/1000sf)
2	BARLEY OR RYE PLUS FOXTAIL MILLOT	150	6/1 - 7/31	1"		

SECTION 3 - PERMANENT SEEDING

Seeding grass and legumes to establish groung cover for a minimum of one year on disturbed areas generally receiving low maintenance.

A. Seed mixtures - Permanent Seeding

i. Select one or more of the species or mixtures listed in Table 25 for the appropriate Plant Hardiness Zone (from Figure 5) and enter them in the Permanent Seeding Summary below, along with application rates and seeding dates. Seeding depths can be estimated using Table 26. If this summary is not put on the construction plans and completed, then Table 25 must be put on the plans. Additional planting specifications for exceptional sites such as shorelines, streambanks, or dunes or for special purposes such as wildlife or aesthetic treatment may be found in USDA-SCS Techinical Field Office Guide, Section 342 - Critical Area Planting. For special lawn maintenance areas, see Sections IV Sod and V Turfgrass.

ii. For sites having disturbed area over 5 areas, the rates shown on this table shall be deleted and the rates recommended by the soil testing agency shall be written in.

iii. For areas receiving low maintenance, apply ureaform fertilizer (46-0-0) at 3 1/2 lbs/1000 sq. ft. (150 lbs/ac), in addition to the above soil amendments shown in the table below, to be performed at the time of seeding.

Seed Mixture (Hardiness Zone __6a___) From Table 25					Fertilizer Rate (10-20-20)			Lime Rate
No.	Species	Application Rate (lb/ac)	Seeding Dates	Seeding Depths	N	P205	K20	
1	TALL FESCUE (85%) KENTUCKY BLUEGRASS (5%) PERENNIAL RYEGRASS (10%)	125 15 10	3/15 - 6/1, 8/1 - 10/1	1" - 2"	90 lb/ac (2.0 lb/1000sf)	175 lb/ac (4 lb/1000sf)	175 lb/ac (4 lb/1000sf)	2 tons/ac (100 lb/1000sf)
2	TALL FESCUE (80%) HARD FESCUE (20%)	120 30	3/15 - 6/1, 8/1 - 10/1	1" - 2"				

TOPSOIL SPECIFICATIONS

Definition

Placement of topsoil over a prepared subsoil prior to establishment of permanent vegetation.

Purpose

To provide a suitable soil medium for vegetative growth. Soils of concern have low moisture content, low nutrient levels, low pH, materials toxic to plants, and/or unacceptable soil gradation.

Conditions Where Practice Applies

I. This practice is limited to areas having 2:1 or flatter slopes where:

a. The texture of the exposed subsoil/parent material is not adequate to produce vegetative growth.

b. The soil material is so shallow that the rooting zone is not deep enough to support plants or furnish continuing supplies of moisture and plant growth.

c. The original soil to be vegetated contains material toxic to plant growth.

d. The soil is so acidic that treatment with limestone is not feasible.

II. For the purpose of these Standards and Specifications, areas having slopes steeper than 2:1 require special consideration and design for adequate stabilization. Areas having slopes steeper than 2:1 shall have the appropriate stabilization shown on the plans.

Construction and Material Specifications

I. Topsoil salvaged from the existing site may be used provided that it meets the standards as set forth in these specifications. Typically, the depth of topsoil to be salvaged for a given soil type can be found in the representative soil profile section in the Soil Survey published by USDA-SCS in cooperation with Maryland Agricultural Experimental Station.

II. Topsoil Specifications - Soil to be used as topsoil must meet the following:

i. Topsoil shall be a loam, sandy loam, clay loam, silt loam, sandy clay loam, loamy sand. Other soils may be used if recommended by an agronomist or soil scientist and approved by the appropriate approval authority. Regardless,topsoil shall not be a mixture of contrasting textured subsoils and shall contain less than 5% by volume of cinders, stones, slag, coarse fragments, gravel, sticks, roots, trash, or other materials larger than 1 1/2" in diameter.

ii. Topsoil must be free of plants or plant parts such as Bermuda grass, quackgrass, Johnsongrass, nutsedge, poison ivy, thistle, or others as specified.

iii. Where the subsoil is either highly acidic or composed of heavy clays, ground limestone shall be spread at a rate of 4-8 tons/acre (200-400 pounds per 1,000 square feet) prior to the placement of topsoil. Lime shall be distributed uniformly over designated areas and worked into the soil in conjunction with tillage operations as described in the following procedures.

II. For sites having disturbed areas under 5 acres:

i. Place topsoil (if required) and apply soil amendments as specified in 10.0 Vegetative Stabilization - Section I - Vegetative Stabilization Methods and Materials.

III. For sites having disturbed areas over 5 acres:

i. On soil meeting Topsoil specifications, obtain test results dictating fertilizer and lime amendments required to bring the soil into compliance with the following:

a. pH for topsoil shall be between 6.0 and 7.5. If the tested soil demonstrates a pH of less than 6.0, sufficient lime shall be prescribed to raise the pH to 6.5 or higher.

b. Organic content of topsoil shall be not less than 1.5 percent by weight.

c. Topsoil having soluble salt content greater than 500 parts per million shall not be used.

d. No sod or seed shall be placed on soil which has been treated with soil sterilants or chemicals used for weed control until sufficient time has elapsed (14 days min.) to permit dissipation of phyto-toxic materials.

Note: Topsoil substitutes or amendments, as recommended by a qualified agronomist or soil scientist and approved by the appropriate approval authority, may be used in lieu of natural topsoil.

ii. Place topsoil (if required) and apply soil amendments as specified in 10.0 Vegetative Stabilization - Section I - Vegetative Stabilization Methods and Materials.

V. Topsoil Application

i. When topsoiling, maintain needed erosion and sediment control practices such as diversions, Grade Stabilization Structures, Earth Dikes, Slope Silt Fence and Sediment Traps and Basins.

ii. Grades on the areas to be topsoiled, which have been previously established, shall be maintained, albeit 4" - 8" higher in elevation.

iii. Topsoil shall be uniformly distributed in a 4" - 8" layer and lightly compacted to a minimum thickness of 4". Spreading shall be performed in such a manner that sodding or seeding can proceed with a minimum of additional soil preparation and tillage. any irregularities in the surface resulting from topsoiling or other operations shall be corrected in order to prevent the formation of depressions or water pockets.

iv. Topsoil shall not be placed while the topsoil or subsoil is in a frozen or muddy condition. when the subsoil is excessively wet or in a condition that may otherwise be detrimental to proper grading and seedbed preparation.

VI. Alternative for Permanent Seeding - Instead of applying the full amounts of lime and commercial fertilizer, composted sludge and amendments may be applied as specified below:

i. Composted Sludge Material for use as a soil conditioner for sites having disturbed areas over 5 acres shall be tested to prescribe amendments and for sites having disturbed areas under 5 acres shall conform to the following requirements.

a. Composted sludge shall be supplied by, or originate from, a person or persons that are permitted (at the time of acquisition of the compost) bt the Maryland Department of the Environment under COMAR 26.04.06.

b. Composted sludge shall contain at least 1 percent nitrogen, 1.5 percent phosphorus, and 0.2 percent potassium and have a Ph of 7.0 to 8.0. If compost does not meet these requirements, the appropriate constituents must be added to meet the requirements prior to use.

c. Composted sludge shall be applied at a rate of 1 ton/1,000 square feet.

iv. Composted sludge shall be amended with a potassium fertilizer applied at the rate of 4 lb/1,000 square feet, and 1/3 the normal lime application rate.

STABILIZED CONSTRUCTION ENTRANCE

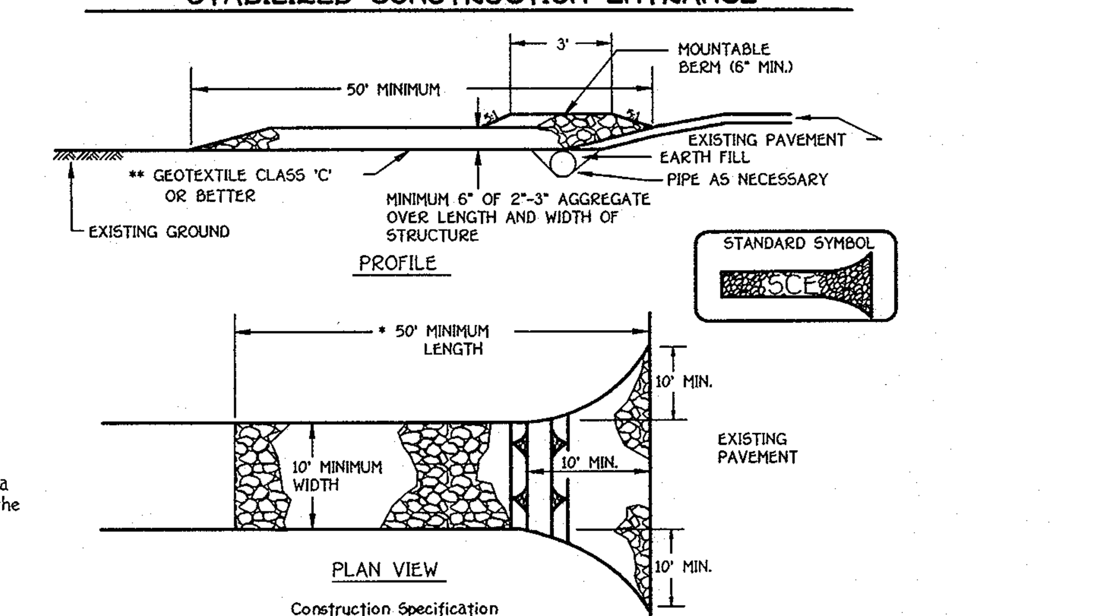

Construction Specification

1. Length - minimum of 50' (*30' for single residence lot).
2. Width - 10' minimum, should be flared at the existing road to provide a turning radius.
3. Geotextile fabric (filter cloth) shall be placed over the existing ground prior to placing stone. **The plan approval authority may not require single family residences to use geotextile.
4. Stone - crushed aggregate (2" to 3") or reclaimed or recycled concrete equivalent shall be placed at least 6" deep over the length and width of the entrance.
5. Surface Water - all surface water flowing to or diverted toward construction entrances shall be piped through the entrance, maintaining positive drainage. Pipe installed through the stabilized construction entrance shall be protected with a mountable berm with 5:1 slopes and a minimum of 6" of stone over the pipe. Pipe has to be sized according to the drainage. When the SCE is located at a high spot and has no drainage to convey a pipe will not be necessary. Pipe should be sized according to the amount of runoff to be conveyed. A 6" minimum will be required.
6. Location - A stabilized construction entrance shall be located at every point where construction traffic enters or leaves a construction site. Vehicles leaving the site must travel over the entire length of the stabilized construction entrance.

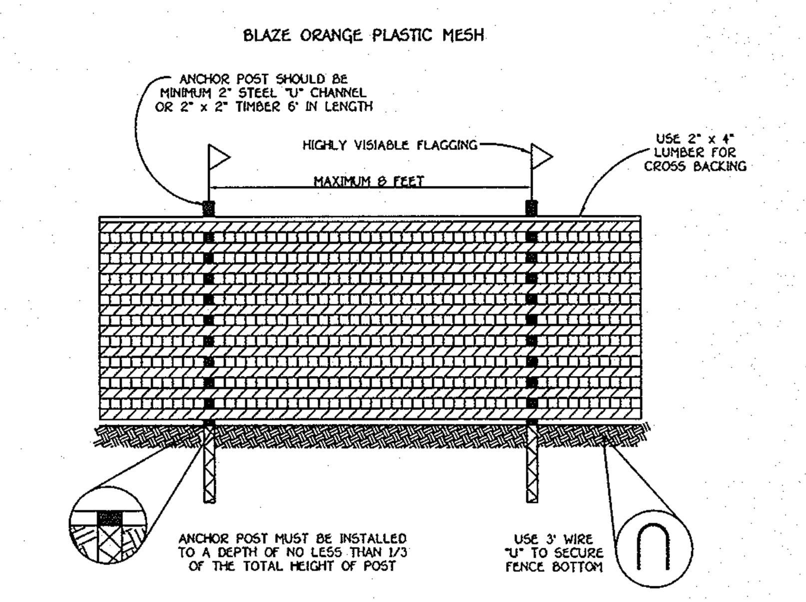

NOTES:
1. FOREST PROTECTION DEVICE ONLY.
2. RETENTION AREA WILL BE SET AS PART OF THE REVIEW PROCESS.
3. BOUNDARIES OF RETENTION AREA SHOULD BE STAKED AND FLAGGED PRIOR TO INSTALLING DEVICE.
4. ROOT DAMAGE SHOULD BE AVOIDED.
5. PROTECTIVE SIGNAGE MAY ALSO BE USED.
6. DEVICE SHOULD BE MAINTAINED THROUGHOUT CONSTRUCTION.

TREE PROTECTION DETAIL

NOT TO SCALE

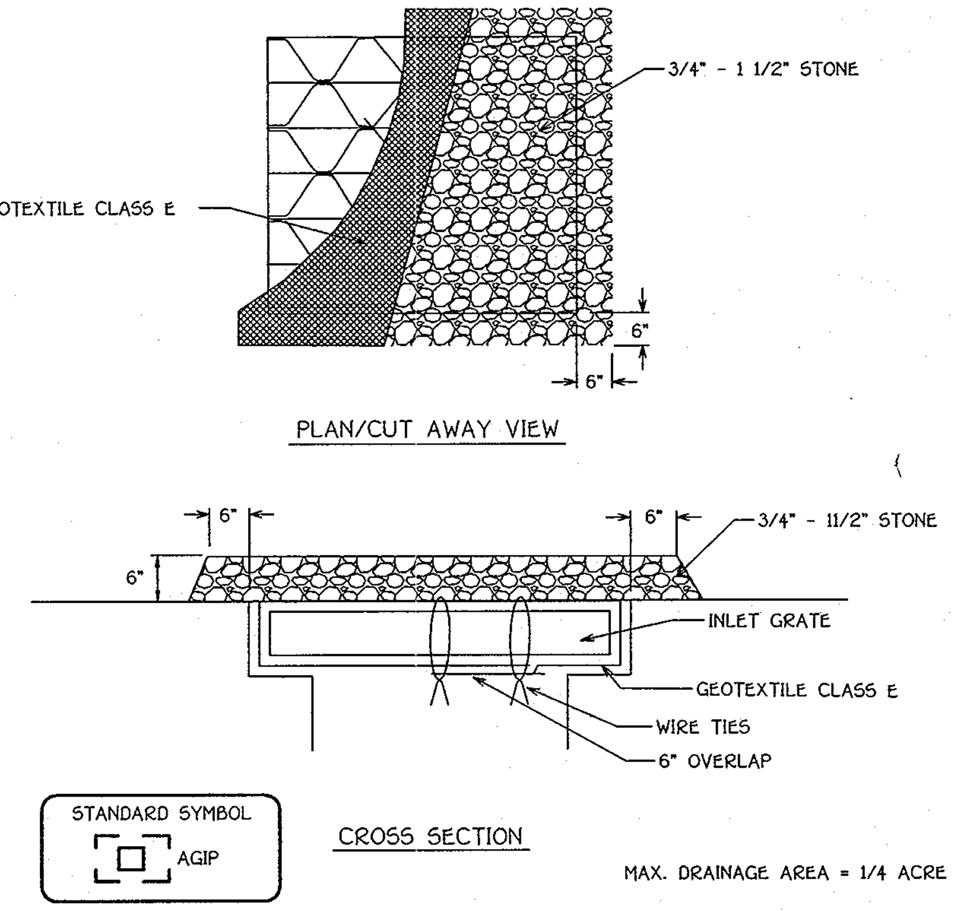

MAX. DRAINAGE AREA = 1/4 ACRE

Construction Specifications

1. Lift grate and wrap with Geotextile Class E to completely cover all openings, then set grate back in place.
2. Place 3/4" to 11/2" stone, 4"-6" thick on the grate to secure the fabric and provide additional filtration.

AT GRADE INLET PROTECTION

SUPER SILT FENCE

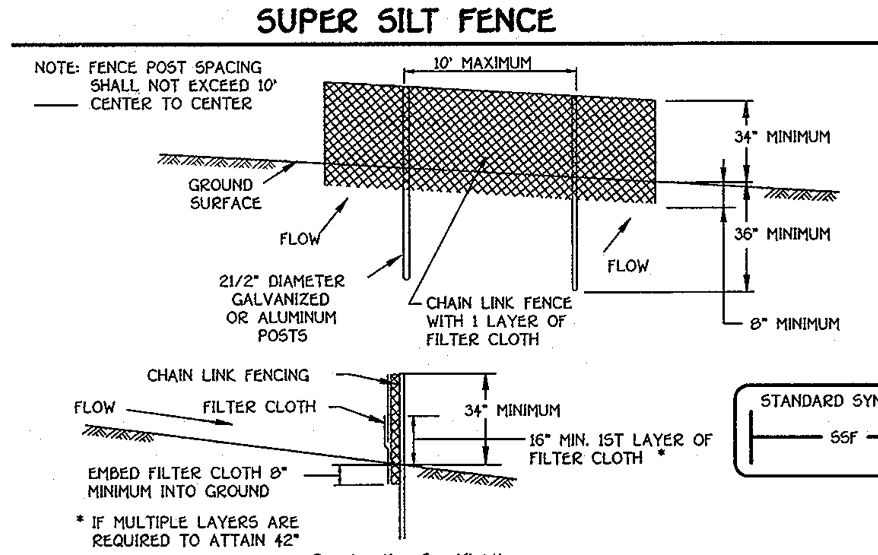

Construction Specifications

1. Fencing shall be 42" in height and constructed in accordance with the latest Maryland State Highway Details for Chain Link Fencing. The specification for a 6' fence shall be used, substituting 42" fabric and 6' length posts.
2. Chain link fence shall be fastened securely to the fence posts with wire ties. The lower tension wire, brace and truss rods, drive anchors and post caps are not required except on the ends of the fence.
3. Filter cloth shall be fastened securely to the chain link fence with ties spaced every 24" at the top and mid section.
4. Filter cloth shall be embedded a minimum of 8" into the ground.
5. When two sections of filter cloth adjoin each other, they shall be overlapped by 6" and folded.
6. Maintenance shall be performed as needed and silt buildups removed when "bulges" develop in the silt fence, or when silt reaches 50% of fence height
7. Filter cloth shall be fastened securely to each fence post with wire ties or staples at top and mid section and shall meet the following requirements for Geotextile Class F:

Tensile Strength	50 lbs/in (min.)	Test: MSMT 509
Tensile Modulus	20 lbs/in (min.)	Test: MSMT 509
Flow Rate	0.3 gal/ft /minute (max.)	Test: MSMT 322
Filtering Efficiency	75% (min.)	Test: MSMT 322

Design Criteria

Slope	Slope Steepness	Slope Length (maximum)	Silt Fence Length (maximum)
0 - 10%	0 - 10:1	Unlimited	Unlimited
10 - 20%	10:1 - 5:1	200 feet	1,500 feet
20 - 33%	5:1 - 3:1	100 feet	1,000 feet
33 - 50%	3:1 - 2:1	100 feet	500 feet
50% +	2:1 +	50 feet	250 feet

CURB INLET PROTECTION WITH SUPER SILT FENCE

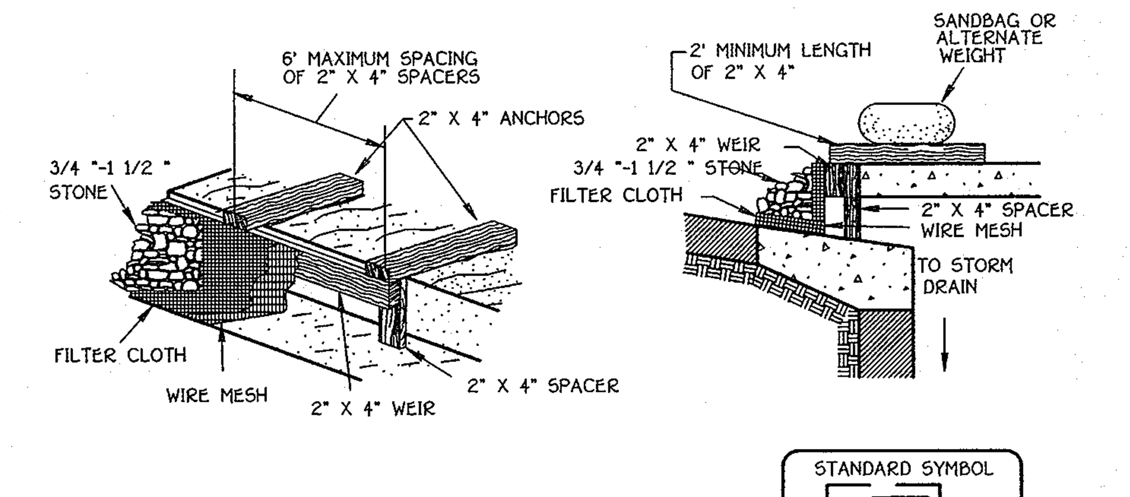

MAX. DRAINAGE AREA = 1/4 ACRE

Construction Specifications

1. Attach a continuous piece of wire mesh (30" minimum width by throat length plus 4') to the 2" x 4" weir (measuring throat length plus 2') as shown on the standard drawing.
2. Place a continuous piece of Geotextile Class E the same dimensions as the wire mesh over the wire mesh and securely attach it to the 2" x 4" weir.
3. Securely nail the 2" X 4" weir to a 9" long vertical spacer to be located between the weir and the inlet face (max. 4' apart).
4. Place the assembly against the inlet throat and nail (minimum 2' lengths of 2" x 4" to the top of the weir at spacer locations). These 2" x 4" anchors shall extend across the inlet top and be held in place by sandbags or alternate weight.
5. The assembly shall be placed so that the end spacers are a minimum 1' beyond both ends of the throat opening.
6. Form the 1/2 " x 1/2 " wire mesh and the geotextile fabric to the concrete gutter and against the face of the curb on both sides of the inlet. Place clean 3/4 " x 1 1/2 " stone over the wire mesh and geotextile in such a manner to prevent water from entering the inlet under or around the geotextile.
7. This type of protection must be inspected frequently and the filter cloth and stone replaced when clogged with sediment.
8. Assure that storm flow does not bypass the inlet by installing a temporary earth or asphalt dike to direct the flow to the inlet.

CURB INLET PROTECTION (COG OR COS INLETS)

STATE OF MARYLAND CHARLES J. CROUSE, SR. PROFESSIONAL ENGINEER

SEDIMENT CONTROL NOTES

1) A MINIMUM OF 48 HOURS NOTICE MUST BE GIVEN TO THE HOWARD COUNTY DEPARTMENT OF INSPECTIONS, LISCENSES AND PERMITS, SEDIMENT CONTROL DIVISION PRIOR TO THE START OF ANY CONSTRUCTION (313-1855).

2) ALL VEGETATIVE AND STRUCTURAL PRACTICES ARE TO BE INSTALLED ACCORDING TO THE PROVISIONS OF THIS PLAN AND ARE TO BE IN CONFORMANCE WITH THE MOST CURRENT MARYLAND STANDARDS AND SPECIFICATIONS FOR SOIL EROSION AND SEDIMENT CONTROL AND REVISIONS THERETO.

3) FOLLOWING INITIAL SOIL DISTURBANCE OR RE-DISTURBANCE, PERMANENT OR TEMPORARY STABILIZATION SHALL BE COMPLETED WITHIN:
a) 7 CALENDAR DAYS FOR ALL PERIMETER SEDIMENT CONTROL STRUCTURES, DIKES, PERIMETER SLOPES AND ALL SLOPES STEEPER THAN 3:1,
b) 14 DAYS AS TO ALL OTHER DISTURBED OR GRADED AREAS ON THE PROJECT SITE.

4) ALL SEDIMENT TRAPS/BASINS SHOWN MUST BE FENCED AND WARNING SIGNS POSTED AROUND THEIR PERIMETER IN ACCORDANCE WITH VOL. 1, CHAPTER 12, OF THE HOWARD COUNTY DESIGN MANUAL, STORM DRAINAGE.

5) ALL DISTURBED AREAS MUST BE STABILIZED WITHIN THE TIME PERIOD SPECIFIED ABOVE IN ACCORDANCE WITH THE 1994 MARYLAND STANDARDS AND SPECIFICATIONS FOR SOIL EROSION AND SEDIMENT CONTROL FOR PERMANENT SEEDING (SEC. 51), SOD (SEC. 54), TEMPORARY SEEDING (SEC. 50), AND MULCHING (SEC. 52). TEMPORARY STABILIZATION WITH MULCH ALONE CAN ONLY BE DONE WHEN RECOMMENDED SEEDING DATES DO NOT ALLOW FOR PROPER GERMINATION AND ESTABLISHMENT OF GRASSES.

6) ALL SEDIMENT CONTROL STRUCTURES ARE TO REMAIN IN PLACE AND ARE TO BE MAINTAINED IN OPERATIVE CONDITION UNTIL PERMISSION FOR THEIR REMOVAL HAS BEEN OBTAINED FROM THE HOWARD COUNTY SEDIMENT CONTROL INSPECTOR.

7) SITE ANALYSIS:

TOTAL AREA OF SITE	15.64 ACRES
AREA DISTURBED	10.90 ACRES
AREA TO BE ROOFED OR PAVED	7.21 ACRES
AREA TO BE VEGETATIVELY STABILIZED	3.69 ACRES
TOTAL CUT	39900 CU.YDS.
TOTAL FILL	39900 CU.YDS.
ONSITE BORROW AREA LOCATION	N/A CU.YDS.

8) ANY SEDIMENT CONTROL PRACTICE WHICH IS DISTURBED BY GRADING ACTIVITY FOR PLACEMENT OF UTILITIES MUST BE REPAIRED ON THE SAME DAY OF DISTURBANCE.

9) ADDITIONAL SEDIMENT CONTROLS MUST BE PROVIDED, IF DEEMED NECESSARY BY THE HOWARD COUNTY SEDIMENT CONTROL INSPECTOR.

10) ON ALL SITES WITH DISTURBED AREAS IN EXCESS OF 2 ACRES, APPROVAL OF THE INSPECTION AGENCY SHALL BE REQUESTED UPON COMPLETION OF INSTALLATION OF PERIMETER EROSION AND SEDIMENT CONTROLS, BUT BEFORE PROCEEDING WITH ANY OTHER EARTH DISTURBANCE OR GRADING. OTHER BUILDING OR GRADING INSPECTION APPROVALS MAY NOT BE AUTHORIZED UNTIL THIS INITIAL APPROVAL BY THE INSPECTION AGENCY IS MADE.

11) TRENCHES FOR THE CONSTRUCTION OF UTILITIES IS LIMITED TO THREE PIPE LENGTHS OR THAT WHICH SHALL BE BACK-FILLED AND STABILIZED WITHIN ONE WORKING DAY, WHICHEVER IS SHORTER.

FISHER, COLLINS & CARTER, INC.
CIVIL ENGINEERING CONSULTANTS & LAND SURVEYORS
CENTENNIAL SQUARE OFFICE PARK - 10272 BALTIMORE NATIONAL PIKE
ELLICOTT CITY, MARYLAND 21042
(410) 461 - 2855

DATE	DESCRIPTION
3/10/08	⚠ REVISED TITLE BLOCK

REVISION BLOCK

ENGINEER'S CERTIFICATE

"I certify that this plan for sediment and erosion control represents a practical and workable plan based on my personal knowledge of the site conditions and that it was prepared in accordance with the requirements of the Howard Soil Conservation District."

Signature of Engineer — Date 4/1/07

DEVELOPER'S CERTIFICATE

"I/We certify that all development and construction will be done according to this plan for sediment and erosion control, and that all responsible personnel involved in the construction project will have a Certificate of Attendance at a Department of the Environment Approved Training Program for the Control of Sediment and Erosion before beginning the project. I also authorize periodic on-site inspection by the Howard Soil Conservation District."

Signature of Developer — Date 3/29/07
C. PATRICK CREANEY

Reviewed for HOWARD SCD and meets Technical Requirements.

U.S.D.A.-Natural Resources Conservation Service — Date 5/23/07

This development plan is approved for soil erosion and sediment control by the HOWARD SOIL CONSERVATION DISTRICT.

Howard SCD — Date 5/23/07

OWNER/DEVELOPER

CSG PATAPSCO, LLC
5024 CAMPBELL BOULEVARD, SUITE G
WHITE MARSH, MARYLAND 21236
410-933-2091

APPROVED: DEPARTMENT OF PLANNING AND ZONING

Director - Department of Planning and Zoning — Date 6/5/07

Chief, Division of Land Development — Date 6/5/07

Chief, Development Engineering Division J.P. — Date 5/30/07

SUBDIVISION			SECTION/AREA		PARCEL NO.
PATAPSCO VALLEY BUSINESS CENTER			N/A		C-1, C-2 AND C-3
PLAT NO. 18979 & 18980 F-07-144	BLOCK NO. 14, 15, 20, 21	ZONE M-2	TAX MAP 38	ELEC. DIST. FIRST	CENSUS TR. 601201
WATER CODE A04	PLAT NO. 20000 & 20001 F-08-138		SEWER CODE 2150500, 2150501, 2150300		

SEDIMENT CONTROL NOTES AND DETAILS

PATAPSCO VALLEY BUSINESS CENTER
PATAPSCO VALLEY OFFICE CAMPUS
PARCELS C-1, C-2 AND C-3
ZONED: M-2
TAX MAP No. 38 PARCEL No. 285 GRID No. 14,15,20,21
FIRST ELECTION DISTRICT HOWARD COUNTY, MARYLAND
SCALE: AS SHOWN
DATE: MARCH 15, 2007
SHEET 16 OF 21
SDP-07-028

I:\06003\dwg\SITE DEVELOPMENT PLAN\06003-6001 SED CON NOTES.dwg, SED CON NOTES & DETAILS, 3/16/2007 8:25:19 AM, 1:1

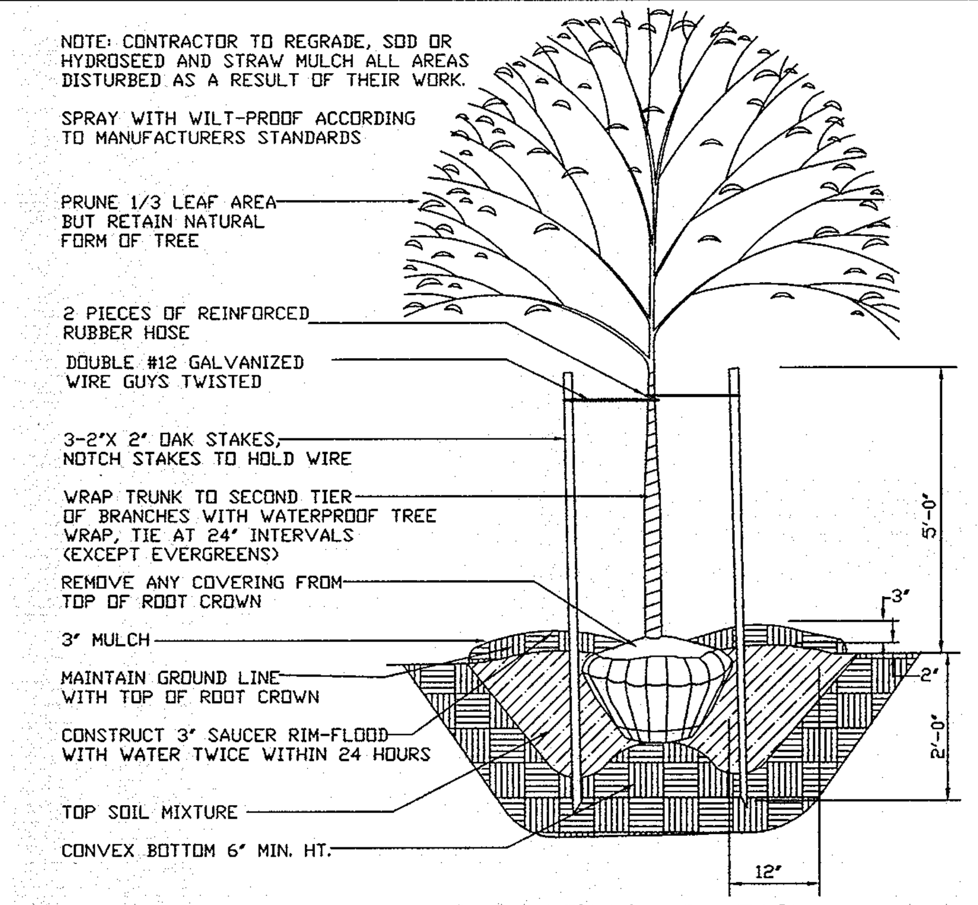

TREE PLANTING DETAIL

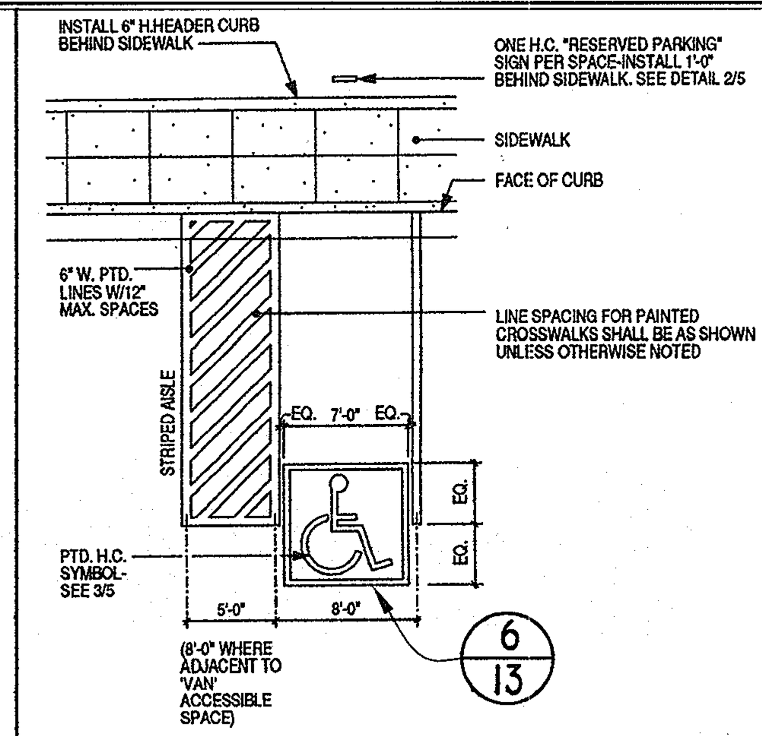

ACCESSIBLE SPACE LAYOUT

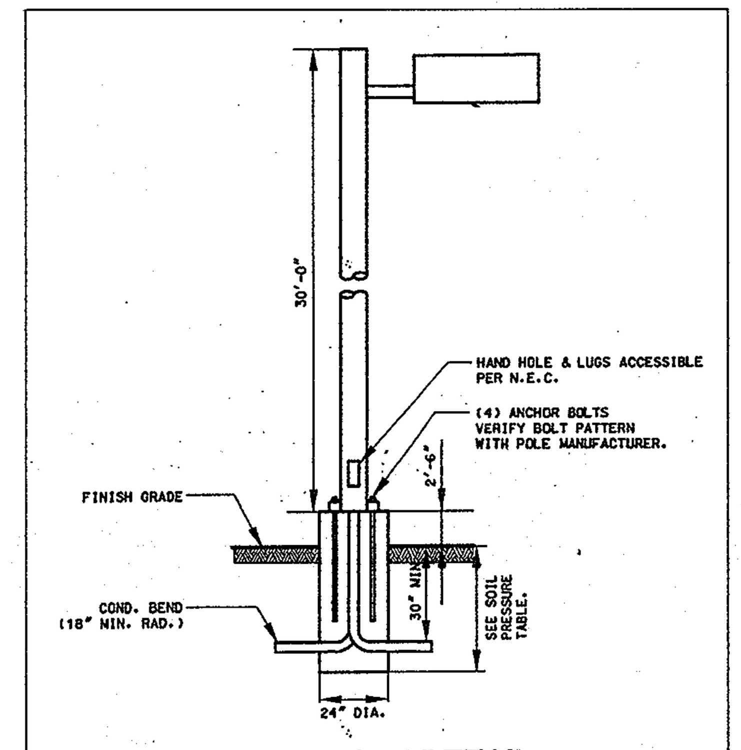

LIGHT POLE DETAIL

N.T.S.

LIGHTING FIXTURE SCHEDULE

TYPE	DESCRIPTION	LAMP	SHIELDING
B1/13	POLE MOUNTED FIXTURE MOUNTED ON 30'-0" POLE.	250 WATT METAL HALIDE (40,000) LUMENS	FULL CUTOFF TYPE IV SC DISTRIBUTION
B2/13	POLE MOUNTED FIXTURE MOUNTED ON 30'-0" POLE.	250 WATT METAL HALIDE (40,000) LUMENS	FULL CUTOFF TYPE III DISTRIBUTION
B3/13	POLE MOUNTED FIXTURE MOUNTED ON 30'-0" POLE.	250 WATT METAL HALIDE (40,000) LUMENS	FULL CUTOFF TYPE II DISTRIBUTION

5/13 HANDICAP PARKING SIGN DETAIL

NOT TO SCALE

GENERAL NOTES:

1. SIGNS SHALL MEET DESIGN STANDARDS OF THE FEDERAL HIGHWAY ADMINISTRATION AND CONFORM TO THE STATE OF MARYLAND STANDARD HIGHWAY SIGN BOOKLET DETAIL R7-8.
2. ONE SIGN IS REQUIRED PER SPACE PLACED AS SHOWN ON SITE IMPROVEMENT PLAN.
3. SIGNS SHALL BE POLE MOUNTED WITH HOT DIPPED GALVANIZED COUNTY APPROVED PERFORATED CHANNEL POSTS W/TOP OF SIGNS 9'-1" ABOVE FINISHED GRADE OR AS INDICATED ON SITE DRAWINGS.
4. SIGN SHALL BE ATTACHED TO FLANGED SIDE OF POST. POST SHALL EXTEND INTO GROUND 2'-6" MIN.
5. COLORS: LEGEND AND BORDER-GREEN
SYMBOL-WHITE ON BLUE BACKGROUND
BACKGROUND-WHITE
6. CONTRACTOR SHALL COORDINATE ARROW DIRECTION WITH LOCATION OF ADJACENT AISLE.

7/13 SOLID WASTE SERVICE PAD

NOT TO SCALE

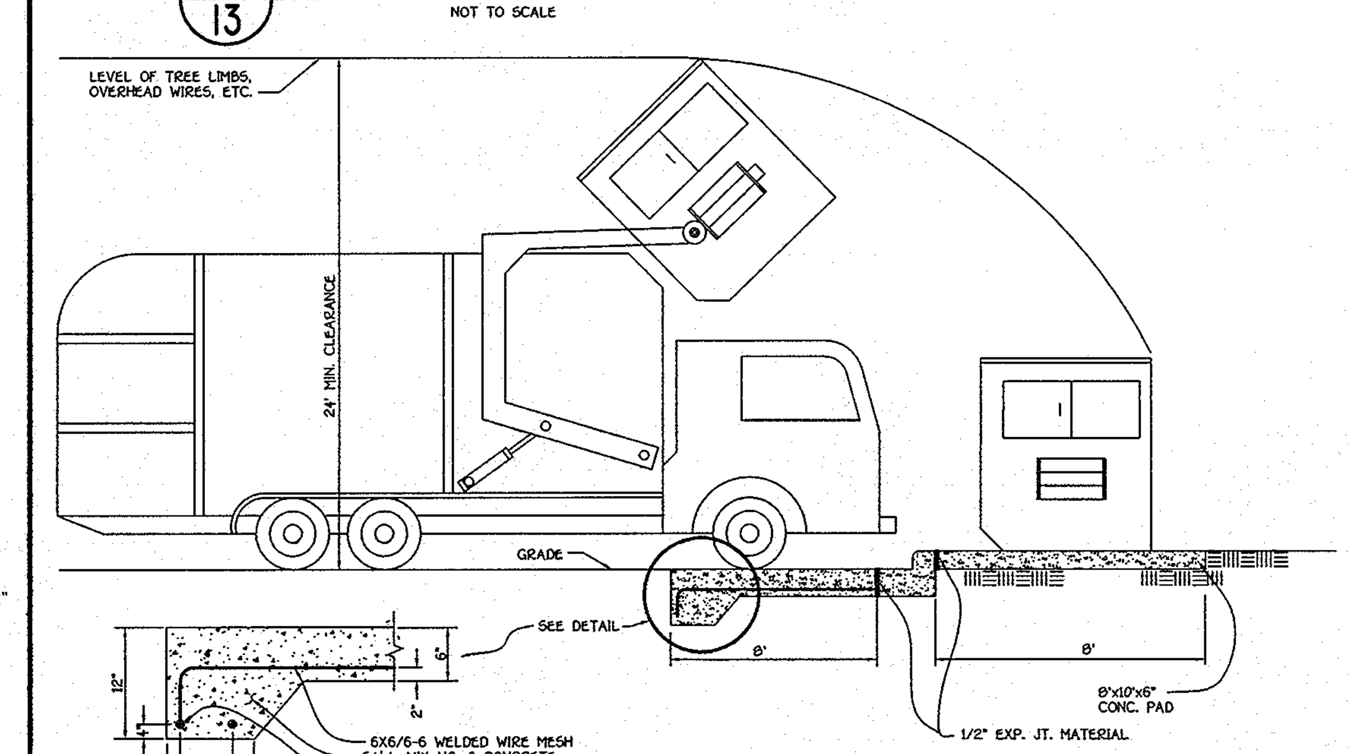

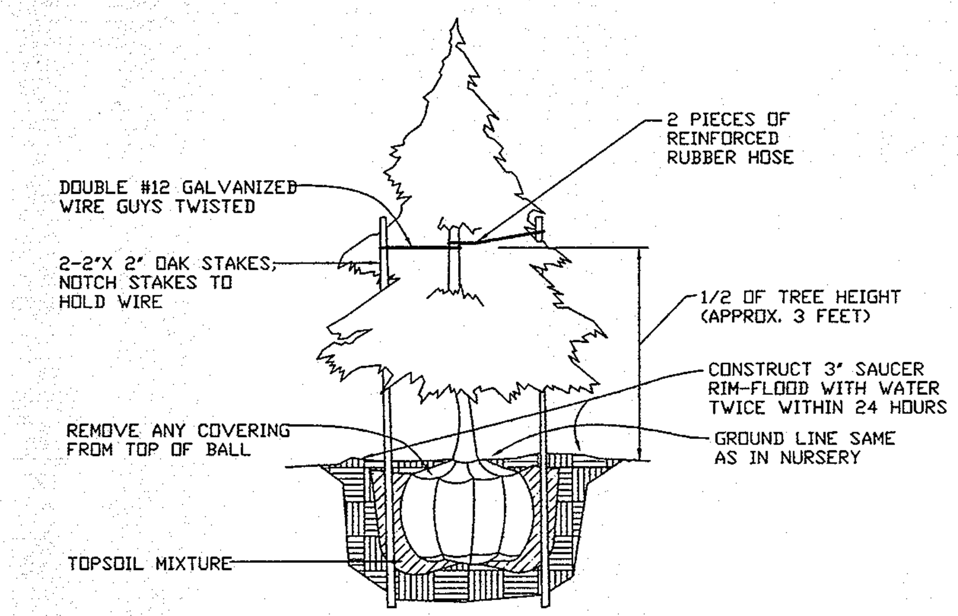

EVERGREEN PLANTING DETAIL

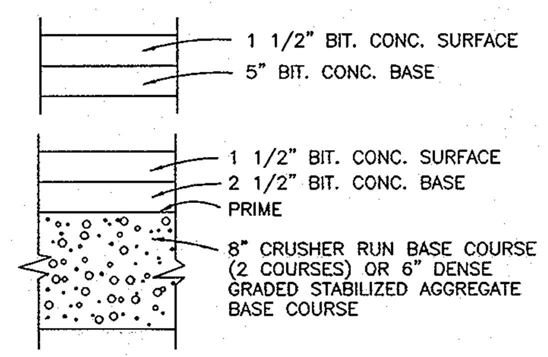

PAVING SECTION P-2

NO SCALE

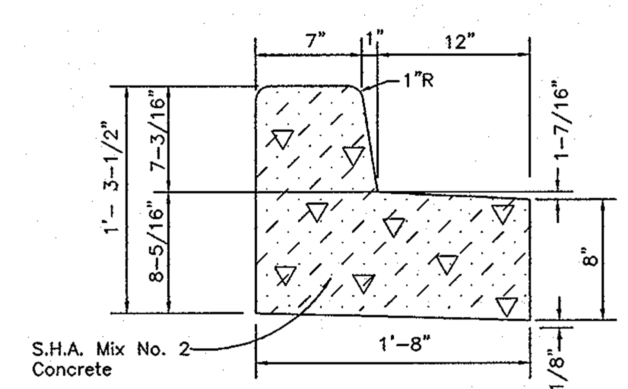

3/13 *REVERSE 7" COMB. CONC. CURB AND GUTTER*

NO SCALE

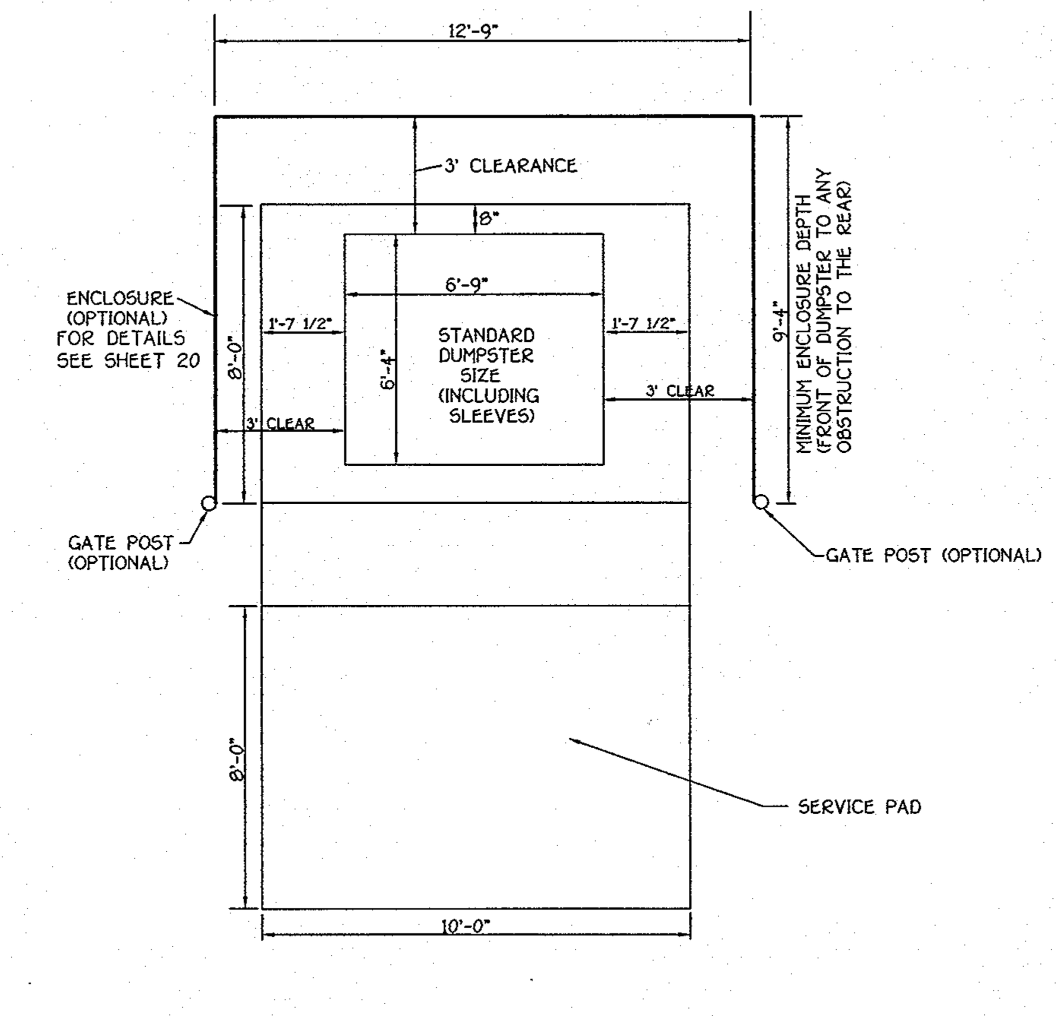

8/13 SOLID WASTE OPTIONAL CONTAINER ENCLOSURE

NOT TO SCALE

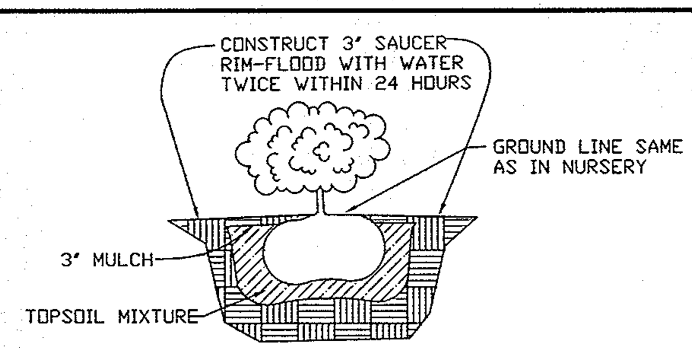

SHRUB PLANTING DETAIL

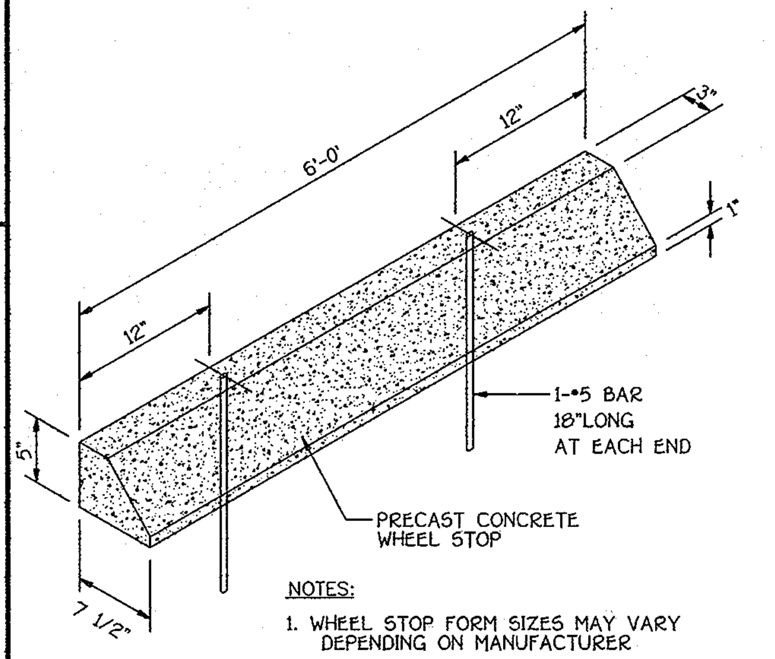

NOTES:

1. WHEEL STOP FORM SIZES MAY VARY DEPENDING ON MANUFACTURER
2. CONCRETE STRENGTH SHALL BE 4,000 P.S.I. AIR ENTRAINED

1/13 WHEEL STOP DETAIL

NO SCALE

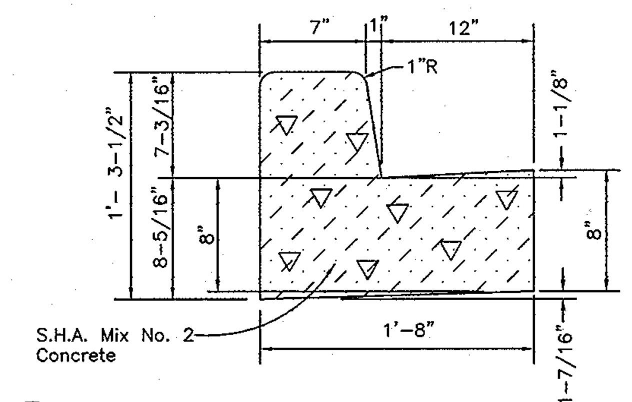

4/13 *STANDARD 7" COMB. CONC. CURB AND GUTTER*

NO SCALE

CONCRETE SIDEWALK DETAIL

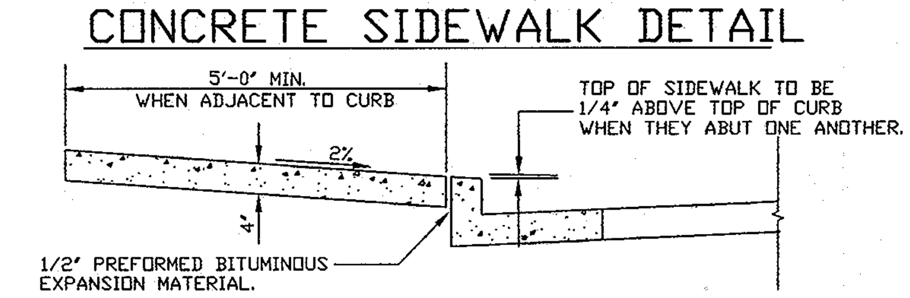

NOTES:

1. SIDEWALK TO BE SCRIBED IN 5'-0" MAXIMUM SQUARES.
2. EXPANSION JOINTS ACROSS THE SIDEWALK NOT TO MORE THAN 15' APART.
3. 1/2" PREFORMED BITUMINOUS EXPANSION MATERIAL IN EXPANSION JOINTS TO BE KEPT 1/4" BELOW SURFACE OF SIDEWALK.
4. CONCRETE TO BE MIX NO. 2.
5. WHEN SIDEWALK ABUTS CURB, WALK SHALL BE 1/4" ABOVE CURB WITH 1/2" PREFORMED BITUMINOUS EXPANSION MATERIAL BETWEEN SIDEWALK AND CURB.
6. ON LONGITUDINAL SIDEWALK GRADES OF 5% OR GREATER, A CONCRETE HEADER, 6" THICK AND 6" DEEP BELOW THE NORMAL 4" SIDEWLAK THICKNESS SHALL BE CONSTRUCTED FOR THE FULL WIDTH OF THE SIDEWALK AT INTERVALS OF 48 FEET. THE HEADERS SHALL BE PLACED AT EXPANSION JOINT LOCATIONS AND SHALL BE MONOLITHIC WITH THE SIDEWALK.
7. SIDEWALK WIDTH ADJACENT TO CURB SHALL BE 5'-0" MIN.
8. SIDEWALK LOCATED 2' OR MORE FROM CURB MAY BE 4'-0" IN WIDTH WITH A 5' X 5' PAVED SECTION PLACED 200' APART.

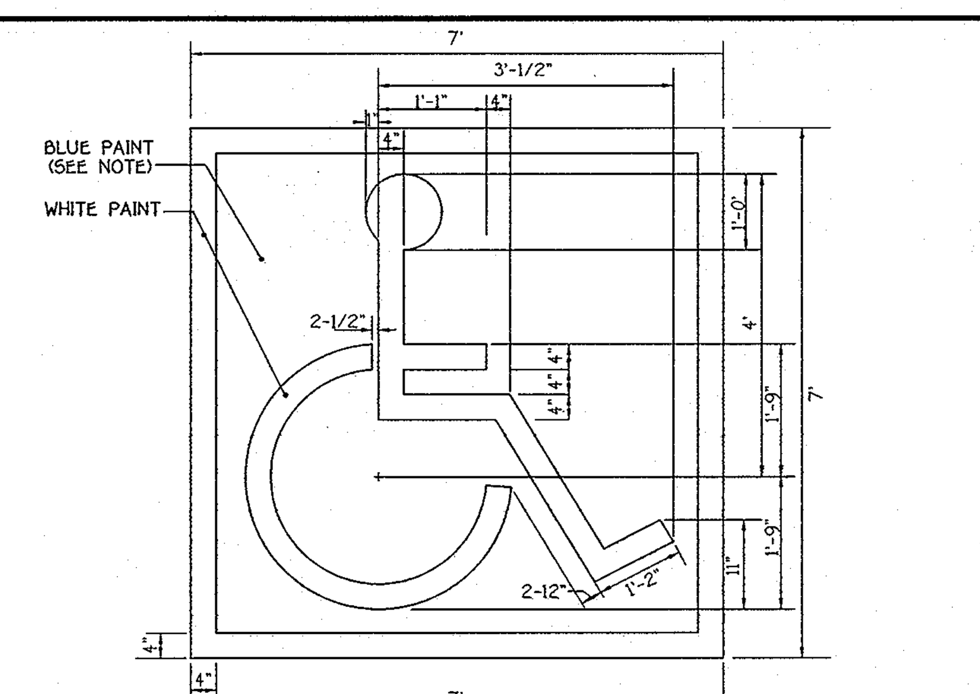

NOTE:
SYMBOL IS REQUIRED TO CONTRAST WITH BACKGROUND (WHITE ON BLUE: COLOR NO. 105090 IN FED. STANDARD 5952-DOUBLE COAT TYP.)

6/13 HANDICAP SPACE STENCIL LAYOUT

SCALE: 1" = 20'

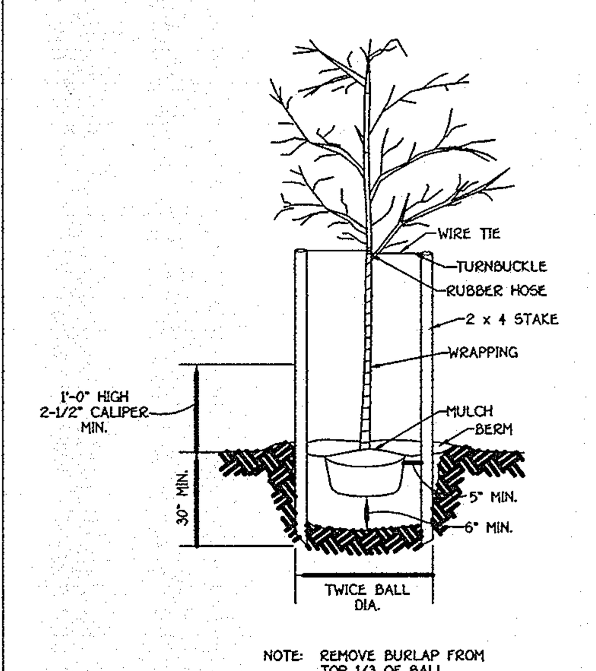

NOTE: REMOVE BURLAP FROM TOP 1/3 OF BALL

TREE PLANTING
NOT TO SCALE

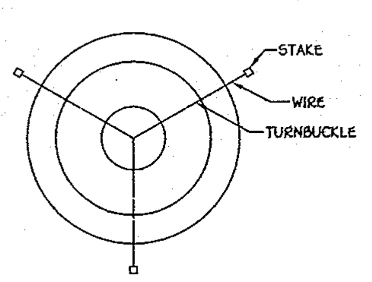

STAKING DETAIL
NOT TO SCALE

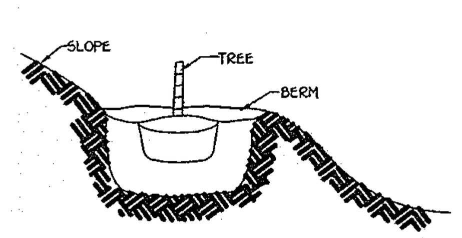

GRADING FOR PLANTING ON SLOPES
NOT TO SCALE

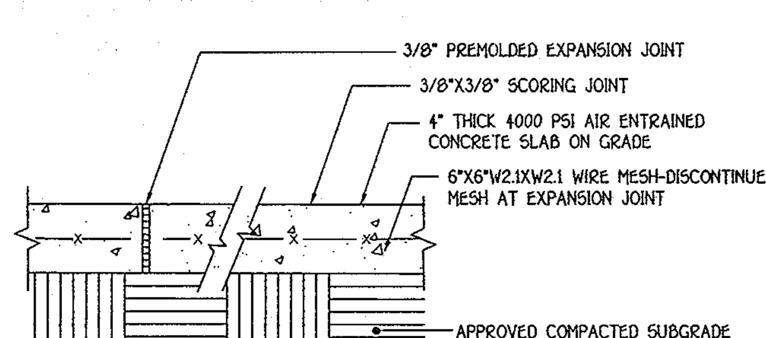

NOTE: INSTALL EXPANSION JOINTS AT MAX. 15'-0" O.C. AND INSTALL SCORING JOINTS AT MAX. 5'-0" O.C.

SLOPE ACROSS SIDEWALK SHALL BE MIN. 1/8"/FT.

2/13 CONCRETE WALK DETAIL

HOWARD COUNTY DETAIL NOTED IS FOR REFERENCE ONLY
SCALE: 1 1/2"=1'-0"

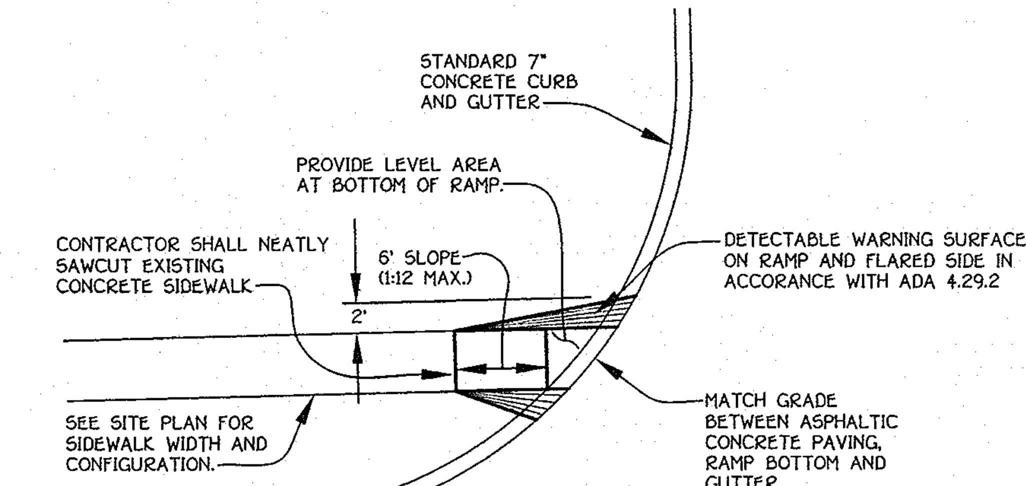

9/13 HANDICAP RAMP DETAIL

NO SCALE

FISHER, COLLINS & CARTER, INC.
CIVIL ENGINEERING CONSULTANTS & LAND SURVEYORS
CENTENNIAL SQUARE OFFICE PARK - 10272 BALTIMORE NATIONAL PIKE
ELLICOTT CITY, MARYLAND 21042
(410) 461 - 2855

DATE	DESCRIPTION
3.10.08	1 Revise Title Block.

REVISION BLOCK

OWNER/DEVELOPER
CSG PATAPSCO, LLC
5024 CAMPBELL BOULEVARD, SUITE G
WHITE MARSH, MARYLAND 21236
410-933-2091

STATE OF MARYLAND · CHARLES A. CRISCO · No. 13624 · REGISTERED · PROFESSIONAL ENGINEER

APPROVED: DEPARTMENT OF PLANNING AND ZONING

Director - Department of Planning and Zoning	Date 6/5/07
Chief, Division of Land Development	Date 6/5/07
Chief, Development Engineering Division J.P.	Date 5/30/07

SUBDIVISION			SECTION/AREA		PARCEL NO.
PATAPSCO VALLEY BUSINESS CENTER			N/A		C-1, C-2 & C-3
PLAT NO. 18979& 18980 F-07-144	BLOCK NO. 14, 15, 20, 21	ZONE M-2	TAX MAP 38	ELEC. DIST. FIRST	CENSUS TR. 601201
WATER CODE A04	PLAT NO. 20000 & 20001 F-08-138		SEWER CODE 2150500, 2150501, 2150300		

DETAILS

PATAPSCO VALLEY BUSINESS CENTER
PATAPSCO VALLEY OFFICE CAMPUS
PARCELS C-1, C-2 AND C-3 1
ZONED: M-2
TAX MAP No. 38 PARCEL No. 285 GRID No. 14,15,20,21
FIRST ELECTION DISTRICT HOWARD COUNTY, MARYLAND
SCALE: AS SHOWN
DATE: MARCH 15, 2007
SHEET 13 OF 21
SDP-07-028

I:\06003\dwg\SITE DEVELOPMENT PLAN\06003-6001 DETAILS.dwg, DETAILS, 3/16/2007 8:21:24 AM, 1:1

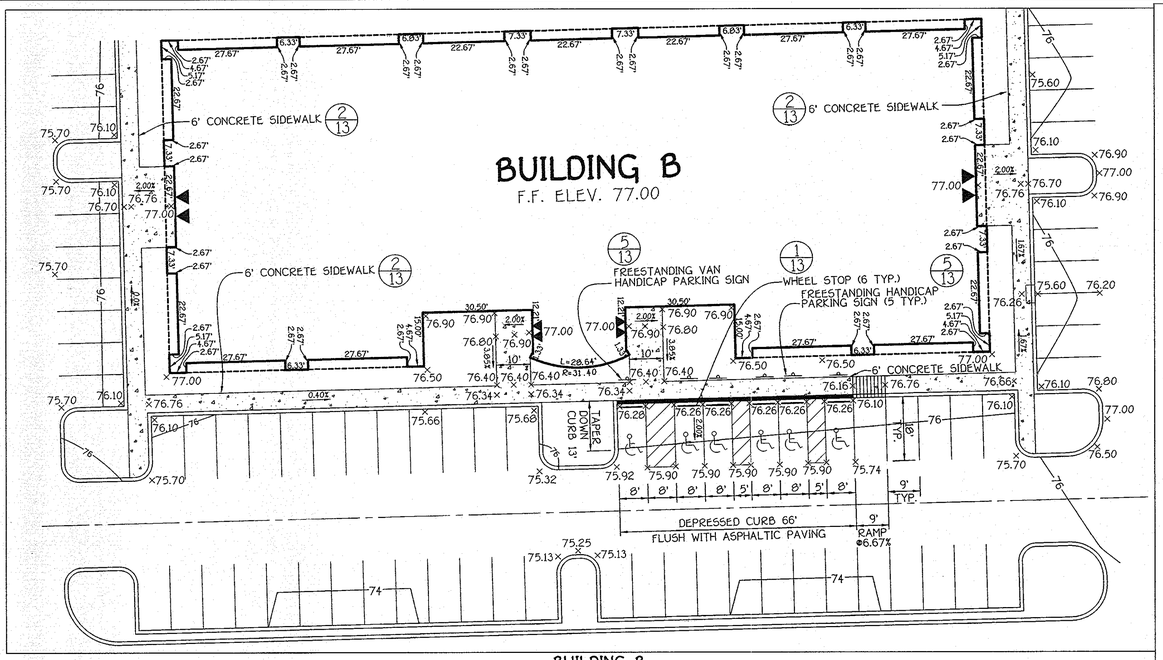

BUILDING B
HANDICAP RAMP DETAIL
SCALE: 1" = 20'

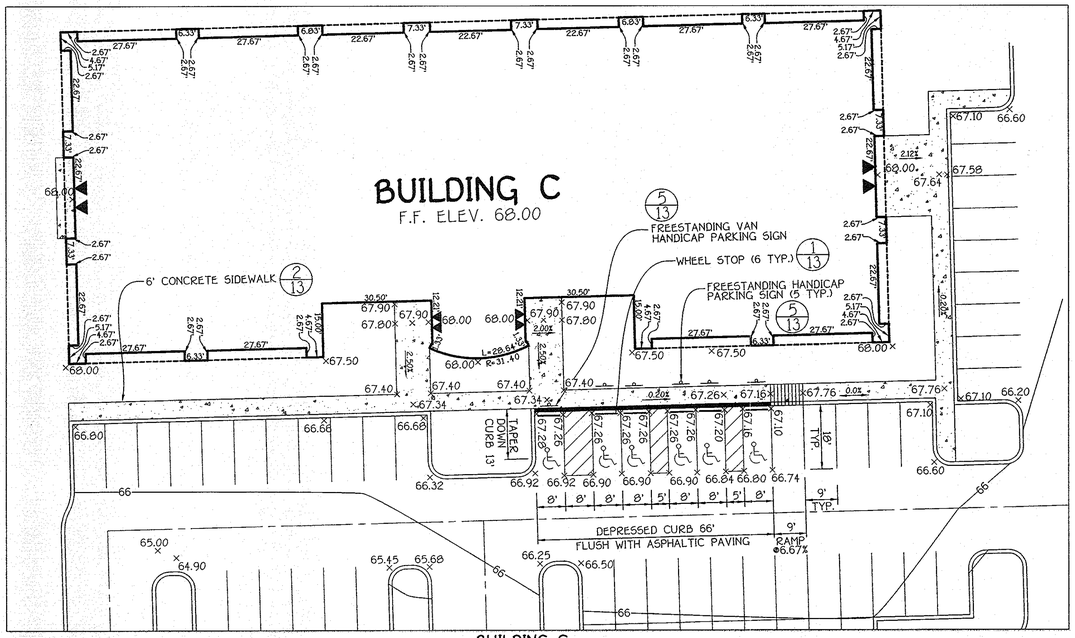

BUILDING C
HANDICAP RAMP DETAIL
SCALE: 1" = 20'

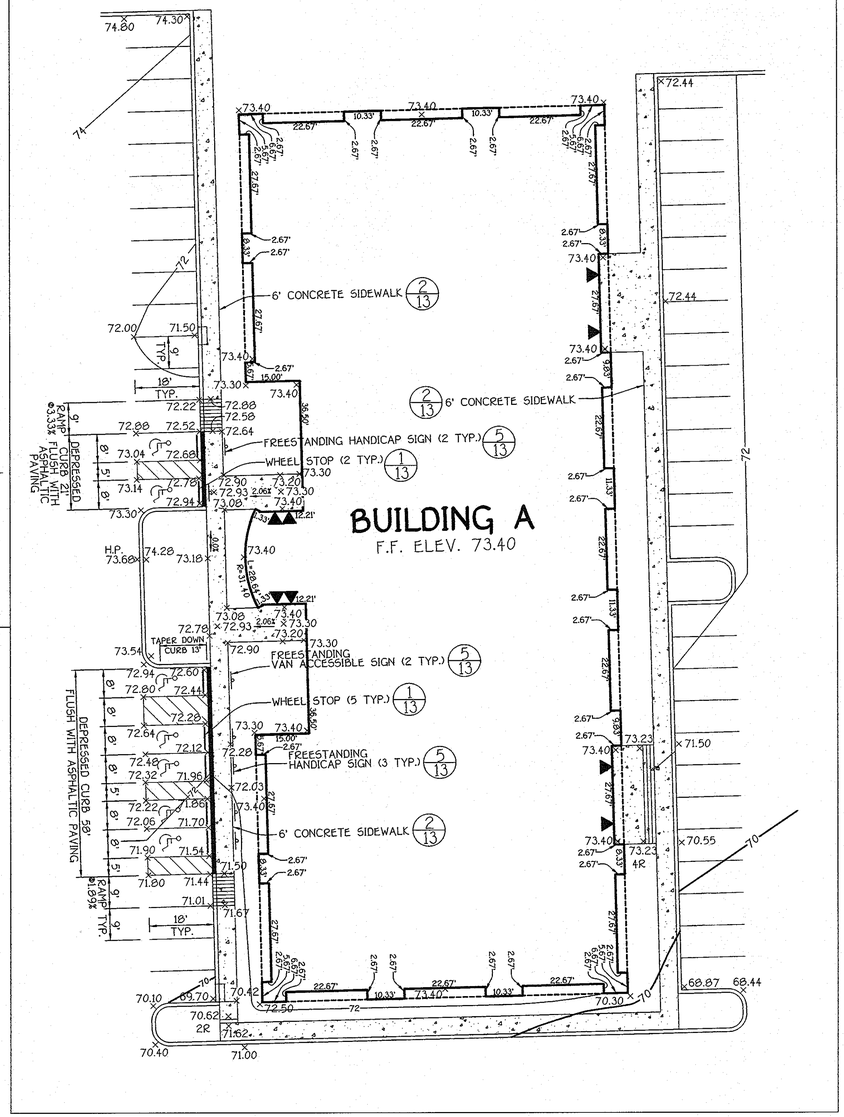

BUILDING A
HANDICAP RAMP DETAIL
SCALE: 1" = 20'

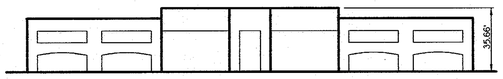

BUILDING A – FRONT ELEVATION
SCALE: 1" = 40'

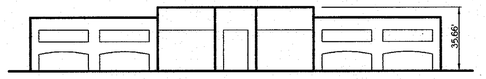

BUILDING B & C – FRONT ELEVATION
SCALE: 1" = 40'

STATE OF MARYLAND
ROBERT E. CARTER, III
No. 10920
REGISTERED PROFESSIONAL ENGINEER

FISHER, COLLINS & CARTER, INC.
CIVIL ENGINEERING CONSULTANTS & LAND SURVEYORS
CENTENNIAL SQUARE OFFICE PARK - 10272 BALTIMORE NATIONAL PIKE
ELLICOTT CITY, MARYLAND 21042
(410) 461 - 2855

DATE	DESCRIPTION
3-10-08	⚠1 Revise Title Block.

REVISION BLOCK

OWNER/DEVELOPER
CSG PATAPSCO, LLC
5024 CAMPBELL BOULEVARD, SUITE G
WHITE MARSH, MARYLAND 21236
410-933-2091

APPROVED: DEPARTMENT OF PLANNING AND ZONING

Director - Department of Planning and Zoning — Date 6/5/07

Chief, Division of Land Development — Date 6/05/07

Chief, Development Engineering Division J.P. — Date 5/30/07

SUBDIVISION			SECTION/AREA	PARCEL NO.
PATAPSCO VALLEY BUSINESS CENTER			N/A	C-1, C-2 & C-3
PLAT NO.	BLOCK NO.	ZONE	TAX MAP	ELEC. DIST.	CENSUS TR.
18979 & 18980 F-07-144	14, 15, 20, 21	M-2	38	FIRST	601201
WATER CODE	PLAT NO. 20000 & 20001 F-08-138		SEWER CODE	
A04			2150500, 2150501, 2150300	

HANDICAP RAMP DETAILS AND SCHEMATIC BUILDING PROFILES

PATAPSCO VALLEY BUSINESS CENTER
PATAPSCO VALLEY OFFICE CAMPUS
PARCELS C-1, C-2 AND C-3 ⚠1
ZONED: M-2

TAX MAP No. 38 PARCEL No. 285 GRID No. 14,15,20,21
FIRST ELECTION DISTRICT HOWARD COUNTY, MARYLAND
SCALE: AS SHOWN
DATE: MARCH 15, 2007
SHEET 12 OF 21 SDP-07-028

I:\06003\dwg\SITE DEVELOPMENT PLAN\06003-0001 DETAILS.dwg, HC DETAILS, 3/16/2007 8:22:27 AM, 1:1

SHEET INDEX

SHEET NO	DESCRIPTION
1	TITLE SHEET
2	SITE DEVELOPMENT PLAN
3	SITE DEVELOPMENT PLAN
4	SEDIMENT CONTROL PLAN
5	SEDIMENT CONTROL PLAN
6	DRAINAGE AREA MAP AND SOILS MAP
7	DRAINAGE AREA MAP AND SOILS MAP
8	GEOMETRY PLAN
9	GEOMETRY PLAN
10	LANDSCAPE PLAN
11	LANDSCAPE PLAN
12	HANDICAP RAMP DETAILS AND SCHEMATIC BUILDING PROFILES
13	DETAILS
14	STORM DRAIN PROFILES AND STRUCTURE SCHEDULE
15	STORM DRAIN PROFILES
16	SEDIMENT CONTROL NOTES AND DETAILS
17	SIGHT DISTANCE PLAN AND PROFILE
18	WATER AND SEWER PROFILES
19	TRUCK MANUEVERING PLAN AND MAINTENANCE OF TRAFFIC PLAN
20	DUMPSTER PLAN, ELEVATIONS AND DETAILS
21	STREAM CROSSING NOTES & DETAILS

SITE DEVELOPMENT PLAN
PATAPSCO VALLEY OFFICE CAMPUS
PARCELS C-1, C-2 AND C-3

ZONED: M-2

TAX MAP No. 38 GRID No. 14,15,20,21 PARCEL No. 285

FIRST ELECTION DISTRICT HOWARD COUNTY, MARYLAND

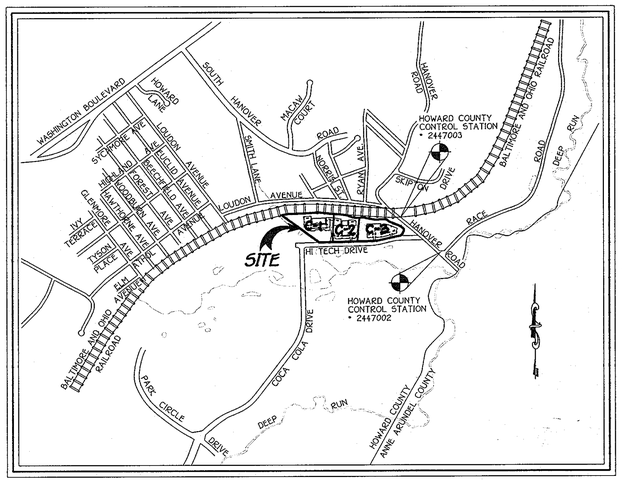

VICINITY MAP
SCALE: 1"= 1200'

GENERAL NOTES:

1. ALL CONSTRUCTION SHALL BE IN ACCORDANCE WITH THE LATEST STANDARDS AND SPECIFICATIONS OF HOWARD COUNTY PLUS MSHA STANDARDS AND SPECIFICATIONS IF APPLICABLE
2. THE CONTRACTOR SHALL NOTIFY THE BUREAU OF ENGINEERING/CONSTRUCTION INSPECTION DIVISION AT (410) 313-1880 AT LEAST (5) FIVE WORKING DAYS PRIOR TO THE START OF WORK.
3. THE CONTRACTOR SHALL NOTIFY "MISS UTILITY" AT 1-800-257-7777 AT LEAST 48 HOURS PRIOR TO ANY DIGGING AND EXCAVATION WORK.
4. PROJECT BACKGROUND:
   A. LOCATION: TAX MAP 38, GRID 20, PARCEL 285
   B. THE SUBJECT PROPERTY IS ZONED M-2 PER 2/2/2004 COMPREHENSIVE ZONING PLAN.
   C. ELECTION DISTRICT: FIRST
   D. SECTION: N/A AREA: N/A
   E. SITE AREA: 15.64 AC.±
   F. PROPOSED USE FOR THIS SITE AND STRUCTURES: GENERAL OFFICES USE
   G. PARKING REQUIREMENTS: (SEE PARKING CHART THIS SHEET)
5. TRAFFIC CONTROL DEVICES, MARKINGS AND SIGNING SHALL BE IN ACCORDANCE WITH THE LATEST EDITION OF THE MANUAL ON UNIFORM TRAFFIC CONTROL DEVICES (MUTCD). ALL STREET AND REGULATORY SIGNS SHALL BE IN PLACE PRIOR TO PLACEMENT OF ANY ASPHALT.
6. ALL PLAN DIMENSIONS ARE TO THE FACE OF CURB OR FACE OF BUILDING UNLESS OTHERWISE NOTED. DIMENSIONS ARE MEASURED PERPENDICULAR OR RADIAL BETWEEN ITEMS UNLESS OTHERWISE NOTED.
7. THE EXISTING TOPOGRAPHY AND FEATURES WERE DERIVED FROM A FIELD RUN MONUMENTAL BOUNDARY SURVEY BY FISHER COLLINS & CARTER INC. AND HARFORD AERIAL SURVEYS, INC. ON OR ABOUT FEBRUARY 2006
8. HORIZONTAL AND VERTICAL CONTROL DATUM IS BASED ON HOWARD COUNTY GEODETIC CONTROL STATIONS: (NAD 27 MARYLAND COORDINATE SYSTEM)
   HOWARD COUNTY MONUMENT 2447002 - (N 494376.0470 E 879030.1730 ELEV. 89.819)
   HOWARD COUNTY MONUMENT 2447003 - (N 494994.5460 E 878209.6580 ELEV. 46.266)
9. PUBLIC WATER AND SEWER IS TO BE UTILIZED FOR THIS PROJECT.
10. ALL ON-SITE STORM DRAINS UNDER THIS SITE DEVELOPMENT PLAN ARE PRIVATE.
11. THE EXISTING UTILITIES SHOWN HEREON WERE DERIVED FROM AVAILABLE PUBLIC RECORDS. THE CONTRACTOR MUST DIG TEST PITS BY HAND AT ALL UTILITY CROSSINGS AND CONNECTION POINTS TO VERIFY THE EXACT LOCATIONS.
12. ALL PROPOSED RAMPS SHALL BE IN ACCORDANCE WITH CURRENT A.D.A STANDARDS ACCESSIBILITY GUIDELINES. MAXIMUM SIDEWALK CROSS SLOPE SHALL BE TWO PRECENT. PROVIDED A (5'x5') FIVE FOOT BY FIVE FOOT LEVEL LANDING (MAX. SLOPE 2%) AT THE TOP AND BOTTOM OF ALL RAMPS AND BUILDING ENTRANCES AND EXITS. HANDRAILS SHALL BE PROVIDED ON ALL RAMPS IN ACCORDANCE WITH SECTION 4.8.5 OF THE A.D.A. STANDARDS ACCESSIBILITY GUIDELINES.
13. ALL DRIVEWAYS AND PARKING TO BE PRIVATELY OWNED AND MAINTAINED.
14. ANY DAMAGE TO COUNTY AND OR STATE OWNED RIGHT OF WAY TO BE CORRECTED AT THE CONTRACTOR'S EXPENSE.
15. TRENCH BEDDING FOR STORM DRAIN STRUCTURES SHALL BE IN ACCORDANCE WITH THE HOWARD COUNTY STANDARD G2.01 CLASS C BEDDING UNLESS OTHERWISE NOTED.
16. GUTTER PAN OF CURBS SHALL BE PITCHED TO CONFORM TO THE ADJACENT DRAINAGE PATTERNS OF THE ADJOINING PAVING FOR VEHICULAR USE. SEE DETAIL
17. FOR DETAILS OF BUILDING PROFILE, PARKING, ROAD SECTION, HANDICAP, CURB AND GUTTER SEE SHEETS 12 AND 13. (3/13) (4/13)
18. THERE ARE NO KNOWN GRAVE SITES OR CEMETERIES ON THIS SITE BASED ON A VISUAL SITE VISIT AND BASED ON AN EXAMINATION OF THE HOWARD COUNTY CEMETARY INVENTORY MAP.
19. THIS PROJECT IS RECORDED AMONG THE LAND RECORDS IN HOWARD COUNTY, MARYLAND AS PLAT #18110 AND #18111 (F 06-127).
20. ALL OUTDOOR LIGHTING SHALL COMPLY WITH ZONING REGULATIONS SECTION 134 WHICH REQUIRES LIGHTS TO BE INSTALLED TO DIRECT/REFLECT LIGHT DOWNWARDS AND INWARDS ON THE SITE AND AWAY FROM ALL PUBLIC STREETS AND RESIDENTIAL AREAS. SEE EXTERIOR LIGHT DETAIL ON SHEET 13.
21. THE BUILDINGS SHALL BE EQUIPPED WITH AN AUTOMATIC FIRE PREVENTION SPRINKLER SYSTEM.
22. PREVIOUS FILE NUMBERS: S 91-19, P 91-13, P 91-14, WP 91-98, F 94-24, F 06-127, F 02-164, F-07-144, F-08-198.
23. THIS SDP IS SUBJECT TO THE FIRST AMENDMENT TO THE FIFTH EDITION OF THE SUBDIVISION AND LAND DEVELOPMENT REGULATIONS DATED OCTOBER 2, 2003 AND THE AMENDED ZONING REGULATIONS, PER COUNCIL BILL 75-2003.
24. ALL SIGN POSTS USED FOR TRAFFIC CONTROL SIGNS INSTALLED IN THE COUNTY RIGHT-OF-WAY SHALL BE MOUNTED ON A 2" GALVANIZED STEEL, PERFORATED, SQUARE TUBE POST (14 GAUGE) INSERTED INTO A 2-1/2" GALVANIZED STEEL, PERFORATED, SQUARE TUBE SLEEVE (12 GAUGE) - 3' LONG. A GALVANIZED STEEL POLE CAP SHALL BE MOUNTED ON TOP OF EACH POST.
25. THIS SDP IS SUBJECT TO THE AMENDED FIFTH EDITION OF THE SUBDIVISION AND LAND DEVELOPMENT REGULATIONS PER COUNCIL BILL NO. 45-2003 AND THE AMENDED ZONING REGULATIONS, PER COUNCIL BILL 75-2003. DEVELOPMENT OR CONSTRUCTION ON THIS PROPERTY MUST COMPLY WITH SETBACKS AND BUFFER REGULATIONS IN EFFECT AT THE TIME OF SUBMISSION OF THE SITE DEVELOPMENT PLAN, WAIVER PETITION APPLICATION OR BUILDING/GRADING PERMIT APPLICATIONS.
26. FINANCIAL SURETY FOR THE REQUIRED LANDSCAPING HAS BEEN POSTED AS PART OF THE DPW DEVELOPERS AGREEMENT IN THE AMOUNT OF $29,070.00.
27. THE TRAFFIC STUDY WAS PERFORMED BY THE TRAFFIC GROUP AND APPROVED ON OCTOBER 1, 1992 UNDER P 91-14. THE MARS GROUP INC. PREPARED AN UPDATED TRAFFIC STUDY ON NOVEMBER 2006.
28. NOISE STUDY IS NOT REQUIRED FOR THIS INDUSTRIAL ZONED PROPERTY.
29. STORM WATER MANAGEMENT FOR THE ENTIRE SUBDIVISION WAS PROVIDED UNDER F 94-24. EXTENDED DETENTION FACILITIES WERE SIZED TO MANAGE ULTIMATE SITE CONDITIONS THAT ARE OWNED BY C&S PARTNERSHIP, LLC AND JOINTLY MAINTAINED WITH C&S PARTNERSHIP, LLC AND HOWARD COUNTY DEPARTMENT OF PUBLIC WORKS.
30. THIS PLAN IS EXEMPT FROM COMPLIANCE WITH THE REQUIREMENTS OF THE FOREST CONSERVATION ACT PER SUBDIVISION SECTION 16.1202 (b)(1)(iii) BECAUSE THIS SUBDIVISION HAD PRELIMINARY PLANS (P 91-13 AND P 91-14) APPROVED PRIOR TO DEC. 31, 1992 AND THIS SITE DEVELOPMENT PLAN DOES NOT EXCEED THE LIMIT OF DISTURBANCE SHOWN ON P 91-13 OR P 91-14.
31. THE FLOODPLAIN STUDY AND WETLANDS DELINEATION WAS COMPLETED, REVIEWED AND APPROVED UNDER P 91-14 ON OCTOBER 1, 1992.
32. IMPACT TO NON-TIDAL WETLANDS AND WATERWAYS WAS APPROVED ON JANUARY 13, 1994 BY MARYLAND DEPARTMENT OF NATURAL RESOUCES WATER RESOURCES ADMINISTRATION TRACKING NO. 1991011196 DIVISION NO. 93-NT-0858.
33. THERE ARE NO HISTORIC STRUCTURES LOCATED ON THIS SITE.
34. SNOW REMOVAL AND ROAD MAINTENANCE TO BE PRIVATE.
35. STD - DENOTES STANDARD CURB AND GUTTER.
36. REV - DENOTES REVERSE CURB AND GUTTER.
37. CONTRACTOR TO VERIFY THE SIZE, LOCATION AND ELEVATION OF ALL WATER, SEWER AND STORM DRAIN CONNECTIONS PRIOR TO CONSTRUCTION. EXISTING UTILITIES SHOWN IS FROM BEST AVAILABLE INFORMATION.
38. STREET LIGHT PLACEMENT AND THE TYPE OF FIXTURE AND POLE SHALL BE IN ACCORDANCE WITH THE HOWARD COUNTY DESIGN MANUAL, VOLUME III (1993) AND AS MODIFIED BY "GUIDELINES FOR STREET LIGHTS IN RESIDENTIAL DEVELOPMENTS (JUNE 1993)". A MINIMUM SPACING OF 20' SHALL BE MAINTAINED BETWEEN ANY STREETLIGHT AND ANY TREE.
39. THE KNOX BOX LOCATION SHOWN ON SHEETS 2 AND 3 SHALL BE PLACED TO THE RIGHT OF THE MAIN ENTRANCE AT A RANGE OF 4-5 FEET IN HEIGHT AND NO MORE THAN 6 FEET LATERALLY FROM THE DOOR. THE KNOX BOX SHALL BE ELECTRONICALLY SUPERVISED TO NOTIFY THE OWNER THAT IT IS BEING ACCESSED AND INTEGRATED WITH THE FIRE ALARM SYSTEM (NFPA-1 10.12.1).

NOTE:

A DECLARATION OF EASEMENTS HAS BEEN RECORDED AMONG THE LAND RECORDS OF HOWARD COUNTY MARYLAND IN LIBER 11124 AT FOLIO 529, 1.) FOR CONSTRUCTION, USE, OPERATION AND MAINTENANCE OF A DRIVEWAY TO PROVIDE INGRESS AND EGRESS TO AND FROM HI TECH DRIVE FOR PARCELS C-1 AND C-2 AS SHOWN ON PLAT NO. 20001. 2.) FOR THE INSTALLATION, CONSTRUCTION, USE, OPERATION AND MAINTENANCE OF UTILITIES AS SHOWN ON PLAT NO. 20001 AS A PRIVATE DRAINAGE AND UTILITY EASEMENT TO SERVICE PARCELS C-1 AND C-2.

SITE ANALYSIS DATA:

1. TOTAL SITE AREA: 15.64 AC. ± (PARCEL C-1 (6.218 AC.), PARCEL C-2 (4.520 AC.), PARCEL C-3 (4.906 AC.))
2. PLAN SUBMISSION AREA: 15.64 AC. ±
3. AREA DISTURBED: 10.90 AC. ±
4. BUILDING COVERAGE OF SITE: A - 24,444 SF (0.56 AC.) = 12.44% (C-2)
   B - 20,499 SF (0.47 AC.) = 7.56% (C-1)
   C - 20,499 SF (0.47 AC.) = 9.54% (C-3)
   TOTAL - 65,442 SF (1.50 AC.) = 9.6%

PARKING DATA CHART:

GENERAL OFFICE USE
BUILDING A = 40,888 SF - PARCEL C-2
BUILDING B = 40,998 SF - PARCEL C-1
BUILDING C = 40,998 SF - PARCEL C-3
TOTAL AREA = 130,884 SF

NUMBER OF PARKING SPACES REQUIRED: 434
NUMBER OF HANDICAP PARKING SPACES REQUIRED: 19
NUMBER OF PARKING SPACES PROVIDED ON SITE (INCLUDING HANDICAP PARKING) = 551
NUMBER OF HANDICAP PARKING SPACES PROVIDED (INCLUDING HANDICAP VAN SPACES) = 19

BUILDING 'A': (PARCEL C-2)

GENERAL OFFICE USE
1st FLOOR AREA = 24,444 SF
2nd FLOOR AREA = 24,444 SF
TOTAL AREA = 48,888 SF

NUMBER OF PARKING SPACES REQUIRED: 48,888 SF x 3.3 SPACES/1000 SF = 162
NUMBER OF HANDICAP PARKING SPACES REQUIRED: 7
NUMBER OF PARKING SPACES PROVIDED ON SITE (INCLUDING HANDICAP PARKING) = 222
NUMBER OF HANDICAP PARKING SPACES PROVIDED (INCLUDING HANDICAP VAN SPACES) = 7

BUILDING 'B': (PARCEL C-1)

GENERAL OFFICE USE
1st FLOOR AREA = 20,499 SF
2nd FLOOR AREA = 20,499 SF
TOTAL AREA = 40,998 SF

NUMBER OF PARKING SPACES REQUIRED: 40,998 SF x 3.3 SPACES/1000 SF = 136
NUMBER OF HANDICAP PARKING SPACES REQUIRED: 6
NUMBER OF PARKING SPACES PROVIDED ON SITE (INCLUDING HANDICAP PARKING) = 156
NUMBER OF HANDICAP PARKING SPACES PROVIDED (INCLUDING HANDICAP VAN SPACES) = 6

BUILDING 'C': (PARCEL C-3)

GENERAL OFFICE USE
1st FLOOR AREA = 20,499 SF
2nd FLOOR AREA = 20,499 SF
TOTAL AREA = 40,998 SF

NUMBER OF PARKING SPACES REQUIRED: 40,998 SF x 3.3 SPACES/1000 SF = 136
NUMBER OF HANDICAP PARKING SPACES REQUIRED: 6
NUMBER OF PARKING SPACES PROVIDED ON SITE (INCLUDING HANDICAP PARKING) = 173
NUMBER OF HANDICAP PARKING SPACES PROVIDED (INCLUDING HANDICAP VAN SPACES) = 6

STREET ADDRESS CHART

BUILDING	PARCEL	STREET ADDRESS
A	C-2	7030 HI TECH DRIVE
B	C-1	7050 HI TECH DRIVE
C	C-3	7010 HI TECH DRIVE

FISHER, COLLINS & CARTER, INC.
CIVIL ENGINEERING CONSULTANTS & LAND SURVEYORS
CENTENNIAL SQUARE OFFICE PARK - 10272 BALTIMORE NATIONAL PIKE
ELLICOTT CITY, MARYLAND 21042
(410) 461 - 2855

DATE	DESCRIPTION
3/10/08	RESUBDIVIDED PARCEL C INTO PARCELS C-1, C-2 AND C-3, REVISED DATA CHARTS AND TITLE BLOCK

REVISION BLOCK

OWNER/DEVELOPER
CSG PATAPSCO, LLC
5024 CAMPBELL BOULEVARD, SUITE G
WHITE MARSH, MARYLAND 21236
410-933-2091

APPROVED: DEPARTMENT OF PLANNING AND ZONING

Director - Department of Planning and Zoning — Date 6/5/07
Chief, Division of Land Development — Date 6/5/07
Chief, Development Engineering Division J.P. — Date 5/30/07

SUBDIVISION	SECTION/AREA	PARCEL NO.
PATAPSCO VALLEY BUSINESS CENTER	N/A	C-1, C-2 AND C-3

PLAT NO.	BLOCK NO.	ZONE	TAX MAP	ELEC. DIST.	CENSUS TR.
19779 & 19980 F 07-144	14, 15, 20, 21	M-2	38	FIRST	601201

WATER CODE A04 — PLAT NO. 20000 & 20001 F-08-198 — SEWER CODE 2150500, 2150501, 2150300

TITLE SHEET

PATAPSCO VALLEY BUSINESS CENTER
PATAPSCO VALLEY OFFICE CAMPUS
PARCELS C-1, C-2 AND C-3
ZONED: M-2
TAX MAP No. 38 PARCEL No. 285 GRID No. 14,15,20,21
FIRST ELECTION DISTRICT HOWARD COUNTY, MARYLAND
SCALE: AS SHOWN
DATE: MARCH 15, 2007
SHEET 1 OF 21

SDP-07-028

SDP-07-028

I:\2006\03dwg\SITE DEVELOPMENT PLAN\06003-6001 TITLE SHEET.dwg, TITLE SHEET, 3/16/2007 7:47:23 AM, 1:1