GENERAL NOTES

1. ALL CONSTRUCTION SHALL BE IN ACCORDANCE WITH THE LATEST STANDARDS AND SPECIFICATIONS OF HOWARD COUNTY PLUS MSHA STANDARDS AND SPECIFICATIONS, IF APPLICABLE.
2. THE CONTRACTOR SHALL NOTIFY "MISS UTILITY" AT 1-800-257-7777 AT LEAST 48 HOURS PRIOR TO ANY EXCAVATION WORK.
3. THE CONTRACTOR IS TO NOTIFY THE FOLLOWING UTILITIES OR AGENCIES AT LEAST FIVE DAYS BEFORE STARTING WORK ON THESE DRAWINGS.

C & P TELEPHONE COMPANY	725-9976
HOWARD COUNTY BUREAU OF UTILITIES	313-2366
AT&T CABLE LOCATION DIVISION	393-3553
BG&E CO. CONTRACTOR SERVICES	850-4620
BG&E CO. UNDERGROUND DAMAGE CONTROL	787-4620
STATE HIGHWAY ADMINISTRATION	531-5533

4. THE CONTRACTOR SHALL NOTIFY THE DEPARTMENT OF PUBLIC WORKS/ BUREAU OF ENGINEERING INSPECTION DIVISION AT 410-313-1880 AT LEAST FIVE(5) WORKING DAYS PRIOR TO START OF WORK.
5. ANY DAMAGE TO THE PUBLIC RIGHT-OF-WAYS, PAVING, OR EXISTING UTILITIES WILL BE CORRECTED AT THE CONTRACTOR'S EXPENSE.
6. EXISTING UTILITIES LOCATED FROM ROAD CONSTRUCTION PLANS, FIELD SURVEYS AND AVAILABLE RECORD DRAWINGS. APPROXIMATE LOCATION OF EXISTING UTILITIES ARE SHOWN FOR THE CONTRACTORS INFORMATION. CONTRACTOR SHALL LOCATE EXISTING UTILITIES WELL IN ADVANCE OF CONSTRUCTION ACTIVITIES AND TAKE ALL NECESSARY PRECAUTIONS TO PROTECT THE EXISTING UTILITIES AND TO MAINTAIN UNINTERRUPTED SERVICE. ANY DAMAGE INCURRED DUE TO CONTRACTOR'S OPERATION SHALL BE REPAIRED IMMEDIATELY AT THE CONTRACTOR'S EXPENSE
7. ALL REINFORCED CONCRETE FOR STORM DRAIN STRUCTURES SHALL HAVE A MINIMUM OF 28 DAYS STRENGTH OF 3,500 P.S.I.
8. TRAFFIC CONTROL DEVICES, MARKINGS AND SIGNING SHALL BE IN ACCORDANCE WITH THE LATEST EDITION OF THE MANUAL ON UNIFORM TRAFFIC CONTROL DEVICES (MUTCD). ALL STREET AND REGULATORY SIGNS SHALL BE IN PLACE PRIOR TO THE PLACEMENT OF ANY ASPHALT.
9. ESTIMATES OF EARTHWORK QUANTITIES ARE PROVIDED SOLELY FOR THE PURPOSE OF CALCULATING FEES.
10. SOIL COMPACTION SPECIFICATIONS, REQUIREMENTS, METHODS AND MATERIALS ARE TO BE IN ACCORDANCE WITH THE RECOMMENDATIONS OF THE PROJECT GEOTECHNICAL ENGINEER, GEOTECHNICAL ENGINEER TO CONFIRM ACCEPTABILITY OF PROPOSED PAVING SECTION, BASED ON SOILS TEST.
11. ALL STORM DRAIN BEDDING SHALL BE CLASS 'C', VOLUME I OF HOWARD COUNTY DESIGN MANUAL.
12. COORDINATES AND ELEVATION ARE BASED ON THE FOLLOWING HOWARD COUNTY MONUMENTS:
    38A9 N 561,056.341 E 1,389,634.145
    38BA N 562,553.293 E 1,390,967.941
13. A NOISE STUDY PREPARED BY MARS GROUP WAS SUBMITTED AND APPROVED WITH THE SKETCH PLAN SUBMITTAL (S-04-011)
14. FOR PAVING SECTIONS DETAIL SEE SHEETS 4 & 9
15. CONC. CURB AND GUTTER TO BE AS PER HC STD. PLATE R-3.01 CONC. BARRIER CURBS TO BE AS PER HC STANDARD PLATE R-3.03
16. PAVING SECTIONS TO BE CONFIRMNED BY PROJECT GEOTECHNICAL ENGINEER PRIOR TO CONSTRUCTION.
17. PUBLIC WATER METERS ARE SHOWN ON SITE DEVELOPMENT PLANS
18. CONTRACTOR RESPONSIBLE TO CONSTRUCT ALL HANDICAP PARKING AND HANDICAP ACCESS ROUTES IN ACCORDANCE WITH CURRENT ADA REQUIREMENTS.
19. WHERE DRAINAGE FLOWS AWAY FROM THE CURB, CONTRACTOR TO USE CONCRETE BARRIER CURBS(HC PLATE R-3.03)
20. EXISTING TOPOGRAPHY IS BASED ON AERIAL TOPOGRAPHIC SURVEY PREPARED BY WINGS MAPPING DATED DECEMBER, 2002 AND SUPPLEMENTED BY FIELD SURVEY BY NILDENBERD-BOENDER ASSOC. IN APRIL, 2004
21. THIS PROJECT IS SERVED BY PUBLIC WATER AND PUBLIC SEWER (CONTRACT NO.MD-105C\3312.
22. THE CONTRACTOR WILL REMOVE EX. CURB AND GUTTER AS NOTED ON THE SITE PLAN.THE CONTRACTOR WILL LEAVE A CLEAN EDGE AT EXISTING PAVING FOR TIE-IN OF PROPOSED PAVING.
23. THE CONTRACTOR WILL CONSTRICT ALL CONCRETE CURB AND GUTTER NOTED ON THE SITE PLAN TO BE FULLY DEPRESSED SO THAT THERE IS NOT A LIP.
24. OUTDOOR LIGHTING TO BE IN ACCORDANCE WITH SECTION 134 OF THE HOWARD COUNTY ZONING REGULATIONS.
25. ALL 2:1 SLOPES TO BE STABILIZED WITH SEDIMENT AND EROSION CONTROL MATTING.
26. ALL UTILITIES INSTALLED SHALL RECEIVE FULL TRENCH COMPACTION(95%) PER AASHTO SPECIFICATIONS.
27. ALL PLAN DIMENSIONS ARE TO THE FACE OF CURB UNLESS OTHERWISE NOTED.
28. ALL WATER MAIN TEES, BENDS, CAPS, ETC. SHALL BE BUTTRESSED IN ACCORDANCE WITH HOWARD COUNTY DESIGN REQUIREMENTS.
29. THIS PLAN IS SUBJECT TO THE AMENDED 5-TH EDITION OF THE SUBDIVISION REGULATIONS
30. STORMWATER QUALITY & CHANNEL PROTECTION WILL BE PROVIDED FOR PHASE 1 IN AN OPEN POND WHICH WILL DISCHARGE INTO THE DRAINAGE SYSTEM THE REQUIRED LANDSCAPING AND FOREBAYS FOR THE SWM DESIGN HAVE BEEN DEFERRED UNTIL THE FACILITY IS CONVERTED TO ITS FINAL DESIGN UPON THE COMPLETION OF PHASE II OF THE PROJECT
31. REQUIRED NO. OF MIH UNITS FOR PHASE 2 OF ELKRIDGE CROSSING IS 4 ON-SITE MIHU'S & 3 OFF-SITE LIHU'S AS OUTLINED IN:
    MIHU AGREEMENT RECORDED IN LIBER 15889 FOLIO 153
    MIHU COVENANTS RECORDED IN LIBER 15889 FOLIO 163
32. ON 10/26/06 MDE ISSUED A LETTER OF AUTHORIZATION TO ALLOW CONSTRUCTION ACTIVITY IN THE TWO WETLAND AND BUFFER AREAS IDENTIFIED AND SHOWN ON THESE DRAWINGS. IN THE TWO ISOLATED NONTIDAL WETLAND AND BUFFER AREAS IDENTIFIED AND SHOWN ON THESE DRAWINGS.(AUTHORIZATION #20063225/06--NT-3130)
33. THE FOREST CONSERVATION OBLIGATION FOR THIS PLAN AND ALL OTHER PHASES OF ELKRIDGE CROSSING HAS BEEN MET AND PROVIDED BY SDP-04-017 BY PROVIDING 5.27 ACRES OF OFFSITE REFORESTATION AT BRANTWOOD, 2/1, PRES. PARCEL F AND 2.52 ACRES OF OFFSITE RETENTION (ONLY 50% ACREAGE CREDIT) AND 3.83 ACRES OF OFFSITE REFORESTATION AT ELLICOTT MEADOWS, TM 16, BLK. 22, TM PARCEL 99.
34. THE TOWNHOUSE UNITS ARE REQUIRED TO DISPLAY THEIR ADDRESSES ON THE FRONT AND REAR OF EACH UNIT.
35. LANDSCAPE SURETY FOR THIS PLAN IN THE AMOUNT OF $50,760.00 HAS BEEN POSTED AS A PART OF THE DEVELOPER'S AGREEMENT
36. TRASH COLLECTION FOR THIS PROJECT WILL BE PROVIDED BY A PRIVATE CONTRACTOR. TRASH PICKUP WILL BE FROM DUMPSTERS AS LOCATED AND SHOWN ON PLANS.

NOTE:

BOUNDARY SURVEY PREPARED BY:
APR ASSOCIATES, INC.
7427 HARFORD ROAD
BALTIMORE, MARYLAND 21234
PHONE: 410-444-4312

TOPOGRAPHICAL SURVEY PREPARED BY:
WINGS AERIAL MAPPING CO., INC.
919 BEYDA HARBOUR
PASADENA, MARYLAND 21122
PHONE: 410-255-2053

APPROVED: DEPARTMENT OF PLANNING AND ZONING

CHIEF, DEVELOPMENT ENGINEERING DIVISION (signature)	DATE 02/04/09
CHIEF, DIVISION OF LAND DEVELOPMENT (signature)	DATE 3/16/09
DIRECTOR (signature)	DATE 3/17/09

BENCH MARKS

HOWARD COUNTY MON. #38A9
ELEV. 223.417
BRASS DISK ON CONC. MONUMENT IN GRASS PLOT ON SE SIDE OF US RTE 1 AND MONTGOMERY RD.

HOWARD COUNTY MON. #38BA
ELEV. 166.939
BRASS DISC ON CONC. MONUMENT ON WEST SIDE OF US RTE.1 APPROX. 100' N OF BONNIE VIEW LA.

ELKRIDGE CROSSING-PHASING
SCALE: 1"=150'

NOTE: PER MEETING WITH DLD SEPTEMBER 13, 2010 THE DIRECTOR APPROVED NOT HAVING AN 18' DRIVEWAY SPACING FOR EACH OF THE 36 TOWNHOUSES AS REQUIRED PER SECTION 133.C.4.

DESIGN MANUAL WAIVER REQUEST TO SECTION 5.485 OF THE HOW. CO. DESIGN MANUAL, VOLUME II WATER AND SEWER DENIED MAY 9TH 2014, DENIED REQUEST TO ALLOW A STRUCTURE WITHIN 10 FEET OF THE EDGE OF A UTILITY EASEMENT.

SITE DEVELOPMENT PLANS PHASE TWO

ELKRIDGE-CROSSING

FIRST ELECTION DISTRICT, HOWARD COUNTY, MARYLAND

WP 11-042 APPROVED ON 10-18-2010
WP 14-062 APPROVED ON 07-10-2014
SEE SHEET 33 FOR DETAILS

PHASES 1 & 2 PARKING	REQUIRED	PROVIDED
PHASE 1	307	357
PHASE 2	507	457
TOTAL	814	814 *

* DOES NOT INCLUDE 52 OVERFLOW SPACES

PURPOSE OF REVISION NOTE:
THE PURPOSE OF THIS REVISION IS TO REVISE BUILDING "E", THE PARKING LOT NORTH OF BUILDING "E", THE STORMDRAINS AND LANDSCAPING IN THOSE AREAS, PARCEL NAMES AND REFERENCES AND TO SHOW THE REVISIONS TO PHASE 3 & 4.

PROFESSIONAL CERTIFICATION:
I HEREBY CERTIFY THAT THESE DOCUMENTS WERE PREPARED OR APPROVED BY ME, AND THAT I AM A DULY LICENSED PROFESSIONAL ENGINEER UNDER THE LAWS OF THE STATE OF MARYLAND, LICENSE NUMBER 16597, EXPIRATION DATE: 08-15-2015

FOR REV. 2 ONLY 07/21/14

SHEET INDEX

1	COVER SHEET
2	VICINAL PROPERTIES MAP
3-6	SITE / DEVELOPMENT PLANs
7	BUILDING ELEVATIONS
8	SITE CONSTRUCTION DETAILS
9	TYPICAL ROAD SECTIONS
10	ROAD PROFILES
11	DRAINAGE AREA MAP
12-13	STORM DRAIN PROFILES
14-18	LANDSCAPE PLANS
19-20	RETAINING WALL PLANS
21	PRIVATE SEWER PLAN
22	PRIVATE SEWER PROFILES
23-28	STORMWATER MANAGEMENT PLANS
29-32	SEDIMENT & EROSION CONTROL PLANS
33-35	LOTS 1-36

SEE BUILDING ADDRESS CHART ON SHEET 4 OF 32

COMMERCIAL AREA REQUIREMENTS

PHASE NO.	UNITS PROPOSED	AREA REQUIRED	AREA PROVIDED	SDP NO.
1 - 2007	128	38,400 SF	19,320 SF	04-017
2 - 2008	114	34,200 SF	89,280 SF	06-078
3 - 2009 4 - 2010	120	36,000	0	07-055
TOTAL	362	108,600 SF	108,600 SF	

(A MINIMUM OF 300 SQ.FT. OF COMMERCIAL AREA IS REQUIRED PER EACH RESIDENTIAL UNIT)

MODERATE INCOME HOUSING UNITS SUMMARY

PHASE NO.	TOTAL UNITS	REQUIRED MIHU UNITS	MIHU UNITS PROVIDED	SDP NO.	LIHU UNITS PROVIDED
1 - 2007	128	20	4	04-017	0
2 - 2008	114	18	19	06-078	3
3 - 2009 4 - 2010	120	18	24	07-055	3
TOTAL	362	56	47		6

MINIMUM MIHU REQUIRED: 15% OF TOTAL UNITS
* AS DETERMINED BY THE HOWARD COUNTY HOUSING COMMISSION.

THE HORIZONTAL AND VERTICAL CONTROLS FOR THIS SURVEY ARE BASED ON THE NAD83 AND NAVD29 DATUM RESPECTIVELY AND ARE REFERENCED TO THE FOLLOWING HOWARD COUNTY GEODETIC CONTROL STATIONS:
38A9 N 561056.341 E 1389634.145 EL. 223.417
38BA N 562553.293 E 1390967.941 EL. 166.939

OVERALL SITE

1. SITE ANALYSIS
   A. TAX MAP 38, PARCELS 30 AND 38
   B. ZONING: CAC
   C. DENSITY TABULATION:
      GROSS AREA=26.458 ACRES*
      AREA OF STEEP SLOPES>25%=0.29 ACRES
      NET AREA=26.168 ACRES
      UNITS ALLOWED: 26.168 X 25 = 653 UNITS
   D. UNITS PROPOSED=362 (128 CONDOMINIUMS & 234 TOWNHOUSES)
   E. PHASING:
      PHASE 1: 128 UNITS & BLDG. A1 (2007 ALLOCATION)
      32 CONDOMINIUM UNITS & 96 TOWNHOUSES BLDGS.B1,B2, & TH1 - TH8 (INCLUDES 4 ON-SITE MIHU'S)
      PHASE 2: 114 UNITS & BLDGS D & E (2008 ALLOCATION)
      32 CONDOMINIUM UNITS & 82 TOWNHOUSES BLDGS..B3, B4, TH11 - 14 (INCLUDES 19 ON-SITE MIHU'S & 3 OFF-SITE LIHU'S)
      PHASES 3 & 4: 120 UNITS (2009 ALLOCATION PHASE 3; 2010 ALLOCATION PHASE 4)
      56 TOWNHOUSES & 64 CONDOMINIUMS BLDGS. TH15-21 + BLDGS. B5-B9 (INCLUDES 24 ON-SITE MIHU'S & 3 OFF-SITE LIHU'S)
      SEE SKETCH PLAN SHEET 4 OF 4
   F. AREA OF ROADWAY DEDICATION:
      US RTE 1: 0.1760 ACRES
      MONTGOMERY ROAD: 0.2234 ACRES
      TOTAL ROAD DEDICATION: 0.3994 ACRES±
   G. 1) AREA OF COMMERCIAL REQUIRED=362 UNITSX300 SQ.FT/UNIT=108,600 SF
      AREA OF COMMERCIAL PROVIDED:
      BUILDING A1= 19,320 SF (PHASE 1)
      BUILDING D @ 8,480 SF/FLOORX3=25,440 SF (PHASE 2)
      BUILDING E @ 12,768 SF/FLOORX5=63,840 SF (PHASE 2)
      TOTAL AREA OF COMMERCIAL PROVIDED=108,600 SQ.FT.
      2) AMENITY AREA REQUIRED=26.45 AC. X 10%=2.65 AC.
      AMENITY AREA PROVIDED:
      PHASE 1: 1.0 ACRES
      PHASE 2: 0.63 acres
      PHASEs 3:: 0.70 acres
      PHASEs 4: 0.32 acres
      AMENITY AREA PROVIDED=2.65±AC.

* AREA OF PARCEL A-1 (F-08-067) 1.536 AC.
AREA OF PARCEL B-1 (F-08-067) 3.880 AC.
AREA OF PARCEL C-1 (F-08-067) 5.974 AC.
AREA OF PARCEL D-1 (F-08-067) 5.718 AC.
AREA OF PARCEL E (F-05-120) 8.919 AC.
AREA OF US RT.1 WIDENING: 0.176 AC.
AREA OF MONTGOMERY RD. WIDENING: 0.256 AC.

H. PREVIOUS DEVELOPMENT HISTORY:
PARCELS 30 & 38
WP-04-86 REQUEST WAIVER TO SECTION 16.155(a)-TO ALLOW GRADING FOR A DEVELOPMENT PRIOR TO SITE DEVELOPMENT PLAN APPROVAL (WAIVER REQUEST DENIED APRIL 12, 2004)
S-04-011 SKETCH PLAN OF ELKRIDGE CROSSING APPROVED ON DECEMBER 10, 2004
SDP 04-017 - APPROVED ON 9/18/06
WP 04-43 REQUEST WAIVER TO SECTION 16.116(a)(1)-TO PERMIT THE REMOVAL OF VEGETATIVE COVER, GRADING, PAVEMENT AND A PERMANENT STRUCTURE WITHIN THE 2 25' WETLAND BUFFERS LOCATED ON THE SITE (WAIVER REQUEST APPROVED NOV. 18, 2003)
WP 04-43 REQUEST WAIVER TO SECTION 16.121(a)(4)(vi)-TO PERMIT THE 400 SQUARE FEET OF RECREATION OPEN SPACE REQUIRED PER APARTMENT UNIT TO BE REDUCED TO 205 SQUARE FEET PER APARTMENT UNIT (APPROVED NOV.18, 2003)
WP 04-43 REQUEST WAIVER TO SECTION 16.119(f)(3)-TO PERMIT 2 SEPARATE VEHICULAR ACCESS POINTS TO A RESTRICTED ACCESS ROAD (US RTE.1)- (REQUEST DENIED NOV.18, 2003)
WP 04-43 REQUEST WAIVER TO SECTION 16.121(a)(4)(iii)-TO PERMIT RECREATION OPEN SPACE TO BE LOCATED ON LAND WITH SLOPES EXCEEDING 10 PERCENT. (REQUEST DENIED NOV.18, 2003)
F-04-187 FINAL PLAT OF ELKRIDGE CROSSING, PARCELS A-D HC PN 17347 & 17348
WP 04-150 REQUEST WAIVER TO SECTION 16.144(a) AND (f) TO NOT BE REQUIRED TO SUBMIT SKETCH AND PRELIMINARY PLANS FOR A MAJOR (NON-RESIDENTIAL) SUBDIVISION APPROVED AUGUST 5, 2004-WITH FOLLOWING CONDITIONS:
1) THE PROPOSED PARCELS SHALL HAVE SHARED VEHICULAR ACCESS AND PARKING IN ACCORDANCE WITH SUBDIVISION SECTION 16.120(C)(1) AND THE SHARED VEHICULAR ACCESS AND PARKING EASEMENT SHALL BE INDICATED ON THE FINAL PLAT (F-04-187)
2) WITH THE EXCEPTION OF THE ONE APPROVED VEHICULAR ACCESS POINT (SHARED ACCESS EASEMENT AT US RTE.1) VEHICULAR INGRESS AND EGRESS RESTRICTIONS AND THEIR LIMITS SHALL BE INDICATED AND NOTED ALONG THE US RTE.1 FRONTAGE OF THE PARCELS ON FINAL PLAT F-04-187, IN ACCORDANCE WITH SUBDIVISION SECTION 16.119(f)
3) ANY EXISTING STREAM ON THE SITE SHALL BE INDICATED WITH ITS REQUIRED STREAM BUFFERS (SEE SUBDIVISION SECTION 16.116 FOR THE REQUIRED STREAM BUFFER WIDTH DIMENSIONS) ON FINAL PLAT F-04-187 SEE SCD COMMENTS DATED 7/14/04.
WP 04-150 REQUEST TO WAIVE SECTIONS 16.119(f)(1) TO PERMIT THE PROJECT ELKRIDGE CROSSING(04-011), TO HAVE VEHICULAR ACCESS TO TWO RESTRICTED ACCESS ROADS (US ROUTE 1 & MONTGOMERY ROAD), AND 16.120(c)(1) TO PERMIT COMMERCIAL AND APARTMENT LOTS WITHOUT PUBLIC ROAD FRONTAGE WITH SHARED ACCESS AND WITHOUT SHARED PARKING. APPROVED OCTOBER 7, 2004-WITH FOLLOWING CONDITIONS:
1. THE PROPOSED PARCELS AND EXISTING PARCEL 30 SHALL HAVE SHARED ACCESS, AND THE SHARED ACCESS EASEMENT SHALL BE SHOWN ON F-04-187, S 04-011 AND ALL FURTHER RELATED PLANS & PLATS.
2. WITH THE EXCEPTION OF THE TWO VEHICULAR ACCESS POINTS, VEHICULAR ACCESS RESTRICTION LINES AND NOTATION SHALL BE INDICATED ON F 04-187, S 04-011 AND ALL FUTURE RELATED PLANS AND PLATS PER SUBDIVISION SECTION 16.119(f).
FORMER SITE OF HO-388 - "CROSSWINDS" THAT NO LONGER EXISTS
F-05-120 FINAL PLAT OF ELKRIDGE CROSSING, PARCEL E - PN 18490-91
S-04-011 SKETCH PLAN OF ELKRIDGE CROSSING APPROVED ON DECEMBER 10, 2004
F-06-013 AMENDED PLAT OF ELKRIDGE CROSSING, PARCEL A-D - PN 18494-95
DESIGN MANUAL WAIVER REQUEST DATED 3/07/06:
1. TO PROVIDE A SETBACK OF 0' FROM TOE OF STORMEATER MANAGEMENT EMBANKMENT TO TO A PARCEL LINE,IN LIEU OF THE SETBACK OF 25' AS PER CHAPTER 5, sRCTION 5.2.4.I.
2. REQUEST NOT TO PROVIDE EASEMENTS FOR THE PRIVATE DRAINAGE SYSTEMS ON ON SDP 04-017 PLANS AND ON THE FINAL PLATS F-05-120 AND F-06-013.
DESIGN MANUAL WAIVER REQUEST DATED 8/07/06:
TO REQUEST A WAIVER OF SECTION 5.415 OF THE HOWARD COUNTY DESIGN MANUAL, VOLUME II REQUIRING A MINIMUM OF 10-FOOT HORIZONTAL CLEARANCE BETWEEN ANY PERMANENT STRUCTURE AND THE EDGE OF THE UTILITY EASEMENT.
APPROVED ON 8/31/06 WITH THE FOLLOWING CONDITIONS:
1. REMOVAL OF THE RETAINING WALL MAINTENANCE EASEMENT FROM THE AREA OF THE PUBLIC WATER AND UTILITY EASEMENT.
2. THE RETAINING WALL SHALL BE LOCATED A MINIMUM OF 5' FROM THE PUBLIC WATER AND UTILITY EASEMENT.
F-06-005 BRANTWOOD 2/1, PRES. PARCEL F, OFFSITE FCE'S, PN 18487-89
F-05-188 ELLICOTT MEADOWS, PARCELS A & B, OFFSITE FCE'S ON PARCEL A, PN 18496-500
F-07-131 ELKRIDGE CROSSING-PARCELS A-D: PN 19052-53
F-07-132 ELKRIDGE CROSSING-PARCEL E: PN 19057-58
F-08-067 RESUBDIVISION PLAT-PARCELS A1-A4, ELKRIDGE CROSSINNG PN 19565-66RELKRIDGE CROSSING-PARCEL E: PN19058
SDP 07-055 ELKRIDGE CROSSING PHASES 3 & 4 (APPROVED 8/21/08)
F-08-192 REVISION PLAT-PARCELS A1, B1, C1 & D1 ELKRIDGE CROSSINNG

2. TRAFFIC STUDY WAS PREPARED BY MARS GROUP ON OR ABOUT APRIL 2004.
3. FOR DRIVEWAY INTERSECTION DETAIL USE HOWARD COUNTY STANDARD DETAILS R-6-.05
4. STORMWATER MANAGEMENT IS SATISFIED THROUGH THE USE OF A BIO-RETENTION WET POND. WATER QUALITY MANHOLES, AND GRASS SWALES. AND TWO UNDERGROUND STORAGE FACILITIES FOR CHANNEL PROTECTION
5. ADEQUATE FACILITIES ROAD TEST EVALUATION WAS PREFORMED BY MARS GROUP IN APRIL 2004.
6. PUBLIC WATER AND SEWER ARE AVAILABLE AND OF ADEQUATE CAPACITY TO SERVE THIS SITE.
7. ALL ON SITE SEWERS WILL BE PRIVATE.
8. ON SITE WATER MAINS WILL BE PUBLIC AND PRIVATE. BUILDING SERVICES WILL BE PRIVATE.
9. ROAD IMPROVEMENTS MUST MEET THE FOLLOWING CONDITIONS:
   A. THE APPLICANT MUST PROVIDE ROAD FRONTAGE IMPROVEMENTS ALONG US RTE.1 AS PER THE STATE HIGHWAY ADMINISTRATION, AND ALONG MONTGOMERY ROAD AS REQUIRED BY HOWARD COUNTY.
   B. THE APPLICANT SHALL ENSURE THAT ALL STORMWATER RUNOFF FROM THIS PROPERTY IS ADEQUATELY DISCHARGED TO A DOWNSTREAM OUTFALL WITH NO DELETERIOUS IMPACTS ON DOWNSTREAM PROPERTIES. TO THIS END THE APPLICANT MUST VERIFY THAT EXISTING CONVEYANCE SYSTEMS ALONG AND ACROSS US ROUTE 1 ARE ADEQUATELY SIZED TO CONVEY THE 10-YEAR STORMWATER DISCHARGE FROM THIS PROPERTY.
   C. ALL ROAD FRONTAGE IMPROVEMENTS SHALL BE COORDINATED WITH ANY REQUIRED IMPROVEMENTS NECESSARY FOR STORMWATER RUNOFF CONVEYANCE.
   D. THE APPLICANT SHALL PROVIDE A SIDEWALK ALONG THE ENTIRE AREA OF ROAD FRONTAGE IMPROVEMENTS REQUIRED BY THE ROUTE 1 MANUAL, SUBJECT TO SHA APPROVAL.
10. ALL EXISTING STRUCTURES TO BE REMOVED-UNLESS OTHERWISE SHOWN

SEE SHEET 33 FOR CONTINUATION OF NOTES

IN ADDITION 12 VISITOR/OVERFLOW PARKING SPACES ARE LOCATED ON CHETAN LANE FOR LOTS 1-36.

VICINITY MAP

SITE ANALYSIS - PHASE TWO

PARKING DATA:

TOWNHOUSE BUILDINGS TH11- TH14 & LOTS 1-36
TOTAL 82 UNITS
TOTAL PARKING REQUIRED @ 2/UNIT= 164 SPACES
PARKING PROVIDED @ 2/UNIT= 164 SPACES
1 SPACE IN GARAGE UNDER BLDG.& 1 SPACE IN REAR OF EACH UNIT ON A DRIVEWAY
LOTS 1-36 2 SPACES IN GARAGE
NOTE: THE GARAGES SHALL BE USED FOR PARKING ONLY IN ACCORDANCE WITH ZONING SECTION 133.D.2.a

BUILDING D
BUILDING D: 3 STORY @ 8,480/FLOOR
GENERAL OFFICES: 25,440 SF

PARKING REQUIRED @ 3.3/1000 = 84 SPACES
PARKING PROVIDED: 87 SPACES

BUILDING E (56'X228 5 STORY HOTEL BUILDING-TOTAL OF 148 GUEST ROOMS)
1-ST FLOOR
1) RESTAURANT: 4,999 SF
2) BANQUET HALL: 4,500 SF
2-ND THRU 5-TH FLOORS
3) 37 GUEST ROOMS EACH FLOOR=148 GUEST ROOMS
4) LOBBY W/ 10 EMPLOYEES
PARKING DATA:
1) NONE REQUIRED(LESS THAN 5000 SF)
2) 10/1000 SF = 45 SPACES
3) 1/ROOM = 148 SPACES
4) 1 PER 2 EMPLOYEES= 5 SPACES
TOTAL REQUIRED = 198 SPACES
TOTAL PROVIDED: 198 SPACES

CONDOMINIUM BUILDINGS B3-B4
NO. OF UNITS PER BUILDING: 16
TOTAL NO. OF UNITS FOR BLDGS. B3-B4: 32 UNITS
PARKING REQUIRED: 32 @ 2/UNIT = 64 SPACES

SHARED PARKING ADJUSTMENT-PARKING LOTS A & B, PHASE 1
TOTAL PARKING REQUIRED FOR BLDGS.A1,B1-B4) =75+64+64=203 SPACES
SHARED PARKING ADJUSTMENT PER SECTION 133.E.1.a
206 SPACES REQUIRED X 80% = 164 SPACES - USING EVENING PARKING PROVIDED IN PARKING LOTS A & B = 165

OVERFLOW PARKING NOTE:
IN ACCORDANCE WITH SECTION 16.120(b)(12) OF THE HOWARD COUNTY SUBDIVISION REGULATIONS OVERFLOW PARKING IS REQUIRED TO BE 0.3X242=72.6 ROUNDED TO 73 SPACES FOR 242 UNITS PROPOSED FOR PHASES 1 AND 2. THE PARKING LOT ON DARBY DOWNS AND HARPER WAY CONTAINS 118 PARKING SPACES. OF THOSE SPACES 64 ARE DEDICATED TO CONDOMINIUM BUILDINGS B-1 AND B-2. THE REMAINING 54 SPACES ARE AVAILABLE FOR OVERFLOW PARKING. IN ADDITION THE PARKING LOT ON ESQUIRE COURT CONTAINS 45 PARKING SPACES FOR THE OFFICE DEVELOPMENT. THESE SPACES ARE ALSO AVAILABLE FOR OVERFLOW PARKING FROM THE RESIDENTIAL UNITS.

SITE DATA - PHASE TWO

1. TOTAL AREA: 8.320 ACRES
2. TOTAL BUILDING AREAS: 1.794 ACRES
3. SITE BUILDING COVERAGE: 1.794/8.320 = 22%
4. PAVED AREA/AREA OF SITE:139,133/362,419 = 38%
5. TOTAL DISTURBED AREA: 362,419 SF OR 8.32 ACRES
6. COMMERCIAL DISTURBED AREA: 46,200 SF OR 1.060 ACRES
7. PROJECT BACKGROUND:
   LOCATION: ELKRIDGE, HOWARD COUNTY, MD.
   TAX MAP: 38, PARCEL 30 PROPERTY NO.:01-168150
   TAX MAP: 38, PARCEL 38 PROPERTY NO.:01-164465
   ZONED: CAC
8. AMENITY OPEN SPACE PROVIDED: 0.63 ACRES
9. DEVELOPER/OWNER WILL EXECUTE A COVENANT WITH DEPARTMENT OF HOUSING WITH REGARD TO PROVIDING MODERATE INCOME HOUSING
10. SKETCH PLAN FOR "ELKRIDGE CROSSING(S-04-011) APPROVED ON DEC.10, 2004

CONSTRUCTION PHASING

PHASE NO. YEAR	UNITS PROPOSED	UNITS TYPE & NO. OF UNITS: TOWNHOUSES	CONDOMINIUMS	COMMERCIAL AREA: OFFICES	RETAIL	RESTAURANT	BANQUET	HOTEL GUEST ROOMS	SDP NO.	REC. CLUB-HOUSE
1 - 2007	128	96 *	32(BLDGS.B1-B2	* 12,880 SF	6,440 SF	*	----	----	04-017	
2 - 2008	114	82 **	32(BLDGS.B3-B4	**25,440 SF		***4,999 SF	4,500 SF	148	06-078	
3 - 2009 4 - 2010	120	56 {*** ****}	64 (BLDGS.B5,B6, B8,B9)	----	----	----	----	----	07-055	8,000 SF
TOTAL	362	234	128	38,320 SF	6440 SF	4,999 SF	4,500 SF	148		8,000 SF
				*BLDG.A1	**BLDG.D	*** BLDG.E	*** BLDG.E	*** BLDG.E		

* BLDGS. TH 1-8 ; ** BLDGS. TH 9-14 ; *** **** } BLDGS. TH15-21

OWNER
PARCEL 30 - GWENRIDGE, LLC
5551 OAKLAND MILLS ROAD
COLUMBIA MD 21045
TEL: 410-730-3961
PARCEL 38 - MEHTA CHARALUTA TRUST
5551 OAKLAND MILLS ROAD
COLUMBIA MD 21045
TEL: 410-730-3961

DEVELOPER
GWENRIDGE, LLC
5551 OAKLAND MILLS ROAD
COLUMBIA MD 21045
TEL: 410-730-3961

NO.	DATE	DESCRIPTION	BY
	9/01/07	PER APPROVED REDLINES	JM
	9/02/08	PARKING, BLDG "D" & UTILITIES	JM
2	7/21/14	REVISE TH9, 10, 10A & BLDG F TO 36 TOWNHOUSES & CHANGE BLDG D FROM 4 TO 3 STORIES & ALL NOTES & CHARTS.	RENG

PLANS PREPARERD BY:
JURI MAISTE - SITE DESIGN CONSULTANT
2923 Chenoak Avenue, Baltimore, Maryland 21234
Phone: 410-661-8752 Fax: 410-661-8752
RICHARDSON ENGINEERING, LLC
730 W.Padonia Road, Suite 101, Cockeysville, Maryland 21030
Phone: 410-560-1502 Fax: 410-560-0827

DRAWN: JM
DATE: JAN. 30, 2007
SCALE: AS SHOWN
SHEET NO. 1 OF 35

ADDRESS CHART

PARCEL No.	STREET ADDRESS
38	6200 BALTIMORE WASHINGTON BOULEVARD (US RTE. #1)
30	SEE COMPLETE ADDRESS CHART ON SHEET 4 OF 32

SUBDIVISION NAME: ELKRIDGE CROSSING PARCELS A-D: PN 17347-48, 18494-95, 19057-58 PARCEL E PN: 18490-91, PN 19053-54 | SECTION/AREA N/A | PARCEL NUMBER A-E

PLATS	BLOCK No	ZONE	TAX/ZONE	ELECT.DIST.	CENSUS TR.
F04-187 (#17347-48) F05-120 (#18490-91) F06-013 (#18494-95)	2	CAC	38	FIRST	6012.01

WATER CODE: D-09 | SEWER CODE: 2022431

F07131 PN 19052-53
F07132 PN 19057-58
F-12-001 PN 23060-62
COVER SHEET REV/REPLACEMENT SHT.

PHASE TWO
ELKRIDGE-CROSSING
PARCELS A-E
TAX MAP 38, GRID 2, PARCELS 30 & 38
FIRST ELECTION DISTRICT, HOWARD COUNTY, MARYLAND

REVISED SDP-06-078

C:\DRAWINGS\ELKRID~1\PHASE-2\WYTLARS\VIC-2 Sat Sep 9 22:36:53 2006

APPROVED: DEPARTMENT OF PLANNING AND ZONING

CHIEF, DEVELOPMENT ENGINEERING DIVISION J.P.	DATE 3/22/07
CHIEF, DIVISION OF LAND DEVELOPMENT	DATE 6/28/07
DIRECTOR	DATE 6/29/07

OWNER

PARCEL 30 – GWENRIDGE, LLC
8835–P COLUMBIA 100 PARKWAY
COLUMBIA MD 21045
PARCEL 38 – MEHTA CHARALUTA TRUST
5551 OAKLAND MILLS ROAD
COLUMBIA MD 21045

DEVELOPER

BRANTLY DEVELOPMENT GROUP, INC.
8835–P COLUMBIA 100 PARKWAY
COLUMBIA MD 21045

STATE OF MARYLAND
JURI MAISTE
NO. 6695
REGISTERED PROFESSIONAL LAND SURVEYOR

DRAWN: J.M.
DATE: sept. 14, 2006
SCALE: 1"=100'

DATE	REVISION	BY

ELKRIDGE–CROSSING–PHASE. TWO

PARCELS A–E

TAX MAP 38, GRID 2, PARCELS 30 & 38
FIRST ELECTION DISTRICT, HOWARD COUNTY, MARYLAND

EXISTING*FEATURES*WITHIN*200; *OF*SITE

JURI MAISTE – SITE DESIGN CONSULTANT
2923 Chenoak Avenue, Baltimore, Maryland 21234
Phone: 410-661-8752 Fax: 410-661-8752
RICHARDSON ENGINEERING, LLC
730 W.Padonia Road, Suite 101, Cockeysville, Maryland 21030
Phone: 410-560-1502 Fax: 410-560-0827

SHEET 2 OF 32

SDP-06-078

F-05-120
F-06-013

EXISTING EASEMENT LEGEND

PN 18490-91 & 18494-95

- DENOTES PRIVATE RETAINING WALL MAINTENANCE EASEMENT
- DENOTES PRIVATE ACCESS EASEMENT
- DENOTES PUBLIC WATER AND UTILITY EASEMENT
- PRIVATE 10' STORM DRAIN EASEMENT
- PRIVATE STORMWATER MANAGEMENT EASEMENT

F-07-131
F-07-132

~~PROPOSED~~ EASEMENT LEGEND

PN 10957-58 PN 10952-53

- DENOTES PRIVATE RETAINING WALL MAINTENANCE EASEMENT
- DENOTES PUBLIC WATER AND UTILITY EASEMENT
- PRIVATE 10' STORM DRAIN EASEMENT
- PRIVATE STORMWATER MANAGEMENT EASEMENT

SC FIRE DEPT. SIAMESE CONN.

KB FIRE DEPT. KNOX BOX

FIRE DEPARTMENT NOTE:

THE FIRE DEPARTMENT KNOX BOX SHALL BE PLACED AT THE RIGHT OF THE MAIN ENTRANCE AT A RANGE OF 4-5' IN HEIGHT AND NO MORE THAN 6' LATERALLY FROM THE DOOR.

Symbol	Qty	Label	Arrangement	Lumens	LLF	Description
R2	0	R2	SINGLE	14000	0.720	175W MH 15' Semi-Cutoff/Reflector
C1	0	C1	SINGLE	14000	0.720	250 WATT HPR (VAPOR) MOUNTED ON 30' POLES WITH 12' ARMS
S2	0	S2	BACK-BACK	36000	0.720	Twin ECA 400 watt MH 32' Full Cutoff/Reflector
S2T	0	S2T	TWIN	36000	0.720	Twin ECA 400 watt MH 32' Full Cutoff/Reflector

LEGEND

- D — EXISTING STORM DRAIN
- G — EXISTING GAS MAIN
- S — EXISTING SANITARY SEWER
- W — EXISTING WATER MAIN
- 210 — PROPOSED CONTOUR LINES
- 210 — EXISTING CONTOUR LINES
- FIRE HYDRANT, VALVE — PROPOSED WATER MAINS
- INLET — PROPOSED STORM DRAIN
- CO, S — PROPOSED SANITARY SEWER
- EXISTING CONC. CURB & GUTTER
- PROPOSED CURB & GUTTER
- (20) DESIGNATES NUMBER OF PARKING SPACES
- FH - FIRE HYDRANT
- CW - CONCRETE WALK
- EDGE OF EX.ISTING WOODS LINE
- PROP. 6' WIDE CROSSWALK STAMPED CONC. OR PAVER BLOCKS
- PROP. DUMPSTERS W/ENCLOSURE
- PROP. WATER METERVALVE
- PROP. FIRE HYDRANTS
- PHASING LINES PARCEL LINES PER F-04-187
- 15%-24.99% SLOPES
- STEEP SLOPES >25%
- SIDEWALK CROSS-OVER(CONC.PAVERS)

HANDICAPPED ACCESS NOTE:

SIDEWALK RAMPS HAVE BEEN PROVIDED UNDER PHASE 1 AT ALL INTERSECTIONS PER HOWARD COUNTY STD. PLATES R-4.01, R-4.02, OR R-4.03.

HANDICAPPED ACCESS NOTE:

CONTRACTOR TO PROVIDE SIDEWALK RAMPS AT ALL INTERSECTIONS PER HOWARD COUNTY STD. PLATES R-4.01, R-4.02, OR R-4.03.

BENCH MARKS

HOWARD COUNTY MON. #38A9
ELEV. 223.417
BRASS DISK ON CONC.MONUMENT IN GRASS PLOT ON SE SIDE OF US RTE 1 AND MONTGOMERY RD.

HOWARD COUNTY MON. #38BA
ELEV. 166.939
BRASS DISC ON CONC,MONUMENT ON WEST SIDE OF RTE.1 APPROX. 100' N OF BONNIE VIEW LA.

APPROVED: DEPARTMENT OF PLANNING AND ZONING

CHIEF, DEVELOPMENT ENGINEERING DIVISION J.P.	DATE 3/22/07
CHIEF, DIVISION OF LAND DEVELOPMENT	DATE 6/28/07
DIRECTOR	DATE 6/29/07

OWNER
PARCEL 30 - GWENRIDGE, LLC
8835-P COLUMBIA 100 PARKWAY
COLUMBIA MD 21045
TEL: 410-730-0810
PARCEL 38 - MEHTA CHARALUTA TRUST
5551 OAKLAND MILLS ROAD
COLUMBIA MD 21045
TEL: 410-730-3961

DEVELOPER
BRANTLY DEVELOPMENT GROUP, INC.
8835-P COLUMBIA 100 PARKWAY
COLUMBIA MD 21045
TEL: 410-730-0810

STATE OF MARYLAND — JURI MAISTE — PROFESSIONAL LAND SURVEYOR (seal)

DRAWN: J.M.
DATE: SEPT. 14, 2006
SCALE: 1:=30

DATE	REVISION	BY

ELKRIDGE-CROSSING-PHASE. TWO

PARCELS A-E

TAX MAP 38, GRID 2, PARCELS 30 & 38
FIRST ELECTION DISTRICT, HOWARD COUNTY, MARYLAND

SITE*DEVELOPMENT*PLAN-1

JURI MAISTE - SITE DESIGN CONSULTANT
2923 Chenoak Avenue, Baltimore, Maryland 21234
Phone: 410-661-8752 Fax: 410-661-8752
RICHARDSON ENGINEERING, LLC
730 W.Padonia Road, Suite 101, Cockeysville, Maryland 21030
Phone: 410-560-1502 Fax: 410-560-0827

SDP-06-078

APPROVED: DEPARTMENT OF PLANNING AND ZONING

CHIEF, DEVELOPMENT ENGINEERING DIVISION J.P.	DATE 3/22/07
CHIEF, DIVISION OF LAND DEVELOPMENT	DATE 6/28/07
DIRECTOR	DATE 6/29/07

Symbol	Qty	Label	Arrangement	Lumens	LLF	Description
R2	10	R2	SINGLE	14000	0.720	175W MH 15' Semi-Cutoff/Reflector
C1	0	C1	SINGLE	14000	0.720	250 WATT HPR (VAPOR) MOUNTED ON 30' POLES WITH 12' ARMS
	0	S2	BACK-BACK	36000	0.720	Twin ECA 400 watt MH 32' Full Cutoff/Reflector
S2T	0	S2T	TWIN	36000	0.720	Twin ECA 400 watt MH 32' Full Cutoff/Reflector

OWNER

PARCEL 30 – GWENRIDGE, LLC
5551 OAKLAND MILLS ROAD
COLUMBIA MD 21045
TEL: 410-730-0810
PARCEL 38 – MEHTA CHARALUTA TRUST
5551 OAKLAND MILLS ROAD
COLUMBIA MD 21045
TEL: 410-730-3961

DEVELOPER

GWENRIDGE, LLC
5551 OAKLAND MILLS ROAD
COLUMBIA MD 21045
TEL: 410-730-3961

ADDRESS CHART

BLDG. #	ADDRESS
B-3	7250 DARBY DOWNS
B-4	7270 DARBY DOWNS
D	6205 DOCTOR PATEL DRIVE
E	6200 DOCTOR PATEL DRIVE

TH12	
U1/2	7128/7130 DANIEL JOHN DRIVE
U3/4	7132/7134 DANIEL JOHN DRIVE
U5/6	7136/7138 DANIEL JOHN DRIVE
U7/8	7140/7142 DANIEL JOHN DRIVE
U9/10	7144/7146 DANIEL JOHN DRIVE
U11/12	7148/7150 DANIEL JOHN DRIVE

TH13	
U1/2	7127/7129 COBURN COURT
U3/4	7231/7133 COBURN COURT
U5/6	7135/7137 COBURN COURT
U7/8	7139/7141 COBURN COURT
U9/10	7143/7145 COBURN COURT
U11/12	7147/7149 COBURN COURT

TH11	
U1/2	7102/7104 DANIEL JOHN DRIVE
U3/4	7106/7108 DANIEL JOHN DRIVE
U5/6	7110/7112 DANIEL JOHN DRIVE
U7/8	7114/7116 DANIEL JOHN DRIVE
U9/10	7118/7120 DANIEL JOHN DRIVE
U11/12	7122/7124 GANIEL JOHN DRIVE

TH14	
U1/2	7101/7103 COBURN COURT
U3/4	7105/7107 COBURN COURT
U5/6	7109/7111 COBURN COURT
U7/8	7113/7115 COBURN COURT
U9/10	7117/7119 COBURN COURT
U11/12	7121/7125 COBURN COURT

LOT#	ADDRESS
1	7288 ElKRIDGE CROSSING WAY
2	7290 ElKRIDGE CROSSING WAY
3	7292 ElKRIDGE CROSSING WAY
4	7294 ElKRIDGE CROSSING WAY
5	7296 ElKRIDGE CROSSING WAY
6	7298 ElKRIDGE CROSSING WAY
7	7302 ElKRIDGE CROSSING WAY
8	7304 ElKRIDGE CROSSING WAY
9	7306 ElKRIDGE CROSSING WAY
10	7308 ElKRIDGE CROSSING WAY
11	7310 ElKRIDGE CROSSING WAY
12	7312 ElKRIDGE CROSSING WAY
13	7314 ElKRIDGE CROSSING WAY
14	7316 ElKRIDGE CROSSING WAY
15	6237 DOCTOR PATEL DRIVE
16	6235 DOCTOR PATEL DRIVE
17	6233 DOCTOR PATEL DRIVE
18	6231 DOCTOR PATEL DRIVE
19	6229 DOCTOR PATEL DRIVE
20	6227 DOCTOR PATEL DRIVE
21	6225 DOCTOR PATEL DRIVE
22	7203 BARRY LANE
23	7205 BARRY LANE
24	7207 BARRY LANE
25	7209 BARRY LANE
26	7211 BARRY LANE
27	7213 BARRY LANE
28	7217 BARRY LANE
29	7219 BARRY LANE
30	7221 BARRY LANE
31	7223 BARRY LANE
32	7225 BARRY LANE
33	7227 BARRY LANE
34	7116 CHARD LANE
35	7114 CHARD LANE
36	7112 CHARD LANE

EASEMENT LEGEND

PN 18490-91 & 18494-95
F-05-120, F-06-013

- DENOTES PRIVATE RETAINING WALL MAINTENANCE EASEMENT
- DENOTES PRIVATE ACCESS EASEMENT
- DENOTES PUBLIC WATER AND UTILITY EASEMENT
- PRIVATE 10' STORM DRAIN EASEMENT
- PRIVATE STORMWATER MANAGEMENT EASEMENT

PN 19052-53 PN 19057-58
F-07-131, F-07-132

- DENOTES PRIVATE RETAINING WALL MAINTENANCE EASEMENT
- DENOTES PUBLIC WATER AND UTILITY EASEMENT
- PRIVATE 10' STORM DRAIN EASEMENT
- PRIVATE STORMWATER MANAGEMENT EASEMENT

LEGEND

- D — D — EXISTING STORM DRAIN
- G — G — EXISTING GAS MAIN
- S — S — EXISTING SANITARY SEWER
- W — W — EXISTING WATER MAIN
- 210 — PROPOSED CONTOUR LINES
- 210 — EXISTING CONTOUR LINES
- FIRE HYDRANT, VALVE — PROPOSED WATER MAINS
- INLET — PROPOSED STORM DRAIN
- CO — PROPOSED SANITARY SEWER
- EXISTING CONC. CURB & GUTTER
- PROPOSED CURB & GUTTER
- (20) DESIGNATES NUMBER OF PARKING SPACES
- FH – FIRE HYDRANT
- CW – CONCRETE WALK
- EDGE OF EX.ISTING WOODS LINE
- PROP. 6' WIDE CROSSWALK STAMPED CONC. OR PAVER BLOCKS
- PROP. DUMPSTERS W/ENCLOSURE
- PROP. WATER METERVALVE
- PROP. FIRE HYDRANTS
- PHASING LINES
- PARCEL LINES PER F-04-187
- 15%–24.99% SLOPES
- STEEP SLOPES >25%
- SIDEWALK CROSS-OVER(CONC.PAVERS)

HANDICAPPED ACCESS NOTE:

SIDEWALK RAMPS HAVE BEEN PROVIDED UNDER PHASE 1 AT ALL INTERSECTIONS PER HOWARD COUNTY STD. PLATES R-4.01, R-4.02, OR R-4.03.

DRIVEWAY NOTE:

THE INDIVIDUAL DRIVEWAYS IN FRONT OF THE TOWNHOME GARAGES SHALL BE A MINIMUM LENGTH OF 18 FEET.

PROFESSIONAL CERTIFICATION:
I HEREBY CERTIFY THAT THESE DOCUMENTS WERE PREPARED OR APPROVED BY ME, AND THAT I AM A DULY LICENSED PROFESSIONAL ENGINEER UNDER THE LAWS OF THE STATE OF MARYLAND, LICENSE NUMBER 16597, EXPIRATION DATE: 08-15-2015

FOR REV. 1 ONLY 04/09/14

REVISION		
DATE	REVISION	BY
4/09/14	REVISE TH 9, 10, 10A, & BLDG E TO 36 TOWNHOUSES & CHANGE BLDG. D FROM 4 TO 3 STORIES AND ALL NOTES AND CHARTS.	RENG

DRAWN: J.M.
DATE: SEPT. 19, 2006
SCALE: 1:=30

ELKRIDGE–CROSSING–PHASE–TWO

PARCELS A–E

TAX MAP 38, GRID 2, PARCELS 30 & 38
FIRST ELECTION DISTRICT, HOWARD COUNTY, MARYLAND

SITE*DEVELOPMENT*PLAN–2

JURI MAISTE – SITE DESIGN CONSULTANT
2923 Chenoak Avenue, Baltimore, Maryland 21234
Phone: 410-661-8752 Fax: 410-661-8752
RICHARDSON ENGINEERING, LLC
730 W. Padonia Road, Suite 101, Cockeysville, Maryland 21030
Phone: 410-560-1502 Fax: 410-560-0827

REVISED SDP-06-078

SDP-06-078

BENCH MARKS

HOWARD COUNTY MON. #38A9
ELEV. 223.417
BRASS DISK ON CONC.MONUMENT IN GRASS PLOT ON SE SIDE OF US RTE 1 AND MONTGOMERY RD.

HOWARD COUNTY MON. #38BA
ELEV. 166.939
BRASS DISC ON CONC.MONUMENT ON WEST SIDE OF RTE.1 APPROX. 100' N OF BONNIE VIEW LA.

Symbol	Qty	Label	Arrangement	Lumens	LLF	Description
	0	R2	SINGLE	14000	0.720	175W MH 15' Semi-Cutoff/Reflector
	0	C1	SINGLE	14000	0.720	250 WATT HPR (VAPOR) MOUNTED ON 30' POLES WITH 12' ARMS
	0	S2	BACK-BACK	36000	0.720	Twin ECA 400 watt MH 32' Full Cutoff/Reflector
	0	S2T	TWIN	36000	0.720	Twin ECA 400 watt MH 32' Full Cutoff/Reflector

APPROVED: DEPARTMENT OF PLANNING AND ZONING

CHIEF, DEVELOPMENT ENGINEERING DIVISION — DATE 02/04/09
CHIEF, DIVISION OF LAND DEVELOPMENT — DATE 3/16/09
DIRECTOR — DATE 3/17/09

SEE SHEET 4 MATCH LINE

M-38 P-20
HOWARD COUNTY BOARD OF EDUCATION
DEED REF.-N/A
ZONED: R-ED

M-38 P-23 LOT 17
RONALDO & BEVERLY SERRANO
2145/347
ZONED: R-ED

GABLES AT LAWYERS HILL
PLAT #10163
LOT 18
M-38 P-23
HOWARD L. & LAURA E. JOHNSON
2414/309
ZONED: R-ED
LOT 19

M-38 P-23
MICHAEL & CYNTHIA b. WOLEK
3055/532
ZONED: R-ED

35' PRIVATE RETAINING WALL MAINTENANCE EASEMENT
10' NO TREE PLANTING AREA
N66°39'51"E 415.30'
N65°07'29"E 380.39'
S56°47'13"W 422.74'
N56°47'13"E 338.08'
S46°17'27"E 611.75'
PARCEL LINE PN 19057-58

PARCEL D-1
PARCEL C-1
PARCEL B-1
PN 19565-66

PHASE 3
84 UNITS

PHASE 4
52 UNITS

COBURN COURT (PRIVATE ROAD)
LEBANON LANE
ELKRIDGE CROSSING WAY
SUBMANN STOP
MEHTA CIRCLE (PRIVATE)
MEHTA DRIVE (PRIVATE)
DOCTOR PATEL DRIVE

(PHASE 1)
(PHASE 2)
(PHASE 3)

TH 8 U-5/6 LL-221.67 GAR-220.33
TH 8 U-7/8 LL-221.00 GAR-220.33
TH 8 U-9/10 LL-219.00 GAR-218.33
TH 8 U-11/12 LL-216.00 GAR-217.00
TH09 U-1/2 LL-22.00 GAR-21.33
TH09 U-3/4 LL-21.33 GAR-20.67
TH09 U-5/6 LL-20.00 GAR-19.33
TH09 U-7/8 LL-18.67 GAR-18.00
TH09 U-9/10 LL-17.33 GAR-16.67
TH09 U-11/12 LL-16.00 GAR-16.00

PRIVATE INGRESS, EGRESS, MAINTENANCE AND UTILITY EASEMENT FOR THE BENEFIT OF PARCELS "A-E" ELKRIDGE CROSSING RECORDED L-9265 F-021 & L-9266 F-180 (SEE PLATS NO. 17347-17348

SEE SHEET 33 OF 35 FOR REVISIONS TO THIS AREA

MATCH LINE
REV/ REPLACEMENT SHT. SEE SHEET 6

LEGEND

D — EXISTING STORM DRAIN
S — EXISTING GAS MAIN
S — EXISTING SANITARY SEWER
W — EXISTING WATER MAIN
EXISTING CONTOUR LINES
PROPOSED CONTOUR LINES
PROPOSED WATER MAINS
PROPOSED STORM DRAIN
PROPOSED SANITARY SEWER
EXISTING CONC. CURB & GUTTER
PROPOSED CURB & GUTTER
20 DESIGNATES NUMBER OF PARKING SPACES
FH — FIRE HYDRANT
CW — CONCRETE WALK
EDGE OF EXISTING WOODS LINE
PROP. 6' WIDE CROSSWALK
STAMPED CONC. OR PAVER BLOCKS
PROP. DUMPSTERS W/ENCLOSURE
PROP. WATER METER/VALVE
PROP. FIRE HYDRANTS
PHASING LINES

EASEMENT LEGEND

PN 18490-91,18494-95 & 19057-58
DENOTES PRIVATE RETAINING WALL MAINTENANCE EASEMENT
DENOTES PRIVATE ACCESS EASEMENT
DENOTES PUBLIC WATER AND UTILITY EASEMENT
PRIVATE 10' STORM DRAIN EASEMENT
PRIVATE STORMWATER MANAGEMENT EASEMENT

FOR REV. 2 ONLY 4/09/14
PROFESSIONAL CERTIFICATION:
I HEREBY CERTIFY THAT THESE DOCUMENTS WERE PREPARED OR APPROVED BY ME, AND THAT I AM A DULY LICENSED PROFESSIONAL ENGINEER UNDER THE LAWS OF THE STATE OF MARYLAND, LICENSE NUMBER 16917, EXPIRATION DATE: 08-15-2015

PARCEL D-1 — BAUMAN PROPERTY PLAT #6691 M-38 P-895 — BRIAN JAY LANDIS & SUZANNE BAUMAN LANDIS 1751/499

OWNERS
KEITH SUBDIVISION PLAT #6989 M-38 P-910
LOT 1 — KEITH LEO BROWN 2428/84 ZONED: R-ED
PARCEL 30 - GWENRIDGE, LLC
5551 OAKLAND MILLS ROAD
COLUMBIA MD 21045
TEL: 410-730-3961
PARCEL 38 - MEHTA CHARALUTA TRUST
5551 OAKLAND MILLS ROAD
COLUMBIA MD 21045
TEL: 410-730-3961
DEVELOPER
GWENRIDGE, LLC
5551 OAKLAND MILLS ROAD
COLUMBIA MD 21045
TEL: 410-730-3961

M-38 P-792 BROWN, MABEL W. & KEITH LEO BROWN, ET AL 4171/29 ZONED: R-ED

DRIVEWAY NOTE:
THE INDIVIDUAL DRIVEWAYS IN FRONT OF THE TOWNHOME GARAGES SHALL BE A MINIMUM LENGTH OF 18 FEET.

PRIVATE INGRESS, EGRESS, MAINTENANCE AND UTILITY EASEMENT FOR THE BENEFIT OF PARCELS "A-E" ELKRIDGE CROSSING RECORDED L-9265 F-021 & L-9266 F-180 (SEE PLATS NO. 17347-17348

STATE OF MARYLAND — JURI MAISTE — No. 9699 — PROFESSIONAL LAND SURVEYOR

DRAWN: J.M.
DATE: FEB. 27, 2007
SCALE: 1"=30'

DATE	REVISION	BY
9/02/08	PER APPROVED REDLINE REVISIONS	JM
4/09/14	ADJUSTED PHASING, ADDED 22' & 27' STRUCTURES, REVISED 4 TO 5 STORIES AND ALL NOTES AND CURVES.	STA
	34 TOWNHOMES & CHANGED BLDG. D	
	REVISED TH 9, 10, 11 & 12 BLDG. E TO	
		GSHG

ELKRIDGE - CROSSING - PHASE TWO
PARCELS A-E
TAX MAP 38, GRID 2, PARCELS 30 & 38
FIRST ELECTION DISTRICT, HOWARD COUNTY, MARYLAND
SITE*DEVELOPMENT*PLAN-3

JURI MAISTE - SITE DESIGN CONSULTANT
2923 Chenoweth Avenue, Baltimore, Maryland 21234
Phone: 410-661-8752 Fax: 410-661-8752

RICHARDSON ENGINEERING, LLC
730 W. Padonia Road, Suite 101, Cockeysville, Maryland 21030
Phone: 410-560-1502 Fax: 410-560-0827

SHEET 5 OF 35

SDP-06-078

REVISED SDP-06-078

SEE SHEET 5
MATCH LINE

PHASE 1

PARCEL C-1
5.974 AC. PN 19565-66

PARCEL A-1
1.536 AC. PN 19565-66

PARCEL B-1
3.880 AC. PN 19565-66

PHASE 2
98 UNITS

PHASE 3/4

PHASE 2

SEE SHEET 33 OF 35
FOR REVISIONS TO
THIS AREA

PROPOSED STORMWATER MANAGEMENT POND (PRIVATELY OWNED & MAINTAINED W/ PUBLIC ACCESS)

PRIVATE SWM EASEMENT (PN 18494-95)

PRIVATE STORMWATER MANAGEMENT EASEMENT (PN 19057-58)

PROPOSED UNDERGROUND SWM FACILITY

PRIVATE COMMON ACCESS EASEMENT PN 18494-95

PUBLIC WATER & UTILITY EASEMENT PN 18494-95

PRIVATE STORM DRAIN EASEMENT PN 19057-58

PRIVATE STORM DRAIN EASEMENT-PN 19565-66

DOCTOR PATEL DRIVE
PRIVATE ROAD
1,126.63'

FUTURE PARKING AREA

EXIST. RETAINING WALL #7 - 16'HIGH

EXIST. RETAINING WALL #8 - 12'HIGH

CROSSHATCH REPRESENTS A NO WOODY VEGETATION ZONE

BLDG. E
5 STORY HOTEL
148 GUEST ROOMS
FF-182.50
2-5TH FLOORS
4,500 SF BANQUET HALL
3,269 SF LOBBY (PHASE 2)
4,999 SF EAT-IN RESTAURANT

(PHASE 2)
BLDG. D
4 STORY
1-ST 6,700 SF RETAIL &
2-4TH 25,500 SF OFFICES
FF 182.25

L O B B Y
1,800 SF
FF 183.75

NON-TIDAL WETLANDS WITH 25' BUFFER LINE

LAND DEDICATED TO MD. SHA FOR PUBLIC ROAD WIDENING AREA=0.1907 ACRES

AMENITY AREA #1 PER APPROVED SKETCH PLAN S-04-011 AREA= 0.14 ACRES

AMENITY AREA #2 PER APPROVED SKETCH PLAN S-04-011 AREA=0.22 ACRES

REMOVE EXIST. CONC. C&G
PROP. SHA TYPE "A" CONC. C&G
VECHICULAR EGRESS AND INGRESS RESTRICTED

WASHINGTON BLVD. (US RTE #1)
(SHA R/W PLATS #53341 & 53342)
128'

McDonalds Entrance

EXISTING BUILDING RETAIL USE

M-38 P-35
SUBWAY 27 PROPERTIES, LLC
5758/137
ZONED: B-2

EXISTING BUILDING

PRE AND POST
65dBA NOISE EXPOSURE LINE - 190

M-38 P-792
BROWN & MABEL BROWN, ET AL
KEITH LEO
4171/29
ZONED: R-ED

FRAME GARAGE

PRE AND POST
65dBA NOISE EXPOSURE LINE

M-38 P-289
KEITH LEO BROWN & LINDA MAE SKINNER
4171/36
ZONED: B-2

FRAME GARAGE

EXISTING SHED

S25°41'28"E 200.03'

N33°07'04"W 187.69'

S43°34'57"W 200.00'

EX.8"SANITARY SEWER

EX. 8"WATER (CWD 29096 DWG 8 O.F 25)

EX.12"GAS

EX.30" RCP

EX. PAVING 68'

EX. R/W 82'

EX.18" RCP

EX.36" RCP

EX.24" RCP

EX.15" RCP

EX.10" RCP

EX.6" RCP

EX.4" RCP

EX.8" RCP

EX.12" RCP

EX.STORM DRAIN MANHOLE

EX.SANITARY MANHOLE

EX.WATER MANHOLE

EX.GAS MANHOLE

EX.FIRE HYDRANT

EX.WATER VALVE

EX.GAS VALVE

EX.WATER METER

EX.SIGN

EX.LIGHT

EX.TELEPHONE MANHOLE

EX.ELECTRIC MANHOLE

EX.CURB TO BE REMOVED

EX.STRUCTURE AND USE SETBACK LINE

EX. R/W LINE

EX. SHA I-5 TO BE REMOVED

EX. SHA I-5 TO BE REMOVED

EX. 30' RCP

EX. 7'R/W

EX. 84'R/W

EXIST. 56' PAVING

PROP. 84'R/W

PROP. 56' PAVING

PROP. 15' SIDEWALK

PROP. 5' SIDEWALK

PROP. 6' WIDE CROSSWALK STAMPED CONC. OR PAVER BLOCKS

PROP. DUMPSTERS W/ENCLOSURE

PROP. WATER METERVALVE

PROP. FIRE HYDRANTS

PHASING LINES

D.P. DEPRESSED CURB

Symbol	Qty	Label	Arrangement	Lumens	LLF	Description
C2	5	R2	SINGLE	14000	0.720	175W MH 15' Semi-Cutoff/Reflector
C1	3	C1	SINGLE	14000	0.720	250 WATT HPR (VAPOR) MOUNTED ON 30' POLES WITH 12' ARMS
	20	S2	BACK-BACK	36000	0.720	Twin ECA 400 watt MH 32' Full Cutoff/Reflector
S2T	7	S2T	TWIN	36000	0.720	Twin ECA 400 watt MH 32' Full Cutoff/Reflector
C2	13	C2	ACORN	1500	0.720	150 W HP SODIUM VAPOR-POSTOP FIXTURE ON 12' BLACK FIBERGLASS POLE INCLUDING A SHROUD

LEGEND

D —EXISTING STORM DRAIN
G —EXISTING GAS MAIN
S —EXISTING SANITARY SEWER
W —EXISTING WATER MAIN
210 PROPOSED CONTOUR LINES
210 EXISTING CONTOUR LINES
PROPOSED WATER MAINS
PROPOSED STORM DRAIN
PROPOSED SANITARY SEWER
EXISTING CONC. CURB & GUTTER
PROPOSED CURB & GUTTER

20 DESIGNATES NUMBER OF PARKING SPACES
FH – FIRE HYDRANT
CW – CONCRETE WALK
EDGE OF EX.ISTING WOODS LINE

BENCH MARKS

HOWARD COUNTY MON. #38BA
ELEV. 166.939
BRASS DISC ON CONC.MONUMENT ON WEST SIDE OF RTE.1 APPROX. 100' N OF BONNIE VIEW LA.

HOWARD COUNTY MON. #38A9
ELEV. 223.417
BRASS DISC ON CONC.MONUMENT IN GRASS PLOT ON SE SIDE OF US RTE 1 AND MONTGOMERY RD.

SF FIRE DEPT. SIAMESE CONN.
KB FIRE DEPT. KNOX BOX

FIRE DEPARTMENT NOTE:
THE FIRE DEPARTMENT KNOX BOX SHALL BE PLACED AT THE RIGHT OF THE MAIN ENTRANCE AT A RANGE OF 4'-5' IN HEIGHT AND NO MORE THAN 6' LATERALLY FROM THE DOOR.

EASEMENT LEGEND

18494-95, 19057-58 & 19565-66

DENOTES PRIVATE ACCESS EASEMENT
DENOTES PUBLIC WATER AND UTILITY EASEMENT
PRIVATE 10' STORM DRAIN EASEMENT
PRIVATE STORMWATER MANAGEMENT EASEMENT

15%-24.99% SLOPES
STEEP SLOPES >25%
SIDEWALK CROSS-OVER(CONC.PAVERS)

OWNER
PARCEL 30 – GWENRIDGE, LLC
5551 OAKLAND MILLS ROAD
COLUMBIA MD 21045
TEL: 410-730-3961
PARCEL 38 – MEHTA CHARALUTA TRUST
5551 OAKLAND MILLS ROAD
COLUMBIA MD 21045
TEL: 410-730-3961

DEVELOPER
GWENRIDGE, LLC
5551 OAKLAND MILLS ROAD
COLUMBIA MD 21045
TEL: 410-730-3961

HANDICAPPED ACCESS NOTE:
CONTRACTOR TO PROVIDE SIDEWALK RAMPS AT ALL INTERSECTIONS PER HOWARD COUNTY STD. PLATES R-4.01, R-4.02, OR R-4.03.

APPROVED: DEPARTMENT OF PLANNING AND ZONING

CHIEF, DEVELOPMENT ENGINEERING DIVISION — DATE 02/04/09
CHIEF, DIVISION OF LAND DEVELOPMENT — DATE 3/06/09
DIRECTOR — DATE 3/3/09

REV/REPLACEMENT SHT.

STATE OF MARYLAND — JURI MAISTE — No. 9895 — PROFESSIONAL LAND SURVEYOR

FOR REV. 3 ONLY 4/09/19
PROFESSIONAL CERTIFICATION:
I HEREBY CERTIFY THAT THESE DOCUMENTS WERE PREPARED OR APPROVED BY ME, AND THAT I AM A DULY LICENSED PROFESSIONAL ENGINEER UNDER THE LAWS OF THE STATE OF MARYLAND, LICENSE NUMBER 16577, EXPIRATION DATE: 08-15-2015

SEE SHEET 3
MATCH LINE

DRAWN: J.M.
NOVEMBER 20, 2006
SCALE: 1"=30'

DATE	REVISION	BY
4/09/19	PER APPROVED REVISE PLANS ADDING PARKING SIGN "D" OUTLOTS REMOVE TM 1, 10 & 100 BLOCK E TO 36 TWINBROOK 1 CLOSURE BLOCK D, PHASE 4 TO 3 TWINBROOK AND ADD NOTES 3 CLOSURE	JM WL BJM

ELKRIDGE*CROSSING*PHASE-2
PARCELS A-E
TAX MAP 38, GRID 2, PARCELS 30 & 38
FIRST ELECTION DISTRICT, HOWARD COUNTY, MARYLAND
SITE*DEVELOPMENT*PLAN-4

JURI MAISTE – SITE DESIGN CONSULTANT
2923 Chenoak Avenue, Baltimore, Maryland 21234
Phone: 410-661-8752 Fax: 410-661-8752

RICHARDSON ENGINEERING, LLC
730 W. Patapsco Road, Suite 101, Cockeysville, Maryland 21030
Phone: 410-560-1502 Fax: 410-560-0827

SHEET 6 OF 35

SDP-06-078

REVISED SDP-06-078

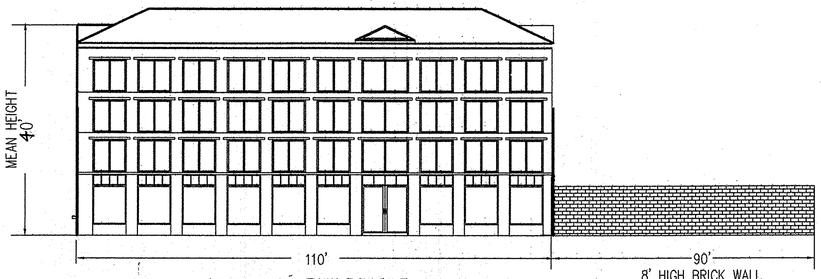

WEST ELEVATION BUILDING D

NTS

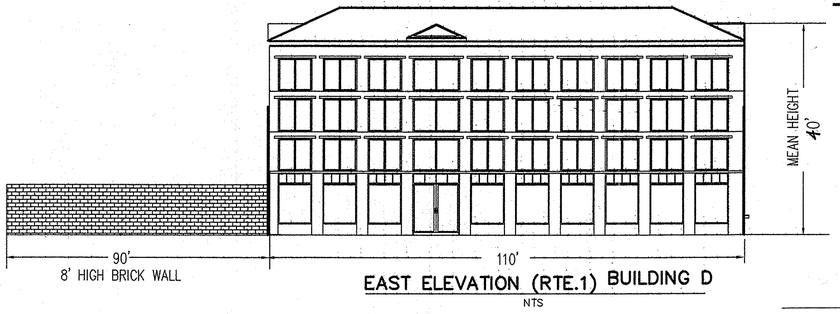

EAST ELEVATION (RTE.1) BUILDING D

NTS

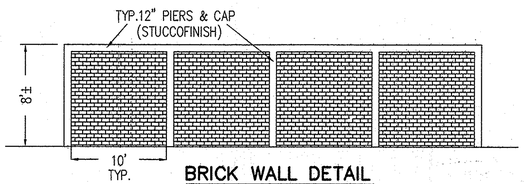

BRICK WALL DETAIL

NTS

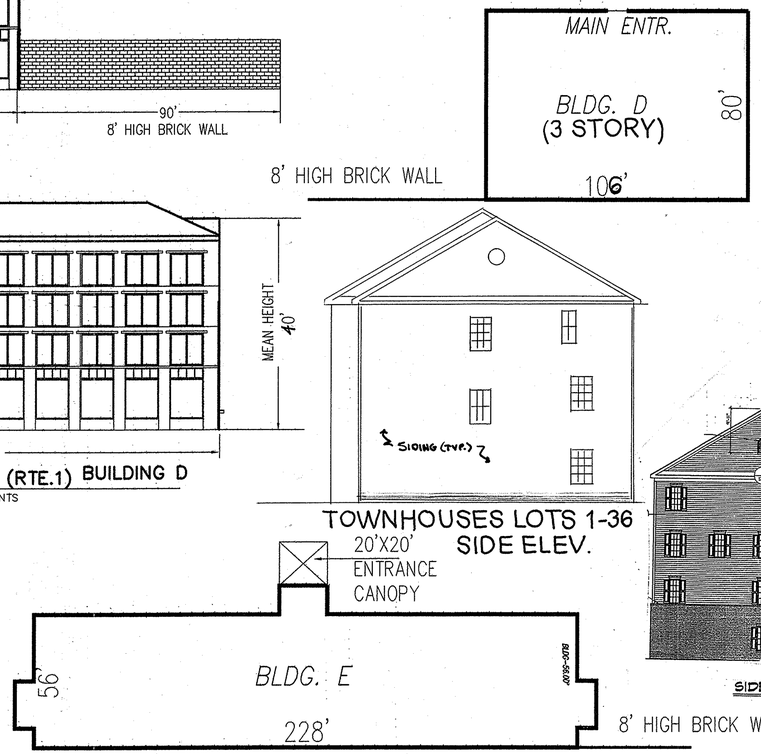

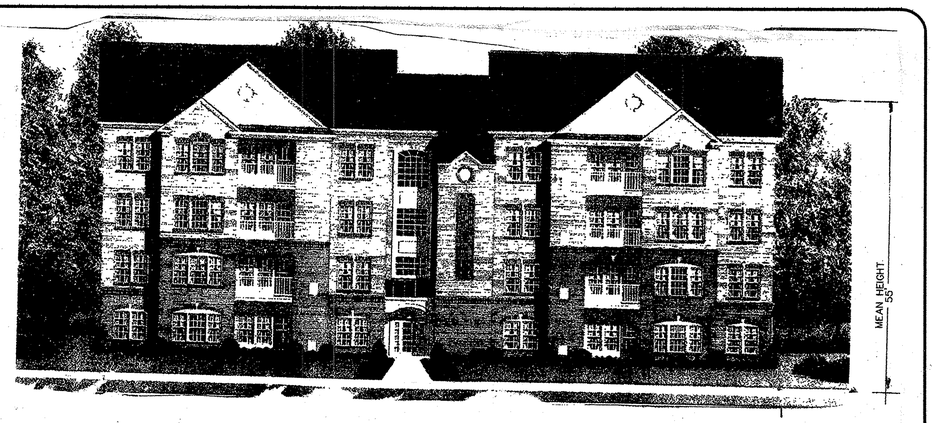

ELEVATION BUILDINGD B3 & B4

NTS

TOWNHOUSES LOTS 1-36
20'X20' ENTRANCE CANOPY
SIDE ELEV.

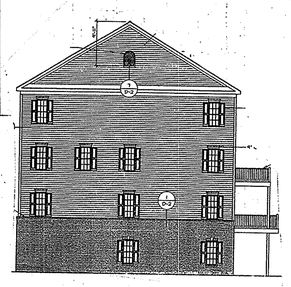

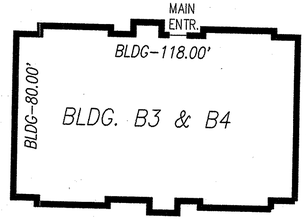

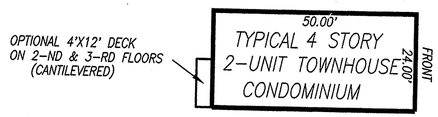

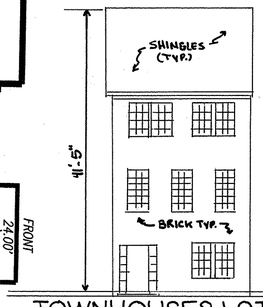

TOWNHOUSES LOTS 1-36
FRONT ELEV.

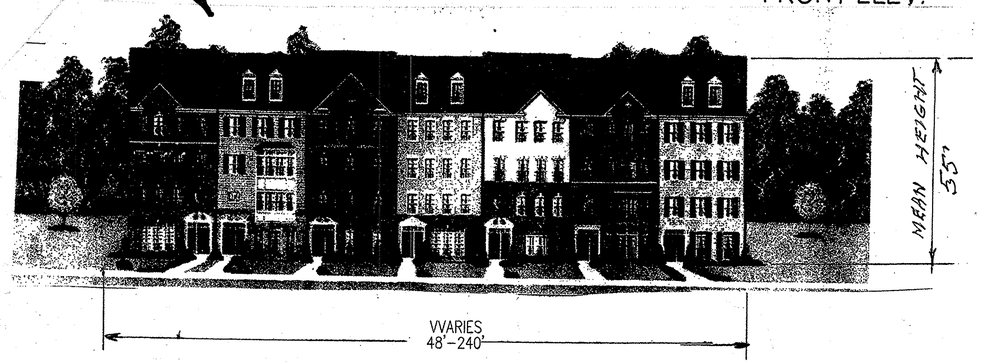

ELEVATION
TOWNHOUSE BUILDINGS 11-14

NTS

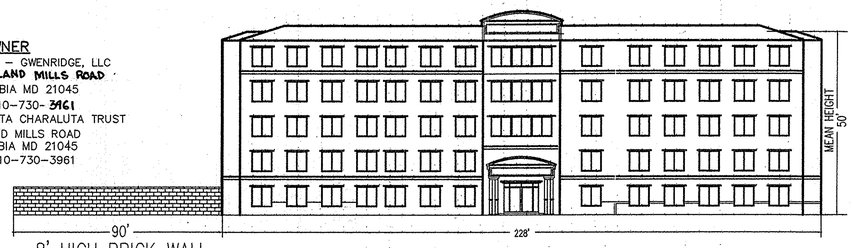

WEST ELEVATION BUILDING E

NTS

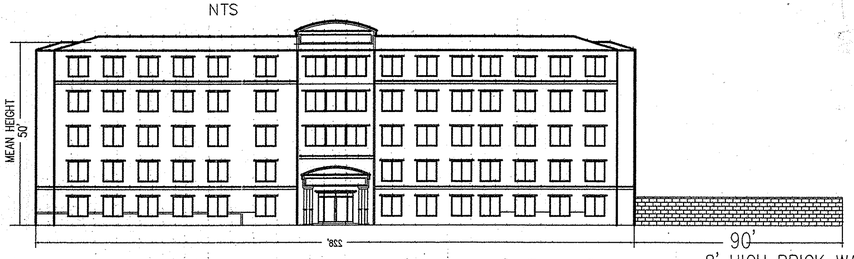

EAST ELEVATION (RTE. 1) BUILDING E

NTS

OWNER
PARCEL 30 – GWENRIDGE, LLC
5551 OAKLAND MILLS ROAD
COLUMBIA MD 21045
TEL: 410-730-3961
PARCEL 38 – MEHTA CHARALUTA TRUST
5551 OAKLAND MILLS ROAD
COLUMBIA MD 21045
TEL: 410-730-3961

DEVELOPER
GWENRIDGE, LLC
5551 OAKLAND MILLS ROAD
COLUMBIA MD 21045
TEL: 410-730-3961

APPROVED: DEPARTMENT OF PLANNING AND ZONING

CHIEF, DEVELOPMENT ENGINEERING DIVISION J.P.	DATE 3/22/07
CHIEF, DIVISION OF LAND DEVELOPMENT	DATE 6/28/07
DIRECTOR	DATE 6/29/07

STATE OF MARYLAND
JURI MAISTE
No. 16697
REGISTERED
PROFESSIONAL ENGINEER

FOR REV. 1 ONLY 7/21/14
PROFESSIONAL CERTIFICATION:
I HEREBY CERTIFY THAT THESE DOCUMENTS WERE PREPARED OR APPROVED BY ME, AND THAT I AM A DULY LICENSED PROFESSIONAL ENGINEER UNDER THE LAWS OF THE STATE OF MARYLAND, LICENSE NUMBER 16697, EXPIRATION DATE: 08-15-2015

STATE OF MARYLAND
JURI MAISTE
No. 16697
REGISTERED
PROFESSIONAL ENGINEER

DRAWN: J.M.
DATE: NOV. 20, 2006
SCALE: 1:=30

BY	DATE	REVISION	REMARKS
	7/21/14	REMOVED TH'S, 1ST, & BLDG. F TO 24 DWELLINGS & CHANGE BLDG. D FROM 4 TO 3 STORIES, AND ALL ASSOC. ADJ'S	

ELKRIDGE – CROSSING – PHASE – TWO
BUILDING*ELEVATIONS

PARCELS A-E
TAX MAP 38, GRID 2, PARCELS 30 & 38
FIRST ELECTION DISTRICT, HOWARD COUNTY, MARYLAND

JURI MAISTE – SITE DESIGN CONSULTANT
2323 Chenoak Avenue, Baltimore, Maryland 21234
Phone: 410-661-8752 Fax: 410-661-8752

RICHARDSON ENGINEERING, LLC
730 W. Padonia Road, Suite 101, Cockeysville, Maryland 21030
Phone: 410-560-1502 Fax: 410-560-0827

REVISED SDP-06-078

SHEET 7 OF 35

SDP-06-078

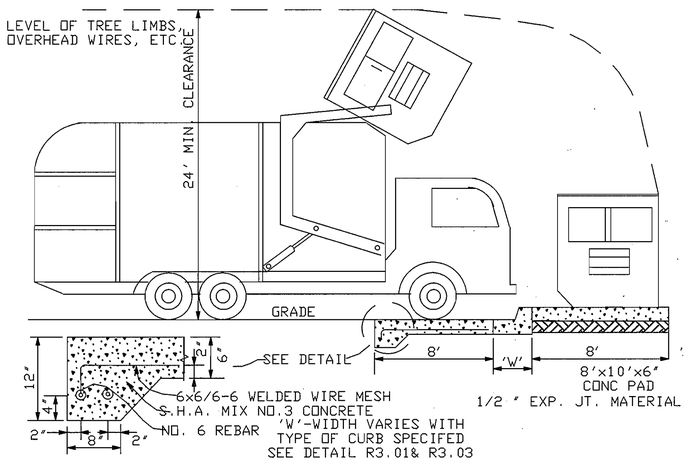

SOLID WASTE SERVICE PAD

N.T.S.

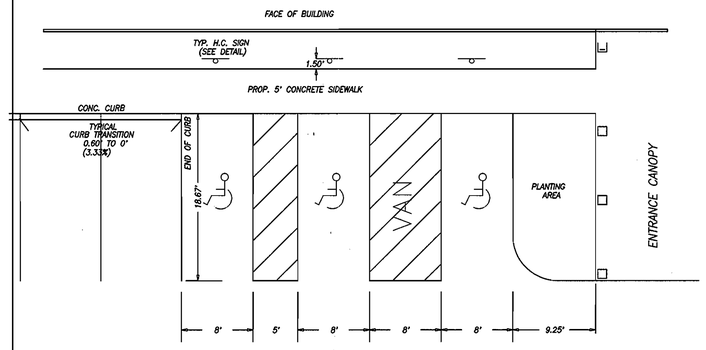

HANDICAPPED PARKING LAYOUT DETAILS BLDGS.C,D,E & F

NOTE:
FIXTURES ALONG LOT LINES SHALL CONTAIN SIDE AND REAR LAMP SHIELDS TO PREVENT GLARE AND EXCESSIVE ILLUMINATION TO ADJACENT PROPERTIES.

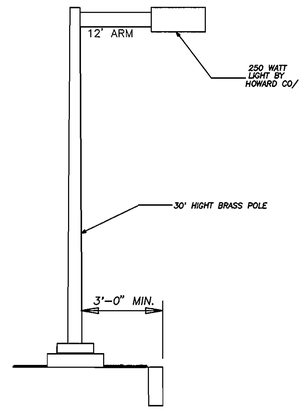

TYPICAL LIGHT C1

N.T.S.

NOTE:
FIXTURES ALONG LOT LINES SHALL CONTAIN SIDE AND REAR LAMP SHIELDS TO PREVENT GLARE AND EXCESSIVE ILLUMINATION TO ADJACENT PROPERTIES.

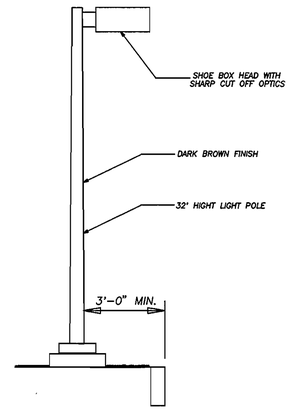

TYPICAL LIGHT FIXTURE

N.T.S.

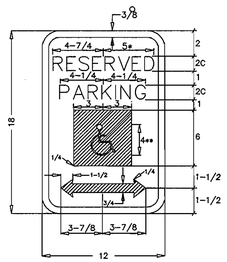

* REDUCE SPACING 50%
** SEE SYMBOL 1860 FOR SYMBOL DESIGN (ALL DIMENSIONS FOR SIGN IN INCHES)

COLORS:
LEGEND AND BORDER – GREEN
WHITE SYMBOL ON BLUE BACKGROUND
BACKGRUND – WHITE

REFERENCE: STATE OF MARYLAND STANDARD HIGHWAY SIGN BOOKLET MARYLAND DEPARTMENT OF TRANSPORTATION

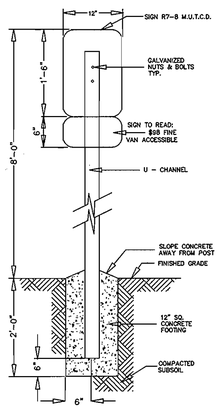

HANDICAP SIGN

NOT TO SCALE

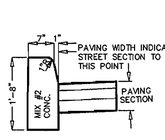

STANDARD BARRIER CURB

HOWARD COUNTY STANDARD R-3.03
NOT TO SCALE

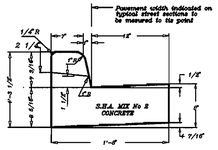

STANDARD COMBINATION CURB & GUTTER

HOWARD COUNTY STANDARD R-3.01
NOT TO SCALE

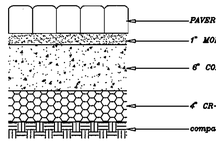

CROSSWALK PAVERS SECTION

NTS

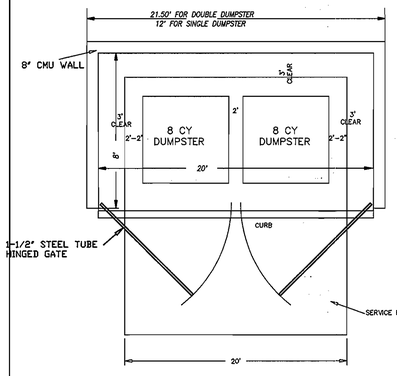

PLAN VIEW

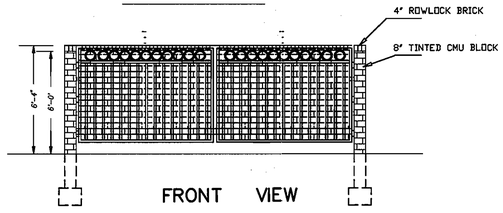

FRONT VIEW

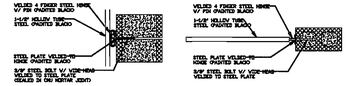

GATE HINGE DETAILS

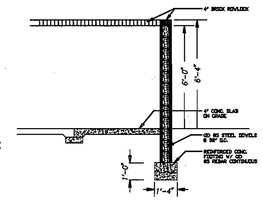

SECTION VIEW

DUMPSTER ENCLOSURE DETAIL

NTS

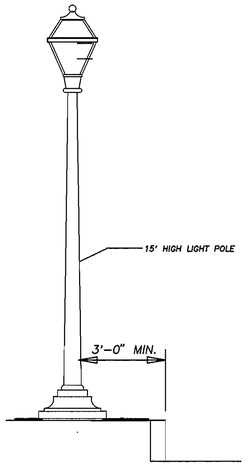

TYPICAL LIGHT R2

N.T.S.

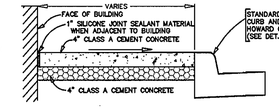

NOTES:
1. SIDEWALK TO HAVE MEDIUM BROOM FINISH PERPENDICULAR TO DIRECTION OF PEDESTRIAN TRAFFIC.
2. CONSTRUCT WITH ACCORDANCE WITH PROJECT SPECIFICATION.
3. SEE SITE PLAN FOR SIDEWALK LOCATION.
4. PROVIDE ACCESSIBLE/CART RAMPS IN ACCORDANCE WITH CODE
5. PLACE 6x6-W2.0 WWF IN CENTER OF SLAB.
6. PLACE EXPANSION JOINT @ 20' MAX.
7. PLACE CONTOL JOINTS AT 4' TO 10' MAX.
8. ALL OTHER SITE SIDEWALKS SHALL BE CONSTRUCTED USING THE MATERIALS AND DEPTHS INDICATED ABOVE.

TYPICAL SIDEWALK DETAIL

N.T.S.

STANDARD RAMP DETAIL.

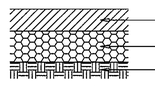

LIGHT DUTY
ALL PARKING AREAS

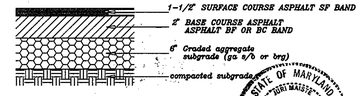

HEAVY DUTY
MEHTA COURT & DRIVES

TYPICAL PAVEMENT SECTIONS

NOT TO SCALE

OWNER
PARCEL 30 – GWENRIDGE, LLC
8835–P COLUMBIA 100 PARKWAY
COLUMBIA MD 21045
TEL: 410–730–0810
PARCEL 38 – MEHTA CHARALUTA TRUST
5551 OAKLAND MILLS ROAD
COLUMBIA MD 21045
TEL: 410–730–3961

DEVELOPER
BRANTLY DEVELOPMENT GROUP, INC.
8835–P COLUMBIA 100 PARKWAY
COLUMBIA MD 21045
TEL: 410–730–0810

APPROVED: DEPARTMENT OF PLANNING AND ZONING

CHIEF, DEVELOPMENT ENGINEERING DIVISION	DATE 3/22/07
CHIEF, DIVISION OF LAND DEVELOPMENT	DATE 6/5/07
DIRECTOR	DATE 6/29/07

DRAWN: J.M. | DATE: MARCH 24, 2006 | SCALE: 1"=30'

REVISION	DATE
8'	

ELKRIDGE–CROSSING– PHASE–TWO

PARCELS A-E
TAX MAP 38, GRID 2, PARCELS 30 & 38
FIRST ELECTION DISTRICT, HOWARD COUNTY, MARYLAND

CONSTRUCTION–DETAILS

JURI MAISTE – SITE DESIGN CONSULTANT
2923 Chenoak Avenue Baltimore, Maryland 21234
Phone: 410–661–8752 Fax: 410–661–8752

RICHARDSON ENGINEERING, LLC
730 W.Padonia Road, Suite 101, Cockeysville, Maryland 21030
Phone: 410–560–1502 Fax: 410–560–0827

STATE OF MARYLAND — JURI MAISTE — REGISTERED PROFESSIONAL LAND SURVEYOR

SHEET 8 OF 32

SDP-06-078

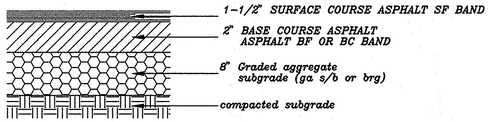

TYPICAL PAVEMENT SECTION

NTS

OWNER
PARCEL 30 - GWENRIDGE, LLC
5551 OAKLAND MILLS ROAD
COLUMBIA MD 21045
TEL: 410-730-3961
PARCEL 38 - MEHTA CHARALUTA TRUST
5551 OAKLAND MILLS ROAD
COLUMBIA MD 21045
TEL: 410-730-3961

DEVELOPER
GWENRIDGE, LLC
5551 OAKLAND MILLS ROAD
COLUMBIA MD 21045
TEL.: 410-730-3961

NOTES:

1. SIDEWALK TO HAVE MEDIUM BROOM FINISH PERPENDICULAR TO DIRECTION OF PEDESTRIAN TRAFFIC.
2. CONSTRUCT IN ACCORDANCE WITH PROJECT SPECIFICATIONS.
3. SEE SITE PLAN FOR SIDEWALK LOCATION.
4. PROVIDE ACCESSIBLE/CART RAMPS IN ACCORDANCE WITH STANDARD RAMP DETAIL.
5. PLACE 6x6-W2.0 WWF IN CENTER OF SLAB.
6. PLACE EXPANSION JOINT @ 20' MAX.
7. PLACE CONTROL JOINTS AT 4' TO 10' MAX.
8. ALL OTHER SITE SIDEWALKS SHALL BE CONSTRUCTED USING THE MATERIALS AND DEPTHS INDICATED ABOVE.

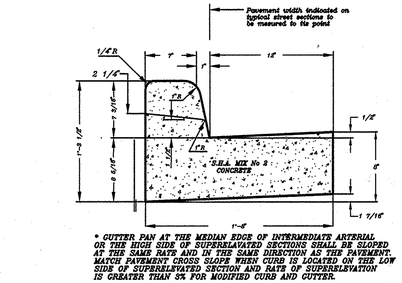

* GUTTER PAN AT THE MEDIAN EDGE OF INTERMEDIATE ARTERIAL OR THE HIGH SIDE OF SUPERELEVATED SECTIONS SHALL BE SLOPED AT THE SAME RATE AND IN THE SAME DIRECTION AS THE PAVEMENT. MATCH PAVEMENT CROSS SLOPE WHEN CURB IS LOCATED ON THE LOW SIDE OF SUPERELEVATED SECTION AND RATE OF SUPERELEVATION IS GREATER THAN 5% FOR MODIFIED CURB AND GUTTER.

STANDARD COMBINATION CURB & GUTTER

HOWARD COUNTY STANDARD R-3.01
NTS

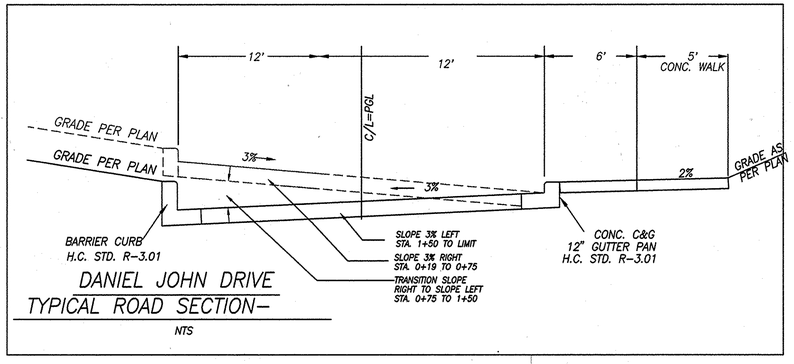

DANIEL JOHN DRIVE
TYPICAL ROAD SECTION-

NTS

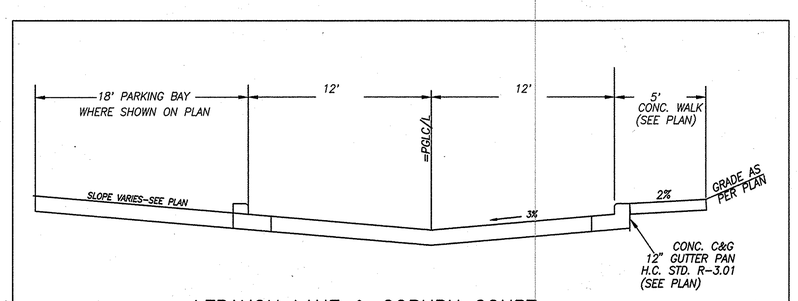

LEBANON LANE & COBURN COURT
TYPICAL ROAD SECTION

NTS

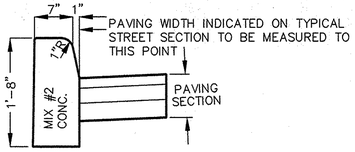

STANDARD BARRIER CURB

HOWARD COUNTY STANDARD R-3.03
NOT TO SCALE

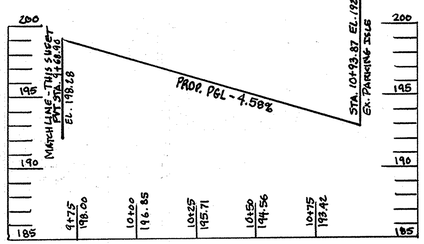

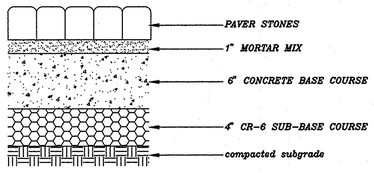

CROSSWALK PAVERS SECTION

NTS

BENCH MARKS

ELEV. 223.417
HOWARD COUNTY MON. #38A9

BRASS DISK ON CONC.MONUMENT IN GRASS PLOT ON SE SIDE OF US RTE 1 AND MONTGOMERY RD.

ELEV. 188.939
HOWARD COUNTY MON. #38A8

BRASS DISC ON CONC. MONUMENT ON WEST SIDE OF RTE.1 APPROX. 100' N OF BONNIE VIEW LA.

APPROVED: DEPARTMENT OF PLANNING AND ZONNING

CHIEF, DEVELOPMENT ENGINEERING DIVISION	DATE 02/04/09
CHIEF, DIVISION OF LAND DEVELOPMENT	DATE 3/16/09
DIRECTOR	DATE 3/17/09

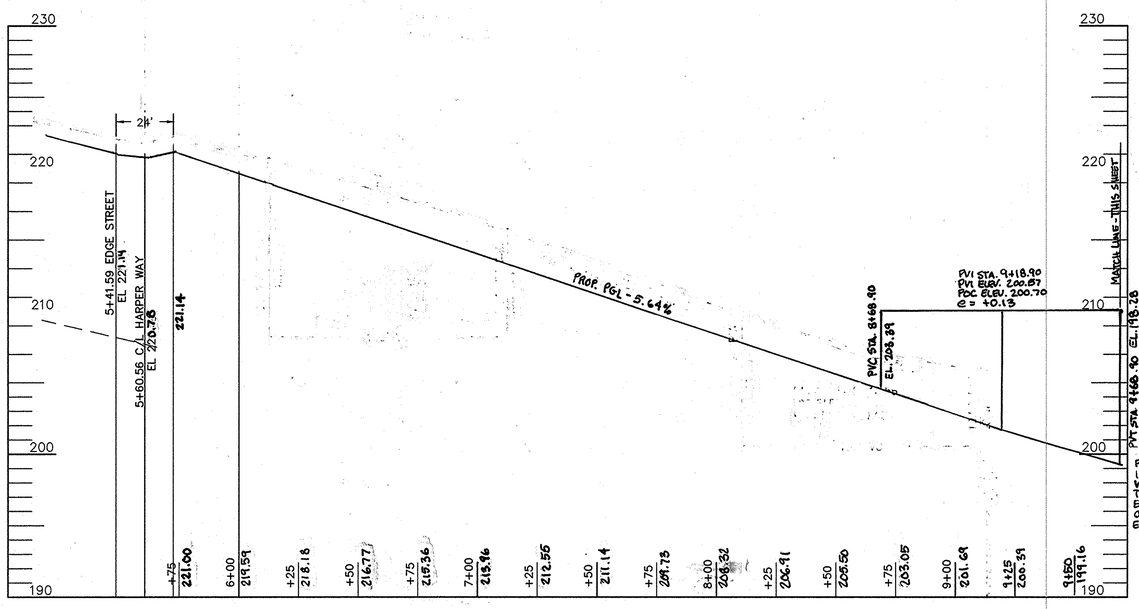

ALLEY C
PRIVATE ROAD

FOR REV. 2 ONLY 4/09/11
PROFESSIONAL CERTIFICATION:
I HEREBY CERTIFY THAT THESE DOCUMENTS WERE PREPARED OR APPROVED BY ME, AND THAT I AM A DULY LICENSED PROFESSIONAL ENGINEER UNDER THE LAWS OF THE STATE OF MARYLAND, LICENSE NUMBER 16097, EXPIRATION DATE: 08-15-2010.

DRAWN: J.M.
DATE: MARCH 24, 2006
SCALE: AS SHOWN

DATE	DESCRIPTION	BY
3/01/07	DEP. APPROVED REVISIONS	JM
4/09/11	REVISED TAX MAP 38, GRID 2, PARCEL 30 & 38 TO INCLUDE PARCEL D, LOT A & LOT F TO BE ABANDONED & CHANGES BLOCK D FROM A TO B, STAGES AND ADD NOTES AND CHARTS.	

ELKRIDGE-CROSSING-PHASE TWO
PARCELS A-E
TAX MAP 38, GRID 2, PARCELS 30 & 38
FIRST ELECTION DISTRICT, HOWARD COUNTY, MARYLAND

ROAD-SECTIONS,-DETAILS-&-PROFILES

JURI MAISTE - SITE DESIGN CONSULTANT
2923 Chenault Avenue, Baltimore, Maryland 21234
Phone: 410-661-8732 Fax: 410-661-8732

RICHARDSON ENGINEERING, LLC
730 W. Padonia Road, Suite 101, Cockeysville, Maryland 21030
Phone: 410-560-1502 Fax: 410-560-0827

REVISED SDP-06-078

SHEET 9 OF 35

SDP-06-078

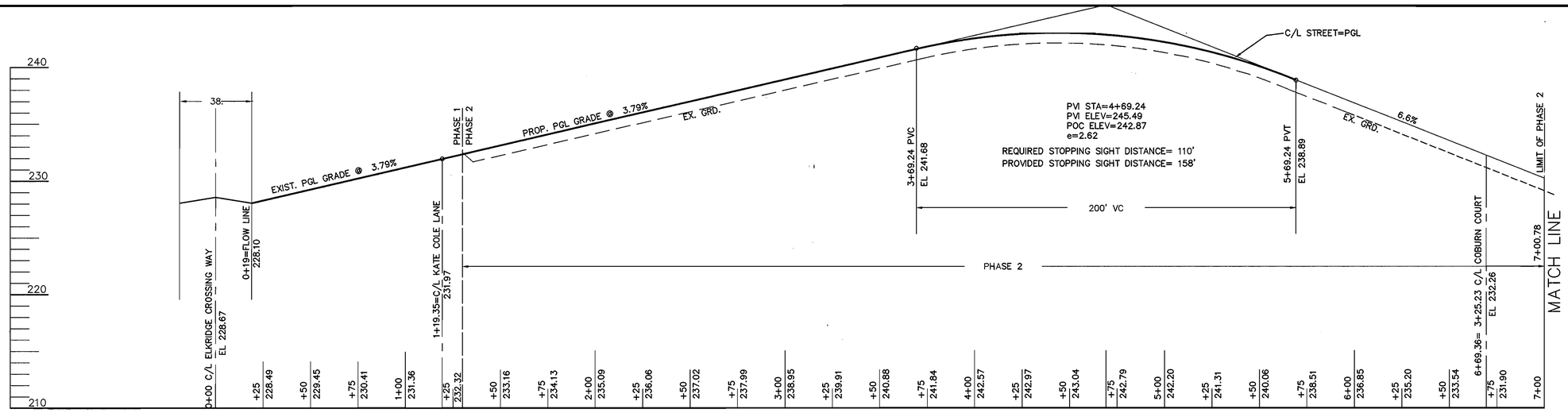

DANIEL JOHN DRIVE

PRIVATE ROAD

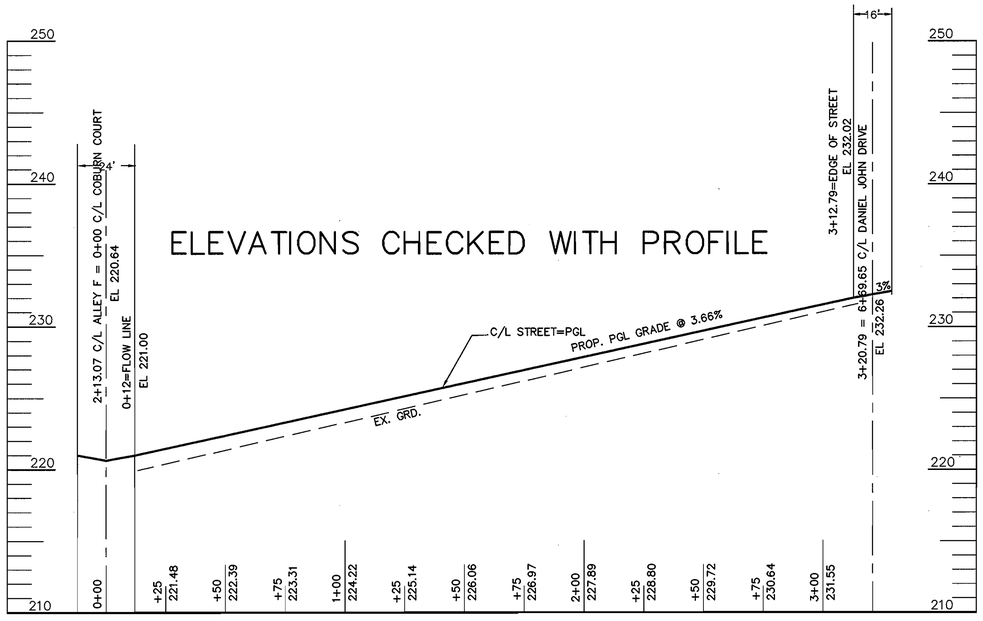

COBURN COURT

PRIVATE ROAD

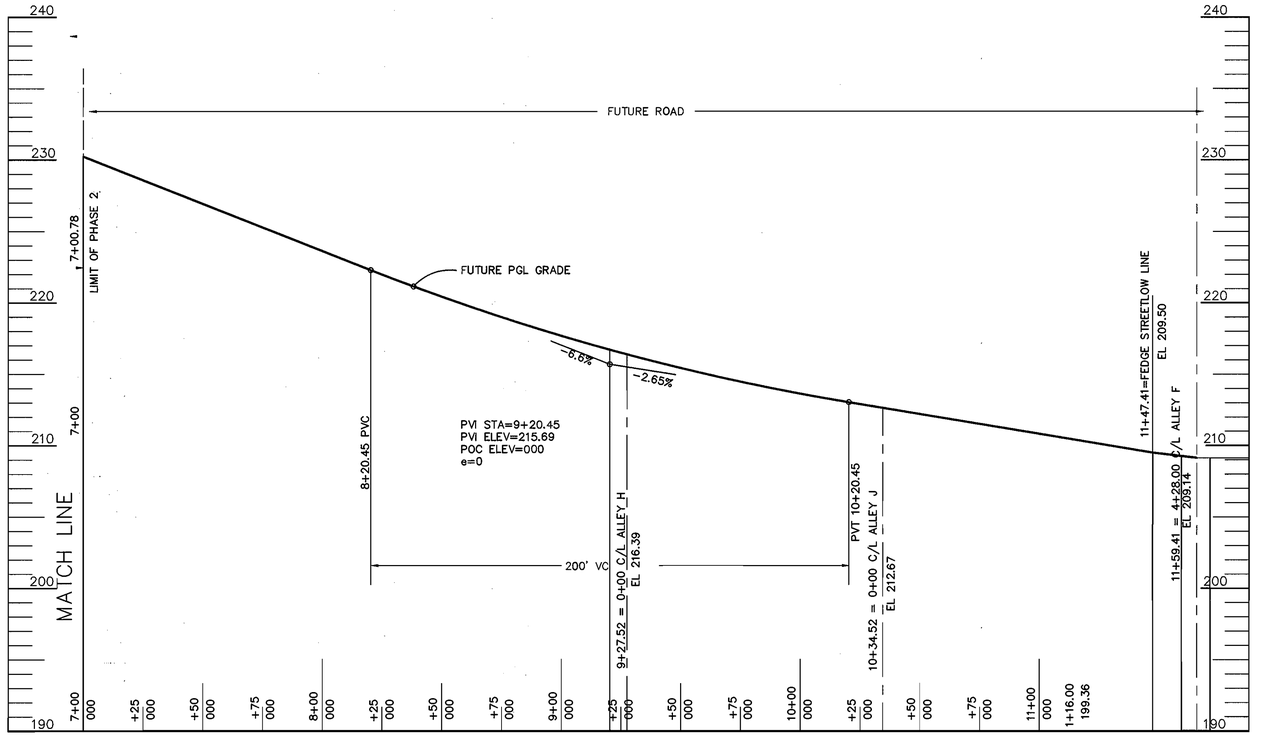

DANIEL JOHN DRIVE

PRIVATE ROAD

BENCH MARKS

HOWARD COUNTY MON. #38A9
ELEV. 223.417
BRASS DISK ON CONC.MONUMENT IN GRASS PLOT ON SE SIDE OF US RTE 1 AND MONTGOMERY RD.

HOWARD COUNTY MON. #38BA
ELEV. 166.939
BRASS DISC ON CONC. MONUMENT ON WEST SIDE OF RTE.1 APPROX. 100' N OF BONNIE VIEW LA.

OWNER

PARCEL 30 – GWENRIDGE, LLC
8835–P COLUMBIA 100 PARKWAY
COLUMBIA MD 21045
TEL: 410–730–0810
PARCEL 38 – MEHTA CHARALUTA TRUST
5551 OAKLAND MILLS ROAD
COLUMBIA MD 21045
TEL: 410–730–3961

DEVELOPER

BRANTLY DEVELOPMENT GROUP, INC.
8835–P COLUMBIA 100 PARKWAY
COLUMBIA MD 21045
TEL: 410–730–0810

APPROVED: DEPARTMENT OF PLANNING AND ZONING

CHIEF, DEVELOPMENT ENGINEERING DIVISION J.P.	DATE 3/22/07
CHIEF, DIVISION OF LAND DEVELOPMENT	DATE 6/28/07
DIRECTOR	DATE 6/29/07

STATE OF MARYLAND
JURI MAISTE
NO. 9695
REGISTERED
PROFESSIONAL LAND SURVEYOR

DRAWN: J.M.
DATE: SEPT. 14, 2006
SCALE: 1:=30–HOR. 1:=5' – VERT.

DATE	REVISION	BY

ELKRIDGE–CROSSING–PHASE–TWO

PARCELS A–E
TAX MAP 38, GRID 2, PARCELS 30 & 38
FIRST ELECTION DISTRICT, HOWARD COUNTY, MARYLAND

PRIVATE*ROAD*PROFILES

JURI MAISTE – SITE DESIGN CONSULTANT
29233 Oberwalk Avenue, Baltimore, Maryland 21234
Phone: 410-661-6732 Fax: 410-661-6732
RICHARDSON ENGINEERING, LLC
730 W. Padonia Road, Suite 101, Cockeysville, Maryland 21030
Phone: 410-560-1502 Fax: 410-560-0827

SDP-06-078

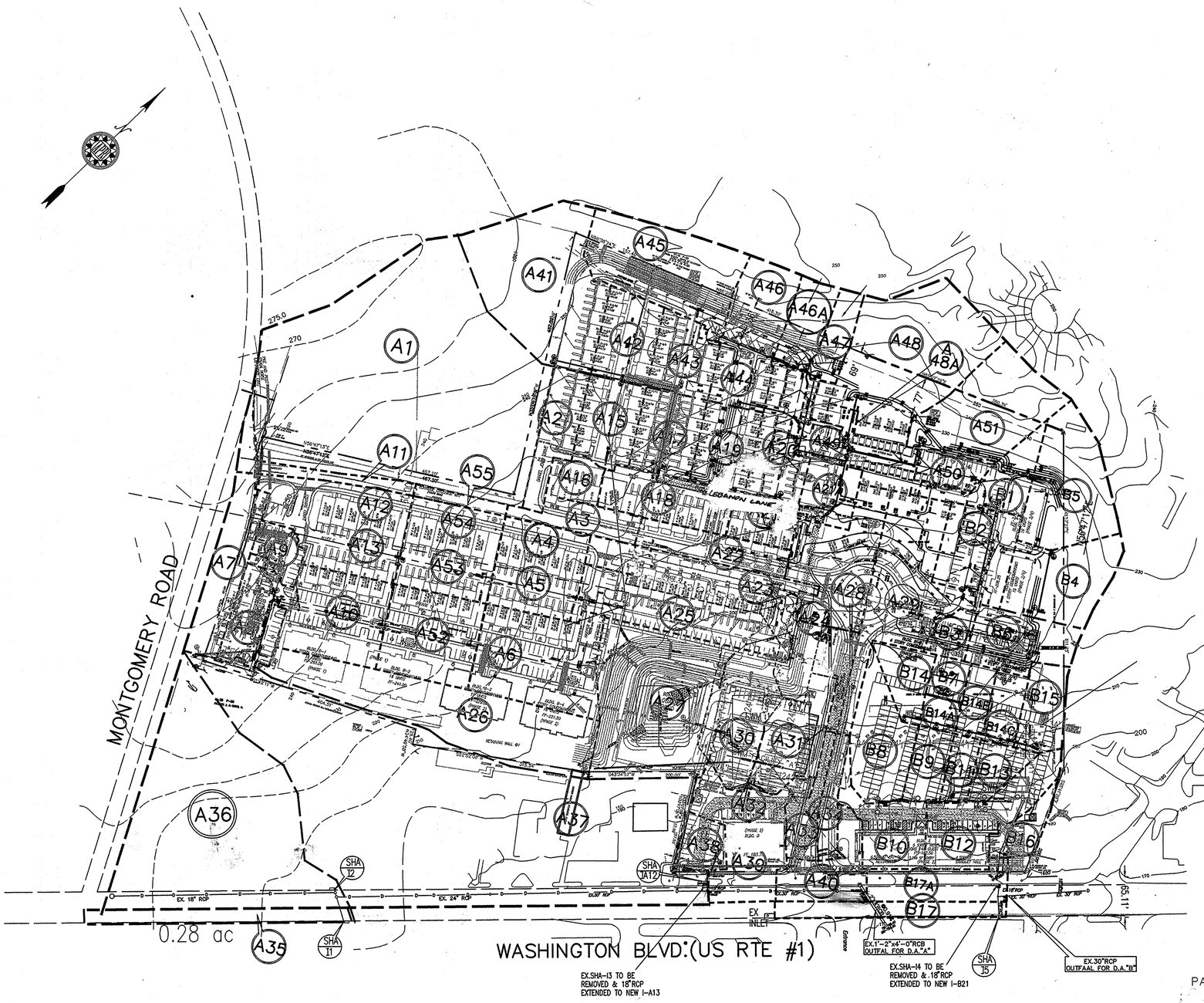

DRAINAGE AREA DATA

D.A. NO.	AREA (ACRES)	"C"	SOILS TYPE
A1	4.03	0.27	C
A2	0.33	0.79	C
A3	0.22	0.79	C
A4	0.28	0.76	C
A5	0.38	0.79	C
A6	0.84	0.76	C
A7	0.54	0.79	C
A8	0.33	0.76	C
A9	0.16	0.73	C
A10	0.68	0.70	C
A11	0.14	0.83	C
A12	0.31	0.76	C
A13	0.56	0.79	C
A15	0.37	0.49	C
A16	0.16	0.76	C
A17	0.38	0.79	C
A18	0.42	0.76	C
A19	0.44	0.49	C
A20	0.0.70	0.79	C
A21	0.23	0.60	C
A21A	0.25	0.60	C
A22	0.32	0.76	C
A23	0.~~51~~	0.73	C
A24	0.~~38~~	0.39	C
A25	0.~~64~~	0.76	C
A26	1.25	0.60	C
A27	1.~~24~~	0.32	C
A28	0.~~39~~	0.73	C
A29	0.98	0.73	C
A30	0.~~57~~	0.79	C
A31	0.~~42~~	0.76	C
A32	0.42	0.79	C
A33	0.21	0.66	C
A34	0.20	0.70	C
A35	0.28	0.76	C
A36	2.49	0.60	C
A37	5.22	0.57	C
A38	0.17	0.79	C
A39	0.27	0.76	C
A40	0.35	0.73	C
A41	1.23	0.36	C
A42	0.46	0.60	C
A43	0.33	0.73	C
A44	0.25	0.60	C
A45	0.85	0.70	C
A46	0.35	0.32	C
A46A	0.27	0.28	C
A47	0.18	0.28	C
A48	0.29	0.28	C
A48A	0.48	0.60	C
A49	0.86	0.86	C
A50	0.15	0.86	C
A51	0.81	0.30	C
A52	0.62	0.76	C
A53	0.42	0.76	C
A54	0.22	0.76	C
A55	0.10	0.76	C
B1	0.29	0.48	C
B2	0.47	0.78	C
B3	0.14	0.40	C
B4	0.57	0.62	C
B5	0.73	0.62	C
B6	0.42	0.39	C
B7	0.10	0.79	C
B8	0.48	0.85	C
B9	0.20	0.85	C
B10	0.36	0.85	C
B11	0.13	0.85	C
B12	0.52	0.45	C
B13	0.18	0.85	C
B14	0.22	0.80	C
B14A	0.10	0.79	C
B14B	0.15	0.79	C
B14C	0.17	0.85	C
B15	0.28	0.35	C
B16	0.52	0.79	C
B17	0.51	0.79	C

LEGEND:

- (A11) AREA NUMBER
- EXISTING CONTOURS
- ZONING DIVIDE
- DRAINAGE AREAS
- PROPERTY LINES

OWNER

PARCEL 30 – GWENRIDGE, LLC
5551 OAKLAND MILLS ROAD
COLUMBIA MD 21045
TEL: 410-730-0810
PARCEL 38 – MEHTA CHARALUTA TRUST
5551 OAKLAND MILLS ROAD
COLUMBIA MD 21045
TEL: 410-730-3961

DEVELOPER

GWENRIDGE, LLC
5551 OAKLAND MILLS ROAD
COLUMBIA MD 21045
TEL: 410-730-3961

APPROVED: DEPARTMENT OF PLANNING AND ZONING

CHIEF, DEVELOPMENT ENGINEERING DIVISION J.P.	02/04/09 DATE
CHIEF, DIVISION OF LAND DEVELOPMENT	3/16/09 DATE
DIRECTOR	3/17/09 DATE

STATE OF MARYLAND — JURI MAISTE — NO. 9895 — PROFESSIONAL ENGINEER

FOR REV. 3 ONLY 4/09/14

PROFESSIONAL CERTIFICATION:
I HEREBY CERTIFY THAT THOSE DOCUMENTS WERE PREPARED OR APPROVED BY ME, AND THAT I AM A DULY LICENSED PROFESSIONAL ENGINEER UNDER THE LAWS OF THE STATE OF MARYLAND, LICENSE NUMBER 16597, EXPIRATION DATE: 08-15-2015

STATE OF MARYLAND — JURI MAISTE — NO. 9895 — PROFESSIONAL LAND SURVEYOR

REV/REPLACEMENT SHT.

DRAWN: J.M.
DATE: AUG. 20, 2007
SCALE: 1"=30

BY	DATE	REVISION
JM	8/01/07	PER APPROVED REZONE REVISIONS
TMK	4/09/14	ADDING ADDL'L PHASING
		INCREASE TILE 4, 10, 104, 4 RELOC. C-10
		SCS TABULATIONS & CHANGE BLDG D
		FROM 4 TO 5 STORIES AND ALL NOTES
		AND CHARTS.

ELKRIDGE– CROSSING– PHASE–2

PARCELS A–D

TAX MAP 38, GRID 2, PARCELS 30 & 38

FIRST ELECTION DISTRICT, HOWARD COUNTY, MARYLAND

DRAINAGE*AREA*MAP

JURI MAISTE – SITE DESIGN CONSULTANT
2923 Chenoak Avenue, Baltimore, Maryland 21234
Phone: 410-661-8752 Fax: 410-661-8752

RICHARDSON ENGINEERING, LLC
730 W. Patapsco Road, Suite 101, Cockeysville, Maryland 21030
Phone: 410-560-1502 Fax: 410-560-0827

SHEET 11 OF 35

SDP-06-078

REVISED SDP-06-078

DEVELOPER
BRANTLY DEVELOPMENT GROUP, INC.
8835-P COLUMBIA 100 PARKWAY
COLUMBIA MD 21045
TEL: 410-730-0810

OWNER
PARCEL 30 - GWENRIDGE, LLC
8835-P COLUMBIA 100 PARKWAY
COLUMBIA MD 21045
TEL: 410-730-0810
PARCEL 38 - MEHTA CHARALUTA TRUST
5551 OAKLAND MILLS ROAD
COLUMBIA MD 21045
TEL: 410-730-3961

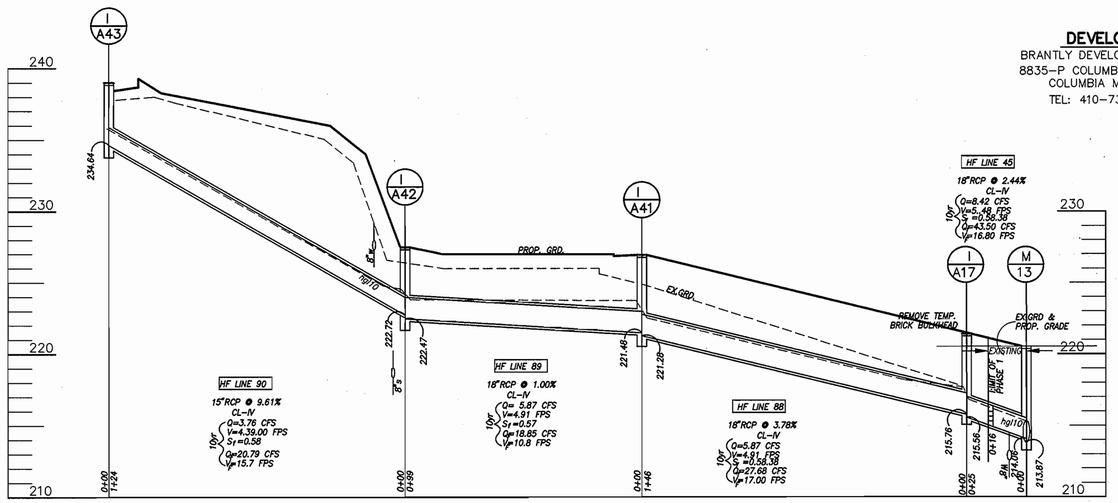

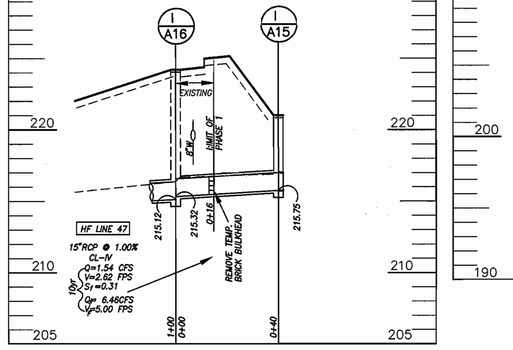

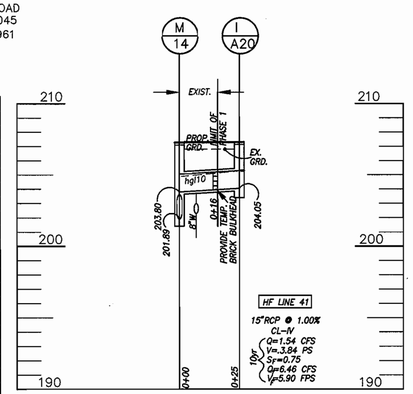

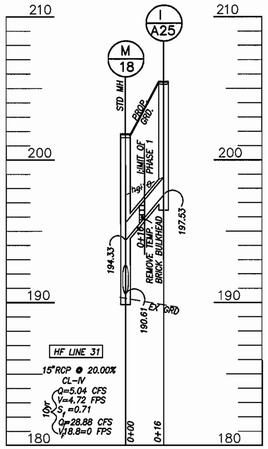

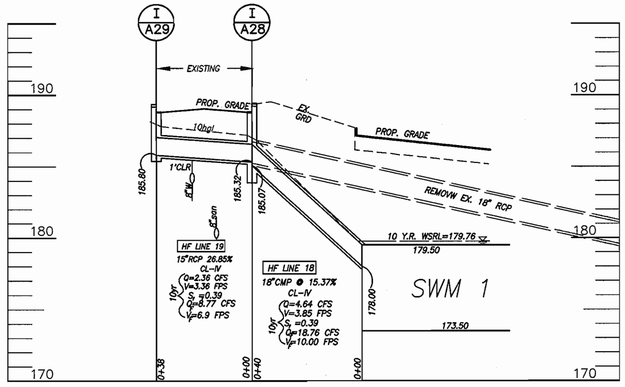

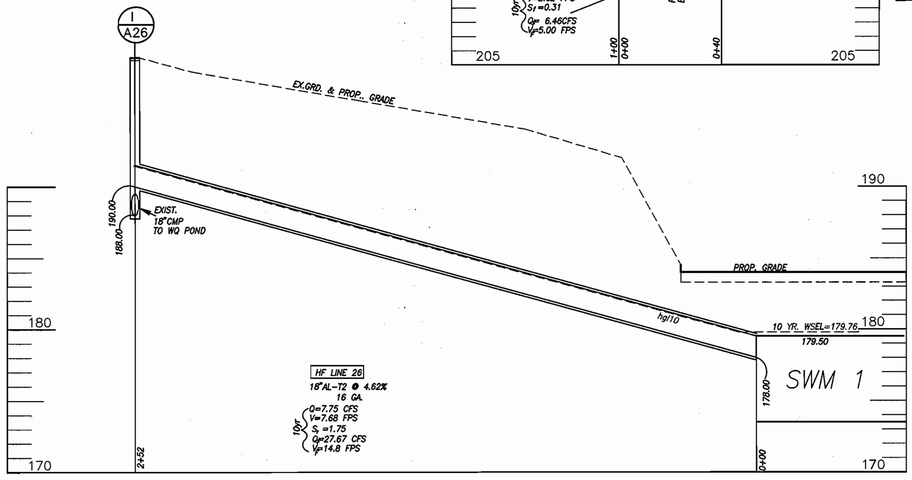

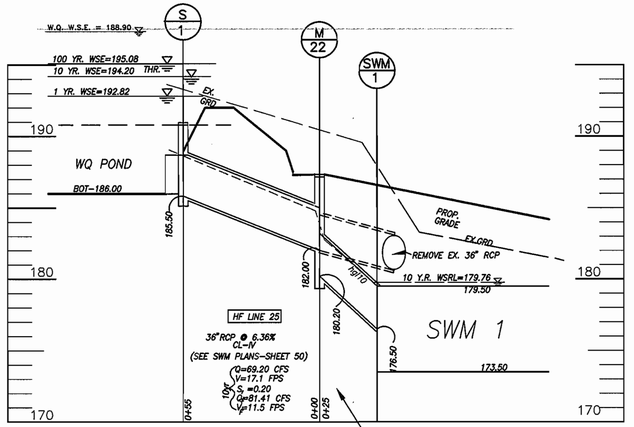

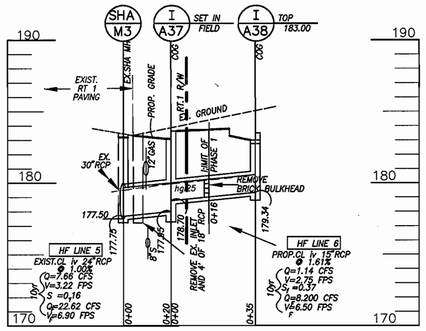

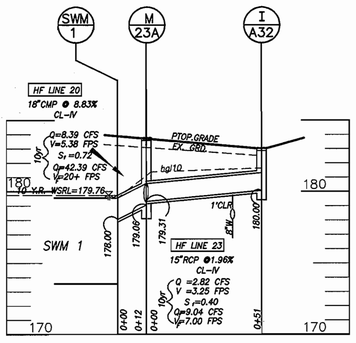

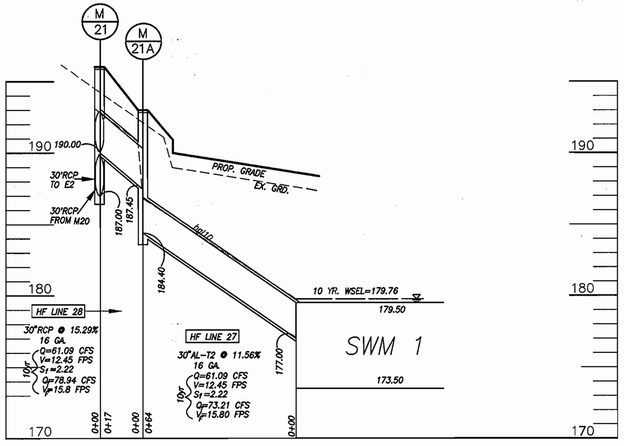

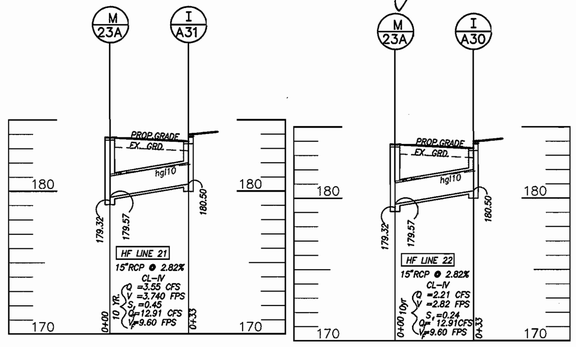

APPROVED: DEPARTMENT OF PLANNING AND ZONING

CHIEF, DEVELOPMENT ENGINEERING DIVISION — DATE 3/22/07

CHIEF, DIVISION OF LAND DEVELOPMENT — DATE 6/25/07

DIRECTOR — DATE 6/29/07

10 Y.R. WSRL=179.76

DRAWN: J.M.
DATE: NOV. 20, 2006
SCALE: 1:=30-HOR. 1:=5-VERT.

REVISION
DATE

ELKRIDGE - CROSSING - PHASE - TWO
PARCELS A-E
TAX MAP 38, GRID 2, PARCELS 30 & 38
FIRST ELECTION DISTRICT, HOWARD COUNTY, MARYLAND
STORM*DRAIN*PROFILES

JURI MAISTE - SITE DESIGN CONSULTANT
2923 Chenoak Avenue Baltimore, Maryland 21234
Phone: 410-661-8752 Fax: 410-661-8752

RICHARDSON ENGINEERING, LLC
730 W.Padonia Road, Suite 101, Cockeysville, Maryland 21030
Phone: 410-560-1502 Fax: 410-560-0827

STATE OF MARYLAND — JURI MAISTE — No. 9995 — PROFESSIONAL ENGINEER

SHEET 12 OF 32

SDP-06-078

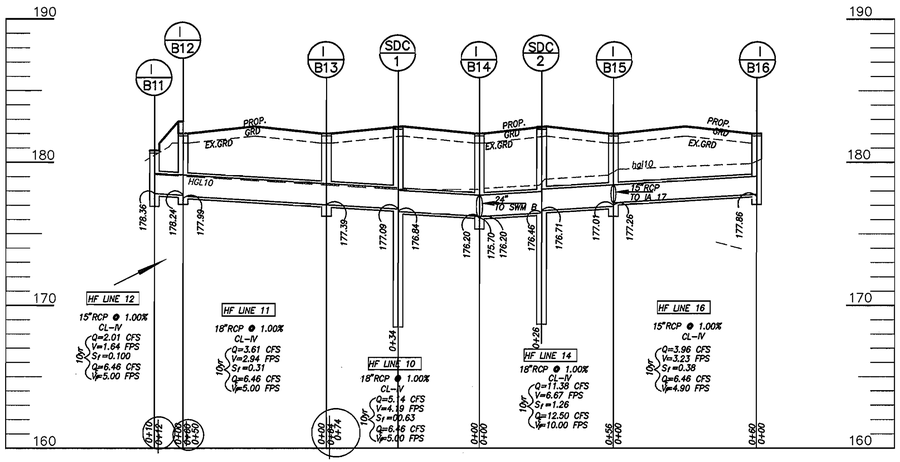

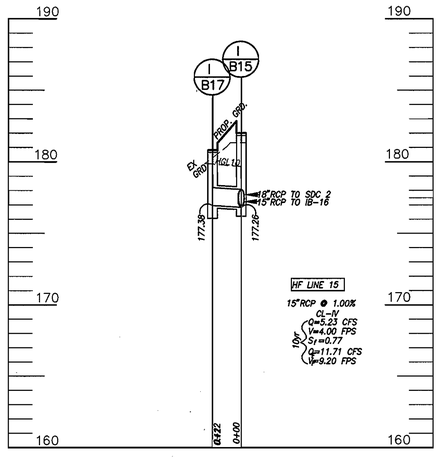

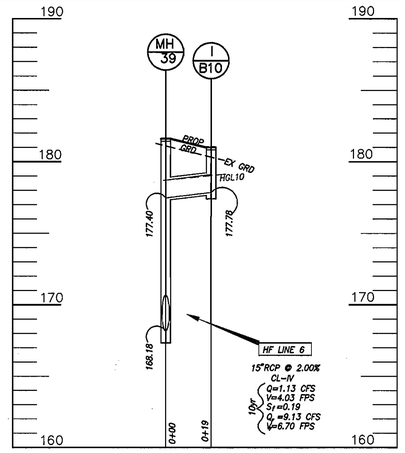

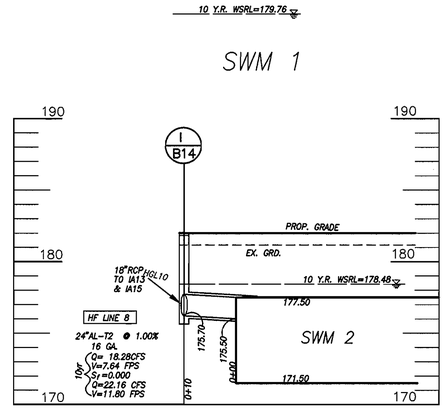

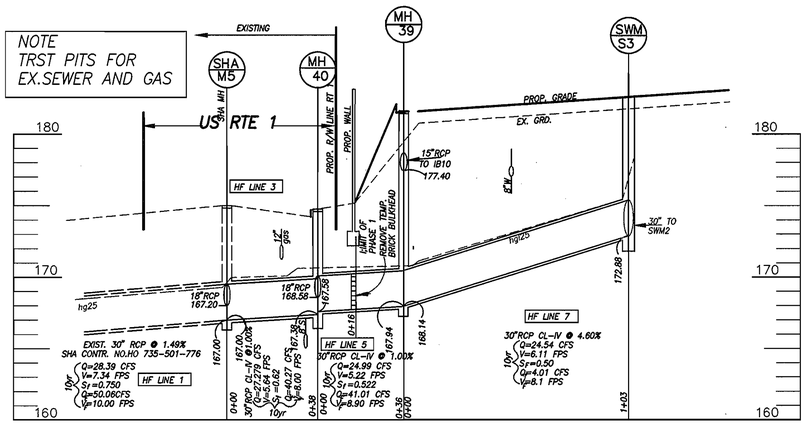

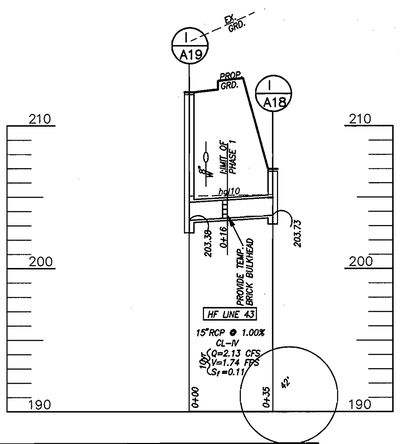

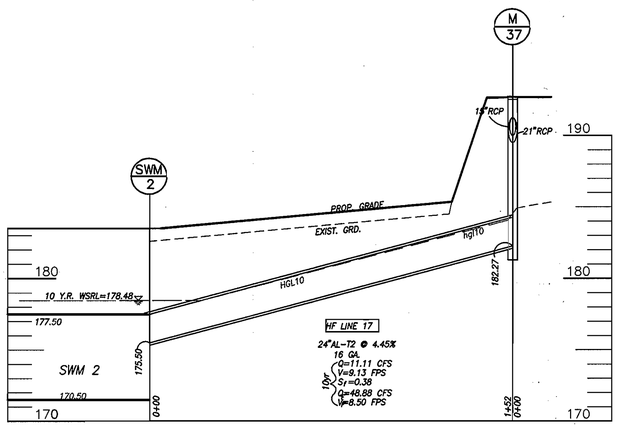

INLET SCHEDULE – PHASE 2

NO.	TYPE	H.C. DETAIL	TOP ELEV. UPPER/LOWER	INV. IN 1	INV. IN 2	INV. OUT	REMARKS	NO.
IA–15	S	SD 4.23	221.00	----		15"–215.75		IA–15
IA–17	S	SD 4.23	221.57	18"–215.76		18"–215.56		IA–17
IA–25	A–10	SD 4.41	TC–206.28	-----		15"–197.53	SUMP	IA–25
IA–30	A–10	SD 4.41	TC–183.85	-----		15"–180.50	SUMP	IA–30
IA–.31	A–10	SD 4.41	TC–183.85	-----		15"–180.50	SUMP	IA–.31
IA–32	S	SD 4.23	183.00	-----		15"–180.00	SUMP	IA–32
IA–41	S	SD 4.23	226.93	18"–221.48		18"–221.28		IA–41
IA–42	D	SD 4.11	227.60(THROAT)	15"–222.72		18"–222.47		IA–42
IA–43	A–10	SD 4.41	TC 239.23/238.84	-----		15"–234.64		IA–43
IB–10	A–10	SD 4.41	TC–181.60	-----		15"–177.78	SUMP	IB–10
IB–11	A–5	SD 4.40	TC–181.60	----		15"–178.36	SUMP	IB–11
IB–12	A–5	SD 4.40	TC–182.60	178.24		15"–177.99	SUMP	IB–12
IB–13	A–5	SD 4.40	TC–182.60	18"–177.39		18"–177.39	SUMP	IB–13
IB–14	A–5	SD 4.40	TC–182.60	18"–176.20	18"–176.20	24"–175.70	SUMP	IB–14
IB–15	A–5	SD 4.40	TC–182.60	15"–177.26		18"–177.01	SUMP	IB–15
IB–16	A–5	SD 4.40	TC–182.60	-----		15"–177.86	SUMP	IB–16
IB–17	A–5	SD 4.40	181.60	-----	-----	15"–177	SUMP	IB–17

STRUCTURE SCHEDULE – PHASE 1

NO.	TYPE	RIM /TOP	INV. IN 1	INV. IN 2	INV. IN 3	INV. OUT	H.C. DETAIL
M21A	STD. MH	191.70	30"–187.45	----	----	30"–184.40	G5.12
M22	STD. MH	187.20	36"–182.00	-----	-----	36"–180.20	G5.12
M23A	STD. MH	183.40	15"–179.31	15"–179.31	15"–179.31	24"–179.06	G5.12
M37	STD. MH	194.00	15"–183.02	21"–182.52	-----	24"–182.27	G5.12
M39	STD. MH	181.50	15"–177.40	30"–168.14	-----	30"–167.94	G5.12
SDC–1	WQ MH	182.30	18"–177.09	-----	-----	18"–176.84	STC–2400
SDC–2	WQ MH	182.30	18"–176.71	-----	-----	18"–176.46	STC–2400
S–1	SWM–MH	192.00	----	-----	-----	36"–185.88	PRECAST
S–2	SWM–MH	183.30	36"–173.00	-----	-----	36"–172.88	PRECAST
S–3	SWM–MH	182.00	30"–173.00	-----	-----	30"–172.88	PRECAST

APPROVED: DEPARTMENT OF PLANNING AND ZONING

CHIEF, DEVELOPMENT ENGINEERING DIVISION — DATE 3/22/07

CHIEF, DIVISION OF LAND DEVELOPMENT — DATE 6/25/07

DIRECTOR — DATE 6/29/07

OWNER

PARCEL 30 – GWENRIDGE, LLC
8835–P COLUMBIA 100 PARKWAY
COLUMBIA MD 21045
TEL: 410–730–0810
PARCEL 38 – MEHTA CHARALUTA TRUST
5551 OAKLAND MILLS ROAD
COLUMBIA MD 21045
TEL: 410–730–3961

DEVELOPER

BRANTLY DEVELOPMENT GROUP, INC.
8835–P COLUMBIA 100 PARKWAY
COLUMBIA MD 21045
TEL: 410–730–0810

STATE OF MARYLAND — JURI MAISTE — No. 21030 — PROFESSIONAL ENGINEER

DRAWN: J.M.
DATE: NOV. 20, 2006
SCALE: 1:=30–HOR. 1:=5–VERT.

BY
REVISION
DATE

ELKRIDGE–CROSSING–PHASE–TWO
PARCELS A–E
TAX MAP 38, GRID 2, PARCELS 30 & 38
FIRST ELECTION DISTRICT, HOWARD COUNTY, MARYLAND
STORM*DRAIN*PROFILES

JURI MAISTE – SITE DESIGN CONSULTANT
2923 Chenoak Avenue, Baltimore, Maryland 21234
Phone: 410–661–8752 Fax: 410–661–8752
RICHARDSON ENGINEERING, LLC
730 W. Padonia Road, Suite 101, Cockeysville, Maryland 21030
Phone: 410–560–1502 Fax: 410–560–0827

SHEET 13 OF 32

SDP-06-078

Perimiter 5: ADJACENT TO COMMERCIAL : 286 FEET

EASEMENT LEGEND

PN 18490-91 & 18494-95
F-05-120, F-06-013

- DENOTES PRIVATE RETAINING WALL MAINTENANCE EASEMENT
- DENOTES PRIVATE ACCESS EASEMENT
- DENOTES PUBLIC WATER AND UTILITY EASEMENT
- PRIVATE 10' STORM DRAIN EASEMENT
- PRIVATE STORMWATER MANAGEMENT EASEMENT

APPROVED: DEPARTMENT OF PLANNING AND ZONNING	
CHIEF, DEVELOPMENT ENGINEERING DIVISION J.P.	DATE 3/22/07
CHIEF, DIVISION OF LAND DEVELOPMENT	DATE 6/28/07
DIRECTOR	DATE 6/29/07

FOR REV. 1 ONLY 7/21/14
PROFESSIONAL CERTIFICATION:
I HEREBY CERTIFY THAT THESE DOCUMENTS WERE PREPARED OR APPROVED BY ME, AND THAT I AM A DULY LICENSED PROFESSIONAL ENGINEER UNDER THE LAWS OF THE STATE OF MARYLAND, LICENSE NUMBER 16597, EXPIRATION DATE: 08-15-2015

Paul N. Walsky
1-27-07

OWNER
PARCEL 30 – GWENRIDGE, LLC
5551 OAKLAND MILLS ROAD
COLUMBIA MD 21045
TEL: 410-730-3961
PARCEL 38 – MEHTA CHARALUTA TRUST
5551 OAKLAND MILLS ROAD
COLUMBIA MD 21045
TEL: 410-730-3961

DEVELOPER
GWENRIDGE, LLC
5551 OAKLAND MILLS ROAD
COLUMBIA MD 21045
TEL: 410-730-3961

DRAWN: J.M.
DATE: SEPT. 14, 2006
SCALE: 1:=30

DATE	REVISION	BY
7/21/14	REVISE TH 9, 10, 10A, & BLDG. F TO 36 TOWNHOUSES & CHANGE BLDG. D FROM 4 TO 3 STORIES AND ALL NOTES AND CHARTS	RGNG

ELKRIDGE–CROSSING–PHASE. TWO
PARCELS A-E
TAX MAP 38, GRID 2, PARCELS 30 & 38
FIRST ELECTION DISTRICT, HOWARD COUNTY, MARYLAND
LANDSCAPE*PLAN–1

JURI MAISTE – SITE DESIGN CONSULTANT
2923 Chenoak Avenue, Baltimore, Maryland 21234
Phone: 410-661-8752 Fax: 410-661-8752
RICHARDSON ENGINEERING, LLC
730 W.Padonia Road, Suite 101, Cockeysville, Maryland 21030
Phone: 410-560-1502 Fax: 410-560-0827

REVISED SDP-06-078

SDP-06-078

C:\DRAWINGS\ELKRID~1\PHASE-2\MYTLARS\ELK-LS2R Fri Sep 8 22:22:53 2006

APPROVED: DEPARTMENT OF PLANNING AND ZONING

CHIEF, DEVELOPMENT ENGINEERING DIVISION	DATE 3/22/07
CHIEF, DIVISION OF LAND DEVELOPMENT	DATE 6/28/07
DIRECTOR	DATE 6/29/07

OWNER

PARCEL 30 – GWENRIDGE, LLC
8835-P COLUMBIA 100 PARKWAY
COLUMBIA MD 21045
TEL: 410-730-0810

PARCEL 38 – MEHTA CHARALUTA TRUST
5551 OAKLAND MILLS ROAD
COLUMBIA MD 21045
TEL: 410-730-3961

DEVELOPER

BRANTLY DEVELOPMENT GROUP, INC.
8835-P COLUMBIA 100 PARKWAY
COLUMBIA MD 21045
TEL: 410-730-0810

EXISTING EASEMENT LEGEND

PN 18490-91 & 18494-95
F-05-120, F-06-013

- DENOTES PRIVATE RETAINING WALL MAINTENANCE EASEMENT
- DENOTES PRIVATE ACCESS EASEMENT
- DENOTES PUBLIC WATER AND UTILITY EASEMENT
- PRIVATE 10' STORM DRAIN EASEMENT
- PRIVATE STORMWATER MANAGEMENT EASEMENT

PROPOSED EASEMENT LEGEND

PN 19052-53 PN 19057-58
F-07-131, F-07-131

- DENOTES PRIVATE RETAINING WALL MAINTENANCE EASEMENT
- DENOTES PUBLIC WATER AND UTILITY EASEMENT
- PRIVATE 10' STORM DRAIN EASEMENT
- PRIVATE STORMWATER MANAGEMENT EASEMENT

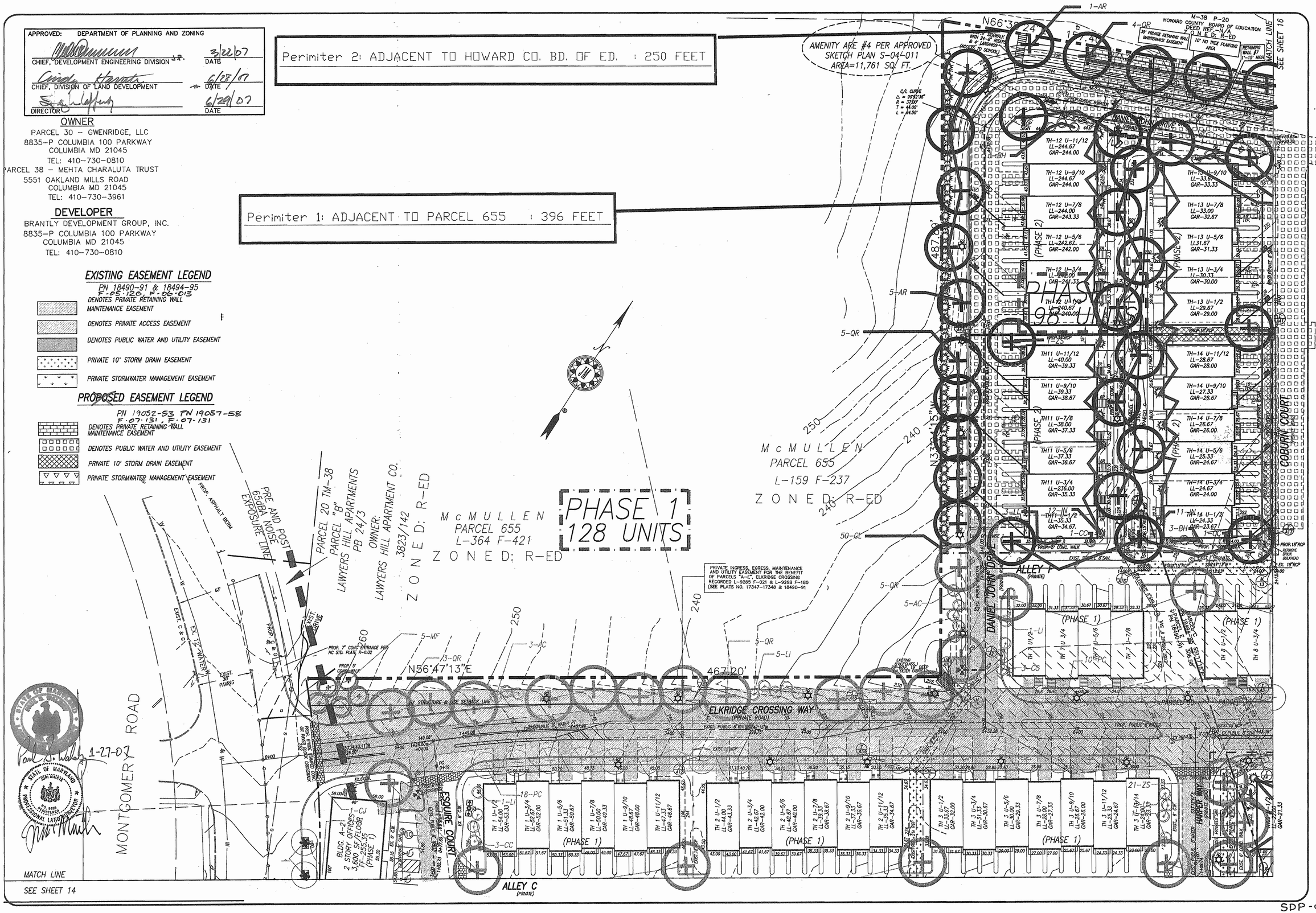

DRAWN: J.M.
DATE: SEPT. 14, 2006
SCALE: 1:=30

DATE	REVISION	BY

ELKRIDGE-CROSSING-PHASE-TWO

PARCELS A-E
TAX MAP 38, GRID 2, PARCELS 30 & 38
FIRST ELECTION DISTRICT, HOWARD COUNTY, MARYLAND

LANDSCAPE*PLAN-2

JURI MAISTE – SITE DESIGN CONSULTANT
2923 Chemoak Avenue, Baltimore, Maryland 21234
Phone: 410-661-8752 Fax: 410-661-8752
RICHARDSON ENGINEERING, LLC
730 W. Padonia Road, Suite 101, Cockeysville, Maryland 21030
Phone: 410-560-1502 Fax: 410-560-0827

SDP-06-078

C:\DRAWINGS\ELKRID~1\PHASE-2\MYTLARS\ELK-LS2A Wed Sep 13 23:19:22 2006

APPROVED: DEPARTMENT OF PLANNING AND ZONNING

CHIEF, DEVELOPMENT ENGINEERING DIVISION	DATE 3/22/07
CHIEF, DIVISION OF LAND DEVELOPMENT	DATE 6/28/07
DIRECTOR	DATE 6/29/07

DEVELOPER
GWENRIDGE, LLC
5551 OAKLAND MILLS ROAD
COLUMBIA MD 21045
TEL: 410-730-3961

OWNER
PARCEL 30 – GWENRIDGE, LLC
5551 OAKLAND MILLS ROAD
COLUMBIA MD 21045
TEL: 410-730-3961
PARCEL 38 – MEHTA CHARALUTA TRUST
5551 OAKLAND MILLS ROAD
COLUMBIA MD 21045
TEL: 410-730-3961

FOR REV. 2 ONLY 4/09/14
PROFESSIONAL CERTIFICATION:
I HEREBY CERTIFY THAT THESE DOCUMENTS WERE PREPARED OR APPROVED BY ME, AND THAT I AM A DULY LICENSED PROFESSIONAL ENGINEER UNDER THE LAWS OF THE STATE OF MARYLAND, LICENSE NUMBER 16597, EXPIRATION DATE: 08-15-2015

STATE OF MARYLAND JURI MAISTE NO. 9695 REGISTERED PROFESSIONAL LAND SURVEYOR
1-27-07

DRAWN: J.M.
DATE: SEPT. 14, 2006
SCALE: 1:=30

DATE	REVISION	BY
9-02-08	TREES PER PHASE I REVISIONS	CNID
4/09/14	REVISE TH 9, 10, 10A & BLDG. F TO 36 TOWNHOUSES & CHANGE BLDG. D FROM 4 TO 3 STORIES AND ALL NOTES AND CHARTS.	REG.

ELKRIDGE–CROSSING–PHASE. TWO
PARCELS A-E
TAX MAP 38, GRID 2, PARCELS 30 & 38
FIRST ELECTION DISTRICT, HOWARD COUNTY, MARYLAND
LANDSCAPE*PLAN-3

JURI MAISTE – SITE DESIGN CONSULTANT
2923 Chenoak Avenue, Baltimore, Maryland 21234
Phone: 410-661-8752 Fax: 410-661-8752
RICHARDSON ENGINEERING, LLC
730 W. Padonia Road, Suite 101, Cockeysville, Maryland 21030
Phone: 410-560-1502 Fax: 410-560-0827

SHEET 16 OF 35

REVISED SDP-06-078

SDP-06-078

C:\DRAWINGS\ELKRID~1\PHASE-2\MYTLARS\ELK-LS2R Sat Sep 9 18:37:14 2006

SEE SHEET 16
MATCH LINE

PARCEL C
PBI 18494-95

PARCEL A
PBI 18494-95

PARCEL B
PBI 18494-95

PHASE 3
84 UNITS

PHASE 2
98 UNITS

PHASE 2
98 UNITS

DR. PATEL DRIVE
PRIVATE ROAD

ROAD R/W REQUIREMENTS:
1160 LIN. FT. @ 2 LARGE TREES REQUIRED
36 LARGE TREES PROPOSED
10 SMALL TREES PROPOSED

FUTURE SCREENING TYPE "B"

PROPOSED STORMWATER MANAGEMENT, POCKET POND (PRIVATELY OWNED & MAINTAINED BY H.O.A.)

PROPOSED UNDERGROUND SWM FACILITY 1

UNDERGROUND SWM FACILITY 2

CROSSHATCH REPRESENTS AREA OF NO WOODY VEGETATION ZONE

AMENITY AREA-
*IMPRINTED CONCRETE, SEE DETAIL
*3 BENCHES, SEE DETAIL

EXISTING BUILDING RETAIL USE

PRE AND POST
65dBA NOISE EXPOSURE LINE

M-38 P-35
SUBWAY 27 PROPERTIES, LLC
5758/137
ZONED: B-2

EXISTING BUILDING

PROPOSED 2 FEET WIDE BAND OF IMPRINTED CONCRETE, TYP., SEE DETAIL ON SHEET 18

BLDG. D
4 STORY
1-ST 8,560 SF RETAIL
2-4TH 25,680 SF OFFICES
FF 183.75

(PHASE 2)

BLDG. E
5 STORY HOTEL
2-5TH FLOORS 148 GUEST ROOMS
FF-182.50
3,269 SF LOBBY
(PHASE 2)

4,500 SF BANQUET HALL

4,999 SF EAT-IN RESTAURANT

M-38 P-792
BROWN & BROWN, ET AL
MABEL W. KEITH LEO
471/29
ZONED: R-ED
FRAME GARAGE

M-38 P-289
KEITH LEO BROWN & LINDA MAE SKINNER
471/36
ZONED: B-2

PRE AND POST
65dBA NOISE EXPOSURE LINE

PROPOSED 15 FEET WIDE CONCRETE WALK
PROPOSED 2 FEET WIDE BAND OF IMPRINTED CONCRETE, TYP., SEE DETAIL ON SHEET 18

PROPOSED 15 FEET LONDON PLANE TREE WIDE CONCRETE WALK (PHASE 1)

5-PL LONDON PLANE TREE (PHASE 1)

NOTE: FOR STORM DRAIN DRAWINGS SEE SHA CONTRACT # HO 725-501-776

REMOVE EXIST. CONC. C&G
PROP. SHA TYPE "A" CONC. C&G
VECHICULAR EGRESS AND INGRESS RESTRICTED

NON-TIDAL WETLANDS WITH 25' BUFFER LINE

WASHINGTON BLVD. (US RTE #1)
(SHA R/W PLATS #53341 & 53342)

McDonalds Entrance

Perimiter 6: PARKING ADJACENT TO ROAD : 88 FEET

Perimiter 4: ADJACENT TO COMMERCIAL : 188 FEET

SEE SHEET 14
MATCH LINE

F-05120, F-06-013

EASEMENT LEGEND
PBI 18490-91 & 18494-95

- DENOTES PRIVATE RETAINING WALL MAINTENANCE EASEMENT
- DENOTES PRIVATE ACCESS EASEMENT
- DENOTES PUBLIC WATER AND UTILITY EASEMENT
- PRIVATE 10' STORM DRAIN EASEMENT
- PRIVATE STORMWATER MANAGEMENT EASEMENT

OWNER
PARCEL 30 – GWENRIDGE, LLC
8835-P COLUMBIA 100 PARKWAY
COLUMBIA MD 21045
TEL: 410-730-0810
PARCEL 38 – MEHTA CHARALUTA TRUST
5551 OAKLAND MILLS ROAD
COLUMBIA MD 21045
TEL: 410-730-3961

DEVELOPER
BRANTLY DEVELOPMENT GROUP, INC
8835-P COLUMBIA 100 PARKWAY
COLUMBIA MD 21045
TEL: 410-730-0810

1-27-07

APPROVED: DEPARTMENT OF PLANNING AND ZONNING

CHIEF, DEVELOPMENT ENGINEERING DIVISION	DATE 3/22/07
CHIEF, DIVISION OF LAND DEVELOPMENT	DATE 6/25/07
DIRECTOR	DATE 6/29/07

DRAWN: J.M.
DATE: SEPT. 14, 2006
SCALE: 1"=30'

BY	REVISION
JM	

ELKRIDGE – CROSSING – PHASE TWO
PARCELS A-E
TAX MAP 38, GRID 2, PARCELS 30 & 38
FIRST ELECTION DISTRICT, HOWARD COUNTY, MARYLAND

LANDSCAPE*PLAN – 4

JURI MAISTE – SITE DESIGN CONSULTANT
2923 Chernault Avenue, Baltimore, Maryland 21234
Phone: 410-661-8752 Fax: 410-661-8752

RICHARDSON ENGINEERING, LLC
730 W. Patapsco Road, Suite 101, Cockeysville, Maryland 21030
Phone: 410-560-1502 Fax: 410-560-0327

SHEET 17 OF 32

SDP-06-078

C:\DRAWINGS\ELKRID~1\PHASE-2\WTLARS\ELK-LS2R Sat Sep 9 19:27:17 2006

SCHEDULE 'A'
PERIMETER LANDSCAPE EDGE

CATAGORY	ADJACENT TO PERIMETER PROPERTIES				PERIMITER NO. 1	PERIMITER NO. 2	PERIMITER NO. 3	PERIMITER NO. 4	PERIMITER NO. 5	PERIMITER NO. 6
LANDSCAPE TYPE:	A	B	C	E	C	A	C	A	A	E
LINEAR FEET OF ROADWAY, FRONTAGE/PERIMETER	724 FEET	0 FEET	612 FEET	88 FEET	396 FEET	250 FEET	216 FEET	188 FEET	286 FEET	88 FEET
CREDIT FOR EXISTING VEGETATION	NO	NO	NO	NO						
CREDIT FOR EXISTING WALL: NONE	NO	NO	NO	NO						
NUMBER OF PLANTS REQUIRED:										
LARGE TREES	14 (1:60)	0 (1:50)	16 (1:40)	3 (1:40)	10 (1:40)	5 (1:60)	6 (1:40)	4 (1:60)	5 (1:60)	3 (1:40)
EVERGREEN TREES		0 (1:40)	31 (1:20)		20 (1:20)		11 (1:20)			
SHRUBS				22 (1:20)						22 (1:20)
NUMBER OF PLANTS PROVIDED:										
LARGE TREES					10	5	1	2 (2 LESS SH.TREE)	2 (3 LESS SH.TREE)	
EVERGREEN TREES					50		21	4 ADD. EVERGREENS	15 ADD. EVERGREENS	6 FLOWER. (MINOR)TREES
OTHER TREES (2:1 SUBSTITUTION)										
SHRUBS										88

SCHEDULE 'C'
RESIDENTIAL DEVELOPMENT INTERNAL LANDSCAPING

CATAGORY	SINGLE FAMILY ATTACHED (1 TREE PER UNIT)	APARTMENT TYPE (CONDO. BLDG.) (1 TREE PER 3 UNITS)
NUMBER OF DWELLING UNITS	59	32
NUMBER OF TREES REQUIRED	59	11
NUMBER OF TREES PROVIDED		
SHADE TREES	15	6
OTHER TREES (2:1 SUBSTITUTION)	88	10

ENDS OF RESIDENTIAL UNITS ADJACENT TO INTERNAL ROADS

LANDSCAPE TYPE:	'C'
LENGTH OF INTERNAL ROAD:	450 LIN. FT.
NUMBER OF PLANTS REQUIRED:	
LARGE TREES (1:40)	11
EVERGREEN TREES (1:20)	22(1:40)
NUMBER OF TREES PROVIDED:	
SHADE TREES (1:50):	7
OTHER TREES (2:1 SUBSTITUTION)	30

SCHEDULE 'B'
PARKING LOT INTERNAL LANDSCAPING

CATAGORY	RESIDENTIAL (1:10) 4 ISLANDS	NON-RESIDENTIAL (1:20) 22 ISLANDS
NUMBER OF PARKING SPACES	12	320
NUMBER OF TREES REQUIRED	1	16
NUMBER OF TREES PROPOSED		
SHADE TREES	1	22
OTHER TREES (2:1 SUBSTITUTION)		

BENCH DETAIL

NOT TO SCALE

PLANTING NOTES

1. PLANTS, RELATED MATERIALS, AND OPERATIONS SHALL MEET THE DETAILED DESCRIPTION AS GIVEN ON THE PLANS AND AS DESCRIBED HEREIN.
2. ALL PLANT MATERIAL, UNLESS OTHERWISE SPECIFIED, SHALL BE NURSERY GROWN, UNOFORMLY BRANCHED AND HAVE A VIGOROUS ROOT SYSTEM. PLANT MATERIAL SHALL BE HEALTHY, VIGOROUS PLANTS FREE FROM DEFECTS, DECAY, DISFIGURING ROOTS, SUNSCALD INJURIES, ABRASIONS OF THE BARK, PLANT DISEASE, INSECT PEST EGGS, BOXERS AND ALL FORMS OF INFESTATION OR OBJECTIONABLE DISFIGUREMENTS.PLANT MATERIAL THAT IS WEAK OR WHICH HAS BEEN CUT BACK FROM LARGER GRADES TO MEET SPECIFIED REQUIREMENTS WILL BE REJECTED. TREES FORKED LEADERS WILL NOT BE ACCEPTED. ALL PLANTS SHALL BE FRESHLY DUG: NO HEELED-IN PLANTS OR PLANTS FROM COLD STORAGE WILL BE ACCEPTED.
3. UNLESS OTHERWISE SPECIFIED, ALL PLANT MATERIAL SHALL CONFORM TO "AMERICAN STANDARD FOR NURSERY STOCK" ANSI Z60.1-1986, PUBLISHED BY AMERICAN ASSOCIATION OF NURSERYMAN, INCLUDING ALL ADDENDA.
4. UNLESS OTHERWISE SPECIFIED, ALL GENERAL CONDITIONS, PLANTING OPERATIONS, DETAILS AND PLANTING SPECIFICATIONS SHALL CONFORM TO "LANDSCAPE SPECIFICATION GUIDELINES FOR BALTIMORE-WASHINGTON METROPOLITAN AREAS", (HEREIN-AFTER "LANDSCAPE GUIDELINES") APPRVED BY THE LANDSCAPE CONTRACTORS ASSOCIATION OF METROPOLITAN WASHINGTON AND THE POTOMAC CHAPTER OF THE AMERICAN SOCIETY OF LANDSCAPE ARCHITECTS, SEPTEMBER, 1981, INCLUDING ALL ADDENDA.
5. CONTRACTOR SHALL BE RESPONSIBLE FOR NOTIFYING UNILITY COMPANIES, UTILITY CONTRACTORS AND "MISS UTILITY" A MINIMUM OF 48 HOURS PRIOR TO BEGINNING ANY WORK. CONTRACTOR SHALL BE RESPONSIBLE FOR DAMAGE TO UTILITIES AND MAY MAKE MINOR ADJUSTMENTS IN SPACING AND LOCATION OF PLANTING MATERIALS TO AVOID CONFLICTS WITH UTILITIES.
6. PLANTING BED SHALL BE MULCHED WITH 3" OF SHREDDED HARDWOD BARK MULCH. GROUNDCOVER BEDS SHALL BE MULCHED TO A DEPTH OF 2".
7. ALL AREAS WITHIN THE CONTRACT LIMIT NOT COVERED BY BUILDING, PAVING, PLANTING BEDS OR OTHERWISE DESIGNATED ON THE PLANS SHALL BE SEEDED AND MULCHED OR SODDED IN ACCORDANCE WITH "1983 MARYLAND STANDARDS AND SPECIFICATIONS FOR SOIL EROSION AND SEDIMENT CONTROL", PERMANENT SEEDING SPECIFICATIONS (SEE SHEET 6), INCLUDING ALL ADDENDA, AS DIRECTED BY THE OWNER.
8. CONTRACTOR IS RESPONSIBLE FOR INSTALLING ALL MATERIALS IN THE PROPER PLANTING SEASON FOR EACH PLANT TYPE.
   PLANTING MIX SHALL BE DONE AS FOLLOWS:
   DECIDUOUS PLANTS – TWO PARTS TOP SOIL, ONE PART WELL-ROTTED COW OR HORSEMANURE. ADD 3 LBS. OF STANDARD 10-10-10 FERTILIZER PER CUBIC YARD OF PLANTING MIX.
   EVERGREEN PLANTS – TWO PARTS TOPSOIL, ONE PART HUMIS OR OTHER APPROVED ORGANIC MATERIAL. ADD 3 LBS. OF EVERGREEN (ACIDIC) FERTILIZER PER CUBIC YARD OF PLANTING MIX.
9. TOPSOIL SHALL CONFORM TO LANDSCAPE GUIDELINES.
10. THIS PLAN IS INTENDED FOR LANDSCAPE PLA ONLY. SEE OTHER PLAN SHEETS FOR INFORMATION ON GRADING, SIDEMENT CONTROL, LAYOUT, ETC.
11. CONTRACTOR TO ADJUST PLANTINGS AS REQUIRED WITH PRIOR APPROVAL OF THE LANDSCAPE ARCHITECT. THE BUILDING AREA PLANTS SHALL BE ADJUSTED BY THE LANDSCAPE ARCHITECT PRIOR TO PLANTING.
12. ANY CHANGES TO THE SITE LAYOUT SHALL REQUIRE THE REDESIGN OF THE PLANTING BY THE LANDSCAPE ARCHITECT.
13. THE CENTER OF MEHTA CIRCLE SHALL BE PLANTED WITH ANNUALS AS FOLLOWS: 200 WAVE PETUNIA IN SPRING AND 200 PANSEYS IN THE FALL AND MAINTAINED BY THE HOME OWNER'S ASSOC.
14. LANDSCAPE SURETY FOR THIS PLAN IN THE AMOUNT OF $50,760.00 HAS BEEN POSTED AS A PART OF THE DEVELOPER'S AGREEMENT
15. THE LANDSCAPING SHOWN FOR SDP-06-78 AND ASSOCIATED REDLINE IS CONSIDERED "ALTERNATIVE COMPLIANCE". THIS APPROVAL FOR ALTERNATE COMPLIANCE IS SPECIFIC TO SDP-06-78 AND THE ASSOCIATED REDLINE PRESENTED IN JULY, 2014. FUTURE PROPOSALS, SITE DEVELOPMENT PLANS AND/OR REDLINES WILL BE EXPECTED TO MEET ALL LANDSCAPING REQUIREMENTS PER THE CURRENT LANDSCAPE MANUAL.

PLANTING LEGEND

EVERGREEN TREE PLANTING DETAIL

NOT TO SCALE

DECIDUOUS TREE PLANTING DETAIL

NOT TO SCALE

ROUTE 1 CONCRETE WALK DETAIL

NOT TO SCALE

NOTES:

1) ALL CONCRETE SHALL BE 5 INCH THICK, WITH 6 X 6 W WIRE MESH, 4 INCH CR6 BASE OVER COMPACTED SUBGRADE, SHA STANDARDS.

PLANT LIST

KEY	QUANTITY	BOTANICAL NAME/COMMON NAME	MINIMUM SIZE	ROOT	REMARKS
AR	17	ACER RUBRUM 'RED SUNSET'/ RED SUNSET MAPLE	2 1/2 – 3" CAL.	B&B	
PL	14	PLATANUS ACERIFOLIA 'BLOODGOOD' / BLOODGOOD LONDON PLANETREE	2 1/2 – 3" CAL.	B&B	
QR	19	QUERCUS RUBRA / RED OAK	2 1/2 – 3" CAL.	B&B	
UA	8	ULMUS AMER. 'VALLEY FORGE' / VALLEY FORGE AMER. ELM	2 1/2 – 3" CAL.	B&B	
ZS	26	ZELKOVA SERRATA 'VILLAGE GREEN' / VILLAGE GREEN ZELKOVA	2 1/2 – 3" CAL.	B&B	
BH	23	BETULA NIGRA 'HERITAGE' / HERITAGE RIVER BIRCH	8-10' HGT.	B&B	MULTI-STEM
CC	2	CERCUS CANADENSIS / EASTERN REDBUD	8-10' HGT.	B&B	
CK	10	CORNUS KOUSA / KOUSA DOGWOOD	6-7' HGT.	B&B	
LI	21	LAGERSTROEMIA INDICA X FAURIEI 'NATCHEZ' / NATCHEZ CRAPEMYRTLE	9-10' HGT.	B&B	MULTI-STEM
CL	50	CUPRESSOCYPARIS LEYLANDII / LEYLAND CYPRESS	6-8' HGT.	B&B	
IN	84	ILEX X 'NELLIE R. STEVENS' / NELLIE STEVENS HOLLY	6-8' HGT.	B&B	
PS	31	PINUS STROBUS / EASTERN WHITE PINE	6-8' HGT.	B&B	
PA	10	PICEA ABIES / NORWAY SPRUCE	6-8' HGT.	B&B	
VR	22	VIBURNUM RHYTIDOPHYLLOIDES 'WILLOWWOOD' / WILLOWWOOD VIBURNUM	24-30"	B&B	

OWNER
PARCEL 30 – GWENRIDGE, LLC
5551 OAKLAND MILLS ROAD
COLUMBIA MD 21045
TEL: 410-730-3961
PARCEL 38 – MEHTA CHARALUTA TRUST
5551 OAKLAND MILLS ROAD
COLUMBIA MD 21045
TEL: 410-730-3961

DEVELOPER
GWENRIDGE, LLC
5551 OAKLAND MILLS ROAD
COLUMBIA MD 21045
TEL: 410-730-3961

FOR REV. 1 ONLY 7/21/14
PROFESSIONAL CERTIFICATION:
I HEREBY CERTIFY THAT THESE DOCUMENTS WERE PREPARED OR APPROVED BY ME, AND THAT I AM A DULY LICENSED PROFESSIONAL ENGINEER UNDER THE LAWS OF THE STATE OF MARYLAND, LICENSE NUMBER 16897, EXPIRATION DATE: 08-15-2015

APPROVED: DEPARTMENT OF PLANNING AND ZONING

CHIEF, DEVELOPMENT ENGINEERING DIVISION	DATE 2/22/07
CHIEF, DIVISION OF LAND DEVELOPMENT	DATE 6/28/07
DIRECTOR	DATE 6/29/07

DRAWN: P.W.
DATE: SEPT. 14, 2006
SCALE: AS SHOWN

DATE	REVISION	BY
7/21/14	REVISE TH 9, 10, 10A, & BLDG F TO 36 TOWNHOUSES & CHANGE BLDG D FROM 4 TO 5 STORIES AND ALL NOTES AND CHARTS	RGEN

ELKRIDGE-CROSSING-PHASE TWO
PARCELS A-D AND HARPER PROPERTY
TAX MAP 38, GRID 2, PARCELS 30 & 38
SECOND ELECTION DISTRICT, HOWARD COUNTY, MARYLAND

LANDSCAPE PLAN--DETAILS

JURI MAISTE – SITE DESIGN CONSULTANT
2923 Chenoak Avenue, Baltimore, Maryland 21234
Phone: 410-661-8752 Fax: 410-661-8752
RICHARDSON ENGINEERING, LLC
730 W. Padonia Road, Suite 101, Cockeysville, Maryland 21030
Phone: 410-560-1502 Fax: 410-560-0827

SHEET 18 OF 35

REVISED SDP-06-078

SDP-06-078

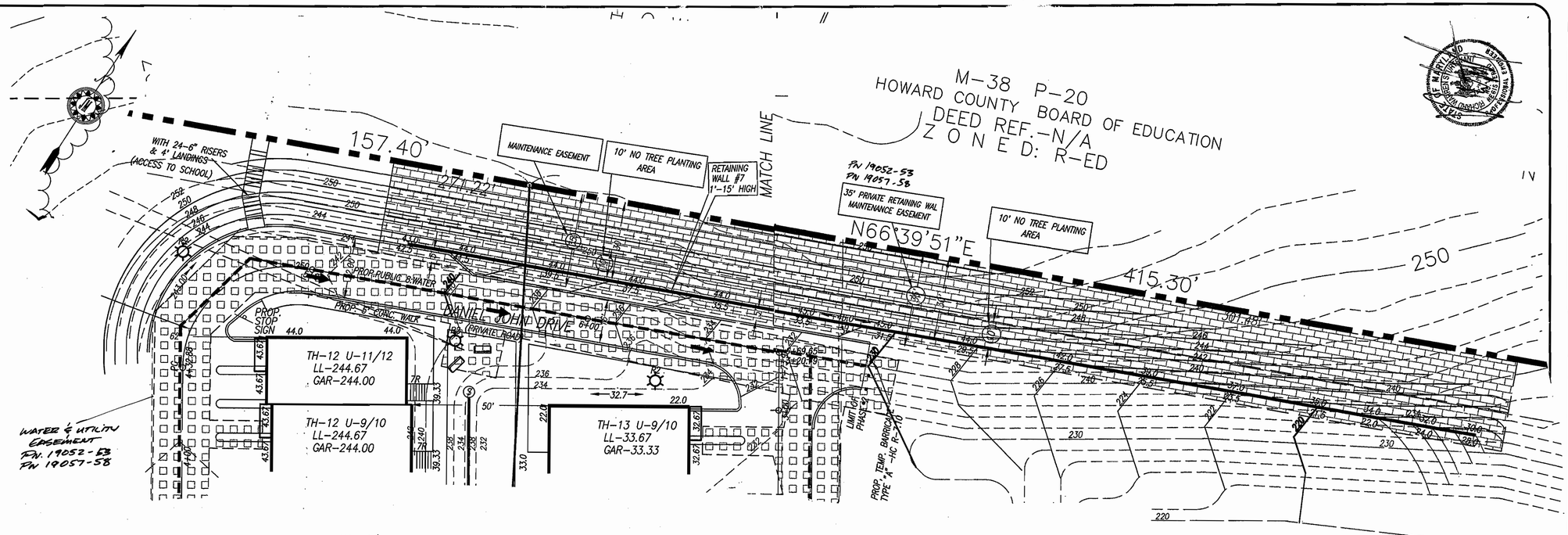

RETAINING #7 WALL LOCATION PLAN

1" = 20'

NOTES:

1.) No trees shall be planted within 10 feet of the top of the retaining wall.
2.) Retaining walls shall only be constructed under the observation of a registered professional engineer and a (NICET, WACEL, or equiv.) certified soils technician.
3.) The required bearing pressure beneath the wall system shall be verified in the field by a certified soils technician. Testing documentation must be provided to the Howard County Inspector prior to start of construction. The required bearing test shall be the Dynamic Cone Penetrometer test ASTM STP-399.
4.) The suitability of fill material shall be confirmed by the on-site soils technician. Each 8" lift must be compacted to a minimum 95% standard proctor density and the testing report shall be made available to the Howard County Inspector upon completion of construction.

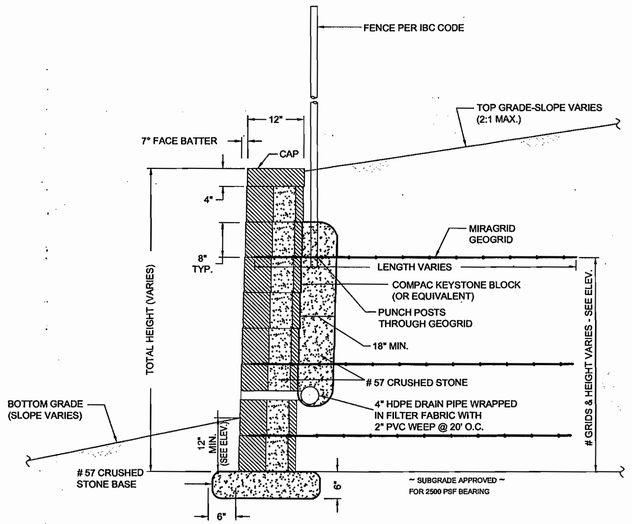

TYPICAL WALL SECTION

N.T.S.

SPECIFICATIONS

MODULAR CONCRETE BLOCK RETAINING WALL

PART 1: GENERAL

1.01 Description
A. Work shall consist of furnishing and construction of a MODULAR BLOCK Retaining Wall System in accordance with these specifications and in reasonably close conformity with the lines, grades, design, and dimensions shown on the plans.
B. Work includes preparing foundation soil, furnishing and installing leveling pad, unit drainage fill and backfill to the lines and grades shown on the construction drawings.
C. Work includes furnishing and installing geogrid soil reinforcement of the type, size, location, and lengths designated on the construction drawings.

1.02 Delivery, Storage and Handling
A. Contractor shall check all materials upon delivery to assure that the proper type, grade, color, and certification has been received.
B. Contractor shall protect all materials from damage due to job site conditions and in accordance with manufacturer's recommendations. Damaged materials shall not be incorporated into the work.

PART 2: PRODUCTS

2.01 Modular Concrete Retaining Wall Units
A. Modular concrete units shall conform to the following architectural requirements:
Face color - concrete grey - standard manufacturers' color may be specified by the Owner.
Face finish - sculptured rock face in angular tri-planer configuration. Other face finishes will be allowed with written approval of Owner.
Bond configuration - running with bonds nominally located at midpoint of vertically adjacent units, in both straight and curved alignments.
Exposed surfaces of units shall be free of chips, cracks or other imperfections when viewed from a distance of 10 feet under diffused lighting.
B. Modular concrete materials shall conform to the requirements of ASTM C1372 - Standard Specifications for Segmental Retaining Wall Units.
C. Modular concrete units shall conform to the following structural and geometric requirements measured in accordance with appropriate references:
Compressive strength = 3000 psi minimum;
Absorption = 8 % maximum (6% in northern states) for standard weight aggregates
Dimensional tolerances = ± 1/8" from nominal unit dimensions not including rough split unit dimensions, ±1/16" unit height - top and bottom planes;
Unit size – 8" (H) x 18" (W) x 12" (D) minimum;
Unit weight – 75 lbs/unit minimum for standard weight aggregates;
inter-unit shear strength – 1000 plf minimum at 2 psi normal pressure
geogrid/unit peak connection strength - 1000 plf minimum at 2 psi normal pressure
D. Modular concrete units shall conform to the following constructability requirements:
Vertical setback = 1/8"± per course (near vertical) or 1"+ per course per the design;
Alignment and grid positioning mechanism - fiberglass pins, two per unit minimum;
Maximum gap between erected units shall be - 1/2 inch.

2.02 Shear Connectors (If Applicable)
A. Shear connectors shall be 1/2 inch diameter thermoset isophthalic polyester resin-protruded fiberglass reinforcement rods or equivalent to provide connection between vertically and horizontally adjacent units. Strength of shear connectors between vertical adjacent units shall be applicable over a design temperature of 10 degrees F to + 100 degrees F.
B. Shear connectors shall be capable of holding the geogrid in the proper design position during grid pre-tensioning and backfilling.

2.03 Base Leveling Pad Material
A. Material shall consist of a compacted #57 crushed stone base as shown on the construction drawings.

2.04 Unit Drainage Fill
A. Unit drainage fill shall consist of #57crushed stone

2.05 Reinforced Backfill
A. Reinforced backfill shall be type SM, be free of debris and meet the following gradation tested in accordance with ASTM D-422 and meet other properties shown on the plan:

Sieve Size	Percent Passing
2 Inch	100-75
3/4 Inch	100-75
No. 40	0-60
No. 200	0-40

Plasticity Index (PI) <15 and Liquid Limit <40 per ASTM D-4318.
B. Material can be site excavated soils where the above requirements can be met. Unsuitable soils for backfill (high plastic clays or organic soils) shall not be used in the reinforced soil mass.

2.06 Geogrid Soil Reinforcement
A. Geosynthetic reinforcement shall consist of geogrids manufactured specifically for soil reinforcement applications and shall be manufactured from high tenacity polyester yarn, or HDPE material.

2.07 Drainage Pipe
A. The drainage pipe shall be perforated corrugated HDPE pipe manufactured in accordance with ASTM D-1248.

PART 3: EXECUTION

3.01 Excavation
A. Contractor shall excavate to the lines and grades shown on the construction drawings. Owner's representative shall be responsible for inspecting and approving the excavation prior to placement of leveling material or fill soils.

3.02 Base Leveling Pad
A. Leveling pad material shall be placed to the lines and grades shown on the construction drawings, to a minimum thickness of 6 inches and extend laterally a minimum of 6" in front and behind the modular wall unit.
B. Leveling pad shall be prepared to insure full contact to the base surface of the concrete units.

3.03 Modular Unit Excavation
A. First course of units shall be placed on the leveling pad at the appropriate line and grade. Alignment and level shall be checked in all directions and insure that all units are in full contact with the base and properly seated.
B. Place the front of units side-by-side. Do not leave gaps between adjacent units. Layout of corners and curves shall be in accordance with manufacturer's recommendations.
C. Install shear/connecting devices per manufacturer's recommendations.
D. Place and compact drainage fill within and behind wall units. Place and compact backfill soil behind drainage fill.
E. Maximum stacked vertical height of wall units, prior to unit drainage fill and backfill placement and compaction, shall not exceed manufacturers recommendations.

3.04 Structural Geogrid Installation
A. Geogrid shall be oriented with the highest strength axis perpendicular to the wall alignment.
B. Geogrid reinforcement shall be placed at the strengths, lengths, and elevations shown on the construction design drawings or as directed by the Engineer.
C. The geogrid shall be laid horizontally on compacted backfill and attached to the modular wall units. Place the next course of modular concrete units over the geogrid. The geogrid shall be pulled taut, and anchored prior to backfill placement on the geogrid.
D. Geogrid reinforcements shall be continuous throughout their embedment lengths and placed side-by-side to provide 100% coverage at each level. Spliced connections between shorter pieces of geogrid or gaps between adjacent pieces of geogrid are not permitted.

3.05 Reinforced Backfill Placement
A. Reinforced backfill shall be placed, spread, and compacted in such a manner that minimizes the development of slack in the geogrid and installation damage.
B. Reinforced backfill shall be placed and compacted in lifts not to exceed 6 inches where hand compaction is used, or 8 - 10 inches where heavy compaction equipment is used. Lift thickness shall be decreased to achieve the required density as required.
C. Reinforced backfill shall be compacted to 95% of the maximum density as determined by ASTM D698. The moisture content of the backfill material prior to and during compaction shall be uniformly distributed throughout each layer and shall be + 3% to - 3% of optimum.
D. Only lightweight hand-operated equipment shall be allowed within 3 feet from the tail of the modular concrete unit.
E. Tracked construction equipment shall not be operated directly upon the geogrid reinforcement. A minimum fill thickness of 6 inches is required prior to operation of tracked vehicles over the geogrid. Tracked vehicle turning should be kept to a minimum to prevent tracks from displacing the fill and damaging the geogrid.
F. Rubber tired equipment may pass over geogrid reinforcement at slow speeds, less than 10 MPH. Sudden braking and sharp turning shall be avoided.
G. At the end of each day's operation, the Contractor shall slope the last lift of reinforced backfill away from the wall units to direct runoff away from wall face. The Contractor shall not allow surface runoff from adjacent areas to enter the wall construction site.

3.06 Cap Installation
A. Cap units shall be glued to underlying units with an all-weather adhesive recommended by the manufacturer.

3.07 Field Quality Control
A. The Owner shall engage inspection and testing services, including independent laboratories, to provide quality assurance and testing services during construction.
B. As a minimum, quality assurance testing should include foundation soil inspection, soil bearing and backfill testing, verification of design parameters, and observation of construction for general compliance with design drawings and specifications.

OWNER

PARCEL 30 – GWENRIDGE, LLC
8835-P COLUMBIA 100 PARKWAY
COLUMBIA MD 21045
TEL: 410-730-0810
PARCEL 38 – MEHTA CHARALUTA TRUST
5551 OAKLAND MILLS ROAD
COLUMBIA MD 21045
TEL: 410-730-3961

DEVELOPER

BRANTLY DEVELOPMENT GROUP, INC.
8835-P COLUMBIA 100 PARKWAY
COLUMBIA MD 21045
TEL: 410-730-0810

APPROVED: DEPARTMENT OF PLANNING AND ZONNING

CHIEF, DEVELOPMENT ENGINEERING DIVISION	DATE 3/22/07
CHIEF, DIVISION OF LAND DEVELOPMENT	DATE 6/25/07
DIRECTOR	DATE 6/29/07

DRAWN: H.M.
DATE: FEB. 03, 2006
HCEA # 05032-C/02105-A
SCALE: AS SHOWN

BY	REVISION	DATE

ELKRIDGE CROSSING PHASE TWO

PARCELS A-E
TAX MAP 38, GRID 2, PARCELS 30 & 38
FIRST ELECTION DISTRICT, HOWARD COUNTY, MARYLAND

RETAINING WALL PLAN AND DETAILS

HILLIS-CARNES
ENGINEERING ASSOCIATES
10975 Guilford Road, Suite A Annapolis Junction, MD
(410) 880-4788 Fax: (410)880-4098

SHEET 19 OF 32

SDP-06-078

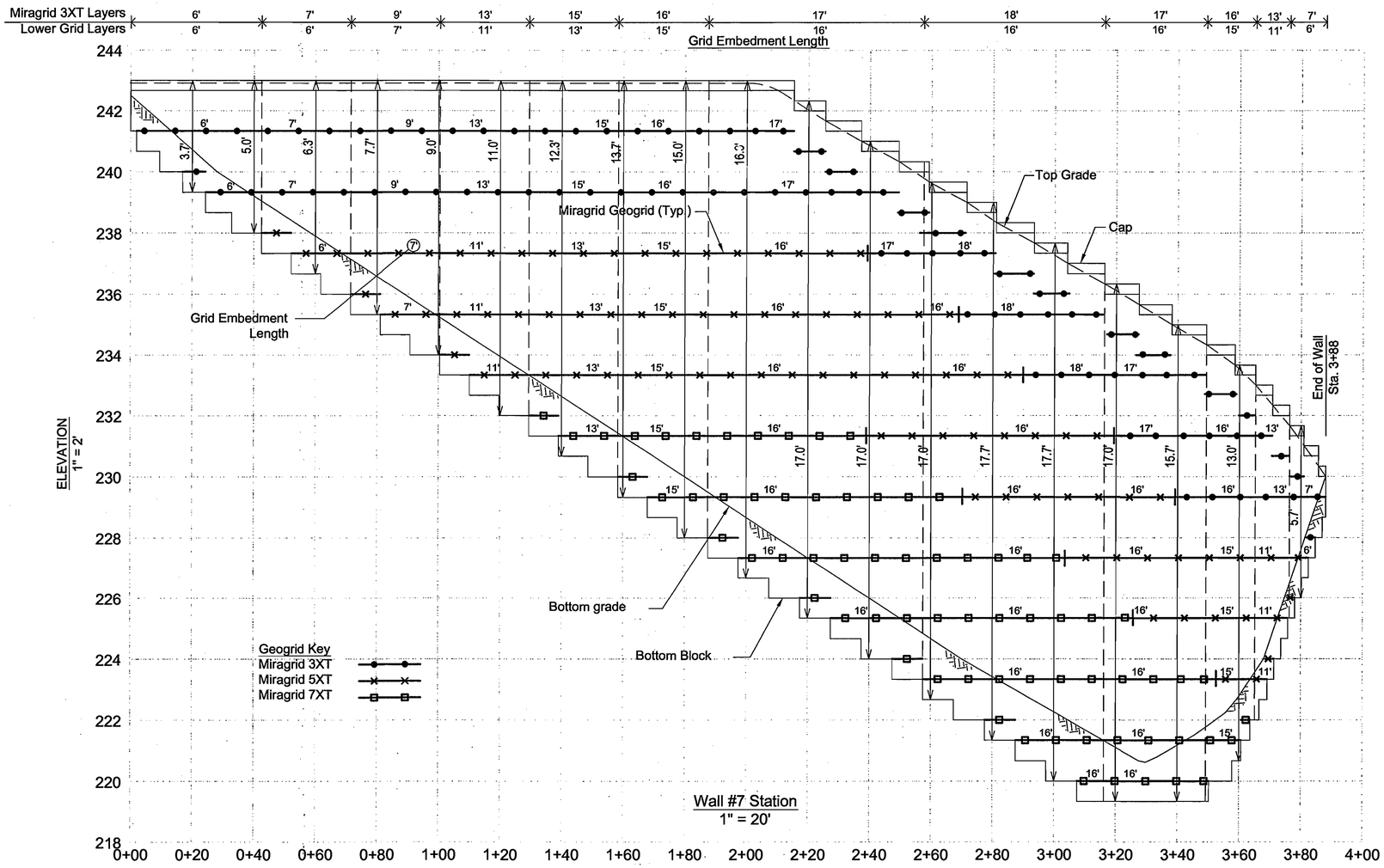

OWNER
PARCEL 30 – GWENRIDGE, LLC
8835-P COLUMBIA 100 PARKWAY
COLUMBIA MD 21045
TEL: 410-730-0810
PARCEL 38 – MEHTA CHARALUTA TRUST
5551 OAKLAND MILLS ROAD
COLUMBIA MD 21045
TEL: 410-730-3961

DEVELOPER
BRANTLY DEVELOPMENT GROUP, INC.
8835-P COLUMBIA 100 PARKWAY
COLUMBIA MD 21045
TEL: 410-730-0810

APPROVED: DEPARTMENT OF PLANNING AND ZONNING

CHIEF, DEVELOPMENT ENGINEERING DIVISION	DATE 3/22/07
CHIEF, DIVISION OF LAND DEVELOPMENT	DATE 6/25/07
DIRECTOR	DATE 6/29/07

DRAWN: H.M.
DATE: FEB. 03, 2006
HCEA # 06032-C/02105-A
SCALE: AS SHOWN

BY	REVISION	DATE

ELKRIDGE CROSSING PHASE TWO

PARCELS A-E
TAX MAP 38, GRID 2, PARCELS 30 & 38
FIRST ELECTION DISTRICT, HOWARD COUNTY, MARYLAND

RETAINING WALL #4, #5 AND #7 ELEVATIONS

HILLIS-CARNES ENGINEERING ASSOCIATES
10975 Guilford Road, Suite A, Annapolis Junction, MD
(410) 880-4788 Fax: (410)880-4098

SDP-06-078

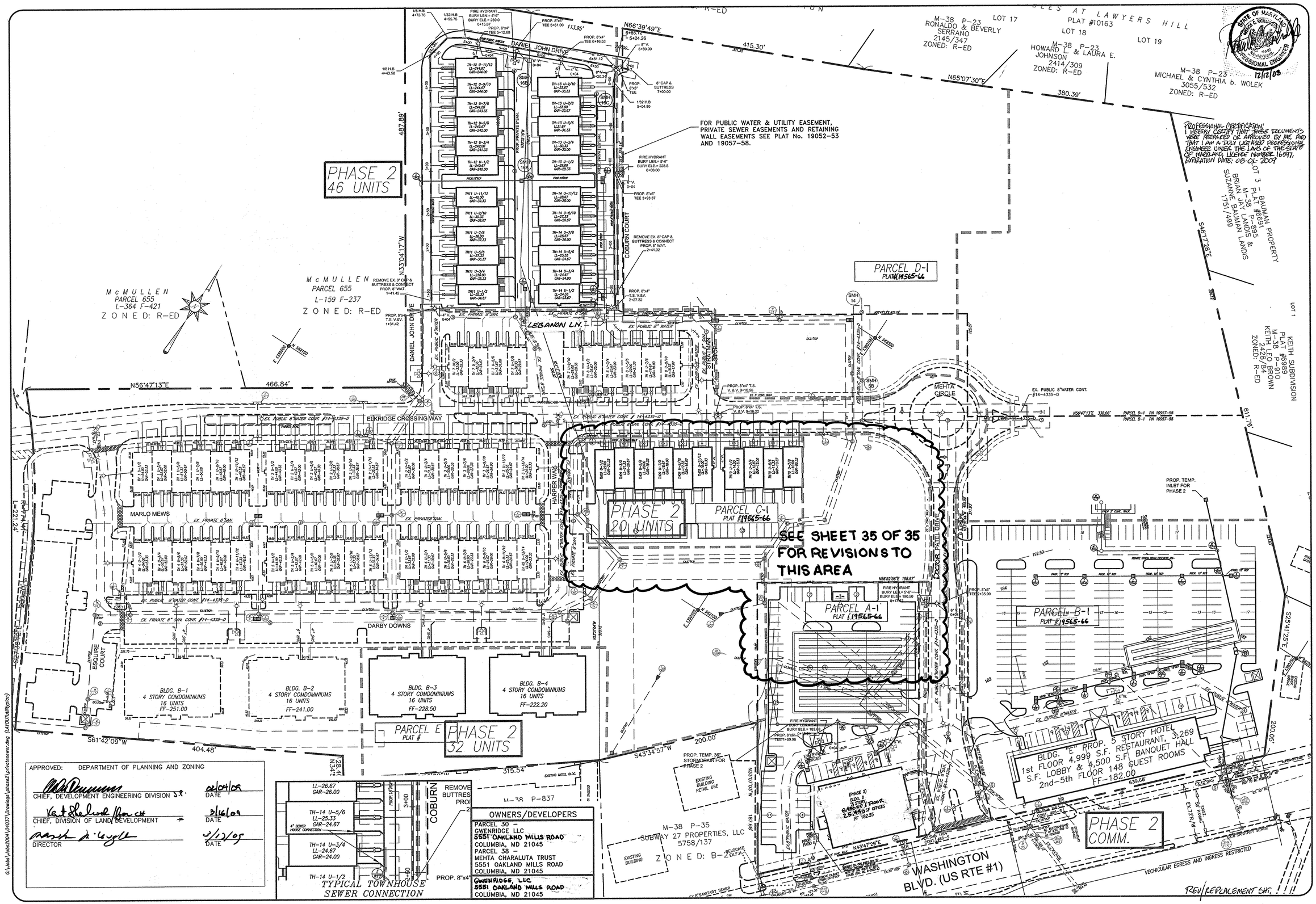

APPROVED: DEPARTMENT OF PLANNING AND ZONING

CHIEF, DEVELOPMENT ENGINEERING DIVISION	DATE 02/04/09
CHIEF, DIVISION OF LAND DEVELOPMENT	DATE 3/16/09
DIRECTOR	DATE 3/12/09

TYPICAL TOWNHOUSE SEWER CONNECTION

OWNERS/DEVELOPERS

PARCEL 30 –
GWENRIDGE LLC
5551 OAKLAND MILLS ROAD
COLUMBIA, MD 21045
PARCEL 38 –
MEHTA CHARALUTA TRUST
5551 OAKLAND MILLS ROAD
COLUMBIA, MD 21045
GWENRIDGE, LLC
5551 OAKLAND MILLS ROAD
COLUMBIA, MD 21045

PROFESSIONAL CERTIFICATION:
I HEREBY CERTIFY THAT THESE DOCUMENTS WERE PREPARED OR APPROVED BY ME, AND THAT I AM A DULY LICENSED PROFESSIONAL ENGINEER UNDER THE LAWS OF THE STATE OF MARYLAND, LICENSE NUMBER 16597, EXPIRATION DATE: 08-01-2009

STATE OF MARYLAND
MICHAEL G. SCHACHT
REGISTERED PROFESSIONAL ENGINEER
12/12/08

DATE	REVISION	BY
09-02-08	BUILDING "D" AND PARKING	CND
4/09/14	REVISE TH 9, 10, 10A, & BLDG F TO 36 TOWNHOUSES & CHANGE BLDG. D FROM A TO 3 STORIES AND ALL NOTES AND CHARTS.	RSM

DRAWN: CND
DATE: JUNE 15, 2006
SCALE: 1"=50'

ELKRIDGE-CROSSING-PHASE TWO

PARCELS A-E
TAX MAP 38, GRID 2, PARCELS 30 & 38
FIRST ELECTION DISTRICT, HOWARD COUNTY, MARYLAND

UTILITY PLAN

JURI MAISTE – SITE DESIGN CONSULTANT
2923 Chenoak Avenue, Baltimore, Maryland 21234
Phone: 410-661-8752 Fax: 410-661-8752
RICHARDSON ENGINEERING, LLC
30 E. Padonia Road, Suite 500, Timonium, Maryland 21093
Phone: 410-560-1502 Fax: 443-901-1208

REVISED SDP-06-078

SHEET 21 OF 35

SDP-06-078

G:\Jobs\Jobs2004\04037\Drawings\phase2\privatesewer.dwg (LAYOUTutilityplan)

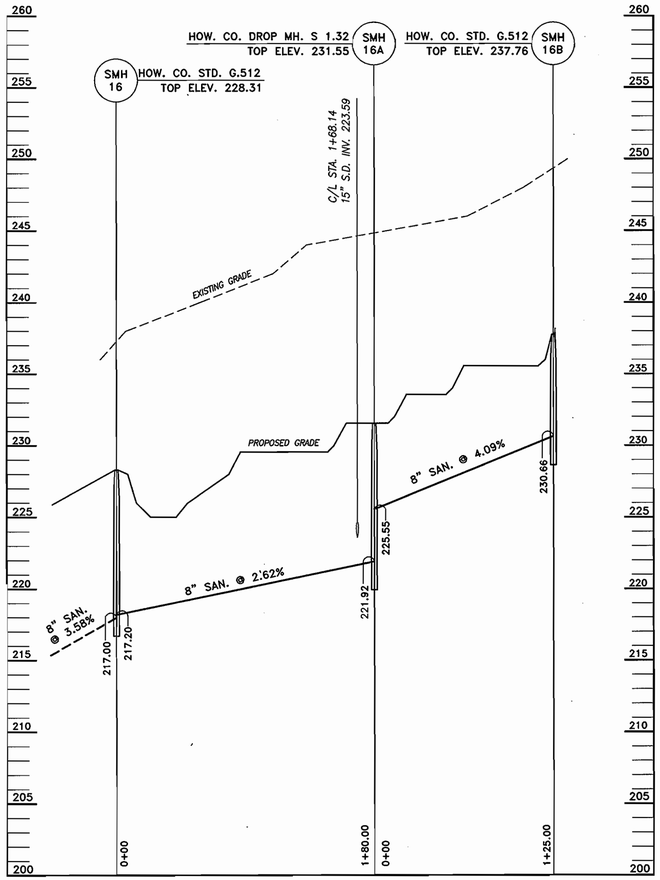

SMH 16 TO SMH 16B

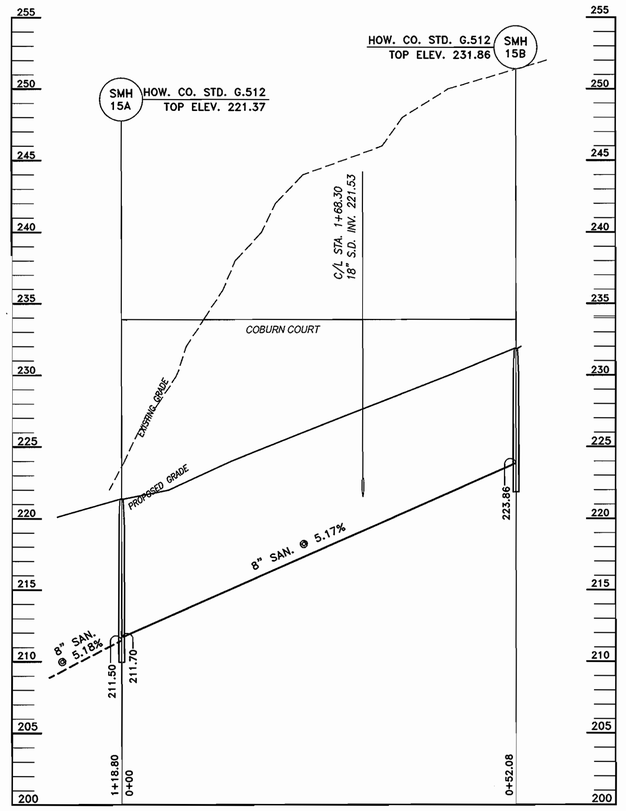

SMH 15A TO SMH 15C

APPROVED: DEPARTMENT OF PLANNING AND ZONNING

CHIEF, DEVELOPMENT ENGINEERING DIVISION — DATE 5/22/07

CHIEF, DIVISION OF LAND DEVELOPMENT — DATE 6/28/07

DIRECTOR — DATE 6/29/07

I HEREBY CERTIFY THAT THE PLANS SHOWN HEREON ARE CORRECT AND IN ACCORDANCE WITH THE REQUIREMENTS OF THE HOWARD COUNTY DESIGN MANUAL, VOLUME III, AND THE STANDARD SPECIFICATIONS AND DETAILS FOR CONSTRUCTION OF HOWARD COUNTY.

6/4/07
PROFESSIONAL ENGINEER

OWNERS/DEVELOPERS
PARCEL 30 – GWENRIDGE LLC 8835–P COLUMBIA 100 PARKWAY COLUMBIA, MD 21045 PARCEL 38 – MEHTA CHARALUTA TRUST 5551 OAKLAND MILLS ROAD COLUMBIA, MD 21045
BRANTLY DEVELOPMENT GROUP, INC. 8835–P COLUMBIA 100 PARKWAY COLUMBIA, MD 21045

DRAWN: CND
DATE: JUNE 15, 2006
SCALE: HORZ.= 1"=50' VERT.= 1"=5'

BY	REVISION	DATE

ELKRIDGE–CROSSING–PHASE TWO

PARCELS A–E
TAX MAP 38, GRID 2, PARCELS 30 & 38
FIRST ELECTION DISTRICT, HOWARD COUNTY, MARYLAND

PROFILES–SEWER

JURI MAISTE – SITE DESIGN CONSULTANT
2923 Chenault Avenue, Baltimore, Maryland 21234
Phone: 410–661–8752 Fax: 410–661–8752

RICHARDSON ENGINEERING, LLC
30 E. Padonia Road, Suite 500, Timonium, Maryland 21093
Phone: 410–560–1502 Fax: 443–901–1208

SDP-06-078

G:\Work\2005\05002\CAD\DRAWINGS\phase2\privatesewer.DWG (LAYOUT=set2sew1)

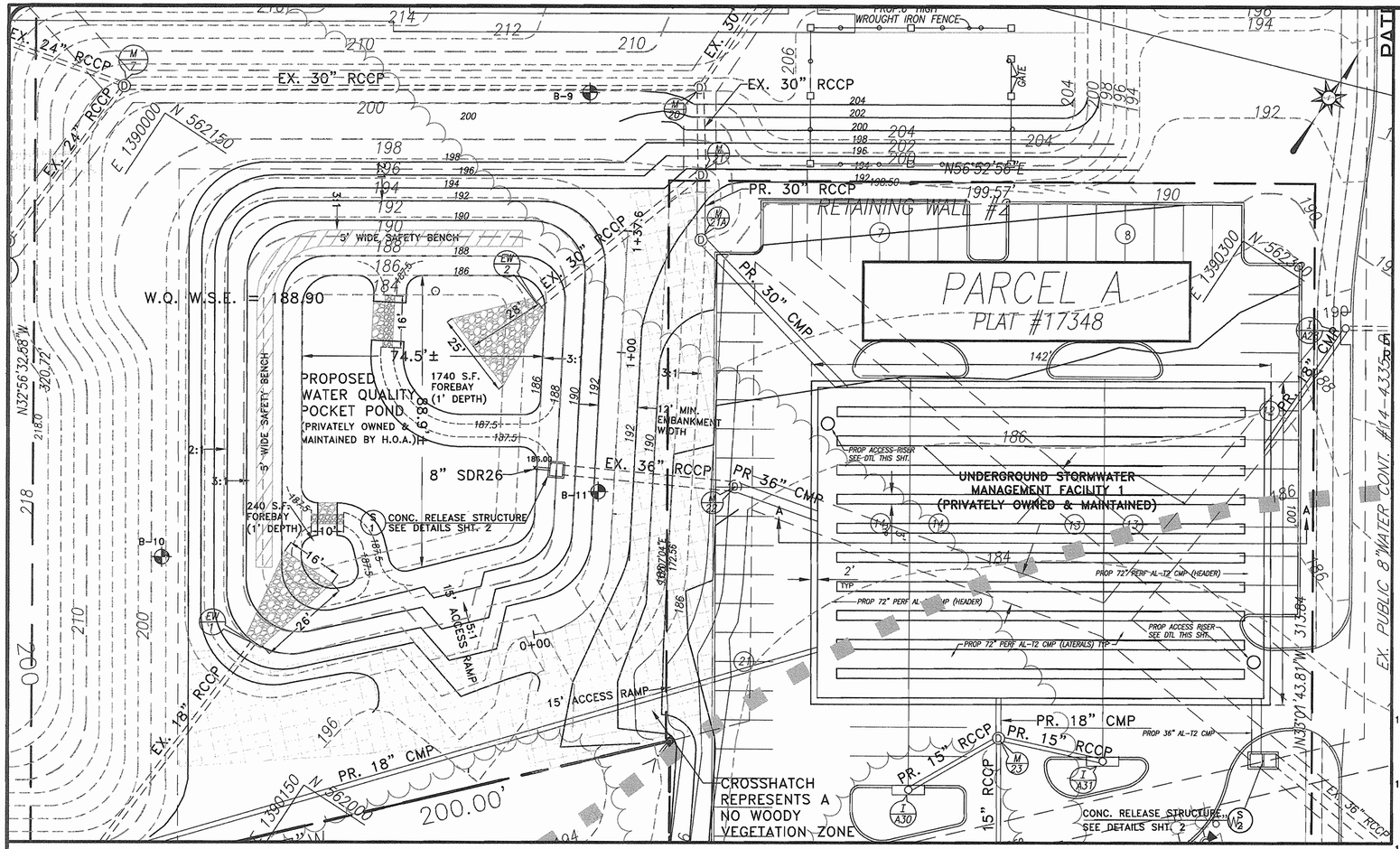

WATER QUALITY AND STORMWATER MANAGEMENT FACILITY 1 PLAN

SCALE: 1" = 20'

0' 20' 40' 60'

NOTE:
FOR PRIVATE STORM DRAIN EASEMENTS AND PRIVATE STORM WATER MANAGEMENT EASEMENTS SEE PN. 19052-53 & PN 19057-58 F-07-131, F-07-132

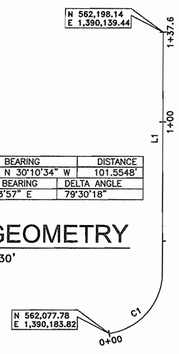

LINE	BEARING	DISTANCE
L1	N 30°10'34" W	101.5548'

CURVE	RADIUS	ARC LENGTH	CHORD LENGTH	CHORD BEARING	DELTA ANGLE
C1	25.9989'	36.0767'	33.2512'	N 11°33'57" E	79°30'18"

EMBANKMENT GEOMETRY

SCALE: 1" = 30'

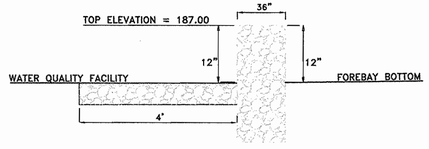

FOREBAY GABION WEIR DETAIL

NOT TO SCALE

NOTES:
THE CONVERSION OF THE WATER QUALITY PROFILE SHALL NOT BE PERFORMED UNTIL THE ENTIRE CONTRIBUTING DRAINAGE AREA IS PERMANENTLY STABILIZED.

THE UNDERGROUND FACILITIES SHALL BE KEPT CLEAR OF TRASH AND DEBRIS BOTH DURING AND AFTER CONSTRUCTION.

APPROVED: DEPARTMENT OF PLANNING AND ZONING

CHIEF, DEVELOPMENT ENGINEERING DIVISION	DATE 3/22/07
CHIEF, DIVISION OF LAND DEVELOPMENT	DATE 6/25/07
DIRECTOR	DATE 6/29/07

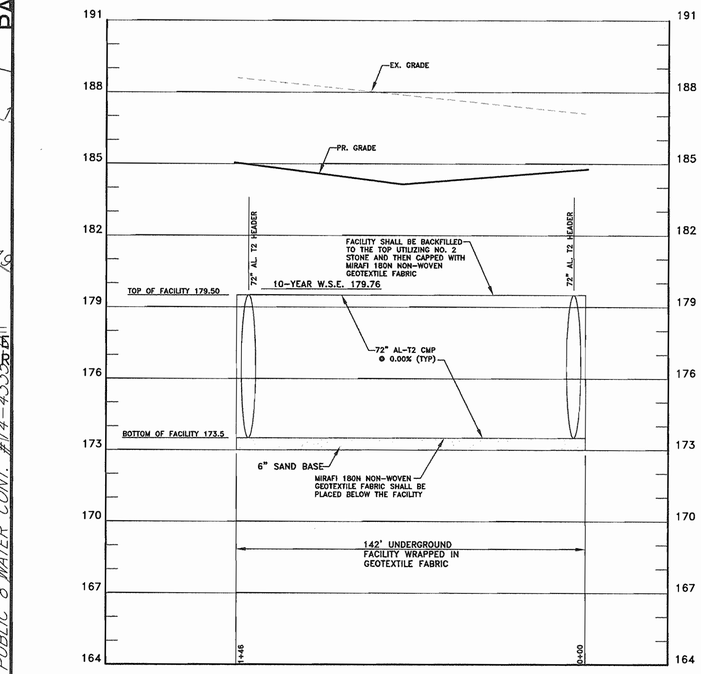

SWM FACILITY 1 CROSS SECTION

SCALE: HORZ. 1" = 30'
VERT. 1" = 3'

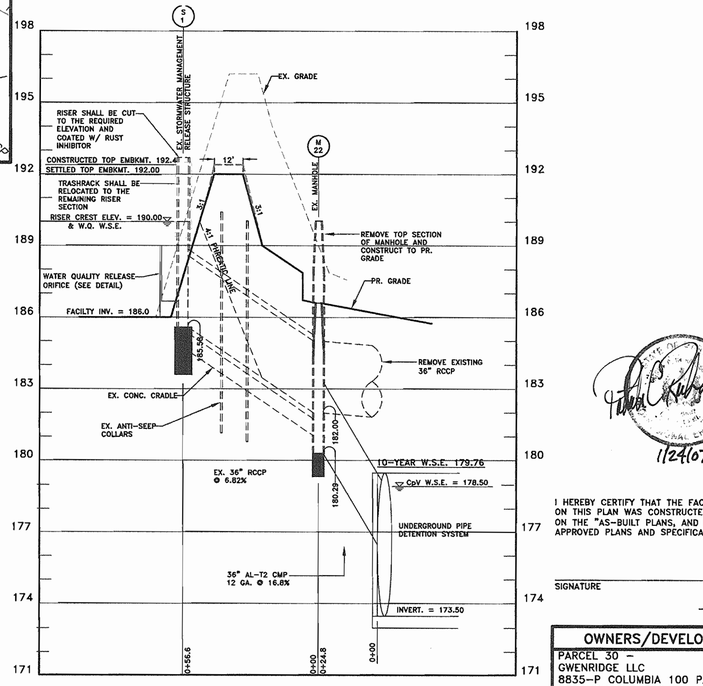

WATER QUALITY OUTLET PROFILE

SCALE: HORZ. 1" = 30'
VERT. 1" = 3'

1/24/07

I HEREBY CERTIFY THAT THE FACILITY SHOWN ON THIS PLAN WAS CONSTRUCTED AS SHOWN ON THE "AS-BUILT PLANS, AND MEETS THE APPROVED PLANS AND SPECIFICATIONS.

SIGNATURE DATE

P.E. NO.

OWNERS/DEVELOPERS
PARCEL 30 – GWENRIDGE LLC 8835-P COLUMBIA 100 PARKWAY COLUMBIA, MD 21045 PARCEL 38 – MEHTA CHARALUTA TRUST 5551 OAKLAND MILLS ROAD COLUMBIA, MD 21045
BRANTLY DEVELOPMENT GROUP, INC. 8835-P COLUMBIA 100 PARKWAY COLUMBIA, MD 21045

DRAWN: J.D. DATE: September 12, 2006 SCALE: AS SHOWN

BY	REVISION	DATE

ELKRIDGE–CROSSING–PHASE TWO

PARCELS A–E
GRID 2, PARCELS 30 & 38
TAX MAP 38, GRID 2, PARCELS 30 & 38
FIRST ELECTION DISTRICT, HOWARD COUNTY, MARYLAND

STORMWATER MANAGEMENT PLAN, PROFILES & DETAILS

JURI MAISTE – SITE DESIGN CONSULTANT
2923 Chenoak Avenue, Baltimore, Maryland 21234
Phone: 410-661-8752 Fax: 410-661-8752
RICHARDSON ENGINEERING, LLC
30 E. Padonia Road, Suite 500, Timonium, Maryland 21093
Phone: 410-560-1502 Fax: 443-901-1208

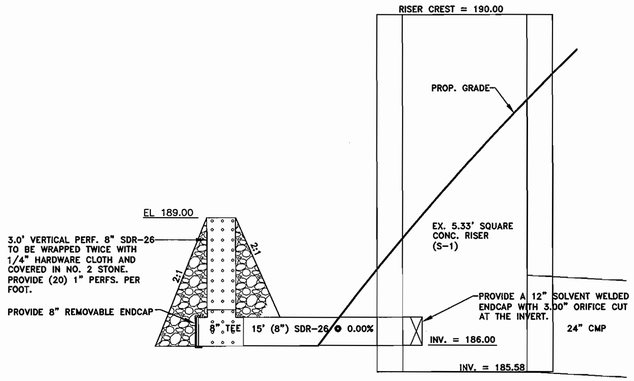

WATER QUALITY DE-WATERING DEVICE & LOW FLOW

NOT TO SCALE

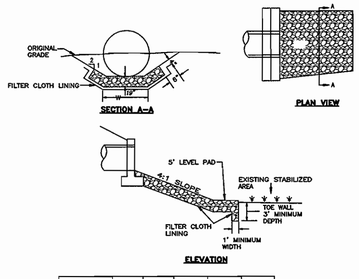

STRUCTURE	Q (CFS)	V (FPS)	RIP RAP CLASS	LENGTH	WIDTH (W)
EW – 1	7.75	7.68	I	26'	VARIES SEE PLAN
EW – 2	10.11	2.5	I	28'	

FILTER FABRIC LINING SHALL BE EMBEDDED A MINIMUM OF 4" AND SHALL EXTEND AT LEAST 6" BEYOND THE EDGE OF THE RIP-RAP

NOTES:
1. FILTER CLOTH SHALL BE GEOTEXTILE CLASS SE NONWOVEN FABRIC

OUTLET CHANNEL DETAILS

NOT TO SCALE

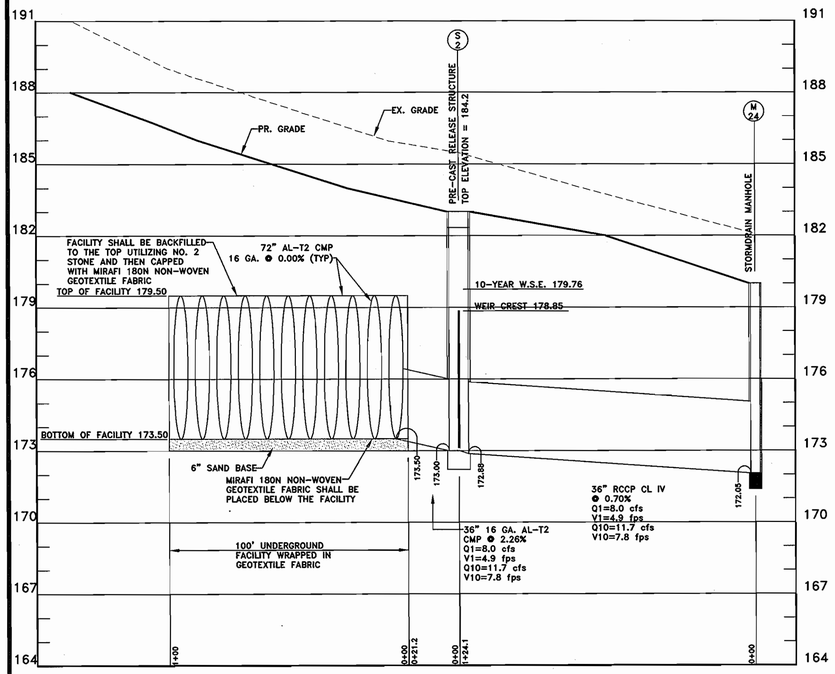

CPV FACILITY 1 OUTFALL PROFILE

SCALE: HORZ. 1" = 30'
VERT. 1" = 3'

Qwq = 0.50 cfs
Vwq = 0.45 fps
Q10 = 3.9 cfs
V10 = 1.05 fps
SLOPE = 2.00%
FLOW DEPTH (10YR) = 0.60'

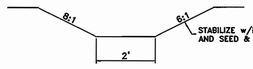

SWALE 1 SECTION

NOT TO SCALE

Qwq = 0.29 cfs
Vwq = 0.44 fps
Q10 = 1.8 cfs
V10 = 0.85 fps
SLOPE = 2.63%
FLOW DEPTH (10YR) = 0.44'

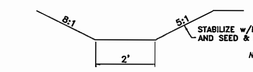

SWALE 2 SECTION

NOT TO SCALE

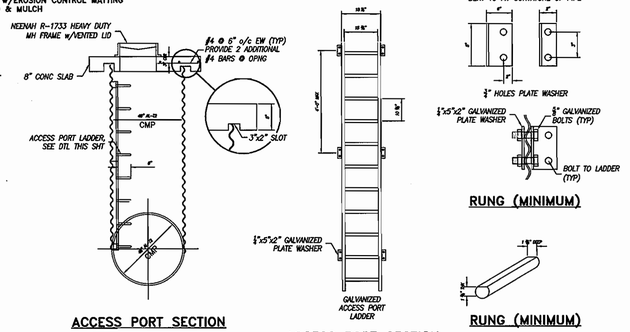

ACCESS RISER

NOT TO SCALE

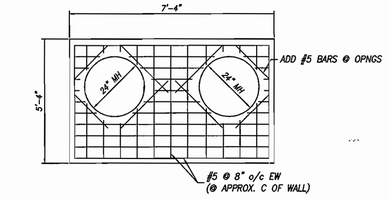

(S-2) TOP SLAB

NOT TO SCALE

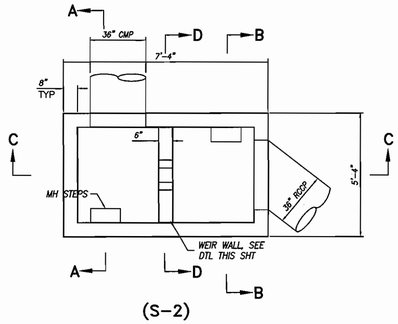

(S-2) PLAN VIEW

NOT TO SCALE

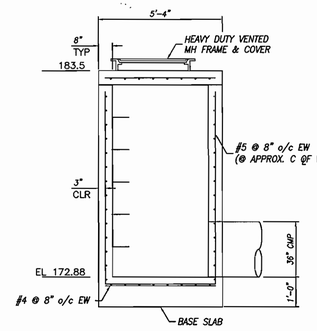

(S-2) SECTION A-A

NOT TO SCALE

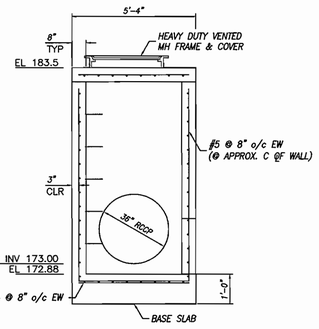

(S-2) SECTION B-B

NOT TO SCALE

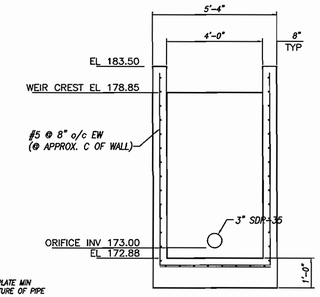

(S-2) SECTION D-D

NOT TO SCALE

(S-2) SECTION C-C

NOT TO SCALE

STRUCTURAL NOTES

1. CONCRETE CONSTRUCTION SHALL BE DESIGNED, REINFORCED AND CONSTRUCTED IN ACCORDANCE WITH ACI 318 "BUILDING CODE REQUIREMENTS FOR REINFORCED CONCRETE."
2. CONCRETE SHOWN ON THIS DRAWING SHALL BE SHA MIX No. 3.
3. REINFORCING STEEL SHALL BE DEFORMED STEEL BARS CONFORMING TO ASTM A615, GRADE 60.
4. THE CONTRACTOR WILL FURNISH THE STRUCTURE AS A PRECAST UNIT.
5. PROVIDE A 12" CONCRETE COLLAR AT ALL PIPE CONNECTIONS TO THE RELEASE STRUCTURES.

STATE OF MARYLAND — PAUL A. RICHARDSON — No. 21234 — PROFESSIONAL ENGINEER

1/24/07

OWNERS/DEVELOPERS
PARCEL 30 – GWENRIDGE LLC 8835-P COLUMBIA 100 PARKWAY COLUMBIA, MD 21045
PARCEL 38 – MEHTA CHARALUTA TRUST 5551 OAKLAND MILLS ROAD COLUMBIA, MD 21045
BRANTLY DEVELOPMENT GROUP, INC. 8835-P COLUMBIA 100 PARKWAY COLUMBIA, MD 21045

APPROVED: DEPARTMENT OF PLANNING AND ZONING

CHIEF, DEVELOPMENT ENGINEERING DIVISION	DATE 3/22/07
CHIEF, DIVISION OF LAND DEVELOPMENT	DATE 6/28/07
DIRECTOR	DATE 6/29/07

DRAWN: J.D. | DATE: September 12, 2006 | SCALE: AS SHOWN

BY	REVISION	DATE

ELKRIDGE – CROSSING – PHASE TWO
PARCELS A-E
TAX MAP 38, GRID 2, PARCELS 30 & 38
FIRST ELECTION DISTRICT, HOWARD COUNTY, MARYLAND
STORMWATER MANAGEMENT NOTES & DETAILS

JURI MAISTE – SITE DESIGN CONSULTANT
2923 Chenoak Avenue, Baltimore, Maryland 21234
Phone: 410-661-8752 Fax: 410-661-8752

RICHARDSON ENGINEERING, LLC
30 E. Padonia Road, Suite 500, Timonium, Maryland 21093
Phone: 410-560-1502 Fax: 443-901-1208

SHEET 24 OF 32

SDP-06-078

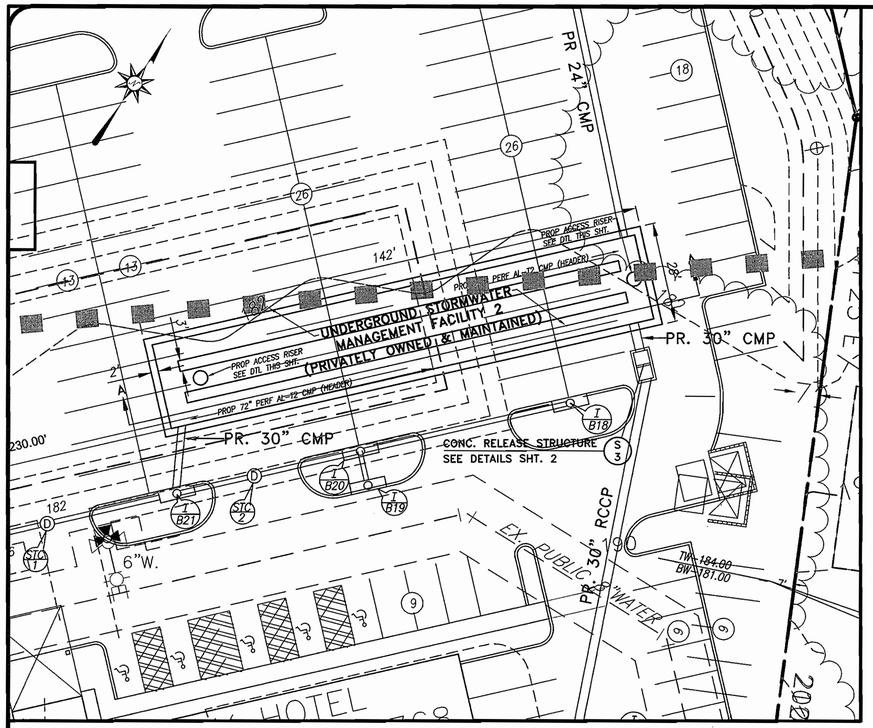

STORMWATER MANAGEMENT FACILITY 2 PLAN

SCALE: 1" = 20'

0' 20' 40' 60'

NOTE:
FOR PRIVATE STORM DRAIN EASEMENTS AND STORM WATER MANAGEMENT EASEMENTS SEE TN. 19052-53 & PN 19057-58

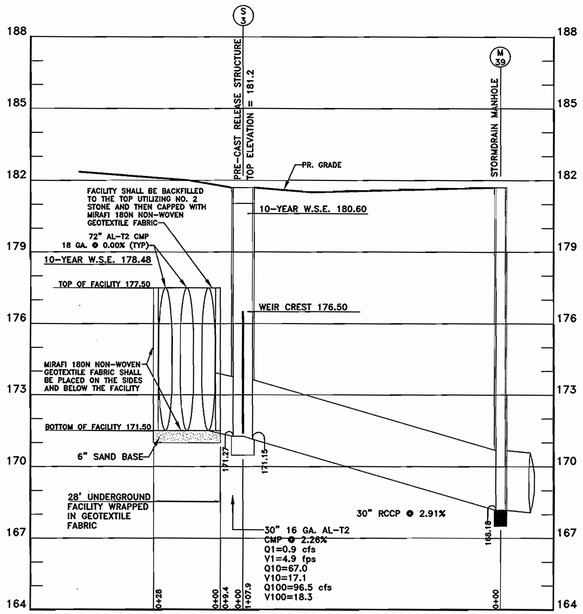

SWM FACILITY 2 OUTLET PROFILE

SCALE: HORZ. 1" = 30'
VERT. 1" = 3'

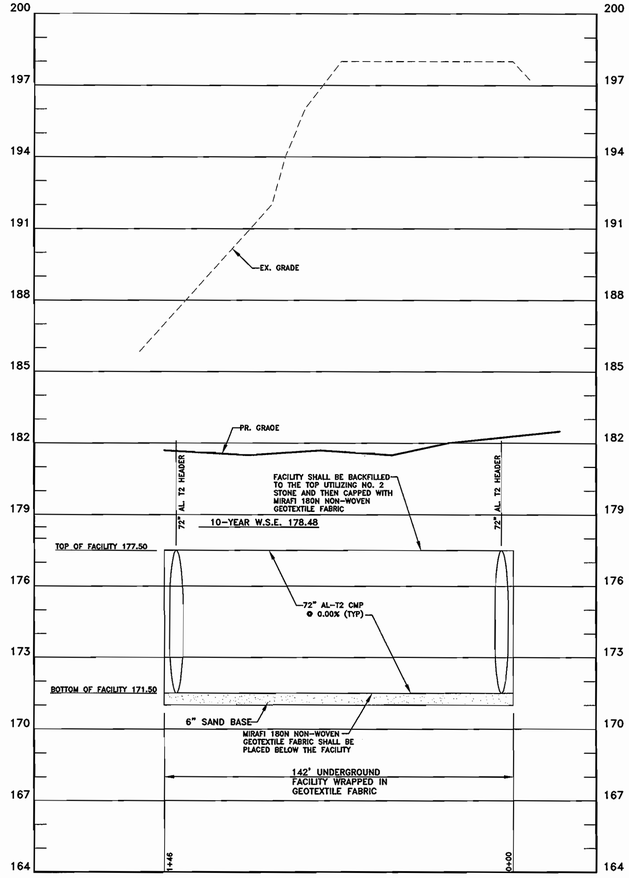

SWM FACILITY 2 CROSS SECTION A-A

SCALE: HORZ. 1" = 30'
VERT. 1" = 3'

1/27/07

I HEREBY CERTIFY THAT THE FACILITY SHOWN ON THIS PLAN WAS CONSTRUCTED AS SHOWN ON THE "AS-BUILT PLANS, AND MEETS THE APPROVED PLANS AND SPECIFICATIONS.

SIGNATURE DATE

P.E. NO.

OWNERS/DEVELOPERS
PARCEL 30 – GWENRIDGE LLC 8835-P COLUMBIA 100 PARKWAY COLUMBIA, MD 21045
PARCEL 38 – MEHTA CHARALUTA TRUST 5551 OAKLAND MILLS ROAD COLUMBIA, MD 21045
BRANTLY DEVELOPMENT GROUP, INC. 8835-P COLUMBIA 100 PARKWAY COLUMBIA, MD 21045

APPROVED: DEPARTMENT OF PLANNING AND ZONING

CHIEF, DEVELOPMENT ENGINEERING DIVISION J.P.	DATE 3/22/07
CHIEF, DIVISION OF LAND DEVELOPMENT	DATE 6/28/07
DIRECTOR	DATE 6/29/07

NOTE: THE UNDERGROUND FACILITIES SHALL BE KEPT CLEAR OF TRASH AND DEBRIS BOTH DURING AND AFTER CONSTRUCTION.

DRAWN: J.D.
DATE: November 10, 2006
SCALE: AS SHOWN

DATE	REVISION	BY

ELKRIDGE-CROSSING-PHASE TWO
PARCELS A-E
TAX MAP 38, GRID 2, PARCELS 30 & 38
FIRST ELECTION DISTRICT, HOWARD COUNTY, MARYLAND
STORMWATER MANAGEMENT PLAN, PROFILES & DETAILS

JURI MAISTE – SITE DESIGN CONSULTANT
2923 Chenoak Avenue, Baltimore, Maryland 21234
Phone: 410-661-8752 Fax: 410-661-8752
RICHARDSON ENGINEERING, LLC
30 E. Padonia Road, Suite 500, Timonium, Maryland 21093
Phone: 410-560-1502 Fax: 443-901-1208

SHEET 25 OF 32

SDP-06-078

SWM 2 OUTFALL PROFILE

SCALE: HORZ. 1" = 30'
VERT. 1" = 3'

Stormceptor®	Hydro Conduit	DR. BY:
	STC 2400 Precast Concrete Stormceptor (2400 US Gallon Capacity)	CK. BY:
		DATE:
	PROJECT:	SCALE: N.T.S.
	LOCATION:	DWG.#

NOTE :
1. THE USE OF FLEXIBLE CONNECTIONS IS RECOMMENDED AT THE INLET AND OUTLET WHERE APPLICABLE.
2. THE COVER SHOULD BE POSITIONED OVER THE 24"Ø OUTLET RISER PIPE AND THE 6"Ø OIL PORT.
3. THE STORMCEPTOR SYSTEM IS PROTECTED BY ONE OR MORE OF THE FOLLOWING U.S. PATENTS: #4985148, #5498331, #5725760, #5753115, #5849181, #6068765, #6371690.

ENLARGED INLET TEE DROP PIPE

REV.	DESCRIPTION	BY	DATE

NOTE: SEE THE STORM DRAIN PLANS FOR THE LOCATION OF THE STORMCEPTORS. THE UNITS THAT ARE TO BE UTILIZED AS PART OF PHASE II SHALL BE THE STC 2400. THESE UNITS CAPTURE 1.83 ACRES OF IMPERVIOUS AREA. ADDITIONAL UNITS WILL BE REQUIRED AS PART OF THE NEXT PHASES TO CAPTURE AN ADDITIONAL 1.77 ACRES.

APPROVED: DEPARTMENT OF PLANNING AND ZONING

CHIEF, DEVELOPMENT ENGINEERING DIVISION J.P. — DATE 3/22/07

CHIEF, DIVISION OF LAND DEVELOPMENT — DATE 6/28/07

DIRECTOR — DATE 6/29/07

CONSTRUCTION SPECIFICATIONS

A. SITE PREPARATION

AREAS DESIGNATED FOR BORROW AREAS, EMBANKMENT, AND STRUCTURAL WORKS SHALL BE CLEARED, GRUBBED AND STRIPPED OF TOPSOIL. ALL TREES, VEGETATION, ROOTS AND OTHER OBJECTIONABLE MATERIAL SHALL BE REMOVED. CHANNEL BANKS AND SHARP BREAKS SHALL BE SLOPED TO NO STEEPER THAN 1:1. ALL TREES SHALL BE CLEARED AND GRUBBED WITHIN 15 FEET OF THE TOE OF EMBANKMENT.

AREAS TO BE COVERED BY THE RESERVOIR WILL BE CLEARED OF ALL TREES, BRUSH, LOGS, FENCES, RUBBISH AND OTHER OBJECTIONABLE MATERIAL UNLESS OTHERWISE DESIGNATED ON THE PLANS. TREES, BRUSH AND STUMPS SHALL BE CUT APPROXIMATELY LEVEL WITH THE GROUND SURFACE. FOR DRY STORMWATER MANAGEMENT PONDS, A MIN OF A 25 FOOT RADIUS AROUND THE INLET STRUCTURE SHALL BE CLEARED.

ALL CLEARED AND GRUBBED MATERIAL SHALL BE DISPOSED OF OUTSIDE AND BELOW THE LIMITS OF THE DAM AND RESERVOIR AS DIRECTED BY THE OWNER OR HIS REPRESENTATIVE. WHEN SPECIFIED, A SUFFICIENT QUANTITY OF TOPSOIL WILL BE STOCKPILED IN A SUITABLE LOCATION FOR USE ON THE EMBANKMENT AND OTHER DESIGNATED AREAS.

B. EARTH FILL

1. MATERIAL: THE FILL MATERIAL SHALL BE TAKEN FROM APPROVED DESIGNATED BORROW AREAS. IT SHALL BE FREE OF ROOTS, STUMPS, WOOD, RUBBISH, STONES GREATER THAN 6", FROZEN OR OTHER OBJECTIONABLE MATERIALS. FILL MATERIAL FOR THE CENTER OF THE EMBANKMENT, AND CUT OFF TRENCH SHALL CONFORM TO UNIFIED SOIL CLASSIFICATION GC, SC, CH, OR CL AND MUST HAVE AT LEAST 30% PASSING THE #200 SIEVE. CONSIDERATION MAY BE GIVEN TO THE USE OF OTHER MATERIALS IN THE EMBANKMENT IF DESIGNED BY A GEOTECHNICAL ENGINEER. SUCH SPECIAL DESIGNS MUST HAVE CONSTRUCTION SUPERVISED BY A GEOTECHNICAL ENGINEER. MATERIALS USED IN THE OUTER SHELL OF THE EMBANKMENT MUST HAVE THE CAPABILITY TO SUPPORT VEGETATION OF THE QUALITY REQUIRED TO PREVENT EROSION OF THE EMBANKMENT.

2. PLACEMENT: AREAS ON WHICH FILL IS TO BE PLACED SHALL BE SCARIFIED PRIOR TO PLACEMENT OF FILL. FILL MATERIALS SHALL BE PLACED IN MAXIMUM 8 INCH THICK (BEFORE COMPACTION) LAYERS WHICH ARE TO BE CONTINUOUS OVER THE ENTIRE LENGTH OF THE FILL. THE MOST PERMEABLE BORROW MATERIAL SHALL BE PLACED IN THE DOWNSTREAM PORTIONS OF THE EMBANKMENT. THE PRINCIPAL SPILLWAY MUST BE INSTALLED CONCURRENTLY WITH FILL PLACEMENT AND NOT EXCAVATED INTO THE EMBANKMENT.

3. COMPACTION: THE MOVEMENT OF THE HAULING AND SPREADING EQUIPMENT OVER THE FILL SHALL BE CONTROLLED SO THAT THE ENTIRE SURFACE OF EACH LIFT SHALL BE TRAVERSED BY NOT LESS THAN ONE TREAD TRACK OF HEAVY EQUIPMENT OR COMPACTION SHALL BE ACHIEVED BY A MINIMUM OF FOUR COMPLETE PASSES OF A SHEEPSFOOT, RUBBER TIRED OR VIBRATORY ROLLER. FILL MATERIAL SHALL CONTAIN SUFFICIENT MOISTURE SUCH THAT THE REQUIRED DEGREE OF COMPACTION WILL BE OBTAINED WITH THE EQUIPMENT USED. THE FILL MATERIAL SHALL CONTAIN SUFFICIENT MOISTURE SO THAT IF FORMED INTO A BALL IT WILL NOT CRUMBLE, YET NOT BE SO WET THAT WATER CAN BE SQUEEZED OUT.

WHEN REQUIRED BY THE REVIEWING AGENCY THE MINIMUM REQUIRED DENSITY SHALL NOT BE LESS THAN 95% OF MAXIMUM DRY DENSITY WITH A MOISTURE CONTENT WITHIN ñ2% OF THE OPTIMUM. EACH LAYER OF FILL SHALL BE COMPACTED AS NECESSARY TO OBTAIN THE DENSITY AND IS TO BE CERTIFIED BY THE ENGINEER AT THE TIME OF CONSTRUCTION. ALL COMPACTION IS TO BE DETERMINED BY AASHTO METHOD T-99 (STANDARD PROCTOR).

C. STRUCTURE BACKFILL

BACKFILL ADJACENT TO PIPES OR STRUCTURES SHALL BE OF THE TYPE AND QUALITY CONFORMING TO THAT SPECIFIED FOR THE ADJOINING FILL MATERIAL. THE FILL SHALL BE PLACED IN HORIZONTAL LAYERS NOT TO EXCEED FOUR INCHES IN THICKNESS AND COMPACTED BY HAND TAMPERS OR OTHER MANUALLY DIRECTED COMPACTION EQUIPMENT. THE MATERIAL NEEDS TO FILL COMPLETELY ALL SPACES UNDER AND ADJACENT TO THE PIPE. AT NO TIME DURING THE BACKFILLING OPERATION SHALL DRIVEN EQUIPMENT BE ALLOWED TO OPERATE CLOSER THAN FOUR FEET, MEASURED HORIZONTALLY, TO ANY PART OF A STRUCTURE. UNDER NO CIRCUMSTANCES SHALL EQUIPMENT BE DRIVEN OVER ANY PART OF A CONCRETE STRUCTURE OR PIPE, UNLESS THERE IS A COMPACTED FILL OF 24" OR GREATER OVER THE STRUCTURE OR PIPE.

STRUCTURE BACKFILL MAY BE FLOWABLE FILL MEETING THE REQUIREMENTS OF MARYLAND DEPARTMENT OF TRANSPORTATION, STATE HIGHWAY ADMINISTRATION STANDARD SPECIFICATIONS FOR CONSTRUCTION AND MATERIALS, SECTION 313 AS MODIFIED. THE MIXTURE SHALL HAVE A 100-200 PSI; 28 DAY UNCONFINED COMPRESSIVE STRENGTH. THE FLOWABLE FILL SHALL HAVE A MINIMUM RESISTIVITY OF 2,000 OHM-CM. MATERIAL SHALL BE PLACED SUCH THAT A MINIMUM OF 6" (MEASURED PERPENDICULAR TO THE OUTSIDE OF THE PIPE) OF FLOWABLE FILL SHALL BE UNDER (BEDDING), OVER AND, ON THE SIDES OF THE PIPE. IT ONLY NEEDS TO EXTEND UP TO THE SPRING LINE FOR RIGID CONDUITS. AVERAGE SLUMP OF THE FILL SHALL BE OF THE FILL SHALL BE 7" TO ASSURE FLOWABILITY OF THE MATERIAL. ADEQUATE MEASURES SHALL BE TAKEN (SAND BAGS, ETC.) TO PREVENT FLOATING THE PIPE. WHEN USING FLOWABLE FILL, ALL METAL PIPE SHALL BE BITUMINOUS COATED. ANY ADJOINING SOIL FILL SHALL BE PLACED IN HORIZONTAL LAYERS NOT TO EXCEED FOUR INCHES IN THICKNESS AND COMPACTED BY HAND TAMPERS OR OTHER MANUALLY DIRECTED COMPACTION EQUIPMENT. THE MATERIAL SHALL COMPLETELY FILL ALL VOIDS ADJACENT TO THE FLOWABLE FILL ZONE. AT NOT TIME DURING THE BACKFILLING OPERATION SHALL DRIVEN EQUIPMENT BE ALLOWED TO OPERATE CLOSER THAN FOUR FEET, MEASURED HORIZONTALLY, TO ANY PART OF THE STRUCTURE. UNDER NO CIRCUMSTANCES SHALL BE EQUIPMENT BE DRIVEN OVER ANY PART OF THE STRUCTURE OR PIPE UNLESS THERE IS A COMPACTED FILL OF 24" OR GREATER OVER THE STRUCTURE OF PIPE. BACKFILL MATERIAL OUTSIDE THE STRUCTURAL BACKFILL (FLOWABLE FILL) ZONE SHALL BE OF THE TYPE AND QUALITY CONFORMING TO THAT SPECIFIED FOR THE CORE OF THE EMBANKMENT OR OTHER EMBANKMENT MATERIALS.

D. PIPE CONDUITS

ALL PIPES SHALL BE CIRCULAR IN CROSS SECTION.

1. CORRUGATED METAL PIPE - ALL OF THE FOLLOWING CRITERIA SHALL APPLY FOR CORRUGATED METAL PIPE.

A. MATERIALS (POLYMER COATED STEEL PIPE) - STEEL PIPES WITH POLYMERIC COATINGS SHALL HAVE A MINIMUM COATING THICKNESS OF 0.01 INCH (10 MIL) ON BOTH SIDES OF THE PIPE. THIS PIPE AND ITS APPURTENANCES SHALL CONFORM TO THE REQUIREMENTS OF AASHTO SPECIFICATIONS M-245 & M-246 WITH WATERTIGHT COUPLING BANDS OR FLANGES.

MATERIALS (ALUMINUM COATED STEEL PIPE) - THIS PIPE AND ITS APPURTENANCES SHALL CONFORM TO THE REQUIREMENTS OF AASHTO SPECIFICATION M-274 WITH WATERTIGHT COUPLING BANDS OR FLANGES. ALUMINUM COATED STEEL PIPE, WHEN USED WITH FLOWABLE FILL OR WHEN SOIL AND/OR WATER CONDITIONS WARRANT THE NEED FOR INCREASED DURABILITY, SHALL BE FULLY BITUMINOUS COATED PER REQUIREMENTS OF AASHTO SPECIFICATION M-190 TYPE A. ANY ALUMINUM COATING DAMAGED OR OTHERWISE REMOVED SHALL BE REPLACED WITH COLD APPLIED BITUMINOUS COATING COMPOUND. ALUMINUM SURFACES THAT ARE TO BE IN CONTACT WITH CONCRETE SHALL BE PAINTED WITH ONE COAT OF ZINC CHROMATE PRIMER OR TWO COATS OF ASPHALT.

MATERIALS (ALUMINUM PIPE) - THIS PIPE AND ITS APPURTENANCES SHALL CONFORM TO THE REQUIREMENTS OF AASHTO SPECIFICATION M-196 OR M-211 WITH WATERTIGHT COUPLING BANDS OR FLANGES. ALUMINUM PIPE, WHEN USED WITH FLOWABLE FILL OR WHEN SOIL AND/OR WATER CONDITIONS WARRANT FOR INCREASED DURABILITY, SHALL BE FULLY BITUMINOUS COATED PER REQUIREMENTS OF AASHTO SPECIFICATION M-190 TYPE A. ALUMINUM SURFACES THAT ARE TO BE IN CONTACT WITH CONCRETE SHALL BE PAINTED WITH ONE COAT OF ZINC CHROMATE PRIMER OR TWO COATS OF ASPHALT. HOT DIP GALVANIZED BOLTS MAY BE USED FOR CONNECTIONS. THE PH OF THE SURROUNDING SOILS SHALL BE BETWEEN 4 AND 9.

B. COUPLING BANDS, ANTI-SEEP COLLARS, END SECTIONS, ETC., MUST BE COMPOSED OF THE SAME MATERIAL AND COATINGS AS THE PIPE. METALS MUST BE INSULATED FROM DISSIMILAR MATERIALS WITH USE OF RUBBER OR PLASTIC INSULATING MATERIALS AT LEAST 24 MILS IN THICKNESS.

C. CONNECTIONS - ALL CONNECTIONS WITH PIPES MUST BE COMPLETELY WATERTIGHT. THE DRAIN PIPE OR BARREL CONNECTION TO THE RISER SHALL BE WELDED ALL AROUND THE PIPE AND RISER ARE METAL. ANTI-SEEP COLLARS SHALL BE CONNECTED TO THE PIPE IN SUCH A MANNER AS TO BE COMPLETELY WATERTIGHT. DIMPLE BANDS ARE NOT CONSIDERED TO BE WATERTIGHT.

ALL CONNECTIONS SHALL USE A RUBBER OR NEOPRENE GASKET WHEN JOINING PIPE SECTIONS. THE END OF EACH PIPE SHALL BE RE-ROLLED AN ADEQUATE NUMBER OF CORRUGATIONS TO ACCOMMODATE THE BANDWIDTH. THE FOLLOWING TYPE CONNECTIONS ARE ACCEPTABLE FOR PIPES LESS THAN 24 INCHES IN DIAMETER: FLANGES ON BOTH ENDS OF THE PIPE WITH A CIRCULAR 3/8 INCH CLOSED CELL NEOPRENE GASKET, PRE-PUNCHED TO THE GLANGE BOLT CIRCLE, SANDWICHED BETWEEN ADJACENT FLANGES; A 12-INCH WIDE STANDARD LAP TYPE BAND BY 3/8-INCH THICK CLOSED CELL CIRCULAR NEOPRENE GASKET; AND A 12-INCH WIDE HUGGER TYPE BAND WITH O-RING GASKETS HAVING A MINIMUM DIAMETER OF Ac INCHT GREATER THAN THE CORRUGATION DEPTH. PIPES 24 INCHES IN DIAMETER AND LARGER SHALL BE CONNECTED BY A 24 INCH LONG ANNULAR CORRUGATED BAND USING A MINIMUM OF 4 (FOUR) RODS AND LUGS, 2 ON EACH CONNECTING PIPE END. A 24-INCH WIDE BY 3/8-INCH THICK CLOSED CELL CIRCULAR NEOPRENE GASKET WILL BE INSTALLED WITH 12-INCHES ON THE END OF EACH PIPE. FLANGED JOINTS WITH 3/8-INCH CLOSED CELL GASKETS THE FULL WIDTH OF THE FLANGE IS ALSO ACCEPTABLE.

HELICALLY CORRUGATED PIPE SHALL HAVE EITHER CONTINUOUSLY WELDED SEAMS OR HAVE LOCK SEAMS WITH INTERNAL CAULKING OR A NEOPRENE BEAD.

D. BEDDING - THE PIPE SHALL BE FIRMLY AND UNIFORMLY BEDDED THROUGH-OUT ITS ENTIRE LENGTH. WHERE ROCK OR SOFT, SPONGY OR OTHER UNSTABLE SOIL IS ENCOUNTERED, ALL SUCH MATERIAL SHALL BE REMOVED AND REPLACED WITH SUITABLE EARTH COMPACTED TO PROVIDE ADEQUATE SUPPORT.

E. BACKFILLING SHALL CONFORM TO "STRUCTURE BACKFILL".

F. OTHER DETAILS (ANTI-SEEP COLLARS, VALVES, ETC.) SHALL BE AS SHOWN ON THE DRAWINGS.

E. CONCRETE

CONCRETE SHALL MEET THE REQUIREMENTS OF MARYLAND DEPARTMENT OF TRANSPORTATION, STATE HIGHWAY ADMINISTRATION STANDARD SPECIFICATIONS FOR CONSTRUCTION AND MATERIALS, SECTION 414, MIX NO. 3.

F. ROCK RIPRAP

ROCK RIPRAP SHALL MEET THE REQUIREMENTS OF MARYLAND DEPARTMENT OF TRANSPORTATION, STATE HIGHWAY ADMINISTRATION STANDARD SPECIFICATIONS FOR CONSTRUCTION AND MATERIALS, SECTION 311. GEOTEXTILE SHALL BE PLACED UNDER ALL RIPRAP AND SHALL MEET THE REQUIREMENTS OF MARYLAND DEPARTMENT OF TRANSPORTATION, STATE HIGHWAY ADMINISTRATION STANDARD SPECIFICATIONS FOR CONSTRUCTION AND MATERIALS, SECTION 921.09, CLASS C.

G. CARE OF WATER DURING CONSTRUCTION

ALL WORK ON PERMANENT STRUCTURES SHALL BE CARRIED OUT IN AREAS FREE FROM WATER. THE CONTRACTOR SHALL CONSTRUCT AND MAINTAIN ALL TEMPORARY DIKES, LEVEES, COFFERDAMS, DRAINAGE CHANNELS, AND STREAM DIVERSIONS NECESSARY TO PROTECT THE AREAS TO BE OCCUPIED BY THE PERMANENT WORKS. THE CONTRACTOR SHALL ALSO FURNISH, INSTALL, OPERATE, AND MAINTAIN ALL NECESSARY PUMPING AND OTHER EQUIPMENT REQUIRED FOR REMOVAL OF WATER FROM VARIOUS PARTS OF THE WORK AND FOR MAINTAINING THE EXCAVATIONS, FOUNDATION, AND OTHER PARTS OF THE WORK FREE FROM WATER AS REQUIRED OR DIRECTED BY THE ENGINEER FOR CONSTRUCTING EACH PART OF THE WORK. AFTER HAVING SERVED THEIR PURPOSE, ALL TEMPORARY PROTECTIVE WORKS SHALL BE REMOVED OR LEVELED AND GRADED TO THE EXTENT REQUIRED TO PREVENT OBSTRUCTION IN ANY DEGREE WHATSOEVER OF THE FLOW OF WATER TO THE SPILLWAY OR OUTLET WORKS AND SO AS NOT TO INTERFERE IN ANY WAY WITH THE OPERATION OR MAINTENANCE OF THE STRUCTURE. STREAM DIVERSIONS SHALL BE MAINTAINED UNTIL THE FULL FLOW CAN BE PASSED THROUGH THE PERMANENT WORKS. THE REMOVAL OF WATER FROM THE REQUIRED EXCAVATION AND THE FOUNDATION SHALL BE ACCOMPLISHED IN A MANNER AND TO THE EXTENT THAT WILL MAINTAIN STABILITY OF THE EXCAVATED SLOPES AND BOTTOM REQUIRED EXCAVATIONS AND WILL ALLOW SATISFACTORY PERFORMANCE OF ALL CONSTRUCTION OPERATIONS. DURING THE PLACING AND COMPACTING OF MATERIAL IN REQUIRED EXCAVATIONS, THE WATER LEVEL AT THE LOCATIONS BEING REFILLED SHALL BE MAINTAINED BELOW THE BOTTOM OF THE EXCAVATION AT SUCH LOCATIONS WHICH MAY REQUIRE DRAINING THE WATER SUMPS FROM WHICH THE WATER SHALL BE PUMPED.

H. CONSTRUCTION INSPECT. BY DESIGNATED ENGINEERS

THE CONSTRUCTION OF THE STORMWATER MANAGEMENT FACILITY AND DECLARATION THAT THE FACILITY HAS BEEN BUILT IN ACCORDANCE WITH THE DRAWINGS AND SPECIFICATIONS SHALL BE UNDER THE SUPERVISION OF A REGISTERED PROFESSIONAL ENGINEER. THE CONTRACTOR SHALL PROVIDE THE ENGINEER WITH A MINIMUM OF TWO WEEKS ADVANCE NOTICE OF THE DATE THAT HE EXPECTS TO START CONSTRUCTION. AT THIS SAME TIME, THE CONTRACTOR SHALL ALSO PROVIDE THE ENGINEER, IN WRITING, A LIST OF ALL MATERIALS TO BE INCORPORATED INTO THE WORK, ALONG WITH THEIR SOURCES OF SUPPLY. THE ENGINEER SHALL BE GIVEN SUFFICIENT NOTICE OF ALL UPCOMING ACTIVITIES, PRIOR TO AND DURING THE PROCESS OF THE WORK, IN ORDER THAT ARRANGEMENTS CAN BE MADE FOR:

1. INSPECTION OF ALL MATERIALS AND THEIR ASSOCIATED CERTIFICATIONS PRIOR TO THEIR INSTALLATION/PLACEMENT IN THE PROPOSED WORK.
2. INSPECTION AND RELATED TESTING OF THE CONSTRUCTION OF THE CUTOFF/CORE TRENCH(ES), AND POND EMBANKMENT; INSTALLATION OF THE PRINCIPAL SPILLWAY, ANTI-SEEP COLLARS AND RISER ASSEMBLY; CONSTRUCTION OF THE EMERGENCY SPILLWAY AND OTHER CRITICAL FLOW CHANNELS.
3. INSPECTION OF ALL OTHER SIGNIFICANT CONSTRUCTION/INSTALLATION ITEMS FOR THE PROPOSED FACILITY AND RELATED PIPING, INCLUDING BACKFILLING AND SOIL COMPACTION. THE ENGINEER SHALL ALSO DIRECT THE HANDLING OF WATER DURING CONSTRUCTION, MINOR CHANGES NOT AFFECTING THE INTEGRITY OF THE DAM IN ORDER TO COMPENSATE FOR UNUSUAL SOIL CONDITIONS, AND THE REMOVAL AND REPLACEMENT OF DEFECTIVE FILL.

I. GENERAL

ALL STORMWATER MANAGEMENT FACILITIES ARE TO BE CONSTRUCTED IN ACCORDANCE WITH THE 2000 MARYLAND STORMWATER DESIGN MANUAL, VOLUMES I AND II, (MARYLAND DEPARTMENT OF THE ENVIRONMENT) AND THE USDA NATURAL RESOURCES CONSERVATION SERVICE MARYLAND CONSERVATION PRACTICE STANDARD POND CODE 378 (JANUARY 2000). THESE CONSTRUCTION DRAWINGS ARE INTENDED TO REFLECT THE RELEVANT REQUIREMENTS, HOWEVER, ANY LACK OF SPECIFIC DETAILS ON THESE DRAWINGS SHALL NOT RELIEVE ANY OF THE REQUIREMENTS OF THESE AND OTHER RELEVANT CODES.

SPECIFICATIONS FOR TYPE 2 ALUMINIZED STEEL (AL-T2)

SCOPE
THIS SPECIFICATION COVERS THE CORRUGATED STEEL PIPE (CSP) DETAILED INTHE PROJECT PLANS.

MATERIAL
THE TYPE 2 ALUMINIZED STEEL COILS SHALL CONFORM TO THE APPLICABLE REQUIREMENTS OF AASHTO M 274 OR ASTM A 929.

PIPE
THE CSP SHALL BE MANUFACTURED IN ACCORDANCE WITH THE APPLICABLE REQUIREMENTS OF AASHTO M 36 OR ASTM A 760. THE PIPE SIZES, GAUGES AND CORRUGATIONS SHALL BE AS SHOWN ON THE PROJECT PLANS.

FITTING REINFORCING
THE REINFORCING SHALL BE DESIGNED AND SUPPLIED BY THE MANUFACTURER IN ACCORDANCE WITH ASTM A 998 STANDARDS.

REPAIR
ALL REPAIRS, WHEN THE COATING IS DAMAGED, SHALL BE IN ACCORDANCE WITH AASHTO M 36.

(S-3)
TOP SLAB
NOT TO SCALE

(S-3)
SECTION A-A
NOT TO SCALE

(S-3)
SECTION B-B
NOT TO SCALE

(S-3)
WEIR WALL
NOT TO SCALE

STRUCTURAL NOTES

1. CONCRETE CONSTRUCTION SHALL BE DESIGNED, REINFORCED AND CONSTRUCTED IN ACCORDANCE WITH ACI 318 'BUILDING CODE REQUIREMENTS FOR REINFORCED CONCRETE.'
2. CONCRETE SHOWN ON THIS DRAWING SHALL BE SHA MIX No. 3.
3. REINFORCING STEEL SHALL BE DEFORMED STEEL BARS CONFORMING TO ASTM A615, GRADE 60.
4. THE CONTRACTOR WILL FURNISH THE STRUCTURE AS A PRECAST UNIT.
5. PROVIDE A 12" CONCRETE COLLAR AT ALL PIPE CONNECTIONS TO THE RELEASE STRUCTURES.

(S-3)
PLAN VIEW
NOT TO SCALE

(S-3)
SECTION C-C
NOT TO SCALE

ACCESS PORT SECTION
NOT TO SCALE

ACCESS PORT SECTION
ALL MATERIALS USED FOR LADDER RUNGS & INSTALLATION HARDWARE SHALL BE GALVANIZED

RUNG (MINIMUM)

RUNG (MINIMUM)

ACCESS RISER

OWNERS/DEVELOPERS
PARCEL 30 - GWENRIDGE LLC 8835-P COLUMBIA 100 PARKWAY COLUMBIA, MD 21045 PARCEL 38 - MEHTA CHARALUTA TRUST 5551 OAKLAND MILLS ROAD COLUMBIA, MD 21045
BRANTLY DEVELOPMENT GROUP, INC. 8835-P COLUMBIA 100 PARKWAY COLUMBIA, MD 21045

DRAWN: J.D.
DATE: September 12, 2006
SCALE: AS SHOWN

DATE	REVISION	BY

ELKRIDGE-CROSSING-PHASE TWO
PARCELS A-E
TAX MAP 38, GRID 2, PARCELS 30 & 38
FIRST ELECTION DISTRICT, HOWARD COUNTY, MARYLAND
STORMWATER MANAGEMENT NOTES & DETAILS

JURI MAISTE - SITE DESIGN CONSULTANT
2923 Chenoak Avenue, Baltimore, Maryland 21234
Phone: 410-661-8752 Fax: 410-661-8752
RICHARDSON ENGINEERING, LLC
30 E. Padonia Road, Suite 500, Timonium, Maryland 21093
Phone: 410-560-1502 Fax: 443-901-1208

HILLIS - CARNES
ENGINEERING ASSOCIATES, INC.
RECORD OF SOIL EXPLORATION

Page 1 of 1
Project Name: Elkridge Crossing SWM — Location: Howard County, Maryland — Boring Number: B-10 — Job #: 04327A
Surface Elev.: 188.00 — Date Started: 08-18-04
SAMPLER: Hammer Wt. 140 Lbs. — Hammer Drop 30 Inches — Pipe Size 2.0 Inches OD — Hole Diameter 8" — Rock Core Dia. - — Boring Method HSA
Foreman: Steven McManus — Inspector — Completed: 08-18-04

ELEV.	SOIL DESCRIPTION	STRA. DEPTH	CON	SAMPLE BLOWS/6"	NO.	REC	BORING & SAMPLING NOTES
	SURFACE	0.0					
	Grayish brown, moist, soft, silty clay, with sand and asphalt fragments (CL) FILL	2.0	D	8-2-2	1	10"	No groundwater encountered while drilling
	Brown to reddish brown, moist, stiff, sandy silt (ML)		I	7-9-10	2	12"	
		7.5	I	5-7-10	3	15"	Caved in at 6.5' at Completion
	Light brown, moist, stiff, silt, trace sand (ML)	12.0	I	3-5-7	4	10"	Caved in at 7.5' after 24 hours
	Orange and gray, moist, stiff, sandy clay, trace gravel and rock fragments (CL)	15.0	D	5-5-9	5	14"	
	Bottom of Test Hole at 15.0'						

SAMPLER TYPE: SPLIT SPOON UNLESS OTHERWISE NOTED; PRESSED SHELBY TUBE; CONTINUOUS FLIGHT AUGER; ROCK CORE
SAMPLE CONDITIONS: D-DISINTEGRATED; I-INTACT; U-UNDISTURBED; L-LOST
GROUND WATER DEPTH: AT COMPLETION Dry FT.; AFTER 24 hrs Dry FT.; AFTER ___ FT.
BORING METHOD: HSA-HOLLOW STEM AUGERS; CFA-CONT. FLIGHT AUGERS; DC-DRIVING CASING; MD-MUD DRILLING

HILLIS - CARNES
ENGINEERING ASSOCIATES, INC.
RECORD OF SOIL EXPLORATION

Page 1 of 1
Project Name: Elkridge Crossing SWM — Location: Howard County, Maryland — Boring Number: B-11 — Job #: 04327A
Surface Elev.: 182.00 — Date Started: 08-18-04
SAMPLER: Hammer Wt. 140 Lbs. — Hammer Drop 30 Inches — Pipe Size 2.0 Inches OD — Hole Diameter 8" — Rock Core Dia. - — Boring Method HSA
Foreman: Steven McManus — Inspector — Completed: 08-18-04

ELEV.	SOIL DESCRIPTION	STRA. DEPTH	CON	SAMPLE BLOWS/6"	NO.	REC	BORING & SAMPLING NOTES
	SURFACE	0.0					2" Topsoil
	Dark grayish brown, moist, medium dense, clayey sand, trace gravel, trace organics (SC)	2.0	D	6-3-11	1	4"	Groundwater encountered at 4.5' while drilling
	Dark grayish brown, moist, soft, sandy clay, trace gravel, trace organics (CL)	4.5	D	2-2-2	2	2"	Caved in at 4.0' at Completion
	Brown, wet, soft, clay, trace sand, trace organics (CL)	7.5	D	1-1-3	3	13"	Caved in at 4.3' after 24 hours
	Brown, wet, medium stiff to stiff, sandy clay, trace gravel and rock fragments in sample 5 (CL)		D	3-3-3	4	10"	
		15.0	D	9-13-15	6	15"	
	Bottom of Test Hole at 15.0'						

SAMPLER TYPE: SPLIT SPOON UNLESS OTHERWISE NOTED; PRESSED SHELBY TUBE; CONTINUOUS FLIGHT AUGER; ROCK CORE
SAMPLE CONDITIONS: D-DISINTEGRATED; I-INTACT; U-UNDISTURBED; L-LOST
GROUND WATER DEPTH: AT COMPLETION 3.0 FT.; AFTER 24 hrs 3.4 FT.; AFTER ___ FT.
BORING METHOD: HSA-HOLLOW STEM AUGERS; CFA-CONT. FLIGHT AUGERS; DC-DRIVING CASING; MD-MUD DRILLING

HILLIS - CARNES
ENGINEERING ASSOCIATES, INC.
RECORD OF SOIL EXPLORATION

Page 1 of 1
Project Name: Elkridge Crossing SWM — Location: Howard County, Maryland — Boring Number: B-9 — Job #: 04327A
Surface Elev.: 188.50 — Date Started: 08-18-04
SAMPLER: Hammer Wt. 140 Lbs. — Hammer Drop 30 Inches — Pipe Size 2.0 Inches OD — Hole Diameter 8" — Rock Core Dia. - — Boring Method HSA
Foreman: Steven McManus — Inspector — Completed: 08-18-04

ELEV.	SOIL DESCRIPTION	STRA. DEPTH	CON	SAMPLE BLOWS/6"	NO.	REC	BORING & SAMPLING NOTES
	SURFACE	0.0					
	Grayish brown, moist, loose silty sand, with rock fragments and gravel (SM)	2.0	D	8-5-5	1	10"	Groundwater encountered at 9.0' while drilling
	Brown, moist, medium dense, silty sand, trace gravel (SM)		I	6-11-11	2	16"	
		7.5	I	7-9-9	3	14"	
	Dark brown, moist, medium dense, clayey coarse sand, with gravel and rock fragments (SC)	12.0	D	6-7-5	4	14"	Caved in at 9.0' at Completion; Caved in at 4.75 after 24 hours
	Brown, wet, loose, silty sand (SM)	15.0	D	2-1-5	5	12"	
	Bottom of Test Hole at 15.0'						

SAMPLER TYPE: SPLIT SPOON UNLESS OTHERWISE NOTED; PRESSED SHELBY TUBE; CONTINUOUS FLIGHT AUGER; ROCK CORE
SAMPLE CONDITIONS: D-DISINTEGRATED; I-INTACT; U-UNDISTURBED; L-LOST
GROUND WATER DEPTH: AT COMPLETION 6.5 FT.; AFTER 24 hrs 2.2 FT.; AFTER ___ FT.
BORING METHOD: HSA-HOLLOW STEM AUGERS; CFA-CONT. FLIGHT AUGERS; DC-DRIVING CASING; MD-MUD DRILLING

STANDARD PENETRATION TEST-DRIVING 2" OD SAMPLER 1' WITH 140# HAMMER FALLING 30"; COUNT MADE AT 6" INTERVALS

STATE OF MARYLAND — RICHARDSON — PROFESSIONAL ENGINEER
1/24/07

SOILS DATA

ID	NAME	SOIL GROUP
Br	BELTSVILLE	C
Cl	CHILLUM	B
Cu	CODORUS	C
Iu	IUKA	C
Kh	KEYPORT	C
Md	MADE	C
Sc	SAND & CLAY	C
Sl	SASSAFRAS	B
Ss	SASSAFRAS	B
Su	SUNNYSIDE	B

EXISTING DRAINAGE AREA MAP

SCALE: 1" = 100'
0' 100' 200' 300'

APPROVED: DEPARTMENT OF PLANNING AND ZONING

CHIEF, DEVELOPMENT ENGINEERING DIVISION — DATE 3/22/07
CHIEF, DIVISION OF LAND DEVELOPMENT — DATE 6/28/07
DIRECTOR — DATE 6/29/07

OWNERS/DEVELOPERS
PARCEL 30 -
GWENRIDGE LLC
8835-P COLUMBIA 100 PARKWAY
COLUMBIA, MD 21045
PARCEL 38 -
MEHTA CHARALUTA TRUST
5551 OAKLAND MILLS ROAD
COLUMBIA, MD 21045

BRANTLY DEVELOPMENT GROUP, INC.
8835-P COLUMBIA 100 PARKWAY
COLUMBIA, MD 21045

DRAWN: J.D.
DATE: September 12, 2006
SCALE: AS SHOWN

DATE	REVISION	BY

ELKRIDGE-CROSSING-PHASE TWO
PARCELS A-E
TAX MAP 38, GRID 2, PARCELS 30 & 38
FIRST ELECTION DISTRICT, HOWARD COUNTY, MARYLAND
STORMWATER MANAGEMENT EX. DRAINAGE AREA MAP

JURI MAISTE - SITE DESIGN CONSULTANT
2923 Chenoak Avenue, Baltimore, Maryland 21234
Phone: 410-661-8752 Fax: 410-661-8752
RICHARDSON ENGINEERING, LLC
30 E. Padonia Road, Suite 500, Timonium, Maryland 21093
Phone: 410-560-1502 Fax: 443-901-1208

SDP-06-078

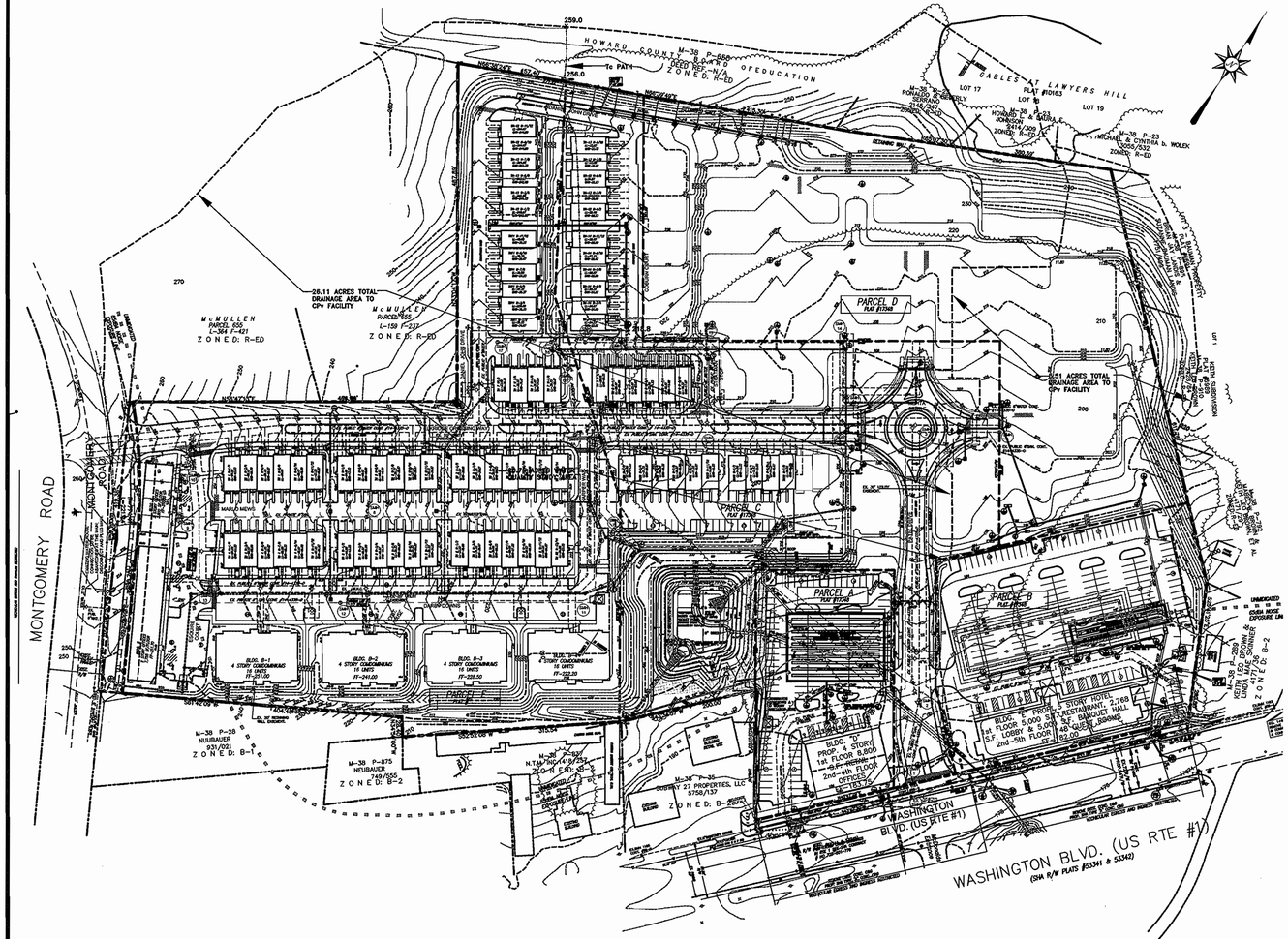

PROPOSED DRAINAGE AREA MAP

SCALE: 1" = 100'

0' 100' 200' 300'

SWM DATA

1. TYPE OF FACILITIES – **POCKET POND (P5) UNDERGROUND PIPE DETENTION, STORMCEPTORS
2. POND STRUCTURE CLASSIFICATION – CLASS A MD-378
3. WATERSHED AREA TO FACILITIES – 21.88 AC TO POND, 26.11 AC TO CPV FACILITY 1, 5.658 AC TO CPV FACILITY 2
4. POND FREEBOARD = 2.00'
5. WATER QUALITY REQUIRED = 0.45 AC–FT
6. WATER QUALITY PROVIDED = 0.76 AC–FT
7. MAINTENANCE RESPONSIBILITY – PRIVATE (ALL FACILITIES)
8. CPv PROVIDED IN UNDERGROUND DETENTION FACILITIES 1 & 2
9. FACILITY 1 CPv REQUIRED = 1.28 AC–FT
10. FACILITY 1 CPv PROVIDED = 1.28 AC–FT
11. FACILITY 2 CPv REQUIRED = 0.33 AC–FT
12. FACILITY 2 CPv PROVIDED = 0.33 AC–FT
13. Qp = NOT REQUIRED, Qf = NOT REQUIRED

**DUE TO M.A.A. REGULATIONS THE POND WILL HAVE TO BE A DRY POND, THEREFORE 24 HOUR EXTENDED DETENTION HAS BEEN PROVIDED FOR THE WATER QUALITY VOLUME.

SOILS DATA

ID	NAME	SOIL GROUP
Br	BELTSVILLE	C
Cl	CHILLUM	B
Cu	CODORUS	C
Iu	IUKA	C
Kh	KEYPORT	C
Md	MADE	C
Sc	SAND & CLAY	C
Sl	SASSAFRAS	B
Ss	SASSAFRAS	B
Su	SUNNYSIDE	B

WATER QUALITY POND MAINTENANCE SCHEDULE

1. THE FACILITY SHALL BE INSPECTED AND CLEANED TWICE ANNUALLY – MARCH AND SEPTEMBER. VISUAL INSPECTION OF ALL COMPONENTS SHALL BE COMPLETED BY THE OWNER. ALL DRAINS SHALL BE OPENED BY THE OWNER ONCE A YEAR. THE OWNER SHALL KEEP NOTES OF EACH INSPECTION.
2. REMOVE OIL AND SEDIMENT THROUGH THE 24–INCH DIAMETER OUTLET RISER PIPE. ALTERNATIVELY, YOU MAY REMOVE FLOATABLES AND HYDROCARBONS THROUGH THE 6–INCH OIL INSPECTION PORT. MATERIALS REMOVED SHALL BE DISPOSED OF AT AN APPROVED WASTE MANAGEMENT FACILITY.
3. ALL APURTENANCES SHALL BE KEPT FREE OF TRASH.
4. VISIBLE SIGNS OF DETERIORATION OF THE STRUCTURE SHALL BE REPAIRED AS SOON AS POSSIBLE
5. ALL REQUIRED MAINTENANCE SHALL BE PERFORMED BY THE OWNER, OR THE OWNER'S REPRESENTATIVE AT THE OWNER'S EXPENSE.

WATER QUALITY POND MAINTENANCE SCHEDULE

1. THE FACILITY SHALL BE INSPECTED TWICE ANNUALLY – MARCH AND SEPTEMBER. VISUAL INSPECTION OF ALL COMPONENTS SHALL BE COMPLETED BY THE OWNER. ALL DRAINS SHALL BE OPENED BY THE OWNER ONCE A YEAR. THE OWNER SHALL KEEP NOTES OF EACH INSPECTION.
2. GRASS AREAS SHALL BE MOWED ANYTIME THE GRASS IS OVER TWELVE (12) INCHES TALL.
3. VEGETATIVE COVER SHALL BE MAINTAINED BY MOWING, LIMING AND FERTILIZING. AS A MINIMUM REQUIREMENT, THE LIME AND FERTILIZER SHALL BE APPLIED ONE (1) TIME EVERY TWO (2) YEARS. NO TREES OR WOODY VEGETATION SHALL BE ALLOWED ON THE EMBANKMENT OR WITHIN FIFTEEN (15) FEET OF THE TOE OF THE EMBANKMENT, IN THE EMERGENCY SPILLWAY OR WITHIN TWENTY–FIVE (25) FEET OF THE OUTLET STRUCTURE.
4. ALL APURTENANCES SHALL BE KEPT FREE OF TRASH.
5. VISIBLE SIGNS OF DETERIORATION OF THE RISER, BARREL AND EMERGENCY SPILLWAY SHALL BE REPAIRED AS SOON AS POSSIBLE
6. ALL REQUIRED MAINTENANCE SHALL BE PERFORMED BY THE OWNER, OR THE OWNER'S REPRESENTATIVE AT THE OWNER'S EXPENSE.

SEQUENCE OF CONSTRUCTION

1. SEE THE SEDIMENT AND EROSION CONTROL PLANS FOR THE TIMING OF COVERSION OF THE EXISTING SEDIMENT BASIN TO THE WATER QUALITY FACILITY AND FOR THE ELIMINATION OF EXISTING SEDIMENT BASIN #2 AND CONSTRUCTION OF UNDERGROUND FACILITY 2, AS SHOWN ON THESE PLANS. THE CONVERSION FOR THE WATER QUALITY FACILITY SHALL BE PERFORMED AS FOLLOWS.
   A. INSTALL THE BYPASS PIPE AS SHOWN ON THE SEDIMENT AND EROSION CONTROL PLANS AND DE–WATER THE FACILITY.
   B. BEGIN CONSTRUCTION OF THE UNDERGROUND DETENTION FACILITIES 1 & 2.
   C. UPON COMPLETION OF CONSTRUCTION OF UNDERGROUND FACILITY 1, ALL DRAINAGE SHALL BE DIVERTED DIRECTLY TO THE UNDERGROUND FACILITY.
   D. BEGIN GRADING THE BASIN SO THAT IT CONFORMS TO THE GEOMETRY OF THE FINAL WATER QUALITY FACILITY. THE SUMP PIT SHALL REMAIN UNTIL ALL GRADING OF THE POND HAS BEEN COMPLETED AND STABILIZATION OF THE FACILITY IS IMMINENT.
   E. THE RISER AND DE–WATERING DEVICE SHALL BE MODIFIED AS REQUIRED.
   F. ONCE ALL WORK IS COMPLETED WITHIN THE FACILITY AND THE FACILITY IS STABILIZED THE INFLOW STRUCTURES SHALL BE FINALIZED TO ALLOW FLOW INTO THE FACILITY.
3. THE UNDERGROUND PIPE DETENTIOPN FACILITIES SHALL BE CONSTRUCTED AS FOLLOWS.
   A. EXCAVATE TO THE REQUIRED DEPTH AND PLACE THE 6" SAND BEDDING FOLLOWED BY THE FILTER FABRIC. THE FABRIC SHALL BE FASTENED TO THE WALLS OF THE EXCAVATION BY OVERLAPPING THE TOP OF THE WALL AND NOT BY ANY METHOD WHICH PUNCTURES THE FABRIC.
   B. BEGIN PLACEMENT OF THE DETENTION PIPES WHILE SIMULTANEOUSLY CONSTRUCTING THE RELEASE STRUCTURE AND PLACING THE WASHED #2 STNE IN THE VOID AREAS BETWEEN THE DETENTION PIPES.
   C. ONCE THE PIPES HAVE BEEN PLACED AND THE VOIDS FILLED TO THE DESIGN ELEVATION THE FILTER FABRIC SHALL BE FOLDED OVER THE FACILITY AND THE FACILITY IS TO BE SEALED WITH A MINIMUM OF 2' OVERLAPS OF THE FABRIC.
   D. ANY FILL PLACED OVER THE FACILITY SHALL BE COMPACTED TO SUB–GRADE.

NOTE:
FOR ALL PUBLIC WATER & UTILITY EASEMENTS, PRIVATE SEWER EASEMENTS, PRIVATE STORM DRAIN EASEMENTS, PRIVATE STORM WATER MANAGEMENT EASEMENTS, AND PRIVATE RETAINING WALL EASEMENTS. SEE PN 19052-33 & PN. 19057-58 – F-07-131, F-07-132

CPv FACILITIES MAINTENANCE SCHEDULE

1. THE FACILITIES SHALL BE INSPECTED MONTHLY. VISUAL INSPECTION OF ALL COMPONENTS SHALL BE COMPLETED BY THE OWNER. THE OWNER SHALL KEEP NOTES OF EACH INSPECTION.
2. THE FACILITY SHALL BE KEPT FREE OF TRASH INCLUDING ALL AREAS DISCHARGING INTO THE FACILITY DURING AND AFTER CONSTRUCTION.
3. CORRECTIVE MAINTENANCE IS REQUIRED ANYTIME A FACILITY DOES NOT DRAIN WITHIN 48 HOURS.
4. DETERIORATION OF THE PIPES, RELEASE STRUCTURES, ETC. AND MALFUNCTION OF THE FACILITY SHALL BE REPORTED TO THE HOWARD COUNTY DEPARTMENT OF PUBLIC WORKS.
5. ALL REQUIRED MAINTENANCE SHALL BE PERFORMED BY THE OWNER, THE OWNER'S REPRESENTATIVE AT THE OWNER'S EXPENSE.

STATE OF MARYLAND — PATRICK C. RICHARDSON — No. 21093 — PROFESSIONAL ENGINEER
1/24/07

OWNERS/DEVELOPERS
PARCEL 30 – GWENRIDGE LLC 8835–P COLUMBIA 100 PARKWAY COLUMBIA, MD 21045
PARCEL 38 – MEHTA CHARALUTA TRUST 5551 OAKLAND MILLS ROAD COLUMBIA, MD 21045
BRANTLY DEVELOPMENT GROUP, INC. 8835–P COLUMBIA 100 PARKWAY COLUMBIA, MD 21045

APPROVED: DEPARTMENT OF PLANNING AND ZONING

CHIEF, DEVELOPMENT ENGINEERING DIVISION — DATE 3/22/07

CHIEF, DIVISION OF LAND DEVELOPMENT — DATE 6/8/07

DIRECTOR — DATE 6/29/07

DRAWN: J.D. | DATE: September 12, 2006 | SCALE: AS SHOWN

BY	REVISION	DATE

ELKRIDGE–CROSSING– PHASE. TWO

PARCELS A–E
TAX MAP 38, GRID 2, PARCELS 30 & 38
FIRST ELECTION DISTRICT, HOWARD COUNTY, MARYLAND

STORMWATER MANAGEMENT PR. DRAINAGE AREA MAP

JURJ MAISTE – SITE DESIGN CONSULTANT
2923 Chenoak Avenue, Baltimore, Maryland 21234
Phone: 410–661–8752 Fax: 410–661–8752

RICHARDSON ENGINEERING, LLC
30 E. Padonia Road, Suite 500, Timonium, Maryland 21093
Phone: 410–560–1502 Fax: 443–901–1208

SHEET 28 OF 32

SDP-06-078

DETAIL 5 – RIP-RAP INFLOW PROTECTION

Construction Specifications

1. Rip-rap lined inflow channels shall be 1' in depth, have a trapezoidal cross section with 2:1 or flatter side slopes and 3' (min.) bottom width. The channel shall be lined with 4" to 12" rip- rap to a depth of 18".

2. Filter cloth shall be installed under all rip-rap. Filter cloth shall be Geotextile Class C.

3. Entrance and exit sections shall be installed as shown on the detail section.

4. Rip-rap used for the lining may be recycled for permanent outlet protection if the basin is to be converted to a stormwater management facility.

5. Gabion Inflow Protection may be used in lieu of Rip-rap Inflow Protection.

6. Rip-rap should blend into existing ground.

7. Rip-rap Inflow Protection shall be used where the slope is between 4:1 and 10:1, for slopes flatter than 10:1 use Earth Dike or Temporary Swale lining criteria.

U.S. DEPARTMENT OF AGRICULTURE SOIL CONSERVATION SERVICE	PAGE B - 6 - 2	MARYLAND DEPARTMENT OF ENVIRONMENT WATER MANAGEMENT ADMINISTRATION

DETAIL 24 – STABILIZED CONSTRUCTION ENTRANCE

Construction Specifications

1. LENGTH – Minimum of 50' (*30' for single residence lot.)
2. WIDTH – 10' minimum, should be flared at the existing road to provide a turning radius.
3. Geotextile fabric (filter cloth) shall be placed over the existing ground prior to placing stone. **The plan approval authority may not require single family residences to use geotextile.
4. STONE – Crushed aggregate (2"-3") or reclaimed or recycled concrete equivalent shall be placed at least 6" deep over the length and width of the entrance.
5. SURFACE WATER – All surface water flowing to or diverted toward construction entrances shall be piped through the entrance, maintaining positive drainage. Pipe installed through the stabilized construction entrance shall be protected with a mountable berm with 5:1 slopes and a minimum of 6" stone over the pipe. Pipe has to be sized according to the drainage. When the SCE is located at a high spot and has no drainage to convey, a pipe will not be necessary. Pipe should be sized according to th amount of runoff to be conveyed. A 6" minimum will be required.
6. LOCATION – A stabilized construction entrance shall be located at every point where construction traffic enters or leaves a construction site. Vehicles leaving the site must travel over the entire length of the stabilized construction entrance.

U.S. DEPARTMENT OF AGRICULTURE SOIL CONSERVATION SERVICE	PAGE F - 17 - 3	MARYLAND DEPARTMENT OF ENVIRONMENT WATER MANAGEMENT ADMINISTRATION

DETAIL 22 – SILT FENCE

Construction Specifications

1. Fence posts shall be a minimum of 36" long driven 16" minimum into the ground. Wood posts shall be 11/2" x 11/2" square (minimum) cut, or 13/4" diameter (minimum) round and shall be of sound quality hardwood. Steel posts will be standard T or U section weighting not less than 1.00 pond per linear foot.

2. Geotextile shall be fastened securely to each fence post with wire ties or staples at top and mid-section and shall meet the following requirements for Geotextile Class F:

Tensile Strength	50 lbs/in (min.)	Test: MSMT 509
Tensile Modulus	20 lbs/in (min.)	Test: MSMT 509
Flow Rate	0.3 gal ft² / minute (max.)	Test: MSMT 322
Filtering Efficiency	75% (min.)	Test: MSMT 322

3. Where ends of geotextile fabric come together, they shall be overlapped, folded and stapled to prevent sediment bypass.

4. Silt Fence shall be inspected after each rainfall event and maintained when bulges occur or when sediment accumulation reached 50% of the fabric height.

U.S. DEPARTMENT OF AGRICULTURE SOIL CONSERVATION SERVICE	PAGE E - 15 - 3	MARYLAND DEPARTMENT OF ENVIRONMENT WATER MANAGEMENT ADMINISTRATION

DETAIL 33 – SUPER SILT FENCE

Construction Specifications

1. Fencing shall be 42" in height and constructed in accordance with the latest Maryland State Highway Details for Chain Link Fencing. The specification for a 6' fence shall be used, substituting 42" fabric and 6' length posts.
2. Chain link fence shall be fastened securely to the fence posts with wire ties. The lower tension wire, brace and truss rods, drive anchors and post caps are not required except on the ends of the fence.
3. Filter cloth shall be fastened securely to the chain link fence with ties spaced every 24" at the top and mid section.
4. Filter cloth shall be embedded a minimum of 8" into the ground.
5. When two sections of filter cloth adjoin each other, they shall be overlapped by 6" and folded.
6. Maintenance shall be performed as needed and silt buildups removed when "bulges" develop in the silt fence, or when silt reaches 50% of fence height.
7. Filter cloth shall be fastened securely to each fence post with wire ties or staples at top and mid section and shall meet the following requirements for Geotextile Class F:

Tensile Strength	50 lbs/in (min)	Test: MSMT 509
Tensile Modulus	20 lbs/in (min)	Test: MSMT 509
Flow Rate	0.3 gal/ft²/minutes (max)	Test: MSMT 322
Filtering Efficiency	75% (min)	Test: MSMT 322

U.S. DEPARTMENT OF AGRICULTURE SOIL CONSERVATION SERVICE	PAGE H - 26 - 3	MARYLAND DEPARTMENT OF ENVIRONMENT WATER MANAGEMENT ADMINISTRATION

DETAIL 1 – EARTH DIKE

	DIKE A	DIKE B
a–DIKE HEIGHT	18"	30"
b–DIKE WIDTH	24"	36"
c–FLOW WIDTH	4'	6'
d–FLOW DEPTH	12"	24"

FLOW CHANNEL STABILIZATION
GRADE 0.5% MIN. 10% MAX.

1. Seed and cover with straw mulch.
2. Seed and cover with Erosion Control Matting or line with sod.
3. 4" – 7" stone or recycled concrete equivalent pressed into the soil 7" minimum

Construction Specifications

1. All temporary earth dikes shall have uninterrupted positive grade to an outlet. Spot elevations may be necessary for grades less than 1%.

2. Runoff diverted from a disturbed area shall be conveyed to a sediment trapping device.

3. Runoff diverted from an undisturbed area shall outlet directly into an undisturbed, stabilized area at a non-erosive velocity.

4. All trees, brush, stumps, obstructions, and other objectional material shall be removed and disposed of so as not to interfere with the proper functioning of the dike.

5. The dike shall be excavated or shaped to line, grade and cross section as required to meet the criteria specified herein and be free of bank projections or other irregularities which will impede normal flow.

6. Fill shall be compacted by earth moving equipment.

7. All earth removed and not needed for construction shall be placed so that it will not interfere with the functioning of the dike.

8. Inspection and maintenance must be provided periodically and after each rain event.

U.S. DEPARTMENT OF AGRICULTURE SOIL CONSERVATION SERVICE	PAGE A - 1 - 6	MARYLAND DEPARTMENT OF ENVIRONMENT WATER MANAGEMENT ADMINISTRATION

APPROVED: DEPARTMENT OF PLANNING AND ZONING

CHIEF, DEVELOPMENT ENGINEERING DIVISION	DATE 3/22/07
CHIEF, DIVISION OF LAND DEVELOPMENT	DATE 6/28/07
DIRECTOR	DATE 6/29/07

Reviewed for Howard SCD and meets Technical Requirements

USDA – Natural Resources Conservation Service — Date 4/4/07

This development plan is approved for soil erosion and sediment control by the Howard Soil Conservation District.

USDA – Natural Resources Conservation Service — Date 4/4/07

OWNERS/DEVELOPERS

PARCEL 30 –
GWENRIDGE LLC
8835-P COLUMBIA 100 PARKWAY
COLUMBIA, MD 21045
PARCEL 38 –
MEHTA CHARALUTA TRUST
5551 OAKLAND MILLS ROAD
COLUMBIA, MD 21045

BRANTLY DEVELOPMENT GROUP, INC.
8835-P COLUMBIA 100 PARKWAY
COLUMBIA, MD 21045

1/24/07

DRAWN: CND
DATE: September 12, 2006
SCALE: NTS

DATE	REVISION	BY

ELKRIDGE-CROSSING-PHASE TWO
PARCELS A-E
TAX MAP 38, GRID 2, PARCELS 30 & 38
FIRST ELECTION DISTRICT, HOWARD COUNTY, MARYLAND

SED. & EROSION CONTROL DETAILS

JURI MAISTE – SITE DESIGN CONSULTANT
2923 Chenoak Avenue, Baltimore, Maryland 21234
Phone: 410-661-8752 Fax: 410-661-8752
RICHARDSON ENGINEERING, LLC
30 E. Padonia Road, Suite 500, Timonium, Maryland 21093
Phone: 410-560-1502 Fax: 443-901-1208

SDP-06-078

G:\JOBS\JOBS2004\04037\Drawings\SHEET4.DWG (LAYOUT1)

SEDIMENT CONTROL NOTES

1. THE CONTRACTOR/OWNER IS RESPONSIBLE FOR OBTAINING ALL NECESSARY PERMITS. NO FURTHER CONSTRUCTION ACTIVITY SHALL TAKE PLACE UNTIL ALL REQUIRED PERMITS HAVE BEEN OBTAINED.
2. THE LIMITS OF DISTURBANCE SHALL BE CLEARLY DELINEATED IN THE FIELD PRIOR TO GRADING OF THE SITE TO ENSURE COMPLIANCE WITH APPROVED PLANS. ANY WORK BEYOND LIMITS OF DISTURBANCE IS CONSIDERED TO BE A VIOLATION OF THIS PLAN.
3. ALL SEDIMENT CONTROL PRACTICES MUST BE INSTALLED PRIOR TO ANY CONSTRUCTION ACTIVITY. UPON OMPLETION OF INSTALLATION OF PERIMETER SEDIMENT CONTROL PRACTICES, THE SITE MUST BE INSPECTED BY DPW. NO ADDITIONAL CONSTRUCTION ACTIVITY WILL BE AUTHORIZED WITHOUT THE APPROVAL OF DPW.
4. ALL POINTS OF INGRESS AND EGRESS SHALL BE PROTECTED TO PREVENT TRACKING OF MUD INTO PUBLIC WAYS. DURING CONSTRUCTION, EVERY MEANS WILL BE TAKEN TO CONTROL SOIL EROSION AND SILTATION. IF NECESSARY, A WASH RACK MAY NEED TO BE ESTABLISHED.
5. EARTH DIKES, SEDIMENT TRAPS, ETC. WILL BE LOCATED AS SHOWN ON THESE DRAWINGS. FIELD CHANGES AND MINOR ADJUSTMENTS ARE PERMISSABLE AS LONG AS THE INSTALLATION FUNCTIONS AND CONFORMS TO SPECIFICATIONS. ALL SUCH CHANGES MUST BE APPROVED BY THE SITE INSPECTOR PRIOR TO INSTALLATION. MAJOR CHANGES TO THE APPROVED PLAN WILL REQUIRE REAPPROVAL BY THE HOWARD SOIL CONSERVATION DISTRICT.
6. FOLLOWING INITIAL SOIL DISTURBANCE, PERMANENT OR TEMPORARY STABILIZATION SHALL BE COMPLETED WITHIN:
   A: SEVEN CALENDAR DAYS ON SLOPES GREATER THEN 3:1 AND ALL WATERWAYS, AND TO THE SURFACE OF ALL PERIMETER CONTROLS.
   B: FOURTEEN CALENDAR DAYS AS TO ALL OTHER DISTURBED OR GRADED AREAAS OF THE PROJECT SITE.
7. SEDIMENT BASINS MUST BE BUILT TO DESIGN SPECIFICATIONS SHOWN. IF THE BASIN IS TO BE USED AS A FUTURE SWM POND, THE BASIN WILL BE BUILT IN ACCORDANCE WITH THE LATEST MD-378 SPECIFICATIONS. SPECIFIED MATERIALS MUST BE USED. NO CHANGES OR MODIFIACTIONS WILL BE MADE WITHOUT WRITTEN AUTHORIZATION OF THE HOWARD SOIL CONSERVATION DISTRICT.
8. TEMPORARY FENCING SHALL BE PLACED AOUND ALL SEDIMENT BASINS, TRAPS, AND PONDS DURING CONSTRUCTION AND SITE GRADING.
9. AT THE END OF EACH WORKING DAY ALL SEDIMENT CONTROL PRACTICES WILL BE INSPECTED AND LEFT OPERATIONAL. A WEEKLY LOG WILL BE KEPT IN ACCORDANCE WITH NOI/NPDES REGULATIONS. A COPY OF THE APPROVED SEDIMENT CONTROL PLANS SHALL BE AVAILABLE AT THE SITE AT ALL TIMES.
10. CUT AND/OR FILL SHALL BE DONE IN CONFORMANCE WITH 1994 EROSION AND SEDIMENT CONTROL STANDARD AND SPECIFICATIONS FOR LAND GRADING.
11. SURFACE FLOWS OVER CUT AND FILL SLOPES SHALL BE CONTROLLED BY EITHER REDIRECTING FLOWS FROM TRAVERSING THE SLOPES OR BY INSTALLING MECHANICAL DEVICES TO SAFELY CONVEY WATER DOWN SLOPES WITHOUT CAUSING EROSION.
12. OFF-SITE WASTE OR BORROW AREAS SHALL HAVE AN APPROVED EROSION AND SEDIMENT CONTROL PLAN PRIOR TO THE IMPORT OR EXPORT OF MATERIAL TO THE PROJECT SITE.
13. ALL MATERIAL ORIGINATING FROM THE DEVELOPMENT OF THE PROPERTY AND DEPOSITED ON THE PUBLIC RIGHT-OF-WAY SHALL BE IMMEDIATELY REMOVED.
14. STORM DRAIN INLETS AND OUTLETS SHALL BE PROTECTED PER 1994 EROSION AND SEDIMENT CONTROL STANDARDS AND SPECIFICATIONS.
15. TOPSOILING, LIMING, FERTILIZING, SEEDING, MULCHING, SADDLING, ETC. ARE ALL ESSENTIAL PARTS OF SEDIMENT CONTROL AND MUST BE COMPLTED ALONG WITH ALL OTHER PRACTICES.
16. TRAPS TO BE REMOVED SHALL BE DEWATERED AS PER THE 1994 EROSION AND SEDIMENT CONTROL SATNDARDS AND SPECIFICATIONS.
17. PRIOR TO REMOVAL OR CONVERSION OF SEDIMENT BASINS TO SWM FACILITIES, THE STORM DRAINS WILL BE FLUSHED.
18. SEDIMENT CONTROL PRACTICES WILL BE MAINTAINED UNTIL ALL DISTURBED AREAS FOR WHICH PRACTICES WERE INSTALLED HAVE BEEN STABILIZED. SEDIMENT CONTROL PRACTICES MAY BE REMOVED ONLY WITH THE AUTHORIZATION OF DPW. ALL DISTURBED AREAS RESULTING FROM THE REMOVAL OF SEDIMENT CONTROL DEVICES SHALL BE STABILIZED IMMEDIATELY. REMOVAL PRIOR TO INSPECTOR APPROVAL CONSTITUTES A VIOLATION.

Permanent Seeding Summary

Seed Mixture (For Hardiness Zone 6 B) (From Table 25)					Fertilizer Rate (10-20-20)			Lime Rate
No.	Species	Application Rate (lb/ac)	Seeding Dates	Seeding Depths	N	P205	K20	
1	KENT, BLUEGRASS, CREEPING RED OR HARD FESCUE REDTOP	150	3/1 - 5/15 8/15 - 10/1	*	90 lb/ac (2.0 lb/ 1000 sf)	175 lb/ac (4.0 lb/ 1000 sf)	175 lb/ac (4.0 lb/ 1000 sf)	2 tons/ac (100 lb/ 1000 sf)
2	TALL FESCUE WEEPING LOVEGRASS SERECIA LEPEDEZA	110 3 20	5/16 - 8/14	*				

Temporary Seeding Summary

Seed Mixture (For Hardiness Zone 6 B) (From Table 26)					Fertilizer Rate (10-20-20)	Lime Rate
No.	Species	Application Rate (lb/ac)	Seeding Dates	Seeding Depths		
1	RYE	140	3/1 - 4/30 8/15 - 11/15	*	600 lb/ac (15 lb/1000 sf)	2 tons/ac (100 lb/ 1000 sf)
2	WEEPING LOVEGRASS	4	5/1 - 8/14	*		
3	TALL FESCUE	30	3/1 - 4/30 8/15 - 11/15	*		

* FOR HYDROSEEDING OR DRY SEEDING. APPLY AT SURFACE FOR DRILL OR CULTIPACKER SEEDING DEPTH = 1/4" MIN.

SPECIFICATIONS FOR VEGETATIVE ESTABLISHMENT

SITE PREPARATION
1. STABILIZE AS PER STANDARD RESPONSIBILITY NOTE #3.
2. TEMPORARY PERIMETER DIKES AND SILT TRAPS; ETC., ARE TO BE PROVIDED AS PER THIS PLAN PRIOR TO GRADING OPERATIONS WITH LOCATION ADJUSTMENTS TO BE MADE IN THE FIELD AS NECESSARY AND TO BE MAINTAINED AT THE END OF THE WORKING DAY. THE MINIMUM AREA PRACTICAL SHALL BE DISTURBED FOR THE MINIMUM AMOUNT OF TIME POSSIBLE.
3. PERMANENT SEEDING:
   A. SEEDBED PREPARATION: AREA TO BE SEEDED SHALL BE LOOSE AND FRIABLE TO A DEPTH OF AT LEAST 3 INCHES. THE TOP LAYER SHALL BE LOOSENED BY RAKING, DISCING OR OTHER ACCEPTABLE MEANS BEFORE SEEDING OCCURS. APPLY 2 TONS OF DOLOMITIC LIMESTONE AND 1,000 POUNDS OF 10-20-20 FERTILIZER PER ACRE. HARROW OR DISK LIME AND FERTILIZER INTO THE SOIL TO A DEPTH OF AT LEAST 3 INCHES ON SLOPES FLATTER THAN 3:1. NO ATTEMPT SHOULD BE MADE TO DRAG ANY DISKED AREA TO MAKE THE SOIL SURFACE SMOOTH AFTER DISKING.
   B. SEEDING: APPLY THE FOLLOWING SEED MIXTURES BETWEEN 1 FEBRUARY AND 31 OCTOBER: KENTUCKY 31 TALL FESCUE 100 POUNDS PER ACRE RED TOP 15 POUNDS PER ACRE SERICA LESPEDEZA 30 POUNDS PER ACRE ANNUAL RYE GRASS 25 POUNDS PER ACRE OR GERMAN MILLET 20 POUNDS PER ACRE TOTAL 165 TO 175 POUNDS PER ACRE USE GERMAN MILLET BETWEEN 1 JUNE AND 15 AUGUST. APPLY SEED UNIFORMLY ON A MOIST, FIRM SEEDBED WITH A CYCLONE SEED DRILL, CULTIPACKER SEEDER OR HYDROSEEDER (SLURRY INCLUDES SEEDS AND FERTILIZER, RECOMMENDED ON SLOPES ONLY). MAXIMUM SEED DEPTH SHOULD BE 1/4" IN CLAYEY SOILS AND 1/2" IN SANDY SOILS WHEN USING OTHER THAN THE HYDROSEEDER METHOD. IRRIGATE IF SOIL MOISTURE IS DEFICIENT TO SUPPORT ADEQUATE GROWTH, UNTIL VEGETATION IS FIRMLY ESTABLISHED.
   C. MULCHING: MULCH SHALL BE UNCHOPPED, UNROTTED, SMALL GRAIN STRAW APPLIED AT A RATE OF 2 TONS PER ACRE. MULCH MATERIALS SHALL BE RELATIVELY FREE OF ALL KINDS OF WEEDS AND SHALL BE FREE OF PROHIBITED NOXIOUS WEEDS.
   D. GUARANTEED PERMANENT VEGETATIVE STABILIZATION OF ALL AREAS AFFECTED BY THE EXECUTION OF THIS CONTRACT IS REQUIRED. AREAS NOT STABILIZED WITH A VIABLE STAND OF PERMANENT VEGETATIVE COVER MUST BE OVERSEEDED, LIMED AND FERTILIZED AND, IF NECESSARY, STRAW MULCHED AND TACKED BY NO LATER THAN THE FOLLOWING GROWING SEASON FOLLOWINGH INITIAL STABILIZATION EFFORTS.

4. TEMPORARY SEEDING:
LIME: 100 POUNDS OF DOLOMITIC LIMESTONE PER 1,000 SQUARE FEET
FERTILIZER: 15 POUNDS OF 10-10-10 PER 1,000 SQUARE FEET.
SEED: PERENNIAL RYE, ITALIAN RYE - 0.92 POUNDS PER 1,000 SQUARE FEET
(FEBRUARY 1 THROUGH APRIL 30 OR AUGUST 15 THROUGH NOVEMBER 1)
MILLET - 0.92 POUNDS PER 1,000 SQUARE FEET (MAY 1 THROUGH AUGUST 15)

5. NO FILLS MAY BE PLACED ON FROZEN GROUND. ALL FILL TO BE PLACED IN APPROXIMATELY HORIZONTAL LAYERS, EACH LAYER HAVING A LOOSE THICKNESS OF NOT MORE THAN 8". ALL FILL IN ROADWAYS AND PARKING AREAS IS TO BE COMPACTED TO 90% DENSITY; COMPACTION TO BE DETERMINED BY ASTM D-1557 (MODIFIED PROCTOR). ANY FILL WITHIN BUILDING AREA IS TO BE COMPACTED TO A MINIMUM OF 95% AS DETERMINED BY METHODS PREVIOUSLY MENTIONED. ALL OTHER FILLS SHALL BE COMPACTED SUFFICIENTLY SO AS TO BE STABLE AND PREVENT EROSION AND SLIPPAGE.

6. PERMANENT SOD:
PERMANENT SOD IS TO BE KENTUCKY 31 TALL FESCUE, STATE APPROVED SOD; LIME AND FERTILIZE PER PERMANENT SEEDING SPECIFICATIONS AND LIGHTLY IRRIGATE SOIL PRIOR TO LAYING SOD. SOD IS TO BE LAID ON THE CONTOUR WITH ALL ENDS TIGHTLY SHUTTING, JOINTS ARE TO BE STAGGERED BETWEEN ROWS. WATER AND ROLL OR TAMP SOD TO INSURE POSITIVE ROOT CONTACT WITH THE SOIL. ADDITIONAL WATERING FOR ESTABLISHMENT MAY BE REQUIRED. SOD IS NOT TO BE APPLIED ON FROZEN GROUND.

G:\JOBS\JOBS2004\04037\Drawings\phase2\SHEET5.DWG (LAYOUT1)

TOPSOIL SPECIFICATIONS

DEFINITION
PLACEMENT OF TOPSOIL OVER A PREPARED SUBSOIL PRIOR TO ESTABLISHMENT OF PERMANENT VEGETATION.

PURPOSE
TO PROVIDE A SUITABLE SOIL MEDIUM FOR VEGETATIVE GROWTH. SOILS OF CONCERN HAVE LOW MOISTURE CONTENT, LOW NUTRIENT LEVELS, LOW PH, MATERIALS TOXIC TO PLANTS, AND/OR UNACCEPTABLE SOIL GRADATION.

CONDITIONS WHERE PRACTICE APPLIES
I. THIS PRACTICE IS LIMITED TO AREAS HAVING 2:1 OR FLATTER SLOPES WHERE:

A. THE TEXTURE OF THE EXPOSED SUBSOIL/PARENT MATERIAL IS NOT ADEQUATE TO PRODUCE VEGETATIVE GROWTH.
B. THE SOIL MATERIAL IS SO SHALLOW THAT THE ROOTING ZONE IS NOT DEEP ENOUGH TO SUPPORT PLANTS OR FURNISH CONTINUING SUPPLIES OF MOISTURE AND PLANT NUTRIENTS.
C. THE ORIGINAL SOIL TO BE VEGETATED CONTAINS MATERIAL TOXIC TO PLANT GROWTH.

D. THE SOIL IS SO ACID'F6:1HAT TREATMENT WITH LIMESTONE IS NOT FEASIBLE.

II. FOR THE PURPOSE OF THESE STANDARDS AND SPECIFICATIONS, AREAS HAVING SLOPES STEEPER THAN 2: 1 REQUIRE SPECIAL CONSIDERATION AND DESIGN FOR ADEQUATE STABILIZATION. AREAS HAVING SLOPES STEEPER THAN 2:1 SHALL HAVE THE APPROPRIATE STABILIZATION SHOWN ON THE PLANS.

CONSTRUCTION AND MATERIAL SPECIFICATIONS
I. TOPSOIL SALVAGED FROM THE EXISTING SITE MAY BE USED PROVIDED THAT IT MEETS THE STANDARDS AS SET FORTH IN THESE SPECIFICATIONS. TYPICALLY, THE DEPTH OF TOPSOIL TO BE SALVAGED FOR A GIVEN SOIL TYPE CAN BE FOUND IN THE REPRESENTATIVE SOIL PROFILE SECTION IN THE SOIL SURVEY PUBLISHED BY USDA-SCS IN COOPERATION WITH MARYLAND AGRICULTURAL EXPERIMENTAL STATION.

II. TOPSOIL SPECIFICATIONS - SOIL TO BE USED AS TOPSOIL MUST MEET THE FOLLOWING:

A. TOPSOIL SHALL BE A LOAM, SANDY LOAM, CLAY LOAM, SILT LOAM, SANDY CLAY LOAM, LOAMY SAND. OTHER SOILS MAY BE USED IF RECOMMENDED BY AN AGRONOMIST OR SOIL SCIENTIST AND APPROVED BY THE APPROPRIATE APPROVAL AUTHORITY. REGARDLESS, TOPSOIL SHALL NOT BE A MIXTURE OF CONTRASTING TEXTURED SUBSOILS AND SHALL CONTAIN LESS THAN 5% BY VOLUME OF CINDERS, STONES, SLAG, COARSE FRAGMENTS, GRAVEL, STICKS, ROOTS, TRASH, OR OTHER MATERIALS LARGER THAN 1 ½" IN DIAMETER.

B. TOPSOIL MUST BE FREE OF PLANTS OR PLANT PARTS SUCH AS BERMUDA GRASS, QUACKGRASS, JOHNSONGRASS, NUTSEDGE, POISON IVY, THISTLE, OR OTHERS AS SPECIFIED.

C. WHERE THE SUBSOIL IS EITHER HIGHLY ACIDIC OR COMPOSED OF HEAVY CLAYS, GROUND LIMESTONE SHALL BE SPREAD AT THE RATE OF 4-8 TONS/ACRE (200-400 POUNDS/1,000 SQUARE FEET) PRIOT TO THE PLACEMENT OF TOPSOIL. LIME SHALL BE DISTRIBUTED UNIFORMLY OVER DESIGNATED AREAS AND WORKED INTO THE SOIL IN CONJUNCTION WITH TILLAGE OPERATIONS AS DESCRIBED IN THE FOLLOWING PROCEDURES.

III. PLACE TOPSOIL (IF REQUIRED) AND APPLY SOIL AMENDMENTS AS SPECIFIED IN 20.0 VEGETATIVE STABILIZATION - SECTION I - VEGETATIVE STABILIZATION METHODS & MATERIALS.

TOPSOIL APPLICATION
I. WHEN TOPSOILING, MAINTAIN NEEDED EROSION AND SEDIMENT CONTROL PRACTICES SUCH AS DIVERSIONS, DRADE STABILIZATION STRUCTURES, EARTH DIKES, SLOPE SILT FENCE AND SEDIMENT TRAPS & BASINS.

II. GRADES ON THE AREAS TO BE TOPSOILED, WHICH HAVE BEEN PREVIOUSLY ESTABLISHED, SHALL BE MAINTAINED, ALBEIT 4" OR 8" HIGHER IN ELEVATION.

III. TOPSOIL SHALL BE UNIFORMLY DISTRIBUTED IN A 4"-8" LAYER AND SLIGHTLY COMPACTED TO A MINIMUM THICKNESS OF 4". SPREADING SHALL BE PERFORMED IN SUCH A MANNER THAT SODDING OR SEEDING CAN PROCEED WITH A MINIMUM OF ADDITIONAL SOIL PREPARATION AND TILLAGE. ANY IRREGULARITIES IN THE SURFACE RESULTING FROM TOPSOILING OR OTHER OPERATIONS SHALL BE CORRECTED IN ORDER TO PREVENT THE FORMATION OF DEPRESSIONS OR WATER POCKETS.

IV. TOPSOIL SHALL NOT BE PLACED WHILE THE TOPSOIL OR SUBSOIL IS IN A FROZEN OR MUDDY CONDITION, WHEN THE SUBSOIL IS EXCESSIVELY WET OR IN A CONDITION THAT MAY OTHERWISE BE DETRIMENTAL TO PROPER GRADING AND SEEDBED PREPARATION.

OWNERS/DEVELOPERS
PARCEL 30 - GWENRIDGE LLC 8835-P COLUMBIA 100 PARKWAY COLUMBIA, MD 21045 PARCEL 38 - MEHTA CHARALUTA TRUST 5551 OAKLAND MILLS ROAD COLUMBIA, MD 21045
BRANTLY DEVELOPMENT GROUP, INC. 8835-P COLUMBIA 100 PARKWAY COLUMBIA, MD 21045

SEQUENCE OF OPERATIONS

1. OBTAIN GRADING PERMIT. NOTIFY HOWARD COUNTY DEPARTMENT OF INSPECTIONS, LICENSES & PERMITS AT LEAST 48 HOURS PRIOR TO ANY LAND DISTURBANCE @ 410-313-2455.

2. INSPECT SEDIMENT CONTROLS INSTALLED AS PART OF PHASE 1 (SDP 04-17) TO ASSURE THEY ARE IN GOOD WORKING ORDER AND INSTALLED AT LOCATION SHOWN ON PLAN. (2 DAYS)

BEGIN CONSTRUCTION OF PHASE 2 WORK AS SHOWN ON THE PLANS. EACH AREA CAN BE WORKED INDEPENDENTLY EXCEPT AS NOTED IN THE SEQUENCE(S).

3. BUILDING E (150 DAYS)
 A) INSTALL SUPER SILT FENCE PER PHASE 2 PLAN.
 B) CONSTRUCT PROPOSED UTILITY CONNECTIONS. INSTALL STORM DRAIN FROM M-30 TO M-41. INSTALL EARTH DIKE TO TEMPORARY INLET AT M-41 LOCATION
 C) DEWATER AND REMOVE SEDIMENT BASIN #2 WITH THE APPROVAL OF THE SEDIMENT CONTROL INSPECTOR.
 D) BEGIN BUILDING CONSTRUCTION.
 E) FINE GRADE AND STABLIZE ALL AREAS.
 F) INSTALL PAVING SUBGRADE FOR PARKING LOT.
 G) PAVE ROADS AND PARKING AREAS AND INSTALL SIDEWALKS.
 H) SEED AND MULCH ALL DISTURBED AREAS.

4. TOWNHOUSES 11-14. (120 DAYS)
 A) INSTALL PROPOSED SUPER SILT FENCE PER PHASE 2 PLAN.
 B) CONSTRUCT PROPOSED UTILITY CONNECTIONS.
 C) INSTALL STORM DRAINS AND BEGIN HOUSE CONSTRUCTION.
 D) FINE GRADE AND STABLIZE ALL AREAS.
 E) INSTALL SUBBASE IN PAVED AREAS.
 F) PAVE ROADS AND PARKING AREAS AND INSTALL SIDEWALKS.
 G) SEED AND MULCH ALL DISTURBED AREAS.

5. TOWNHOUSES 15-16. (120 DAYS)
 A) CONSTRUCT PROPOSED UTILITY CONNECTIONS AND MAINS.
 B) INSTALL STORM DRAINS AND BEGIN HOUSE CONSTRUCTION.
 C) FINE GRADE AND STABLIZE ALL AREAS.
 D) INSTALL SUBBASE IN PAVED AREAS.
 E) PAVE ROADS AND PARKING AREAS AND INSTALL SIDEWALKS.
 F) SEED AND MULCH ALL DISTURBED AREAS.

6. BUILDINGS B-3 & B-4 (120 DAYS)
 A) CONSTRUCT PROPOSED UTILITY CONNECTIONS.
 B) BEGIN BUILDING CONSTRUCTION.
 C) FINE GRADE AND STABLIZE ALL AREAS.
 D) INSTALL SIDEWALKS.
 E) SEED AND MULCH ALL DISTURBED AREAS.

7. ONCE THE 4 AREAS HAVE BEEN STABILIZED AND THE UNDERGROUND PIPE STORAGE SYSTEM HAS BEEN INSTALLED, THEN CONVERT THE SEDIMENT BASIN #1 TO PERMANENT STORMWATER MANAGEMENT FACILITY PER THE SEQUENCE INCLUDED IN THE STORMWATER MANAGEMENT PLANS INCLUDED IN THIS SDP. (180 DAYS)

8. BUILDING D (120 DAYS)
 A) INSTALL SILT FENCE PER PHASE 2 PLAN.
 B)CONSTRUCT PROPOSED UTILITY CONNECTIONS. CONSTRUCT TEMPORARY STORM DRAIN FROM M-16 TO S-1.
 C) BEGIN BUILDING CONSTRUCTION AND CONSTRUCT Cpv FACILITY.
 D) FINE GRADE AND STABLIZE ALL AREAS.
 E) INSTALL PAVING SUBGRADE AND SIDEWALKS
 F) PAVE ROADS AND PARKING AREAS AND INSTALL SIDEWALKS.
 G) SEED AND MULCH ALL DISTURBED AREAS.

9. FINE GRADE REMAINING AREAS AND PROVIDE PERMANENT STABILIZATION. (8 DAYS)

10. REMOVE SEDIMENT CONTROL MEASURES WITH APPROVAL FROM THE SEDIMENT CONTROL INSPECTOR. (SEE NOTE)

11. STABILIZE AREAS DISTURBED AS A RESULT OF SEDIMENT CONTROL MEASURE REMOVAL.

NOTE: SEDIMENT CONTROL BASINS SHALL BE CONSTRUCTED IN ACCORDANCE WITH PLANS IN SDP 04-17 AND IN GOOD OPERATING ORDER PRIOR TO STARTING WORK ON THIS PHASE OF CONSTRUCTION. THE SEDIMENT BASIN #1 SHALL NOT BE CONVERTED FOR STORMWATER MANAGEMENT UNTIL THE COMPLETION OF PHASE II. BASIN #2 SHALL NOT BE REMOVED UNTIL THE CONTRIBUTING AREA IS PERMANENTLY STABILIZED.

APPROVED: DEPARTMENT OF PLANNING AND ZONING

[signature] J.P. 3/22/07
CHIEF, DEVELOPMENT ENGINEERING DIVISION DATE

[signature] 6/28/07
CHIEF, DIVISION OF LAND DEVELOPMENT DATE

[signature] 6/29/07
DIRECTOR DATE

SEDIMENT CONTROL NOTES

1. A MINIMUM OF 48 HOURS NOTICE MUST BE GIVEN TO THE HOWARD COUNTY DEPARTMENT OF INSPECTIONS, LICENSES AND PERMITS, SEDIMENT CONTROL DIVISION PRIOR TO THE START OF ANY CONSTRUCTION 313-1855 .

2. ALL VEGETATIVE AND STRUCTURAL PRACTICES ARE TO BE INSTALLED ACCORDING TO THE PROVISIONS OF THIS PLAN AND ARE TO BE IN CONFORMANCE WITH THE 1994 MARYLAND STANDARDS AND SPECIFICATIONS FOR SOIL EROSION AND SEDIMENT CONTROL AND REVISIONS THERETO.

3. FOLLOWING INITIAL SOIL DISTURBANCE OR REDISTURBANCE, PERMANENT OR TEMPORARY STABILIZATION SHALL BE COMPLETED WITHIN: A) 7 CALENDAR DAYS FOR ALL PERIMETER SEDIMENT CONTROL STRUCTURES, DIKES, PERIMETER SLOPES AND ALL SLOPES GREATER THAN 3:1, B) 14 DAYS AS TO ALL OTHER DISTURBED OR GRADED AREAS ON THE PROJECT SITE.

4. ALL SEDIMENT TRAPS/BASINS SHOWN MUST BE FENCED AND WARNING SIGNS POSTED AROUND THEIR PERIMETER IN ACCORDANCE WITH VOL. 1, CHAPTER 7, OF THE HOWARD COUNTY DESIGN MANUAL, STORM DRAINAGE.

5. ALL DISTURBED AREAS MUST BE STABILIZED WITHIN THE TIME PERIOD SPECIFIED ABOVE IN ACCORDANCE WITH THE 1994 MARYLAND STANDARDS AND SPECIFICATIONS FOR SOIL EROSION AND SEDIMENT CONTROL FOR PERMANENT SEEDING, SOD, TEMPORARY SEEDING, AND MULCHING SEC. G .
TEMPORARY STABILIZATION WITH MULCH ALONE CAN ONLY BE DONE WHEN RECOMMENDED SEEDING DATES DO NOT ALLOW FOR PROPER GERMINATION AND ESTABLISHMENT OF GRASSES.

6. ALL SEDIMENT CONTROL STRUCTURES ARE TO REMAIN IN PLACE AND ARE TO BE MAINTAINED IN OPERATIVE CONDITION UNTIL PERMISSION FOR THEIR REMOVAL HAS BEEN OBTAINED FROM THE HOWARD COUNTY SEDIMENT CONTROL INSPECTOR.

7. SITE ANALYSIS:

TOTAL AREA OF SITE	1,152,550 SF / 26.459 AC.
AREA DISTURBED	1,118,532 SF / 25.678 AC.
AREA TO BE:	
ROOFED OR PAVED	349,135 SF / 8.038 AC.
VEGETATIVELY STABILIZED	803,415 SF / 18.421 AC.
TOTAL CUT	148,000 CU. YDS
TOTAL FILL	148,000 CU. YDS
OFFSITE WASTE/BORROW AREA LOCATION	

8. ANY SEDIMENT CONTROL PRACTICE WHICH IS DISTURBED BY GRADING ACTIVITY FOR PLACEMENT OF UTILITIES MUST BE REPAIRED ON THE SAME DAY OF DISTURBANCE.

9. ADDITIONAL SEDIMENT CONTROL MUST BE PROVIDED, IF DEEMED NECESSARY BY THE HOWARD COUNTY SEDIMENT CONTROL INSPECTOR.

10. ON ALL SITES WITH DISTURBED AREAS IN EXCESS OF 2 ACRES, APPROVAL OF THE INSPECTION AGENCY SHALL BE REQUESTED UPON COMPLETION OF INSTALLATION OF PERIMETER EROSION AND SEDIMENT CONTROLS, BUT BEFORE PROCEEDING WITH ANY OTHER EARTH DISTURBANCE OR GRADING. OTHER BUILDING OR GRADING INSPECTION APPROVALS MAY NOT BE AUTHORIZED UNTIL THIS INITIAL APPROVAL BY THE INSPECTION AGENCY IS MADE.

11. TRENCHES FOR THE CONSTRUCTION OF UTILITIES IS LIMITED TO THREE PIPE LENGTHS OR THAT WHICH SHALL BE BACK-FILLED AND STABILIZED WITHIN ONE WORKING DAY, WHICHEVER IS SHORTER.

Reviewed for Howard SCD and meets Technical Requirements
[signature] 4/4/07
USDA - Natural Resources Conservation Service Date

This development plan is approved for soil erosion and sediment control by the Howard Soil Conservation District.
[signature] 4/4/07
USDA - Natural Resources Conservation Service Date

ENGINEER'S CERTIFICATE

"I CERTIFY THAT THIS PLAN FOR SEDIMENT AND EROSION CONTROL REPRESENTS A PRACTICAL AND WORKABLE PLAN BASED ON MY PERSONAL KNOWLEDGE OF THE SITE CONDITIONS AND THAT IT WAS PREPARED IN ACCORDANCE WITH THE REQUIREMENTS OF THE HOWARD SOIL CONSERVATION DISTRICT."

[signature] 1/24/07
SIGNATURE OF ENGINEER (Print name below signature) DATE

STATE OF MARYLAND · PATRICK C. RICHARDSON JR. · PROFESSIONAL ENGINEER

DEVELOPER'S CERTIFICATE

"I/WE CERTIFY THAT ALL DEVELOPMENT AND CONSTRUCTION WILL BE DONE ACCORDING TO THIS PLAN FOR EROSION AND SEDIMENT CONTROL AND THAT ALL RESPONSIBLE PERSONNEL INVOLVED IN THE CONSTRUCTION PROJECT WILL HAVE A CERTIFICATE OF ATTENDANCE AT A DEPARTMENT OF THE ENVIRONMENT APPROVED TRAINING PROGRAM FOR THE CONTROL OF SEDIMENT AND EROSION BEFORE BEGINNING THE PROJECT. I ALSO AUTHORIZE PERIODIC ON-SITE INSPECTION BY THE HOWARD SOIL CONSERVATION DISTRICT."

[signature] 1/24/07
SIGNATURE OF DEVELOPER (Print name below signature) DATE
JOHN F. LIPARINI

DRAWN: CND
DATE: September 12, 2005
SCALE: NTS

DATE	REVISION	BY

ELKRIDGE-CROSSING-PHASE TWO
PARCELS A-E
TAX MAP 38, GRID 2, PARCELS 30 & 38
FIRST ELECTION DISTRICT, HOWARD COUNTY, MARYLAND

SED. & EROSION CONTROL NOTES

JURI MAISTE - SITE DESIGN CONSULTANT
2923 Chenoak Avenue, Baltimore, Maryland 21234
Phone: 410-661-8752 Fax: 410-661-8752
RICHARDSON ENGINEERING, LLC
30 E. Padonia Road, Suite 500, Timonium, Maryland 21093
Phone: 410-560-1502 Fax: 443-901-1208

SDP-06-078

LEGEND

— — —100— — —	EXISTING CONTOUR
— — — —	EXISTING PAVED AREAS
┌ — ┘	EXISTING BUILDING
———	PROPOSED PAVING
——100——	PROPOSED CONTOUR
—SF—SF—SF—	SILT FENCE
—SSF—SSF—SSF—	SUPER SILT FENCE
—●—●—●—●—	LIMIT OF DISTURBANCE

OWNERS/DEVELOPERS
PARCEL 30 – GWENRIDGE LLC 8835–P COLUMBIA 100 PARKWAY COLUMBIA, MD 21045 PARCEL 38 – MEHTA CHARALUTA TRUST 5551 OAKLAND MILLS ROAD COLUMBIA, MD 21045
BRANTLY DEVELOPMENT GROUP, INC. 8835–P COLUMBIA 100 PARKWAY COLUMBIA, MD 21045

[Seal: State of Maryland, Registered Professional Engineer — signed] 1/24/07

Reviewed for Howard SCD and meets Technical Requirements

Jim Myers — 4/4/07
USDA – Natural Resources Conservation Service — Date

This development plan is approved for soil erosion and sediment control by the Howard Soil Conservation District.

John K. Robertson — 4/4/07
USDA – Natural Resources Conservation Service — Date

APPROVED: DEPARTMENT OF PLANNING AND ZONING

CHIEF, DEVELOPMENT ENGINEERING DIVISION J.P.	DATE 3/22/07
CHIEF, DIVISION OF LAND DEVELOPMENT	DATE 6/28/07
DIRECTOR	DATE 6/29/07

DRAWN: CND
DATE: September 12, 2006
SCALE: 1"=50'

DATE	REVISION	BY

ELKRIDGE–CROSSING–PHASE TWO

PARCELS A–E
TAX MAP 38, GRID 2, PARCELS 30 & 38
FIRST ELECTION DISTRICT, HOWARD COUNTY, MARYLAND

SED. & EROSION CONTROL PLAN

JURI MAISTE – SITE DESIGN CONSULTANT
2923 Chenoak Avenue, Baltimore, Maryland 21234
Phone: 410-661-8752 Fax: 410-661-8752
RICHARDSON ENGINEERING, LLC
30 E. Padonia Road, Suite 500, Timonium, Maryland 21093
Phone: 410-560-1502 Fax: 443-901-1208

SDP-06-078

G:\JOBS\JOBS2004\04037\Drawings\SHEET6.DWG (LAYOUT1)

ELKRIDGE – CROSSING – PHASE TWO

PARCELS A-E
TAX MAP 38, GRID 2, PARCELS 30 & 38
FIRST ELECTION DISTRICT, HOWARD COUNTY, MARYLAND

SED. & EROSION CONTROL PLAN

DRAWN: CND
DATE: September 12, 2006
SCALE: 1"=50'

DATE	REVISION	BY

JURI MAISTE – SITE DESIGN CONSULTANT
2923 Chenoak Avenue, Baltimore, Maryland 21234
Phone: 410-661-8752 Fax: 410-661-8752

RICHARDSON ENGINEERING, LLC
30 E. Padonia Road, Suite 500, Timonium, Maryland 21093
Phone: 410-560-1502 Fax: 410-561-1208

SHEET 32 OF 32

SDP-06-078

LEGEND

- EXISTING CONTOUR
- EXISTING PAVED AREAS
- EXISTING BUILDING
- PROPOSED PAVING
- PROPOSED CONTOUR
- SILT FENCE
- SUPER SILT FENCE
- LIMIT OF DISTURBANCE

MATCHLINE SHEET 32
MATCHLINE SHEET 31

Reviewed for Howard SCD and meets Technical Requirements

USDA – Natural Resources Conservation Service — Date 4/4/07

This development plan is approved for soil erosion and sediment control by the Howard Soil Conservation District.

USDA – Natural Resources Conservation Service — Date 4/4/07

APPROVED: DEPARTMENT OF PLANNING AND ZONING

CHIEF, DEVELOPMENT ENGINEERING DIVISION — DATE 3/22/07

CHIEF, DIVISION OF LAND DEVELOPMENT — DATE 6/25/07

DIRECTOR — DATE 6/29/07

OWNERS/DEVELOPERS
PARCEL 30 – GWENRIDGE LLC 8835-P COLUMBIA 100 PARKWAY COLUMBIA, MD 21045 PARCEL 38 – MEHTA CHARALUTA TRUST 5551 OAKLAND MILLS ROAD COLUMBIA, MD 21045
BRANTLY DEVELOPMENT GROUP, INC. 8835-P COLUMBIA 100 PARKWAY COLUMBIA, MD 21045

EXISTING FROM SDP 04-17
SEDIMENT BASIN NO. 1
PROPOSED D.A.: 21.88 AC.
EXISTING D.A.: 21.88 AC
STORAGE REQ'D.: 78,768 C.F.
STORAGE PROV'D.: 102,036 C.F.
WET STORAGE REQ'D. : 39,384 C.F.
WET STORAGE PROV'D. : 39,384 C.F.
WET STORAGE: 189.30
DRY STORAGE REQ'D. : 39,384 C.F.
DRY STORAGE PROV'D. : 62,652 C.F.
DRY STORAGE: 192.50 (WEIR CREST)
CLEAN OUT REQ'D. : 19,692 C.F.
CLEAN OUT PROV'D. : 19,692 C.F.
CLEAN OUT ELEV.: 187.10
SIDE SLOPE: 3:1
BARRELL PIPE SIZE: 36"
BARRELL INV. 186
STORAGE DEPTH= 8.5'
TOP ELEVATION: 196.08 (EMBANKMENT ELEV.)
EX. GROUND AT SPILLWAY: 194
BOTTOM ELEV.: 184.0

EXISTING FROM SDP 04-17
SEDIMENT BASIN NO. 2
PROPOSED D.A.: 14.87 AC.
EXISTING D.A.: 14.87 AC
STORAGE REQ'D.: 53 ,534 C.F.
STORAGE PROV'D.: 54,052 C.F.
WET STORAGE REQ'D. : 26,767 C.F.
WET STORAGE PROV'D. : 26,800 C.F.
WET STORAGE: 181.15 .
DRY STORAGE REQ'D. : 26,767 C.F.
DRY STORAGE PROV'D. : 27,252 C.F.
DRY STORAGE: 183.0 (WEIR CREST)
CLEAN OUT REQ'D. : 13,384 C.F.
CLEAN OUT PROV'D. : 13,400 C.F.
CLEAN OUT ELEV.: 180.15
SIDE SLOPE: 2:1
BARRELL PIPE SIZE: 30"
BARRELL INV. 178.5
STORAGE DEPTH= 4.0'
TOP ELEVATION: 186.0 (EMBANKMENT ELEV.)
EX. GROUND AT SPILLWAY: 184
BOTTOM ELEV.: 179

1/24/07

C:\JOBS\JOBS2004\04037\Drawings\SHEET6.DWG (LAYOUT1)

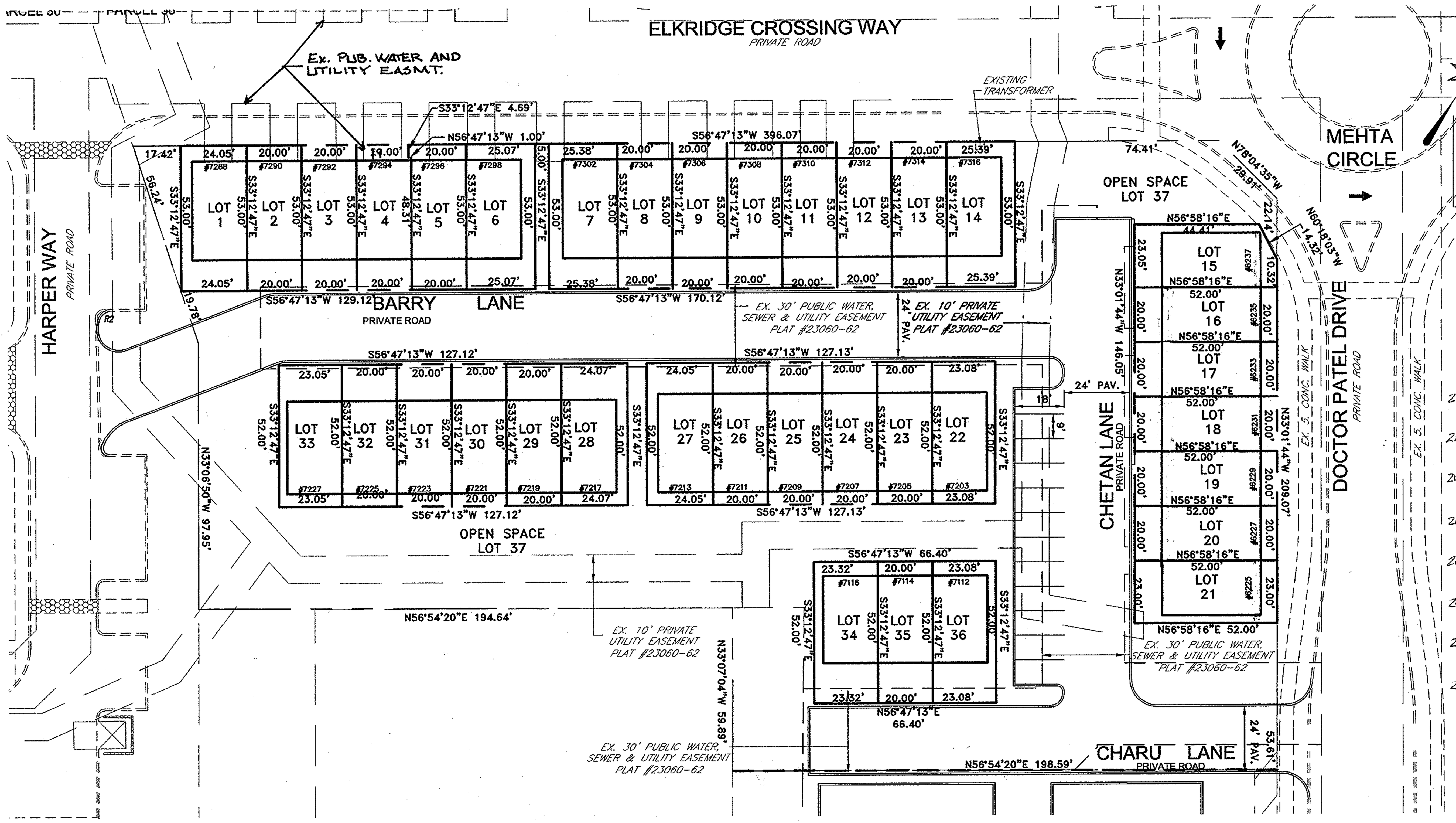

LOT LAYOUT

SCALE: 1" = 30'

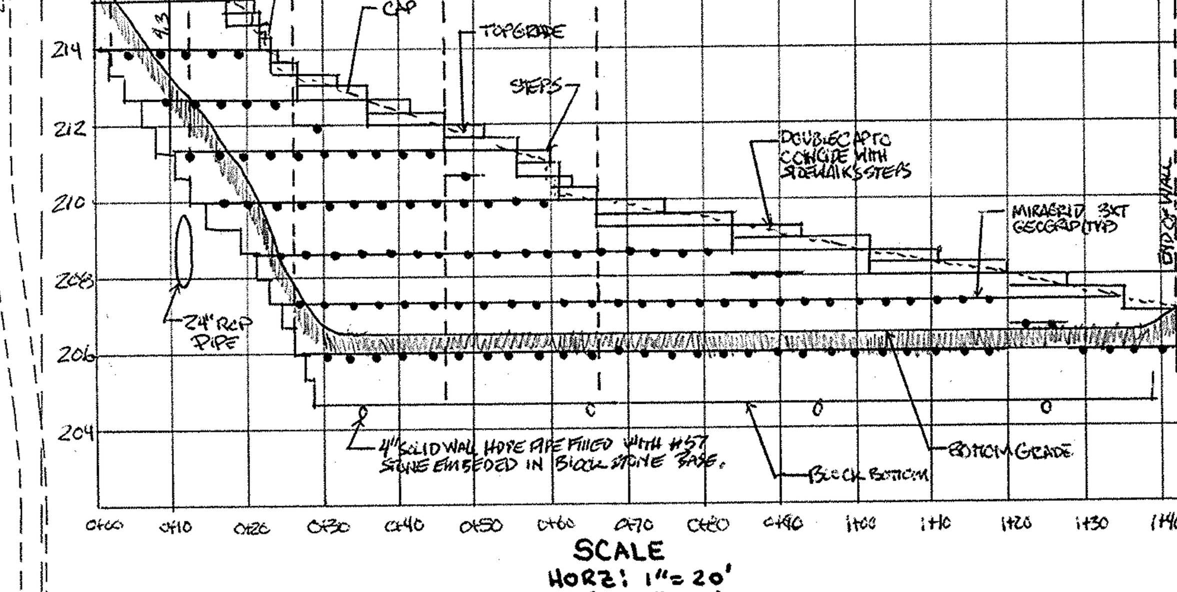

WALL ELEVATION

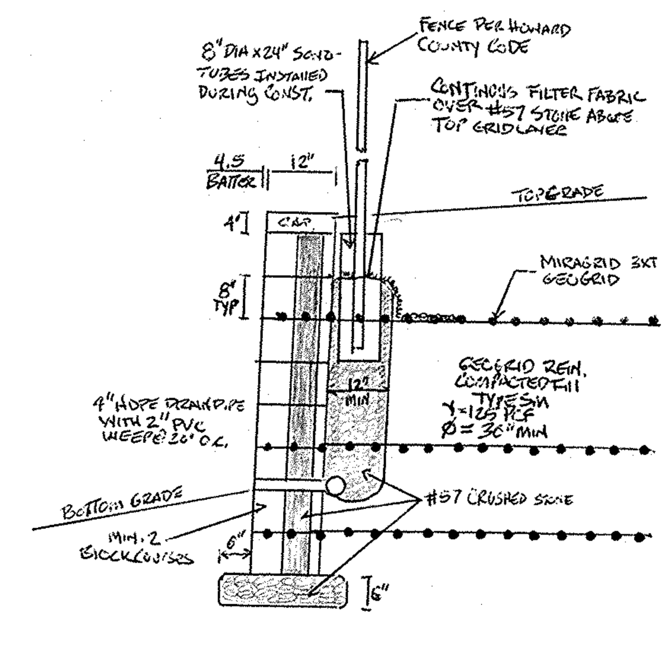

TYPICAL WALL SECTION
N.T.S.

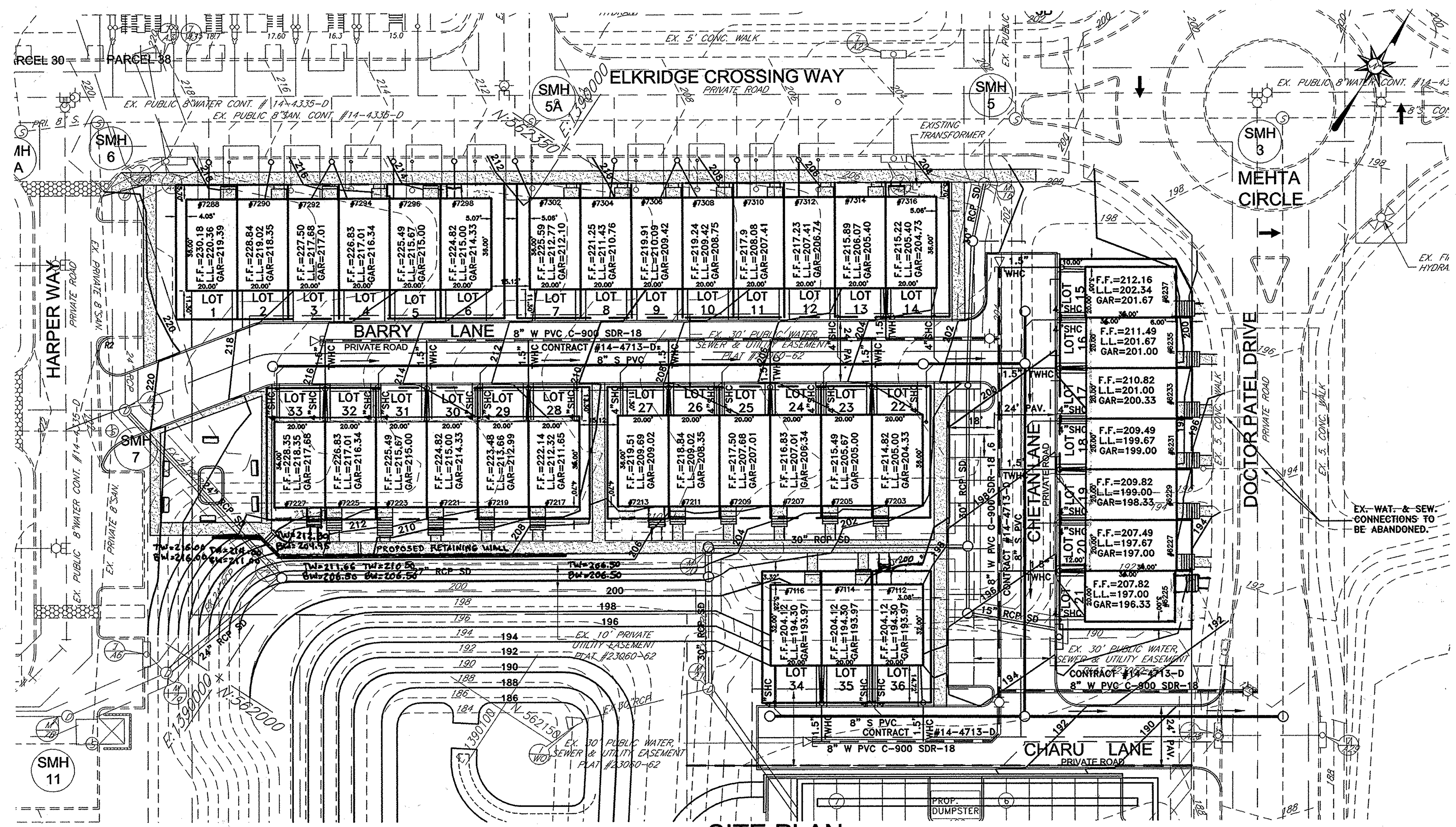

SITE PLAN

SCALE: 1" = 30'

DEVELOPMENT HISTORY

(CONTINUED FROM SHEET 1 OF 35)

WP 11-042 REQUEST TO WAIVE SECTIONS 16.120(c)(4) TO NOT BE REQUIRED TO PROVIDE ANY MINIMUM SFD LOT FRONTAGE OF 15' AND AN APPROVED PUBLIC ROADS AND BE PERMITTED TO HAVE THE SFD LOTS FRONT ON A PRIVATE ROAD EXCEEDING A LENGTH OF 200'. AND SECTION 16.156(O)(II) TO BE GRANTED A TWO YEAR EXTENSION TO APPLY FOR A BUILDING PERMITS FOR ALL OF THE SHOWN ON APPROVED SDP-07-055. -APPROVED 10-18-2010.

WP-14-062

THE DIRECTOR OF THE DEPARTMENT OF PLANNING AND ZONING CONSIDERED YOUR WAIVER REQUEST FOR A RECONSIDERATION OF THE EXISTING APPROVED DECISION ISSUED FOR WP-14-062 IN A LETTER DATED FEBRUARY 25, 2014 FOR THE ELKRIDGE CROSSING PROJECT.

AS OF THE DATE OF THIS LETTER (JULY 10, 2014), THE PLANNING DIRECTOR APPROVED YOUR REQUEST FOR RECONSIDERATION TO WAIVE SECTION 16.144(q) WHICH DICTATES THAT WITHIN 180 DAYS OF FINAL PLAN APPROVAL, THE DEVELOPER SHALL SUBMIT THE FINAL SUBDIVISION PLAT MYLARS TO THE DEPARTMENT OF PLANNING AND ZONING FOR SIGNATURES AND RECORDATION AND A WAIVER TO SECTION 16.156 (o)(1)(II) WHICH STATES THAT FOR SINGLE FAMILY ATTACHED, APARTMENT AND NONRESIDENTIAL DEVELOPMENTS INVOLVING MULTIPLE BUILDINGS OR STAGED CONSTRUCTION, THE DEVELOPER SHALL APPLY FOR BUILDING PERMITS FOR ALL CONSTRUCTION AUTHORIZED BY THE APPROVED SITE DEVELOPMENT PLAN WITHIN 2 YEARS OF SIGNATURE APPROVAL. AS A FOLLOW-UP TO OUR MEETING ON JULY 7,2014, THE DEVELOPER IS REQUESTING A WAIVER RECONSIDERATION TO EXTEND ALL PREVIOUS DEADLINES DATES ESTABLISHED UNDER WP-14-062 BY THE DEPARTMENT OF PLANNING AND ZONING IN A LETTER DATED FEBRUARY 25, 2014 TO ALLOW SUFFICIENT TIME TO COMPLETE THE RED-LINE REVISION FOR SDP-06-078, RECORD F-12-001, SUBMIT A NEW AMENDED SKETCH PLAN FOR THE PROJECT, SUBMIT A NEW COMMUNITY POOLL/CLUBHOUSE SDP FOR THE PROJECT AND TO OBTAIN ALL BUILDING PERMITS WITHIN A REASONABLE TIME FRAME.

RECONSIDERATION APPROVAL IS SUBJECT TO THE FOLLOWING CONDITIONS:

1. PREVIOUS CONDITION -THE APPLICANT/DEVELOPER OR BUILDER SHALL START THE PROCESS WITH DPW, REAL ESTATE SERVICES DIVISION FOR RE-ASSIGNMENT OF THE ASSOCIATED DEVELOPER'S AGREEMENTS AND BONDS FOR SDP-06-078 AND SDP-07-055 AS APPLICABLE FROM GWENRIDGE, LLC (BRANTLY DEVELOPMENT GROUP) TO THE NEW DEVELOPER'S NAME WITHIN 60 DAYS OF MARCH 1, 2014 (ON OR BEFORE APRIL 30, 2014). THIS PREVIOUS CONDITION WAS DEEMED SATISFIED BY THE DPW, REAL ESTATE SERVICES DIVISION IN AN EMAIL FROM MS. TINA HACKETT DATED APRIL 28, 2014.
2. PREVIOUS CONDITION - THE APPLICANT/DEVELOPER OR BUILDER SHALL SUBMIT A RED-LINE REVISION TO SDP-06-078 AND SDP-07-055 AS APPLICABLE (IT APPEARS FROM THE APPROVED SDP'S THE PROPOSED SFA UNITS ARE SHOWN PARTIALLY UNDER SDP-05-078 FOR PHASE 2 AND PARTIALLY WITHIN SDP-07-055 FOR PHASE 3) TO CHANGE THE PLANS FOR THE NEW HOUSE MODEL TYPES FOR KB HOMES (NOW RICHMOND AMERICAN HOMES) FOR THE TWENTY-TWO (22) 2 OVER 2 HOUSE MODELS AND THE 36 SFA TOWNHOUSE LOTS (F-12-001) WITHIN 50 DAYS OF MARCH 1, 2014 (ON OR BEFORE APRIL 30, 2014). THIS PREVIOUS CONDITION WAS SATISFIED WITH SUBMISSION OF THE APPROPRIATE RED-LINE REVISIONS FOR SDP-06-078 AND SDP-07-055 BY THE APPLICANT TO DPZ ON JANUARY 28, 2014.
3. REVISED CONDITION - THE APPLICANT/DEVELOPER SHALL SUBMIT THE FINAL PLAT ORIGINALS IN ASSOCIATION WITH F-12-001 FOR SIGNATURE AND RECORDING WITHIN 60 DAYS OF MARCH 1, 2014 ON OR BEFORE APRIL 30, 2014. THIS PREVIOUS CONDITION WAS DETERMINED SATISFIED BECAUSE DPZ PREVIOUSLY RECOMMENDED THAT THE FINAL PLAT ORIGINALS NOT BE SUBMITTED TO DPZ FOR RECORDING UNTIL THE REDLINE REVISION FOR SDP-06-078 WAS SUBMITTED AND APPROVED. THE FINAL PLAT MYLARS SHOULD REFLECT ANY AND ALL ASSOCIATED CHANGES APPROVED WITH THE REDLINED PLANS, INCLUDING ALL EXISTING AND PROPOSED EASEMENTS.

THE FINAL PLAT ORIGINAL FOR F-12-001 SHALL BE SUBMITTED TO DPZ FOR SIGNATURE APPROVAL AND RECORDING WITHIN 30 DAYS AFTER APPROVAL OF THE RED-LINE REVISION FOR SDP-06-07B.

4. REVISED CONDITION - THE APPLICANT/DEVELOPER SHALL SUBMIT A NEW AMENDED SKETCH PLAN FOR THE OVERALL ELKRIDGE CROSSING PROJECT PREVIOUSLY APPROVED UNDER S-04-011 SHOWING THE EXISTING DEVELOPMENT AND THE PROPOSED NEW REDESIGNED PROJECT PER THE "CHARLES ALEXANDER DESIGN" CONCEPT PLAN FOR RESIDENTIAL AND NON-RESIDENTIAL CHANGES WITH A PROPOSED APFO PHASING SCHEDULE FOR THE REMAINING PROPOSED DEVELOPMENT ON OR BEFORE SEPTEMBER 8, 2014. THIS AMENDED SKETCH PLAN MUST ALSO INCLUDE THE NEW COMMUNITY CLUBHOUSE AND POOL FOR THE ELKRIDGE CROSSING PROJECT.
5. REVISED CONDITION - THE APPLICANT/DEVELOPER OR BUILDER (RICHMOND AMERICAN HOMES) SHALL APPLY FOR BUILDING PERMITS FOR ALL CONSTRUCTION SHOWN ON THE REDLINED AND APPROVED SDP-06-07B, PHASE 2 FOR THE 36 SFA UNITS ON OR BEFORE OCTOBER 1, 2014).
6. REVISED CONDITION - THE APPLICANT/DEVELOPER OR BUILDER SHALL APPLY FOR BUILDING PERMITS FOR ALL CONSTRUCTION SHOWN ON THE REDLINED AND APPROVED SDP-07 -055, PHASES 3 AND 4 ON OR BEFORE DECEMBER 1,2014.
7. PREVIOUS CONDITION UNCHANGED - THE APPLICANT/DEVELOPER SHALL ADHERE TO ALL PREVIOUSLY ISSUED DEVELOPMENT ENGINEERING DIVISION (OED) COMMENTS DATED DECEMBER 18, 2013.
8. REVISED CONDITION - THE APPLICANT/DEVELOPER SHALL SUBMIT A SITE DEVELOPMENT PLAN FOR THE COMMUNITY CLUBHOUSE AND SWIMMING POOL ON OR BEFORE DECEMBER 1,2014. THE MAXIMUM NUMBER OF BUILDING PERMITS TO BE ISSUED FOR THE REMAINING RESIDENTIAL UNITS (178) FOR THIS PROJECT WILL BE LIMITED TO NO MORE THAN 80 UNITS UNTIL THE BUILDING PERMITS ARE APPROVED FOR THE COMMUNITY CLUBHOUSE AND POOL.NO ADDITIONAL BUILDING PERMITS WILL BE ISSUED FOR THIS PROJECT UNTIL THE BUILDING PERMITS ARE ISSUED FOR THE COMMUNITY CLUBHOUSE AND POOL.
9. NEW CONDITION - ESTABLISHMENT OF SOP PLAN MILESTONE PROCESSING DATES AND DEADLINE DATES FOR BUILDING PERMITS FOR THE REMAINING RESIDENTIAL UNITS AND NON-RESIDENTIAL STRUCTURES WILL BE ISSUED IN ACCORDANCE WITH THE REVISED APFO PHASING SCHEDULE APPROVED UNDER THE NEW AMENDED SKETCH PLAN FOR THE PROJECT BASED ON THE APPROVAL OF NEW SITE DEVELOPMENT PLANS. THE EXISTING DEVELOPER AGREEMENTS AND POSTED SURETIES/BONDS FOR PHASES 3 AND 4 (SDP-07 -055) SHALL BE AMENDED ACCORDINGLY BASED ON APPROVAL OF THE NEW SITE DEVELOPMENT PLANS FOR PHASES 3 AND 4 DEVELOPMENT FOR THIS PROJECT. CONSTRUCTION OF THE REMAINING NON-RESIDENTIAL SPACE SHALL COMMENCE AFTER APPROVAL OF NO MORE THAN 140 RESIDENTIAL UNITS OF THE REMAINING 178 UNITS FOR THIS PROJECT TO COMPLY WITH THE ROUGHLY PROPORTIONAL PHASING OF RESIDENTIAL AND NON-RESIDENTIAL CONSTRUCTION FOR THE CAC ZONING DISTRICT.
10. NEW CONDITION - IF ANY OF THE ABOVE DEADLINE DATES INDICATED PER CONDITION NUMBERS 4, 5, 6, 8 AND 9 ARE MISSED BY THE APPLICANT/DEVELOPER OR BUILDER, THIS WAIVER PETITION APPROVAL FOR THE EXTENDED DEADLINE DATES SHALL BECOME NULL AND VOID FOR THE ENTIRE PROJECT.

APPROVED: DEPARTMENT OF PLANNING AND ZONING

[signature] J.P.	12. 18. 14
CHIEF, DEVELOPMENT ENGINEERING DIVISION	DATE
[signature]	1-05-15
CHIEF, DIVISION OF LAND DEVELOPMENT	DATE
[signature]	1/5/15
DIRECTOR	DATE

OWNERS/DEVELOPERS

PARCEL 30 -
GWENRIDGE LLC
5551 OAKLAND MILLS ROAD
COLUMBIA, MD 21045
PARCEL 38 -
MEHTA CHARALUTA TRUST
5551 OAKLAND MILLS ROAD
COLUMBIA, MD 21045
GWENRIDGE LLC
5551 OAKLAND MILLS ROAD
COLUMBIA, MD 21045

STATE OF MARYLAND — PATRICK C. RICHARDSON — NO. 16597 — REGISTERED PROFESSIONAL ENGINEER
12/17/14

PROFESSIONAL CERTIFICATION:
I HEREBY CERTIFY THAT THESE DOCUMENTS WERE PREPARED OR APPROVED BY ME, AND THAT I AM A DULY LICENSED PROFESSIONAL ENGINEER UNDER THE LAWS OF THE STATE OF MARYLAND, LICENSE NUMBER 16597, EXPIRATION DATE: 08-15-2015

DRAWN: SE
DATE: 07-21-14
SCALE: 1" = 30'

#	DATE	REVISION	BY
2	3/24/15	LOTS 15-21 & 28-33 TO 36' TH / PORCH TO INSIDE WALL ON END UNITS	PCR
3	11/12/15	ADD RETAINING WALL BY LOTS 28-33	RENG

ELKRIDGE–CROSSING–PHASE TWO
PARCELS A–E
TAX MAP 38, GRID 2, PARCELS 30 & 38
FIRST ELECTION DISTRICT, HOWARD COUNTY, MARYLAND
SITE PLAN – 36 UNITS

Richardson Engineering, LLC
30 East Padonia Road, Suite 500
Timonium, Maryland 21093
Phone: 410-560-1502 Fax: 443-901-1208

SDP-06-078

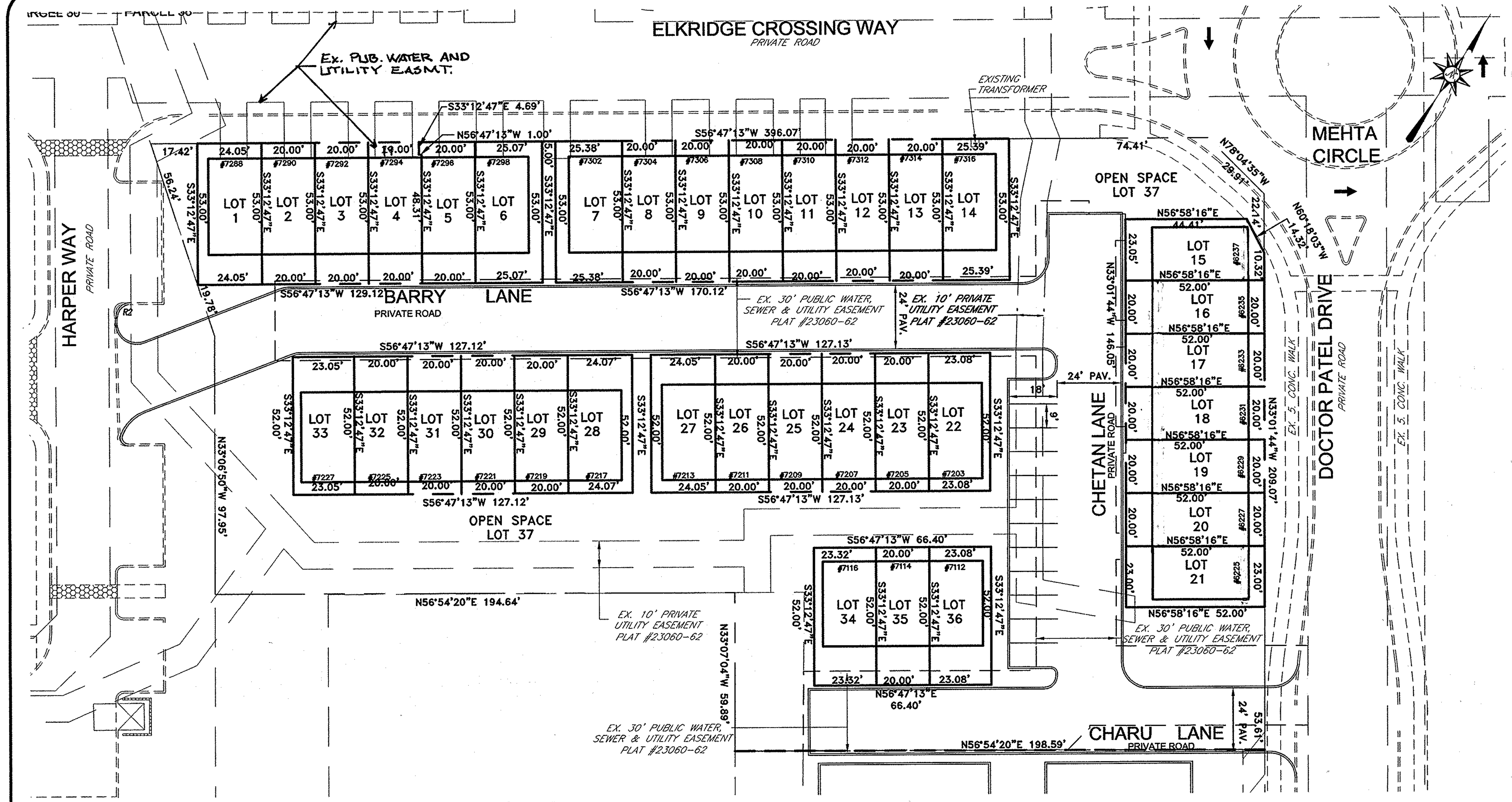

LOT LAYOUT

SCALE: 1" = 30'

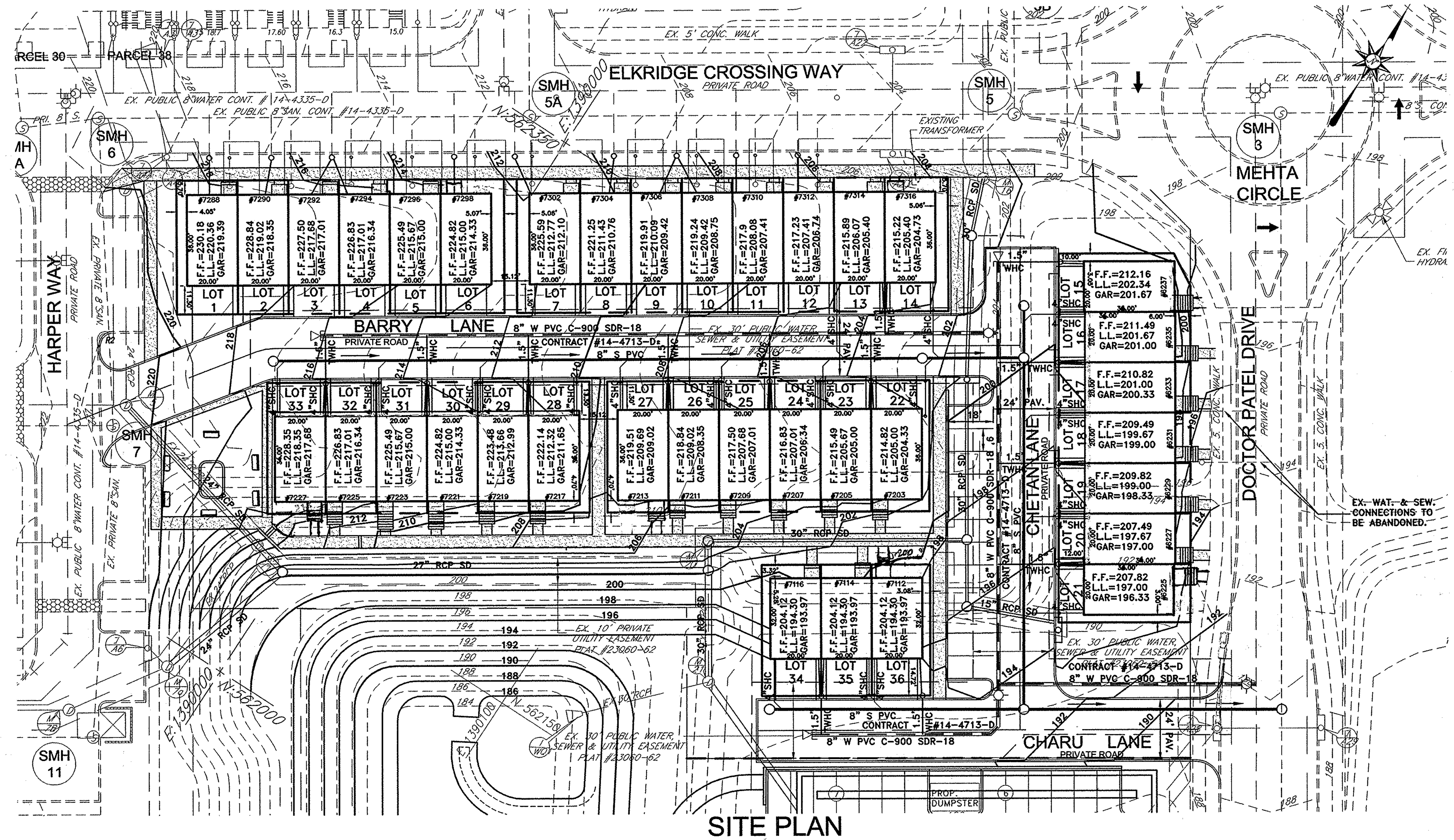

SITE PLAN

SCALE: 1" = 30'

DEVELOPMENT HISTORY

(CONTINUED FROM SHEET 1 OF 35)

WP 11-042 REQUEST TO WAIVE SECTIONS 16.120(c)(4) TO NOT BE REQUIRED TO PROVIDE ANY MINIMUM SFD LOT FRONTAGE OF 15' AND AN APPROVED PUBLIC ROADS AND BE PERMITTED TO HAVE THE SFD LOTS FRONT ON A PRIVATE ROAD EXCEEDING A LENGTH OF 200'. AND SECTION 16.156(O)(II) TO BE GRANTED A TWO YEAR EXTENSION TO APPLY FOR A BUILDING PERMITS FOR ALL OF THE SHOWN ON APPROVED SDP-07-055. -APPROVED 10-18-2010.

WP-14-062
THE DIRECTOR OF THE DEPARTMENT OF PLANNING AND ZONING CONSIDERED YOUR WAIVER REQUEST FOR A RECONSIDERATION OF THE EXISTING APPROVED DECISION ISSUED FOR WP-14-062 IN A LETTER DATED FEBRUARY 25, 2014 FOR THE ELKRIDGE CROSSING PROJECT.

AS OF THE DATE OF THIS LETTER (JULY 10, 2014), THE PLANNING DIRECTOR APPROVED YOUR REQUEST FOR RECONSIDERATION TO WAIVE SECTION 16.144(q) WHICH DICTATES THAT WITHIN 180 DAYS OF FINAL PLAN APPROVAL, THE DEVELOPER SHALL SUBMIT THE FINAL SUBDIVISION PLAT MYLARS TO THE DEPARTMENT OF PLANNING AND ZONING FOR SIGNATURES AND RECORDATION AND A WAIVER TO SECTION 16.156 (o)(1)(II) WHICH STATES THAT FOR SINGLE FAMILY ATTACHED, APARTMENT AND NONRESIDENTIAL DEVELOPMENTS INVOLVING MULTIPLE BUILDINGS OR STAGED CONSTRUCTION, THE DEVELOPER SHALL APPLY FOR BUILDING PERMITS FOR ALL CONSTRUCTION AUTHORIZED BY THE APPROVED SITE DEVELOPMENT PLAN WITHIN 2 YEARS OF SIGNATURE APPROVAL. AS A FOLLOW-UP TO OUR MEETING ON JULY 7,2014, THE DEVELOPER IS REQUESTING A WAIVER RECONSIDERATION TO EXTEND ALL PREVIOUS DEADLINES DATES ESTABLISHED UNDER WP-14-062 BY THE DEPARTMENT OF PLANNING AND ZONING IN A LETTER DATED FEBRUARY 25, 2014 TO ALLOW SUFFICIENT TIME TO COMPLETE THE RED-LINE REVISION FOR SDP-06-078, RECORD F-12-001, SUBMIT A NEW AMENDED SKETCH PLAN FOR THE PROJECT, SUBMIT A NEW COMMUNITY POOLL/CLUBHOUSE SDP FOR THE PROJECT AND TO OBTAIN ALL BUILDING PERMITS WITHIN A REASONABLE TIME FRAME.

RECONSIDERATION APPROVAL IS SUBJECT TO THE FOLLOWING CONDITIONS:

1. PREVIOUS CONDITION -THE APPLICANT/DEVELOPER OR BUILDER SHALL START THE PROCESS WITH DPW, REAL ESTATE SERVICES DIVISION FOR RE-ASSIGNMENT OF THE ASSOCIATED DEVELOPER'S AGREEMENTS AND BONDS FOR SDP-06-078 AND SDP-07-055 AS APPLICABLE FROM GWENRIDGE, LLC (BRANTLY DEVELOPMENT GROUP) TO THE NEW DEVELOPER'S NAME WITHIN 60 DAYS OF MARCH 1, 2014 (ON OR BEFORE APRIL 30, 2014). THIS PREVIOUS CONDITION WAS DEEMED SATISFIED BY THE DPW, REAL ESTATE SERVICES DIVISION IN AN EMAIL FROM MS. TINA HACKETT DATED APRIL 28, 2014.
2. PREVIOUS CONDITION - THE APPLICANT/DEVELOPER OR BUILDER SHALL SUBMIT A RED-LINE REVISION TO SDP-06-078 AND SDP-07-055 AS APPLICABLE (IT APPEARS FROM THE APPROVED SDP'S THE PROPOSED SFA UNITS ARE SHOWN PARTIALLY UNDER SDP-05-078 FOR PHASE 2 AND PARTIALLY WITHIN SDP-07-055 FOR PHASE 3) TO CHANGE THE PLANS FOR THE NEW HOUSE MODEL TYPES FOR KB HOMES (NOW RICHMOND AMERICAN HOMES) FOR THE TWENTY-TWO (22) 2 OVER 2 HOUSE MODELS AND THE 36 SFA TOWNHOUSE LOTS (F-12-001) WITHIN 50 DAYS OF MARCH 1, 2014 (ON OR BEFORE APRIL 30, 2014). THIS PREVIOUS CONDITION WAS SATISFIED WITH SUBMISSION OF THE APPROPRIATE RED-LINE REVISIONS FOR SDP-06-078 AND SDP-07-055 BY THE APPLICANT TO DPZ ON JANUARY 28, 2014.
3. REVISED CONDITION - THE APPLICANT/DEVELOPER SHALL SUBMIT THE FINAL PLAT ORIGINALS IN ASSOCIATION WITH F-12-001 FOR SIGNATURE AND RECORDING WITHIN 60 DAYS OF MARCH 1, 2014 ON OR BEFORE APRIL 30, 2014. THIS PREVIOUS CONDITION WAS DETERMINED SATISFIED BECAUSE DPZ PREVIOUSLY RECOMMENDED THAT THE FINAL PLAT ORIGINALS NOT BE SUBMITTED TO DPZ FOR RECORDING UNTIL THE REDLINE REVISION FOR SDP-06-078 WAS SUBMITTED AND APPROVED. THE FINAL PLAT MYLARS SHOULD REFLECT ANY AND ALL ASSOCIATED CHANGES APPROVED WITH THE REDLINED PLANS, INCLUDING ALL EXISTING AND PROPOSED EASEMENTS.

THE FINAL PLAT ORIGINAL FOR F-12-001 SHALL BE SUBMITTED TO DPZ FOR SIGNATURE APPROVAL AND RECORDING WITHIN 30 DAYS AFTER APPROVAL OF THE RED-LINE REVISION FOR SDP-06-07B.

4. REVISED CONDITION - THE APPLICANT/DEVELOPER SHALL SUBMIT A NEW AMENDED SKETCH PLAN FOR THE OVERALL ELKRIDGE CROSSING PROJECT PREVIOUSLY APPROVED UNDER S-04-011 SHOWING THE EXISTING DEVELOPMENT AND THE PROPOSED NEW REDESIGNED PROJECT PER THE "CHARLES ALEXANDER DESIGN" CONCEPT PLAN FOR RESIDENTIAL AND NON-RESIDENTIAL CHANGES WITH A PROPOSED APFO PHASING SCHEDULE FOR THE REMAINING PROPOSED DEVELOPMENT ON OR BEFORE SEPTEMBER 8, 2014. THIS AMENDED SKETCH PLAN MUST ALSO INCLUDE THE NEW COMMUNITY CLUBHOUSE AND POOL FOR THE ELKRIDGE CROSSING PROJECT.
5. REVISED CONDITION - THE APPLICANT/DEVELOPER OR BUILDER (RICHMOND AMERICAN HOMES) SHALL APPLY FOR BUILDING PERMITS FOR ALL CONSTRUCTION SHOWN ON THE REDLINED AND APPROVED SDP-06-07B, PHASE 2 FOR THE 36 SFA UNITS ON OR BEFORE OCTOBER 1, 2014).
6. REVISED CONDITION - THE APPLICANT/DEVELOPER OR BUILDER SHALL APPLY FOR BUILDING PERMITS FOR ALL CONSTRUCTION SHOWN ON THE REDLINED AND APPROVED SDP-07 -055, PHASES 3 AND 4 ON OR BEFORE DECEMBER 1,2014.
7. PREVIOUS CONDITION UNCHANGED - THE APPLICANT/DEVELOPER SHALL ADHERE TO ALL PREVIOUSLY ISSUED DEVELOPMENT ENGINEERING DIVISION (OED) COMMENTS DATED DECEMBER 18, 2013.
8. REVISED CONDITION - THE APPLICANT/DEVELOPER SHALL SUBMIT A SITE DEVELOPMENT PLAN FOR THE COMMUNITY CLUBHOUSE AND SWIMMING POOL ON OR BEFORE DECEMBER 1,2014. THE MAXIMUM NUMBER OF BUILDING PERMITS TO BE ISSUED FOR THE REMAINING RESIDENTIAL UNITS (178) FOR THIS PROJECT WILL BE LIMITED TO NO MORE THAN 80 UNITS UNTIL THE BUILDING PERMITS ARE APPROVED FOR THE COMMUNITY CLUBHOUSE AND POOL.NO ADDITIONAL BUILDING PERMITS WILL BE ISSUED FOR THIS PROJECT UNTIL THE BUILDING PERMITS ARE ISSUED FOR THE COMMUNITY CLUBHOUSE AND POOL.
9. NEW CONDITION - ESTABLISHMENT OF SOP PLAN MILESTONE PROCESSING DATES AND DEADLINE DATES FOR BUILDING PERMITS FOR THE REMAINING RESIDENTIAL UNITS AND NON-RESIDENTIAL STRUCTURES WILL BE ISSUED IN ACCORDANCE WITH THE REVISED APFO PHASING SCHEDULE APPROVED UNDER THE NEW AMENDED SKETCH PLAN FOR THE PROJECT BASED ON THE APPROVAL OF NEW SITE DEVELOPMENT PLANS. THE EXISTING DEVELOPER AGREEMENTS AND POSTED SURETIES/BONDS FOR PHASES 3 AND 4 (SDP-07 -055) SHALL BE AMENDED ACCORDINGLY BASED ON APPROVAL OF THE NEW SITE DEVELOPMENT PLANS FOR PHASES 3 AND 4 DEVELOPMENT FOR THIS PROJECT. CONSTRUCTION OF THE REMAINING NON-RESIDENTIAL SPACE SHALL COMMENCE AFTER APPROVAL OF NO MORE THAN 140 RESIDENTIAL UNITS OF THE REMAINING 178 UNITS FOR THIS PROJECT TO COMPLY WITH THE ROUGHLY PROPORTIONAL PHASING OF RESIDENTIAL AND NON-RESIDENTIAL CONSTRUCTION FOR THE CAC ZONING DISTRICT.
10. NEW CONDITION - IF ANY OF THE ABOVE DEADLINE DATES INDICATED PER CONDITION NUMBERS 4, 5, 6, 8 AND 9 ARE MISSED BY THE APPLICANT/DEVELOPER OR BUILDER, THIS WAIVER PETITION APPROVAL FOR THE EXTENDED DEADLINE DATES SHALL BECOME NULL AND VOID FOR THE ENTIRE PROJECT.

APPROVED: DEPARTMENT OF PLANNING AND ZONING

CHIEF, DEVELOPMENT ENGINEERING DIVISION J.P.	DATE 12.18.14
CHIEF, DIVISION OF LAND DEVELOPMENT	DATE 1-05-15
DIRECTOR	DATE 1/5/15

STATE OF MARYLAND — PATRICK C. RICHARDSON — NO. 16597 — REGISTERED PROFESSIONAL ENGINEER
12/17/14

OWNERS/DEVELOPERS
PARCEL 30 - GWENRIDGE LLC 5551 OAKLAND MILLS ROAD COLUMBIA, MD 21045 PARCEL 38 - MEHTA CHARALUTA TRUST 5551 OAKLAND MILLS ROAD COLUMBIA, MD 21045
GWENRIDGE LLC 5551 OAKLAND MILLS ROAD COLUMBIA, MD 21045

PROFESSIONAL CERTIFICATION:
I HEREBY CERTIFY THAT THESE DOCUMENTS WERE PREPARED OR APPROVED BY ME, AND THAT I AM A DULY LICENSED PROFESSIONAL ENGINEER UNDER THE LAWS OF THE STATE OF MARYLAND, LICENSE NUMBER 16597, EXPIRATION DATE: 08-15-2015

DRAWN: SE
DATE: 07-21-14
SCALE: 1" = 30'

#	DATE	REVISION	BY
2	3/24/15	LOTS 15-21 & 28-33 TO 36' TH PORCH TO INSIDE WALL ON END UNITS	PCR

ELKRIDGE-CROSSING-PHASE. TWO
PARCELS A-E
TAX MAP 38, GRID 2, PARCELS 30 & 38
FIRST ELECTION DISTRICT, HOWARD COUNTY, MARYLAND
SITE PLAN - 36 UNITS

Richardson Engineering, LLC
30 East Padonia Road, Suite 500
Timonium, Maryland 21093
Phone: 410-560-1502 Fax: 443-901-1208

SDP-06-078

APPROVED: DEPARTMENT OF PLANNING AND ZONING	
CHIEF, DEVELOPMENT ENGINEERING DIVISION J.P.	DATE 12.18.14
CHIEF, DIVISION OF LAND DEVELOPMENT	DATE 1-05-15
DIRECTOR	DATE 1/5/15

OWNERS/DEVELOPERS
PARCEL 30 – GWENRIDGE LLC 5551 OAKLAND MILLS ROAD COLUMBIA, MD 21045 PARCEL 38 – MEHTA CHARALUTA TRUST 5551 OAKLAND MILLS ROAD COLUMBIA, MD 21045
GWENRIDGE LLC 5551 OAKLAND MILLS ROAD COLUMBIA, MD 21045

STATE OF MARYLAND — PATRICK C. RICHARDSON — NO. 16597 — REGISTERED PROFESSIONAL ENGINEER

12/17/14

PROFESSIONAL CERTIFICATION:
I HEREBY CERTIFY THAT THESE DOCUMENTS WERE PREPARED OR APPROVED BY ME, AND THAT I AM A DULY LICENSED PROFESSIONAL ENGINEER UNDER THE LAWS OF THE STATE OF MARYLAND, LICENSE NUMBER 16597, EXPIRATION DATE: 08-15-2015

SDP-06-078

DRAWN: SE
DATE: 07-21-14
SCALE: 1" = 30'

#	DATE	REVISION	BY
2	3/24/15	LOTS 15-21 & 28-33 TO 36' TH PORCH TO INSIDE WALL ON END UNITS	PCR
3	11/12/15	ADD RETAINING WALL BY LOTS 28-33	RENG

ELKRIDGE-CROSSING-PHASE TWO

PARCELS A-E
TAX MAP 38, GRID 2, PARCELS 30 & 38
FIRST ELECTION DISTRICT, HOWARD COUNTY, MARYLAND

LANDSCAPE PLAN - 36 UNITS

Richardson Engineering, LLC
30 East Padonia Road, Suite 500
Timonium, Maryland 21093
Phone: 410-560-1502 Fax: 443-901-1208

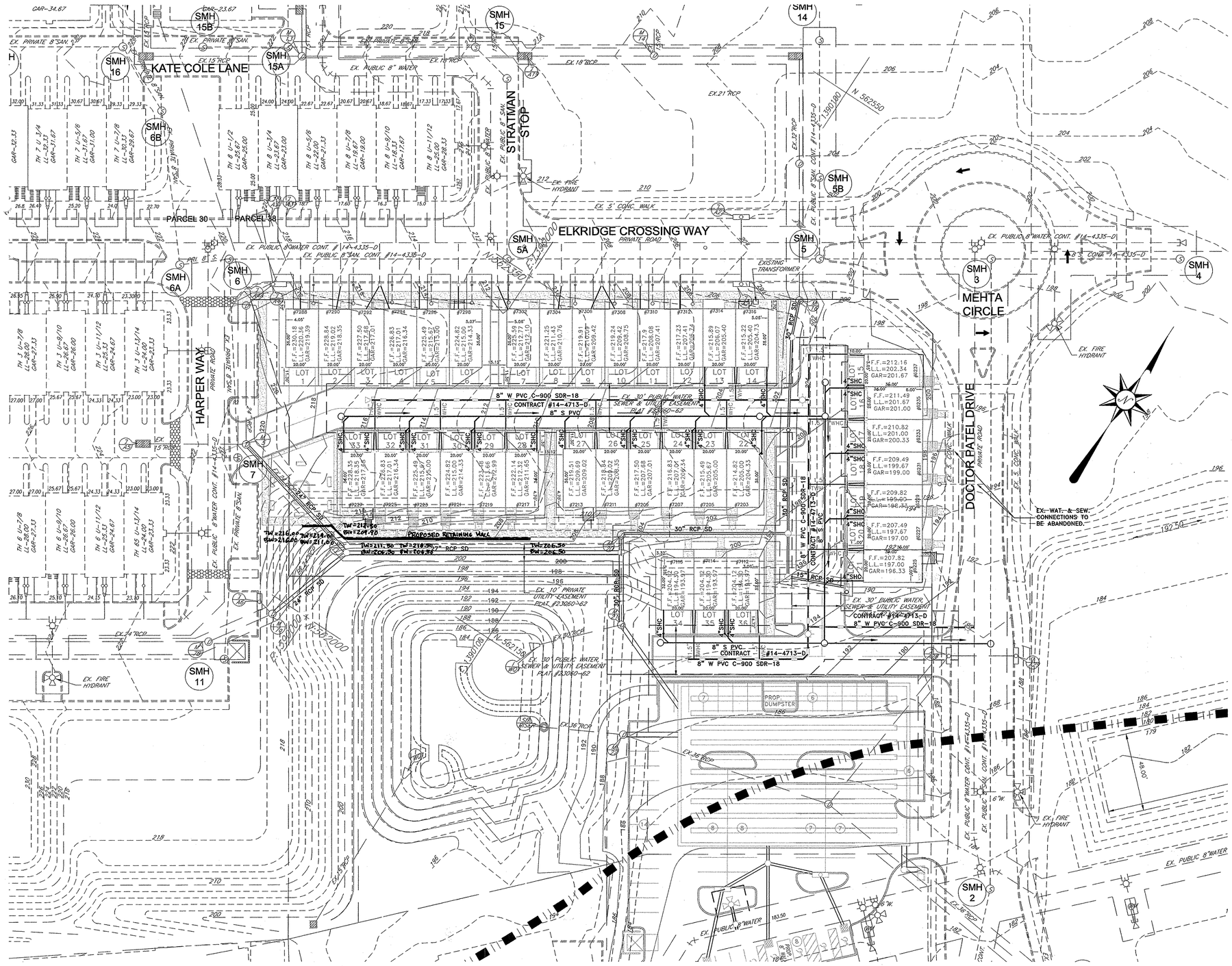

APPROVED: DEPARTMENT OF PLANNING AND ZONING

CHIEF, DEVELOPMENT ENGINEERING DIVISION J.P.	DATE 12-18-14
CHIEF, DIVISION OF LAND DEVELOPMENT	DATE 1-05-15
DIRECTOR	DATE 1/5/15

OWNERS/DEVELOPERS

PARCEL 30 –
GWENRIDGE LLC
5551 OAKLAND MILLS ROAD
COLUMBIA, MD 21045
PARCEL 38 –
MEHTA CHARALUTA TRUST
5551 OAKLAND MILLS ROAD
COLUMBIA, MD 21045
GWENRIDGE LLC
5551 OAKLAND MILLS ROAD
COLUMBIA, MD 21045

STATE OF MARYLAND — PATRICK C. RICHARDSON — NO. 16597 — REGISTERED PROFESSIONAL ENGINEER
12/17/14

PROFESSIONAL CERTIFICATION:
I HEREBY CERTIFY THAT THESE DOCUMENTS WERE PREPARED OR APPROVED BY ME, AND THAT I AM A DULY LICENSED PROFESSIONAL ENGINEER UNDER THE LAWS OF THE STATE OF MARYLAND, LICENSE NUMBER 16597, EXPIRATION DATE: 08-15-2015

SDP-06-078

DRAWN: SE
DATE: 07-21-14
SCALE: 1" = 30'

#	DATE	REVISION	BY
2	3/24/15	LOTS 15-21 & 28-33 TO 36' TH PARCH TO INSIDE WALL ON GRID UNITS	PCR
3	11/12/15	ADD RETAINING WALL BY LOTS 28-33	REWG

ELKRIDGE-CROSSING-PHASE TWO

PARCELS A-E
TAX MAP 38, GRID 2, PARCELS 30 & 38
FIRST ELECTION DISTRICT, HOWARD COUNTY, MARYLAND

UTILITY PLAN – 36 UNITS

Richardson Engineering, LLC
30 East Padonia Road, Suite 500
Timonium, Maryland 21093
Phone: 410-560-1502 Fax: 443-901-1208