SITE DEVELOPMENT PLAN
PATUXENT SQUARE APARTMENTS AND RETAIL CENTER
5-STORY RETAIL AND APARTMENT BUILDING
PARCEL A AND NON-BUILDABLE PARCEL B OF THE NORTH LAUREL SUBDIVISION
A RESUBDIVISION OF LOTS 1 THRU 10, BLOCK 4 AND LOTS 9,10 AND 19 THRU 22 & BLOCK 6

GENERAL NOTES

1. ALL ASPECTS OF THE PROJECT ARE IN CONFORMANCE WITH THE LATEST HOWARD COUNTY STANDARDS.
2. DEED REFERENCE: 479/676, 832/562, 815/344
3. THE PROJECT BOUNDARY IS BASED ON A SURVEY PERFORMED BY ROBERT H. VOGEL ENGINEERING, INC., DATED AUGUST 2005.
4. THE TOPOGRAPHY SHOWN HEREON IS BASED ON FIELD RUN TOPOGRAPHIC SURVEY PREPARED BY ROBERT H. VOGEL, DATED AUGUST 2004.
5. WATER AND SEWER FOR THIS PROJECT WILL BE PUBLIC. PROPOSED SEWER FOR THE SITE WILL BE CONNECTED TO EXISTING PUBLIC SEWER CONTRACT #29-S. AND PROPOSED PUBLIC WATER WILL BE CONNECTED TO EXISTING PUBLIC CONT.# 1-W.
6. STORMWATER MANAGEMENT REQUIREMENTS FOR THIS PROJECT IS PROVIDED BY SAND FILTERS (Wqv), GRAVEL UNDER SAND FILTER (Rev) AND STORAGE PIPE (Cpv).
7. WETLANDS DELINEATION WAS PERFORMED BY EXPLORATION RESEARCH. INC., DATED JULY, 2004.
8. NO FLOODPLAIN IS LOCATED ONSITE.
9. NO STEEP SLOPES ARE LOCATED ONSITE.
10. NO GRADING , REMOVAL OF VEGETATIVE COVER OR TREES, PAVING OR NEW STRUCTURES SHALL BE PERMITTED WITHIN THE WETLANDS AND STREAMS OR REQUIRED BUFFERS, EXCEPT AS PERMITTED UNDER APPROVED WP-05-45.
11. FOREST STAND DELINEATION PLAN PREPARED BY ROBERT H. VOGEL ENGINEERING, INC., DATED MAY, 2003.
12. APFO TRAFFIC STUDY PREPARED BY THE TRAFFIC GROUP, DATED APRIL 7, 2004. APPROVED BY STATE HIGHWAY ADMINISTRATION AND DEVELOPMENT ENGINEERING DIVISION OF HOWARD COUNTY WITH S-05-03.
13. ALL EXTERIOR LIGHT FIXTURE SHALL BE ORIENTED TO DIRECT LIGHT INWARDS AND DOWNWARDS ON-SITE AWAY FROM ALL RESIDENTIAL PROPERTIES AND PUBLIC ROADS IN ACCORDANCE WITH SECTION 134 OF THE HOWARD COUNTY ZONING REGULATIONS.
14. ALL LANDSCAPING REQUIREMENTS AS SET FORTH IN THE LANDSCAPE MANUAL SHALL BE COMPLIED WITH.
15. SEDIMENT AND EROSION CONTROL WILL BE PROVIDED FOR THIS SITE.
16. THIS PROPERTY IS LOCATED WITHIN THE METROPOLITAN DISTRICT.
17. TO THE BEST OF THE OWNERS KNOWLEDGE, THERE ARE NO BURIAL/CEMETARY LOCATIONS ON SITE.
18. STREET TREES ARE REQUIRED FOR THIS SUBDIVISION IN ACCORDANCE WITH SECTION 16.124(e)(1) OF THE SUBDIVISION REGULATIONS AND THE LANDSCAPE MANUAL. A MINIMUM OF 20' SHALL BE MAINTAINED BETWEEN STREET LIGHTS AND TREES. STREET TREES ARE PROVIDED AND APPROVED ON THE ROAD CONSTRUCTION PLAN FOR F-06-213.
19. A NOISE STUDY IS NOT REQUIRED.
20. THIS SUBDIVISION IS SUBJECT TO THE AMENDED FIFTH EDITION OF THE SUBDIVISION AND LAND DEVELOPMENT REGULATIONS AS EFFECTIVE 10/2/03. DEVELOPMENT OR CONSTRUCTION ON THIS PROPERTY MUST COMPLY WITH SETBACK AND BUFFER REGULATIONS IN EFFECT AT THE TIME OF SUBMISSION OF THE SITE DEVELOPMENT PLAN, WAIVER PETITION APPLICATION OR BUILDING/ GRADING PERMIT APPLICATIONS.
21. A WETLAND PERMIT IS REQUIRED FOR THE DISTURBANCE SHOWN ON THIS PLAN. MDE TRACKING #200664292-06-NT-3198.
22. WP-05-45: A WAIVER PETITION HAS BEEN SUBMITTED AND APPROVED, DATED NOVEMBER 30, 2004, TO WAIVE SECTION 16.116 (a) (1) OF THE SUBDIVISION AND LAND DEVELOPMENT REGULATIONS WHICH PROHIBITS THE GRADING, REMOVAL OF VEGETATIVE COVER AND TREES, PAVING AND NEW STRUCTURES WITHIN 25 FEET OF A WETLAND IN ANY ZONING DISTRICT AND WITHIN 50' OR 75' OF A STREAM IN RESIDENTIAL AND NON RESIDENTIAL ZONING DISTRICTS. THIS PLAN PROPOSES THE FILLING OF WETLANDS, A STREAM AND THE DISTURBANCE OF THE 25' WETLAND BUFFER AND 50' STREAM BUFFER FOR THE CONSTRUCTION OF HILL STREET, GROVER PLACE, PARKING LOT PAVING AND A PORTION OF THE NEW BUILDING.
23. THE SUBJECT PROPERTY IS ZONED "CAC" CORRIDOR ACTIVITY CENTER PER THE 2/2/04 COMPREHENSIVE ZONING PLAN.
24. ALL EXISTING STRUCTURES ARE TO BE REMOVED.
25. SEE THE FOLLOWING PREVIOUS DPZ FILES FOR THIS PROPERTY; WP-96-112, WP-98-30, F-99-109, F-98-10, BA 366-D, WP-05-45, S-05-03, WP-05-109 AND F-06-213, WP-06-87, CB-142-2006.
26. THIS PLAN HAS BEEN PREPARED IN ACCORDANCE WITH THE PROVISION OF SECTION 16.124 OF THE HOWARD COUNTY CODE, THE LANDSCAPE MANUAL AND THE ROUTE 1 MANUAL. FINANCIAL SURETY FOR THE REQUIRED 70 SHADE TREES, 2 EVERGREEN TREES, 205 SHRUBS AND 619 LINEAR FEET OF WALL HAS BEEN POSTED AS PART OF THE DEVELOPER'S AGREEMENT IN THE AMOUNT OF $ 39,830.00 UNDER THIS SITE PLAN. STREET TREES FOR HILL STREET AND U.S. RT.1 ARE BONDED UNDER F-06-213 AND SHALL BE PROVIDED PER THE ROAD CONSTRUCTION DRAWINGS.
27. THIS PROJECT COMPLIES WITH THE REQUIREMENTS OF SECTION 16.1200 OF THE HOWARD COUNTY CODE AND THE FOREST CONSERVATION MANUAL WITH A FOREST CONSERVATION OBLIGATION OF 1.02 ACRES OF REFORESTATION PROVIDED BY A FEE-IN-LIEU OF $22,215.60.
28. THIS DEVELOPMENT PROJECT IS SUBJECT TO PRELIMINARY AND FINAL PLAN SUBMISSION TO CONSOLIDATE THE 16 LOTS INTO ONE BUILDABLE BULK PARCEL, TO ESTABLISH THE PUBLIC ROAD RIGHT-OF-WAYS FOR GROVER PLACE AND HILL STREET, AND TO ESTABLISH ANY PUBLIC OR PRIVATE UTILITY EASEMENT.
29. THE PROPOSED RETAIL CENTER WILL CONSIST OF A GROUP OF 6 OR MORE RETAIL USES OR RETAIL AND SERVICE USES THAT ARE DESIGNED, DEVELOPED AND MANAGED AS AN INTEGRAL ENTITY AND THAT SHARE COMMON VEHICULAR ACCESS AND PARKING TO BE ELIGIBLE FOR THE SHOPPING CENTER PARKING REQUIREMENTS OF 5 PARKING SPACES PER 1,000 SF. IN ACCORDANCE WITH SECTION 103.A149 OF THE ZONING REGULATION.
30. A PARKING NEEDS ANALYSIS AND DESIGN MANUAL WAIVER WAS APPROVED TO PROVIDE 1.5 PARKING SPACE PER UNIT. THIS ANALYSIS IS BASED ON A STUDY PERFORMED BY COLUMBIA HOUSING CORPORATION AND THE DEVELOPER. THE 0.3 SPACE GUEST/ OVERFLOW PARKING SPACE REQUIREMENT IS ACCOMMODATED WITHIN THE 1.5 SPACE REQUIREMENT AND THE RETAIL PARKING REQUIREMENTS.
31. THE ALTERNATE COMPLIANCE REQUESTED AND APPROVED BY DPZ, DIVISION OF ENVIRONMENTAL AND COMMUNITY PLANNING IN ACCORDANCE WITH THE ROUTE 1 MANUAL INCLUDE:

    A REDUCTION OF THE COMMERCIAL SPACE REQUIREMENT FROM 300 SF. PER RESIDENTIAL UNIT TO 200 SF.

    AN INCREASE IN THE MAXIMUM SETBACK FROM U.S. ROUTE 1 FROM 10 FEET TO APPROXIMATELY 73 FT.

    THE LOCATION OF PARKING SPACES AND A SERVICE DRIVE IN FRONT OF THE BUILDING BETWEEN U.S. ROUTE 1.
32. THE SIGHT DISTANCE AT THE INTERSECTION OF THE PROPOSED LOCAL ROAD AND GROVER PLACE WILL BE PROVIDED ON PRELIMINARY ROAD PLAN AND REQUIRED EASEMENT OR RIGHT OF WAY TRUNCATION WILL BE RECORDED ON RECORD PLAT.
33. ALL TRASH COLLECTION TO BE PRIVATE.
34. THE CONTRACTOR IS TO NOTIFY THE FOLLOWING UTILITIES OR AGENCIES AT LEAST FIVE DAYS BEFORE STARTING WORK ON THESE DRAWINGS:

MISS UTILITY	
VERIZON TELEPHONE	725-9976
HOWARD COUNTY BUREAU OF UTILITIES:	313-2366
AT&T CABLE LOCATION DIVISION:	393-3553
B.G.&E. CO. CONTRACTOR SERVICES:	850-4620
B.G.&E. CO. UNDERGROUND DAMAGE CONTROL:	787-4620
STATE HIGHWAY ADMINISTRATION:	531-5533

SITE ANALYSIS:

GENERAL SITE DATA

PRESENT ZONING: CAC

PROPOSED USE OF SITE: RETAIL, APARTMENT UNITS, AND CHILD DAYCARE

PROPOSED WATER SYSTEM: PUBLIC

PROPOSED SEWER SYSTEM: PUBLIC

AREA TABULATION

TOTAL AREA OF BUILDABLE UNITS: 20,341 SF.
TOTAL PROJECT AREA (GROSS): 147,076 SF (3.3626 AC.)
AREA OF RIGHT OF WAY: 0.43 AC.
AREA OF PARCEL A: 2.87 AC.
AREA OF PARCEL B: 0.06 AC.
APPROXIMATE LIMIT OF DISTURBANCE: 2.87 AC.

PARKING TABULATION

NUMBER OF UNITS ALLOWED AND PROPOSED 80

RESIDENTIAL

SEE GENERAL NOTE 30.

PARKING SPACES REQUIRED:

PARKING SPACES REQUIRED:
: 80 UNITS x 1.5 SPACES/UNIT=120 SPACES

COMMERCIAL

SEE GENERAL NOTE 29.

PARKING SPACES REQUIRED: 4375 SF DAYCARE x 3 SPACES/1000 SF = 14 SPACES
11,625 SQ FT RETAIL x 5 SPACES/1,000 SQ FT = 59 SPACES

TOAL PARKING SPACES REQUIRED: 193 SPACES

HC SPACES: MIN 2% OF TOTAL SPACES REQUIRED: 5 SPACES

PARKING SPACES PROVIDED:

HC ACCESSIBLE SPACES: (7 SPACES) ON-SITE SPACES: 179
OFF-SITE SPACES(HILL STREET):14 SPACES

TOTAL PARKING SPACES PROVIDED: 195 SPACES

PARKING IS NOT PROVIDED FOR BUSINESS VEHICLES OWNED AND OPERATED BY THESE RETAIL SPACES .

DENSITY TABULATION

NUMBER OF PARCELS: 2 (A & B)	
TRACT AREA	3.3626 AC.
100-YEAR FLOODPLAIN	0.00 AC.
STEEP SLOPES OUTSIDE FLOODPLAIN	0.0 AC.
NET AREA	3.3626 AC.
DENSITY	25 DWELLING UNITS/NET ACRE
TOTAL NUMBER OF UNITS ALLOWED:	84
TOTAL NUMBER OF UNITS PROPOSED:	80

AMENITY AREA(10% OF NET SITE AREA) REQUIRED:
: 14,723 SF (0.33 AC.)

AMENITY AREA(10% OF NET SITE AREA) PROVIDED:
OUTDOOR: 4,282 SF (2,540 SF OUTDOOR PLAYAREA +1,742 SF OUTDOOR AREA)
INDOOR: 3,582 SF*

* THE INDOOR RECREATIONAL AREA IS A SUBSTITUTE FOR 10,441 SF OF OUTDOOR AMENITY AREA.

THE 2,540 SF OUTDOOR PLAYAREA IS AVAILABLE TO ALL RESIDENTS WHEN DAYCARE FACILITY IS CLOSED. GATES WILL BE OPEN AT THESE TIMES.

15% MODERATE INCOME HOUSING REQUIRED: 12 UNITS

15% MODERATE INCOME HOUSING PROVIDED: 12 UNITS

BUILDING COVERAGE: 0.47 AC.
14% OF GROSS AREA

BUILDING FOOTPRINT:

RESIDENTIAL USE:	RETAIL USE	AMENITY AREA
-	FIRST FLOOR:16,759 SF	FIRST FLOOR:3,582SF
SECOND FLOOR:21,670 SF	-	-
THIRD FLOOR: 21,670 SF	-	-
FOURTH FLOOR:21,670 SF	-	-
FIFTH FLOOR: 20,390 SF	-	

COORDINATE TABLE

POINT	NORTHING	EASTING
306	527274.05700	1359461.90600
307	527559.38933	1359152.55478
308	527626.16003	1359286.87408
309	527235.93687	1359515.14501
310	526954.89800	1359302.25099
311	527127.74484	1359077.52312
312	527356.45613	1359253.43377

BEST MANAGEMENT PRACTICES FOR WORKING IN NONTIDAL WETLANDS, WETLAND BUFFERS, WATERWAYS, AND 100-YEAR FLOODPLAIN

1) NO EXCESS FILL, CONSTRUCTION MATERIAL, OR DEBRIS SHALL BE STOCKPILED OR STORED IN THE WETLANDS OR BUFFER.
2) PLACE MATERIALS IN A LOCATION AND MANNER WHICH DOES NOT ADVERSELY IMPACT SURFACE OR SUBSURFACE WATER FLOW INTO OR OUT OF THE NONTIDAL WETLAND.
3) DO NOT USE THE EXCAVATED MATERIAL AS BACKFILL IF IT CONTAINS WASTE METAL PRODUCTS, UNSIGHTLY DEBRIS, TOXIC MATERIAL OR ANY OTHER DELETERIOUS SUBSTANCE. IF ADDITIONAL BACKFILL IS REQUIRED, USE CLEAN MATERIAL FREE OF WASTE METAL PRODUCTS, UNSIGHTLY DEBRIS, TOXIC MATERIAL OR ANY OTHER DELETERIOUS SUBSTANCE.
4) PLACE HEAVY EQUIPMENT ON MATS OR SUITABLY OPERATE THE EQUIPMENT TO PREVENT DAMAGE TO THE NONTIDAL WETLANDS OR BUFFER.
5) REPAIR AND MAINTAIN ANY SERVICEABLE STRUCTURE OR FILL SO THERE IS NO PERMANENT LOSS OF NONTIDAL WETLANDS IN EXCESS OF NONTIDAL WETLANDS LOST UNDER THE ORIGINAL STRUCTURE OR FILL.
6) RECTIFY ANY NONTIDAL WETLANDS TEMPORARILY IMPACTED BY ANY CONSTRUCTION.
7) ALL STABILIZATION IN THE WETLAND AND BUFFER SHALL BE OF THE FOLLOWING RECOMMENDED SPECIES: ANNUAL RYEGRASS (LOLIUIN MULTIFLORUM), MILLET (SETARIA ITALICA), BARLEY (HORDEUM SP.), OATS (UNIOLA SP.), AND/OR RYE (SECALE CEREALE). THESE SPECIES WILL ALLOW FOR THE STABILIZATION OF THE SITE WHILE ALSO ALLOWING FOR THE VOLUNTARY REVEGETATION OF NATURAL WETLAND SPECIES. OTHER NON-PERSISTENT VEGETATION MAY BE ACCEPTABLE, BUT MUST BE APPROVED BY THE DIVISION. KENTUCKY 33 FESCUE SHALL NOT BE UTILIZED IN THE WETLAND OR BUFFER AREAS. THE AREA SHOULD BE SEEDED AND MULCHED TO REDUCE EROSION AFTER CONSTRUCTION ACTIVITIES HAVE BEEN COMPLETED.
8) AFTER INSTALLATION HAS BEEN COMPLETED, MAKE POST CONSTRUCTION GRADES AND ELEVATIONS OF NONTIDAL WETLANDS THE SAME AS THE ORIGINAL GRADES AND ELEVATIONS IN TEMPORARILY IMPACTED AREAS.
9) TO PROTECT AQUATIC SPECIES, IN-STREAM WORK IS PROHIBITED AS DETERMINED BY THE CLASSIFICATION OF THE STREAM. USE I WATERS: IN-STREAM WORK SHALL NOT BE CONDUCTED DURING THE PERIOD MARCH 1 THROUGH JUNE 15, INCLUSIVE, DURING ANY YEAR.
10) STORMWATER RUNOFF FROM IMPERVIOUS SURFACES SHALL BE CONTROLLED TO PREVENT THE WASHING OF DEBRIS INTO THE WATERWAY.
11) CULVERTS SHALL BE CONSTRUCTED AND ANY RIPRAP PLACED SO AS NOT TO OBSTRUCT THE MOVEMENT OF AQUATIC SPECIES, UNLESS THE PURPOSE OF THE ACTIVITY IS TO IMPOUND WATER.

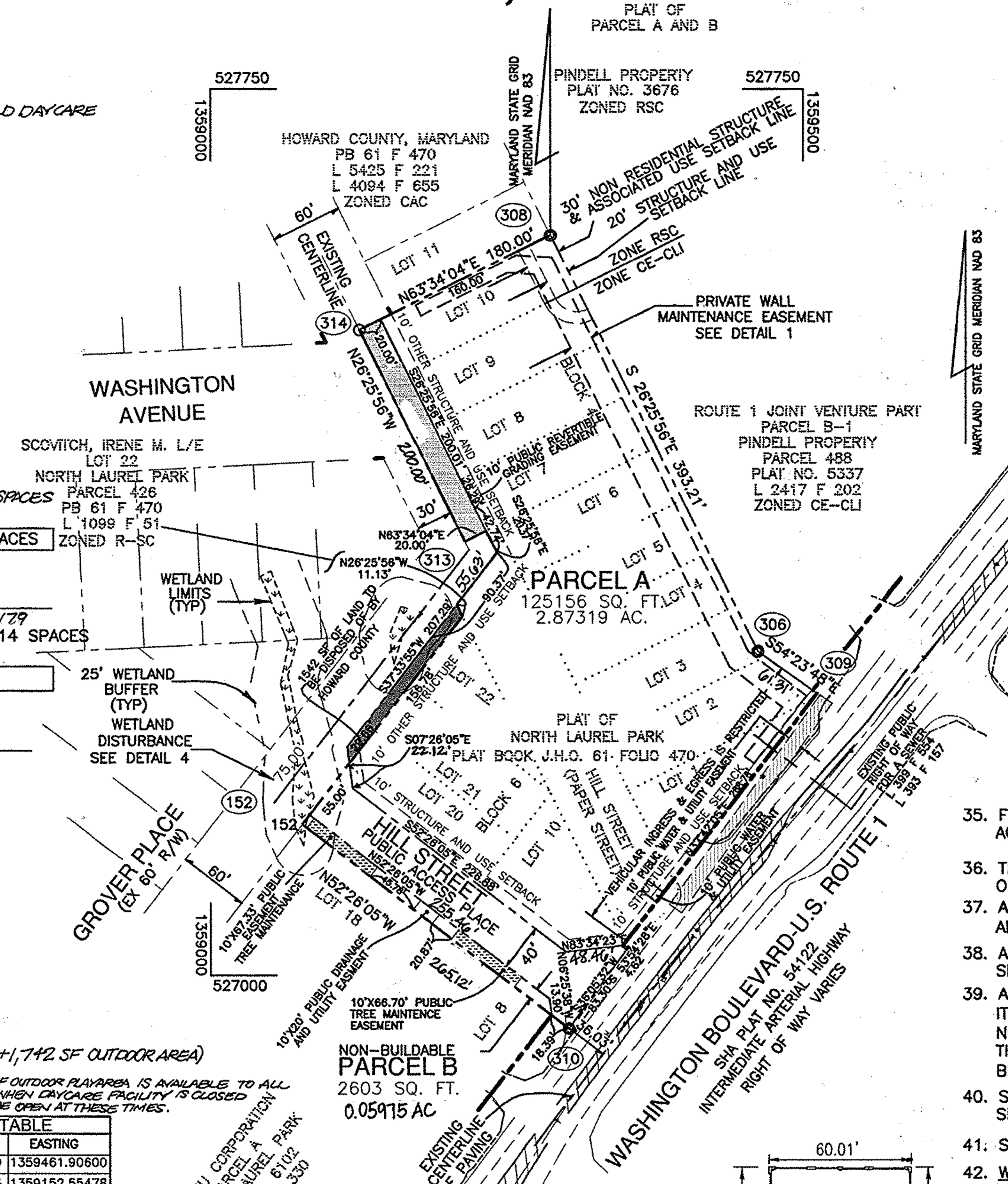

LOCATION PLAN

SCALE: 1" = 100'

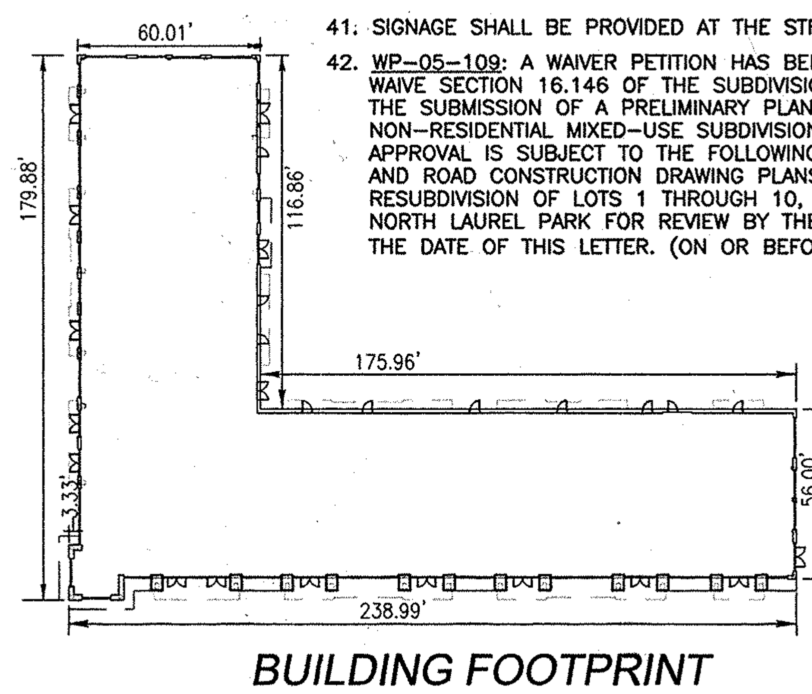

BUILDING FOOTPRINT

SCALE: 1" = 50'

ELEVATION

NOT TO SCALE

AREA 1.45 AC.	REQUIREMENT	VOLUME REQUIREMENT WITHOUT CREDITS	CREDITS	VOLUME REQUIREMENT WITH CREDITS	NOTES
	STORMWATER MANAGEMENT REQUIREMENTS - REDEVELOPMENT				
1	WATER QUALITY VOLUME (WQv)	0.0197 AC. FT.	0	0.0197 AC. FT.	PROVIDED BY SAND FILTER 20% OF TOTAL REDEVELOPMENT
2	RECHARGE VOLUME (REv)	0 AC. FT. OR 0 AC.	0	N\A	N/A NOT REQUIRED FOR REDEVELOPMENT
3	CHANNEL PROTECTION VOLUME (CPv)	0 AC. FT.	0	0	N/A NOT REQUIRED FOR REDEVELOPMENT
4	OVERHEAD FLOOD PROTECTION ($Q_{10}P$)	N/A	N/A	N/A	
5	EXTREME FLOOD VOLUME ($Q_{100}P$)	N/A	N/A	N/A	

AREA 2.42 AC.	REQUIREMENT	VOLUME REQUIREMENT WITHOUT CREDITS	CREDITS	VOLUME REQUIREMENT WITH CREDITS	NOTES
	STORMWATER MANAGEMENT REQUIREMENTS -NEW DEVELOPMENT				
1	WATER QUALITY VOLUME	0.1553 AC. FT.	0	0.1553 AC. FT.	PROVIDED BY SAND FILTER
2	RECHARGE VOLUME (REv)	0.0558 AC. FT. 0.6954 AC.	0	0.03 AC. FT. 0.39 AC.	PROVIDED BELOW SAND FILTER IN A GRAVEL TRENCH
3 *	CHANNEL PROTECTION VOLUME (CPv)	0.2029 AC. FT.	0	0.2029 AC. FT.	PROVIDED BY UNDERGROUND STORAGE
4	OVERHEAD FLOOD PROTECTION ($Q_{10}P$)	N\A	N\A	N\A	
5	EXTREME FLOOD VOLUME ($Q_{100}P$)	N\A	N\A	N\A	

BASED ON 2.95 AC. DRAWING TO SWMF

35. FIRE LANE SIGNAGE OR PAINT THE CURBS RED AND STENCIL TO IDENTIFY THE ROAD THAT PROVIDES ACCESS TO THE REAR AS A FIRE LANE SHALL BE PROVIDED.
36. THE FIRE DEPARTMENT SIAMESE CONNECTION SHALL BE ON THE FRONT OF THE BUILDING AS SHOWN ON THE PLAN.
37. A CLEAR UNOBSTRUCTED ACCESS PATH TO THE FIRE DEPARTMENT CONNECTION SHALL BE PROVIDED. ALL LANDSCAPING SHALL BE AT 7.5' OF EACH SIDE OF THE FIRE DEPARTMENT CONNECTION.
38. A FIRE HYDRANT SHALL BE PROVIDED WITHIN 100' OF THE FIRE DEPARTMENT CONNECTION. AS SHOWN ON THE PLAN.
39. A KNOX BOX (FIRE DEPARTMENT ACCESS BOX) SHALL BE PLACED ON THE FRONT OF THE BUILDING. IT SHALL BE PLACED TO THE RIGHT OF THE MAIN ENTRANCE AT A RANGE OF 4-5' IN HEIGHT AND NO MORE THAN 6' LATERALLY FROM THE DOOR. THE KNOX BOX LOCATION SHALL BE AS SHOWN ON THE PLAN. THE BOX SHALL BE ELECTRONICALLY SUPERVISED TO NOTIFY THE OWNER THAT IT IS BEING ACCESSED WITH THE FIRE ALARM SYSTEM).
40. SIGNAGE SHALL BE PROVIDED ON THE BUILDING IDENTIFYING THE BUILDING ADDRESS AND EACH SEPARATE SUITE BY LETTER.
41. SIGNAGE SHALL BE PROVIDED AT THE STREET IDENTIFYING THE BUILDING ADDRESS.
42. WP-05-109: A WAIVER PETITION HAS BEEN SUBMITTED AND APPROVED, DATED APRIL 12, 2006, TO WAIVE SECTION 16.146 OF THE SUBDIVISION AND LAND DEVELOPMENT REGULATIONS WHICH REQUIRES THE SUBMISSION OF A PRELIMINARY PLAN FOR MULTI-FAMILY RESIDENTIAL AND NON-RESIDENTIAL MIXED-USE SUBDIVISIONS WHEN PUBLIC ROAD IMPROVEMENTS AND RIGHT-OF-WAY APPROVAL IS SUBJECT TO THE FOLLOWING CONDITIONS: SUBMISSION OF A FINAL SUBDIVISION PLAT AND ROAD CONSTRUCTION DRAWING PLANS FOR THE SUBJECT DEVELOPMENT AND THE RESUBDIVISION OF LOTS 1 THROUGH 10, BLOCK 4, LOT 9, 10 AND 19 THROUGH 22, BLOCK 6 OF NORTH LAUREL PARK FOR REVIEW BY THE SUBDIVISION REVIEW COMMITTEE WITHIN 9 MONTH FROM THE DATE OF THIS LETTER. (ON OR BEFORE JANUARY 12, 2007).
43. THIS SDP WILL BE REVISED AT SUCH TIME HOWARD COUNTY DISPOSES EXCESS LAND WHICH WAS INADVERTENTLY OBTAINED BY COUNTY COUNCIL RESOLUTION 142-2006.
44. THE MODERATE INCOME HOUSING UNIT AGREEMENT WAS RECORDED IN THE HOWARD COUNTY LAND RECORDS ON 3/21/2007, ~~2006~~ BY LIBER 10584 AND FOLIO 503.
45. THE MODERATE INCOME COVENANTS WERE RECORDED IN THE HOWARD COUNTY LAND RECORDS ON 3/21/07 BY LIBER 10584 AND FOLIO 511.
46. FOREST CONSERVATION REQUIREMENTS PER SECTION 16.1202 OF THE HOWARD COUNTY CODE AND THE FOREST CONSERVATION MANUAL. FOREST CONSERVATION REQUIREMENTS PREPARED BY EXPLORATION RESEARCH, INC. IN FEBRUARY 2007.
47. WP-07-81: APPROVED BY DEPARTMENT OF PLANNING AND ZONING JANUARY 30, 2007 FOR A WAIVER OF SECTION 16.155(a)(1) TO ALLOW MASS GRADING OF THE SITE PRIOR TO SIGNATURE APPROVAL OF SDP-06-50.
48. COUNCIL BILL NO. 142-2006 APPROVED BY THE COUNTY COUNCIL ON OCTOBER 30, 2006 TO ALLOW HOWARD COUNTY TO ACCEPT THE OFFER OF GROVER PLACE AND HILL STREET (EACH 60 FEET IN WIDTH) ABUTTING LOTS 21, 22 AND 23 IN BLOCK 5 AND LOTS 18 THRU 22 ALONG GROVER PLACE ONLY IN BLOCK 6, AND TO REJECT THE OFFER OF DEDICATION OF HILL STREET (60 FEET IN WIDTH) ABUTTING LOTS 1 THRU 6 IN BLOCK 4 AND LOTS 10 AND 22 ALONG HILL STREET ONLY IN BLOCK 6 AND TO ACCEPT THE RELOCATION OF HILL STREET THROUGH LOTS 9 AND 19 IN BLOCK 6 ALL AS SHOWN ON THE PLAT OF NORTH LAUREL AND F06-213.
49. FOR ROUTE 1 IMPROVEMENTS REFERENCE APPROVED MSHA ACCES PERMIT

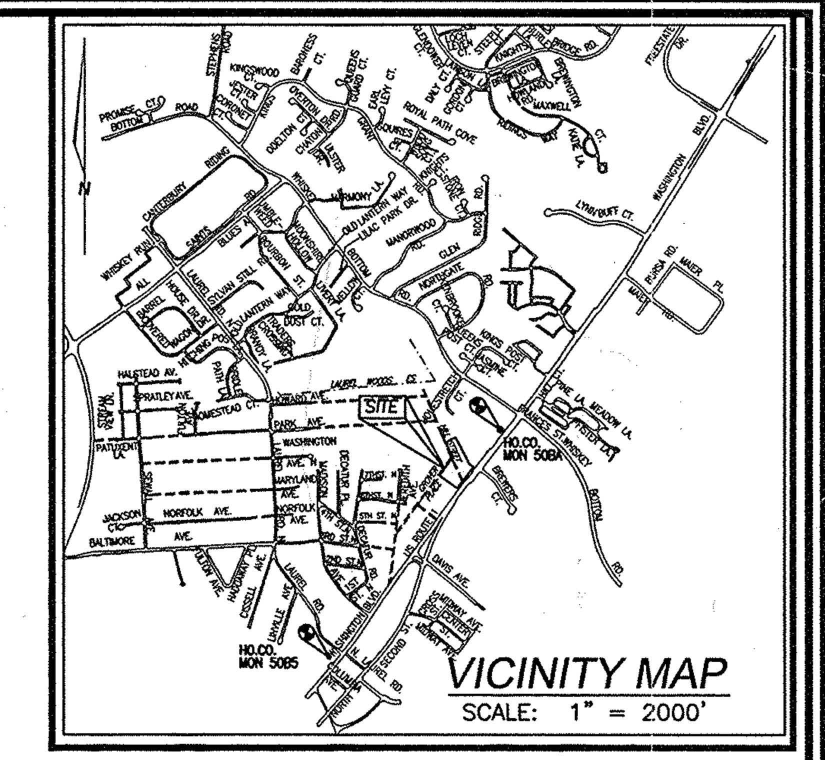

VICINITY MAP

SCALE: 1" = 2000'

BENCHMARK INFORMATION

THE BEARINGS SHOWN ON THIS PLAT ARE REFERRED TO THE SYSTEM OF COORDINATES ESTABLISHED IN THE MARYLAND COORDINATE SYSTEM (NAD 83) AS PROJECTED BY THE FOLLOWING HOWARD COUNTY GEODETIC CONTROL STATIONS:

50BA	(N) 527,561.678	(E) 1,359,772.604
50B5	(N) 524,999.375	(E) 1,357,925.748

SHEET INDEX

DESCRIPTION	SHEET NO
COVER SHEET	1 OF 12
SITE AND UTILITY PLAN	2 OF 12
GRADING AND SEDIMENT CONTROL PLAN	3 OF 12
SITE DETAILS	4 OF 12
SEDIMENT AND EROSION CONTROL DETAILS	5 OF 12
STORM DRAIN AND UTILITY PROFILES	6 OF 12
STORM DRAIN DRAINAGE AREA MAP	7 OF 12
LANDSCAPE PLAN AND DETAILS	8 OF 12
SWM FACILITY DETAILS	9 OF 12
FOREST CONSERVATION WORKSHEET & ROUTE 1 DETAILS	10 OF 12
RETAINING WALL PLAN & DETAILS	11 OF 12
RETAINING WALL PLAN & DETAILS	12 OF 12

ADDRESS CHART

BLDG. NO	STREET ADDRESS
1	9800 HILL STREET

AS-BUILT CERTIFICATION
I HEREBY CERTIFY THAT THE FACILITY SHOWN ON THIS PLAN WAS CONSTRUCTED AS SHOWN ON THE "AS-BUILT" PLANS AND MEETS THE APPROVED PLANS AND SPECIFICATIONS.

STATE OF MARYLAND ROBERT HARRIS VOGEL No. 16193 PROFESSIONAL ENGINEER 2/2/09

ROBERT H. VOGEL, PE NO. 16193

DEVELOPER
ORCHARD DEVELOPMENT
5032 DORSEY HALL DRIVE
ELLICOTT CITY , MARYLAND 21042
(410) 964-2334
(410) 964-2315 FAX

OWNER
HOWARD COUNTY DEPARTMENT OF HOUSING AND COMMUNITY DEVELOPMENT
6751 COLUMBIA GATEWAY DRIVE
COLUMBIA, MARYLAND
21046-2164

~~APPROVED: HOWARD COUNTY HEALTH DEPARTMENT~~

~~COUNTY HEALTH OFFICER — DATE~~
~~HOWARD COUNTY HEALTH DEPARTMENT~~

NO.	REVISION	DATE
3	REDUCE FIRST FLOOR RETAIL AREA AND EXPAND DAYCARE AREA; ADJUST PARKING TABULATION ACCORDINGLY	7/30/14
2	REVISE PLAN TO ADD OUTDOOR PLAYAREA AND RELOCATE OUTDOOR AMENITY AREA	5/28/2010
1	PRIVATE STORMWATER AS-BUILTS	1-15-09

SITE DEVELOPMENT PLAN
PATUXENT SQUARE APARTMENTS & RETAIL CENTER
5-STORY RETAIL AND APARTMENT BUILDING
PARCEL A AND NON-BUILDABLE PARCEL B
OF THE NORTH LAUREL SUBDIVISION
A RESUBDIVISION OF LOTS 1 THRU 10, BLOCK 4
AND 9,10 AND 19 THRU 22 & BLOCK 6

COVER SHEET

TAX MAP 50 GRID 4,
6TH ELECTION DISTRICT

BULK PARCEL A, A RESUBDIVISION OF LOTS 1 THRU 10, BLOCK 4 AND LOTS 9, 10 AND 19 THRU 22, BLOCK 6, NORTH LAUREL PARK

PERMIT INFORMATION CHART

PROJECT NAME			SECTION/AREA	LOT/PARCEL	
PATUXENT SQUARE APARTMENTS AND RETAIL CENTER NORTH LAUREL PARK			N/A	PARCELS A & B	
DEED REF. 479/676 832/562 815/344 PLAT # 18929-30	BLOCK NO	ZONE	TAX MAP	ELECT DIST	CENSUS TR
	4	CAC	50	6TH	6069.03
WATER CODE: CO5			SEWER CODE: 7103000		

APPROVED: DEPARTMENT OF PLANNING AND ZONING

CHIEF, DIVISION OF LAND DEVELOPMENT — DATE 3/20/07

CHIEF, DEVELOPMENT ENGINEERING DIVISION — DATE 3/13/07

DIRECTOR — DATE

ROBERT H. VOGEL ENGINEERING, INC.
ENGINEERS • SURVEYORS • PLANNERS
8407 MAIN STREET ELLICOTT CITY, MD 21043
TEL: 410.461.7666 FAX: 410.461.8961

STATE OF MARYLAND ROBERT HARRIS VOGEL No. 16193 PROFESSIONAL ENGINEER
ROBERT H VOGEL, PE #16193

DESIGN BY:	RJ/RHV
DRAWN BY:	RJ
CHECKED BY:	RHV
DATE:	07-24-2007
SCALE:	AS SHOWN
W.O. NO.:	04-11.00

LEGEND

- WETLAND BUFFER
- WETLAND BUFFER
- PUBLIC TREE MAINTENANCE
- 10 SIDEWALK TYP. FOR ROUTE 1 COMMUNITY SEE SHEET 10 OF 12 FOR DETAIL
- REVERTIBLE EASEMENT SHA PLAT NO 54122.
- STREET LIGHT PER FINAL RD PLAN
- EXISTING TREES TO REMAIN
- STREET TREE PER F-06-213
- VARIABLE WIDTH PRIVATE RETAINING WALL MAINTENANCE EASEMENT
- PARKING LOT LIGHTS
- OUTDOOR AMENITY AREA
- DISTURBANCE WETLAND
  WETLAND A=1,272.95
  WETLAND B=4,991
  TOTAL AREA=1,765.65

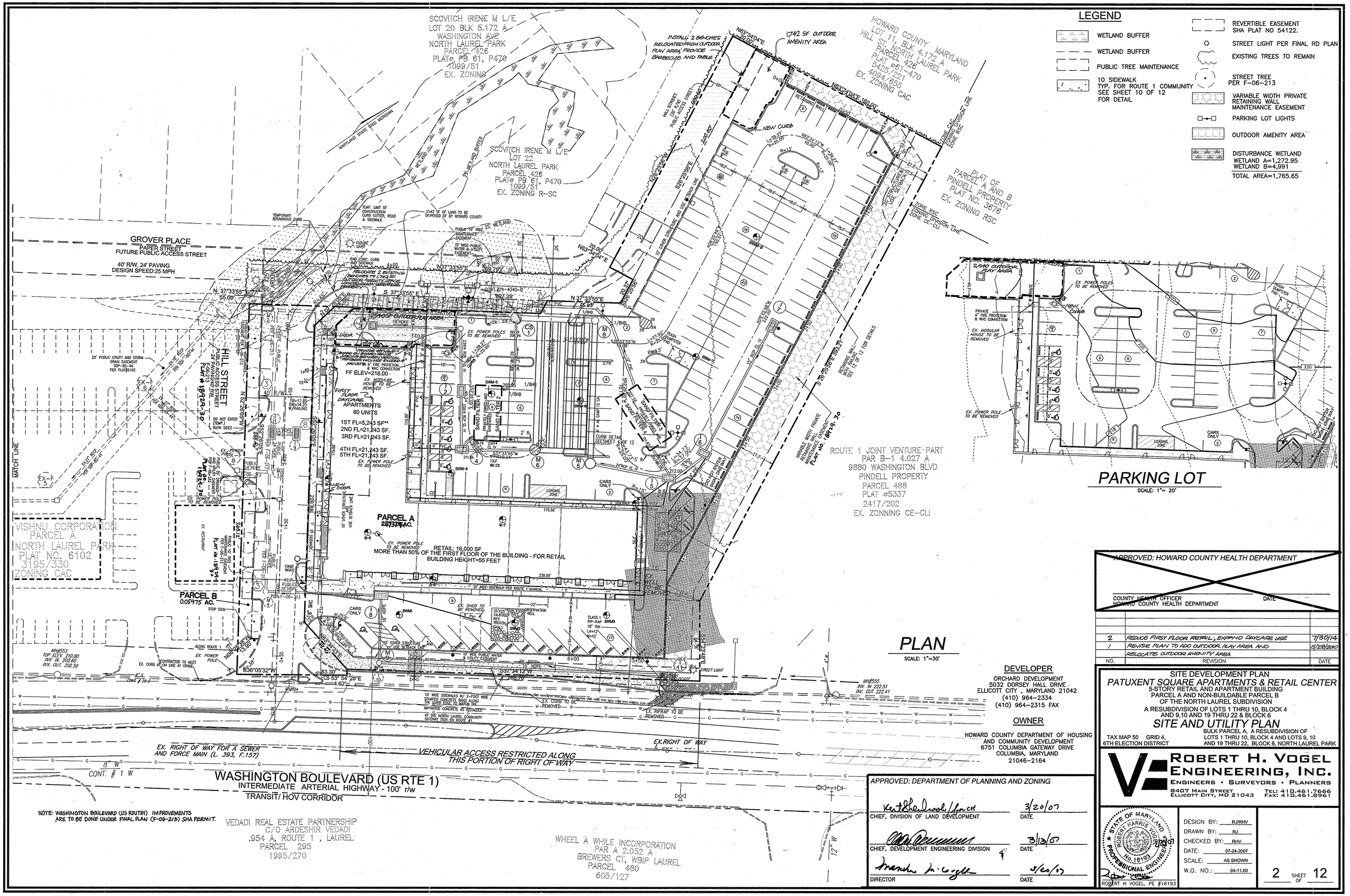

PARKING LOT

SCALE: 1"= 20'

PLAN

SCALE: 1"=30'

DEVELOPER

ORCHARD DEVELOPMENT
5032 DORSEY HALL DRIVE
ELLICOTT CITY , MARYLAND 21042
(410) 964-2334
(410) 964-2315 FAX

OWNER

HOWARD COUNTY DEPARTMENT OF HOUSING AND COMMUNITY DEVELOPMENT
6751 COLUMBIA GATEWAY DRIVE
COLUMBIA, MARYLAND
21046-2164

APPROVED: HOWARD COUNTY HEALTH DEPARTMENT

COUNTY HEALTH OFFICER — DATE
HOWARD COUNTY HEALTH DEPARTMENT

NO.	REVISION	DATE
2	REDUCE FIRST FLOOR RETAIL, EXPAND DAYCARE USE	7/30/14
1	REVISE PLAN TO ADD OUTDOOR PLAY AREA AND RELOCATE OUTDOOR AMENITY AREA	5/20/2010

APPROVED: DEPARTMENT OF PLANNING AND ZONING

CHIEF, DIVISION OF LAND DEVELOPMENT — DATE 3/20/07
CHIEF, DEVELOPMENT ENGINEERING DIVISION — DATE 3/13/07
DIRECTOR — DATE 3/20/07

SITE DEVELOPMENT PLAN
PATUXENT SQUARE APARTMENTS & RETAIL CENTER
5-STORY RETAIL AND APARTMENT BUILDING
PARCEL A AND NON-BUILDABLE PARCEL B
OF THE NORTH LAUREL SUBDIVISION
A RESUBDIVISION OF LOTS 1 THRU 10, BLOCK 4
AND 9,10 AND 19 THRU 22 & BLOCK 6
SITE AND UTILITY PLAN
BULK PARCEL A, A RESUBDIVISION OF
LOTS 1 THRU 10, BLOCK 4 AND LOTS 9, 10
AND 19 THRU 22, BLOCK 6, NORTH LAUREL PARK

TAX MAP 50 GRID 4,
6TH ELECTION DISTRICT

ROBERT H. VOGEL ENGINEERING, INC.
ENGINEERS • SURVEYORS • PLANNERS
8407 MAIN STREET
ELLICOTT CITY, MD 21043
TEL: 410.461.7666
FAX: 410.461.8961

STATE OF MARYLAND — ROBERT HARRIS VOGEL — No. 16193 — PROFESSIONAL ENGINEER — 3/20/07
ROBERT H VOGEL, PE #16193

DESIGN BY: RJ/RHV
DRAWN BY: RJ
CHECKED BY: RHV
DATE: 07-24-2007
SCALE: AS SHOWN
W.O. NO.: 04-11.00

SHEET 2 OF 12

SDP-06-50

LEGEND

- WETLAND BUFFER
- WETLAND BUFFER
- PUBLIC TREE MAINTENANCE EASEMENT
- 10 SIDEWALK SEE SHEET 10 OF 12 FOR DETAIL.
- REVERTIBLE EASEMENT SHA PLAT NO 54122. TYP. FOR ROUTE 1 COMMUNITY
- SCE STABILIZED CONSTRUCTION ENTRANCE
- LOD LIMIT OF DISTURBANCE
- SSF DOUBLE ROW SUPER SILT FENCE
- EARTHDIKE
- INLET PROTECTION
- SLOPES 25% > SOIL DIVIDE

ALL EARTH DIKES ARE TO BE PLACED IN WORKING ORDER AT THE END OF EACH WORKING DAY.

IMBRICATE SF/SSF IN 25' SEGMENTS AND CURL ENDS UPHILL BY 2' IN ELEVATION AS REQUIRED.

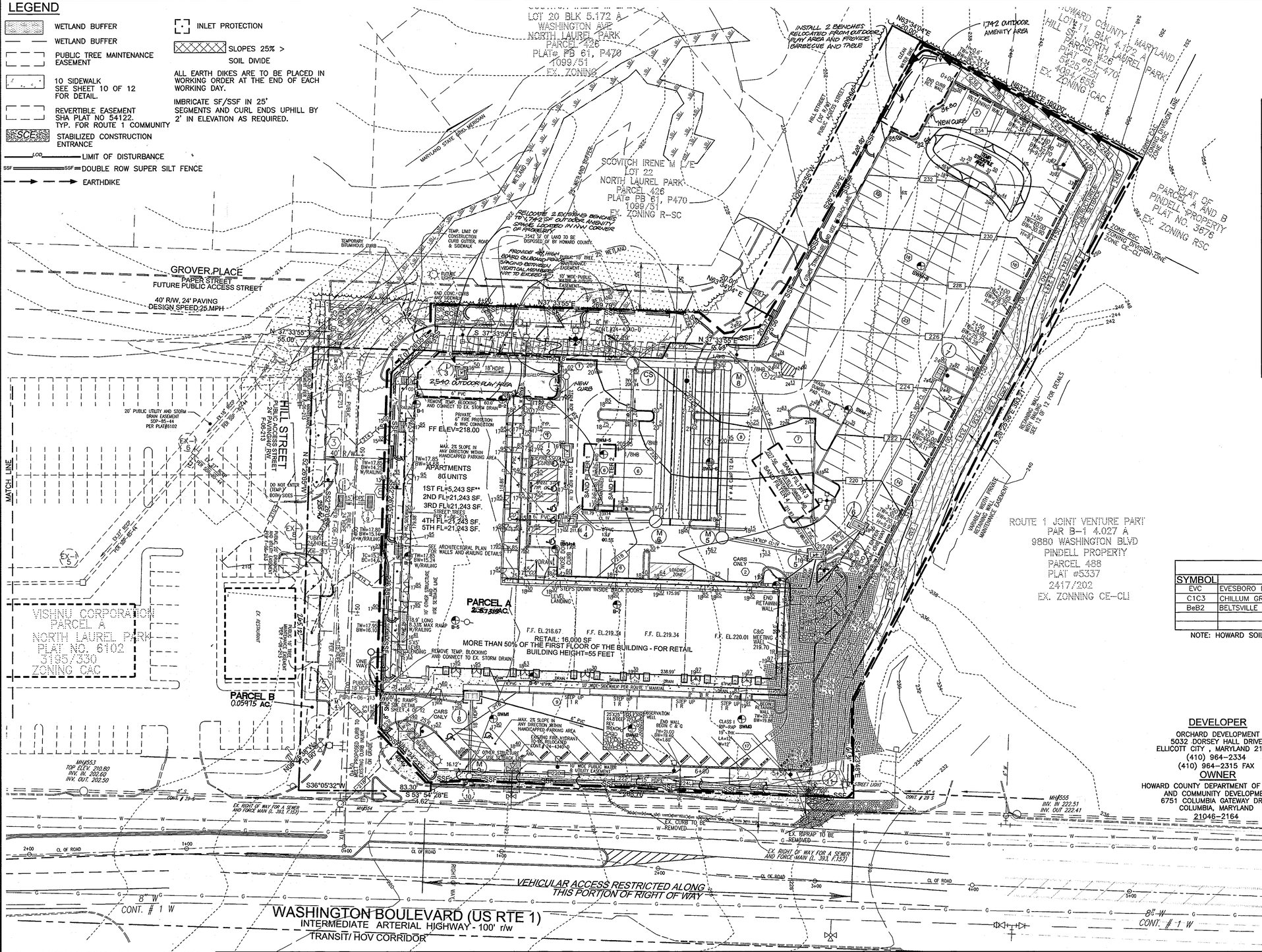

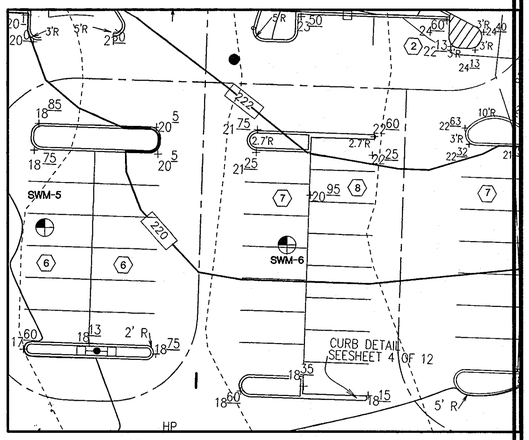

SOILS LEGEND			
SYMBOL	NAME / DESCRIPTION	K VALUE	TYPE
EVC	EVESBORO LOAMY SAND, 5% TO 15% SLOPE	.17	A
C1C3	CHILLUM GRAVELLY LOAM, 5%-10% SLOPES, SEVERELY ERODED	.43	B
BeB2	BELTSVILLE SILT LOAM, 1% TO 5% SLOPES, MODERATELY	.43	C

NOTE: HOWARD SOIL SURVEY, MAP NUMBER 26

APPROVED: HOWARD COUNTY HEALTH DEPARTMENT

COUNTY HEALTH OFFICER — DATE
HOWARD COUNTY HEALTH DEPARTMENT

NO.	REVISION	DATE
1	REVISE PLAN TO ADD OUTDOOR PLAY AREA AND RELOCATE OUTDOOR AMENITY AREA	5/29/2007

DEVELOPER
ORCHARD DEVELOPMENT
5032 DORSEY HALL DRIVE
ELLICOTT CITY , MARYLAND 21042
(410) 964-2334
(410) 964-2315 FAX
OWNER
HOWARD COUNTY DEPARTMENT OF HOUSING AND COMMUNITY DEVELOPMENT
6751 COLUMBIA GATEWAY DRIVE
COLUMBIA, MARYLAND
21046-2164

SITE DEVELOPMENT PLAN
PATUXENT SQUARE APARTMENTS & RETAIL CENTER

5-STORY RETAIL AND APARTMENT BUILDING
PARCEL A AND NON-BUILDABLE PARCEL B
OF THE NORTH LAUREL SUBDIVISION
A RESUBDIVISION OF LOTS 1 THRU 10, BLOCK 4
AND 9,10 AND 19 THRU 22 & BLOCK 6

GRADING AND SEDIMENT CONTROL PLAN

TAX MAP 50 GRID 4, 6TH ELECTION DISTRICT

BULK PARCEL A, A RESUBDIVISION OF LOTS 1 THRU 10, BLOCK 4 AND LOTS 9, 10 AND 19 THRU 22, BLOCK 6, NORTH LAUREL PARK

NOTE: WASHINGTON BOULEVARD (US ROUTE 1) IMPROVEMENTS ARE TO BE DONE UNDER FINAL PLAN (F-06-219) SHA PERMIT

PLAN
SCALE: 1"=30'

ENGINEER'S CERTIFICATE

"I HEREBY CERTIFY THAT THIS PLAN FOR EROSION AND SEDIMENT CONTROL REPRESENTS A PRACTICAL AND WORKABLE PLAN BASED ON MY PERSONAL KNOWLEDGE OF THE SITE CONDITIONS. THIS PLAN WAS PREPARED IN ACCORDANCE WITH THE REQUIREMENTS OF THE HOWARD SOIL CONSERVATION DISTRICT.

2/28/07
SIGNATURE OF ENGINEER — DATE
ROBERT H. VOGEL

APPROVED: DEPARTMENT OF PLANNING AND ZONING

CHIEF, DIVISION OF LAND DEVELOPMENT — DATE 3/20/07
CHIEF, DEVELOPMENT ENGINEERING DIVISION — DATE 3/13/07
DIRECTOR — DATE 3/20/07

DEVELOPER'S CERTIFICATE

"I/WE CERTIFY THAT ALL DEVELOPMENT AND/OR CONSTRUCTION WILL BE DONE IN ACCORDANCE TO THESE PLANS, AND THAT ANY RESPONSIBLE PERSONNEL INVOLVED IN THE CONSTRUCTION PROJECT WILL HAVE A CERTIFICATE OF ATTENDANCE AT A DEPARTMENT OF THE ENVIRONMENT APPROVED TRAINING PROGRAM FOR THE CONTROL OF SEDIMENT AND EROSION BEFORE BEGINNING THE PROJECT.

Michael B. Speedy 2/27/07
SIGNATURE OF DEVELOPER — DATE

REVIEWED FOR HOWARD SCD AND MEETS TECHNICAL REQUIREMENTS

USDA - NATURAL RESOURCES CONSERVATION SERVICE — DATE 3/9/07

THIS DEVELOPMENT PLAN IS APPROVED FOR SOIL EROSION AND SEDIMENT CONTROL BY THE HOWARD SOIL CONSERVATION DISTRICT

HOWARD SCD — DATE 3/9/07

ROBERT H. VOGEL ENGINEERING, INC.
ENGINEERS • SURVEYORS • PLANNERS
8407 MAIN STREET
ELLICOTT CITY, MD 21043
TEL: 410.461.7666
FAX: 410.461.8961

STATE OF MARYLAND — ROBERT HARRIS VOGEL — No. 16193 — PROFESSIONAL ENGINEER
ROBERT H VOGEL, PE #16193

DESIGN BY: RJ/RHV
DRAWN BY: RJ
CHECKED BY: RHV
DATE: 07-24-2007
SCALE: AS SHOWN
W.O. NO.: 04-11.00

SHEET 3 OF 12

SDP-06-50

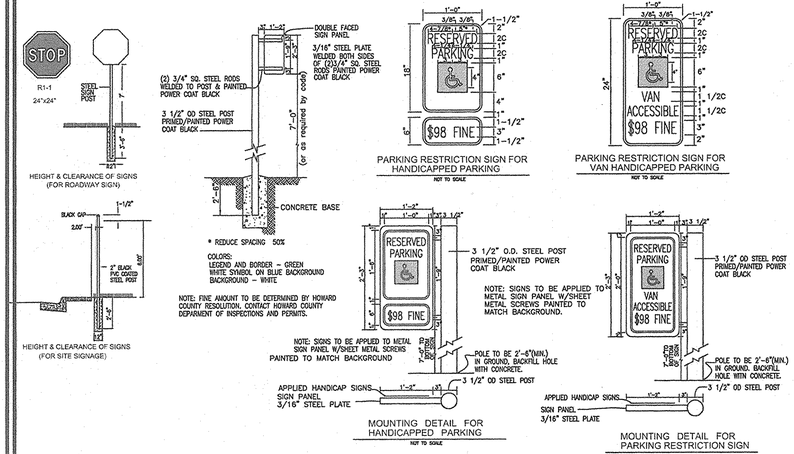

SIGNAGE DETAIL

NOT TO SCALE

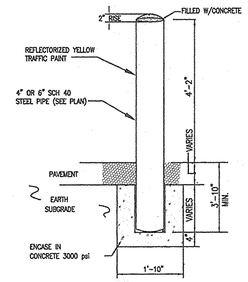

BOLLARD

NOT TO SCALE

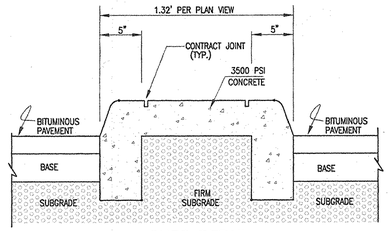

CURB DETAIL

NOT TO SCALE

CONCRETE SIDEWALK
HOWARD COUNTY STANDARD DETAIL R3.05

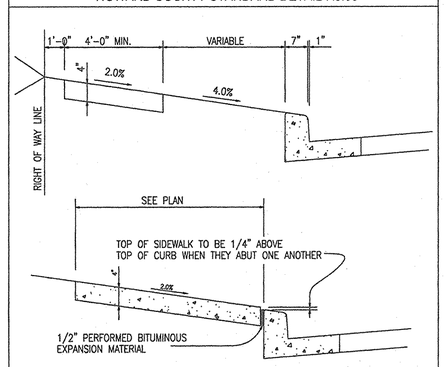

CONSTRUCTION SPECIFICATIONS

1. SIDEWALK TO BE SCRIBED IN 5'-0" MAXIMUM SQUARES.
2. EXPANSION JOINTS ACROSS THE SIDEWALK NOT TO BE MORE THAN 15' APART.
3. 1/2" PREFORMED BITUMINOUS EXPANSION MATERIAL IN EXPANSION JOINTS TO BE KEPT 1/4" BELOW SURFACE OF SIDEWALK.
4. CONCRETE TO BE MIX NUMBER 2.
5. WHERE SIDEWALK ABUTS CURB, SIDEWALK SHALL BE 1/4" ABOVE CURB WITH 1/2" PREFORMED BITUMINOUS EXPANSION MATERIAL BETWEEN SIDEWALK AND CURB.
6. ON LONGITUDINAL SIDEWALK GRADES OF 5% OR GREATER, A CONCRETE HEADER, 6' THICK AND 6" DEEP BELOW THE NORMAL 4" SIDEWALK THICKNESS SHALL CONSTRUCTED FOR THE FULL WIDTH OF THE SIDEWALK AT INTERVALS\ OF 48 FEET. THE HEADERS SHALL BE PLACED AT EXPANSION JOINT LOCATIONS AND SHALL BE MONOLITHIC WITH THE CURB.
7. SIDEWALK WIDTH ADJACENT TO CURB SHALL BE 5'-0" MINIMUM EXCEPT SIDEWALK ADJACENT TO CURB IN CUL-DE-SAC BULBS MAY BE 4.0' WIDE.
8. SIDEWALK LOCATED 2' OR MORE FROM CURB MAY BE 4'-0" IN WIDTH WITH A 5'X5' PAVED SECTION PLACED 200' APART.

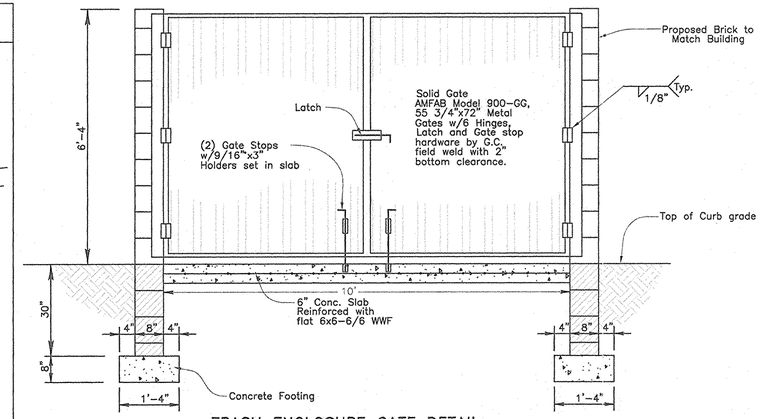

TRASH ENCLOSURE GATE DETAIL

NO SCALE

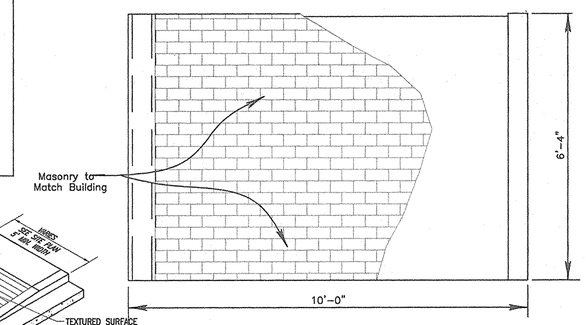

TRASH ENCLOSURE ELEVATION

NOT TO SCALE

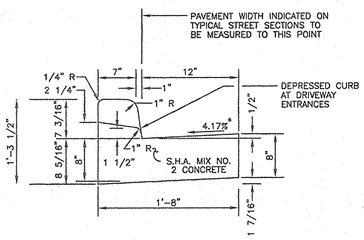

NOTE : DEPRESSED CURB IN HANDICAP ACCESSABLE AREAS SHALL HAVE A 0.0417'(1/2") RISE FROM PAVING TO TOP OF CURB.

STANDARD COMBINATION CURB AND GUTTER

HOWARD COUNTY STANDARD R-3.01
NOT TO SCALE

* GUTTER PAN AT THE MEDIAN EDGE OF INTERMEDIATE ARTERIAL OR THE HIGH SIDE OF SUPERELEVATED SECTIONS SHALL BE SLOPED AT THE SAME RATE AND IN THE SAME DIRECTION AS THE PAVEMENT. MATCH PAVEMENT CROSS SLOPE WHEN CURB IS LOCATED ON THE LOW SIDE OF SUPERELEVATED SECTION AND THE RATE OF SUPERELEVATION IS GREATER THAN 3% FOR MODIFIED CURB AND GUTTER.

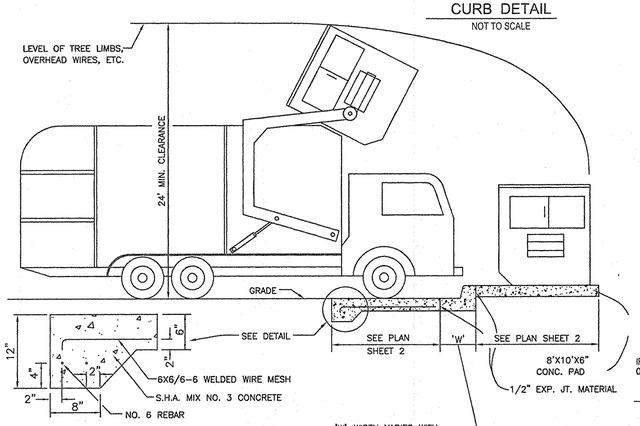

SOLID WASTE SERVICE PAD

HOWARD COUNTY STD. R 11.01
NOT TO SCALE
FOR DUMPSTER ENCLOSURE DETAIL SEE ARCHITECTURAL PLANS

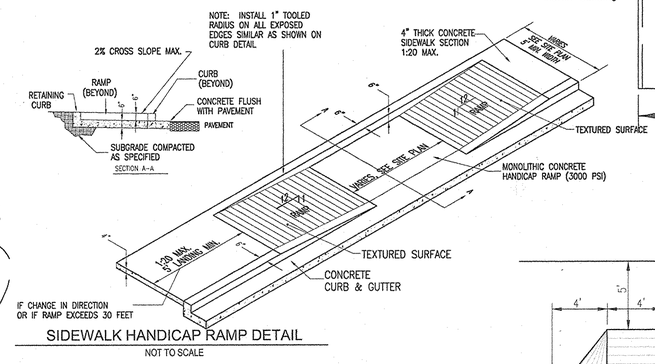

SIDEWALK HANDICAP RAMP DETAIL

NOT TO SCALE

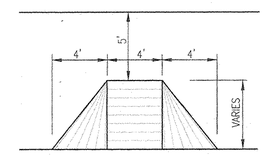

SIDEWALK RAMP

NOT TO SCALE

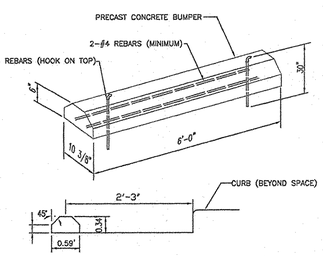

CONCRETE WHEEL STOP

NOT TO SCALE

UNDERGROUND SEND FILTERS:

THE STRUCTURE MUST BE DESIGNED BY A STRUCTURAL ENGINEER PRIOR TO CONSTRUCTION. THIS PERTAINS ALL CUSTOM STRUCTURES.

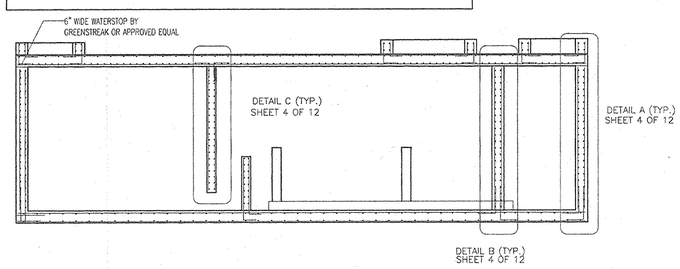

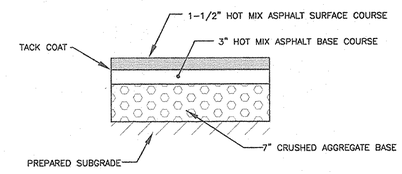

BITUMINOUS PAVEMENT (MEDIUM DUTY)

PER GEOTECHNICAL REPORT BY ECS LLC MID-ATLANTIC

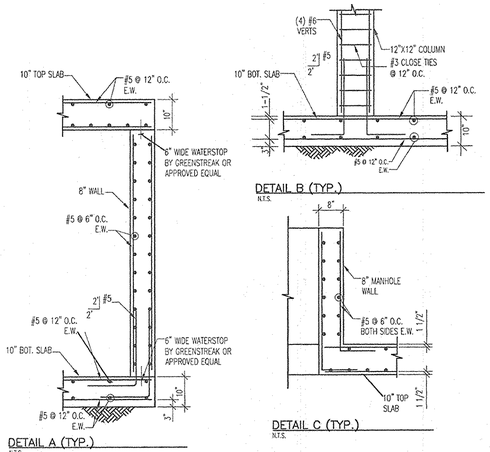

WALL DETAILS FOR SANDFILTERS

DEVELOPER

ORCHARD DEVELOPMENT
5032 DORSEY HALL DRIVE
ELLICOTT CITY , MARYLAND 21042
(410) 964-2334
(410) 964-2315 FAX

OWNER

HOWARD COUNTY DEPARTMENT OF HOUSING AND COMMUNITY DEVELOPMENT
6751 COLUMBIA GATEWAY DRIVE
COLUMBIA, MARYLAND
21046-2164

APPROVED: HOWARD COUNTY HEALTH DEPARTMENT

COUNTY HEALTH OFFICER
HOWARD COUNTY HEALTH DEPARTMENT — DATE

NO.	REVISION	DATE

SITE DEVELOPMENT PLAN
PATUXENT SQUARE APARTMENTS & RETAIL CENTER
5-STORY RETAIL AND APARTMENT BUILDING
PARCEL A AND NON-BUILDABLE PARCEL B
OF THE NORTH LAUREL SUBDIVISION
A RESUBDIVISION OF LOTS 1 THRU 10, BLOCK 4
AND 9,10 AND 19 THRU 22 & BLOCK 6
SITE DETAILS
BULK PARCEL A, A RESUBDIVISION OF
LOTS 1 THRU 10, BLOCK 4 AND LOTS 9, 10
AND 19 THRU 22, BLOCK 6, NORTH LAUREL PARK

TAX MAP 50 GRID 4,
6TH ELECTION DISTRICT

ROBERT H. VOGEL ENGINEERING, INC.
ENGINEERS • SURVEYORS • PLANNERS
8407 MAIN STREET
ELLICOTT CITY, MD 21043
TEL: 410.461.7666
FAX: 410.461.8961

APPROVED: DEPARTMENT OF PLANNING AND ZONING

CHIEF, DIVISION OF LAND DEVELOPMENT — DATE 3/20/07

CHIEF, DEVELOPMENT ENGINEERING DIVISION — DATE 3/13/07

DIRECTOR — DATE 3/29/07

STATE OF MARYLAND ROBERT HARRIS VOGEL No. 16193 PROFESSIONAL ENGINEER 3/29/07
ROBERT H VOGEL, PE #16193

DESIGN BY: RJ/RH-V
DRAWN BY: RJ
CHECKED BY: RHV
DATE: 07-24-2007
SCALE: AS SHOWN
W.O. NO.: 04-11.00

SHEET 4 OF 12

SDP-06-50

DETAIL 18 - SEDIMENT BASIN BAFFLES

PLAN VIEWS

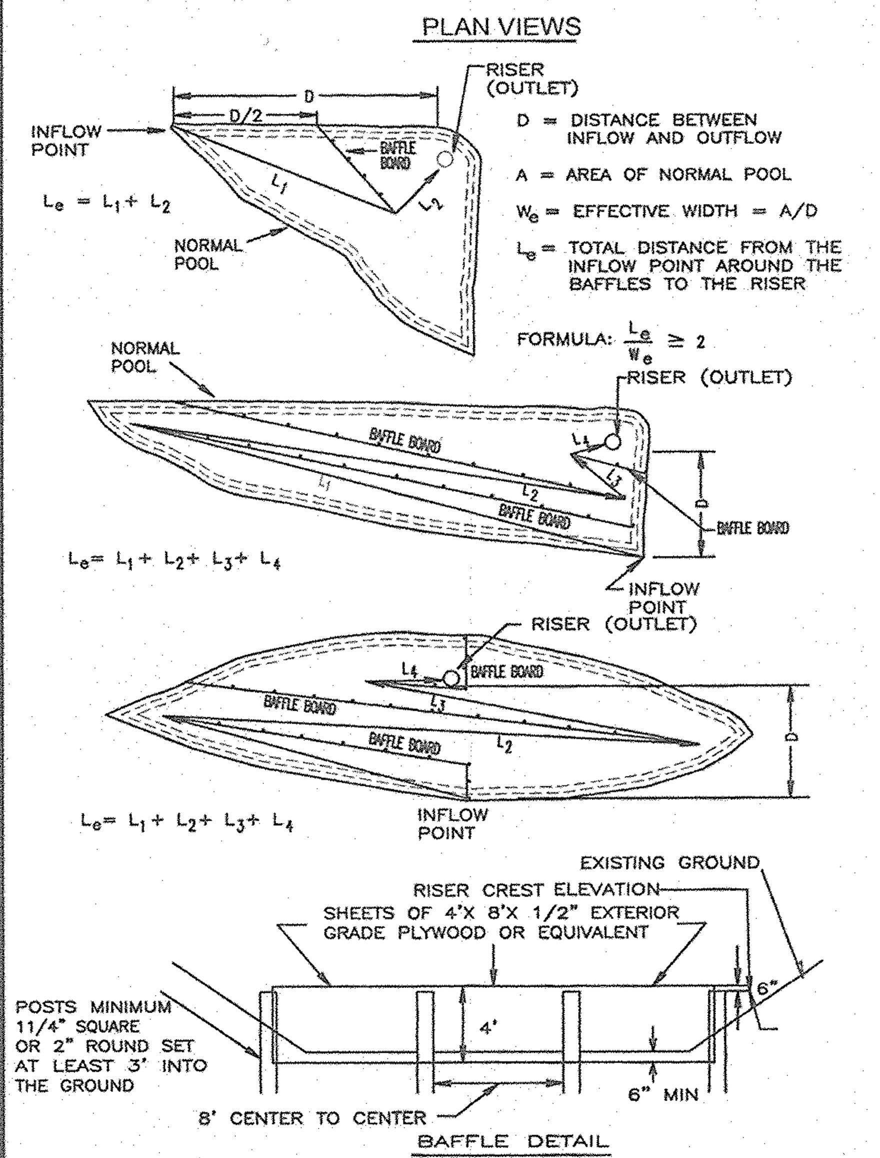

U.S. DEPARTMENT OF AGRICULTURE SOIL CONSERVATION SERVICE	PAGE C - 10 - 28	MARYLAND DEPARTMENT OF ENVIRONMENT WATER MANAGEMENT ADMINISTRATION

DETAIL 1 - EARTH DIKE

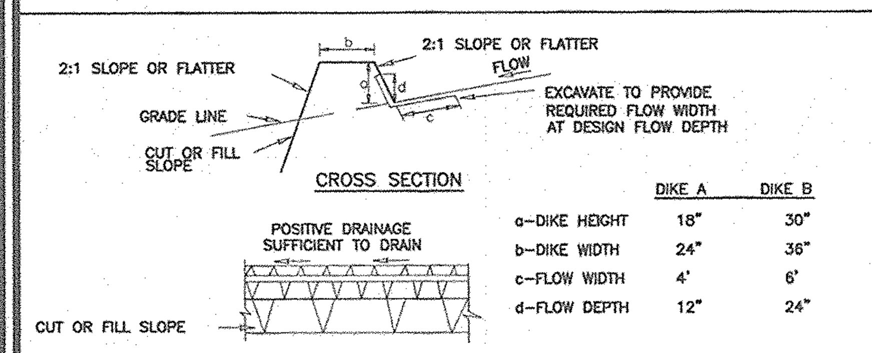

	DIKE A	DIKE B
a-DIKE HEIGHT	18"	30"
b-DIKE WIDTH	24"	36"
c-FLOW WIDTH	4'	6'
d-FLOW DEPTH	12"	24"

STANDARD SYMBOL A-2 B-3

FLOW CHANNEL STABILIZATION
GRADE 0.5% MIN. 10% MAX.

1. SEED AND COVER WITH STRAW MULCH.
2. SEED AND COVER WITH EROSION CONTROL MATTING OR LINE WITH SOD.
3. 4" - 7" STONE OR RECYCLED CONCRETE EQUIVALENT PRESSED INTO THE SOIL 7" MINIMUM

CONSTRUCTION SPECIFICATIONS

1. ALL TEMPORARY EARTH DIKES SHALL HAVE UNINTERRUPTED POSITIVE GRADE TO AN OUTLET. SPOT ELEVATIONS MAY BE NECESSARY FOR GRADES LESS THAN 1%.
2. RUNOFF DIVERTED FROM A DISTURBED AREA SHALL BE CONVEYED TO A SEDIMENT TRAPPING DEVICE.
3. RUNOFF DIVERTED FROM AN UNDISTURBED AREA SHALL OUTLET DIRECTLY INTO AN UNDISTURBED, STABILIZED AREA AT A NON-EROSIVE VELOCITY.
4. ALL TREES, BRUSH, STUMPS, OBSTRUCTIONS, AND OTHER OBJECTIONAL MATERIAL SHALL BE REMOVED AND DISPOSED OF SO AS NOT TO INTERFERE WITH THE PROPER FUNCTIONING OF THE DIKE.
5. THE DIKE SHALL BE EXCAVATED OR SHAPED TO LINE, GRADE AND CROSS SECTION AS REQUIRED TO MEET THE CRITERIA SPECIFIED HEREIN AND BE FREE OF BANK PROJECTIONS OR OTHER IRREGULARITIES WHICH WILL IMPEDE NORMAL FLOW.
6. FILL SHALL BE COMPACTED BY EARTH MOVING EQUIPMENT.
7. ALL EARTH REMOVED AND NOT NEEDED FOR CONSTRUCTION SHALL BE PLACED SO THAT IT WILL NOT INTERFERE WITH THE FUNCTIONING OF THE DIKE.
8. INSPECTION AND MAINTENANCE MUST BE PROVIDED PERIODICALLY AND AFTER EACH RAIN EVENT.

U.S. DEPARTMENT OF AGRICULTURE SOIL CONSERVATION SERVICE	PAGE A - 1 - 6	MARYLAND DEPARTMENT OF ENVIRONMENT WATER MANAGEMENT ADMINISTRATION

DETAIL 6 - GABION INFLOW PROTECTION

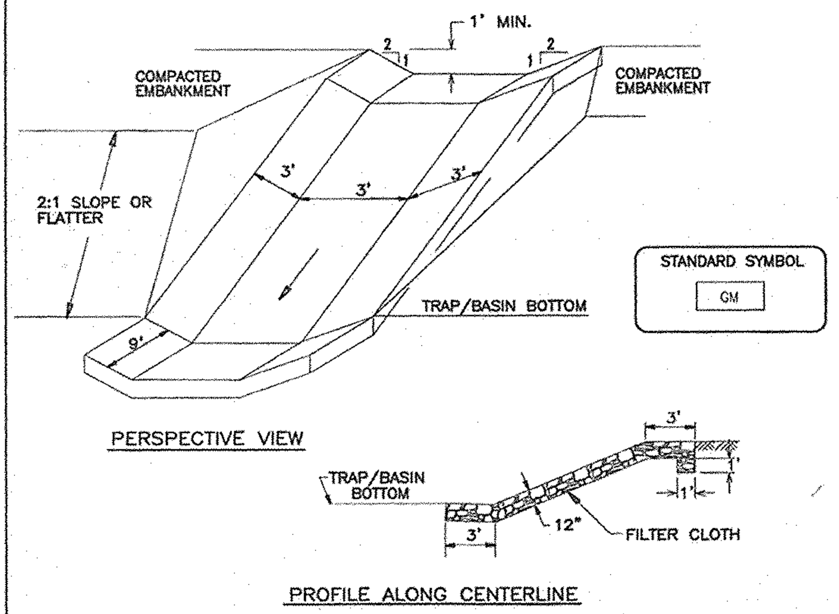

STANDARD SYMBOL GM

CONSTRUCTION SPECIFICATIONS

1. GABION INFLOW PROTECTION SHALL BE CONSTRUCTED OF 9' X 3' X 9" GABION BASKETS FORMING A TRAPEZOIDAL CROSS SECTION 1' DEEP, WITH 2:1 SIDE SLOPES, AND A 3' BOTTOM WIDTH.
2. GEOTEXTILE CLASS C SHALL BE INSTALLED UNDER ALL GABION BASKETS.
3. THE STONE USED TO FILL THE GABION BASKETS SHALL BE 4" - 7".
4. GABIONS SHALL BE INSTALLED IN ACCORDANCE WITH MANUFACTURERS RECOMMENDATIONS.
5. GABION INFLOW PROTECTION SHALL BE USED WHERE CONCENTRATED FLOW IS PRESENT ON SLOPES STEEPER THAN 4:1.

U.S. DEPARTMENT OF AGRICULTURE SOIL CONSERVATION SERVICE	PAGE B - 7 - 2	MARYLAND DEPARTMENT OF ENVIRONMENT WATER MANAGEMENT ADMINISTRATION

SEDIMENT CONTROL NOTES

1. A MINIMUM OF 48 HOURS NOTICE MUST BE GIVEN TO THE HOWARD COUNTY DEPARTMENT OF INSPECTION, LICENSE AND PERMITS SEDIMENT CONTROL DIVISION PRIOR TO THE START OF ANY CONSTRUCTION (313-1855).
2. ALL VEGETATION AND STRUCTURAL PRACTICES ARE TO BE INSTALLED ACCORDING TO THE PROVISIONS OF THIS PLAN AND ARE TO BE IN CONFORMANCE WITH THE 1994 MARYLAND STANDARDS AND SPECIFICATIONS FOR SOIL EROSION AND SEDIMENT CONTROL. AND REVISIONS THERETO.
3. FOLLOWING INITIAL SOIL DISTURBANCE OR REDISTURBANCE, PERMANENT OR TEMPORARY STABILIZATION SHALL BE COMPLETED WITHIN: (A) 7 CALENDAR DAYS FOR ALL PERIMETER SEDIMENT CONTROL STRUCTURES, DIKES, PERIMETER SLOPES, AND ALL SLOPES GREATER THAN 3:1, (B) 14 DAYS AS TO ALL OTHER DISTURBED OR GRADED AREAS ON THE PROJECT SITE.
4. ALL SEDIMENT TRAPS/BASINS SHOWN MUST BE FENCED AND WARNING SIGNS POSTED AROUND THEIR PERIMETER IN ACCORDANCE WITH VOL. 1, CHAPTER 7, HOWARD COUNTY DESIGN MANUAL, STORM DRAINAGE.
5. ALL DISTURBED AREAS MUST BE STABILIZED WITHIN THE TIME PERIOD SPECIFIED ABOVE IN ACCORDANCE WITH THE 1994 MARYLAND STANDARDS AND SPECIFICATIONS FOR SOIL EROSION AND SEDIMENT CONTROL FOR PERMANENT SEEDING, SOD, TEMPORARY SEEDING, AND MULCHING (SEC. G). TEMPORARY STABILIZATION WITH MULCH ALONE SHALL BE DONE WHEN RECOMMENDED SEEDING DATES DO NOT ALLOW FOR PROPER GERMINATION AND ESTABLISHMENT OF GRASSES.
6. ALL SEDIMENT CONTROL STRUCTURES ARE TO REMAIN IN PLACE AND ARE TO BE MAINTAINED IN OPERATIVE CONDITION UNTIL PERMISSION FOR THEIR REMOVAL HAS BEEN OBTAINED FROM THE HOWARD COUNTY SEDIMENT CONTROL INSPECTOR.
7. SITE ANALYSIS :

	SUBDIVISION PARCEL
TOTAL AREA	3.30 ACRES
AREA DISTURBED	2.97 ACRES
AREA TO BE ROOFED OR PAVED	2.52 ACRES
AREA TO BE VEGETATIVELY STABILIZED	0.86 ACRES
TOTAL CUT	30,000 ± CY
TOTAL FILL	000,000 ± CY
OFFSITE WASTE/BORROW AREA LOCATION	

* TO BE DETERMINED BY CONTRACTOR, WITH PRE-APPROVAL OF THE SEDIMENT CONTROL INSPECTOR WITH AN APPROVED AND ACTIVE GRADING PERMIT

8. ANY SEDIMENT CONTROL PRACTICE WHICH IS DISTURBED BY GRADING ACTIVITY FOR PLACEMENT OF UTILITIES MUST BE REPAIRED ON THE SAME DAY OF DISTURBANCE.
9. ADDITIONAL SEDIMENT CONTROLS MUST BE PROVIDED, IF DEEMED NECESSARY BY THE HOWARD COUNTY SEDIMENT CONTROL INSPECTOR.

AGENCY SHALL BE REQUESTED UPON COMPLETION OF INSTALLATION OF PERIMETER EROSION AND SEDIMENT CONTROLS, BUT BEFORE PROCEEDING WITH ANY OTHER EARTH DISTURBANCE OR GRADING. OTHER BUILDING OR GRADING INSPECTION APPROVALS MAY NOT BE AUTHORIZED UNTIL THIS INITIAL APPROVAL BY THE INSPECTION AGENCY IS MADE.

11. TRENCHES FOR THE CONSTRUCTION OF UTILITIES IS LIMITED TO THREE PIPE LENGTHS OR THAT WHICH SHALL BE BACK-FILLED AND STABILIZED WITHIN ONE WORKING DAY, WHICHEVER IS SHORTER.

SEQUENCE OF CONSTRUCTION	DURATION
1. OBTAIN GRADING PERMIT. MDE PERMIT/TRACKING # 200664292-06-NT.	
2. NOTIFY HOWARD COUNTY BUREAU OF INSPECTIONS AND PERMITS (313-1880) AT LEAST 24 HOURS BEFORE STARTING ANY WORK.	
3. CONSTRUCT STABILIZED CONSTRUCTION ENTRANCE.	4 DAYS
4. INSTALL PERIMETER SUPER SILT FENCE AND ALL REMAINING PERIMETER CONTROLS.	6 DAYS
5. WITH INSPECTOR'S APPROVAL, BEGIN CLEARING AND GRUBBING, MASS GRADING AND BUILDING CONSTRUCTION. EXISTING BUILDING MAY REMAIN UNTIL BASE PAVING IS ACHIEVED.	3 MONTHS
6. GRADE SITE TO SUB-BASE AS SITE IS GRADED. BEGIN INSTALLATION OF STORM DRAIN SYSTEMS, WATER & SEWER, AND STORM WATER MANAGEMENT. WITH INSPECTOR'S APPROVAL, GRADE ROADS TO SUB GRADE.	3 MONTHS
7. WITH ROADS GRADED TO SUB-BASE AND INLETS ARE IN PLACE BEGIN INSTALLATION OF CURB AND GUTTER.	3 WEEKS
8. BEGIN PAVING ROADS AND INSTALL SIDEWALKS.	3 WEEKS
9. STABILIZE THE SITE WITH THE INSPECTOR'S APPROVAL REMOVE TEMPORARY BRICK BULKHEAD DAM IN STORM DRAIN BETWEEN M-1 AND EXISTING INLET	2 WEEKS
10. INSTALL LANDSCAPING AS SHOWN ON LANDSCAPE PLAN.	2 WEEK
11. WITH PERMISSION OF THE INSPECTOR, FLUSH STORM DRAIN SYSTEM AND REMOVE ALL SEDIMENT CONTROLS FROM THE SITE. STABILIZED ALL DISTURBED AREAS IMMEDIATELY AND REMOVE ALL JUNK, TRASH AND DEBRIS FROM SITE.	1 WEEK

NOTES:

DURING GRADING AND AFTER EACH RAINFALL, THE CONTRACTOR SHALL INSPECT AND PROVIDE THE NECESSARY MAINTENANCE ON THE SEDIMENT AND EROSION CONTROL MEASURES SHOWN HEREON.

FOLLOWING INITIAL SOIL DISTURBANCE OR REDISTURBANCE PERMANENT OR TEMPORARY STABILIZATION SHALL BE COMPLIED WITH:
A. 7 CALENDAR DAYS FOR ALL PERIMETER SEDIMENT CONTROL STRUCTURES, DIKES, SWALES, DITCH PERIMETER SLOPES SLOPES AND ALL SLOPES GREATER THAN 3:1.
B. 14 CALENDAR DAYS FOR ALL OTHER DISTURBED AREAS.

DETAIL 23A - STANDARD INLET PROTECTION

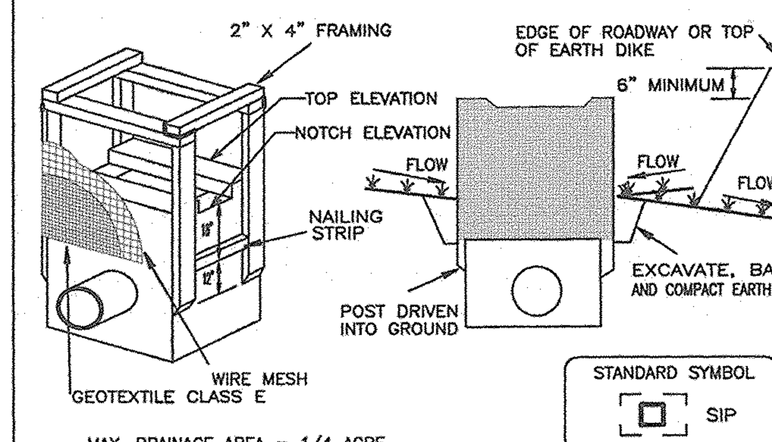

STANDARD SYMBOL SIP

MAX. DRAINAGE AREA = 1/4 ACRE

CONSTRUCTION SPECIFICATIONS

1. EXCAVATE COMPLETELY AROUND THE INLET TO A DEPTH OF 18" BELOW THE notch elevation.
2. DRIVE THE 2" X 4" CONSTRUCTION GRADE LUMBER POSTS 1' INTO THE GROUND AT EACH CORNER OF THE INLET. PLACE NAIL STRIPS BETWEEN THE POSTS ON THE ENDS OF THE INLET. ASSEMBLE THE TOP PORTION OF THE 2" X 4" FRAME USING THE OVERLAP JOINT SHOWN ON DETAIL 23A. THE TOP OF THE FRAME (WEIR) MUST BE 6" BELOW ADJACENT ROADWAYS WHERE FLOODING AND SAFETY ISSUES MAY ARISE.
3. STRETCH THE 1/2" X 1/2" WIRE MESH TIGHTLY AROUND THE FRAME AND FASTEN SECURELY. THE ENDS MUST MEET AND OVERLAP AT A post.
4. STRETCH THE GEOTEXTILE CLASS E TIGHTLY OVER THE WIRE MESH WITH THE GEOTIXTILE EXTENDING FROM THE TOP OF THE FRAME TO 18" BELOW THE INLET NOTCH ELEVATION. FASTEN THE GEOTEXTILE FIRMLY TO THE FRAME. THE ENDS OF THE GEOTEXTILE MUST MEET AT A POST, BE OVERLAPPED AND FOLDED, THEN FASTENED DOWN.
5. BACKFILL AROUND THE INLET IN COMPACTED 6" LAYERS UNTIL THE LAYER OF EARTH IS LEVEL WITH THE NOTCH ELEVATION ON THE ENDS AND TOP ELEVATION ON THE SIDES.
6. IF THE INLET IS NOT IN A SUMP, CONSTRUCT A COMPACTED EARTH DIKE ACROSS THE DITCH LINE DIRECTLY BELOW IT. THE TOP OF THE EARTH DIKE SHOULD BE AT LEAST 6" HIGHER THAN THE TOP OF THE FRAME.
7. THE STRUCTURE MUST BE INSPECTED PERIODICALLY AND AFTER EACH RAIN AND THE GEOTEXTILE REPLACED WHEN IT BECOMES CLOGGED.

U.S. DEPARTMENT OF AGRICULTURE SOIL CONSERVATION SERVICE	PAGE E - 16 - 5	MARYLAND DEPARTMENT OF ENVIRONMENT WATER MANAGEMENT ADMINISTRATION

DETAIL 33 - SUPER SILT FENCE

NOTE: FENCE POST SPACING SHALL NOT EXCEED 10' CENTER TO CENTER

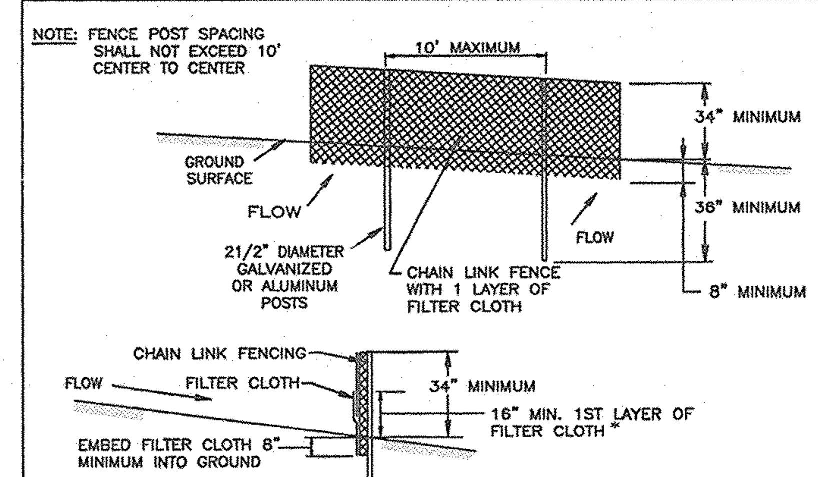

* IF MULTIPLE LAYERS ARE REQUIRED TO ATTAIN 42"

STANDARD SYMBOL SSF

CONSTRUCTION SPECIFICATIONS

1. FENCING SHALL BE 42" IN HEIGHT AND CONSTRUCTED IN ACCORDANCE WITH THE LATEST MARYLAND STATE HIGHWAY DETAILS FOR CHAIN LINK FENCING. THE SPECIFICATION FOR A 6' FENCE SHALL BE USED, SUBSTITUTING 42" FABRIC AND 6' LENGTH POSTS.
2. CHAIN LINK FENCE SHALL BE FASTENED SECURELY TO THE FENCE POSTS WITH WIRE TIES. THE LOWER TENSION WIRE, BRACE AND TRUSS RODS, DRIVE ANCHORS AND POST CAPS ARE NOT REQUIRED EXCEPT ON THE ENDS OF THE FENCE.
3. FILTER CLOTH SHALL BE FASTENED SECURELY TO THE CHAIN LINK FENCE WITH TIES SPACED EVERY 24" AT THE TOP AND MID SECTION.
4. FILTER CLOTH SHALL BE EMBEDDED A MINIMUM OF 8" INTO THE GROUND.
5. WHEN TWO SECTIONS OF FILTER CLOTH ADJOIN EACH OTHER, THEY SHALL BE OVERLAPPED BY 6" AND FOLDED.
6. MAINTENANCE SHALL BE PERFORMED AS NEEDED AND SILT BUILDUPS REMOVED WHEN "BULGES" DEVELOP IN THE SILT FENCE, OR WHEN SILT REACHES 50% OF FENCE HEIGHT
7. FILTER CLOTH SHALL BE FASTENED SECURELY TO EACH FENCE POST WITH WIRE TIES OR STAPLES AT TOP AND MID SECTION AND SHALL MEET THE FOLLOWING REQUIREMENTS FOR GEOTEXTILE CLASS F:

TENSILE STRENGTH	50 LBS/IN (MIN.)	TEST: MSMT 509
TENSILE MODULUS	20 LBS/IN (MIN.)	TEST: MSMT 509
FLOW RATE	0.3 GAL/FT²/MINUTE (MAX.)	TEST: MSMT 322
FILTERING EFFICIENCY	75% (MIN.)	TEST: MSMT 322

U.S. DEPARTMENT OF AGRICULTURE SOIL CONSERVATION SERVICE	PAGE H - 26 - 3	MARYLAND DEPARTMENT OF ENVIRONMENT WATER MANAGEMENT ADMINISTRATION

DETAIL 30 - EROSION CONTROL MATTING

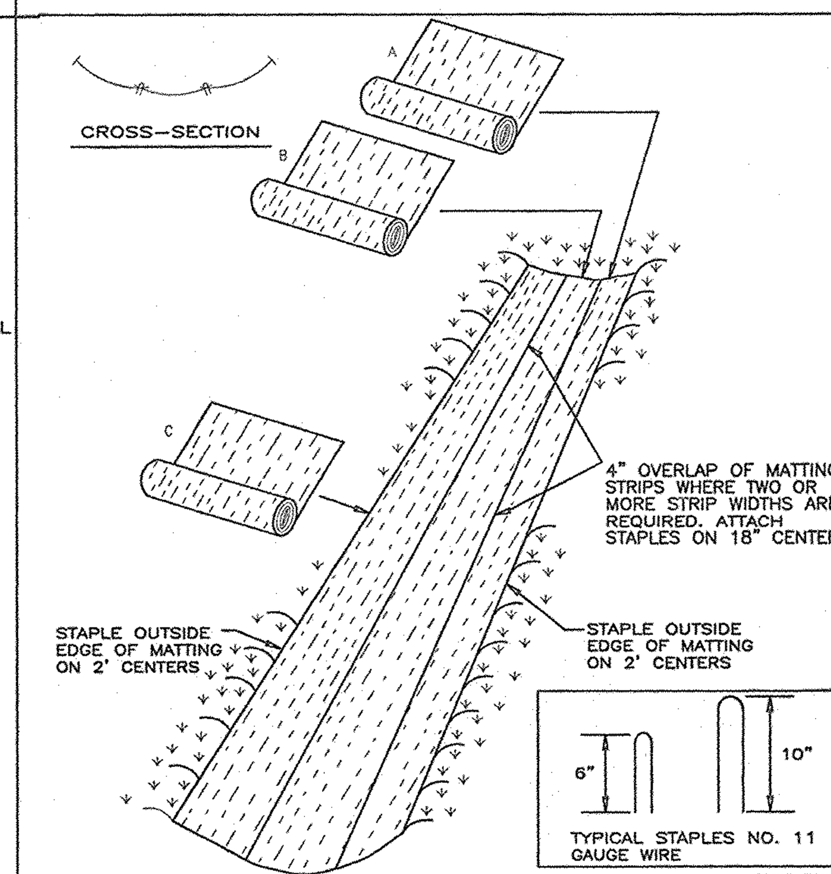

U.S. DEPARTMENT OF AGRICULTURE SOIL CONSERVATION SERVICE	PAGE G - 22 - 2	MARYLAND DEPARTMENT OF ENVIRONMENT WATER MANAGEMENT ADMINISTRATION

EROSION CONTROL MATTING

CONSTRUCTION SPECIFICATIONS

1. KEY-IN THE MATTING BY PLACING THE TOP ENDS OF THE MATTING IN A NARROW TRENCH, 6" IN DEPTH. BACKFILL THE TRENCH AND TAMP FIRMLY TO CONFORM TO THE CHANNEL CROSS-SECTION. SECURE WITH A ROW OF STAPLES ABOUT 4" DOWN SLOPE FROM THE TRENCH. SPACING BETWEEN STAPLES IS 6".
2. STAPLE THE 4" OVERLAP IN THE CHANNEL CENTER USING AN 18" SPACING BETWEEN STAPLES.
3. BEFORE STAPLING THE OUTER EDGES OF THE MATTING, MAKE SURE THE MATTING IS SMOOTH AND IN FIRM CONTACT WITH THE SOIL.
4. STAPLES SHALL BE PLACED 2' APART WITH 4 ROWS FOR EACH STRIP, 2 OUTER ROWS, AND 2 ALTERNATING ROWS DOWN THE CENTER.
5. WHERE ONE ROLL OF MATTING ENDS AND ANOTHER BEGINS, THE END OF THE TOP STRIP SHALL OVERLAP THE UPPER END OF THE LOWER STRIP BY 4", SHIPLAP FASHION. REINFORCE THE OVERLAP WITH A DOUBLE ROW OF STAPLES SPACED 6" APART IN A STAGGERED PATTERN ON EITHER SIDE.
6. THE DISCHARGE END OF THE MATTING LINER SHOULD BE SIMILARLY SECURED WITH 2 DOUBLE ROWS OF STAPLES.

NOTE: IF FLOW WILL ENTER FROM THE EDGE OF THE MATTING THEN THE AREA EFFECTED BY THE FLOW MUST BE KEYED-IN.

U.S. DEPARTMENT OF AGRICULTURE SOIL CONSERVATION SERVICE	PAGE G - 22 - 2A	MARYLAND DEPARTMENT OF ENVIRONMENT WATER MANAGEMENT ADMINISTRATION

DETAIL 24 - STABILIZED CONSTRUCTION ENTRANCE

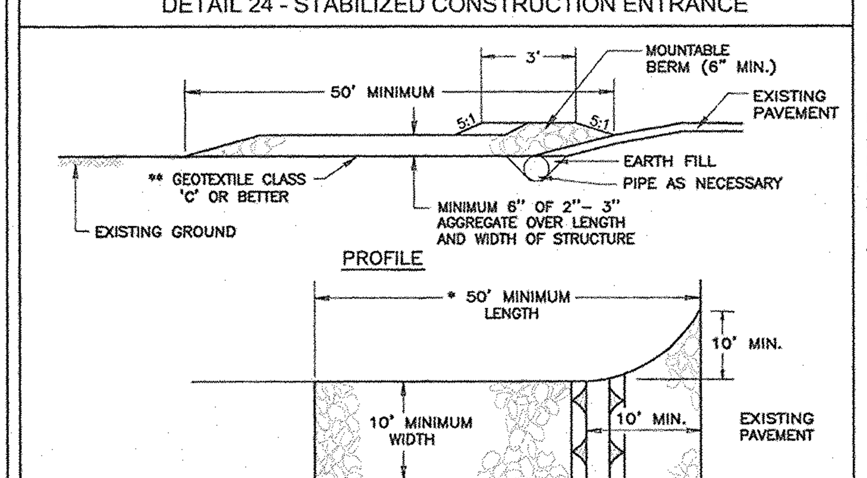

STANDARD SYMBOL SCE

CONSTRUCTION SPECIFICATION

1. LENGTH - MINIMUM OF 50' (* 30' FOR A SINGLE RESIDENCE LOT).
2. WIDTH - 10' MINIMUM, SHOULD BE FLARED AT THE EXISTING ROAD TO PROVIDE A TURNING RADIUS.
3. GEOTEXTILE FABRIC (FILTER CLOTH) SHALL BE PLACED OVER THE EXISTING GROUND PRIOR TO PLACING STONE. ** THE PLAN APPROVAL AUTHORITY MAY NOT REQUIRE SINGLE FAMILY RESIDENCES TO USE GEOTEXTILE.
4. STONE - CRUSHED AGGREGATE (2" TO 3") OR RECLAIMED OR RECYCLED CONCRETE EQUIVALENT SHALL BE PLACED AT LEAST 6" DEEP OVER THE LENGTH AND WIDTH OF THE ENTRANCE.
5. SURFACE WATER - ALL SURFACE WATER FLOWING TO OR DIVERTED TOWARD CONSTRUCTION ENTRANCES SHALL BE PIPED THROUGH THE ENTRANCE, MAINTAINING POSITIVE DRAINAGE. PIPE INSTALLED THROUGH THE STABILIZED CONSTRUCTION ENTRANCE SHALL BE PROTECTED WITH A MOUNTABLE BERM WITH 5:1 SLOPES AND A MINIMUM OF 6" OF STONE OVER THE PIPE. PIPE HAS TO BE SIZED ACCORDING TO THE DRAINAGE. WHEN THE SCE IS LOCATED AT A HIGH SPOT AND HAS NO DRAINAGE TO CONVEY, A PIPE WILL NOT BE NECESSARY. PIPE SHOULD BE SIZED ACCORDING TO THE AMOUNT OF RUNOFF TO BE CONVEYED. A 6" MINIMUM WILL BE REQUIRED.
6. LOCATION - A STABILIZED CONSTRUCTION ENTRANCE SHALL BE LOCATED AT EVERY POINT WHERE CONSTRUCTION TRAFFIC ENTERS OR LEAVES A CONSTRUCTION SITE. VEHICLES LEAVING THE SITE MUST TRAVEL OVER THE ENTIRE LENGTH OF THE STABILIZED CONSTRUCTION ENTRANCE.

U.S. DEPARTMENT OF AGRICULTURE SOIL CONSERVATION SERVICE	PAGE F - 17 - 3	MARYLAND DEPARTMENT OF ENVIRONMENT WATER MANAGEMENT ADMINISTRATION

DETAIL 20A - REMOVABLE PUMPING STATION

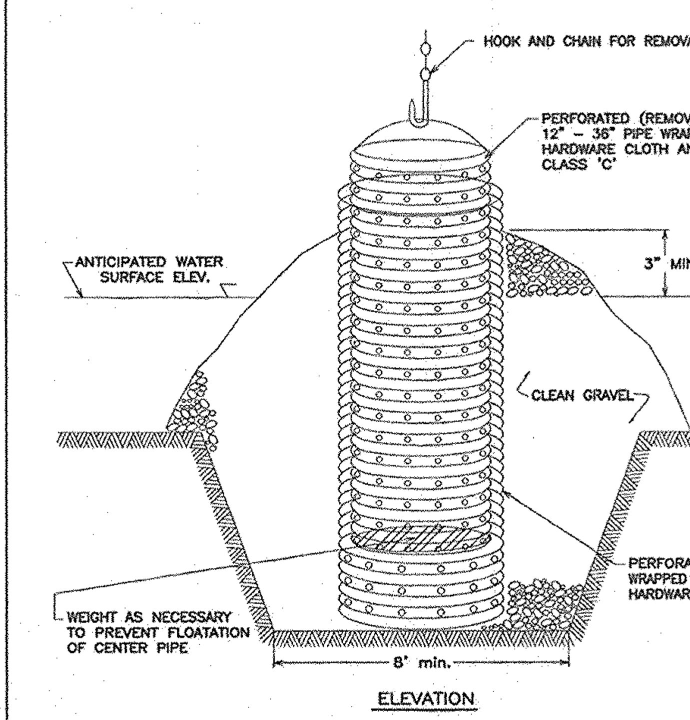

ELEVATION

CONSTRUCTION SPECIFICATIONS

1. THE OUTER PIPE SHOULD BE 48" DIA. OR SHALL, IN ANY CASE, BE AT LEAST 4" GREATER IN DIAMETER THAN THE CENTER PIPE. THE OUTER PIPE SHALL BE WRAPPED WITH 1/2" HARDWARE CLOTH TO PREVENT BACKFILL MATERIAL FROM ENTERING THE PERFORATIONS.
2. AFTER INSTALLING THE OUTER PIPE, BACKFILL AROUND OUTER PIPE WITH 2" AGGREGATE OR CLEAN GRAVEL.
3. THE INSIDE STAND PIPE (CENTER PIPE) SHOULD BE CONSTRUCTED BY PERFORATING A CORRUGATED OR PVC PIPE BETWEEN 12" AND 36" IN DIAMETER. THE PERFORATIONS SHALL BE 1/2" X 6" SLITS OR 1" DIAMETER HOLES 6" ON CENTER. THE CENTER PIPE SHALL BE WRAPPED WITH 1/2" HARDWARE CLOTH FIRST, THEN WRAPPED AGAIN WITH GEOTEXTILE CLASS C.
4. THE CENTER PIPE SHOULD EXTEND 12" TO 18" ABOVE THE ANTICIPATED WATER SURFACE ELEVATION OR RISER CREST ELEVATION WHEN DEWATERING A BASIN.

U.S. DEPARTMENT OF AGRICULTURE SOIL CONSERVATION SERVICE	PAGE D - 12 - 4	MARYLAND DEPARTMENT OF ENVIRONMENT WATER MANAGEMENT ADMINISTRATION

DEWATERING STRATEGY

DEWATERING REFERS TO THE ACT OF REMOVING AND DISCHARGING WATER FROM EXCAVATED AREAS ON CONSTRUCTION SITE OR FROM SEDIMENT TRAPS OR BASINS ON CONSTRUCTION SITES. STANDARDS AND SPECIFICATION FOR DEWATERING PRACTICES FOLLOW:

THESE STANDARDS APPLY TO REMOVAL AND DISCHARGE OF WATER FROM ANY EXCAVATED AREA OR SEDIMENT TRAP OR BASIN AT ANY CONSTRUCTION SITE. GIVEN THE UNIQUE CONDITIONS AT ANY PARTICULAR CONSTRUCTION SITE, ANY OR ALL OF THE PRACTICES MAY APPLY. REGARDLESS OF THE APPLICABILITY OF THE PRACTICES LISTED HEREIN, OPERATORS ARE REQUIRED TO USE ACCEPTABLE PROCEDURES FOR MAINTENANCE AND DEWATERING. IN ALL CASES, EVERY EFFORT SHALL BE MADE TO ELIMINATE SEDIMENT POLLUTION ASSOCIATED WITH DEWATERING.

DESIGNERS SHALL SPECIFY THE PREFERRED PROCEDURES FOR DEWATERING ON PLANS. IN PARTICULAR, DESIGNERS SHOULD IDENTIFY PROCEDURES FOR DEWATERING SEDIMENT TRAPS AND BASINS PRIOR TO ELIMINATION OF THE LAST SEDIMENT CONTROL FACILITY ON THE SITE OR PRIOR TO CONVERSION OF SEDIMENT CONTROL FACILITIES TO STORMWATER MANAGEMENT FACILITIES. RECOMMENDED PROCEDURES SHALL BE CONSISTENT WITH THESE STANDARDS. A TYPICAL SITE CONDITIONS MAY REQUIRE INNOVATIVE DEWATERING DESIGNS. DEWATERING MEASURES NOT REFERENCED IN THIS STANDARD MAY BE USED WITH THE CONSENT OF THE APPROVAL AUTHORITY.

DEWATERING OF EXCAVATED AREAS

A. DESIGNERS SHALL SPECIFY ON PLANS, AND IN SEQUENCES OF CONSTRUCTION INCLUDED ON PLANS, PRACTICES FOR DEWATERING OF EXCAVATED AREAS. PLAN REVIEWERS SHALL CHECK TO SEE THAT PROCEDURES FOR DEWATERING ARE INCLUDED ON PLANS.

B. IN ALL CASES, WATER REMOVED FROM EXCAVATED AREAS SHALL BE DISCHARGED SUCH THAT IT SHALL PASS THROUGH A SEDIMENT CONTROL DEVICE PRIOR TO ENTERING RECEIVING WATERS. SEDIMENT CONTROL DEVICES INCLUDE SEDIMENT TRAPS AND BASINS, IN ADDITION TO THE PRACTICES IN THIS SECTION.

APPROVED PRACTICES FOR DEWATERING OF EXCAVATED AREAS

1. PUMPING OF WATER TO AN EXISTING SEDIMENT BASIN OR TRAP IN WHICH THE ENTIRE VOLUME OF WATER FROM THE AREA TO BE DEWATERED CAN BE CONTAINED WITHOUT DISCHARGE TO RECEIVING WATERS.
2. PUMPING OF WATER TO AN EXISTING SEDIMENT BASIN OR TRAP SUCH THAT THE ENTIRE VOLUME OF WATER FROM THE AREA TO BE DEWATERED CAN BE MANAGED WITHOUT EXCEEDING THE DESIGN OUTFLOW FROM THE SEDIMENT CONTROL STRUCTURE.
3. REMOVABLE PUMPING STATION STANDARDS AND SPECIFICATIONS FOR REMOVABLE PUMPING STATION ARE ON DETAIL 20A.
4. USE OF A SUMP PIT STANDARDS AND SPECIFICATIONS FOR A SUMP PIT ARE ON DETAIL 20B.
5. SEDIMENT TANK STANDARDS AND SPECIFICATIONS FOR A SUMP PIT ARE ON DETAIL 21.

DEWATERING OF SEDIMENT TRAPS AND BASINS

DESIGNERS SHALL SPECIFY ON PLANS, AND IN SEQUENCES OF CONSTRUCTION INCLUDED ON PLANS, THE PRACTICES FOR DEWATERING OF TRAPS AND BASINS. PLAN REVIEWERS SHALL CHECK TO SEE THAT PROCEDURES FOR DEWATERING TO BE USED ARE INCLUDED ON PLANS. IN ALL CASES, WATER REMOVED FROM TRAPS AND BASINS SHALL BE DISCHARGED SO THAT IT PASSES THROUGH A SEDIMENT CONTROL DEVICE PRIOR TO ENTERING RECEIVING WATERS.

APPROVED PRACTICES FOR DEWATERING OF TRAPS AND BASINS

REMOVABLE PUMPING STATION.
USE OF A SUMP PIT.
USE OF A FLOATING SUCTION HOSE TO PUMP THE CLEANER WATER FROM THE TOP OF THE POND. AS THE

1. CLEANER WATER IS PUMPED THE SUCTION HOSE WILL LOWER AND EVENTUALLY ENCOUNTER SEDIMENT LADEN
2. WATER WHEN THIS HAPPENS THE PUMPING OPERATION WILL CEASE. PROVISIONS SHALL BE MADE TO
3. FILTER WATER.

21.0 STANDARDS AND SPECIFICATIONS FOR TOPSOIL

DEFINITION

PLACEMENT OF TOPSOIL OVER A PREPARED SUBSOIL PRIOR TO ESTABLISHMENT OF PERMANENT VEGETATION.

PURPOSE

TO PROVIDE A SUITABLE SOIL MEDIUM FOR VEGETABLE GROWTH. SOILS OF CONCERN HAVE LOW MOISTURE CONTENT, LOW NUTRIENT LEVELS, LOW PH, MATERIALS TOXIC TO PLANTS, AND/OR UNACCEPTABLE SOIL GRADATION.

CONDITIONS WHERE PRACTICE APPLIES

I. THIS PRACTICE IS LIMITED TO AREAS HAVING 2:1 OR FLATTER SLOPES WHERE:

A. THE TEXTURE OF THE EXPOSED SUBSOIL/PARENT MATERIAL IS NOT ADEQUATE TO PRODUCE VEGETATIVE GROWTH.

B. THE SOIL MATERIAL IS SO SHALLOW THAT THE ROOTING ZONE IS NOT DEEP ENOUGH TO SUPPORT PLANTS OR FURNISH CONTINUING SUPPLIES OF MOISTURE AND PLANT NUTRIENTS.

C. THE ORIGINAL SOIL TO BE VEGETATED CONTAINS MATERIAL TOXIC TO PLANT GROWTH.

D. THE SOIL IS SO ACIDIC THAT TREATMENT WITH LIMESTONE IS NOT FEASIBLE.

II. FOR THE PURPOSE OF THESE STANDARDS AND SPECIFICATIONS, AREAS HAVING SLOPES STEEPER THAN 2:1 REQUIRE SPECIAL CONSIDERATION AND DESIGN FOR ADEQUATE STABILIZATION. AREAS HAVING SLOPES STEEPER THAN 2:1 SHALL HAVE THE APPROPRIATE STABILIZATION SHOWN ON THE PLANS.

CONSTRUCTION AND MATERIAL SPECIFICATIONS

I. TOPSOIL SALVAGED FROM THE EXISTING SITE MAY BE USED PROVIDED THAT IT MEETS THE STANDARDS AS SET FORTH IN THESE SPECIFICATIONS. TYPICALLY, THE DEPTH OF TOPSOIL TO BE SALVAGED FOR A GIVEN SOIL TYPE CAN BE FOUND IN THE REPRESENTATIVE SOIL PROFILE SECTION IN THE SOIL SURVEY PUBLISHED BY USDA-SCS IN COOPERATION WITH MARYLAND AGRICULTURAL EXPERIMENTAL STATION.

II. TOPSOIL SPECIFICATIONS - SOIL TO BE USED AS TOPSOIL MUST MEET THE FOLLOWING:

I. TOPSOIL SHALL BE A LOAM, SANDY LOAM, CLAY LOAM, SILT LOAM, SANDY CLAY LOAM, LOAMY SAND. OTHER SOILS MAY BE USED IF RECOMMENDED BY AN AGRONOMIST OR A SOIL SCIENTIST AND APPROVED BY THE APPROPRIATE APPROVAL AUTHORITY. REGARDLESS, TOPSOIL SHALL NOT BE A MIXTURE OF CONTRASTING TEXTURED SUBSOILS AND SHALL CONTAIN LESS THAN 5% BY VOLUME OF CINDERS, STONES, SLAG, COARSE FRAGMENTS, GRAVEL, STICKS, ROOTS, TRASH, OR OTHER MATERIALS LARGER THAT 1 AND 1/2" IN DIAMETER.

II. TOPSOIL MUST BE FREE OF PLANTS OR PLANT PARTS SUCH AS BERMUDA GRASS, QUACKGRASS, JOHNSONGRASS, NUTSEDGE, POISON IVY, THISTLE, OR OTHERS AS SPECIFIED.

III. WHERE THE SUBSOIL IS EITHER HIGHLY ACIDIC OR COMPOSED OF HEAVY CLAYS, GROUND LIMESTONE SHALL BE SPREAD AT THE RATE OF 4-8 TONS/ACRE (200-400 POUNDS PER 1,000 SQUARE FEET) PRIOR TO THE PLACEMENT OF TOPSOIL. LIME SHALL BE DISTRIBUTED UNIFORMLY OVER DESIGNATED AREAS AND WORKED INTO THE SOIL IN CONJUNCTION WITH TILLAGE OPERATIONS AS DESCRIBED IN THE FOLLOWING PROCEDURES.

II. FOR SITES HAVING DISTURBED AREAS UNDER 5 ACRES:

I. PLACE TOPSOIL (IF REQUIRED) AND APPLY SOIL AMENDMENTS AS SPECIFIED IN 20.0 VEGETATIVE STABILIZATION - SECTION I - VEGETATIVE STABILIZATION METHODS AND MATERIALS.

III. FOR SITES HAVING DISTURBED AREAS OVER 5 ACRES:
I. ON SOIL MEETING TOPSOIL SPECIFICATIONS, OBTAIN TEST RESULTS DICTATING FERTILIZER AND LIME AMENDMENTS REQUIRED TO BRING THE SOIL INTO COMPLIANCE WITH THE FOLLOWING:
A. PH FOR TOPSOIL SHALL BE BETWEEN 6.0 AND 7.5. IF THE TESTED SOIL DEMONSTRATES A PH OF LESS THAN 6.0, SUFFICIENT LIME SHALL BE PRESCRIBED TO RAISE THE PH TO 6.5 OR HIGHER.
B. ORGANIC CONTENT OF TOPSOIL SHALL BE NOT LESS THAN 1.5 PERCENT BY WEIGHT.
C. TOPSOIL HAVING SOLUBLE SALT CONTENT GREATER THAN 500 PARTS PER MILLION SHALL NOT BE USED.
D. NO SOD OR SEED SHALL BE PLACED ON SOIL SOIL WHICH HAS BEEN TREATED WITH SOIL STERILANTS OR CHEMICALS USED FOR WEED CONTROL UNTIL SUFFICIENT TIME HAS ELAPSED (14 DAYS MIN.) TO PERMIT DISSIPATION OF PHYTO-TOXIC MATERIALS.
NOTE: TOPSOIL SUBSTITUTES OR AMENDMENTS, AS RECOMMENDED BY A QUALIFIED AGRONOMIST OR SOIL SCIENTIST AND APPROVED BY THE APPROPRIATE APPROVAL AUTHORITY, MAY BE USED IN LIEU OF NATURAL TOPSOIL.

II. PLACE TOPSOIL (IF REQUIRED) AND APPLY SOIL AMMENDMENTS SPECIFIED IN 20.0 VEGETATIVE STABILIZATION-SECTION I-VEGETATIVE STABILIZATION METHODS AND MATERIALS.

V. TOPSOIL APPLICATION

I. WHEN TOPSOILING, MAINTAIN NEEDED EROSION AND SEDIMENT CONTROL PRACTICES SUCH AS DIVERSIONS, GRADE STABILIZATION STRUCTURES, EARTH DIKES, SLOPE SILT FENCE AND SEDIMENT TRAPS AND BASINS.

II. GRADES ON THE AREAS TO BE TOPSOILED, WHICH HAVE BEEN PREVIOUSLY ESTABLISHED, SHALL BE MAINTAINED, ALBEIT 4" - 8" HIGHER IN ELEVATION.

III. TOPSOIL SHALL BE UNIFORMLY DISTRIBUTED IN A 4" - 8" LAYER AND LIGHTLY COMPACTED TO A MINIMUM THICKNESS OF 4". SPREADING SHALL BE PERFORMED IN SUCH A MANNER THAT SODDING OR SEEDING CAN PROCEED WITH A MINIMUM OF ADDITIONAL SOIL PREPARATION AND TILLAGE. ANY IRREGULARITIES IN THE SURFACE RESULTING FROM TOPSOILING OR OTHER OPERATIONS SHALL BE CORRECTED IN ORDER TO PREVENT THE FORMATION OF DEPRESSIONS OR WATER POCKETS.

IV. TOPSOIL SHALL NOT BE PLACE WHILE THE TOPSOIL OR SUBSOIL IS IN A FROZEN OR MUDDY CONDITION, WHEN THE SUBSOIL IS EXCESSIVELY WET OR IN A CONDITION THAT MAY OTHERWISE BE DETRIMENTAL TO PROPER GRADING AND SEEDBED PREPARATION.

PERMANENT SEEDING NOTES

APPLY TO GRADED OR CLEARED AREAS NOT SUBJECT TO IMMEDIATE FURTHER DISTURBANCE WHERE A PERMANENT LONG-LIVED VEGETATIVE COVER IS NEEDED.

SEEDBED PREPARATION: LOOSEN UPPER THREE INCHES OF SOIL BY RAKING, DISCING OR OTHER ACCEPTABLE MEANS BEFORE SEEDING, IF NOT PREVIOUSLY LOOSENED.

SOIL AMENDMENTS: IN LIEU OF SOIL TEST RECOMMENDATIONS, USE ONE OF THE FOLLOWING SCHEDULES:

1) PREFERRED-APPLY 2 TONS PER ACRE DOLOMITIC LIMESTONE (92 LBS/100 SQ.FT.) AND 600 LBS PER ACRE 10-10-10 FERTILIZER (14 LBS./1000 SQ.FT.) BEFORE SEEDING. HARROW OR DISC INTO UPPER THREE INCHES OF SOIL. AT THE TIME OF SEEDING, APPLY 400 LBS. PER ACRE 30-0-0 UREAFORM FERTILIZER (9 LBS/1000 SQ.FT.)
2) ACCEPTABLE-APPLY 2 TONS PER ACRE DOLOMATIC LIMESTONE (92 LBS/1000 SQ.FT.) AND APPLY 1000 LBS. PER ACRE 10-10-10- FERTILIZER (23 LBS./1000 SQ.FT.) BEFORE SEEDING. HARROW OR DISC INTO UPPER THREE INCHES OF SOIL.

SEEDING: FOR THE PERIODS MARCH 1 THRU APRIL 30, AND AUGUST 1 THRU OCTOBER 15, SEED WITH 60 LBS. PER ACRE (1.4 LBS/1000 SQ.FT.) OF KENTUCKY 31 TALL FESCUE. FOR THE PERIOD MAY 1 THRU JULY 31, SEED WITH 60 LBS. KENTUCKY 31 TALL FESCUE PER ACRE AND 2 LBS. PER ACRE (.05 LBS./1000 SQ.FT.) OF WEEPING LOVEGRASS. DURING THE PERIOD OF OCTOBER 16 THRU FEBRUARY 28, PROTECT SITE BY: OPTION (1) 2 TONS PER ACRE WELL ANCHORED STRAW MULCH AND SEED AS SOON AS POSSIBLE IN THE SPRING. OPTION (2) USE SOD. OPTION (3) SEED WITH 60 LBS/ACRE KENTUCKY 31 TALL FESCUE AND MULCH WITH 2 TONS/ACRE WELL ANCHORED STRAW.

MULCHING: APPLY 1 1/2 TO 2 TONS PER ACRE (70 TO 90 LBS/1000 SQ. FT.) OF UNROTTED SMALL GRAIN STRAW IMMEDIATELY AFTER SEEDING. ANCHOR MULCH IMMEDIATELY AFTER APPLICATION USING MULCH ANCHORING TOOL OR 218 GALLONS PER ACRE (5 GAL/1000 SQ.FT.) OF EMULSIFIED ASPHALT ON FLAT AREAS. ON SLOPES 8 FEET OR HIGHER, USE 348 GALLONS PER ACRE (8 GAL/1000 SQ.FT.) FOR ANCHORING.

MAINTENANCE: INSPECT ALL SEEDED AREAS AND MAKE NEEDED REPAIRS, REPLACEMENTS AND RESEEDINGS.

TEMPORARY SEEDING NOTES

SEEDBED PREPARATION: LOOSEN UPPER THREE INCHES OF SOIL BY RAKING, DISCING OR OTHER ACCEPTABLE MEANS BEFORE SEEDING, IF NOT PREVIOUSLY LOOSENED.

SOIL AMENDMENTS: APPLY 600 LBS. PER ACRE 10-10-10 FERTILIZER (14 LBS./1000 SQ.FT).

SEEDING: FOR PERIODS MARCH 1 THRU APRIL 30 AND FROM AUGUST 15 THRU NOVEMBER 15, SEED WITH 2 1/2 BUSHEL PER ACRE OF ANNUAL RYE (3.2 LBS./1000 SQ.FT.) FOR THE PERIOD MAY 1 THRU AUGUST 14, SEED WITH 3 LBS. PER ACRE OF WEEPING LOVEGRASS (.07 LBS./1000 SQ.FT.). FOR THE PERIOD NOVEMBER 1 THRU FEBRUARY 28, PROTECT SITE BY APPLYING 2 TONS PER ACRE OF WELL ANCHORED STRAW MULCH AND SEED AS SOON AS POSSIBLE IN THE SPRING, OR USE SOD.

MULCHING: APPLY 1 1/2 TO 2 TONS PER ACRE (70 TO 90 LBS./1000 SQ.FT.) OF UNROTTED SMALL GRAIN STRAW IMMEDIATELY AFTER SEEDING. ANCHOR MULCH IMMEDIATELY AFTER APPLICATION USING MULCH ANCHORING TOOL OR 218 GALLONS PER ACRE (5 GAL/1000 SQ.FT.) OF EMULSIFIED ASPHALT ON FLAT AREAS. ON SLOPES 8 FEET OR HIGHER, USE 348 GALLONS PER ACRE (8 GAL/1000 SQ.FT.) FOR ANCHORING.

REFER TO THE 1994 MARYLAND STANDARDS AND SPECIFICATIONS FOR SOIL EROSION AND SEDIMENT CONTROL FOR RATE AND METHODS NOT COVERED.

APPROVED: HOWARD COUNTY HEALTH DEPARTMENT

COUNTY HEALTH OFFICER — DATE
HOWARD COUNTY HEALTH DEPARTMENT

NO.	REVISION	DATE

APPROVED: DEPARTMENT OF PLANNING AND ZONING

Kent Sheubrooks /for CH — 3/20/07
CHIEF, DIVISION OF LAND DEVELOPMENT — DATE

[signature] — 3/13/07
CHIEF, DEVELOPMENT ENGINEERING DIVISION — DATE

[signature] — 3/20/07
DIRECTOR — DATE

DEVELOPER'S CERTIFICATE

"I HEREBY CERTIFY THAT THIS PLAN FOR EROSION AND SEDIMENT CONTROL REPRESENTS A PRACTICAL AND WORKABLE PLAN BASED ON MY PERSONAL KNOWLEDGE OF THE SITE CONDITIONS. THIS PLAN WAS PREPARED IN ACCORDANCE WITH THE REQUIREMENTS OF THE HOWARD SOIL CONSERVATION DISTRICT.

Michael B Sheedy — 2/27/07
SIGNATURE OF DEVELOPER — DATE

ENGINEER'S CERTIFICATE

"I/WE CERTIFY THAT ALL DEVELOPMENT AND/OR CONSTRUCTION WILL BE DONE IN ACCORDANCE TO THESE PLANS, AND THAT ANY RESPONSIBLE PERSONNEL INVOLVED IN THE CONSTRUCTION PROJECT WILL HAVE A CERTIFICATE OF ATTENDANCE AT A DEPARTMENT OF THE ENVIRONMENT APPROVED TRAINING PROGRAM FOR THE CONTROL OF SEDIMENT AND EROSION BEFORE BEGINNING THE PROJECT.

[signature] — 2/22/07
SIGNATURE OF ENGINEER — DATE
ROBERT H. VOGEL

REVIEWED FOR HOWARD SCD AND MEETS TECHNICAL REQUIREMENTS

Jim Myers — 3/9/07
USDA - NATURAL RESOURCES CONSERVATION SERVICE — DATE

THIS DEVELOPMENT PLAN IS APPROVED FOR SOIL EROSION AND SEDIMENT CONTROL BY THE HOWARD SOIL CONSERVATION DISTRICT

[signature] — 3/9/07
HOWARD SCD — DATE

DEVELOPER

ORCHARD DEVELOPMENT
5032 DORSEY HALL DRIVE
ELLICOTT CITY , MARYLAND 21042
(410) 964-2334
(410) 964-2315 FAX

OWNER

HOWARD COUNTY DEPARTMENT OF HOUSING AND COMMUNITY DEVELOPMENT
6751 COLUMBIA GATEWAY DRIVE
COLUMBIA, MARYLAND
21046-2164

SITE DEVELOPMENT PLAN
PATUXENT SQUARE APARTMENTS & RETAIL CENTER
5-STORY RETAIL AND APARTMENT BUILDING
PARCEL A AND NON-BUILDABLE PARCEL B
OF THE NORTH LAUREL SUBDIVISION
A RESUBDIVISION OF LOTS 1 THRU 10, BLOCK 4
AND 9,10 AND 19 THRU 22 & BLOCK 6

SEDIMENT & EROSION CONTROL DETAILS

TAX MAP 50 GRID 4,
6TH ELECTION DISTRICT

BULK PARCEL A, A RESUBDIVISION OF LOTS 1 THRU 10, BLOCK 4 AND LOTS 9, 10 AND 19 THRU 22, BLOCK 6, NORTH LAUREL PARK

ROBERT H. VOGEL ENGINEERING, INC.
ENGINEERS • SURVEYORS • PLANNERS
8407 MAIN STREET
ELLICOTT CITY, MD 21043
TEL: 410.461.7666
FAX: 410.461.8961

STATE OF MARYLAND ROBERT HARRIS VOGEL No. 16193 PROFESSIONAL ENGINEER
ROBERT H VOGEL, PE #16193

DESIGN BY: RJ/RHV
DRAWN BY: RJ
CHECKED BY: RHV
DATE: 07-24-2007
SCALE: AS SHOWN
W.O. NO.: 04-11.00

SDP-06-50

1. CENTER TOP OF GRATE FOR DOUBLE TYPE 'S' INLET AND TOP OF MANHOLE COVER FOR PRECAST MANHOLES.
2. SEE ARCHITECTURAL PLANS FOR ROOF DRAIN DETAILS

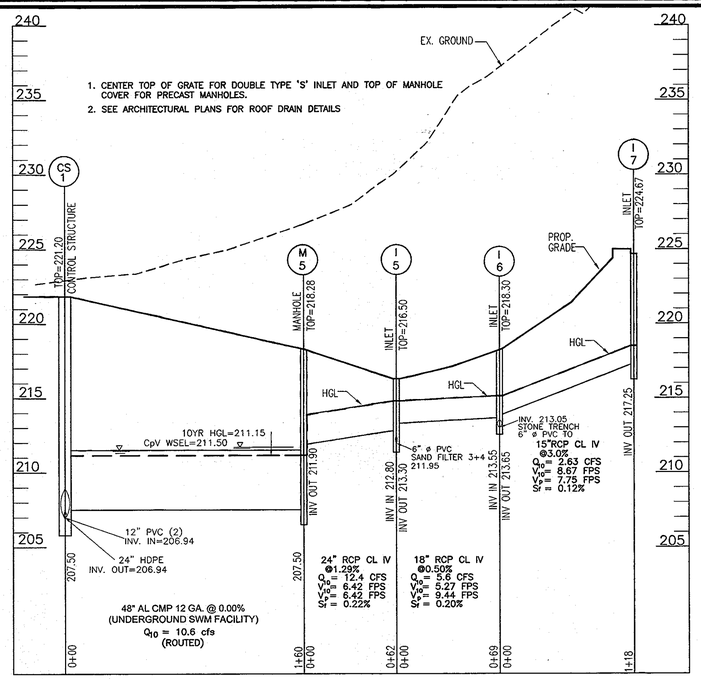

STORM DRAIN PROFILE
SCALE: 1"=50' HORIZ. 1"=5' VERT.

PIPE SCHEDULE		
SIZE	TYPE	LENGTH
15"	HDPE	30 LF
18"	HDPE	269 LF
24"	HDPE	121 LF
24"	RCP	211 LF
18"	RCP	135 LF
15"	RCP	118 LF
12"	RCP	125 LF
23X14 CL IV		150 LF

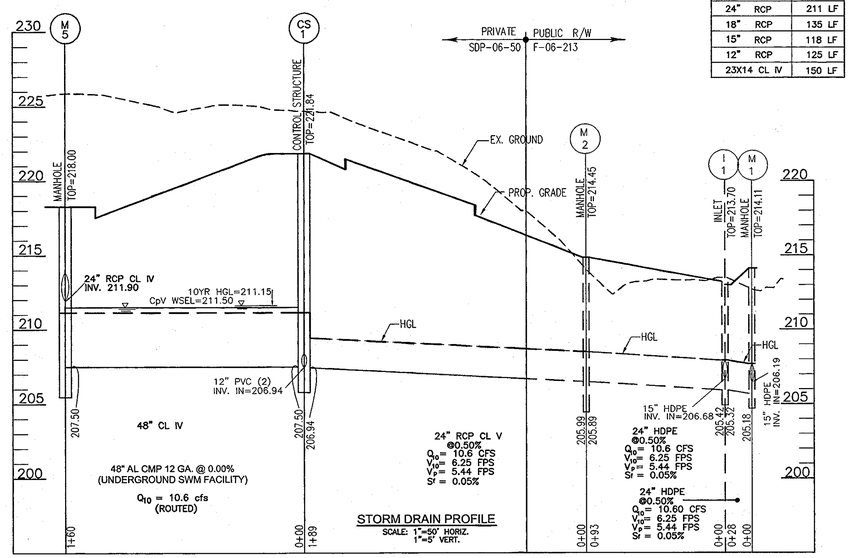

STORM DRAIN PROFILE
SCALE: 1"=50' HORIZ. 1"=5' VERT.

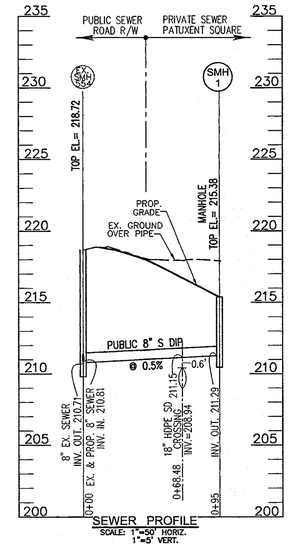

SEWER PROFILE
SCALE: 1"=50' HORIZ. 1"=5' VERT.

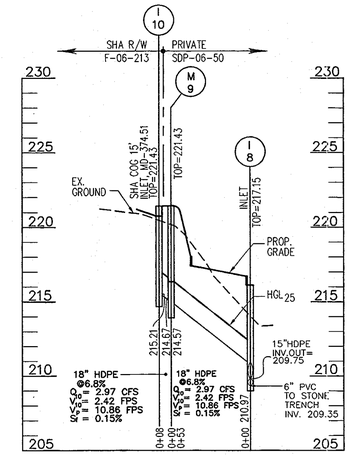

STORM DRAIN PROFILE
SCALE: 1"=50' HORIZ. 1"=5' VERT.

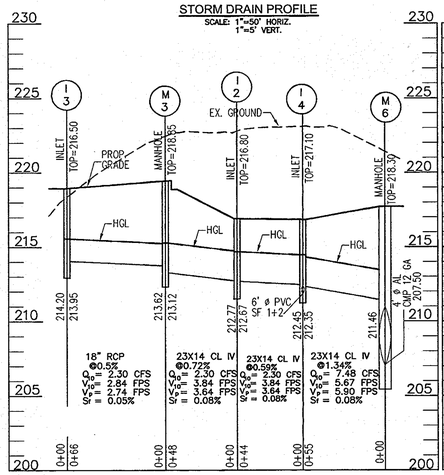

STORM DRAIN PROFILE
SCALE: 1"=50' HORIZ. 1"=5' VERT.

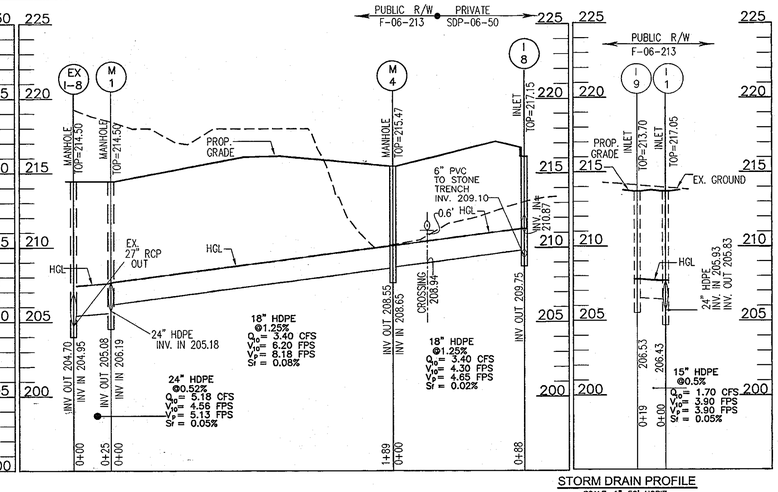

STORM DRAIN PROFILE
SCALE: 1"=50' HORIZ. 1"=5' VERT.

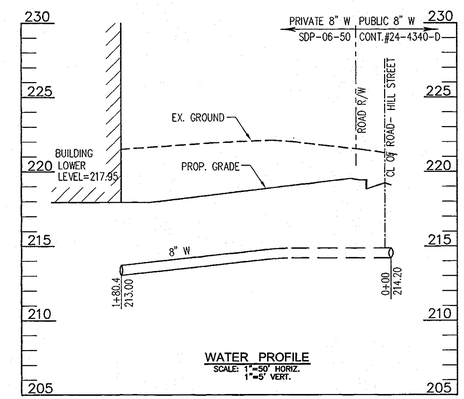

WATER PROFILE
SCALE: 1"=50' HORIZ. 1"=5' VERT.

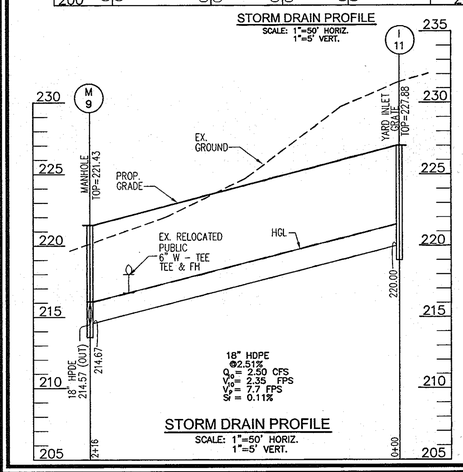

STORM DRAIN PROFILE
SCALE: 1"=50' HORIZ. 1"=5' VERT.

STRUCTURE SCHEDULE

NO.	TYPE	LOCATION	TOP ELEV.	INV. IN	INV. OUT	REMARKS
CS-1	CONTROL STRICTURE	N 527291.37 E 1359209.18	221.20	207.50 206.94	206.94	MD-384.09 MODIFIED
M-3	STANDARD 4' MANHOLE	N 527247.27 E 1359186.65	218.85	213.62	213.12	G-5.12
M-5	8' PRECAST MANHOLE	N 527268.83 E 1359326.28	218.28	211.90	207.50	MD-384.09
M-6	8' PRECAST MANHOLE	N 527238.90 E 1359294.66	218.30	211.46	207.50	MD-384.09
M-9	STANDARD 4' MANHOLE	N 527048.08 E 1359358.14	221.43	214.67	214.57	G-5.12
I-2	DOUBLE TYPE 'S'	N 527219.76 E 1359225.87	216.80	212.77	212.67	SD-4.23
I-3	TYPE 'S'	N 527194.40 E 1359145.93	216.50	–	213.95	SD-4.22
I-4	DOUBLE TYPE 'S'	N 527194.39 E 1359262.19	217.10	212.45	212.35	SD-4.23
I-5	DOUBLE TYPE 'S'	N 527309.72 E 1359371.85	216.50	213.30	212.80	SD-4.23
I-6	DOUBLE TYPE 'S'	N 527342.43 E 1359372.25	218.30	213.65	213.55	SD-4.23
I-7	DOUBLE TYPE 'S'	N 527441.51 E 1359322.98	224.67	–	217.25	SD-4.23
I-8	DOUBLE TYPE 'S' COMBINATION	N 527079.44 E 1359317.32	217.15	–	209.75	SD-4.32
I-11	YARD INLET	N 527217.91 E 1359491.28	227.88	–	220.00	SD-4.14

APPROVED: HOWARD COUNTY HEALTH DEPARTMENT

COUNTY HEALTH OFFICER
HOWARD COUNTY HEALTH DEPARTMENT — DATE

NO.	REVISION	DATE

DEVELOPER
ORCHARD DEVELOPMENT
5032 DORSEY HALL DRIVE
ELLICOTT CITY , MARYLAND 21042
(410) 964-2334
(410) 964-2315 FAX

OWNER
HOWARD COUNTY DEPARTMENT OF HOUSING AND COMMUNITY DEVELOPMENT
6751 COLUMBIA GATEWAY DRIVE
COLUMBIA, MARYLAND
21046-2164

APPROVED: DEPARTMENT OF PLANNING AND ZONING

CHIEF, DIVISION OF LAND DEVELOPMENT	DATE 3/20/07
CHIEF, DEVELOPMENT ENGINEERING DIVISION	DATE 3/13/07
DIRECTOR	DATE 3/20/07

SITE DEVELOPMENT PLAN
PATUXENT SQUARE APARTMENTS & RETAIL CENTER
5-STORY RETAIL AND APARTMENT BUILDING
PARCEL A AND NON-BUILDABLE PARCEL B
OF THE NORTH LAUREL SUBDIVISION
A RESUBDIVISION OF LOTS 1 THRU 10, BLOCK 4 AND 9,10 AND 19 THRU 22 & BLOCK 6
STORM DRAIN & UTILITY PROFILES
TAX MAP 50 GRID 4, 6TH ELECTION DISTRICT
BULK PARCEL A, A RESUBDIVISION OF LOTS 1 THRU 10, BLOCK 4 AND LOTS 9, 10 AND 19 THRU 22, BLOCK 6, NORTH LAUREL PARK

ROBERT H. VOGEL ENGINEERING, INC.
ENGINEERS • SURVEYORS • PLANNERS
8407 MAIN STREET
ELLICOTT CITY, MD 21043
TEL: 410.461.7666
FAX: 410.461.8961

STATE OF MARYLAND ROBERT HARRY VOGEL No. 18193 PROFESSIONAL ENGINEER 07-24-07
ROBERT H VOGEL, PE #16193

DESIGN BY: RJ/RHV
DRAWN BY: RJ
CHECKED BY: RHV
DATE: 07-24-2007
SCALE: AS SHOWN
W.O. NO.: 04-11.00

SHEET 6 OF 12

SDP-06-50

LEGEND

- WETLAND BUFFER
- WETLAND BUFFER
- PUBLIC TREE MAINTENANCE EASEMENT
- 10 SIDEWALK TYP. FOR ROUTE 1 COMMUNITY SEE SHEET 10 OF 12 FOR DETAIL.
- REVERTIBLE EASEMENT SHA PLAT NO 54122.
- STREET LIGHT
- EXISTING TREES TO REMAIN
- STREET TREE
- DRAINAGE DIVIDE
- PRIVATE 20' RETAINING WALL EASEMENT

SOILS LEGEND

SYMBOL	NAME / DESCRIPTION	K VALUE	TYPE
EVC	EVESBORO LOAMY SAND, 5% TO 15% SLOPE	.17	A
C1C3	CHILLUM GRAVELLY LOAM, 5%-10% SLOPES, SEVERELY ERODED	.43	B
BeB2	BELTSVILLE SILT LOAM, 1% TO 5% SLOPES, MODERATELY	.43	C

NOTE: HOWARD SOIL SURVEY, MAP NUMBER 26

STORM DRAIN CHART

INLET NO.	AREA(AC.)	ZONE	'C' FACTOR	IMP.
I-1	0.31	CAC	0.72	85%
I-3	0.09	CAC	0.72	85%
I-4	0.68	CAC	0.72	85%
I-5	0.82	CAC	0.72	85%
I-6	0.42	CAC	0.72	85%
I-7	0.42	CAC	0.72	85%
I-8	0.53	CAC	0.72	85%
I-9	0.32	CAC	0.72	85%
I-10	SHA INLET COG -15			F-06-213
I-11	FROM EX. OUTFALL - 2.5 CFS			

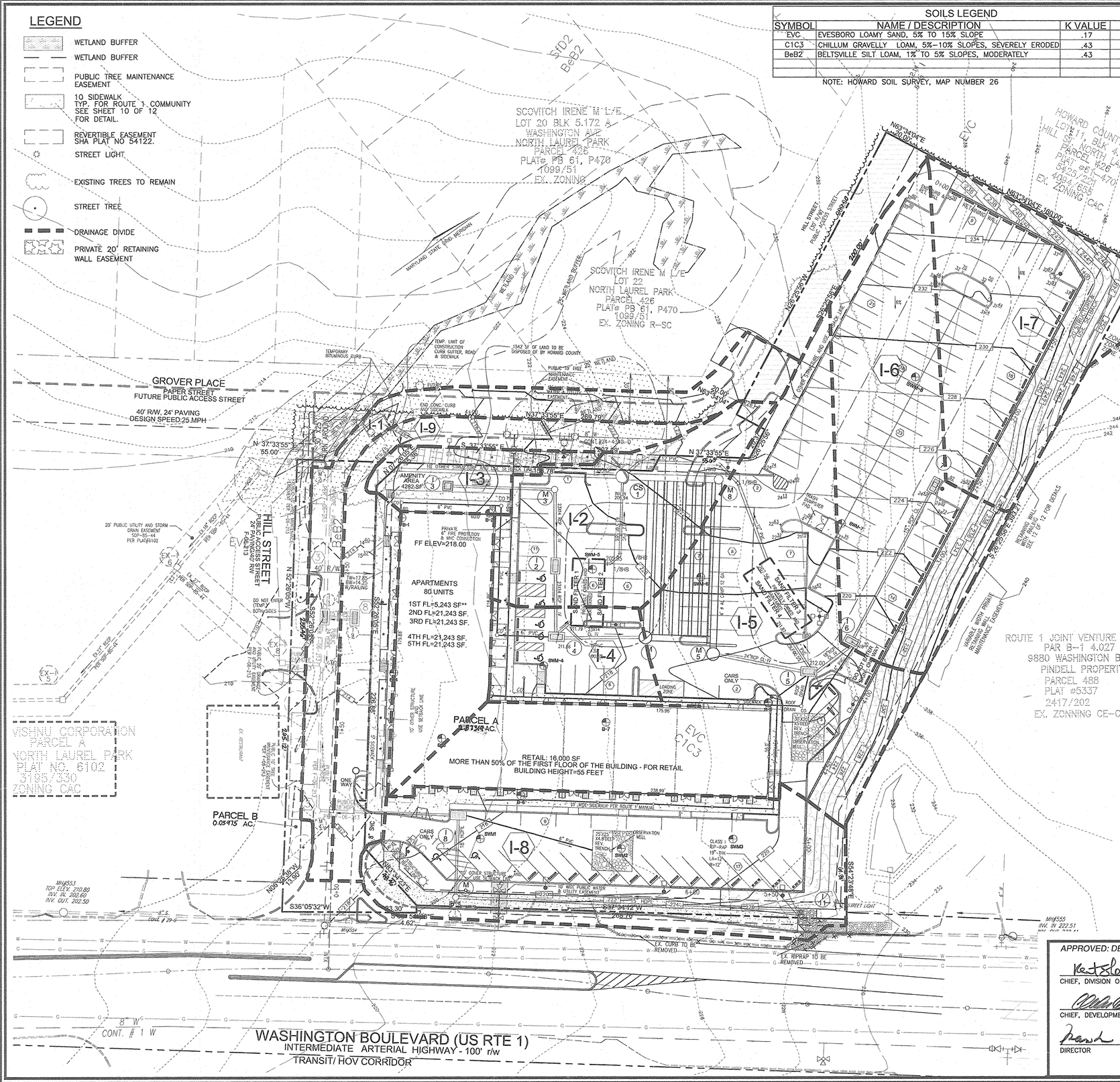

PLAN

SCALE: 1"=30'

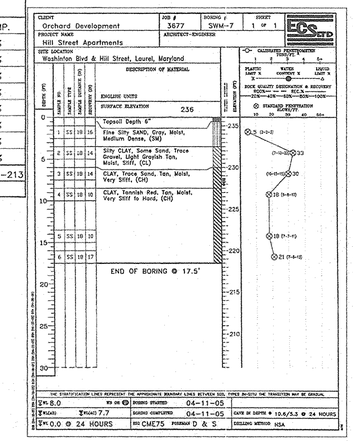

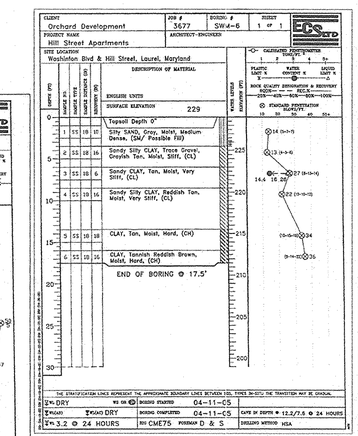

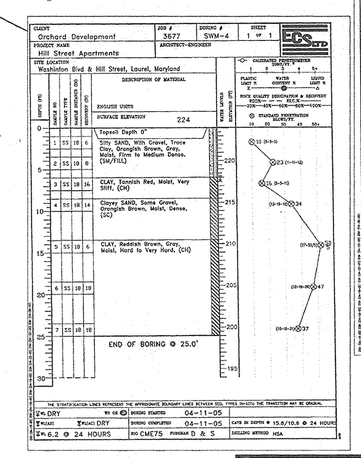

APPROVED: HOWARD COUNTY HEALTH DEPARTMENT

COUNTY HEALTH OFFICER — DATE
HOWARD COUNTY HEALTH DEPARTMENT

NO.	REVISION	DATE

DEVELOPER

ORCHARD DEVELOPMENT
5032 DORSEY HALL DRIVE
ELLICOTT CITY , MARYLAND 21042
(410) 964-2334
(410) 964-2315 FAX

OWNER

HOWARD COUNTY DEPARTMENT OF HOUSING
AND COMMUNITY DEVELOPMENT
6751 COLUMBIA GATEWAY DRIVE
COLUMBIA, MARYLAND
21046-2164

APPROVED: DEPARTMENT OF PLANNING AND ZONING

CHIEF, DIVISION OF LAND DEVELOPMENT — DATE 3/20/07
CHIEF, DEVELOPMENT ENGINEERING DIVISION — DATE 3/13/07
DIRECTOR — DATE 3/20/07

SITE DEVELOPMENT PLAN
PATUXENT SQUARE APARTMENTS & RETAIL CENTER
5-STORY RETAIL AND APARTMENT BUILDING
PARCEL A AND NON-BUILDABLE PARCEL B
OF THE NORTH LAUREL SUBDIVISION
A RESUBDIVISION OF LOTS 1 THRU 10, BLOCK 4
AND 9,10 AND 19 THRU 22 & BLOCK 6
STORM DRAIN DRAINAGE AREA MAP

TAX MAP 50 GRID 4,
6TH ELECTION DISTRICT

BULK PARCEL A, A RESUBDIVISION OF
LOTS 1 THRU 10, BLOCK 4 AND LOTS 9, 10
AND 19 THRU 22, BLOCK 6, NORTH LAUREL PARK

ROBERT H. VOGEL ENGINEERING, INC.
ENGINEERS • SURVEYORS • PLANNERS
8407 MAIN STREET
ELLICOTT CITY, MD 21043
TEL: 410.461.7666
FAX: 410.461.8961

STATE OF MARYLAND — ROBERT HARRY VOGEL — No. 18195 — PROFESSIONAL ENGINEER
ROBERT H VOGEL, PE #16193

DESIGN BY: RJ/RHV
DRAWN BY: RJ
CHECKED BY: RHV
DATE: 07-24-2007
SCALE: AS SHOWN
W.O. NO.: 04-11.00

SHEET 7 OF 12

SDP-06-50

GENERAL NOTES

1. AT THE TIME OF PLANT INSTALLATION, ALL SHRUBS AND TREES LISTED AND APPROVED ON THE LANDSCAPE PLAN, SHALL COMPLY WITH THE PROPER HEIGHT REQUIREMENT IN ACCORDANCE WITH THE HOWARD COUNTY LANDSCAPE MANUAL. IN ADDITION, NO SUBSTITUTIONS OR RELOCATION OF THE REQUIRED PLANTING MAY BE MADE WITHOUT PRIOR REVIEW AND APPROVAL FROM THE DEPARTMENT OF PLANNING AND ZONING. ANY DEVIATION FROM THE APPROVED LANDSCAPE PLAN MAY RESULT IN DENIAL OR DELAY IN THE RELEASE OF LANDSCAPE SURETY UNTIL SUCH TIME AS ALL REQUIRED MATERIALS ARE PLANTED AND/OR REVISIONS ARE MADE TO THE APPLICABLE PLANS.
2. THE OWNER, TENANTS AND/OR THEIR AGENTS SHALL BE RESPONSIBLE FOR MAINTENANCE OF THE REQUIRED LANDSCAPING INCLUDING BOTH PLANT MATERIALS AND BERMS, FENCES AND WALLS. ALL PLANT MATERIALS SHALL BE MAINTAINED IN GOOD GROWING CONDITION, AND WHEN NECESSARY, REPLACED WITH NEW MATERIALS TO ENSURE CONTINUED COMPLIANCE WITH APPLICABLE REGULATIONS. ALL OTHER REQUIRED LANDSCAPING SHALL BE PERMANENTLY MAINTAINED IN GOOD CONDITION, AND WHEN NECESSARY, REPAIRED OR REPLACED.
3. THIS PLAN HAS BEEN PREPARED IN ACCORDANCE WITH SECTION 16.124 OF THE HOWARD COUNTY CODE AND THE LANDSCAPE MANUAL.
4. ALL PROPOSED TRANSFORMERS, EQUIPMENT BOXES AND UTILITY CABINETS MUST BE LOCATED IN AREAS NOT VISIBLE FROM ROUTE 1 AND THE PEDESTRIAN AREAS IN ACCORDANCE WITH THE ROUTE 1 MANUAL.

THE REQUIRED INDIVIDUAL LANDSCAPE ISLAND REQUIREMENT FOR THE 12' MINIMUM WIDTH AND 200 SF. AREA WERE PROVIDED THROUGH ALTERNATIVE COMPLIANCE BY PROVIDING A COMBINED OVERALL AREA EQUAL TO OR GREATER THAN THE INDIVIDUAL ISLAND SIZES ALONG THE PERIMETER OF THE PROPERTY IN ORDER TO PROVIDE THE REQUIRED NUMBER OF PARKING SPACES. WHEEL STOPS MUST BE PROVIDED FOR ALL PARKING SPACES WHERE THERE WILL BE HEAD-IN PARKING TO AVOID DAMAGE TO OTHER CARS AND THE LANDSCAPED PLANT MATERIALS.

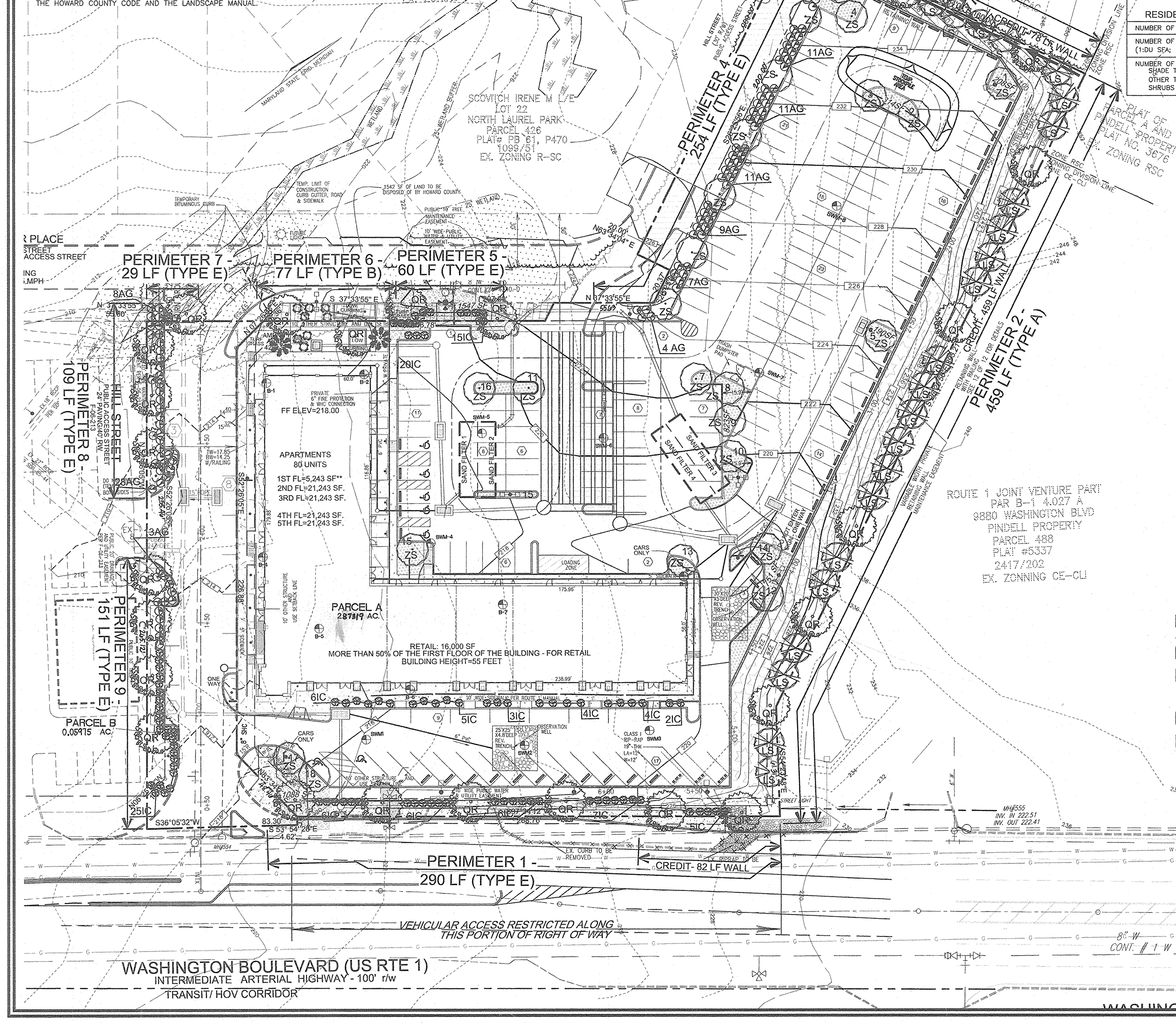

SCHEDULE B
PARKING LOT INTERNAL LANDSCAPING (APARTMENT)

NUMBER OF PARKING SPACES	120
NUMBER OF TREES AND ISLANDS REQUIRED	12
NUMBER OF TREES AND ISLANDS PROVIDED SHADE TREES OTHER TREES (2:1 SUBSTITUTION)	12** –
LANDSCAPE ISLAND 200 SF X 12	2400 SF

SCHEDULE B
PARKING LOT INTERNAL LANDSCAPING (RETAIL)

NUMBER OF PARKING SPACES	80
NUMBER OF TREES AND ISLANDS REQUIRED	4
NUMBER OF TREES AND ISLANDS PROVIDED SHADE TREES OTHER TREES (2:1 SUBSTITUTION)	4** –
LANDSCAPE ISLAND 200 SF X 8	1600 SF

**TOTAL 16 + 2 ADDITIONAL LANDSCAPE ISLAND TREES ARE PROVIDED.

SCHEDULE C
RESIDENTIAL DEVELOPMENT INTERNAL LANDSCAPING

NUMBER OF DWELLING UNITS	80
NUMBER OF TREES REQUIRED (1:DU SFA; 1:3 DU APTS)	27
NUMBER OF TREES PROVIDED SHADE TREES OTHER TREES (2:1 SUBSTITUTION) SHRUBS (10:1 SUBSTITUTION)	27 – –

SCHEDULE A
PERIMETER LANDSCAPE EDGE

CATEGORY	ADJACENT TO ROADWAYS							ADJACENT TO PERIMETER PROPERTIES	
Perimeter/Frontage Designation Landscape Type	1 E	4 E	5 E	6 B	7 E	8 E	9 E	2 A	3 A
Linear Feet of Roadway Frontage/Perimeter	290'	254'	60'	77'	29'	109'	151'	459'	160'
Credit for Existing Vegetation (Yes, No, Linear Feet Describe below if needed)	No	No	No	No	No	No	No	No	No
Credit for Wall, Fence or Berm (Yes, No, Linear Feet Describe below if needed)	Yes* 82'	No	No	No	No	No	No	Yes* 459'	Yes* 78'
Number of Plants Required Shade Trees Evergreen Trees Shrubs	1:40 6 - 1:4 52	1:40 7 - 1:4 64	1:40 2 - 1:4 15	1:50 2 1:40 2 -	1:40 1 - 1:4 8	1:40 3 - 1:4 28	1:40 4 - 1:4 38	1:60 0 - -	1:60 2 - -
Number of Plants Provided Shade Trees Evergreen Trees Other Trees (2:1 Substitution) Shrubs (10:1 Substitution) Describe Plant Substitution Credits Below if needed)	6 - - 52	7 - - 64	2 - - 15	2 2 - -	1 - - 8	3 - - 28	4 - - 38	0 - - -	2 - - -

*CREDIT FOR 5'+ HIGH RETAINING WALL

LANDSCAPE SCHEDULE

KEY	QUAN.	BOTANICAL NAME	SIZE	REM.
LS	25	LIQUIDAMBAR STYRACIFLUA AMERICAN SWEETGUM	2 1/2"–3" Cal.	B & B
QR	25	QUERCUS ROBUR 'FASTIGIATA' COLUMNAR ENGLISH OAK	2 1/2"–3" Cal.	B & B
ZS	24	ZELKOVA SERRATA 'VILLAGE GREEN' VILLAGE GREEN ZELKOVA	2 1/2"–3" Cal.	B & B
AG	113	AZALEA 'GUMPO WHITE' GUMPO WHITE AZALEA	2 1/2'–3' Ht.	B & B
IC	112	IIEX CORNUTA CHINESE HOLLY	2 1/2'–3' Ht.	B & B
	2	PINUS NIGRA AUSTRIAN PINE	6'–8' Ht.	B & B

1. ALL PLANT MATERIALS SHALL BE FULL AND HEAVY, BE WELL FORMED AND SYMMETRICAL, CONFORM TO THE MOST CURRENT AAN SPECIFICATIONS AND BE INSTALLED IN ACCORDANCE WITH LCAMW PLANTING SPECIFICATIONS.
2. CONTRACTOR SHALL VERIFY LOCATION OF ALL UNDERGROUND UTILITIES PRIOR TO DIGGING.
3. FINAL LOCATION OF PLANT MATERIAL MAY NEED TO VARY TO MEET FINAL FIELD CONDITIONS. TREES SHALL NOT BE PLANTED IN THE BOTTOM OF DRAINAGE SWALES.
4. CONTRACTOR SHALL VERIFY PLANT QUANTITIES PRIOR TO BIDDING. IF PLAN DIFFERS FROM LANDSCAPE SCHEDULE, THE PLAN SHALL GOVERN.

NOTE: STREET TREES ALONG HILL STREET ARE PER F-06-213.

FINANCIAL SURETY FOR THE REQUIRED LANDSCAPING SHALL BE POSTED AS PART OF THE DEVELOPER'S AGREEMENT IN THE AMOUNT OF $ 39,830.00 FOR 70 SHADE TREES, 2 EVERGREEN TREES, 205 SHRUBS AND 619 LF OF WALL.

NOTES

1. SEE "LANDSCAPE SPECIFICATION GUIDELINES FOR BALTIMORE-WASHINGTON METROPOLITAN AREAS" FOR ALL MATERIAL, PRODUCT, AND PROCEDURE SPECIFICATIONS.
2. SEE "LANDSCAPE GUIDELINES" FOR SUPPORTING TREES LARGER THAN 2-1/2" CALIPER.
3. PLACE UPRIGHT STAKES PARALLEL TO WALKS & BUILDINGS.
4. KEEP MULCH 1" FROM TRUNK
5. SEE ARCHITECTURAL PLANS FOR ADDITIONAL PLANTINGS WHICH EXCEED HOWARD COUNTY MINIMUM REQUIREMENTS.
6. TREES ARE NOT TO BE PLANTED OVER PRIVATE SEWAGE EASEMENT.

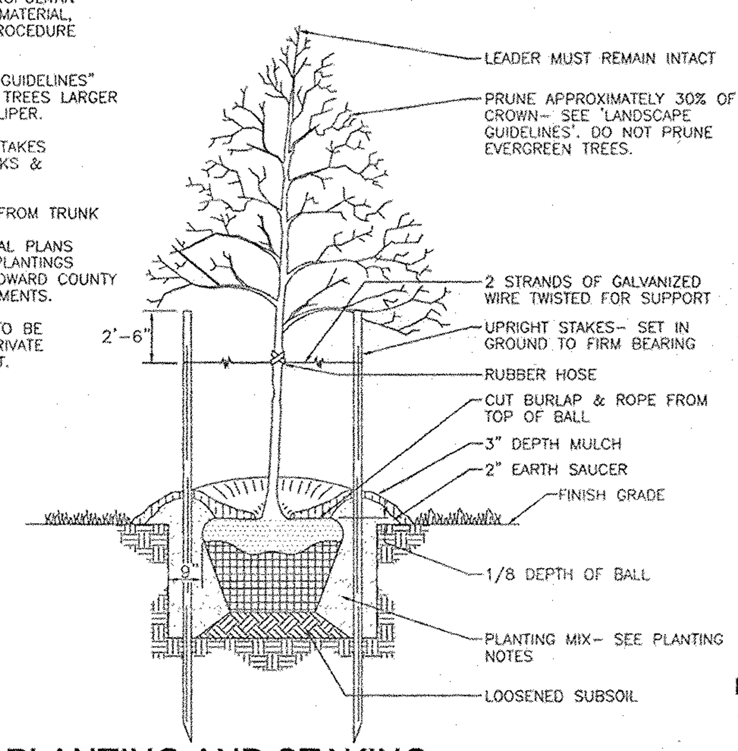

TREE PLANTING AND STAKING

DECIDUOUS TREES UP TO 2-1/2" CALIPER — NOT TO SCALE

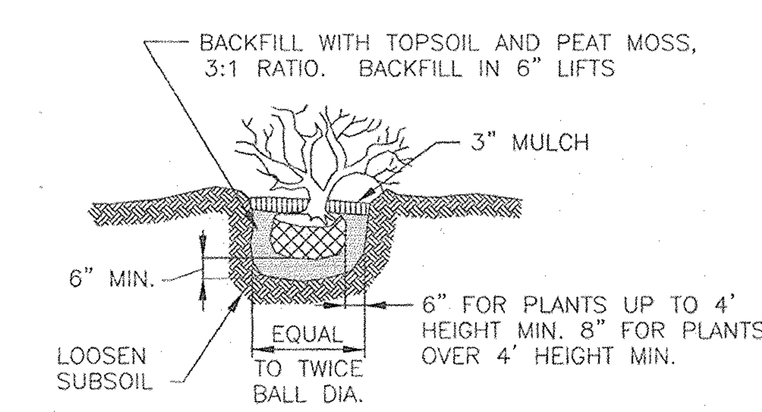

SHRUB PLANTING DETAIL

NOT TO SCALE

DEVELOPER

ORCHARD DEVELOPMENT
5032 DORSEY HALL DRIVE
ELLICOTT CITY , MARYLAND 21042
(410) 964–2334
(410) 964–2315 FAX

OWNER

HOWARD COUNTY DEPARTMENT OF HOUSING AND COMMUNITY DEVELOPMENT
6751 COLUMBIA GATEWAY DRIVE
COLUMBIA, MARYLAND
21046–2164

DEVELOPER'S LANDSCAPE CERTIFICATE

I/WE CERTIFY THAT LANDSCAPING SHOWN ON THIS PLAN WILL BE DONE ACCORDING TO THE PLAN, SECTION 16.124 OF THE HOWARD COUNTY CODE AND THE LANDSCAPE MANUAL. I/WE FURTHER CERTIFY THAT UPON COMPLETION OF THE PROJECT, A LETTER OF LANDSCAPE INSTALLATION, ACCOMPANIED BY AN EXECUTED ONE YEAR GUARANTEE OF PLANT MATERIALS, WILL BE SUBMITTED TO THE DEPARTMENT OF PLANNING AND ZONING.

Michael B Shudy
DEVELOPER'S NAME: ORCHARD DEVELOPMENT

LEGEND

- WETLAND BUFFER
- WETLAND BUFFER
- PUBLIC TREE MAINTENANCE
- 10 SIDEWALK TYP. FOR ROUTE 1 COMMUNITY SEE SHEET 10 OF 12 FOR DETAIL
- PARKING LOT LIGHTS
- OUTDOOR AMENITY AREA
- DISTURBANCE WETLAND WETLAND A=1,272.95 WETLAND B=4,991 TOTAL AREA=1,765.65
- REVERTIBLE EASEMENT SHA PLAT NO 54122.
- STREET LIGHT PER FINAL RD PLAN
- EXISTING TREES TO REMAIN
- STREET TREE PER F–06–213
- VARIABLE WIDTH PRIVATE RETAINING WALL MAINTENANCE EASEMENT

APPROVED: HOWARD COUNTY HEALTH DEPARTMENT

COUNTY HEALTH OFFICER — DATE
HOWARD COUNTY HEALTH DEPARTMENT

NO.	REVISION	DATE

PLAN

SCALE: 1"=30'

APPROVED: DEPARTMENT OF PLANNING AND ZONING

Kent Sheubrooks / fr. CH — 3/20/07
CHIEF, DIVISION OF LAND DEVELOPMENT — DATE

[signature] — 3/13/07
CHIEF, DEVELOPMENT ENGINEERING DIVISION — DATE

Marsha McLaughlin — 3/20/07
DIRECTOR — DATE

SITE DEVELOPMENT PLAN
PATUXENT SQUARE APARTMENTS & RETAIL CENTER
5-STORY RETAIL AND APARTMENT BUILDING
PARCEL A AND NON-BUILDABLE PARCEL B
OF THE NORTH LAUREL SUBDIVISION
A RESUBDIVISION OF LOTS 1 THRU 10, BLOCK 4
AND 9,10 AND 19 THRU 22 & BLOCK 6
LANDSCAPE PLAN AND DETAILS
TAX MAP 50 GRID 4, 6TH ELECTION DISTRICT
BULK PARCEL A, A RESUBDIVISION OF LOTS 1 THRU 10, BLOCK 4 AND LOTS 9, 10 AND 19 THRU 22, BLOCK 6, NORTH LAUREL PARK

ROBERT H. VOGEL ENGINEERING, INC.
ENGINEERS • SURVEYORS • PLANNERS
8407 MAIN STREET ELLICOTT CITY, MD 21043
TEL: 410.461.7666 FAX: 410.461.8961

STATE OF MARYLAND — ROBERT HARRY VOGEL — No. 16193 — PROFESSIONAL ENGINEER — 2/2/07
ROBERT H VOGEL, PE #16193

DESIGN BY: RJ/RHV
DRAWN BY: RJ
CHECKED BY: RHV
DATE: 07-24-2007
SCALE: AS SHOWN
W.O. NO.: 04-11.00

SDP-06-50

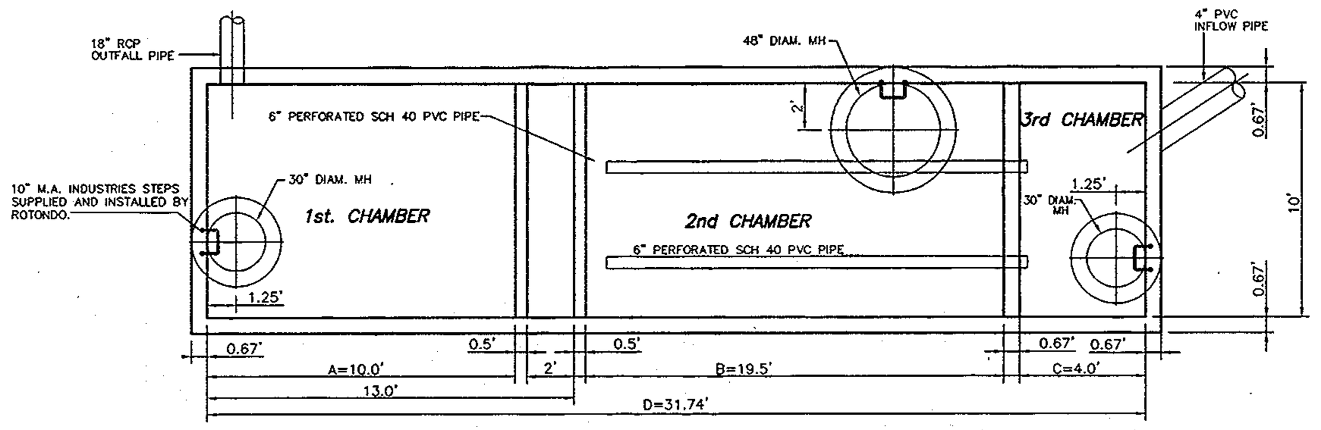

PLAN VIEW

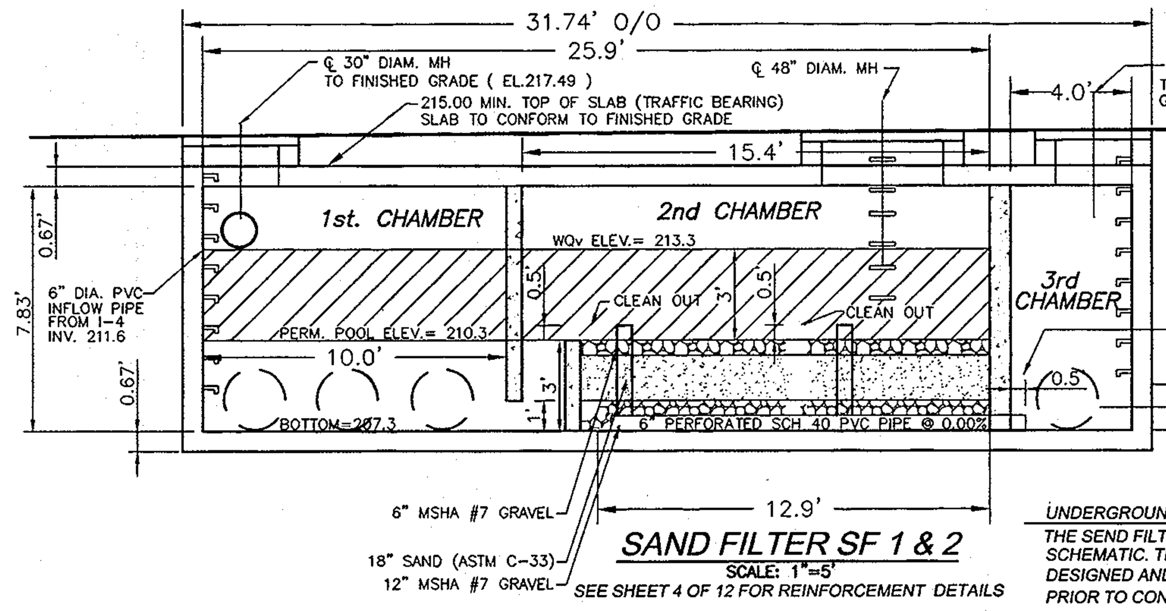

SAND FILTER SF 1 & 2

SCALE: 1"=5'
SEE SHEET 4 OF 12 FOR REINFORCEMENT DETAILS

UNDERGROUND SEND FILTERS:
THE SEND FILTER DESIGN SHOWN ON THESE PLANS IS SCHEMATIC. THE SANDFILTER STRUCTURE ARE TO BE DESIGNED AND CERTIFIED BY A STRUCTURAL ENGINEER PRIOR TO CONSTRUCTION.

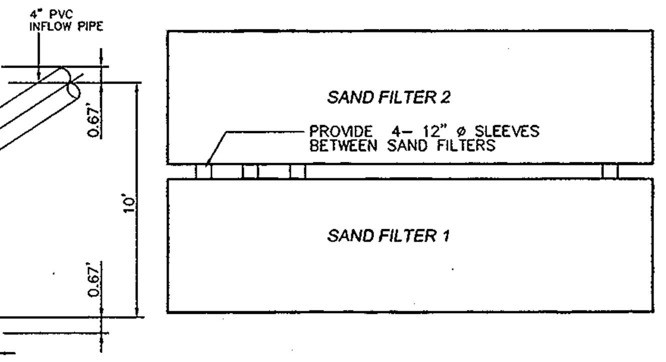

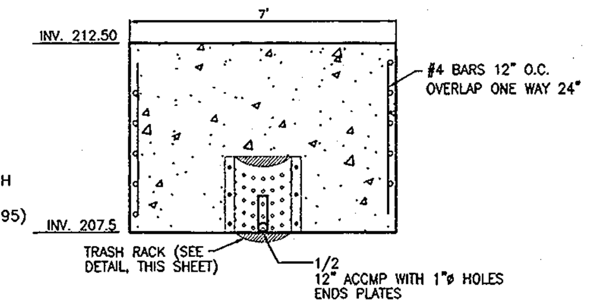

CONTROL STRUCTURE CS-1
CONCRETE WALL DETAIL

SCALE: 1/4" = 1'

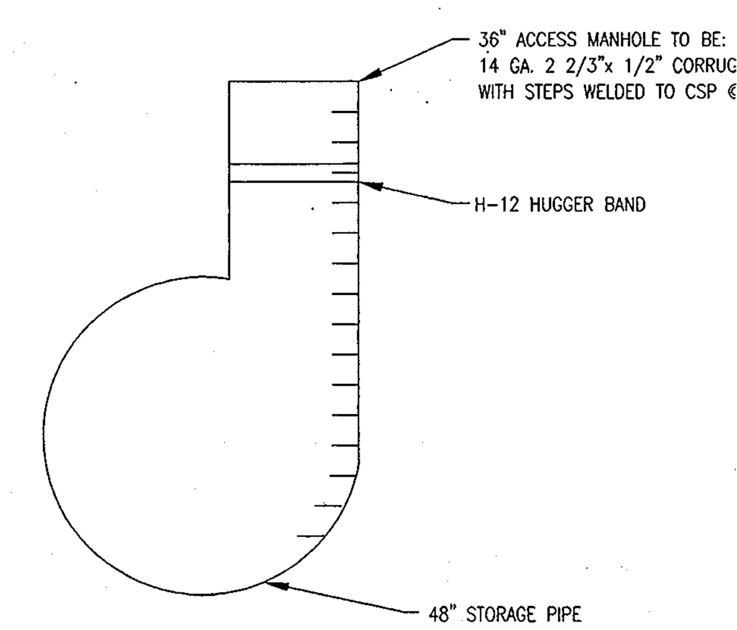

TYPICAL ACCESS MANHOLE DETAIL FOR FOR UNDERGROUND SWM FACILITY

(NOT TO SCALE)

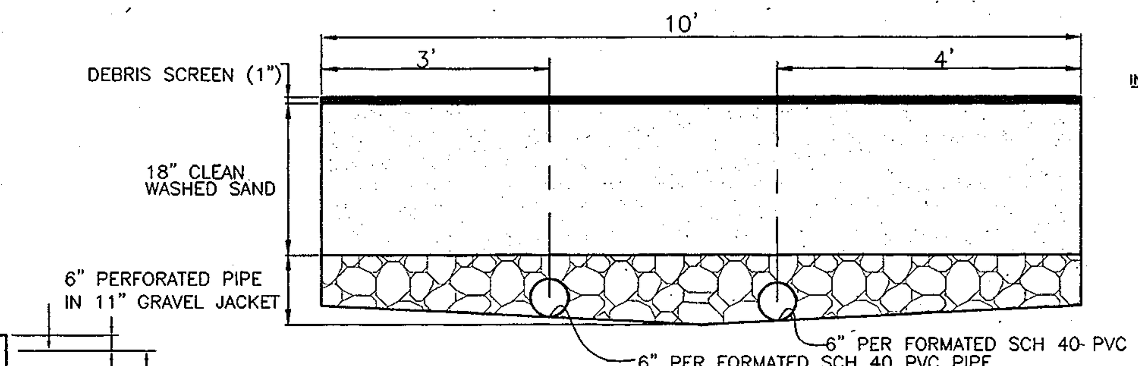

SECTION THROUGH SAND FILTER (TYPICAL)

SCALE: 1/2" = 1'

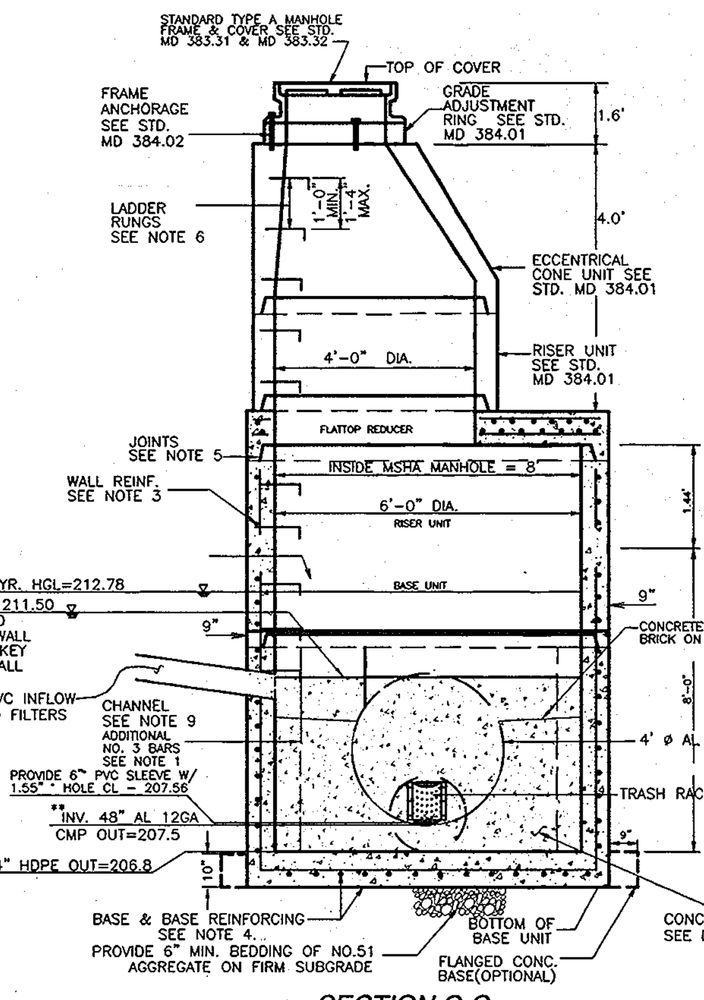

SECTION C-C
CONTROL STRUCTURE CS-1
MD SHA STD. 384.05

SCALE: 1" = 4'

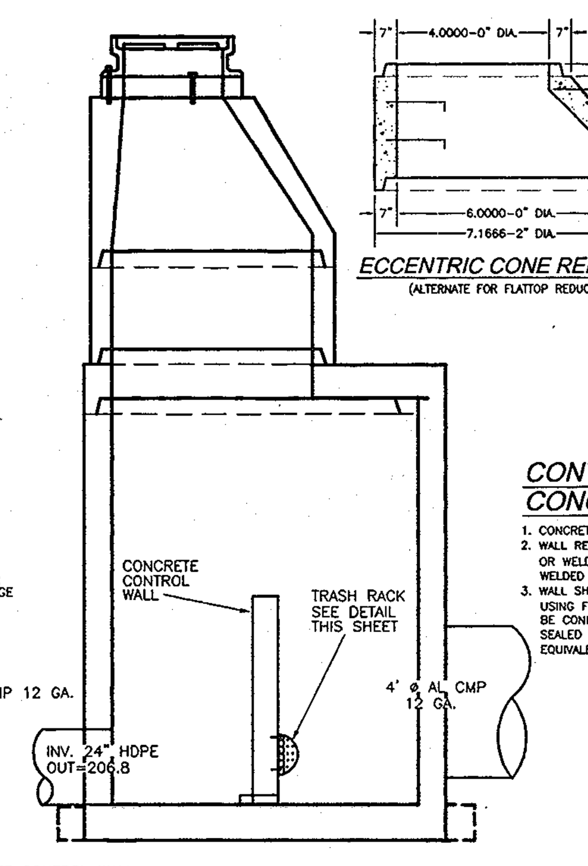

SECTION D-D

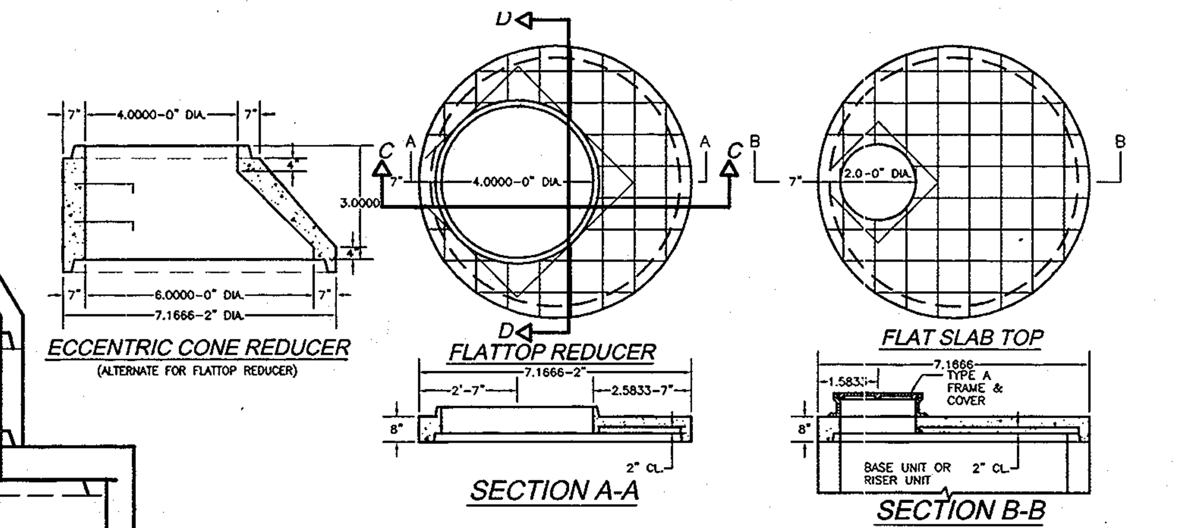

ECCENTRIC CONE REDUCER (ALTERNATE FOR FLATTOP REDUCER)

FLATTOP REDUCER

FLAT SLAB TOP

SECTION A-A

SECTION B-B

CONTROL STRUCTURE CONCRETE WALL NOTES

1. CONCRETE WALL SHALL BE MIX NO. 6 (4500 p.s.i.)
2. WALL REINFORCEMENT SHALL BE REINFORCEMENT BARS OR WELDED WIRE FABRIC WITH A MIN. AREA OF 0.21 in./ft WELDED WIRE FABRIC.
3. WALL SHALL BE CAST-IN-PLACE, POURED MONOLITHIC USING FORMS. IN LIEU OF MONOLITHIC POUR, WALL SHALL BE CONNECTED BY OVERLAPPING BARS ONE WAY 24", AND SEALED WITH GREEN STREAK WATERSTOP (OR APPROVED EQUIVALENT)

CONTROL STRUCTURE NOTES:

1. MANHOLES SHALL BE CONSTRUCTED IN ACCORDANCE WITH AASHTO M 199.
2. CONCRETE SHALL BE MIX NO. 6 (4500 P.S.I.)
3. WALL REINFORCEMENT FOR BASE UNITS AND RISER UNITS SHALL BE REINFORCEMENT BARS OR WELDED WIRE FABERIC WITH A MINIMUM AREA OF 0.2 in./ft FOR THE 84" DIAMETER MANHOLES. WELDED WIRE FABERIC SHALL CONFORM TO ASTM A 185 AND A 82.
4. BASE REINFORCEMENT TO BE REINFORCEMENT BARS OR WELDED WIRE FABERIC WITH A MINIMUM AREA OF 0.27 in./ft. THE BASE SHALL BE CAST MONOLITHIC WITH THE BASE UNIT OR JOINTED PER MANUFACTURERS DESIGN.
5. THE MANUFACTURER SHALL FORM MALE AND FEMALE ENDS OF JOINTS USING THEIR OWN DESIGN. THE JOINTS SHALL BE SEALED BY THE CONTRACTOR AND MADE WATERTIGHT USING (WHERE APPLICABLE) MORTAR. RUEBER O-RING GASKETS MEETING ASTM C361 AND C 443 OR FLEXIBLE PLASTIC GASKETS MEETING AASHTO M 198 TYPE B.
6. LADDER RUNGS SHALL BE INSTALLED IN VERTICAL ALIGNMENT AT 1'-4" MAXIMUM C/C. RUNG TYPES SHALL BE IN ACCORDANCE WITH STANDARDS MD-383.91 OR MD-383.92. LADDER RUNGS SHALL BE INCIDENTAL TO THE COST OF THE MANHOLE.
7. WHEN THE DISTANCE BETWEEN MULTIPLE PIPE OPENINGS IN THE BASE UNIT OR ANY RISER UNIT IS LESS THEN 6" ADDITIONAL NO. 3 BARS ARE REQUIRED AROUND OPENINGS.
8. LIFT HOLES OR LIFT EYES SHALL BE PROVIDED IN EACH SECTION FOR HANDLING.
9. MIX NO. 2 CONCRETE OR BRICK CHANNEL SHALL BE PROVIDED IN THE FIELD AND SHALL SLOPE 2" PER FOOT TOWARD OUTLET OR AS DIRECTED BY THE ENGINEER.
10. THE DRIP STONE LANDING SHALL BE USED ONLY WHEN THERE ARE PIPES CONNECTED TO THE RISER UNITS. SEE STD.MD-384.13 FOR DETAILS.
11. MINIMUM DEPTH PAYMENT PER EACH SHALL BE 10'-1" MEASURED FROM THE BOTTOM OF THE BASE UNIT TO THE TOP OF THE MANHOLE COVER. VERTICAL DEPTH PAYMENT PER LINEAR FOOT SHALL INCLUDE ALL DEPTHS IN EXCESS OF 10'-1" THE COST OF THE DRIP STONE LANDING, NO. 57 AGGREGATE GROUT, SEALENT, AND ALL NESSASARY APPURTENANCES SHALL BE INCIDENTAL TO THE PRICE BID.

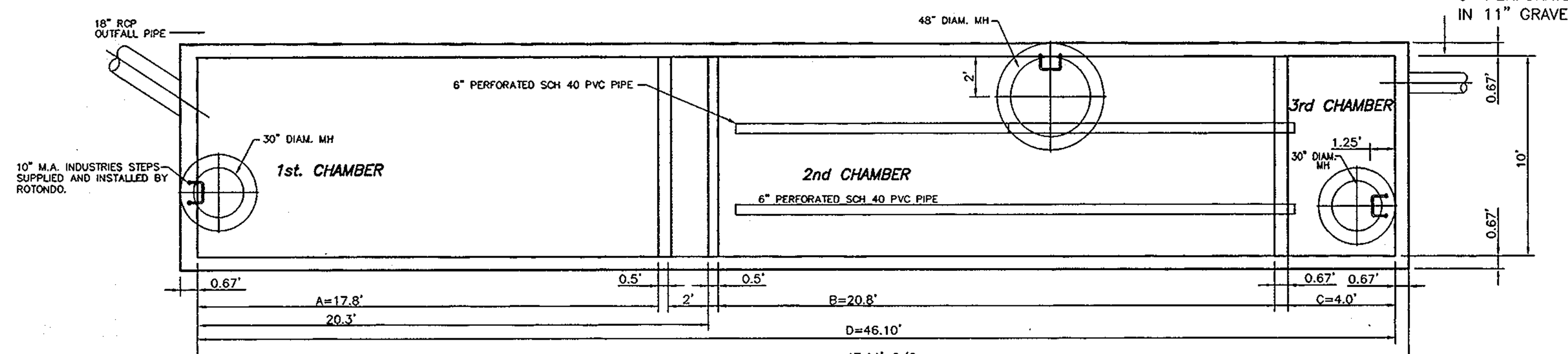

PLAN VIEW

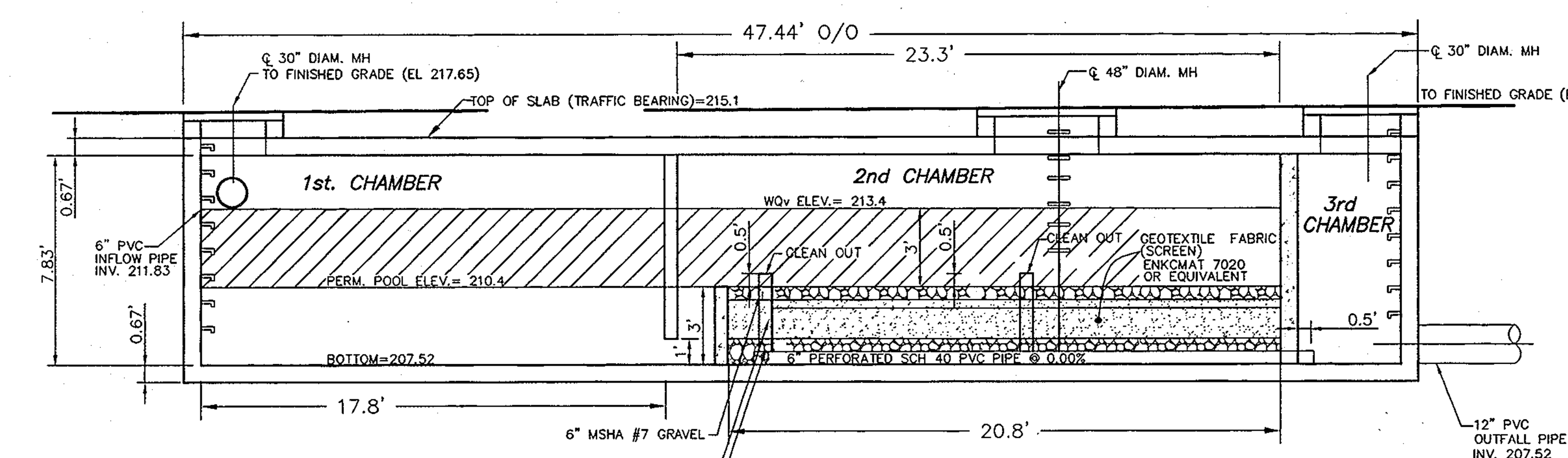

SAND FILTER SF 3 & 4

SCALE: 1"=5'
SEE SHEET 4 OF 12 FOR REINFORCEMENT DETAILS

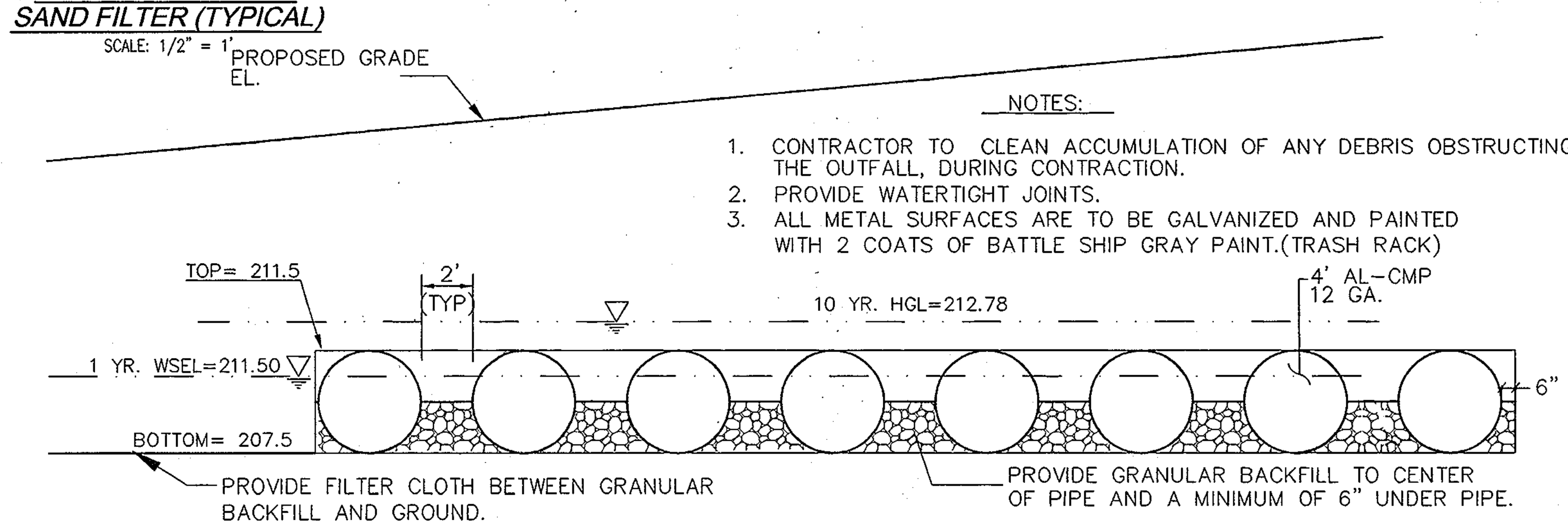

NOTES:

1. CONTRACTOR TO CLEAN ACCUMULATION OF ANY DEBRIS OBSTRUCTING THE OUTFALL, DURING CONTRACTION.
2. PROVIDE WATERTIGHT JOINTS.
3. ALL METAL SURFACES ARE TO BE GALVANIZED AND PAINTED WITH 2 COATS OF BATTLE SHIP GRAY PAINT.(TRASH RACK)

SECTION A-A THROUGH SWMF #1
UNDERGROUND PIPE STORAGE

SCALE: 1"=5'

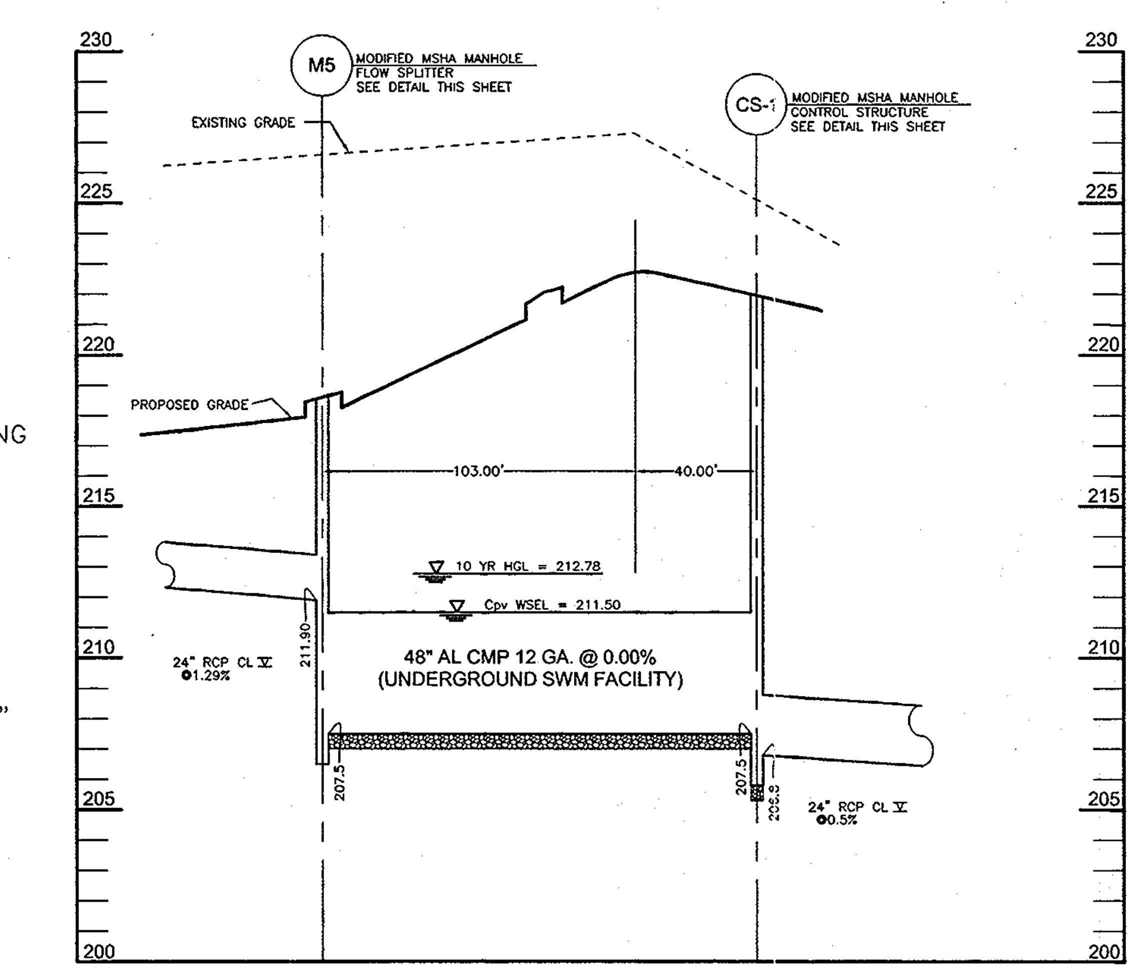

PROFILE - SWMF #1 UNDERGROUND PIPE STORAGE

SCALE: HORIZONTAL: 1"=50' VERTICAL: 1"=5'

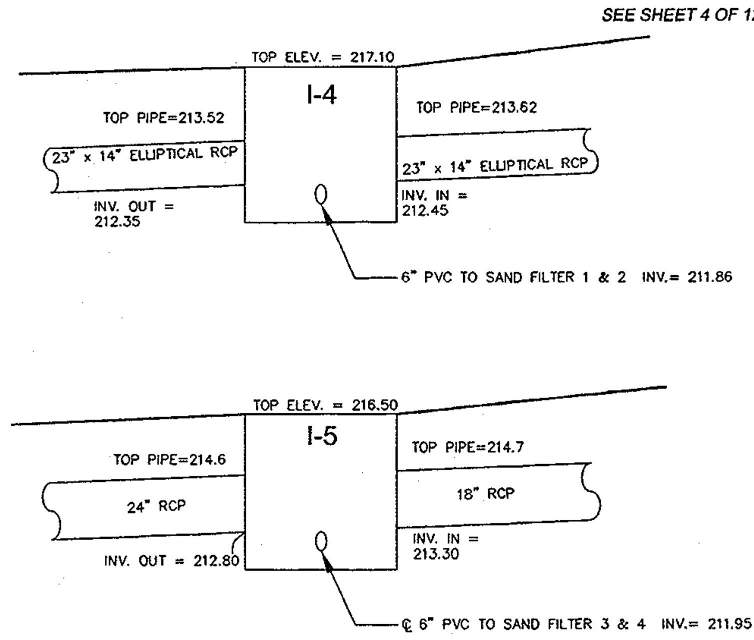

DETAIL: FLOW SPLITTERS

SCALE: 1"=10'

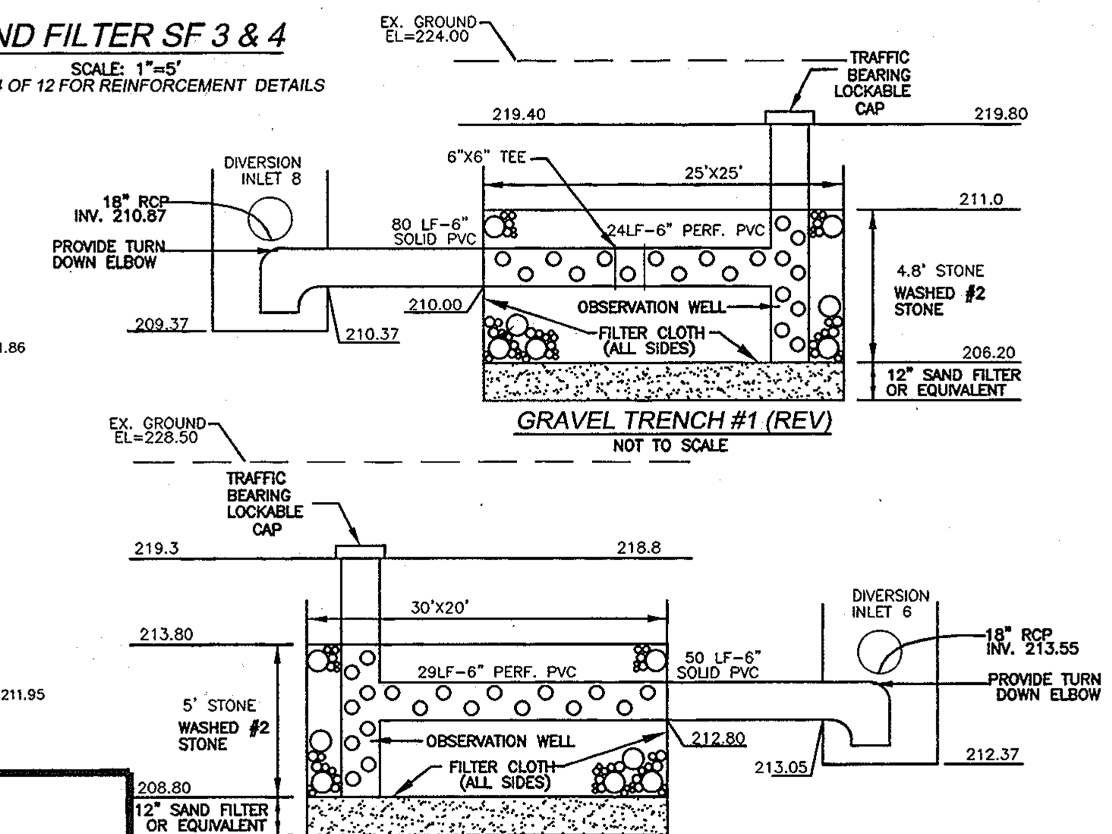

GRAVEL TRENCH #1 (REV)
NOT TO SCALE

GRAVEL TRENCH #2 (REV)
NOT TO SCALE

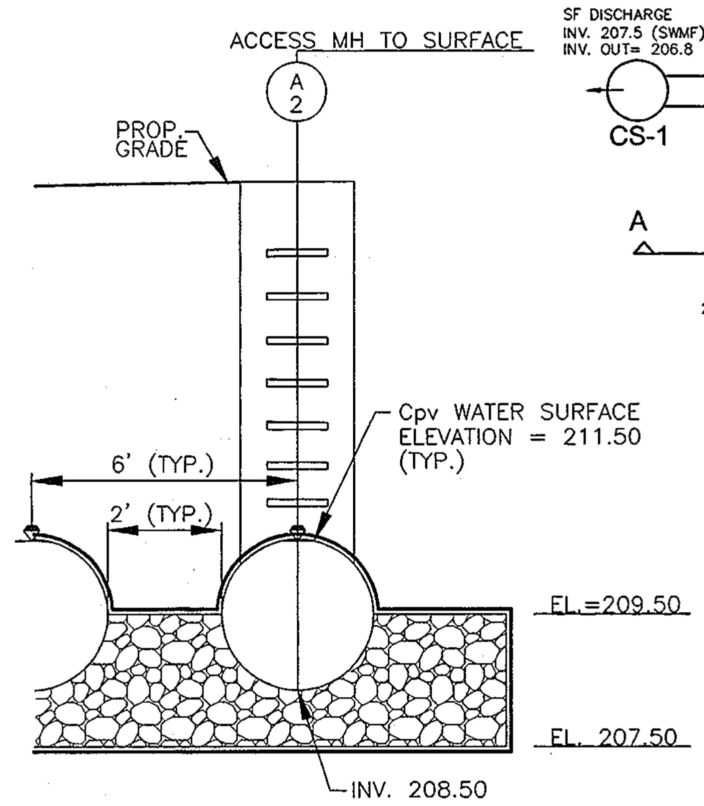

UNDERGROUND DETENTION MANHOLE :M-8

SCALE: 1/4" = 1'

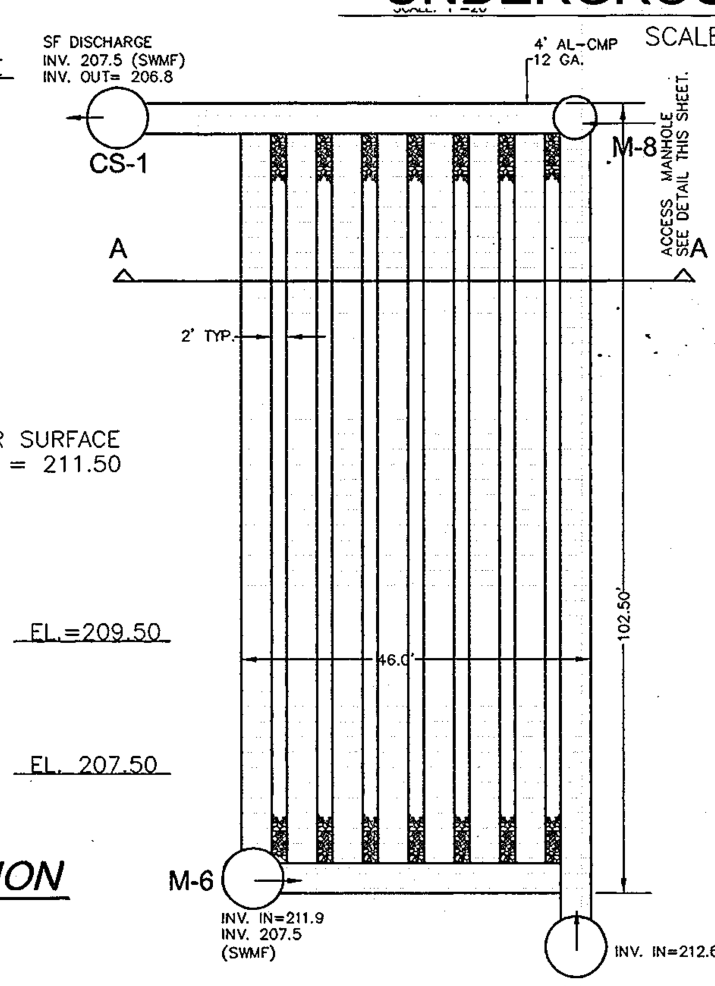

PLAN VIEW

OPERATION AND MAINTENANCE SCHEDULE FOR PRIVATELY OWNED AND MAINTAINED UNDERGROUND STORMWATER FILTRATION SYSTEMS (SF 1&2, 3&4)

1. THE SEDIMENT CHAMBER OUTLET DEVICES SHALL BE CLEANED AND/OR REPAIRED WHEN DRAWDOWN TIMES WITHIN THE CHAMBER EXCEED 36 HOURS.
2. DEBRIS AND LITTER SHALL BE REMOVED AS NECESSARY TO INSURE PROPER OPERATION OF THE SYSTEM.
3. SEDIMENT SHALL BE CLEANED OUT OF THE SEDIMENTATION CHAMBER WHEN IT ACCUMULATES TO A DEPTH OF 6 INCHES. VEGETATION WITHIN THE SEDIMENT CHAMBER SHALL BE LIMITED TO A HEIGHT OF 18 INCHES.
4. WHEN WATER PONDS OF THE SURFACE OF THE FILTER BED FOR MORE THAN 72 HOURS, THE TIP FEW INCHES OF DISCOLORED MATERIAL SHALL BE REPLACED WITH FRESH MATERIAL. THE OWNER MUST FOLLOW PROPER CLEANING AND DISPOSAL OF THE REMOVED MATERIALS AND LIQUID.
5. A LOGBOOK SHALL BE MAINTAINED TO DETERMINE THE RATE AT WHICH THE FACILITY DRAINS.
6. THE MAINTENANCE LOGBOOK SHALL BE AVAILABLE TO HOWARD COUNTY FOR INSPECTION TO INSURE COMPLIANCE WITH OPERATION AND MAINTENANCE CRITERIA.
7. ONCE THE PERFORMANCE CHARACTERISTICS OF THE INFILTRATION SYSTEM HAVE BEEN VERIFIED, THE MONITORING SCHEDULE CAN BE REDUCED TO AN ANNUAL BASIS UNLESS THE PERFORMANCE DATA INDICATES THAT A MORE FREQUENT SCHEDULE IS REQUIRED.

OPERATION AND MAINTENANCE SCHEDULE FOR PRIVATELY OWNED AND MAINTAINED UNDERGROUND FACILITIES

1. THE UNDERGROUND STORMWATER MANAGEMENT FACILITY IS PRIVATELY OWNED AND IT SHALL BE THE RESPONSIBILITY OF THE OWNER TO PERIODICALLY INSPECT AND CLEAN THE FACILITY TO MAINTAIN ITS OPERATION AND FUNCTION.
2. THE UNDERGROUND STORMWATER MANAGEMENT FACILITY SHALL BE INSPECTED YEARLY AT A MINIMUM AND AFTER ESPECIALLY SEVERE STORM EVENTS.
3. WHEN SEDIMENT ACCUMULATION OF MORE THAN 2" IS OBSERVED OR ANY DEBRIS THAT MIGHT OBSTRUCT THE OUTFALL IS OBSERVED, THE FACILITY SHALL BE CLEANED.
4. THE FACILITY SHALL BE CLEANED IMMEDIATELY AFTER PETROLEUM SPILLS. THE OWNER SHALL CONTACT THE APPROPRIATE REGULATORY AGENCIES NOTIFYING THEM OF THE SPILL AND CLEANUP OPERATION.
5. THE SEDIMENT AND DEBRIS SHALL BE REMOVED FROM THE UNDERGROUND STORMWATER MANAGEMENT FACILITY BY VACUMN TRUCK OR OTHER MANUAL MEANS. THE OWNER SHALL FOLLOW PROPER CLEANING AND DISPOSAL OF THE REMOVED MATERIAL AND LIQUID.
6. THE INLET AND OUTLET PIPES SHALL BE CHECKED FOR ANY OBSTRUCTIONS AT LEAST ONCE EVERY SIX (6) MONTHS. IF OBSTRUCTIONS ARE FOUND, THE OWNER SHALL HAVE THEM REMOVED AND PROPERTY DISPOSED OF.

SANDFILTER SPECIFICATION CHART

UNIT	INCOMING PIPE		OUTGOING PIPE		A	B	C	D	TOP STRUCT. ELEV.
	SIZE	INV.	SIZE	INV.					
SF 1 & 2	6"	211.6	8"	207.3					215.0
SF 3 & 4	4"	212.0	8"	211.50					215.1

APPROVED: HOWARD COUNTY HEALTH DEPARTMENT

COUNTY HEALTH OFFICER
HOWARD COUNTY HEALTH DEPARTMENT — DATE

NO.	REVISION	DATE

SITE DEVELOPMENT PLAN
PATUXENT SQUARE APARTMENTS & RETAIL CENTER
5-STORY RETAIL AND APARTMENT BUILDING
PARCEL A AND NON-BUILDABLE PARCEL B
OF THE NORTH LAUREL SUBDIVISION
A RESUBDIVISION OF LOTS 1 THRU 10, BLOCK 4
AND 9,10 AND 19 THRU 22 & BLOCK 6
SWM FACILITY DETAILS
TAX MAP 50 GRID 4, 6TH ELECTION DISTRICT
BULK PARCEL A, A RESUBDIVISION OF LOTS 1 THRU 10, BLOCK 4 AND LOTS 9, 10 AND 19 THRU 22, BLOCK 6, NORTH LAUREL PARK

ROBERT H. VOGEL ENGINEERING, INC.
ENGINEERS • SURVEYORS • PLANNERS
8407 MAIN STREET
ELLICOTT CITY, MD 21043
TEL: 410.461.7666
FAX: 410.461.8961

STATE OF MARYLAND — ROBERT HARRIS VOGEL — No. 16193 — PROFESSIONAL ENGINEER
ROBERT H VOGEL, PE #16193

DESIGN BY: RJ/RHV
DRAWN BY: RJ
CHECKED BY: RHV
DATE: 07-24-2007
SCALE: AS SHOWN
W.O. NO.: 04-11.00

SHEET 9 OF 12

APPROVED: DEPARTMENT OF PLANNING AND ZONING

CHIEF, DIVISION OF LAND DEVELOPMENT — DATE 3/20/07
CHIEF, DEVELOPMENT ENGINEERING DIVISION — DATE 3/13/07
DIRECTOR — DATE 3/21/07

DEVELOPER'S CERTIFICATE

"I HEREBY CERTIFY THAT THIS PLAN FOR EROSION AND SEDIMENT CONTROL REPRESENTS A PRACTICAL AND WORKABLE PLAN BASED ON MY PERSONAL KNOWLEDGE OF THE SITE CONDITIONS. THIS PLAN WAS PREPARED IN ACCORDANCE WITH THE REQUIREMENTS OF THE HOWARD SOIL CONSERVATION DISTRICT.

SIGNATURE OF DEVELOPER — DATE 2/27/07

ENGINEER'S CERTIFICATE

"I/WE CERTIFY THAT ALL DEVELOPMENT AND/OR CONSTRUCTION WILL BE DONE IN ACCORDANCE TO THESE PLANS, AND THAT ANY RESPONSIBLE PERSONNEL INVOLVED IN THE CONSTRUCTION PROJECT WILL HAVE A CERTIFICATE OF ATTENDANCE AT A DEPARTMENT OF THE ENVIRONMENT APPROVED TRAINING PROGRAM FOR THE CONTROL OF SEDIMENT AND EROSION BEFORE BEGINNING THE PROJECT.

SIGNATURE OF ENGINEER ROBERT H. VOGEL — DATE 2/28/07

REVIEWED FOR HOWARD SCD AND MEETS TECHNICAL REQUIREMENTS
USDA - NATURAL RESOURCES CONSERVATION SERVICE — DATE

THIS DEVELOPMENT PLAN IS APPROVED FOR SOIL EROSION AND SEDIMENT CONTROL BY THE HOWARD SOIL CONSERVATION DISTRICT
HOWARD SCD — DATE

DEVELOPER

ORCHARD DEVELOPMENT
5032 DORSEY HALL DRIVE
ELLICOTT CITY , MARYLAND 21042
(410) 964-2334
(410) 964-2315 FAX

OWNER

HOWARD COUNTY DEPARTMENT OF HOUSING AND COMMUNITY DEVELOPMENT
6751 COLUMBIA GATEWAY DRIVE
COLUMBIA, MARYLAND
21046-2164

SDP-06-50

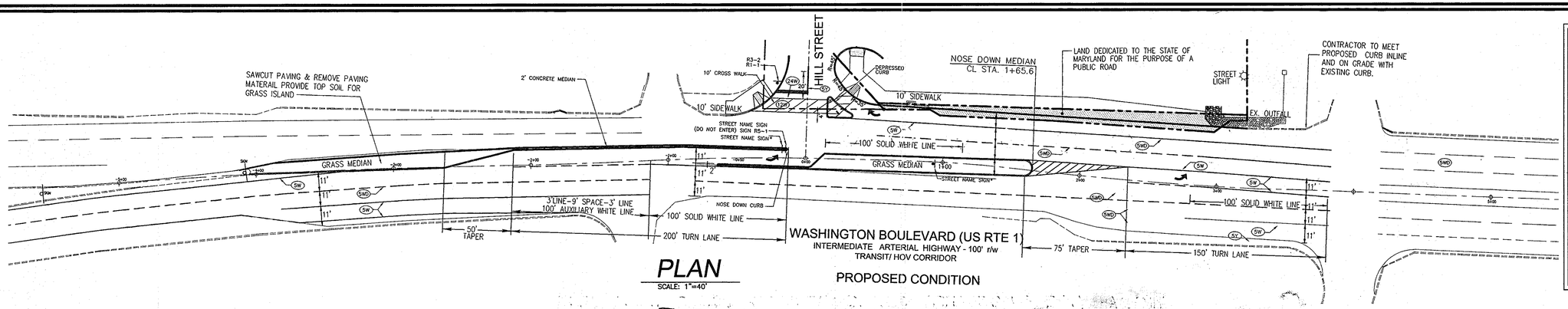

PLAN

SCALE: 1"=40'

PROPOSED CONDITION

FOR ROUTE 1 IMPROVEMENTS UTILIZE APPROVED MSHA ACCESS PERMIT

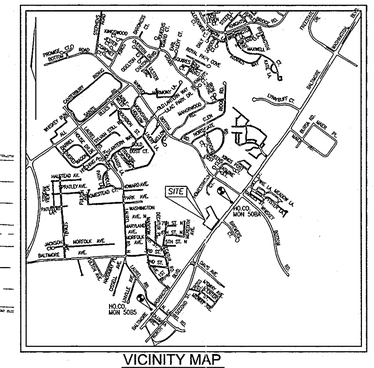

VICINITY MAP

SCALE: 1"=2000'

THE BEARINGS SHOWN ON THIS PLAT ARE REFERRED TO THE SYSTEM OF COORDINATES ESTABLISHED IN THE MARYLAND COORDINATE SYSTEM (NAD 83) AS PROJECTED BY THE FOLLOWING HOWARD COUNTY GEODETIC CONTROL STATIONS:

50BA	(N)	527,561.678	(E)	1,359,772.604
50B5	(N)	524,999.375	(E)	1,357,925.748

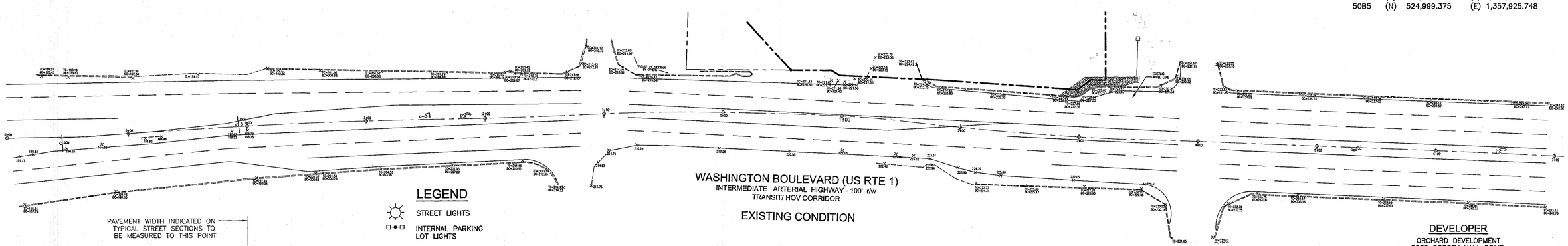

EXISTING CONDITION

LEGEND

STREET LIGHTS

INTERNAL PARKING LOT LIGHTS

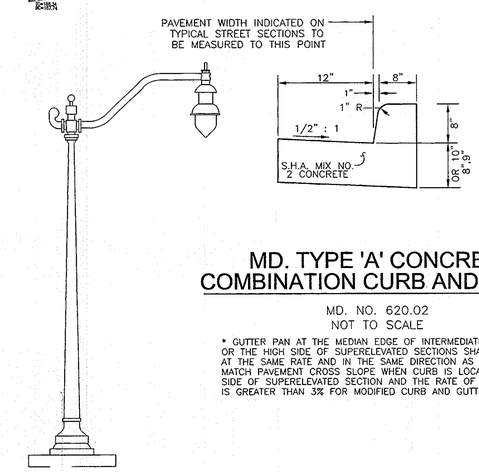

MD. TYPE 'A' CONCRETE COMBINATION CURB AND GUTTER

MD. NO. 620.02
NOT TO SCALE

* GUTTER PAN AT THE MEDIAN EDGE OF INTERMEDIATE ARTERIAL OR THE HIGH SIDE OF SUPERELEVATED SECTIONS SHALL BE SLOPED AT THE SAME RATE AND IN THE SAME DIRECTION AS THE PAVEMENT. MATCH PAVEMENT CROSS SLOPE WHEN CURB IS LOCATED ON THE LOW SIDE OF SUPERELEVATED SECTION AND THE RATE OF SUPERELEVATION IS GREATER THAN 3% FOR MODIFIED CURB AND GUTTER.

LIGHT POLE DETAIL

NO SCALE

PER S-05-003 FOREST STAND TOTALS

STAND L-1	2.78 ACRES
STAND F-1	0.60 ACRES
TOTAL	3.38 ACRES PLUS OR MINUS

ORNAMENTAL STREET LIGHT:

1. BLACK FINISH , TEARDROP FIXTURE SB470A WITH SINGLE ARM ADAPTER SA8470, MANUFACTURED BY HADCO, OT EQUAL BY ANOTHER MANUFACTURER.
2. LIGHTING SHALL BE DIRECTED DOWN AND AWAY FROM ADJOINING PROPERTIES AND STREETS.

CURB ALONG US RTE. 1:

MD. TYPE 'A' CONCRETE COMBINATION CURB AND GUTTER
MD. NO. 620.02

CURB ALONG HILL STREET:

STANDARD COMBINATION CURB AND GUTTER
HOWARD COUNTY STANDARD R-3.01

EDGING FOR SIDEWALK :

MANUFACTURED BY ABBOTSFORD CONCRETE PRODUCTS, LTD., OR EQUAL BY ANOTHER MANUFACTURER.
CONCRETE PAVERS, COBBLESTONE PATTERN, SHADOW(GRAY) COLOR,

CROSSWALK PAVING :

STAMPED ASPHALT PAVING, BRITISH COBBLE PATTERN, GRANITE COLOR WITH TEXAS COBBLE EDGES, CONCRETE GRAY COLOR, MANUFACTURES BY STREETPRINT , OR EQUAL BY ANOTHER MANUFACTURER.

CROSSWALK STRIPING :

WHITE THERMOPLASTIC LINES, ALL LINES 1-FOOT WIDE, OUTSIDE EDGES TO BE 2 PARALLEL LINES, 10 FEET APART , INTERNAL STRIPING TO BE PERPENDICULAR TO THE EDGE LINES, 2 FEET APART.

ORNAMENTAL STREET LIGHT:

BLACK FINISH, TEARDROP FIXTURE SB470A WITH ARM ADAPTER SA8470, MANUFACTURED BY HADCO, OR EQUAL BY ANOTHER MANUFACTURER, THE POLE IS TAPERED, FLUTED BLACK METAL WITH WRAP-AROUND BASE.

LIGHTING SHALL BE DIRECTED DOWN AND AWAY FROM ADJOINING PROPERTIES AND STREETS.

INTERNAL PARKING LOT LIGHTS:

WHITE FINISH, AR3 FIXTURE, 2B MOUNTING, A-25 OPTION,VSF-2B VSF OPTION PSA16-4125B/WH-P POLE

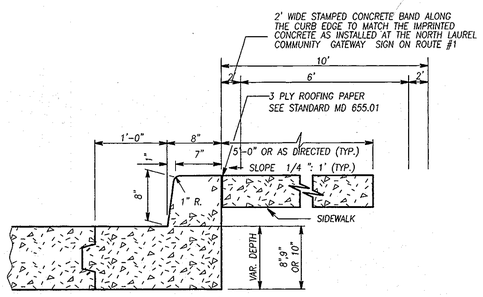

TYPE 'A'

COMBINATION CURB & GUTTER
DESIGN SPEED 30-40 MPH

US. RTE. 1 (SHA) PAVING SECTION

N.T.S

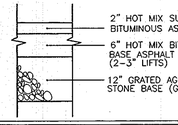

FOREST CONSERVATION NARRATIVE

THIS FOREST CONSERVATION NARRATIVE WAS PREPARED IN ACCORDANCE WITH THE HOWARD COUNTY FOREST MANUAL.

THE SUBJECT PROPERTY HAS A GROSS TRACT OF 3.38 Ac. THE ROAD RIGHT-OF-WAY OF 0.08 Ac HAS BEEN SUBTRACTED OUT FOR A NET TRACT AREA OF 3.30 Ac. EXISTING FOREST IS 0.60 ACRES AND THIS ENTIRE AREA SHALL BE CLEARED. THE REQUIRED FOREST REFORESTATION OF 1.02 ACRES SHALL BE FULFILLED BY A FEE-IN-LIEU (SEE WORKSHEET, THIS SHEET, FOR CALCULATED AMOUNT).

STATE OF MARYLAND STEPHEN W. MILLER REGISTERED PROFESSIONAL FORESTER No. 616

HOWARD COUNTY FOREST CONSERVATION WORKSHEET

ZONED CAC

NET TRACT AREA:

A. TOTAL TRACT AREA	3.38 AC
B. AREA WITHIN 100 YEAR FLOODPLAIN	0.00 AC
C. AREA TO REMAIN IN AGRICULTURAL PRODUCTION	0.00 AC
D. NET TRACT AREA	3.38 AC

LAND USE CATEGORY

INPUT THE NUMBER "1" UNDER THE APPROPIATE LAND USE ZONING, AND LIMIT TO ONLY ONE ENTRY. ZONED CAC.

ARA	MDR	IDA	HDR	MPD	CIA
0	0	0	0	1	0

E. AFFOREST THRESHOLD	15% X D = 0.50 AC
F. CONSERVATION THRESHOLD	15% X D = 0.50 AC

EXISTING FOREST COVER:

G. EXISTING FOREST COVER (EXCLUDING FLOODPLAIN) =	0.60 AC
H. AREA OF FOREST ABOVE AFFORESTATION THRESHOLD =	0.11 AC
I. AREA OF FOREST ABOVE CONSERVATION THRESHOLD =	0.11 AC

BREAK EVEN POINT:

(0.2 X I) + F = BREAK EVEN POINT

J. FOREST RETENTION WITH NO MITIGATION =	0.52 AC
K. CLEARING PERMITTED WITHOUT MITIGATION =	0.08 AC

PROPOSED FOREST CLEARING:

L. TOTAL AREA OF FOREST TO BE CLEARED =	0.60 AC
M. TOTAL AREA OF FOREST TO BE RETAINED =	0.00 AC

PLANTING REQUIREMENTS:

N. REFORESTATION FOR CLEARING ABOVE CONSERVATION THRESHOLD =	0.03 AC
P. REFORESTATION FOR CLEARING BELOW CONSERVATION THRESHOLD =	0.99 AC
Q. CREDIT FOR RETENTION ABOVE CONSERVATION THRESHOLD =	0.00 AC
R. TOTAL REFORESTATION REQUIRED (N+P-Q) =	1.02 AC
S. TOTAL AFFORESTATION REQUIRED =	0.00 AC
T. TOTAL REFORESTATION AND AFFORESTATION REQUIRED =	1.02 AC

TOTAL FOREST CONSERVATION OBLIGATION- 1.02 AC.
OBLIGATION TO BE FULFILLED BY FEE-IN-LIEU FOR

THE (1.02 AC.) 44,431.20 SF x 0.50 = $22,215.60

FEE-IN-LIEU IN AMOUNT OF $22,215.60 FOR 1.02 ACRES OF REFORESTATION SHALL BE PAID TO THE FOREST CONSERVATION FUND.

APPROVED: DEPARTMENT OF PLANNING AND ZONING

CHIEF, DIVISION OF LAND DEVELOPMENT	DATE 3/20/07
CHIEF, DEVELOPMENT ENGINEERING DIVISION	DATE 3/13/07
DIRECTOR	DATE 3/20/07

DEVELOPER

ORCHARD DEVELOPMENT
5032 DORSEY HALL DRIVE
ELLICOTT CITY , MARYLAND 21042
(410) 964-2334
(410) 964-2315 FAX

OWNER

HOWARD COUNTY DEPARTMENT OF HOUSING AND COMMUNITY DEVELOPMENT
6751 COLUMBIA GATEWAY DRIVE
COLUMBIA, MARYLAND
21046-2164

APPROVED: HOWARD COUNTY HEALTH DEPARTMENT

COUNTY HEALTH OFFICER HOWARD COUNTY HEALTH DEPARTMENT	DATE

NO.	REVISION	DATE

SITE DEVELOPMENT PLAN
PATUXENT SQUARE APARTMENTS & RETAIL CENTER
5-STORY RETAIL AND APARTMENT BUILDING
PARCEL A AND NON-BUILDABLE PARCEL B
OF THE NORTH LAUREL SUBDIVISION
A RESUBDIVISION OF LOTS 1 THRU 10, BLOCK 4
AND 9,10 AND 19 THRU 22 & BLOCK 6
FOREST CONSERVATION WORKSHEET & ROUTE 1 DETAILS

TAX MAP 50 GRID 4,
6TH ELECTION DISTRICT

BULK PARCEL A, A RESUBDIVISION OF
LOTS 1 THRU 10, BLOCK 4 AND LOTS 9, 10
AND 19 THRU 22, BLOCK 6, NORTH LAUREL PARK

ROBERT H. VOGEL ENGINEERING, INC.
ENGINEERS • SURVEYORS • PLANNERS
8407 MAIN STREET
ELLICOTT CITY, MD 21043
TEL: 410.461.7666
FAX: 410.461.8961

STATE OF MARYLAND ROBERT HARRY VOGEL No. 16193 PROFESSIONAL ENGINEER
3/20/07
ROBERT H VOGEL, PE #16193

DESIGN BY:	RJ/RHV
DRAWN BY:	RJ
CHECKED BY:	RHV
DATE:	07-24-2007
SCALE:	AS SHOWN
W.O. NO.:	04-11.00

SDP-06-50

RETAINING WALL #1

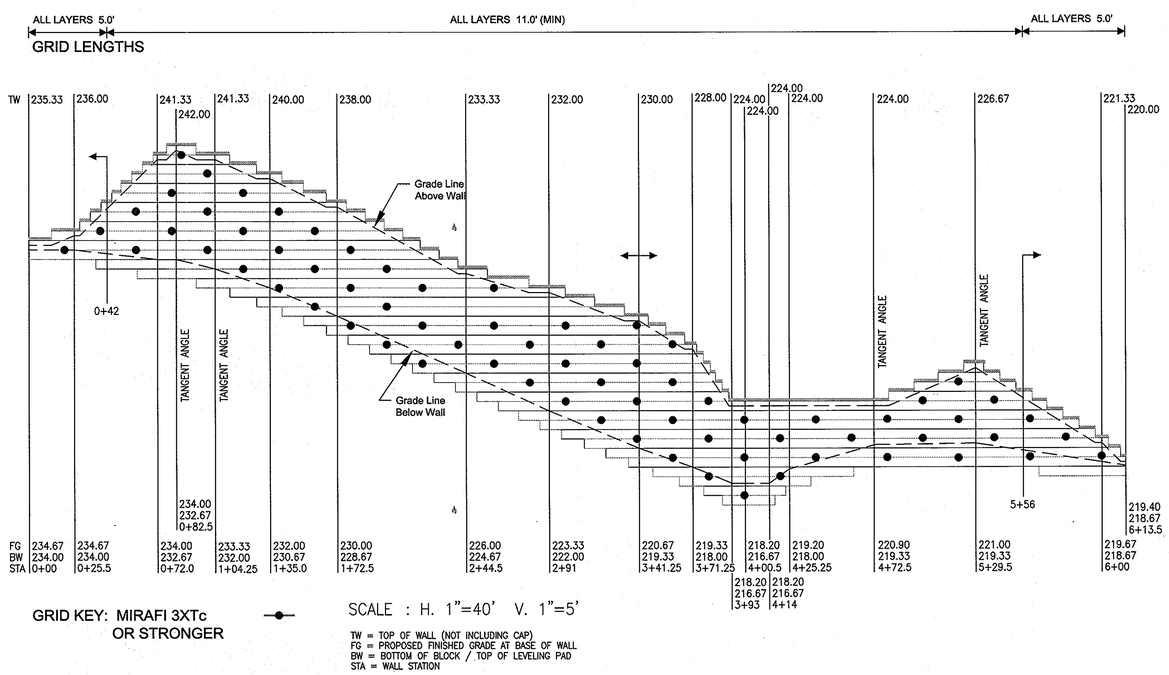

GRID KEY: MIRAFI 3XTc OR STRONGER

SCALE : H. 1"=40' V. 1"=5'

TW = TOP OF WALL (NOT INCLUDING CAP)
FG = PROPOSED FINISHED GRADE AT BASE OF WALL
BW = BOTTOM OF BLOCK / TOP OF LEVELING PAD
STA = WALL STATION

HILL STREET RETAINING WALL PLAN VIEW

SCALE 1"=20'

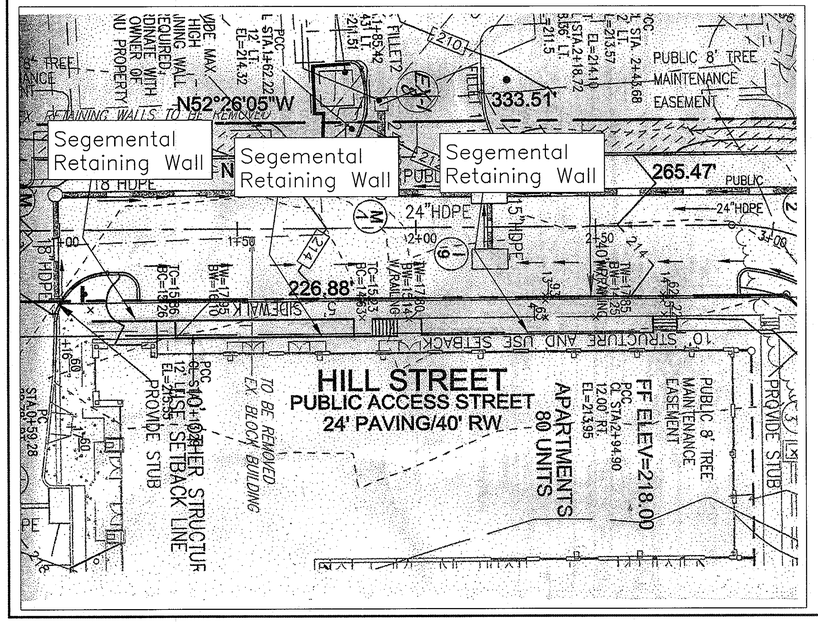

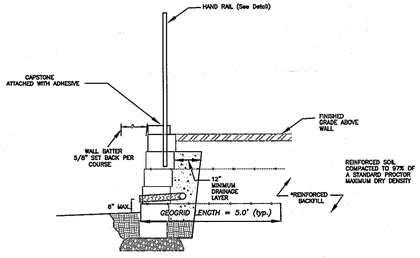

4 FOOT WALL SECTION*

N. T. S.

* SECTION FOR USE IN CONSTRUCTION OF WALLS LOCATED ALONG HILL STREET AT ENTRANCE STEPS TO APARTMENT BUILDING (SEE TYPICAL GEOGRID WALL SECTION SHEET 2 FOR FURTHER INFORMATION).

OWNER
HOWARD COUNTY DEPARTMENT OF HOUSING AND COMMUNITY DEVELOPMENT
6751 COLUMBIA GATEWAY DRIVE
COLUMBIA, MARYLAND
21046-2164

DEVELOPER
ORCHARD DEVELOPMENT
5032 DORSEY HALL DRIVE
ELLICOTT CITY, MARYLNAD 21042
(410) 964-2334
(410) 964-2315 (FAX)

APPROVED: DEPARTMENT OF PLANNING AND ZONING

CHIEF, DIVISION OF LAND DEVELOPMENT	DATE 11/1/07
CHIEF, DEVELOPMENT ENGINEERING DIVISION	DATE 11/1/07
DIRECTOR	DATE 11/1/07

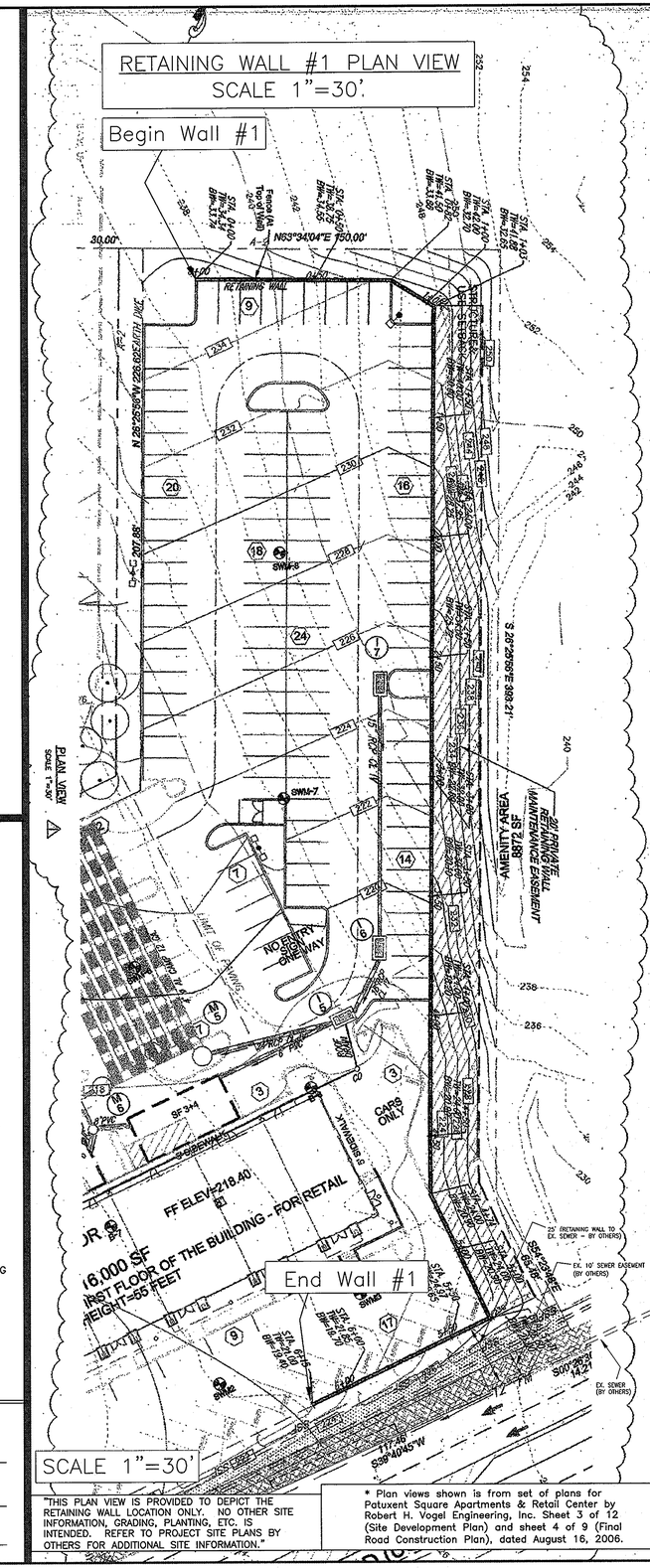

"THIS PLAN VIEW IS PROVIDED TO DEPICT THE RETAINING WALL LOCATION ONLY. NO OTHER SITE INFORMATION, GRADING, PLANTING, ETC. IS INTENDED. REFER TO PROJECT SITE PLANS BY OTHERS FOR ADDITIONAL SITE INFORMATION."

* Plan views shown is from set of plans for Patuxent Square Apartments & Retail Center by Robert H. Vogel Engineering, Inc. Sheet 3 of 12 (Site Development Plan) and sheet 4 of 9 (Final Road Construction Plan), dated August 16, 2006.

CIS
ENGINEERING, INC.
A division of CIS, Inc.
31 Sycolin Road, S.E.
Leesburg, VA 20175
Phone: (703) 669-9052
Fax: (703) 534-2107

REVISION #	REMARKS	DATE	BY	CHKD
1	Revised for On-site water conditions and soil friction	05/10/07	JWP	TMG
2	Revised Site Plan Dated 01/04/06	06/25/07	JWP	TMG
3	Add Existing Sewer (by others) and easement (by others) per Howard County	08/23/07	TMG	TMG
4	Revise Title Block and Notes for Howard County, MD	10/03/07	JWP	TMG
	REVISE RETAINING WALL DESIGN TO INTERLOCKING BLOCK WALL			

Stamp & Signature

PATUXENT SQUARE APARTMENTS & RETAIL CENTER
5-STORY RETAIL AND APARTMENT BUILDING, PARCEL A AND NON-BUILDABLE PARCEL B OF THE NORTHERN LAUREL SUBDIVISION, A RESUBDIVISION OF LOTS 1 THRU 10, BLOCK 4 AND 9, 10 AND 19 THRU 22 & BLOCK 6

TAX MAP 50 GRID 4
8TH ELECTION DISTRICT

BULK PARCEL A, A RESUBDIVISION OF LOTS 1 THRU 10 BLOCK 4 AND LOTS 9, 10 AND 19 THRU 22, BLOCK 6 NORTH LAUREL PARK

CORNERSTONE LANDSCAPE RETAINING WALL
WALL ELEVATION & PLAN VIEW

SHEET 11 OF 12

TMG

02/20/2007

PLOT DATE: 022007

SDP-06-50

BLOCK DIMENSIONS
TOP VIEW

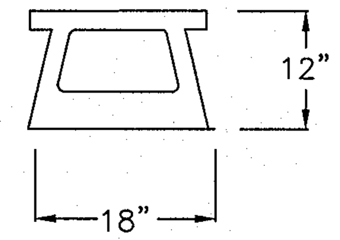

BLOCK DIMENSIONS
FRONT VIEW

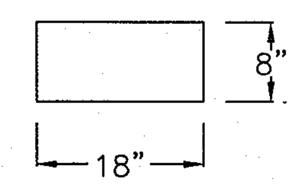

CAP DIMENSIONS

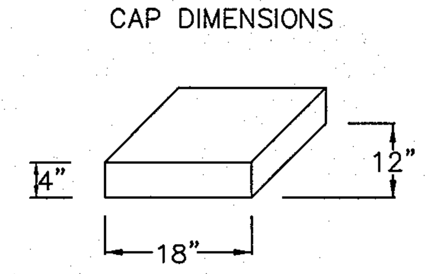

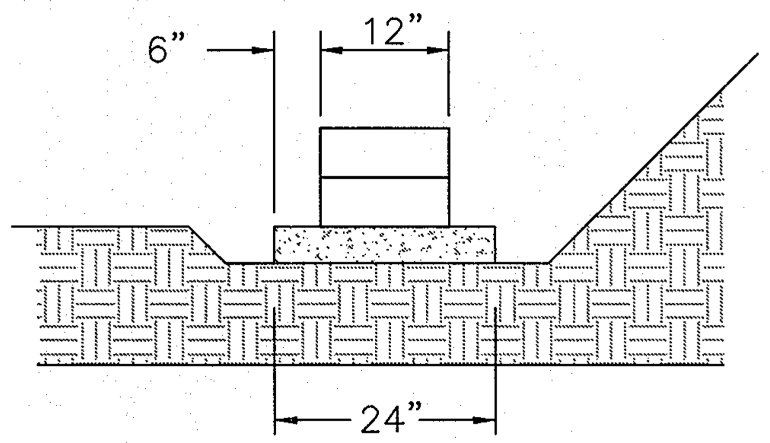

SECTION

LEVELING PAD DETAIL

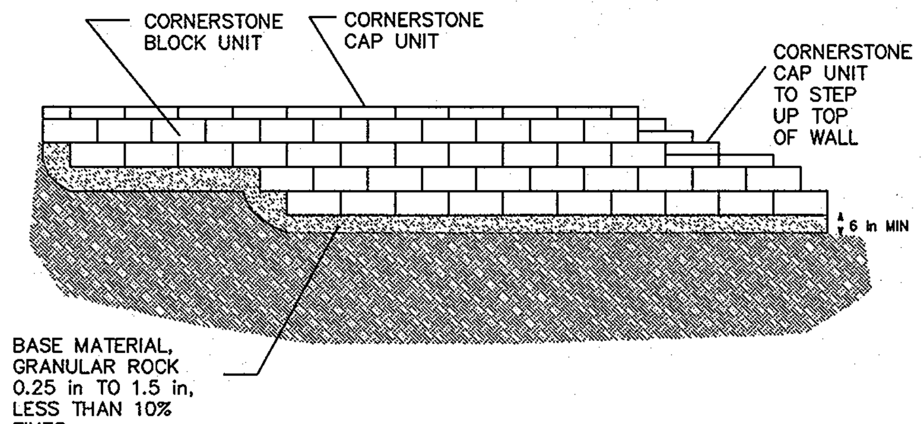

CORNERSTONE STEP DOWN TYPICAL DETAIL

N. T. S.

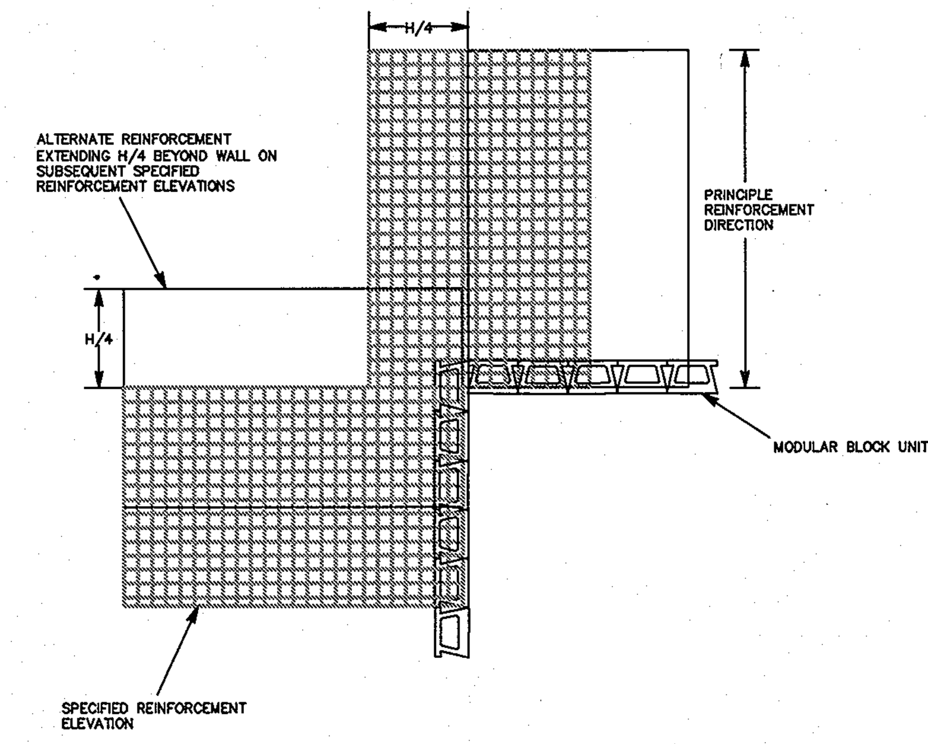

REINFORCEMENT PLACEMENT FOR INSIDE 90° CORNERS

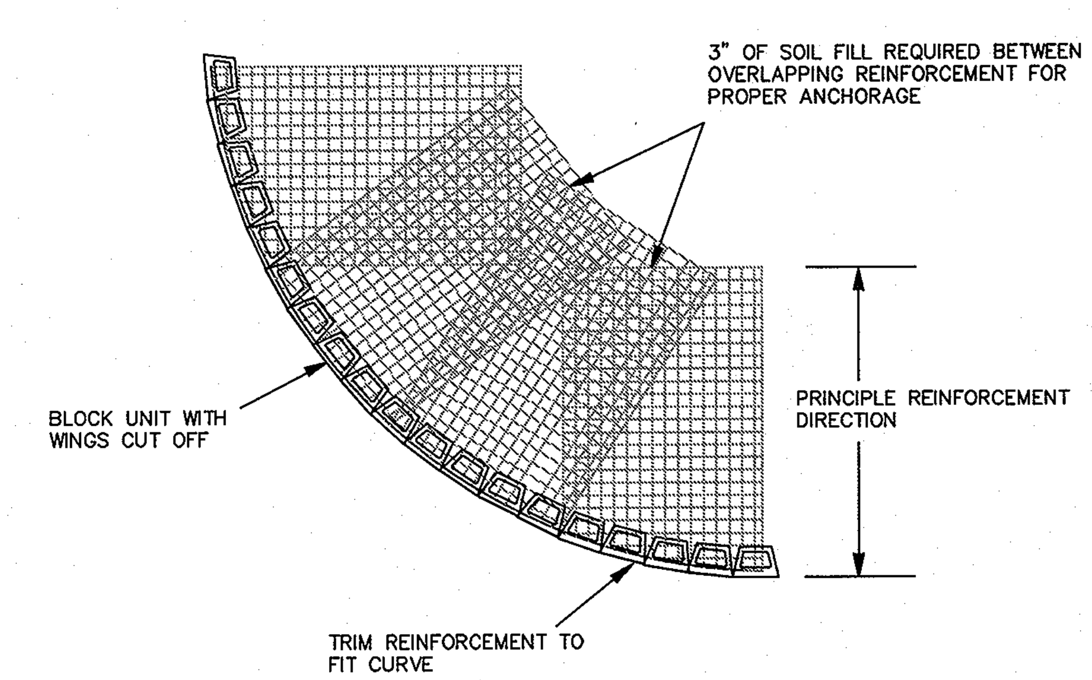

REINFORCEMENT PLACEMENT FOR OUTSIDE CURVES

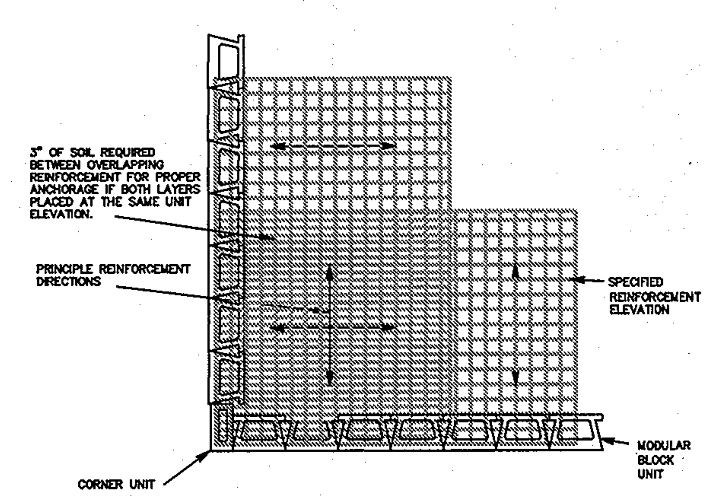

REINFORCEMENT PLACEMENT FOR OUTSIDE 90° CORNERS

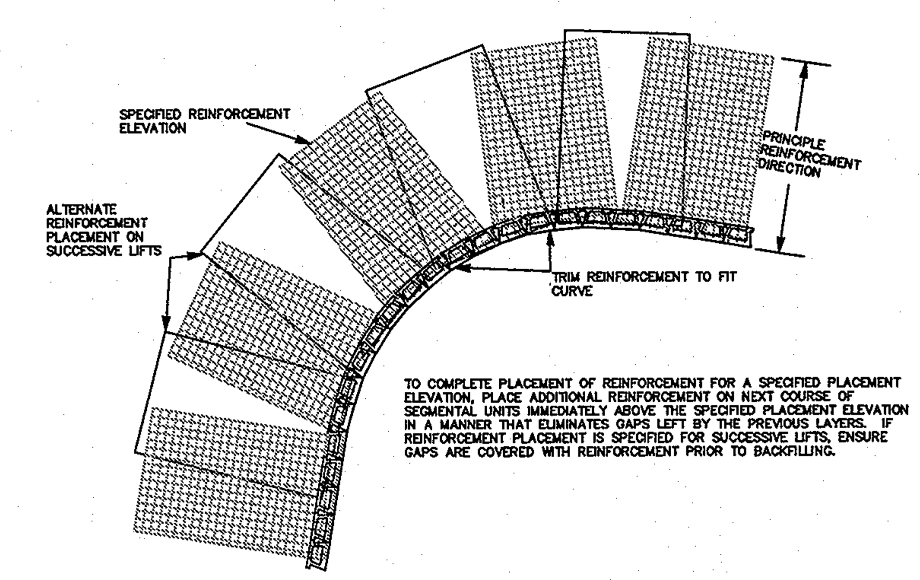

REINFORCEMENT PLACEMENT FOR INSIDE CURVES

TYPICAL GEOGRID WALL SECTION

N. T. S.

NOTE: THIS SECTION SHOWS TYPICAL WALL COMPONENTS BUT NOT THE DESIGN GEOGRID PATTERN. REFER TO THE ELEVATION VIEW FOR GEOGRID TYPE, LENGTH AND LOCATION.

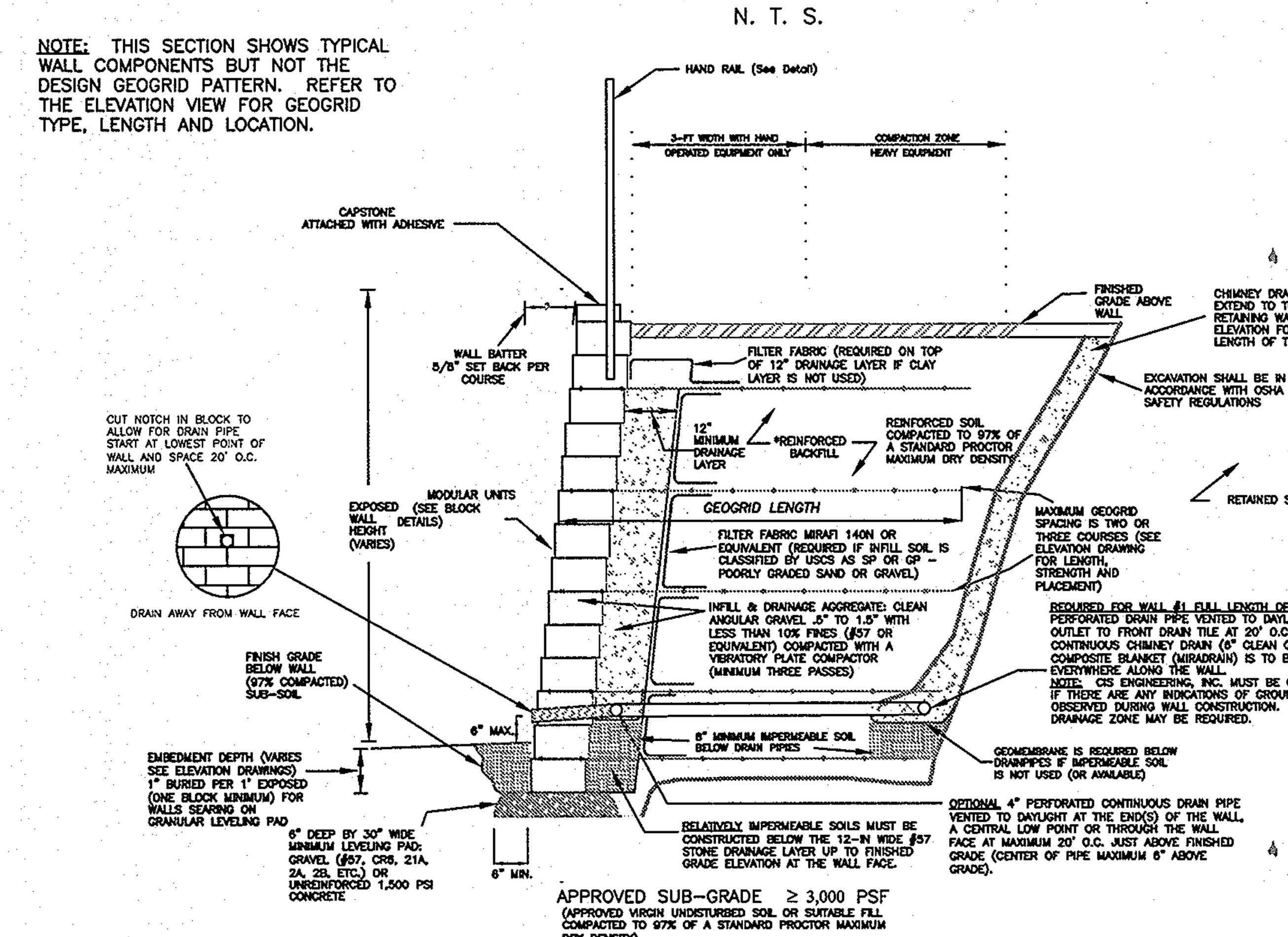

TYPICAL FENCE DETAIL*

(No Scale)

* "Jerith OrnamentalFences of Distinction Style #202"

Owners may substitute fence style, and add fence at the retaining wall as needed per code.

Fence Elevation View — Fence Section View

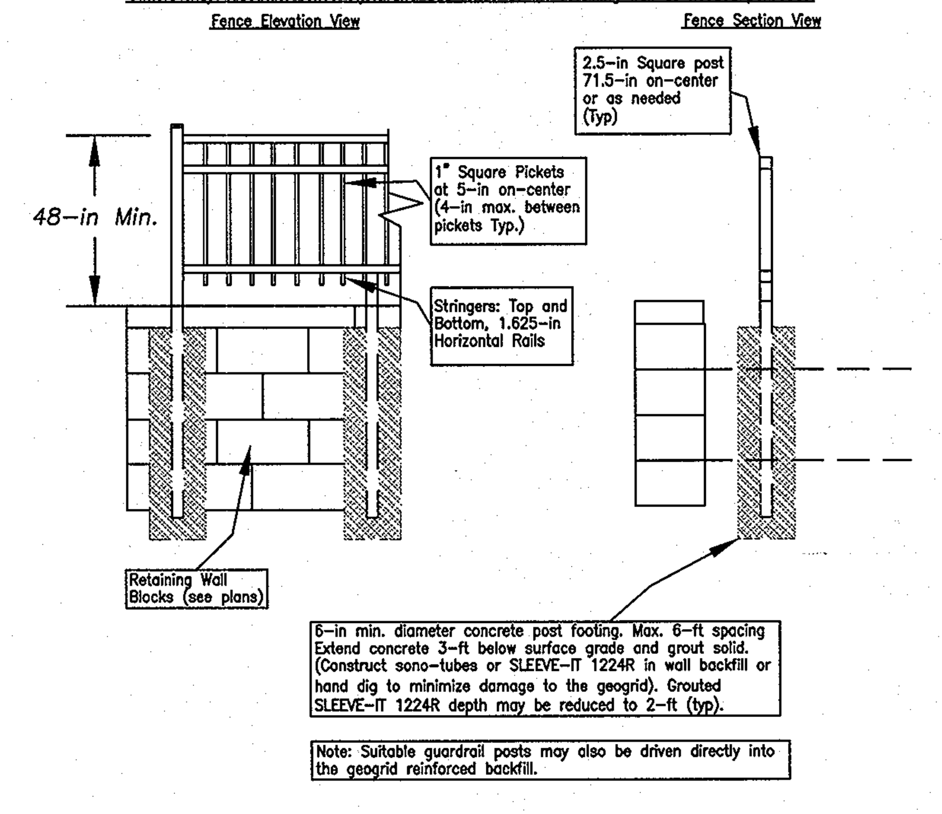

6-in min. diameter concrete post footing. Max. 6-ft spacing Extend concrete 3-ft below surface grade and grout solid. (Construct sono-tubes or SLEEVE-IT 1224R in wall backfill or hand dig to minimize damage to the geogrid). Grouted SLEEVE-IT 1224R depth may be reduced to 2-ft (typ).

Note: Suitable guardrail posts may also be driven directly into the geogrid reinforced backfill.

PART 1: GENERAL

A. These plans refer only to the installation of the referenced Cornerstone 100 wall block. No other site grading or other information is intended by these plans. All site grading and wall location information was provided by others. The wall height may be reduced in the field as needed to meet site grades.

PART 2: CORNERSTONE PRODUCTS

A. Modular concrete materials shall consist of Cornerstone 100 units in accordance with the requirements of ASTM C1372, ASTM C90, and ASTM C140.
B. Base leveling pad shall consist of a Compacted crushed stone base as shown on the drawings.
C. Unit drainage fill shall consist of clean #57 stone.
D. The retaining Wall backfill selectively may be site excavated soil when approved by the geotechnical engineer or otherwise specified herein. Suitable wall backfill must meet the following:
USCS ML, SM or more granular
Liquid Limit (LL) ≤ 40; Plasticity Index (PI) ≤ 12
Standard Proctor maximum dry density ≥ 108 pcf
Internal Friction Angle $\Phi \geq 30°$
Moisture content ± 3% of the optimum moisture content for compaction
E. The retaining wall backfill also may consist of approved topsoil for planting provided it meets the friction angle requirements above. The geotechnical engineer must approve the backfill soils.
F. The geogrid shall consist of Mirafi 3XTc geogrid or stronger as noted on Elevation View.

PART 3 EXECUTION

A. All work must be performed in accordance with these plans, project documents, Cornerstone construction recommendations all applicable building and safety codes.
B. At the end of each work day, the Contractor shall protect the retaining wall backfill zone from runoff from adjacent site areas.

3.01 Excavation

A. Contractor shall excavate to the lines and grades shown on the construction drawings or as recommended by the geotechnical engineer.
B. In areas with soil subgrade the geotechnical engineer shall inspect the excavation and verify the subgrade for at least 3,000-psf soil bearing capacity prior to placement of leveling material or fill soils. The bottom of the wall shall be supported upon a granular leveling pad on approved natural ground or controlled structural fill. Unsuitable foundation soils must be overexcavated and replaced with approved Compacted materials.

3.02 Base Leveling Pad

A. Leveling pad material shall be placed to the lines and grades shown on the construction drawings, to a min. thickness of 6-in and extend laterally a min of 6-in in front and behind the modular wall unit.
B. Soil leveling pad shall be compacted to at least of 97% Standard Proctor density per ASTM D-698.
C. Geotechnical engineer must verify drilled pier and grade beam construction to support retaining wall.

3.03 Modular Unit Installation

A. Retaining wall block and connection pins shall be installed in accordance with the manufacturer's construction manual.

3.04 Cap Installation

A. Cap units shall be glued to underlying units with an all-weather adhesive recommended by the manufacturer.

3.05 Structural Geogrid Installation

A. Geogrid shall be oriented with the highest strength axis perpendicular to the wall alignment.
B. Geogrid reinforcement shall be placed at the strengths, lengths, and elevations shown on the construction or as directed by CIS Engineering, Inc.
C. The geogrid shall be laid horizontally on compacted backfill and attached to the modular wall units. Place the next course of modular concrete units over the geogrid. The geogrid shall be pulled taut, and anchored prior to backfill placement on the geogrid.
D. Geogrid reinforcements shall be continuous throughout their embedment lengths and placed side-by-side to provide 100% coverage at each level.

3.06 Reinforced Backfill Placement

A. Backfill shall be placed in ±8-in max. loose lifts, spread, and compacted in such a manner that minimizes the development of slack in the geogrid and installation damage.
B. Reinforced backfill shall be Compacted to at least 97% of the maximum density as determined by ASTM D698. The moisture content of the backfill material prior to and during compaction shall be uniformly distributed throughout each layer and shall be ±3% of the optimum moisture content for compaction.
C. Open-graded stone, gravel, reclaimed concrete, or planting soil backfill shall be compacted with the grading equipment or approved vibratory compaction equipment.
D. Only lightweight hand-operated equipment shall be allowed within 3-ft from the tail of the modular concrete unit.
E. It is recommended that Sono-tubes or SLEEVE-IT 1224R be installed during wall construction to allow for fence installation (as needed).

3.07 As-built Construction Tolerances

A. Vertical alignment: ± 1.5" over any 10' distance.
B. Wall Batter: within 2 degrees of design batter.
C. Horizontal alignment: ± 1.5" over any 10' distance.
D. Max horizontal gap between blocks ≤ 1/2 inch.

Retaining Wall Design Information

Retained Soil Unit Weight (γ):	125 pcf	Foundation Bearing Capacity:	3,000 psf
Wall Backfill Unit Weight (γ):	125 pcf	Internal Angle of Soil Backfill Friction (Φ):	30°
Uniform Vertical Live Load :	100 psf	Soil Cohesion (c)	0 psf
Uniform Vertical Dead Load:	0 psf		

Seismic Factors

A=0.272 Kh=0.136g

- All F.S. reduced to 75% of Static Loading F.S. for seismic conditions with minimum F.S.(seismic) = 1.1

F.S. Sliding (min.):	1.5	F.S. Shear (min.):	1.5
F.S. Overturning (min.):	1.5	F.S. Bending (min.)	1.5
F.S. Bearing (min.):	2.0		

Global Stability

F.S. Circular Failure (min.) 1.3

Internal Stability

F.S. Uncertainty (min.):1.5
F.S. Pullout (min.): 1.5

APPROVED: DEPARTMENT OF PLANNING AND ZONING

Andy Hamot CHIEF, DIVISION OF LAND DEVELOPMENT	DATE *11/1/07*
[signature] CHIEF, DEVELOPMENT ENGINEERING DIVISION	DATE *11/1/07*
[signature] DIRECTOR	DATE *11/1/07*

OWNER
HOWARD COUNTY DEPARTMENT OF HOUSING AND COMMUNITY DEVELOPMENT
6751 COLUMBIA GATEWAY DRIVE
COLUMBIA, MARYLAND
21046-2164

DEVELOPER
ORCHARD DEVELOPMENT
5032 DORSEY HALL DRIVE
ELLICOTT CITY, MARYLNAD 21042
(410) 964-2334
(410) 964-2315 (FAX)

CIS
ENGINEERING, INC.
A division of CIS, Inc.
31 Sycolin Road, S.E.
Leesburg, VA 20175
Phone: (703) 669-9052
Fax: (703) 534-2107

REVISION #	REMARKS	DATE	BY	CHKD
1	Revised for On-site water conditions and soil friction	05/10/07	JWP	TMG
2	Revised Site Plan Dated 01/04/06	06/25/07	JWP	TMG
3	Add Existing Sewer (by others) and easement (by others) per Howard County	08/23/07	TMG	TMG
4	Revise Title Block and Notes for Howard County, MD	10/03/07	JWP	TMG
	REVISE RETAINING WALL DESIGN TO INTERLOCKING BLOCK WALL			

STATE OF MARYLAND * TIMOTHY M. GARY * PROFESSIONAL ENGINEER No. 22...

Stamp & Signature

PATUXENT SQUARE APARTMENTS & RETAIL CENTER

5-STORY RETAIL AND APARTMENT BUILDING, PARCEL A AND NON-BUILDABLE PARCEL B OF THE NORTHERN LAUREL SUBDIVISION, A RESUBDIVISION OF LOTS 1 THRU 10, BLOCK 4 AND 9, 10 AND 19 THRU 22 & BLOCK 6

TAX MAP 50 GRID 4
6TH ELECTION DISTRICT

BULK PARCEL A, A RESUBDIVISION OF LOTS 1 THRU 10 BLOCK 4 AND LOTS 9, 10 AND 19 THRU 22, BLOCK 6 NORTH LAUREL PARK

CORNERSTONE LANDSCAPE RETAINING WALL DETAILS & CONSTRUCTION SPECS. AND NOTES

SHEET 12 OF 12

02/20/2007 TMG

PLOT DATE: 022007

SDP-06-50