HIGH RIDGE PARK
HOWARD COUNTY CAPITAL PROJECT NO. N-3104
HOWARD COUNTY MARYLAND

SITE DEVELOPMENT PLAN

GENERAL NOTES:

1. ALL CONSTRUCTION SHALL BE IN ACCORDANCE WITH THE LATEST STANDARDS AND SPECIFICATIONS OF HOWARD COUNTY AND MSHA STANDARDS AND SPECIFICATIONS WHERE APPLICABLE.
2. THE CONTRACTOR SHALL NOTIFY THE CONSTRUCTION INSPECTION DIVISION AT (410)313-1880 AT LEAST FIVE (5) WORKING DAYS PRIOR TO THE START OF WORK AND THE NATURAL RESOURCES & OPEN SPACE DIVISION, MARK RAAB, AT 410-313-4730.
3. THE CONTRACTOR SHALL NOTIFY "MISS UTILITY" AT 1-800-257-7777 AT LEAST 48 HOURS PRIOR TO ANY EXCAVATION WORK.
4. ALL PLAN DIMENSIONS ARE TO THE EDGES OF PAVED SURFACES UNLESS OTHERWISE NOTED.
5. HORIZONTAL DATUM: MARYLAND STATE PLANE COORDINATE GRID BASED ON NORTH AMERICAN ADJUSTMENT OF 1983.
6. VERTICAL DATUM: MEAN SEA LEVEL OF U.S.C. & G SURVEY (1929 ADJUSTMENT).
7. TOPOGRAPHIC SURVEY PERFORMED BY FREDERICK WARD ASSOCIATES, INC. JANUARY 1997 AND URS CORPORATION APRIL 2004. COORDINATES USED REFER TO THE MARYLAND COORDINATE SYSTEM NAD 83 AS PROJECTED TO HOWARD COUNTY GEODETIC CONTROL STATIONS NOS. 17400001 & 18400001.
8. PUBLIC WATER AND SEWER ARE AVAILABLE ON SITE. THE CONTRACT NUMBERS ARE 24-3818 FOR WATER AND 0030-S FOR SEWER. BOTH UTILITIES ARE IN THE LITTLE PATUXENT DRAINAGE AREA.
9. EXISTING UTILITIES WERE FIELD LOCATED IN CONJUNCTION WITH THE TOPOGRAPHIC SURVEY.
10. THE KEY PLAN SH[illegible] SHOWS THE ENTIRE PARK PROPERTY AT 1" = 200' SCALE. CONSTRUCTION WILL OCCUR ON [illegible] N SHEE[illegible] 3 THROUGH 8.
11. A TRAFFIC CONTROL PLAN WILL NOT BE REQUIRED.
12. STORMWATER MANAGEMENT IS PROVIDED BY EXTENDED-DETENTION WITH A MICROPOOL & FOREBAY, BIO-RETENTION FACILITIES; AND TO BE OWNED AND MAINTAINED BY HOWARD COUNTY
13. WETLANDS DELINEATION AN WORK WITHIN WETLANDS, STREAMS AND RELATED BUFFERS BY FREDERICK WARD ASSOCIATES, OCTOBER 1992. [illegible]PROVED BY MARYLAND DEPARTMENT OF THE ENVIRONMENT, APRIL 20, 1998, PERMIT No. 98-NT-0108/199862780 (EXPIRES [illegible] 005). A PERMIT MODIFICATION HAS BEEN SUBMITTED TO MDE &ACOE REQUESTING A TIME EXTENSION TO JA[illegible] [illegible]007 AND TO ADDRESS CHANGES IN WETLAND AND WETLAND BUFFER IMPACTS.
14. NO TRAFFIC STUDY IS REQUIRED FOR THIS PROJECT.
15. THE LIMITS OF THE 100 YEAR FLOOD PLAIN (PATUXENT RIVER) AS SHOWN HEREON ARE FROM THE FEDERAL EMERGENCY MANAGEMENT AGENCY (FEMA) FLOOD INSURANCE RATE MAP [illegible]RM) COMMUNITY PANEL NO. 240044-0045 B EFFECTIVE DATE DECEMBER 4, 1986).
16. THE OBLIGATIONS OF FOREST CONSERVATION HAVE BEEN MET BY THE RE[illegible]TION OF 27.37 ACRES OF FOREST IN A FOREST CONSERVATION EASEMENT, PLAT OF EASEMENT #14613.
17. THIS PARK IS A 'CARRY IN-CARRY OUT' PARK, MEANING THAT PARK PATRONS ARE RESPONSIBLE FOR THEIR OWN TRASH.
18. NO CLEARING, GRADING, OR CONSTRUCTION IS PERMITTED WITHIN ANY WETLAND AREA, WETLAND BUFFER, FLOODPLAIN AREA, OR STREAM BUFFERS WITHOUT APPROVAL OF THE HOWARD COUNTY DEPARTMENT OF PLANNING AND ZONING.
19. THIS PROJECT IS SUBJECT TO WAIVER WP-04-123, WHICH WA[illegible] SECTION 16.144 OF THE SUBDIVISION AND LAND DEVELOPMENT REGULATIONS TO ALLOW FOR THE CONSO[illegible]ON OF EXISTING LOTS/PARCELS BY RECORDING AN ADJOINER DEED INSTEAD OF A STANDARD PLA[illegible]E ACTION WAS APPROVED ON MAY 20, 2[illegible] SUBJECT TO THE FOLLOWING CONDITIONS:
    a. IN THE EVENT THAT AN OWNER CLAIMS THE PROPE[illegible] IDENTIFIED ON THE WAIVER EXHIBIT AS "JOHN MATTINGLY, LIBER WWW25, FOLIO [illegible]79" THEN [illegible] DEPARTMENT OF PUBLIC WORKS SHALL PROVIDE ACCESS TO THAT PROPERTY, EITHER BY FE[illegible] SIMPLE FRONTAGE ONTO A PUBLIC ROAD OR VIA AN ACCESS EASEMENT FROM A PUBLIC ROAD TO THAT PROPERTY. IN SIMILAR FASHION, IF ANY OTHER ADJOINING PARCEL SHOULD BE DEEMED [illegible] BE LANDLOCKED WITHOUT PUBLIC ROAD FRONTAGE OR ACCESS TO A PUBLIC ROAD THEN RE[illegible]NABLE ACCESS SHALL BE PROVIDED TO THOSE PROPERTIES THROUGH THE SUBJ[illegible] PROPER[illegible]
    b. THE DEED OF ADJOINDER SHALL BE R[illegible]ED WITHIN 6 MONTHS OF APPROVAL OF THIS WAIVER (BY 11/20/2004). A COPY OF THE R[illegible]ED DEED SHALL BE PROVIDED TO THE DEPARTMENT OF PLANNING AND ZONING AS SOON [illegible]SSIBLE.
    c. ALL ENVIRONMENTAL FEATURES AND [illegible]S SHALL BE DELINEATED ON THE FUTURE SITE PLAN (THAT WILL SUPERCEDE SDP-00-34) [illegible] WILL BE REVIEWED BY THE SUBDIVISION REVIEW COMMITTEE. AN ENVIRONMENTAL REPO[illegible]LL BE PROVIDED WITH THE SUBMISSION OF THAT PLAN.
20. NO LANDSCAPE SURETY IS REQUIRED SINCE TH[illegible] HOWARD COUNTY CAPITAL PR[illegible]ECT.
21. THE DEPARTMENT OF RECREATION AND PARKS [illegible] TO MAINTAIN THE BIORETEN[illegible] FACILITY AND STORMWATER MANAGEMENT POND.
22. A FLOODPLAIN STUDY FOR HA HA CREEK WAS PERFORMED AND APPROVED UNDER SDP-00-34. THE STUDY WAS UPDATED TO REFLECT MINOR CHANGES IN THE CULVERT CROSSING, WHICH RESU[illegible] IN INSIGNIFICANT CHANGES TO THE FLOOD PLAIN.
23. THE ENVIRONMENTAL DISTURBA[illegible]ES FOR THE ENTRANCE ARE CONSIDERED TO BE "ESSENTIAL" IN ACCORDANCE WITH SECTION 16.116(C) OF THE SUBDIVISION REGULATIONS SUBJECT TO ANY CONDITIONS OR DESIGN REQUIREMENTS IMPOSED BY SC[illegible] OR [illegible]ED FOR THE PIPE CULVERT.
24. THE ENTRANCE ROAD DOES NOT REQUIRE APPROVAL OF A VARIANCE. THE ROADWAY IS ALLOWED TO PASS THROUGH THE SETBACK AREA WITHIN THE NARROW STRIP OF LAND FROM THE TERMINUS OF THE PUBLIC PORTION OF SUPERIOR AVENUE INTO THE MAIN AREA OF THE PARK, AT WHICH POINT IT MUST THEN COMPLY WITH ALL APPLICABLE SETBACKS.
25. BY RESOLUTION NO. 113-200[illegible] DATED OCTOBER 4, 2004, A VARIANCE WAS GRANTED TO: (A) REDUCE TH[illegible] [illegible]UIRED 20-FOOT USE SETBACK FROM A PUBLIC STREET RIGHT-OF-WAY AS REQUIRED BY SECTION 110.D.4.b.(2) OF THE ZONIN[illegible] [illegible]ULATIONS TO 2 FEET FOR THE CONSTRUCTION OF THE ROAD FILL RETAINING WALL; AND (B) REDUCE THE REQUIRED 20-FOOT USE [illegible]CK FROM [illegible] LOT LINE AS REQUIRED BY SECTION 110.D.4.[illegible](2) OF THE ZONING REGULATIONS TO 2 FEET FOR THE CONSTRUCTION [illegible] ROAD FI[illegible] RETAINING WALL.

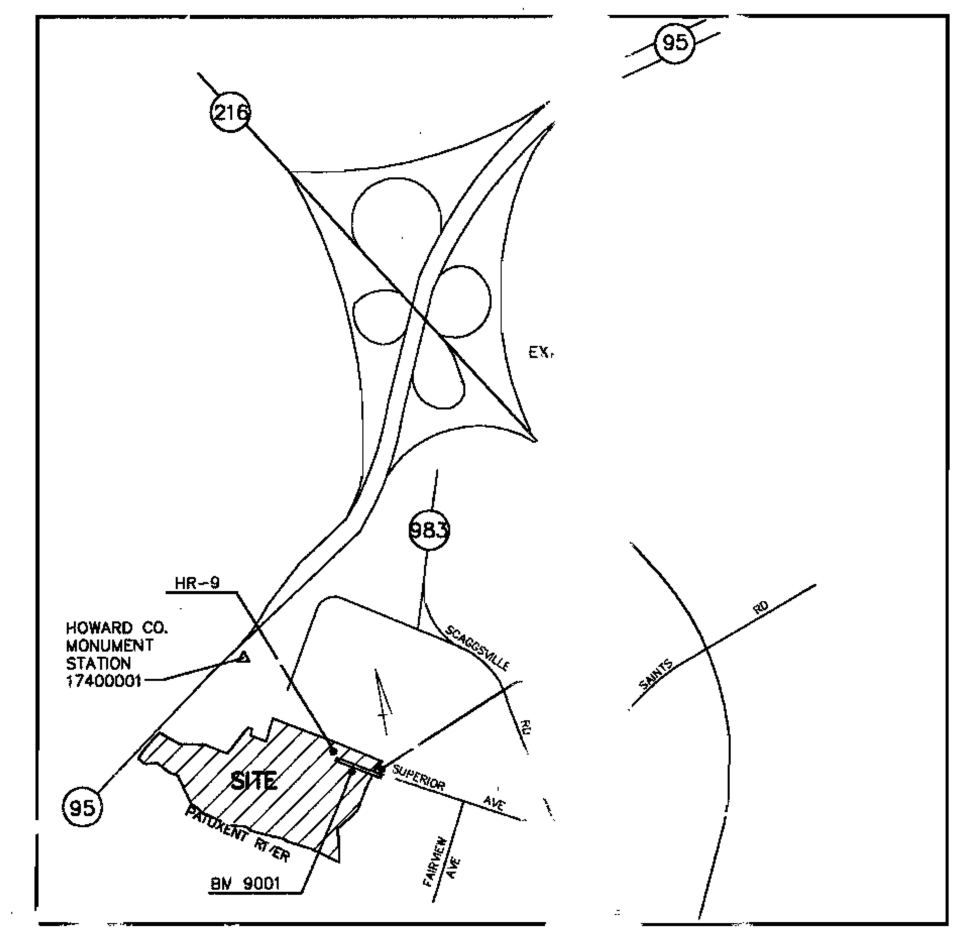

VICINITY MAP
SCALE 1" =

INDEX OF DRAWINGS

SHEET NO.	TITLE	SHEET NO.	TITLE
1	COVER SHEET	27	STORMWATER MANAGEMENT PLAN AND DETAILS
2	KEY PLAN	28	BIORETENTION PLAN AND DETAILS
3-8	SITE DEVELOPMENT PLAN	29	STORMWATER MANAGEMENT NOTES
9-13	SITE DETAILS	30	PRE-DEVELOPMENT DRAINAGE AREA MAP
14-16	RETAINING WALL DETAILS	31-32	POST-DEVELOPMENT DRAINAGE AREA MAP
17	ROAD PROFILE AND TYPICAL SECTION	33-36	LANDSCAPE PLAN
18	STORM DRAIN PROFILES, SCHEDULES AND DETAILS	37	LANDSCAPE DETAILS
19-24	GRADING & EROSION AND SEDIMENT CONTROL PLAN	38	PLAYGROUND PLAN
25-26	EROSION AND SEDIMENT CONTROL NOTES & DETAILS	39	GEOTECHNICAL DATA

BENCH MARK [illegible]
EL. 229.76
N 527,197.220 E 1,[illegible]1,6[illegible] 40

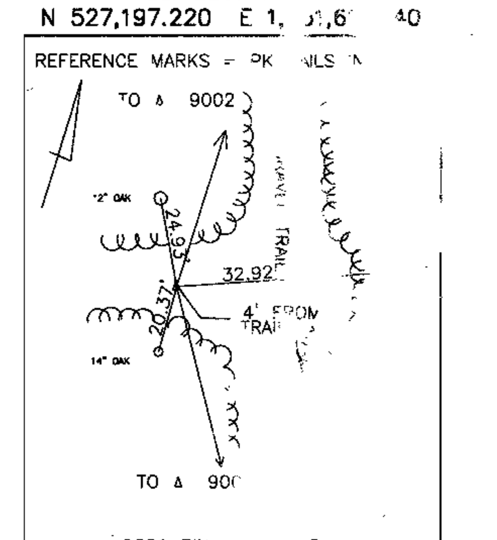

BENCH MARK
EL. 246.51
N 527,197.220 E [illegible] 250

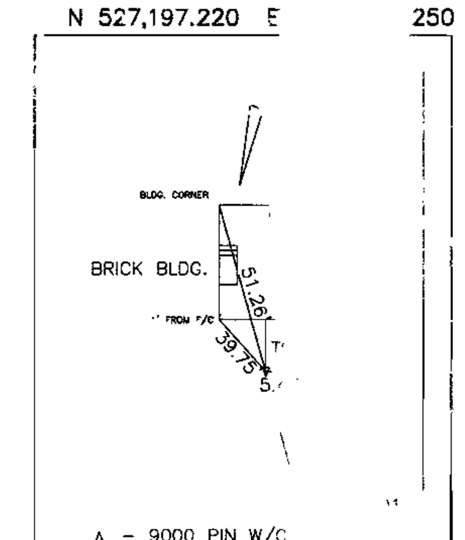

BENCH MARK HR-9
EL. 229.05
N 527,098.831 E 1,351,912.421

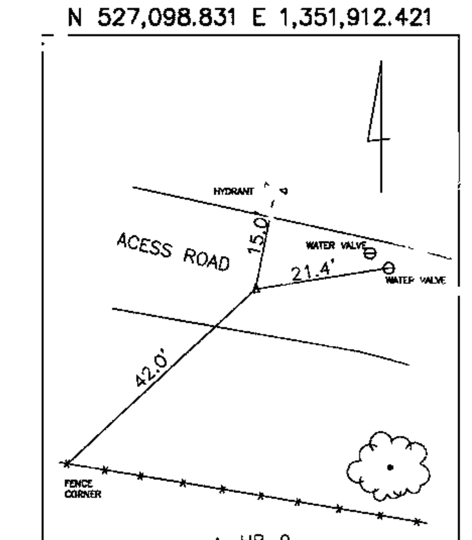

SITE ANALYSIS DATA CHART

TOTAL PROJECT AREA:	88.4 ACRES, 3,850,704 SQ. FT.
AREA OF PLAN SUBMISSION:	7.4
LIMIT OF DISTURBED AREA:	7.4 ACRES
PRESENT ZONING DESIGNATION:	R-20 & R-SC
PROPOSED USES FOR SITE:	PARK WITH BASKETBALL COURT, TENNIS COURT PICNIC, OPEN PLAY, COMFORT STATION & SHELTER
FLOOR SPACE ON EACH LEVEL OF BUILDING(S) PER USE:	N/A
TOTAL NUMBER OF UNITS ALLOWED FOR PROJECT AS SHOWN ON FINAL PLAT:	N/A
TOTAL NUMBER OF UNITS PROPOSED FOR SUBMISSION:	N/A
MAXIMUM NUMBER OF EMPLOYEE, TENANTS ON SITE PER USE:	N/A
NUMBER OF PARKING SPACES REQUIRED BY HOWARD COUNTY ZONING REGULATIONS AND/OR SDP CRITERIA:	N/A (SEE PARKING JUSTIFICATION - THIS SHEET)
NUMBER OF PARKING SPACES PROVIDED ON SITE (INCLUDE NUMBER OF HANDICAPPED PARKING SPACES):	70 TOTAL PARKING/INCLUDES 3 HANDICAPPED
OPEN SPACE ON SITE:	81.0 ACRES AND 92% OF GROSS AREA
AREA OF RECREATION OPEN SPACE REQUIRED BY SUBDIVISION AND LAND DEVELOPMENT REGULATIONS ACRES:	REQUIRED N/A PROVIDED N/A
BUILDING CONVERAGE OF SITE:	0.04 ACRES AND < 1% OF GROSS AREA
APPLICABLE DPZ REFERENCES:	SDP-00-34, WP-04-123, RESOL.# 113-2004

PARKING JUSTIFICATION

THE FOLLOWING PARKING REQUIREMENTS WERE PROVIDED BY THE DEPARTMENT OF RECREATION AND PARKS FOR HIGH RIDGE PARK:

TENNIS COURT	4 PARKING SPACES
BASKETBALL COURT	10
PLAYGROUND	3
PICNIC SHELTER	24
PICNIC TABLES	12
TRAIL USERS	12
TOTAL REQUIRED	65
TOTAL PROVIDED	70

NOTE: THE PARKING NEEDS FOR HIGH RIDGE PARK WILL TEND [illegible] BE [illegible] AND SPORADIC SINCE IT WILL NOT HAVE ANY FORMAL ATHLETIC FIELDS. FORMAL [illegible] THE [illegible]LDS TEND TO GENERATE A HIGHER PARKING REQUIREMENT PER SECTION 133 [illegible] TH[illegible] [illegible]NG REGULATIONS

PERMIT INFORMATION CHART

Subdivision Name	[illegible]	Lot/Parcel No.	Deed
High Ridge Park	N/A	P. 364	8771/685

[illegible]	Grid #	Zoning	Tax Map	Elec Dist	Census Tract
[illegible]	1 & 2	R-20 & R-SC	[illegible]	6	6069.03

Water Code	Sewer Code
[illegible]06	7170900

ADDRESS CHART

LOT/PARCEL #	STREET ADDRESS
[illegible]/364	10100 SUPERIOR AVENUE

APPROVED: DEPARTMENT OF PLANNING AND ZONING

Chief, Development Engineering Division	Date 2/2/05
Chief, Division of Land Development	Date 2/4/05
Director	Date 2/16/05

APPROVED: FOR PUBLIC (OR PRIVATE) WATER AND PUBLIC (OR PRIVATE) SEWERAGE SYSTEMS

County Health Officer, Howard County Health Department — Date 2/8/05

PREPARED BY
URS
4 NORTH PARK DRIVE
HUNT VALLEY, MARYLAND
TEL [illegible] 785-7220

BY	NO.	REVISION	DATE

OWNER:
HOWARD COUNTY DEPARTMENT
RECREATION AND PARKS
7120 OAKLAND MILLS ROAD
COLUMBIA, MARYLAND 21046

DEVELOPER
HOWARD COUNTY DEPARTMENT OF PUBLIC WORKS
9250 BEN[illegible] ROAD
COLUMBIA, MARYLAND 21045

TAX MAP	50
GRID:	1&2
ZONED:	R-20 & R-SC
PARCEL NO	364
CENSUS TRACT:	6069.03
WATER CODE	C06
SEWER CODE	7170900

HIGH RIDGE PARK
COVER SHEET

DEED REFERENCE LIBER 8771 FOLIO 685
ELECTION DISTRICT NO.6 HOWARD COUNTY MARYLAND

SHEET 1 OF 39

[illegible]-19

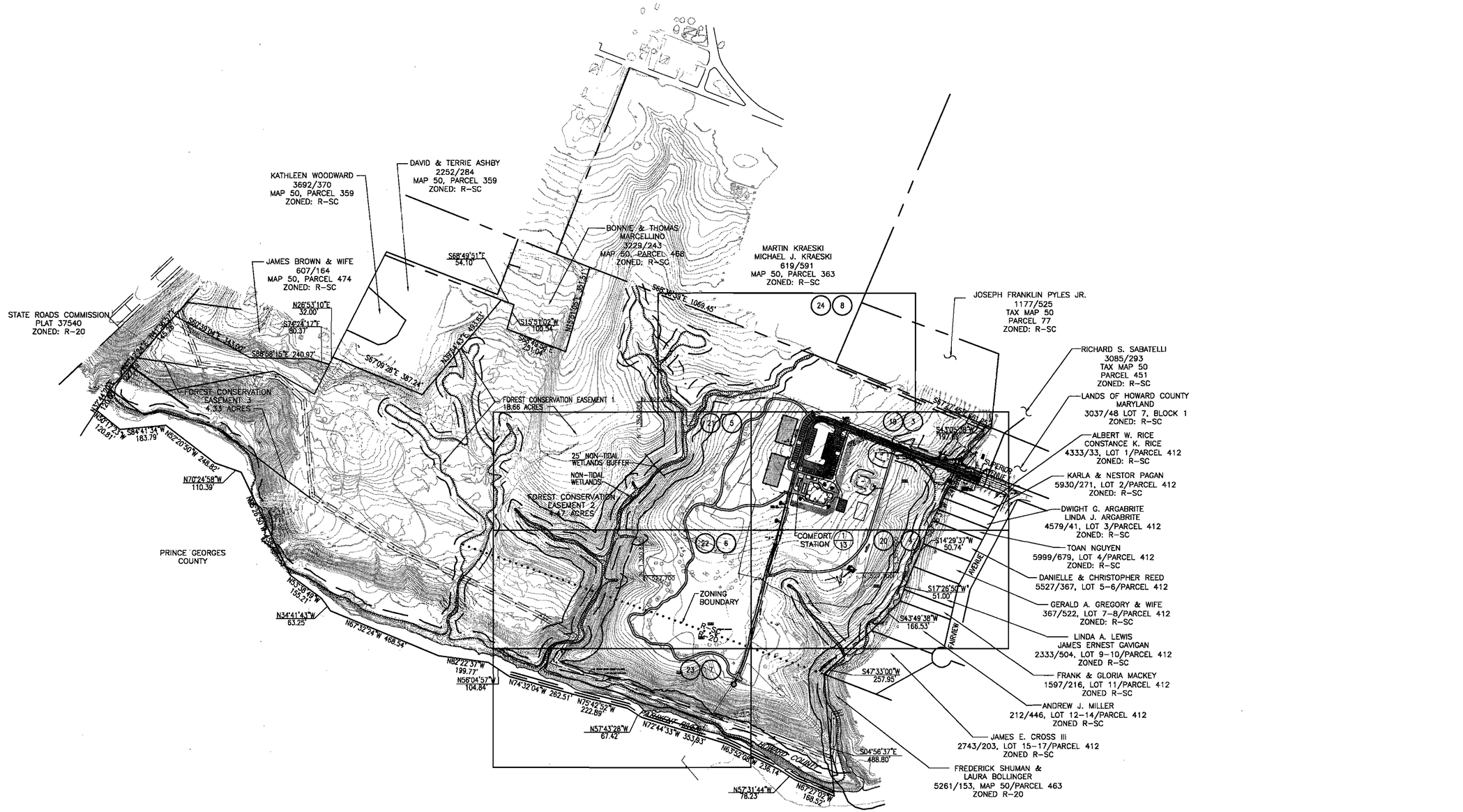

APPROVED: DEPARTMENT OF PLANNING AND ZONING

Chief, Development Engineering Division — Date 2/2/05

Chief, Division of Land Development — Date 2/4/05

Director — Date 2/16/05

APPROVED: FOR PUBLIC ~~(OR PRIVATE)~~ WATER AND PUBLIC ~~(OR PRIVATE)~~ SEWERAGE SYSTEMS

Robert J. Weber, County Health Officer, Howard County Health Department — Date 2/9/05

PREPARED BY
URS
4 NORTH PARK DRIVE
HUNT VALLEY, MARYLAND
TEL: (410) 785-7220

STATE OF MARYLAND — DAVID THOMAS MORGAN — REGISTERED PROFESSIONAL ENGINEER — 1/11/05

DES: DTM/RKK				
DRN: RMC/HWC				
CHK: DTM/RKK				
DATE: 10/8/04	BY	NO.	REVISION	DATE

OWNER:
HOWARD COUNTY DEPARTMENT
RECREATION AND PARKS
7120 OAKLAND MILLS ROAD
COLUMBIA, MARYLAND 21046

DEVELOPER:
HOWARD COUNTY DEPARTMENT OF PUBLIC WORKS
9250 BENDIX ROAD
COLUMBIA, MARYLAND 21045

TAX MAP: 50	
GRID: 1&2	
ZONED: R-20 & R-SC	
PARCEL NO.: 364	
CENSUS TRACT: 6069.03	
WATER CODE: C06	
SEWER CODE: 7170900	

HIGH RIDGE PARK

KEY PLAN

DEED REFERENCE: LIBER 8771, FOLIO 685
ELECTION DISTRICT NO. 6, HOWARD COUNTY, MARYLAND

SHEET 2 OF 39

SDP-05-19

MATCH LINE SEE SHEET 8

MATCH LINE SEE SHEET 5

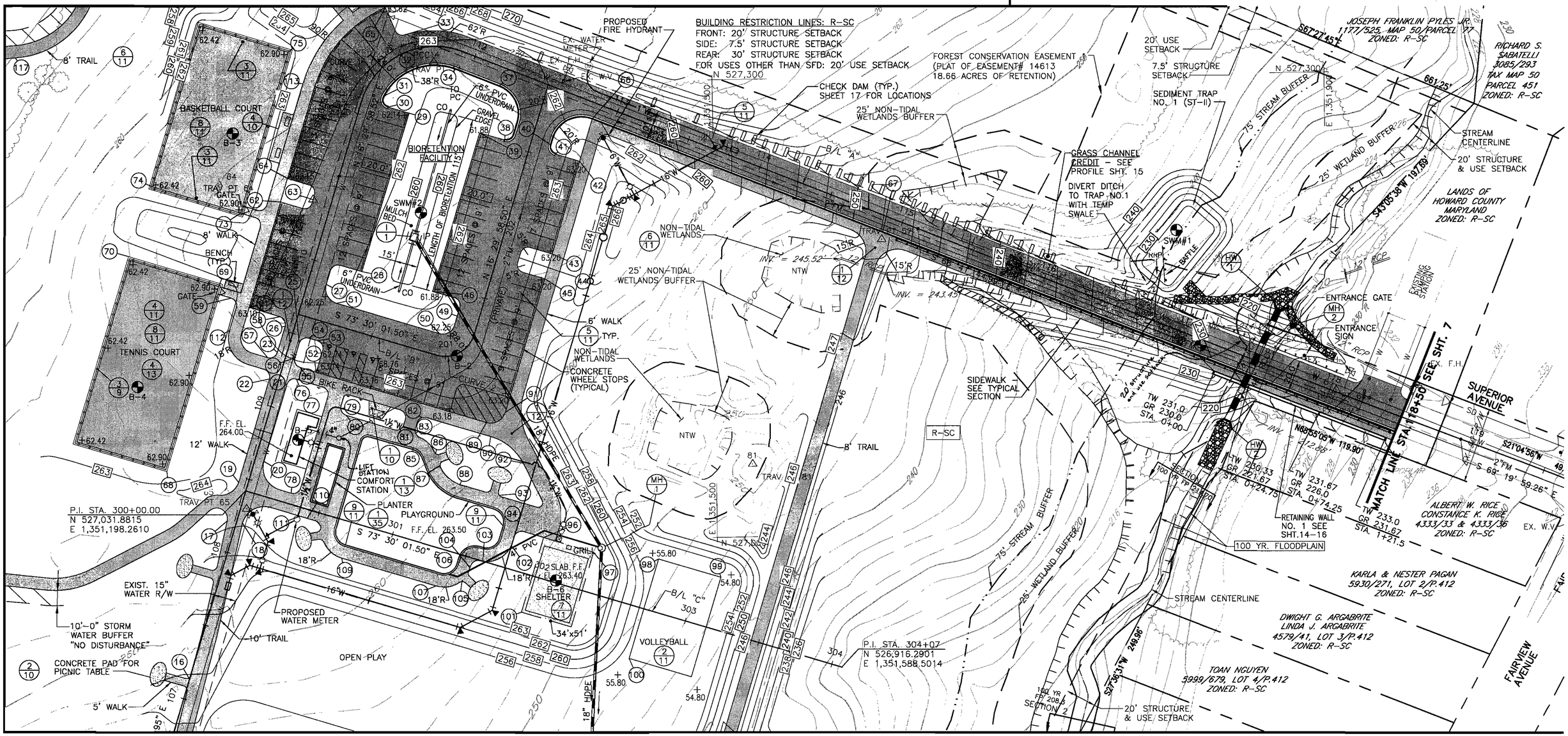

MATCH LINE SEE SHEET 4

GEOMETRY KEY (101)

NOTE:

1. COMFORT STATION AND SHELTER SHALL BE HANDICAPPED ACCESSIBLE.
2. REFER TO SHEET 13 FOR SIZE OF COMFORT STATION. THE SHELTER IS 30'x44'.

BASELINE GEOMETRY

B/L	LOCATION	NORTHING	EASTING
A	P.I. STA. 100+00	526,221.1609	1,350,971.4465
	P.I. STA. 104+44.16	526,650.9360	1,351,083.5520
	P.I. STA. 106+85.00	526,881.3469	1,351,153.6721
	P.C. STA. 111+08.61	527,287.5103	1,351,273.9800
	P.T. STA. 111+91.34	527,319.8931	1,351,340.0870
	P.I. STA. 118+35.90	527,085.7110	1,351,940.6040
	P.I. STA. 119+71.68	527,037.7890	1,352,067.6480
B	P.I. STA. 200+00	527,147.8989	1,351,232.6260
	P.C. STA. 200+94.00	527,121.2021	1,351,322.7552
	P.T. STA. 201+25.42	527,134.6984	1,351,347.6118
	P.I. STA. 202+95.82	527,298.0852	1,351,396.0079

COORDINATE TABLE

NO.	NORTHING	EASTING	NO.	NORTHING	EASTING	NO.	NORTHING	EASTING
1	526,254.5526	1,350,972.0106	19	527,037.5240	1,351,193.6747	37	527,297.5957	1,351,364.2357
2	526,266.9223	1,351,001.5568	20	527,051.2715	1,351,210.2621	38	527,261.6972	1,351,367.5574
3	526,275.7349	1,351,006.3707	21	527,102.0891	1,351,225.3145	39	527,266.3594	1,351,351.1504
4	526,300.0526	1,350,986.0077	22	527,105.4972	1,351,213.8087	40	527,258.6716	1,351,397.3702
5	526,298.6630	1,350,997.4507	23	527,122.7559	1,351,218.9208	41	527,252.4574	1,351,400.7443
6	526,329.1902	1,351,011.4326	24	NOT USED		42	527,247.7713	1,351,416.5648
7	526,423.7954	1,351,029.5321	25	527,128.9361	1,351,233.2668	43	527,187.3655	1,351,398.6723
8	526,559.5298	1,351,071.8273	26	527,140.0147	1,351,224.0330	44	527,184.8957	1,351,377.0818
9	526,596.4472	1,351,081.2592	27	527,167.5025	1,351,250.9481	45	527,171.0656	1,351,393.8442
10	526,675.4433	1,351,099.4221	28	527,175.9224	1,351,274.3010	46	527,162.8003	1,351,320.4756
11	NOT USED		29	527,279.4804	1,351,304.9755	47	NOT USED	
12	NOT USED		30	527,283.3849	1,351,291.2881	48	NOT USED	
13	526,715.2050	1,351,100.6983	31	527,290.6032	1,351,288.0331	49	527,146.5388	1,351,336.5178
14	526,712.3887	1,351,110.2935	32	527,306.2340	1,351,302.9473	50	527,135.1936	1,351,324.8137
15	526,843.2658	1,351,145.5339	33	527,330.6314	1,351,301.9629	51	527,155.0742	1,351,257.6962
16	526,908.0822	1,351,161.9410	34	527,308.7132	1,351,335.7272	52	527,110.0096	1,351,244.3478
17	527,012.2749	1,351,186.1869	35	NOT USED		53	527,130.6061	1,351,245.2338
18	527,010.9044	1,351,196.1253	36	NOT USED		54	527,132.3101	1,351,239.4809

CURVE 1
P.I. STA. 111+62.99
N = 527,339.6500
E = 1,351,289.4241
Δ = 94°-48'-16" RT.
Dc = 114°-35'-30"
L = 82.73'
T = 54.38'
Ch = 73.61' N63°-54'-07"E
E = 23.87'

CURVE 2
P.I. STA. 201+14.00
N = 527,115.5220
E = 1,351,341.9317
Δ = 90°-00'-00" LT.
Dc = 286°-28'-44"
L = 31.42'
T = 20.00'
Ch = 28.28' N61°-29'-58"E
E = 8.28'

30 0 15 30 60
SCALE IN FEET

APPROVED: DEPARTMENT OF PLANNING AND ZONING

Chief, Development Engineering Division	Date 2/2/05
Chief, Division of Land Development	Date 2/4/05
Director	Date 2/16/05

APPROVED: FOR PUBLIC ~~(OR PRIVATE)~~ WATER AND PUBLIC ~~(OR PRIVATE)~~ SEWERAGE SYSTEMS

County Health Officer, Howard County Health Department — Date 2/9/05

PREPARED BY
URS
4 NORTH PARK DRIVE
HUNT VALLEY, MARYLAND
TEL: (410) 785-7220

STATE OF MARYLAND — DAVID TROUS BROOKS — No. 19157 — PROFESSIONAL ENGINEER — 1/11/05

DES: DTM/RKK			
DRN: RMC/HWC			
CHK: DTM/RKK			
DATE: 10/8/04	BY	NO.	REVISION	DATE

OWNER:
HOWARD COUNTY DEPARTMENT
RECREATION AND PARKS
7120 OAKLAND MILLS ROAD
COLUMBIA, MARYLAND 21046

DEVELOPER:
HOWARD COUNTY DEPARTMENT OF PUBLIC WORKS
9250 BENDIX ROAD
COLUMBIA, MARYLAND 21045

TAX MAP: 50
GRID: 1&2
ZONED: R-20 & R-SC
PARCEL NO.: 364
CENSUS TRACT: 6069.03
WATER CODE: C06
SEWER CODE: 7170900

HIGH RIDGE PARK

SITE DEVELOPMENT PLAN

DEED REFERENCE: LIBER 8771, FOLIO 685
ELECTION DISTRICT NO. 6, HOWARD COUNTY, MARYLAND

SDP-05-19

MATCH LINE SEE SHEET 3

MATCH LINE SEE SHEET 6

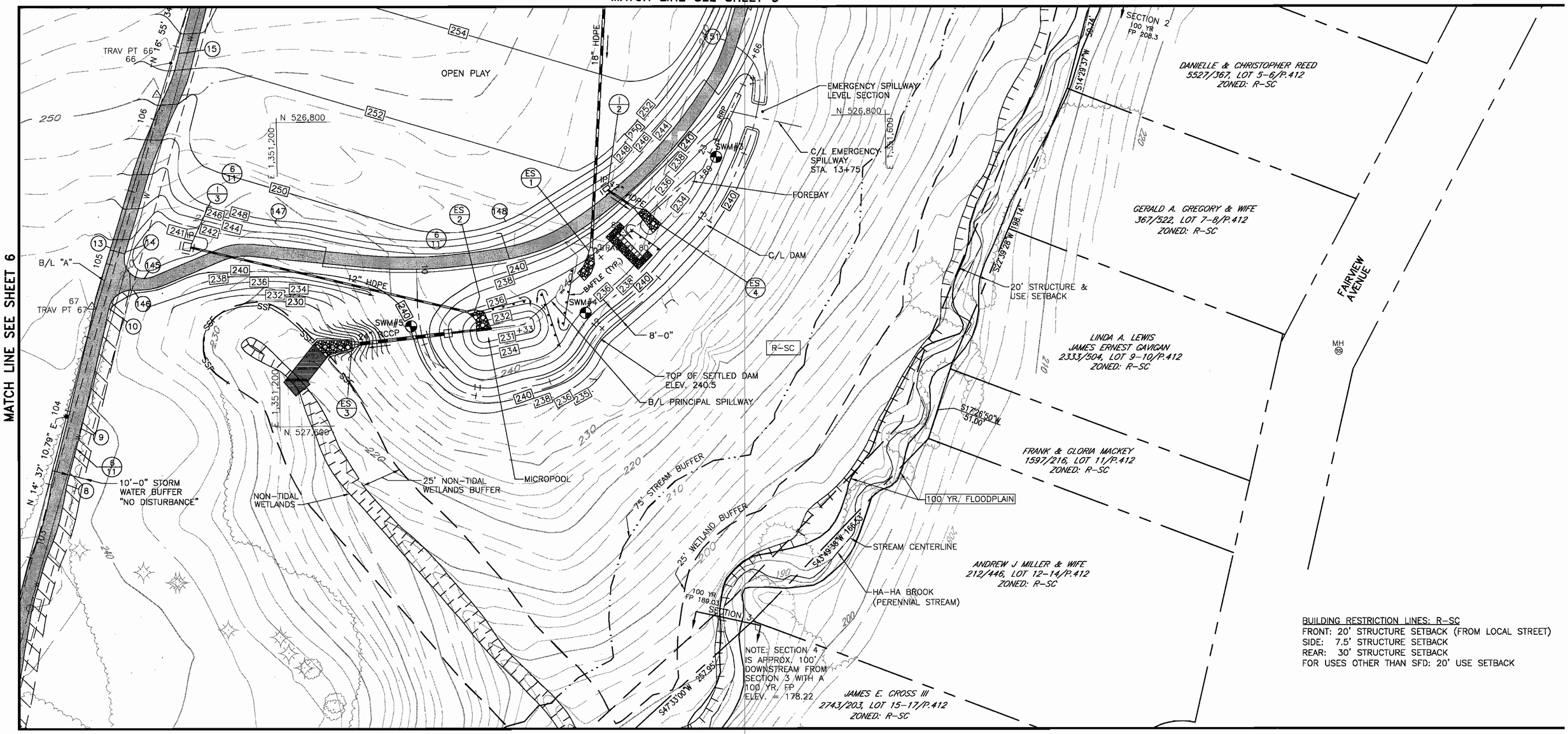

BUILDING RESTRICTION LINES: R-SC
FRONT: 20' STRUCTURE SETBACK (FROM LOCAL STREET)
SIDE: 7.5' STRUCTURE SETBACK
REAR: 30' STRUCTURE SETBACK
FOR USES OTHER THAN SFD: 20' USE SETBACK

GEOMETRY KEY (148)

COORDINATE TABLE

NO.	NORTHING	EASTING	NO.	NORTHING	EASTING	NO.	NORTHING	EASTING
55	527,113.1337	1,351,233.8008	73	527,213.9599	1,351,194.8316	91	527,083.8128	1,351,367.9994
56	527,119.3478	1,351,230.4267	74	527,231.0004	1,351,137.3023	92	527,050.2090	1,351,379.7029
57	527,119.3819	1,351,212.7067	75	527,319.4303	1,351,226.0725	93	527,028.9368	1,351,362.6835
58	527,146.1943	1,351,220.4798	76	527,105.4631	1,351,231.5287	94	527,011.3054	1,351,376.7344
59	527,158.3846	1,351,188.7994	77	527,088.3063	1,351,241.3074	95	NOT USED	
60	NOT USED		78	527,030.3908	1,351,227.9408	96	527,001.3287	1,351,393.2951
61	527,152.1931	1,351,200.5237	79	527,086.4161	1,351,260.4593	97	526,991.6560	1,351,425.8901
62	527,221.2282	1,351,220.9723	80	527,081.8455	1,351,263.9707	98	526,987.3021	1,351,468.4771
63	527,223.2186	1,351,242.4208	81	527,070.9284	1,351,300.1269	99	526,975.2318	1,351,509.2270
64	527,236.5694	1,351,225.5164	82	527,081.7252	1,351,311.6686	100	526,922.1023	1,351,449.1645
65	527,348.5269	1,351,289.2652	83	527,315.6766	1,351,307.8035	101	526,952.4361	1,351,378.7860
66	527,276.0029	1,351,425.1099	84	NOT USED		102	526,995.9029	1,351,372.0942
67	527,201.9931	1,351,614.8944	85	527,060.3541	1,351,307.7535	103	526,985.7062	1,351,353.3668
68	527,044.6393	1,351,146.7637	86	527,054.9909	1,351,322.6110	104	526,981.7161	1,351,345.0952
69	527,167.3684	1,351,183.1168	87	527,050.4155	1,351,324.4003	105	526,973.5314	1,351,339.9689
70	527,185.5450	1,351,121.7522	88	527,036.1054	1,351,338.2453	106	526,986.6202	1,351,328.1844
71	NOT USED		89	527,077.0646	1,351,355.5711	107	526,969.5694	1,351,322.7243
72	NOT USED		90	527,067.8224	1,351,358.4586			

APPROVED: DEPARTMENT OF PLANNING AND ZONING

Chief, Development Engineering Division — Date 2/2/05

Chief, Division of Land Development — Date 2/4/05

Director — Date 2/16/05

APPROVED: FOR PUBLIC ~~(OR PRIVATE)~~ WATER AND PUBLIC ~~(OR PRIVATE)~~ SEWERAGE SYSTEMS

County Health Officer, Howard County Health Department — Date 2/9/05

PREPARED BY
URS
4 NORTH PARK DRIVE
HUNT VALLEY, MARYLAND
TEL: (410) 785-7220

STATE OF MARYLAND — OWEN THOMAS DAMCOTT — No. 16158 — PROFESSIONAL ENGINEER — 2/11/05

DES: DTM
DRN: RMC
CHK: DTM
DATE: 10/8/04

BY	NO.	REVISION	DATE

OWNER:
HOWARD COUNTY DEPARTMENT
RECREATION AND PARKS
7120 OAKLAND MILLS ROAD
COLUMBIA, MARYLAND 21046

DEVELOPER:
HOWARD COUNTY DEPARTMENT OF PUBLIC WORKS
9250 BENDIX ROAD
COLUMBIA, MARYLAND 21045

TAX MAP: 50
GRID: 1&2
ZONED: R-20 & R-SC
PARCEL NO.: 364
CENSUS TRACT: 6069.03
WATER CODE: C06
SEWER CODE: 7170900

HIGH RIDGE PARK

SITE DEVELOPMENT PLAN

DEED REFERENCE: LIBER 8771, FOLIO 685
ELECTION DISTRICT NO. 6, HOWARD COUNTY, MARYLAND

SCALE IN FEET: 30 0 15 30 60

MATCH LINE SEE SHEET 8

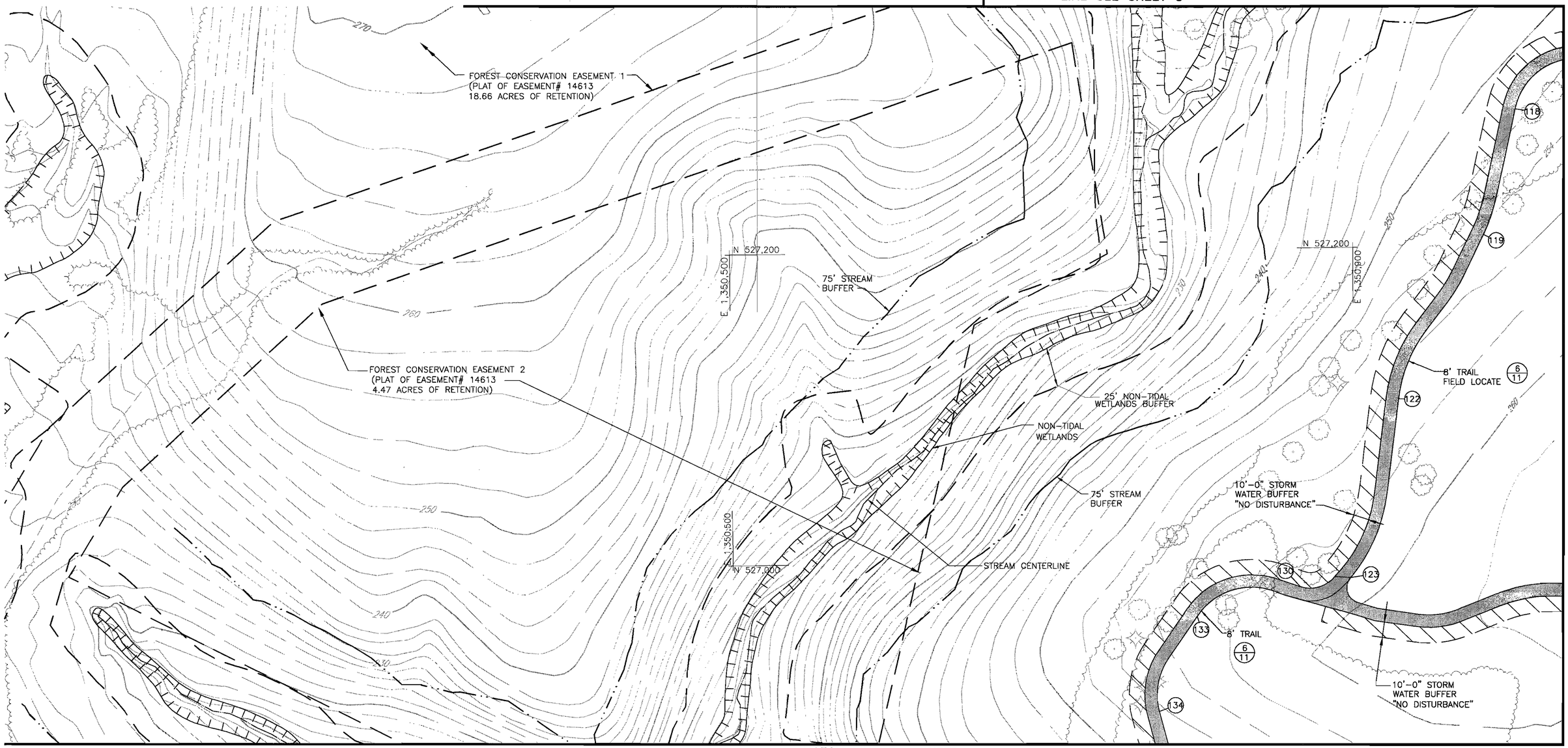

MATCH LINE SEE SHEET 3

MATCH LINE SEE SHEET 6

GEOMETRY KEY (134)

COORDINATE TABLE

NO.	NORTHING	EASTING	NO.	NORTHING	EASTING	NO.	NORTHING	EASTING	NO.	NORTHING	EASTING
109	526,988.1181	1,351,260.1664	127	NOT USED		151	526,851.3726	1,351,504.6098	171	526,401.3284	1,350,727.1866
110	527,013.9854	1,351,238.5392	128	NOT USED		152	527,172.9733	1,351,598.8268	172	526,374.5462	1,350,736.6356
111	527,015.4054	1,351,233.7451	129	NOT USED		153	527,170.1332	1,351,608.4150	173	526,366.9647	1,350,799.6372
112	527,137.2063	1,351,187.7410	130	526,975.5400	1,350,871.1010	154	526,716.5049	1,350,784.0253	174	526,382.5829	1,350,842.0738
113	527,298.8706	1,351,235.6271	133	526,956.6925	1,350,804.9758	155	526,687.0304	1,350,785.9411	175	526,377.1254	1,350,910.8183
114	527,394.0090	1,351,183.0545	134	526,895.1897	1,350,780.8552	156	526,646.5313	1,350,774.2724	176	526,350.8358	1,350,944.2524
115	527,398.8135	1,351,142.5430	135	526,779.0987	1,350,811.7958	157	526,612.0565	1,350,746.0473	177	526,313.1329	1,350,951.4763
116	527,068.6766	1,351,100.6743	136	526,745.6828	1,350,800.7996	158	526,601.3757	1,350,726.2074			
117	527,363.3948	1,351,047.4762	137	526,728.5126	1,350,793.0234	159	NOT USED				
118	527,283.2333	1,351,008.8989	138	526,693.2972	1,350,851.2727	160	NOT USED				
119	527,201.9493	1,350,988.4859	139	526,688.1922	1,350,945.1619	161	526,578.1084	1,350,685.9991			
120	NOT USED		142	526,707.5544	1,350,986.8150	162	526,555.7055	1,350,656.6026			
121	NOT USED		143	NOT USED		163	526,536.4539	1,350,618.3398			
122	527,096.5002	1,350,934.0485	144	NOT USED		164	526,533.0410	1,350,579.0430			
123	526,981.3628	1,350,903.4125	145	NOT USED		165	526,504.2292	1,350,556.4166			
124	NOT USED		146	NOT USED		166	526,448.4702	1,350,591.2898			
125	NOT USED		147	NOT USED		167	526,424.8417	1,350,636.3855			
126	NOT USED		148	NOT USED		170	526,417.9743	1,350,704.9609			

APPROVED: DEPARTMENT OF PLANNING AND ZONING

Chief, Development Engineering Division — Date 2/2/05

Chief, Division of Land Development — Date 2/4/05

Director — Date 2/10/05

APPROVED: FOR PUBLIC ~~(OR PRIVATE)~~ WATER AND PUBLIC ~~(OR PRIVATE)~~ SEWERAGE SYSTEMS

County Health Officer, Howard County Health Department — Date 2/9/05

30 0 15 30 60
SCALE IN FEET

PREPARED BY
URS
4 NORTH PARK DRIVE
HUNT VALLEY, MARYLAND
TEL: (410) 785-7220

STATE OF MARYLAND — DAVID THOMAS KERCHOUL — No. 19156 — PROFESSIONAL ENGINEER — 1/11/05

DES: DTM/RKK				
DRN: RMC/HWC				
CHK: DTM/RKK				
DATE: 10/8/04	BY	NO.	REVISION	DATE

OWNER:
HOWARD COUNTY DEPARTMENT
RECREATION AND PARKS
7120 OAKLAND MILLS ROAD
COLUMBIA, MARYLAND 21046

DEVELOPER:
HOWARD COUNTY DEPARTMENT OF PUBLIC WORKS
9250 BENDIX ROAD
COLUMBIA, MARYLAND 21045

TAX MAP: 50
GRID: 1&2
ZONED: R-20 & R-SC
PARCEL NO.: 364
CENSUS TRACT: 6069.03
WATER CODE: C06
SEWER CODE: 7170900

HIGH RIDGE PARK

SITE DEVELOPMENT PLAN

DEED REFERENCE: LIBER 8771, FOLIO 685
ELECTION DISTRICT NO. 6, HOWARD COUNTY, MARYLAND

MATCH LINE SEE SHEET 5

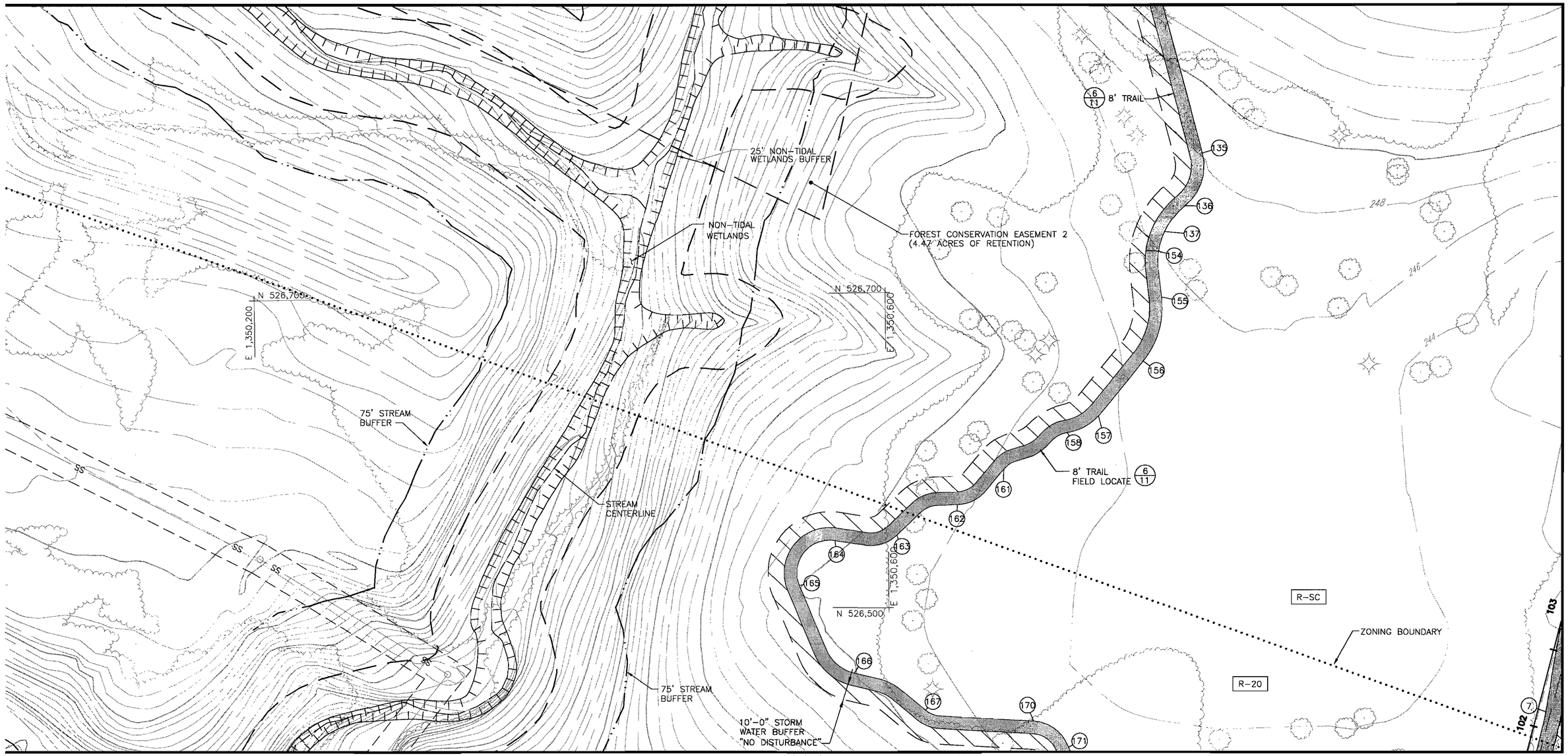

MATCH LINE SEE SHEET 4

MATCH LINE SEE SHEET 7

NOTES:
1. REFER TO SHEET 5 FOR COORDINATE TABLE.

BUILDING RESTRICTION LINES: R-SC
FRONT: 20' STRUCTURE SETBACK
SIDE: 7.5' STRUCTURE SETBACK
REAR: 30' STRUCTURE SETBACK
FOR USES OTHER THAN SFD: 20' USE SETBACK

BUILDING RESTRICTION LINES: R-20
FRONT: 30' STRUCTURE SETBACK
SIDE: 10' STRUCTURE SETBACK
REAR: 30' STRUCTURE SETBACK

30 0 15 30 60
SCALE IN FEET

APPROVED: DEPARTMENT OF PLANNING AND ZONING

Chief, Development Engineering Division	Date 2/2/05
Chief, Division of Land Development	Date 2/4/05
Director	Date 2/16/05

APPROVED: FOR PUBLIC ~~(OR PRIVATE)~~ WATER AND PUBLIC ~~(OR PRIVATE)~~ SEWERAGE SYSTEMS

Robert J. Weber
County Health Officer
Howard County Health Department JJAB
Date 2/9/05

PREPARED BY
URS
4 NORTH PARK DRIVE
HUNT VALLEY, MARYLAND
TEL: (410) 785-7220

STATE OF MARYLAND
DAVID THOMAS MORCOVI
No. 16158
REGISTERED PROFESSIONAL ENGINEER
1/11/05

DES: DTM/RKK				
DRN: RMC/HWC				
CHK: DTM/RKK				
DATE: 10/8/04	BY	NO.	REVISION	DATE

OWNER:
HOWARD COUNTY DEPARTMENT
RECREATION AND PARKS
7120 OAKLAND MILLS ROAD
COLUMBIA, MARYLAND 21046

DEVELOPER:
HOWARD COUNTY DEPARTMENT OF PUBLIC WORKS
9250 BENDIX ROAD
COLUMBIA, MARYLAND 21045

TAX MAP: 50
GRID: 1&2
ZONED: R-20 & R-SC
PARCEL NO.: 364
CENSUS TRACT: 6069.03
WATER CODE: C06
SEWER CODE: 7170900

HIGH RIDGE PARK
SITE DEVELOPMENT PLAN

DEED REFERENCE: LIBER 8771, FOLIO 685
ELECTION DISTRICT NO. 6, HOWARD COUNTY, MARYLAND

SHEET 6 OF 39

SDP-05-19

MATCH LINE SEE SHEET 6

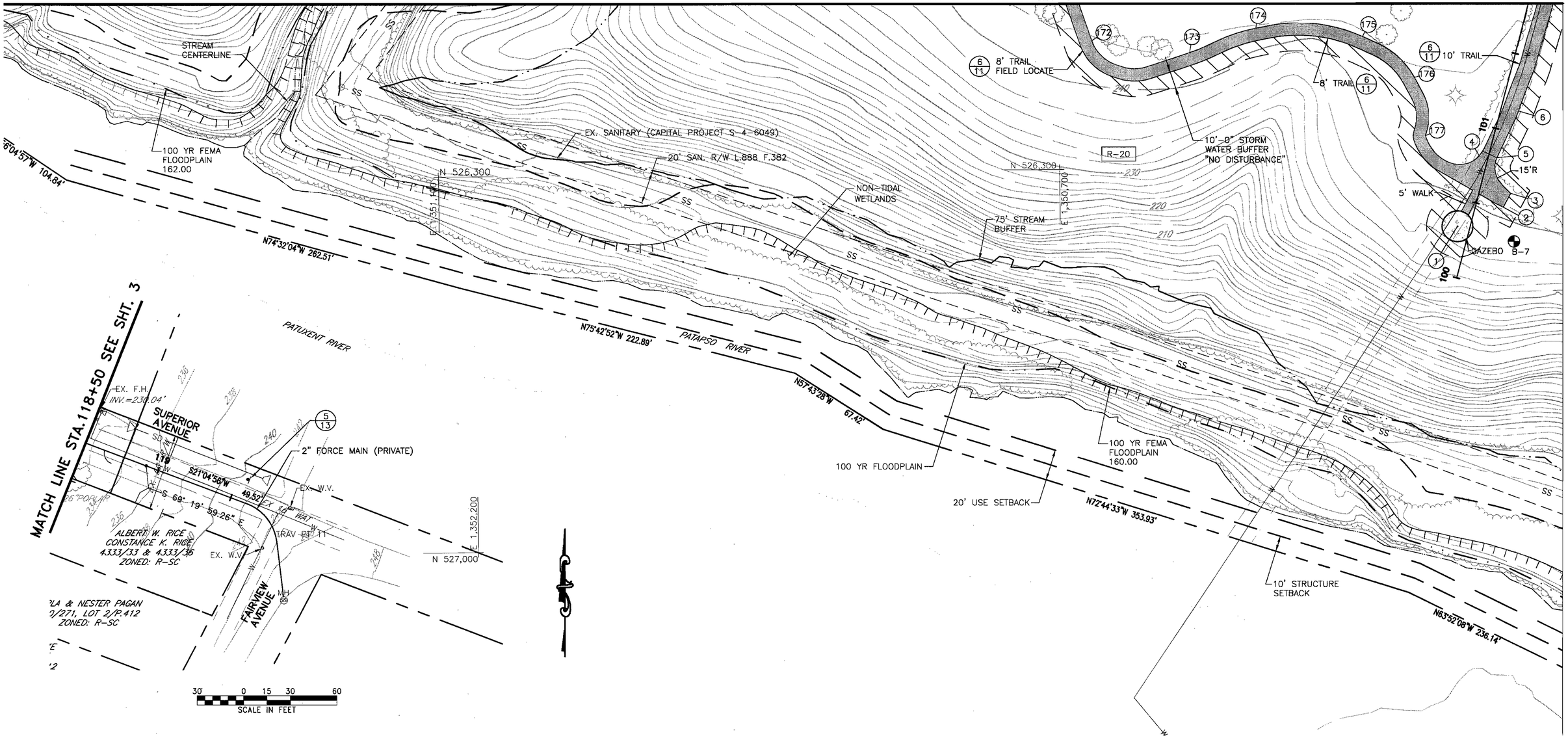

NOTES:
1. REFER TO SHEET 5 FOR COORDINATE TABLE.

BUILDING RESTRICTION LINES: R-20
FRONT: 30' STRUCTURE SETBACK
SIDE: 10' STRUCTURE SETBACK
REAR: 30' STRUCTURE SETBACK

SCALE IN FEET

APPROVED: DEPARTMENT OF PLANNING AND ZONING

Chief, Development Engineering Division	Date 2/2/05
Chief, Division of Land Development	Date 2/4/05
Director	Date 2/10/05

APPROVED: FOR PUBLIC ~~(OR PRIVATE)~~ WATER AND PUBLIC ~~(OR PRIVATE)~~ SEWERAGE SYSTEMS

For County Health Officer, Howard County Health Department — Date 2/9/05

PREPARED BY
URS
4 NORTH PARK DRIVE
HUNT VALLEY, MARYLAND
TEL: (410) 785-7220

STATE OF MARYLAND — DAVID THOMAS RODGERS — No. 16755 — REGISTERED PROFESSIONAL ENGINEER — 1/11/05

DES: DTM/RKK				
DRN: RMC/HWC				
CHK: DTM/RKK				
DATE: 10/8/04	BY	NO.	REVISION	DATE

OWNER:
HOWARD COUNTY DEPARTMENT
RECREATION AND PARKS
7120 OAKLAND MILLS ROAD
COLUMBIA, MARYLAND 21046

DEVELOPER:
HOWARD COUNTY DEPARTMENT OF PUBLIC WORKS
9250 BENDIX ROAD
COLUMBIA, MARYLAND 21045

TAX MAP: 50
GRID: 1&2
ZONED: R-20 & R-SC
PARCEL NO.: 364
CENSUS TRACT: 6069.03
WATER CODE: C06
SEWER CODE: 7170900

HIGH RIDGE PARK

SITE DEVELOPMENT PLAN

DEED REFERENCE: LIBER 8771, FOLIO 685
ELECTION DISTRICT NO. 6, HOWARD COUNTY, MARYLAND

SHEET 7 OF 39

SDP-05-19

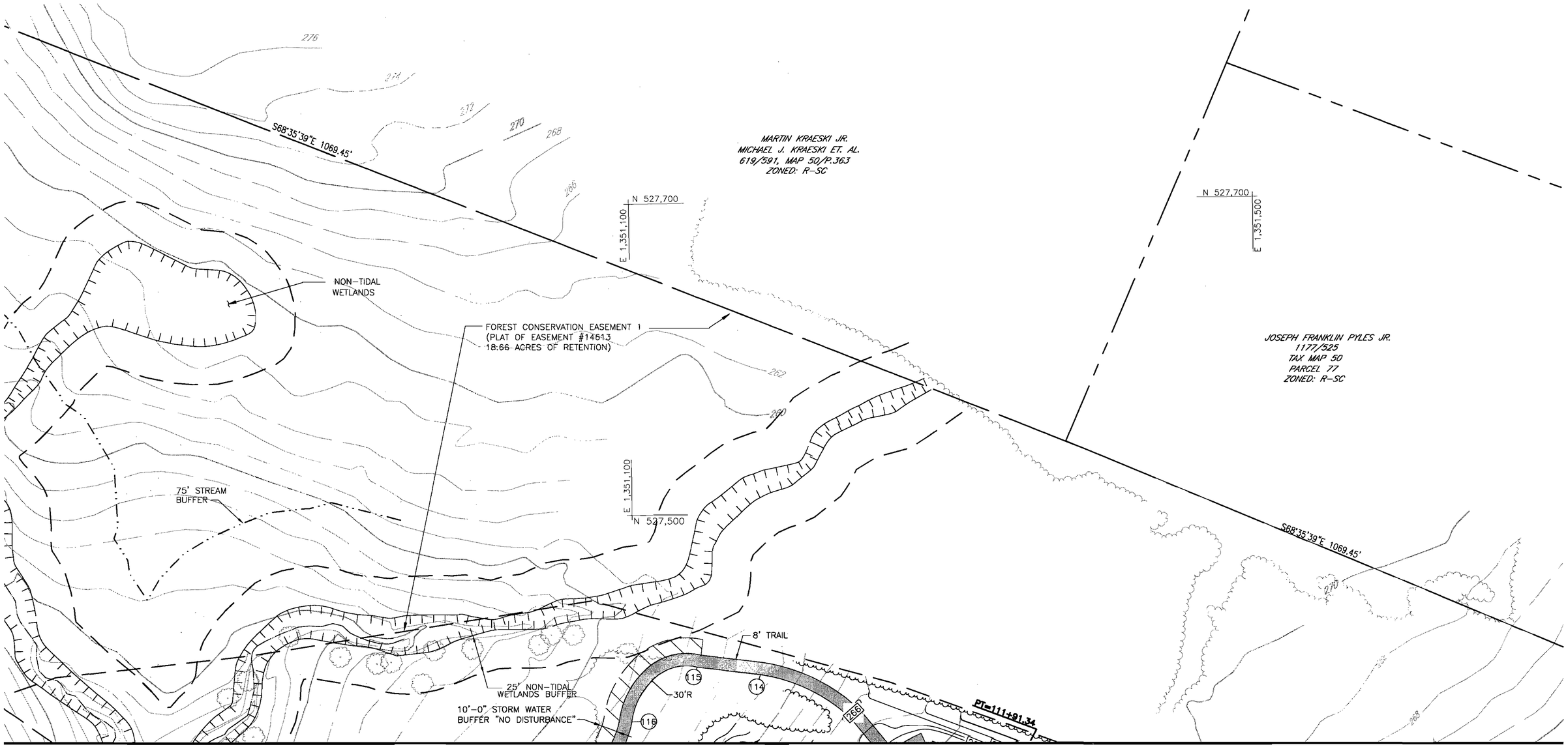

MATCH LINE SEE SHEET 3 & 5

NOTES:
1. REFER TO SHEET 5 FOR COORDINATE TABLE.

30 0 25 50 60
SCALE IN FEET

APPROVED: DEPARTMENT OF PLANNING AND ZONING

Chief, Development Engineering Division	Date 2/2/05
Chief, Division of Land Development	Date 2/4/05
Director	Date 2/16/05

APPROVED: FOR PUBLIC ~~(OR PRIVATE)~~ WATER AND PUBLIC ~~(OR PRIVATE)~~ SEWERAGE SYSTEMS

for Robert J. Weber
County Health Officer
Howard County Health Department AB

Date 2/9/05

PREPARED BY
URS
4 NORTH PARK DRIVE
HUNT VALLEY, MARYLAND
TEL: (410) 785-7220

STATE OF MARYLAND
DAVID THOMAS MORICONI
No. 16156
REGISTERED
PROFESSIONAL ENGINEER
6/11/05

DES:DTM/RKK				
DRN:RMC/HWC				
CHK:DTM/RKK				
DATE: 10/8/04	BY	NO.	REVISION	DATE

OWNER:
HOWARD COUNTY DEPARTMENT
RECREATION AND PARKS
7120 OAKLAND MILLS ROAD
COLUMBIA, MARYLAND 21046

DEVELOPER:
HOWARD COUNTY DEPARTMENT OF PUBLIC WORKS
9250 BENDIX ROAD
COLUMBIA, MARYLAND 21045

TAX MAP: 50	
GRID: 1&2	
ZONED: R-20 & R-SC	
PARCEL NO.: 364	
CENSUS TRACT: 6069.03	
WATER CODE: C06	
SEWER CODE: 7170900	

HIGH RIDGE PARK
SITE DEVELOPMENT PLAN

DEED REFERENCE: LIBER 8771, FOLIO 685
ELECTION DISTRICT NO. 6, HOWARD COUNTY, MARYLAND

SHEET 8 OF 39

SDP-05-19

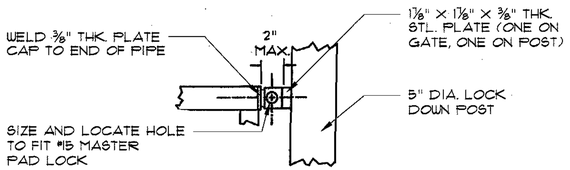

LATCH - FRONT VIEW
NTS

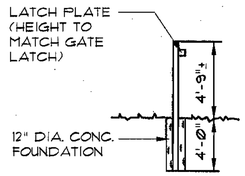

LOCK DOWN POST ELEVATION
NTS

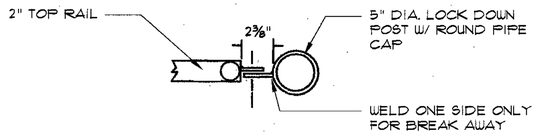

LATCH - TOP VIEW
NTS

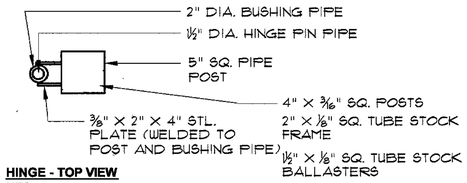

HINGE - TOP VIEW
NTS

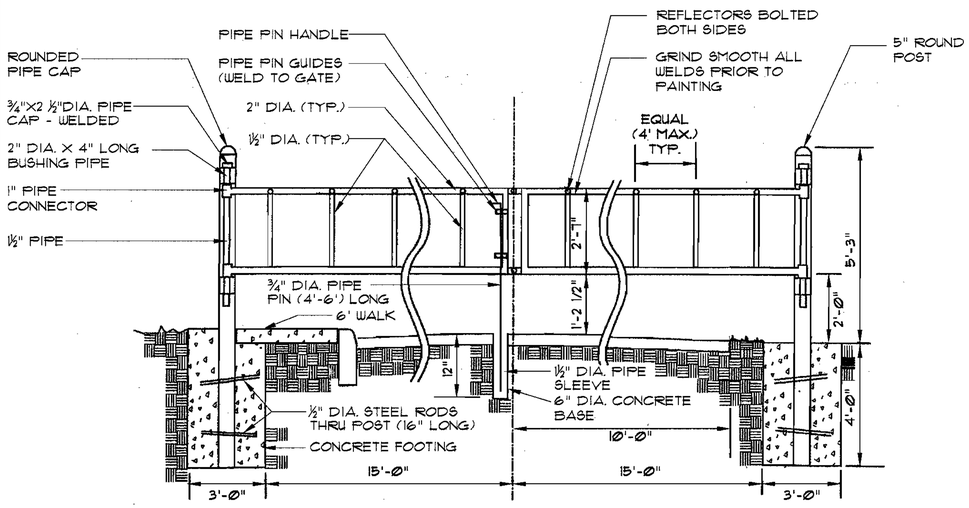

NOTES:
1. CONTRACTOR SHALL PROVIDE SHOP DRAWINGS OF GATE FOR APPROVAL.
2. PRIME AND PAINT GATES AND POSTS WITH TWO (2) COATS OF GLOSS BLACK POLYURETHANE.

1/9 ENTRANCE GATE
NTS

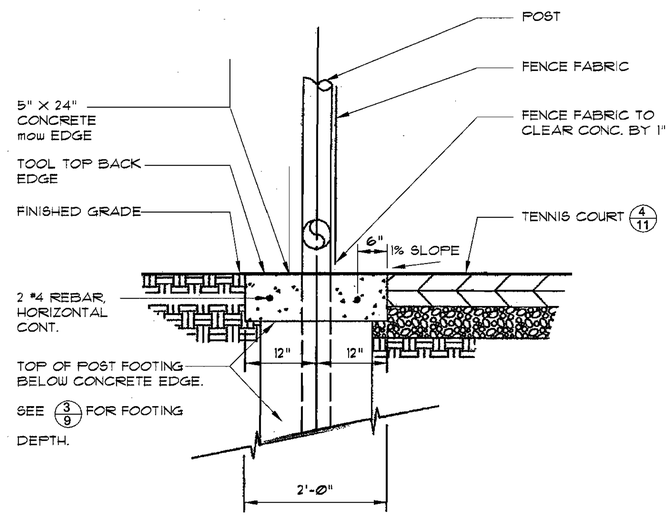

2/9 CONCRETE MOW EDGE
NTS

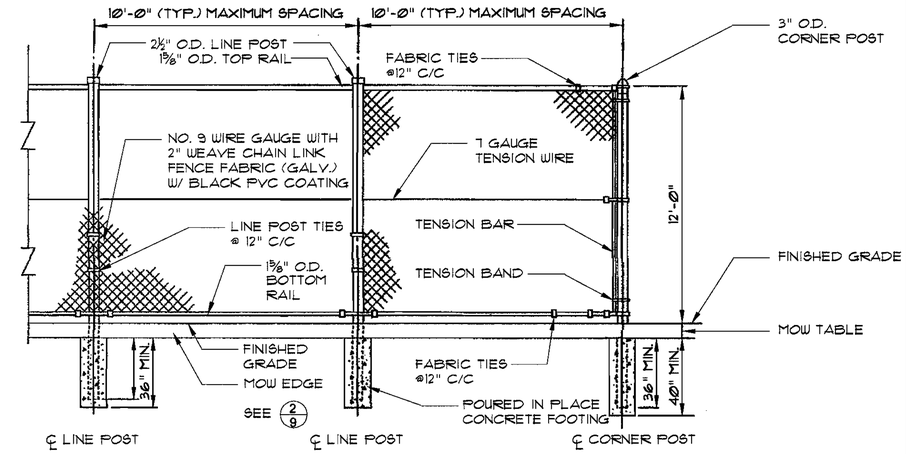

NOTES:
1. PIPING SHALL BE SCHEDULE 40.
2. INSTALL FABRIC ON OUTSIDE OF POSTS.
3. KNUCKLE SELVAGE TOP AND BOTTOM OF FABRIC.
4. CHAIN LINK FABRIC, POSTS, AND FITTINGS SHALL BE GALVANIZED WITH BLACK PVC COATING.

3/9 CHAIN LINK FENCE
NTS

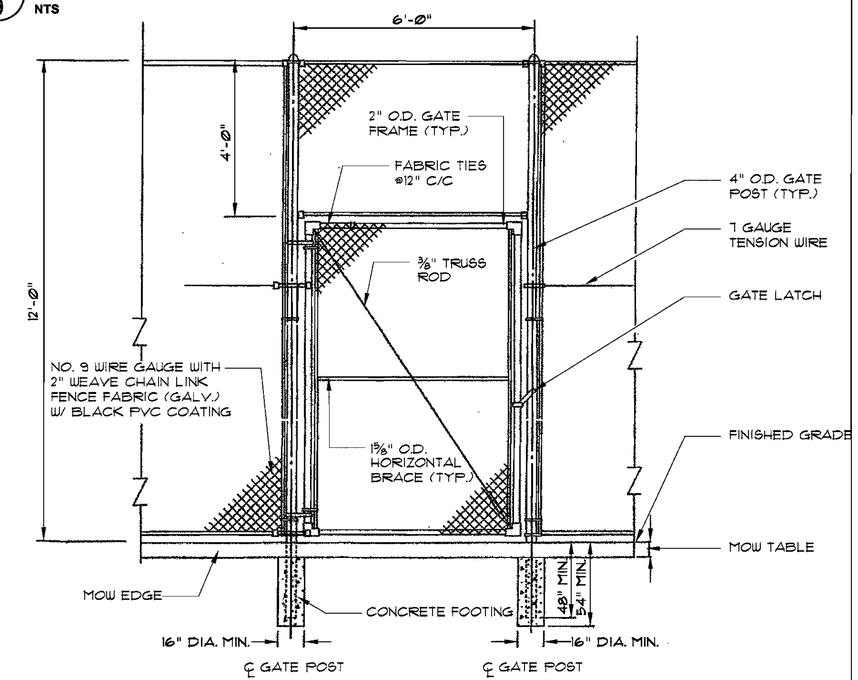

NOTES:
1. PIPING SHALL BE SCHEDULE 40.
2. CHAIN LINK FABRIC, POSTS AND FITTINGS SHALL BE GALVANIZED WITH BLACK PVC COATING.

4/9 PEDESTRIAN GATE
NTS

APPROVED: DEPARTMENT OF PLANNING AND ZONING

Chief, Development Engineering Division	Date 2/2/05
Chief, Division of Land Development	Date 2/4/05
Director	Date 2/16/05

PREPARED BY
URS
4 NORTH PARK DRIVE
HUNT VALLEY, MARYLAND
TEL: (410) 785-7220

STATE OF MARYLAND — DAVID THOMAS HODGSON — No. 28872 — PROFESSIONAL ENGINEER — 1/11/05

DES: DTM/RKK				
DRN: RMC/HWC				
CHK: DTM/RKK				
DATE: 10/8/04	BY	NO.	REVISION	DATE

OWNER:
HOWARD COUNTY DEPARTMENT
RECREATION AND PARKS
7120 OAKLAND MILLS ROAD
COLUMBIA, MARYLAND 21046

DEVELOPER:
HOWARD COUNTY DEPARTMENT OF PUBLIC WORKS
9250 BENDIX ROAD
COLUMBIA, MARYLAND 21045

TAX MAP: 50
GRID: 1&2
ZONED: R-20 & R-SC
PARCEL NO.: 364
CENSUS TRACT: 6069.03
WATER CODE: C06
SEWER CODE: 7170900

HIGH RIDGE PARK
SITE DETAILS

DEED REFERENCE: LIBER 8771, FOLIO 685
ELECTION DISTRICT NO. 6, HOWARD COUNTY, MARYLAND

SHEET 9 OF 39

SDP-05-19

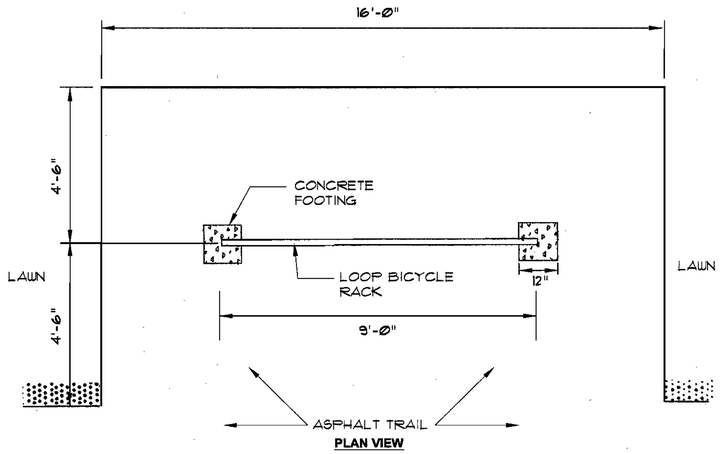

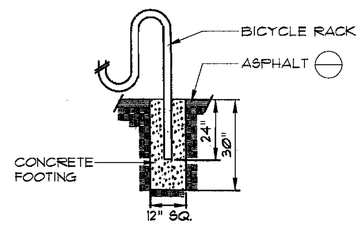

SEE SHEET 3 FOR PAVING LIMITS

1/10 BICYCLE RACK
NTS

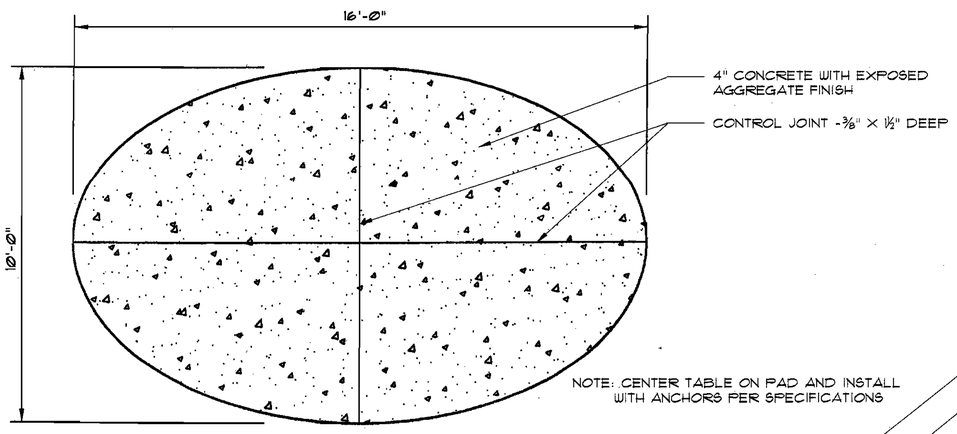

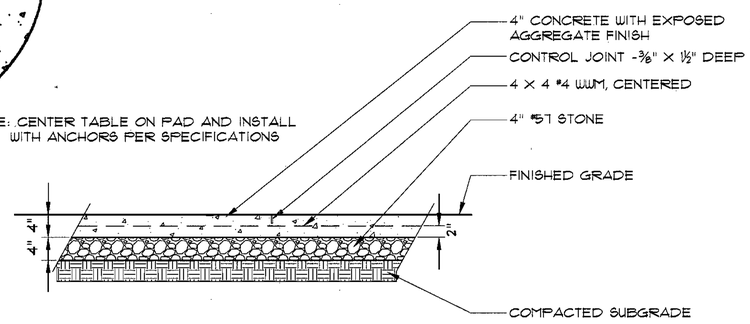

NOTE: CENTER TABLE ON PAD AND INSTALL WITH ANCHORS PER SPECIFICATIONS

2/10 CONCRETE PAD FOR PICNIC TABLE
NTS

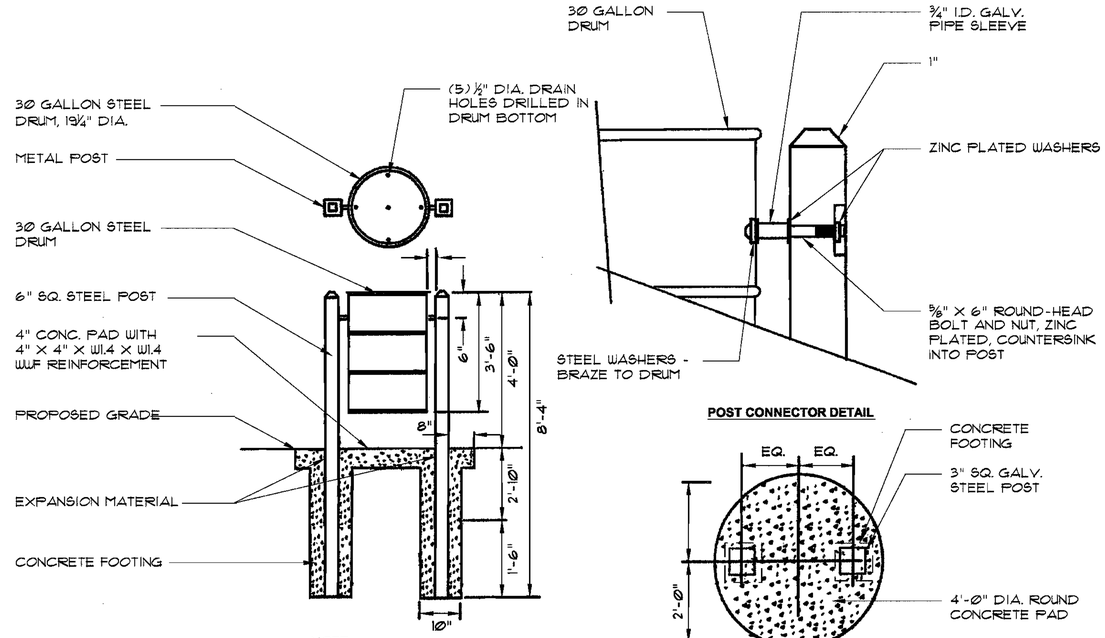

NOTE:
1. PAINT DRUM AND POST WITH TWO (2) COATS OF DARK BROWN FEDERAL STD. 595(B), COLOR #20062, POLYURETHAN PAINT.

3/10 TRASH RECEPTACLE DETAIL
NTS

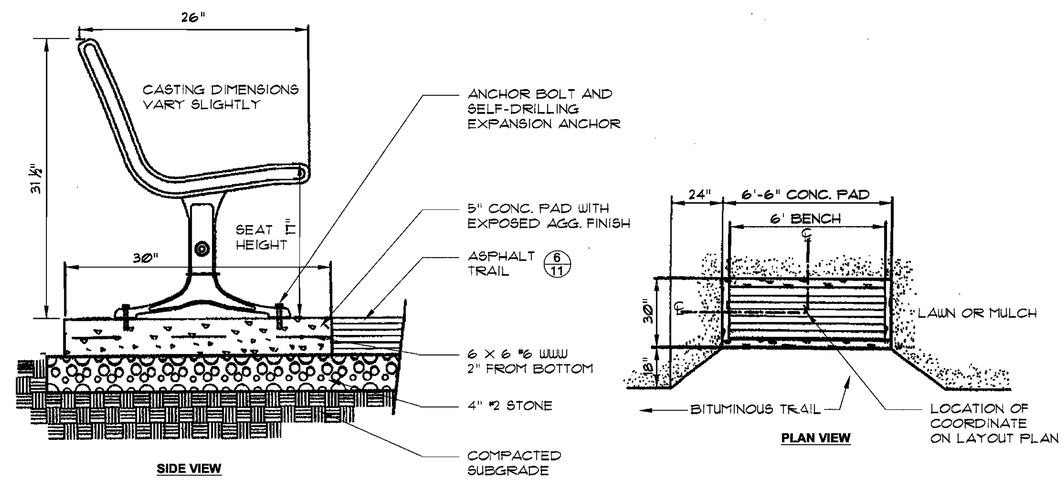

4/10 BENCH
NTS

APPROVED: DEPARTMENT OF PLANNING AND ZONING

Chief, Development Engineering Division	Date 2/2/05
Chief, Division of Land Development	Date 2/4/05
Director	Date 2/14/05

PREPARED BY
URS
4 NORTH PARK DRIVE
HUNT VALLEY, MARYLAND
TEL: (410) 785-7220

STATE OF MARYLAND — DAVID THOMAS KOROLOGOS — No. 16152 — REGISTERED PROFESSIONAL ENGINEER — 2/1/05

DES: DTM/RKK	
DRN: RMC/HWC	
CHK: DTM/RKK	
DATE: 10/8/04	

BY	NO.	REVISION	DATE

OWNER:
HOWARD COUNTY DEPARTMENT
RECREATION AND PARKS
7120 OAKLAND MILLS ROAD
COLUMBIA, MARYLAND 21046

DEVELOPER:
HOWARD COUNTY DEPARTMENT OF PUBLIC WORKS
9250 BENDIX ROAD
COLUMBIA, MARYLAND 21045

TAX MAP: 50	
GRID: 1&2	
ZONED: R-20 & R-SC	
PARCEL NO.: 364	
CENSUS TRACT: 6069.03	
WATER CODE: C06	
SEWER CODE: 7170900	

HIGH RIDGE PARK
SITE DETAILS

DEED REFERENCE: LIBER 8771, FOLIO 685
ELECTION DISTRICT NO. 6, HOWARD COUNTY, MARYLAND

SHEET 10 OF 39

SDP-05-19

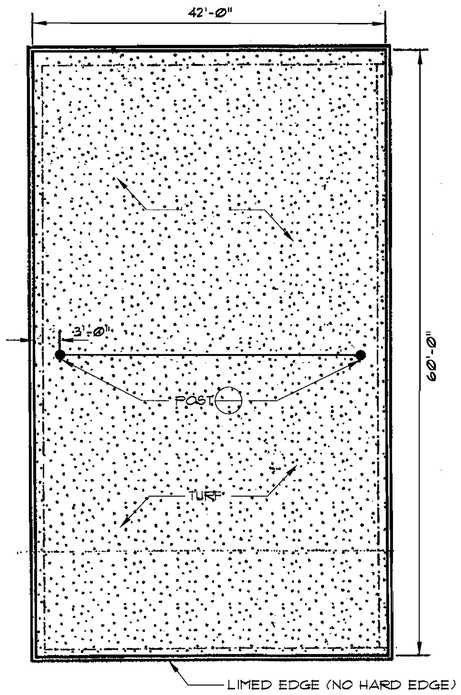

1/11 VOLLEYBALL COURT LAYOUT

NTS 60' X 42'

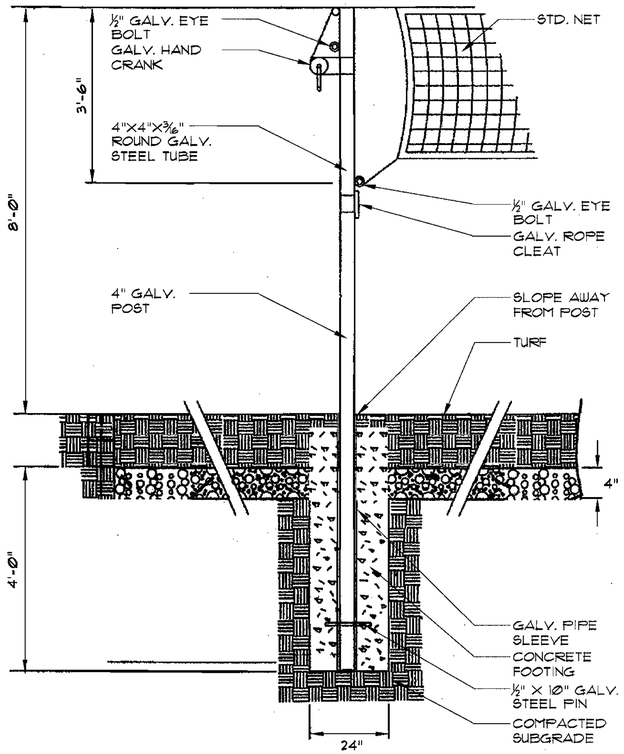

2/11 VOLLEYBALL NET AND SURFACE

NTS

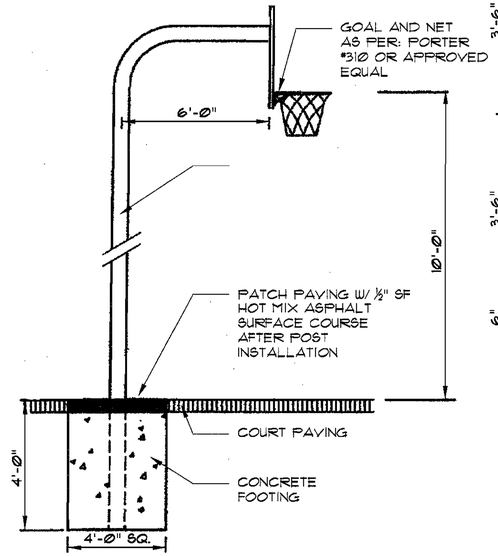

NOTE:
USE BISON SYSTEM (SEE SPECS). SUBMIT SHOP DRAWING FOR REVIEW AND APPROVAL.

3/11 BASKETBALL GOAL

NTS

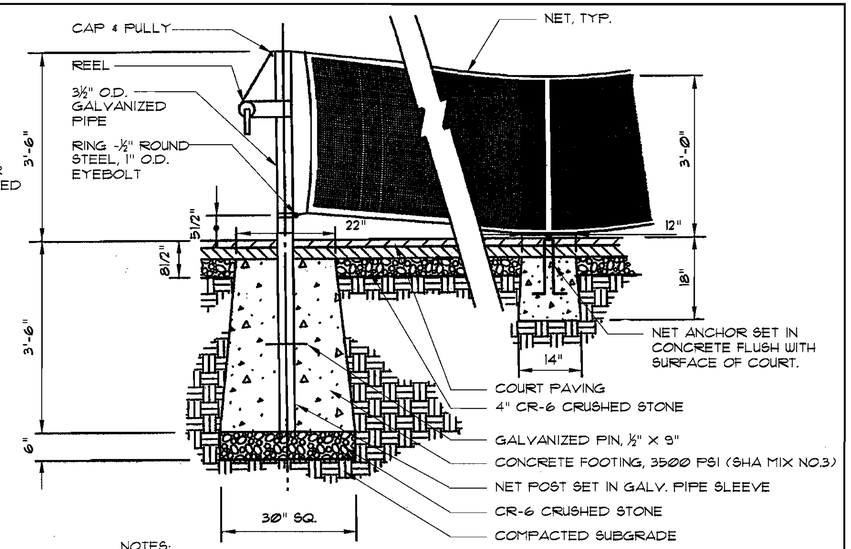

NOTES:
1. POST AND NET ANCHOR FOUNDATIONS SHALL BE ROUND AT THE TOP AND SQUARE AT THE BASE.
2. POSTS SHALL BE USED WITH FABRIC NETS ONLY.
3. SLEEVE SHALL BE SIZED TO ALLOW PIPE TO BE REMOVED WITHOUT BINDING, BUT SHALL HOLD PIPE FIRMLY WITH MIN. CLEAR DISTANCE.
4. CONTRACTOR SHALL INSTALL NET ANCHOR AT MID COURT.
5. PRIME AND PAINT POSTS TO MATCH GREEN COURT SURFACE.
6. REFER TO TENNIS COURT PLAN FOR LOCATION OF POSTS.

4/11 TENNIS EQUIPMENT

NTS

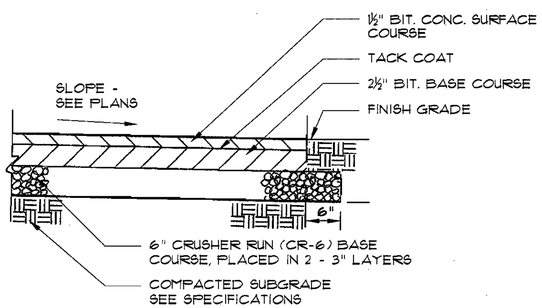

NOTES:
1. SEE HOWARD COUNTY STANDARD SPECIFICATION FOR PARKING.
2. COMPLY WITH HOWARD COUNTY STANDARD DETAILS AND SPECIFICATIONS.

5/11 ASPHALT ROADS & PARKING - PAVING DETAIL

NTS

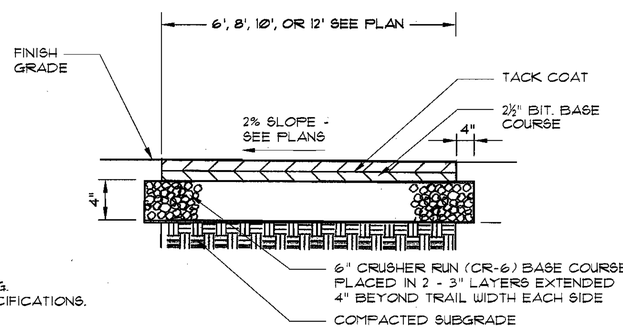

6/11 ASPHALT TRAIL - TYPICAL SECTION

NTS

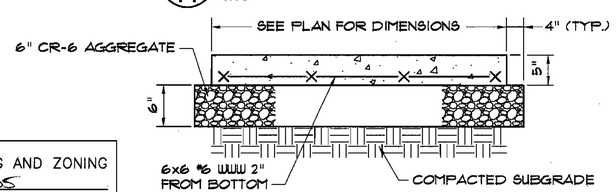

7/11 CONCRETE PAVING

NTS

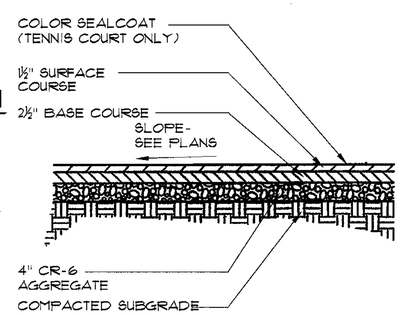

8/11 COURT PAVING

NTS

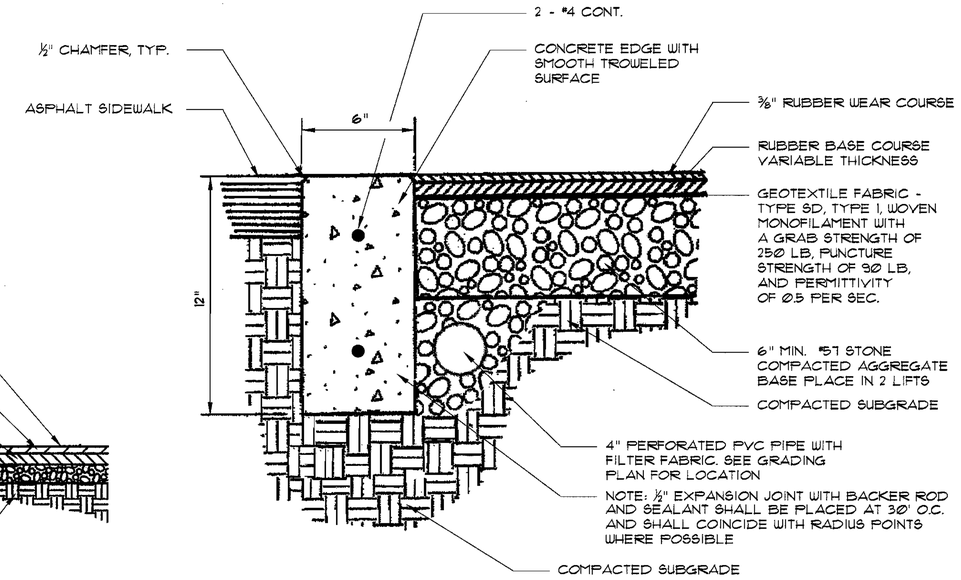

9/11 PLAYGROUND EDGE & SURFACE

NTS

APPROVED: DEPARTMENT OF PLANNING AND ZONING

Chief, Development Engineering Division	Date 2/2/05
Chief, Division of Land Development	Date 2/4/05
Director	Date 2/16/05

PREPARED BY
URS
4 NORTH PARK DRIVE
HUNT VALLEY, MARYLAND
TEL: (410) 785-7220

STATE OF MARYLAND — DAVID THOMAS KNOCHE — No. 14159 — REGISTERED PROFESSIONAL ENGINEER — 1/11/05

DES: DTM/RKK				
DRN: RMC/HWC				
CHK: DTM/RKK				
DATE: 10/8/04	BY	NO.	REVISION	DATE

OWNER:
HOWARD COUNTY DEPARTMENT
RECREATION AND PARKS
7120 OAKLAND MILLS ROAD
COLUMBIA, MARYLAND 21046

DEVELOPER:
HOWARD COUNTY DEPARTMENT OF PUBLIC WORKS
9250 BENDIX ROAD
COLUMBIA, MARYLAND 21045

TAX MAP: 50
GRID: 1&2
ZONED: R-20 & R-SC
PARCEL NO.: 364
CENSUS TRACT: 6069.03
WATER CODE: C06
SEWER CODE: 7170900

HIGH RIDGE PARK

SITE DETAILS

DEED REFERENCE: LIBER 8771, FOLIO 685
ELECTION DISTRICT NO. 6, HOWARD COUNTY, MARYLAND

SDP-05-19

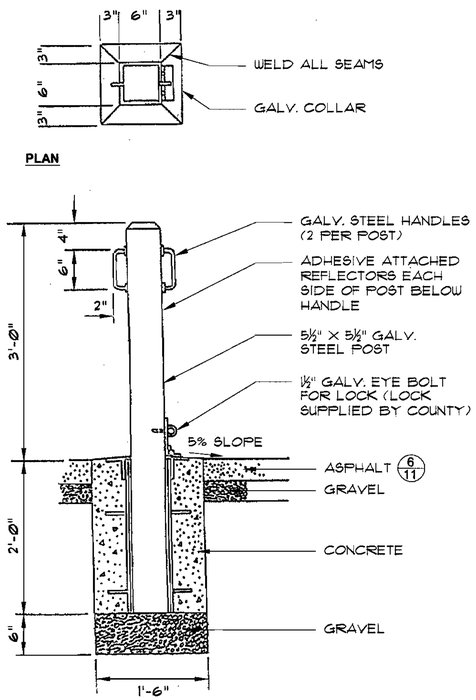

NOTE: ORIENT HANDLES PARALLEL TO DIRECTION OF PATHWAY (NOT AT RIGHT ANGLES TO PATH)

1/12 REMOVABLE BOLLARD DETAIL

NTS

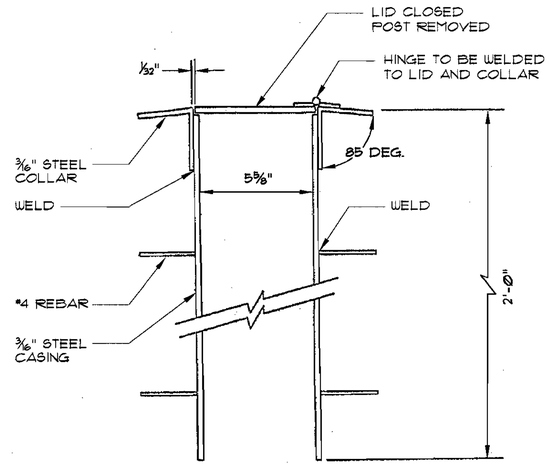

LID & CASING DETAIL

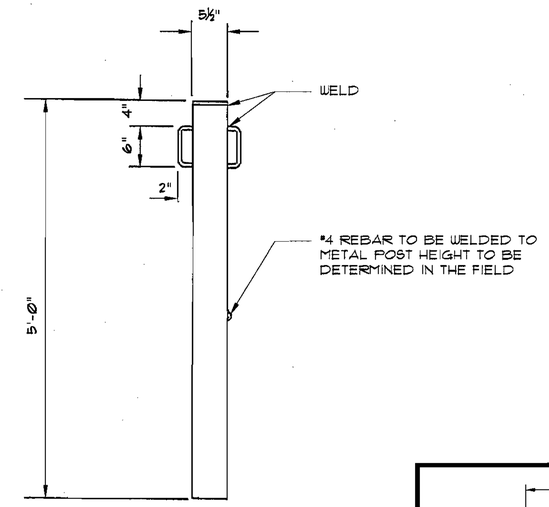

ALUMINUM POST

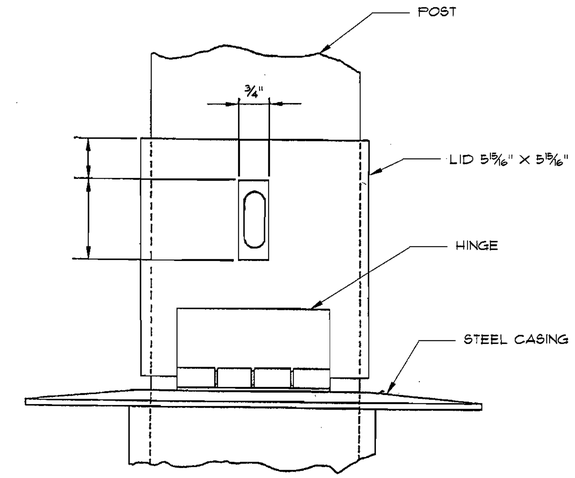

LID DETAIL

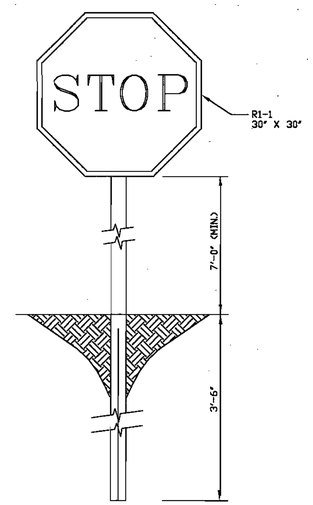

2/12 STOP SIGN DETAIL

NTS

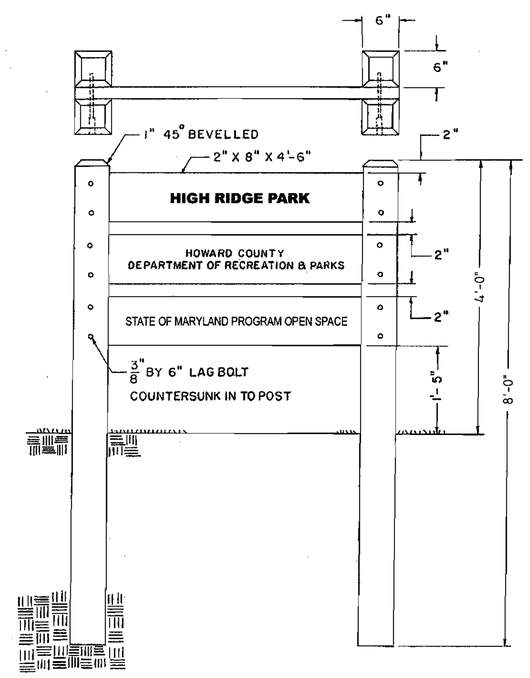

3/12 PARK SIGN DETAIL

NTS

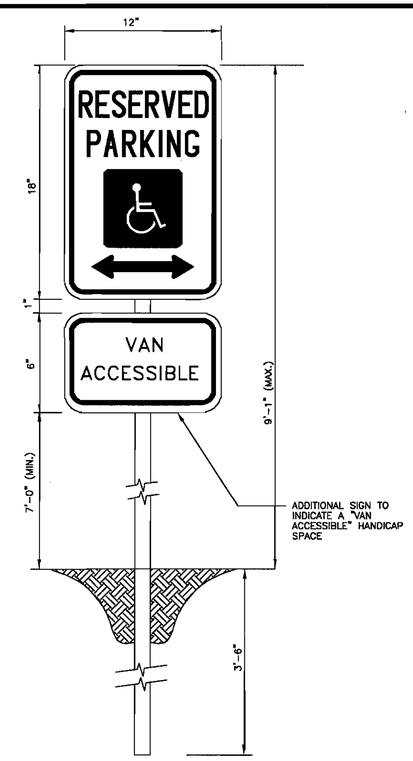

VAN ACCESSIBLE SIGN

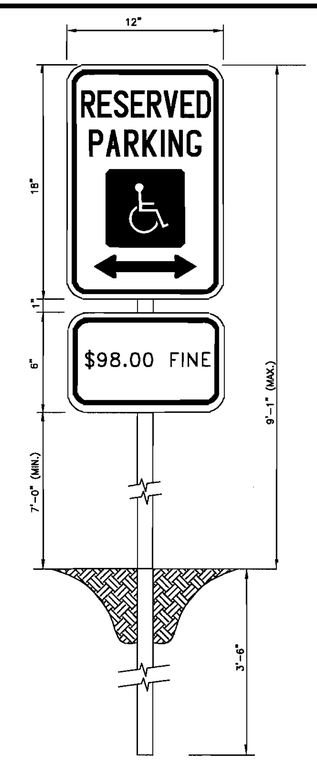

STANDARD H.C. SIGN

4/12 HANDICAP SIGN DETAIL

NTS

NOTE: EACH SIGN SHALL BE FIELD LOCATED AND APPROVED BY THE ENGINEER.

APPROVED: DEPARTMENT OF PLANNING AND ZONING

Chief, Development Engineering Division	Date 2/2/05
Chief, Division of Land Development	Date 2/4/05
Director	Date 2/16/05

PREPARED BY
URS
4 NORTH PARK DRIVE
HUNT VALLEY, MARYLAND
TEL: (410) 785-7220

STATE OF MARYLAND — DAVID THOMAS BOROVICH — No. 14152 — PROFESSIONAL ENGINEER — 2/16/05

DES: DTM/RKK	
DRN: RMC/HWO	
CHK: DTM/RKK	
DATE: 10/8/04	

BY	NO.	REVISION	DATE

OWNER:
HOWARD COUNTY DEPARTMENT
RECREATION AND PARKS
7120 OAKLAND MILLS ROAD
COLUMBIA, MARYLAND 21046

DEVELOPER:
HOWARD COUNTY DEPARTMENT OF PUBLIC WORKS
9250 BENDIX ROAD
COLUMBIA, MARYLAND 21045

TAX MAP: 50
GRID: 1&2
ZONED: R-20 & R-SC
PARCEL NO.: 364
CENSUS TRACT: 6069.03
WATER CODE: C06
SEWER CODE: 7170900

HIGH RIDGE PARK

SITE DETAILS

DEED REFERENCE: LIBER 8771, FOLIO 685
ELECTION DISTRICT NO. 6, HOWARD COUNTY, MARYLAND

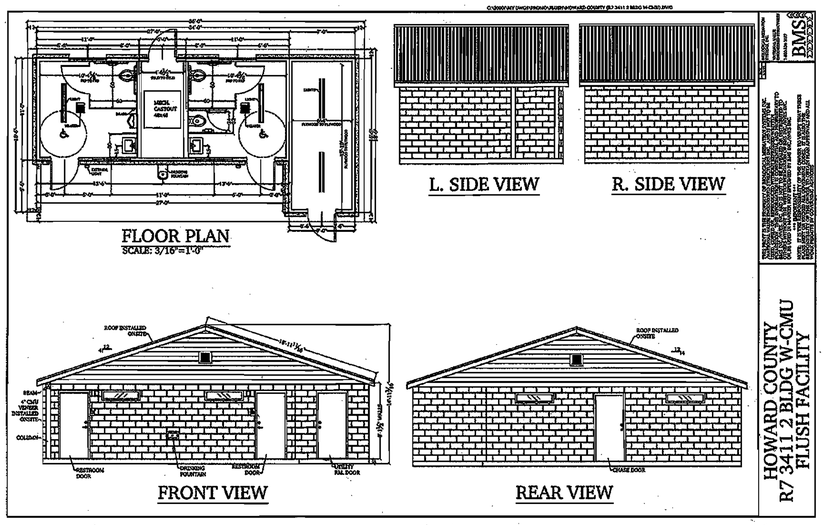

NOTE: COMFORT STATION SHOWN WILL BE CONSTRUCTED UNDER SEPARATE CONTRACT AND IS PROVIDED FOR INFORMATIONAL PURPOSES ONLY.

1/13 COMFORT STATION
NTS

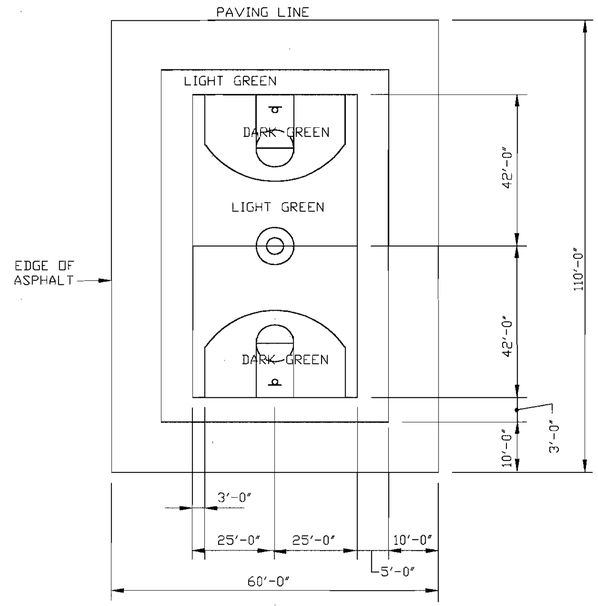

2/13 PLAN VIEW BASKETBALL COURT
NTS

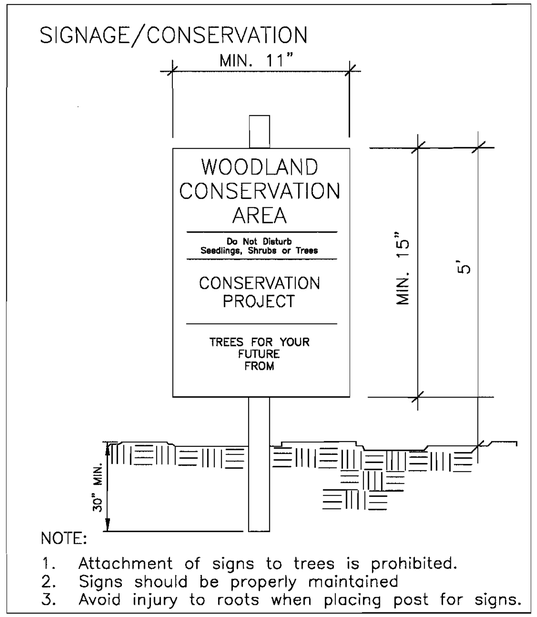

NOTE:
1. Attachment of signs to trees is prohibited.
2. Signs should be properly maintained
3. Avoid injury to roots when placing post for signs.

3/13 WOODLAND CONSERVATION SIGN
NTS

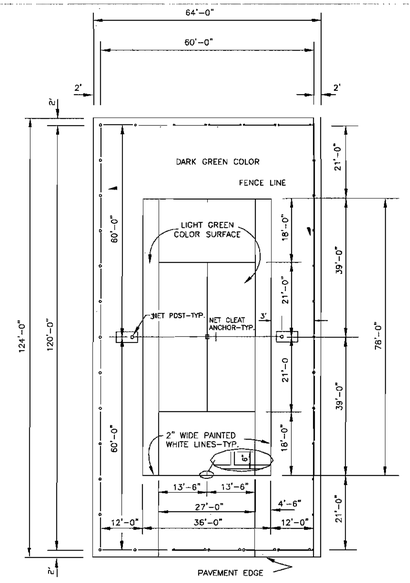

NOTES:

PROVIDE 1% SLOPE ACROSS COURT.

GATES ARE TO BE LOCATED AS SHOWN ON SITE PLAN AND ARE TO SWING OUT.

APPLY PROTECTIVE COLORCOATING ON SMOOTH ASPHALT SURFACE AT MANUFACTURER'S RECOMMENDED RATE.

COLORCOAT SURFACE AFTER FENCE AND GATES HAVE BEEN INSTALLED. PROVIDE CHAIN AND LOCK FOR GATES TO PROTECT THE COLORCOATED SURFACE FROM POSSIBLE VANDALISM.

ALL MEASUREMENTS FOR LINE STRIPING OF COURTS ARE TO THE OUTSIDE OF LINES, EXCEPT THOSE INVOLVING THE CENTER SERVICE LINE WHICH IS EQUALLY DIVIDED BETWEEN LEFT AND RIGHT SERVICE COURTS.

FOR PAVEMENT SECTION AND NET POST ANCHOR DETAILS, SEE STANDARD NO. 203.

FOR FENCE AND GATE DETAILS, SEE STANDARD NO. 204 AND 205.

4/13 TENNIS COURT - SINGLE
NTS

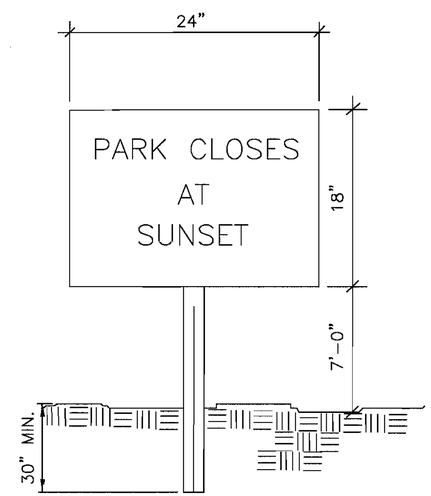

5/13 PARK CLOSED SIGN
NTS

APPROVED: DEPARTMENT OF PLANNING AND ZONING

Chief, Development Engineering Division	Date 2/2/05
Chief, Division of Land Development	Date 2/4/05
Director	Date 2/8/05

PREPARED BY
URS
4 NORTH PARK DRIVE
HUNT VALLEY, MARYLAND
TEL: (410) 785-7220

STATE OF MARYLAND — DAVID HOWARD CROSS — No. 16153 — PROFESSIONAL ENGINEER
2/11/05

DES: DTM/RKK	
DRN: RMC/HWC	
CHK: DTM/RKK	
DATE: 10/8/04	

BY	NO.	REVISION	DATE

OWNER:
HOWARD COUNTY DEPARTMENT
RECREATION AND PARKS
7120 OAKLAND MILLS ROAD
COLUMBIA, MARYLAND 21046

DEVELOPER:
HOWARD COUNTY DEPARTMENT OF PUBLIC WORKS
9250 BENDIX ROAD
COLUMBIA, MARYLAND 21045

TAX MAP: 50	
GRID: 1&2	
ZONED: R-20 & R-SC	
PARCEL NO.: 364	
CENSUS TRACT: 6069.03	
WATER CODE: C06	
SEWER CODE: 7170900	

HIGH RIDGE PARK
SITE DETAILS

DEED REFERENCE: LIBER 8771, FOLIO 685
ELECTION DISTRICT NO. 6, HOWARD COUNTY, MARYLAND

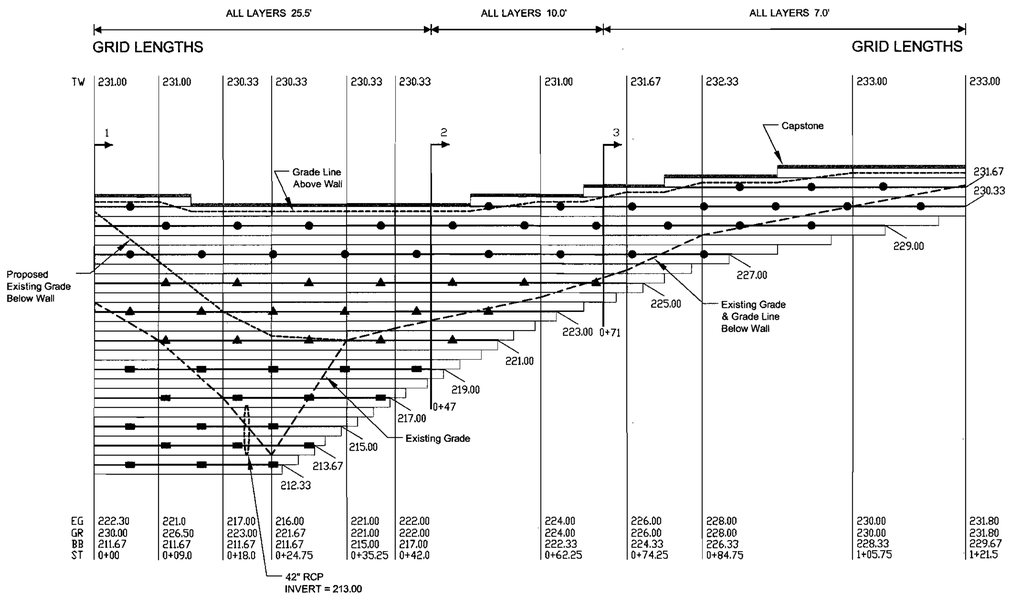

GRID KEY: MIRAFI 3XT
MIRAFI 5XT
MIRAFI 7XT

TW = TOP OF WALL (NOT INCLUDING CAP)
EG = EXISTING GRADE
GR = PROPOSED FINISHED GRADE AT BASE OF WALL
BB = BOTTOM OF BLOCK / TOP OF LEVELING PAD
ST = WALL STATION

SCALE: HORIZONTAL SCALE 1" = 10'
VERTICAL SCALE 1"= 5'

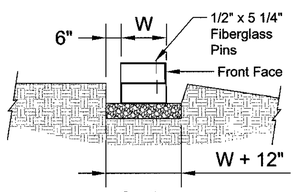

Section

Leveling Pad Detail

KEYSTONE COMPAC

WALL SECTION WITH SURCHARGE

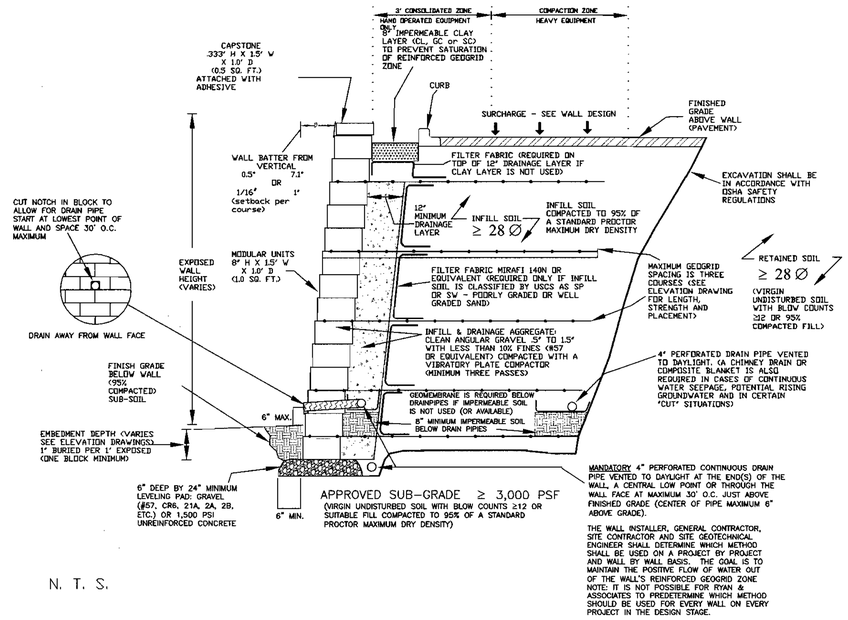

N. T. S.

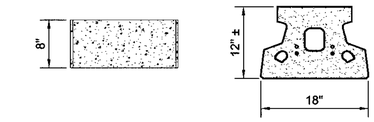

Compac Elevation

Compac Plan

Compac Unit
* Dimensions May Vary by Region

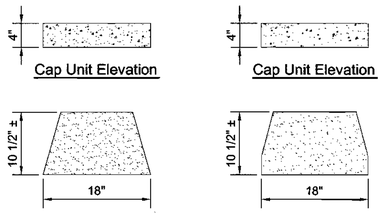

Cap Unit Elevation

Cap Unit Elevation

Cap Unit Plan

Cap Unit Plan

Universal Cap Unit Option
* Dimensions & Availability Will Vary by Region

Straight Split Cap Unit Option
* Dimensions & Availability Will Vary by Region

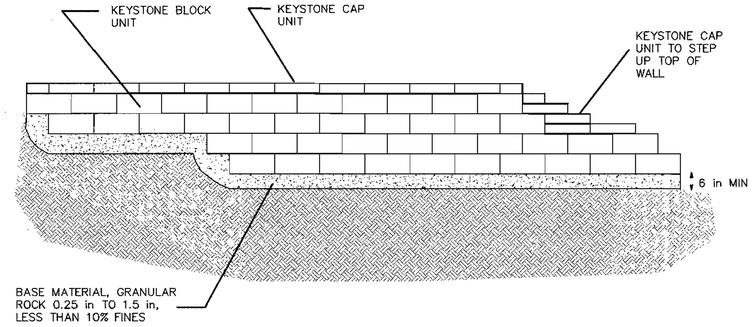

KEYSTONE STEP DOWN TYPICAL DETAIL

APPROVED: DEPARTMENT OF RECREATION AND PARKS

DIRECTOR — DATE 2-15-05

APPROVED: DEPARTMENT OF PLANNING AND ZONING

Chief, Development Engineering Division — Date 2/2/05

Chief, Division of Land Development — Date 2/4/05

Director — Date 2/14/05

RYAN & ASSOCIATES
A Division of WKR Consulting, Inc.
RETAINING WALL DIVISION
PHONE 717-262-4242 FAX 717-262-4245
29 SOUTH MAIN STREET, SUITE A
CHAMBERSBURG, PA 17201

STATE OF MARYLAND — WILLIAM K. RYAN — No. 21586 — REGISTERED PROFESSIONAL ENGINEER

12/11/04

Professional Engr. No. 21586

PREPARED BY
URS
4 NORTH PARK DRIVE
HUNT VALLEY, MARYLAND
TEL: (410) 785-7220

DES:				
DRN:				
CHK:				
DATE: 8/3/04	BY	NO.	REVISION	DATE

OWNER:
HOWARD COUNTY DEPARTMENT
RECREATION AND PARKS
7120 OAKLAND MILLS ROAD
COLUMBIA, MARYLAND 21046

DEVELOPER:
HOWARD COUNTY DEPARTMENT OF PUBLIC WORKS
9250 BENDIX ROAD
COLUMBIA, MARYLAND 21045

TAX MAP: 50
GRID: 1&2
ZONED: R-20 & R-SC
PARCEL NO.: 344
CENSUS TRACT: 6069.03
WATER CODE: C06
SEWER CODE: 7170900

HIGH RIDGE PARK

RETAINING WALL DETAILS

DEED REFERENCE: LIBER 8711 FOLIO 685
ELECTION DISTRICT NO. 6, HOWARD COUNTY, MARYLAND

SHEET 14 OF 39

SDP-05-19

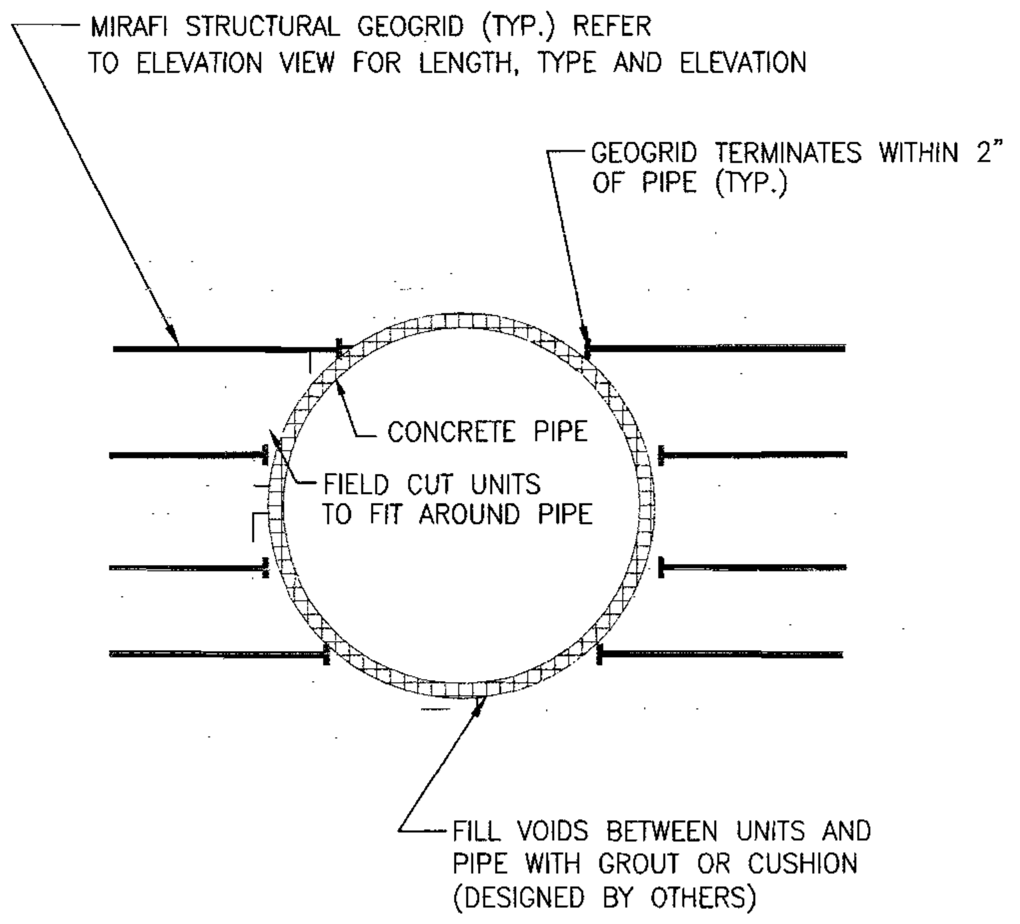

MATERIAL ESTIMATE*:

BLOCK TYPE: Keystone Compac II **GEOGRID TYPE: Mirafi 3XT, 5XT & 7XT**

TOTAL SQ. FT.	(1 S. F.) BLOCK	(.5 S. F.) CAPS**	PINS	SQ. YDS. 3XT GRID	SQ. YDS. 5XT GRID	SQ. YDS. 7XT GRID	CU. YDS. DRAIN GRAVEL	CU. YDS. LEVELING PAD GRAVEL	FT. WALL LENGTH
1,400	1,355	90	2,549	575	535	605	83	9	121

NOTE: Quantities have been increased by the following percentages: block & caps 3%, geogrid 15% & gravel 5%.
**Cap quantity is based on one unit for each step down transition on the top of the wall.

* Ryan & Associates is not responsible for extras or shortages based on this take-off. The recipient is responsible for verifying the accuracy of this design by reviewing the site/ grading plan for this project or by taking field measurements.

CROSS SECTION DETAILS & FACTORS OF SAFETY:

SECTION	STATION	TOTAL WALL HEIGHT	LOAD APPLIED	SLIDING minimum 1.50	OVERTURNING minimum 2.00	BEARING CAPACITY minimum 2.50	BEARING PRESSURE PSF
1	0+00 TO 0+47	19.33'	300 PSF LIVE LOAD	2.65	10.71	12.05	2,994
2	0+47 TO 0+71	12.00'	300 PSF LIVE LOAD	1.68	3.68	5.61	2,157
3	0+71 TO 1+21.5	8.00'	300 PSF LIVE LOAD	1.62	3.44	5.89	1,460

GENERAL NOTES

1. SOIL PARAMETERS: Ryan & Associates (RA) has reviewed the "Geotechnical investigation" report for this site dated 09/09/2004 prepared by Marshall Engineering, Inc. The in-situ soils are classified as ML (sandy silt and sandy clayey silts), SM-SC (silty to clayey, fine to medium sand) and SP-SM (poorly graded sand-silty sand). Based on this report, an internal angle of friction of 28° was used for the soils in the retaining wall design. This is for a worst case ML (sandy silt, clayey silt/silt) soil type. CH (fat clay), CL (lean clay), MH (elastic silt) and OH/OL/PT (organic) soils are not acceptable for wall construction. If these unsuitable soils are encountered they must be removed and replaced with soils that meet or exceed the design friction angle of 28°. An average value of the three proctors was used for the soil unit weight of 139.8 PCF (maximum wet density). The maximum wet density of 139.8 PCF was used for the foundation soils and a value of 132.8 PCF (average maximum wet density less 5% for 95% compaction) was used for the infill and retained soils. Fluctuations in unit weights of 5 PCF higher or lower will not affect this design, however if the unit weights vary by more than 5 PCF RA must be notified so that the cross sections can be rerun to verify that all factors of safety are still met. Soil moisture must be within (2% of optimum to obtain proper compaction results (no exceptions). No cohesion was used in any of the calculations. If possible, sandy soils (SC, SM and SP) should be stockpiled and used for wall backfill, since these soils have a higher friction angle, are more "free-draining" and are less sensitive to moisture.

2. SPECIFICATIONS: Construction and materials must conform to the attached "Ryan & Associates segmental retaining wall specifications and installation guidelines for Keystone".

3. BEARING CAPACITY: The sub-grade (the soils under the wall's gravel leveling pad and the soils under the wall's reinforced geogrid zone) must be tested by the site geotechnical engineer prior to wall construction and have minimum allowable bearing capacity of 3,000 PSF. The actual bearing pressure exerted by each specific wall section is shown on the "Cross Section Details and Factors of Safety" table so that the site geotechnical engineer may determine specifically how to handle any areas where low bearing capacity soils are encountered on an individual wall section basis. Areas of the sub-grade that do not meet these maximum pressures will require undercutting and/or geogrid reinforcing. The sub-grades must be virgin (natural undisturbed soil with blow counts ≥12).

4. CONSTRUCTION OVERSIGHT: The construction of this wall must be performed under the observation/review of a Maryland Registered Professional Engineer or their designated representative to ensure that it is built in accordance with the RA General Notes and Specifications. A registered professional geotechnical/structural engineer must certify all wall construction.

5. GEOGRIDS: This wall was designed with Mirafi 3XT, 5XT & 7XT geogrids which have LTDS (Long Term Design Strengths) of 1558, 2234 & 2961 respectively. All geogrid substitutions must have prior approval of RA.

6. REAR DRAIN TILES: Due to Howard County requirements, a rear drainpipe is required at the back of the wall's reinforced geogrid zone. This is in addition to the mandatory 4" drainpipe at the front of the wall (within the gravel leveling pad or behind the at grade course- depending which drainpipe position is exercised). The rear drainpipe shall be surrounded by a minimum of 6" of clean gravel (#57 or equivalent) and shall have perpendicular solid pipes that run forward and connect to the front drainage system with crosses or tees.

7. DESIGN SOFTWARE: Internal and external wall calculations were performed with Keywall 2004 design software (version 3.3.1.181). A table has been included ("Cross Section Details and Factors of Safety") which has the following information: section locations (area of wall referenced), total wall heights, loads applied, factors of safety (for sliding, overturning and bearing capacity) and bearing pressures (the weight exerted by the wall structure-block and geogrid zone). Factors of safety of 1.5 were also met for: geogrid pullout (from the soil and from the block), geogrid overstress (geogrid rupture) and connection (block to geogrid).

8. GLOBAL STABILITY: Due to Howard County requirements, a global stability analysis was done at the maximum height of the wall (station 0+18). The analysis verified that the geogrid lengths met a factor of safety of 1.3. RA did the analysis with 28° soils and 0# of cohesion (for the worst case scenario of fine-grained ML soils). A copy of the global stability analysis is included in the 81/2" X 11" submittal.

9. WALL BATTER: This wall was designed with the blocks having no batter (0.0°). This was done so that the 0.5° near vertical batter (front pin position: 1/16" setback per block course) may be used if desired and will allow for some construction tolerance. However, the 7.1° batter (rear pin position: 1" setback per block course) is strongly recommended by RA since it is more conservative (yields higher factors of safety) and allows for more construction tolerance. If the near vertical batter is used the wall installer should lay the base course tilted back a minimum of 1/4" to compensate for movement during construction (from compaction equipment and the geogrid losing its slack) to ensure that the wall does not go beyond vertical (have a negative batter). It is important for the wall installer and the civil engineer/surveyor to predetermine the wall's batter during stake out. The base of the wall will need to be moved forward if there are critical dimensions that need to be met on the high side of the wall.

10. "RCP" STORMWATER PIPE INTERSECTING THE WALL: The civil plan shows an RCP (reinforced concrete pipe) pipe intersecting the wall at approximate wall station 0+21.3. Since this is a structural pipe it should be able to be worked around without additional means of support. However, it should be verified by the pipe manufacturer that it can withstand the load of the wall (maximum bearing pressure of 2,994 PSF). The blocks may be cut to fit around the pipe and the voids filled with type "M" mortar or non-shrink grout, or a concrete collar can be cast around it. If a concrete collar is cast in place, its top elevation must coincide with a top of block elevation to eliminate the horizontal cutting of blocks. NOTE: RA is not responsible for wall failure that results from this pipe leaking water and saturating the wall's reinforced geogrid zone. It is imperative that the site contractor adequately seals all joints in these structures.

11. CIVIL PLAN: This design package is based on the civil plan electronic files (prepared by The URS Corporation) provided to RA via the email dated 09/14/2004. A Partial copy of this plan has been included in the 8 1/2" X 11" submittal to show the RA wall numbering and stationing.

12. WALL PROFILE: The elevation drawing is done to represent the grade changes necessary on the civil plan and was done in even block course increments of .667' (8"). Minor field changes may be necessary by the wall installer. Lineal footage may be added or subtracted as needed if the wall's height is equal to or less than the design height. If the wall needs to be raised in height, RA shall be notified and new structural cross sections must be provided before the installer proceeds. The cap height of .333' (4") is not accounted for on the profile elevations however its height may have been used in some cases to achieve the desired TW elevations.

13. BLOCK SYSTEM: This design is valid only for the Keystone Compac II block systems. Each segmental wall system has unique dimensions, connection devices and interacts differently with geogrids; therefore other block types may not be substituted without partial or total redesigns.

14. FACTORS OF SAFETY: The following factors of safety have been met in this design: Sliding 1.5, Overturning 2.0, Bearing Capacity 2.0, Geogrid Overstress 1.5, Geogrid Pullout 1.5 (from the soil and from the block) and Global Stability 1.3.

15. SPECIAL HOWARD COUNTY RETAINING WALL SPECIFICATIONS:

A. The retaining wall shall only be constructed under the observation of a Registered Professional Engineer and a (NICET, WACEL, or equivalent) certified soils technician.

B. The required bearing pressure beneath the footing of the wall shall be verified in the field by a certified soils technician. Testing documentation shall be provided to the Howard County Inspector prior to the start of construction. The required test procedure shall be the Dynamic Cone Penetrometer Test ASTM STP-399.

C. The suitability of the fill material shall be confirmed by the on-site soils technician. Each eight inch lift must be compacted to 95% Standard Proctor Density and the testing report shall be made available to the Howard County Inspector upon completion of the construction.

D. For walls over ten feet in height, one soil boring is required every 100 feet along the length of the wall, copies of the boring reports shall be provided to the Howard County Inspector prior to the start of construction.

16. EMBEDMENT: Wall embedment varies from two to twenty-seven blocks (burying to virgin and eliminating "step-downs"). The exact amount of buried blocks can be determined by subtracting the "BB" elevation from the "GR" elevation on the RA profile drawings.

17. SEPARATE 81/2" X 11" SUBMITTAL: These 24" X 36" sheets were done in conjunction with an 81/2" X 11" submittal. The cross section calculations and the global stability analysis are included in the 8 1/2" X 11" submittal.

APPROVED: DEPARTMENT OF RECREATION AND PARKS

DIRECTOR (signature) DATE 2-15-05

APPROVED: DEPARTMENT OF PLANNING AND ZONING

Chief, Development Engineering Division (signature) Date 2/2/05
Chief, Division of Land Development (signature) Date 2/4/05
Director (signature) Date 2/16/05

PREPARED BY
URS
4 NORTH PARK DRIVE
HUNT VALLEY, MARYLAND
TEL: (410) 785-7220

DES:				
DRN:				
CHK:				
DATE: 8/3/04	BY	NO.	REVISION	DATE

OWNER:
HOWARD COUNTY DEPARTMENT
RECREATION AND PARKS
7120 OAKLAND MILLS ROAD
COLUMBIA, MARYLAND 21046

DEVELOPER:
HOWARD COUNTY DEPARTMENT OF PUBLIC WORKS
9250 BENDIX ROAD
COLUMBIA, MARYLAND 21045

TAX MAP: 50
GRID: 1&2
ZONED: R-20 & R-SC
PARCEL NO.: 364
CENSUS TRACT: 6069.03
WATER CODE: C06
SEWER CODE: 7170900

RYAN & ASSOCIATES
A Division of WKR Consulting, Inc.
RETAINING WALL DIVISION
PHONE 717-262-4242 FAX 717-262-4245
29 SOUTH MAIN STREET, SUITE A
CHAMBERSBURG, PA 17201

STATE OF MARYLAND — WILLIAM K. RYAN — REGISTERED PROFESSIONAL ENGINEER (seal) 10/11/04
Professional Engr. No. 21586

HIGH RIDGE PARK

RETAINING WALL DETAILS

DEED REFERENCE: LIBER 8771 FOLIO 685
ELECTION DISTRICT NO. 6, HOWARD COUNTY, MARYLAND

SDP-05-19

SPECIFICATIONS FOR SEGMENTAL RETAINING WALL SYSTEMS

PART 1: GENERAL

1.01 Description

A. Work includes furnishing and installing segmental retaining wall (SRW) Units to the lines and grades designated on the Final Design prepared by Ryan & Associates (RA). Also included are furnishing and installing appurtenant materials required for construction of the retaining wall as shown on the RA Final Design.

1.02 Reference Standards

A. ASTM C 140– Sampling and Testing Concrete Masonry Units
B. ASTM D 4595– Tensile Properties of Geotextiles by the Wide-Width Strip Method.
C. ASTM D 5262– Test Method for Evaluating the Unconfined Creep Behavior of Geo- Grids
D. GRI:GG1– Single Rib Geogrid Tensile Strength
E. GRI:GG5– Geogrid Pullout
F. ASTM D 698– Moisture Density Relationship for Soils, Standard Method
G. ASTM D 422– Gradation of Soils
H. ASTM 4318– Atterberg Limits of Soil
I. ASTM 3034– Specification for Polyvinyl Chloride (PVC) Plastic Pipe
J. ASTM D 1248– Specification for Corrugated Plastic Pipe

1.03 Design Standards

A. The following factors of safety must have been met in this design: Sliding 1.5, Overturning 2.0, Bearing Capacity 2.0, Geogrid Overstress 1.5, Geogrid Connection (between the block and the geogrid) and Geogrid Pullout 1.5 (from the block and from the soil).

PART 2: MATERIALS & DESIGN PARAMETERS

2.01 Segmental Retaining Wall Units

A. SRW Units shall be machine formed, Portland Cement concrete blocks specifically designed for retaining wall applications. The SRW Unit currently approved for this project is:

Keystone Compac II as manufactured by Betco Block & Products

NOTE: Where Keystone specifications and reference documents conflict with these specifications the RA specifications hold precedence.

B. SRW Units shall be sound and free of cracks or other defects that would interfere with the proper placing of the units or significantly impair the strength or permanence of the structure. Cracking or excessive chipping may be grounds for rejection. Units showing cracks longer than 1/2 inch shall not be used within the wall. Units showing chips visible at a distance of 30 feet from the wall shall not be used within the wall.

C. Concrete used to manufacture SRW Units shall have a minimum 28 days compressive strength of 3,000 PSI and a maximum moisture absorption rate, by weight, of 5% as determined in accordance with ASTM C 140. Compressive strength test specimens shall conform to the saw-cut coupon provisions of Section 5.2.4 of ASTM C 140 with the following exception: Coupon shall be taken from the least dimension of the unit of a size and shape representing the geometry of the unit as a whole.

D. SRW Units molded dimensions shall not differ more than ± 1/8 inch from that specified, except height which shall be ± 1/16 inch as measured in accordance with ASTM C 140.

2.02 Geosynthetic Reinforcement

A. Geosynthetic reinforcement shall consist of geogrids as indicated on the RA Final Design. No geogrid substitutions shall be permitted without the prior approval of RA (a partial redesign may be necessary if geogrids are substituted). NOTE: It is always acceptable to substitute a higher strength geogrid (of the same manufacturer) for a lower strength geogrid.

2.03 Connectors

A. Shear connectors shall be 1/2 inch diameter thermoset isophtalic polyester resin–pultruded fiberglass reinforcement rods or equivalents to provide connection between vertically and horizontally adjacent units. Strength of shear connections between vertical adjacent units shall be applicable over a design temperature of 10 degrees F to +100 degrees F. These connectors shall be capable of holding the geogrid in the proper design position during geogrid pre–tensioning and backfilling. The pins have several positions. The rear pin position results in a 1" setback and a 7.1° batter and the center pin position results in a near vertical setback with an approximate positive batter of 0.5°. The batter for which RA designed this wall will be stated in the RA Final Design General Notes and on the structural cross sections. It is always acceptable to change from the near vertical batter to 7.1° since it is more conservative (yields higher factors of safety); however the cross sections will need to be revised.

2.04 Leveling Pad

A. Material for the leveling pad shall consist of compacted gravel or unreinforced concrete. Typical gravels used for this leveling pad are #57, CR6, 21A, 2A modified, 2B, RC6, RC57, etc. Lean un–reinforced concrete with a strength of 1,500 PSI may also be used for the leveling pad.

2.05 Drainage Aggregate

A. Drainage aggregate shall be clean angular gravel (#57 or equivalent) with a size of 1/2 inch to 1 1/2 inches and less than 10% fines (passing the #200 sieve). Rounded "pea gravel" type aggregate is not permissible since it does not have the necessary frictional properties. Recycled gravel may be used if it meets the above criterion.

2.06 Drainage Pipe

A. The drainage collection pipe shall be a 4 inch perforated or slotted PVC or corrugated HDPE pipe.

2.07 Infill Soil: within the reinforced geogrid zone

A. The soils used must meet or exceed the friction angle stated in the RA Final Design (in the General Notes, on the typical wall section and on the structural cross sections). The reinforced material shall be free of debris and organic material (i.e.– no plants, roots, sod, top soil, trash, wood, etc.). The infill soil shall not consist of CH (fat clay), MH (elastic silt) or OH/OL/PT (organic) soils. All soils used for wall infill must always meet the following requirements, regardless of the friction angle: maximum liquid limit of 40, maximum optimum moisture of 20%, maximum of 75% passing the #200 sieve (minimum of 25% retained on the #200 sieve) and minimum dry unit weight of 105 PCF. Soil moisture must be within 2% of optimum for proper compaction results (no exceptions).

B. Rocks may be used as infill material as long as they have a maximum size of 6 inches and a mean diameter of 3 inches. Recycled concrete is permissible for infill except with certain polyester geogrids in water applications. In the case of water applications the geogrid manufacturer shall be consulted to see if the alkali in the recycled material will cause corrosive damage to their geogrid.

C. Select gravel (classified by USCS as GP or GW) is normally an acceptable substitution in the event suitable soils (those meeting RA's and the site geotechnical engineer's requirements) are not readily available. However, the unit weights of gravel can vary widely (clean gravel is typically 105 PCF and "crusher run" gravel is typically 135 PCF) so RA must be notified so that revised sections can be run prior to making any substitutions. In some cases clean gravel actually requires longer geogrid because of its extremely light unit weight (typically 105 PCF).

2.08 Retained Soil: the area beyond the infill soil and extending to a distance that is twice the wall's exposed height

A. This soil must meet or exceed the friction angle stated in the RA Final Design (in the General Notes, on the typical wall section and on the structural cross sections). This soil must be virgin (natural undisturbed with blow counts ≥12) or suitable fill (friction angle ≥ the RA Final Design requirement) compacted to 95% of a standard proctor maximum dry density.

2.09 Foundation Soil: the soil under the wall's gravel leveling pad and the soil under the reinforced geogrid zone

A. The foundation soil must meet or exceed the minimum allowable bearing capacity stated in the RA Final Design (in the General Notes and on the typical wall section). The sub–grade must be virgin (natural undisturbed with blow counts ≥12) or suitable fill (friction angle ≥ the RA Final Design requirement) compacted to 95% of a standard proctor maximum dry density.

2.10 Soil Investigation

A. RA recommends that every retaining wall design be preceded by an in–situ soil investigation by a licensed geotechnical engineer. However, if the owner and/or wall installer elects not to have an investigation conducted RA may assume soil design parameters based on: published data by the Soil Conservation Service (soil maps), a verbal description by the owner and/or wall installer or by RA's previous experience in certain geographic areas. It must be understood that the owner and/or wall installer bears full responsibility to the election not to have an investigation performed.

2.11 Site History & Information

A. Many factors other than soil information affect the performance and design of the retaining wall. RA relies on information provided by the owner and/or wall installer when designing a retaining wall. RA bears no responsibility if the owner and/or wall installer omit critical information required to properly design the wall. Information critical to wall design from the site consist of: topographic features (such as slopes), soil types, utilities, storm water management, structures (including buildings, other existing or proposed walls, swimming pools, etc.), site geological phenomenon, groundwater, loads with the wall's zone of influence (such as driveways, patios, roadways, sidewalks, etc.) and any other readily known site factors that could potentially impact the RA Final Design.

PART 3: CONSTRUCTION

3.01 Inspection

A. RA considers all retaining walls to be critical structures, meaning most walls require a considerable financial investment by the owner and failure of a wall will negatively impact a property both financially and from a public safety perspective. The owner or owner's representative is responsible for verifying that the wall installer meets all of the requirements of the RA Final Design (as stated in these specifications and the project's General Notes). This includes all submittals for materials and design, qualifications and proper installation of the wall system. All walls with an exposed height of 4 feet or greater, or those that require building permits, must have the construction certified by a licensed geotechnical/ structural engineer registered in the jurisdiction of the project. Additionally, after the wall has been completed it is highly recommended that it be surveyed to establish the wall's current horizontal and vertical alignment.

B. The wall installer's field construction supervisor shall have demonstrated experience and be qualified to direct all work at the site.

C. RA provides construction oversight on some retaining wall projects. RA verifies general compliance with the RA Final Design; however, it is the wall installer's ultimate responsibility to construct the structure properly in accordance with the RA Final Design. RA's liability is limited to the amount of our fees for the scope of work provided for the wall designs and construction oversight.

3.02 Excavation

A. The wall installer shall excavate to the lines and grades shown on the RA Final Design and the project's civil plans. The wall installer shall take precautions to minimize over–excavation. Over–excavation shall be filled with compacted soil (friction angle (RA design parameters) or gravel as directed by the site geotechnical engineer.

B. The wall installer shall verify location of existing structures and utilities prior to excavation. The wall installer shall ensure that all surrounding structures are protected from the effects of wall excavation. Excavation support (shoring), if required, is the responsibility of the wall installer. All excavation must be conducted in accordance with OSHA (federal) and state safety regulations. All work to construct the wall must be in accordance with 29CFR1926 sub–part P (OSHA Excavation Safety Requirements).

3.03 Foundation Preparation

A. Following excavation, the foundation soils (under the wall's gravel leveling pad and under the wall's reinforced geogrid zone) shall be examined by the site geotechnical engineer to assure that the actual foundation soil strength meets or exceeds the minimum allowable bearing capacity in the RA Final Design (stated in the General Notes and shown on the typical wall section). Soils that do not meet the required strength shall be removed and replaced with approved select structural fill or gravel and be compacted to 95% of a standard proctor maximum dry density for the full depth.

B. In cases of poor bearing capacity or fill soils, an enlarged geogrid reinforced leveling pad may be required. This typically consists of a 1 foot deep X 4 foot wide leveling pad with geogrid under (on the sub–grade) and within the gravel (6 inches above the sub–grade). The sub–grade must be compacted with a "J–Tamp" or "Jumping Jack" type compactor with a minimum of three passes prior to geogrid placement. These extra measures will increase the soil's bearing capacity by a minimum of 1,000 PSF (RA shall be consulted if the soil's bearing capacity needs to be increased by more than 1,000 PSF).

3.04 Leveling Pad Construction

A. The leveling pad shall be placed so that its top elevation is the same as the bottom of block ("BB") elevation on the RA Final Design profile drawing. It shall have a minimum thickness of 6 inches and a minimum width of 2 feet. The leveling pad should, at a minimum, extend laterally at least a distance of 6 inches from the toe and heel of the lower most SRW Unit.

B. The leveling pad material shall be compacted to 95% of a standard proctor maximum dry density with a vibratory plate compactor to provide a firm level–bearing surface on which to place the first course of SRW Units. A thin layer (not to exceed 1/2 inch) of wall–graded sand or stone dust may be used to smooth the top of the leveling pad.

3.05 SRW Unit Installation

A. All SRW Units shall be installed at the proper elevation and orientation as shown on the RA Final Design profile drawing and in conjunction with the project's civil plans. The SRW Units shall be installed in general accordance with the manufacturer's recommendations (RA's Final Design shall govern in any conflict between the two requirements).

B. The first course of SRW Units shall be placed on the leveling pad. The units shall be leveled side–to–side, front–to–rear and with adjacent units, and aligned to ensure intimate contact with the leveling pad. The first course is the most important for accurate and acceptable results. Alignment may be done by means of a string line or an offset from the base line to the backs of the blocks. SRW units shall have a minimum 4 inch overlap of units on each successive course so that the wall is interlocked and continuous. No horizontal gape greater than 1/4 inch between the faces of adjacent units are permitted.

C. Because the wall has a setback, its batter must be predetermined during the stake out process by the civil engineer/surveyor and wall installer. If there are critical dimensions that must be met on the high side of the wall then the base (at the toe) will need to be moved forward to compensate.

D. Lay out of curves and corners shall be installed in accordance with the civil plans and the RA Final Design. Construction techniques for curves and corners shall be in general accordance with the SRW manufacturer's installation guidelines. In general, all tangent angles shown on the civil drawings should be changed into curves to enhance the wall's strength and appearance. Continuous vertical joints are not recommended. Inside and outside 90° corners may be constructed without compromising the wall's integrity if they are properly interlocked. Inside corners should be constructed so that the SRW Units interlock (according to manufacturer's recommendations) and outside corners should incorporate special corner blocks when possible. If special outside corner blocks are not available from the block manufacturer for this project then the manufacturer's guidelines for building structural outside corners shall be followed. If gluing is necessary only industrial grade adhesives or sealants designed for concrete–to–concrete applications may be used (adhesives designed for plastic or wood applications are not acceptable).

E. Clean all excess debris from the tops of the SRW Units and install the next course.

F. Repeat procedures to extent of wall height.

G. A ±2" tolerance is permitted horizontally for wall batter (block setback). In no case shall a wall go beyond vertical (have a negative batter). Walls shall be built level (not with grade), however a +1.5 inch tolerance over a 10 foot distance is permitted vertically (as checked from left to right along the wall).

H. Embedment shall be a minimum of 1 inch buried for every 1 foot of wall exposed with one block minimum when the front slope is 4:1 or greater (more level). Walls constructed on 3:1 front slopes or less (more steep) require additional buried blocks. See the profile drawing in the RA Final Design for the exact amount of embedment (the amount of buried block can be determined at each wall station by subtracting the "BB" elevations from the "GR" elevations).

3.06 Geogrid Reinforcement Placement

A. All geogrid reinforcement shall be installed at the proper elevation, length and strength as shown on the profile and structural cross sections in the RA Final Design. Partial geogrid coverage is not acceptable: no gaps shall be present between geogrid layers. 100% coverage is required, however it is not necessary to overlap the geogrid pieces. The geogrid shall be laid horizontally on the compacted infill soil and on top of the concrete SRW Units. The geogrid must be embedded into the SRW Units to the face. The wall installer shall verify that the orientation of the geogrid is in accordance with the geogrid manufacturer's recommendations. The highest strength direction of the geogrid must be perpendicular to the wall face (the geogrid must not be laid parallel to the wall– cannot be rolled out with the wall).

B. Geogrid reinforcement layers shall be one continuous piece for their entire embedment length. Overlapping of the geogrid in the design strength direction (perpendicular to the wall face) is not permitted.

C. Tracked construction equipment shall not be operated directly on the geogrid. A minimum of 6 inches of backfill is required prior to operation of tracked vehicles over the geogrid. Turning should be kept to a minimum. Rubber–tired equipment may pass over the geogrid reinforcement at slow speeds (less than 5 MPH).

D. The geogrid shall be in tension and free of wrinkles prior to placement of the infill soil. Nominal tension shall be applied to the geogrid and secured in place with staples, stakes or by hand until it is covered by 6 inches of infill soil.

E. For inside & outside corners and inside & outside curves the geogrid shall be placed according to the manufacturer's instructions to provide total geogrid coverage. On outside corners the geogrid should be shifted up or down one course and alternated so that the geogrid comes into the reinforced geogrid zone from both legs of the 90° angle. Geogrid layers should never be placed on top of one another: there must be a minimum of 3 inches of compacted infill soil between geogrid layers.

3.07 Wall Drainage

A. Drainage aggregate (clean gravel such as #57 or equivalent) shall be installed behind the entire wall face from the first course below grade to one course from the top of the wall. The drainage gravel shall be placed to a minimum thickness of 12 inches behind the SRW Units. Drainage gravel shall also fill all voids between and within (if hollow) the SRW Units. SRW Units must be filled with drainage aggregate in one course lifts (SRW Units may not be stacked in two or three course lifts and then have the gravel dumped in from the top through multiple courses). An impermeable clay layer (CL, GC or SC) shall be placed on top of the 12" drainage layer. If clayey soils are not readily available, a layer of filter fabric (Mirafi 140N or equivalent) shall be placed on top of the gravel (below the topsoil) to prevent the downward migration of fines.

B. Drainpipes are mandatory and shall be vented through the wall face at maximum intervals of 40 feet on center (no more than 6 inches above finished grade). The pipes must maintain positive flow of water outside the reinforced geogrid zone. The drainpipes should be checked by the owner on a regular basis to ensure that they remain open (not blocked, filled in, grown over, pinched, etc.).

C. A rear drainpipe is required for this wall because of the "cut" situation (the potential exists for stormwater to enter the interface between the reinforced geogrid zone and the retained zone) and because low permeable soils (CL– lean clay & ML–silt) will be used for infill soil. This rear drainpipe shall be surrounded by a minimum of 6 inches of clean gravel in all directions (#57 or equivalent). This rear drainpipe must be vented through the wall face at maximum intervals of 40' O.C.

D. Chimney drains (a second 12 inch layer of drainage aggregate within the rear 1 foot of the reinforced geogrid zone or directly behind the reinforced geogrid zone) must be installed when groundwater is present or likely (to an elevation that is a minimum of 1 foot above predicted levels as given by the site geotechnical engineer), when stated in the RA Final Design or when required by the site geotechnical engineer.

E. All drainage zone aggregate shall be compacted to 95% of a standard proctor maximum dry density with a vibratory plate compactor (minimum of three passes).

3.08 Backfill Placement

A. The infill soil shall be placed as shown in the RA Final Design in the maximum compacted lift thickness of 10 inches and shall be compacted to a minimum of 95% of a standard proctor maximum dry density (ASTM D 698) at a moisture content within 2% of optimum (no exceptions). The backfill shall be placed and spread in such a manner as to eliminate wrinkles or movement of the geogrid and the SRW units. Compaction testing shall be done at 25%, 50%, 75% and 100% of the wall height or as specified by the site geotechnical engineer.

B. Only a vibratory plate or small–scale vibratory smooth drum compactor equipment shall be allowed within 3 feet of the front of the wall face. Compaction within the 3 feet behind the wall face shall be achieved by at least three (3) passes of the lightweight mechanical plate compactor or roller. Heavy equipment (such as track hoes, ride on rollers, pans, etc.) must be kept back a minimum of 3 feet from the rear of the wall.

C. At the end of each day's operation, the wall installer shall slope the last level of backfill away from the wall facing to direct water runoff away from the wall face.

D. At completion of wall construction if final grading, paving, landscaping and/or storm drainage installation adjacent to the wall is not placed immediately after wall completion, temporary grading shall be provided to ensure that water runoff is not allowed to collect or pond behind the wall until final construction adjacent to the wall is completed.

E. Filter fabric (Mirafi 140N or equivalent) is required when the infill soil is classified as poorly graded sand (SP) or well graded sand (SW) since these soils are non–cohesive and could potentially slough, clogging the gravel drainage layer. Filter fabric is optional between the 12 inch gravel drainage layer and the compacted infill soil if the backfill soils are clayey (CL or SC), gravelly (GC, GM, GP or GW) or silty (ML or SM).

3.09 SRW Caps

A. SRW caps shall be properly aligned and glued (for safety reasons) to the underlying SRW Units with a flexible high–strength concrete adhesive or sealant designed for "concrete to concrete" applications (not for plastic or wood). Rigid adhesive or mortar is not acceptable.

3.10 Water Applications

A. When walls are installed in water applications (such as storm water ponds, streams, bulkheads, areas adjacent to flood plains, etc.) all clean gravel must be used as infill up to 1 foot above the 100 year flood elevation, the high water level or the top of berm/spillway. This gravel must be free draining and have less than 10% fines (#57 or equivalent). Filter fabric (Mirafi 140N or equivalent) must go in front of the buried block, under the leveling pad, behind the reinforced geogrid zone (vertically up to the extent of the gravel infill) and on top of the gravel infill (horizontally). This is required to prevent the migration of fines into the gravel infill. Rip rap is required in front of the bottom three courses on walls installed in tidal waters. Rip rap is also required when indicated on the civil plans and where pipes with active water flow exit through the wall.

3.11 Rails, Fences & Other Structures

A. The scope of RA for this project does not include fence or railing designs. Typical details have been given to provide general guidelines for the installation of fences, guardrails and railings behind walls. RA cannot give specific details because the type, placement and height of fences and rails vary widely and because the requirements are different depending on the municipality and regulatory authority. RA can provide a project specific fence or rail detail and structural design for an additional fee if given exact information (material type and size and manufacturer's specifications and installation guidelines).

B. Open fences and railings not subject to wind loads (minimum of 50% open and maximum of 50% solid) may be placed directly behind the wall or in the wall (can be placed in the blocks only if they are a hollow system and if the cores and web alignment will accept the posts) as long as they are not subject to vehicular impact. Solid or semi–solid fences that are subject to wind loads must be kept back a minimum of 3 feet from the rear of the wall to prevent loading of the wall.

3.10 Water Applications

A. When walls are installed in water applications (such as storm water ponds, streams, bulkheads, areas adjacent to flood plains, etc.) all clean gravel must be used as infill up to 1 foot above the 100 year flood elevation, the high water level or the top of berm/spillway. This gravel must be free draining and have less than 10% fines (#57 or equivalent). Filter fabric (Mirafi 140N or equivalent) must go in front of the buried block, under the leveling pad, behind the reinforced geogrid zone (vertically up to the extent of the gravel infill) and on top of the gravel infill (horizontally). This is required to prevent the migration of fines into the gravel infill. Rip rap is required in front of the bottom three courses on walls installed in tidal waters. Rip rap is also required when indicated on the civil plans and where pipes with active water flow exit through the wall.

C. Guardrails subject to vehicular impact must be kept back a minimum of 3 feet from the rear of the wall to prevent loading of the wall. Guardrails may be placed closer than this 3 foot minimum only if a barrier (such as curbing, wheel stops, etc.) is in place to prevent vehicular impact (the overhang of vehicles must be considered when determining this).

D. Light post foundations, sign foundations and similar structures subject to wind loads must be kept back a minimum of 3 feet from the rear of the wall to prevent loading of the wall.

E. In cases where these 3 foot minimum distances cannot be met due to restraints on the site, additional analyses will need to be done to determine methods of stabilization. RA can provide these designs for an additional fee.

3.12 Storm Structures & Utilities

A. Reinforced Concrete Pipes (RCP) may pass through the leveling pad or wall structure without compromising the design. The SRW units may be cut to fit around the pipe and the voids filled with non–shrink grout or type "M" mortar. A concrete collar may be cast around the structure if desired. When a collar is cast, the top of the collar shall line up with an even block course to maintain proper alignment and neat workmanship.

B. The wall may not bear on plastic or steel pipes (such as ADS, CMP, HDPE, PVC, SLCPP, etc.) or utilities (such as electric, gas, phone lines, sewer or water lines, etc.). Grade beams or lintels must be used to bridge these non–load bearing structures. If a specific grade beam or lintel is not specified in the RA Final Design, RA shall be consulted to determine the size, strength and reinforcing of the grade beam or lintel. If these non–load bearing pipes or utilities are located at minimum of 42 inches below the wall's leveling pad then a grade beam or lintel is not necessary.

C. Concrete storm structures may be located behind a wall and be within the reinforced geogrid zone as dictated by the project's civil drawings. If the structure(s) cannot be moved out of the reinforced geogrid zone and the geogrid cannot be installed to its full design length the following shall apply. On small structures (such as collection boxes, concrete pipes less than 18 inches, inlets, manholes, etc.) it is acceptable to shorten the geogrid from the design length and meet the structure. The area between the wall and structure where the geogrid has been shortened must be filled with gravel (#57 or equivalent) and not soil. The gravel must be compacted to 95% of a standard proctor maximum dry density with a vibratory plate compactor. On large structures and in cases where pipes parallel the wall for long distances, RA shall be consulted to determine the impact on the wall before allowing this to be done.

D. The wall's integrity may be compromised if pipes or structures burst or develop leaks and allow water or fluids to saturate the reinforced geogrid zone. RA is not responsible for wall failure that results from pipes or structures that burst or leak and allow water or fluids to saturate the reinforced geogrid zone.

3.13 Construction Adjacent to Completed Wall

A. The owner or owner's representative is responsible for ensuring that construction adjacent to the wall by others does not disturb the wall or place temporary construction loads on the wall that exceed design loads, including loads such as water pressure, temporary grades, or equipment loading. Heavy paving or grading equipment shall be kept a minimum of three feet behind the back of the wall face. Equipment with wheel loads in excess of 150 PSF live load shall not be operated with 10 feet of the face of the retaining wall during construction adjacent to the wall. Care should be taken by the general contractor or owner to ensure water runoff is directed away from the wall structure until final grading and surface drainage collection systems are completed.

B. Care must be taken when installing appurtenances (such as generators, transformers, etc.) or utilities within the reinforced geogrid zone of the wall. The compaction integrity of the reinforced geogrid zone must be maintained, both below and beside (around) the appurtenance or utility. Neglecting to do so may cause hydrostatic pressure and wall failure.

3.14 Storm Water Management

A. The segmental retaining wall is not a storm water management structure. The wall can accommodate the rainfall above the reinforced geogrid zone but not the watershed (including the retained zone). Therefore it is absolutely essential that surface water be prevented from entering (and ultimately saturating) the reinforced geogrid zone. This is usually accomplished by the site engineer (owner's civil engineer) grading the surface behind the wall to direct surface water to swales that divert the water around the wall ends, to inlets or over the top of the wall through scuppers. If water is directed to the wall (such as applications with back slopes), the top 8 inches of compacted fill over the reinforced geogrid zone must have impermeable soil (such as CL, GC or SC). If clayey soils are not readily available an underlying geomembrane (geosynthetic liner) may also be used. This geomembrane shall be Mirafi G200N, Stratadrain or equivalent. It shall extend downward vertically a minimum of 3 feet behind the reinforced geogrid zone, be laid horizontally on top of the reinforced geogrid zone with a maximum slope of 10:1 and extend forward into the 12 inch gravel drainage layer.

B. The site geotechnical engineer is responsible for verifying the stability of slopes on the project. RA's scope includes only wall the design, not the evaluation of back slopes (above walls) or front slopes (at the base of walls). RA performs global stability analyses on walls that rest on major front slopes, however only the wall is analyzed, not the actual slopes above or below the wall. It is the responsibility of the site geotechnical engineer to determine if the site soils are able to sustain the proposed grades. If not, they shall determine and specify the additional reinforcement that is necessary to provide the proper slope stability and prevent erosion.

C. The general contractor, owner, site contractor and/or wall installer must provide for proper wall drainage to prevent the buildup of hydrostatic pressures over the service life of the structure. In the event additional water is introduced into the general wall area, either above or below grade, the RA Final Design will be invalid (the exception is "water applications" where clean gravel is used for infill and it is wrapped in filter fabric and the design intent is for the wall to be interacting with water).

3.15 Post Construction Responsibilities

A. Retaining walls are a substantial financial investment. Therefore it is in the owner's best interest that a wall maintenance budget be established within the overall property management budget to monitor and provide preventative maintenance. Retaining wall maintenance, at a minimum, should consist of: checking drainage, inspecting for settling and surveying to verify alignment and batter. This service should be by qualified personnel under the supervision of a licensed geotechnical/structural engineer. RA can provide this service for an additional fee.

B. RA SHOULD BE NOTIFIED AS SOON AS REASONABLY POSSIBLE IF THE RETAINING WALL EXHIBITS CONDITIONS CONTRARY TO THE RA FINAL DESIGN SO THAT RA MAY BE CONSULTED TO PROTECT THE OWNER'S INVESTMENT.

END OF SECTION Revised 03–10–04

The information contained herein is proprietary and is the sole property of RA. It is only intended for use on this project. Reuse of these drawings, sketches, and design computations in any manner is strictly prohibited without written approval from RA. Any other use is subject to penalty of law. (c)

APPROVED: DEPARTMENT OF RECREATION AND PARKS

DIRECTOR — DATE 2-15-05

APPROVED: DEPARTMENT OF PLANNING AND ZONING

Chief, Development Engineering Division — Date 2/2/05
Chief, Division of Land Development — Date 2/4/05
Director — Date 2/14/05

RYAN & ASSOCIATES
A Division of WKR Consulting, Inc.
RETAINING WALL DIVISION
PHONE 717-262-4242 FAX 717-262-4245
29 SOUTH MAIN STREET, SUITE A
CHAMBERSBURG, PA 17201

STATE OF MARYLAND — WILLIAM K. RYAN — No. 21586 — REGISTERED PROFESSIONAL ENGINEER — 12/11/04

Professional Engr. No. 21586

PREPARED BY
URS
4 NORTH PARK DRIVE
HUNT VALLEY, MARYLAND
TEL: (410) 785-7220

DES:				
DRN:				
CHK:				
DATE: 8/3/04	BY	NO.	REVISION	DATE

OWNER:
HOWARD COUNTY DEPARTMENT
RECREATION AND PARKS
7120 OAKLAND MILLS ROAD
COLUMBIA, MARYLAND 21046

DEVELOPER:
HOWARD COUNTY DEPARTMENT OF PUBLIC WORKS
9250 BENDIX ROAD
COLUMBIA, MARYLAND 21045

TAX MAP: 50
GRID: 1&2
ZONED: R-20 & R-SC
PARCEL NO.: 364
CENSUS TRACT: 6069.03
WATER CODE: C06
SEWER CODE: 7170900

HIGH RIDGE PARK

RETAINING WALL DETAILS

DEED REFERENCE: LIBER 8711 FOLIO 685
ELECTION DISTRICT NO. 6, HOWARD COUNTY, MARYLAND

SDP-05-19

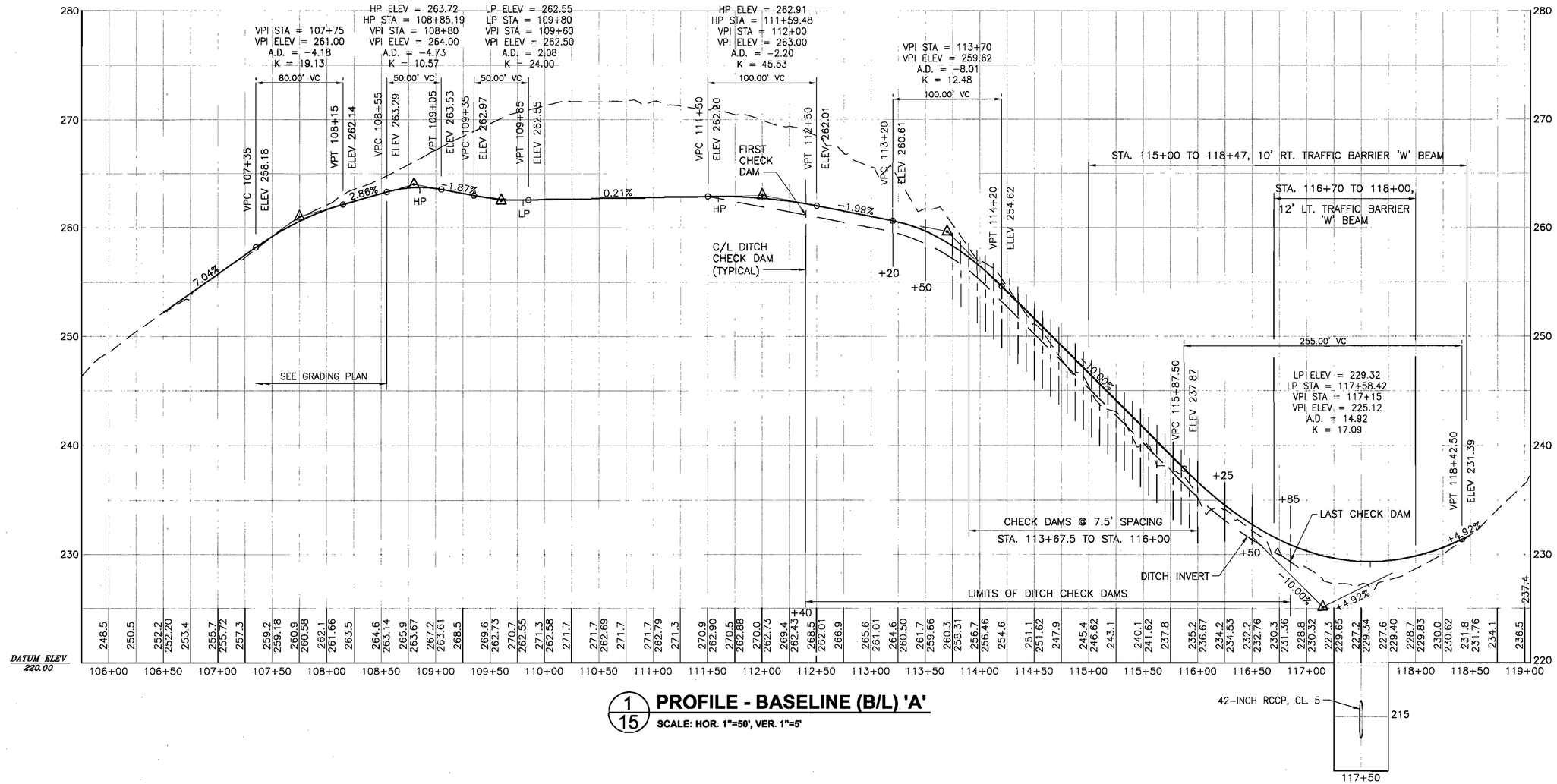

1/15 PROFILE - BASELINE (B/L) 'A'

SCALE: HOR. 1"=50', VER. 1"=5'

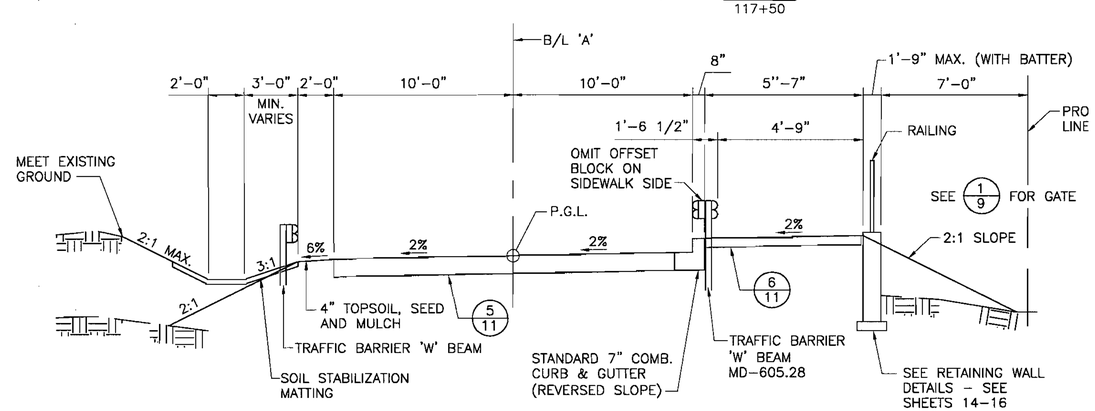

3/15 PARK ENTRANCE - TYPICAL SECTION

NTS

APPROVED: DEPARTMENT OF PLANNING AND ZONING

Chief, Development Engineering Division	Date 2/2/05
Chief, Division of Land Development	Date 2/4/05
Director	Date 2/14/05

PREPARED BY
URS
4 NORTH PARK DRIVE
HUNT VALLEY, MARYLAND
TEL: (410) 785-7220

STATE OF MARYLAND — DAVID THOMAS KOCON — No. 28152 — PROFESSIONAL ENGINEER — 11/06

DES:DTM/RKK				
DRN:RMC/HWC				
CHK:DTM/RKK				
DATE: 10/8/04	BY	NO.	REVISION	DATE

OWNER:
HOWARD COUNTY DEPARTMENT
RECREATION AND PARKS
7120 OAKLAND MILLS ROAD
COLUMBIA, MARYLAND 21046

DEVELOPER:
HOWARD COUNTY DEPARTMENT OF PUBLIC WORKS
9250 BENDIX ROAD
COLUMBIA, MARYLAND 21045

TAX MAP: 50
GRID: 1&2
ZONED: R-20 & R-SC
PARCEL NO.: 364
CENSUS TRACT: 6069.03
WATER CODE: C06
SEWER CODE: 7170900

HIGH RIDGE PARK

ROADWAY PROFILE AND TYPICAL SECTION

DEED REFERENCE: LIBER 8771, FOLIO 685
ELECTION DISTRICT NO. 6, HOWARD COUNTY, MARYLAND

SDP-05-19

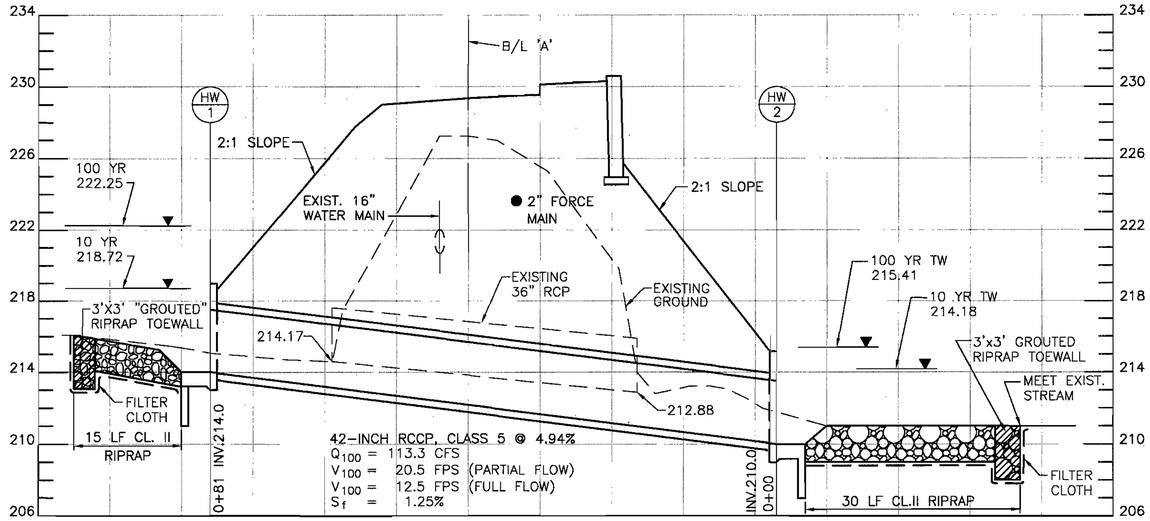

1/12 CROSS CULVERT PROFILE

SCALE: HOR. 1"=10', VER. 1"=4'

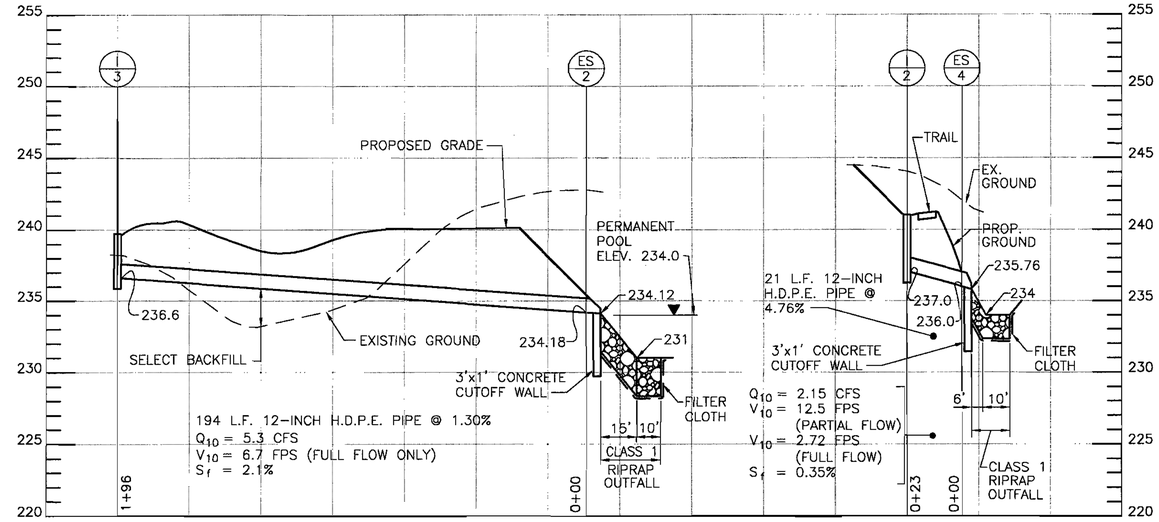

2/12 STORM DRAIN PROFILES

SCALE: HOR. 1"=30', VER. 1"=5'

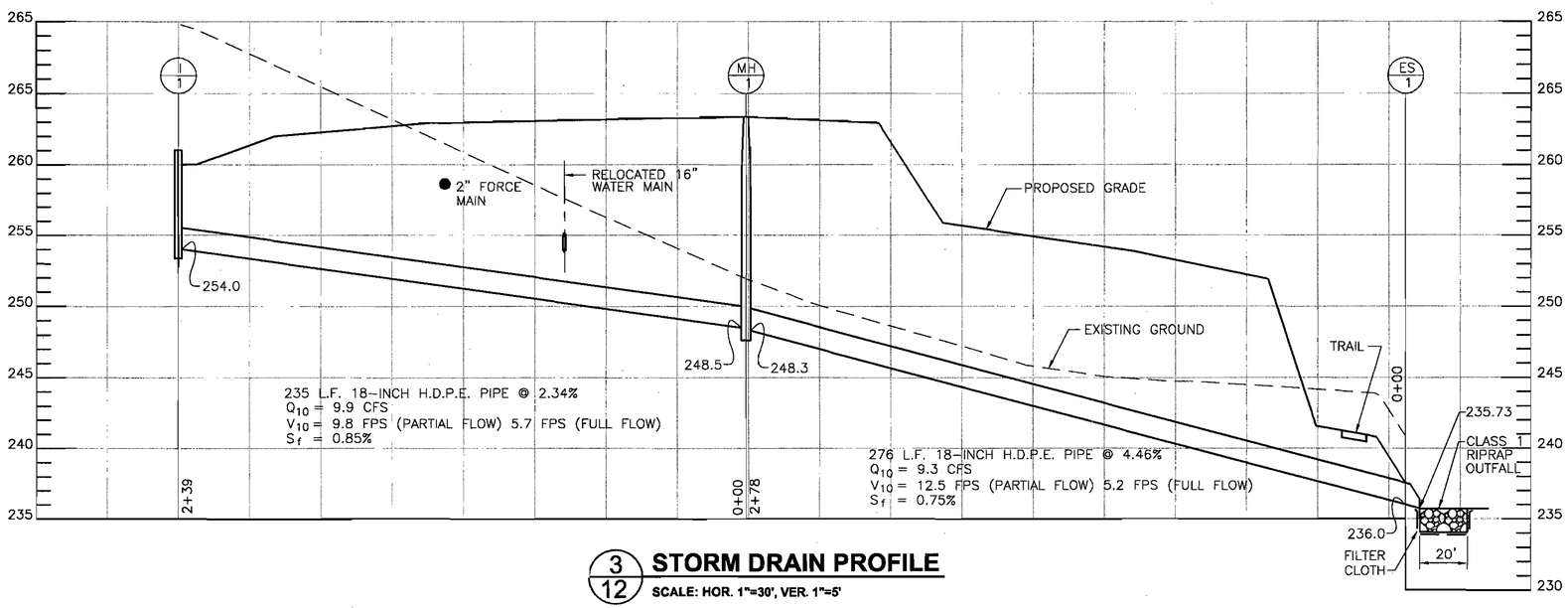

3/12 STORM DRAIN PROFILE

SCALE: HOR. 1"=30', VER. 1"=5'

DRAINAGE AREAS TO STORM DRAINS			
AREA	ACRES	% IMPERVIOUS AREA	RCN
1	26.38	19.6	75
5A1	1.99	86.3	
5A2	0.89	11.3	
5B	1.39	11.6	

PIPE SCHEDULE		
ITEM	QUANTITY	MATERIALS
4" PVC SCH 40 UNDERDRAIN & SD PIPE	540 LF	SCH 40 PVC
12" HDPE STORM DRAIN PIPE	215 LF	HDPE
18" HDPE STORM DRAIN PIPE	511 LF	HDPE
24" RCP C-361, B-25 SWM OUTFALL PIPE	56 LF	C-361, B-25
42" RCP, CLASS 5 CULVERT PIPE	48 LF	RCP

STRUCTURE SCHEDULE					
NO.	DESCRIPTION	LOCATION	INV. IN	INV. OUT	TOP ELEV.
I-1	TYPE "S" INLET (SD-4.22)	201+76, 56' LT.	–	256.50	TG 261.0
I-2	TYPE "S" INLET (SD-4.22)	302+98, 203' RT.	–	237.0	TG 241.0
I-3	TYPE "S" INLET (SD-4.22)	105+25, 46' RT.	–	236.6	TG 239.5
MH 1	STANDARD PRECAST MH (G-5.12)	302+34, 30' LT.	248.5	248.3	263.4
MH 2	STANDARD PRECAST MH (G-5.12)	117+62.5, 29' LT.	215.49	215.30	225.5
ES-1	18" CMP END SECTION (SD 5.61)		–	235.73	–
ES-2	12" CMP END SECTION (SD 5.61)		–	234.12	–
ES-3	24" CONCRETE END SECTION (SD 5.52)		–	227.9	–
ES-4	12" CMP END SECTION (SD 5.61)		–	235.76	–
HW-1	TYPE 'A' HEADWALL-CIRCULAR (SD5.11)	117+50.5, 36' LT.	214.00	–	– –
HW-2	TYPE 'A' HEADWALL-CIRCULAR (SD5.11)	117+46, 45' RT.	–	210.0	

NOTES:

1. ALL HIGH DENSITY POLYETHYLENE PIPE (HDPE) SHALL MEET AASHTO M-252 TYPES, M294 TYPE S AND ASTM RESPECTIVELY.
2. ALL PIPE PLACED IN FILL SHALL COMPLY WITH AASHTO T-180.

APPROVED: DEPARTMENT OF PLANNING AND ZONING

Chief, Development Engineering Division — Date 2/2/05

Chief, Division of Land Development — Date 2/4/05

Director — Date 2/10/05

PREPARED BY URS
4 NORTH PARK DRIVE
HUNT VALLEY, MARYLAND
TEL: (410) 785-7220

STATE OF MARYLAND — DAVID THOMAS HORSEY — No. 18263 — REGISTERED PROFESSIONAL ENGINEER — 1/4/06

DES: DTM/RKK				
DRN: HWC				
CHK: DTM/RKK				
DATE: 10/8/04	BY	NO.	REVISION	DATE

OWNER:
HOWARD COUNTY DEPARTMENT
RECREATION AND PARKS
7120 OAKLAND MILLS ROAD
COLUMBIA, MARYLAND 21046

DEVELOPER:
HOWARD COUNTY DEPARTMENT OF PUBLIC WORKS
9250 BENDIX ROAD
COLUMBIA, MARYLAND 21045

TAX MAP: 50
GRID: 1&2
ZONED: R-20 & R-SC
PARCEL NO.: 364
CENSUS TRACT: 6069.03
WATER CODE: C06
SEWER CODE: 7170900

HIGH RIDGE PARK

STORM DRAIN PROFILES, SCHEDULES AND DETAILS

DEED REFERENCE: LIBER 8771, FOLIO 685
ELECTION DISTRICT NO. 6, HOWARD COUNTY, MARYLAND

MATCH LINE SEE SHEET 24

MATCH LINE SEE SHEET 21

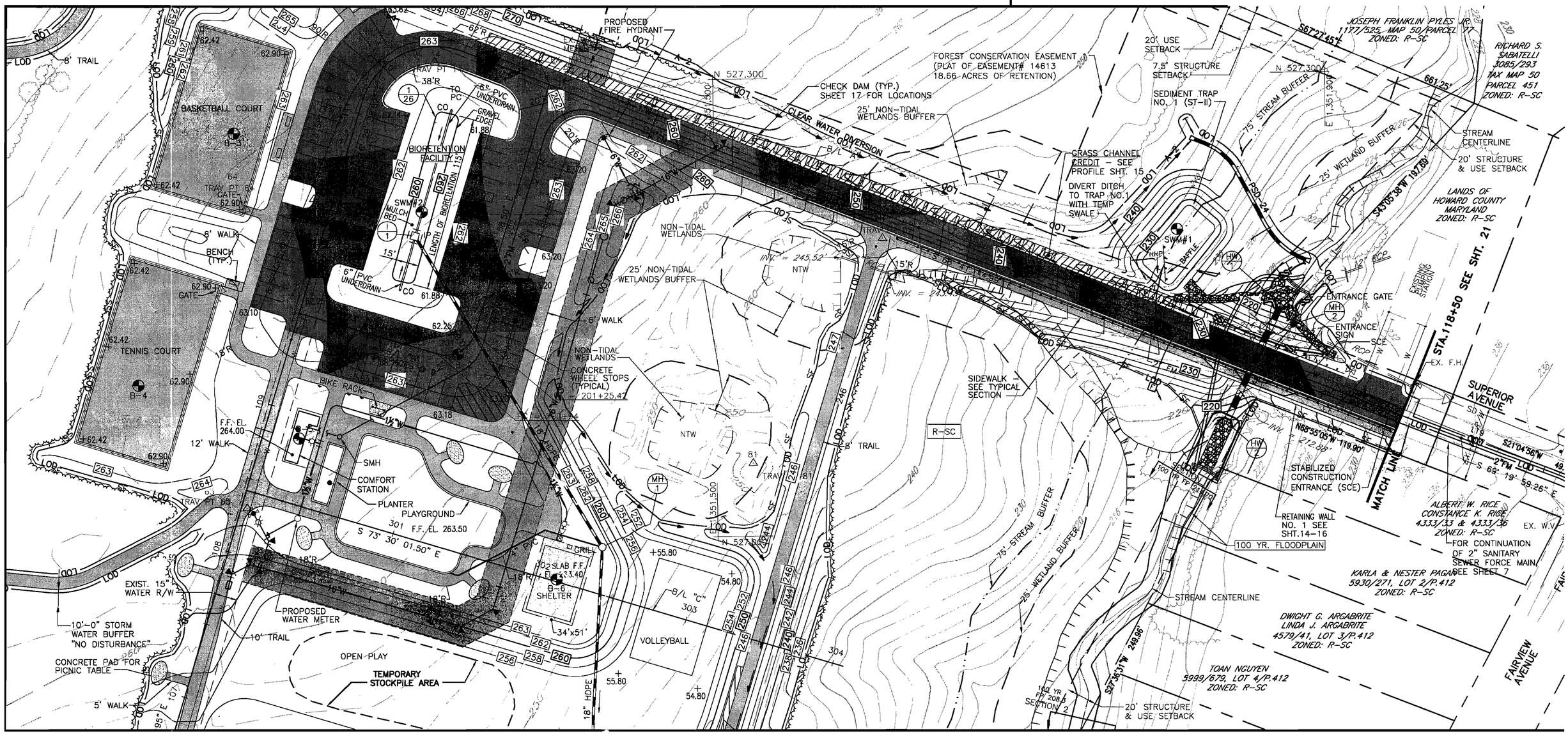

MATCH LINE SEE SHEET 20

SEDIMENT TRAP #1 (ST-II)

MAXIMUM DRAINAGE AREA = 0.66 ACRES
MAXIMUM WET STORAGE REQ'D. = 2,376 CF
MAXIMUM DRY STORAGE REQ'D = 2,376 CF
BOTTOM DIMENSIONS = 26'x48'
BOTTOM ELEVATION = 228.0 WEIR LENGTH = 4.0'
WET ELEVATION = 230.0
DRY STORAGE ELEVATION = 231.5
CLEANOUT ELEVATION = 229.0
Q_1(PRE)=1.77 CFS Q_1(DURING CONSTR.)=1.19 CFS
Q_1(POST CONSTR.)=1.12 CFS

APPROVED: DEPARTMENT OF PLANNING AND ZONING

Chief, Development Engineering Division — Date 2/2/05
Chief, Division of Land Development — Date 2/4/05
Director — Date 2/16/05

ENGINEER'S CERTIFICATE

" I certify that this plan pond construction and for sediment and erosion control represents a practical and workable plan based on my personal knowledge of the site conditions. This plan was prepared in accordance with the requirements of the Howard Soil Conservation District. I have notified the developer that he/she must engage a registered professional engineer to supervise pond construction and provide the Howard Soil Conservation District with an "as-built" plan of the pond within 30 days of completion.

Signature of Engineer (print name below signature) — Date 1/11/05
DAVID T. MORIGONI

DEVELOPER'S CERTIFICATE

" I/We certify that all development and construction will be done according to these plans, and that any responsible personnel involved in the construction of this project will have a Certificate of Attendance at a Department of the Environment Approved Training Program for the Control of Sediment and Erosion before beginning the project. I also authorize periodic on-site inspection by the Howard Soil Conservation District." I shall engage a registered professional engineer to supervise pond construction and provide the Howard Soil Conservation District with an "as-built" plan of the pond within 30 days of completion.

Signature of Developer (print name below signature) — Date 2-15-05
GARY J. ARTHUR

NOTE:

1. PROVIDE EROSION CONTROL MATTING FOR ALL DITCHES & SWALES AS SHOWN ON PLAN.

These plans have been reviewed for the Howard Soil Conservation District and meet the technical requirements for small pond construction, soil erosion and sediment control.

USDA - Natural Resources Conservation Service — Date 1/25/05

These plans for small pond construction, soil erosion and sediment control meet the requirements of the Howard Soil Conservation District.

Howard Soil Conservation District — Date 1/25/05

EROSION & SEDIMENT CONTROL LEGEND

220	EXISTING CONTOUR
220	PROPOSED CONTOUR
LOD	LIMIT OF DISTURBANCE
SF	SILT FENCE
SSF	SUPER SILT FENCE
A-2, B-2	EARTH DIKE
	EROSION CONTROL (SOIL STAB) MATTING
F	FILTER BAG
SP	SUMP PIT
	STABILIZED CONSTRUCTION ENTRANCE (SCE)
IP	INLET PROTECTION
OCF	ORANGE CONSTRUCTION FENCE (TREE PROTECTION FENCE)
	PROPOSED TREE LINE
PSD-24	PIPE SLOPE DRAIN
A-2	TEMPORARY SWALE
RRP	RIPRAP INFLOW PROTECTION

30 0 15 30 60
SCALE IN FEET

PREPARED BY
URS
4 NORTH PARK DRIVE
HUNT VALLEY, MARYLAND
TEL: (410) 785-7220

STATE OF MARYLAND — DAVID THOMAS MORGONI — No. 19453 — REGISTERED PROFESSIONAL ENGINEER

DES: DTM	
DRN: RMC	
CHK: DTM	
DATE: 10/8/04	

L.T.	NO.	REVISION	DATE

OWNER:
HOWARD COUNTY DEPARTMENT
RECREATION AND PARKS
7120 OAKLAND MILLS ROAD
COLUMBIA, MARYLAND 21046

DEVELOPER:
HOWARD COUNTY DEPARTMENT OF PUBLIC WORKS
9250 BENDIX ROAD
COLUMBIA, MARYLAND 21045

TAX MAP: 50	
GRID: 1&2	
ZONED: R-20 & R-SC	
PARCEL NO.: 364	
CENSUS TRACT: 6069.03	
WATER CODE: C06	
SEWER CODE: 7170900	

HIGH RIDGE PARK

GRADING & EROSION & SEDIMENT CONTROL PLAN

DEED REFERENCE: LIBER 8771, FOLIO 685
ELECTION DISTRICT NO. 6, HOWARD COUNTY, MARYLAND

SHEET 19 OF 39

SDP-05-19

MATCH LINE SEE SHEET 19

MATCH LINE SEE SHEET 22

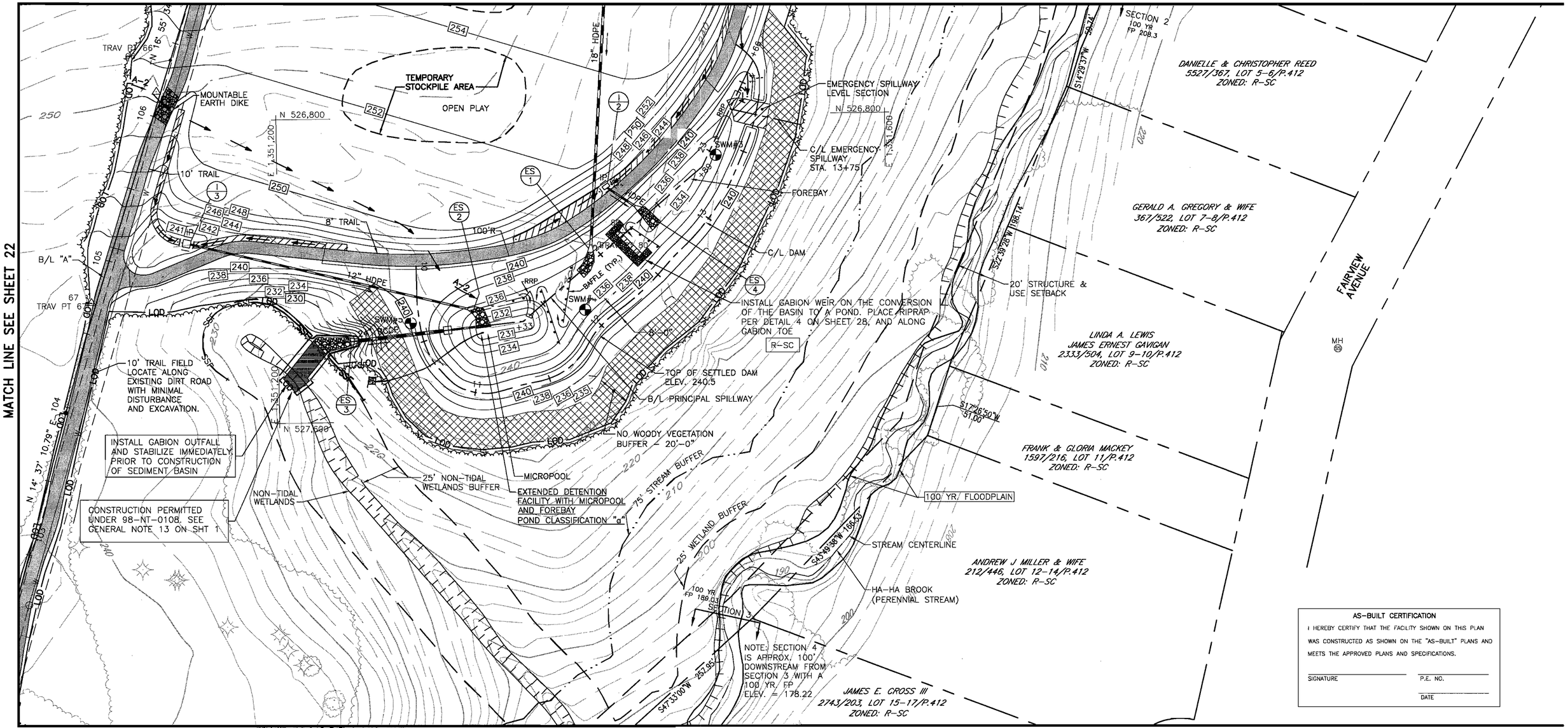

AS-BUILT CERTIFICATION

I HEREBY CERTIFY THAT THE FACILITY SHOWN ON THIS PLAN WAS CONSTRUCTED AS SHOWN ON THE "AS-BUILT" PLANS AND MEETS THE APPROVED PLANS AND SPECIFICATIONS.

SIGNATURE _____ P.E. NO. _____

DATE _____

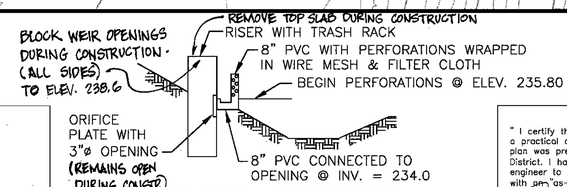

LOW FLOW - SEDIMENT BASIN
NTS

NOTES:

1. BEGIN PERFORATIONS ON LOW FLOW DEWATERING DEVICE AT ELEV. 235.80
2. SEDIMENT BASIN AND FINAL POND GRADING ARE IDENTICAL.

REFER TO SHEET 19 FOR LEGEND

SEDIMENT BASIN DATA		
MAXIMUM DRAINAGE AREA	VOLUME REQUIRED	VOLUME PROVIDED
5.04 AC	18,144 CF	21,869 CF
WET VOLUME/ELEVATION	DRY VOLUME/ELEVATION	
9072 CF/235.80	9072 CF/237.02	
CLEANOUT VOLUME/ELEVATION		
4536 CF/234.69		
DISTANCE - RISER CREST TO CLEANOUT ELEV.		
2.81 FT		

ENGINEER'S CERTIFICATE

" I certify that this plan pond construction and for sediment and erosion control represents a practical and workable plan based on my personal knowledge of the site conditions. This plan was prepared in accordance with the requirements of the Howard Soil Conservation District. I have notified the developer that he/she must engage a registered professional engineer to supervise pond construction and provide the Howard Soil Conservation District with an "as-built" plan of the pond within 30 days of completion.

Signature of Engineer (print name below signature) DAVID T. MORIGONI — Date 1/11/05

DEVELOPER'S CERTIFICATE

" I/We certify that all development and construction will be done according to these plans, and that any responsible personnel involved in the construction of this project will have a Certificate of Attendance at a Department of the Environment Approved Training Program for the Control of Sediment and Erosion before beginning the project. I also authorize periodic on-site inspection by the Howard Soil Conservation District." I shall engage a registered professional engineer to supervise pond construction and provide the Howard Soil Conservation District with an "as-built" plan of the pond within 30 days of completion.

Signature of Developer (print name below signature) GARY J. ARTHUR — Date 2/15/05

These plans have been reviewed for the Howard Soil Conservation District and meet the technical requirements for small pond construction, soil erosion and sediment control.

USDA - Natural Resources Conservation Service — Date: 1/25/05

These plans for small pond construction, soil erosion and sediment control meet the requirements of the Howard Soil Conservation District.

Howard SCD — Date 1/25/05

APPROVED: DEPARTMENT OF PLANNING AND ZONING

Chief, Development Engineering Division — Date 2/2/05

Chief, Division of Land Development — Date 2/4/05

Director — Date 2/10/05

SCALE IN FEET: 30 0 15 30 60

PREPARED BY
URS
4 NORTH PARK DRIVE
HUNT VALLEY, MARYLAND
TEL: (410) 785-7220

STATE OF MARYLAND — DAVID THOMAS RIGGS — No. 16156 — PROFESSIONAL ENGINEER — 1/11/05

DES: DTM/RKK				
DRN: RMC/HWC				
CHK: DTM/RKK				
DATE: 10/8/04	BY	NO.	REVISION	DATE

OWNER:
HOWARD COUNTY DEPARTMENT
RECREATION AND PARKS
7120 OAKLAND MILLS ROAD
COLUMBIA, MARYLAND 21046

DEVELOPER:
HOWARD COUNTY DEPARTMENT OF PUBLIC WORKS
9250 BENDIX ROAD
COLUMBIA, MARYLAND 21045

TAX MAP: 50
GRID: 1&2
ZONED: R-20 & R-SC
PARCEL NO.: 364
CENSUS TRACT: 6069.03
WATER CODE: C06
SEWER CODE: 7170900

HIGH RIDGE PARK

GRADING & EROSION & SEDIMENT CONTROL PLAN

DEED REFERENCE: LIBER 8771, FOLIO 685
ELECTION DISTRICT NO. 6, HOWARD COUNTY, MARYLAND

SHEET 20 OF 39

SDP-05-19

MATCH LINE SEE SHEET 24

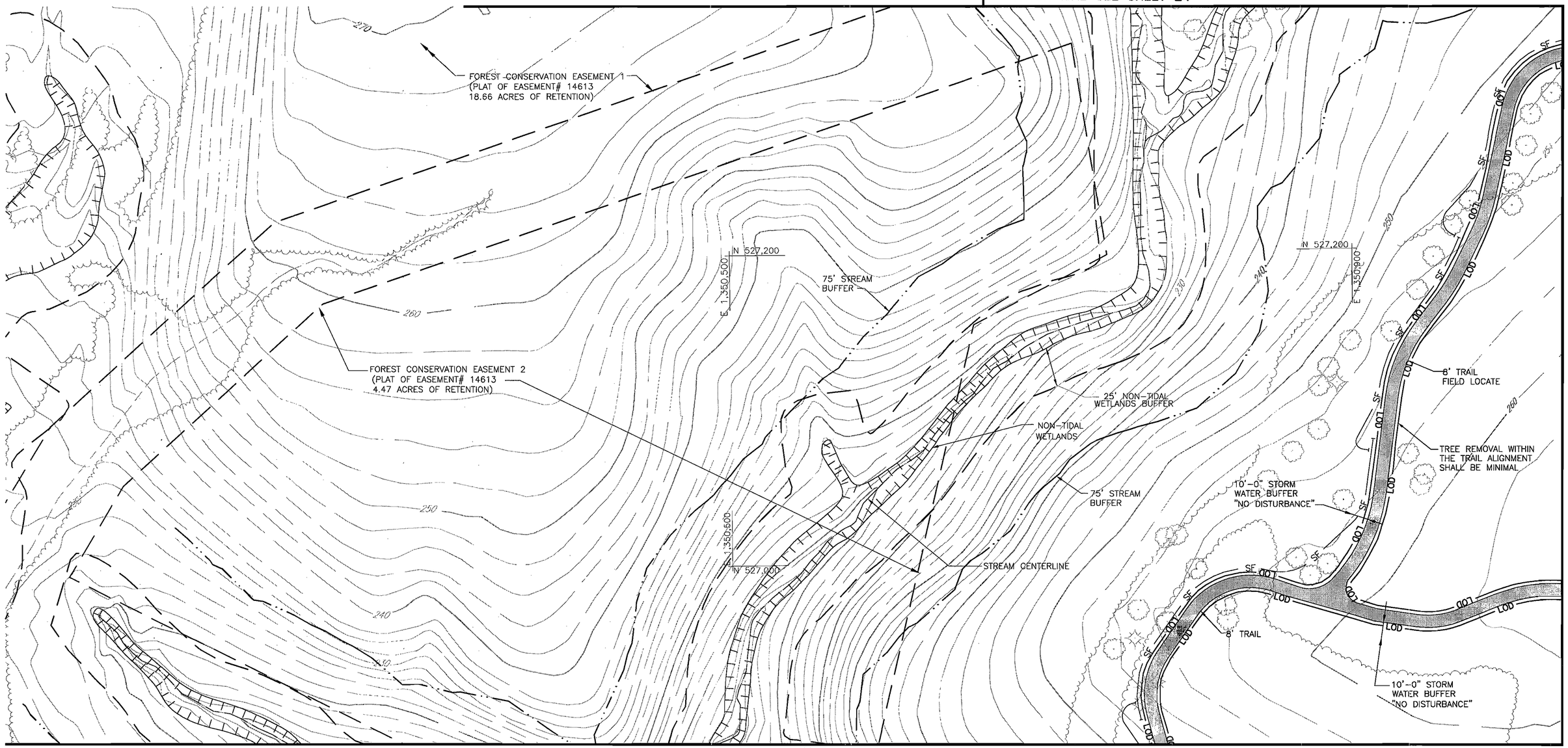

MATCH LINE SEE SHEET 17

MATCH LINE SEE SHEET 22

REFER TO SHEET 19 FOR LEGEND

ENGINEER'S CERTIFICATE

" I certify that this plan pond construction and for sediment and erosion control represents a practical and workable plan based on my personal knowledge of the site conditions. This plan was prepared in accordance with the requirements of the Howard Soil Conservation District. I have notified the developer that he/she must engage a registered professional engineer to supervise pond construction and provide the Howard Soil Conservation District with an "as-built" plan of the pond within 30 days of completion.

Signature of Engineer (print name below signature) — DAVID T. MORICONI — Date: 1/11/05

DEVELOPER'S CERTIFICATE

" I/We certify that all development and construction will be done according to these plans, and that any responsible personnel involved in the construction of this project will have a Certificate of Attendance at a Department of the Environment Approved Training Program for the Control of Sediment and Erosion before beginning the project. I also authorize periodic on-site inspection by the Howard Soil Conservation District." I shall engage a registered professional engineer to supervise pond construction and provide the Howard Soil Conservation District with an "as-built" plan of the pond within 30 days of completion.

Signature of Developer (print name below signature) — GARY J. ARTHUR — Date: 2-15-05

These plans have been reviewed for the Howard Soil Conservation District and meet the technical requirements for small pond construction, soil erosion and sediment control.

USDA – Natural Resources Conservation Service — Date: 1/25/05

These plans for small pond construction, soil erosion and sediment control meet the requirements of the Howard Soil Conservation District.

Howard SCD — Date: 1/25/05

APPROVED: DEPARTMENT OF PLANNING AND ZONING

Chief, Development Engineering Division — Date: 2/2/05

Chief, Division of Land Development — Date: 2/4/05

Director — Date: 2/14/05

SCALE IN FEET: 30 0 15 30 60

PREPARED BY
URS
4 NORTH PARK DRIVE
HUNT VALLEY, MARYLAND
TEL: (410) 785-7220

STATE OF MARYLAND — DAVID THOMAS MORICONI — No. 16196 — REGISTERED PROFESSIONAL ENGINEER — 1/11/05

DES:DTM/RKK				
DRN:RMC/HWC				
CHK:DTM/RKK				
DATE: 10/8/04	BY	NO.	REVISION	DATE

OWNER:
HOWARD COUNTY DEPARTMENT
RECREATION AND PARKS
7120 OAKLAND MILLS ROAD
COLUMBIA, MARYLAND 21046

DEVELOPER:
HOWARD COUNTY DEPARTMENT OF PUBLIC WORKS
9250 BENDIX ROAD
COLUMBIA, MARYLAND 21045

TAX MAP: 50
GRID: 1&2
ZONED: R-20 & R-SC
PARCEL NO.: 364
CENSUS TRACT: 6069.03
WATER CODE: C06
SEWER CODE: 7170900

HIGH RIDGE PARK

GRADING & EROSION & SEDIMENT CONTROL PLAN

DEED REFERENCE: LIBER 8771, FOLIO 685
ELECTION DISTRICT NO. 6, HOWARD COUNTY, MARYLAND

MATCH LINE SEE SHEET 21

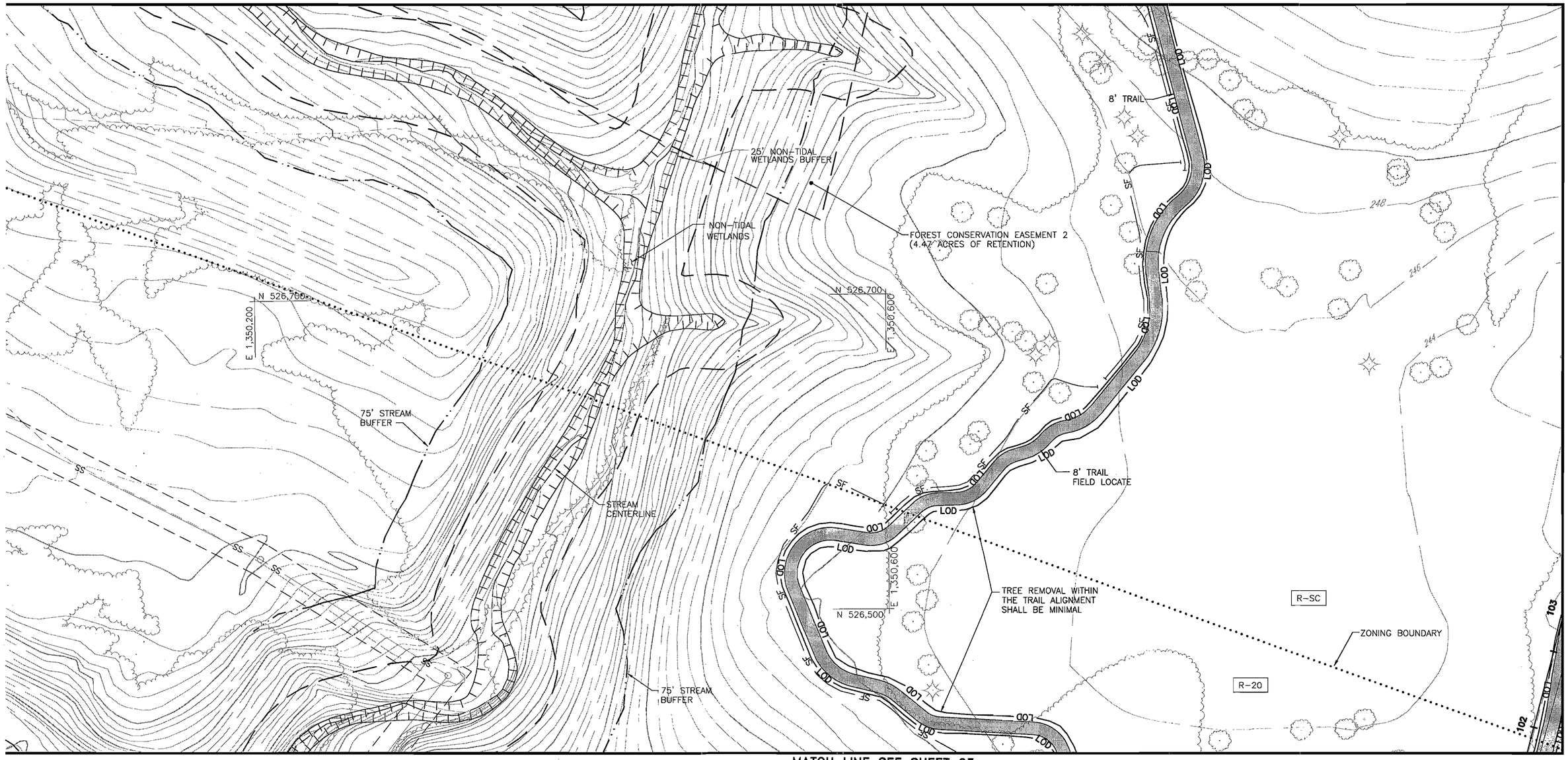

MATCH LINE SEE SHEET 20

MATCH LINE SEE SHEET 23

REFER TO SHEET 19 FOR LEGEND

ENGINEER'S CERTIFICATE

" I certify that this plan pond construction and for sediment and erosion control represents a practical and workable plan based on my personal knowledge of the site conditions. This plan was prepared in accordance with the requirements of the Howard Soil Conservation District. I have notified the developer that he/she must engage a registered professional engineer to supervise pond construction and provide the Howard Soil Conservation District with an "as-built" plan of the pond within 30 days of completion.

Signature of Engineer (print name below signature) DAVID T. MORICONI — Date 1/11/05

DEVELOPER'S CERTIFICATE

" I/We certify that all development and construction will be done according to these plans, and that any responsible personnel involved in the construction of this project will have a Certificate of Attendance at a Department of the Environment Approved Training Program for the Control of Sediment and Erosion before beginning the project. I also authorize periodic on-site inspection by the Howard Soil Conservation District." I shall engage a registered professional engineer to supervise pond construction and provide the Howard Soil Conservation District with an "as-built" plan of the pond within 30 days of completion.

Signature of Developer (print name below signature) GARY J. ARTHUR — Date 2-15-05

These plans have been reviewed for the Howard Soil Conservation District and meet the technical requirements for small pond construction, soil erosion and sediment control.

USDA – Natural Resources Conservation Service — Date: 1/25/05

These plans for small pond construction, soil erosion and sediment control meet the requirements of the Howard Soil Conservation District.

Howard SCD — Date 1/25/05

APPROVED: DEPARTMENT OF PLANNING AND ZONING

Chief, Development Engineering Division — Date 2/2/05

Chief, Division of Land Development — Date 2/4/05

Director — Date 2/14/05

30 0 15 30 60
SCALE IN FEET

PREPARED BY
URS
4 NORTH PARK DRIVE
HUNT VALLEY, MARYLAND
TEL: (410) 785-7220

STATE OF MARYLAND — DAVID THOMAS MORICONI — No. 16153 — REGISTERED PROFESSIONAL ENGINEER — 1/11/05

DES: DTM/RKK				
DRN: RMC/HWC				
CHK: DTM/RKK				
DATE: 10/8/04	BY	NO.	REVISION	DATE

OWNER:
HOWARD COUNTY DEPARTMENT
RECREATION AND PARKS
7120 OAKLAND MILLS ROAD
COLUMBIA, MARYLAND 21046

DEVELOPER:
HOWARD COUNTY DEPARTMENT OF PUBLIC WORKS
9250 BENDIX ROAD
COLUMBIA, MARYLAND 21045

TAX MAP: 50	
GRID: 1&2	
ZONED: R-20 & R-SC	
PARCEL NO.: 364	
CENSUS TRACT: 6069.03	
WATER CODE: C06	
SEWER CODE: 7170900	

HIGH RIDGE PARK

GRADING & EROSION & SEDIMENT CONTROL PLAN

DEED REFERENCE: LIBER 8771, FOLIO 685
ELECTION DISTRICT NO. 6, HOWARD COUNTY, MARYLAND

SHEET 22 OF 39

SDP-05-19

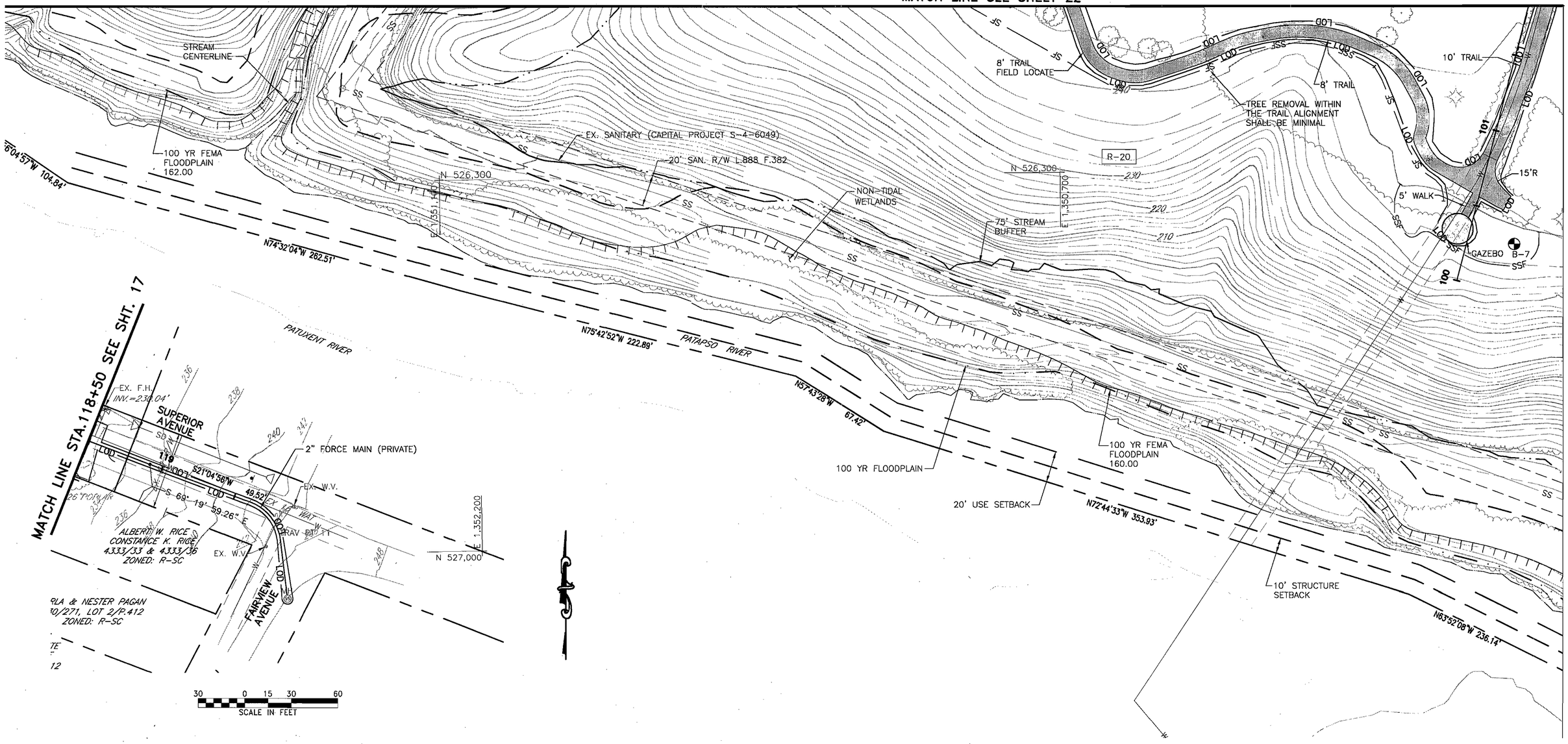

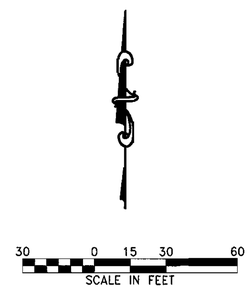

REFER TO SHEET 19 FOR LEGEND

ENGINEER'S CERTIFICATE

" I certify that this plan pond construction and for sediment and erosion control represents a practical and workable plan based on my personal knowledge of the site conditions. This plan was prepared in accordance with the requirements of the Howard Soil Conservation District. I have notified the developer that he/she must engage a registered professional engineer to supervise pond construction and provide the Howard Soil Conservation District with an "as-built" plan of the pond within 30 days of completion.

Signature of Engineer (print name below signature) DAVID T. MORICONI — Date 1/11/05

DEVELOPER'S CERTIFICATE

" I/We certify that all development and construction will be done according to these plans, and that any responsible personnel involved in the construction of this project will have a Certificate of Attendance at a Department of the Environment Approved Training Program for the Control of Sediment and Erosion before beginning the project. I also authorize periodic on-site inspection by the Howard Soil Conservation District." I shall engage a registered professional engineer to supervise pond construction and provide the Howard Soil Conservation District with an "as-built" plan of the pond within 30 days of completion.

Signature of Developer (print name below signature) GARY J. ARTHUR — Date 2-15-05

These plans have been reviewed for the Howard Soil Conservation District and meet the technical requirements for small pond construction, soil erosion and sediment control.

USDA – Natural Resources Conservation Service — Date: 1/25/05

These plans for small pond construction, soil erosion and sediment control meet the requirements of the Howard Soil Conservation District.

Howard SCD — Date 1/25/05

APPROVED: DEPARTMENT OF PLANNING AND ZONING

Chief, Development Engineering Division — Date 2/2/05

Chief, Division of Land Development — Date 2/4/05

Director — Date 2/10/05

PREPARED BY
URS
4 NORTH PARK DRIVE
HUNT VALLEY, MARYLAND
TEL: (410) 785-7220

STATE OF MARYLAND — DAVID THOMAS MORICONI — REGISTERED PROFESSIONAL ENGINEER — 1/11/05

DES: DTM/RKK				
DRN: RMC/HWC				
CHK: DTM/RKK				
DATE: 10/8/04	BY	NO.	REVISION	DATE

OWNER:
HOWARD COUNTY DEPARTMENT
RECREATION AND PARKS
7120 OAKLAND MILLS ROAD
COLUMBIA, MARYLAND 21046

DEVELOPER:
HOWARD COUNTY DEPARTMENT OF PUBLIC WORKS
9250 BENDIX ROAD
COLUMBIA, MARYLAND 21045

TAX MAP: 50	
GRID: 1&2	
ZONED: R-20 & R-SC	
PARCEL NO.: 364	
CENSUS TRACT: 6069.03	
WATER CODE: C06	
SEWER CODE: 7170900	

HIGH RIDGE PARK

GRADING & EROSION & SEDIMENT CONTROL PLAN

DEED REFERENCE: LIBER 8771, FOLIO 685
ELECTION DISTRICT NO. 6, HOWARD COUNTY, MARYLAND

SHEET 23 OF 39

SDP-05-19

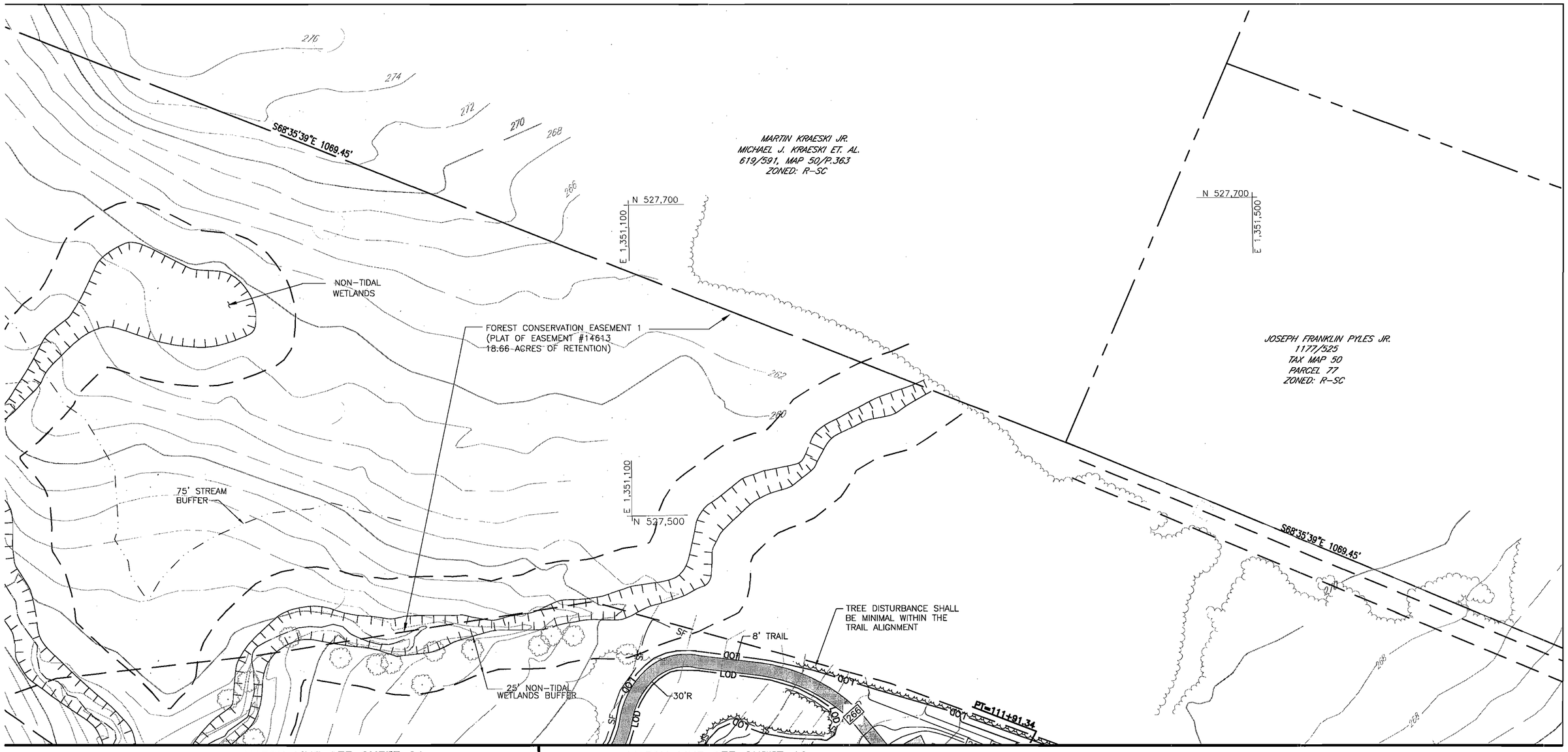

REFER TO SHEET 19 FOR LEGEND

ENGINEER'S CERTIFICATE

" I certify that this plan pond construction and for sediment and erosion control represents a practical and workable plan based on my personal knowledge of the site conditions. This plan was prepared in accordance with the requirements of the Howard Soil Conservation District. I have notified the developer that he/she must engage a registered professional engineer to supervise pond construction and provide the Howard Soil Conservation District with an "as-built" plan of the pond within 30 days of completion.

Signature of Engineer (print name below signature) DAVID T. MORICONI — Date 1/11/05

DEVELOPER'S CERTIFICATE

" I/We certify that all development and construction will be done according to these plans, and that any responsible personnel involved in the construction of this project will have a Certificate of Attendance at a Department of the Environment Approved Training Program for the Control of Sediment and Erosion before beginning the project. I also authorize periodic on-site inspection by the Howard Soil Conservation District." I shall engage a registered professional engineer to supervise pond construction and provide the Howard Soil Conservation District with an "as-built" plan of the pond within 30 days of completion.

Signature of Developer (print name below signature) GARY J. ARTHUR — Date 2-15-05

These plans have been reviewed for the Howard Soil Conservation District and meet the technical requirements for small pond construction, soil erosion and sediment control.

USDA – Natural Resources Conservation Service — Date: 1/25/05

These plans for small pond construction, soil erosion and sediment control meet the requirements of the Howard Soil Conservation District.

Howard SCD — Date 1/25/05

APPROVED: DEPARTMENT OF PLANNING AND ZONING

Chief, Development Engineering Division — Date 2/2/05

Chief, Division of Land Development — Date 2/4/05

Director — Date 2/16/05

30 0 25 50 60
SCALE IN FEET

PREPARED BY
URS
4 NORTH PARK DRIVE
HUNT VALLEY, MARYLAND
TEL: (410) 785-7220

STATE OF MARYLAND — DAVID THOMAS MORICONI — No. 16153 — REGISTERED PROFESSIONAL ENGINEER — 1/11/05

DES: DTM/RKK				
DRN: RMC/HWC				
CHK: DTM/RKK				
DATE: 10/8/04	BY	NO.	REVISION	DATE

OWNER:
HOWARD COUNTY DEPARTMENT
RECREATION AND PARKS
7120 OAKLAND MILLS ROAD
COLUMBIA, MARYLAND 21046

DEVELOPER:
HOWARD COUNTY DEPARTMENT OF PUBLIC WORKS
9250 BENDIX ROAD
COLUMBIA, MARYLAND 21045

TAX MAP: 50	
GRID: 1&2	
ZONED: R-20 & R-SC	
PARCEL NO.: 364	
CENSUS TRACT: 6069.03	
WATER CODE: C06	
SEWER CODE: 7170900	

HIGH RIDGE PARK

GRADING & EROSION & SEDIMENT CONTROL PLAN

DEED REFERENCE: LIBER 8771, FOLIO 685
ELECTION DISTRICT NO. 6, HOWARD COUNTY, MARYLAND

SHEET 24 OF 39

SDP-05-19

HOWARD SOIL CONSERVATION DISTRICT
STANDARD SEDIMENT CONTROL NOTES

1. A MINIMUM OF 48 HOURS NOTICE MUST BE GIVEN TO THE HOWARD COUNTY DEPARTMENT OF INSPECTIONS, LICENSES AND PERMITS, SEDIMENT CONTROL DIVISION, PRIOR TO THE START OF ANY CONSTRUCTION. (313-1855)
2. ALL VEGETATIVE AND STRUCTURAL PRACTICES ARE TO BE INSTALLED ACCORDING TO THE PROVISIONS OF THIS PLAN AND ARE TO BE IN CONFORMANCE WITH THE "1994 MARYLAND STANDARDS AND SPECIFICATIONS FOR SOIL EROSION AND SEDIMENT CONTROL", AND REVISIONS THERETO.
3. FOLLOWING INITIAL SOIL DISTURBANCE OR REDISTURBANCE, PERMANENT OR TEMPORARY STABILIZATION SHALL BE COMPLETED WITHIN: A) 7 CALENDAR DAYS FOR ALL PERIMETER SEDIMENT CONTROL STRUCTURES, DIKES, PERIMETER SLOPES AND ALL SLOPES STEEPER THAN 3:1, B) 14 DAYS AS TO ALL OTHER DISTURBED OR GRADED AREAS ON THE PROJECT SITE.
4. ALL SEDIMENTS TRAPS/BASINS SHOWN MUST BE FENCED AND WARNING SIGNS POSTED AROUND THEIR PERIMETER IN ACCORDANCE WITH VOL 1, CHAPTER 7 OF "HOWARD COUNTY DESIGN MANUAL", STORM DRINAGE.
5. ALL DISTURBED AREAS MUST BE STABILIZED WITHIN THE TIME PERIOD SPECIFIED ABOVE IN ACCORDANCE WITH THE "1994 MARYLAND STANDARDS AND SPECIFICATIONS FOR SOIL EROSION AND SEDIMENT CONTROL" FOR PERMANENT SEEDING, SOD, TEMPORARY SEEDING, AND MULCHING (SEC G.) TEMPORARY STABILIZATION WITH MULCH ALONE SHALL ONLY BE DONE WHEN RECOMMENDED SEEDING DATES DO NOT ALLOW FOR PROPER GERMINATION AND ESTABLISHMENT OF GRASSES.
6. ALL SEDIMENT CONTROL STURCTURES ARE TO REMAIN IN PLACE AND ARE TO BE MAINTAINED IN OPERATIVE CONDITION UNTIL PERMISSION FOR THEIR REMOVAL HAS BEEN OBTAINED FROM THE HOWARD COUNTY SEDIMENT CONTROL INSPECTOR.
7. SITE ANALYSIS:

TOTAL AREA OF SITE	=	88.4	ACRES ±
AREA DISTURBED	=	7.4	ACRES ±
AREA TO BE ROOFED OR PAVED	=	3.07	ACRES ±
AREA TO BE VEGATATIVELY STABILIZED	=	4.33	ACRES ±
TOTAL CUT	=	24,494	CUBIC YARDS
TOTAL FILL	=	23,040	CUBIC YARDS
OFFSITE WASTE/BORROW LOCATION	=	N/A	TO BE DETERMINED BUT MUST BE A SITE WITH AN ACTIVE GRADING PERMIT

8. ANY SEDIMENT CONTROL PRACTIVE WHICH IS DISTURBED BY GRADING ACTIVITY FOR PLACEMENT OF UTILITIES MUST BE REPAIRED ON THE SAME DAY OF DISTURBANCE.
9. ADDITIONAL SEDIMENT CONTROL MUST BE PROVIDED, IF DEEMED NECESSARY BY THE HOWARD COUNTY SEDIMENT CONTROL INSPECTOR.
10. ON ALL SITES WITH DISTURBED AREAS IN EXCESS OF 2 ACRES, APPROVAL OF THE INSPECTION AGENCY SHALL BE REQUESTED UPON COMPLETION OF INSTALLATION OF PERIMETER EROSION AND SEDIMENT CONTROLS, BUT BEFORE PROCEEDING WITH ANY OTHER EARTH DISTURBANCE OR GRADING. OTHER BUILDING OR GRADING INSPECTION APPROVALS MAY NOT BE AUTHORIZED UNTIL THIS INITIAL APPROVAL BY THE INSPECTION AGENCY IS MADE.
11. TRENCHES FOR THE CONSTRUCTION OF UTILITIES IS LIMITED TO THREE PIPE LENGTHS OR THAT WHICH SHALL BE BACK-FILLED AND STABILIZED BY THE END OF EACH WORK DAY, WHICHEVER IS SHORTER.

TEMPORARY SEEDING NOTES

APPLY TO GRADED OR CLEARED AREAS LIKELY TO BE REDISTURBED WHERE A SHORT-TERM VEGETATIVE COVER IS NEEDED.

SEEDBED PREPARATION: LOOSEN UPPER 3 INCHES OF SOIL BY RAKING, DISCING OR OTHER ACCEPTABLE MEANS BEFORE SEEDING (UNLESS PREVIOUSLY LOOSENED).

SOILS AMENDMENTS: APPLY 600 LBS. PER ACRE 10-10-10 FERTILIZER (14 LBS./1000 SQ.FT.)

SEEDING: FOR PERIODS MARCH 1 THROUGH OUT APRIL 30 AND FROM AUGUST 15 THROUGH NOVEMBER 15, SEED WITH 2 1/2 BU. PER ACRE OF ANNUAL RYE (3.2 LBS./1000 SQ.FT.). FOR THE PERIOD MAY 1 THROUGH AUGUST 14, SEED WITH 3 LBS. PER ACRE OF WEEPING LOVEGRASS (.07 LBS/1000 SQ.FT.). FOR THE PERIOD OF NOVEMBER 16 THROUGH FEBRUARY 28, PROTECT SITE BY APPLYING 2 TONS PER ACRE OF WELL ANCHORED STRAW MULCH AND SEED AS SOON AS POSSIBLE IN THE SPRING OR USE SOD.

SEEDING: FOR THE PERIODS MARCH 1 THROUGH APRIL 30, AND AUGUST 1 THROUGH OCTOBER 15, SEED WITH 60 LBS. PER ACRE (1.4 LBS./1000 SQ.FT.) OF KENTUCKY 31 TALL FESCUE. FOR THE PERIOD MAY 1 THROUGH JULY 31, SEED WITH 60 LBS. KENTUCKY 31 TALL FESCUE PER ACRE AND 2 LBS. PER ACRE (.05 LBS./1000 SQ.FT.) OF WEEPING LOVEGRASS. DURING THE PERIOD OF OCTOBER 16 THROUGH FEBRUARY 28, PROTECT SITE BY: OPTION (1) 2 TONS PER ACRE OF WELL ANCHORED STRAW MULCH AND SEED AS SOON AS POSSIBLE IN THE SPRING. OPTION (2) USE SOD. OPTION (3) SEED WITH 60 LBS/ACRE KENTUCKY 31 TALL FESCUE AND MULCH WITH 2 TONS/ACRE WELL ANCHORED STRAW.

MULCHING: APPLY 1 1/2 TO 2 TONS PER ACRE (70 TO 90 LBS./1000 SQ.FT.) OF UNROTTED SMALL GRAIN STRAW IMMEDIATELY AFTER SEEDING. ANCHOR MULCH IMMEDIATELY AFTER APPLICATION USING MULCH ANCHORING TOOL OR 218 GALLONS PER ACRE (5 GALS./1000 SQ.FT.) OF EMULSIFIED ASPHALT ON FLAT AREA. ON SLOPES 8 FEET OR HIGHER, USE 348 GALLONS PER ACRE (8 GALS./1000 SQ.FT.) FOR ANCHORING.

MAINTENANCE: INSPECT ALL SEEDED AREAS AND MAKE NEEDED REPAIRS, REPLACEMENTS AND RESEEDINGS.

PERMANENT SEEDING NOTES

APPLY TO GRADED OR CLEARED AREA NOT SUBJECT TO IMMEDIATE FURTHER DISTURBANCE WHERE A PERMANENT LONG-LIVED VEGETATIVE COVER IS NEEDED.

SEEDBED PREPARATION: LOOSEN UPPER 3 INCHES OF SOIL BY RAKING, DISCING OR OTHER ACCEPTABLE MEANS BEFORE SEEDING (IF NOT PREVIOUSLY LOOSENED).

SOIL AMENDMENTS: IN LIEU OF SOIL TEST RECOMMENDATIONS, USE ONE OF THE FOLLOWING SCHEDULES:

1. PREFERRED - APPLY 2 TONS PER ACRE DOLOMITIC LIMESTONE (92 LBS./1000 SQ.FT.) AND 600 LBS. PER ACRE 10-10-10 FERTILIZER (14 LBS./1000 SQ.FT.) BEFORE SEEDING. HARROW OR DISC INTO UPPER THREE INCHES OF SOIL. AT TIME OF SEEDING, APPLY 400 LBS. PER ACRE 30-0-0 UREAFORM FERTILIZER (9 LBS/1000 SQ.FT.)
2. ACCEPTABLE - APPLY 2 TONS PER ACRE DOLOMITIC LIMESTONE (92 LBS./1000 SQ. FT.) AND 1000 LBS. PER ACRE 10-10-10 FERTILIZER (23 LBS./1000 SQ.FT.) BEFORE SEEDING. HARROW OR DISC INTO UPPER THREE INCHES OF SOILS.

<u>SEEDING</u> - FOR THE PERIODS MARCH 1 - APRIL 30, AND AUGUST 1 - OCTOBER 15, SEED WITH 60 LBS/ACRE (1.4 LBS/1000 SQ. FT.) OF KENTUCKY 31 TALL FESCUE. FOR THE PERIOD MAY 1 - JULY 31, SEED WITH 60 LBS KENTUCKY 31 TALL FESCUE PER ACRE AND 2 LBS/ACRE (.05 LBS/1000 SQ. FT.) OF WEEPING LOVEGRASS. DURING THE PERIOD OF OCTOBER 16 - FEBRUARY 28, PROTECT SITE BY:

OPTION 1 - TWO TONS PER ACRE OF WELL ACHORED STRAW MULCH AND SEED AS SOON AS POSSIBLE IN THE SPRING.
OPTION 2 - USE SOD.
OPTION 3 - SEER: WITH 60 LBS/ACRE KENTUCKY 30 TALL FESCUE AND MULCH WITH 2 TONS/ACRE WELL ANCHORED STRAW.

<u>MULCHING</u> - APPLY 1-1/2 TO 2 TONS PER ACRE (70 TO 90 LBS/1000 SQ. FT.) OF UNROTTED SMALL GRAIN STRAW IMMEDIATELY AFTER SEEDING. ANCHOR MULCH IMMEDIATELY AFTER APPLICATION USING MULCH ANCHORING TOOL OR 218 GALLONS PER ACRE (5 GAL/1000 SQ. FT.) OF EMULSIFIED ASPHALT ON FLAT AREAS. ON SLOPE 8 FEET OR HIGHER, USE 348 GALLONS PER ACRE (8 GAL/1000 SQ. FT.) FOR ANCHORING.

<u>MAINTENANCE</u> - INSPECT ALL SEEDING AREAS AND MAKE NEEDED REPAIRS, REPLACEMENTS AND RESEEDINGS.

TOPSOIL CONSTRUCTION AND MATERIAL SPECIFICATIONS

I. TOPSOIL SALVAGED FROM THE EXISTING SITE MAY BE USED PROVIDED THAT IT MEETS THE STANDARDS AS SET FORTH IN THESE SPECIFICATIONS. TYPICALLY, THE DEPTH OF TOPSOIL TO BE SALVAGED FOR A GIVEN SOIL TYPE CAN BE FOUND IN THE REPRESENTATIVE SOIL PROFILE SECTION IN THE SOIL SURVEY PUBLISHED BY USDA-SCS IN COOPERATION WITH MARYLAND AGRICULTURAL EXPERIMENTAL STATION.

II. TOPSOIL SPECIFICATIONS - SOIL TO BE USED AS TOPSOIL MUST MEET THE FOLLOWING:

i. TOPSOIL SHALL BE A LOAM, SANDY LOAM, CLAY LOAM, SILT LOAM, SANDY CLAY LOAM, LOAMY SAND. OTHER SOILS MAY BE USED IF RECOMMENDED BY AN AGRONOMIST OR SOIL SCIENTIST AND APPROVED BY THE APPROPRIATE APPROVAL AUTHORITY.

TEXTURED SUBSOILS AND SHALL CONTAIN LESS THAN 5% BY VOLUME OF CINDERS, STONES, SLAG, COARSE FRAGMENTS, GRAVEL, STICKS, ROOTS, TRASH, OR OTHER MATERIALS LARGER THAN 1 1/2 " IN DIAMETER.

ii. TOPSOIL MUST BE FREE OF PLANTS OR PLANT PARTS SUCH AS BERMUDA GRASS, QUACKGRASS, JOHNSONGRASS, NUTSEDGE, POISON IVY, THISTLE, OR OTHERS AS SPECIFIED.

iii. WHERE THE SUBSOIL IS EITHER HIGHLY ACIDIC OR COMPOSED OF HEAVY CLAYS, GROUND LIMESTONE SHALL BE SPREAD AT THE RATE OF 4-8 TONS/ACRE (200-400 POUNDS PER 1,000 SQUARE FEET) PRIOR TO THE PLACEMENT OF TOPSOIL. LIME SHALL BE DISTRIBUTED UNIFORMLY OVER DESIGNATED AREAS AND WORKED INTO THE SOIL IN CONJUNCTION WITH TILLAGE OPERATIONS AS DESCRIBED IN THE FOLLOWING PROCEDURES.

III. FOR SITES HAVING DISTURBED AREAS UNDER 5 ACRES:

I. PLACE TOPSOIL (IF REQUIRED) AND APPLY SOIL AMENDMENTS AS SPECIFIED IN 20.0 VEGETATIVE STABILIZATION - SECTION I - VEGETATIVE STABILIZATION METHODS AND MATERIALS.

IV. TOPSOIL APPLICATION

I. WHEN TOPSOILING, MAINTAIN NEEDED EROSION AND SEDIMENT CONTROL PRACTICES SUCH AS DIVERSIONS, GRADE STABILIZATION STRUCTURES, EARTH DIKES, SLOPE SILT FENCE AND SEDIMENT TRAPS AND BASINS.

II. GRADES ON THE AREAS TO BE TOPSOILED, WHICH HAVE BEEN PREVIOUSLY ESTABLISHED, SHALL BE MAINTAINED, ALBEIT 4" - 8" HIGHER IN ELEVATION.

III. TOPSOIL SHALL BE UNIFORMLY DISTRIBUTED IN A 4" - 8" LAYER AND LIGHTLY COMPACTED TO A MINIMUM THICKNESS OF 4". SPREADING SHALL BE PERFORMED IN SUCH A MANNER THAT SODDING OR SEEDING CAN PROCEED WITH A MINIMUM OF ADDITIONAL SOIL PREPARATION AND TILLAGE. ANY IRREGULARITIES IN THE SURFACE RESULTING FROM TOPSOILING OR OTHER OPERATIONS SHALL BE CORRECTED IN ORDER TO PREVENT THE FORMATION OF DEPRESSIONS OR WATER POCKETS.

IV. TOPSOIL SHALL NOT BE PLACED WHILE THE TOPSOIL OR SUBSOIL IS IN A FROZEN OR MUDDY CONDITION, WHEN THE SUBSOIL IS EXCESSIVELY WET OR IN A CONDITION THAT MAY OTHERWISE BE DETRIMENTAL TO PROPER GRADING AND SEEDBED PREPARATION.

V. THESE TOPSOIL SPECIFICATIONS HAVE BEEN EDITED FROM THE 1994 EROSION AND SEDIMENT CONTROL STANDARDS TO FIT THIS PROJECT. IT IS STILL THE INTENTION TO FOLLOW THE REFERENCED 1994 EROSION AND SEDIMENT CONTROLS STANDARDS IN THEIR ENTIRETY.

SEQUENCE OF CONSTRUCTION

1. OBTAIN HOWARD COUNTY GRADING PERMIT. (1 DAY)
2. NOTIFY HOWARD COUNTY AT LEAST 48 HOURS PRIOR TO START OF CONSTRUCTION. PHONE (410) 313-1880 (1 DAY) AND MARK RAAB AT (410) 313-4730.
3. INSTALL STABILIZED CONSTRUCTION ENTRANCE WITH MOUNTABLE BERM AND INSTALL ORANGE CONSTRUCTION FENCE (TREE PROTECTION FENCE). SILT FENCE AND SUPER SILT FENCE WITH APPROVAL FROM MARK RAAB AND SEDIMENT CONTROL INSPECTOR. (10 DAYS)
   - -INSTALL PUMP AROUND PRACTICE AND DIVERSION PIPE, REMOVE EXIST. 36" PIPE AND REPLACE WITH 42" RCCP CL. 5, HEADWALLS, RIPRAP CHANNEL PROTECTION, ROADWAY EMBANKMENT BETWEEN 116+75 AND 117+95,RIPRAP DITCHES BETWEEN 116+75 TO 117+95 LT & MH-1 TO HW-1 PIPE. REMOVE PUMP AROUND PRACTICE AND DIVERSION PIPE WITH PERMISSION FROM INSPECTOR BEFORE PROCEEDING WITH REST OF THE SITES.
   - -BEGIN INSTALLATION OF MODULAR BLOCK RETAINING WALL SYSTEM.
   - -INSTALL EARTH DIKE NO. 1 (CLEAR WATER DIVERSION) & SLOPE DRAIN.
4. CONSTRUCT SEDIMENT BASIN AS SHOWN ON THE STORMWATER MANAGEMENT PLANS WITH THE FOLLOWING MODIFICATIONS: (3 WEEKS)
   - EXCAVATE POND TO THE BOTTOM ELEV. 231.0 INSTALL EMBANKMENT, RISER WITH TRASH RACKS, PRINCIPAL SPILLWAY
   - INSTALL 3" ORIFICE PLATE AT ELEV. 234.0
   - INSTALL LOW FLOW DEVICE

   INSTALL PERIMETER CONTROLS: SILT FENCE, SUPER SILT FENCE, PIPE SLOPE DRAIN, EARTH DIKES AND SED. TRAP AS SHOWN ON THE PLAN. INSTALL ORANGE CONSTRUCTION FENCE AT THE LIMITS OF DISTURBANCE NOT SERVED BY SILT OR SUPER SILT FENCE. THE SILT FENCE, SUPER SILT FENCE AND ORANGE SAFETY FENCE SHALL BE INSTALLED UNDER THE SUPERVISION OF HOWARD COUNTY DEPARTMENT OF RECREATION & PARKS.
5. WITH THE APPROVAL OF THE SEDIMENT CONTROL INSPECTOR, CLEAR AND GRUB SITE WITHIN THE LIMITS OF DISTURBANCE. (2 WEEKS)
6. STRIP AND STOCKPILE TOPSOIL. (1 WEEK)
7. WITH THE APPROVAL OF THE SEDIMENT CONTROL INSPECTOR, CONSTRUCT THE FOLLOWING: (15 WEEKS)
   - CONSTRUCT SANITARY SEWER, WATER LINE RELOCATION, AND STORM DRAIN AS INDICATED ON THE APPROVED PLANS.
   - GRADE SITE TO THE PROPOSED ELEVATIONS AS INDICATED ON THE SITE PLAN, INSTALL RETAINING WALLS.
   - GRADE AND PERMANENTLY STABILIZE PATHWAY IN INCREMENTS, NOT TO EXCEED 200' IN LENGTH.
   - CONSTRUCT CURB, GUTTER AND INSTALL PAVEMENT ON THE ROADS AND PARKING LOTS
   - CONSTRUCT BIORETENTION AREA. INSTALL SILT FENCE AROUND THE BIORETENTION AREAS TO PROTECT AGAINST CONTAMINATION.
8. FINE GRADE AND STABILIZE SITE. (1 WEEK)
9. AFTER SITE IS PERMANENTLY STABILIZED, OBTAIN PERMISSION FROM HOWARD COUNTY SEDIMENT CONTROL INSPECTOR AND REMOVE SEDIMENT CONTROL MEASURES. CONVERT SEDIMENT BASIN INTO PERMANENT STORMWATER MANAGEMENT POND AS FOLLOWS: (2 WEEKS)
   - EXCAVATE POND TO THE BOTTOM ELEVATION INDICATED ON THE STORMWATER MANAGEMENT PLAN.
   - REMOVE DRAW-DOWN DEVICE. INSTALL 4" UNDERDRAIN PVC PIPE.
10. REMOVE ALL SEDIMENT CONTROL MEASURES AFTER RECEIVING PERMISSION FROM THE SEDIMENT CONTROL INSPECTOR. (1 WEEK)

NOTE: THIS SEQUENCE MAY BE MODIFIED AFTER RECEIVING PERMISSION FROM THE SEDIMENT CONTROL INSPECTOR AS LONG AS THE INTENTION AND INTEGRITY OF THIS PLAN IS NOT COMPROMISED.

PATUXENT RIVER AND TRIBUTARIES ARE USE 1 WATERWAYS. INSTREAM WORK MAY NOT BE CONDUCTED FROM MARCH 1 THROUGH JUNE 15, INCLUSIVE OF ANY YEAR.

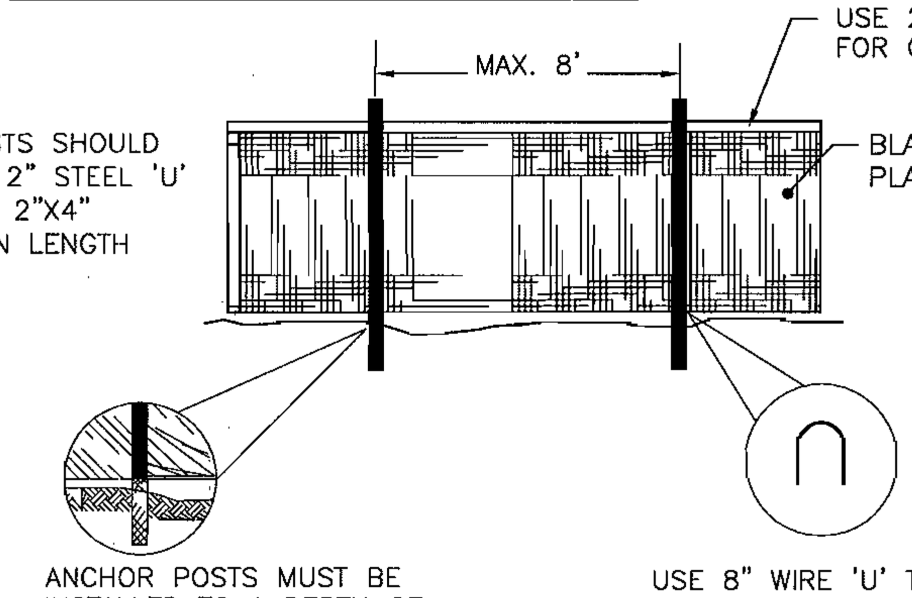

1. TREE PROTECTION DEVICE ONLY.
2. TREE PROTECTION AREA WILL BE SET AS PART OF THE REVIEW PROCESS.
3. BOUNDARIES OF TREE PROTECTION AREA SHOULD BE STAKED AND FLAGGED PRIOR TO INSTALLING DEVICE.
4. ROOT DAMAGE SHOULD BE AVOIDED.
5. PROTECTIVE SIGNAGE MAY ALSO BE USED, AND SHOULD BE ATTACHED DIRECTLY TO POSTS OR CROSS BRACING
6. DEVICE SHOULD BE MAINTAINED THROUGHOUT CONSTRUCTION.

TREE PROTECTION FENCE
SCALE: NONE

DETAIL 33 - SUPER SILT FENCE

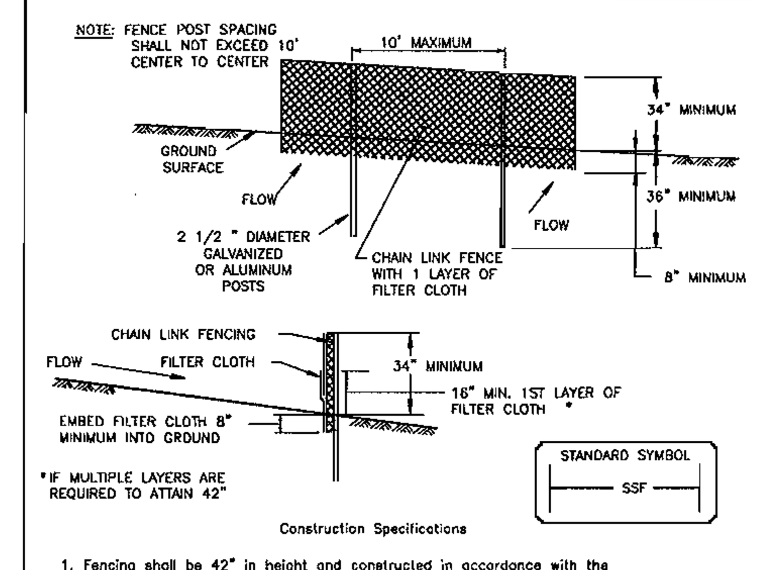

Construction Specifications

1. Fencing shall be 42" in height and constructed in accordance with the latest Maryland State Highway Details for Chain Link Fencing. The specification for a 6' fence shall be used, substituting 42" fabric and 6' length posts.
2. Chain link fence shall be fastened securely to the fence posts with wire ties. The lower tension wire, brace and truss rods, drive anchors and post caps are not required except on the ends of the fence.
3. Filter cloth shall be fastened securely to the chain link fence with ties spaced every 24" at the top and mid section.
4. Filter cloth shall be embedded a minimum of 8" into the ground.
5. When two sections of filter cloth adjoin each other, they shall be overlapped by 6" and folded.
6. Maintenance shall be performed as needed and silt buildups removed when "bulges" develop in the silt fence, or when silt reaches 50% of fence height
7. Filter cloth shall be fastened securely to each fence post with wire ties or staples at top and mid section and shall meet the following requirements for Geotextile Class F:

Tensile Strength	50 lbs/in (min.)	Test: MSMT 509
Tensile Modulus	20 lbs/in (min.)	Test: MSMT 509
Flow Rate	0.3 gal/ft /minute (max.)	Test: MSMT 322
Filtering Efficiency	75% (min.)	Test: MSMT 322

STABILIZED CONSTRUCTION ENTRANCE

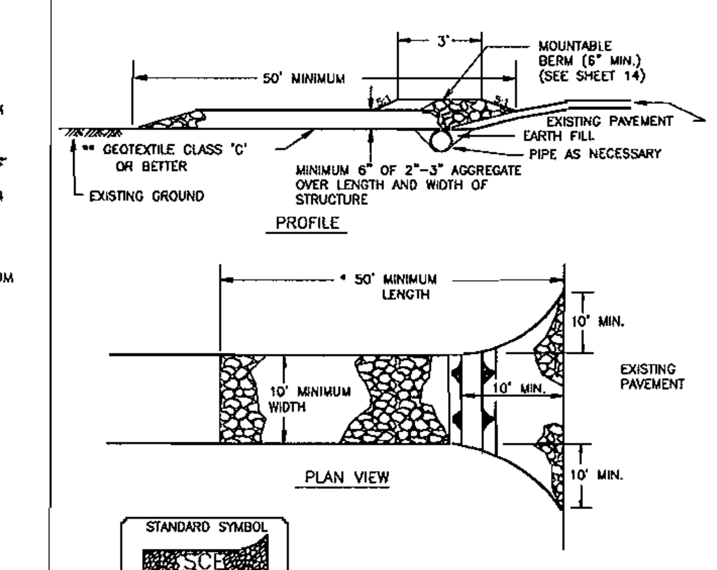

Construction Specification

1. Length - minimum of 50' (*30' for single residence lot).
2. Width - 10' minimum, should be flared at the existing road to provide a turning radius.
3. Geotextile fabric (filter cloth) shall be placed over the existing ground prior to placing stone. **The plan approval authority may not require single family residences to use geotextile.
4. Stone - crushed aggregate (2" to 3") or reclaimed or recycled concrete equivalent shall be placed at least 6" deep over the length and width of the entrance.
5. Surface Water - all surface water flowing to or diverted toward construction entrances shall be piped through the entrance, maintaining positive drainage. Pipe installed through the stabilized construction entrance shall be protected with a mountable berm with 5:1 slopes and a minimum of 6" of stone over the pipe. Pipe has to be sized according to the drainage. When the SCE is located at a high spot and has no drainage to convey a pipe will not be necessary. Pipe should be sized according to the amount of runoff to be conveyed. A 6" minimum will be required.
6. Location - A stabilized construction entrance shall be located at every point where construction traffic enters or leaves a construction site. Vehicles leaving the site must travel over the entire length of the stabilized construction entrance.

DETAIL 1 - EARTH DIKE

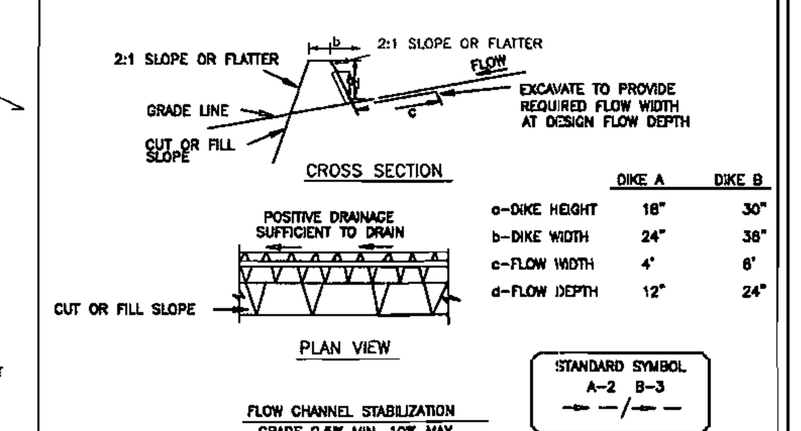

	DIKE A	DIKE B
a-DIKE HEIGHT	18"	30"
b-DIKE WIDTH	24"	36"
c-FLOW WIDTH	4'	6'
d-FLOW DEPTH	12"	24"

FLOW CHANNEL STABILIZATION
GRADE 0.5% MIN. 10% MAX.

1. Seed and cover with straw mulch.
2. Seed and cover with Erosion Control Matting or line with sod.
3. 4" - 7" stone or recycled concrete equivalent pressed into the soil 7" minimum

Construction Specifications

1. All temporary earth dikes shall have uninterrupted positive grade to an outlet. Spot elevations may be necessary for grades less than 1%.
2. Runoff diverted from a disturbed area shall be conveyed to a sediment trapping device.
3. Runoff diverted from an undisturbed area shall outlet directly into an undisturbed, stabilized area at a non-erosive velocity.
4. All trees, brush, stumps, obstructions, and other objectional material shall be removed and disposed of so as not to interfere with the proper functioning of the dike.
5. The dike shall be excavated or shaped to line, grade and cross section as required to meet the criteria specified herein and be free of bank projections or other irregularities which will impede normal flow.
6. Fill shall be compacted by earth moving equipment.
7. All earth removed and not needed for construction shall be placed so that it will not interfere with the functioning of the dike.
8. Inspection and maintenance must be provided periodically and after each rain event.

DETAIL 20B - SUMP PIT

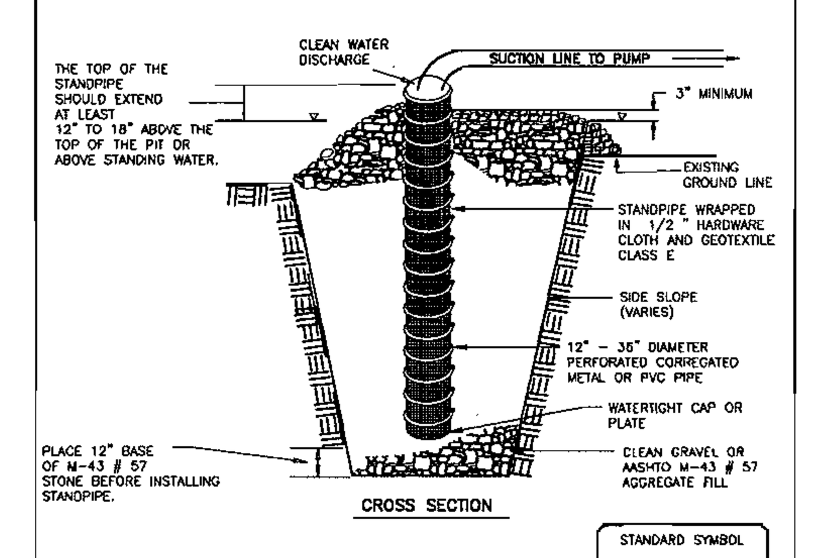

Construction Specifications

1. Pit dimensions are variable, with the minimum diameter being 2 times the standpipe diameter.
2. The standpipe should be constructed by perforating a 12" to 24" diameter corrugated or PVC pipe. Then wrapping with 1/2 " hardware cloth and Geotextile Class E. The perforations shall be 1/2 " x 6" slits or 1" diameter holes.
3. A base of filter material consisting of clean gravel or #57 stone should be placed in the pit to a depth of 12". After installing the standpipe, the pit surrounding the standpipe should then be backfilled with the same filter material.
4. The standpipe should extend 12" to 18" above the lip of the pit or the riser crest elevation (basin dewatering only) and the filter material should extend 3" minimum above the anticipated standing water elevation.

U.S. DEPARTMENT OF AGRICULTURE SOIL CONSERVATION SERVICE	PAGE D - 13 - 2	MARYLAND DEPARTMENT OF ENVIRONMENT WATER MANAGEMENT ADMINISTRATION

DETAIL 2 - TEMPORARY SWALE

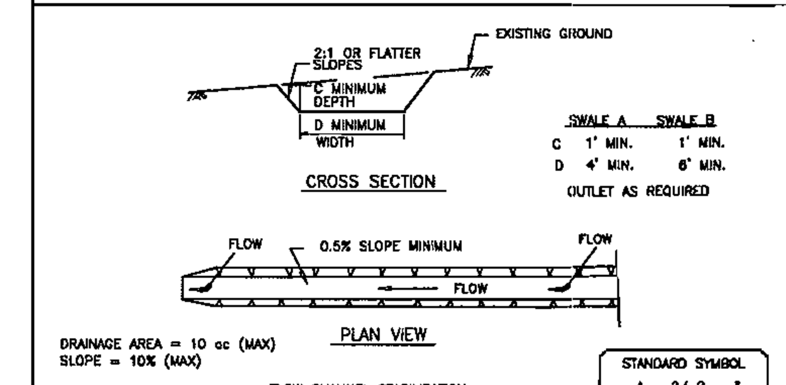

	SWALE A	SWALE B
C	1' MIN.	1' MIN.
D	4' MIN.	6' MIN.

OUTLET AS REQUIRED

DRAINAGE AREA = 10 ac (MAX)
SLOPE = 10% (MAX)

FLOW CHANNEL STABILIZATION
GRADE 0.5% MIN. 10% MAX.

1. Seed and cover with straw mulch.
2. Seed and cover with Erosion Control Matting or line with sod.
3. 4"-7" stone or recycled concrete equivalent pressed into soil in a minimum 7" layer.

Construction Specifications

1. All temporary swales shall have uninterrupted positive grade to an outlet. Spot elevations may be necessary for grades less than 1%.
2. Runoff diverted from a disturbed area shall be conveyed to a sediment trapping device.
3. Runoff diverted from an undisturbed area shall outlet directly into an undisturbed stabilized area at a non-erosive velocity.
4. All trees, brush, stumps, obstructions, and other objectional material shall be removed and disposed of so as not to interfere with the proper functioning of the swale.
5. The swale shall be excavated or shaped to line, grade and cross section as required to meet the criteria specified herein and be free of bank projections or other irregularities which will impede normal flow.
6. Fill, if necessary, shall be compacted by earth moving equipment.
7. All earth removed and not needed for construction shall be placed so that it will not interfere with the functioning of the swale.
8. Inspection and maintenance must be provided periodically and after each rain event.

U.S. DEPARTMENT OF AGRICULTURE SOIL CONSERVATION SERVICE	PAGE A - 2 - 4	MARYLAND DEPARTMENT OF ENVIRONMENT WATER MANAGEMENT ADMINISTRATION

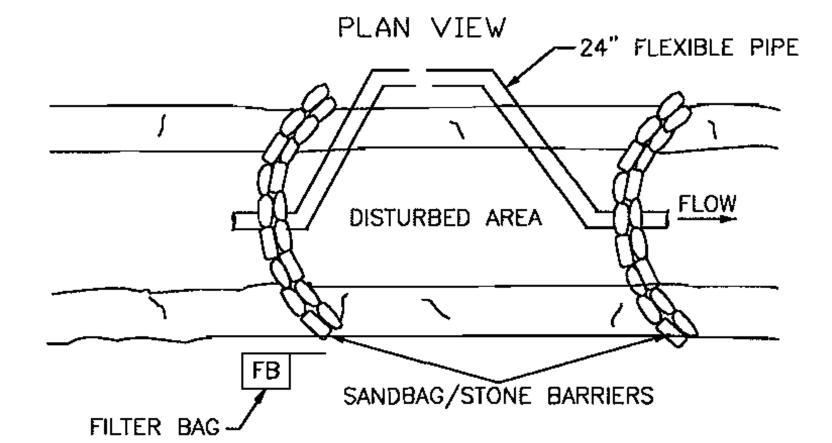

LONGITUDINAL SECTION VIEW

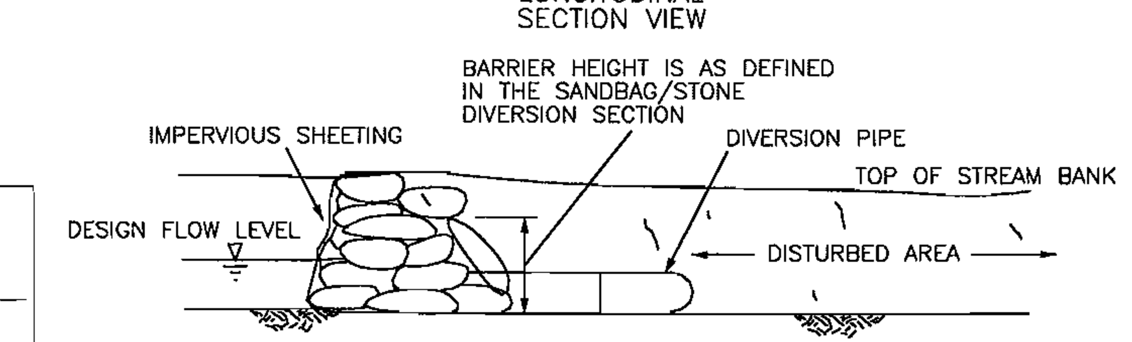

DETAIL 1.4 - DIVERSION PIPE

INSTALL AT THE END OF WORK DAY THROUGH EXISTING PIPE, WITHIN DISTURBED AREA, OR THROUGH NEW PIPE TO MAINTAIN FLOW DURING NON-WORK HOURS.

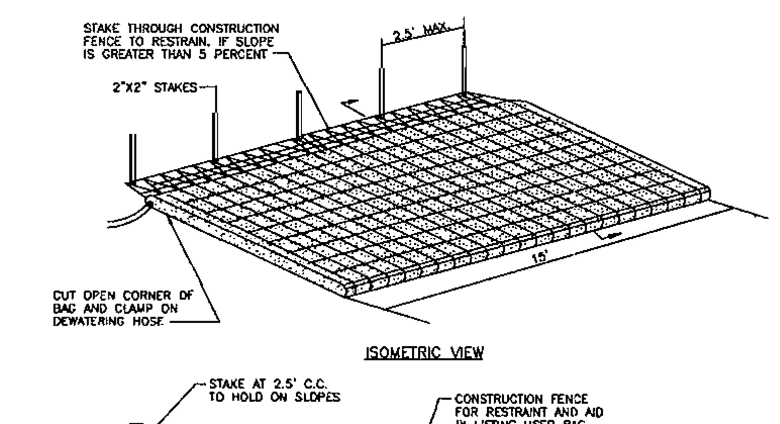

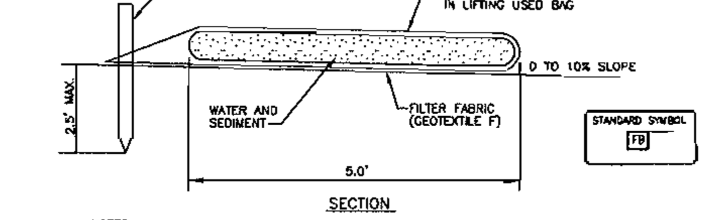

NOTES:

1. FILTER BAG SHALL BE PLACED ON A SLOPING OR LEVEL, WELL GRADED VEGETATED SITE SUCH THAT WATER WILL FLOW AWAY FROM DEVICE AND ANY WORK AREAS.
2. WIDTH AND LENGTH SHALL BE AS SHOWN.
3. THE FILTER BAG MUST BE STAKED IN PLACE AND SECURED TO THE PUMP DISCHARGE LINE.
4. FILTER BAG SHALL NOT BE USED FOR DISCHARGE FLOWS GREATER THAN 300 GPM.
5. DEVICE SHALL BE REMOVED AND DISPOSED OF AFTER BAG IS FILLED WITH SEDIMENT. SEDIMENT FROM BAG SHALL BE SPREAD IN AN UPLAND AREA.
6. FILTER FABRIC SHALL MEET THE FOLLOWING REQUIREMENTS FOR GEOTEXTILE CLASS F:

Tensile Strength	50 lb / in (min)	Test : MSMT 509
Tensile Modulus	20 lb / in (min)	Test : MSMT 509
Flow Rate	0.3 gal ft / minute (max)	Test : MSMT 322
Filtering Efficiency	75% (min)	Test : MSMT 322

FILTER BAG
(TEMPORARY EROSION CONTROL MEASURE) FB
NOT TO SCALE

ENGINEER'S CERTIFICATE

" I certify that this plan pond construction and for sediment and erosion control represents a practical and workable plan based on my personal knowledge of the site conditions. This plan was prepared in accordance with the requirements of the Howard Soil Conservation District. I have notified the developer that he/she must engage a registered professional engineer to supervise pond construction and provide the Howard Soil Conservation District with an "as-built" plan of the pond within 30 days of completion.

Signature of Engineer (print name below signature) DAVID T. MORICONI — Date 1/11/05

DEVELOPER'S CERTIFICATE

" I/We certify that all development and construction will be done according to these plans, and that any responsible personnel involved in the construction of this project will have a Certificate of Attendance at a Department of the Environment Approved Training Program for the Control of Sediment and Erosion before beginning the project. I also authorize periodic on-site inspection by the Howard Soil Conservation District." I shall engage a registered professional engineer to supervise pond construction and provide the Howard Soil Conservation District with an "as-built" plan of the pond within 30 days of completion.

Signature of Developer (print name below signature) GARY J. ARTHUR — Date 2-15-05

These plans have been reviewed for the Howard Soil Conservation District and meet the technical requirements for small pond construction, soil erosion and sediment control.

USDA - Natural Resources Conservation Service — Date: 1/25/05

These plans for small pond construction, soil erosion and sediment control meet the requirements of the Howard Soil Conservation District.

Howard SCD — Date 1/25/05

APPROVED: DEPARTMENT OF PLANNING AND ZONING

Chief, Development Engineering Division — Date 2/2/05
Chief, Division of Land Development — Date 2/4/05
Director — Date 2/16/05

PREPARED BY
URS
4 NORTH PARK DRIVE
HUNT VALLEY, MARYLAND
TEL: (410) 785-7220

STATE OF MARYLAND — DAVID THOMAS MORICONI — PROFESSIONAL ENGINEER — 1/11/05

DES: DTM/RKK				
DRN: RMC/HWC				
CHK: DTM/RKK				
DATE: 10/8/04	BY	NO.	REVISION	DATE

OWNER:
HOWARD COUNTY DEPARTMENT
RECREATION AND PARKS
7120 OAKLAND MILLS ROAD
COLUMBIA, MARYLAND 21046

DEVELOPER:
HOWARD COUNTY DEPARTMENT OF PUBLIC WORKS
9250 BENDIX ROAD
COLUMBIA, MARYLAND 21045

TAX MAP: 50
GRID: 1&2
ZONED: R-20 & R-SC
PARCEL NO.: 364
CENSUS TRACT: 6069.03
WATER CODE: C06
SEWER CODE: 7170900

HIGH RIDGE PARK
EROSION & SEDIMENT CONTROL NOTES & DETAILS

DEED REFERENCE: LIBER 8771, FOLIO 685
ELECTION DISTRICT NO. 6, HOWARD COUNTY, MARYLAND

SDP-05-19

NOTE:
ORIFICE PLATE TO BE INSTALLED OVER 6" UNDERDRAIN OPENING BEFORE GRADING STARTS.

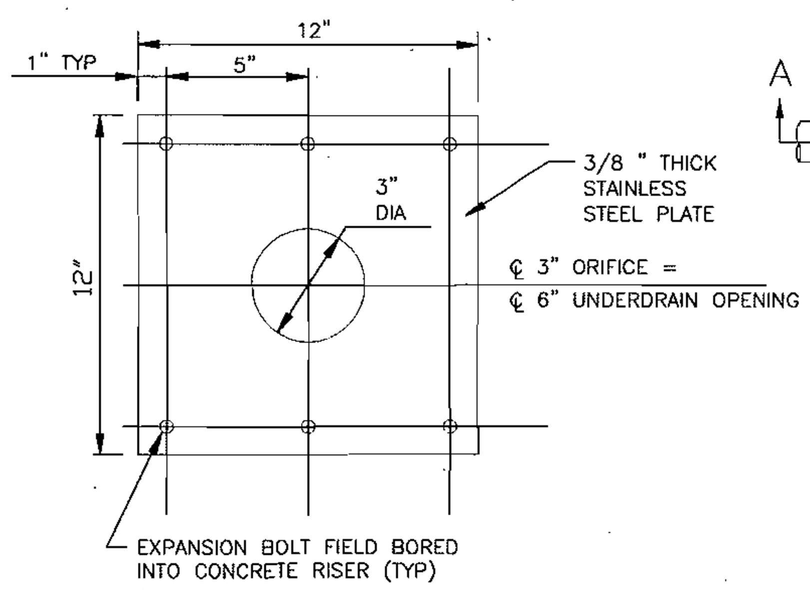

ORIFICE PLATE DETAIL

NOT TO SCALE

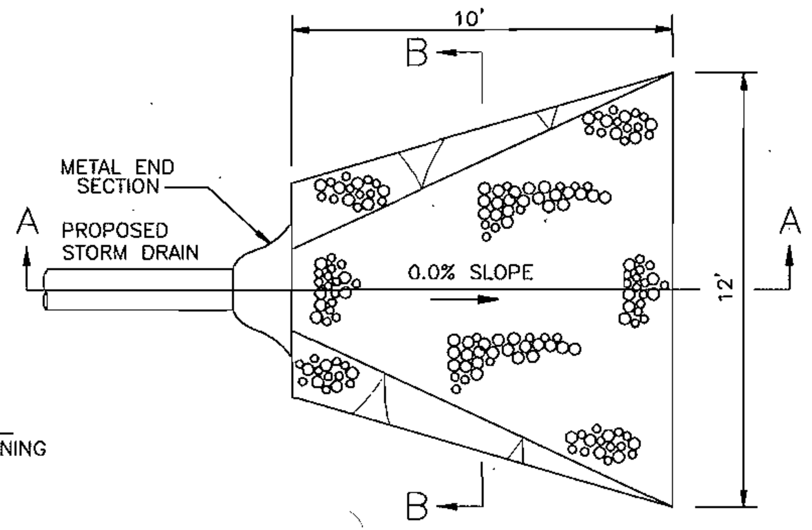

PLAN

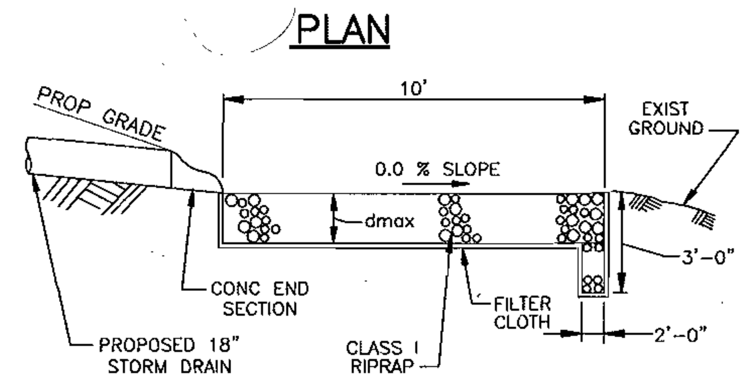

SECTION A–A

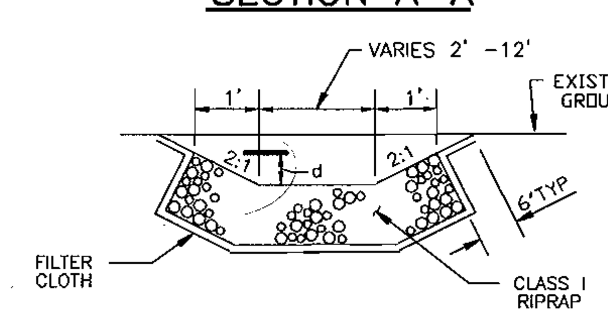

SECTION B–B

AT END SECTION

ES–1 AND ES–3 OUTFALL PROTECTION

NOT TO SCALE

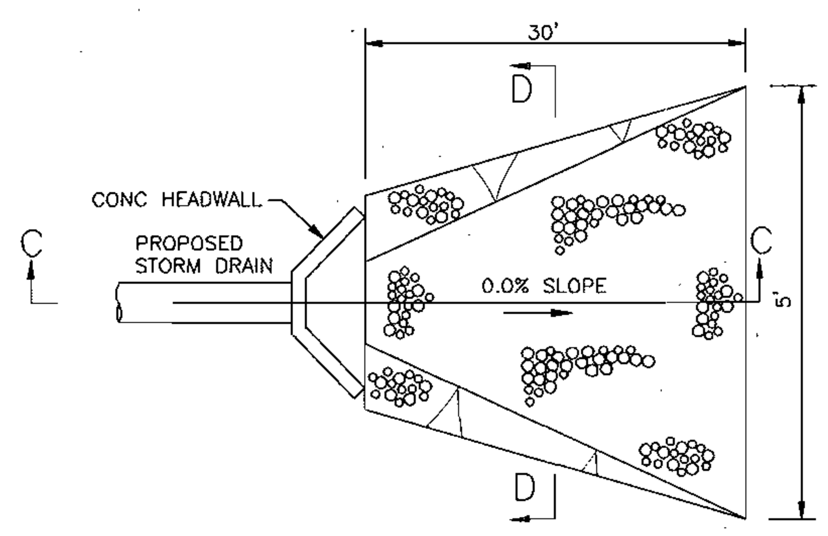

HW–2 OUTFALL PROTECTION

NOT TO SCALE

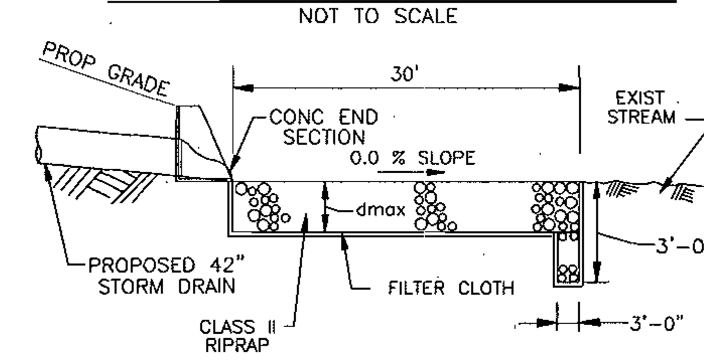

SECTION C–C

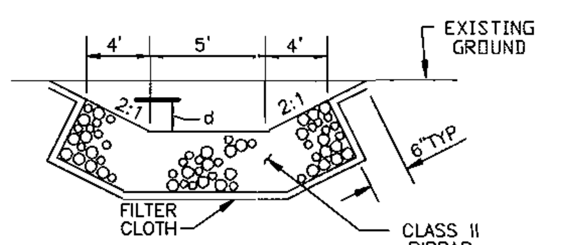

SECTION D–D

OUTFALL	dmax	d50	Q	V	d
HW–2	32"	16"	113.3	12.5	2.0'
ES–1	19"	9.5"	9.3	5.25	2.0'
ES–2	19"	9.5"	5.3	6.75	6"
ES–3	19"	9.5"	8.4	2.7	2.0'
ES–4	19"	9.5"	2.2	2.7	6"

ALL Q'S AND V'S ARE BASED ON A 10–YEAR STORM EXCEMPT FOR HW–2, WHICH IS BASED ON A 100–YEAR STORM.

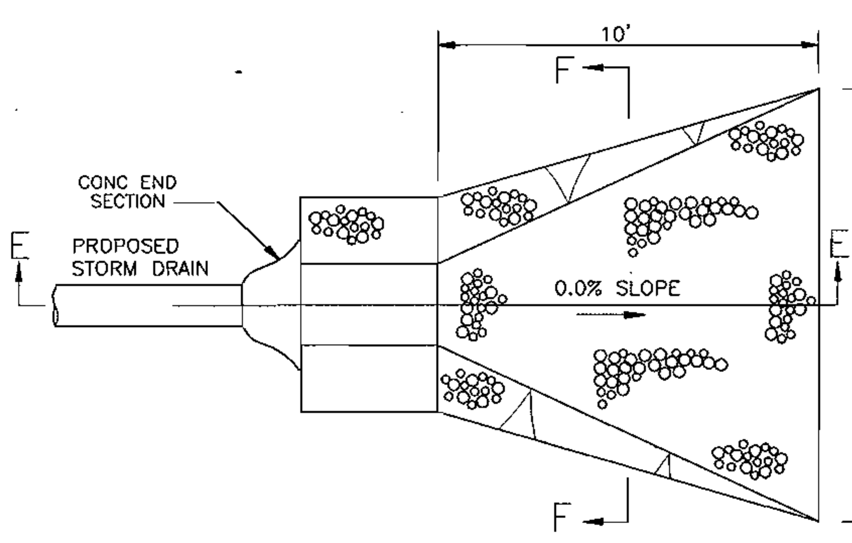

ES–2 AND ES–4 OUTFALL PROTECTION

NOT TO SCALE

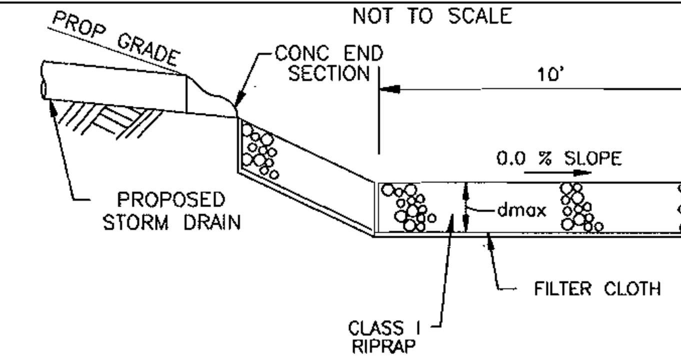

SECTION E–E

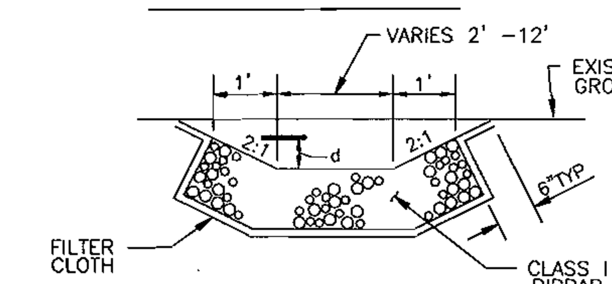

SECTION F–F

DETAIL 18 – SEDIMENT BASIN BAFFLES

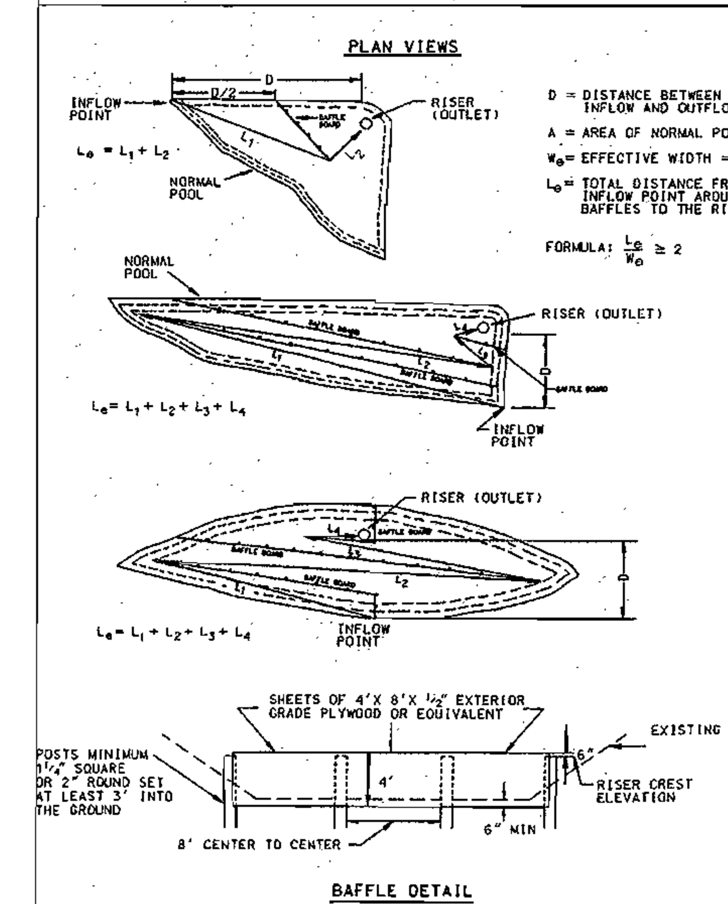

U.S. DEPARTMENT OF AGRICULTURE SOIL CONSERVATION SERVICE	PAGE C – 10 – 28	MARYLAND DEPARTMENT OF ENVIRONMENT WATER MANAGEMENT ADMINISTRATION

DETAIL 9 – STONE OUTLET SEDIMENT TRAP – ST II

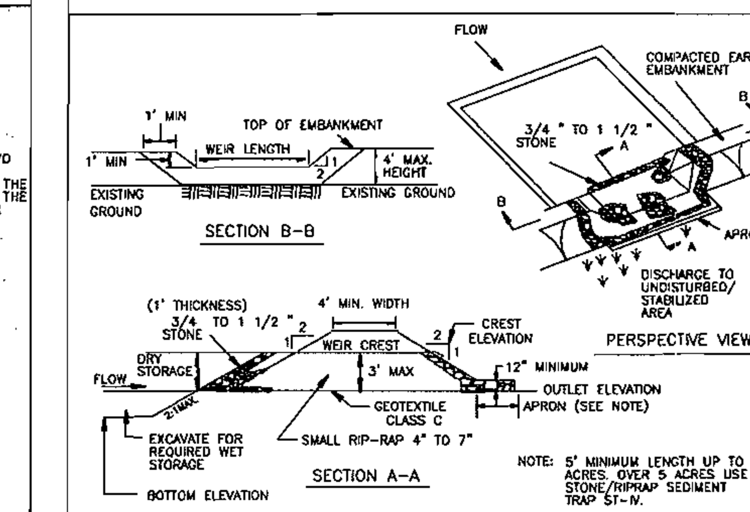

Construction Specifications

1. Area under embankment shall be cleared, grubbed and stripped of any vegetation and root mat. The pool area shall be cleared.

2. The fill material for the embankment shall be free of roots and other woody vegetation as well as over-sized stones, rocks, organic material or other objectionable material. The embankment shall be compacted by traversing with equipment while it is being constructed.

3. All cut and fill slopes shall be 2:1 or flatter.

4. The stone used in the outlet shall be small rip-rap 4" to 7" in size with a 1' thick layer of 3/4 " to 1 1/2 " washed aggregate placed on the upstream face of the outlet. Stone facing shall be as necessary to prevent clogging. Geotextile Class C may be substituted for the stone facing by placing it on the inside face of the stone outlet.

5. Sediment shall be removed and trap restored to its original dimensions when the sediment has accumulated to one half of the wet storage depth of the trap. Removed sediment shall be deposited in a suitable area and in such a manner that it will not erode.

U.S. DEPARTMENT OF AGRICULTURE	PAGE	MARYLAND DEPARTMENT OF ENVIRONMENT

DETAIL 22 – SILT FENCE

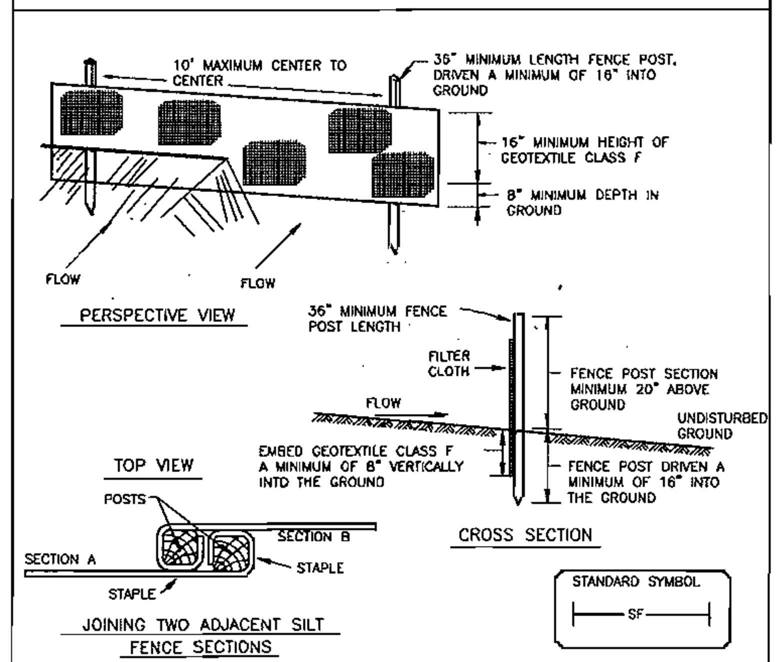

Construction Specifications

1. Fence posts shall be a minimum of 36" long driven 16" minimum into the ground. Wood posts shall be 1 1/2 " x 1 1/2 " square (minimum) cut, or 1 3/4 " diameter (minimum) round and shall be of sound quality hardwood. Steel posts will be standard T or U section weighting not less than 1.00 pond per linear foot.

2. Geotextile shall be fastened securely to each fence post with wire ties or staples at top and mid-section and shall meet the following requirements for Geotextile Class F:

Tensile Strength	50 lbs/in (min.)	Test: MSMT 509
Tensile Modulus	20 lbs/in (min.)	Test: MSMT 509
Flow Rate	0.3 gal ft / minute (max.)	Test: MSMT 322
Filtering Efficiency	75% (min.)	Test: MSMT 322

3. Where ends of geotextile fabric come together, they shall be overlapped, folded and stapled to prevent sediment bypass.

4. Silt Fence shall be inspected after each rainfall event and maintained when bulges occur or when sediment accumulation reached 50% of the fabric height.

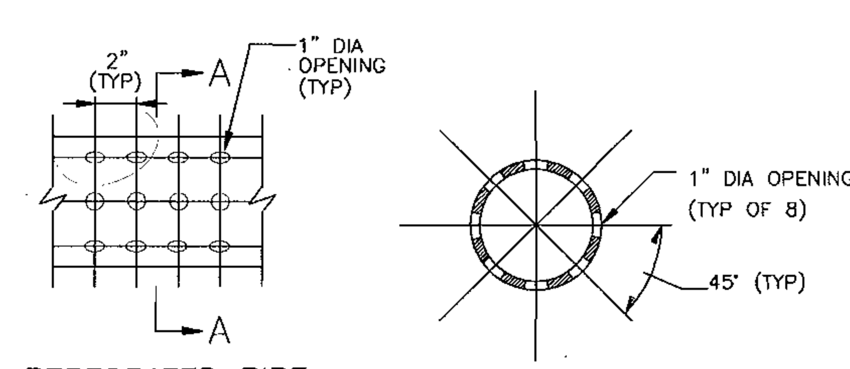

PERFORATED PIPE ENLARGEMENT

SECTION A–A

DRAW–DOWN DEVICE

NOT TO SCALE

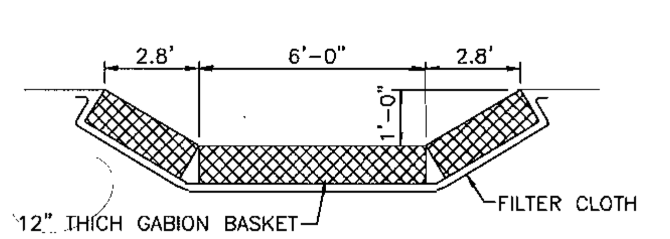

GABION OUTFALL PROTECTION BELOW ES–3

NTS

Maryland's Guidelines To Waterway Construction
DETAIL 1.2: PUMP-AROUND PRACTICE

PLAN VIEW

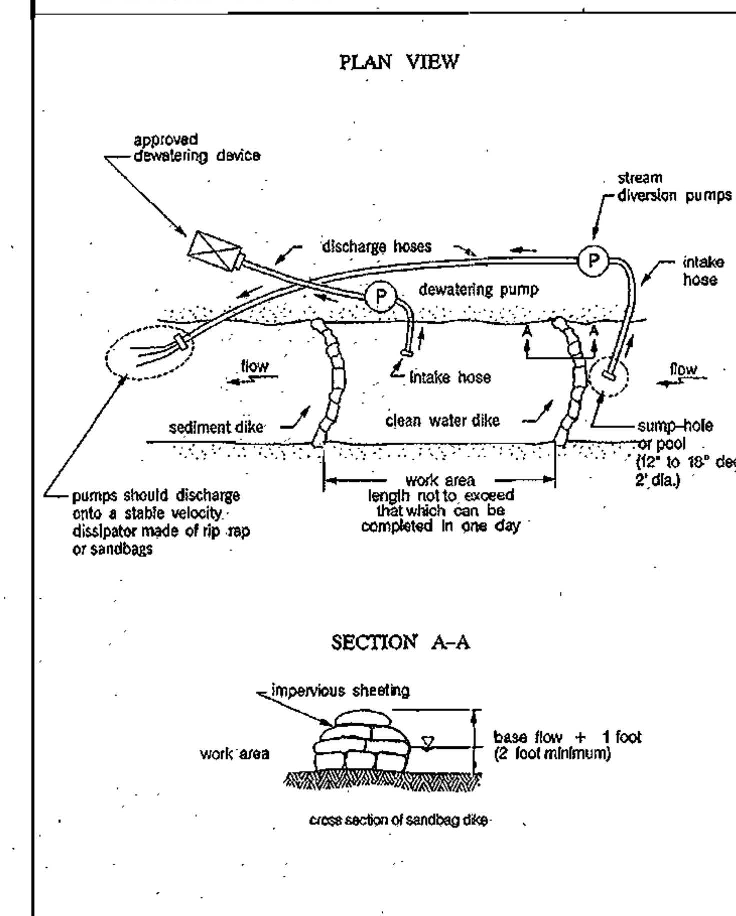

TEMPORARY INSTREAM CONSTRUCTION MEASURES	REVISED NOVEMBER 2000 PAGE 12 – 8	MARYLAND DEPARTMENT OF THE ENVIRONMENT WATER MANAGEMENT ADMINISTRATION

DETAIL 4 – PIPE SLOPE DRAIN

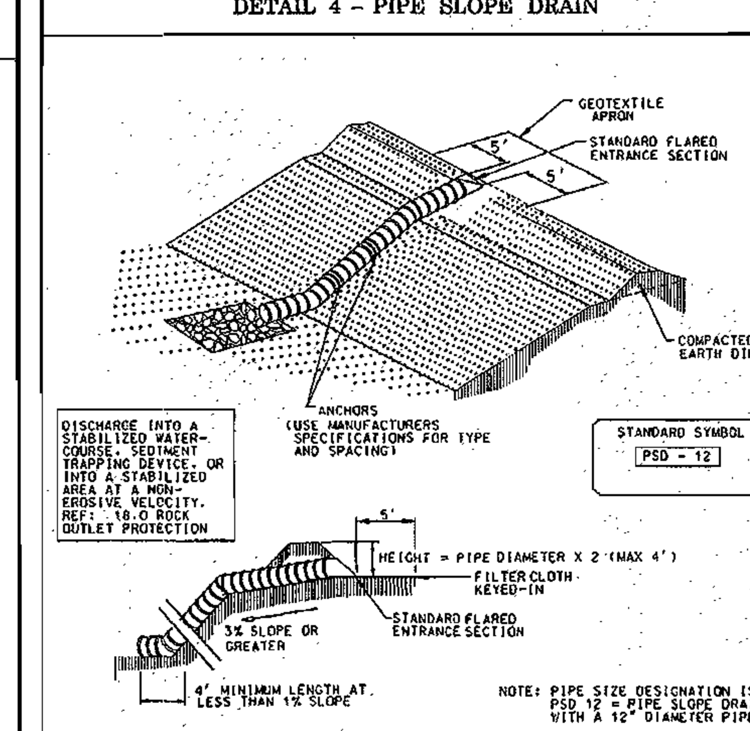

Table 6 Design Criteria for Pipe Slope Drain

Size	Pipe/Tubing Diameter (D) In	Maximum Drainage Area (Acres)
PSD-12	12	0.5
PSD-18	18	1.5
PSD-21	21	2.5
PSD-24	24	3.5
PSD-24 (2)	24	5.0

U.S. DEPARTMENT OF AGRICULTURE SOIL CONSERVATION SERVICE	PAGE B – 5 – 4	MARYLAND DEPARTMENT OF ENVIRONMENT WATER MANAGEMENT ADMINISTRATION

PIPE SLOPE DRAIN

Construction Specifications – Pipe Slope Drain

1. The Pipe Slope Drain (PSD) shall have a slope of 3 percent or steeper.

2. The top of the earth dike over the inlet pipe shall be at least 2 times the pipe diameter measured at the invert of the pipe.

3. Flexible tubing is preferred. However, corrugated metal pipe or equivalent PVC pipe can be used. All connections shall be watertight.

4. A flared end section shall be attached to the inlet end of pipe with a watertight connection. Filter cloth shall be placed under the inlet of the pipe slope drain and shall extend out 5' from the inlet. The filter cloth shall be "keyed in" on all sides.

5. The Pipe Slope Drain shall be securely anchored to the slope by staking at the grommets provided. Spacing for anchors shall be as provided by manufacturer's specification. In no case shall less than two (2) anchors be provided, equally spaced along the length of pipe. These details should be provided by pipe suppliers.

6. The soil around and under the pipe and end section shall be hand tamped in 4 inch lifts to the top of the earth dike.

7. All pipe connections shall be watertight.

8. Whenever possible where a PSD drains on unstabilized area, it shall outlet into a sediment trap or basin. If this is not possible then the slope drain will discharge into a stable conveyence that leads to a sediment trap or basin. When discharging into a trap or basin the PSD shall discharge at the same elevation as the wet pool elevation. The discharge from the PSD must be as far away from the sediment control outlet as possible.

9. When the drainage area is stabilized, the PSD shall discharge onto a stabilized area at a non-erosive velocity.

10. Inspection and any required maintenance shall be performed periodically and after each rain event.

11. The inlet must be kept open at all times.

U.S. DEPARTMENT OF AGRICULTURE SOIL CONSERVATION SERVICE	PAGE B – 5 – 4A	MARYLAND DEPARTMENT OF ENVIRONMENT WATER MANAGEMENT ADMINISTRATION

DETAIL 5 – RIP-RAP INFLOW PROTECTION

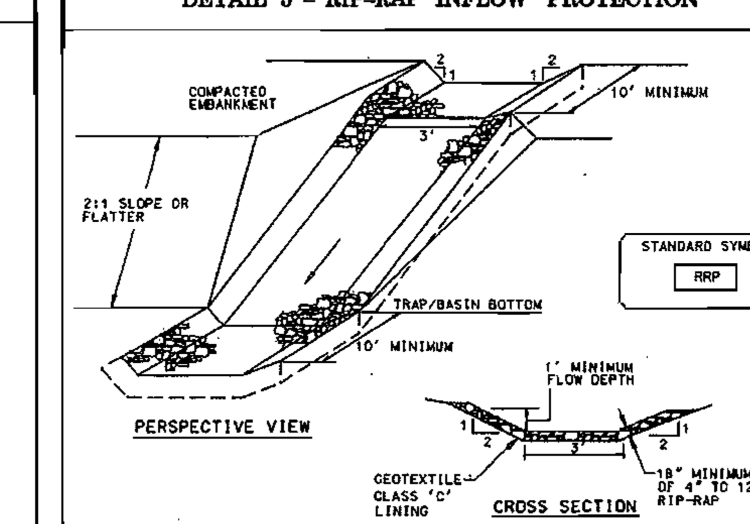

Construction Specifications

1. Rip-rap lined inflow channels shall be 1' in depth, have a trapezoidal cross section with 2:1 or flatter side slopes and 3' (min.) bottom width. The channel shall be lined with 4" to 12" rip- rap to a depth of 18".

2. Filter cloth shall be installed under all rip-rap. Filter cloth shall be Geotextile Class C.

3. Entrance and exit sections shall be installed as shown on the detail section.

4. Rip-rap used for the lining may be recycled for permanent outlet protection if the basin is to be converted to a stormwater management facility.

5. Gabion Inflow Protection may be used in lieu of Rip-rap Inflow Protection.

6. Rip-rap should blend into existing ground.

7. Rip-rap Inflow Protection shall be used where the slope is between 4:1 and 10:1. for slopes flatter than 10:1 use Earth Dike or Temporary Swale lining criteria.

U.S. DEPARTMENT OF AGRICULTURE SOIL CONSERVATION SERVICE	PAGE B – 6 – 2	MARYLAND DEPARTMENT OF ENVIRONMENT WATER MANAGEMENT ADMINISTRATION

DITCH LOCATION	Q10	V10	W	d
ADJ. TO ENTR. RD.	1.6'	4.0'	6.0'	1.0'
TO I–2	1.0'	2.0'	4.0'	0.5'
TO I–3	1.5'	2.5'	4.0'	0.5'

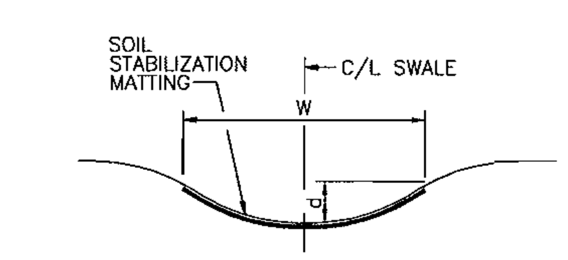

STABILIZED SWALE DETAIL

NTS

ENGINEER'S CERTIFICATE

" I certify that this plan pond construction and for sediment and erosion control represents a practical and workable plan based on my personal knowledge of the site conditions. This plan was prepared in accordance with the requirements of the Howard Soil Conservation District. I have notified the developer that he/she must engage a registered professional engineer to supervise pond construction and provide the Howard Soil Conservation District with an "as-built" plan of the pond within 30 days of completion.

[signature] 1/11/05
Signature of Engineer (print name below signature) DAVID T. MORICONI — Date

DEVELOPER'S CERTIFICATE

" I/We certify that all development and construction will be done according to these plans, and that any responsible personnel involved in the construction of this project will have a Certificate of Attendance at a Department of the Environment Approved Training Program for the Control of Sediment and Erosion before beginning the project. I also authorize periodic on-site inspection by the Howard Soil Conservation District." I shall engage a registered professional engineer to supervise pond construction and provide the Howard Soil Conservation District with an "as-built" plan of the pond within 30 days of completion.

[signature] 2-15-05
Signature of Developer (print name below signature) GARY J. ARTHUR — Date

These plans have been reviewed for the Howard Soil Conservation District and meet the technical requirements for small pond construction, soil erosion and sediment control.

[signature] 1/25/05
USDA – Natural Resources Conservation Service — Date:

These plans for small pond construction, soil erosion and sediment control meet the requirements of the Howard Soil Conservation District.

[signature] 1/25/05
Howard SCD — Date

APPROVED: DEPARTMENT OF PLANNING AND ZONING

[signature] 2/2/05
Chief, Development Engineering Division — Date

[signature] 2/4/05
Chief, Division of Land Development — Date

[signature] 2/16/05
Director — Date

PREPARED BY
URS
4 NORTH PARK DRIVE
HUNT VALLEY, MARYLAND
TEL: (410) 785–7220

STATE OF MARYLAND — DAVID THOMAS MORICONI — No. 18186 — REGISTERED PROFESSIONAL ENGINEER — 1/11/05

DES: DTM/RKK				
DRN: RMC/HWC				
CHK: DTM/RKK				
DATE: 10/8/04	BY	NO.	REVISION	DATE

OWNER:
HOWARD COUNTY DEPARTMENT
RECREATION AND PARKS
7120 OAKLAND MILLS ROAD
COLUMBIA, MARYLAND 21046

DEVELOPER:
HOWARD COUNTY DEPARTMENT OF PUBLIC WORKS
9250 BENDIX ROAD
COLUMBIA, MARYLAND 21045

TAX MAP: 50
GRID: 1&2
ZONED: R–20 & R–SC
PARCEL NO.: 364
CENSUS TRACT: 6069.03
WATER CODE: C06
SEWER CODE: 7170900

HIGH RIDGE PARK

EROSION AND SEDIMENT CONTROL DETAILS

DEED REFERENCE: LIBER 8771, FOLIO 685
ELECTION DISTRICT NO. 6, HOWARD COUNTY, MARYLAND

SDP–05–19

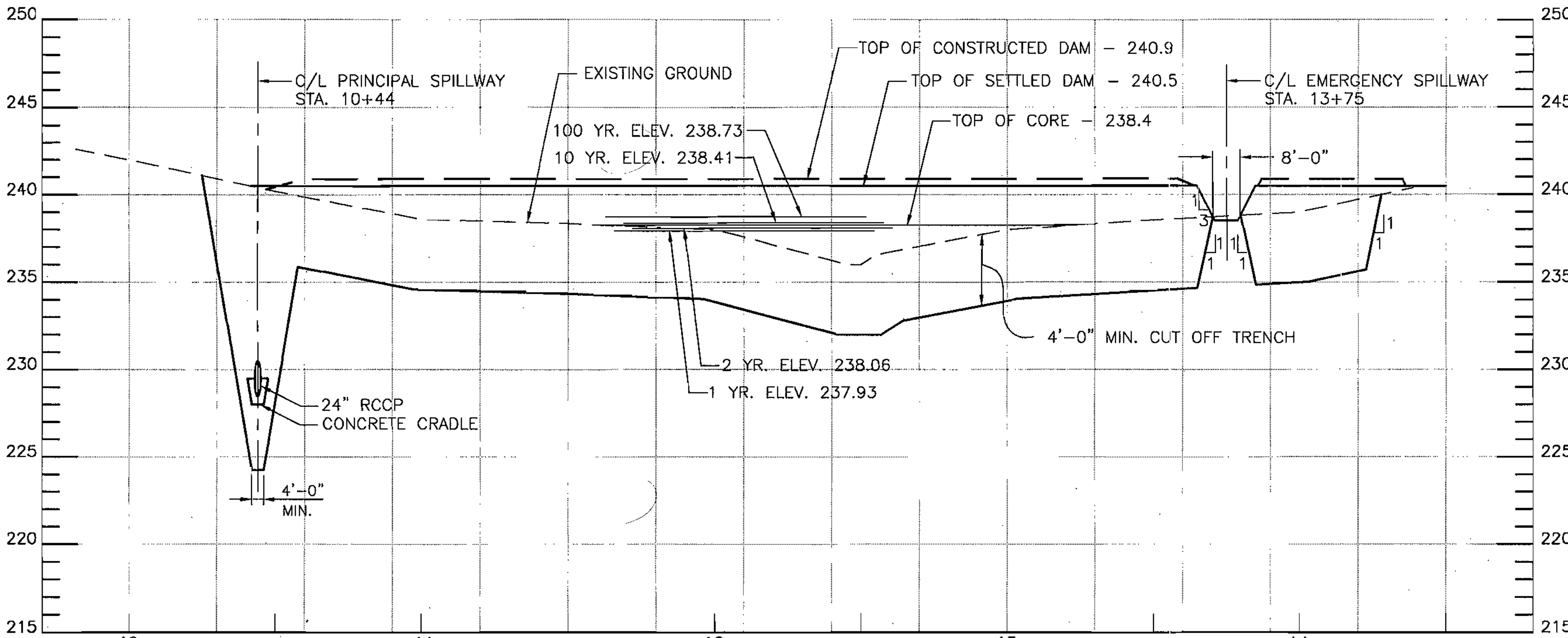

1/27 PROFILE ALONG DAM

SCALE: H 1"=30', V 1"=5'

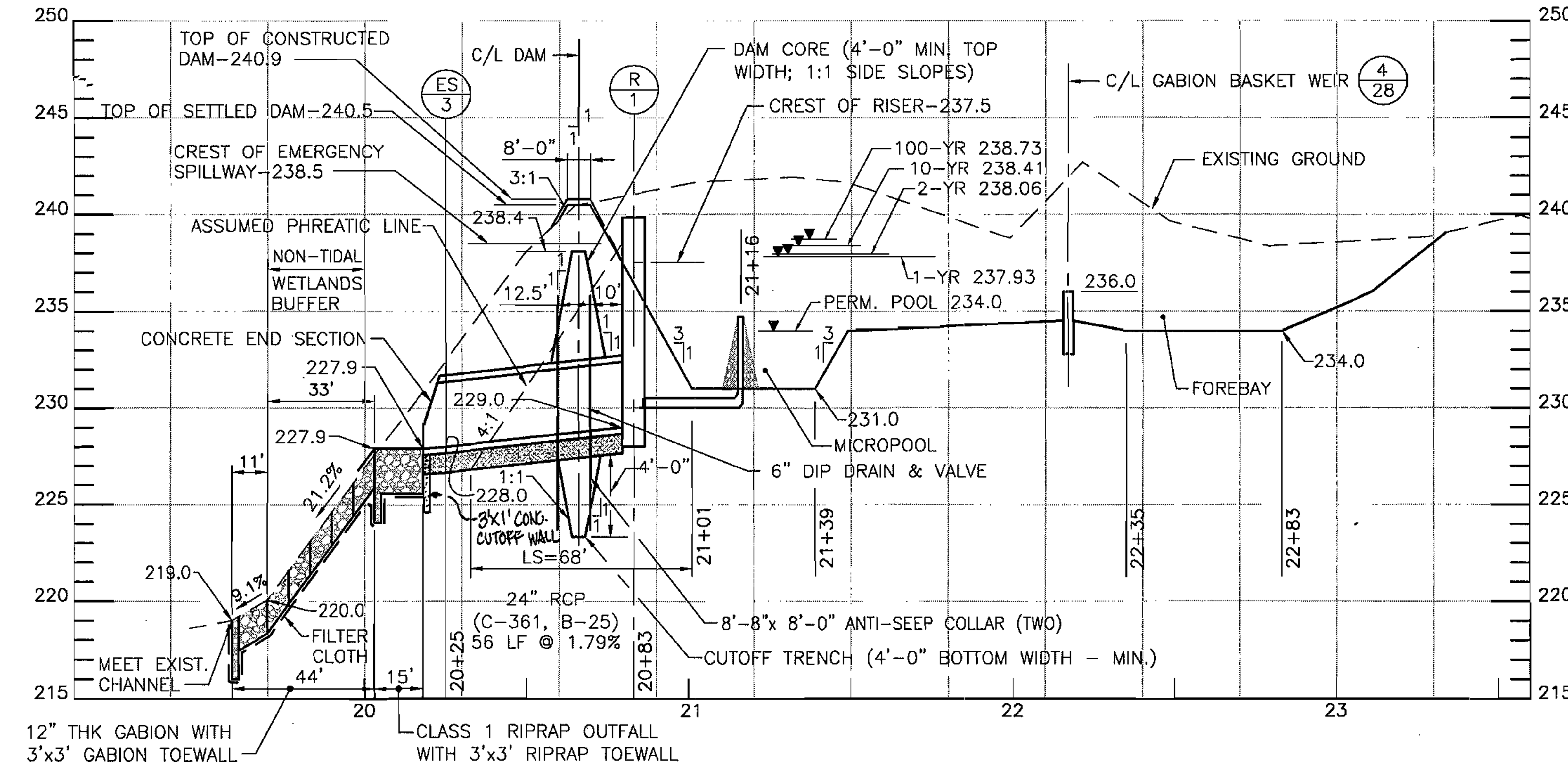

2/27 PROFILE - PRINCIPAL SPILLWAY

SCALE: H 1"=30', V 1"=5'

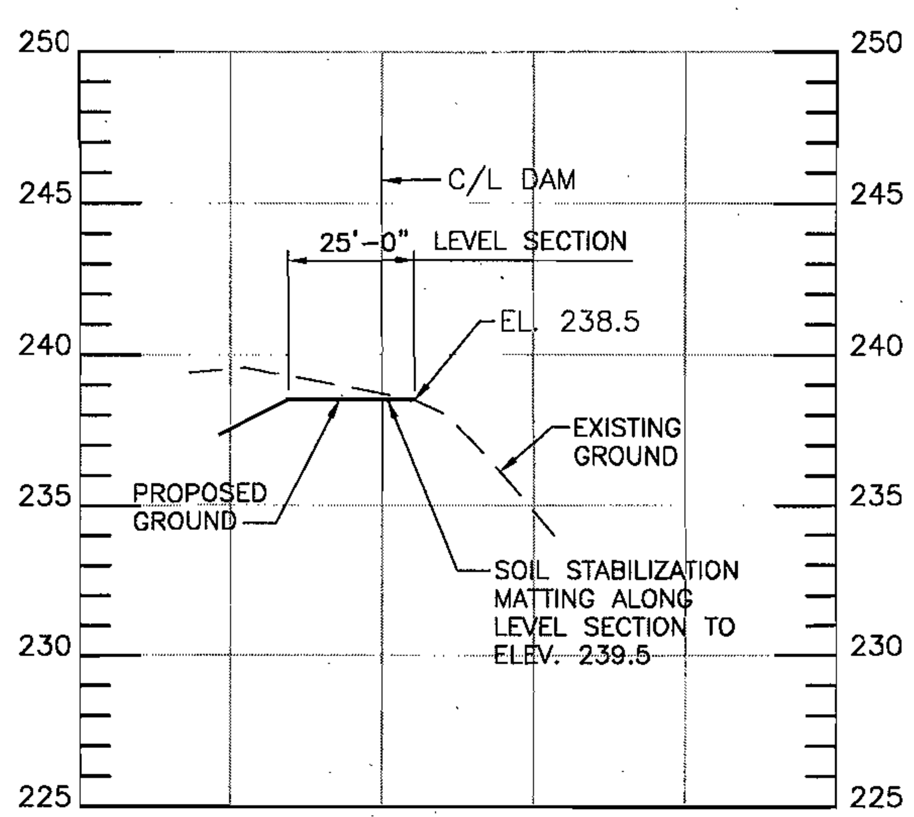

3/27 PROFILE ALONG EMERGENCY SPILLWAY

SCALE: H 1"=30', V 1"=5'

OPERATION AND MAINTENANCE SCHEDULE FOR STORMWATER MANAGEMENT EXTENDED DETENTION FACILITY

STORMWATER MANAGEMENT FACILITY

ROUTINE MAINTENANCE

1. FACILITY WILL BE INSPECTED ANNUALLY AND AFTER MAJOR STORMS. INSPECTIONS SHOULD BE PERFORMED DURING WET WEATHER TO DETERMINE IS FUNCTIONING PROPERLY.
2. TOP AND SIDE SLOPES OF THE EMBANKMENT SHALL BE MOWED A MINIMUM OF TWO (2) TIMES A YEAR, ONCE IN JUNE AND ONCE IN SEPTEMBER. OTHER SIDE SLOPES AND MAINTENANCE ACCESS SHOULD BE MOWED AS NEEDED.
3. DEBRIS AND LITTER NEXT TO THE OUTLET STRUCTURE SHALL BE REMOVED DURING REGULAR MOWING OPERATIONS AND AS NEEDED.
4. VISIBLE SIGNS OF EROSION IN THE POND AS WELL AS RIPRAP OUTLET AREAS SHALL BE REPAIRED AS SOON AS IT IS NOTICED.

NON–ROUTINE MAINTENANCE

1. STRUCTURAL COMPONENTS OF THE POND SUCH AS THE DAM, THE RISER, AND THE PIPES SHALL BE REPAIRED UPON DETECTION OF ANY DAMAGE. THE COMPONENTS SHOULD BE INSPECTED DURING ROUTINE MAINTENANCE OPERATIONS.
2. SEDIMENT SHOULD BE REMOVED WHEN ITS ACCUMULATION SIGNIFICANTLY REDUCES THE DESIGN STORAGE, INTERFERE WITH THE FUNCTION OF THE RISER, WHEN DEEMED NECESSARY FOR AESTHETIC REASONS, OR WHEN DEEMED NECESSARY BY THE HOWARD COUNTY DEPARTMENT OF PUBLIC WORKS.

OPERATION AND MAINTENANCE SCHEDULE FOR BIO–RETENTION AREAS

1. ANNUAL MAINTENANCE OF PLANT MATERIAL, MULCH LAYER AND SOIL LAYER IS REQUIRED. MAINTENANCE OF MULCH AND SOIL IS LIMITED TO CORRECTING AREAS OF EROSION OR WASH OUT. ANY MULCH REPLACEMENT SHALL BE DONE IN THE SPRING. PLANT MATERIAL SHALL BE CHECKED FOR DISEASE AND INSECT INFESTATION AND MAINTENANCE WILL ADDRESS DEAD MATERIAL AND PRUNING.
2. SCHEDULE OF PLANT INSPECTION WILL BE TWICE A YEAR IN SPRING AND FALL. THIS INSPECTION WILL INCLUDE REMOVAL OF DEAD AND DISEASED VEGETATION CONSIDERED BEYOND TREATMENT, TREATMENT OF ALL DEFICIENT STAKES AND WIRES.
3. MULCH SHALL BE INSPECTED EACH SPRING. REMOVE PREVIOUS MULCH LAYER BEFORE APPLYING NEW LAYER ONCE EVERY 2 TO 3 YEARS.
4. SOIL EROSION TO BE ADDRESSED ON AN AS NEEDED WITH A MINIMUM OF ONCE PER MONTH AND AFTER HEAVY STORM EVENTS.

NOTE: CONTRACTOR SHALL ENSURE THAT THE S.W.M. FACILITY IS WATERTIGHT.

1. ALL PIPE CONNECTIONS AT STRUCTURES SHALL BE CEMENTED TO ENSURE WATERTIGHT CONNECTION.
2. ALL ACCMP PIPE JOINTS SHALL USE 12" WIDE HUGGER BAND WITH "O" RING GASKETS.
3. TEES AND ELBOWS TO BE FACTORY FABRICATED WELDS, ONE PIECE.
4. TRENCH BEDDING TO BE IN ACCORDANCE WITH RECOMMMENDATIONS FROM THE GEOTECHNICAL ENGINEER IN THE FIELD.
5. PROVIDE WATERTIGHT JOINTS AT ALL PIPE CONNECTIONS. (FOR REINFORCED CONCRETE PIPE, ASTM C–361, RUBBER GASKET PIPE).

BMP DATA SUMMARY	
ADDRESS	HIGH RIDGE PARK, HOWARD COUNTY, MD
MD COORDINATES (NAD83)	NORTH 526,660 EAST 1,351,310
ADC MAP/GRID	19/G12
STRUCTURE TYPE	EXTENDED–DETENTION (MICROPOOL/FOREBAY)
MOP LAND USE	PARK
STRUCTURE DRAINAGE AREA	5.04 ACRES
TOTAL SITE DRAINAGE AREA	7.4 ACRES (DISTURBED)
RCN – POST DEVELOPMENT	80.0
ON/OFF SITE SWM	ON SITE STORMWATER MANAGEMENT
OWNER	HOWARD COUNTY DEPT. OF RECREATION & PARKS

STORMWATER MANAGEMENT SUMMARY CHART

STORM	EXISTING PEAK DISCHARGE		PROPOSED PEAK INFLOW	PROPOSED PEAK DISCHARGES	PROPOSED POND ELEVATIONS	PROPOSED STORAGE VOLUMES	PROPOSED PEAK DISCHARGES *	PROPOSED POND ELEVATIONS *
	CFS		CFS	CFS	FT.	AC.–FT.	CFS	FT.
1 YR.	1.77		7.45	0.35	236.40	0.2312	5.71	237.93
2 YR.	3.31		10.59	0.41	237.11	0.3520	8.09	238.06
10 YR.	9.41		21.48	8.43	238.06	0.5481	16.35	238.41
100 YR.	17.27		34.24	25.39	238.64	0.6764	29.08	238.73

*LOW FLOW ORIFICE IN CLOGGED CONDITION

NOTES:
ALL METAL PARTS TO BE GALVANIZED. BOLTS SHALL BE STAINLESS STEEL.
ALL EXPOSED EDGES TO HAVE 1/2 " CHAMFER

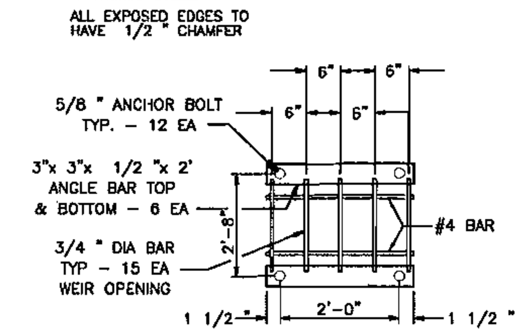

WEIR GRATE

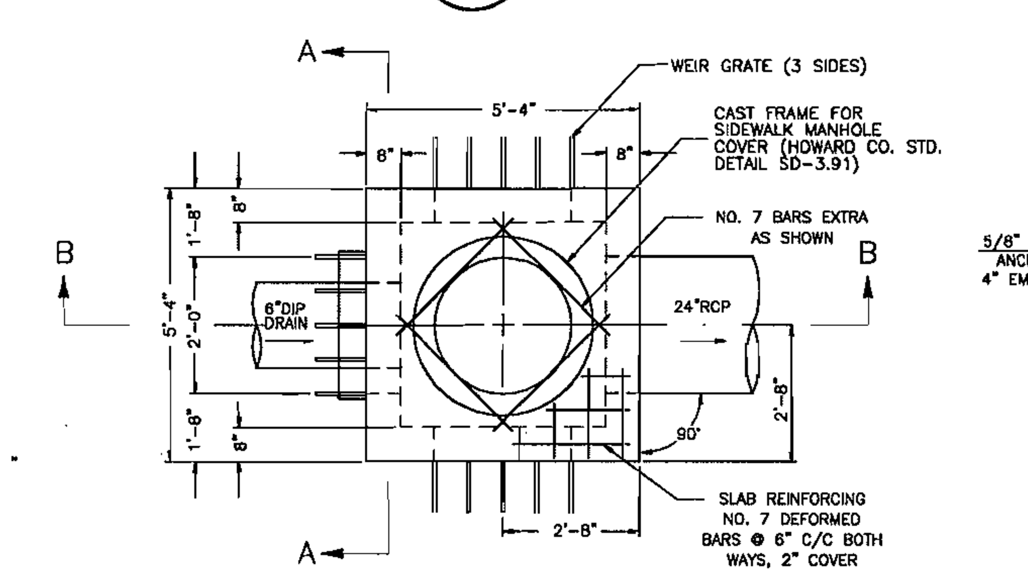

PLAN

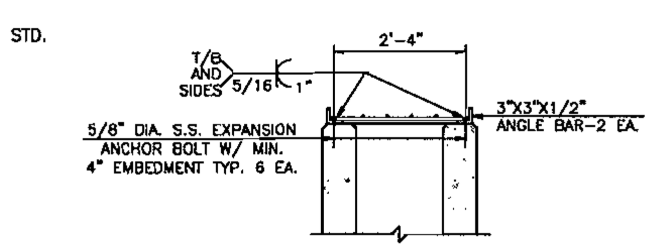

ELEVATION

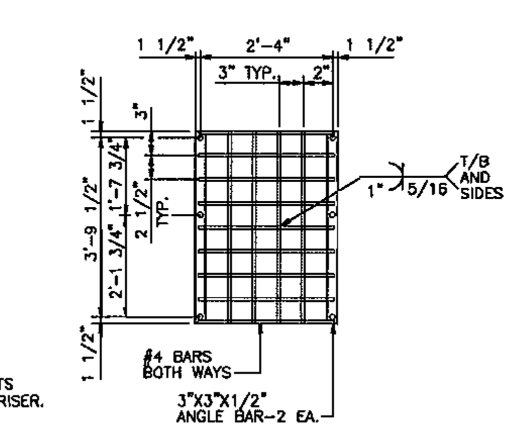

TRASH RACK DETAIL

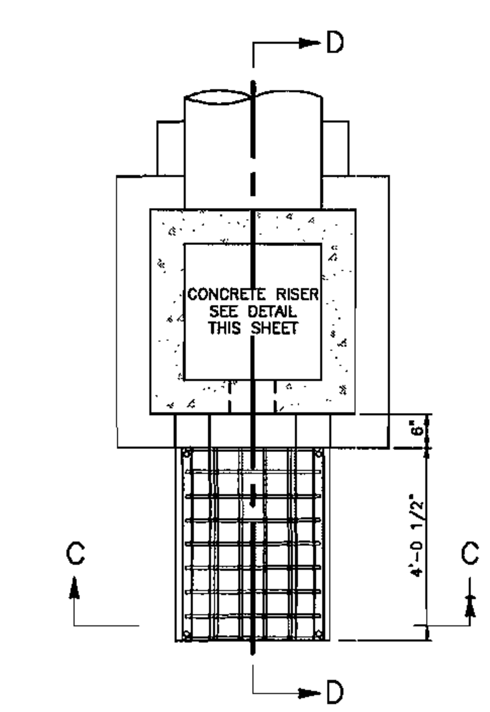

PLAN

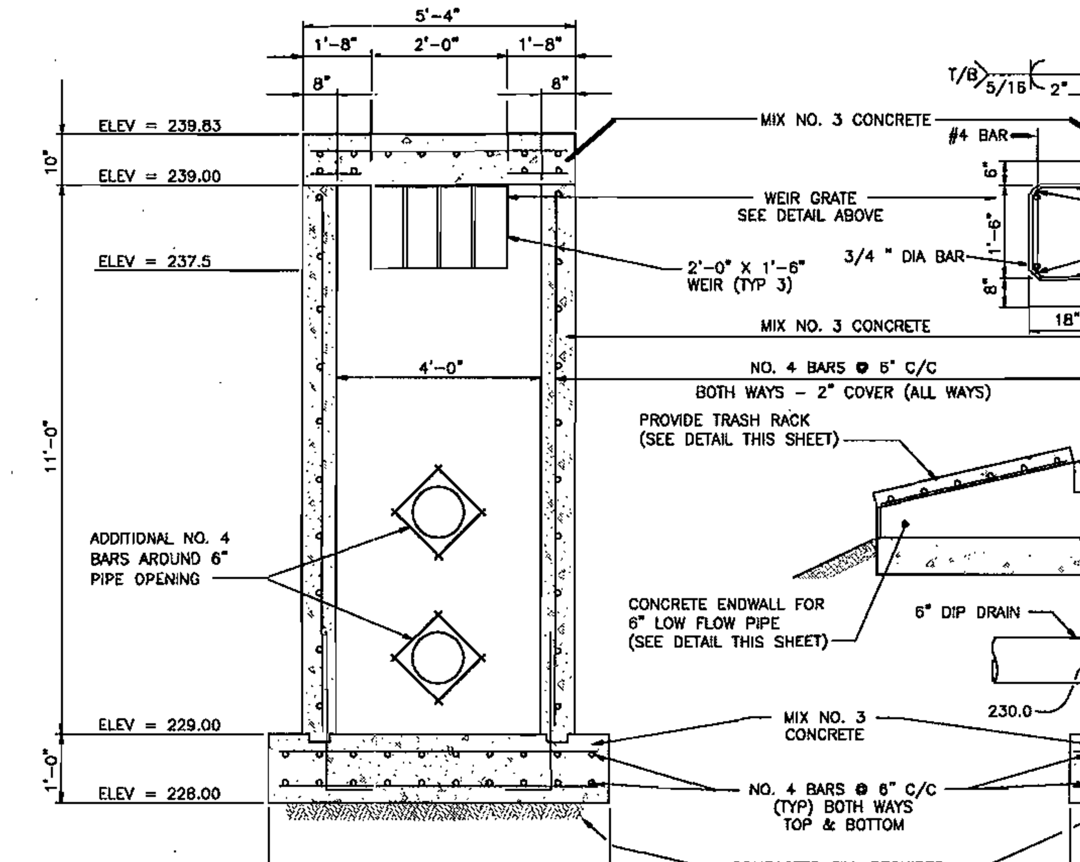

SECTION A–A

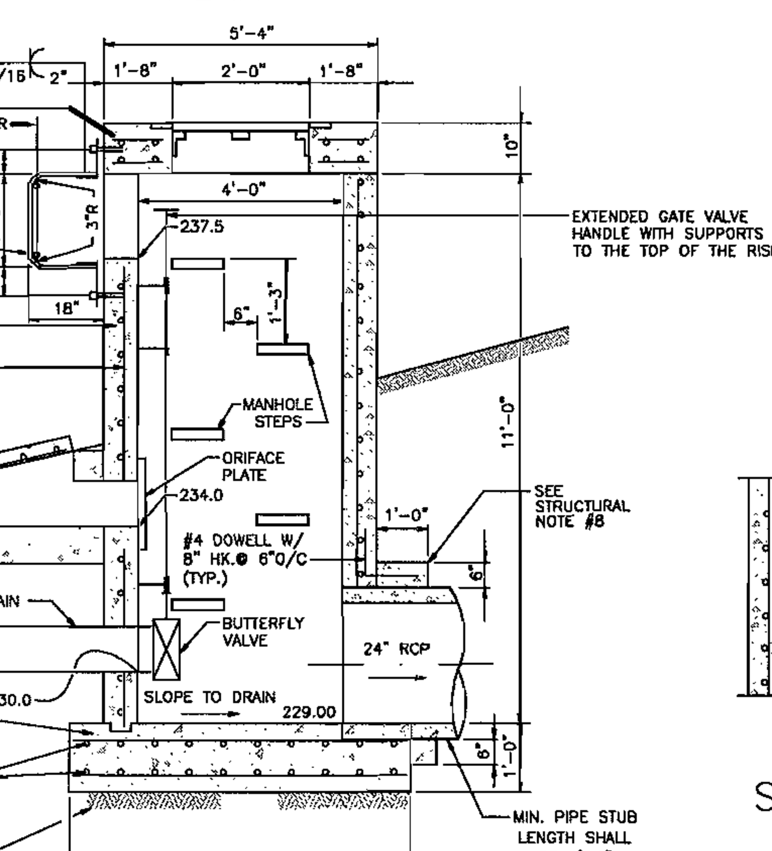

SECTION B–B

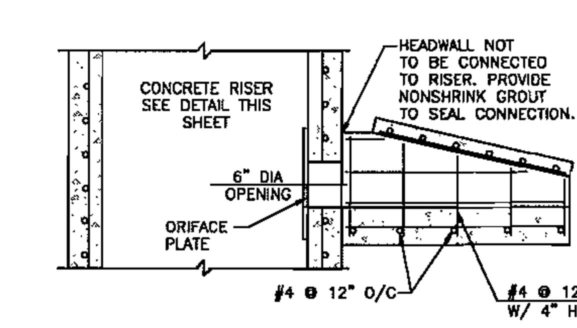

SECTION D–D

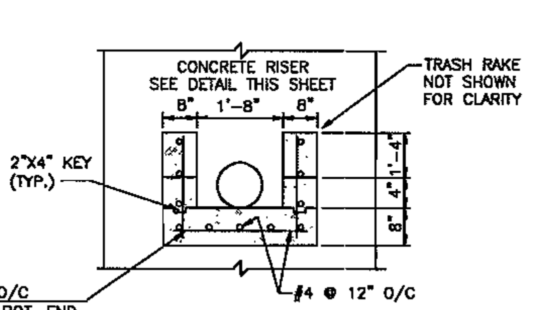

SECTION C–C

4/27 RISER DETAIL (R-1)

NTS

CONCRETE STRUCTURAL NOTES

1. CONCRETE CONSTRUCTION SHALL BE DESIGNED, REINFOREOED AND CONSTRUCTED IN ACCORDANCE WITH ACI 318 BUILDING CODE REQUIREMENTS FOR REINFORCED CONCRETE.
2. CONCRETE SHOWN HEREON SHALL BE 3000 PSI MINIMUM 28 DAY COMPRESSIVE STRENGTH UNLESS OTHERWISE NOTED.
3. REINFORCING STEEL SHALL BE DEFORMED STEEL BARS CONFORMING TO ASTM A615, GRADE 60.
4. CONCRETE EXPOSED TO WEATHER SHALL HAVE 5% MINIMUM ENTRAINED AIR.
5. CONTRACTOR MAY (AT HIS OWN OPTION) FURNISH THESE STRUCTURES AS A PRECAST UNIT, PROVIDED THAT SHOP DRAWINGS OF THE PRECAST STRUCTURE ARE SUBMITTED TO, AND APPROVED BY THE ENGINEER–IN–CHARGE, PRIOR TO CONSTRUCTION
6. CHAMPFER ALL EXPOSED CONCRETE EDGES 3/4–INCH.
7. TRASH RACK & WEIR GRATING ASSEMBLIES SHALL BE HOT DIPPED GALVANIZED AFTER FABRICATION AND PAINTED W/2 COATS OF BATTLESHIP GRAY PAINT.
8. IF RISER IS PRECAST, PROVIDE A WATERTIGHT COLLAR AT BARREL PIPE CONNECTION TO RISER. IF RISER IS CAST–IN–PLACE, CAST WALLS DIRECTLY AROUND BARREL PIPE TO FORM A WATERTIGHT SEAL.

AS–BUILT CERTIFICATION

I HEREBY CERTIFY THAT THE FACILITY SHOWN ON THIS PLAN WAS CONSTRUCTED AS SHOWN ON THE "AS–BUILT" PLANS AND MEETS THE APPROVED PLANS AND SPECIFICATIONS.

Signature ______ PE No. ______ Date ______

ENGINEER'S CERTIFICATE

" I certify that this plan pond construction and for sediment and erosion control represents a practical and workable plan based on my personal knowledge of the site conditions. This plan was prepared in accordance with the requirements of the Howard Soil Conservation District. I have notified the developer that he/she must engage a registered professional engineer to supervise pond construction and provide the Howard Soil Conservation District with an "as–built" plan of the pond within 30 days of completion.

Signature of Engineer (print name below signature) DAVID T. MORICONI — Date 1/11/05

APPROVED: DEPARTMENT OF PLANNING AND ZONING

Chief, Development Engineering Division — Date 2/2/05

Chief, Division of Land Development — Date 2/4/05

Director — Date 2/16/05

DEVELOPER'S CERTIFICATE

" I/We certify that all development and construction will be done according to these plans, and that any responsible personnel involved in the construction of this project will have a Certificate of Attendance at a Department of the Environment Approved Training Program for the Control of Sediment and Erosion before beginning the project. I also authorize periodic on–site inspection by the Howard Soil Conservation District." I shall engage a registered professional engineer to supervise pond construction and provide the Howard Soil Conservation District with an "as–built" plan of the pond within 30 days of completion.

Signature of Developer (print name below signature) GARY J. ARTHUR — Date 2-15-05

These plans have been reviewed for the Howard Soil Conservation District and meet the technical requirements for small pond construction, soil erosion and sediment control.

USDA – Natural Resources Conservation Service — Date: 1/25/05

These plans for small pond construction, soil erosion and sediment control meet the requirements of the Howard Soil Conservation District.

Howard SCD — Date 1/25/05

PREPARED BY
URS
4 NORTH PARK DRIVE
HUNT VALLEY, MARYLAND
TEL: (410) 785–7220

DES: DTM/RKK
DRN: HWC
CHK: DTM/RKK
DATE: 10/8/04

BY	NO.	REVISION	DATE

OWNER:
HOWARD COUNTY DEPARTMENT
RECREATION AND PARKS
7120 OAKLAND MILLS ROAD
COLUMBIA, MARYLAND 21046

DEVELOPER:
HOWARD COUNTY DEPARTMENT OF PUBLIC WORKS
9250 BENDIX ROAD
COLUMBIA, MARYLAND 21045

TAX MAP: 50
GRID: 1&2
ZONED: R–20 & R–SC
PARCEL NO.: 364
CENSUS TRACT: 6069.03
WATER CODE: C06
SEWER CODE: 7170900

HIGH RIDGE PARK

STORMWATER MANAGEMENT POND DETAILS

DEED REFERENCE: LIBER 8771, FOLIO 685
ELECTION DISTRICT NO. 6, HOWARD COUNTY, MARYLAND

SDP–05–19

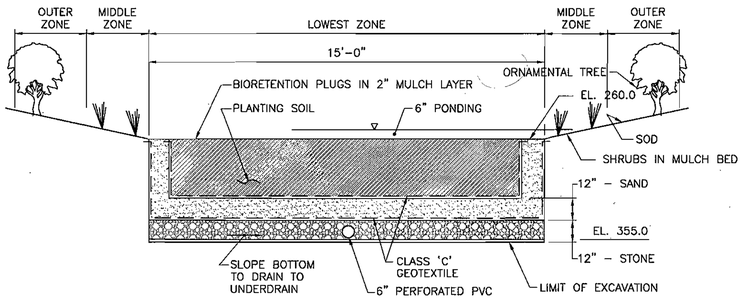

1/28 TYPICAL SECTION - BIORETENTION AREA

NTS

NOTE: SEE LANDSCAPE PLAN FOR PLANTING

OWNERSHIP AND MAINTENANCE RESPONSIBILITY OF THIS STORMWATER MANAGEMENT FACILITY (F-6) BELONGS TO HOWARD COUNTY

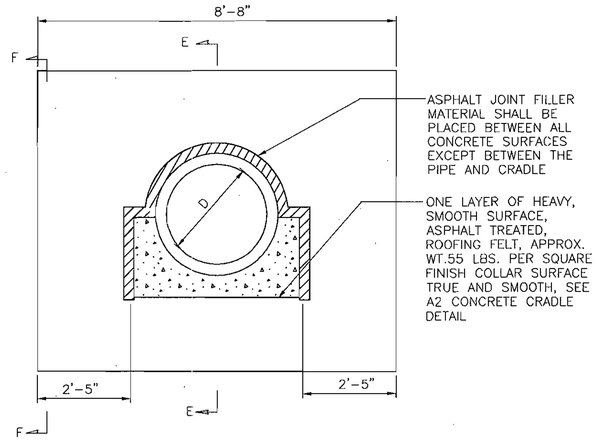

DETAIL SHOWN FOR EARTH FOUNDATION. FOR ROCK FOUNDATION, FOUND BOTTOM OF CRADLE ON ROCK LINE AND KEY COLLAR 6" INTO ROCK

PLAN VIEW

2/28 DETAIL OF ANTI-SEEP COLLAR ALTERNATE FOR CLASS(a) DAMS LESS THAN 50FT HIGH

NTS

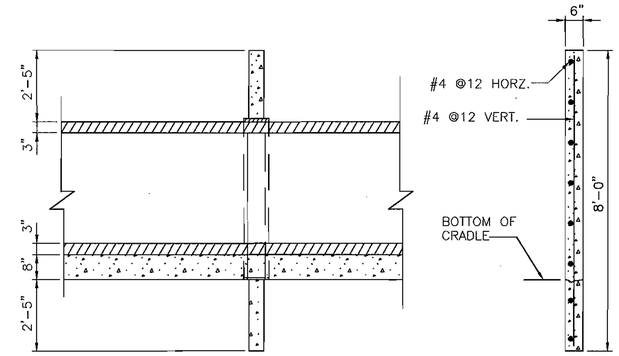

SECTION E-E

SECTION F-F
(SHOWING STEEL)

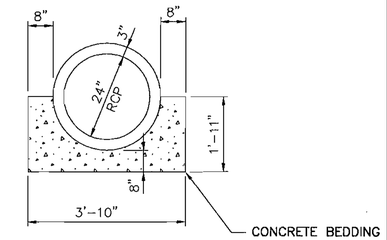

SCS TR-46
3/28 A2 CONCRETE CRADLE DETAIL

NTS

MATERIAL SPECIFICATIONS FOR PLANTING AREA

PLANTING SOIL: SAND 35% - 60%
SILT 30% - 55%
CLAY 10% - 25%

* PROVIDE FOR TESTING OF EXISTING SOILS FOR COMPLIANCE WITH BIORETENTION SPECIFICATIONS.

GEOTEXTILE: CLASS 'C'

OPENING SIZE PER ASTM-D-4751
GRAB TENSILE STRENGTH PER ASTM-D-4632
PUNCTURE RESISTANCE PER ASTM-D-4833

GRAVEL: AASHTO M-43 (0.25" TO 0.75")

UNDERDRAIN PIPING: 6" RIGID SCHEDULE 40 PVC OR SDR 35
3/8 " PERFORATIONS @ 6" O.C., 4 HOLES PER ROW, MIN. OF 3" OF GRAVEL OVER PIPE

OPERATION, MAINTENANCE AND INSPECTION

Inspection of the stormwater management facilities shown hereon shall be performed at least annually, in accordance with the checklist and requirements contained within USDA, NRCS "Standards And Specifications For Ponds" (MD-378). The pond owner(s) and any heirs, successors, or assigns shall be responsible for the safety of the pond and the continued operation, surveillance, inspection, and maintenance thereof. The pond owner(s) shall promptly notify the Soil Conservation District of any unusual observations that may be indications of distress such as excessive seepage, turbid seepage, sliding or slumping.

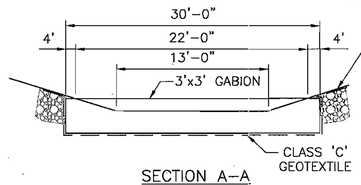

SECTION A-A

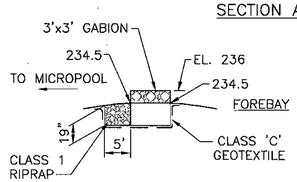

SECTION B-B

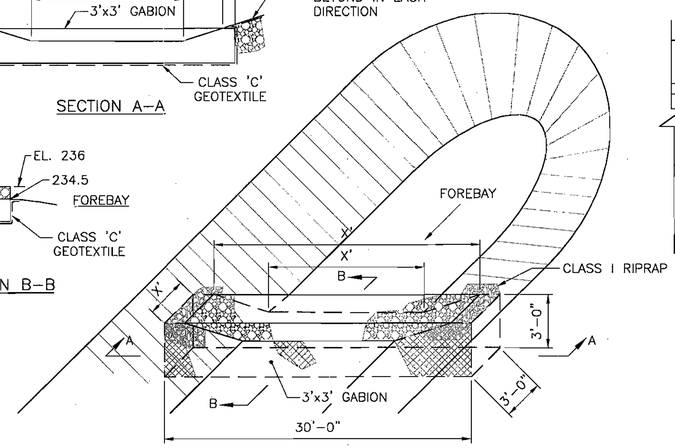

4/28 GABION BASKET WEIR

NTS

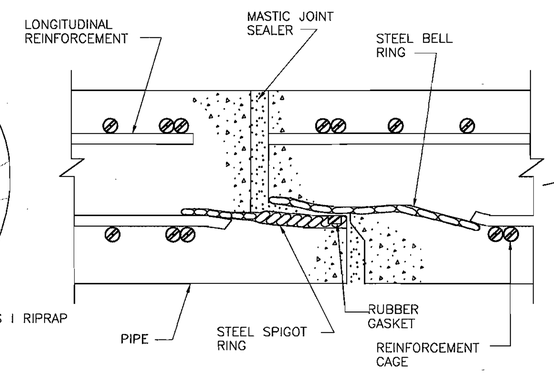

5/28 ASTM DESIGNATION C361

NTS

NOTE TO CONTRACTOR: ASTM C361 PIPE MAY BE DIFFICULT TO OBTAIN. ALLOW FOR AMPLE TIME PRIOR TO INSTALLATION TO ORDER PIPE FOR DELIVERY.

PERMANENT TURF CHECK DAM

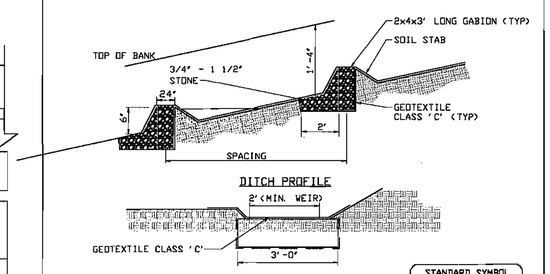

STANDARD SYMBOL

STANDARD GABION CHECK DAM DESIGN

SLOPE	SPACING
2% or less	80'
2. 1% to 4%	40'
4. 1% to 7%	25'
7. 1% to 10%	15'
over 10%	use lined waterway design

SEE SHEET 17 FOR LOCATIONS

Construction Specifications

1. Swales and ditches shall be prepared in accordance with the construction specifications described in Section A-2, Standards and Specifications for Temporary Swale.
2. The check dam shall be constructed as shown. The soil shall be placed so that it completely covers the width of the channel and keyed into the channel banks.
3. The top of the check dam shall be constructed so the the center is approximately 6" lower than the outer edges, forming a weir that water can flow across.
4. The maximum height of the check dam at the center shall not exced 6".
5. The check dam shall be lined with soil stabilization matting.
6. Accumulated sediment shall be removed when it has built up to 1/2 of the original height of the weir crest

U.S. DEPARTMENT OF AGRICULTURE SOIL CONSERVATION SERVICE	PAGE B - 8 - 3	MARYLAND DEPARTMENT OF ENVIRONMENT WATER MANAGEMENT ADMINISTRATION

6/28 CHECK DAM

NTS

AS-BUILT CERTIFICATION

I HEREBY CERTIFY THAT THE FACILITY SHOWN ON THIS PLAN WAS CONSTRUCTED AS SHOWN ON THE "AS-BUILT" PLANS AND MEETS THE APPROVED PLANS AND SPECIFICATIONS.

Signature _____ PE No. _____

Date _____

ENGINEER'S CERTIFICATE

" I certify that this plan pond construction and for sediment and erosion control represents a practical and workable plan based on my personal knowledge of the site conditions. This plan was prepared in accordance with the requirements of the Howard Soil Conservation District. I have notified the developer that he/she must engage a registered professional engineer to supervise pond construction and provide the Howard Soil Conservation District with an "as-built" plan of the pond within 30 days of completion.

Signature of Engineer (print name below signature) DAVID T. MARCIONI — Date 1/11/05

DEVELOPER'S CERTIFICATE

" I/We certify that all development and construction will be done according to these plans, and that any responsible personnel involved in the construction of this project will have a Certificate of Attendance at a Department of the Environment Approved Training Program for the Control of Sediment and Erosion before beginning the project. I also authorize periodic on-site inspection by the Howard Soil Conservation District." I shall engage a registered professional engineer to supervise pond construction and provide the Howard Soil Conservation District with an "as-built" plan of the pond within 30 days of completion.

Signature of Developer (print name below signature) GARY J. ARTHUR — Date 2-15-05

These plans have been reviewed for the Howard Soil Conservation District and meet the technical requirements for small pond construction, soil erosion and sediment control.

USDA - Natural Resources Conservation Service — Date: 1/25/05

These plans for small pond construction, soil erosion and sediment control meet the requirements of the Howard Soil Conservation District.

Howard SCD — Date 1/25/05

APPROVED: DEPARTMENT OF PLANNING AND ZONING

Chief, Development Engineering Division — Date 2/2/05

Chief, Division of Land Development — Date 2/4/05

Director — Date 2/10/05

PREPARED BY
URS
4 NORTH PARK DRIVE
HUNT VALLEY, MARYLAND
TEL: (410) 785-7220

STATE OF MARYLAND — DAVID THOMAS MARCIONI — No. 18154 — PROFESSIONAL ENGINEER — 01/11/05

DES: DTM/RKK				
DRN: RMC/HWC				
CHK: DTM/RKK				
DATE: 10/8/04	BY	NO.	REVISION	DATE

OWNER:
HOWARD COUNTY DEPARTMENT
RECREATION AND PARKS
7120 OAKLAND MILLS ROAD
COLUMBIA, MARYLAND 21046

DEVELOPER:
HOWARD COUNTY DEPARTMENT OF PUBLIC WORKS
9250 BENDIX ROAD
COLUMBIA, MARYLAND 21045

TAX MAP: 50	
GRID: 1&2	
ZONED: R-20 & R-SC	
PARCEL NO.: 364	
CENSUS TRACT: 6069.03	
WATER CODE: C06	
SEWER CODE: 7170900	

HIGH RIDGE PARK
BIORETENTION AND MISC. STORMWATER MANAGEMENT DETAILS

DEED REFERENCE: LIBER 8771, FOLIO 685
ELECTION DISTRICT NO. 6, HOWARD COUNTY, MARYLAND

SHEET 28 OF 39

SDP-05-19

SWM POND CONSTRUCTION SPECIFICATIONS

These specifications are appropriate to all ponds within the scope of the Standard for practice MD-378. All references to ASTM and AASHTO Specifications apply to the most recent version.

Site Preparation

Areas designated for borrow areas, embankment, and structural works shall be cleared, grubbed and stripped of topsoil. All trees, vegetation, roots and other objectionable material shall be removed. Channel banks and sharp breaks shall be sloped to no steeper than 1:1. All trees shall be cleared and grubbed within 15 feet of the toe of the embankment.

Areas to be covered by the reservoir will be cleared of all trees, brush, logs, fences, rubbish and other objectionable material unless otherwise designated on the plans. Trees, brush and stumps shall be cut approximately level with the ground surface. For dry stormwater management ponds, a minimum of a 25 foot radius around the inlet structure shall be cleared.

All cleared and grubbed material shall be disposed of outside and below the limits of the dam and reservoir as directed by the owner or his representative. When specified, a sufficient quantity of topsoil will be stockpiled in a suitable location for use on the embankment and other designated areas.

Earth Fill

Material–The fill material shall be taken from approved designated borrow areas. It shall be free of roots, stumps, wood, rubbish, stones greater than 6", frozen or other objectionable materials. Fill material for the center of the embankment and cut off trench shall conform to Unified Soil Classification GC, SC, CH, or CL and must have at least 30% passing the #200 sieve. Consideration may be given to the use of other materials in the embankment if designed by a geotechnical engineer. Such special designs must have construction supervised be a geotechnical engineer. Materials used in the outer shell of the embankment must have the capability to support vegetation of the quality required to prevent erosion of the embankment.

Placement–Areas on which fill is to be placed shall be scarified prior to placement of fill. Fill materials shall be placed in maximum 8 inch thick (before compaction) layers, which are to be continuous over the entire length of the fill. The most permeable borrow material shall be placed in the downstream portions of the embankment. The principal spillway must be installed concurrently with fill placement and not excavated into the embankment.

Compaction–The movement of the hauling and spreading equipment over the fill shall be controlled so that the entire surface of each lift shall be traversed by not less than one tread track of heavy equipment or compaction shall be achieved by a minimum of four complete passes of a sheepsfoot, rubber tired or vibratory roller. Fill material shall contain sufficient moisture to yield the required degree of compaction with the equipment used. The fill material shall contain sufficient moisture so that if formed into a ball it would not crumble, yet not be so wet that water can be squeezed out.When required by the reviewing agency the minimum required density shall not be less than 95% of maximum dry density with a moisture content within 2% of the optimum. Each layer of fill shall be compacted as necessary to obtain that density, and is to be certified by the Engineer at the time of construction. All compaction is to be determined by AASHTO Method T-99 (Standard Proctor).

Cut Off Trench – The cutoff trench shall be excavated into impervious material along or parallel to the centerline of the embankment as shown on the plans. The bottom width of the trench shall be governed by the equipment used for excavation, with the minimum width being four feet. The depth shall be at least four feet below existing grade or as shown on the plans. The side slopes of the trench shall be 1 to 1 or flatter. The backfill shall be compacted with construction equipment, rollers, or hand tampers to assure maximum density and minimum permeability.

Embankment Core – The core shall be parallel to the centerline of the embankment as shown on the plans. The top width of the core shall be a minimum of four feet. The height shall extend up to at least the 10-year water elevation or as shown or the plans. The side slopes shall be 1:1 or flatter. The core shall be compacted with construction equipment, rollers, or hand tampers to assure maximum density and minimum permeability. In addition, the core shall be placed concurrently with the outer shell of the embankment.

Structure Backfill

Backfill adjacent to pipes or structures shall be of the type and quality conforming to that specified for the adjoining fill material. The fill shall be placed in horizontal layers not to other manually directed compaction equipment. The material needs to fill completely all spaces under and adjacent to the pipe. At no time during the backfilling operation shall driven equipment be allowed to operate closer than four feet, measured horizontally, to any part of a structure. Under no circumstances shall equipment be driven over any part of a concrete structure or pipe, unless there is a compacted fill of 24" or greater over the structure or pipe. Structure backfill may be flowable fill meeting the requirements of the Maryland Department of Transportation, State Highway Administration Standard Specifications for construction and Materials, Section 313 as modified. The mixture shall have a 100-200 psi; 28 day unconfined compressive strength. The flowable fill shall have a minimum pH of 4.0 and a minimum resistivity of 2,000 ohm-cm. Material shall be placed such that a minimum of 6"(measured perpendicular to the outside of the pipe) of flowable fill shall be under (bedding), over and, on the sides of the pipe. It only needs to extend up to the spring line for rigid conduits. Average slump of the fill shall be 7" to assure flowability of the material. Adequate measures shall be taken (sand bags, etc.) to prevent floating the pipe. When using the flowable fill, all metal pipe shall be bituminous coated. Any adjoining soil fill shall be placed in horizontal layers not to exceed four inches in thickness and compacted by hand tampers or other manually directed compaction equipment. The material shall completely fill all voids adjacent to the flowable fill zone. At no time during the backfilling operation shall driven equipment be allowed to operate closer than four feet, measured horizontally, to any part of a structure. Under no circumstances shall equipment be driven over any part of a structure or pipe unless there is a compacted fill of 24" or greater over the structure or pipe. Backfill material outside the structural backfill (flowable fill) zone shall be of a type and quality conforming to that specified for the core of the embankment or other embankment materials.

Pipe Conduits

All pipes shall be circular in cross section.

Corrugated Metal Pipe – All of the following criteria shall apply for corrugate metal pipe:

1. Materials – (Polymer Coated Steel Pipe) – Steel pipes with polymeric coatings shall have a minimum coating thickness of 0.01 inch (10 mil) on both sides of the pipe. This pipe and its appurtenances shall conform to the requirements of AASHTO Specifications M-245 & M-246 with watertight coupling bands or flanges.

Materials – (Aluminum Coated Steel Pipe) – This pipe and its appurtenances shall conform to the requirements of AASHTO Specification M-274 with watertight coupling bands or flanges. Aluminum Coated Steel Pipe, when used with flowable fill or when soil and/or water conditions warrant the need for increased durability, shall be fully bituminous coated per requirements of AASHTO M-190 Type A. Any aluminum coating damaged or otherwise removed shall be replaced with cold applied bituminous coating compound. Aluminum surfaces that are to be in contact with concrete shall be painted with one coat of zinc chromate primer or two coats of asphalt.

Materials – (Alumium Pipe) – This pipe and its appurtenances shall conform to the requirements of AASHTO Specification M-196 or M-211 with watertight coupling bands or flanges. Aluminum Pipe, when used with flowable fill or when soil and/or soil conditions warrant for increased durability, shall be fully bituminous coated per requirements of AASHTO Specification M-190 Type A. Aluminum surfaces that are to be in contact with concrete shall be painted with one coat of zinc chromate primer or two coats of asphalt. Hot dip galvanized bolts may be used for connections. The pH of the surrounding soils shall be between 4 and 9.

2. Coupling bands, anti-seep collars, end sections, etc., must be composed of the same material and coatings as the pipe. Metals must be insulated from dissimilar materials with use of rubber or plastic insulating materials at least 24 mils in thickness.

3. Connections – All connections with pipes must be completely watertight. The drain pipe or barrel connection to the riser shall be welded all around when the pipe and riser are metal. Anti-seep collars shall be connected to the pipe in such a manner as to be completely watertight. Dimple bands are not considered to be watertight All connections shall use a rubber or neoprene gasket when joining pipe sections. The end of each pipe shall be re-rolled an adequate number of corrugations to accommodate the bandwidth. The following type connections are acceptable for pipe less than 24 inches in diameter: flanges on both ends of the pipe with a circular 3/8 inch closed cell neoprene gasket, pre-punched to the flange bolt circle, sandwiched between adjacent flanges; a 12-inch wide standard lap type band with 12-inch wide by 3/8-inch thick closed cell circular neoprene gasket; and a 12-inch wide hugger type band with o-ring gaskets having a minimum diameter of 1/2 -inch greater than the corrugation depth. Pipes 24 inches in diameter and larger shall be connected by a 24-inch long annular corrugated band using a minimum of 4 (four) rods and lugs, 2 one each connecting pipe end. A 24-inch wide by 3/8-inch closed cell circular neoprene gasket will be installed with 12 inches on the end of each pipe. Flanged joint is with 3/8 inch closed cell gaskets the full width of the flange is also acceptable. Helically corrugated pipe shall have either continuously welded seams or have lock seams with internal caulking or a neoprene bead.

4. Bedding – The pipe shall be firmly and uniformly bedded throughout its entire length. Where rock or soft, spongy or other unstable soil in encountered, all such material shall be removed and replaced with suitable earth compacted to provide adequate support.

5. Backfilling shall conform to "Structure Backfill".

6. Other details (Anti-seep collars, valves, etc.) shall be as shown on the drawings.

Reinforced Concrete Pipe – All of the following criteria shall apply for reinforced concrete pipe:

1. Materials–Reinforced concrete pipe shall have bell and spigot joints with rubber gaskets and shall equal or exceed ASTM C-361.

2. Bedding – Reinforced concrete pipe conduits shall be laid in concrete bedding cradle for their entire length. This bedding cradle shall consist of high slump concrete placed under the pipe and up the sides of the pipe at least 50% of its outside diameter with a minimum thickness of 6 inches. Where a concrete cradle in not needed for structural reasons, flowable fill may be used as described in the "Structure Backfill" section of this standard. Gravel bedding is not permitted.

3. Laying pipe – Bell and spigot pipe shall be placed with the bell and end upstream. Joints shall be made in accordance with recommendations of the manufacturer of the material. After the joints are sealed for the entire line, the bedding shall the joints are sealed for the entire line, the bedding shall be placed so that all spaces under the pipe are filled. Care shall be exercised to prevent any deviation from the Care shall be exercised to prevent any deviation from the original line and grade of the pipe. The first joint must be located within 2 feet from the riser. be located within 4 feet from the riser.

4. Backfilling shall conform to "Structure Backfill."

5. Other details (anti-seep collars, valves, etc.) shall be as shown on the drawings.

Plastic Pipe – All of the following criteria shall apply for plastic pipe:

1. Materials – PVC pipe shall be PVC-1120 or PVC-1220 conforming to ASTM D-1785 or ASTM D-2241. Corrugated High Density Polyethylene (HDPE) pipe, couplings and fittings, shall conform to the following: 4" - 10" pipe shall meet the requirements of AASHTO M-252 Type S, and 12" through 24" shall meet the requirements of AASHTO M-294 Type S.

2. Joints and connections to anti-seep collars shall be completely watertight.

3. Bedding – The pipe shall be firmly and uniformly bedded throughout its entire length. Where rock or soft, spongy or other unstable soil is encountered, all such material shall be removed and replaced with suitable earth compacted to provide adequate support.

4. Backfilling shall conform to "Structure Backfill".

5. Other details (Anti-seep collars, valves, etc.) shall be as shown on the drawings. Drainage Diaphragms – When a drainage diaphragm is used, registered professional engineer will supervise the design and construction inspection.

SEQUENCE OF CONSTRUCTION AND INSPECTOR'S CHECK-OFF LIST FOR SWM FACILITIES

STAGE	DEVELOPER'S/ENGINEER APPROVAL		INSPECTOR'S APPROVAL	
	INITIALS	DATE	INITIALS	DATE
1. PRE-CONSTRUCTION MEETING. *				
2. SCE, TREE PROTECTION, AND POND EXCAVATION TO THE BOTTOM ELEVATION 231.00				
3. INSTALLATION OF STRUCTURES AND ASSOCIATED STORM DRAINAGE: * A.FOOTING SUBGRADE PRIOR TO POURING. *				
B.FOOTING FORMED AND STEEL SET PRIOR TO POURING. *				
C.STRUCTURE SIDES FORMED AND STEEL SET PRIOR TO POURING. *				
D.PRIOR TO TOP SLAB AND MANHOLES BEING SET ON, INSPECTOR MUST INSPECT ALL CAST-IN-PLACE AND PRE-CAST STRUCTURES FOR PROPER ASSEMBLY. *				
4. SEDIMENT BASIN CONSTRUCTION:* A.INSTALLATION OF ORIFICE PLATE				
B.INSTALLATION OF DRAW-DOWN DEVICE				
5. SITE IS PERMANENTLY STABILIZED, ALL SEDIMENT AND DEBRIS REMOVED FROM THE STRUCTURE AND SEDIMENT BASIN CONVERTED INTO STORMWATER MANAGEMENT POND:* A. POND EXCAVATED TO THE BOTTOM ELEVATIONS INDICATED ON THE PLAN SHEET.				
B. ORIFICE PLATE IS REMOVED				
C. DRAW-DOWN DEVICE IS REMOVED AND UNDERDRAIN PIPE INSTALLED.				
6. FINAL INSPECTION. *				

NOTE: SEE CONSTRUCTION SPECIFICATIONS FOR DETAILED REQUIREMENTS.

* MANDATORY NOTIFICATION/APPROVAL OF INSPECTOR PRIOR TO PROCEEDING WITH NEXT STAGE.

4035M-4 (REV 4-89)

Concrete

Concrete shall meet the requirements of Maryland Department of Transportation, State Highway Administration Standard Specifications for Construction and Materials, Section 414, Mix No. 3.

Rock Riprap

Rock riprap shall meet the requirements of Maryland Department of Transportation, State Highway Administration Standard Specifications for Construction and Materials, Section 311. Geotextile shall be placed under all riprap and shall meet the requirements of Maryland Department of Transportation, State Highway Administration Standard Specifications for Construction and Materials, Section 921.09, Class C.

Care of Water During Construction

All work on permanent structures shall be carried out in areas free from water. The Contractor shall construct and maintain all temporary dikes, levees, cofferdams, drainage channels, and stream diversions necessary to protect the areas to be occupied by the permanent works. The contractor shall also furnish, install, operate, and maintain all necessary pumping and other equipment required for removal of water from the various parts of the work and for maintaining the excavations, foundation, and other parts of the work free from water as required or directed by the engineer for constructing each part of the work. After having served their purpose, all temporary protective works shall be removed or leveled and graded to the extent required or prevent obstruction in any degree whatsoever of the flow of water to the spillway or outlet works and so as not to interfere in any way with the operation or maintenance of the structure. Stream diversions shall be maintained until the full flow can be passed through the permanent works. The removal of water from the required excavation and the foundation shall be accomplished in a manner and to the extent that will maintain stability of the excavated slopes and bottom of required excavations and will allow satisfactory performance of all construction operations. During the placing and compacting of material in required excavations, the water level at the locations being refilled shall be maintained below the bottom of the excavation at such locations which may require draining the water to sumps from which the water shall be pumped.

Stabilization

All borrow areas shall be graded to provide proper drainage and left in a sightly condition. All exposed surfaces of the embankment, spillway, spoil and borrow areas, and berms shall be stabilized by seeding, liming, fertilizing and mulching in accordance with the Natural Resources Conservation Service Standards and Specifications for Critical Area Planting (MD-342) or as shown on the accompanying drawings.

Erosion and Sediment Control

Construction operations will be carried out in such a manner that erosion will be controlled and water and air pollution minimized. State and local laws concerning pollution abatement will be followed. Construction plans shall detail erosion and sediment control measures.

OPERATION AND MAINTENANCE

An operation and maintenance plan in accordance with Local or State Regulations will be prepared for all ponds. As a minimum, the dam inspection checklist located in Appendix A shall be included as part of the operation and maintenance plan and performed at least annually. Written records of maintenance and major repairs needs to be retained in a file. The issuance of a Maintenance and Repair Permit for any repairs or maintenance that involves the modification of the dam or spillway from its original design and specifications is required. A permit is also required for any repairs or reconstruction that involve a substantial portion of the structure. All indicated repairs are to be made as soon as practical.

AS-BUILT CERTIFICATION

I HEREBY CERTIFY THAT THE FACILITY SHOWN ON THIS PLAN WAS CONSTRUCTED AS SHOWN ON THE "AS-BUILT" PLANS AND MEETS THE APPROVED PLANS AND SPECIFICATIONS.

Signature _____ PE No. _____

Date _____

ENGINEER'S CERTIFICATE

" I certify that this plan pond construction and for sediment and erosion control represents a practical and workable plan based on my personal knowledge of the site conditions. This plan was prepared in accordance with the requirements of the Howard Soil Conservation District. I have notified the developer that he/she must engage a registered professional engineer to supervise pond construction and provide the Howard Soil Conservation District with an "as-built" plan of the pond within 30 days of completion.

Signature of Engineer (print name below signature) DAVID F. MORICONI — Date 1/1/05

APPROVED: DEPARTMENT OF PLANNING AND ZONING

Chief, Development Engineering Division — Date 2/2/05

Chief, Division of Land Development — Date 2/4/05

Director — Date 2/10/05

DEVELOPER'S CERTIFICATE

" I/We certify that all development and construction will be done according to these plans, and that any responsible personnel involved in the construction of this project will have a Certificate of Attendance at a Department of the Environment Approved Training Program for the Control of Sediment and Erosion before beginning the project. I also authorize periodic on-site inspection by the Howard Soil Conservation District." I shall engage a registered professional engineer to supervise pond construction and provide the Howard Soil Conservation District with an "as-built" plan of the pond within 30 days of completion.

Signature of Developer (print name below signature) GARY J. ARTHUR — Date 2-15-05

These plans have been reviewed for the Howard Soil Conservation District and meet the technical requirements for small pond construction, soil erosion and sediment control.

USDA – Natural Resources Conservation Service — Date: 1/25/05

These plans for small pond construction, soil erosion and sediment control meet the requirements of the Howard Soil Conservation District.

Howard SCD — Date 1/25/05

PREPARED BY
URS
4 NORTH PARK DRIVE
HUNT VALLEY, MARYLAND
TEL: (410) 785-7220

STATE OF MARYLAND — DAVID THOMAS MORICONI — No. 16156 — PROFESSIONAL ENGINEER — 1/11/05

DES: DTM/RKK	
DRN: RMC/HWC	
CHK: DTM/RKK	
DATE: 10/8/04	

BY	NO.	REVISION	DATE

OWNER:
HOWARD COUNTY DEPARTMENT
RECREATION AND PARKS
7120 OAKLAND MILLS ROAD
COLUMBIA, MARYLAND 21046

DEVELOPER:
HOWARD COUNTY DEPARTMENT OF PUBLIC WORKS
9250 BENDIX ROAD
COLUMBIA, MARYLAND 21045

TAX MAP: 50
GRID: 1&2
ZONED: R-20 & R-SC
PARCEL NO.: 364
CENSUS TRACT: 6069.03
WATER CODE: C06
SEWER CODE: 7170900

HIGH RIDGE PARK

STORMWATER MANAGEMENT NOTES

DEED REFERENCE: LIBER 8771, FOLIO 685
ELECTION DISTRICT NO. 6, HOWARD COUNTY, MARYLAND

MAP SYMBOL	MAPPING UNIT	SOIL GROUP
BeB2	BELTSVILLE SILT LOAM, 1 TO 5% SLOPES	C
CmB2	CHILLUM SILT LOAM, 1 TO 5% SLOPES	C
CmC2	CHILLUM SILT LOAM, 5 TO 10% SLOPES	C
ClD2	CHILLUM GRAVELLY LOAM, 10 TO 15% SLOPES	C
ClC3	CHILLUM GRAVELLY LOAM, 5 TO 10% SLOPES	C
Fa	FALLSINGTON LOAM	D
IuB	IUKA LOAM, LOCAL ALLUVIUM, 1 TO 5% SLOPES	C
MlB2	MANOR LOAM, 3 TO 8% SLOPES	B
MlE	MANOR LOAM, 25 TO 45% SLOPES	B
MnF	MANOR VERY STONY LOAM, 25 TO 60% SLOPES	B
SfC2	SASSAFRASS GRAVELLY SANDY LOAM, 5 TO 10% SLOPES	B
SfD2	SASSAFRASS GRAVELLY SANDY LOAM, 10 TO 15% SLOPES	B

DRAINAGE AREAS

AREA	ACRES	RCN	% IMPERVIOUS AREA
1	28.2	75.3	18.8
2	25.3	70.4	12.9
3	65.1	64.2	2.5
4	8.0	57.8	0

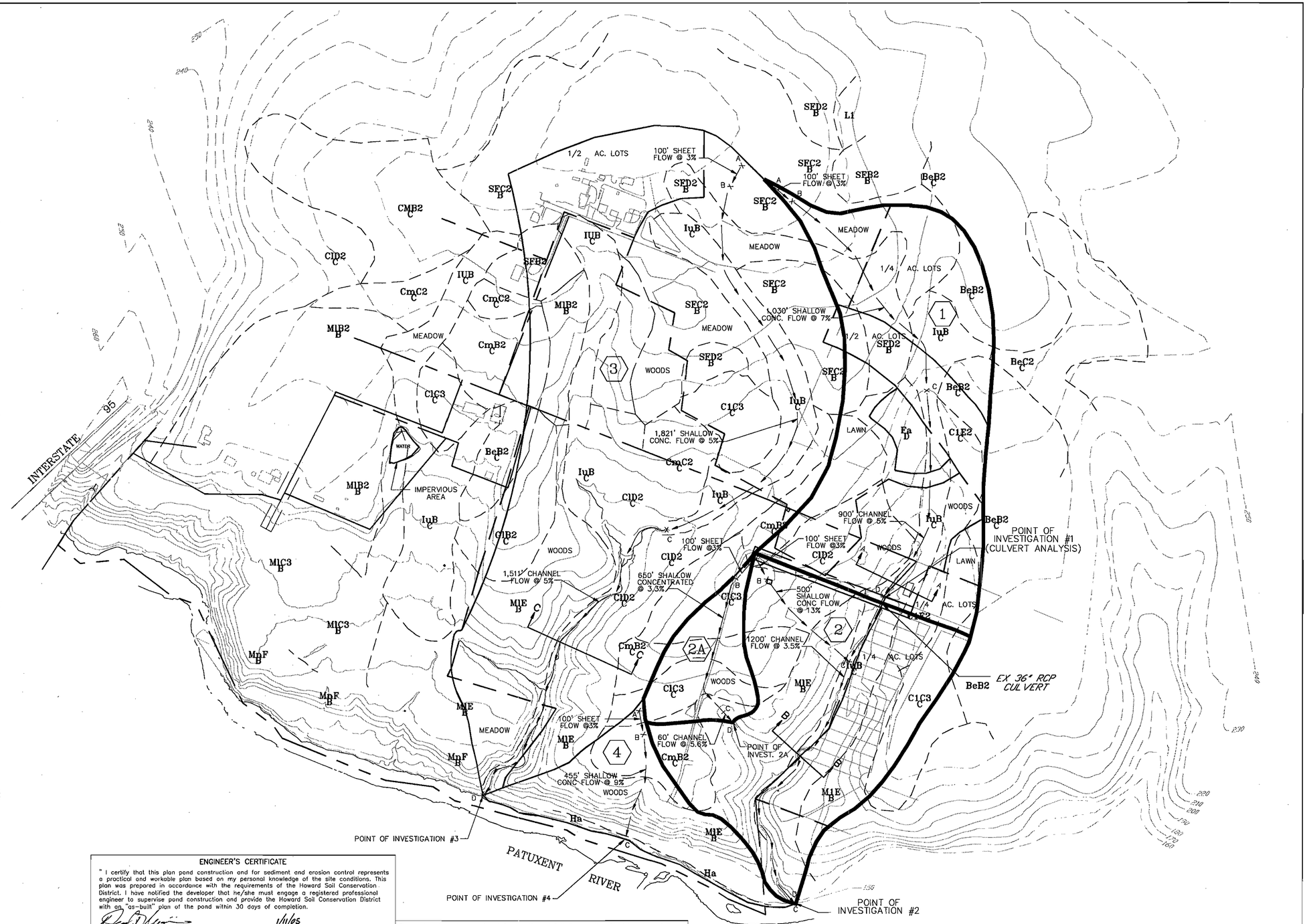

PLAN
SCALE: 1" = 200'
200' 0 200' 400' 600'

ENGINEER'S CERTIFICATE

" I certify that this plan pond construction and for sediment and erosion control represents a practical and workable plan based on my personal knowledge of the site conditions. This plan was prepared in accordance with the requirements of the Howard Soil Conservation District. I have notified the developer that he/she must engage a registered professional engineer to supervise pond construction and provide the Howard Soil Conservation District with an "as-built" plan of the pond within 30 days of completion.

Signature of Engineer (print name below signature) DAVID T. MORICONI — Date 1/11/05

DEVELOPER'S CERTIFICATE

" I/We certify that all development and construction will be done according to these plans, and that any responsible personnel involved in the construction of this project will have a Certificate of Attendance at a Department of the Environment Approved Training Program for the Control of Sediment and Erosion before beginning the project. I also authorize periodic on-site inspection by the Howard Soil Conservation District." I shall engage a registered professional engineer to supervise pond construction and provide the Howard Soil Conservation District with an "as-built" plan of the pond within 30 days of completion.

Signature of Developer (print name below signature) GARY J. ARTHUR — Date 2-15-05

These plans have been reviewed for the Howard Soil Conservation District and meet the technical requirements for small pond construction, soil erosion and sediment control.

USDA – Natural Resources Conservation Service — Date: 1/25/05

These plans for small pond construction, soil erosion and sediment control meet the requirements of the Howard Soil Conservation District.

Howard SCD — Date 1/25/05

APPROVED: DEPARTMENT OF PLANNING AND ZONING

Chief, Development Engineering Division — Date 2/2/05

Chief, Division of Land Development — Date 2/4/05

Director — Date 2/10/05

PREPARED BY
URS
4 NORTH PARK DRIVE
HUNT VALLEY, MARYLAND
TEL: (410) 785-7220

STATE OF MARYLAND — DAVID THOMAS MORICONI — REGISTERED PROFESSIONAL ENGINEER — 1/11/05

DES: DTM/RKK				
DRN: RMC/HWC				
CHK: DTM/RKK				
DATE: 10/8/04	BY	NO.	REVISION	DATE

OWNER:
HOWARD COUNTY DEPARTMENT
RECREATION AND PARKS
7120 OAKLAND MILLS ROAD
COLUMBIA, MARYLAND 21046

DEVELOPER:
HOWARD COUNTY DEPARTMENT OF PUBLIC WORKS
9250 BENDIX ROAD
COLUMBIA, MARYLAND 21045

TAX MAP: 50
GRID: 1&2
ZONED: R-20 & R-SC
PARCEL NO.: 364
CENSUS TRACT: 6069.03
WATER CODE: C06
SEWER CODE: 7170900

HIGH RIDGE PARK

PRE-DEVELOPMENT DRAINAGE AREA MAP

DEED REFERENCE: LIBER 8771, FOLIO 685
ELECTION DISTRICT NO. 6, HOWARD COUNTY, MARYLAND

SHEET 30 OF 39

SDP-05-19

MAP SYMBOL	MAPPING UNIT	SOIL GROUP
BeB2	BELTSVILLE SILT LOAM, 1 TO 5% SLOPES	C
CmB2	CHILLUM SILT LOAM, 1 TO 5% SLOPES	C
CmC2	CHILLUM SILT LOAM, 5 TO 10% SLOPES	C
ClD2	CHILLUM GRAVELLY LOAM, 10 TO 15% SLOPES	C
ClC3	CHILLUM GRAVELLY LOAM, 5 TO 10% SLOPES	C
Fa	FALLSINGTON LOAM	D
IuB	IUKA LOAM, LOCAL ALLUVIUM, 1 TO 5% SLOPES	C
MlB2	MANOR LOAM, 3 TO 8% SLOPES	B
MlE	MANOR LOAM, 25 TO 45% SLOPES	B
MnF	MANOR VERY STONY LOAM, 25 TO 60% SLOPES	B
SfC2	SASSAFRASS GRAVELLY SANDY LOAM, 5 TO 10% SLOPES	B
SfD2	SASSAFRASS GRAVELLY SANDY LOAM, 10 TO 15% SLOPES	B

DRAINAGE AREAS

AREA	ACRES	RCN	% IMPERVIOUS AREA
1	26.4	75	19.6
2	20.2	72	16.4
3	65.3	65	3.5
4	8.0	59	1.5
5A	3.65	74	8.8
5B	1.39	95	86.3
5C	.	.	.

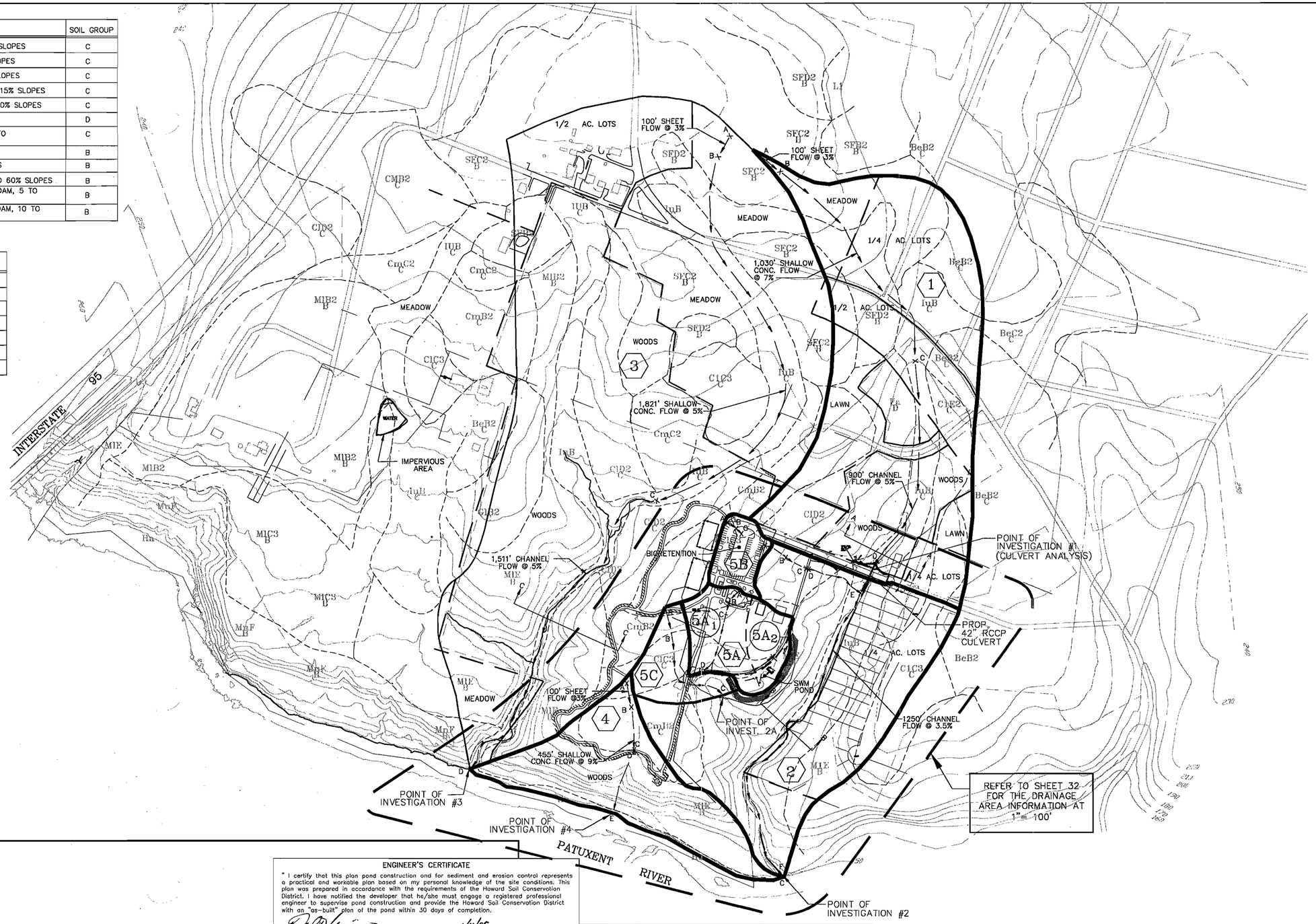

PLAN
SCALE: 1" = 200'
200' 0 200' 400' 600'

ENGINEER'S CERTIFICATE

" I certify that this plan pond construction and for sediment and erosion control represents a practical and workable plan based on my personal knowledge of the site conditions. This plan was prepared in accordance with the requirements of the Howard Soil Conservation District. I have notified the developer that he/she must engage a registered professional engineer to supervise pond construction and provide the Howard Soil Conservation District with an "as-built" plan of the pond within 30 days of completion.

Signature of Engineer (print name below signature) DAVID T. MORICONI — Date 1/11/05

DEVELOPER'S CERTIFICATE

" I/We certify that all development and construction will be done according to these plans, and that any responsible personnel involved in the construction of this project will have a Certificate of Attendance at a Department of the Environment Approved Training Program for the Control of Sediment and Erosion before beginning the project. I also authorize periodic on-site inspection by the Howard Soil Conservation District." I shall engage a registered professional engineer to supervise pond construction and provide the Howard Soil Conservation District with an "as-built" plan of the pond within 30 days of completion.

Signature of Developer (print name below signature) GARY J. ARTHUR — Date 2-15-05

These plans have been reviewed for the Howard Soil Conservation District and meet the technical requirements for small pond construction, soil erosion and sediment control.

USDA – Natural Resources Conservation Service — Date: 1/25/05

These plans for small pond construction, soil erosion and sediment control meet the requirements of the Howard Soil Conservation District.

Howard SCD — Date 1/25/05

APPROVED: DEPARTMENT OF PLANNING AND ZONING

Chief, Development Engineering Division — Date 2/2/05

Chief, Division of Land Development — Date 2/4/05

Director — Date 2/16/05

PREPARED BY
URS
4 NORTH PARK DRIVE
HUNT VALLEY, MARYLAND
TEL: (410) 785-7220

STATE OF MARYLAND — DAVID THOMAS MORICONI — No. 18153 — REGISTERED PROFESSIONAL ENGINEER — 1/11/05

DES: DTM/RKK				
DRN: RMC/HWC				
CHK: DTM/RKK				
DATE: 10/8/04	BY	NO.	REVISION	DATE

OWNER:
HOWARD COUNTY DEPARTMENT
RECREATION AND PARKS
7120 OAKLAND MILLS ROAD
COLUMBIA, MARYLAND 21046

DEVELOPER:
HOWARD COUNTY DEPARTMENT OF PUBLIC WORKS
9250 BENDIX ROAD
COLUMBIA, MARYLAND 21045

TAX MAP: 50	
GRID: 1&2	
ZONED: R-20 & R-SC	
PARCEL NO.: 364	
CENSUS TRACT: 6069.03	
WATER CODE: C06	
SEWER CODE: 7170900	

HIGH RIDGE PARK

POST-DEVELOPMENT DRAINAGE AREA MAP

DEED REFERENCE: LIBER 8771, FOLIO 685
ELECTION DISTRICT NO. 6, HOWARD COUNTY, MARYLAND

SDP-05-19

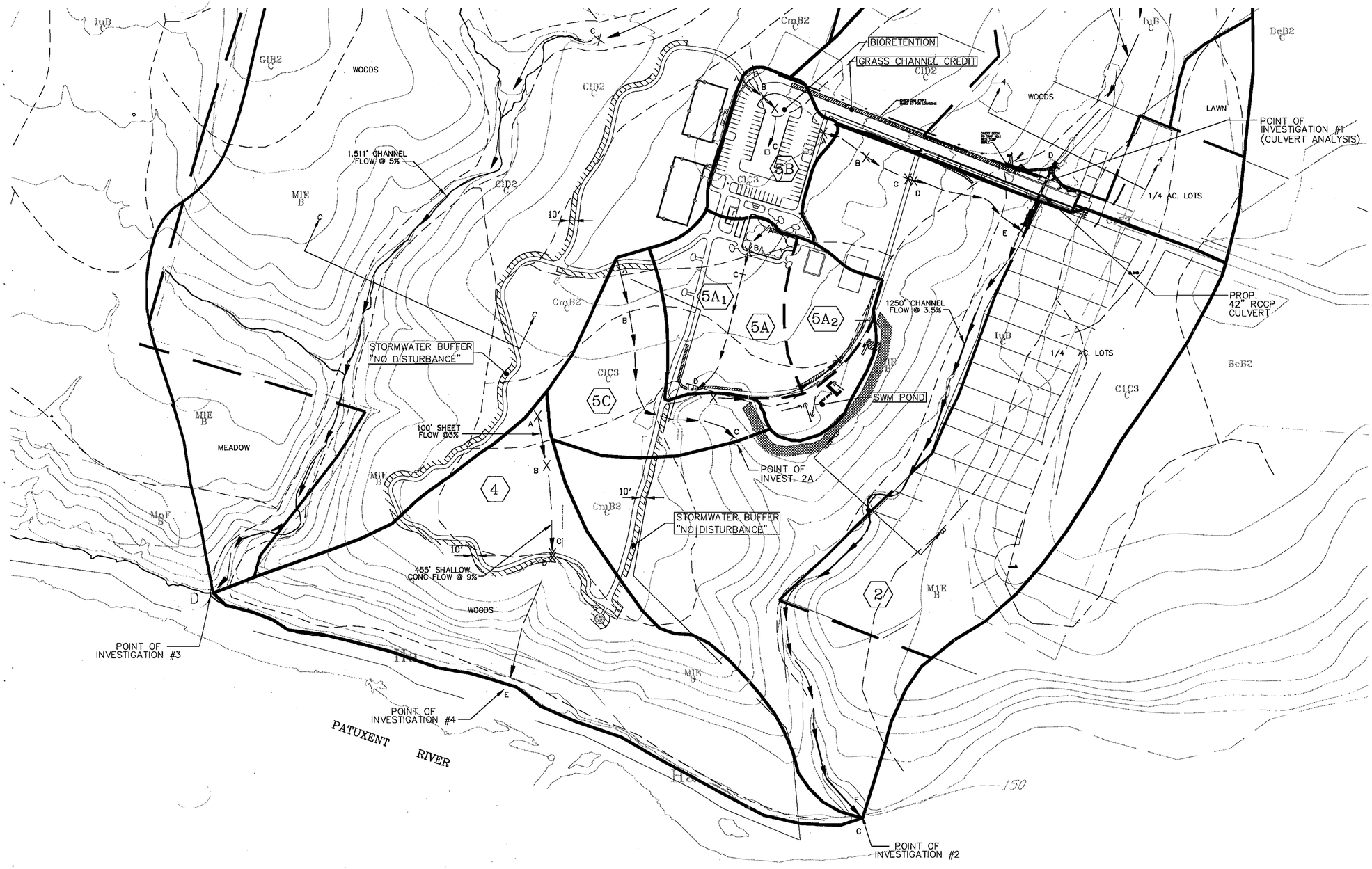

PLAN
SCALE: 1" = 100'

100' 0 100' 200' 300'

APPROVED: DEPARTMENT OF PLANNING AND ZONING

Chief, Development Engineering Division	Date 2/2/05
Chief, Division of Land Development	Date 2/4/05
Director	Date 2/16/05

PREPARED BY
URS
4 NORTH PARK DRIVE
HUNT VALLEY, MARYLAND
TEL: (410) 785-7220

STATE OF MARYLAND
DAVID THOMAS MORGAN
No. 19153
REGISTERED
PROFESSIONAL ENGINEER
1/11/05

DES: DTM/RKK				
DRN: RMC/HWC				
CHK: DTM/RKK				
DATE: 10/8/04	BY	NO.	REVISION	DATE

OWNER:
HOWARD COUNTY DEPARTMENT
RECREATION AND PARKS
7120 OAKLAND MILLS ROAD
COLUMBIA, MARYLAND 21046

DEVELOPER:
HOWARD COUNTY DEPARTMENT OF PUBLIC WORKS
9250 BENDIX ROAD
COLUMBIA, MARYLAND 21045

TAX MAP: 50	
GRID: 1&2	
ZONED: R-20 & R-SC	
PARCEL NO.: 364	
CENSUS TRACT: 6069.03	
WATER CODE: C06	
SEWER CODE: 7170900	

HIGH RIDGE PARK

POST-DEVELOPMENT DRAINAGE AREA MAP

DEED REFERENCE: LIBER 8771, FOLIO 685
ELECTION DISTRICT NO. 6, HOWARD COUNTY, MARYLAND

SHEET 32 OF 39

SDP-05-19

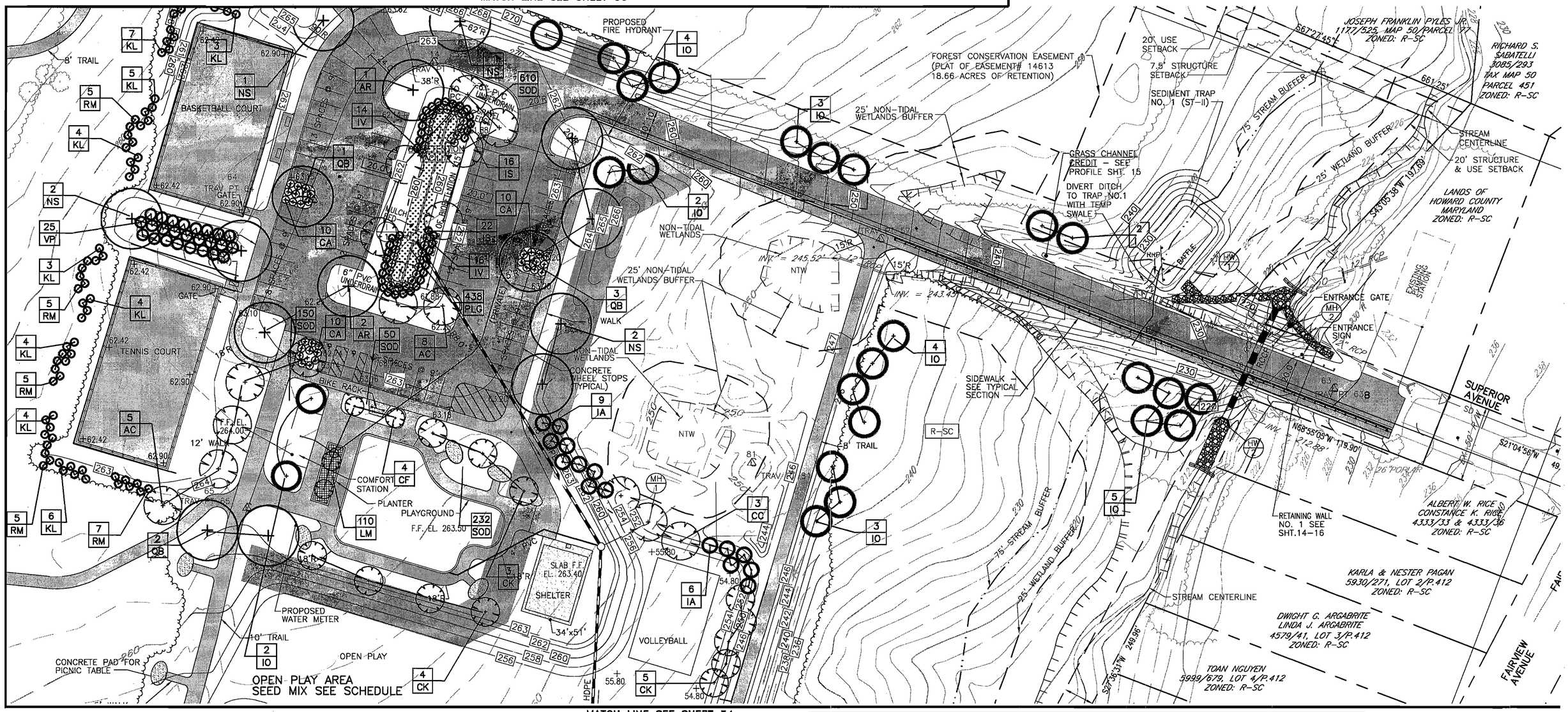

NOTES:
1. SEE SHEET 36 FOR GENERAL PLANTING NOTES AND DETAILS.
2. SEE SHEET 31 FOR STORMWATER MANAGEMENT FACILITY SEED MIX NO.1 AND FOR BIORETENTION PLUG SCHEDULE
3. PLANS FOR LANDSCAPE PURPOSES ONLY.

LANDSCAPE PLANT SCHEDULE

KEY	QTY	BOTANICAL NAME	COMMON NAME	SIZE	ROOT	SPACING	NOTES
AC	13	AMELANCHIER CANADENSIS	SHADBLOW SERVICEBERRY	7' HT	B&B	25' OC	CLUMP FORM
AS	5	ACER SACCHARUM	SUGAR MAPLE	3" CAL	B&B	40' OC	
AR	7	ACER RUBRUM 'RED SUNSET'	RED SUNSET MAPLE	3" CAL	B&B	40' OC	
CB	10	COTINUS OBOVATUS	AMERICAN SMOKETREE	2.5" CAL	B&B	25' OC	
CC	4	CERCIS CANADENSIS	EASTERN REDBUD	2.5" CAL	B&B	25' OC	
CF	4	CERCIS CANADENSIS 'FOREST PANSY'	FOREST PANSY REDBUD	2.5" CAL	B&B	20' OC	SPECIMEN
CK	15	CLADRASTIS KENTUKEA	AMERICAN YELLOWWOOD	3" CAL	B&B	30' OC	
IA	15	ILEX X AQUIPERNYI	DRAGON LADY HOLLY	5' HT	B&B	20' OC	
IO	25	ILEX OPACA 'MISS HELEN'	AMERICAN HOLLY	6' HT	B&B	25' OC	INCLUDES 3 MALE ONLY
IS	38	ILEX VOMITORIA 'SCHILLINGS'	SCHILLINGS YAUPON HOLLY	24" HT	CONT	5' OC	
IV	30	ILEX VERTICILLATA 'RED SPRITE'	RED SPRITE WINTERBERRY	24" HT	CONT	5' OC	
KL	54	KALMIA LATIFOLIA 'ALBA'	WHITE MOUNTAIN LAUREL	24" HT	CONT	5' OC	
NS	6	NYSSA SYLVATICA	BLACK GUM	3" CAL	B&B	40' OC	
PF	6	PINUS STROBUS 'FASTIGIATA'	COLUMNAR WHITE PINE	8' HT	B&B	25' OC	
CA	30	COTONEASTER APICULATUS	CRANBERRY COTONEASTER	18" HT	CONT	5' OC	
QB	6	QUERCUS BOREALIS	NORTHERN RED OAK	3" CAL	B&B	40' OC	
RM	27	RHODODENDRON MAXIMUM	GREAT RHODODENDRON	24" HT	CONT	8' OC	
LM	110	LIRIOPE MUSCARI 'VARIEGATA'	VARIEGATED LIRIOPE	1 GAL	CONT	24" OC	
VP	25	VIBURNUM X BURKWOODII	BURKWOOD VIBURNUM	24" HT	CONT	8' OC	
PLG	438	BIORETENTION PLUGS: SEE SCHEDULE ON SHEET 31					
SWM	1278 SY	STORMWATER MANAGEMENT MIX: SEE SCHEDULE ON SHEET 31					
SOD	1042 SY	SOD: TALL FESCUE					
SEED	1.7 AC	OPEN PLAY AREA SEED MIX: SEE SCHEDULE ON SHEET 31					

30 0 15 30 60
SCALE IN FEET

APPROVED: DEPARTMENT OF PLANNING AND ZONING

Chief, Development Engineering Division — Date 2/2/05

Chief, Division of Land Development — Date 2/4/05

Director — Date 2/10/05

PREPARED BY
URS
4 NORTH PARK DRIVE
HUNT VALLEY, MARYLAND
TEL: (410) 785-7220

STATE OF MARYLAND — BRIAN THOMAS KOCHER — No. 29515 — PROFESSIONAL ENGINEER — 2/11/05

DES: RKK	
DRN: RMC/VH	
CHK: RKK	
DATE: 10/8/04	

BY.	NO.	REVISION	DATE

OWNER:
HOWARD COUNTY DEPARTMENT
RECREATION AND PARKS
7120 OAKLAND MILLS ROAD
COLUMBIA, MARYLAND 21046

DEVELOPER:
HOWARD COUNTY DEPARTMENT OF PUBLIC WORKS
9250 BENDIX ROAD
COLUMBIA, MARYLAND 21045

TAX MAP: 50
GRID: 1&2
ZONED: R-20 & R-SC
PARCEL NO.: 364
CENSUS TRACT: 6069.03
WATER CODE: C06
SEWER CODE: 7170900

HIGH RIDGE PARK

LANDSCAPE PLAN

DEED REFERENCE: LIBER 8771, FOLIO 685
ELECTION DISTRICT NO. 6, HOWARD COUNTY, MARYLAND

SHEET 33 OF 39

SDP-05-19

MATCH LINE SEE SHEET 33

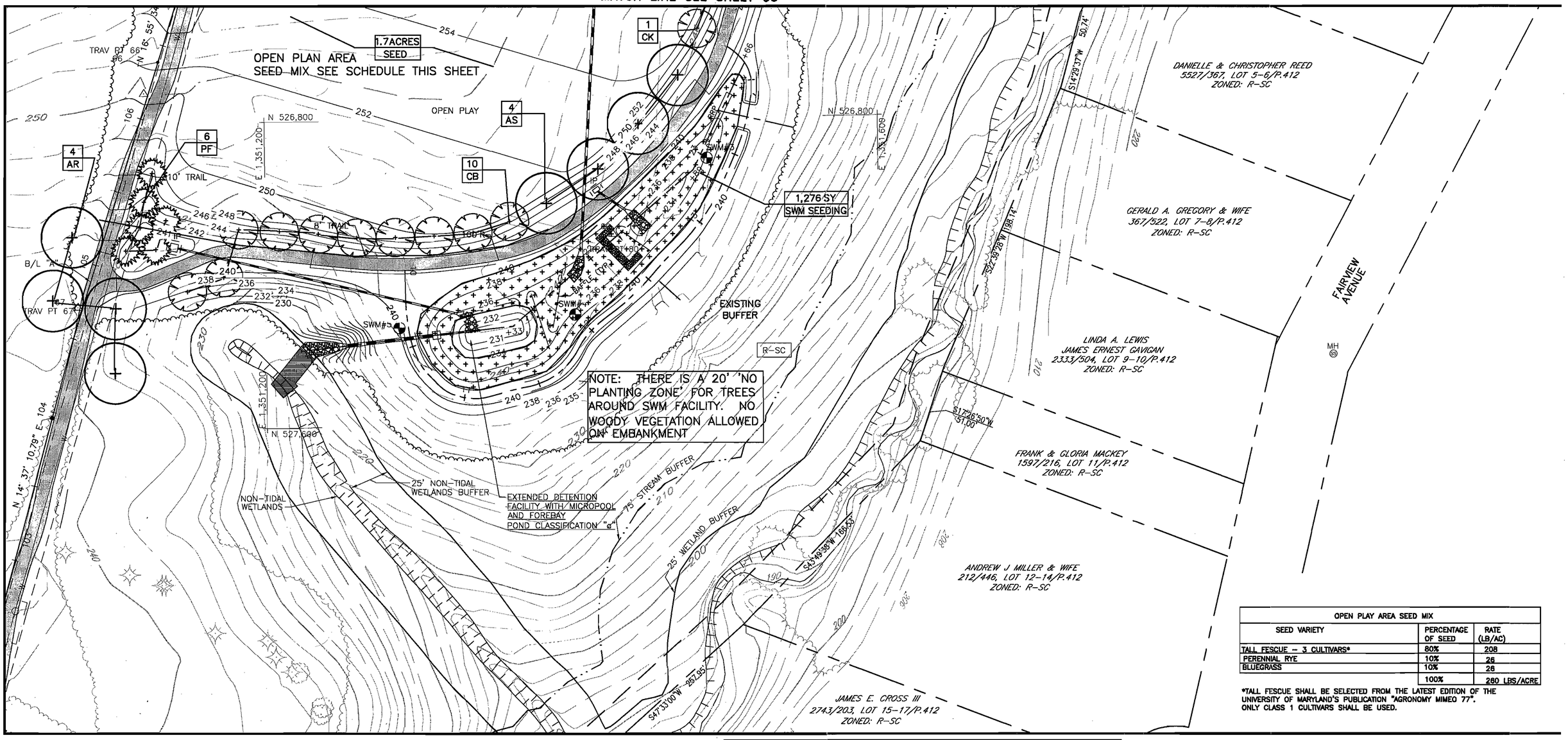

OPEN PLAY AREA SEED MIX		
SEED VARIETY	PERCENTAGE OF SEED	RATE (LB/AC)
TALL FESCUE – 3 CULTIVARS*	80%	208
PERENNIAL RYE	10%	26
BLUEGRASS	10%	26
	100%	260 LBS/ACRE

*TALL FESCUE SHALL BE SELECTED FROM THE LATEST EDITION OF THE UNIVERSITY OF MARYLAND'S PUBLICATION "AGRONOMY MIMEO 77". ONLY CLASS 1 CULTIVARS SHALL BE USED.

SWM SEEDING					
SEED VARIETY	PERCENTAGE OF SEED	MINIMUM PURITY	GERMINATION RATE	MAXIMUM % WEED	RATE (LB/AC)
LOLIUM MULTIFLORUM LAM. – ANNUAL RYEGRASS	50%	98%	90%	0.15%	10.0
ASTER PUNICEUS – SWAMP ASTER	15%	98%	90%	0.15%	3.0
ELYMUS VIRGINICUS – VIRGINIA WILD RYE	15%	98%	90%	0.15%	3.0
AGROSTIS STOLONIFERA – RED TOP	10%	98%	90%	0.15%	2.0
MIMULUS RINGENS – SQUARE MONKEY FLOWER	10%	98%	90%	0.15%	2.0
	100%			TOTAL	20.0

NOTE: SWM SEED MIX TO BE SEEDED INSIDE FACILITY FROM ELEVATION 234 TO ELEVATION 240.

30 0 15 30 60
SCALE IN FEET

BIORETENTION PLUG SCHEDULE – SEE SHEET NO. 30						
QTY	BOTANICAL NAME	COMMON NAME	SIZE	ROOT	SPACING	NOTES
73	IRIS VERSICOLOR	BLUE FLAG	3" ROOT	PLUG	24" OC	PLACE PLUGS IN COLONIES OF 7 – 15 PLUGS EACH.
73	LOBELIA CARDINALIS	CARDINAL FLOWER	3" ROOT	PLUG	24" OC	
73	RUDBECKIA LACINIATA	TALL CONEFLOWER	3" ROOT	PLUG	24" OC	
73	VERNONIA NOVEBORACENSIS	NEW YORK IRONWEED	3" ROOT	PLUG	24" OC	
73	VERBENA HASTATA	BLUE VERVAIN	3" ROOT	PLUG	24" OC	
73	SCUTELLARIA INTEGRIFOLIA	ROUGH SKULLCAP	3" ROOT	PLUG	24" OC	

APPROVED: DEPARTMENT OF PLANNING AND ZONING

Chief, Development Engineering Division	Date 2/2/05
Chief, Division of Land Development	Date 2/4/05
Director	Date 2/14/05

PREPARED BY
URS
4 NORTH PARK DRIVE
HUNT VALLEY, MARYLAND
TEL: (410) 785-7220

STATE OF MARYLAND
DAVID ROBERT MOSER
No. 16153
REGISTERED PROFESSIONAL ENGINEER
2/1/05

DES: RKK				
DRN: RMC/VH				
CHK: RKK				
DATE: 10/8/04	BY	NO.	REVISION	DATE

OWNER:
HOWARD COUNTY DEPARTMENT
RECREATION AND PARKS
7120 OAKLAND MILLS ROAD
COLUMBIA, MARYLAND 21046

DEVELOPER:
HOWARD COUNTY DEPARTMENT OF PUBLIC WORKS
9250 BENDIX ROAD
COLUMBIA, MARYLAND 21045

TAX MAP: 50
GRID: 1&2
ZONED: R-20 & R-SC
PARCEL NO.: 364
CENSUS TRACT: 6069.03
WATER CODE: C06
SEWER CODE: 7170900

HIGH RIDGE PARK
LANDSCAPE PLAN

DEED REFERENCE: LIBER 8771, FOLIO 685
ELECTION DISTRICT NO. 6, HOWARD COUNTY, MARYLAND

SDP-05-19

MATCH LINE SEE SHEET 36

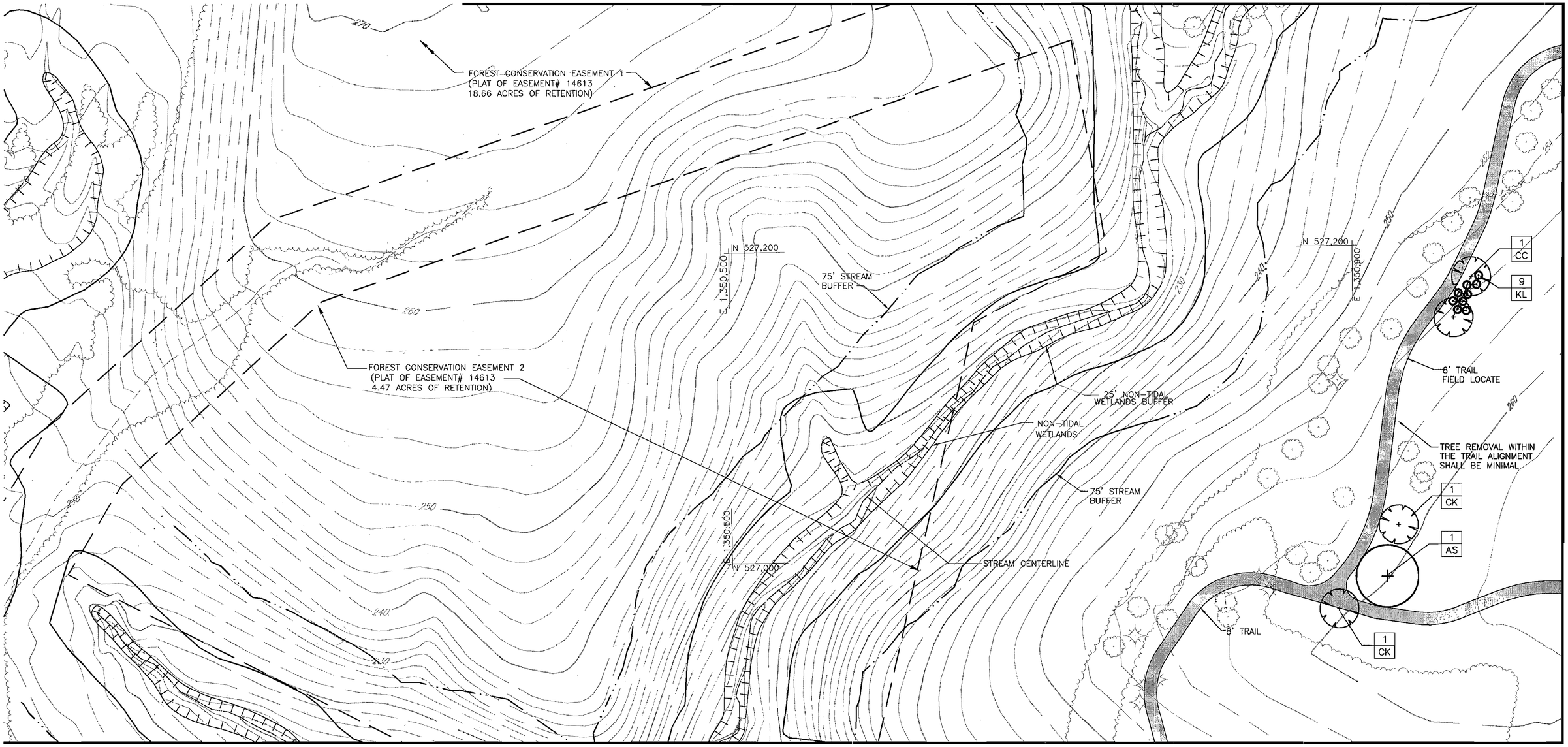

MATCH LINE SEE SHEET 33

30 0 15 30 60
SCALE IN FEET

APPROVED: DEPARTMENT OF PLANNING AND ZONING

Chief, Development Engineering Division	Date 2/2/05
Chief, Division of Land Development	Date 2/4/05
Director	Date 2/14/05

PREPARED BY
URS
4 NORTH PARK DRIVE
HUNT VALLEY, MARYLAND
TEL: (410) 785-7220

STATE OF MARYLAND — CINDY THOMAS KOSCON — No. 18150 — PROFESSIONAL ENGINEER
2/11/05

DES: RKK				
DRN: RMC/VH				
CHK: RKK				
DATE: 10/8/04	BY	NO.	REVISION	DATE

OWNER:
HOWARD COUNTY DEPARTMENT
RECREATION AND PARKS
7120 OAKLAND MILLS ROAD
COLUMBIA, MARYLAND 21046

DEVELOPER:
HOWARD COUNTY DEPARTMENT OF PUBLIC WORKS
9250 BENDIX ROAD
COLUMBIA, MARYLAND 21045

TAX MAP: 50
GRID: 1&2
ZONED: R-20 & R-SC
PARCEL NO.: 364
CENSUS TRACT: 6069.03
WATER CODE: C06
SEWER CODE: 7170900

HIGH RIDGE PARK

LANDSCAPE PLAN

DEED REFERENCE: LIBER 8771, FOLIO 685
ELECTION DISTRICT NO. 6, HOWARD COUNTY, MARYLAND

SHEET 35 OF 39

SDP-05-19

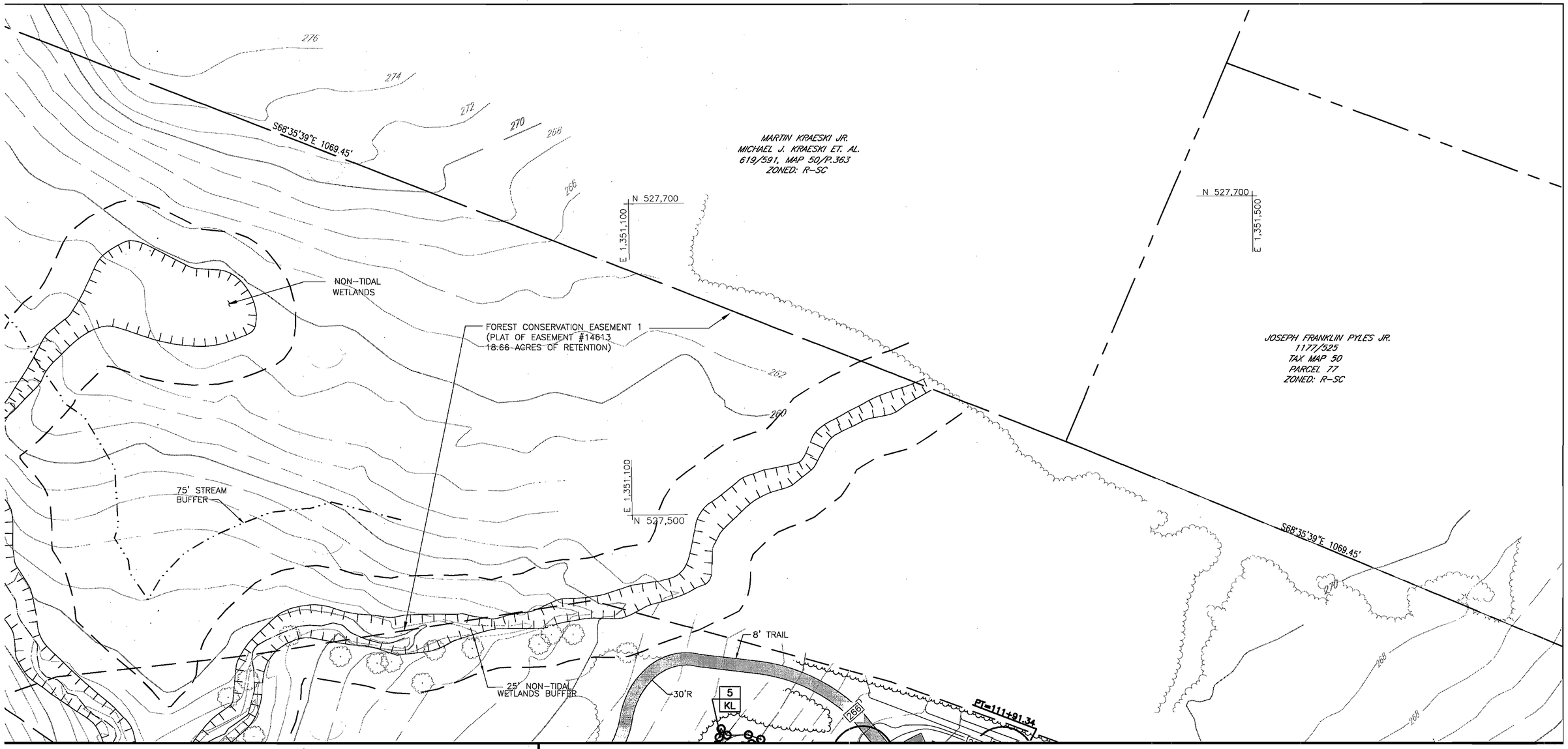

MATCH LINE SEE SHEET 35

MATCH LINE SEE SHEET 33

30 0 25 50 60
SCALE IN FEET

APPROVED: DEPARTMENT OF PLANNING AND ZONING

Chief, Development Engineering Division	Date 2/2/05
Chief, Division of Land Development	Date 2/4/05
Director	Date 2/16/05

PREPARED BY
URS
4 NORTH PARK DRIVE
HUNT VALLEY, MARYLAND
TEL: (410) 785-7220

STATE OF MARYLAND
DAVID THOMAS MCKEEGAN
REGISTERED PROFESSIONAL ENGINEER
No. 15153
2/11/05

DES: RKK				
DRN: RMC/VH				
CHK: RKK				
DATE: 10/8/04	BY	NO.	REVISION	DATE

OWNER:
HOWARD COUNTY DEPARTMENT
RECREATION AND PARKS
7120 OAKLAND MILLS ROAD
COLUMBIA, MARYLAND 21046

DEVELOPER:
HOWARD COUNTY DEPARTMENT OF PUBLIC WORKS
9250 BENDIX ROAD
COLUMBIA, MARYLAND 21045

TAX MAP: 50
GRID: 1&2
ZONED: R-20 & R-SC
PARCEL NO.: 364
CENSUS TRACT: 6069.03
WATER CODE: C06
SEWER CODE: 7170900

HIGH RIDGE PARK
LANDSCAPE PLAN

DEED REFERENCE: LIBER 8771, FOLIO 685
ELECTION DISTRICT NO. 6, HOWARD COUNTY, MARYLAND

SHEET 36 OF 39

SDP-05-19

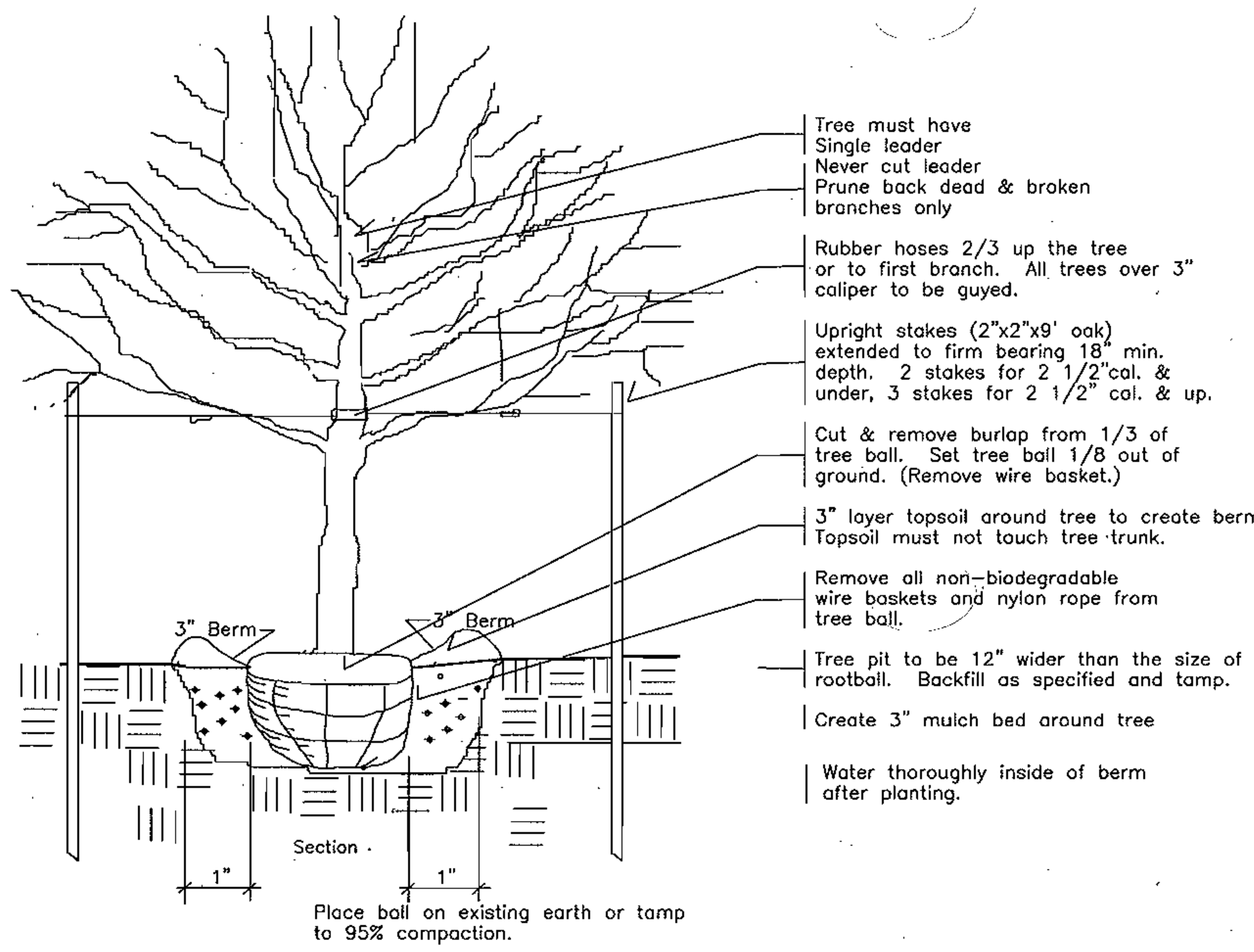

DECIDUOUS TREE PLANTING DETAIL: SECTION

NO SCALE

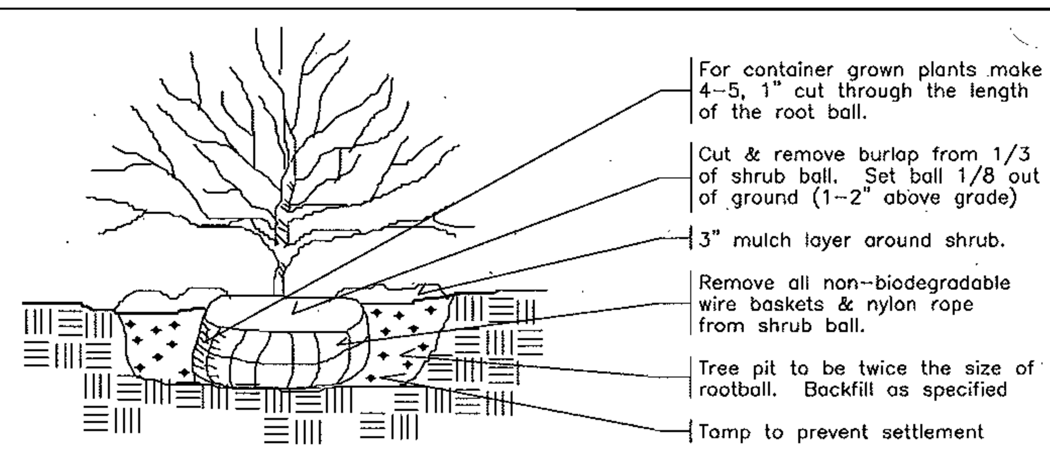

SHRUB PLANTING DETAIL: SECTION
NO SCALE

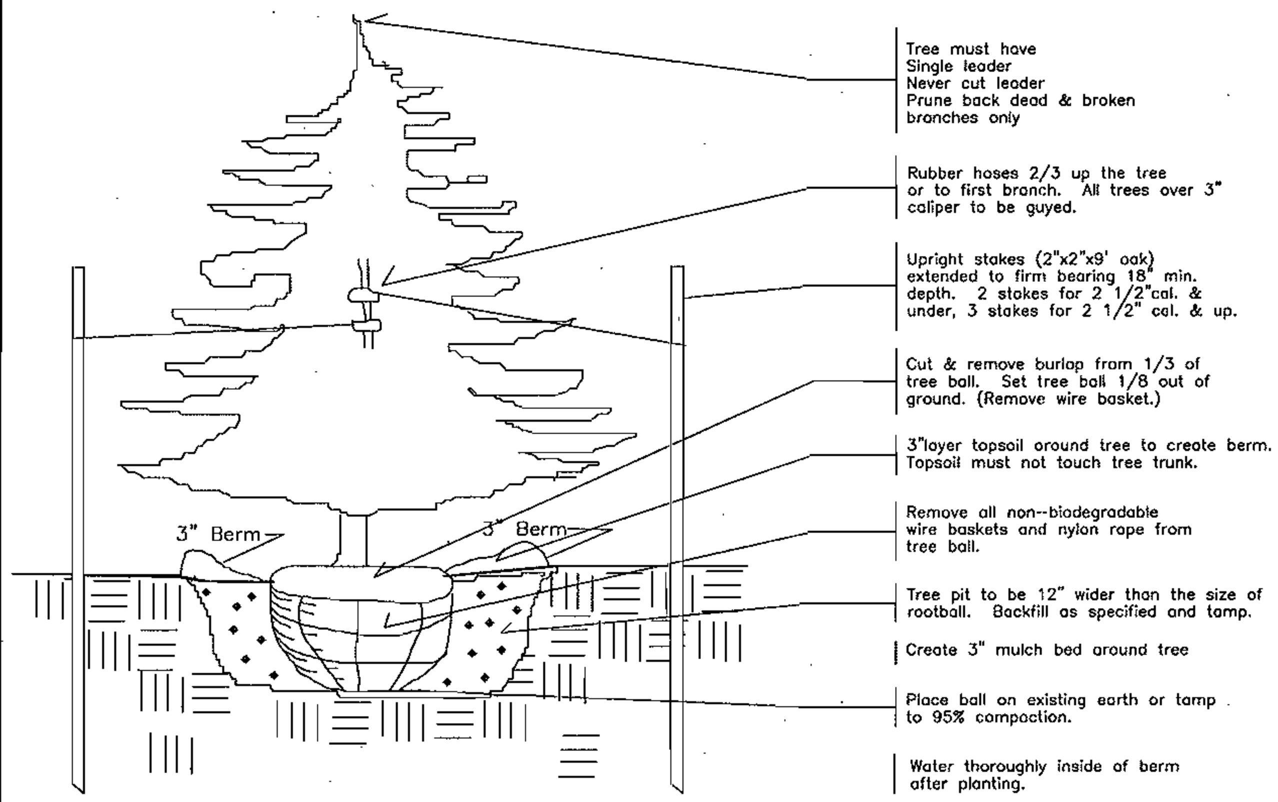

EVERGREEN TREE PLANTING DETAIL: SECTION

NO SCALE

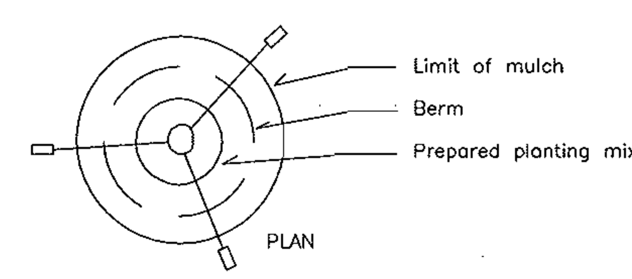

DECIDUOUS AND EVERGREEN TREE PLANTING DETAIL: PLAN VIEW

NO SCALE

SCHEDULE A

PERIMETER LANDSCAPE EDGE

CATEGORY	ADJACENT TO ROADWAYS	ADJACENT TO PERIMETER PROPERTIES
LANDSCAPE BUFFER TYPE	NONE	TYPE A
LINEAR FEET OF ROADWAY FRONTAGE/PERIMETER	NONE – ENTRANCE ROAD TO PARK IS 20' WIDE	1,219 LINEAR FEET
CREDIT FOR EXISTING VEGETATION (YES, NO, LINEAR FEET) (DESCRIBE IF NEEDED)	NO	*1,219 LF ALONG ADJACENT PROPERTIES TO REMAIN
NUMBER OF PLANTS REQUIRED SHADE TREES EVERGREEN TREES OTHER TREES(2:1 SUBSTITUTION) SHRUBS (10:1 SUBSTITUTION)		0
NUMBER OF PLANTS PROVIDED SHADE TREES EVERGREEN TREES OTHER TREES(2:1 SUBSTITUTION) SHRUBS (10:1 SUBSTITUTION) (DESCRIBE PLANT SUBSTITUTION CREDITS BELOW IF NEEDED)	NONE	14

*THE EXISTING STREAM AND FOREST BUFFER EXCEEDING MINIMUM REQUIREMENTS IS PROVIDED.

SCHEDULE B

PARKING LOT INTERNAL LANDSCAPING

	LOT 1
NUMBER OF PARKING SPACES	67
NUMBER OF PARKING ISLANDS REQUIRED	4
NUMBER OF PARKING ISLANDS PROVIDED	6
NUMBER OF TREES REQUIRED	4
NUMBER OF TREES PROVIDED SHADE TREES EVERGREEN TREES OTHER TREES (2:1 SUBSTITUTION)	6 *4

*8 ORNAMENTAL TREES PROVIDED, 4 CREDITED AT 2:1 RATIO

SCHEDULE D

STORMWATER MANAGEMENT AREA LANDSCAPING

LINEAR FEET OF PERIMETER	1036'
NUMBER OF TREES REQUIRED SHADE TREES EVERGREEN TREES	20 26
CREDIT FOR EXISTING VEGETATION (YES, NO & %)	*YES 100 % EXISTING FOREST TO BE RETAINED
CREDIT FOR OTHER LANDSCAPING (YES, NO & %)	NO
NUMBER OF TREES PROVIDED SHADE TREES EVERGREEN TREES OTHER TREES (2:1 SUBSTITUTION)	NONE , SEE NOTE BELOW

*THE SWM FACILITY IS OVER 250' FROM THE NEAREST DWELLING AND INCLUDING EXISTING FOREST AND STREAM BUFFER.

NOTE: NO LANDSCAPE SURETY IS REQUIRED SINCE THIS IS A HOWARD COUNTY CAPITAL PROJECT.

GENERAL NOTES FOR PLANTING

1. Plants shall conform to current "American Standards for Nursery Stock" by American Association of Nurseryman (ANN), particularly with regards to size, growth, size of ball, and density of branch sturcture.
2. All plants (B&B or container) shall be properly identified by weather proof labels securely attached thereto before delivery to project site. Labels shall not be removed until the final inspection by the Landscape Architect.
3. Any material and/or work may be rejected by the Landscape Architect if it does not meet the requirements of the specifications. All rejected materials shall be removed from the site by the contractor.
4. The contractor shall furnish all plants in quantities and sizes to complete the work as specified in the plant schedule.
5. Substitutions in plant species or size shall not be permitted except with the written approval by the landscape architect.
6. Plants shall be installed as shown on the drawings and by scaling or as designated in the field by the landscape architect. All locations are to be approved by the landscape architect prior to excavation.
7. Contractor shall contact Miss Utility prior to excavaton.
8. If Utility lines are encountered in excavation of tree pits, other locations for trees shall be selected by the landscape architect. Such changes shall be made by the contractor without additional compensation. No changes shall take place prior to location and digging the pits for the trees.
9. Contractor shall first locate and mark the underground utilities and delineate the utility easement areas where no planting shall take place prior to location and digging the pits for the trees.
10. All equipment and tools shall be placed so as not to interfere or hinder the pedestrian and vehicular traffic.
11. During planting operation, excess and waste materials shall be promptly and frequently removed from the site.
12. The landscape contractor shall be responsible to verify all plant quantities prior to commencment of work. Quantities in the schedule are intended to be only a guide. In the event of a discrepancy between the number of plants in the schedule and on the drawings, the greater number shall apply.
13. All disturbed areas of the site not planted with shurbs, groundcover or sod shall be seeded with lawn seed.
14. Diameters of plant materials as drawn are representative of plants at or near maturity rather than at inital planting.
15. All shurbs or trees occuring in a continuous R.O.W. or formal arrangement shall have uniform height, spread, and habit of growth.
16. A minimum of 12" depth of new topsoil shall be placed in all bed areas by landscape contractor prior to plant installation. Backfill all shrubs and trees with backfill mix of one part peat to three parts topsoil. Backfill all holly, boxwood, perennials, and groundcover with backfill mix of one part peat to one part topsoil.
17. Mulch perennial and groundcover beds with min. 2" of shredded hardwood mulch. Mulch shrubs and trees with min. 3" of shredded hardwood mulch. Mulch shall extend in a continuous layer within plantings beds from face to face of site structures -- walks, building, or other plant bed limits.
18. All bed edges shall be spade-cut and closely align as possible with edges as shown on drawing.

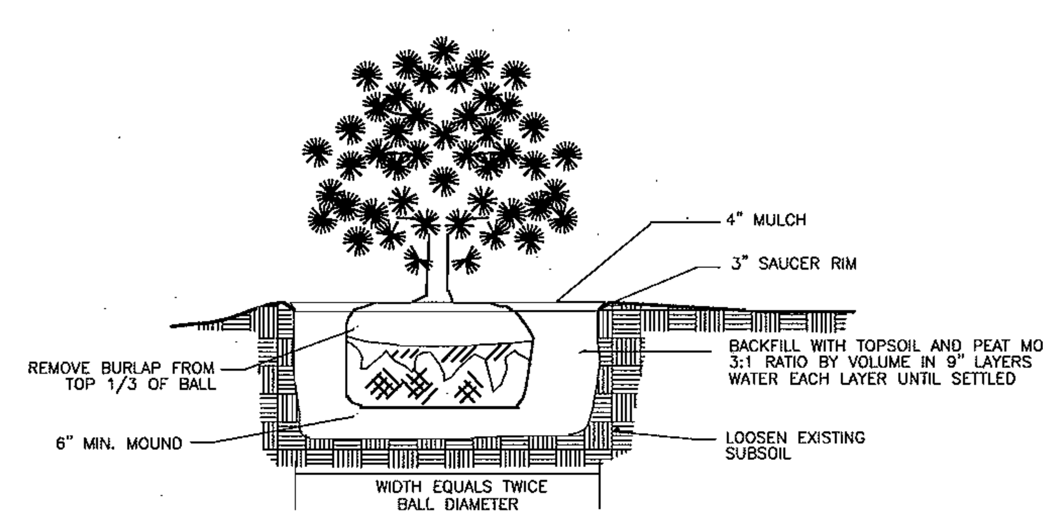

NOTES

1. PRUNE ALL BROKEN OR DAMEGED BRANCHES
2. GROUND LINE TO BE THE SAME AS EXISTED AT NURSERY
3. MATERIALS WITH A FALL PLANTING HAZARD SHALL BE HANDLED ACCORDINGLY
4. ALL PLANT MATERIAL SHALL CONFORM TO THE AMER. ASSOC. OF NURSERYMEN'S STANDARDS.

SHRUB PLANTING DETAIL

NOT TO SCALE

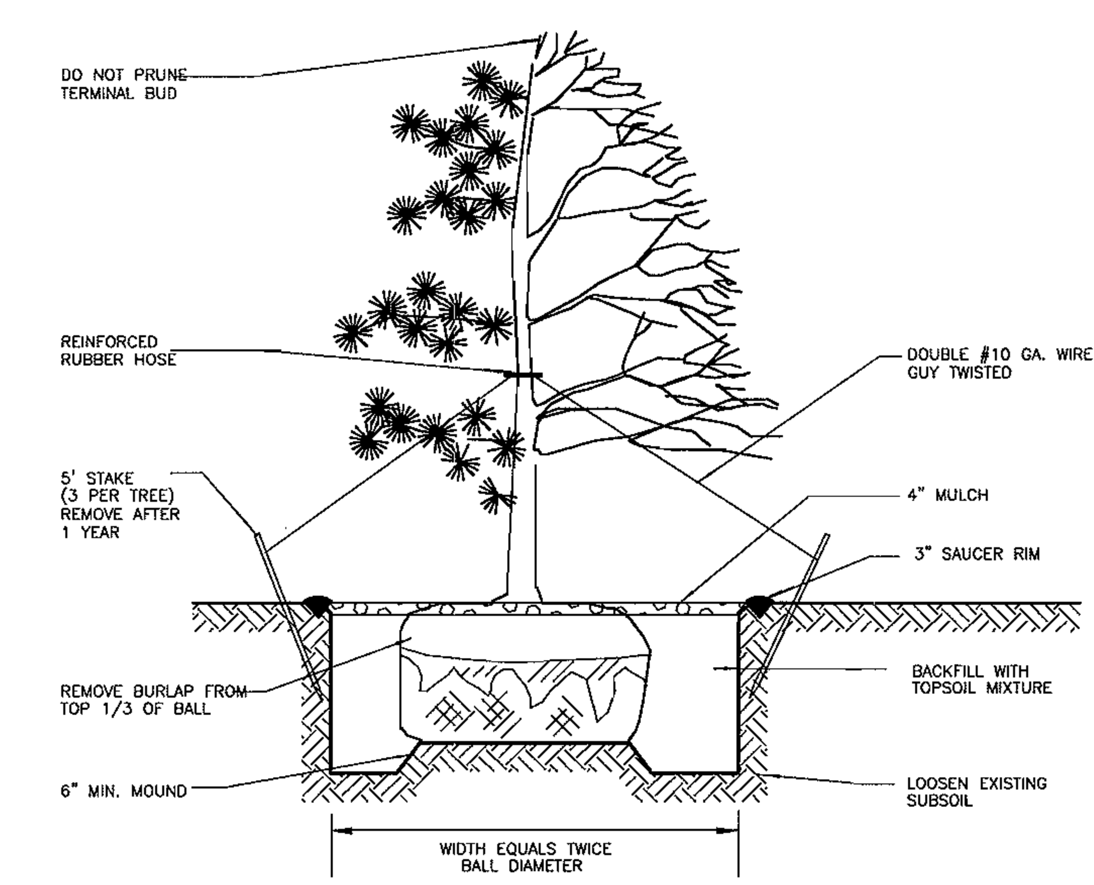

NOTES

1. STAKES TO BE DRIVEN INTO UNDISTURBED SOIL
2. PRUNE ALL BROKEN OR DAMAGED BRANCHES
3. GROUND LINE TO BE THE SAME AS EXISTED AT NURSERY
4. FOLLOW DETAIL ABOVE FOR SHRUB PLANTING NO STAKING NECESSARY
5. MATERIALS WITH A FALL PLANTING HAZARD SHALL BE HANDLED ACCORDINGLY
6. ALL PLANT MATERIAL SHALL CONFORM TO THE AMER. ASSOC. OF NURSERYMEN'S STANDARDS.

EVERGREEN TREE PLANTING DETAIL

NOT TO SCALE

APPROVED: DEPARTMENT OF PLANNING AND ZONING

Chief, Development Engineering Division	Date 2/2/05
Chief, Division of Land Development	Date 2/4/05
Director	Date 2/16/05

PREPARED BY
URS
4 NORTH PARK DRIVE
HUNT VALLEY, MARYLAND
TEL: (410) 785-7220

STATE OF MARYLAND — DAVID THOMAS MORICONI — REGISTERED PROFESSIONAL ENGINEER

DES: RKK				
DRN: RMC/VH				
CHK: RKK				
DATE: 10/8/04	BY	NO.	REVISION	DATE

OWNER:
HOWARD COUNTY DEPARTMENT
RECREATION AND PARKS
7120 OAKLAND MILLS ROAD
COLUMBIA, MARYLAND 21046

DEVELOPER:
HOWARD COUNTY DEPARTMENT OF PUBLIC WORKS
9250 BENDIX ROAD
COLUMBIA, MARYLAND 21045

TAX MAP: 50
GRID: 1&2
ZONED: R-20 & R-SC
PARCEL NO.: 364
CENSUS TRACT: 6069.03
WATER CODE: C06
SEWER CODE: 7170900

HIGH RIDGE PARK

LANDSCAPE DETAILS

DEED REFERENCE: LIBER 8771, FOLIO 685
ELECTION DISTRICT NO. 6, HOWARD COUNTY, MARYLAND

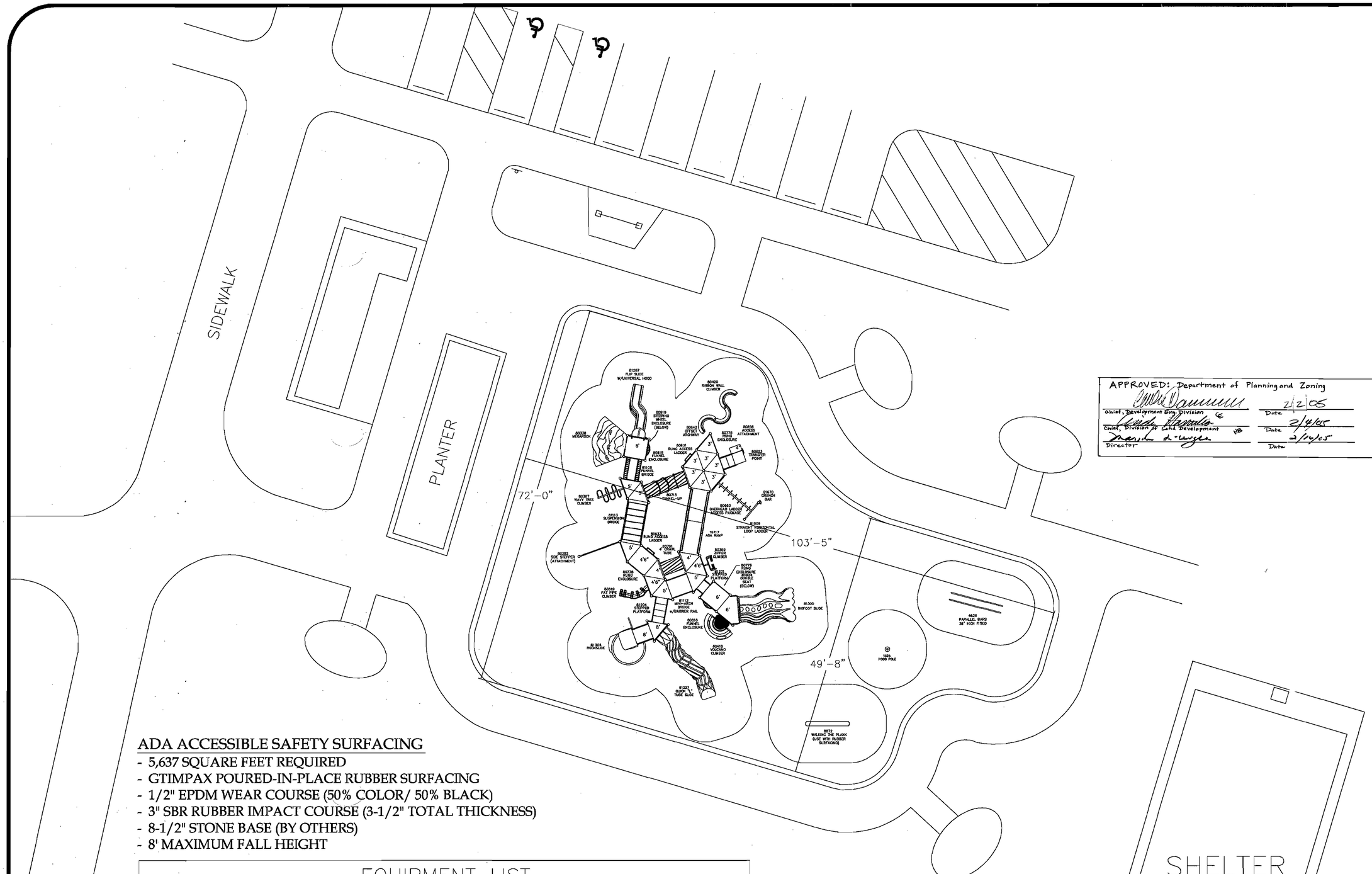

APPROVED: Department of Planning and Zoning

Chief, Development Eng. Division	Date 2/2/05
Chief, Division of Land Development	Date 2/4/05
Director	Date 2/14/05

ADA ACCESSIBLE SAFETY SURFACING

- 5,637 SQUARE FEET REQUIRED
- GTIMPAX POURED-IN-PLACE RUBBER SURFACING
- 1/2" EPDM WEAR COURSE (50% COLOR/ 50% BLACK)
- 3" SBR RUBBER IMPACT COURSE (3-1/2" TOTAL THICKNESS)
- 8-1/2" STONE BASE (BY OTHERS)
- 8' MAXIMUM FALL HEIGHT

EQUIPMENT LIST

ITEM	QUANITY	PART NUMBER	MANUFACTURER	DESCRIPTION
1	1	85077	GAMETIME	(ACRES OF FUN) POWERSCAPE PLUS PLAY STRUCTURE FOR AGES 5–12
2	1	4628	GAMETIME	36" HIGH PARALLEL BARS (FITKID)
3	1	1525	GAMETIME	POGO POLE
4	1	8672	GAMETIME	WALKING THE PLANK (USE WITH RUBBER SURFACING)

IPEMA CERTIFIED

THE PLAY COMPONENTS IDENTIFIED IN THIS PLAY AREA ARE IPEMA CERTIFIED. THE USE AND LAYOUT OF THESE COMPONENTS CONFORM TO THE REQUIREMENTS OF ASTM F1487–01.

Howard County
Parks & Recreation`
Highridge Park
(Acres of Fun) Play Structure

PROVIDED BY:

WEST RECREATION, INC.
P.O. BOX 487
QUEENSTOWN, MD 21658
PHONE: (800) 233-0529
FAX: (410) 827-8855

No.	Revision	Date

This play equipment is recommended for children ages 5 - 12 .

Soft, resilient surfacing should be placed in the use zones of all equipment, as specified for each type of equipment, and at depths to meet the critical fall heights as specified by the U.S. consumer Product Safety Commission, ASTM standard F 1487 and Canadian Standard CAN/CSA-Z-614.

A PLAYCORE COMPANY GameTime® Enriching Childhood Through Play. ISO 9001 CERTIFIED

Drawn By: BLO	Scale: AS SHOWN
Date: 07/06/04	
Drawing Name: HIGHRIDGEPK2	

DRILL HOLE LOG
BORING NO.: SWM-1

PROJECT: High Ridge Community Park
CLIENT: URS Corporation
LOCATION: See Boring Plan
DRILLER: Geomatrix Inc.
DRILL RIG: Truck
DEPTH TO WATER> AT COMPLETION: Dry AFTER HOURS:
DEPTH TO CAVING> AT COMPLETION: 5.4' AFTER HOURS:
PROJECT NO.: 04149
DATE: 08/03/04
ELEVATION: 237.54'
LOGGED BY: RAO

USCS	Depth to (ft)	Description
ML	4.0	Moist to Very Moist Light Brown Micaceous medium stiff to stiff Loam (ML)
SC-SM	8.0	Moist to Very Moist Tan medium dense Micaceous f-m Sandy Loam (SC-SM) – reddish tan below 6'
SM-ML	10.0	Very Moist Gray, Tan and Black medium dense/very stiff Micaceous Loam (SM-ML) (Highly Weathered Rock?)
		Bottom of Boring 10'

NMC	Depth	N
30	0'-2'	7
15	2'-4'	10
12	4'-6'	14
13	6'-8'	19
25	8'-10'	19

Coordinates:

This information pertains only to this boring and should not be interpreted as being indicative of the site.

DRILL HOLE LOG
BORING NO.: SWM-2

PROJECT: High Ridge Community Park
CLIENT: URS Corporation
LOCATION: See Boring Plan
DRILLER: Geomatrix Inc.
DRILL RIG: Truck
DEPTH TO WATER> AT COMPLETION: Dry AFTER HOURS:
DEPTH TO CAVING> AT COMPLETION: 9.0' AFTER HOURS:
PROJECT NO.: 04149
DATE: 08/03/04
ELEVATION: 272.38'
LOGGED BY: RAO

USCS	Depth to (ft)	Description
ML	2.0	Very Moist Tan soft Loam (ML) to Silt Loam (ML)
CL-ML	4.0	Moist to Very Moist Tan very stiff Silty Clay Loam (CL-ML)
SM	7.0	Moist Reddish Brown and Tan dense f-m Sandy Loam (SM) w/gravel and Sandy Clay Loam (SC) pockets
SP-SM	12.0	Moist Tan very dense f-m Sand (SP-SM) – medium dense below 8' – moist to very moist below 10'
SC-SM	14.0	Moist Reddish Tan dense f-m Sandy Loam (SC-SM) w/gravel
SM	18.0	Moist Tan and Brown medium dense f-c Loamy Sand (SM) to Sandy Loam (SM) w/gravel and Loam (ML) layers – dense below 16'
		Bottom of Boring 18'

NMC	Depth	N
22	0'-2'	4
23	2'-4'	17
10	4'-6'	66
6	6'-8'	69
5	8'-10'	24
10	10'-12'	18
7	12'-14'	25
6	14'-16'	22
7	16'-18'	27

Coordinates:

This information pertains only to this boring and should not be interpreted as being indicative of the site.

DRILL HOLE LOG
BORING NO.: SWM-3

PROJECT: High Ridge Community Park
CLIENT: URS Corporation
LOCATION: See Boring Plan
DRILLER: Geomatrix Inc.
DRILL RIG: Truck
DEPTH TO WATER> AT COMPLETION: Dry AFTER HOURS:
DEPTH TO CAVING> AT COMPLETION: 1.4' AFTER HOURS:
PROJECT NO.: 04149
DATE: 08/04/04
ELEVATION: 238.27'
LOGGED BY: RAO

USCS	Depth to (ft)	Description
ML	2.0	Moist to Very Moist Reddish Tan stiff Loam (ML) w/gravel
SM	5.0	Moist Tan medium dense Micaceous f-m Loamy Sand (SM)
		Bottom of Boring 5'

NMC	Depth	N
16	0'-2'	10
7	3'-5'	14

Coordinates:

This information pertains only to this boring and should not be interpreted as being indicative of the site.

DRILL HOLE LOG
BORING NO.: SWM-4

PROJECT: High Ridge Community Park
CLIENT: URS Corporation
LOCATION: See Boring Plan
DRILLER: Geomatrix Inc.
DRILL RIG: Truck
DEPTH TO WATER> AT COMPLETION: Dry AFTER HOURS:
DEPTH TO CAVING> AT COMPLETION: 6.0' AFTER HOURS:
PROJECT NO.: 04149
DATE: 08/04/04
ELEVATION: 238.63'
LOGGED BY: RAO

USCS	Depth to (ft)	Description
SC-SM	10.0	Moist to Very Moist Reddish Brown medium dense to dense f-m Sandy Loam (SC-SM) – w/Loam (ML) layers from 2' to 4' – reddish tan and tan below 6'
SM-ML	12.0	Moist to Very Moist Tan and Black dense f-m Sandy Loam (SM) to hard Loam (SM-ML)
		Bottom of Boring 12'

NMC	Depth	N
10	0'-2'	17
14	2'-4'	37
	4'-6'	34
14	6'-8'	31
17	8'-10'	33
15	10'-12'	35

Coordinates:

This information pertains only to this boring and should not be interpreted as being indicative of the site.

DRILL HOLE LOG
BORING NO.: SWM-5

PROJECT: High Ridge Community Park
CLIENT: URS Corporation
LOCATION: See Boring Plan
DRILLER: Geomatrix Inc.
DRILL RIG: Truck
DEPTH TO WATER> AT COMPLETION: Dry AFTER HOURS:
DEPTH TO CAVING> AT COMPLETION: 5.0' AFTER HOURS:
PROJECT NO.: 04149
DATE: 08/04/04
ELEVATION: 240.94'
LOGGED BY: RAO

USCS	Depth to (ft)	Description
SM-ML	2.0	Very Moist Grayish Brown loose/medium stiff Loam (SM-ML)
SM	10.0	Moist Reddish Brown and Tan very dense f-m Sandy Loam (SM) w/gravel and Loamy Sand (SM) and Silty Clay Loam (CL-ML) layers
		Bottom of Boring 10'

NMC	Depth	N
	0'-2'	8
7	2'-4'	67
8	4'-6'	64
8	6'-8'	99+
7	8'-10'	51+

Coordinates:

This information pertains only to this boring and should not be interpreted as being indicative of the site.

DRILL HOLE LOG
BORING NO.: B-1

PROJECT: High Ridge Community Park
CLIENT: URS Corporation
LOCATION: See Boring Plan
DRILLER: Geomatrix Inc.
DRILL RIG: Truck
DEPTH TO WATER> AT COMPLETION: Dry AFTER HOURS:
DEPTH TO CAVING> AT COMPLETION: 3.0' AFTER HOURS:
PROJECT NO.: 04149
DATE: 08/03/04
ELEVATION: 228.18'
LOGGED BY: RAO

USCS	Depth to (ft)	Description
Fill	2.0	Moist to Very Moist Reddish Brown loose f-m Clayey Sand (SC) w/gravel [Fill]
SC	5.0	Intermixed Moist Brown and Tan medium dense fine Clayey Sand (SC) and very stiff Sandy Clayey Silt (ML) w/trace gravel [Fill?]
		Bottom of Boring 5'

NMC	Depth	N
16	0'-1'6"	8
10	3'6"-5'	22

Coordinates:

This information pertains only to this boring and should not be interpreted as being indicative of the site.

DRILL HOLE LOG
BORING NO.: B-2

PROJECT: High Ridge Community Park
CLIENT: URS Corporation
LOCATION: See Boring Plan
DRILLER: Geomatrix Inc.
DRILL RIG: Truck
DEPTH TO WATER> AT COMPLETION: Dry AFTER HOURS:
DEPTH TO CAVING> AT COMPLETION: 3.0' AFTER HOURS:
PROJECT NO.: 04149
DATE: 08/03/04
ELEVATION: 266.52'
LOGGED BY: RAO

USCS	Depth to (ft)	Description
ML	2.0	Very Moist Grayish Brown soft Sandy Silt (ML) w/trace gravel
SM	4.5	Moist Brown and Tan dense f-m Silty Sand (SM) w/gravel
SP-SM	8.5	Moist Tan dense f-m Silty Sand (SM) to Sand w/Silt (SP-SM) – w/trace gravel from 4.5' to 6'
		Bottom of Boring 8.5'

NMC	Depth	N
20	0'-1'6"	4
	2'6"-4'	44
5	5'-6'6"	26
	7'-8'6"	29

Coordinates:

This information pertains only to this boring and should not be interpreted as being indicative of the site.

DRILL HOLE LOG
BORING NO.: B-3

PROJECT: High Ridge Community Park
CLIENT: URS Corporation
LOCATION: See Boring Plan
DRILLER: Geomatrix Inc.
DRILL RIG: Truck
DEPTH TO WATER> AT COMPLETION: Dry AFTER HOURS:
DEPTH TO CAVING> AT COMPLETION: 6.0' AFTER HOURS:
PROJECT NO.: 04149
DATE: 08/03/04
ELEVATION: 268.67'
LOGGED BY: RAO

USCS	Depth to (ft)	Description
ML	4.5	Very Moist Grayish Brown soft Sandy Clayey Silt (ML) w/trace gravel – moist to very moist brown very stiff below 2'
SM	9.5	Moist Reddish Tan medium dense f-m Silty Sand (SM) w/gravel
SP-SM	11.5	Damp Tan medium dense f-m Sand w/Silt (SP-SM) w/gravel and Silty Sand (SM) layers
		Bottom of Boring 11.5'

NMC	Depth	N
24	0'-1'6"	3
	2'6"-4'	20
5	5'-6'6"	21
	7'6"-9'	22
3	10'-11'6"	21

Coordinates:

This information pertains only to this boring and should not be interpreted as being indicative of the site.

DRILL HOLE LOG
BORING NO.: B-4

PROJECT: High Ridge Community Park
CLIENT: URS Corporation
LOCATION: See Boring Plan
DRILLER: Geomatrix Inc.
DRILL RIG: Truck
DEPTH TO WATER> AT COMPLETION: Dry AFTER HOURS:
DEPTH TO CAVING> AT COMPLETION: 1.0' AFTER HOURS:
PROJECT NO.: 04149
DATE: 08/03/04
ELEVATION: 264.51'
LOGGED BY: RAO

USCS	Depth to (ft)	Description
ML	2.0	Very Moist Grayish Brown soft Sandy Silt (ML) w/trace organics and gravel
SM	5.0	Moist to Very Moist Reddish Tan medium dense f-m Silty Sand (SM)
		Bottom of Boring 5'

NMC	Depth	N
15	0'-1'6"	3
15	3'6"-5'	13

Coordinates:

This information pertains only to this boring and should not be interpreted as being indicative of the site.

DRILL HOLE LOG
BORING NO.: B-5

PROJECT: High Ridge Community Park
CLIENT: URS Corporation
LOCATION: See Boring Plan
DRILLER: Geomatrix Inc.
DRILL RIG: Truck
DEPTH TO WATER> AT COMPLETION: Dry AFTER HOURS:
DEPTH TO CAVING> AT COMPLETION: 5.0' AFTER HOURS:
PROJECT NO.: 04149
DATE: 08/03/04
ELEVATION: 265.83'
LOGGED BY: RAO

USCS	Depth to (ft)	Description
ML	4.5	Moist to Very Moist Grayish Brown medium stiff Sandy Silt (ML) w/trace gravel – tan stiff below 2'
SM	7.5	Moist Reddish Tan medium dense f-m Silty Sand (SM)
ML	10.0	Moist White and Tan very stiff fine Sandy Clayey Silt (ML)
		Bottom of Boring 10'

NMC	Depth	N
17	0'-1'6"	6
	2'6"-4'	15
11	5'-6'6"	20
	8'6"-10'	28

Coordinates:

This information pertains only to this boring and should not be interpreted as being indicative of the site.

DRILL HOLE LOG
BORING NO.: B-6

PROJECT: High Ridge Community Park
CLIENT: URS Corporation
LOCATION: See Boring Plan
DRILLER: Geomatrix Inc.
DRILL RIG: Truck
DEPTH TO WATER> AT COMPLETION: Dry AFTER HOURS:
DEPTH TO CAVING> AT COMPLETION: 1.0' AFTER HOURS:
PROJECT NO.: 04149
DATE: 08/04/04
ELEVATION: 252.51'
LOGGED BY: RAO

USCS	Depth to (ft)	Description
ML	2.0	Very Moist Grayish Brown soft Sandy Silt (ML) w/trace organics and gravel
SM	5.0	Moist Light Brown very dense f-m Silty Sand (SM) w/gravel
		Bottom of Boring 5'

NMC	Depth	N
17	0'-1'6"	2
5	3'6"-5'	56

Coordinates:

This information pertains only to this boring and should not be interpreted as being indicative of the site.

DRILL HOLE LOG
BORING NO.: B-7

PROJECT: High Ridge Community Park
CLIENT: URS Corporation
LOCATION: See Boring Plan
DRILLER: Geomatrix Inc.
DRILL RIG: Truck
DEPTH TO WATER> AT COMPLETION: Dry AFTER HOURS:
DEPTH TO CAVING> AT COMPLETION: 5.0' AFTER HOURS:
PROJECT NO.: 04149
DATE: 08/04/04
ELEVATION: 239.14'
LOGGED BY: RAO

USCS	Depth to (ft)	Description
ML	2.0	Very Moist Grayish Brown soft Sandy Silt (ML) w/trace gravel and organics
SM	10.0	Moist Reddish Brown and Tan very dense f-m Silty Sand (SM) w/gravel and Clayey Sand (SC) pockets
		Bottom of Boring 10'

NMC	Depth	N
23	0'-1'6"	3
	2'6"-4'	88
13	5'-5'10"	31+
	8'6"-10'	51+

Coordinates:

This information pertains only to this boring and should not be interpreted as being indicative of the site.

CONCLUSIONS AND RECOMMENDATIONS

It is concluded from this investigation that conventional spread footings and floor slabs can be used to support the proposed buildings and other ground-supported structures. Solid bedrock and groundwater were not encountered at any boring location and should not, therefore, impact grading operations provided excavations do not extend much below the boring depths. We note that some of the shallow soils are fine-grained ML materials and that they may become unstable from construction activity disturbance if their moisture contents are too high which may be the case during wet seasons. In the area of the basketball and tennis courts, SM Sands should be exposed at subgrade level based on Borings B-3 and B-4. These soils should be relatively easy to grade. Concerning pavements, reference is made to a following section of this report concerning recommendations. The classification of the soils at the SWM pond and bioretention areas range from acceptable to unacceptable relative to the use of infiltration design; groundwater does not appear to be a limitation. Given below are geotechnical-related comments and recommendations to guide design and construction of the building foundations, paved areas, and SWM facilities.

Site Preparation

All topsoil, vegetation, and any other unsuitable condition – such as unacceptable existing fill – that may be found to exist over the surface of the various sites should be stripped and removed from the construction areas. In building and pavement areas where the surface is at design grade after these operations or where fill is required, the exposed subgrade should then be proof-rolled with a fully loaded tandem-axle dump truck or equivalent to check for soft, loose, or otherwise unsuitable conditions. Any such area should be undercut as required to expose firm, stable conditions or if conditions permit, densified in place by vibratory rollers.

Proof-rolling operations should be inspected by a Geotechnical Engineer or his/her representative to determine if the subgrade is in suitable condition to support the proposed construction. Hand auger borings and Dynamic Cone Penetrometer (DCP) tests may be required as part of that inspection.

Grading

All structural fill materials should be approved by a Geotechnical Engineer prior to placement. All of the soils excavated from cut areas on-site that classify as SC and SM Sands should be acceptable for use as general fill, including under foundations and paved areas. Any structural fill required under slabs and pavements should be placed in loose lifts not to exceed 12 inches and each lift should be compacted to a density of at least 95 percent maximum density as determined by the Modified Proctor test (AASHTO T-180). The subgrade in all fill areas should also be compacted to a firm, stable condition prior to placement of the fill. We recommend that fill placement below slabs and pavements extend a minimum of 5 feet horizontally beyond the edge of each structure. Compacted fill under foundations should extend beyond foundation edges at a ratio of 1.3 vertical to 1 horizontal.

Moisture contents of structural fills should ideally be maintained within -/+2 percentage points of optimum, thus adjustments to the natural moisture contents of the soils may be required in order to obtain specified compaction levels. We note here that the natural moisture content of the shallow on-site soils will depend on seasonal conditions.

All subgrade preparation, fill placement, and compaction operations in critical areas, i.e., structural and slab areas, should be monitored by a qualified Soils Inspector under the supervision of a Geotechnical Engineer, on a full-time basis to ensure that fill materials are being placed and compacted in compliance with the project specifications. A sufficient number of in-place density tests should be performed to verify that the proper degree of compaction is being obtained. Should any compaction problems develop during grading operations, the Geotechnical Engineer should be consulted for an evaluation of the problem.

Foundations

It is recommended that all foundations exposed to outside temperatures be located at least 2.5 feet below final exterior grade for frost protection. Foundations not exposed to outside temperatures can be located as shallow as 1 foot below final grade. Foundations located at these depths and bearing either on approved natural soils or compacted fill can be designed for an allowable net bearing capacity of 3000 psf. In using net bearing capacity, it is not necessary to include the weight of the footing or backfill over the foundation in sizing the footing. All footings should also contain reinforcing steel as designated by a structural engineer.

All footing excavations and/or foundation areas where structural fill is required should be inspected by a Geotechnical Engineer prior to the placement of concrete or the structural fill. This inspection may include hand auger borings and Dynamic Cone Penetrometer (DCP) testing to determine conditions within the depth influence of the foundation. The purpose of the inspection would be to ensure that the exposed materials will be capable of supporting the design footing pressure. If soft or loose pockets are encountered in the footing excavations, the unsuitable materials should be removed and the footings should be located at a lower elevation. Alternatively, the unsuitable materials could be undercut and replaced with new fill placed and compacted in accordance with the recommendations of the Grading Section.

Floor Slabs

Floor slabs should be supported on approved firm natural soils or on newly compacted fill over natural soils. It is recommended that, unless dictated by structural requirements, slabs be directly supported on a minimum 4-inch layer of clean granular materials (washed gravel). These materials may require acquisition from off-site sources. A polyethylene vapor-moisture barrier should be provided above these granular materials. These precautions will provide a moisture break that will prevent dampness of the floor slab.

Groundwater and Drainage

The groundwater table appears to be below expected excavation depths. However, during wet seasons rainwater could collect in open excavations. We recommend that adequate precautions be undertaken to minimize the possibility of water collecting in the structural areas. Adequate drainage should be provided at the site to minimize this possibility of any increase in moisture content of the foundation soils. Slab subgrade areas should be sealed each night with a smooth drum roller or covered.

A locally high groundwater condition can develop immediately adjacent to the building if surface drainage is not properly controlled. The site grading plan should include a grade of at least 5 percent perpendicular to the walls for the first 10 feet away from the walls to facilitate rapid runoff of surface water. Roof downspouts or other water collection systems should be discharged well away from the backfill so that surface water does not have an opportunity to pond adjacent to the foundation walls and cause seepage into the backfill and foundation bearing soils. In addition, we recommend that the foundation walls which will be below grade be damp-proofed.

Stormwater Management and Bioretention

Given below are specific details concerning the profile at each boring location relative to their infiltration potential.

Boring	Depth	Description	Infiltration Potential *
SWM-1	0' – 4'	Loam (ML)	Poor
	4' – 8'**	Sandy Loam (SC-SM)	Slow
	8' – 10'	Loam (SM-ML) [Weathered Rock?]	Poor
SWM-2	0' – 2'	Silt Loam (ML)	Poor
	2' – 4'	Silty Clay Loam (CL-ML)	Poor
	4' – 7'	Sandy Loam (SM) w/Sandy Clay Loam Pockets	Slow/Poor***
	7' – 12'	Sand (SP-SM)	Good
	12' – 14'**	Sandy Loam (SC-SM)	Slow
	14' – 18'	Loamy Sand (SM) to Sandy Loam (SM)	Good/Slow***
SWM-3	0' – 2'	Loam (ML)	Poor
	2' – 5'**	Loamy Sand (SM)	Good

Boring	Depth	Description	Infiltration Potential *
SWM-4	0' – 10'**	Sandy Loam (SC-SM)	Slow
	10' – 12'	Sandy Loam (SM) to Loam (SM-ML)	Slow/Poor***
SWM-5	0' – 2'	Loam (SM-ML)	Poor
	2' – 10'**	Sandy Loam (SM) & Loamy Sand (SM)	Slow/Good***

* Relative Permeability Ratings by Marshall Engineering, Inc.:
Poor = Not considered suitable for infiltration (can be due to thin layers)
Slow = probably suitable but slow (Prel. I = 1.0 in./hr.)
Good = probably suitable (Prel. I = 2.5 in./hr.)

** Set pipe in this stratum and performed infiltration test.

*** Where a dual infiltration potential is provided, the slower infiltration rate should be used for design unless field infiltration testing can verify a higher rate.

The permeability classification and preliminary infiltration rates "I" given above are arbitrary and solely estimates by Marshall Engineering, Inc. based on previous experience. They are for preliminary design purposes only, and are subject to change based on field test results and/or other data.

Concerning actual measured infiltration rates, reference is made to the Infiltration Test Summary in Appendix C. The following table summarizes the findings of our infiltration testing.

Boring	Test Depth	Soil Description	Tested Infiltration Rate Range (in./hr.)
SWM-1	6.0'	Sandy Loam (SC-SM)	2(+) to 5(+)
SWM-2	12.0'	Sandy Loam (SC-SM)	2(+) to 5(-)
SWM-3	3.0'	Loamy Sand (SM)	1(-) to 5(+)
SWM-4	8.0'	Sandy Loam (SC-SM)	2(+) to 4(+)
SWM-5	5.0'	Sandy Loam (SM)/Loamy Sand (SM)	1(-) to 4(+)

Based on the above, it appears that infiltration conditions vary from unsuitable to suitable depending on location and depth. We typically recommend a conservative design infiltration rate of about one-half the measured rate to account for the presence of the seams and layers of soils with slower rates. We also recommend that the bottom of any infiltration system be at least 2 feet above a layer with a slower or unsuitable rate. Based on the above, tabulated below are our recommendations.

Boring	Recommended Infiltration Rate (in./hr.)	Depth
SWM-1	1	4' – 6'
SWM-2	1	14' – 16'
SWM-3	*	2' – 3'
SWM-4	1	8' – 10'
SWM-5	*	2' – 8'

* Slowest tested rate less than 1 in./hr.

Pavements

It is assumed that construction of the paved areas will be a staged operation of first grading the site to include compaction of the subgrade, proof-rolling to locate soft areas and repair of those areas, placement and compaction of a stone base and finally placement of the asphalt surface. Variation in the timing of the various stages may be appropriate, depending on economics and other considerations. For example, it may be desirable to prepare the subgrade and only place the stone, delaying placement of the asphalt until after building construction is completed so as to minimize repair costs due to asphalt pavement failures under the heavy construction traffic.

The key to good pavement support is proper compaction of an acceptable subgrade material and protection of the subgrade from intrusion of water which softens the subgrade soils, thereby weakening them. The on-site SP-SM, SM and SM-SC Sands exhibit good subgrade characteristics for support of assumed moderate traffic loading conditions. Based on their classification, a CBR value of at least 5 should be available at all locations where these soils exist in a compacted condition to at least 2 feet below subgrade level. This can be accomplished by undercutting any pavement area where these soils are not present and replacing the undercut with these soils as obtained from other on-site locations. Based on this subgrade preparation, standard Howard County pavement sections should be suitable for the expected traffic and loading conditions.

APPROVED: DEPARTMENT OF PLANNING AND ZONING

Chief, Development Engineering Division — Date 2/2/05

Chief, Division of Land Development — Date 2/4/05

Director — Date 2/14/05

PREPARED BY
URS
4 NORTH PARK DRIVE
HUNT VALLEY, MARYLAND
TEL: (410) 785-7220

STATE OF MARYLAND — DAVID THOMAS MONCOL — No. 16152 — REGISTERED PROFESSIONAL ENGINEER — 1/11/05

DES: DTM/RKK
DRN: RMC/HWC
CHK: DTM/RKK
DATE: 10/8/04

BY	NO.	REVISION	DATE

OWNER:
HOWARD COUNTY DEPARTMENT
RECREATION AND PARKS
7120 OAKLAND MILLS ROAD
COLUMBIA, MARYLAND 21046

DEVELOPER:
HOWARD COUNTY DEPARTMENT OF PUBLIC WORKS
9250 BENDIX ROAD
COLUMBIA, MARYLAND 21045

TAX MAP: 50
GRID: 1&2
ZONED: R-20 & R-SC
PARCEL NO.: 364
CENSUS TRACT: 6069.03
WATER CODE: C06
SEWER CODE: 7170900

HIGH RIDGE PARK
GEOTECHNICAL DATA

DEED REFERENCE: LIBER 8771, FOLIO 685
ELECTION DISTRICT NO. 6, HOWARD COUNTY, MARYLAND