GENERAL NOTES

1. ALL CONSTRUCTION SHALL BE IN ACCORDANCE WITH THE LATEST STANDARDS AND SPECIFICATIONS OF HOWARD COUNTY PLUS MSHA STANDARDS AND SPECIFICATIONS, IF APPLICABLE.
2. THE CONTRACTOR SHALL NOTIFY "MISS UTILITY" AT 1-800-257-7777 AT LEAST 48 HOURS PRIOR TO ANY EXCAVATION WORK.
3. THE CONTRACTOR IS TO NOTIFY THE FOLLOWING UTILITIES OR AGENCIES AT LEAST FIVE DAYS BEFORE STARTING WORK ON THESE DRAWINGS.

C & P TELEPHONE COMPANY	725-9976
HOWARD COUNTY BUREAU OF UTILITIES	313-2366
AT&T CABLE LOCATION DIVISION	393-3553
BG&E CO. CONTRACTOR SERVICES	850-4620
BG&E CO. UNDERGROUND DAMAGE CONTROL	787-4620
STATE HIGHWAY ADMINISTRATION	531-5533

4. THE CONTRACTOR SHALL NOTIFY THE DEPARTMENT OF PUBLIC WORKS BUREAU OF ENGINEERING INSPECTION DIVISION AT 410-313-1880 AT LEAST FIVE(5) WORKING DAYS PRIOR TO START OF WORK.
5 ANY DAMAGE TO THE PUBLIC RIGHT-OF-WAYS, PAVING, OR EXISTING UTILITIES WILL BE CORRECTED AT THE CONTRACTOR'S EXPENSE.
6. EXISTING UTILITIES LOCATED FROM ROAD CONSTRUCTION PLANS, FIELD SURVEYS AND AVAILABLE RECORD DRAWINGS. APPROXIMATE LOCATION OF EXISTING UTILITIES ARE SHOWN FOR THE CONTRACTORS INFORMATION. CONTRACTOR SHALL LOCATE EXISTING UTILITIES WELL IN ADVANCE OF CONSTRUCTION ACTIVITIES AND TAKE ALL NECESSARY PRECAUTIONS TO PROTECT THE EXISTING UTILITIES AND TO MAINTAIN UNINTERRUPTED SERVICE. ANY DAMAGE INCURRED DUE TO CONTRACTOR'S OPERATION SHALL BE REPAIRED IMMEDIATELY AT THE CONTRACTOR'S EXPENSE
7. ALL REINFORCED CONCRETE FOR STORM DRAIN STRUCTURES SHALL HAVE A MINIMUM OF 28 DAYS STRENGTH OF 3,500 P.S.I.
8. TRAFFIC CONTROL DEVICES, MARKINGS AND SIGNING SHALL BE IN ACCORDANCE WITH THE LATEST EDITION OF THE MANUAL ON UNIFORM TRAFFIC CONTROL DEVICES (MUTCD). ALL STREET AND REGULATORY SIGNS SHALL BE IN PLACE PRIOR TO THE PLACEMENT OF ANY ASPHALT.
9. ESTIMATES OF EARTHWORK QUANTITIES ARE PROVIDED SOLELY FOR THE PURPOSE OF CALCULATING FEES.
10. SOIL COMPACTION SPECIFICATIONS, REQUIREMENTS, METHODS AND MATERIALS ARE TO BE IN ACCORDANCE WITH THE RECOMMENDATIONS OF THE PROJECT GEOTECHNICAL ENGINEER, GEOTECHNICAL ENGINEER TO CONFIRM ACCEPTABILITY OF PROPOSED PAVING SECTION, BASED ON SOILS TEST.
11. ALL STORM DRAIN BEDDING SHALL BE CLASS 'C', VOLUME I OF HOWARD COUNTY DESIGN MANUAL.
12. COORDINATES AND ELEVATION ARE BASED ON THE FOLLOWING HOWARD COUNTY MONUMENTS:
    38A9 N 561,056.341 E 1,389,634.145
    38BA N 562,553.293 E 1,390,967.941
13. A NOISE STUDY PREPARED BY MARS GROUP WAS SUBMITTED AND APPROVED WITH THE SKETCH PLAN SUBMITTAL (S-04-011)
14. FOR PAVING SECTIONS DETAIL SEE SHEETS 12 & 19
15. CONC. CURB AND GUTTER TO BE AS PER HC STD. PLATE R-3.01 CONC. BARRIER CURBS TO BE AS PER HC STANDARD PLATE R-3.03
16. PAVING SECTIONS TO BE CONFIRMNED BY PROJECT GEOTECHNICAL ENGINEER PRIOR TO CONSTRUCTION.
17. PUBLIC WATER METERS ARE SHOWN ON UTILITY PLAN, SHEET 45
18. CONTRACTOR RESPONSIBLE TO CONSTRUCT ALL HANDICAP PARKING AND HANDICAP ACCESS ROUTES IN ACCORDANCE WITH CURRENT ADA REQUIREMENTS.
19. WHERE DRAINAGE FLOWS AWAY FROM THE CURB, CONTRACTOR TO USE CONCRETE BARRIER CURBS(HC PLATE R-3.03)
20. EXISTING TOPOGRAPHY IS BASED ON AERIAL TOPOGRAPHIC SURVEY PREPARED BY WINGS MAPPING DATED DECEMBER, 2002 AND SUPPLEMENTED BY FIELD SURVEY BY NILDENBERD-BOENDER ASSOC. IN APRIL, 2004
21. THIS PROJECT IS SERVED BY PUBLIC WATER AND PUBLIC SEWER (CONTRACT NO.MD-105C\3312.
22. THE CONTRACTOR WILL REMOVE EX. CURB AND GUTTER AS NOTED ON THE SITE PLAN.THE CONTRACTOR WILL LEAVE A CLEAN EDGE AT EXISTING PAVING FOR TIE-IN OF PROPOSED PAVING.
23. THE CONTRACTOR WILL CONSTRICT ALL CONCRETE CURB AND GUTTER NOTED ON THE SITE PLAN TO BE FULLY DEPRESSED SO THAT THERE IS NOT A LIP.
24. OUTDOOR LIGHTING TO BE IN ACCORDANCE WITH SECTION 134 OF THE HOWARD COUNTY ZONING REGULATIONS.
25. ALL 2:1 SLOPES TO BE STABILIZED WITH SEDIMENT AND EROSION CONTROL MATTING.
26 ALL UTILITIES INSTALLED SHALL RECEIVE FULL TRENCH COMPACTION(95%) PER AASHTO SPECIFICATIONS.
27 ALL PLAN DIMENSIONS ARE TO THE FACE OF CURB UNLESS OTHERWISE NOTED.
28 ALL WATER MAIN TEES, BENDS, CAPS, ETC. SHALL BE BUTTRESSED IN ACCORDANCE WITH HOWARD COUNTY DESIGN REQUIREMENTS.
29 THIS PLAN IS SUBJECT TO THE AMENDED 5-TH EDITION OF THE SUBDIVISION REGULATIONS
30. STORMWATER QUALITY & CHANNEL PROTECTION WILL BE PROVIDED FOR PHASE 1 IN AN OPEN POND WHICH WILL DISCHARGE INTO THE DRAINAGE SYSTEM THE REQUIRED LANDSCAPING AND FOREBAYS FOR THE SWM DESIGN HAVE BEEN DEFERRED UNTIL THE FACILITY IS CONVERTED TO ITS FINAL DESIGN UPON THE COMPLETION OF PHASE II OF THE PROJECT
31. REQUIRED NO. OF MIH UNITS-128X15%=20; MIH UNITS PROVIDED=20 MIHU AGREEMENT RECORDED IN LIBER 10174 FOLIO 306-316 & LIBER 10194 FOLIO 268-274
32. MDE WILL ISSUE A LETTER OF AUTHORIZATION TO ALLOW CONSTRUCTION ACTIVITY IN THE TWO WETLAND AND BUFFER AREAS IDENTIFIED AND SHOWN ON THESE DRAWINGS. IN THE TWO ISOLATED NONTIDAL WETLAND AND BUFFER AREAS IDENTIFIED AND SHOWN ON THESE DRAWINGS. (#98-NT-0482, TRACKING #19985413)
33. THE FOREST CONSERVATION OBLIGATION FOR THIS PLAN AND ALL OTHER PHASES OF ELKRIDGE CROSSING HAS BEEN MET BY PROVIDING 5.27 ACRES OF OFFSITE RETENTION AT BRANTWOOD, 2/1, PRES. PARCEL F AND 2.52 ACRES OF OFFSITE RETENTION (ONLY 50% ACREAGE CREDIT) AND 3.83 ACRES OF OFFSITE REFORESTATION AT ELLICOTT MEADOWS, TM 16, BLK. 22, TM PARCEL 99.
34. FOREST CONSERVATION SURETY IN THE AMOUNT OF $114,780.60 FOR 5.27 ACRES OF OFFSITE REFORESTATION AT BRANTWOOD, 2/1, PRES. PARCEL F HAS BEEN POSTED AS A PART OF THE DEVELOPER'S AGREEMENT-- PN 18487-489
35. FOREST CONSERVATION SURETY IN THE AMOUNT OF $21,954.24 FOR 2.52 ACRES OF OFFSITE RETENTION AND $83,417.40 FOR 3.83 ACRES OF OFFSITE RETENTION AT ELLICOTT MEADOWS, TM 16, BLK. 22, TM PARCEL 99, TOTALING $105,371.64 HAS BEEN POSTED AS A PART OF THE DEVELOPER'S AGREEMENT PN 18490-500
36. TRASH COLLECTION FOR THIS PROJECT WILL BE PROVIDED BY A PRIVATE CONTRACTOR.
37. LANDSCAPE SURETY IN THE AMOUNT OF $81,750.00 HAS BEEN POSTED AS PART OF THE DEVELOPER'S AGREEMENT

ADDRESS NOTE:
THE TOWNHOUSE UNITS WITH FRONT AND REAR ROAD AND ALLEY ACCESS SHALL HAVE THE ADDRESSES DISPLAYED AT THE FRONTS AND REAR OF THE UNITS.

APPROVED: DEPARTMENT OF PLANNING AND ZONING

CHIEF, DEVELOPMENT ENGINEERING DIVISION J.P.	DATE 7/27/07
CHIEF, DIVISION OF LAND DEVELOPMENT	DATE 8/1/07
DIRECTOR	DATE 8/2/07

BENCH MARKS

HOWARD COUNTY MON. #38A9
ELEV. 223.417
BRASS DISK ON CONC. MONUMENT IN GRASS PLOT ON SE SIDE OF US RTE 1 AND MONTGOMERY RD.

HOWARD COUNTY MON. #38BA
ELEV. 166.939
BRASS DISC ON CONC. MONUMENT ON WEST SIDE OF US RTE.1 APPROX. 100' N OF BONNIE VIEW LA.

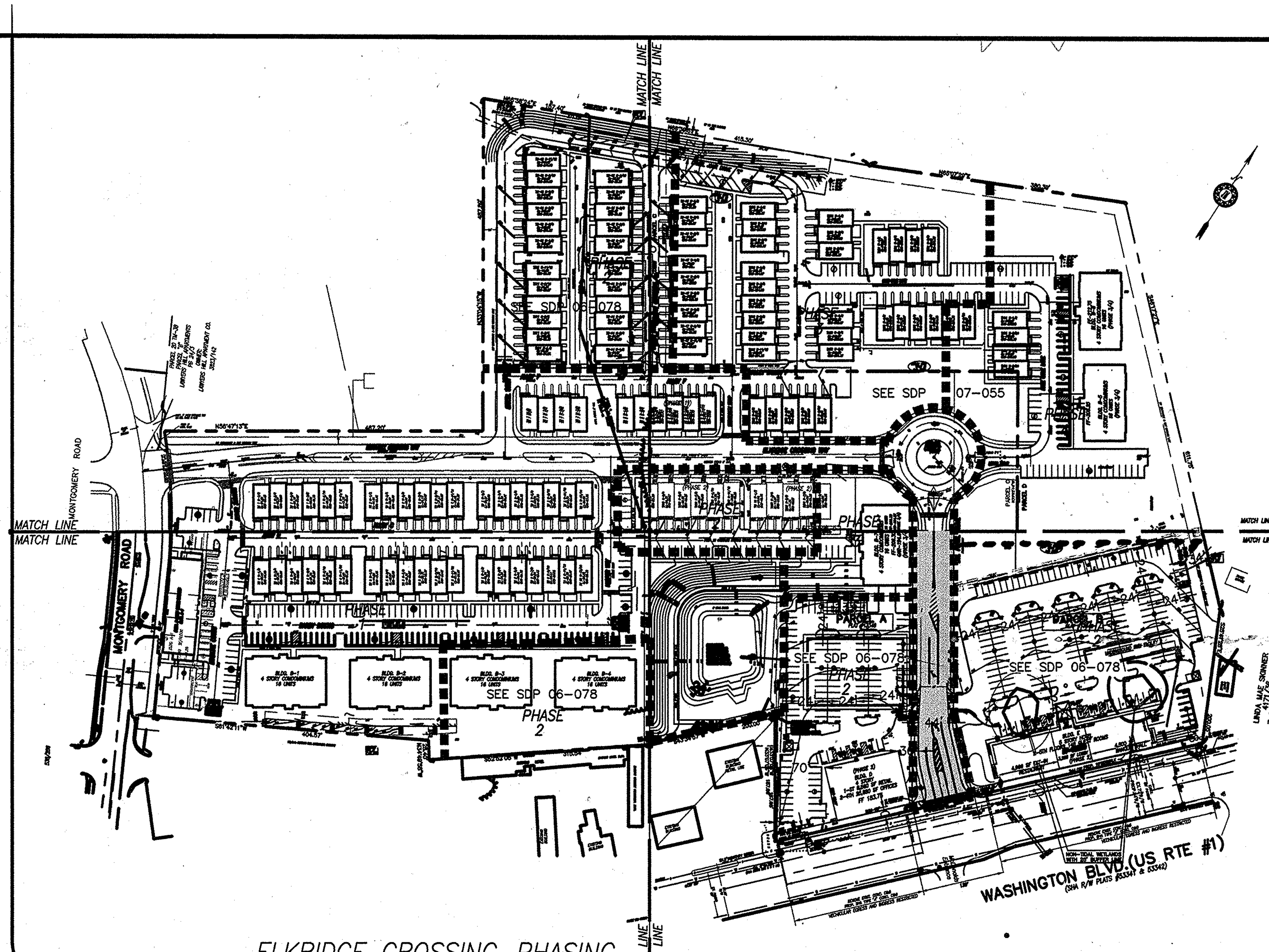

ELKRIDGE CROSSING-PHASING
SCALE: 1"=150'

SITE DEVELOPMENT PLANS PHASE ONE

ELKRIDGE-CROSSING

FIRST ELECTION DISTRICT, HOWARD COUNTY, MARYLAND

1.) H.) CONT.
F-06-005 BRANTWOOD 2/1 PRES. PARCEL F, OFFSITE FCE'S. PN 18487-89
SDP 06-078 ELKRIDGE CROSSING PHASE 2. (APPROVED 07/03/07)
F-07-131 REVISION PLAT ELKRIDGE CROSSING-PARCEL E: PN 18490
F-07-132 REVISION PLAT ELKRIDGE CROSSING-PARCELS A-D: PN 18491
F-08-067 RESUBDIVISION PLAT-PARCELS A1, B1, C1 & D1 ELKRIDGE CROSSING PN 19565-66
F-08-192 REVISION PLAT-PARCELS A1, B1, C1 & D1 ELKRIDGE CROSSING PN 20023-24
SDP 07-055 ELKRIDGE CROSSING PHASE 3/4, (APPROVED 08/21/08)
F-05-188 ELLICOTT MEADOWS, PARCELS A & B, OFFSITE FCE'S ON PARCEL A, PN 18496-500

SHEET INDEX

1	COVER SHEET
2	VICINAL PROPERTIES MAP
3-6	SITE DEVELOPMENT PLANs
7	BUILDING ELEVATIONS
8-11	LAYOUT GEOMETRY
12	SITE CONSTRUCTION DETAILS
13	TYPICAL ROAD SECTIONS
14-18	PRIVATE ROAD PROFILES
19	MONTGOMERY ROAD PLAN
20-22	X SECTIONS-MONTGOMERY RD.
23	MONTGOMERY ROAD STRIPING PLAN
24	MONTGOMERY ROAD MOT PLAN
25	DRAINAGE AREA MAP
26-31	STORM DRAIN PROFILES
32-36	LANDSCAPE PLANS
37-39	RETAINING WALL PLANS
40-44	FOREST CONSERVATION PLANS
45	PRIVATE SEWER PLAN
46-48	SEWER PROFILES
49-52	SWM PLANS
53-56	SEDIMENT AND EROSION CONTROL PLANS

PURPOSE OF REVISION NOTE:
THE PURPOSE OF THIS REVISION IS TO REPLACE BUILDINGS A1 AND A2 WITH A SINGLE 3-STORY BUILDING A1, AND TO REVISE RELATED SHEETS IN CONJUNCTION WITH THE BUILDING REVISION,AND TO REMOVE DR. PATEL DRIVE LOCATED NORTHWEST OF THE ROUND-ABOUT.

COMMERCIAL AREA REQUIREMENTS

PHASE NO.	UNITS PROPOSED	AREA REQUIRED	AREA PROVIDED
1 - 2007	128	38,400 SF	19,320 SF
2 - 2008	98	29,400 SF	99,040 SF
3 - 2009 / 4 - 2010	136	40,000 SF	----
TOTAL	362	108,600 SF	118,360 SF

(A MINIMUM OF 300 SQ.FT. OF COMMERCIAL AREA IS REQUIRED PER EACH RESIDENTIAL UNIT)

MODERATE INCOME HOUSING UNITS SUMMARY

PHASE NO.	TOTAL UNITS	REQUIRED MIHU UNITS	MIHU UNITS PROVIDED
1 - 2007	128	20	20
2 - 2008	98	15	15
3 - 2009 / 4 - 2010	136	30	30
TOTAL	362	56	56

MINIMUM MIHU REQUIRED: 15% OF TOTAL UNITS

OVERALL SITE

AREA OF PARCEL A-1(F-08-067) 1.536 AC.
AREA OF PARCEL B-1(F-08-067) 3.880 AC.
AREA OF PARCEL C-1(F-08-067) 5.474 AC.
AREA OF PARCEL D-1(F-08-067) 5.781 AC.
AREA OF PARCEL E (F-05-120) 8.919 AC.
AREA OF US RT.1 WIDENING: 0.176 AC.
AREA OF MONTGOMERY RD. WIDENING: 0.256 AC.

1. SITE ANALYSIS
   A. TAX MAP 38, PARCELS 30 AND 38
   B. ZONING: CAC
   C. DENSITY TABULATION:
      GROSS AREA=26.458 ACRES*
      AREA OF STEEP SLOPES>25%=0.29 ACRES
      NET AREA=26.168 ACRES
      UNITS ALLOWED: 26.168 X 25 = 653 UNITS
   D. UNITS PROPOSED=362 (96 CONDOMINIUMS & 266 TOWNHOUSES)
   E. PHASING:
      PHASE 1: 128 UNITS & BLDG.A1 (2007 ALLOCATION)
      32 CONDOMINIUM UNITS & 96 TOWNHOUSES
      BLDGS.B1,B2, & TH1 - TH8
      (INCLUDES 7 MODERATE INCOME UNITS)
      PHASE 2: 98 UNITS & BLDGS D & E (2008 ALLOCATION)
      32 CONDOMINIUM UNITS & 66 TOWNHOUSES
      BLDGS..B3, B4, TH9 - 14
      (INCLUDES 18 MODERATE INCOME UNITS)
      PHASE 3: 84 UNITS (2009/10 ALLOCATION)
      84 TOWNHOUSES & BLDG. F
      BLDGS. TH4, TH9, & TH15-23
      (INCLUDES 30 MODERATE INCOME UNITS)
      SEE SKETCH PLAN SHEET 4 OF 4
      PHASE 4 52 UNITS
      32 CONDOMINIUMS & 20 TOWNHOUSES
      BLDGS. C1, C2, TH24 & TH25
      (INCLUDES 8 MODERATE INCOME UNITS)
   F. AREA OF ROADWAY DEDICATION:
      US RTE 1: 0.1760 ACRES
      MONTGOMERY ROAD: 0.2234 ACRES
      TOTAL ROAD DEDICATION: 0.3994 ACRES±
   G. 1) AREA OF COMMERCIAL REQUIRED=362 UNITSX300 SQ.FT/UNIT=108,600 SF
      AREA OF COMMERCIAL PROVIDED:
      BUILDINGS A1 & A2= 23,520 SF (PHASE 1)
      BUILDING D @ 8,800 SF/FLOORX4= 35,200 SF (PHASE 2)
      BUILDING E @ 12,768 SF/FLOORX5=63,840 SF (PHASE 2)
      TOTAL AREA OF COMMERCIAL PROVIDED=122,560 SQ.FT.
      2) AMENITY AREA REQUIRED=26.45 AC. X 10%=2.65 AC.
      AMENITY AREA PROVIDED=2.80±AC.
   H. PREVIOUS DEVELOPMENT HISTORY:
      PARCELS 30 & 38
      WP-04-86 REQUEST WAIVER TO SECTION 16.155(a)-TO ALLOW GRADING FOR A DEVELOPMENT PRIOR TO SITE DEVELOPMENT PLAN APPROVAL (WAIVER REQUEST DENIED APRIL 12, 2004)
      S-04-011 SKETCH PLAN OF ELKRIDGE CROSSING APPROVED ON DECEMBER 10, 2004
      SDP -04-17 PROCESSED THRU FEB.2004 - APPROVED 12/10/05
      WP 04-43 REQUEST WAIVER TO SECTION 16.116(a)(1)-TO PERMIT THE REMOVAL OF VEGETATIVE COVER, GRADING, PAVEMENT AND A PERMANENT STRUCTURE WITHIN THE 2 25' WETLAND BUFFERS LOCATED ON THE SITE (WAIVER REQUEST APPROVED NOV. 18, 2003)
      WP 04-43 REQUEST WAIVER TO SECTION 16.121(a)(4)(vi)-TO PERMIT THE 400 SQUARE FEET OF RECREATION OPEN SPACE REQUIRED PER APARTMENT UNIT TO BE REDUCED TO 205 SQUARE FEET PER APARTMENT UNIT (APPROVED NOV.18, 2003)
      WP 04-43 REQUEST WAIVER TO SECTION 16.119(f)(3)-TO PERMIT 2 SEPARATE VEHICULAR ACCESS POINTS TO A RESTRICTED ACCESS ROAD (US RTE.1)- (REQUEST DENIED NOV.18, 2003)
      WP 04-43 REQUEST WAIVER TO SECTION 16.121(a)(4)(iii)-TO PERMIT RECREATION OPEN SPACE TO BE LOCATED ON LAND WITH SLOPES EXCEEDING 10 PERCENT. (REQUEST DENIED NOV.18, 2003)
      F-04-187 FINAL PLAT OF ELKRIDGE CROSSING, PARCELS A-D HC PN 17347 & 17348
      WP 04-150 REQUEST WAIVER TO SECTION 16.144(a) AND (f) TO NOT BE REQUIRED TO SUBMIT SKETCH AND PRELIMINARY PLANS FOR A MAJOR (NON-RESIDENTIAL) SUBDIVISION APPROVED AUGUST 5, 2004-WITH FOLLOWING CONDITIONS:
      1) THE PROPOSED PARCELS SHALL HAVE SHARED VEHICULAR ACCESS AND PARKING IN ACCORDANCE WITH SUBDIVISION SECTION 16.120(C)(1) AND THE SHARED VEHICULAR ACCESS AND PARKING EASEMENT SHALL BE INDICATED ON THE FINAL PLAT (F-04-187)
      2) WITH THE EXCEPTION OF THE ONE APPROVED VEHICULAR ACCESS POINT (SHARED ACCESS EASEMENT AT US RTE.1) VEHICULAR INGRESS AND EGRESS RESTRICTIONS AND THEIR LIMITS SHALL BE INDICATED AND NOTED ALONG THE US RTE.1 FRONTAGE OF THE PARCELS ON FINAL PLAT F-04-187, IN ACCORDANCE WITH SUBDIVISION SECTION 16.119(f)
      3) ANY EXISTING STREAM ON THE SITE SHALL BE INDICATED WITH ITS REQUIRED STREAM BUFFERS (SEE SUBDIVISION SECTION 16.116 FOR THE REQUIRED STREAM BUFFER WIDTH DIMENSIONS) ON FINAL PLAT F-04-187 SEE SCD COMMENTS DATED 7/14/04.
      WP 04-150 REQUEST TO WAIVE SECTIONS 16.119(f)(1) TO PERMIT THE PROJECT ELKRIDGE CROSSING(04-011), TO HAVE VEHICULAR ACCESS TO TWO RESTRICTED ACCESS ROADS (US ROUTE 1 & MONTGOMERY ROAD), AND 16.120(c)(1) TO PERMIT COMMERCIAL AND APARTMENT LOTS WITHOUT PUBLIC ROAD FRONTAGE WITH SHARED ACCESS AND WITHOUT SHARED PARKING. APPROVED OCTOBER 7, 2004-WITH FOLLOWING CONDITIONS:
      1. THE PROPOSED PARCELS AND EXISTING PARCEL 30 SHALL HAVE SHARED ACCESS, AND THE SHARED ACCESS EASEMENT SHALL BE SHOWN ON F-04-187, S 04-011 AND ALL FURTHER RELATED PLANS & PLATS.
      2. WITH THE EXCEPTION OF THE TWO VEHICULAR ACCESS POINTS, VEHICULAR ACCESS RESTRICTION LINES AND NOTATION SHALL BE INDICATED ON F 04-187, S 04-011 AND ALL FUTURE RELATED PLANS AND PLATS PER SUBDIVISION SECTION 16.119(f).
      FORMER SITE OF HO-388 - "CROSSWINDS" THAT NO LONGER EXISTS
      F-05-120 FINAL PLAT OF ELKRIDGE CROSSING, PARCEL E, (TO BE RECORDED)
      S-04-011 SKETCH PLAN OF ELKRIDGE CROSSING APPROVED ON DECEMBER 10, 2004
      DESIGN MANUAL WAIVER REQUEST DATED 3/07/06:
      1. TO PROVIDE A SETBACK OF 0' FROM TOE OF STORMEATER MANAGEMENT EMBANKMENT TO TO A PARCEL LINE,IN LIEU OF THE SETBACK OF 25' AS PER CHAPTER 5, sRCTION 5.2.4.I. } APPROVED 3/29/06
      2. REQUEST NOT TO PROVIDE EASEMENTS FOR THE PRIVATE DRAINAGE SYSTEMS ON ON SDP 04-017 PLANS AND ON THE FINAL PLATS F-05-120 AND F-06-013. } DENIED 3/29/06
      F 06-013 REVISION PLAT OF ELKRIDGE CROSSING PARCELS A-D, PN 18494-95
      F 07-131 REVISION PLAT OF ELKRIDGE CROSSING, PARCEL E, PN 10958
      F 07-132 REVISION PLAT OF ELKRIDGE CROSSING, PARCELS A-D, PN 10957
2. TRAFFIC STUDY WAS PREPARED BY MARS GROUP ON OR ABOUT APRIL 2004.
3. FOR DRIVEWAY INTERSECTION DETAIL USE HOWARD COUNTY STANDARD DETAILS R-6-.05
4. STORMWATER MANAGEMENT IS SATISFIED THROUGH THE USE OF A BIO-RETENTION WET POND. WATER QUALITY MANHOLES, AND GRASS SWALES. AND TWO UNDERGROUND STORAGE FACILITIES FOR CHANNEL PROTECTION
5. ADEQUATE FACILITIES ROAD TEST EVALUATION WAS PREFORMED BY MARS GROUP IN APRIL 2004.
6. PUBLIC WATER AND SEWER ARE AVAILABLE AND OF ADEQUATE CAPACITY TO SERVE THIS SITE.
7. ALL ON SITE SEWERS WILL BE PRIVATE.
8. ON SITE WATER MAINS WILL BE PUBLIC AND PRIVATE. BUILDING SERVICES WILL BE PRIVATE.
9. ROAD IMPROVEMENTS MUST MEET THE FOLLOWING CONDITIONS:
   A. THE APPLICANT MUST PROVIDE ROAD FRONTAGE IMPROVEMENTS ALONG US RTE.1 AS PER THE STATE HIGHWAY ADMINISTRATION, AND ALONG MONTGOMERY ROAD AS REQUIRED BY HOWARD COUNTY.
   B. THE APPLICANT SHALL ENSURE THAT ALL STORMWATER RUNOFF FROM THIS PROPERTY IS ADEQUATELY DISCHARGED TO A DOWNSTREAM OUTFALL WITH NO DELETERIOUS IMPACTS ON DOWNSTREAM PROPERTIES. TO THIS END THE APPLICANT MUST VERIFY THAT EXISTING CONVEYANCE SYSTEMS ALONG AND ACROSS US ROUTE 1 ARE ADEQUATELY SIZED TO CONVEY THE 10-YEAR STORMWATER DISCHARGE FROM THIS PROPERTY.
   C. ALL ROAD FRONTAGE IMPROVEMENTS SHALL BE COORDINATED WITH ANY REQUIRED IMPROVEMENTS NECESSARY FOR STORMWATER RUNOFF CONVEYANCE.
   D. THE APPLICANT SHALL PROVIDE A SIDEWALK ALONG THE ENTIRE AREA OF ROAD FRONTAGE IMPROVEMENTS REQUIRED BY THE ROUTE 1 MANUAL, SUBJECT TO SHA APPROVAL.
10. ALL EXISTING STRUCTURES TO BE REMOVED-UNLESS OTHERWISE SHOWN

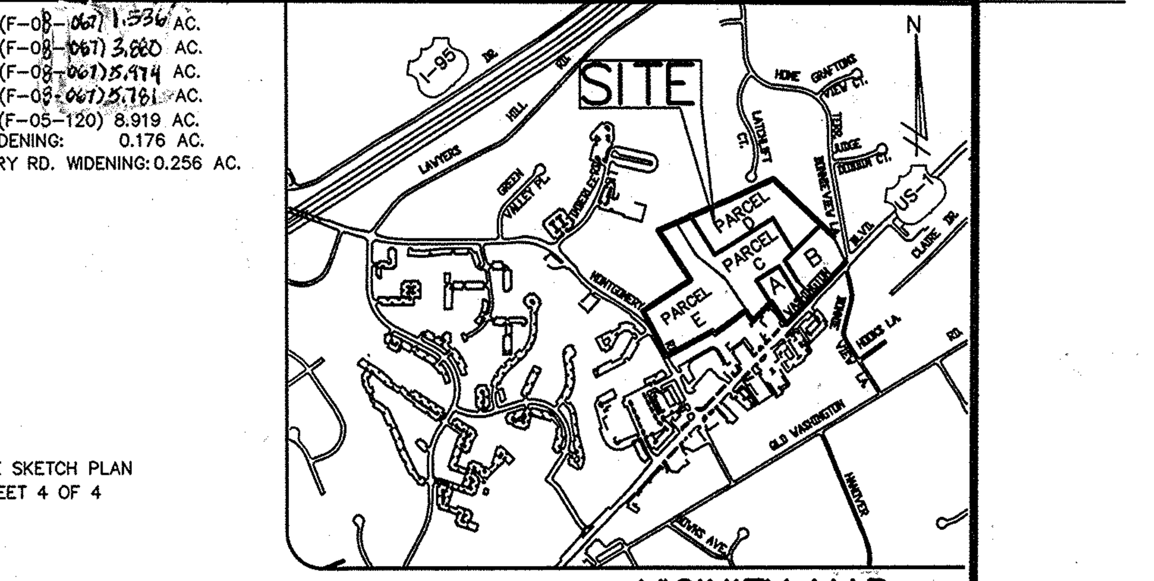

VICINITY MAP

SITE ANALYSIS - PHASE ONE

PARKING DATA:

TOWNHOUSE BUILDINGS TH1 - TH8
TOTAL 96 UNITS
TOTAL PARKING REQUIRED @ 2/UNIT= 192 SPACES
PARKING PROVIDED @ 2/UNIT= 192 SPACES
1 SPACE IN GARAGE UNDER BLDG.& 1 SPACE IN REAR OF EACH UNIT ON A DRIVEWAY

NOTE:
THE GARAGES SHALL BE USED FOR PARKING ONLY IN ACCORDANCE WITH ZONING SECTION 133.D.2.a

BUILDING A1
BUILDING A-1:3 STORY 46'X140'= 6,440 SF
PROPOSED USE: FIRST FLOOR: 1,240 SF OFFICE & 5,200 SF CARRY OUT REST. (GREASE TRAP TO SERVICE CARRY OUT REST.)
PARKING REQUIRED: REST. = 5,200 SF @ 6/1000 = 31.2 SPACES; OFF. = 1st 2nd & 3rd FLOORS; 14,120 SF OF OFFICES. 14,120 SF @ 3.3/1000 = 46.6 SPACES. TOTAL = 31.2+46.6 = 78 SPACES.

CONDOMINIUM BUILDINGS B1-B2
NO. OF UNITS PER BUILDING: 16
TOTAL NO. OF UNITS FOR BLDGS. B1-B2: 32 UNITS
PARKING REQUIRED: 32 @ 2/UNIT = 64 SPACES

CONDOMINIUM BUILDINGS B3-B4(FUTURE PHASE II)
NO. OF UNITS PER BUILDING: 16
TOTAL NO. OF UNITS FOR BLDGS. B3-B4: 32 UNITS
PARKING REQUIRED: 32 @ 2/UNIT = 64 SPACES

SHARED PARKING ADJUSTMENT-PARKING LOTS A & B
TOTAL PARKING REQUIRED FOR BLDGS.A1,B1-B4) =64+64+78=206 SPACES
SHARED PARKING ADJUSTMENT PER SECTION 133.E.1.a - USING MORNING
206 SPACES REQUIRED X 80% = 165 SPACES
PARKING PROVIDED IN PARKING LOTS A & B = 168

OVERFLOW PARKING NOTE:
IN ACCORDANCE WITH SECTION 16.120(b)(12) OF THE HOWARD COUNTY SUBDIVISION REGULATIONS OVERFLOW PARKING IS REQUIRED TO BE 0.3X128= 38.4 ROUNDED TO 39 SPACES. THE PARKING LOT ON DARBY DOWNS AND HARPER WAY CONTAINS 118 PARKING SPACES OF THOSE SPACES 64 ARE DEDICATED TO CONDOMINIUM BUILDINGS B-1 AND B-2. THE REMAINING 54 SPACES ARE AVAILABLE FOR OVERFLOW PARKING. IN ADDITION THE PARKING LOT ON ESQUIRE COURT CONTAINS 50 PARKING SPACES FOR THE OFFICE DEVELOPMENT. THESE SPACES ARE ALSO AVAILABLE FOR OVERFLOW PARKING FROM THE RESIDENTIAL UNITS.

SITE DATA - PHASE ONE

1. TOTAL AREA: 423,417 SF OR 9.720 ACRES
2. TOTAL BUILDING AREAS: 86,808 SF OR 1.993 ACRES
3. SITE BUILDING COVERAGE: 86,808/423,417 = 21%
4. PAVED AREA/AREA OF SITE: 361400/423,417 = 86%
5. TOTAL DISTURBED AREA: 423,417 SF OR 9.720 ACRES
6. COMMERCIAL DISTURBED AREA: 46,200 SF OR 1.060 ACRES
7. PROJECT BACKGROUND:
   LOCATION: ELKRIDGE, HOWARD COUNTY, MD.
   TAX MAP: 38, PARCEL 30 PROPERTY NO.:01-168150
   TAX MAP: 38, PARCEL 38 PROPERTY NO.:01-164465
   ZONED: CAC
8. AMENITY OPEN SPACE PROVIDED: 1.0 ACRES
9. DEVELOPER/OWNER WILL EXECUTE A COVENANT WITH DEPARTMENT OF HOUSING WITH REGARD TO PROVIDING MODERATE INCOME HOUSING
10. SKETCH PLAN FOR "ELKRIDGE CROSSING(S-04-011) APPROVED ON DEC.10, 2004

CONSTRUCTION PHASING

PHASE NO. YEAR	UNITS PROPOSED	UNITS TYPE & NO. OF UNITS: TOWNHOUSES	CONDOMINIUMS	COMMERCIAL AREA: OFFICES	RETAIL	RESTAURANT	BANQUET	HOTEL GUEST ROOMS	SDP NO.
1 - 2007	128	96 *	32(BLDGS.B1-B2)	14,120 SF	*5,200 SF	----	----	----	04-017
2 - 2008	98	66 **	32(BLDGS.B3-B4)	27,480 SF	**6,700 SF	4,999 SF	5,000 SF	148	06-078
3 - 2009 / 4 - 2010	136	56 *** ****	80(BLDGS B5-B9)						07-056
TOTAL	362	218	144	41,600 SF	11,900 SF	4,999 SF	5,000 SF	148	
				BLDG A1	BLDG.D	BLDG.E	BLDG.E	BLDG.E	

* BLDGS. TH 1-8 *** } BLDGS. TH 15-21
** BLDGS. TH 9-14 ****

FOR COMPLETE ADDRESS CHART SEE SHEET 2 OF 56

OWNER
PARCEL 30 - GWENRIDGE, LLC
8835-P COLUMBIA 100 PARKWAY
COLUMBIA MD 21045
TEL: 410-730-0810
PARCEL 38 - MEHTA CHARALUTA TRUST
5551 OAKLAND MILLS ROAD
COLUMBIA MD 21045
TEL: 410-730-3961

DEVELOPER
BRANTLY DEVELOPMENT GROUP, INC.
8835-P COLUMBIA 100 PARKWAY
COLUMBIA MD 21045
TEL: 410-730-0810

NO.	DATE	DESCRIPTION	BY
1	6/15/07	OVERALL PLAN, NOTES	JM
		PERMIT INFO	
		ADDRESS CHART NOTE	
		PHASE 1-SITE ANALYSIS NOTES	
		FUTURE PHASE 3/4 LAYOUT	
2	8/29/08	GREASE TRAP, DEV. HISTORY, PARKING CALCULATIONS	CND

PLANS PREPARERD BY:
JURI MAISTE - SITE DESIGN CONSULTANT
2923 Chenoak Avenue,Baltimore,Maryland 21234
Phone: 410-661-8752 Fax: 410-661-8752
RICHARDSON ENGINEERING, LLC
730 W.Padonia Road, Suite 101, Cockeysville, Maryland 21030
Phone: 410-560-1502 Fax: 410-560-0827

DRAWN: JM
DATE: JUNE 21, 2006 06/07
SCALE: AS SHOWN
SHEET NO. 1 OF 56

ADDRESS CHART

PARCEL No.	STREET ADDRESS
38	6200 BALTIMORE WASHINGTON BOULEVARD (US RTE. #1)
30	7255 MONTGOMERY ROAD

SUBDIVISION NAME: ELKRIDGE CROSSING; PARCELS A-D PN 17347-48,18494-95,19057-58; PARCEL E PN 18490-91, 19052--53 | SECTION/AREA: N / A | PARCEL NUMBER: PARCELS A-E
L/F: P30: 6227/2329; P38: 3124/163 | BLOCK No: 2 | ZONE: CAC | TAX/ZONE: 38 | ELECT.DIST.: FIRST | CENSUS TR.: 6012.01
WATER CODE: D-09 | SEWER CODE: 2022431

COVER SHEET Rev/Replacement Sht.

REVISED SITE DEVELOPMENT PLAN-PHASE ONE
ELKRIDGE-CROSSING
PARCELS A-E
TAX MAP 38, GRID 2, PARCELS 30 & 38
FIRST ELECTION DISTRICT, HOWARD COUNTY, MARYLAND

STATE OF MARYLAND JURI MAISTE (seal)

SDP-04-017

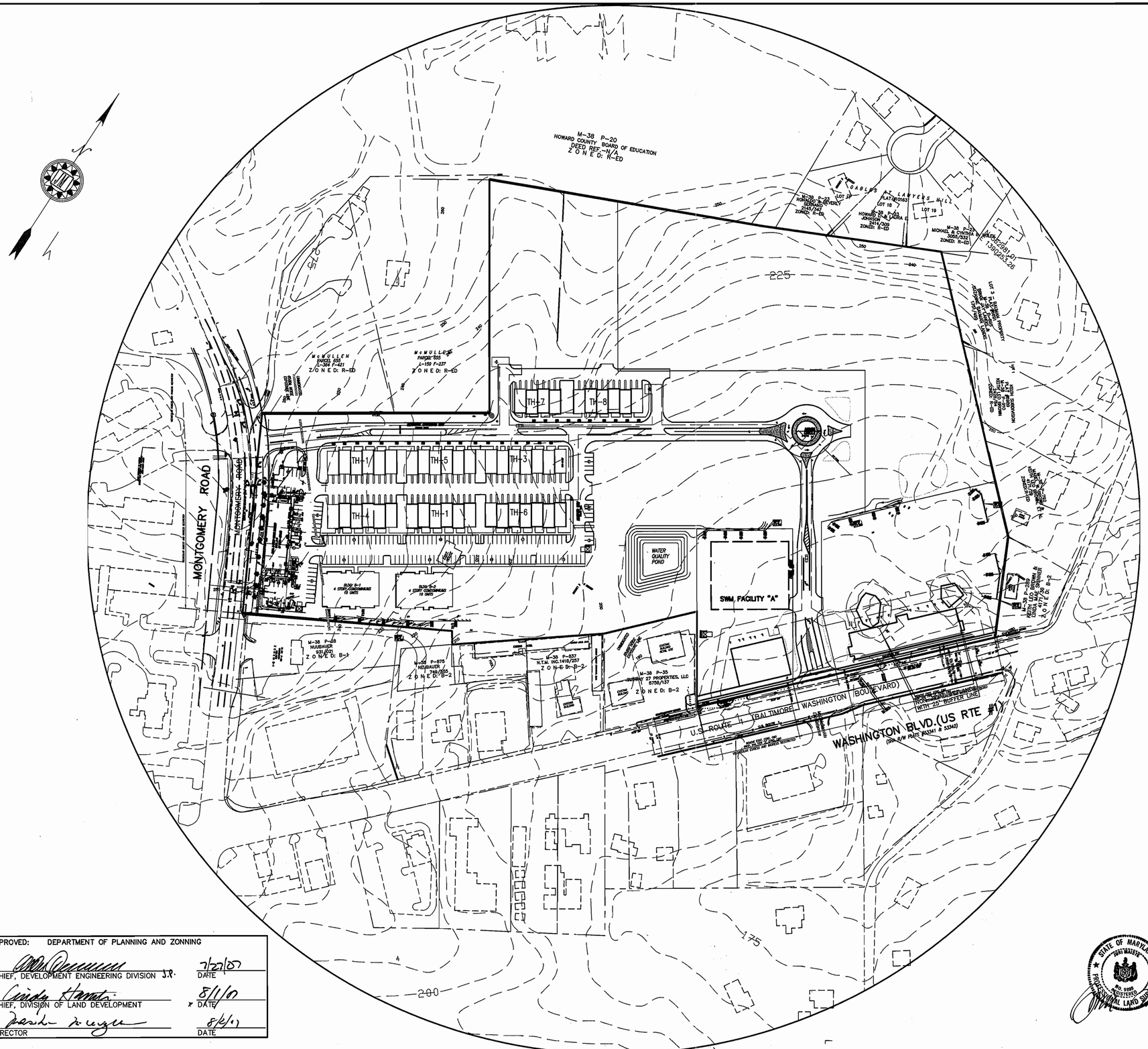

ADDRESS CHART

BLDG. #	ADDRESS
A-1	7320 ESQUIRE COURT
B-1	7210 DARBY DOWNS
B-2	7230 DARBY DOWNS
TH1	
U1/2	7202/7204 ELKRIDGE CROSSING WAY
U3/4	7206/7208 ELKRIDGE CROSSING WAY
U5/6	7210/7212 ELKRIDGE CROSSING WAY
U7/8	7214/7216 ELKRIDGE CROSSING WAY
U9/10	7218/7220 ELKRIDGE CROSSING WAY
U11/12	7222/7224 ELKRIDGE CROSSING WAY
TH2	
U1/2	7228/7230 ELKRIDGE CROSSING WAY
U3/4	7232/7234 ELKRIDGE CROSSING WAY
U5/6	7236/7238 ELKRIDGE CROSSING WAY
U7/8	7240/7242 ELKRIDGE CROSSING WAY
U9/10	7244/7246 ELKRIDGE CROSSING WAY
U11/12	7248/7250 ELKRIDGE CROSSING WAY
TH3	
U1/2	7254/7256 ELKRIDGE CROSSING WAY
U3/4	7258/7260 ELKRIDGE CROSSING WAY
U5/6	7262/7264 ELKRIDGE CROSSING WAY
U7/8	7266/7268 ELKRIDGE CROSSING WAY
U9/10	7270/7272 ELKRIDGE CROSSING WAY
U11/12	7274/7276 ELKRIDGE CROSSING WAY
U13/14	7278/7280 ELKRIDGE CROSSING WAY
TH4	
U1/2	7203/7205 DARBY DOWNS
U3/4	7207/7209 DARBY DOWNS
U5/6	7211/7213 DARBY DOWNS
U7/8	7215/7217 DARBY DOWNS
U9/10	7219/7221 DARBY DOWNS
U11/12	7223/7225 DARBY DOWNS
TH5	
U1/2	7229/7231 DARBY DOWNS
U3/4	7233/7235 DARBY DOWNS
U5/6	7237/7239 DARBY DOWNS
U7/8	7241/7243 DARBY DOWNS
U9/10	7245/7247 DARBY DOWNS
U11/12	7249/7251 DARBY DOWNS
TH6	
U1/2	7255/7257 DARBY DOWNS
U3/4	7259/7261 DARBY DOWNS
U5/6	7263/7265 DARBY DOWNS
U7/8	7267/7269 DARBY DOWNS
U9/10	7271/7273 DARBY DOWNS
U11/12	7275/7277 DARBY DOWNS
U13/14	7279/7281 DARBY DOWNS
TH7	
U1/2	7265/7267 ELKRIDGE CROSSING WAY
U3/4	7269/7271 ELKRIDGE CROSSING WAY
U5/6	7273/7275 ELKRIDGE CROSSING WAY
U7/8	7277/7279 ELKRIDGE CROSSING WAY
TH8	
U1/2	7285/7287 ELKRIDGE CROSSING WAY
U3/4	7289/7291 ELKRIDGE CROSSING WAY
U5/6	7293/7295 ELKRIDGE CROSSING WAY
U7/8	7297/7299 ELKRIDGE CROSSING WAY
U9/10	7301/7303 ELKRIDGE CROSSING WAY
U11/12	7305/7307 ELKRIDGE CROSSING WAY

OWNER

PARCEL 30 – GWENRIDGE, LLC
8835-P COLUMBIA 100 PARKWAY
COLUMBIA MD 21045
PARCEL 38 – MEHTA CHARALUTA TRUST
5551 OAKLAND MILLS ROAD
COLUMBIA MD 21045

DEVELOPER

BRANTLY DEVELOPMENT GROUP, INC.
8835-P COLUMBIA 100 PARKWAY
COLUMBIA MD 21045

APPROVED: DEPARTMENT OF PLANNING AND ZONNING

CHIEF, DEVELOPMENT ENGINEERING DIVISION J.R.	DATE 7/27/07
CHIEF, DIVISION OF LAND DEVELOPMENT	DATE 8/1/07
DIRECTOR	DATE 8/1/07

STATE OF MARYLAND — JURI MAISTE — No. 19981 REGISTERED PROFESSIONAL LAND SURVEYOR

Rev / Replacement Sht.

DRAWN: J.M.
DATE: JUNE 21, 2006 06/07
SCALE: 1"=100'

DATE	REVISION	BY
6/15/07	OFFICE BUILDING ADDRESS CHART ADDED	JM

ELKRIDGE–CROSSING–PHASE.ONE

PARCELS A-E
TAX MAP 38, GRID 2, PARCELS 30 & 38
FIRST ELECTION DISTRICT, HOWARD COUNTY, MARYLAND

EXISTING*FEATURES* WITHIN*200; *OF*SITE

JURI MAISTE – SITE DESIGN CONSULTANT
2923 Chenoak Avenue, Baltimore, Maryland 21234
Phone: 410-661-8752 Fax: 410-661-8752

RICHARDSON ENGINEERING, LLC
730 W. Padonia Road, Suite 101, Cockeysville, Maryland 21030
Phone: 410-560-1502 Fax: 410-560-0227

SDP 04-017

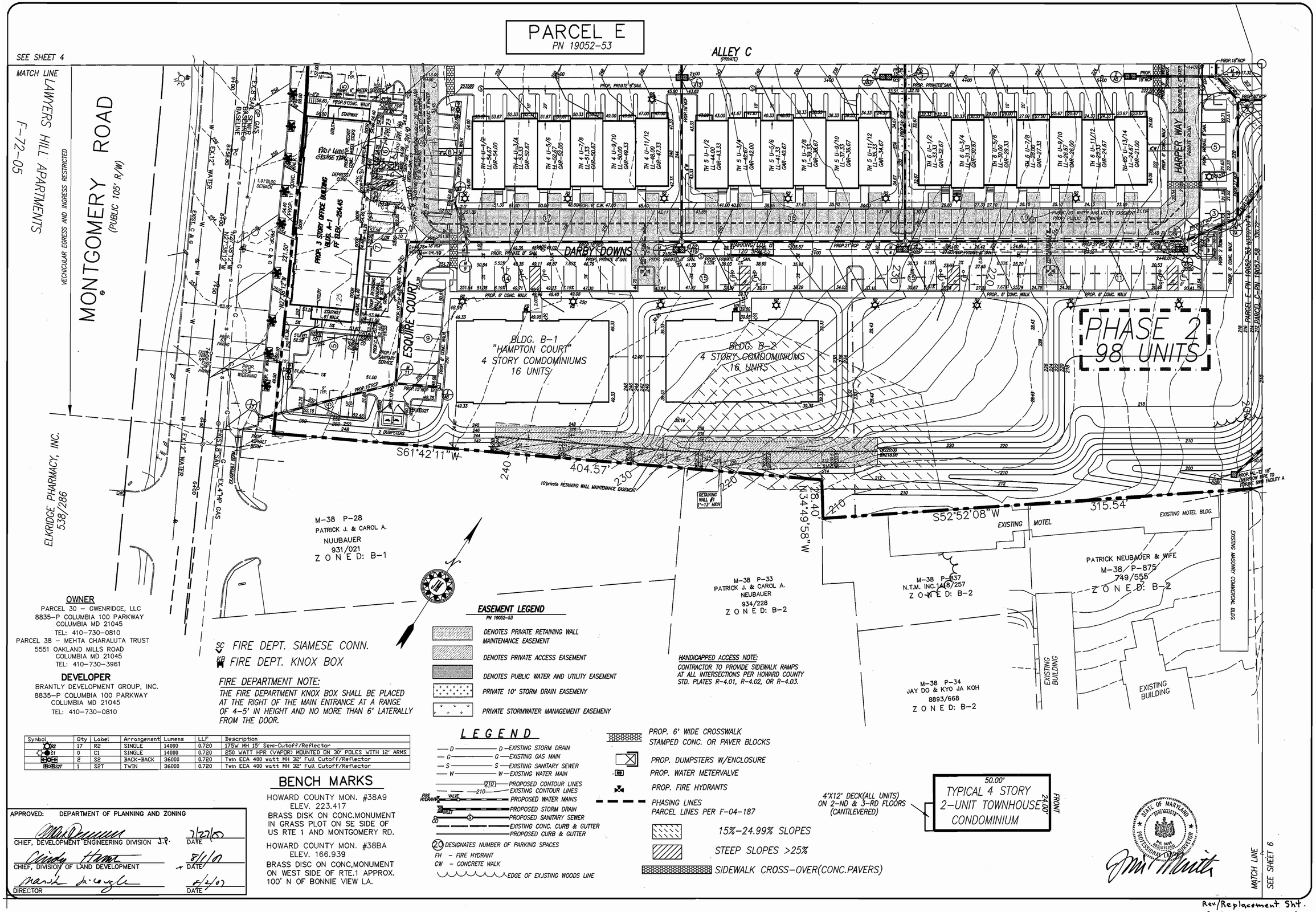

OWNER

PARCEL 30 – GWENRIDGE, LLC
8835-P COLUMBIA 100 PARKWAY
COLUMBIA MD 21045
TEL: 410-730-0810
PARCEL 38 – MEHTA CHARALUTA TRUST
5551 OAKLAND MILLS ROAD
COLUMBIA MD 21045
TEL: 410-730-3961

DEVELOPER

BRANTLY DEVELOPMENT GROUP, INC.
8835-P COLUMBIA 100 PARKWAY
COLUMBIA MD 21045
TEL: 410-730-0810

SC FIRE DEPT. SIAMESE CONN.
KB FIRE DEPT. KNOX BOX

FIRE DEPARTMENT NOTE:

THE FIRE DEPARTMENT KNOX BOX SHALL BE PLACED AT THE RIGHT OF THE MAIN ENTRANCE AT A RANGE OF 4-5' IN HEIGHT AND NO MORE THAN 6' LATERALLY FROM THE DOOR.

EASEMENT LEGEND

PN 19052-53

- DENOTES PRIVATE RETAINING WALL MAINTENANCE EASEMENT
- DENOTES PRIVATE ACCESS EASEMENT
- DENOTES PUBLIC WATER AND UTILITY EASEMENT
- PRIVATE 10' STORM DRAIN EASEMENY
- PRIVATE STORMWATER MANAGEMENT EASEMENY

HANDICAPPED ACCESS NOTE:

CONTRACTOR TO PROVIDE SIDEWALK RAMPS AT ALL INTERSECTIONS PER HOWARD COUNTY STD. PLATES R-4.01, R-4.02, OR R-4.03.

Symbol	Qty	Label	Arrangement	Lumens	LLF	Description
S2	17	R2	SINGLE	14000	0.720	175W MH 15' Semi-Cutoff/Reflector
C1	0	C1	SINGLE	14000	0.720	250 WATT HPR (VAPOR) MOUNTED ON 30' POLES WITH 12' ARMS
S2	2	S2	BACK-BACK	36000	0.720	Twin ECA 400 watt MH 32' Full Cutoff/Reflector
S2T	1	S2T	TWIN	36000	0.720	Twin ECA 400 watt MH 32' Full Cutoff/Reflector

BENCH MARKS

HOWARD COUNTY MON. #38A9
ELEV. 223.417
BRASS DISK ON CONC.MONUMENT IN GRASS PLOT ON SE SIDE OF US RTE 1 AND MONTGOMERY RD.

HOWARD COUNTY MON. #38BA
ELEV. 166.939
BRASS DISC ON CONC.MONUMENT ON WEST SIDE OF RTE.1 APPROX. 100' N OF BONNIE VIEW LA.

LEGEND

- D — EXISTING STORM DRAIN
- G — EXISTING GAS MAIN
- S — EXISTING SANITARY SEWER
- W — EXISTING WATER MAIN
- 210 — PROPOSED CONTOUR LINES
- 210 — EXISTING CONTOUR LINES
- FIRE HYDRANT, VALVE — PROPOSED WATER MAINS
- INLET — PROPOSED STORM DRAIN
- CO — PROPOSED SANITARY SEWER
- EXISTING CONC. CURB & GUTTER
- PROPOSED CURB & GUTTER
- 20 DESIGNATES NUMBER OF PARKING SPACES
- FH – FIRE HYDRANT
- CW – CONCRETE WALK
- EDGE OF EXISTING WOODS LINE
- PROP. 6' WIDE CROSSWALK STAMPED CONC. OR PAVER BLOCKS
- PROP. DUMPSTERS W/ENCLOSURE
- PROP. WATER METERVALVE
- PROP. FIRE HYDRANTS
- PHASING LINES
- PARCEL LINES PER F-04-187
- 15%-24.99% SLOPES
- STEEP SLOPES >25%
- SIDEWALK CROSS-OVER(CONC.PAVERS)

APPROVED: DEPARTMENT OF PLANNING AND ZONING

CHIEF, DEVELOPMENT ENGINEERING DIVISION J.R.	DATE 7/27/07
CHIEF, DIVISION OF LAND DEVELOPMENT	DATE 8/1/07
DIRECTOR	DATE 8/2/07

DRAWN: J.M.
DATE: JUNE 21, 2006
SCALE: 1:=30

DATE	REVISION	BY
7/5/07	BLDG. A2 REMOVED	JM
8/31/06	GRADE STEAP & SWM FACILITY A-1	CMD
	ADDITIONAL HOUSE GRADE STAKE	CMD

ELKRIDGE-CROSSING-PHASE. ONE

PARCELS A-E
TAX MAP 38, GRID 2, PARCELS 30 & 38
FIRST ELECTION DISTRICT, HOWARD COUNTY, MARYLAND

SITE*DEVELOPMENT*PLAN-1

JURI MAISTE - SITE DESIGN CONSULTANT
2923 Chenault Avenue, Baltimore, Maryland 21234
Phone: 410-661-8752 Fax: 410-661-8752

RICHARDSON ENGINEERING, LLC
730 W. Padonia Road, Suite 101, Cockeysville, Maryland 21030
Phone: 410-560-1502 Fax: 410-560-0827

Rev/Replacement Sht.
SDP-04-017

APPROVED: DEPARTMENT OF PLANNING AND ZONING

CHIEF, DEVELOPMENT ENGINEERING DIVISION	DATE 9/6/06
CHIEF, DIVISION OF LAND DEVELOPMENT	DATE 9/14/06
DIRECTOR 9/18/06	DATE

OWNER

PARCEL 30 – GWENRIDGE, LLC
8835-P COLUMBIA 100 PARKWAY
COLUMBIA MD 21045
TEL: 410-730-0810
PARCEL 38 – MEHTA CHARALUTA TRUST
5551 OAKLAND MILLS ROAD
COLUMBIA MD 21045
TEL: 410-730-3961

DEVELOPER

BRANTLY DEVELOPMENT GROUP, INC.
8835-P COLUMBIA 100 PARKWAY
COLUMBIA MD 21045
TEL: 410-730-0810

Symbol	Qty	Label	Arrangement	Lumens	LLF	Description
R2	44	R2	SINGLE	14000	0.720	175W MH 15' Semi-Cutoff/Reflector
C1	3	C1	SINGLE	14000	0.720	250 WATT HPR (VAPOR) MOUNTED ON 30' POLES WITH 12' ARMS
S2	5	S2	BACK-BACK	36000	0.720	Twin ECA 400 watt MH 32' Full Cutoff/Reflector
S2T	1	S2T	TWIN	36000	0.720	Twin ECA 400 watt MH 32' Full Cutoff/Reflector

LEGEND

- D — EXISTING STORM DRAIN
- G — EXISTING GAS MAIN
- S — EXISTING SANITARY SEWER
- W — EXISTING WATER MAIN
- 210 — PROPOSED CONTOUR LINES
- 210 — EXISTING CONTOUR LINES
- FIRE HYDRANT, VALVE — PROPOSED WATER MAINS
- INLET — PROPOSED STORM DRAIN
- CO — PROPOSED SANITARY SEWER
- EXISTING CONC. CURB & GUTTER
- PROPOSED CURB & GUTTER
- (20) DESIGNATES NUMBER OF PARKING SPACES
- FH – FIRE HYDRANT
- CW – CONCRETE WALK
- EDGE OF EXISTING WOODS LINE
- PROP. 6' WIDE CROSSWALK STAMPED CONC. OR PAVER BLOCKS
- PROP. DUMPSTERS W/ENCLOSURE
- PROP. WATER METERVALVE
- PROP. FIRE HYDRANTS
- PHASING LINES PARCEL LINES PER F-04-187
- 15%-24.99% SLOPES
- STEEP SLOPES >25%
- SIDEWALK CROSS-OVER(CONC.PAVERS)

EASEMENT LEGEND

PH. 18490-91 & 18494-95

- DENOTES PRIVATE RETAINING WALL MAINTENANCE EASEMENT
- DENOTES PRIVATE ACCESS EASEMENT
- DENOTES PUBLIC WATER AND UTILITY EASEMENT
- PRIVATE 10' STORM DRAIN EASEMENT
- PRIVATE STORMWATER MANAGEMENT EASEMENT

HANDICAPPED ACCESS NOTE:
CONTRACTOR TO PROVIDE SIDEWALK RAMPS AT ALL INTERSECTIONS PER HOWARD COUNTY STD. PLATES R-4.01, R-4.02, OR R-4.03.

DRIVEWAY NOTE:
THE INDIVIDUAL DRIVEWAYS IN FRONT OF THE TOWNHOME GARAGES SHALL BE A MINIMUM LENGTH OF 18 FEET.

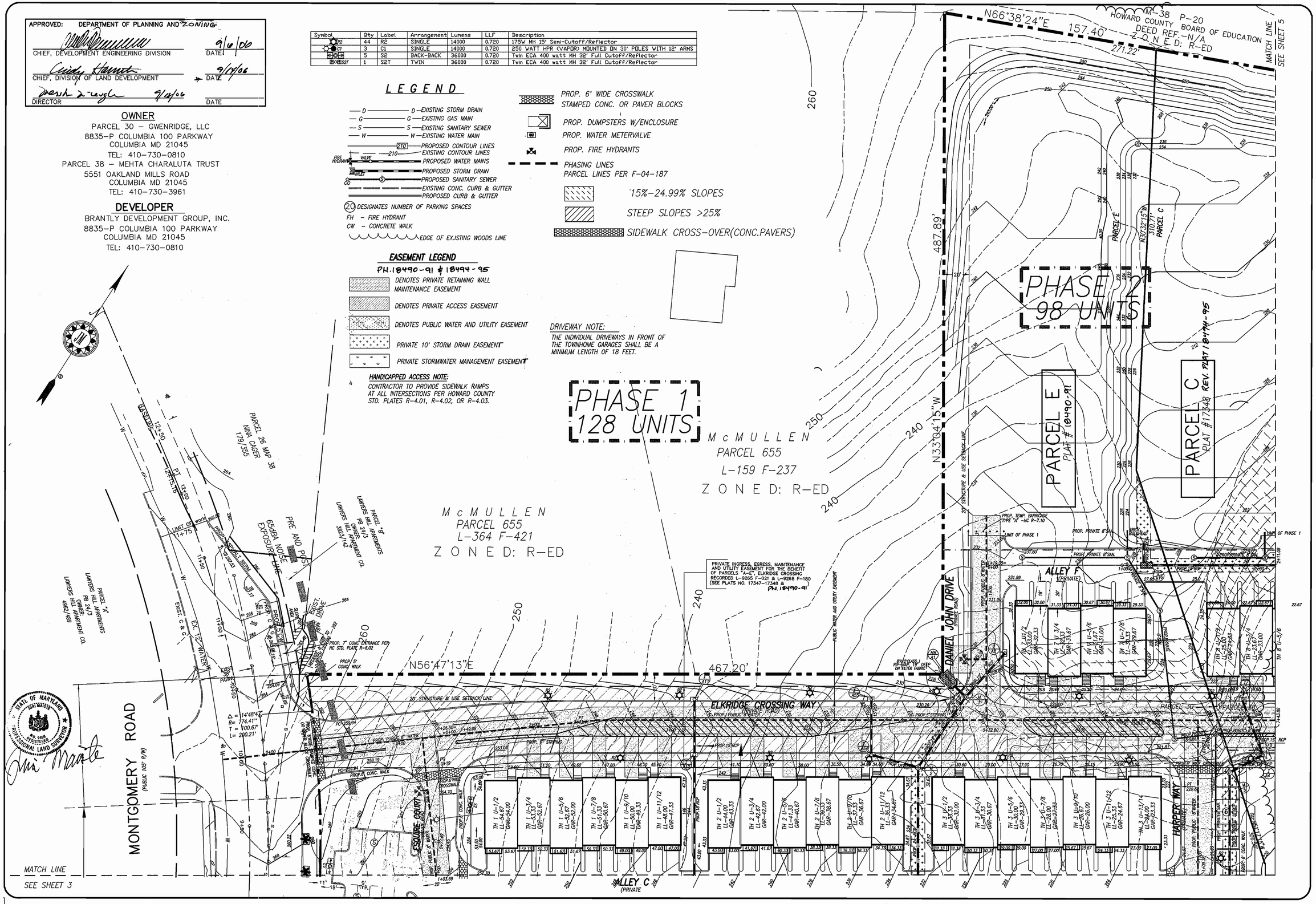

DRAWN: JJM.	DATE: JUNE 21, 2006	SCALE: 1:=30

DATE	REVISION	BY
1/1/07	REMOVE BLOCK A-2 & ADD PARCEL C	CAD

ELKRIDGE-CROSSING-PHASE.ONE

PARCELS A-E
TAX MAP 38, GRID 2, PARCELS 30 & 38
FIRST ELECTION DISTRICT, HOWARD COUNTY, MARYLAND

SITE*DEVELOPMENT*PLAN-2

JURI MAISTE – SITE DESIGN CONSULTANT
2923 Chenoak Avenue, Baltimore, Maryland 21234
Phone: 410-661-8752 Fax: 410-661-8752

RICHARDSON ENGINEERING, LLC
730 W. Padonia Road, Suite 101, Cockeysville, Maryland 21030
Phone: 410-560-1502 Fax: 410-560-0827

SDP-04-017

C:\DRAWINGS\ELKRID~1\PHASE-1\E2-SDP2 Sun Jul 23 21:27:18 2006

BENCH MARKS

HOWARD COUNTY MON. #38A9
ELEV. 223.417
BRASS DISK ON CONC.MONUMENT IN GRASS PLOT ON SE SIDE OF US RTE 1 AND MONTGOMERY RD.

HOWARD COUNTY MON. #38BA
ELEV. 166.939
BRASS DISC ON CONC.MONUMENT ON WEST SIDE OF RTE.1 APPROX 100' N OF BONNIE VIEW LA.

Symbol	Qty	Label	Arrangement	Lumens	LLF	Description
	44	R2	SINGLE	14000	0.720	175W MH 15' Semi-Cutoff/Reflector
	3	C1	SINGLE	14000	0.720	250 WATT HPR (VAPOR) MOUNTED ON 30' POLES WITH 12' ARMS
	5	S2	BACK-BACK	36000	0.720	Twin ECA 400 watt MH 32' Full Cutoff/Reflector
	1	S2T	TWIN	36000	0.720	Twin ECA 400 watt MH 32' Full Cutoff/Reflector

APPROVED: DEPARTMENT OF PLANNING AND ZONING

CHIEF, DEVELOPMENT ENGINEERING DIVISION — DATE 7/27/07

CHIEF, DIVISION OF LAND DEVELOPMENT — DATE 8/1/07

DIRECTOR — DATE 8/2/07

OWNER
PARCEL 30 – GWENRIDGE, LLC
8835-P COLUMBIA 100 PARKWAY
COLUMBIA MD 21045
TEL: 410-730-0810
PARCEL 38 – MEHTA CHARALUTA TRUST
5551 OAKLAND MILLS ROAD
COLUMBIA MD 21045
TEL: 410-730-3961

DEVELOPER
BRANTLY DEVELOPMENT GROUP, INC.
8835-P COLUMBIA 100 PARKWAY
COLUMBIA MD 21045
TEL: 410-730-0810

HANDICAPPED ACCESS NOTE:
CONTRACTOR TO PROVIDE SIDEWALK RAMPS AT ALL INTERSECTIONS PER HOWARD COUNTY STD. PLATES R-4.01, R-4.02, OR R-4.03.

LEGEND
D — EXISTING STORM DRAIN
G — EXISTING GAS MAIN
S — EXISTING SANITARY SEWER
W — EXISTING WATER MAIN
210 — PROPOSED CONTOUR LINES
210 — EXISTING CONTOUR LINES
WM — PROPOSED WATER MAINS
SD — PROPOSED STORM DRAIN
SS — PROPOSED SANITARY SEWER
CG — EXISTING CONC. CURB & GUTTER
CG — PROPOSED CURB & GUTTER
20 DESIGNATES NUMBER OF PARKING SPACES
FH – FIRE HYDRANT
CW – CONCRETE WALK
PHASING LINES
WV WATER VALVE
WM WATER METER
FIRE HYDRANT
STAMPED CONC. OR PAVER BLOCKS
PROP. DUMPSTERS W/ENCLOSURE
PROP. WATER METER/VALVE
PROP. FIRE HYDRANTS
PROP. 6' WIDE CROSSWALK

EASEMENT LEGEND
PN 19057-58
DENOTES PRIVATE RETAINING WALL MAINTENANCE EASEMENT
DENOTES PRIVATE ACCESS EASEMENT
DENOTES PUBLIC WATER AND UTILITY EASEMENT
PRIVATE 10' STORM DRAIN EASEMENT
PRIVATE STORMWATER MANGEMENT EASEMENT

DRIVEWAY NOTE:
THE INDIVIDUAL DRIVEWAYS IN FRONT OF THE TOWNHOME GARAGES SHALL BE A MINIMUM LENGTH OF 18 FEET.

PRIVATE INGRESS, EGRESS, MAINTENANCE AND UTILITY EASEMENT FOR THE BENEFIT OF PARCELS "A-E", ELKRIDGE CROSSING RECORDED L.9265 F.021 & L.9266 F.189 (SEE PLATS NO. 17347-17348 &)

SEE SHEET 4 — MATCH LINE — SEE SHEET 6 — MATCH LINE

DRAWN: J.M.
DATE: JUNE 21, 2006 — 09/07
SCALE: 1:=30

DATE	REVISION	BY
6/15/07	REF. APPROVED REDLINES	JM

ELKRIDGE-CROSSING-PHASE.ONE

PARCELS A-E
TAX MAP 38, GRID 2, PARCELS 30 & 38
FIRST ELECTION DISTRICT, HOWARD COUNTY, MARYLAND

SITE*DEVELOPMENT*PLAN-3

JURI MAISTE – SITE DESIGN CONSULTANT
2933 Chenoak Avenue, Baltimore, Maryland 21234
Phone: 410-661-6752 Fax: 410-661-6752
RICHARDSON ENGINEERING, LLC
730 W. Padonia Road, Suite 101, Cockeysville, Maryland 21030
Phone: 410-560-1502 Fax: 410-560-0827

Rev./Replacement sht.

SDP-04-017

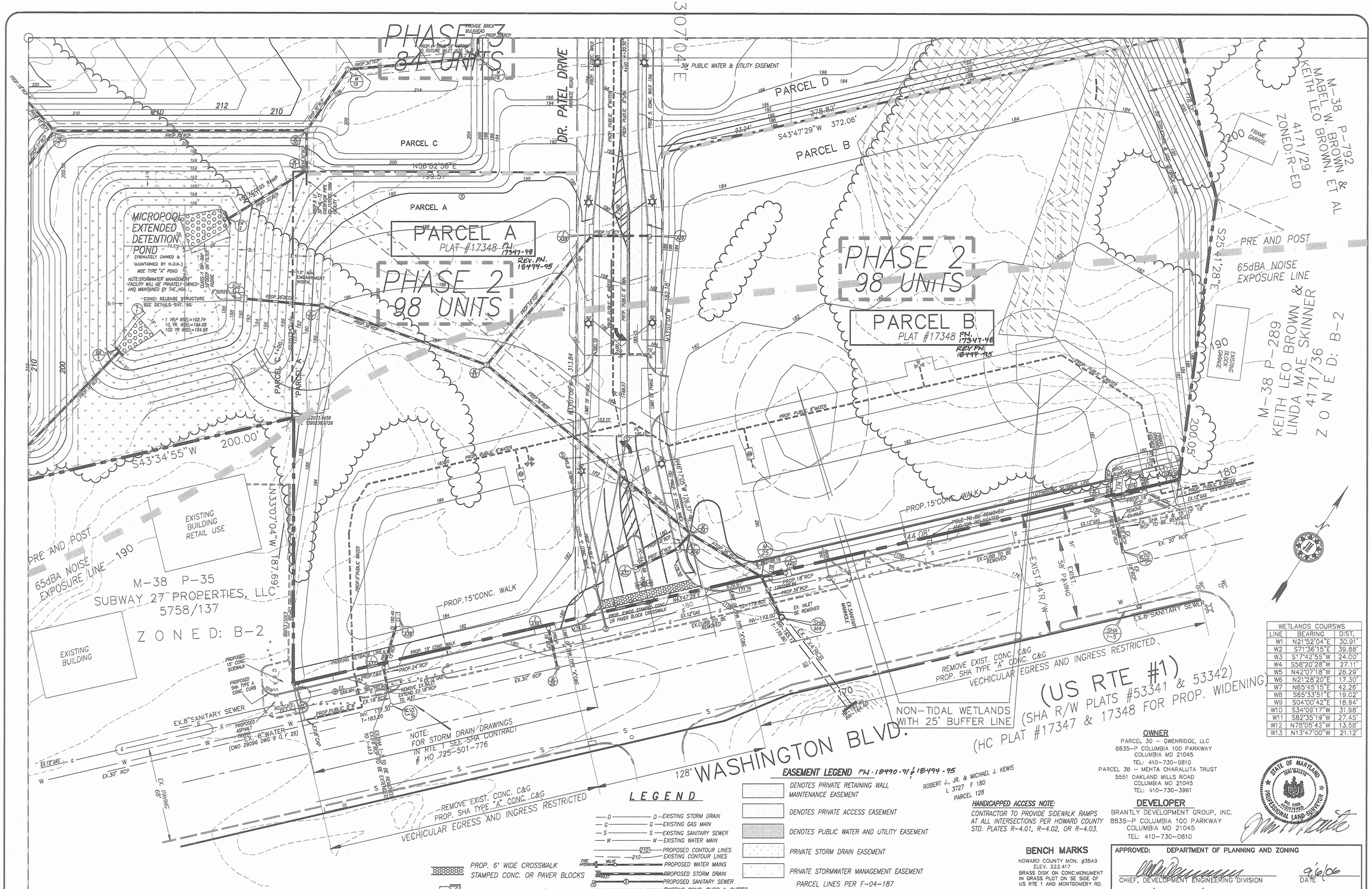

Symbol	Qty	Label	Arrangement	Lumens	LLF	Description
R2	9	R2	SINGLE	14000	0.720	175W MH 15' Semi-Cutoff/Reflector
C1	0	C1	SINGLE	14000	0.720	250 WATT HPR (VAPOR) MOUNTED ON 30' POLES WITH 12' ARMS
S2	1	S2	BACK-BACK	36000	0.720	Twin ECA 400 watt MH 32' Full Cutoff/Reflector
S2T	0	S2T	TWIN	36000	0.720	Twin ECA 400 watt MH 32' Full Cutoff/Reflector

WETLANDS COURSWS		
LINE	BEARING	DIST.
W1	N21°52'04"E	30.91'
W2	S71°36'15"E	39.88'
W3	S1°42'55"W	24.00'
W4	S58°20'28"W	27.11'
W5	N42°07'18"W	28.29'
W6	N21°28'20"E	17.30'
W7	N65°45'15"E	42.26'
W8	S65°33'51"E	19.02'
W9	S04°00'42"E	18.94'
W10	S34°09'17"W	31.98'
W11	S62°35'19"W	27.45'
W12	N78°05'42"W	13.58'
W13	N13°47'00"W	21.12'

OWNER
PARCEL 30 – GWENRIDGE, LLC
8835-P COLUMBIA 100 PARKWAY
COLUMBIA MD 21045
TEL: 410-730-0810
PARCEL 38 – MEHTA CHARALUTA TRUST
5551 OAKLAND MILLS ROAD
COLUMBIA MD 21045
TEL: 410-730-3961

DEVELOPER
BRANTLY DEVELOPMENT GROUP, INC.
8835-P COLUMBIA 100 PARKWAY
COLUMBIA MD 21045
TEL: 410-730-0810

HANDICAPPED ACCESS NOTE:
CONTRACTOR TO PROVIDE SIDEWALK RAMPS AT ALL INTERSECTIONS PER HOWARD COUNTY STD. PLATES R-4.01, R-4.02, OR R-4.03.

BENCH MARKS
HOWARD COUNTY MON. #38A9
ELEV. 223.417
BRASS DISK ON CONC.MONUMENT IN GRASS PLOT ON SE SIDE OF US RTE 1 AND MONTGOMERY RD.
HOWARD COUNTY MON. #38BA
ELEV. 166.939
BRASS DISC ON CONC.MONUMENT ON WEST SIDE OF RTE.1 APPROX. 100' N OF BONNIE VIEW LA.

APPROVED: DEPARTMENT OF PLANNING AND ZONING

CHIEF, DEVELOPMENT ENGINEERING DIVISION	DATE 9/6/06
CHIEF, DIVISION OF LAND DEVELOPMENT	DATE 9/12/06
DIRECTOR	DATE 9/13/06

STATE OF MARYLAND — JURI MAISTE — NO. 9989 — REGISTERED PROFESSIONAL LAND SURVEYOR

DRAWN: J.M.
DATE: JUNE 1, 2006
SCALE: 1:=30

DATE	REVISION	BY

ELKRIDGE-CROSSING-PHASE.ONE
PARCELS A-E
TAX MAP 38, GRID 2, PARCELS 30 & 38
FIRST ELECTION DISTRICT, HOWARD COUNTY, MARYLAND
SITE*DEVELOPMENT*PLAN-4

JURI MAISTE – SITE DESIGN CONSULTANT
20233 Chemoah Avenue, Baltimore, Maryland 21234
Phone: 410-661-8752 Fax: 410-661-8752
RICHARDSON ENGINEERING, LLC
730 W. Padonia Road, Suite 101, Cockeysville, Maryland 21030
Phone: 410-560-1502 Fax: 410-560-0237

SDP-04-017

C:\DRAWINGS\ELKRIDGE\PHASE-1\E2-SDP4 Sat Aug 12 20:54:20 2006

ELEVATION
BUILDING A–1
NTS

TYPICAL ELEVATION
BUILDINGS B–1 & B–2
NTS

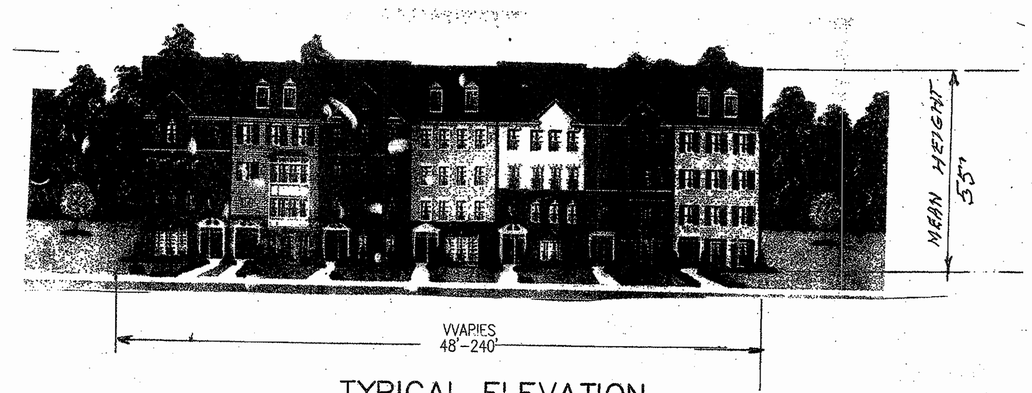

TYPICAL ELEVATION
BUILDING GROUPS TH1––TH22
NTS

APPROVED: DEPARTMENT OF PLANNING AND ZONNING	
CHIEF, DEVELOPMENT ENGINEERING DIVISION J.P.	DATE 7/27/07
CHIEF, DIVISION OF LAND DEVELOPMENT	DATE 8/1/07
DIRECTOR	DATE 8/2/07
~~APPROVED: FOR PUBLIC WATER AND SEWERAGE SYSTEMS~~	
~~COUNTY HEALTH OFFICER HOWARD COUNTY HEALTH DEPARTMENT~~ N/A	DATE

DRAWN: J.M.
DATE: APRIL 27, 2006
06/07
SCALE: NTS

DATE	REVISION	BY
6/15/07	BLDG. A1 REPLACES BLDGS. A1 AND A2	JM

ELKRIDGE–CROSSING–PHASE ONE

PARCELS A–E

TAX MAP 38, GRID 2, PARCELS 30 & 38
SECOND ELECTION DISTRICT, HOWARD COUNTY, MARYLAND

BUILDING–ELEVATIONS

JURI MAISTE – SITE DESIGN CONSULTANT
2923 Chenault Avenue, Baltimore, Maryland 21234
Phone: 410–661–8752 Fax: 410–661–8752
RICHARDSON ENGINEERING, LLC
730 W. Pedernale Road, Suite 101, Cockeysville, Maryland 21030
Phone: 410–560–1502 Fax: 410–560–0027

STATE OF MARYLAND
JURI MAISTE
NO. 5995
REGISTERED
PROFESSIONAL LAND SURVEYOR

Rev./Replacement Sht.

SDP-04-017

SHEET 33 OF 56

SRR SHEET 9

MATCH LINE

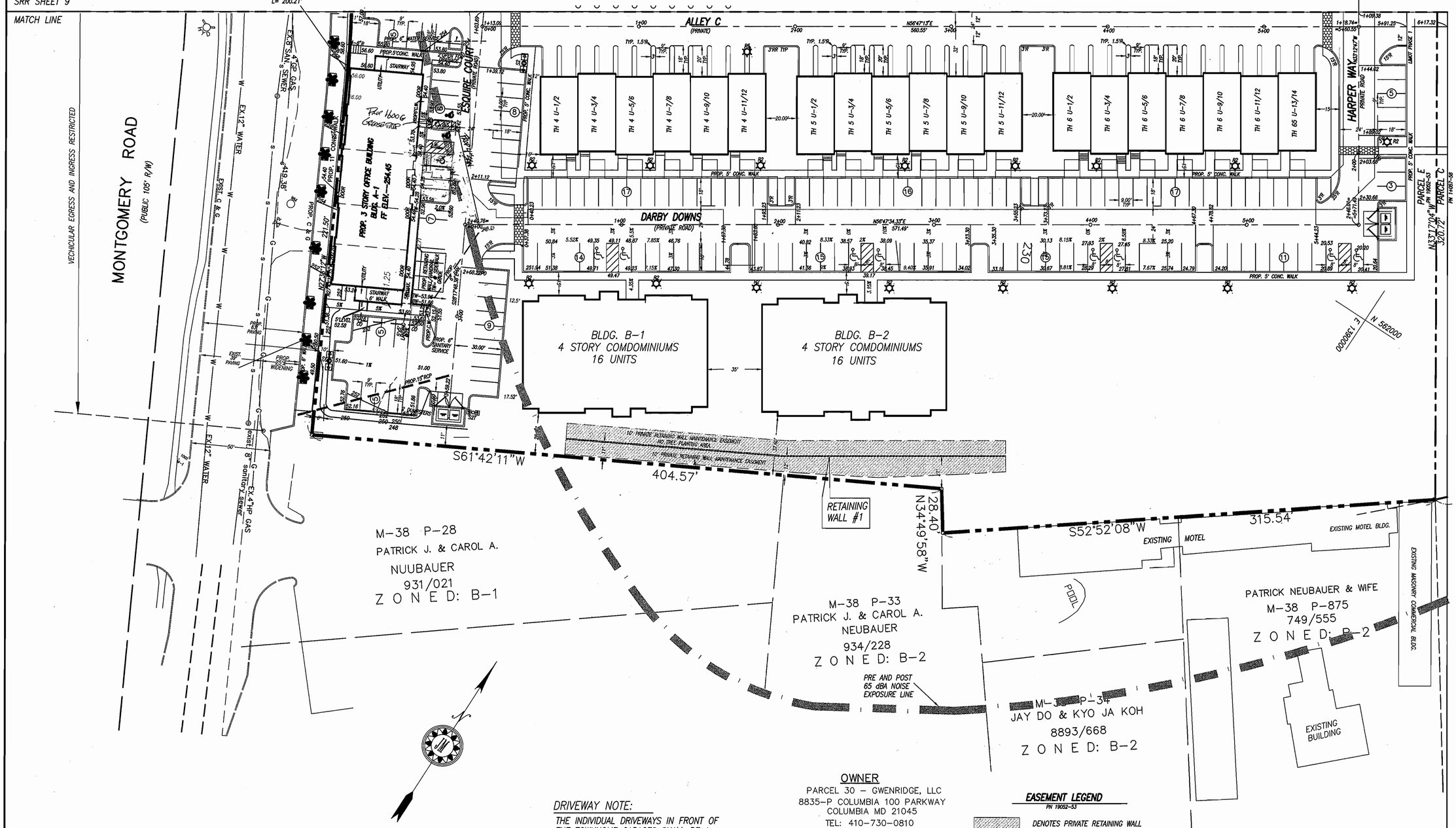

DRIVEWAY NOTE:

THE INDIVIDUAL DRIVEWAYS IN FRONT OF THE TOWNHOME GARAGES SHALL BE A MINIMUM LENGTH OF 18 FEET.

Symbol	Qty	Label	Arrangement	Lumens	LLF	Description
R2	17	R2	SINGLE	14000	0.720	175W MH 15' Semi-Cutoff/Reflector
C1	0	C1	SINGLE	14000	0.720	250 WATT HPR (VAPOR) MOUNTED ON 30' POLES WITH 12' ARMS
S2	3	S2	BACK-BACK	36000	0.720	Twin ECA 400 watt MH 32' Full Cutoff/Reflector
S2T	0	S2T	TWIN	36000	0.720	Twin ECA 400 watt MH 32' Full Cutoff/Reflector

OWNER

PARCEL 30 – GWENRIDGE, LLC
8835-P COLUMBIA 100 PARKWAY
COLUMBIA MD 21045
TEL: 410-730-0810

PARCEL 38 – MEHTA CHARALUTA TRUST
5551 OAKLAND MILLS ROAD
COLUMBIA MD 21045
TEL: 410-730-3961

DEVELOPER

BRANTLY DEVELOPMENT GROUP, INC.
8835-P COLUMBIA 100 PARKWAY
COLUMBIA MD 21045
TEL: 410-730-0810

EASEMENT LEGEND

PN 19052-53

- DENOTES PRIVATE RETAINING WALL MAINTENANCE EASEMENT
- DENOTES PRIVATE ACCESS EASEMENT
- DENOTES PUBLIC WATER AND UTILITY EASEMENT
- PRIVATE 10' STORM DRAIN EASEMENY
- PRIVATE STORMWATER MANAGEMENT EASEMENY

STATE OF MARYLAND
JURI MAISTE
No. 4000
REGISTERED
PROFESSIONAL LAND SURVEYOR

APPROVED: DEPARTMENT OF PLANNING AND ZONNING

CHIEF, DEVELOPMENT ENGINEERING DIVISION J.R.	DATE 7/27/07
CHIEF, DIVISION OF LAND DEVELOPMENT	DATE 8/1/07
DIRECTOR	DATE 8/2/07

Rev./Replacement Sht.

DRAWN: J.M.
DATE: JUNE 1, 2006
06107
SCALE: 1:=30

DATE	REVISION	BY
6/15/07	PER APPROVED REDLINES	JM
8/21/06	ADDED SITE TITLE & SHEET DATA, A-1	CMD
10/17/06	MINOR GRADING CHANGE	CMD

ELKRIDGE–CROSSING–PHASE.ONE

PARCELS A-E
TAX MAP 38, GRID 2, PARCELS 30 & 38
FIRST ELECTION DISTRICT, HOWARD COUNTY, MARYLAND

SITE*GEOMETRY–1

JURI MAISTE – SITE DESIGN CONSULTANT
2923 Chenault Avenue, Baltimore, Maryland 21234
Phone: 410-661-8752 Fax: 410-661-8752

RICHARDSON ENGINEERING, LLC
730 W. Pedonia Road, Suite 101, Cockeysville, Maryland 21030
Phone: 410-560-1502 Fax: 410-560-0827

SHEET 8 OF 56

SDP-04-017

APPROVED: DEPARTMENT OF PLANNING AND ZONING

CHIEF, DEVELOPMENT ENGINEERING DIVISION	DATE 9/6/06
CHIEF, DIVISION OF LAND DEVELOPMENT	DATE 9/14/06
DIRECTOR	DATE 9/18/06

Symbol	Qty	Label	Arrangement	Lumens	LLF	Description
R2	14	R2	SINGLE	14000	0.720	175W MH 15' Semi-Cutoff/Reflector
C1	2	C1	SINGLE	14000	0.720	250 WATT HPR (VAPOR) MOUNTED ON 30' POLES WITH 12' ARMS
S2	1	S2	BACK-BACK	36000	0.720	Twin ECA 400 watt MH 32' Full Cutoff/Reflector
S2T	0	S2T	TWIN	36000	0.720	Twin ECA 400 watt MH 32' Full Cutoff/Reflector

OWNER

PARCEL 30 – GWENRIDGE, LLC
8835-P COLUMBIA 100 PARKWAY
COLUMBIA MD 21045
TEL: 410-730-0810

PARCEL 38 – MEHTA CHARALUTA TRUST
5551 OAKLAND MILLS ROAD
COLUMBIA MD 21045
TEL: 410-730-3961

DEVELOPER

BRANTLY DEVELOPMENT GROUP, INC.
8835-P COLUMBIA 100 PARKWAY
COLUMBIA MD 21045
TEL: 410-730-0810

DRIVEWAY NOTE:
THE INDIVIDUAL DRIVEWAYS IN FRONT OF THE TOWNHOME GARAGES SHALL BE A MINIMUM LENGTH OF 18 FEET.

EASEMENT LEGEND

PH. 18490-91 & 18494-95

- DENOTES PRIVATE RETAINING WALL MAINTENANCE EASEMENT
- DENOTES PRIVATE ACCESS EASEMENT
- DENOTES PUBLIC WATER AND UTILITY EASEMENT
- PRIVATE 10' STORM DRAIN EASEMENT
- PRIVATE STORMWATER MANAGEMENT EASEMENT

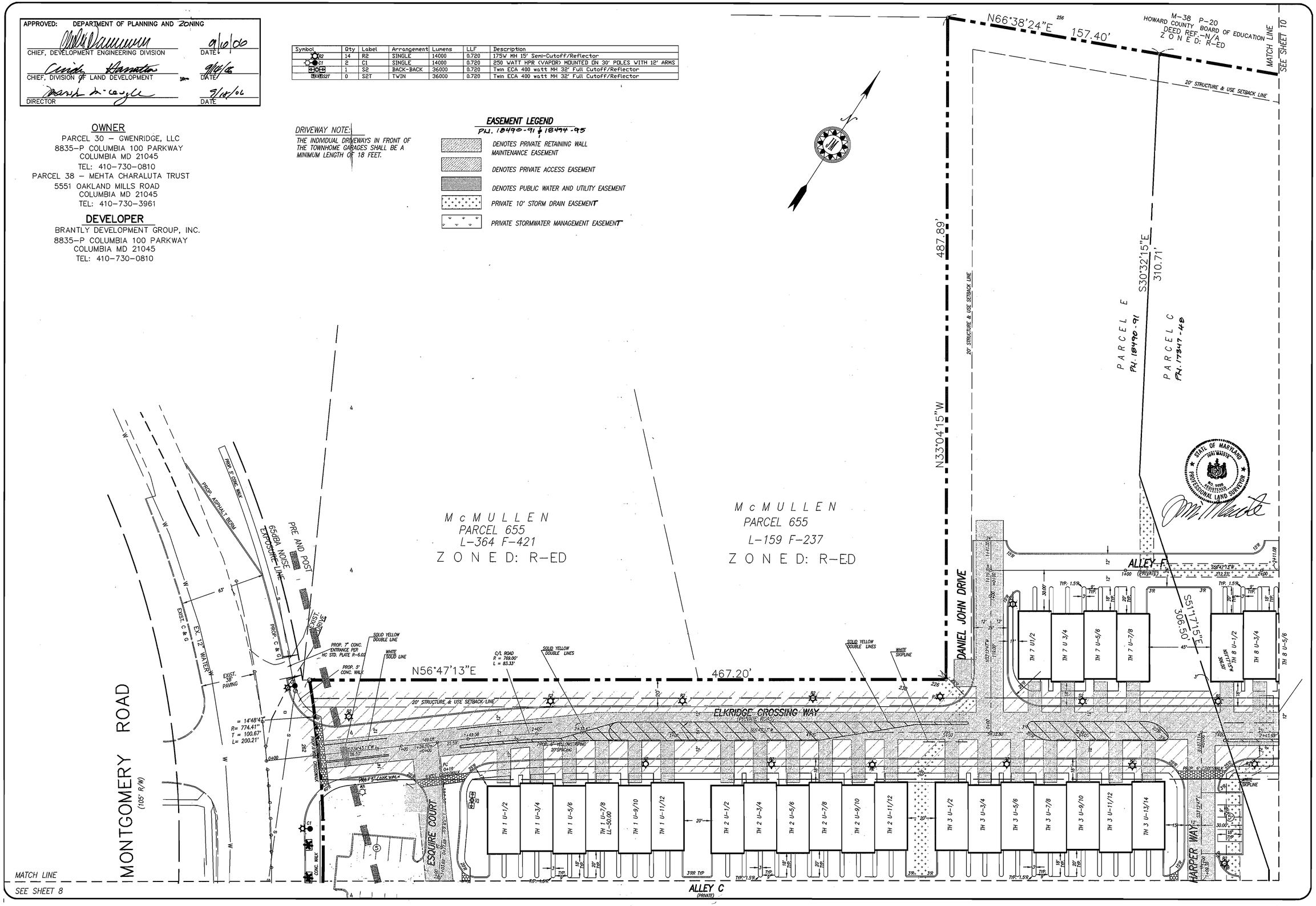

DRAWN: J.M.
DATE: JUNEy 21, 20065
SCALE: 1:=30

DATE	REVISION	BY
1/1/07	REMOVE BLDG. A-2 & ADD PARKING	CMD

ELKRIDGE-CROSSING-PHASE.ONE

PARCELS A-E
TAX MAP 38, GRID 2, PARCELS 30 & 38
FIRST ELECTION DISTRICT, HOWARD COUNTY, MARYLAND

SITE*GEOMETRY-2

JURI MAISTE – SITE DESIGN CONSULTANT
2923 Chenoak Avenue, Baltimore, Maryland 21234
Phone: 410-661-8752 Fax: 410-661-8752
RICHARDSON ENGINEERING, LLC
730 W. Padonia Road, Suite 101, Cockeysville, Maryland 21030
Phone: 410-560-1502 Fax: 410-560-0827

SDP-04-017

C:\DRAWINGS\ELKRID\1\PHASE-1\E6-GE02 Sun Jul 23 22:36:17 2006

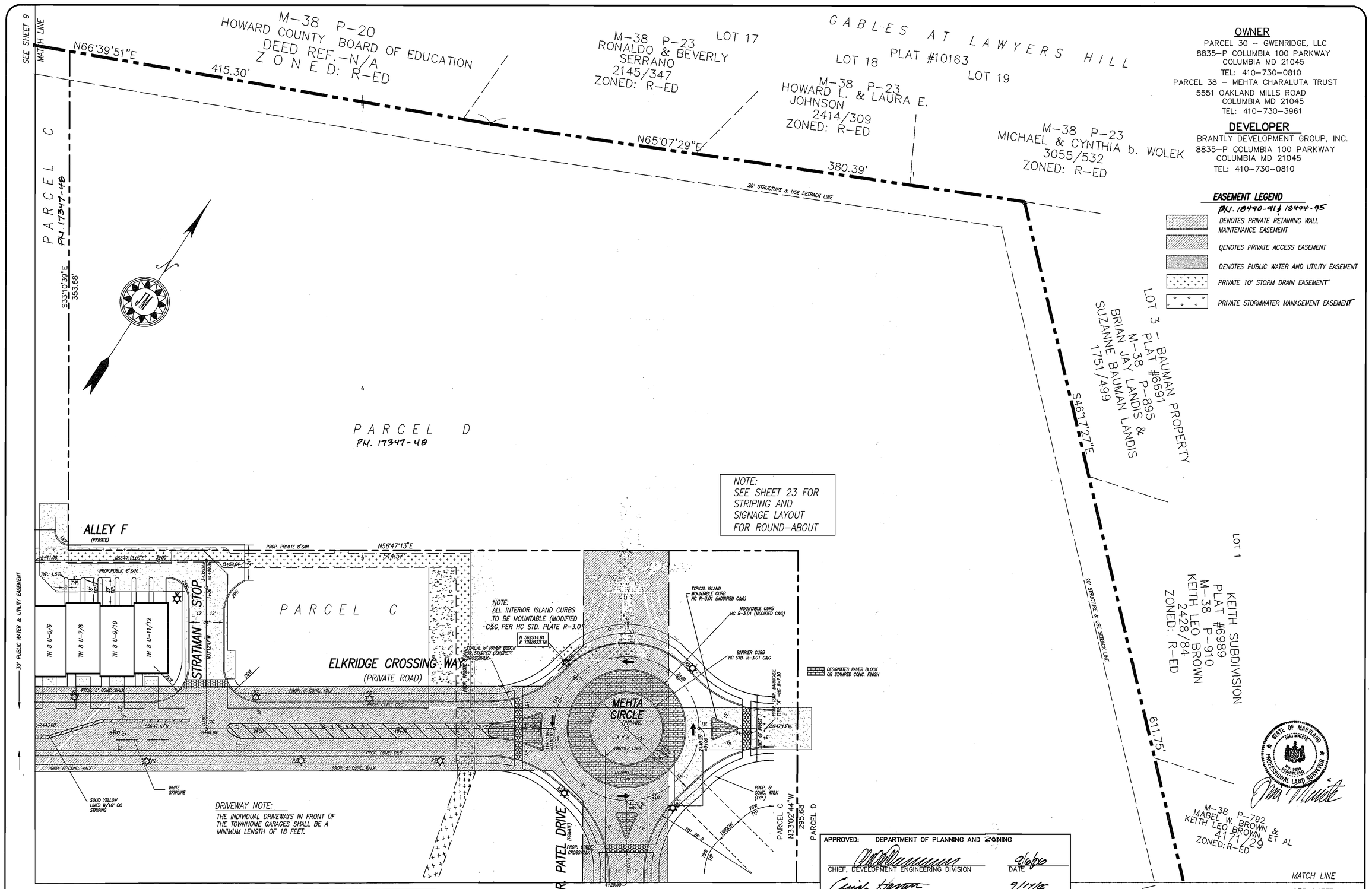

Symbol	Qty	Label	Arrangement	Lumens	LLF	Description 4
R2	12	R2	SINGLE	14000	0.720	175W MH 15' Semi-Cutoff/Reflector
C1	0	C1	SINGLE	14000	0.720	250 WATT HPR (VAPOR) MOUNTED ON 30' POLES WITH 12' ARMS
S2	0	S2	BACK-BACK	36000	0.720	Twin ECA 400 watt MH 32' Full Cutoff/Reflector
S2T	0	S2T	TWIN	36000	0.720	Twin ECA 400 watt MH 32' Full Cutoff/Reflector

APPROVED: DEPARTMENT OF PLANNING AND ZONING

CHIEF, DEVELOPMENT ENGINEERING DIVISION	DATE 9/6/06
CHIEF, DIVISION OF LAND DEVELOPMENT	DATE 9/14/06
DIRECTOR	DATE 9/18/06

DRAWN: J.M.
DATE: JUNE 21, 2006
SCALE: 1:=30

DATE	REVISION	BY
11/1/07	INFLUTA CIRCLE & EASEMENTS	CMD

ELKRIDGE-CROSSING- PHASE.ONE

PARCELS A-F

TAX MAP 38, GRID 2, PARCELS 30 & 38

FIRST ELECTION DISTRICT, HOWARD COUNTY, MARYLAND

SITE*GEOMETRY-3

JURI MAISTE - SITE DESIGN CONSULTANT
2923 Chenault Avenue, Baltimore, Maryland 21234
Phone: 410-661-8752 Fax: 410-661-8752

RICHARDSON ENGINEERING, LLC
730 W. Pudenzia Road, Suite 101, Cockeysville, Maryland 21030
Phone: 410-560-1502 Fax: 410-560-0327

SDP-04-017

C:\DRAWINGS\ELKRID~1\PHASE-1\E6-GE03 Sun Jul 23 22:53:04 2006

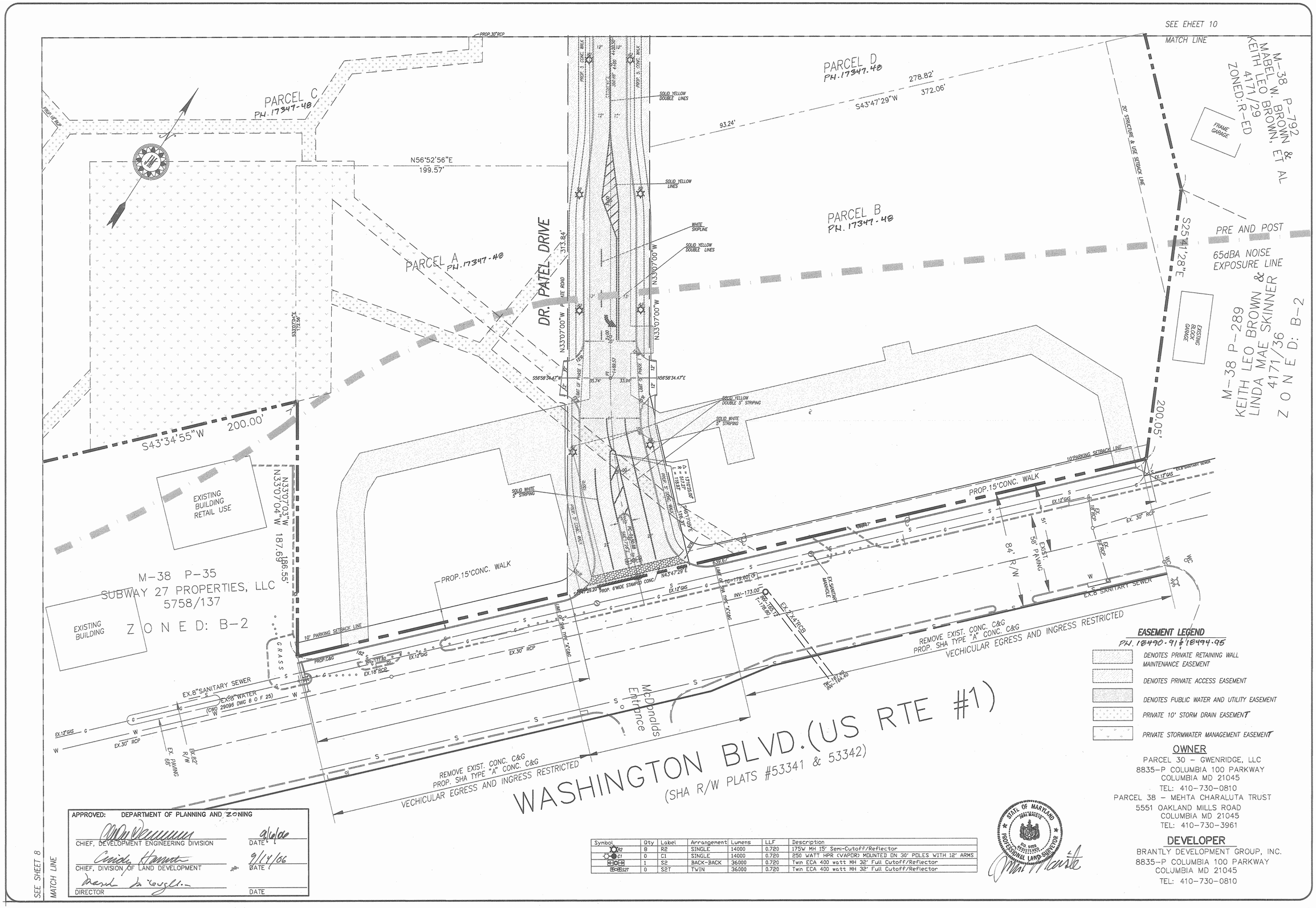

EASEMENT LEGEND

PH. 18490-91 & 18494-95

- DENOTES PRIVATE RETAINING WALL MAINTENANCE EASEMENT
- DENOTES PRIVATE ACCESS EASEMENT
- DENOTES PUBLIC WATER AND UTILITY EASEMENT
- PRIVATE 10' STORM DRAIN EASEMENT
- PRIVATE STORMWATER MANAGEMENT EASEMENT

OWNER

PARCEL 30 – GWENRIDGE, LLC
8835-P COLUMBIA 100 PARKWAY
COLUMBIA MD 21045
TEL: 410-730-0810

PARCEL 38 – MEHTA CHARALUTA TRUST
5551 OAKLAND MILLS ROAD
COLUMBIA MD 21045
TEL: 410-730-3961

DEVELOPER

BRANTLY DEVELOPMENT GROUP, INC.
8835-P COLUMBIA 100 PARKWAY
COLUMBIA MD 21045
TEL: 410-730-0810

Symbol	Qty	Label	Arrangement	Lumens	LLF	Description
R2	8	R2	SINGLE	14000	0.720	175W MH 15' Semi-Cutoff/Reflector
C1	0	C1	SINGLE	14000	0.720	250 WATT HPR (VAPOR) MOUNTED ON 30' POLES WITH 12' ARMS
	1	S2	BACK-BACK	36000	0.720	Twin ECA 400 watt MH 32' Full Cutoff/Reflector
S2T	0	S2T	TWIN	36000	0.720	Twin ECA 400 watt MH 32' Full Cutoff/Reflector

APPROVED: DEPARTMENT OF PLANNING AND ZONING

CHIEF, DEVELOPMENT ENGINEERING DIVISION — DATE 9/6/06

CHIEF, DIVISION OF LAND DEVELOPMENT — DATE 9/14/06

DIRECTOR — DATE

STATE OF MARYLAND — JURI MAISTE — NO. 9809 — REGISTERED PROFESSIONAL LAND SURVEYOR

DRAWN: J.M.
DATE: JUNE 1, 2006
SCALE: 1:=30

DATE	REVISION	BY

ELKRIDGE-CROSSING-PHASE.ONE

PARCELS A-E
TAX MAP 38, GRID 2, PARCELS 30 & 38
FIRST ELECTION DISTRICT, HOWARD COUNTY, MARYLAND

SITE*GEOMETRY-4

JURI MAISTE – SITE DESIGN CONSULTANT
2923 Chenoak Avenue, Baltimore, Maryland 21234
Phone: 410-661-8752 Fax: 410-661-8752
RICHARDSON ENGINEERING, LLC
730 W. Padonia Road, Suite 101, Cockeysville, Maryland 21030
Phone: 410-560-1502 Fax: 410-560-0827

SHEET 11 OF 56

SDP-04-017

C:\DRAWINGS\ELKRID~1\PHASE-1\E6-GE04 Sun Jul 23 23:10:55 2006

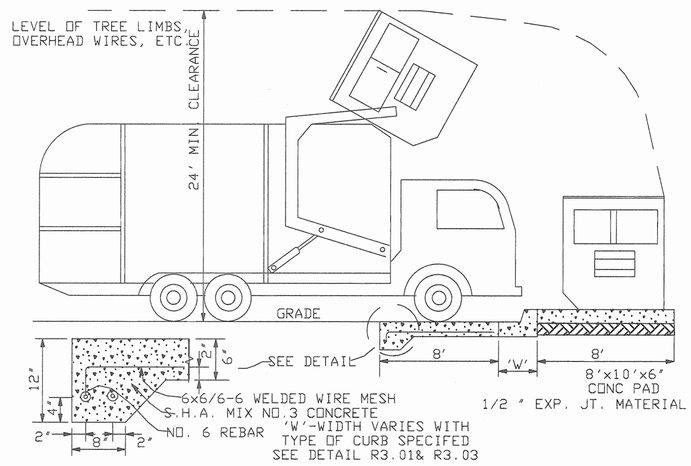

SOLID WASTE SERVICE PAD

N.T.S.

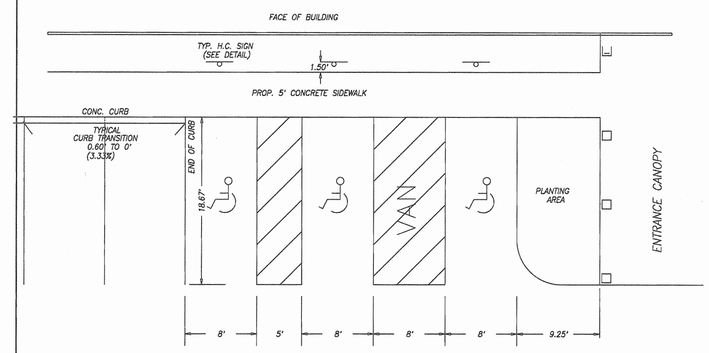

HANDICAPPED PARKING LAYOUT DETAILS BLDGS.C,D,E & F

NOTE:
FIXTURES ALONG LOT LINES SHALL CONTAIN SIDE AND REAR LAMP SHIELDS TO PREVENT GLARE AND EXCESSIVE ILLUMINATION TO ADJACENT PROPERTIES.

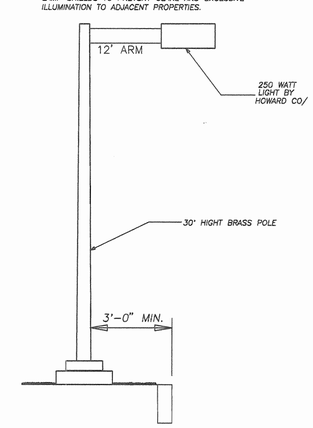

TYPICAL LIGHT C1

N.T.S.

NOTE:
FIXTURES ALONG LOT LINES SHALL CONTAIN SIDE AND REAR LAMP SHIELDS TO PREVENT GLARE AND EXCESSIVE ILLUMINATION TO ADJACENT PROPERTIES.

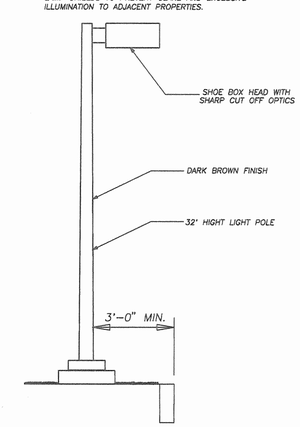

TYPICAL LIGHT FIXTURE

N.T.S.

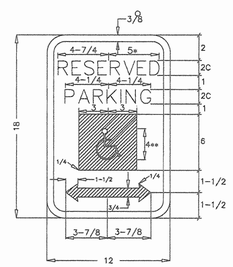

* REDUCE SPACING 50%
** SEE SYMBOL 1860 FOR SYMBOL DESIGN (ALL DIMENSIONS FOR SIGN IN INCHES)

COLORS:
LEGEND AND BORDER – GREEN
WHITE SYMBOL ON BLUE BACKGROUND
BACKGRUND – WHITE

REFERENCE: STATE OF MARYLAND STANDARD HIGHWAY SIGN BOOKLET MARYLAND DEPARTMENT OF TRANSPORTATION

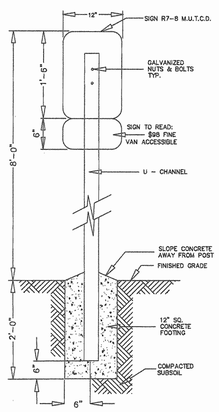

HANDICAP SIGN

NOT TO SCALE

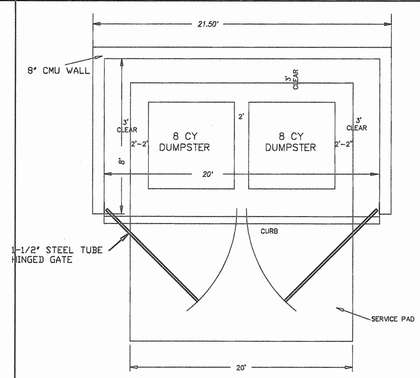

PLAN VIEW

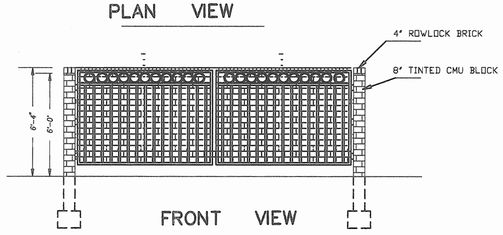

FRONT VIEW

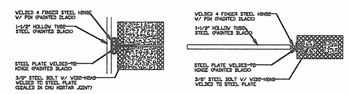

GATE HINGE DETAILS

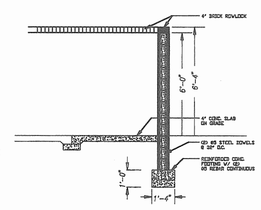

SECTION VIEW

DUMPSTER ENCLOSURE DETAIL

NTS

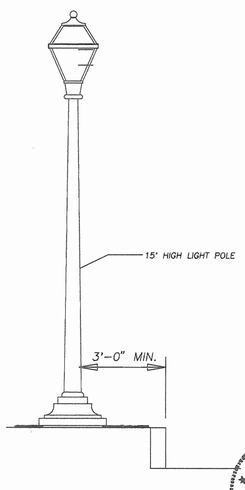

TYPICAL LIGHT R2

N.T.S.

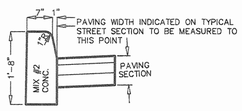

STANDARD BARRIER CURB

HOWARD COUNTY STANDARD R-3.03
NOT TO SCALE

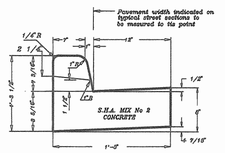

STANDARD COMBINATION CURB & GUTTER

HOWARD COUNTY STANDARD R-3.01
NOT TO SCALE

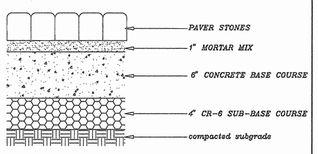

CROSSWALK PAVERS SECTION

NTS

1. SIDEWALK TO HAVE MEDIUM BROOM FINISH PERPENDICULAR TO DIRECTION OF PEDESTRIAN TRAFFIC.
2. CONSTRUCT WITH ACCORDANCE WITH PROJECT SPECIFICATION.
3. SEE SITE PLAN FOR SIDEWALK LOCATION.
4. PROVIDE ACCESSIBLE/CART RAMPS IN ACCORDANCE WITH CODE
5. PLACE 6x6-W2.0 WWF IN CENTER OF SLAB.
6. PLACE EXPANSION JOINT @ 20' MAX.
7. PLACE CONTOL JOINTS AT 4' TO 10' MAX.
8. ALL OTHER SITE SIDEWALKS SHALL BE CONSTRUCTED USING THE MATERIALS AND DEPTHS INDICATED ABOVE.

NOTES:

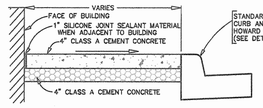

TYPICAL SIDEWALK DETAIL

N.T.S.

STANDARD RAMP DETAIL.

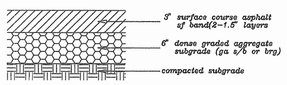

LIGHT DUTY

ALL PARKING AREAS

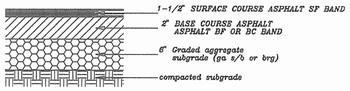

HEAVY DUTY

MEHTA COURT & DRIVES

TYPICAL PAVEMENT SECTIONS

NOT TO SCALE

APPROVED:	DEPARTMENT OF PLANNING AND ZONING	
	CHIEF, DEVELOPMENT ENGINEERING DIVISION	DATE 9/6/06
	CHIEF, DIVISION OF LAND DEVELOPMENT	DATE 9/14/06
	DIRECTOR	DATE 9/18/06

OWNER

PARCEL 30 – GWENRIDGE, LLC
8835-P COLUMBIA 100 PARKWAY
COLUMBIA MD 21045
TEL: 410-730-0810
PARCEL 38 – MEHTA CHARALUTA TRUST
5551 OAKLAND MILLS ROAD
COLUMBIA MD 21045
TEL: 410-730-3961

DEVELOPER

BRANTLY DEVELOPMENT GROUP, INC.
8835-P COLUMBIA 100 PARKWAY
COLUMBIA MD 21045
TEL: 410-730-0810

DRAWN: J.M.
DATE: JUNE 21, 2006
SCALE: AS SHOWN

DATE	REVISION	BY

ELKRIDGE-CROSSING-PHASE ONE

PARCELS A-E
TAX MAP 38, GRID 2, PARCELS 30 & 38
FIRST ELECTION DISTRICT, HOWARD COUNTY, MARYLAND

CONSTRUCTION-DETAILS

JURI MAISTE - SITE DESIGN CONSULTANT
2923 Chenault Avenue, Baltimore, Maryland 21234
Phone: 410-661-0752 Fax: 410-661-0752

RICHARDSON ENGINEERING, LLC
730 W. Pulaski Road, Suite 101, Cockeysville, Maryland 21030
Phone: 410-560-1602 Fax: 410-560-0827

STATE OF MARYLAND PROFESSIONAL LAND SURVEYOR

SDP-04-017

C:\DRAWINGS\ELKRIDG~1\PHASE-1\E1-DET Sat Aug 12 09:58:59 2006

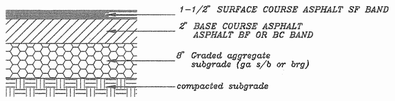

TYPICAL PAVEMENT SECTION

NTS

NOTES:

1. SIDEWALK TO HAVE MEDIUM BROOM FINISH PERPENDICULAR TO DIRECTION OF PEDESTRIAN TRAFFIC.
2. CONSTRUCT IN ACCORDANCE WITH PROJECT SPECIFICATIONS.
3. SEE SITE PLAN FOR SIDEWALK LOCATION.
4. PROVIDE ACCESSIBLE/CART RAMPS IN ACCORDANCE WITH STANDARD RAMP DETAIL.
5. PLACE 6x6-W2.0 WWF IN CENTER OF SLAB.
6. PLACE EXPANSION JOINT @ 20' MAX.
7. PLACE CONTROL JOINTS AT 4' TO 10' MAX.
8. ALL OTHER SITE SIDEWALKS SHALL BE CONSTRUCTED USING THE MATERIALS AND DEPTHS INDICATED ABOVE.

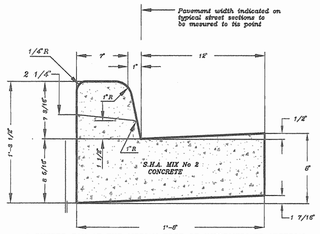

* GUTTER PAN AT THE MEDIAN EDGE OF INTERMEDIATE ARTERIAL OR THE HIGH SIDE OF SUPERELAVATED SECTIONS SHALL BE SLOPED AT THE SAME RATE AND IN THE SAME DIRECTION AS THE PAVEMENT. MATCH PAVEMENT CROSS SLOPE WHEN CURB IS LOCATED ON THE LOW SIDE OF SUPERELAVATED SECTION AND RATE OF SUPERELEVATION IS GREATER THAN 3% FOR MODIFIED CURB AND GUTTER.

STANDARD COMBINATION CURB & GUTTER

HOWARD COUNTY STANDARD R-3.01
NTS

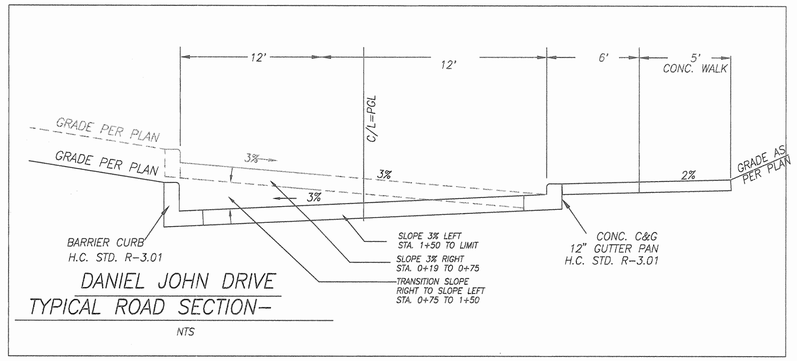

DANIEL JOHN DRIVE
TYPICAL ROAD SECTION-

NTS

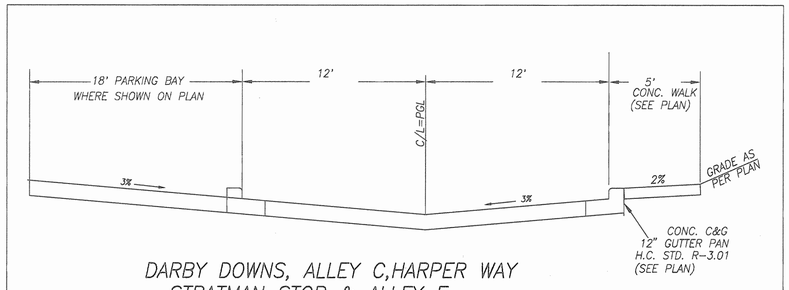

DARBY DOWNS, ALLEY C, HARPER WAY STRATMAN STOP & ALLEY F
TYPICAL ROAD SECTION

NTS

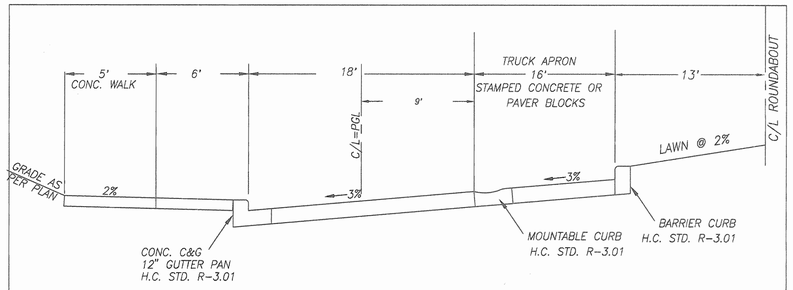

MEHTA CIRCLE
TYPICAL ROAD SECTION-

NTS

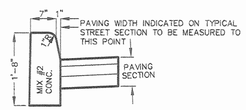

STANDARD BARRIER CURB

HOWARD COUNTY STANDARD R-3.03
NOT TO SCALE

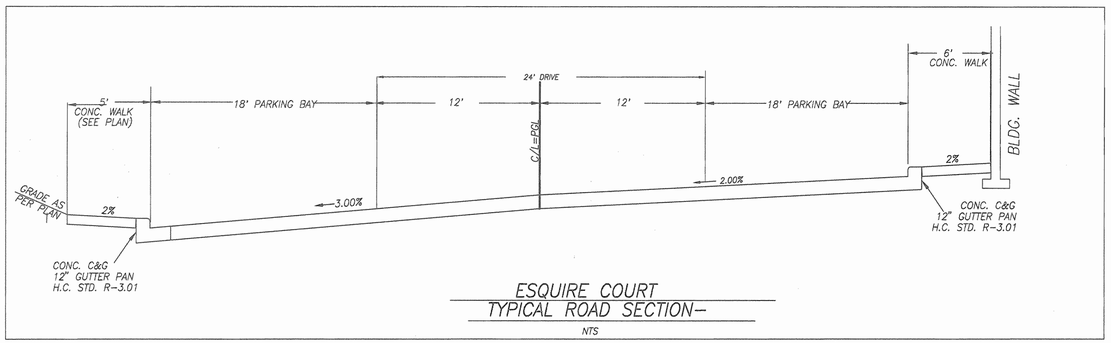

ESQUIRE COURT
TYPICAL ROAD SECTION-

NTS

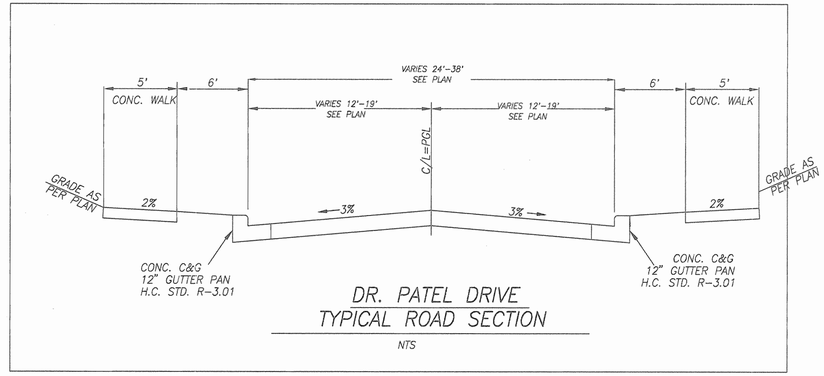

DR. PATEL DRIVE
TYPICAL ROAD SECTION

NTS

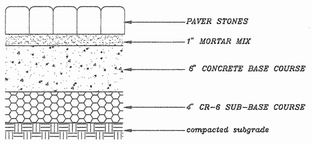

CROSSWALK PAVERS SECTION

NTS

BENCH MARKS

HOWARD COUNTY MON. #38A9
ELEV. 223.417
BRASS DISK ON CONC.MONUMENT IN GRASS PLOT ON SE SIDE OF US RTE 1 AND MONTGOMERY RD.

HOWARD COUNTY MON. #38BA
ELEV. 166.939
BRASS DISC ON CONC. MONUMENT ON WEST SIDE OF RTE.1 APPROX. 100' N OF BONNIE VIEW LA.

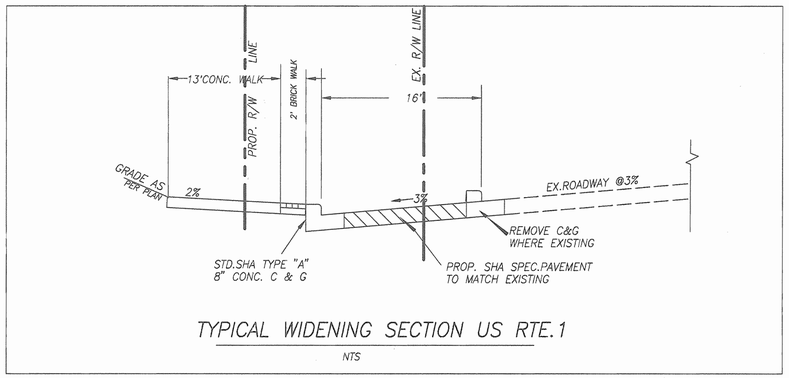

TYPICAL WIDENING SECTION US RTE.1

NTS

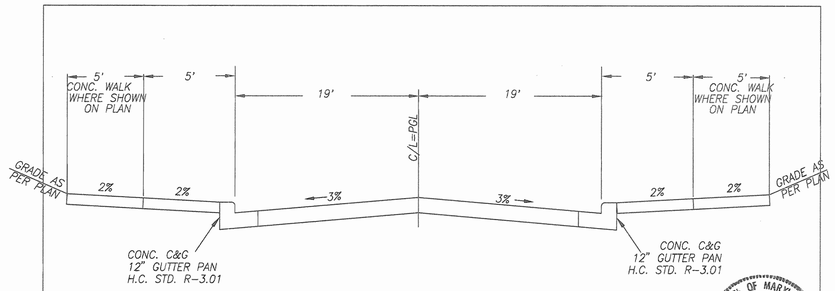

ELKRIDGE CROSSING WAY
TYPICAL ROAD SECTION-

NTS

STATE OF MARYLAND JURI MAISTE NO. 5486 PROFESSIONAL LAND SURVEYOR

APPROVED: DEPARTMENT OF PLANNING AND ZONING

CHIEF, DEVELOPMENT ENGINEERING DIVISION	DATE 9/6/06
CHIEF, DIVISION OF LAND DEVELOPMENT	DATE 9/14/06
DIRECTOR	DATE 9/18/06

DRAWN: J.M.
DATE: JUNE 21, 2006
SCALE: AS SHOWN

DATE	REVISION	BY

ELKRIDGE-CROSSING-PHASE ONE
PARCELS A-E
TAX MAP 38, GRID 2, PARCELS 30 & 38
FIRST ELECTION DISTRICT, HOWARD COUNTY, MARYLAND
ROAD-SECTIONS-DETAILS

JURI MAISTE - SITE DESIGN CONSULTANT
2923 Chenoak Avenue, Baltimore, Maryland 21234
Phone: 410-661-8752 Fax: 410-661-8752
RICHARDSON ENGINEERING, LLC
730 W. Padonia Road, Suite 101, Cockeysville, Maryland 21030
Phone: 410-560-1502 Fax: 410-560-0827

SDP-04-017

C:\WANDISK\ELKRID FINAL - FILE FINAL Sun Aug 13 20:42:10 2006

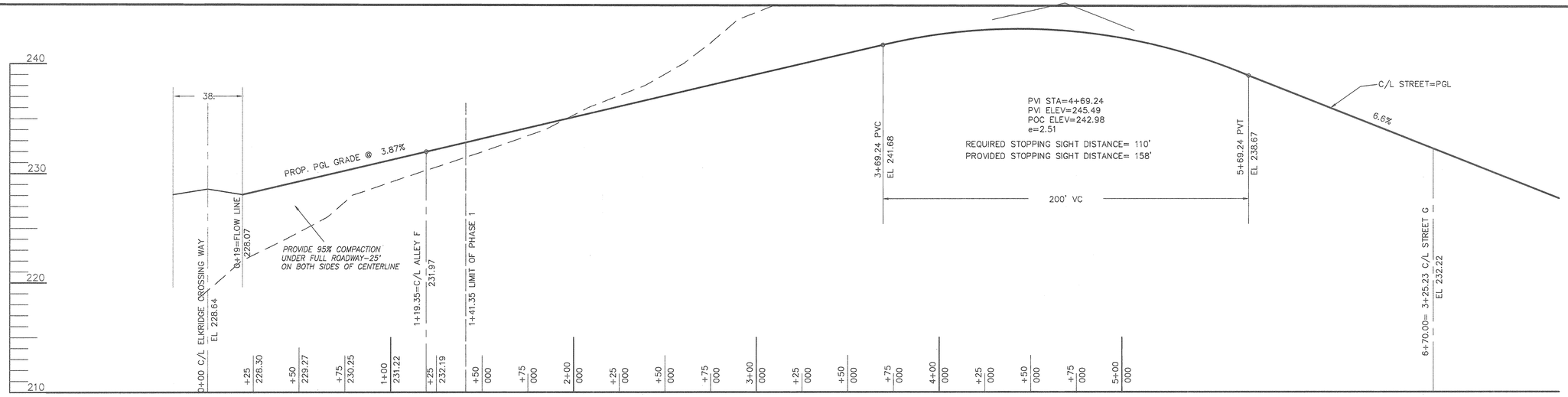

DANIEL JOHN DRIVE

PRIVATE ROAD

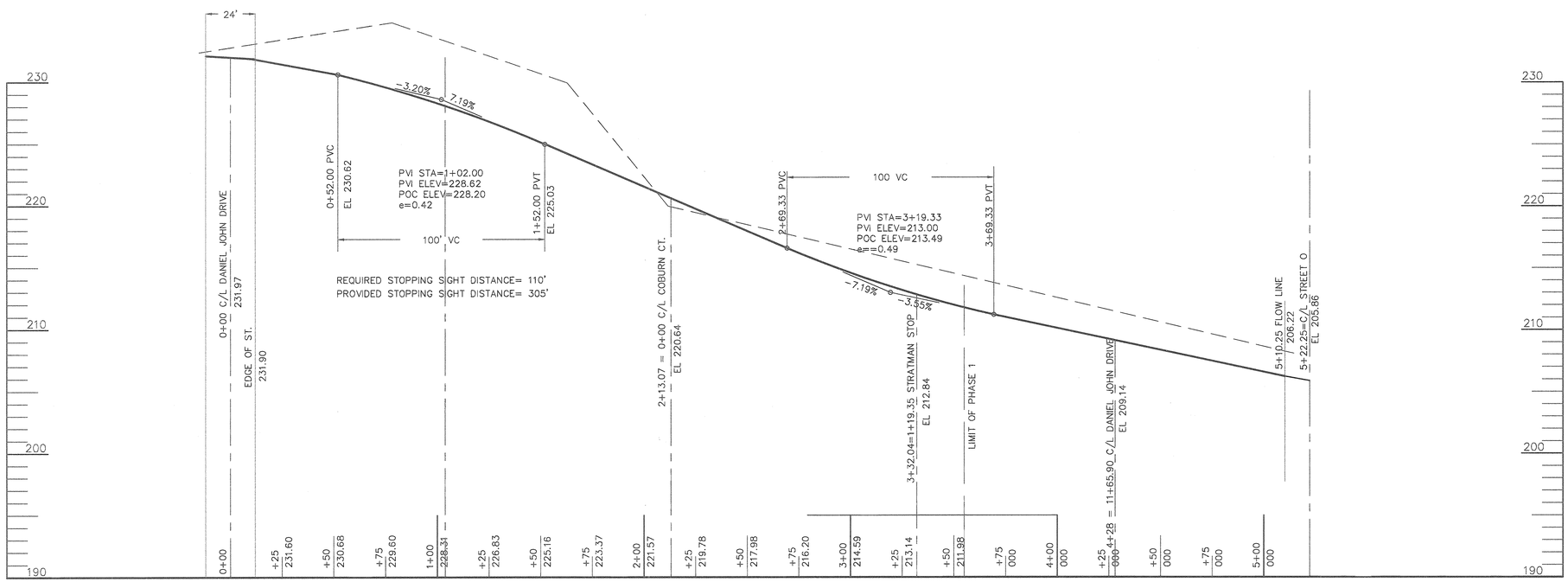

ALLEY F

PRIVATE ROAD

APPROVED: DEPARTMENT OF PLANNING AND ZONING

CHIEF, DEVELOPMENT ENGINEERING DIVISION	DATE 9/6/06
CHIEF, DIVISION OF LAND DEVELOPMENT	DATE 9/14/06
DIRECTOR	DATE 7/18/06

BENCH MARKS

HOWARD COUNTY MON. #38A9
ELEV. 223.417
BRASS DISK ON CONC.MONUMENT IN GRASS PLOT ON SE SIDE OF US RTE 1 AND MONTGOMERY RD.

HOWARD COUNTY MON. #38BA
ELEV. 166.939
BRASS DISC ON CONC. MONUMENT ON WEST SIDE OF RTE.1 APPROX. 100' N OF BONNIE VIEW LA.

STATE OF MARYLAND
JURI MAISTE
NO. 9695
REGISTERED
PROFESSIONAL LAND SURVEYOR

OWNER

PARCEL 30 – GWENRIDGE, LLC
8835-P COLUMBIA 100 PARKWAY
COLUMBIA MD 21045
TEL: 410-730-0810
PARCEL 38 – MEHTA CHARALUTA TRUST
5551 OAKLAND MILLS ROAD
COLUMBIA MD 21045
TEL: 410-730-3961

DEVELOPER

BRANTLY DEVELOPMENT GROUP, INC.
8835-P COLUMBIA 100 PARKWAY
COLUMBIA MD 21045
TEL: 410-730-0810

DRAWN: J.M.
JUNE 21, 2006
SCALE: H-1"=30' V-1"=5'

DATE	REVISION	BY

ELKRIDGE-CROSSING-PHASE.ONE

PARCELS A-E
TAX MAP 38, GRID 2, PARCELS 30 & 38
FIRST ELECTION DISTRICT, HOWARD COUNTY, MARYLAND

ROAD-PROFILES

JURI MAISTE – SITE DESIGN CONSULTANT
2923 Chenoak Avenue, Baltimore, Maryland 21234
Phone: 410-661-8752 Fax: 410-661-8752
RICHARDSON ENGINEERING, LLC
730 W.Padonia Road, Suite 101, Cockeysville, Maryland 21030
Phone: 410-560-1502 Fax: 410-560-0827

SDP-04-017

C:\DRAWINGS\ELKRID~1\PHASE-1\RD-PROF Sat Aug 12 21:11:38 2006

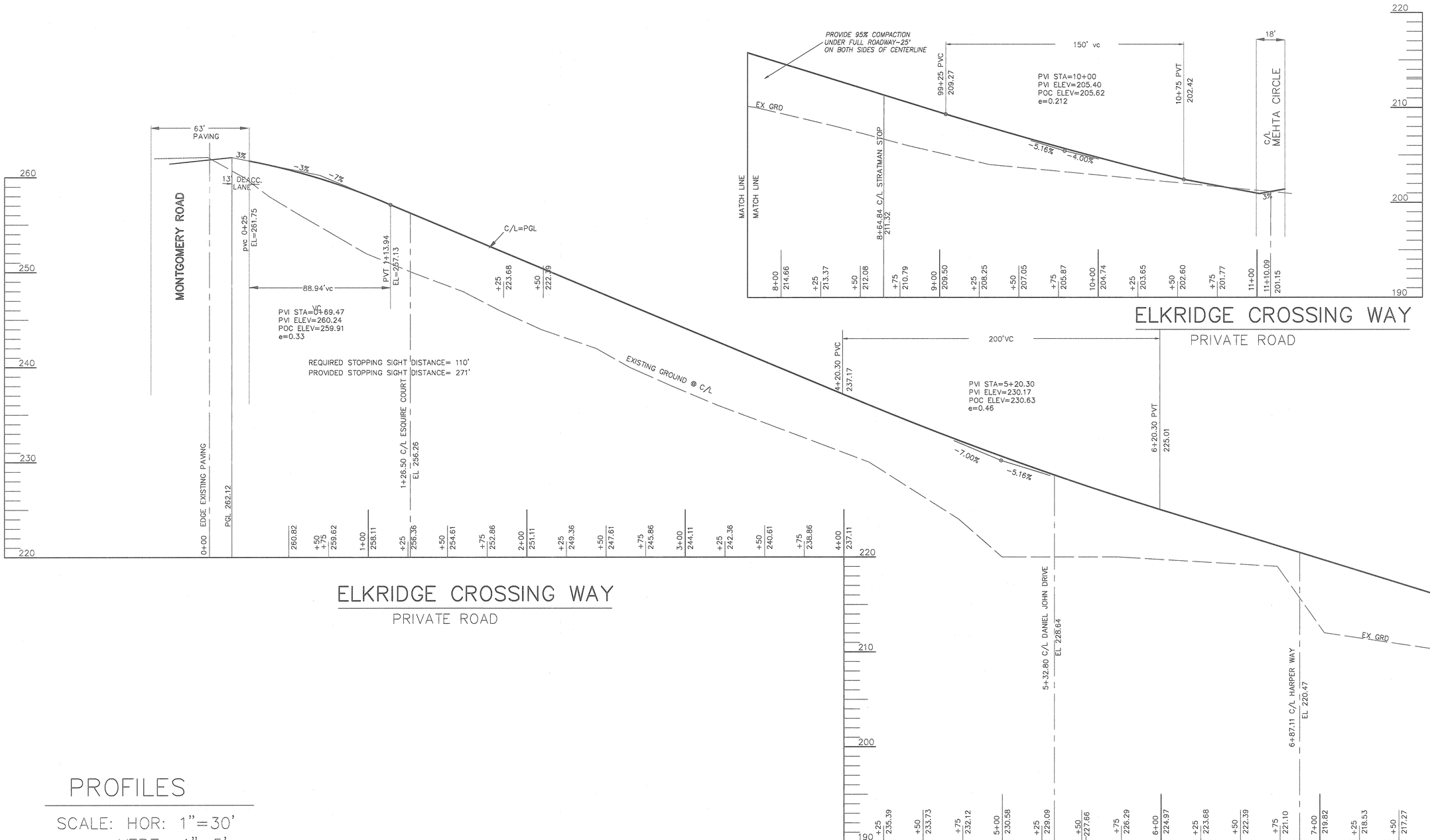

ELKRIDGE CROSSING WAY
PRIVATE ROAD

ELKRIDGE CROSSING WAY
PRIVATE ROAD

PROFILES

SCALE: HOR: 1"=30'
VERT.: 1"=5'

APPROVED: DEPARTMENT OF PLANNING AND ZONING

CHIEF, DEVELOPMENT ENGINEERING DIVISION	DATE 9/6/06
CHIEF, DIVISION OF LAND DEVELOPMENT	DATE 9/14/06
DIRECTOR	DATE 9/18/06

BENCH MARKS

HOWARD COUNTY MON. #38A9
ELEV. 223.417
BRASS DISK ON CONC.MONUMENT IN GRASS PLOT ON SE SIDE OF US RTE 1 AND MONTGOMERY RD.

HOWARD COUNTY MON. #38BA
ELEV. 166.939
BRASS DISC ON CONC. MONUMENT ON WEST SIDE OF RTE.1 APPROX. 100' N OF BONNIE VIEW LA.

STATE OF MARYLAND
JURI MAISTE
NO. 9695
REGISTERED PROFESSIONAL LAND SURVEYOR

PARCEL 30 – GWENRIDGE, LLC
8835-P COLUMBIA 100 PARKWAY
COLUMBIA MD 21045
TEL: 410-730-0810
PARCEL 38 – MEHTA CHARALUTA TRUST
5551 OAKLAND MILLS ROAD
COLUMBIA MD 21045
TEL: 410-730-3961

DEVELOPER
BRANTLY DEVELOPMENT GROUP, INC.
8835-P COLUMBIA 100 PARKWAY
COLUMBIA MD 21045
TEL: 410-730-0810

DRAWN: J.M.
DATE: JUNE 21, 2006
SCALE: H-1"=30' V-1"=5'

DATE	REVISION	BY

ELKRIDGE-CROSSING-PHASE.ONE
PARCELS A-E
TAX MAP 38, GRID 2, PARCELS 30 & 38
FIRST ELECTION DISTRICT, HOWARD COUNTY, MARYLAND
ROAD-PROFILES

JURI MAISTE – SITE DESIGN CONSULTANT
2923 Chenoak Avenue, Baltimore, Maryland 21234
Phone: 410-661-8752 Fax: 410-661-8752
RICHARDSON ENGINEERING, LLC
730 W. Padonia Road, Suite 101, Cockeysville, Maryland 21030
Phone: 410-560-1502 Fax: 410-560-0827

SDP.04-017

C:\DRAWINGS\ELKRID\1\PHASE-1\RD-PROF Sat Aug 12 21:21:31 2006

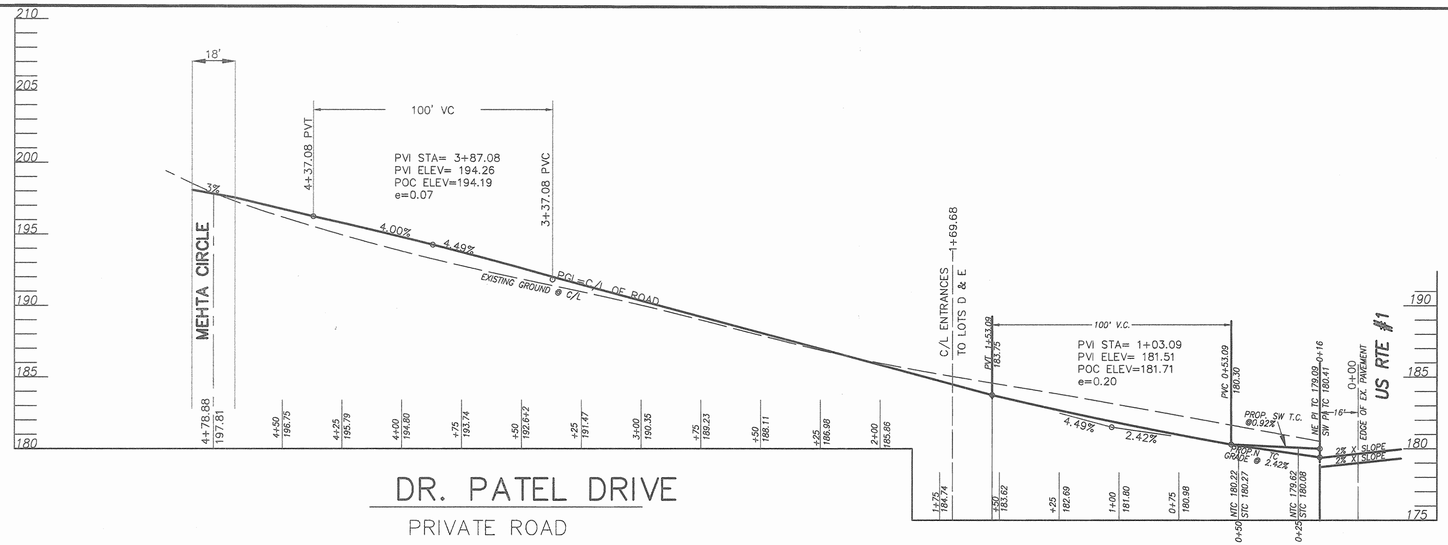

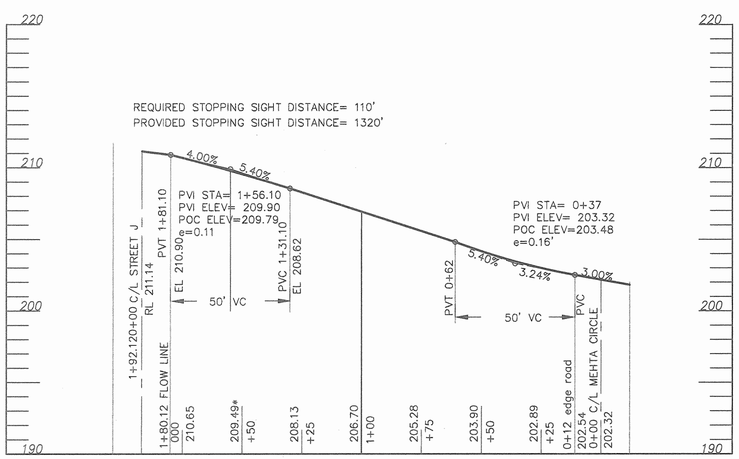

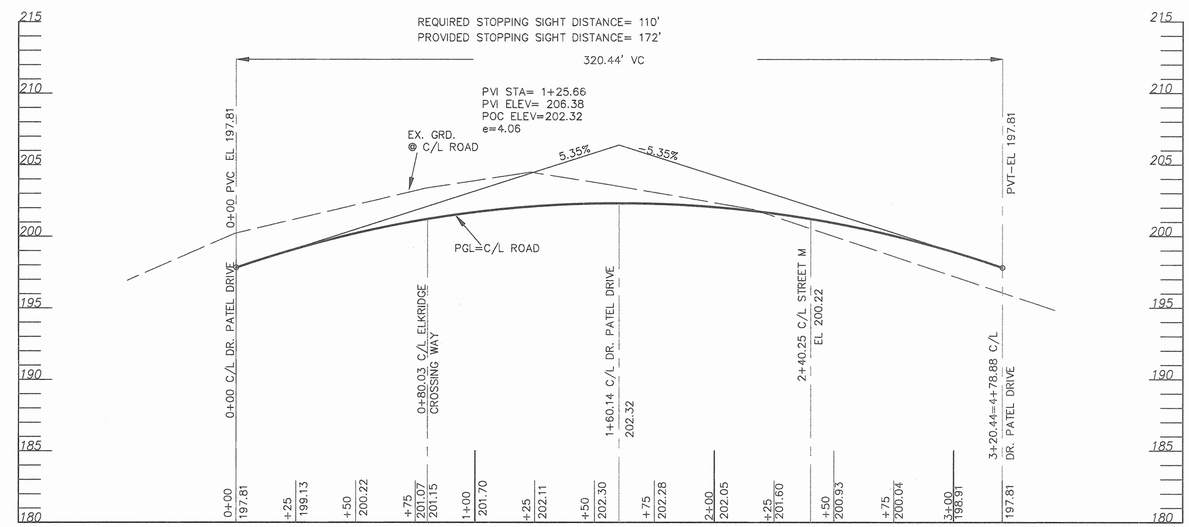

APPROVED: DEPARTMENT OF PLANNING AND ZONING

CHIEF, DEVELOPMENT ENGINEERING DIVISION	DATE 9/6/06
CHIEF, DIVISION OF LAND DEVELOPMENT	DATE 9/14/06
DIRECTOR	DATE 9/18/06

PROFILES

SCALE: HOR: 1"=30'
VERT.: 1"=5'

OWNER
PARCEL 30 – GWENRIDGE, LLC
8835-P COLUMBIA 100 PARKWAY
COLUMBIA MD 21045
TEL: 410-730-0810
PARCEL 38 – MEHTA CHARALUTA TRUST
5551 OAKLAND MILLS ROAD
COLUMBIA MD 21045
TEL: 410-730-3961

DEVELOPER
BRANTLY DEVELOPMENT GROUP, INC.
8835-P COLUMBIA 100 PARKWAY
COLUMBIA MD 21045
TEL: 410-730-0810

STATE OF MARYLAND
MARK WAYNE RICHARDSON
NO. 9868
REGISTERED PROFESSIONAL LAND SURVEYOR

BENCH MARKS

HOWARD COUNTY MON. #38A9
ELEV. 223.417
BRASS DISK ON CONC.MONUMENT IN GRASS PLOT ON SE SIDE OF US RTE 1 AND MONTGOMERY RD.

HOWARD COUNTY MON. #38BA
ELEV. 166.939
BRASS DISC ON CONC. MONUMENT ON WEST SIDE OF RTE.1 APPROX. 100' N OF BONNIE VIEW LA.

DRAWN: J.M.
DATE: JUNE 21, 2006
SCALE: H-1"=30' V-1"=5'

DATE	REVISION	BY

ELKRIDGE-CROSSING-PHASE.ONE

PARCELS A-E
TAX MAP 38, GRID 2, PARCELS 30 & 38
FIRST ELECTION DISTRICT, HOWARD COUNTY, MARYLAND

ROAD-PROFILES

JURI MAISTE - SITE DESIGN CONSULTANT
2923 Chenoak Avenue, Baltimore, Maryland 21234
Phone: 410-661-8752 Fax: 410-661-8752

RICHARDSON ENGINEERING, LLC
730 W. Padonia Road, Suite 101, Cockeysville, Maryland 21030
Phone: 410-560-1502 Fax: 410-560-0227

SDP-04-017

C:\DRAWINGS\ELKRID\1-1\PHASE 1\RD-PROF Sat Aug 12 21:29:36 2006

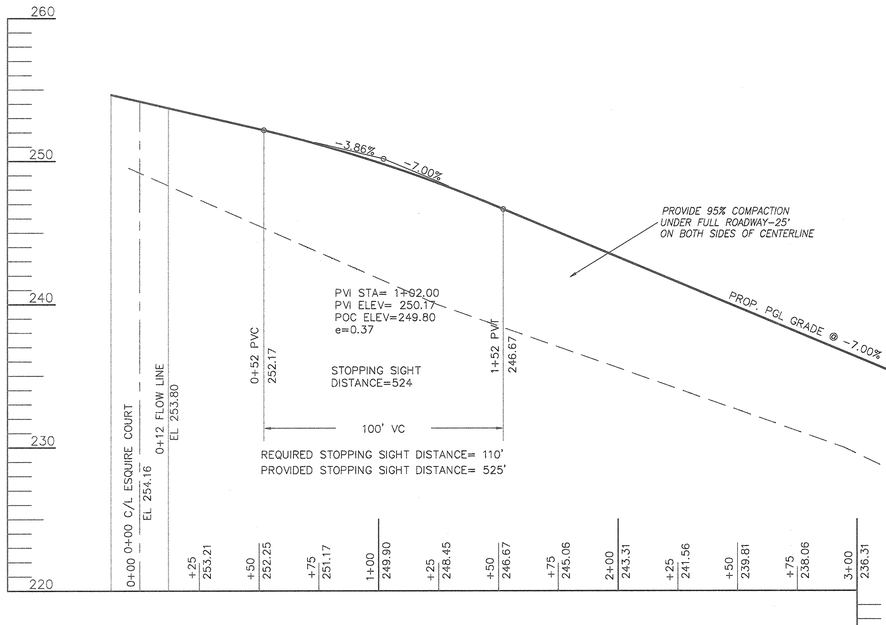

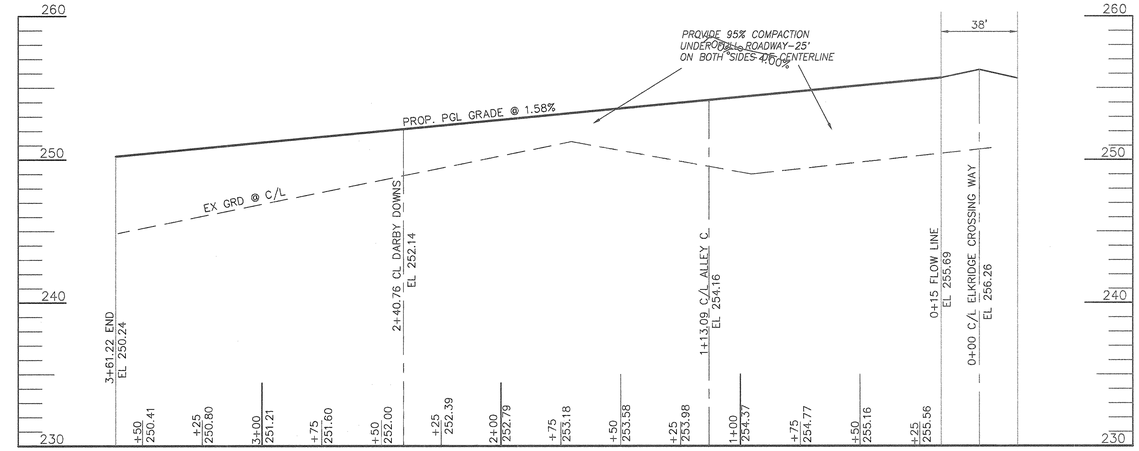

ESQUIRE COURT

PRIVATE ROAD

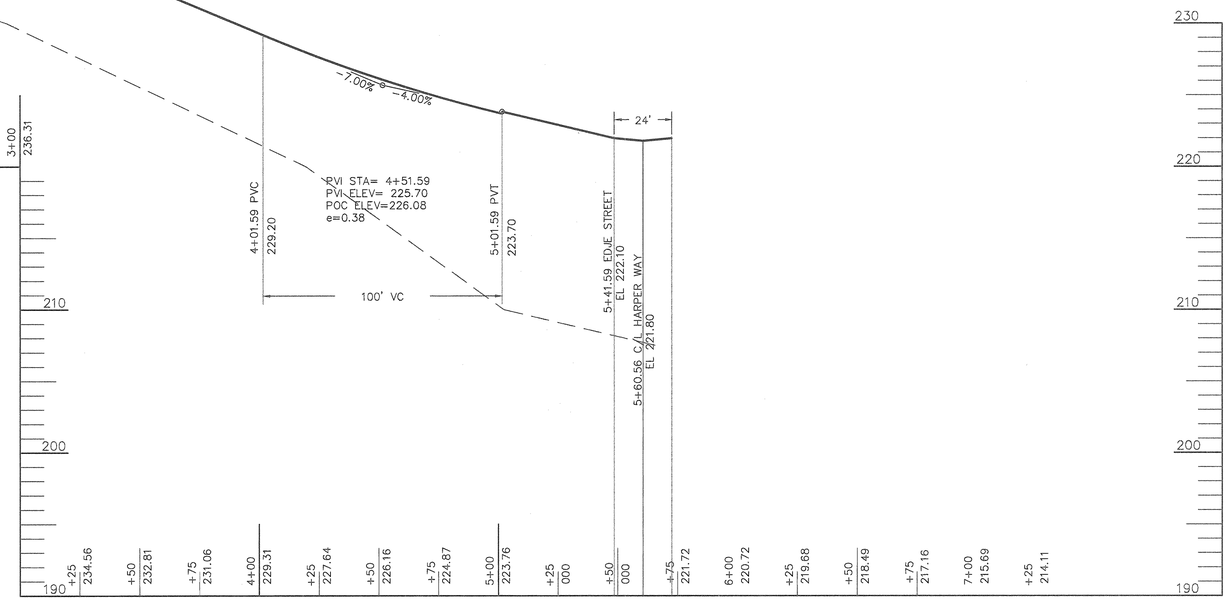

ALLEY C

PRIVATE

OWNER

PARCEL 30 – GWENRIDGE, LLC
8835-P COLUMBIA 100 PARKWAY
COLUMBIA MD 21045
TEL: 410-730-0810
PARCEL 38 – MEHTA CHARALUTA TRUST
5551 OAKLAND MILLS ROAD
COLUMBIA MD 21045
TEL: 410-730-3961

DEVELOPER

BRANTLY DEVELOPMENT GROUP, INC.
8835-P COLUMBIA 100 PARKWAY
COLUMBIA MD 21045
TEL: 410-730-0810

APPROVED: DEPARTMENT OF PLANNING AND ZONING

CHIEF, DEVELOPMENT ENGINEERING DIVISION	DATE 9/6/06
CHIEF, DIVISION OF LAND DEVELOPMENT	DATE 9/14/06
DIRECTOR	DATE 9/18/06

STATE OF MARYLAND · JURI MAISTE · REGISTERED PROFESSIONAL LAND SURVEYOR · NO. 9405

DRAWN: J.M.
DATE: JUNE 21, 2006
SCALE: H-1"=30' V-1"=5'

DATE	REVISION	BY

ELKRIDGE-CROSSING-PHASE.ONE

PARCELS A-E
TAX MAP 38, GRID 2, PARCELS 30 & 38
FIRST ELECTION DISTRICT, HOWARD COUNTY, MARYLAND

ROAD-PROFILES

JURI MAISTE – SITE DESIGN CONSULTANT
2923 Chenoak Avenue, Baltimore, Maryland 21234
Phone: 410-661-8752 Fax: 410-661-8752
RICHARDSON ENGINEERING, LLC
730 W. Padonia Road, Suite 101, Cockeysville, Maryland 21030
Phone: 410-560-1502 Fax: 410-560-0827

SDP-04-017

C:\DRAWINGS\ELKRID\PHASE-1\RD-PROF Sat Aug 12 21:39:45 2006

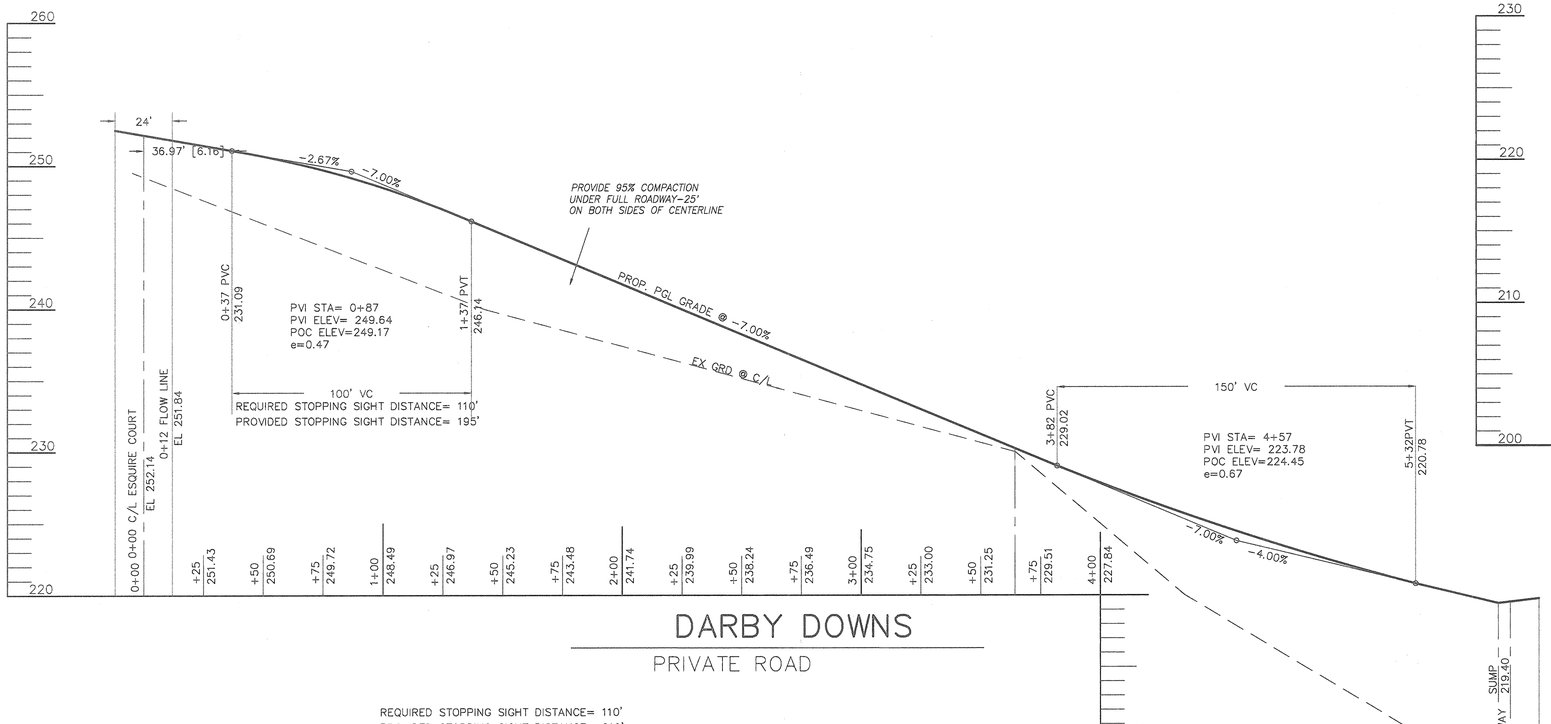

DARBY DOWNS

PRIVATE ROAD

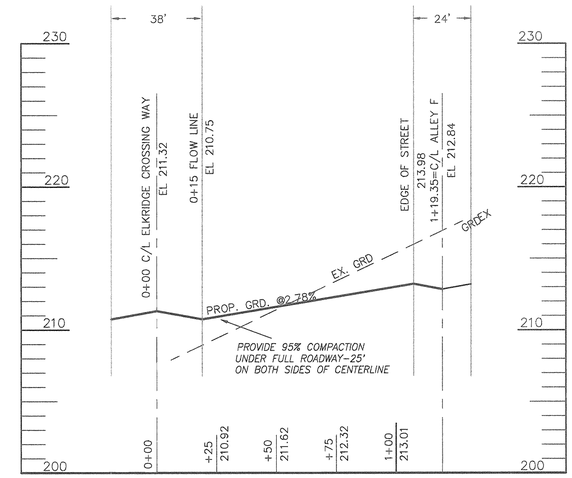

STRATMAN STOP

PRIVATE ROAD

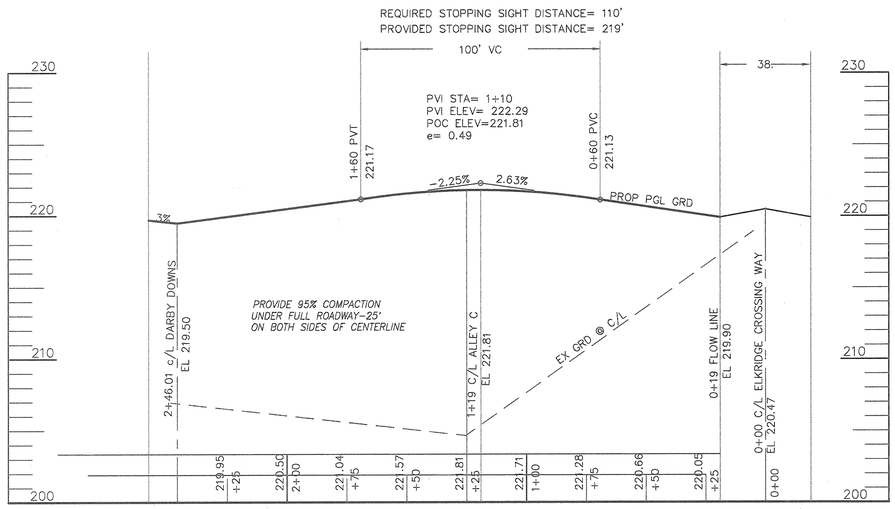

HARPER WAY

PRIVATE ROAD

APPROVED:	DEPARTMENT OF PLANNING AND ZONING	
	CHIEF, DEVELOPMENT ENGINEERING DIVISION	DATE 9/6/06
	CHIEF, DIVISION OF LAND DEVELOPMENT	DATE 9/18/06
	DIRECTOR	DATE 9/18/06

OWNER

PARCEL 30 – GWENRIDGE, LLC
8835-P COLUMBIA 100 PARKWAY
COLUMBIA MD 21045
TEL: 410-730-0810
PARCEL 38 – MEHTA CHARALUTA TRUST
5551 OAKLAND MILLS ROAD
COLUMBIA MD 21045
TEL: 410-730-3961

DEVELOPER

BRANTLY DEVELOPMENT GROUP, INC.
8835-P COLUMBIA 100 PARKWAY
COLUMBIA MD 21045
TEL: 410-730-0810

STATE OF MARYLAND
JURI MAISTE
NO. 5168
REGISTERED
PROFESSIONAL LAND SURVEYOR

DRAWN: J.M.
DATE: JUNE 21, 2006
SCALE: H-1"=30' V-1"=5'

DATE	REVISION	BY

ELKRIDGE-CROSSING-PHASE ONE

PARCELS A-E
TAX MAP 38, GRID 2, PARCELS 30 & 38
FIRST ELECTION DISTRICT, HOWARD COUNTY, MARYLAND

ROAD-PROFILES

JURI MAISTE – SITE DESIGN CONSULTANT
2923 Chenoak Avenue, Baltimore, Maryland 21234
Phone: 410-661-8752 Fax: 410-661-8752

RICHARDSON ENGINEERING, LLC
730 W. Pedonia Road, Suite 101, Cockeysville, Maryland 21030
Phone: 410-560-1802 Fax: 410-560-0827

SDP-04-017

C:\DRAWINGS\ELKR10'1\PHASE-1\RD-PROF Sat Aug 12 21:47:55 2006

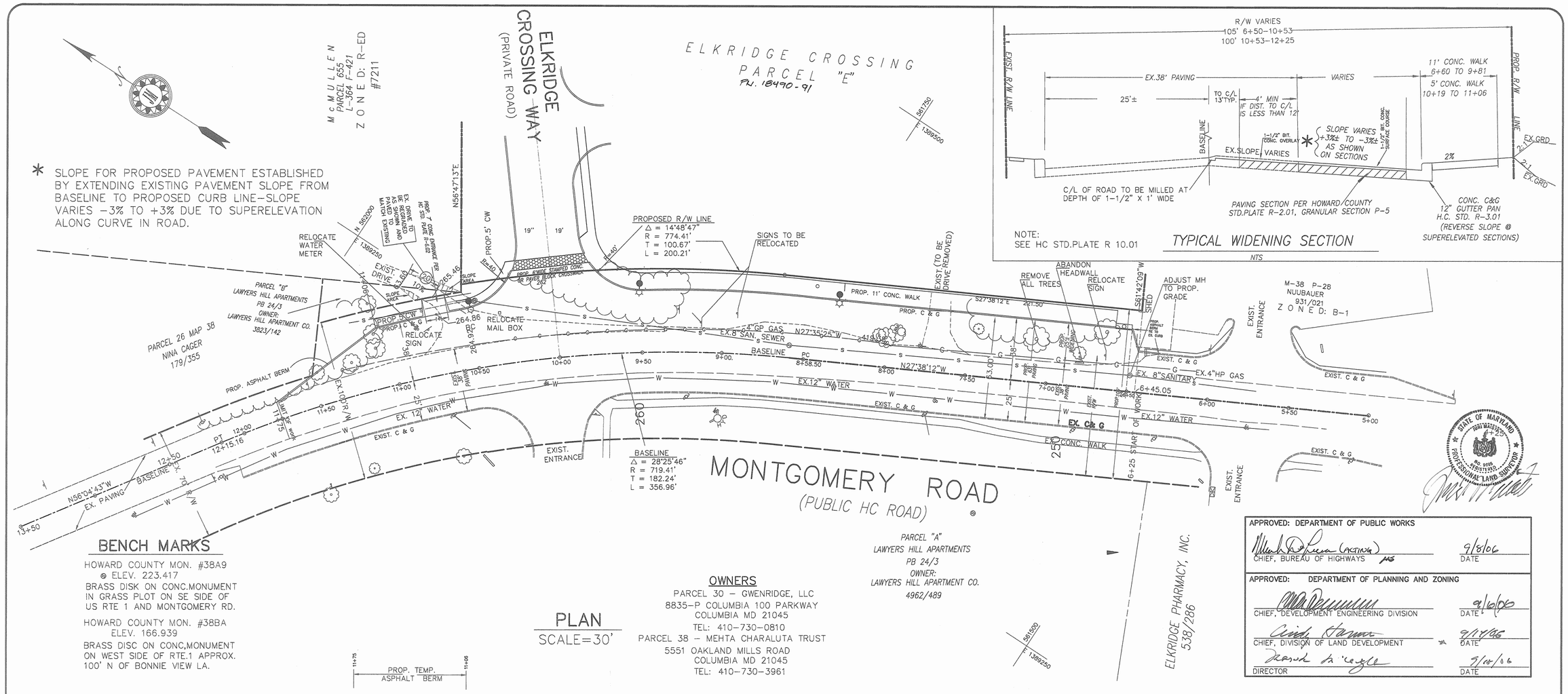

APPROVED: DEPARTMENT OF PUBLIC WORKS

CHIEF, BUREAU OF HIGHWAYS — DATE 9/8/06

APPROVED: DEPARTMENT OF PLANNING AND ZONING

CHIEF, DEVELOPMENT ENGINEERING DIVISION — DATE 9/6/06

CHIEF, DIVISION OF LAND DEVELOPMENT — DATE 9/14/06

DIRECTOR — DATE 9/18/06

STATE OF MARYLAND — MICHAEL S. WOOD — PROFESSIONAL LAND SURVEYOR

DRAWN: J.M.
DATE: JUNE 21, 2006
SCALE: AS SHOWN

DATE	REVISION	BY

ELKRIDGE-CROSSING-PHASE.ONE

PARCELS A-E

TAX MAP 38, GRID 2, PARCELS 30 & 38

FIRST ELECTION DISTRICT, HOWARD COUNTY, MARYLAND

MONTGOMERY*ROAD*WIDENING*PLAN

JURI MAISTE - SITE DESIGN CONSULTANT
2923 Chernock Avenue, Baltimore, Maryland 21234
Phone: 410-866-0752 Fax: 410-661-0782

RICHARDSON ENGINEERING, LLC
730 W. Padonia Road, Suite 101, Cockeysville, Maryland 21030
Phone: 410-560-1502 Fax: 410-560-0827

SHEET 19 OF 56

SDP-04-017

C:\DRAWINGS\ELKRID~1\PHASE-1\MAIN.HD Sat Aug 12 22:29:31 2006

OWNERS

PARCEL 30 – GWENRIDGE, LLC
8835–P COLUMBIA 100 PARKWAY
COLUMBIA MD 21045
TEL: 410–730–0810
PARCEL 38 – MEHTA CHARALUTA TRUST
5551 OAKLAND MILLS ROAD
COLUMBIA MD 21045
TEL: 410–730–3961

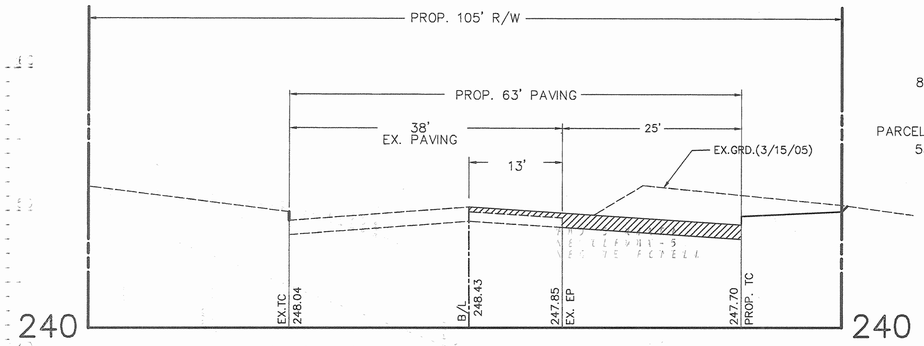

6+50

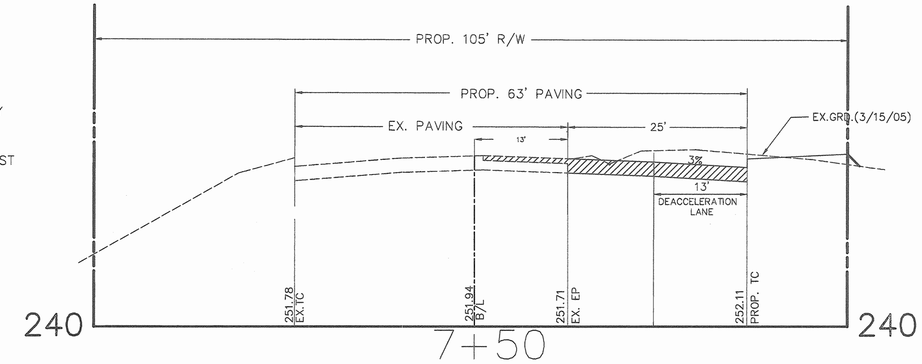

7+50

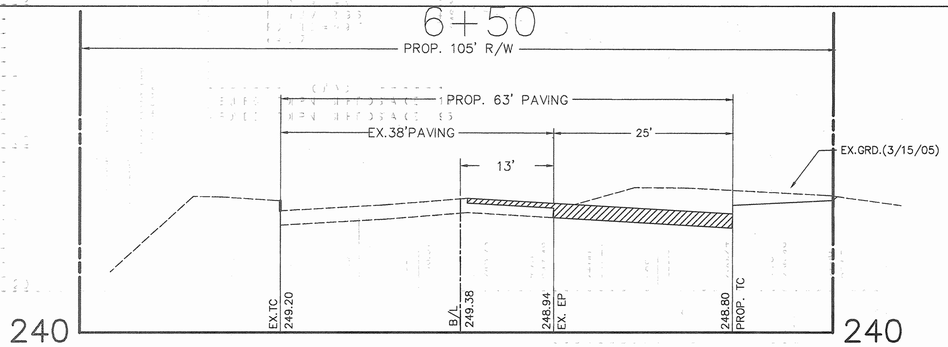

6+75

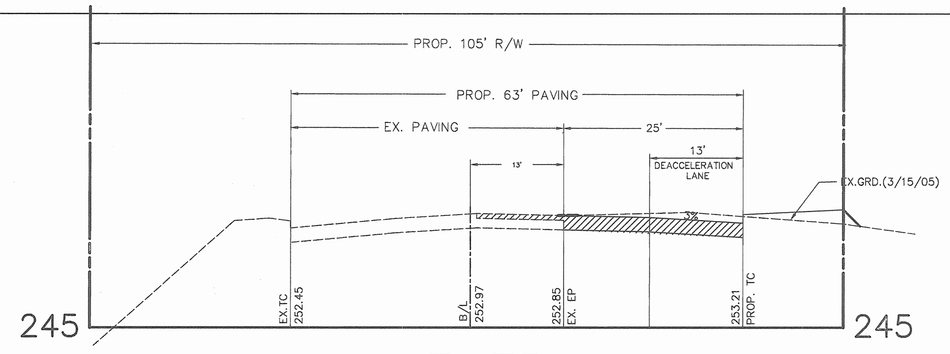

7+75

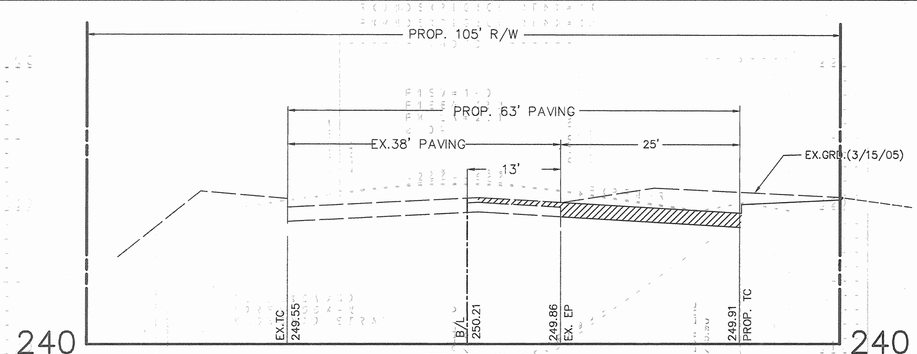

7+00

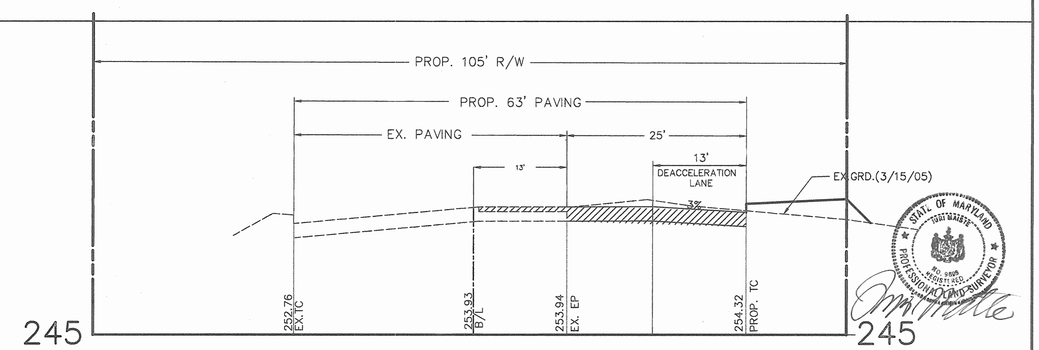

8+0

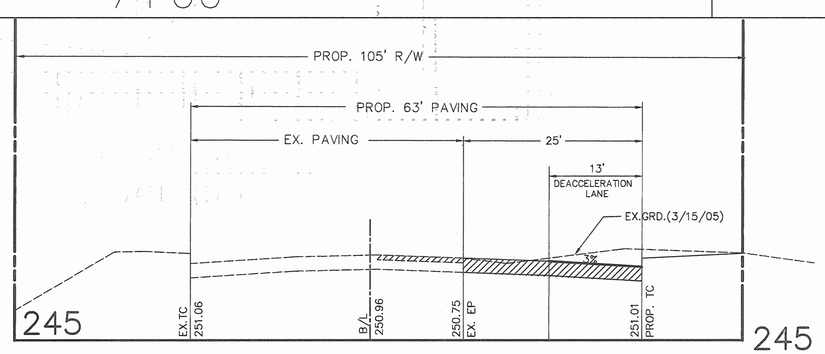

7+25

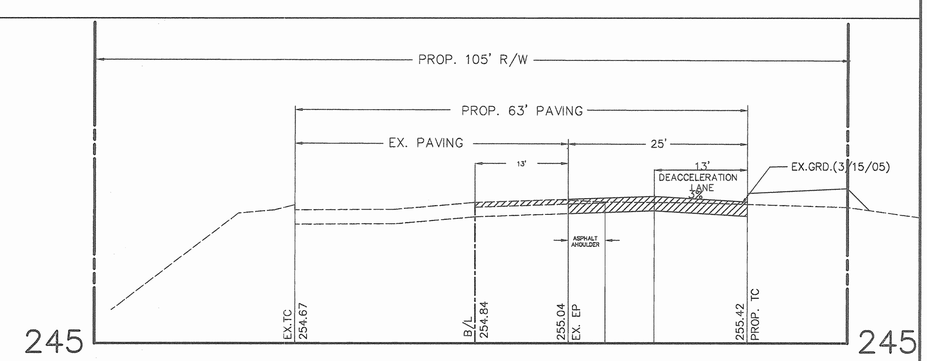

8+25

APPROVED: DEPARTMENT OF PUBLIC WORKS	
CHIEF, BUREAU OF HIGHWAYS	DATE 9/8/06

APPROVED: DEPARTMENT OF PLANNING AND ZONING	
CHIEF, DEVELOPMENT ENGINEERING DIVISION	DATE 9/6/06
CHIEF, DIVISION OF LAND DEVELOPMENT	DATE 9/14/06
DIRECTOR	DATE 9/18/06

DRAWN: J.M.
DATE: JUNE 21, 2006
SCALE: H-1"=10' V-1"=5'

DATE	REVISION	BY

ELKRIDGE–CROSSING–PHASE.ONE
PARCELS A–E
TAX MAP 38, GRID 2, PARCELS 30 & 38
SECOND ELECTION DISTRICT, HOWARD COUNTY, MARYLAND
MONTGOMERY*ROAD*CROSS*SECTIONS*1

JURI MAISTE – SITE DESIGN CONSULTANT
2923 Chenook Avenue, Baltimore, Maryland 21234
Phone: 410–661–8752 Fax: 410–661–8752
RICHARDSON ENGINEERING, LLC
730 W. Pedonia Road, Suite 101, Cockeysville, Maryland 21030
Phone: 410–560–1602 Fax: 410–560–0827

SDP-04-017

C:\ARANTINGS\ELKRID~1\PHASE-1\MONT-RD Mon Jul 24 16:26:49 2006

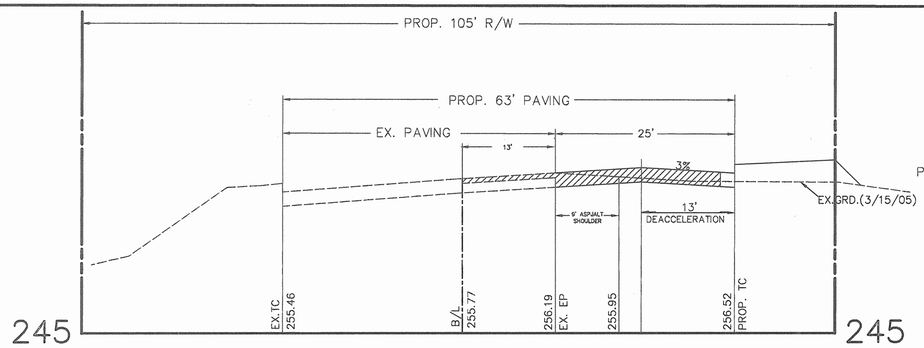

8+50

OWNERS

PARCEL 30 – GWENRIDGE, LLC
8835-P COLUMBIA 100 PARKWAY
COLUMBIA MD 21045
TEL: 410-730-0810

PARCEL 38 – MEHTA CHARALUTA TRUST
5551 OAKLAND MILLS ROAD
COLUMBIA MD 21045
TEL: 410-730-3961

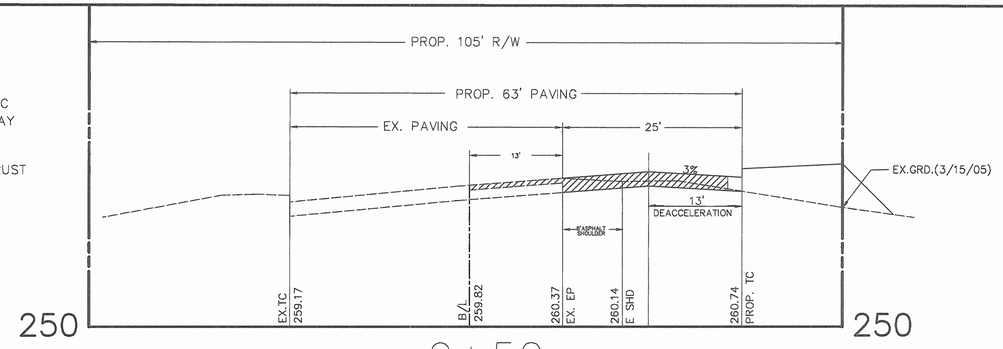

9+50

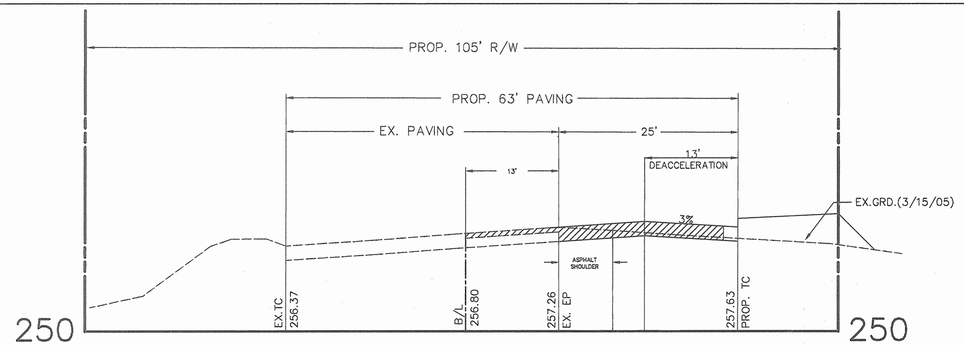

8+75

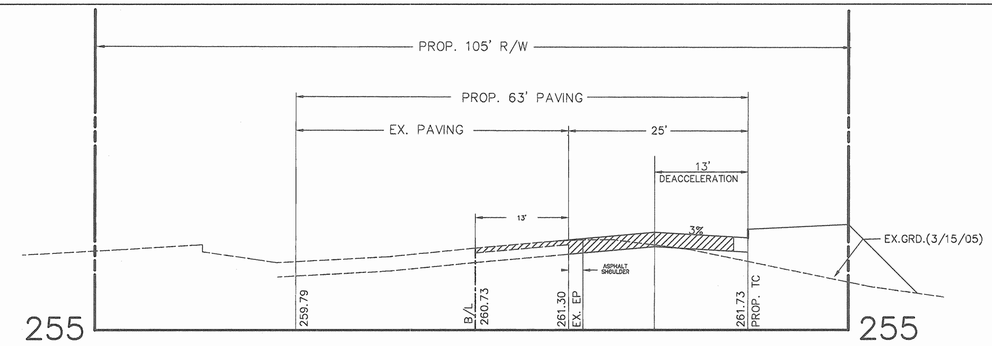

9+75

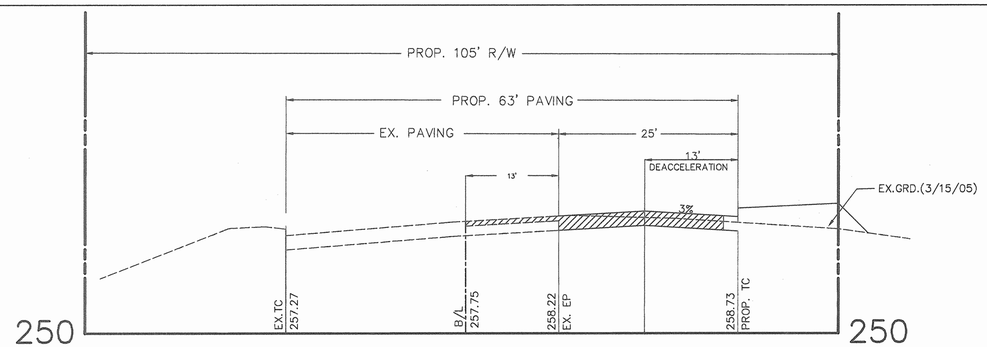

9+00

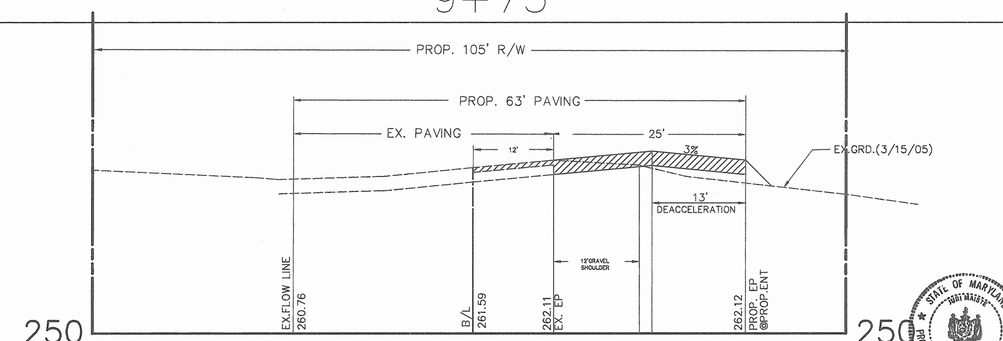

10+00

STATE OF MARYLAND
JURI MAISTE
NO. 5195
REGISTERED
PROFESSIONAL LAND SURVEYOR

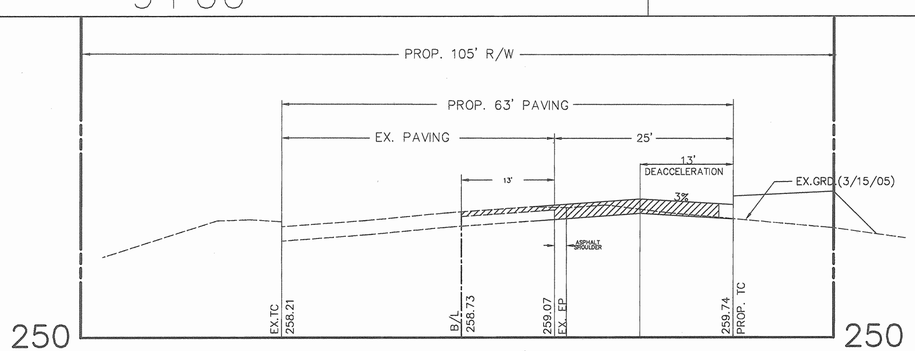

9+25

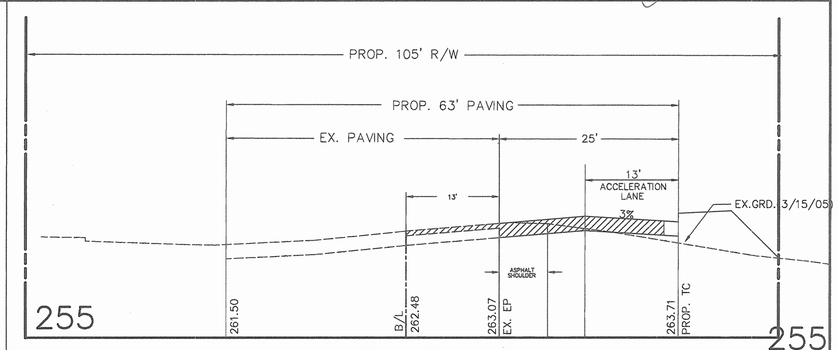

10+25

APPROVED: DEPARTMENT OF PUBLIC WORKS
CHIEF, BUREAU OF HIGHWAYS — DATE 9/8/06

APPROVED: DEPARTMENT OF PLANNING AND ZONING
CHIEF, DEVELOPMENT ENGINEERING DIVISION — DATE 9/6/06
CHIEF, DIVISION OF LAND DEVELOPMENT — DATE 9/14/06
DIRECTOR — DATE 9/18/06

DRAWN: J.M.
DATE: JUNE 21, 2006
SCALE: H.-1"=10' V.-1"=5'

DATE	REVISION	BY

ELKRIDGE–CROSSING–PHASE.ONE

PARCELS A-E
TAX MAP 38, GRID 2, PARCELS 30 & 38
SECOND ELECTION DISTRICT, HOWARD COUNTY, MARYLAND

MONTGOMERY*ROAD*CROSS*SECTIONS

JURI MAISTE – SITE DESIGN CONSULTANT
2923 Chenoak Avenue, Baltimore, Maryland 21234
Phone: 410-661-0752 Fax: 410-661-0752

RICHARDSON ENGINEERING, LLC
720 W. Pedonia Road, Suite 101, Cockeysville, Maryland 21030
Phone: 410-560-1502 Fax: 410-560-0827

SDP-04-017

C:\DRAWINGS\ELKRID1\PHASE-1\MONT-RD Mon Jul 24 15:51:19 2006

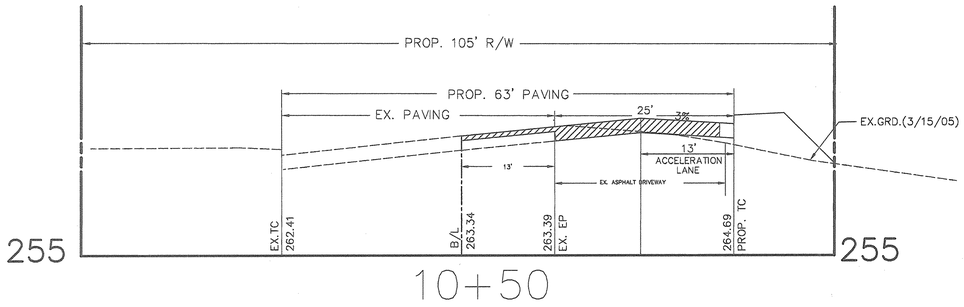

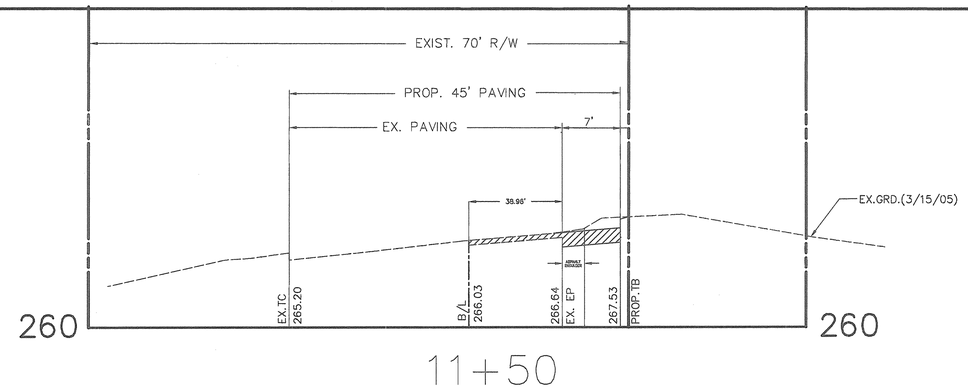

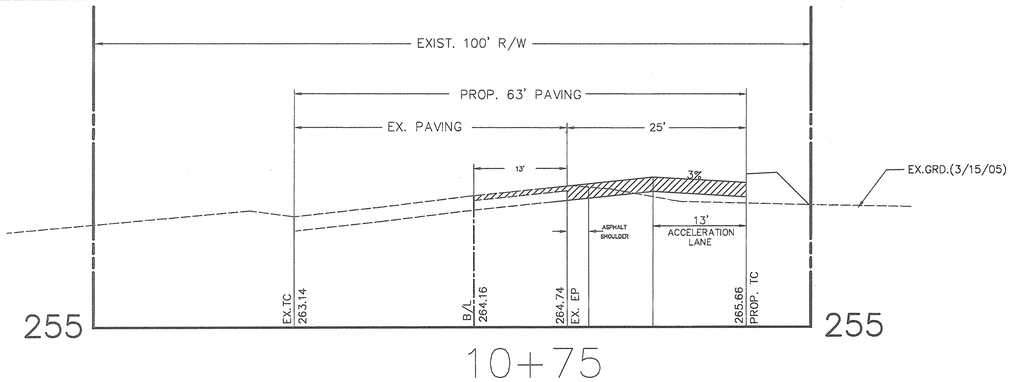

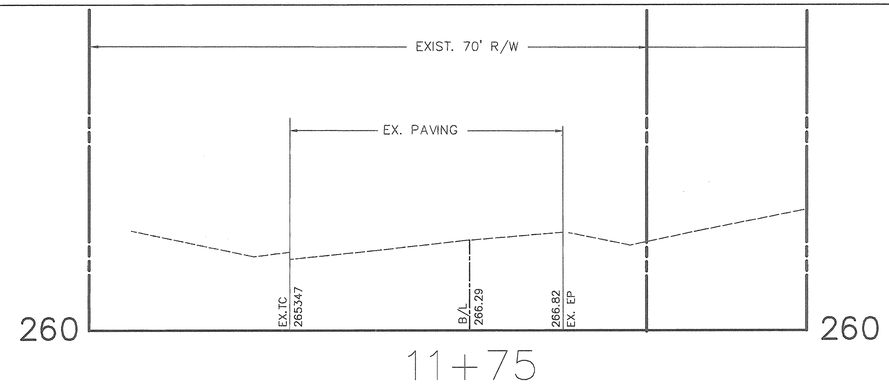

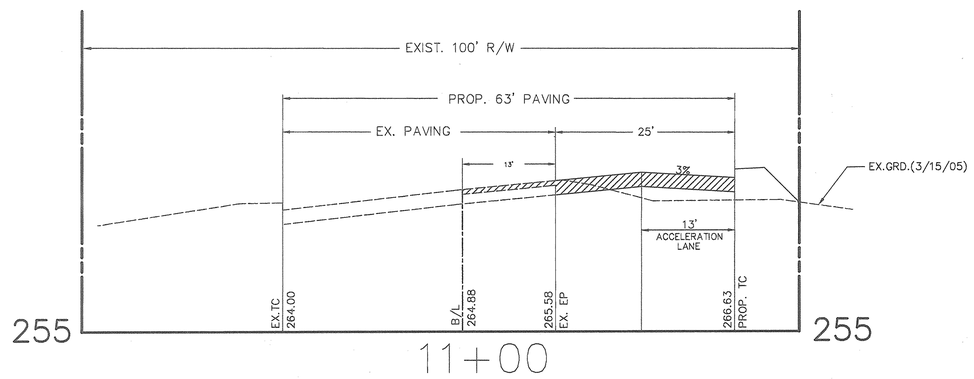

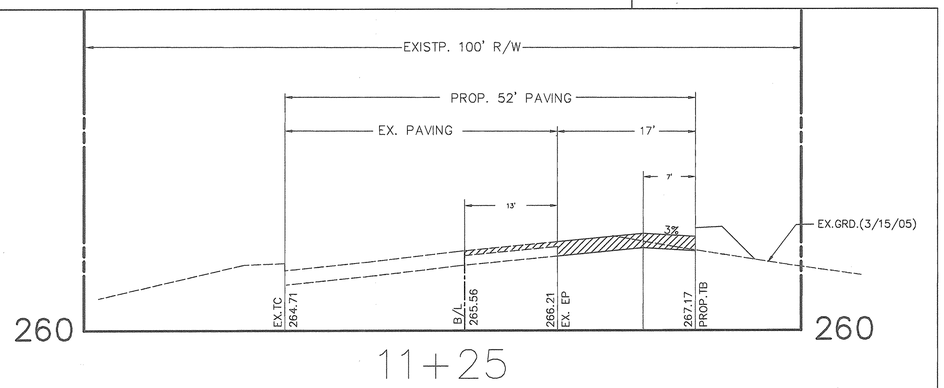

APPROVED: DEPARTMENT OF PUBLIC WORKS	
CHIEF, BUREAU OF HIGHWAYS	DATE 9/8/06

APPROVED: DEPARTMENT OF PLANNING AND ZONING	
CHIEF, DEVELOPMENT ENGINEERING DIVISION	DATE 9/6/06
CHIEF, DIVISION OF LAND DEVELOPMENT	DATE 9/7/06
DIRECTOR	DATE 9/18/06

STATE OF MARYLAND JURI MAISTE No. 9498 REGISTERED PROFESSIONAL LAND SURVEYOR

OWNERS

PARCEL 30 – GWENRIDGE, LLC
8835–P COLUMBIA 100 PARKWAY
COLUMBIA MD 21045
TEL: 410–730–0810
PARCEL 38 – MEHTA CHARALUTA TRUST
5551 OAKLAND MILLS ROAD
COLUMBIA MD 21045
TEL: 410–730–3961

DRAWN: J.M.
DATE: JUNE 21, 2006
SCALE: H–1"=10' V–1"=5'

DATE	REVISION	BY

ELKRIDGE–CROSSING–PHASE.ONE

PARCELS A–E

TAX MAP 38, GRID 2, PARCELS 30 & 38
SECOND ELECTION DISTRICT, HOWARD COUNTY, MARYLAND

MONTGOMERY*ROAD*CROSS*SECTIONS

JURI MAISTE – SITE DESIGN CONSULTANT
2923 Chenault Avenue, Baltimore, Maryland 21234
Phone: 410–661–8752 Fax: 410–661–8752
RICHARDSON ENGINEERING, LLC
730 W. Padonia Road, Suite 101, Cockeysville, Maryland 21030
Phone: 410–560–1502 Fax: 410–560–0827

SDP-04-017

C:\DRAWINGS\ELKRID~1\PHASE-1\MONT-RD Mon Jul 24 16:08:30 2006

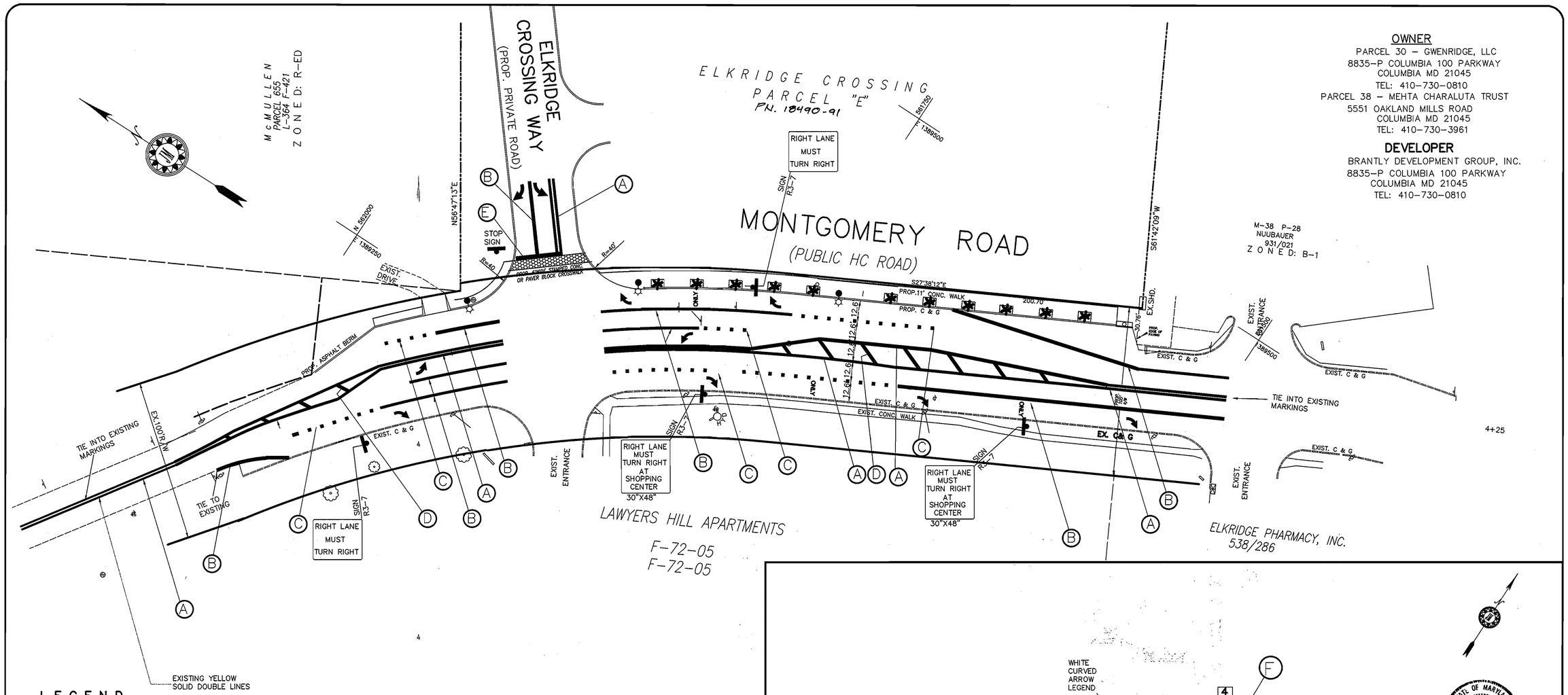

OWNER

PARCEL 30 – GWENRIDGE, LLC
8835-P COLUMBIA 100 PARKWAY
COLUMBIA MD 21045
TEL: 410-730-0810
PARCEL 38 – MEHTA CHARALUTA TRUST
5551 OAKLAND MILLS ROAD
COLUMBIA MD 21045
TEL: 410-730-3961

DEVELOPER

BRANTLY DEVELOPMENT GROUP, INC.
8835-P COLUMBIA 100 PARKWAY
COLUMBIA MD 21045
TEL: 410-730-0810

LEGEND

- Ⓐ 5" DOUBLE YELLOW
- Ⓑ 5" SOLID WHITE
- Ⓒ 5" PUPPY TRACKS..... WHITE(2' LINE SEGMENT/6' SPACE/2' LINE SEGMENT/6' SPACE)...
- Ⓓ 12" YELLOW HATCH LINES (20' SPACING)
- Ⓔ 24" WHITE STOP BAR
- Ⓕ 12"BROKEN WHITE,3'STRIPE, 3'GAP
- Ⓖ 8" SOLID YELLOW
- ● 250WATT HPS (SAG)
- ☼ MOUNTED @ 30'ON A BRONZE FIBERGLASS POLE WITH 12' ARM
- 1 SIGN

APPROVED: DEPARTMENT OF PUBLIC WORKS	
CHIEF, BUREAU OF HIGHWAYS	DATE 9/8/06

APPROVED: DEPARTMENT OF PLANNING AND ZONING	
CHIEF, DEVELOPMENT ENGINEERING DIVISION	DATE 9/6/06
CHIEF, DIVISION OF LAND DEVELOPMENT	DATE 9/14/06
DIRECTOR	DATE 9/18/06

NOTE:
1. EXISTING LINES MUST BE GRINDED FOR REMOVAL
2. NEW LINES TO BE THERMOPLASTIC
3. CONTACT HOWARD COUNTY TRAFFIC DIVISION AT 410-313-5752 TO LAY OUT SIGND LOCATION, AND PAVEMENT MARKINGS.

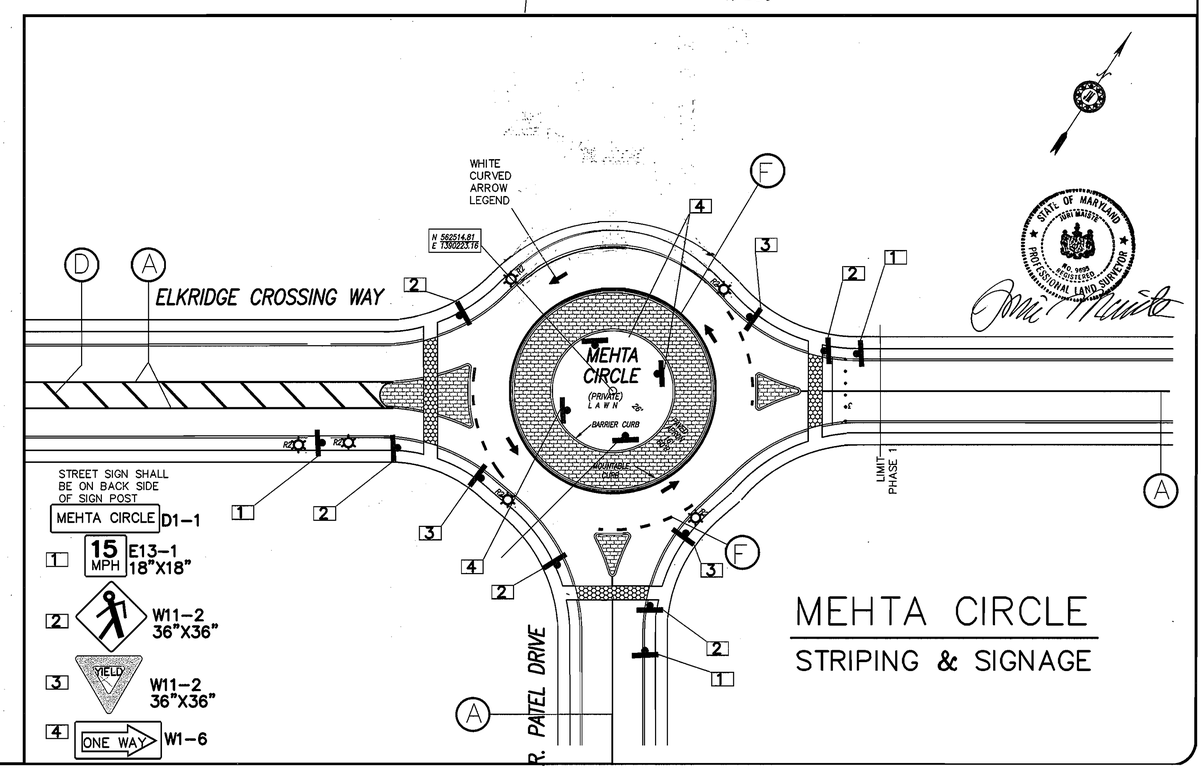

MEHTA CIRCLE
STRIPING & SIGNAGE

DRAWN: J.M.
DATE: JUNE 21, 2006
SCALE: 1:=30

DATE	REVISION	BY
1/1/07	MEHTA CIRCLE	CKN

ELKRIDGE-CROSSING-PHASE.ONE
PARCELS A-E
TAX MAP 38, GRID 2, PARCELS 30 & 38
FIRST ELECTION DISTRICT, HOWARD COUNTY, MARYLAND
MONTGOMERY*ROAD*STIPING*PLAN
MONTGOMERY*ROAD*AND*ROUNDABOUT

JURI MAISTE – SITE DESIGN CONSULTANT
2923 Chenoak Avenue, Baltimore, Maryland 21234
Phone: 410-661-8752 Fax: 410-661-8752
RICHARDSON ENGINEERING, LLC
730 W. Padonia Road, Suite 101, Cockeysville, Maryland 21030
Phone: 410-561-1502 Fax: 410-560-0227

SDP-04-017

C:\DRAWINGS\ELKRID~1\PHASE-1\MONT-STR Mon Jul 24 17:05:47 2006

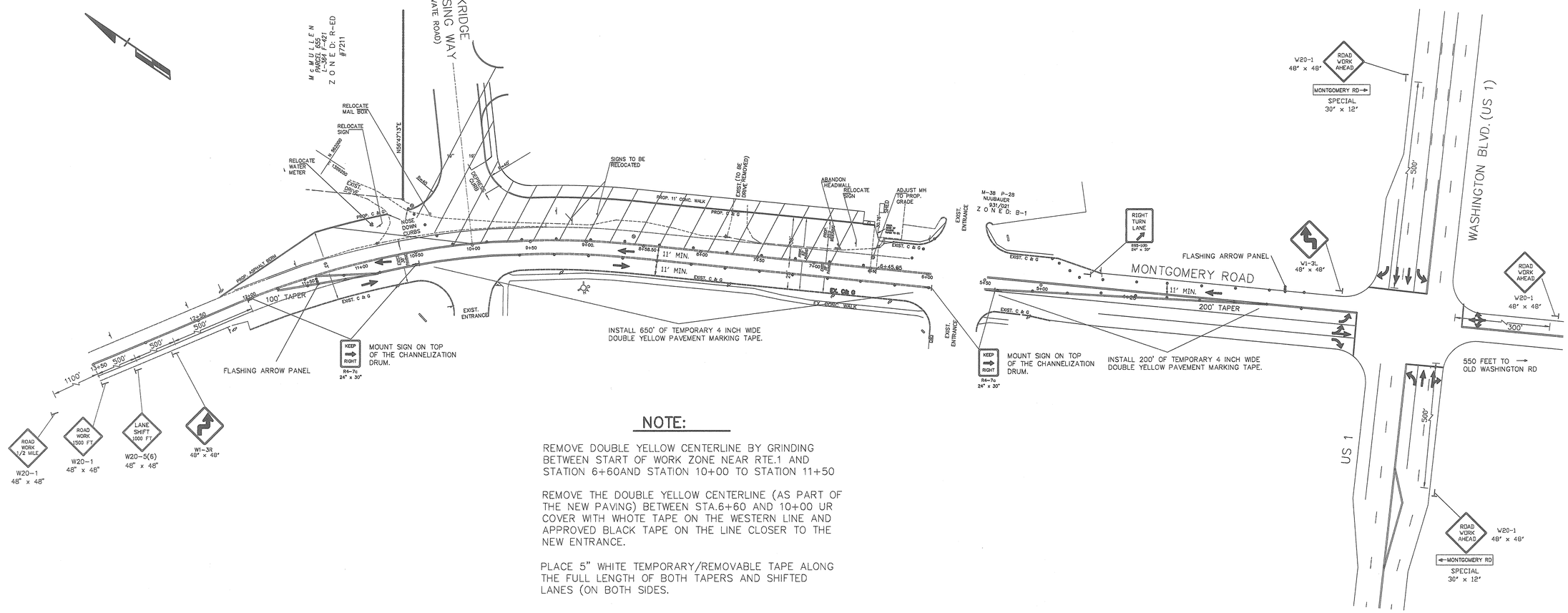

NOTE:

REMOVE DOUBLE YELLOW CENTERLINE BY GRINDING BETWEEN START OF WORK ZONE NEAR RTE.1 AND STATION 6+60AND STATION 10+00 TO STATION 11+50

REMOVE THE DOUBLE YELLOW CENTERLINE (AS PART OF THE NEW PAVING) BETWEEN STA.6+60 AND 10+00 UR COVER WITH WHOTE TAPE ON THE WESTERN LINE AND APPROVED BLACK TAPE ON THE LINE CLOSER TO THE NEW ENTRANCE.

PLACE 5" WHITE TEMPORARY/REMOVABLE TAPE ALONG THE FULL LENGTH OF BOTH TAPERS AND SHIFTED LANES (ON BOTH SIDES.

LEGEND

- DIRECTION OF TRAFFIC
- FLAGPERSON
- TEMPORARY TRAFFIC DRUM
- SIGN POST/FACE OF SIGN
- WORK AREA

GENERAL NOTES

1. INSTALL THE TRAFFIC DEVICES AS SHOWN.
2. TRAFFIC DRUM SPACING SHALL BE 30 FEET ON TANGENT SECTIONS AND 10 FEET ON TAPERS AND RADII.
3. CONSTRUCT THE ROAD WIDENING AND SIDEWALK BETWEEN STA. 6+25 AND STA. 10+50 AS SHOWN.
4. DURING THE ROAD WIDENING BETWEEN STA. 10+50 AND STA. 12+25 THE WORK ZONE WILL REQUIRE FLAGGING OPERATION AS DETAILED IN STANDARD NO. MD 104.31-02.
5. ACCESS SHALL BE MAINTAINED TO ALL DRIVEWAYS.
6. REMOVE THE TRAFFIC CONTROL DEVICES IN REVERSE ORDER OF INSTALLATION.

APPROVED: DEPARTMENT OF PUBLIC WORKS	
CHIEF, BUREAU OF HIGHWAYS	DATE 9/8/06

APPROVED: DEPARTMENT OF PLANNING AND ZONING	
CHIEF, DEVELOPMENT ENGINEERING DIVISION	DATE 9/6/06
CHIEF, DIVISION OF LAND DEVELOPMENT	DATE 9/14/06
DIRECTOR	DATE 9/14/06

STATE OF MARYLAND — JURI MAISTE — PROFESSIONAL LAND SURVEYOR

DRAWN: MN
DATE: MAY 1, 2006
SCALE: NO SCALE

DATE	REVISION	BY

ELKRIDGE-CROSSING-PHASE.ONE

PARCELS A-E
TAX MAP 38, GRID 2, PARCELS 30 & 38
SECOND ELECTION DISTRICT, HOWARD COUNTY, MARYLAND

MONTGOMERY RD WORKZONE TRAFFIC CONTROL PLAN

JURI MAISTE - SITE DESIGN CONSULTANT
2923 Chenoak Avenue, Baltimore, Maryland 21234
Phone: 410-661-8752 Fax: 410-661-8752
RICHARDSON ENGINEERING, LLC
730 W. Padonia Road, Suite 101, Cockeysville, Maryland 21030
Phone: 410-560-1502 Fax: 410-560-0827

SDP-04-017

C:\DRAWINGS\ELKRID1\PHASE-1\MONT-MOT Sat Aug 12 17:11:16 2006

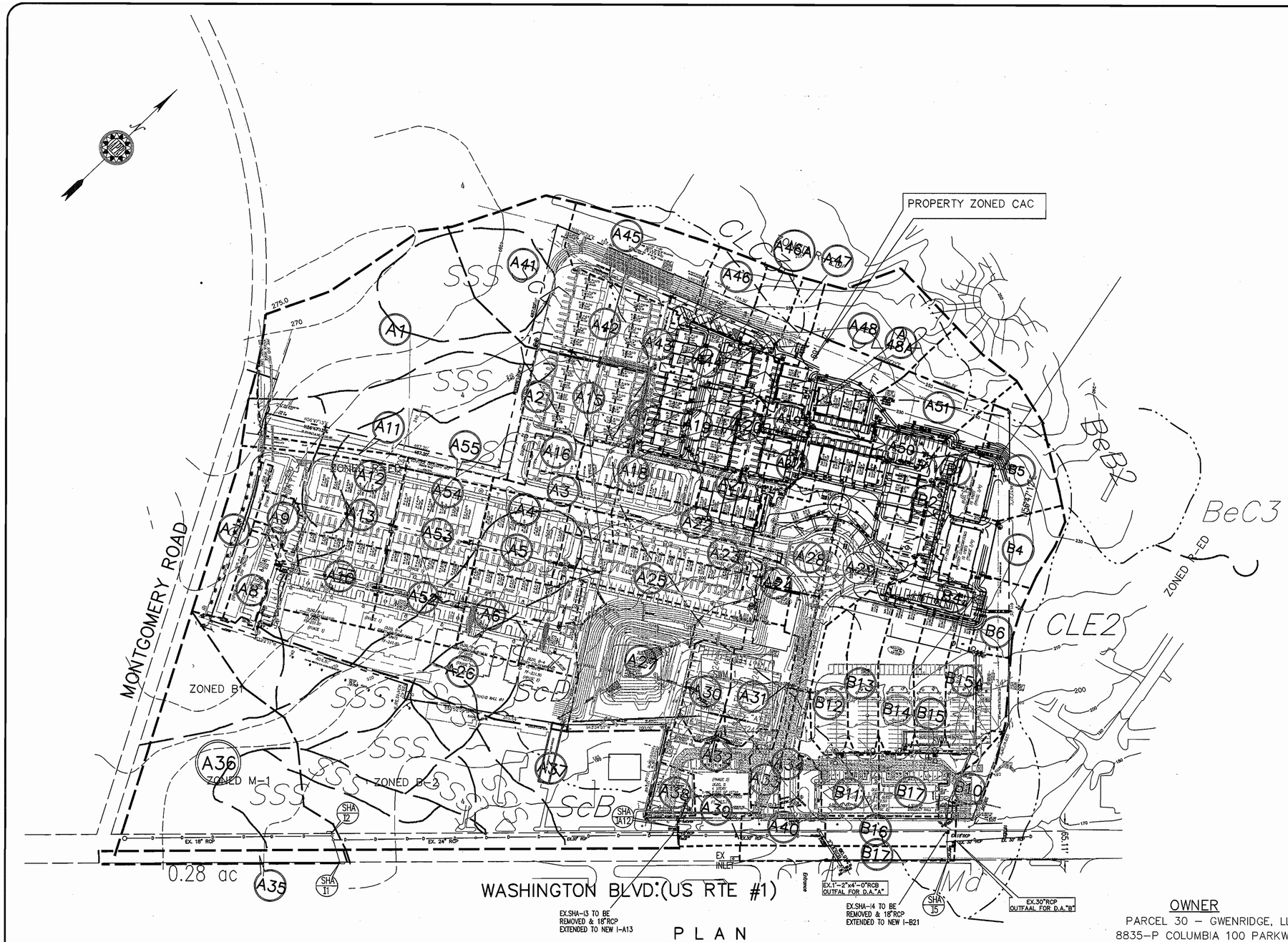

PLAN

SCALE: 1"=100'

LEGEND:

- (A11) AREA NUMBER
- EXISTING CONTOURS
- ZONING DIVIDE
- DRAINAGE AREAS
- PROPERTY LINES

DRAINAGE AREA DATA

D.A. NO.	AREA (ACRES)	"C"	SOILS TYPE
A1	4.03	0.27	C
A2	0.33	0.79	C
A3	0.22	0.79	C
A4	0.28	0.76	C
A5	0.38	0.79	C
A6	0.84	0.76	C
A7	0.54	0.79	C
A8	0.33	0.76	C
A9	0.16	0.73	C
A10	0.68	0.70	C
A11	0.14	0.83	C
A12	0.31	0.76	C
A13	0.56	0.79	C
A15	0.37	0.49	C
A16	0.16	0.76	C
A17	0.38	0.79	C
A18	0.42	0.76	C
A19	0.44	0.49	C
A20	0.0.70	0.79	C
A21	0.23	0.60	C
A21A	0.25	0.60	C
A22	0.32	0.76	C
A23	0.46	0.73	C
A24	0.19	0.39	C
A25	0.78	0.76	C
A26	1.25	0.60	C
A27	1.56	0.32	C
A28	0.76	0.73	C
A29	0.98	0.73	C
A30	0.33	0.79	C
A31	0.55	0.76	C
A32	0.42	0.79	C
A33	0.21	0.66	C
A34	0.20	0.70	C
A35	0.28	0.76	C
A36	2.49	0.60	C
A37	5.22	0.57	C
A38	0.17	0.79	C
A39	0.27	0.76	C
A40	0.35	0.73	C
A41	1.23	0.36	C
A42	0.46	0.60	C
A43	0.33	0.73	C
A44	0.25	0.60	C
A45	0.85	0.70	C
A46	0.35	0.32	C
A46A	0.27	0.28	C
A47	0.18	0.28	C
A48	0.29	0.28	C
A48A	0.48	0.60	C
A49	0.86	0.86	C
A50	0.15	0.86	C
A51	0.81	0.30	C
A52	0.62	0.76	C
A53	0.42	0.76	C
A54	0.22	0.76	C
A55	0.10	0.76	C
B1	0.29	0.48	C
B2	0.47	0.78	C
B3	0.54	0.40	C
B4	0.57	0.62	
B5	0.73	0.62	
B6	0.24	0.39	C
B10	0.17	0.78	C
B11	0.40	0.79	C
B12	0.25	0.79	C
B13	0.25	0.79	C
B14	0.42	0.79	C
B15	0.36	0.79	C
B16	0.52	0.79	C
B17	0.51	0.79	C

OWNER

PARCEL 30 – GWENRIDGE, LLC
8835–P COLUMBIA 100 PARKWAY
COLUMBIA MD 21045
TEL: 410–730–0810

PARCEL 38 – MEHTA CHARALUTA TRUST
5551 OAKLAND MILLS ROAD
COLUMBIA MD 21045
TEL: 410–730–3961

DEVELOPER

BRANTLY DEVELOPMENT GROUP, INC.
8835–P COLUMBIA 100 PARKWAY
COLUMBIA MD 21045
TEL: 410–730–0810

APPROVED: DEPARTMENT OF PLANNING AND ZONING

CHIEF, DEVELOPMENT ENGINEERING DIVISION	DATE 7/27/07
CHIEF, DIVISION OF LAND DEVELOPMENT	DATE 8/1/07
DIRECTOR	DATE 8/2/07

STATE OF MARYLAND — PROFESSIONAL LAND SURVEYOR — NO. 9995 — REGISTERED

Rev./Replacement Sht.

DRAWN: J.M.
DATE: JUNE 15, 2007
07107
SCALE: 1:=100

DATE	REVISION	BY
6/15/07	PER APPROVED REDLINES	JM

ELKRIDGE–CROSSING–PHASE.ONE

PARCELS A–E
TAX MAP 38, GRID 2, PARCELS 30 & 38
FIRST ELECTION DISTRICT, HOWARD COUNTY, MARYLAND

DRAINAGE*AREA*MAP

JURI MAISTE – SITE DESIGN CONSULTANT
2923 Chenault Avenue, Baltimore, Maryland 21234
Phone: 410–661–8752 Fax: 410–661–8752

RICHARDSON ENGINEERING, LLC
730 W. Padonia Road, Suite 101, Cockeysville, Maryland 21030
Phone: 410–560–1502 Fax: 410–560–0827

SDP-04-017

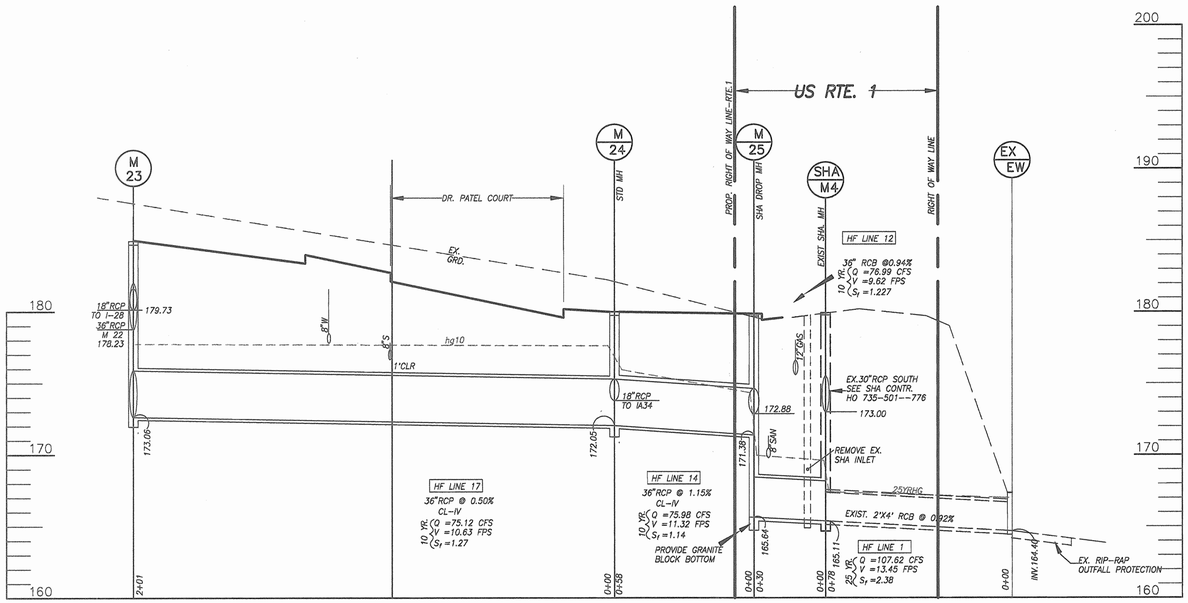

SHA STRUCTURE SCHEDULE – US RTE.1

NO.	TYPE	DETAIL	RIM	INV. IN		INV. OUT	COORDINATES NORTHING	COORDINATES EASTING
M25	5' DIA. MANHOLE	MD-384.03	177.85	18"-172.88	36"-171.38	30"-165.54	562159.60	1390574.15
M26	5' DIA. MANHOLE	MD-384.03	180.43	18"-176.07	30"-175.57*	30"-175.57*	OVER EXIST. 30" RCP	
M40	5' DIA. MANHOLE	MD-384.03	174.45	18"-168.58	30"-167.58	30"-167.38	562241.60	1.90748.38

* EXIST. 30" RCP

SHA INLET SCHEDULE – US RTE.1

NO.	TYPE	DETAIL	T.C. ELEV. UPPER/LOWER	INV. IN	INV. OUT	COORDINATES NORTHING	COORDINATES EASTING
IA-37	COG-20	MD-374.31	TC-182.55 / 182.00	15"-178.70	24"-177.95	561959.14	1390387.77
IA-39	COG-15	MD-374.31	TC-180.51 / 180.24	---	18"-176.27	562045.34	1390470.30
IA-40	COG-15	MD-374.31	TC-177.86 / 177.56	---	18"-173.15	562169.19	1390588.86
IB-16	COG-15	MD-374.31	TC-174.28 / 13.96	---	18"-170.00	562354.47	139766.23

NOTE: COORDINATES SHOWN ARE AT FACE OF CURB

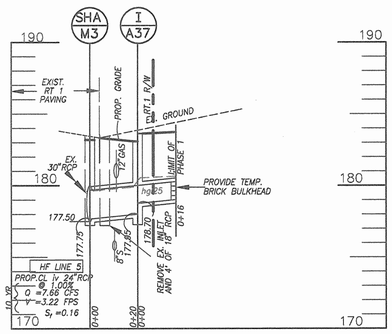

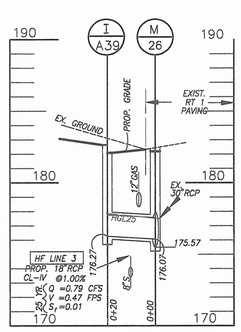

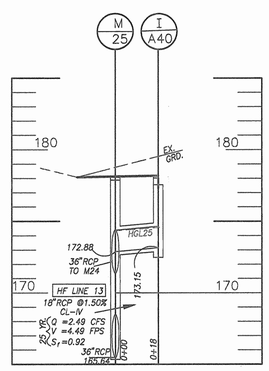

NOTE
TEST PITS FOR
EX.SEWER AND GAS

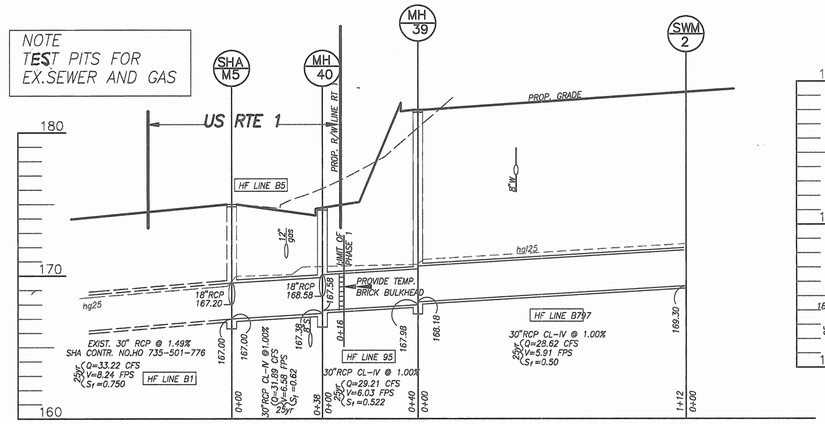

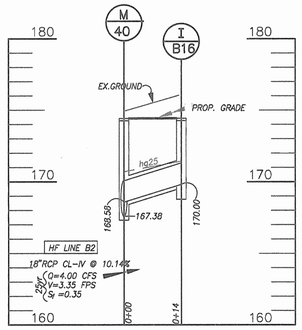

PROFILES

SCALE: HOR: 1"=30'
VERT.: 1"=5'

APPROVED: DEPARTMENT OF PLANNING AND ZONING

CHIEF, DEVELOPMENT ENGINEERING DIVISION	DATE 9/6/06
CHIEF, DIVISION OF LAND DEVELOPMENT	DATE 9/14/06
DIRECTOR	DATE 9/18/06

OWNER
PARCEL 30 – GWENRIDGE, LLC
8835-P COLUMBIA 100 PARKWAY
COLUMBIA MD 21045
TEL: 410-730-0810
PARCEL 38 – MEHTA CHARALUTA TRUST
5551 OAKLAND MILLS ROAD
COLUMBIA MD 21045
TEL: 410-730-3961

DEVELOPER
BRANTLY DEVELOPMENT GROUP, INC.
8835-P COLUMBIA 100 PARKWAY
COLUMBIA MD 21045
TEL: 410-730-0810

NOTE:
PROVIDE 95%
FULL TRENCH COMPACTION

STATE OF MARYLAND
JURI MAISTE
No. 9989
REGISTERED
PROFESSIONAL LAND SURVEYOR

BENCH MARKS

HOWARD COUNTY MON. #38A9
ELEV. 223.417
BRASS DISK ON CONC.MONUMENT IN GRASS PLOT ON SE SIDE OF US RTE 1 AND MONTGOMERY RD.

HOWARD COUNTY MON. #38BA
ELEV. 166.939
BRASS DISC ON CONC,MONUMENT ON WEST SIDE OF RTE.1 APPROX. 100' N OF BONNIE VIEW LA.

DRAWN: J.M.
DATE: JUNE 21, 2006
SCALE: AS SHOWN

DATE	REVISION	BY

ELKRIDGE–CROSSING–PHASE ONE
PARCELS A-E
TAX MAP 38, GRID 2, PARCELS 30 & 38
FIRST ELECTION DISTRICT, HOWARD COUNTY, MARYLAND
STORM*DRAIN*PROFILES–1

JURI MAISTE – SITE DESIGN CONSULTANT
2923 Chenault Avenue, Baltimore, Maryland 21234
Phone: 410-661-8752 Fax: 410-661-8752
RICHARDSON ENGINEERING, LLC
730 W. Padonia Road, Suite 101, Cockeysville, Maryland 21030
Phone: 410-560-1502 Fax: 410-560-0827

SHEET 26 OF 56

SDP-04-017

C:\DRAWINGS\ELKRID~1\PHASE-1\C26.DPF Mon Jul 24 20:21:21 2006

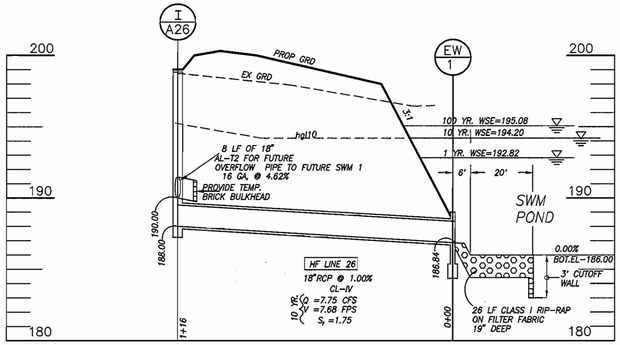

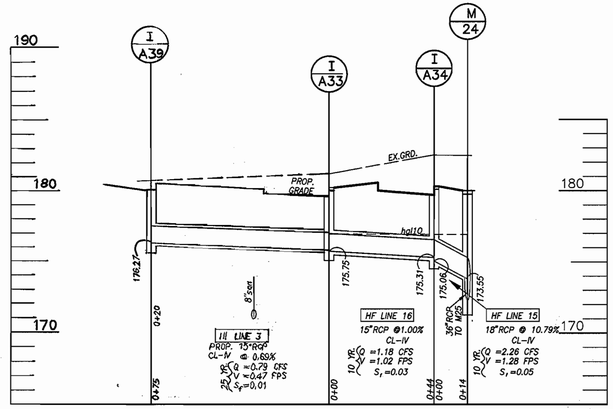

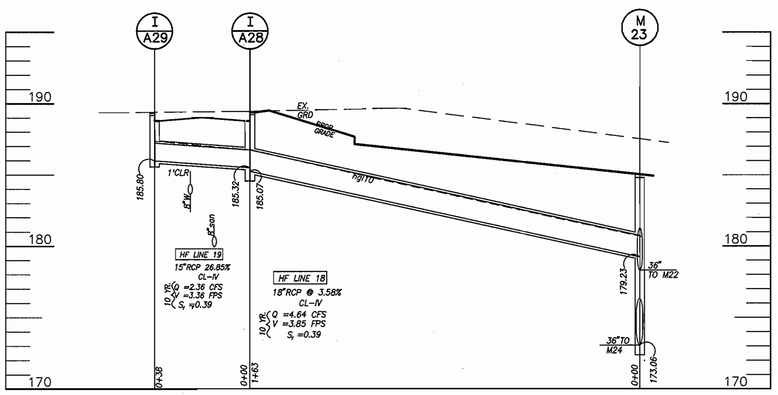

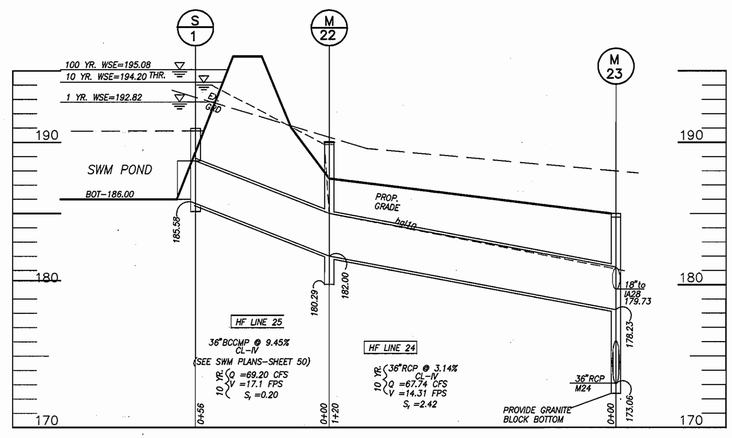

PROFILES

SCALE: HOR: 1"=30'
VERT.: 1"=5'

NOTE:
PROVIDE 95% FULL TRENCH COMPACTION

BENCH MARKS

HOWARD COUNTY MON. #38A9
ELEV. 223.417
BRASS DISK ON CONC.MONUMENT IN GRASS PLOT ON SE SIDE OF US RTE 1 AND MONTGOMERY RD.

HOWARD COUNTY MON. #38BA
ELEV. 166.939
BRASS DISC ON CONC,MONUMENT ON WEST SIDE OF RTE.1 APPROX. 100' N OF BONNIE VIEW LA.

OWNER

PARCEL 30 – GWENRIDGE, LLC
8835-P COLUMBIA 100 PARKWAY
COLUMBIA MD 21045
TEL: 410-730-0810
PARCEL 38 – MEHTA CHARALUTA TRUST
5551 OAKLAND MILLS ROAD
COLUMBIA MD 21045
TEL: 410-730-3961

DEVELOPER

BRANTLY DEVELOPMENT GROUP, INC.
8835-P COLUMBIA 100 PARKWAY
COLUMBIA MD 21045
TEL: 410-730-0810

APPROVED: DEPARTMENT OF PLANNING AND ZONING

CHIEF, DEVELOPMENT ENGINEERING DIVISION	DATE 9/6/06
CHIEF, DIVISION OF LAND DEVELOPMENT	DATE 9/14/06
DIRECTOR	DATE 9/18/06

STATE OF MARYLAND — JURI MAISTE — REG. NO. 9489 — PROFESSIONAL LAND SURVEYOR

DATE	REVISION	BY
1/1/07	ADDED STREET LIGHT & INLET ELEV.	CAD

DRAWN: J.M.
DATE: JUNE 21, 2006
SCALE: AS SHOWN

ELKRIDGE–CROSSING–PHASE.ONE

PARCELS A-E
TAX MAP 38, GRID 2, PARCELS 30 & 38
FIRST ELECTION DISTRICT, HOWARD COUNTY, MARYLAND

STORM*DRAIN*PROFILES–2

JURI MAISTE – SITE DESIGN CONSULTANT
2923 Chenoak Avenue, Baltimore, Maryland 21234
Phone: 410-661-8752 Fax: 410-661-8752
RICHARDSON ENGINEERING, LLC
730 W. Padonia Road, Suite 101, Cockeysville, Maryland 21030
Phone: 410-560-1502 Fax: 410-560-0027

SDP-04-017

C:\DRAWINGS\ELKR10"1\PHASE-1\E27-DPF Mon Jul 24 20:39:14 2006

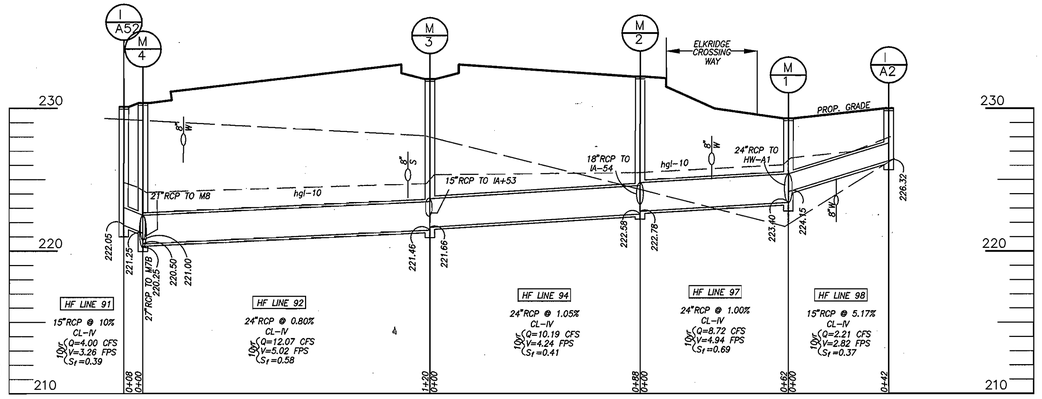

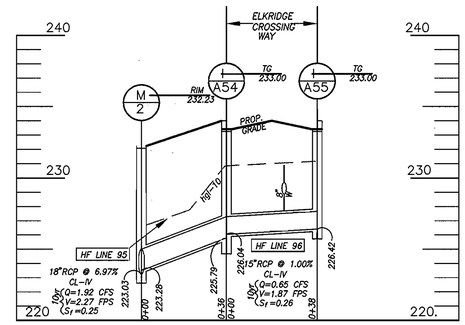

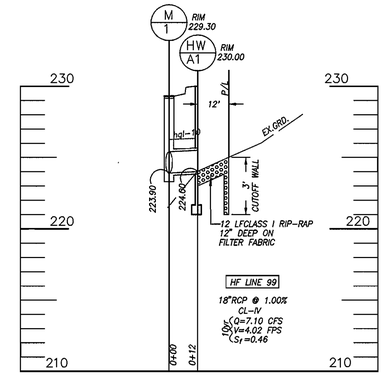

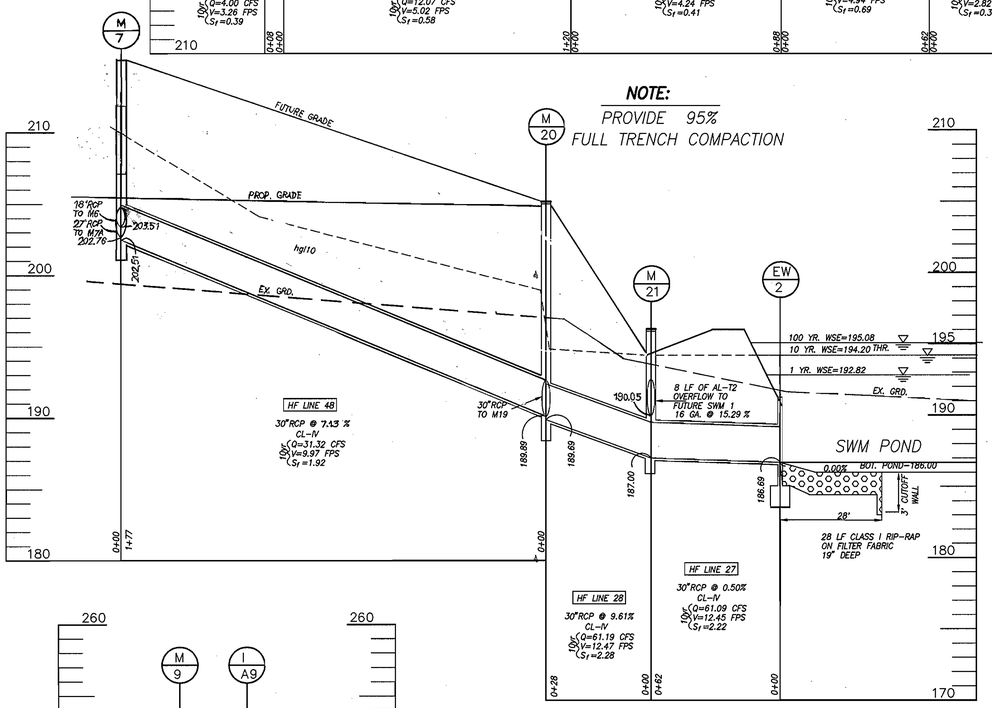

NOTE:
PROVIDE 95%
FULL TRENCH COMPACTION

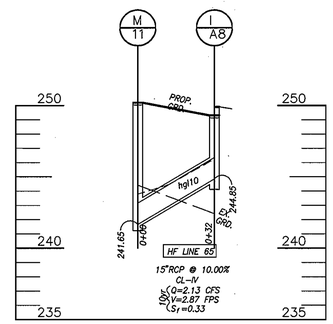

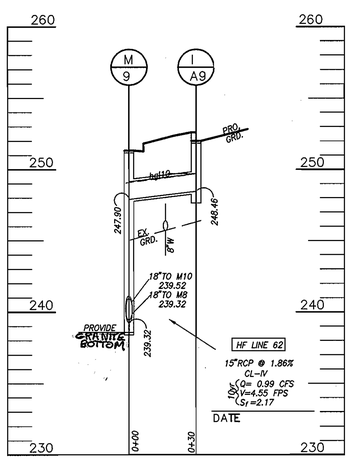

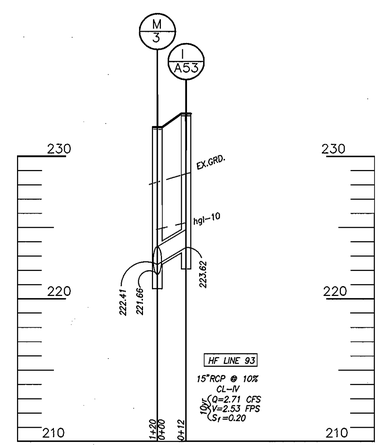

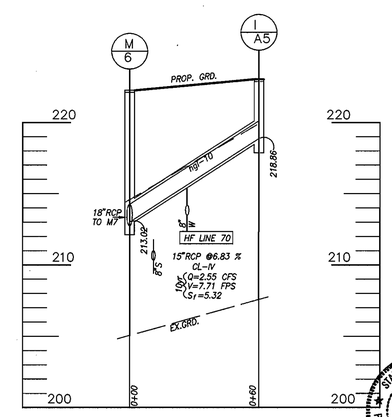

PROFILES

SCALE: HOR: 1"=30'
VERT.: 1"=5'

OWNER
PARCEL 30 – GWENRIDGE, LLC
8835-P COLUMBIA 100 PARKWAY
COLUMBIA MD 21045
TEL: 410-730-0810
PARCEL 38 – MEHTA CHARALUTA TRUST
5551 OAKLAND MILLS ROAD
COLUMBIA MD 21045
TEL: 410-730-3961

DEVELOPER
BRANTLY DEVELOPMENT GROUP, INC.
8835-P COLUMBIA 100 PARKWAY
COLUMBIA MD 21045
TEL: 410-730-0810

APPROVED: DEPARTMENT OF PLANNING AND ZONING

CHIEF, DEVELOPMENT ENGINEERING DIVISION	9/6/06
CHIEF, DIVISION OF LAND DEVELOPMENT	9/14/06 DATE
DIRECTOR	9/14/06 DATE

STATE OF MARYLAND
JURI MAISTE
No. 9082
REGISTERED
PROFESSIONAL LAND SURVEYOR

DRAWN: J.M.
DATE: JUNE 21, 2006
AS SHOWN

DATE	REVISION	BY
1/1/07	STRUCTURE, RETUSED INT. MOD. & HGL	CMD

ELKRIDGE-CROSSING-PHASE.ONE

PARCELS A-E
TAX MAP 38, GRID 2, PARCELS 30 & 38
FIRST ELECTION DISTRICT, HOWARD COUNTY, MARYLAND

STORM*DRAIN*PROFILES-3

JURI MAISTE – SITE DESIGN CONSULTANT
2923 Chenoak Avenue, Baltimore, Maryland 21234
Phone: 410-661-8752 Fax: 410-661-8752

RICHARDSON ENGINEERING, LLC
730 W. Padonia Road, Suite 101 Cockeysville, Maryland 21030
Phone: 410-560-1602 Fax: 410-560-0627

SDP-04-017

C:\DRAWINGS\ELKGTD~1\PHASE-1\E28.DPF Sat Aug 12 16:31:39 2006

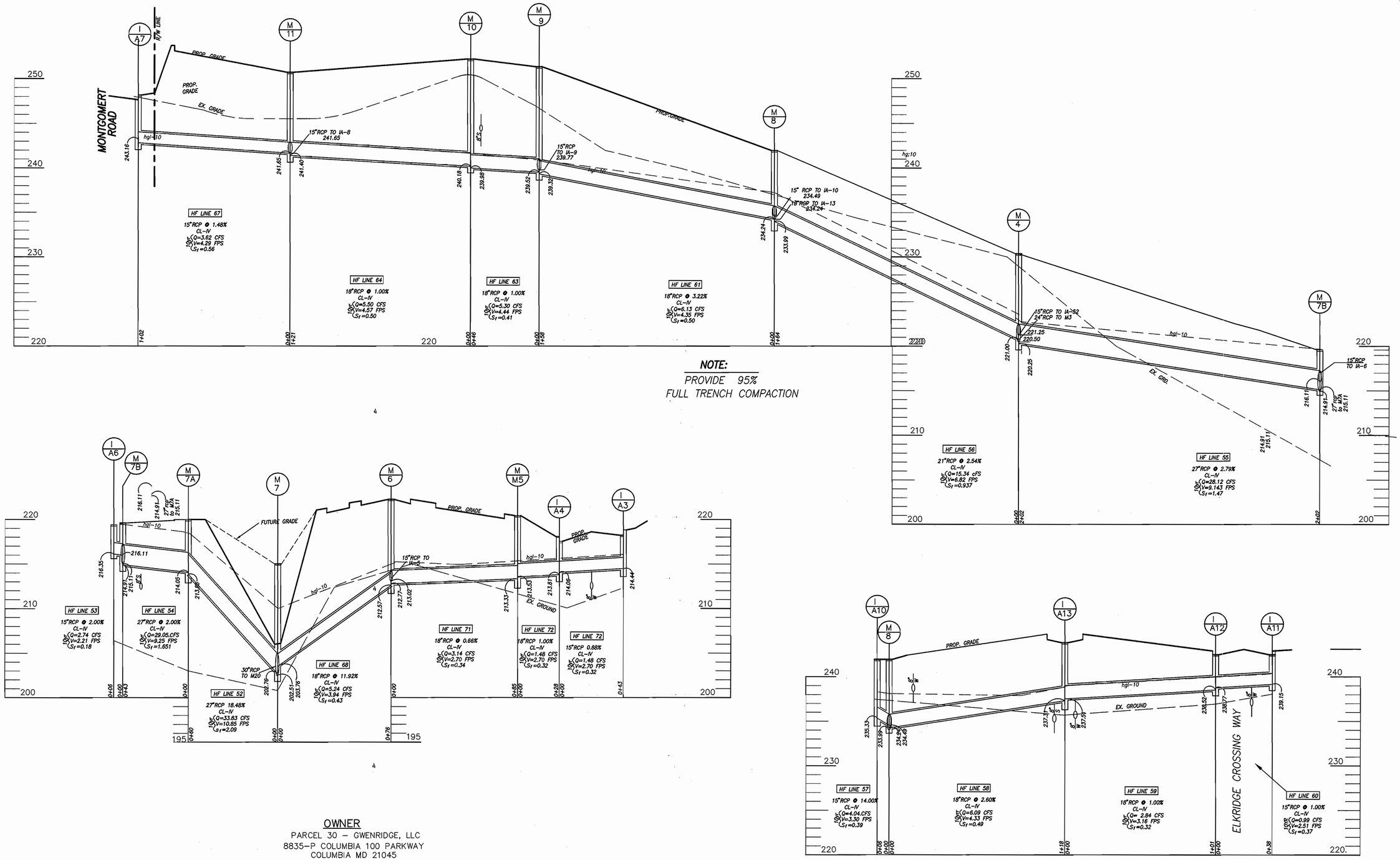

NOTE:
PROVIDE 95%
FULL TRENCH COMPACTION

OWNER

PARCEL 30 – GWENRIDGE, LLC
8835–P COLUMBIA 100 PARKWAY
COLUMBIA MD 21045
TEL: 410–730–0810
PARCEL 38 – MEHTA CHARALUTA TRUST
5551 OAKLAND MILLS ROAD
COLUMBIA MD 21045
TEL: 410–730–3961

DEVELOPER

BRANTLY DEVELOPMENT GROUP, INC.
8835–P COLUMBIA 100 PARKWAY
COLUMBIA MD 21045
TEL: 410–730–0810

APPROVED: DEPARTMENT OF PLANNING AND ZONING	
CHIEF, DEVELOPMENT ENGINEERING DIVISION	DATE 7/27/07
CHIEF, DIVISION OF LAND DEVELOPMENT	DATE 8/1/07
DIRECTOR	DATE 8/2/07

PROFILES

SCALE: HOR: 1"=30'
VERT.: 1"=5'

STATE OF MARYLAND
JURI MAISTE
No. 9498
REGISTERED
PROFESSIONAL LAND SURVEYOR

Rev./Replacement Sht.

DRAWN: J.M.
DATE: JUNE 21, 2008
SCALE: 1:=30

DATE	REVISION	BY
6/15/07	RCP PROFILE W-4 TO W-7, IA-6 TO W-7B, W-6 TO W-7	JM
	MH W-12 ELIMINATED	JM

ELKRIDGE–CROSSING–PHASE ONE

PARCELS A-E
TAX MAP 38, GRID 2, PARCELS 30 & 38
FIRST ELECTION DISTRICT, HOWARD COUNTY, MARYLAND

STORM*DRAIN*PROFILES–4

JURI MAISTE – SITE DESIGN CONSULTANT
2922 Chenault Avenue, Baltimore, Maryland 21234
Phone: 410–661–8752 Fax: 410–661–8752

RICHARDSON ENGINEERING, LLC
730 W. Padonia Road, Suite 101, Cockeysville, Maryland 21030
Phone: 410–560–1502 Fax: 410–560–0827

SDP-04-017

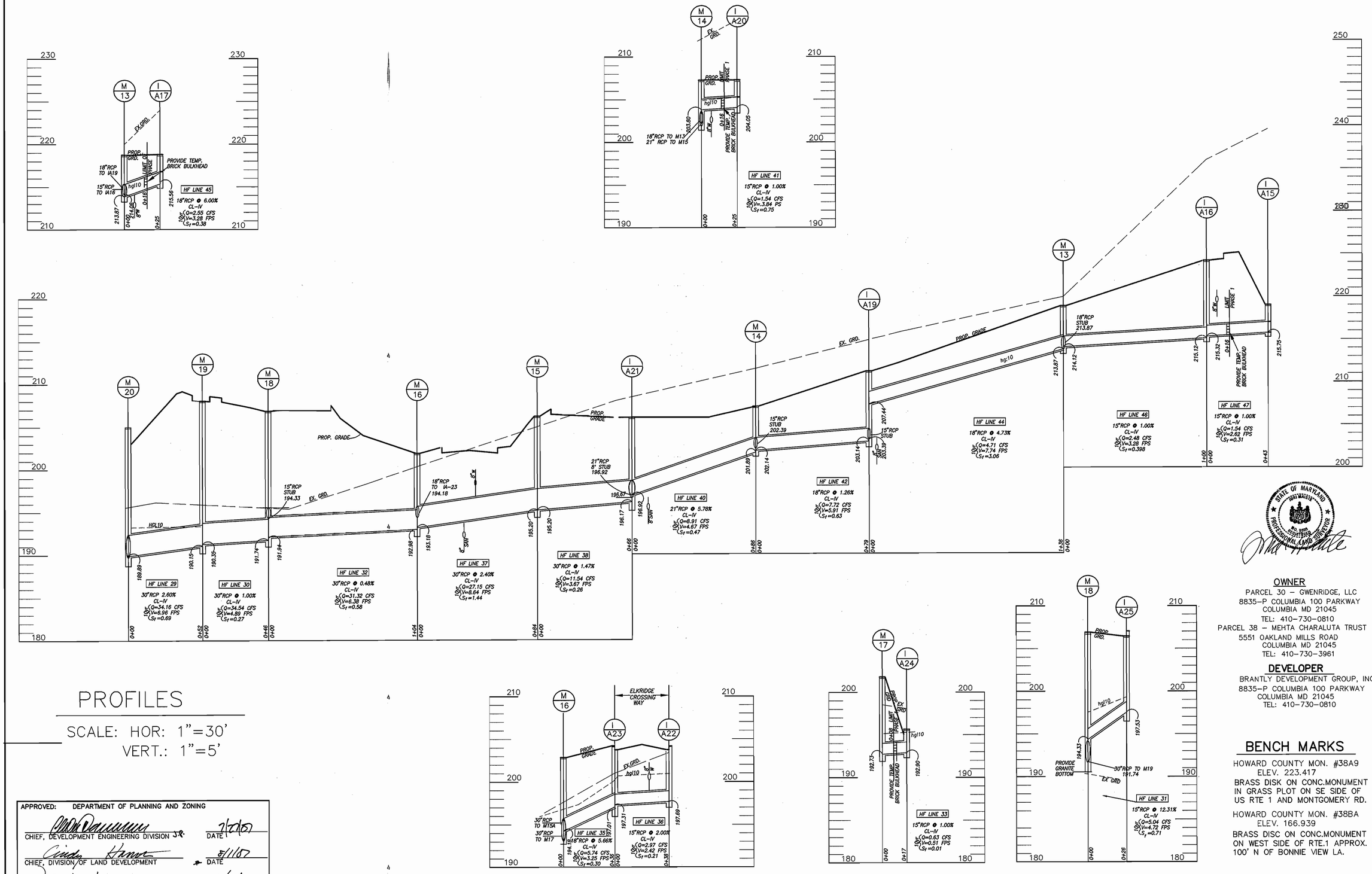

PROFILES

SCALE: HOR: 1"=30'
VERT.: 1"=5'

APPROVED: DEPARTMENT OF PLANNING AND ZONING

CHIEF, DEVELOPMENT ENGINEERING DIVISION	DATE 7/7/07
CHIEF, DIVISION OF LAND DEVELOPMENT	DATE 8/1/07
DIRECTOR	DATE 8/2/07

STATE OF MARYLAND — JURI MAISTE — NO. 19512 REGISTERED PROFESSIONAL LAND SURVEYOR

OWNER

PARCEL 30 – GWENRIDGE, LLC
8835–P COLUMBIA 100 PARKWAY
COLUMBIA MD 21045
TEL: 410–730–0810
PARCEL 38 – MEHTA CHARALUTA TRUST
5551 OAKLAND MILLS ROAD
COLUMBIA MD 21045
TEL: 410–730–3961

DEVELOPER

BRANTLY DEVELOPMENT GROUP, INC
8835–P COLUMBIA 100 PARKWAY
COLUMBIA MD 21045
TEL: 410–730–0810

BENCH MARKS

HOWARD COUNTY MON. #38A9
ELEV. 223.417
BRASS DISK ON CONC.MONUMENT IN GRASS PLOT ON SE SIDE OF US RTE 1 AND MONTGOMERY RD.

HOWARD COUNTY MON. #38BA
ELEV. 166.939
BRASS DISC ON CONC.MONUMENT ON WEST SIDE OF RTE.1 APPROX. 100' N OF BONNIE VIEW LA.

Rev. / Replacement Sht.

SDP-04-017

DRAWN: J.M.
DATE: JUNE 21, 2006
SCALE: 1:=30

DATE	REVISION	BY
6/15/07	M15-A20	JM

ELKRIDGE–CROSSING–PHASE. ONE

TAX MAP 38, GRID 2, PARCELS 30 & 38
FIRST ELECTION DISTRICT, HOWARD COUNTY, MARYLAND

STORM*DRAIN*PROFILES–5

JURI MAISTE – SITE DESIGN CONSULTANT
2923 Chernoak Avenue, Baltimore, Maryland 21234
Phone: 410–661–8752 Fax: 410–661–8752

RICHARDSON ENGINEERING, LLC
730 W. Padonia Road, Suite 101, Cockeysville, Maryland 21030
Phone: 410–560–1502 Fax: 410–560–0827

BENCH MARKS

HOWARD COUNTY MON. #38A9
ELEV. 223.417
BRASS DISK ON CONC.MONUMENT IN GRASS PLOT ON SE SIDE OF US RTE 1 AND MONTGOMERY RD.

HOWARD COUNTY MON. #38BA
ELEV. 166.939
BRASS DISC ON CONC,MONUMENT ON WEST SIDE OF RTE.1 APPROX. 100' N OF BONNIE VIEW LA.

OWNER

PARCEL 30 – GWENRIDGE, LLC
8835–P COLUMBIA 100 PARKWAY
COLUMBIA MD 21045
TEL: 410–730–0810
PARCEL 38 – MEHTA CHARALUTA TRUST
5551 OAKLAND MILLS ROAD
COLUMBIA MD 21045
TEL: 410–730–3961

DEVELOPER

BRANTLY DEVELOPMENT GROUP, INC.
8835–P COLUMBIA 100 PARKWAY
COLUMBIA MD 21045
TEL: 410–730–0810

APPROVED: DEPARTMENT OF PLANNING AND ZONING

CHIEF, DEVELOPMENT ENGINEERING DIVISION	DATE 7/27/07
CHIEF, DIVISION OF LAND DEVELOPMENT	DATE 8/1/07
DIRECTOR	DATE 8/2/07

STRUCTURE SCHEDULE – PHASE 1

NO.	TYPE	RIM /TOP	INV. IN 1	INV. IN 2	INV. IN 3	INV. OUT	H.C. DETAIL
S–1	CONTROL STR.	192.70	185.58	----	----	36"–185.58	
HW–A1	A HEADWALL	230.00	224.00	----	----	18"–224.00	SD 5.22
EW–1	C ENDWALL	193.33	186.84	----	----	186.84	SD 5.21
EW–2	C ENDWALL	190.60	186.69	----	----	186.69	SD 5.21
M1	SHALLOW MH	229.12	15"–224.15	24"–223.40	----	24"–223.40	G 5.12
M2	STD. MH	232.07	18"–223.28	24"–222.78	----	24"–222.58	G 5.12
M3	STD. MH	232.43	24"–221.66	15"–222.41	----	24"–2211.46	G 5.12
M4	STD. MH	230.44	15"–221.25	21"–220.75	24"–220.50	27"–220.25	G 5.12
M5	STD. MH	221.00	18"–213.53	----	----	18"–213.33	G 5.12
M6	STD. MH	221.83	15"–213.02	18"–212.77	----	18"–212.57	G 5.12
M7	STD. MH	216.00	18"–210.45	27"–209.68	----	30"–200.68	G 5.13
M7A	STD. MH	220.00	27"–214.05	----	----	27"–213.85	G 5.13
M7B	STD. MH	219.40	15"–216.11	27"–215.11	----	27"–214.91	G 5.13
M8	STD. MH	241.78	15"–234.49	18"–234.24	18"–234.24	21"–233.99	G 5.12
M9	STD. MH	251.00	15"–247.90	18"–239.52	----	18"–239.32	G 5.12
M10	STD. MH	252.24	18"–240.18	----	----	18"–239.98	G 5.12
M11	STD. MH	250.58	15"–241.65	15"–241.65	----	18"–241.40	G 5.12
M13	STD. MH	220.64	18"–213.87	15"–214.42	----	18"–213.87	G 5.12
M14	STD. MH	209.35	18"–202.14	15"203.80	----	21"–201.89	G 5.12
M15	STD. MH	205.50	30"–195.20	----	----	30"–195.20	G 5.12
							G 5.12
M16	STD. MH	203.00	18"–194.15	30"–193.35	----	30"–193.15	G 5.13
M17	STD. MH 4	201.60	30"–191.48	----	----	30"–191.28	G 5.13
M18	STD. MH	195.00	30"–189.68	----	----	30"–189.48	G 5.13
M19	STD. MH	194.80	188.64	----	----	188.64	G 5.13
M20	STD. MH	196.80	30"–188.06	30"–188.06	----	30"–187.86	G 5.13
M21	STD. MH	193.75	187.20	----	----	30"–187.00	G 5.13
M22	STD. MH	187.33	36"–182.00	----	----	36"–182.00	G 5.13
M23	STD. MH	184.70	36"–178.23	18"–179.73	----	36"–173.06	G 5.13
M24	STD. MH	181.50	36"–172.05	18"–173.55	----	36"–172.05	G 5.13

FUTURE 30" INV. OUT 190.05

SHA STRUCTURE SCHEDULE – US RTE.1

NO.	TYPE	DETAIL	RIM	INV. IN		INV. OUT	COORDINATES NORTHING	COORDINATES EASTING
M25	5' DIA. MANHOLE	MD–384.03	177.85	18"–172.88	36"–171.38	30"–165.54	562159.60	1390574.15
M26	5' DIA. MANHOLE	MD–384.03	180.43	18"–176.07	30"–175.57*	30"–175.57*	OVER EXIST. 30" RCP	
M40	5' DIA. MANHOLE 4	MD–384.03	174.45	18"–168.58	30"–167.58	30"–167.38	562241.60	1.90748.38

* EXIST. 30" RCP

INLET SCHEDULE – PHASE 1

NO.	TYPE	H.C. DETAIL	TOP ELEV. UPPER/LOWER	INV. IN 1	INV. IN 2	INV. OUT	REMARKS	NO.
IA–2	A–5	SD 4.40	TC 230.03 / 229.81	-----	-----	15"–226.32		IA–2
IA–3	A–5	SD 4.40	TC 218.96 / 218.66	----	----	15"–214.44		IA–3
IA–4	A–5	SD 4.40	TC 218.20 / 217.89	15"–214.06	-----	18"–213.81		IA–4
IA–5	S	SD 4.23	TG 223.09	-----	-----	15"–218.86		IA–5
IA–6	S	SD 4.23	TG 219.40	-----	-----	15"–216.35	SUMP	IA–6
IA–7	A–5	SD 4.40	TC 248.06 / 247.82	-----	-----	15"–243.16		IA–7
IA–8	A–5	SD 4.40	TC 250.28	-----	-----	15"–244.85	SUMP	IA–8
IA–9	A–5	SD 4.40	TC 252.46	-----	-----	15"–248.46	SUMP	IA–9
IA–10	S	SD 4.23	TG 241.74	-----	-----	15"–235.33		IA–10
IA–11	A–5	SD 4.40	TC 243.13 / 242.71	-----	-----	15"–239.15	USE HC SD–4.83 DEFLECTORS	IA–11
IA–12	A–5	SD 4.40	TC 243.13 / 242.71	15"–238.77	-----	18"–238.52	USE HC SD–4.83 DEFLECTORS	IA–12
IA–13	S	SD 4.23	TG 243.96	18"–237.51	-----	18"–237.31		IA–13
IA–16	S	SD 4.23	TG 227.29	15"–215.32	-----	15"–215.12		IA–16
IA–19	S	SD 4.23	TG 212.10	18"–207.44	15"–203.39	18"–203.14		IA–19
IA–21	S	SD 4.23	TG 206.20	21"–196.92	24"–196.67	30"–196.17	SUMP	IA–21
IA–22	A–10	SD 4.02	TC 204.60 / 204.15	-----	-----	15"–197.69		IA–22
IA–23	A–10	SD 4.02	TC 204.60 / 204.15	15"–197.31	-----	18"–197.01		IA–23
IA–26	D	SD 4.11	THROAT 198.00	----	-----	15"–188.00	OPEN 4 SIDES	IA–26
IA–28	A–10	SD 4.41	TC 189.85 / 189.37	15"–185.32	-----	18"–185.07		IA–28
IA–29	A–10	SD 4.41	TC 189.85 / 189.37	----	-----	15"–18.80		IA–29
IA–33	A–5	SD 4.40	TC 179.90 / 179.76	----	-----	15"–175.75		IA–33
IA–34	A–5	SD 4.40	TC 180.33 / 180.27	15"–175.31	-----	18"–175.06		IA–34
IA52	S	SD 4.23	TG 230.26	-----	-----	15"–222.05		IA52
IA53	S	SD 4.23	TG 233.43	-----	-----	15"–223.62		IA53
IA54	A–5	SD 4.01	TC 234.12 / 233.73	18"–226.04	-----	18"–225.79	USE HC SD–4.83 DEFLECTORS	IA54
IA55	A–5	SD 4.01	TC 234.12 / 233.73	-----	-----	15"–226.42	USE HC SD–4.83 DEFLECTORS	IA55

NOTE: USE RETICULAR GRATE–SD–4.93 FOR ALL S INLETS

SHA INLET SCHEDULE – US RTE.1

NO.	TYPE	DETAIL	T.C. ELEV. UPPER/LOWER	INV. IN	INV. OUT	COORDINATES NORTHING	COORDINATES EASTING
IA–37	COG–20	MD–374.31	TC–182.55 / 182.00	15"–178.70	24"–177.95	561959.14	1390387.77
IA–39	COG–15	MD–374.31	TC–180.51 / 180.24	----	18"–176.27	562045.34	1390470.30
IA–40	COG–15	MD–374.31	TC–177.86 / 177.56	----	18"–173.15	562169.19	1390588.86
IB–16	COG–15	MD–374.31	TC–174.28 / 13.96	----	18"–170.00	562354.47	139766.23

NOTE: COORDINATES SHOWN ARE AT FACE OF CURB

STATE OF MARYLAND JURI MAISTE No. 9809 REGISTERED PROFESSIONAL LAND SURVEYOR

Rev./Replacement Sht.

SDP-04-017

DRAWN: J.M.
DATE: JUNE 21, 2006 06/07
SCALE: AS SHOWN

DATE	REVISION	BY
6/15/07	ELEV. OF IA–9, IA–6, IA–7, IA–7A AND STRUCTURE SCHEDULE PER REV. OF 2/10/07	JM

ELKRIDGE–CROSSING– PHASE. ONE

PARCELS A–E
TAX MAP 38, GRID 2, PARCELS 30 & 38
FIRST ELECTION DISTRICT, HOWARD COUNTY, MARYLAND

STORM*DRAIN*PROFILES–6

JURI MAISTE – SITE DESIGN CONSULTANT
2923 Chenault Avenue, Baltimore, Maryland 21234
Phone: 410–661–8752 Fax: 410–661–8752

RICHARDSON ENGINEERING, LLC
730 W. Padonia Road, Suite 101, Cockeysville, Maryland 21030
Phone: 410–560–1502 Fax: 410–560–0827

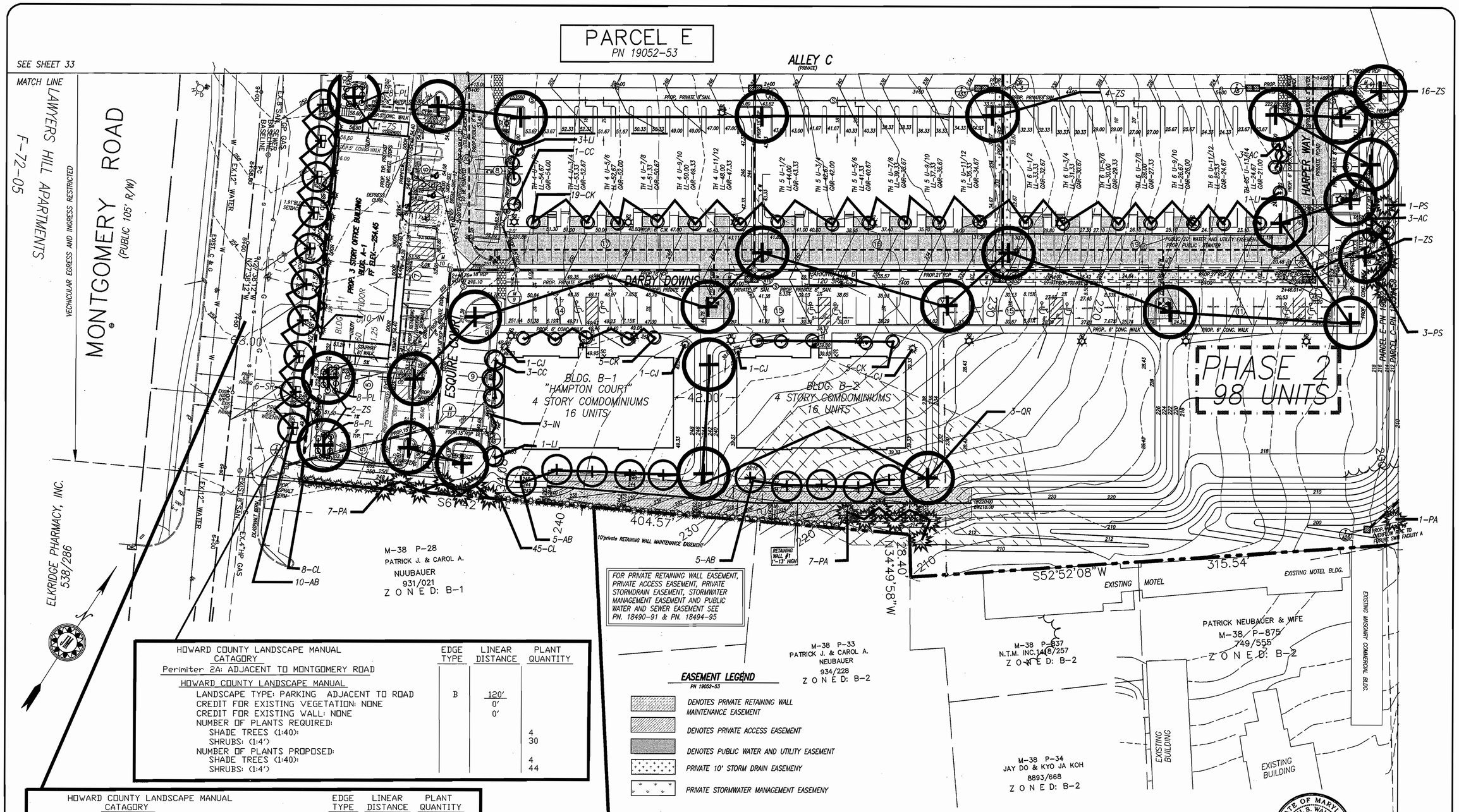

HOWARD COUNTY LANDSCAPE MANUAL CATAGORY	EDGE TYPE	LINEAR DISTANCE	PLANT QUANTITY
Perimiter 2A: ADJACENT TO MONTGOMERY ROAD			
HOWARD COUNTY LANDSCAPE MANUAL			
LANDSCAPE TYPE: PARKING ADJACENT TO ROAD	B	120'	
CREDIT FOR EXISTING VEGETATION: NONE		0'	
CREDIT FOR EXISTING WALL: NONE		0'	
NUMBER OF PLANTS REQUIRED:			
SHADE TREES (1:40):			4
SHRUBS: (1:4')			30
NUMBER OF PLANTS PROPOSED:			
SHADE TREES (1:40):			4
SHRUBS: (1:4')			44

HOWARD COUNTY LANDSCAPE MANUAL CATAGORY	EDGE TYPE	LINEAR DISTANCE	PLANT QUANTITY
Perimiter 2: ADJACENT TO MONTGOMERY ROAD			
HOWARD COUNTY LANDSCAPE MANUAL			
LANDSCAPE TYPE: OFFICES ADJACENT TO ROAD	B	140'	
CREDIT FOR EXISTING VEGETATION: NONE		0'	
CREDIT FOR EXISTING WALL: NONE		0'	
NUMBER OF PLANTS REQUIRED:			
SHADE TREES (1:50):			3
EVERGREEN TREES: (1:40')			4
NUMBER OF PLANTS PROPOSED:			
SHADE TREES:			12
SMALL DECIDUOUS TREES:			
EVERGREEN TREES: (1:40')			10
REQUIRED: LARGE DECIDUOUS TREES @ 40' MAX. ON CENTER		419'	11
PROPOSED : LARGE DECIDUOUS TREES:			12
SMALL DECIDUOUS TREES:			

CATAGORY	EDGE TYPE	LINEAR DISTANCE	PLANT QUANTITY OWNER
Perimiter 1: NON-RESIDENTIAL (BLDG.S B-1 & B-2) ADJ. TO NON-RESIDENTIAL.			
LANDSCAPE TYPE: APT.S. ADJACENT TO NON-RES.	A	464'	
CREDIT FOR EXISTING VEGETATION:		0'	
CREDIT FOR EXISTING WALL:		0'	
NUMBER OF PLANTS REQUIRED:			
LARGE TREES (1:50):			10
NUMBER OF PLANTS PROPOSED:			
LARGE TREES:			14
EVERGREENS:			59

APPROVED: DEPARTMENT OF PLANNING AND ZONING

CHIEF, DEVELOPMENT ENGINEERING DIVISION J.P.	DATE 7/27/07
CHIEF, DIVISION OF LAND DEVELOPMENT	DATE 8/1/07
DIRECTOR	DATE 8/1/07

DRAWN: J.M.
DATE: JUNE 21, 2006
SCALE: 1:=30

REVISION	DATE
BLDG. A-1 REPLACES BLDGS. A1 AND A2 IN BLDG. B-2 REPLACES BLDG. B-1	6/15/07

ELKRIDGE-CROSSING-PHASE. ONE

PARCELS A-E
TAX MAP 38, GRID 2, PARCELS 30 & 38
FIRST ELECTION DISTRICT, HOWARD COUNTY, MARYLAND

LANDSCAPE*PLAN-1

JURI MAISTE - SITE DESIGN CONSULTANT
2923 Chenault Avenue, Baltimore, Maryland 21234
Phone: 410-661-8752 Fax: 410-661-8752
RICHARDSON ENGINEERING, LLC
730 W. Padonia Road, Suite 101, Cockeysville, Maryland 21030
Phone: 410-560-1502 Fax: 410-560-0827

SHEET 32 OF 56

Rev. / Replacement Sht.

SDP-04-017

APPROVED: DEPARTMENT OF PLANNING AND ZONING

CHIEF, DEVELOPMENT ENGINEERING DIVISION	DATE 9/10/06
CHIEF, DIVISION OF LAND DEVELOPMENT	DATE 9/14/06
DIRECTOR	DATE 9/18/06

OWNER

PARCEL 30 – GWENRIDGE, LLC
8835–P COLUMBIA 100 PARKWAY
COLUMBIA MD 21045
TEL: 410–730–0810

PARCEL 38 – MEHTA CHARALUTA TRUST
5551 OAKLAND MILLS ROAD
COLUMBIA MD 21045
TEL: 410–730–3961

DEVELOPER

BRANTLY DEVELOPMENT GROUP, INC.
8835–P COLUMBIA 100 PARKWAY
COLUMBIA MD 21045
TEL: 410–730–0810

CATAGORY	EDGE TYPE	LINEAR DISTANCE	PLANT QUANTITY
Perimiter 3: ADJACENT TO PARCEL 655 FROM PROPOSED ELKRIDGE CROSSING WAY			
LANDSCAPE TYPE:	C	565'	
CREDIT FOR EXISTING VEGETATION:		0'	
CREDIT FOR EXISTING WALL:		0'	
NUMBER OF PLANTS REQUIRED:			
SHADE TREES (1:40):			15
EVERGREEN TREES (1:20):			29
NUMBER OF PLANTS PROPOSED:			
SHADE TREES:			13
SMALL DECIDUOUS TREES:			5
EVERGREEN TREES:			30

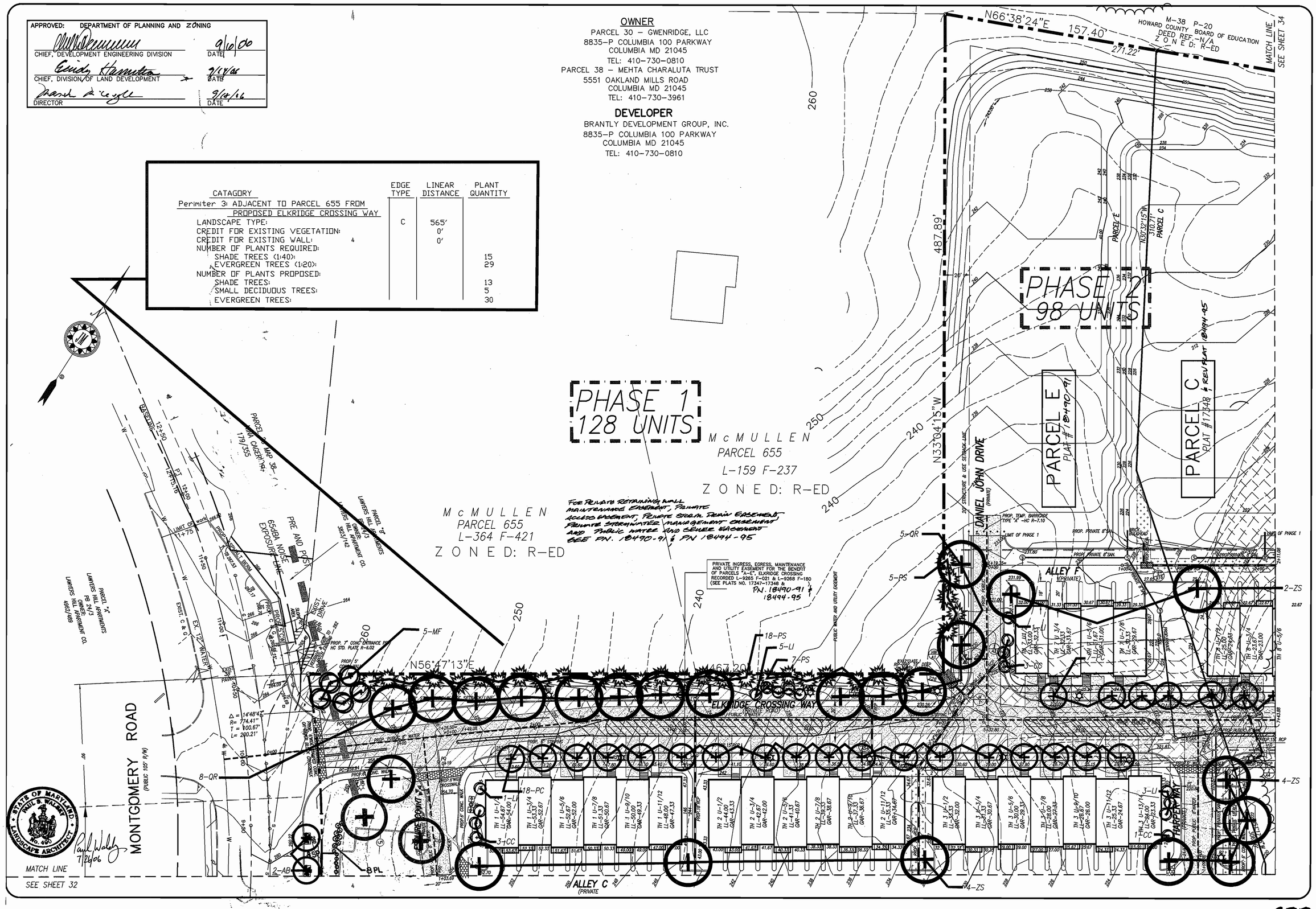

STATE OF MARYLAND PAUL S. WALSH LANDSCAPE ARCHITECT No. 490
Paul Walsh 7/26/06

DRAWN: J.M.
DATE: JUNE 21, 2006
SCALE: 1:=30

DATE	REVISION	BY
1/1/07	REVISE BLDG A/A, ADD PARKING, REFINE GRADE	GAP

ELKRIDGE–CROSSING–PHASE ONE

PARCELS A–E
TAX MAP 38, GRID 2, PARCELS 30 & 38
FIRST ELECTION DISTRICT, HOWARD COUNTY, MARYLAND

LANDDSCAPE PLAN–2

JURI MAISTE – SITE DESIGN CONSULTANT
2923 Chenoak Avenue, Baltimore, Maryland 21234
Phone: 410–661–8752 Fax: 410–661–8752

RICHARDSON ENGINEERING, LLC
730 W. Padonia Road, Suite 101, Cockeysville, Maryland 21030
Phone: 410–584–1502 Fax: 410–584–0827

SDP-04-017

C:\DRAWINGS\ELKRID~1\PHASE-1\02 Mon Jul 24 22:24:17 2006

APPROVED: DEPARTMENT OF PLANNING AND ZONING

CHIEF, DEVELOPMENT ENGINEERING DIVISION	DATE 9/6/06
CHIEF, DIVISION OF LAND DEVELOPMENT	DATE 9/14/06
DIRECTOR	DATE 9/14/06

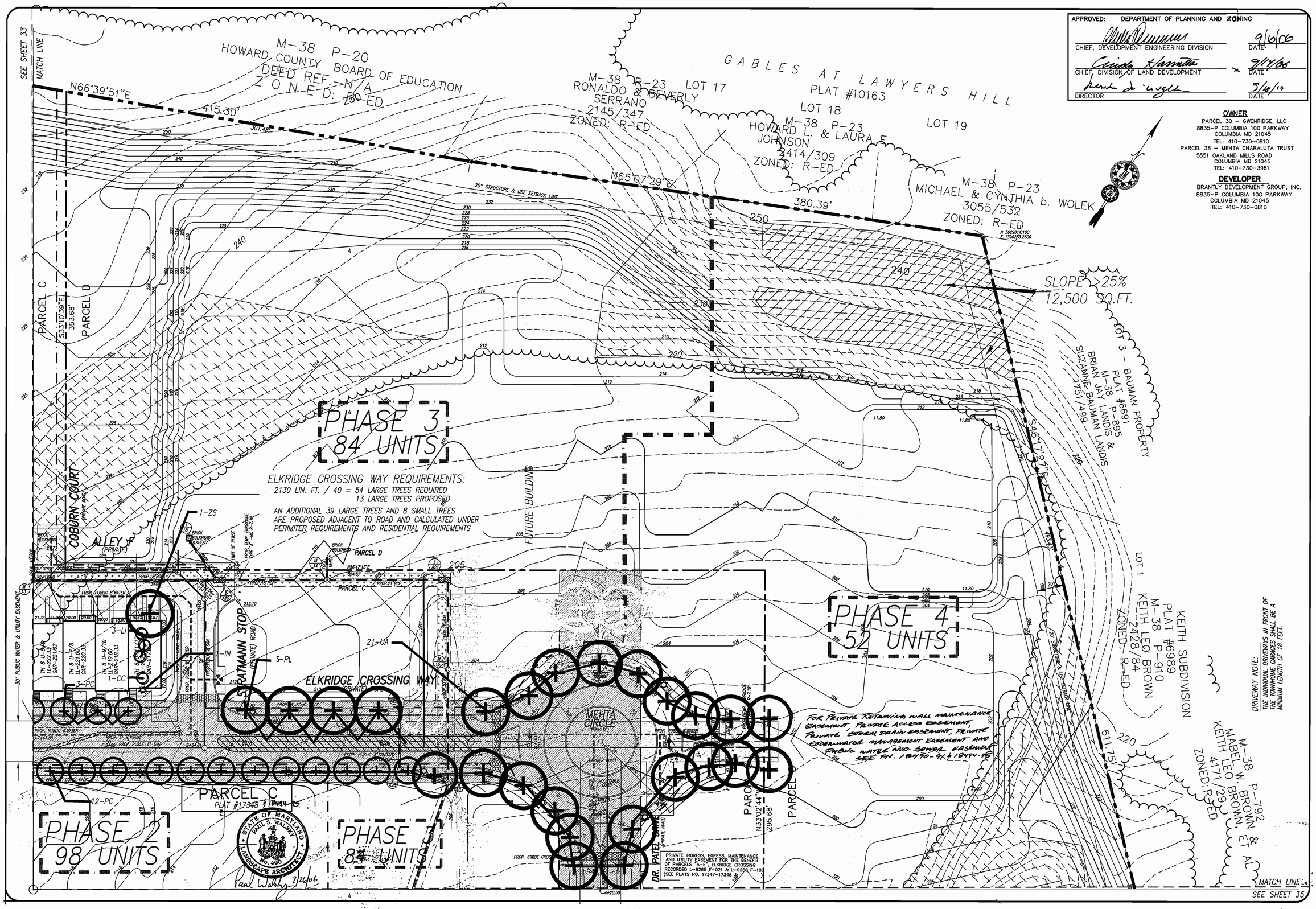

OWNER
PARCEL 30 - GWENRIDGE, LLC
8835-P COLUMBIA 100 PARKWAY
COLUMBIA MD 21045
TEL: 410-730-0810
PARCEL 38 - MEHTA CHARALUTA TRUST
5551 OAKLAND MILLS ROAD
COLUMBIA MD 21045
TEL: 410-730-3961

DEVELOPER
BRANTLY DEVELOPMENT GROUP, INC.
8835-P COLUMBIA 100 PARKWAY
COLUMBIA MD 21045
TEL: 410-730-0810

DRAWN: J.M.
DATE: JUNE 21, 2006
SCALE: 1:=30

DATE	REVISION	BY
1/1/07	Trees Located	CHD

ELKRIDGE-CROSSING-PHASE.ONE

PARCELS A-E

TAX MAP 38, GRID 2, PARCELS 30 & 38,
FIRST ELECTION DISTRICT, HOWARD COUNTY, MARYLAND

LANDSCAPE*PLAN-3

JURI MAISTE - SITE DESIGN CONSULTANT
2923 Chenault Avenue, Baltimore, Maryland 21234
Phone: 410-661-8752 Fax: 410-661-8752

RICHARDSON ENGINEERING, LLC
730 W. Padonia Road, Suite 101, Cockeysville, Maryland 21030
Phone: 410-560-1502 Fax: 410-560-0827

SDP-04-017

C:\DRAWINGS\ELKRID~1\PHASE-1\02 Mon Jul 24 22:42:19 2006

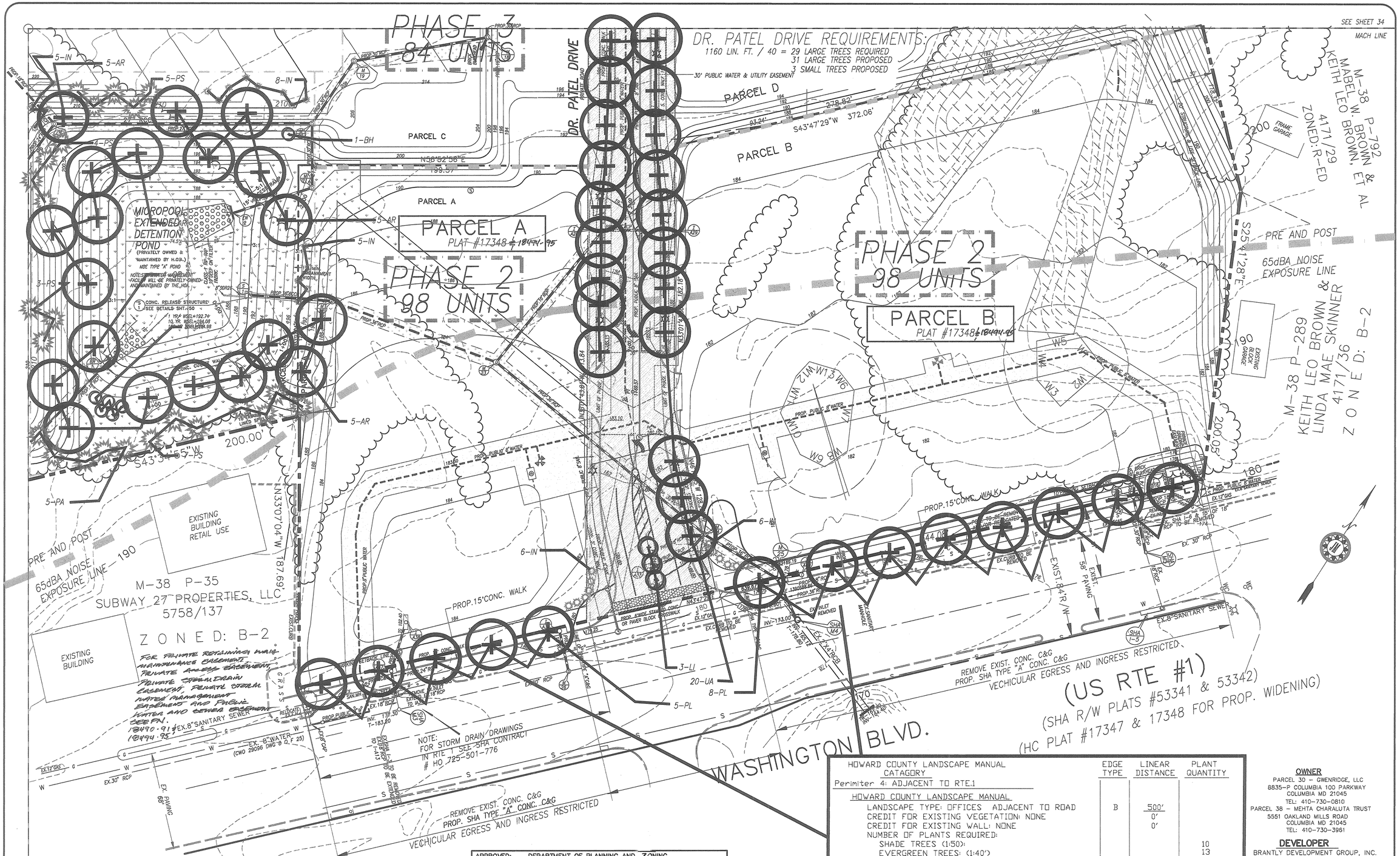

HOWARD COUNTY LANDSCAPE MANUAL CATAGORY	EDGE TYPE	LINEAR DISTANCE	PLANT QUANTITY
Perimiter 4: ADJACENT TO RTE.1			
HOWARD COUNTY LANDSCAPE MANUAL			
LANDSCAPE TYPE: OFFICES ADJACENT TO ROAD	B	500'	
CREDIT FOR EXISTING VEGETATION: NONE		0'	
CREDIT FOR EXISTING WALL: NONE		0'	
NUMBER OF PLANTS REQUIRED:			
SHADE TREES (1:50):			10
EVERGREEN TREES: (1:40')			13
NUMBER OF PLANTS PROPOSED:			
SHADE TREES:			13
EVERGREEN TREES:			12
OTHERS:			5
REQUIRED: LARGE DECIDUOUS TREES @ 40' MAX. ON CENTER		500'	13
PROPOSED : LARGE DECIDUOUS TREES:			13
PROPOSED : LARGE DECIDUOUS TREES:			

OWNER
PARCEL 30 - GWENRIDGE, LLC
8835-P COLUMBIA 100 PARKWAY
COLUMBIA MD 21045
TEL: 410-730-0810
PARCEL 38 - MEHTA CHARALUTA TRUST
5551 OAKLAND MILLS ROAD
COLUMBIA MD 21045
TEL: 410-730-3961

DEVELOPER
BRANTLY DEVELOPMENT GROUP, INC.
8835-P COLUMBIA 100 PARKWAY
COLUMBIA MD 21045
TEL: 410-730-0810

APPROVED: DEPARTMENT OF PLANNING AND ZONING

CHIEF, DEVELOPMENT ENGINEERING DIVISION	DATE 9/6/06
CHIEF, DIVISION OF LAND DEVELOPMENT	DATE 9/14/06
DIRECTOR	DATE 9/18/06

STATE OF MARYLAND · PAUL S. WALSH · No. 490 · LANDSCAPE ARCHITECT
Paul Walsh 7/26/06

DRAWN: J.M.
DATE: JUNE 21, 2006
SCALE: 1:=30

DATE	REVISION	BY

ELKRIDGE-CROSSING-PHASE.ONE
PARCELS A-E
TAX MAP 38, GRID 2, PARCELS 30 & 38
FIRST ELECTION DISTRICT, HOWARD COUNTY, MARYLAND
LANDSCAPE*PLAN-4

JURI MAISTE - SITE DESIGN CONSULTANT
2323 Chenault Avenue, Baltimore, Maryland 21234
Phone: 410-661-8752 Fax: 410-661-8752
RICHARDSON ENGINEERING, LLC
730 W. Padonia Road, Suite 101, Cockeysville, Maryland 21030
Phone: 410-560-1502 Fax: 410-560-0827

SDP-04-017

C:\ARDWINGS\ELKRID~1\PHASE-1\02 Mon Jul 24 23:02:14 2006

SCHEDULE 'A'
PERIMETER LANDSCAPE EDGE

CATAGORY	ADJACENT TO PERIMETER PROPERTIES		
LANDSCAPE TYPE:	A	B	C
LINEAR FEET OF ROADWAY, FRONTAGE/PERIMETER	464	919	565
CREDIT FOR EXISTING VEGETATION	NO	NO	NO
CREDIT FOR EXISTING WALL: NONE	NO	NO	NO
NUMBER OF PLANTS REQUIRED:			
LARGE TREES	10 (1:50')	19 (1:50')	15 (1:40)
EVERGREEN TREES		23 (1:40)	29 (1:20)
NUMBER OF PLANTS PROVIDED:			
LARGE TREES	14	24	13
EVERGREEN TREES	59	25	30
OTHER TREES (2:1 SUBSTITUTION)		5	5

SCHEDULE 'B'
PARKING LOT INTERNAL LANDSCAPING

CATAGORY	RESIDENTIAL (1:10) 18 ISLANDS	NON-RESIDENTIAL (1:20) 3 ISLANDS
NUMBER OF PARKING SPACES	120	44
NUMBER OF TREES REQUIRED	12	3
NUMBER OF TREES PROPOSED		
SHADE TREES	18	3
OTHER TREES (2:1 SUBSTITUTION)		

SCHEDULE 'C'
RESIDENTIAL DEVELOPMENT INTERNAL LANDSCAPING

CATAGORY	SINGLE FAMILY ATTACHED (1 TREE PER UNIT)	APARTMENT TYPE (CONDO. BLDG.) (1 TREE PER 3 UNITS)
NUMBER OF DWELLING UNITS	48	32
NUMBER OF TREES REQUIRED	48	11
NUMBER OF TREES PROVIDED		
	13	3
OTHER TREES (2:1 SUBSTITUTION)	71	16

SCHEDULE 'D'
STORMWATER MANAGEMENT AREA LANDSCAPING

LINEAR FEET OF PERIMITER	900 LIN. FT.
BUFFER TYPE:	B
NUMBER OF TREES REQUIRED:	
SHADE TREES (1:50):	18
EVERGREEN TREE (1:40):	23
CREDIT FOR EXISTING VEGETATION: NONE	
CREDIT FOR OTHER LANDSCAPING: NONE	
NUMBER OF TREES PROPOSED:	
SHADE TREES (1:50):	19
EVERGREEN TREE (1:40):	24
OTHER TREES (2:1 SUBSTITUTION)	6

INTERNAL STREET TREE LANDSCAPING

LENGTH OF DR. PATEL DRIVE AND ELKRIDGE CROSSING WAY(BOTH SIDES):	3,290 LIN. FT.
NUMBER OF TREES REQUIRED: (1:40)	83
NUMBER OF TREES PROVIDED:	
SHADE TREES (1:50):	41
OTHER TREES (2:1 SUBSTITUTION)	10

AN ADDITIONAL 39 LARGE TREES AND 8 SMALL TREES ARE PROPOSED ADJACENT TO ELKRIDGE CROSSING WAY AND CALCULATED UNDER PERIMITER REQUIREMENTS AND RESIDENTIAL REQUIREMENTS

PUBLIC ROAD STREET TREE LANDSCAPING

ROAD	DISTANCE	NO. OF TREES REQUIRED	NO. OF TREES PROPOSED
ROUTE 1	500'	13 (1:40')	13
MONTGOMERY ROAD	419'	11 (1:40')	12

APPROVED: DEPARTMENT OF PLANNING AND ZONING

CHIEF, DEVELOPMENT ENGINEERING DIVISION — DATE 9/6/06

CHIEF, DIVISION OF LAND DEVELOPMENT — DATE 9/14/06

DIRECTOR — DATE 9/14/06

STATE OF MARYLAND — PAUL S. WALSKI — No. 490 — LANDSCAPE ARCHITECT

7/28/06

Victor Stanley, Inc.

P.O. DRAWER 338 - DUNKIRK, MD 20754 USA
TEL. (410) 855-8200 - FAX (410) 257-7579
WEB SITE: http://victorstanley.com

DR# 2000_52 — PG 1 OF 1

PRODUCT SPECIFICATIONS — CADD Department — VIEWS 4 — DRAWN S.P.R. — REV. 2/16/99

STEELSITES™
RBF-28
Standard 8' Length

(For your convenience and economy, this bench is shipped fully assembled)

All fabricated components are steel shotblasted, etched, phosphatized, preheated and electrostatically powder coated with TGIC polyester powder coatings.

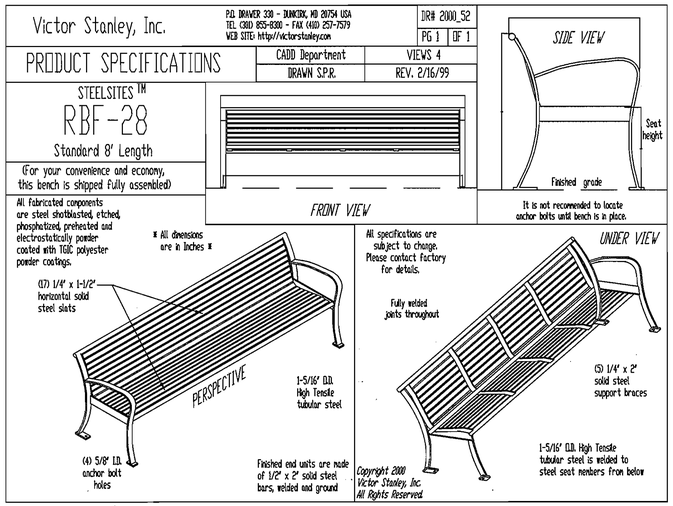

BENCH DETAIL

NOT TO SCALE

ENDS OF RESIDENTIAL UNITS ADJACENT TO INTERNAL ROADS

LANDSCAPE TYPE:	'B'
LENGTH OF INTERNAL ROAD:	480 LIN. FT.
NUMBER OF PLANTS REQUIRED:	
LARGE TREES	10 (1:50)
EVERGREEN TREES	12 (1:40)
NUMBER OF TREES PROVIDED:	
SHADE TREES (1:50):	0
OTHER TREES (2:1 SUBSTITUTION)	32

INDIVIDUAL PROPERTY LINE PERIMETER LANDSCAPE EDGE CALCULATIONS

CATAGORY	EDGE TYPE	LINEAR DISTANCE	PLANT QUANTITY
Perimiter 1: NON-RESIDENTIAL (BLDG.S B-1 & B-2) ADJ. TO NON-RESIDENTIAL (HOTEL),			
LANDSCAPE TYPE: NON-RES. ADJACENT TO NON-RES.	A	464'	
CREDIT FOR EXISTING VEGETATION:		0'	
CREDIT FOR EXISTING WALL:		0'	
NUMBER OF PLANTS REQUIRED:			
SHADE TREES (1:50):			10
Perimiter 2: ADJACENT TO MONTGOMERY ROAD (EXTERNAL ROAD)			
LANDSCAPE TYPE: NON-RESIDENTIAL ADJ. TO ROAD	B	419'	
CREDIT FOR EXISTING VEGETATION: NONE		0'	
CREDIT FOR EXISTING WALL: NONE		0'	
NUMBER OF PLANTS REQUIRED:			
SHADE TREES (1:50):			9
EVERGREEN TREES (1:40):			11
Perimiter 3: ADJACENT TO PARCEL 655 FROM PROPOSED ELKRIDGE CROSSING WAY			
LANDSCAPE TYPE:	A	565'	
CREDIT FOR EXISTING VEGETATION:		0'	
CREDIT FOR EXISTING WALL:		0'	
NUMBER OF PLANTS REQUIRED:			
SHADE TREES (1:40):			14
EVERGREEN TREES (1:20):			29
Perimiter 4: ADJACENT TO RTE. 1 (EXTERNAL ROAD)			
LANDSCAPE TYPE: PARKING ADJACENT TO ROAD	B	500'	
CREDIT FOR EXISTING VEGETATION: NONE		0'	
CREDIT FOR EXISTING WALL: NONE		0'	
NUMBER OF PLANTS REQUIRED:			
SHADE TREES (1:50):			10
EVERGREEN TREES (1:40):			13

PLANTING NOTES

1. PLANTS, RELATED MATERIALS, AND OPERATIONS SHALL MEET THE DETAILED DESCRIPTION AS GIVEN ON THE PLANS AND AS DESCRIBED HEREIN.
2. ALL PLANT MATERIAL, UNLESS OTHERWISE SPECIFIED, SHALL BE NURSERY GROWN, UNOFORMLY BRANCHED AND HAVE A VIGOROUS ROOT SYSTEM. PLANT MATERIAL SHALL BE HEALTHY, VIGOROUS PLANTS FREE FROM DEFECTS, DECAY, DISFIGURING ROOTS, SUNSCALD INJURIES, ABRASIONS OF THE BARK, PLANT DISEASE, INSECT PEST EGGS, BOXERS AND ALL FORMS OF INFESTATION OR OBJECTIONABLE DISFIGUREMENTS.PLANT MATERIAL THAT IS WEAK OR WHICH HAS BEEN CUT BACK FROM LARGER GRADES TO MEET SPECIFIED REQUIREMENTS WILL BE REJECTED. TREES FORKED LEADERS WILL NOT BE ACCEPTED. ALL PLANTS SHALL BE FRESHLY DUG: NO HEELED-IN PLANTS OR PLANTS FROM COLD STORAGE WILL BE ACCEPTED.
3. UNLESS OTHERWISE SPECIFIED, ALL PLANT MATERIAL SHALL CONFORM TO "AMERICAN STANDARD FOR NURSERY STOCK" ANSI Z60.1-1986, PUBLISHED BY AMERICAN ASSOCIATION OF NURSERYMAN, INCLUDING ALL ADDENDA.
4. UNLESS OTHERWISE SPECIFIED, ALL GENERAL CONDITIONS, PLANTING OPERATIONS, DETAILS AND PLANTING SPECIFICATIONS SHALL CONFORM TO "LANDSCAPE SPECIFICATION GUIDELINES FOR BALTIMORE-WASHINGTON METROPOLITAN AREAS", (HEREIN-AFTER "LANDSCAPE GUIDELINES") APPRVED BY THE LANDSCAPE CONTRACTORS ASSOCIATION OF METROPOLITAN WASHINGTON AND THE POTOMAC CHAPTER OF THE AMERICAN SOCIETY OF LANDSCAPE ARCHITECTS, SEPTEMBER, 1981, INCLUDING ALL ADDENDA.
5. CONTRACTOR SHALL BE RESPONSIBLE FOR NOTIFYING UNILITY COMPANIES, UTILITY CONTRACTORS AND "MISS UTILITY" A MINIMUM OF 48 HOURS PRIOR TO BEGINNING ANY WORK. CONTRACTOR SHALL BE RESPONSIBLE FOR DAMAGE TO UTILITIES AND MAY MAKE MINOR ADJUSTMENTS IN SPACING AND LOCATION OF PLANTING MATERIALS TO AVOID CONFLICTS WITH UTILITIES.
6. PLANTING BED SHALL BE MULCHED WITH 3" OF SHREDDED HARDWOD BARK MULCH. GROUNDCOVER BEDS SHALL BE MULCHED TO A DEPTH OF 2".
7. ALL AREAS WITHIN THE CONTRACT LIMIT NOT COVERED BY BUILDING, PAVING, PLANTING BEDS OR OTHERWISE DESIGNATED ON THE PLANS SHALL BE SEEDED AND MULCHED OR SODDED IN ACCORDANCE WITH "1983 MARYLAND STANDARDS AND SPECIFICATIONS FOR SOIL EROSION AND SEDIMENT CONTROL", PERMANENT SEEDING SPECIFICATIONS (SEE SHEET 6), INCLUDING ALL ADDENDA, AS DIRECTED BY THE OWNER.
8. CONTRACTOR IS RESPONSIBLE FOR INSTALLING ALL MATERIALS IN THE PROPER PLANTING SEASON FOR EACH PLANT TYPE.
   PLANTING MIX SHALL BE DONE AS FOLLOWS:
   DECIDUOUS PLANTS - TWO PARTS TOP SOIL, ONE PART WELL-ROTTED COW OR HORSEMANURE. ADD 3 LBS. OF STANDARD 10-10-10 FERTILIZER PER CUBIC YARD OF PLANTING MIX.
   EVERGREEN PLANTS - TWO PARTS TOPSOIL, ONE PART HUMIS OR OTHER APPROVED ORGANIC MATERIAL. ADD 3 LBS. OF EVERGREEN (ACIDIC) FERTILIZER PER CUBIC YARD OF PLANTING MIX.
9. TOPSOIL SHALL CONFORM TO LANDSCAPE GUIDELINES.
10. THIS PLAN IS INTENDED FOR LANDSCAPE PLA ONLY. SEE OTHER PLAN SHEETS FOR INFORMATION ON GRADING, SIDEMENT CONTROL, LAYOUT, ETC.
11. CONTRACTOR TO ADJUST PLANTINGS AS REQUIRED WITH PRIOR APPROVAL OF THE LANDSCAPE ARCHITECT. THE BUILDING AREA PLANTS SHALL BE ADJUSTED BY THE LANDSCAPE ARCHITECT PRIOR TO PLANTING.
12. ANY CHANGES TO THE SITE LAYOUT SHALL REQUIRE THE REDESIGN OF THE PLANTING BY THE LANDSCAPE ARCHITECT.
13. LANDSCAPE SURETY IN THE AMOUNT OF $ HAS BEEN POSTED AS A PART THE DEVELOPER'S AGREEMENT

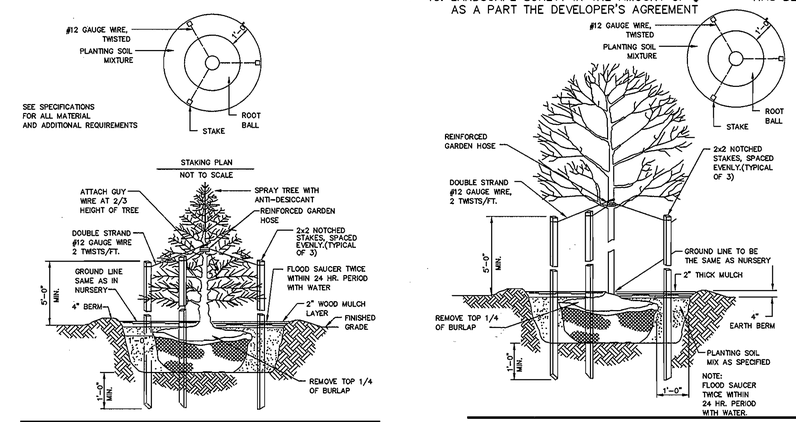

EVERGREEN TREE PLANTING DETAIL

NOT TO SCALE

DECIDUOUS TREE PLANTING DETAIL

NOT TO SCALE

PLANT LIST

KEY	QUANTITY	BOTANICAL NAME/COMMON NAME	MINIMUM SIZE	ROOT	REMARKS
AB	22	ACER RUBRUM 'ARMSTRONG'/ ARMSTRONG MAPLE	2 1/2 - 3" CAL.	B&B	
AR	15	ACER RUBRUM 'RED SUNSET'/ RED SUNSET MAPLE	2 1/2 - 3" CAL.	B&B	
PL	7	PLATANUS ACERIFOLIA 'BLOODGOOD' / BLOODGOOD LONDON PLANETREE	2 1/2 - 3" CAL.	B&B	
PC	40	PYRUS CAL. 'REDSPIRE' / REDSPIRE PEAR	2 1/2 - 3" CAL.	B&B	
QR	20	QUERCUS RUBRA / RED OAK	2 1/2 - 3" CAL.	B&B	
UA	41	ULMUS AMER. 'VALLEY FORGE' / VALLEY FORGE AMER. ELM	2 1/2 - 3" CAL.	B&B	
ZS	34	ZELKOVA SERRATA 'VILLAGE GREEN' / VILLAGE GREEN ZELKOVA	2 1/2 - 3" CAL.	B&B	
AC	3	AMELANCHIER CANADENSIS / SHADBLOW	8-10' HGT.	B&B	MULTI-STEM
BH	6	BETULA NIGRA 'HERITAGE' / HERITAGE RIVER BIRCH	8-10' HGT.	B&B	MULTI-STEM
CC	12	CERCUS CANADENSIS / EASTERN REDBUD	8-10' HGT.	B&B	
CK	29	CORNUS KOUSA / KOUSA DOGWOOD	6-7' HGT.	B&B	
LI	21	LAGERSTROEMIA INDICA X FAURIEI 'NATCHEZ' / NATCHEZ CRAPEMYRTLE	7-8' HGT.	B&B	MULTI-STEM
MF	5	MALUS FLORIBUNDA / JAPANESE FLOWERING CRABAPPLE	8-10' HGT.	B&B	
PL	32	PRUNUS LAUROCERASUS 'SCHIPKAENSIS'/SCHIP CHERRY-LAUREL	24-30"	B&B	IN MULCH BED
CJ	4	CRYPTOMERIA JAPONICA 'YOSHINO' / YOSHINO CRYPTOMERIA	6-8' HGT.	B&B	
CL	53	CUPRESSOCYPARIS LEYLANDII / LEYLAND CYPRESS	6-8' HGT.	B&B	
IN	44	ILEX X 'NELLIE R. STEVENS' / NELLIE STEVENS HOLLY	6-8' HGT.	B&B	
PS	53	PINUS STROBUS / EASTERN WHITE PINE	6-8' HGT.	B&B	
PA	20	PICEA ABIES / NORWAY SPRUCE	6-8' HGT.	B&B	
SP	16	SPIRAEA BUMALDA 'ANTHONEY WATERER' / ANTHONEY WATERER SPIRAEA'	24-30"	CONT.	IN MULCH BED

DRAWN: F.W.
DATE: JUNE 21, 2006
SCALE: AS SHOWN

DATE	REVISION	BY
4/18/07	PLANT LIST	CVD

ELKRIDGE-CROSSING-PHASE.ONE
PARCELS A-E
TAX MAP 38, GRID 2, PARCELS 30 & 38
FIRST ELECTION DISTRICT, HOWARD COUNTY, MARYLAND
LANDSCAPE PLAN--DETAILS

JURI MAISTE - SITE DESIGN CONSULTANT
2923 Chenoak Avenue, Baltimore, Maryland 21234
Phone: 410-661-8752 Fax: 410-661-8752
RICHARDSON ENGINEERING, LLC
730 W. Padonia Road, Suite 101, Cockeysville, Maryland 21030
Phone: 410-560-1502 Fax: 410-560-0827

SDP-04-017

C:\DRAWINGS\ELKRID~1\PHASE-1\02 Mon Jul 24 23:26:11 2006

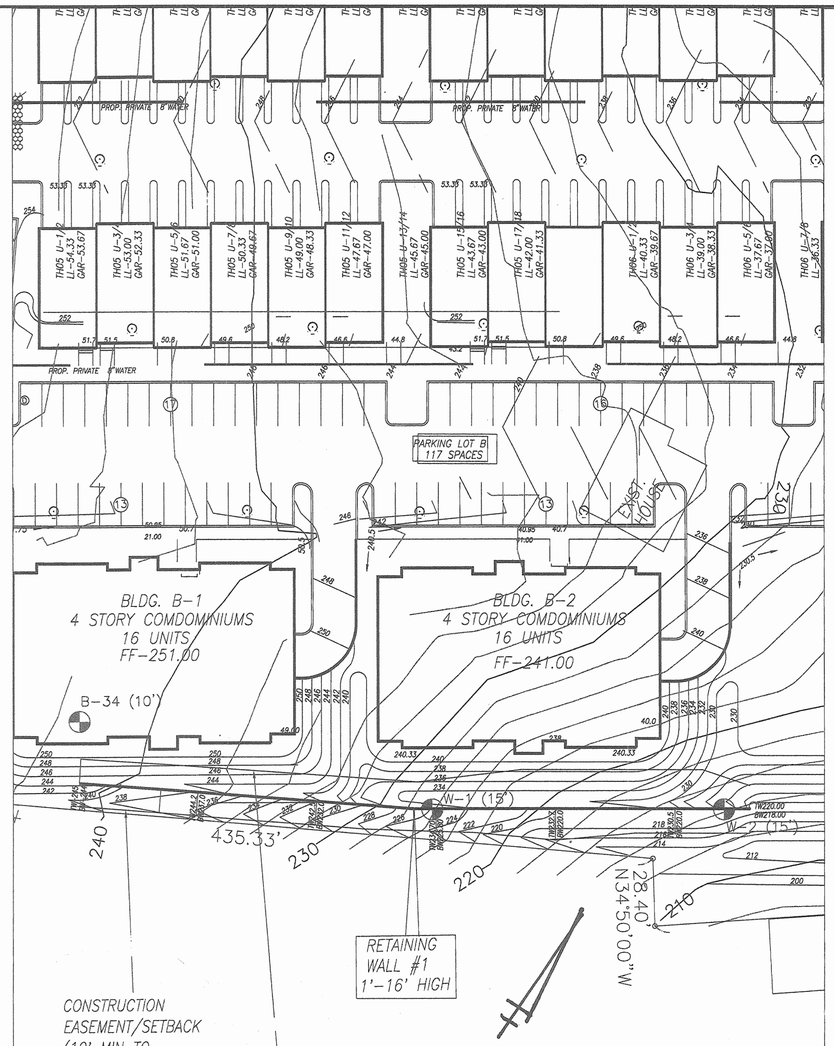

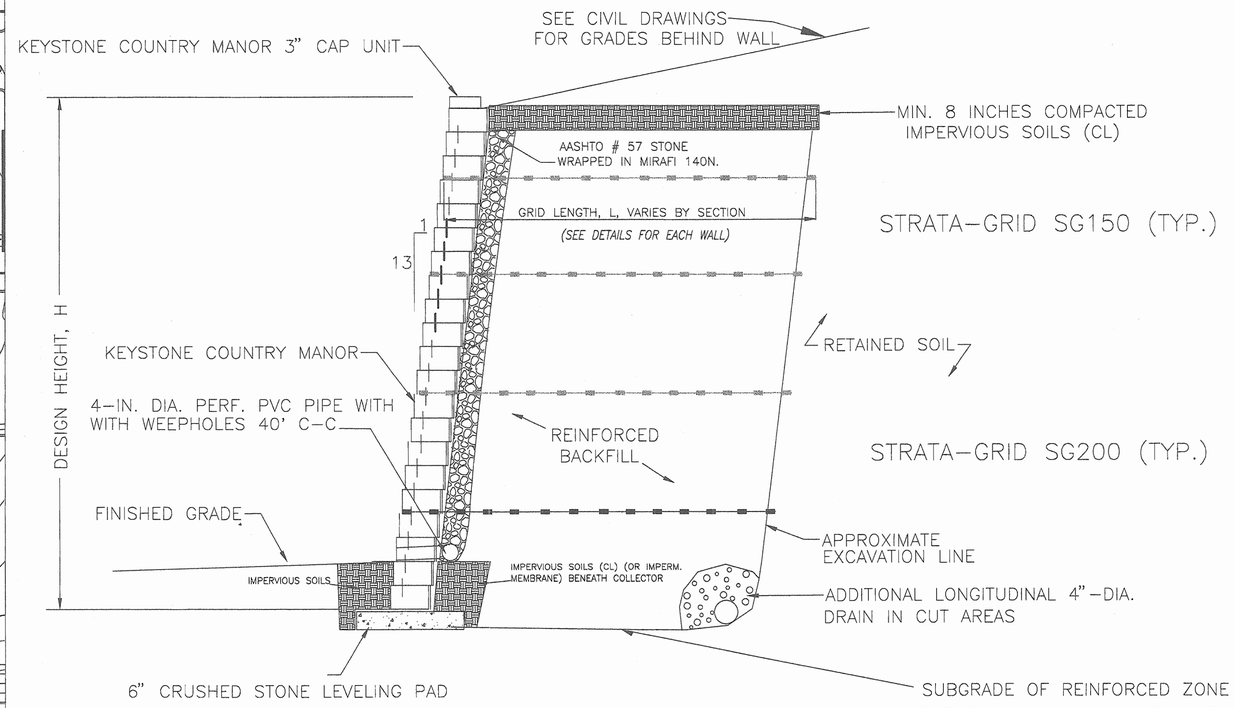

TYPICAL SECTION
KEYSTONE COUNTRY MANOR UNIT
SCALE: NTS

NOTES:

1. VERIFY ALLOWABLE BEARING PRESSURE AT SUBGRADE OF REINFORCED ZONE THROUGHOUT WALL SUBGRADE (SEE TABLE) OVER-EXCAVATION MAY BE NECESSARY AT SUBGRADE TO ACHIEVE REQUIRED BEARING. CONSULT SITE GEOTECHNICAL ENGINEER
2. SEE TABLE NEXT SHEET FOR GRID LENGTH, GRID SPACING, AND SPECIFIC TREATMENT
3. BACKFILL USED IN REINFORCED AREAS SHALL BE USCS CLASSIFICATION SM, SC, CL, GM, OR GC (ML WITH MAX 65% <#200) CH OR MH SOILS SHALL NOT BE PERMITTED IN BACKFILL. BACKFILL PARTICLE SIZE SHALL NOT EXCEED 3 INCHES MAX. AND SUCH PARTICLES SHALL BE <25% OF FILL
4. ALL FILL MATERIAL SHALL HAVE MIN. DRY DENSITY OF 110 PCF (T 99) AND DRAINED FRICTION ANGLE OF 28 DEGREES.
5. ALL BACKFILL WITHIN REINFORCED ZONE SHALL BE COMPACTED TO MIN. 95 PERCENT OF T 99 MAX. DRY DENSITY WITHIN TWO PERCENTAGE POINTS OF OPTIMUM MOISTURE CONTENT
6. MAXIMUM STEP IN LEVELING PAD SHALL BE 12 INCHES AT ANY LOCATION
7. FOR TAPERING WALL AT EACH END, TOP LEVEL OF REINFORCEMENT GRID MAY BE OMITTED TO MAINTAIN MIN. 1 FT. OF COVER ON UPPERMOST GRID LAYER.

APPROVED: DEPARTMENT OF PLANNING AND ZONING

CHIEF, DEVELOPMENT ENGINEERING DIVISION	DATE 9/16/06
CHIEF, DIVISION OF LAND DEVELOPMENT	DATE 9/19/06
DIRECTOR	DATE 9/16/06

OWNERS
PARCEL 30 – GWENRIDGE, LLC
8835-P COLUMBIA 100 PARKWAY
COLUMBIA MD 21045
TEL: 410-730-0810
PARCEL 38 – MEHTA CHARALUTA TRU
5551 OAKLAND MILLS ROAD
COLUMBIA MD 21045
TEL: 410-730-3961

DRAWN: PSL
DATE: JUNE 20, 2005
SCALE: AS SHOWN

DATE	REVISION	BY

ELKRIDGE-CROSSING-PHASE ONE
PARCELS A-E
TAX MAP 38, GRID 2, PARCELS 30 & 38
FIRST ELECTION DISTRICT, HOWARD COUNTY, MARYLAND
RETAINING*WALL*#1*PLAN*AND*CROSS-SECTION

JURI MAISTE – SITE DESIGN CONSULTANT
2923 Chernock Avenue, Baltimore, Maryland 21234
Phone: 410-661-8752 Fax: 410-661-8752
HILLIS-CARNES, GEOTECHNICAL ENGINEER
4959 New Design Road, Suite 107, Frederick, Maryland 21703
Phone: 301-662-2522 Fax: 301-662-5575

SHEET 37 OF 56

SDP-04-017

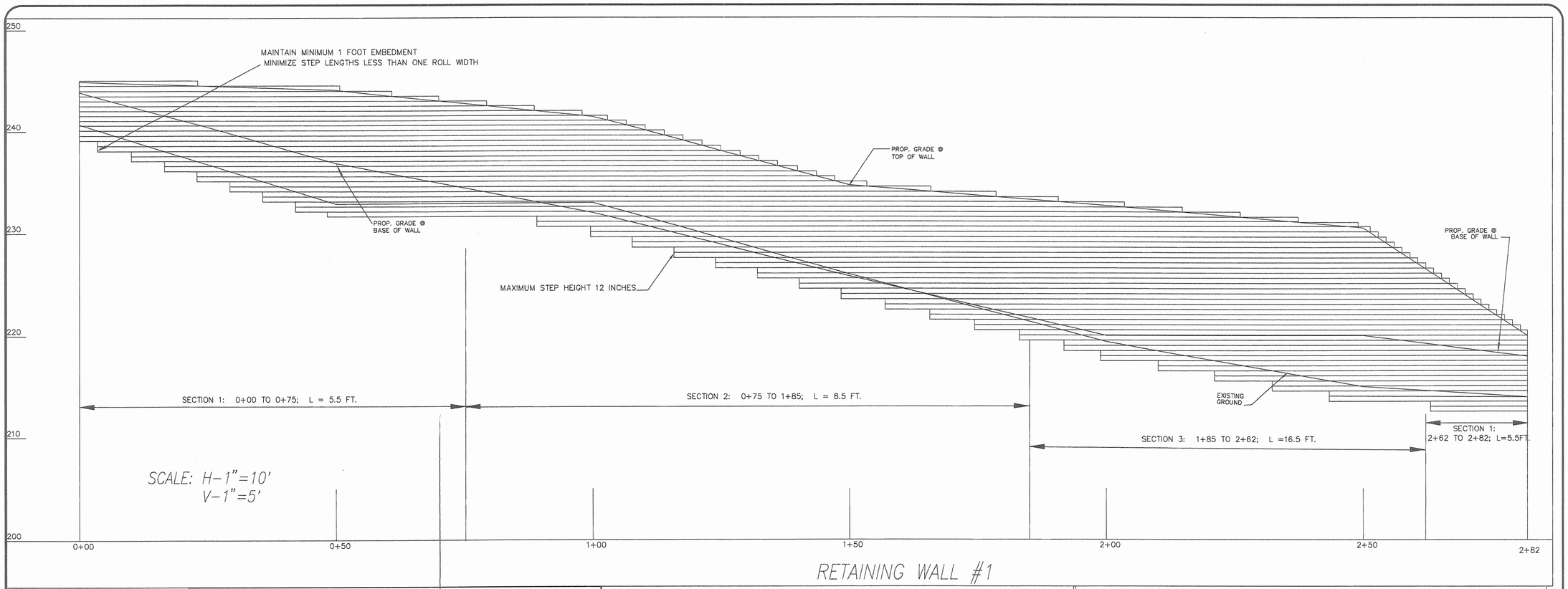

RETAINING WALL #1

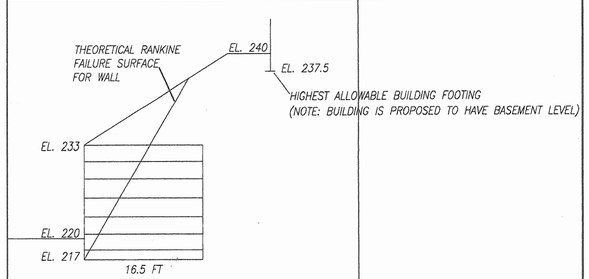

SKETCH OF WALL FAILURE PLANE RELATIVE TO BUILDING FOUNDATION
(HIGHEST WALL/LONGEST REINFORCEMENT CONFIGURATION SHOWN)

GENERAL NOTES

1. VERIFY ALLOWABLE BEARING PRESSURE AT SUBGRADE OF REINFORCED ZONE THROUGHOUT WALL SUBGRADE (SEE TABLE). 2. SEE TABLE FOR GRID LENGTH, GRID SPACING, AND SPECIFIC TREATMENT

2. SEE TABLE FOR GRID LENGTH, GRID SPACING, AND SPECIFIC TREATMENT

3. BACKFILL USED IN REINFORCED AREAS SHALL BE USCS CLASSIFICATION SM, SC, CL, GM, OR GC (ML WITH MAX 65% <#200) CH OR MH SOILS SHALL NOT BE PERMITTED IN BACKFILL. BACKFILL PARTICLE SIZE SHALL NOT EXCEED 3 INCHES MAX. AND SUCH PARTICLES SHALL BE <25% OF FILL

4. ALL FILL MATERIAL SHALL HAVE MIN. DRY DENSITY OF 110 PCF (T 99) AND DRAINED FRICTION ANGLE OF 28 DEGREES.

5. ALL BACKFILL WITHIN REINFORCED ZONE SHALL BE COMPACTED TO MIN. 95 PERCENT OF T 99 MAX. DRY DENSITY WITHIN TWO PERCENTAGE POINTS OF OPTIMUM MOISTURE CONTENT

6. MAXIMUM STEP IN LEVELING PAD SHALL BE 12 INCHES (BLOCK HEIGHT) AT ANY LOCATION

7. FOR TAPERING WALL AT EACH END, TOP LEVEL OF REINFORCEMENT GRID MAY BE OMITTED TO MAINTAIN MIN. 1 FT. OF COVER ON UPPERMOST GRID LAYER.

8. TOP OF WALL TO BE FENCED. SEE DETAIL, SHEET 39.

RETAINING WALL #1

SECTION	STATIONING	GEOGRID (STRATAGRID)	HEIGHT ABOVE SUBGRADE (FT.)	LENGTH, L (FT.)	REQUIRED ALLOWABLE BEARING PRESSURE (PSF)
1	0+00 - 0+75	SG150	7.5	5.5	3,000
	2+62 - 2+82	SG150	6.0	5.5	3,000
		SG150	4.5	5.5	3,000
		SG150	3.0	5.5	3,000
		SG150	2.0	5.5	3,000
		SG200	1.0	5.5	3,000
2	0+75 - 1+85	SG150	10.5	8.5	3,000
		SG150	9.0	8.5	3,000
		SG150	7.5	8.5	3,000
		SG150	6.0	8.5	3,000
		SG200	4.5	8.5	3,000
		SG200	3.0	8.5	3,000
		SG200	2	8.5	3,000
		SG200	1	8.5	3,000
3	1+85 - 2+62	SG150	16.0	16.5	6,000
		SG150	14.5	16.5	6,000
		SG150	13.0	16.5	6,000
		SG150	11.5	16.5	6,000
		SG200	10.0	16.5	6,000
		SG200	8.5	16.5	6,000
		SG200	7.0	16.5	6,000
		SG200	6.0	16.5	6,000
		SG200	5	16.5	6,000
		SG200	4	16.5	6,000
		SG200	3	16.5	6,000
		SG200	2	16.5	6,000
		SG200	1.5	16.5	6,000
		SG200	1	16.5	6,000
		SG200	0.5	16.5	6,000

OWNER
PARCEL 30 - GWENRIDGE, LLC
8835-P COLUMBIA 100 PARKWAY
COLUMBIA MD 21045
TEL: 410-730-0810
PARCEL 38 - MEHTA CHARALUTA TRUST
5551 OAKLAND MILLS ROAD
COLUMBIA MD 21045
TEL: 410-730-3961

APPROVED: DEPARTMENT OF PLANNING AND ZONING

CHIEF, DEVELOPMENT ENGINEERING DIVISION	DATE 9/6/06
CHIEF, DIVISION OF LAND DEVELOPMENT	DATE 9/14/06
DIRECTOR	DATE 9/18/06

DRAWN: PSL
DATE: JUNE 20, 2005
SCALE: AS SHOWN

DATE	REVISION	BY

ELKRIDGE-CROSSING-PHASE.ONE
PARCELS A-E
TAX MAP 38, GRID 2, PARCELS 30 & 38
FIRST ELECTION DISTRICT, HOWARD COUNTY, MARYLAND
RETAINING*WALL#1*ELEVATION*AND*NOTES

JURI MAISTE - SITE DESIGN CONSULTANT
2923 Chenault Avenue, Baltimore, Maryland 21234
Phone: 410-661-8732 Fax: 410-661-8732
HILLIS-CARNES, GEOTECHNICAL ENGINEER
4959 New Design Road, Suite 107, Frederick, Maryland 21703
Phone: 301-662-2522 Fax: 301-662-5575

SDP-04-017

C:\DRAWINGS\ELKRIDGE\PHASE-1\WALL38 Fri Aug 11 11:16:41 2006

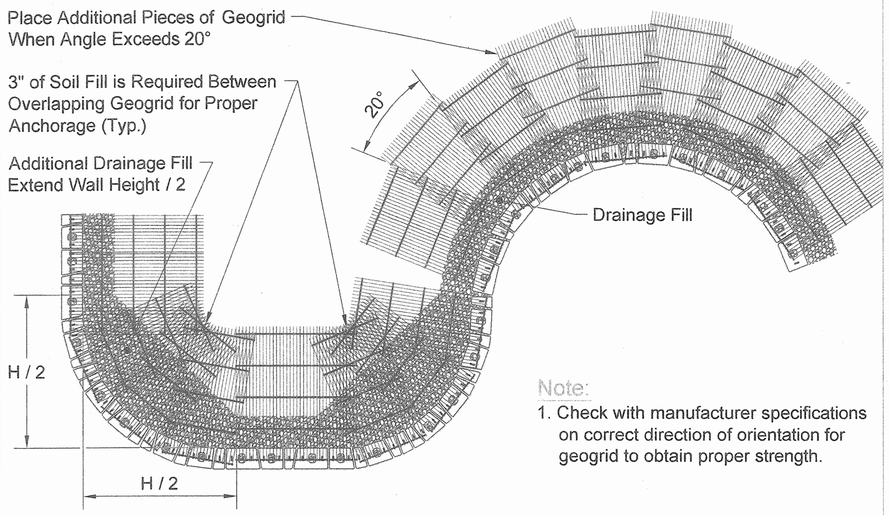

Note:

1. Check with manufacturer specifications on correct direction of orientation for geogrid to obtain proper strength.

Geogrid Installation on Curves

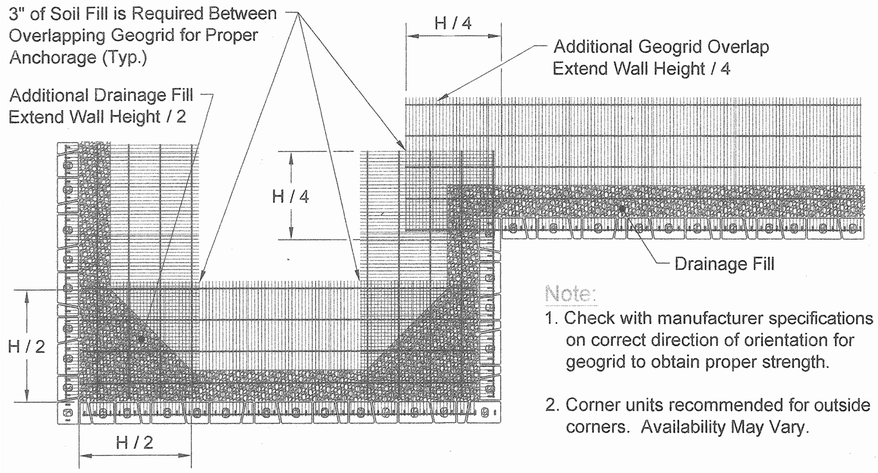

Note:

1. Check with manufacturer specifications on correct direction of orientation for geogrid to obtain proper strength.
2. Corner units recommended for outside corners. Availability May Vary.

Geogrid Installation at Corners

Large Unit	
Width:	16"/14"
*Depth:	10"
Height:	6"
*Weight:	60 lbs

Medium Unit	
Width:	12"/10"
*Depth:	10"
Height:	6"
*Weight:	40 lbs

Small Unit	
Width:	6"/4"
*Depth:	10"
Height:	6"
*Weight:	25 lbs

Base Leveling Pad Notes:

1. The leveling pad is to be constructed of crushed stone or 2,000 psi± unreinforced concrete
2. The base foundation is to be approved by the site geotechnical engineer prior to placement of the leveling pad.

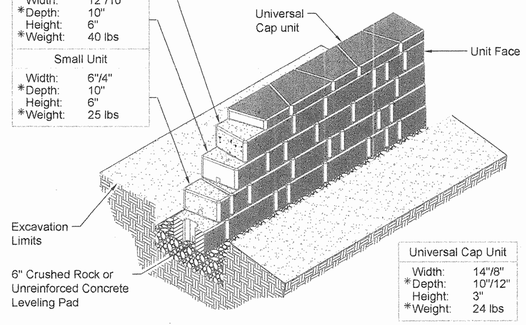

Universal Cap Unit	
Width:	14"/8"
*Depth:	10"/12"
Height:	3"
*Weight:	24 lbs

Country Manor Unit/Base Pad Isometric Section View

Dimensions & Weight May Vary by Region

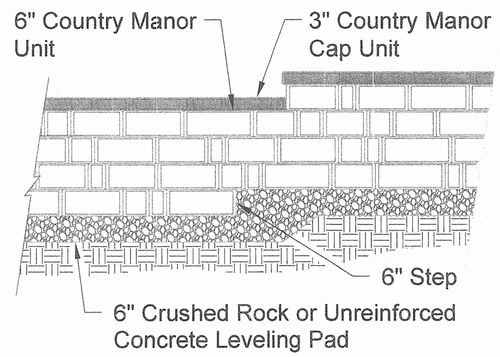

Elevation

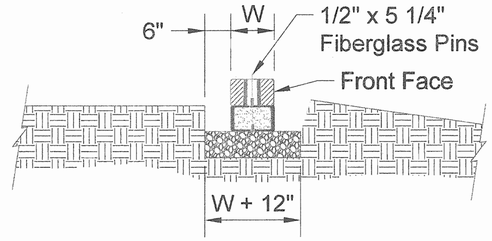

Section

Leveling Pad and Cap Step Detail

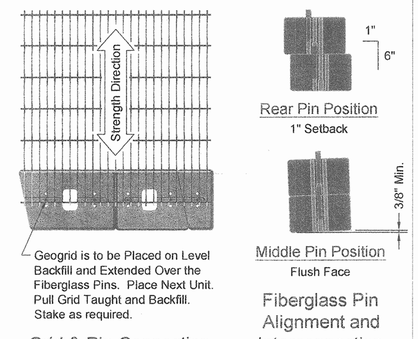

Grid & Pin Connection

Fiberglass Pin Alignment and Interconnection

* All dimensions are nominal and may vary by region. All units not available in all locations.

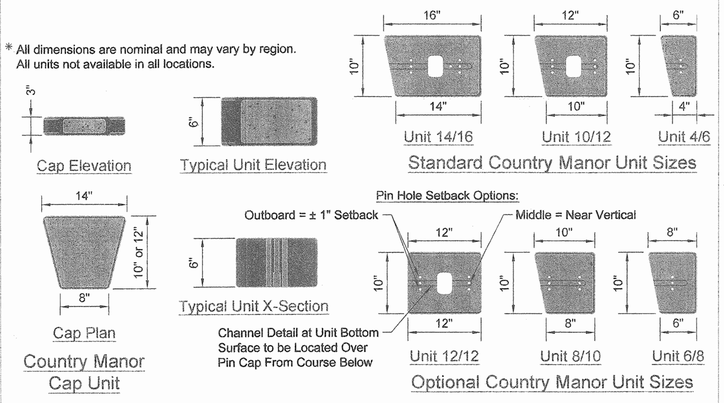

Country Manor Cap Unit

Standard Country Manor Unit Sizes

Optional Country Manor Unit Sizes

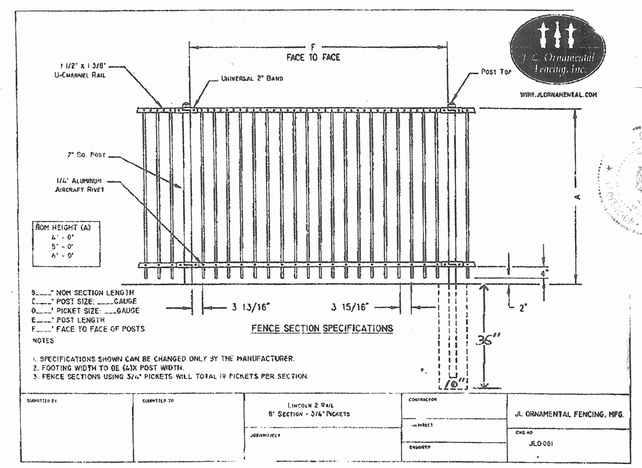

APPROVED: DEPARTMENT OF PLANNING AND ZONING

CHIEF, DEVELOPMENT ENGINEERING DIVISION	DATE 9/6/06
CHIEF, DIVISION OF LAND DEVELOPMENT	DATE 9/14/06
DIRECTOR	DATE 9/18/06

OWNERS

PARCEL 30 – GWENRIDGE, LLC
8835-P COLUMBIA 100 PARKWAY
COLUMBIA MD 21045
TEL: 410-730-0810
PARCEL 38 – MEHTA CHARALUTA TRUST
5551 OAKLAND MILLS ROAD
COLUMBIA MD 21045
TEL: 410-730-3961

STATE OF MARYLAND

DRAWN: PSL
DATE: JUNE 20, 2005
SCALE: AS SHOWN

DATE	REVISION	BY

ELKRIDGE – CROSSING – PHASE ONE
PARCELS A-E
TAX MAP 38, GRID 2, PARCELS 30 & 38
FIRST ELECTION DISTRICT, HOWARD COUNTY, MARYLAND
RETAINING*WALL*#1*KEYSTONE*COUNTRY*MANOR*DETAILS

JURI MAISTE – SITE DESIGN CONSULTANT
2923 Chenoak Avenue, Baltimore, Maryland 21234
Phone: 410-661-8752 Fax: 410-661-8752

HILLIS-CARNES, GEOTECHNICAL ENGINEER
4959 New Design Road, Suite 107, Frederick, Maryland 21703
Phone: 301-662-2522 Fax: 301-662-5575

SDP-04-017

ELKRIDGE CROSSING - OFFSITE PLANTING SCHEDULE

FCE- ELKRIDGE CROSSING OFFSITE # 1 - 0.93 acres
Planting Units Required: 651
Planting Units Provided: 652.5

Qty	Species	Size	Spacing
4	Acer rubrum - Red maple	1" cal.	15' o.c.
4	Liriodendron tulipifera - Tulip poplar **	1" cal.	15' o.c.
4	Platanus occidentalis - Sycamore	1" cal.	15' o.c.
3	Quercus alba - White oak **	1" cal.	15' o.c.
15	total 1"caliper trees provided		
55	Acer rubrum - Red maple	2-3' whip	11' o.c.
10	Diospyros virginiana - Persimmon **	2-3' whip	11' o.c.
75	Liriodendron tulipifera - Tulip poplar **	2-3' whip	11' o.c.
40	Nyssa sylvatica - Black gum	2-3' whip	11' o.c.
30	Platanus occidentalis - Sycamore	2-3' whip	11' o.c.
40	Prunus serotina - Black cherry **	2-3' whip	11' o.c.
5	Quercus palustris - Pin oak	2-3' whip	11' o.c.
20	Ulmus rubra - Slippery Elm	2-3' whip	11' o.c.
25	Viburnum prunifolium - Blackhaw **	2-3' whip	11' o.c.
300	total whips w/shelters provided		

FCE- ELKRIDGE CROSSING OFFSITE # 2 - 0.43 acres
Planting Units Required: 301
Planting Units Provided: 302

Qty	Species	Size	Spacing
8	Acer rubrum - Red maple	1" cal.	15' o.c.
10	Liriodendron tulipifera - Tulip poplar **	1" cal.	15' o.c.
6	Platanus occidentalis - Sycamore	1" cal.	15' o.c.
8	Quercus alba - White oak **	1" cal.	15' o.c.
32	total 1"caliper trees provided		
20	Acer rubrum - Red maple	2-3' whip	11' o.c.
5	Diospyros virginiana - Persimmon **	2-3' whip	11' o.c.
20	Liriodendron tulipifera - Tulip poplar **	2-3' whip	11' o.c.
6	Nyssa sylvatica - Black gum	2-3' whip	11' o.c.
6	Platanus occidentalis - Sycamore	2-3' whip	11' o.c.
10	Prunus serotina - Black cherry **	2-3' whip	11' o.c.
8	Quercus palustris - Pin oak	2-3' whip	11' o.c.
10	Ulmus rubra - Slippery Elm	2-3' whip	11' o.c.
10	Viburnum prunifolium - Blackhaw **	2-3' whip	11' o.c.
95	total whips w/shelters provided		

FCE- ELKRIDGE CROSSING OFFSITE # 3 - 2.04 acres
Planting Units Required: 1428
Planting Units Provided: 1437

Qty	Species	Size	Spacing
25	Acer rubrum - Red maple	1" cal.	15' o.c.
35	Liriodendron tulipifera - Tulip poplar **	1" cal.	15' o.c.
18	Platanus occidentalis - Sycamore	1" cal.	15' o.c.
24	Quercus alba - White oak **	1" cal.	15' o.c.
102	total 1"caliper trees provided		
70	Acer rubrum - Red maple	2-3' whip	11' o.c.
15	Diospyros virginiana - Persimmon **	2-3' whip	11' o.c.
120	Liriodendron tulipifera - Tulip poplar **	2-3' whip	11' o.c.
50	Nyssa sylvatica - Black gum	2-3' whip	11' o.c.
70	Platanus occidentalis - Sycamore	2-3' whip	11' o.c.
75	Prunus serotina - Black cherry **	2-3' whip	11' o.c.
50	Quercus palustris - Pin oak	2-3' whip	11' o.c.
40	Ulmus rubra - Slippery Elm	2-3' whip	11' o.c.
50	Viburnum prunifolium - Blackhaw **	2-3' whip	11' o.c.
540	total whips w/shelters provided		

FCE- ELKRIDGE CROSSING OFFSITE # 4 - 0.44 acres
Planting Units Required: 308
Planting Units Provided: 314

Qty	Species	Size	Spacing
6	Acer rubrum - Red maple	1" cal.	15' o.c.
8	Liriodendron tulipifera - Tulip poplar **	1" cal.	15' o.c.
6	Platanus occidentalis - Sycamore	1" cal.	15' o.c.
4	Quercus alba - White oak **	1" cal.	15' o.c.
24	total 1"caliper trees provided		
20	Acer rubrum - Red maple	2-3' whip	11' o.c.
10	Diospyros virginiana - Persimmon **	2-3' whip	11' o.c.
15	Liriodendron tulipifera - Tulip poplar **	2-3' whip	11' o.c.
15	Nyssa sylvatica - Black gum	2-3' whip	11' o.c.
15	Platanus occidentalis - Sycamore	2-3' whip	11' o.c.
15	Prunus serotina - Black cherry **	2-3' whip	11' o.c.
10	Quercus palustris - Pin oak	2-3' whip	11' o.c.
5	Ulmus rubra - Slippery Elm	2-3' whip	11' o.c.
10	Viburnum prunifolium - Blackhaw **	2-3' whip	11' o.c.
115	total whips w/shelters provided		

FCE- ELKRIDGE CROSSING OFFSITE # 14 - 3.3 acres
Planting Units Required: 2310
Planting Units Provided: 2318

Qty	Species	Size	Spacing
6	Acer rubrum - Red maple	1" cal.	15' o.c.
8	Liriodendron tulipifera - Tulip poplar **	1" cal.	15' o.c.
6	Platanus occidentalis - Sycamore	1" cal.	15' o.c.
8	Quercus alba - White oak **	1" cal.	15' o.c.
28	total 1"caliper trees provided		
250	Acer rubrum - Red maple	2-3' whip	11' o.c.
40	Diospyros virginiana - Persimmon **	2-3' whip	11' o.c.
250	Liriodendron tulipifera - Tulip poplar **	2-3' whip	11' o.c.
100	Nyssa sylvatica - Black gum	2-3' whip	11' o.c.
170	Platanus occidentalis - Sycamore	2-3' whip	11' o.c.
60	Prunus serotina - Black cherry **	2-3' whip	11' o.c.
140	Quercus palustris - Pin oak	2-3' whip	11' o.c.
80	Ulmus rubra - Slippery Elm	2-3' whip	11' o.c.
20	Viburnum prunifolium - Blackhaw **	2-3' whip	11' o.c.
1110	total whips w/shelters provided		

FCE- ELKRIDGE CROSSING OFFSITE # 15 - 0.53 acres
Planting Units Required: 371
Planting Units Provided: 378

Qty	Species	Size	Spacing
4	Acer rubrum - Red maple	1" cal.	15' o.c.
4	Liriodendron tulipifera - Tulip poplar **	1" cal.	15' o.c.
4	Platanus occidentalis - Sycamore	1" cal.	15' o.c.
3	Quercus alba - White oak **	1" cal.	15' o.c.
15	total 1"caliper trees provided		
25	Acer rubrum - Red maple	2-3' whip	11' o.c.
12	Diospyros virginiana - Persimmon **	2-3' whip	11' o.c.
20	Liriodendron tulipifera - Tulip poplar **	2-3' whip	11' o.c.
25	Nyssa sylvatica - Black gum	2-3' whip	11' o.c.
25	Platanus occidentalis - Sycamore	2-3' whip	11' o.c.
10	Prunus serotina - Black cherry **	2-3' whip	11' o.c.
20	Quercus palustris - Pin oak	2-3' whip	11' o.c.
15	Ulmus rubra - Slippery Elm	2-3' whip	11' o.c.
10	Viburnum prunifolium - Blackhaw **	2-3' whip	11' o.c.
162	total whips w/shelters provided		

Offsite FCE Credit Breakdown for Elkridge Crossing

FCE #	Acreage to be Planted	Acreage to be Retained	Total FCE credit-acres	Location
1	1.91		1.91	Brantwood 2-1
2	0.88		0.88	Brantwood 2-1
3	2.04		2.04	Brantwood 2-1
4	0.44		0.44	Brantwood 2-1
10		1.86	0.93	Ellicott Meadows
13		0.66	0.33	Ellicott Meadows
14	3.3		3.3	Ellicott Meadows
15	0.53		0.53	Ellicott Meadows
Total	9.10	2.52	10.36	

APPROVED: DEPARTMENT OF PLANNING AND ZONNING

CHIEF, DEVELOPMENT ENGINEERING DIVISION	DATE 9/16/06
CHIEF, DIVISION OF LAND DEVELOPMENT	DATE 9/14/06
DIRECTOR	DATE 9/18/06

Blaze Orange Plastic Mesh - (TPF)

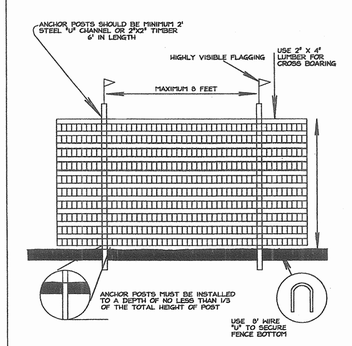

NOTES
1. Forest protection device only.
2. Retention Area will be set as part ofthe review process.
3. Boundaries of Retention Area should be staked and flagged prior to installing device
4. Root damage should be avoided.
5. Protective signage may also be used.
6. Device should be maintained throughout construction.

WOODLAND CONSERVATION MANUAL	EXHIBIT K - 6	PRINCE GEORGES COUNTY, MD

FOREST CONSERVATION WORKSHEET
Version 1.0

Project: Elkridge Crossing
Date: February 14, 2006

NET TRACT AREA		Acres
A. Total tract area		26.5
B. Area within 100 Year Floodplain		0
C. Area to remain in agricultural production		0
D. Net Tract Area		26.5
LAND USE CATEGORY: (from table 3.2.1, page 40, Manual) ARA MDR IDA HDR MPD CIA 1		
E. Afforestation Threshold (percentage)	15%	4.0
F. Conservation Threshold (percentage)	15%	4.0
EXISTING FOREST COVER:		
G. Existing Forest Cover (excluding floodplain)		12.4
H. Area of forest above afforestation threshold		8.4
I. Area of forest above conservation threshold		8.4
BREAK EVEN POINT:		
J. Forest retention above threshold with no mitigation		1.7
Break-Even Point		5.7
K. Clearing permitted without mitigation		6.7
PROPOSED FOREST CLEARING		
L. Total area of forest to be Cleared		12.4
M. Total area of forest to be Retained in FCE		0.0
PLANTING REQUIREMENTS		
N. Reforestation for clearing above Conservation Threshold		2.1
P. Reforestation for clearing below Conservation Threshold		8.0
Q. Credit for retention above conservation threshold		0
R. Total reforestation required		10.1
S. Total afforestation required		0
T. Total reforestation and afforestation required		10.1

Planting Notes:

- **Planting density based spacing requirements: 2" caliper trees @ 20' on center, 1" caliper trees @ 15' on center, whips with shelter @ 11' on center.**
- **** - These species should not be planted within the wetland limits.**
- **1" caliper trees should be staggered along the outer perimeter of the planting area to serve as demarcation of the boundary. The trees should be no closer than 15 foot spacing.**
- **Planting shall be made in a curvilinear fashion along contour. The planting should avoid a grid appearance but should be spaced to facilitate maintenance**
- **Multiflora rose/heavy brush removal/control may be required prior to installation of planting.**
- **All whips are required to be installed with tree shelters per Howard County FCA requirements.**
- **Planting units defined by the spacing requirements established in the FCA Manual. One plant unit is defined as 1 seedling or whip without shelter. The Manual states that 700 seedlings/whips without shelters are required per acre, or 350 whips w/shelters, or 200 1" caliper trees, or 100 2" caliper trees. By conversion it has been determined that a seeding or whip without shelter = 1 unit, whip with shelter = 2 units, 1"caliper tree = 3.5 units and 2" caliper tree =7 units. The use of plant units simplifies the plant density calculations when mixing stock size.**

Planting Spacing Diagram

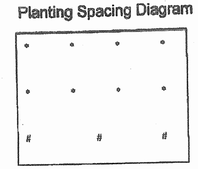

* - whip w/shelter 11' on center spacing
# - 1" caliper tree 15' on center spacing
Species shall be randomly interspersed, rows should be planting along contours

MIN. 11"

FOREST CONSERVATION EASEMENT

Unauthorized disturbance of vegetation is prohibited. Violators are subject to fines as imposed by the Howard County Forest Conservation Act of 1992

Trees for Your Future

MIN. 15"

PROJECT NOTES

1. The forest Conservation obligation for this plan and all other phases of Elkridge Crossing has been met by providing 5.27 acres of offsite reforestation at Brantwood, 2/1, Pres. Parcel F and 2.52 acres of offsite retention (only 50% acreage credit) and 3.83 acres of offsite reforestation at Ellicott Meadows, TM 16, BLK 22, TM Parcel 99.
2. **The offsite planting plan for Elkridge Crossing was prepared by Eco-Science Professionals, Inc. The base plan for the Brantwood community was prepared by Wildman Environmental Services, Inc.**
3. **The FCE locations shown the these Offsite Forest Conservation Plan sheets are for illustrative purposes only. The actual limits are shown by metes and bounds on the Plat of Revision for Brantwood Section 2 Area 1 and Ellicott Meadows.**
4. **All FCP notes are shown on the Elkridge Crossing Forest Conservation Plan sheet.**
5. **Any Forest Conservation Easement (FCE) area shown hereon is subject to protective covenants which may be found in the Land Records of Howard County which restrict the disturbance and use of these areas.**
6. **Forested areas occurring outside of the FCE shall not be considered part of the FCE and shall not be subject to protective land covenants.**
7. **Limits of disturbance shall be restricted to areas outside the limit of temporary fencing or the FCE boundary, whichever is greater.**
8. **There shall be no clearing, grading, construction or disturbance of vegetation in the Forest Conservation Easement, except as permitted by Howard County DPZ.**
9. **No stockpiles, parking areas, equipment cleaning areas, etc. shall occur within areas designated as Forest Conservation Easements.**
10. **Temporary fencing shall be used to protect forest resources during construction. The fencing shall be placed along all FCE boundaries which occur within 15 feet of the proposed limits of disturbance.**
11. **Permanent signage shall be placed 50-100' apart along the boundaries of all areas included in Forest Conservation Easements.**
12. **The existing conditions of the forest retention easements are reported in the *Bagheri Property Forest Stand Delineation Report* prepared by Eco-Science Professionals, Inc. November 2004. The conditions reported therein accurately reflect the existing site conditions. Since the original FSD report for the Bagheri Property was performed and accepted by Howard county within five years of the date this submission the information is considered valid for the purpose of this submission.**
13. **Area for proposed reforestation have been field review and do not currently meet the County's definition of forest.**
14. Forest Conversation surety in th eamount of $114,780.60 for 5.27 acres of offsite reforestaion at Brantwood, 2/1, Pres. Parcel F has been posted as a part of the Developer's Agreement.
15. Forest Conservation surety in the amount of $21,954.24 for 2.52 acres of offsite retention and $83,417.40 for 3.83 acres of offsite reforestation at Ellicott Meadows, TM 16, BLK 22, TM Parcel 99, totaling $105,371.64 has been posted as a part of the Developer's Agreement.

OWNERS

PARCEL 30 - GWENRIDGE, LLC
8835-P COLUMBIA 100 PARKWAY
COLUMBIA, MD 21045
TEL: 410-730-0810

PARCEL 38 - MEHTA CHARALUTA TRUST
5551 OAKLAND MILLS ROAD
COLUMBIA, MD 21045
TEL: 410-730-3961

Eco-Science Professionals, Inc.
Consulting Ecologists
P.O. Box 5006 Glen Arm, Maryland 21057 Telephone (410) 592-6752 Fax (410) 832-2688

MD DNR Qualified Professional
USACOE Wetland Delineator
Certification # WDCP93MD0610044B2

9/14/06
John P. Canoles

DRAWN: J.M.
DATE: APRIL 27, 2005

DATE	REVISION	BY

ELKRIDGE-CROSSING-PHASE.ONE
PARCELS A-E
TAX MAP 38, GRID 2, PARCELS 30 & 38
FIRST ELECTION DISTRICT, HOWARD COUNTY, MARYLAND
FOREST-CONSERVATION-PLAN

JURI MAISTE - SITE DESIGN CONSULTANT
2923 Chenault Avenue, Baltimore, Maryland 21234
Phone: 410-661-8752 Fax: 410-661-8752
RICHARDSON ENGINEERING, LLC
736 W. Pedonia Road, Suite 101, Cockeysville, Maryland 21030
Phone: 410-666-1502 Fax: 410-560-0827

SDP-04-017

F:\05-0280\dwg\05-0280-FOR CONDET (40).dwg, DETAILS, 4/20/2006 8:39:56 AM

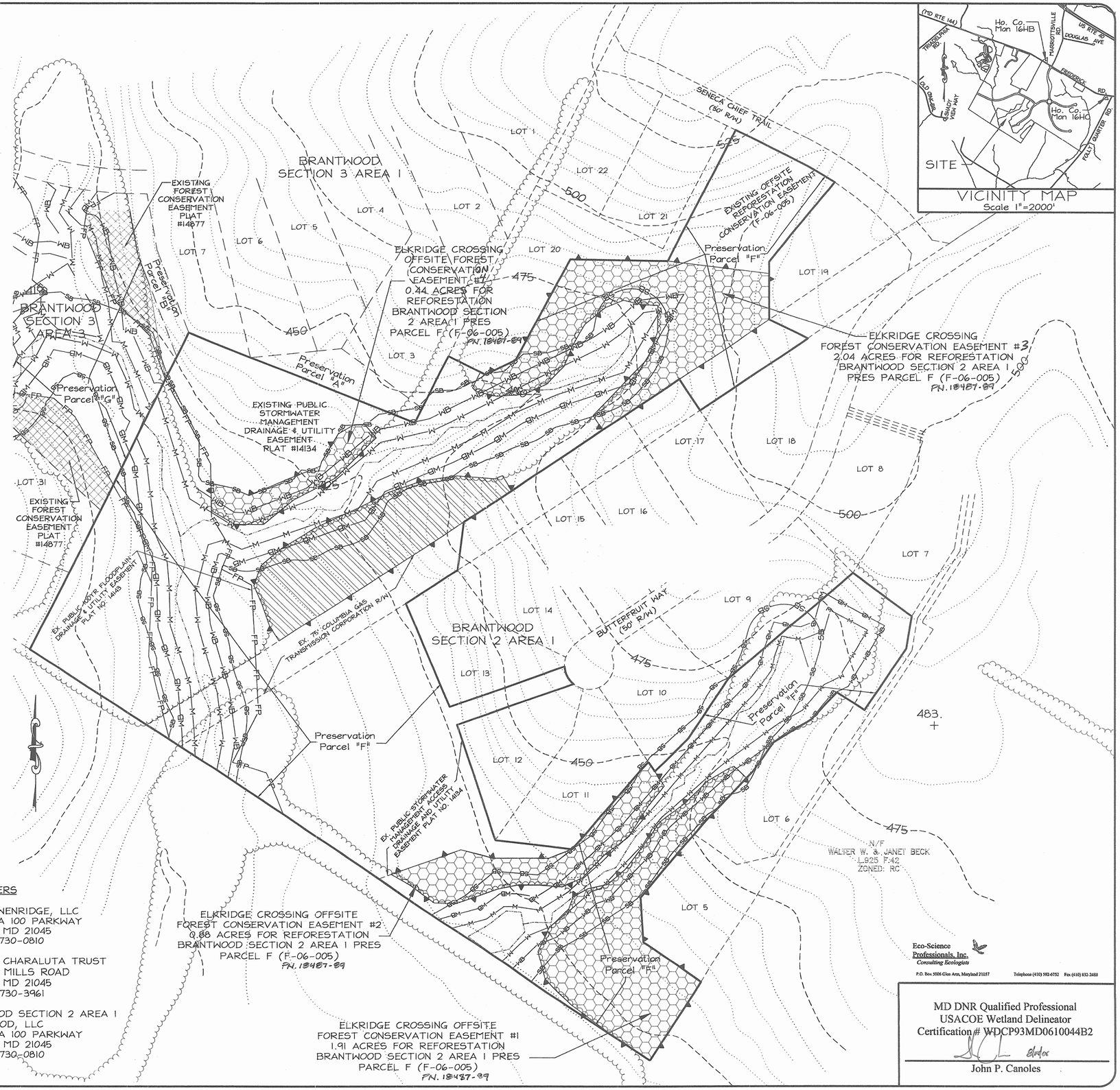

LEGEND

- PERMANENT PROTECTIVE SIGNAGE
- PROPOSED FCE FOR ELKRIDGE CROSSING - REFORESTATION
- EXISTING FCE F01-67
- EXISTING WETLAND
- EXISTING 25' WETLAND BUFFER
- EXISTING STREAM
- EXISTING 75' STREAM BUFFER
- EXISTING 100 YEAR FLOODPLAIN

OWNERS

PARCEL 30 - GWENRIDGE, LLC
8835-P COLUMBIA 100 PARKWAY
COLUMBIA, MD 21045
TEL: 410-730-0810

PARCEL 38 - MEHTA CHARALUTA TRUST
5551 OAKLAND MILLS ROAD
COLUMBIA, MD 21045
TEL: 410-730-3961

PARCEL F - BRANTWOOD SECTION 2 AREA 1
BRANTWOOD, LLC
8835-P COLUMBIA 100 PARKWAY
COLUMBIA, MD 21045
TEL: 410-730-0810

ELKRIDGE CROSSING OFFSITE FOREST CONSERVATION EASEMENT #2 0.88 ACRES FOR REFORESTATION BRANTWOOD SECTION 2 AREA 1 PRES PARCEL F (F-06-005) FN. 18487-89

ELKRIDGE CROSSING OFFSITE FOREST CONSERVATION EASEMENT #1 1.91 ACRES FOR REFORESTATION BRANTWOOD SECTION 2 AREA 1 PRES PARCEL F (F-06-005) FN. 18487-89

APPROVED: DEPARTMENT OF PLANNING AND ZONNING

CHIEF, DEVELOPMENT ENGINEERING DIVISION	DATE 9/6/06
CHIEF, DIVISION OF LAND DEVELOPMENT	DATE 9/7/06
DIRECTOR	DATE 9/13/06

Eco-Science Professionals, Inc. Consulting Ecologists
P.O. Box 5006 Glen Arm, Maryland 21057 Telephone (410) 592-0752 Fax (410) 832-2488

MD DNR Qualified Professional
USACOE Wetland Delineator
Certification # WDCP93MD0610044B2
John P. Canoles

DRAWN: J.M.
DATE: APRIL 27, 2005
SCALE: 1" = 100'

DATE	REVISION	BY

ELKRIDGE-CROSSING-PHASE.ONE

PARCELS A-E
TAX MAP 38, GRID 2, PARCELS 30 & 38
FIRST ELECTION DISTRICT, HOWARD COUNTY, MARYLAND

FOREST-CONSERVATION-PLAN

JURI MAISTE - SITE DESIGN CONSULTANT
2923 Chenault Avenue Baltimore Maryland 21234
Phone: 410-661-0752 Fax: 410-661-0752
RICHARDSON ENGINEERING, LLC
730 W. Pudonia Road, Suite 101, Cockeysville, Maryland 21030
Phone: 410-560-1502 Fax: 410-560-0827

SDP-04-017

LEGEND

- PERMANENT PROTECTIVE SIGNAGE
- PROPOSED FCE FOR ELKRIDGE CROSSING
- FCE FOR ELLICOTT MEADOWS (F-05-188)
- PROPOSED REFORESTATION FCE FOR ELKRIDGE CROSSING
- EXISTING WETLAND
- EXISTING 25' WETLAND BUFFER
- EXISTING STREAM
- EXISTING 75' STREAM BUFFER
- EXISTING 100 YEAR FLOODPLAIN
- EXISTING TREE LINE

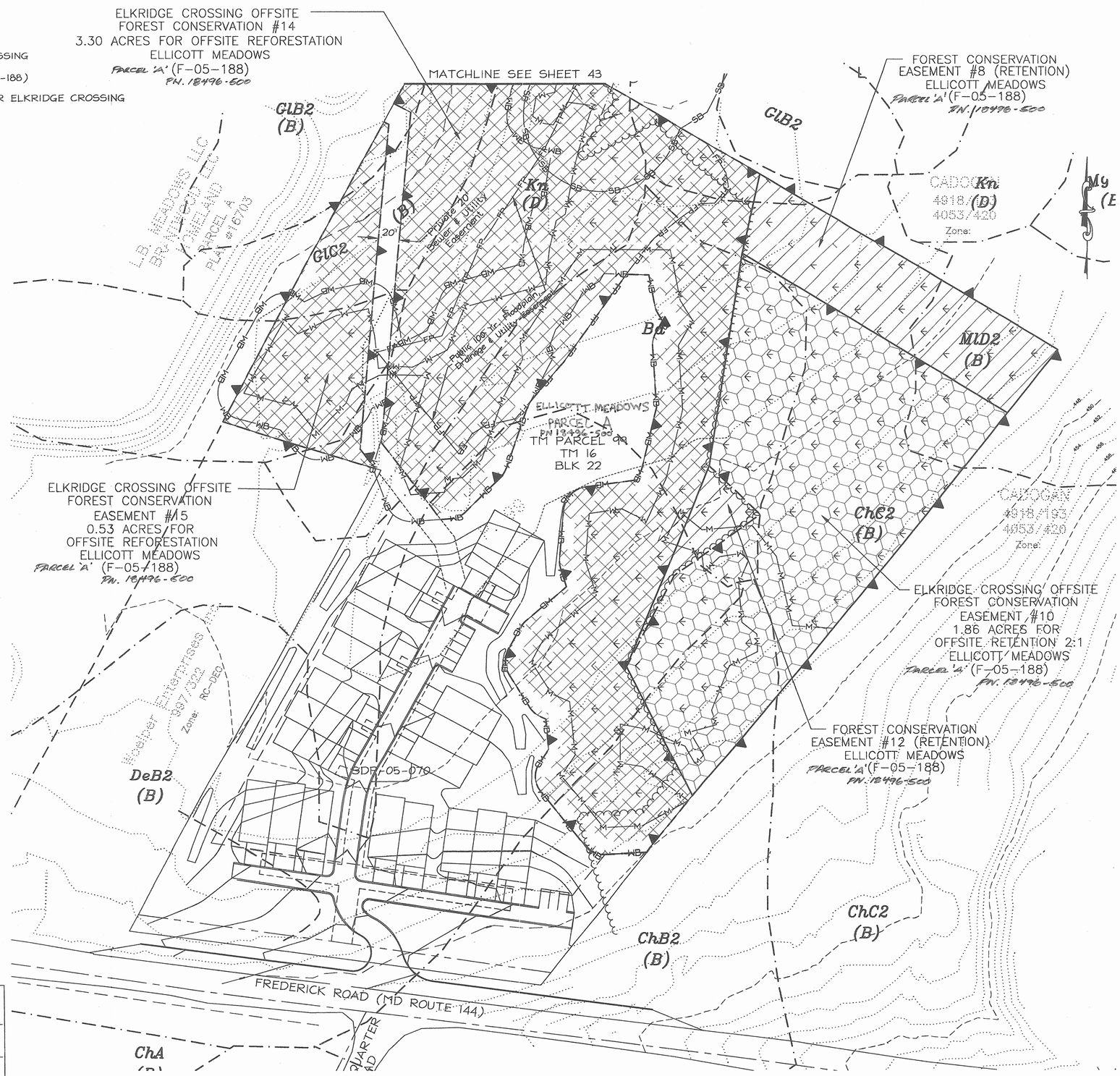

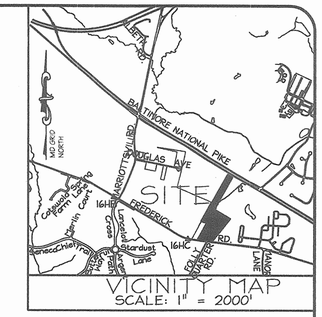

OWNERS:

Parcel 30 - Gwenridge, LLC
8835 P Columbia 100 Parkway
Columbia, MD 21045
Tel: 410-730-0810

Parcel 38 - Mehta Charaluta Trust
5551 Oakland Mills Road
Columbia, MD 21045
Tel: 410-730-3961

Parcel 99 - Brantly Development Corporation
8835 P Columbia 100 Parkway
Columbia, MD 21045
Tel: 410-730-0810

Eco-Science Professionals, Inc.
Consulting Ecologists
P.O. Box 5006 Glen Arm, Maryland 21057 Telephone (410) 592-0752 Fax (410) 832-2488

MD DNR Qualified Professional
USACOE Wetland Delineator
Certification # WDCP93MD0610044B2
8/4/04
John P. Canoles

APPROVED: DEPARTMENT OF PLANNING AND ZONNING

CHIEF, DEVELOPMENT ENGINEERING DIVISION	DATE 9/6/06
CHIEF, DIVISION OF LAND DEVELOPMENT	DATE 9/14/06
DIRECTOR	DATE 9/14/06

DRAWN: J.M.
DATE: APRIL 27, 2005
SCALE: 1" = 50'

DATE	REVISION	BY

ELKRIDGE-CROSSING-PHASE ONE

PARCELS A-E

TAX MAP 38, GRID 2, PARCELS 30 & 38
FIRST ELECTION DISTRICT, HOWARD COUNTY, MARYLAND

FOREST-CONSERVATION-PLAN

JURI MAISTE - SITE DESIGN CONSULTANT
2923 Chenault Avenue, Baltimore, Maryland 21234
Phone: 410-661-8752 Fax: 410-661-8752

RICHARDSON ENGINEERING, LLC
730 W. Pudomia Road, Suite 101, Cockeysville, Maryland 21030
Phone: 410-560-1502 Fax: 410-560-0827

SDP-04-017

LEGEND

- PERMANENT PROTECTIVE SIGNAGE
- PROPOSED FCE FOR ELKRIDGE CROSSING
- FCE FOR ELLICOTT MEADOWS (F-05-188)
- PROPOSED REFORESTATION FCE FOR ELKRIDGE CROSSING
- EXISTING WETLAND
- EXISTING 25' WETLAND BUFFER
- EXISTING STREAM
- EXISTING 75' STREAM BUFFER
- EXISTING 100 YEAR FLOODPLAIN
- EXISTING TREE LINE

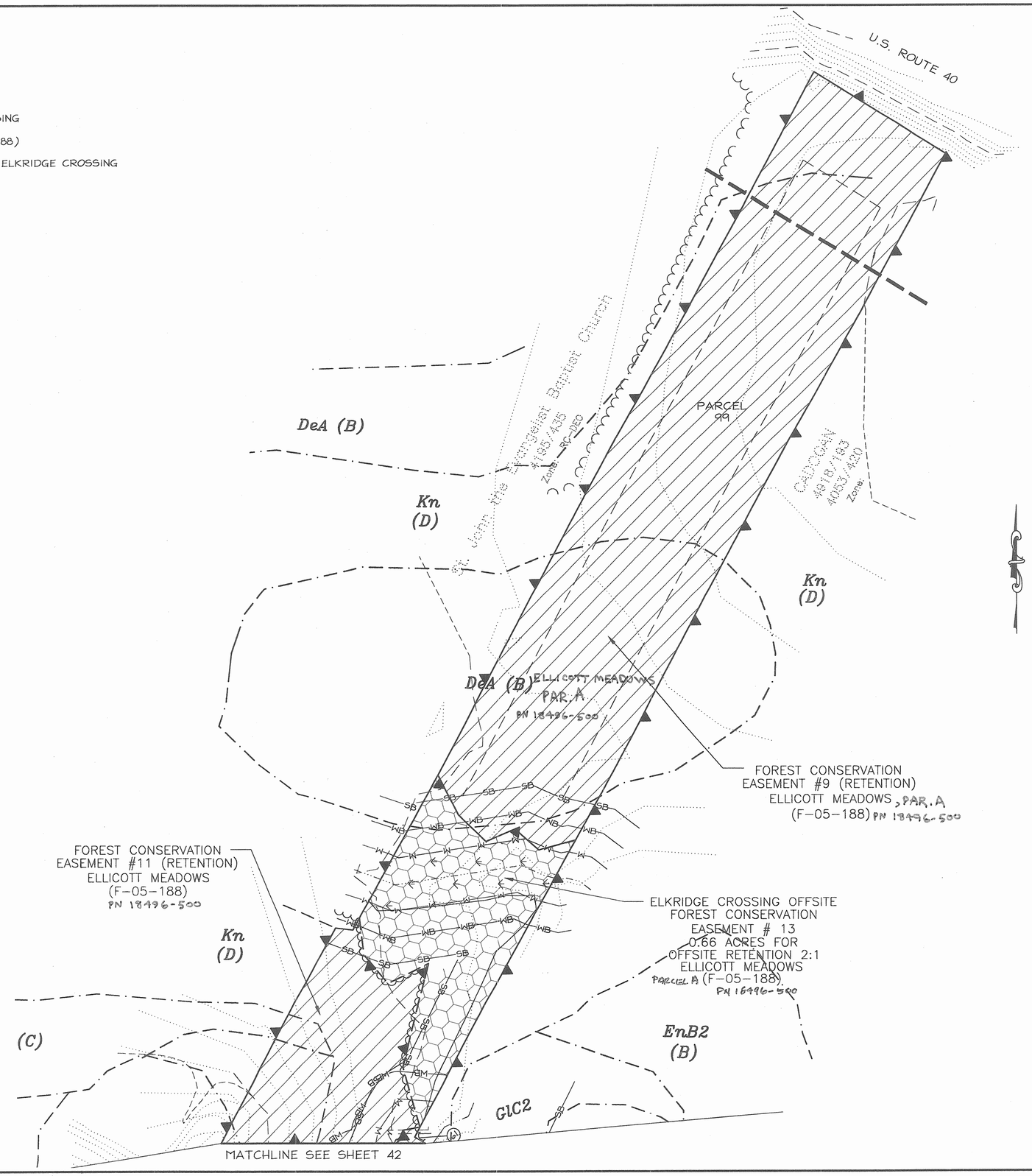

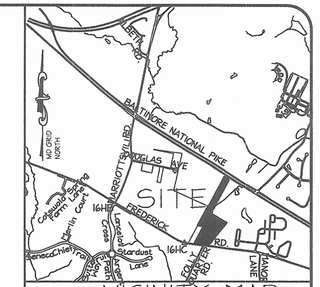

VICINITY MAP
SCALE: 1" = 2000'

OWNERS:

Parcel 30 - Gwenridge, LLC
8835 P Columbia 100 Parkway
Columbia, MD 21045
Tel: 410-730-0810

Parcel 38 - Mehta Charaluta Trust
5551 Oakland Mills Road
Columbia, MD 21045
Tel: 410-730-3961

Parcel 99 - Brantly Development Corporation
8835 P Columbia 100 Parkway
Columbia, MD 21045
Tel: 410-730-0810

Eco-Science Professionals, Inc.
Consulting Ecologists
P.O. Box 5006 Glen Arm, Maryland 21057 Telephone (410) 592-6752 Fax (410) 832-2488

MD DNR Qualified Professional
USACOE Wetland Delineator
Certification # WDCP93MD0610044B2
8/14/06
John P. Canoles

APPROVED: DEPARTMENT OF PLANNING AND ZONNING

CHIEF, DEVELOPMENT ENGINEERING DIVISION	DATE 9/6/06
CHIEF, DIVISION OF LAND DEVELOPMENT	DATE 9/14/06
DIRECTOR	DATE 9/18/06

DRAWN: J.M.
DATE: APRIL 27, 2005
SCALE: 1" = 50'

DATE	REVISION	BY

ELKRIDGE-CROSSING-PHASE ONE
PARCELS A-E
TAX MAP 38, GRID 2, PARCELS 30 & 38
FIRST ELECTION DISTRICT, HOWARD COUNTY, MARYLAND
FOREST-CONSERVATION-PLAN

JURI MAISTE - SITE DESIGN CONSULTANT
2923 Chenault Avenue, Baltimore, Maryland 21234
Phone: 410-661-8752 Fax: 410-661-8752
RICHARDSON ENGINEERING, LLC
730 W. Pulaski Road, Suite 101, Cockeysville, Maryland 21030
Phone: 410-560-1502 Fax: 410-560-0827

SHEET 43 OF 56

SDP-04-017

FILE: G:\Projects\05-0268 FCE B-NGHERE (42).dwg, FCE B-NGH, 4/20/2006 3:42:42 AM

APPROVED:	DEPARTMENT OF PLANNING AND ZONING	
CHIEF, DEVELOPMENT ENGINEERING DIVISION	SR.	DATE 7/27/07
CHIEF, DIVISION OF LAND DEVELOPMENT		DATE 8/1/07
DIRECTOR		DATE 8/2/07

NOTE:
FOREST CONSERVATION REQUIREMENTS ARE PROVIDED BY OFF-SITE MEASURES

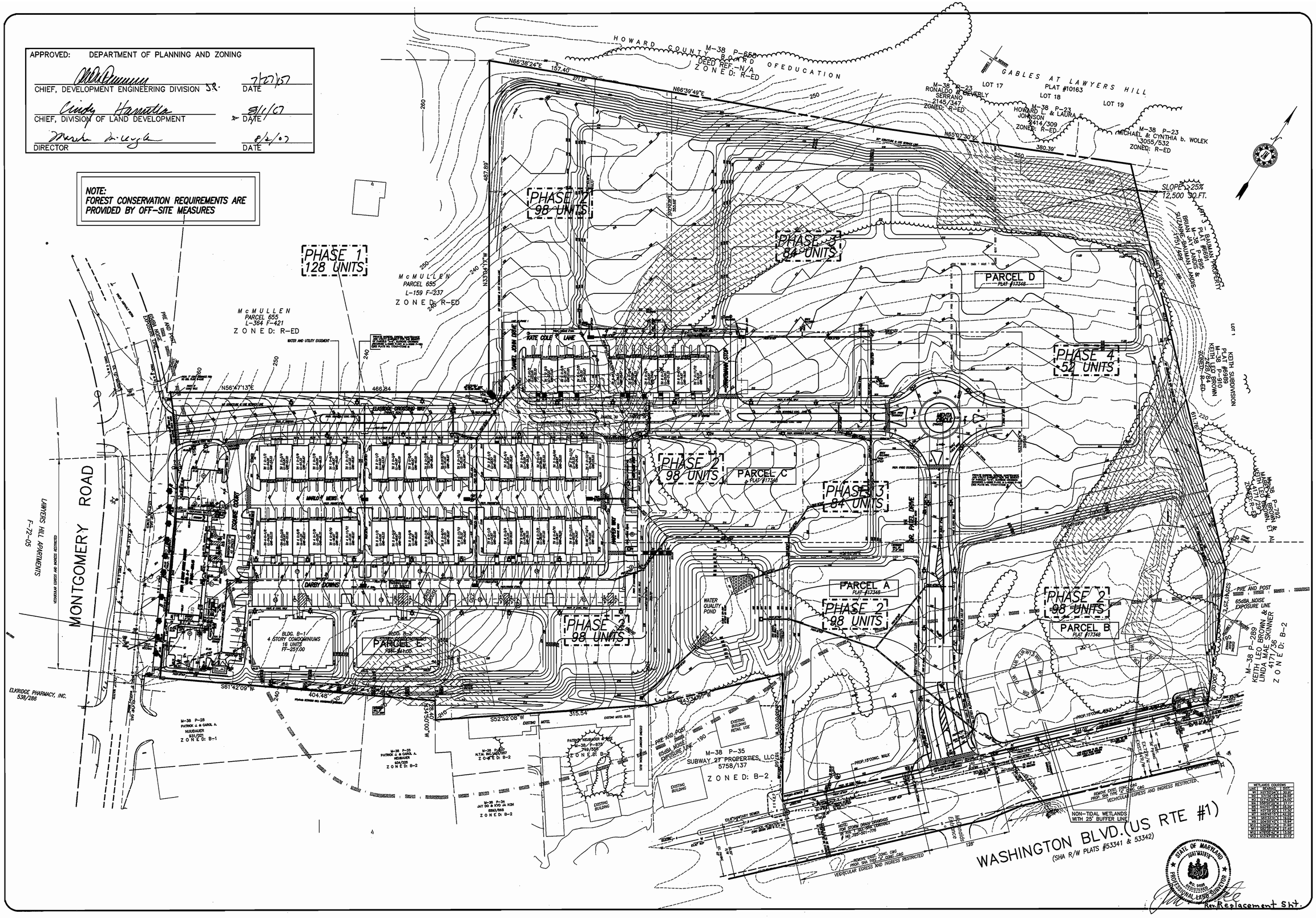

WETLANDS COORDINATES		
LINE	NORTHING	EASTING
W1	1019.00 N	1000.00 E
W2	1019.00 N	1000.00 E
W3	1019.00 N	1000.00 E
W4	1019.00 N	1000.00 E
W5	1019.00 N	1000.00 E
W6	1019.00 N	1000.00 E
W7	1019.00 N	1000.00 E
W8	1019.00 N	1000.00 E
W9	1019.00 N	1000.00 E
W10	1019.00 N	1000.00 E
W11	1019.00 N	1000.00 E
W12	1019.00 N	1000.00 E
W13	1019.00 N	1000.00 E
W14	1019.00 N	1000.00 E
W15	1019.00 N	1000.00 E
W16	1019.00 N	1000.00 E
W17	1019.00 N	1000.00 E
W18	1019.00 N	1000.00 E
W19	1019.00 N	1000.00 E
W20	1019.00 N	1000.00 E
W21	1019.00 N	1000.00 E
W22	1019.00 N	1000.00 E
W23	1019.00 N	1000.00 E
W24	1019.00 N	1000.00 E
W25	1019.00 N	1000.00 E
W26	1019.00 N	1000.00 E
W27	1019.00 N	1000.00 E
W28	1019.00 N	1000.00 E
W29	1019.00 N	1000.00 E
W30	1019.00 N	1000.00 E
W31	1019.00 N	1000.00 E
W32	1019.00 N	1000.00 E
W33	1019.00 N	1000.00 E

Rev. Replacement Sht.

DATE	REVISION	BY
DATE	BLDG. A2 REMOVED	JM

DRAWN: J.M.
DATE: JUNE 15, 2007
06/07
SCALE: 1:=60'

ELKRIDGE-CROSSING-PHASE ONE

PARCELS A-E
TAX MAP 38, GRID 2, PARCELS 30 & 38
SECOND ELECTION DISTRICT, HOWARD COUNTY, MARYLAND

FOREST*CONSERVATION*PLAN

JURI MAISTE - SITE DESIGN CONSULTANT
2923 Chernock Avenue Baltimore, Maryland 21234
Phone: 410-661-8752 Fax: 410-661-8752

RICHARDSON ENGINEERING, LLC
730 W. Padonia Road, Suite 101, Cockeysville, Maryland 21030
Phone: 410-560-1502 Fax: 410-560-0827

SDP-04-017

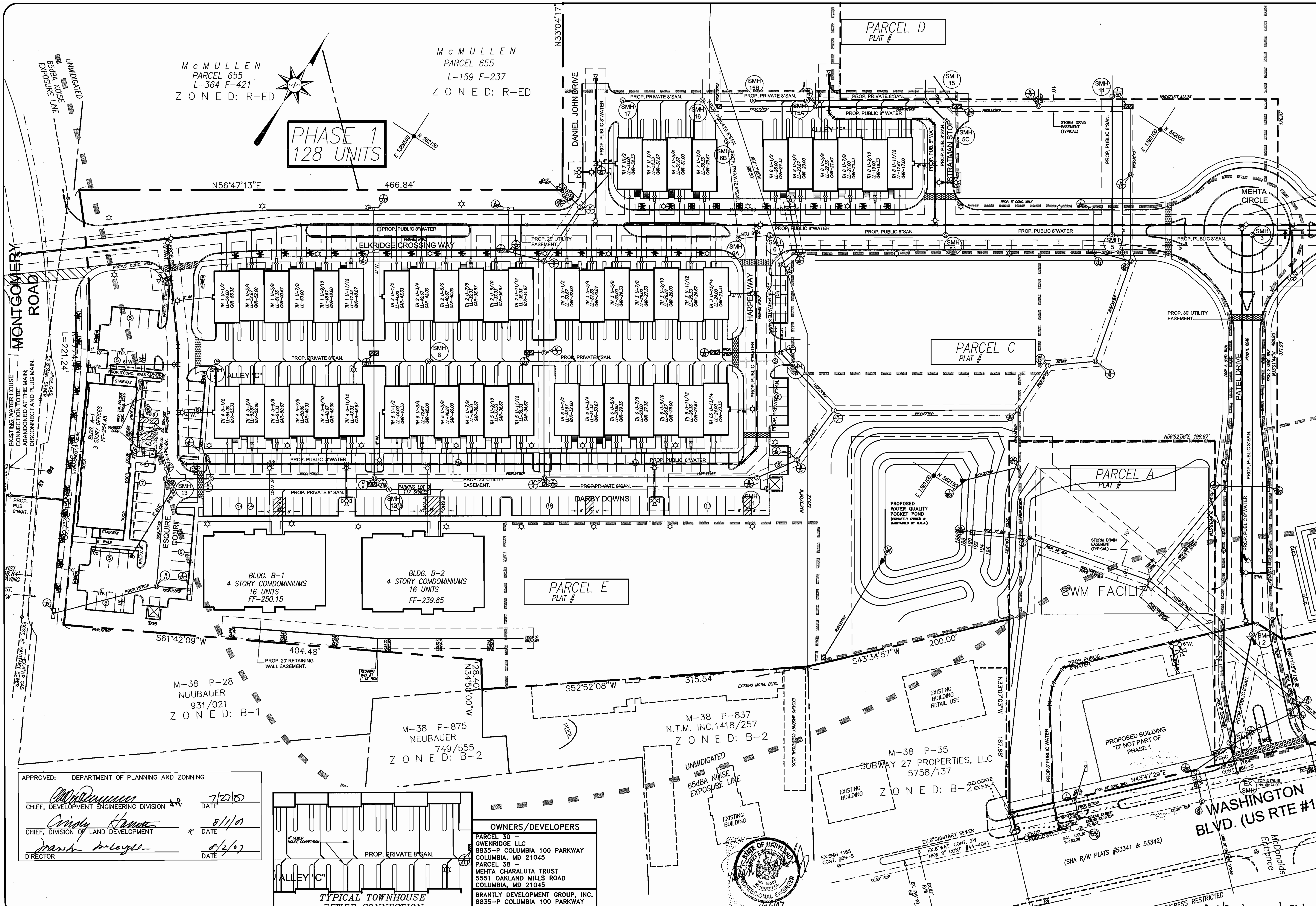

APPROVED: DEPARTMENT OF PLANNING AND ZONNING

CHIEF, DEVELOPMENT ENGINEERING DIVISION — DATE 7/27/07

CHIEF, DIVISION OF LAND DEVELOPMENT — DATE 8/1/07

DIRECTOR — DATE 8/2/07

OWNERS/DEVELOPERS

PARCEL 30 –
GWENRIDGE LLC
8835-P COLUMBIA 100 PARKWAY
COLUMBIA, MD 21045

PARCEL 38 –
MEHTA CHARALUTA TRUST
5551 OAKLAND MILLS ROAD
COLUMBIA, MD 21045

BRANTLY DEVELOPMENT GROUP, INC.
8835-P COLUMBIA 100 PARKWAY
COLUMBIA, MD 21045

STATE OF MARYLAND — PATRICK C. RICHARDSON — NO 18397 — REGISTERED PROFESSIONAL ENGINEER — 6/26/07

DRAWN: CND
DATE: ~~MAR. 1, 2006~~ 05/07
SCALE: 1"=40'

DATE	REVISION	BY
1/1/07	W.H.C., BLDG. A-2 & MEHTA CIRCLE	CND
8/29/08	GREASE TRAP & SHC FOR BLDG A-1	CND

ELKRIDGE-CROSSING-PHASE.ONE

PARCELS A–E
TAX MAP 38, GRID 2, PARCELS 30 & 38
FIRST ELECTION DISTRICT, HOWARD COUNTY, MARYLAND

UTILITY PLAN

JURI MAISTE – SITE DESIGN CONSULTANT
2923 Chenoak Avenue, Baltimore, Maryland 21234
Phone: 410-661-8752 Fax: 410-661-8752
RICHARDSON ENGINEERING, LLC
730 W.Padonia Road, Suite 101, Cockeysville, Maryland 21030
Phone: 410-560-1502 Fax: 410-560-0827

SDP-04-017

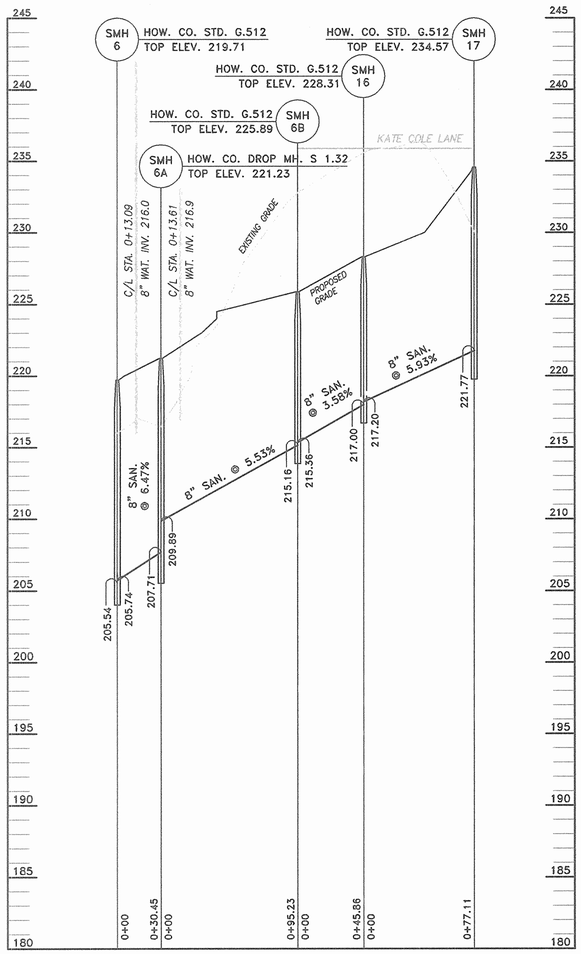

SMH 6 TO SMH 17

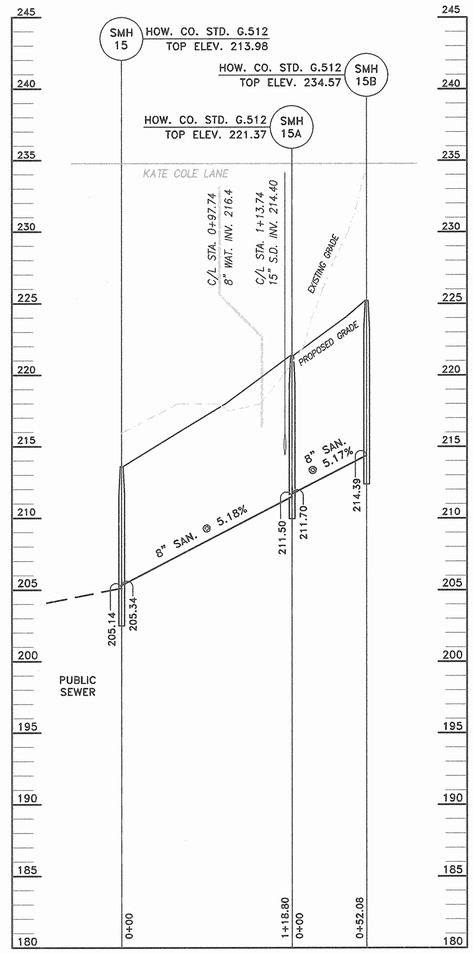

SMH 15 TO SMH 15B

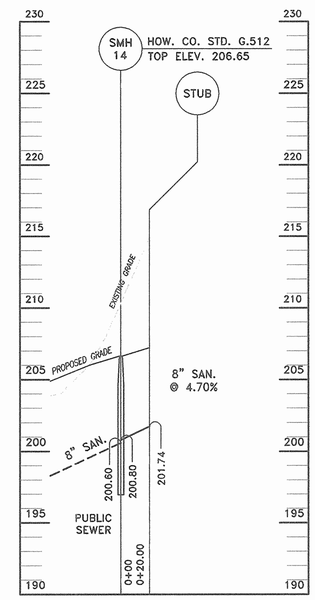

SMH 14 TO STUB

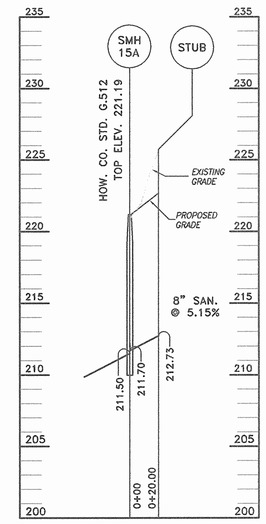

SMH 15A TO STUB

APPROVED: DEPARTMENT OF PLANNING AND ZONING

CHIEF, DEVELOPMENT ENGINEERING DIVISION	DATE 9/6/06
CHIEF, DIVISION OF LAND DEVELOPMENT	DATE 9/14/06
DIRECTOR	DATE 9/18/06

STATE OF MARYLAND
MICHAEL J. RICHARDSON
No. 19389
REGISTERED
PROFESSIONAL ENGINEER
7/24/06

OWNERS/DEVELOPERS
PARCEL 30 – GWENRIDGE LLC 8835-P COLUMBIA 100 PARKWAY COLUMBIA, MD 21045 PARCEL 38 – MEHTA CHARALUTA TRUST 5551 OAKLAND MILLS ROAD COLUMBIA, MD 21045
BRANTLY DEVELOPMENT GROUP, INC. 8835-P COLUMBIA 100 PARKWAY COLUMBIA, MD 21045

DRAWN: CND
DATE: MAR. 1, 2006
SCALE:
HORZ.= 1"=50'
VERT.= 1"=5'

DATE	REVISION	BY

ELKRIDGE-CROSSING-PHASE.ONE

PARCELS A-E
TAX MAP 38, GRID 2, PARCELS 30 & 38
FIRST ELECTION DISTRICT, HOWARD COUNTY, MARYLAND

PROFILES-SEWER No.1

JURI MAISTE - SITE DESIGN CONSULTANT
2323 Chenoak Avenue, Baltimore, Maryland 21234
Phone: 410-661-8752 Fax: 410-661-8752
RICHARDSON ENGINEERING, LLC
730 W. Padonia Road, Suite 101, Cockeysville, Maryland 21030
Phone: 410-560-1502 Fax: 410-560-0827

SDP-04-017

G:\JOBS\JOBS2001\1040327\DRAWINGS\PRIVATEWATR&SEW.DWG (LAYOUT=w12sew1)

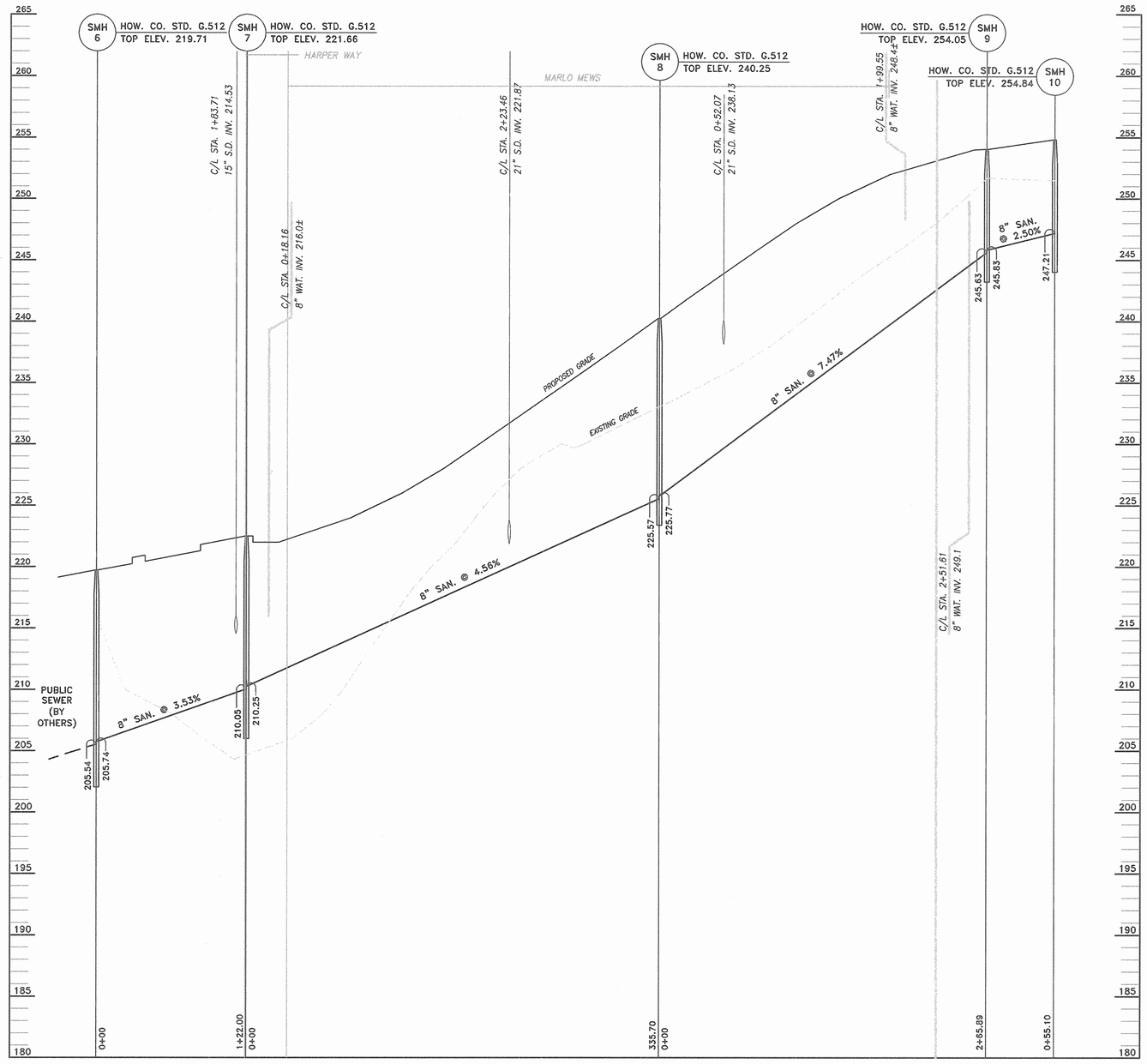

SMH 6 TO SMH 10

APPROVED: DEPARTMENT OF PLANNING AND ZONING

CHIEF, DEVELOPMENT ENGINEERING DIVISION	DATE 9/6/06
CHIEF, DIVISION OF LAND DEVELOPMENT	DATE 9/14/06
DIRECTOR	DATE 9/18/06

STATE OF MARYLAND
REGISTERED PROFESSIONAL ENGINEER
7/24/06

OWNERS/DEVELOPERS
PARCEL 30 – GWENRIDGE LLC 8835-P COLUMBIA 100 PARKWAY COLUMBIA, MD 21045 PARCEL 38 – MEHTA CHARALUTA TRUST 5551 OAKLAND MILLS ROAD COLUMBIA, MD 21045
BRANTLY DEVELOPMENT GROUP, INC. 8835-P COLUMBIA 100 PARKWAY COLUMBIA, MD 21045

DRAWN: CND
DATE: MAR. 1, 2006
SCALE: HORZ.= 1"=50' VERT.= 1"=5'

DATE	REVISION	BY

ELKRIDGE-CROSSING-PHASE.ONE

PARCELS A-E
TAX MAP 38, GRID 2, PARCELS 30 & 38
FIRST ELECTION DISTRICT, HOWARD COUNTY, MARYLAND

PROFILES-SEWER No.2

JURI MAISTE - SITE DESIGN CONSULTANT
2923 Chenoak Avenue, Baltimore, Maryland 21234
Phone: 410-661-8752 Fax: 410-661-8752
RICHARDSON ENGINEERING, LLC
730 W. Padonia Road, Suite 101, Cockeysville, Maryland 21030
Phone: 410-560-1502 Fax: 410-560-0827

SDP-04-017

G:\JOBS\JOBS2004\04037\DRAWINGS\PRIVATE\WATR&SEW.DWG (LAYOUTsew2)

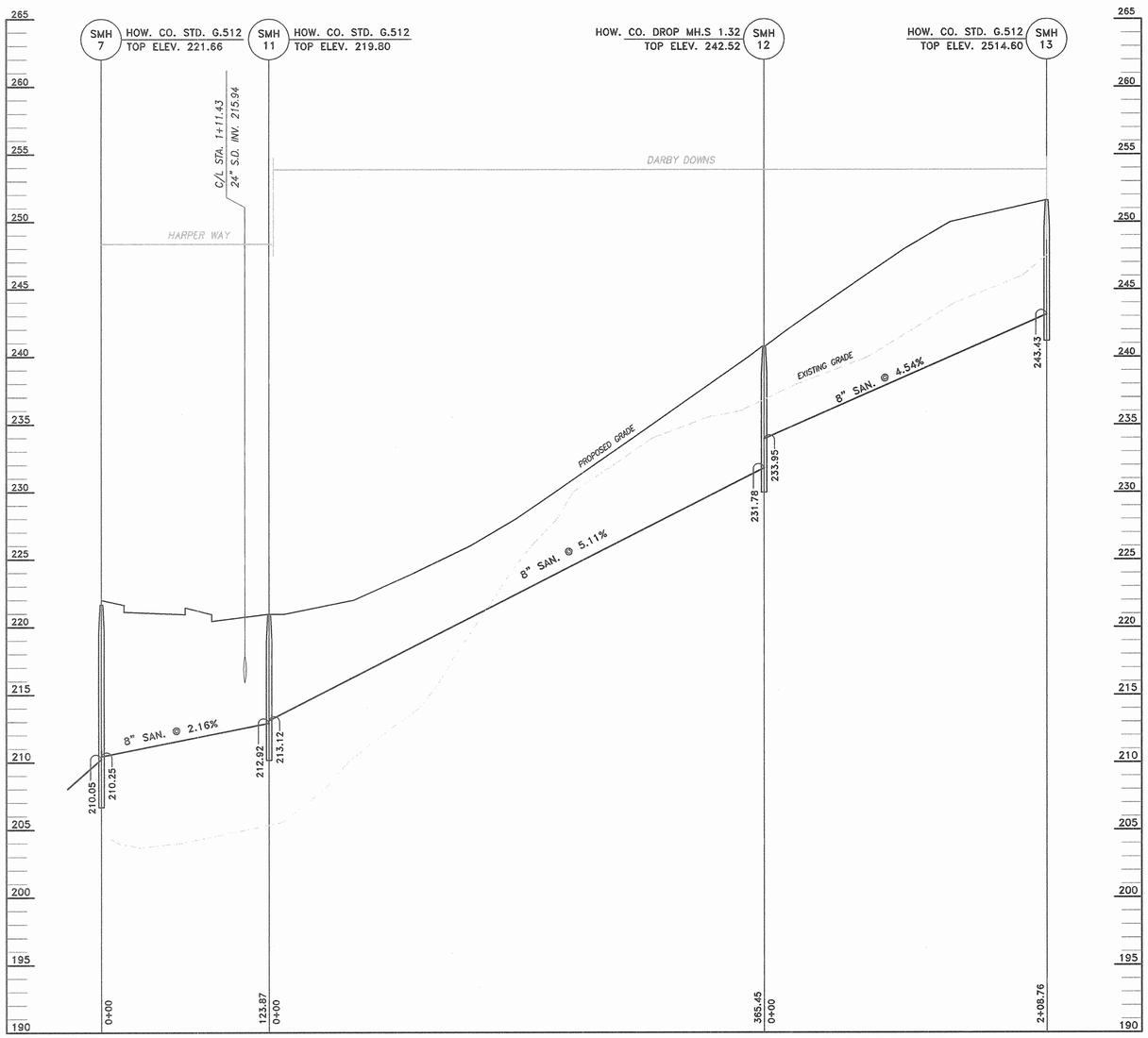

SMH 7 TO SMH 13

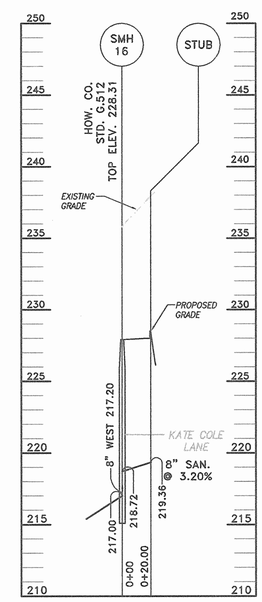

SMH 16 TO STUB

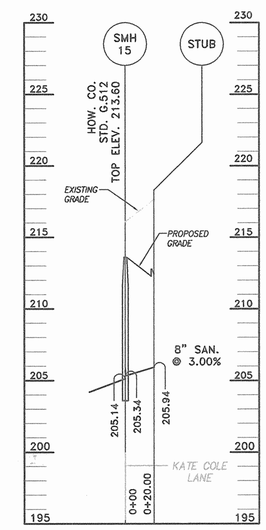

SMH 15 TO STUB

APPROVED: DEPARTMENT OF PLANNING AND ZONING	
CHIEF, DEVELOPMENT ENGINEERING DIVISION	DATE 9/6/06
CHIEF, DIVISION OF LAND DEVELOPMENT	DATE 9/14/06
DIRECTOR	DATE 9/18/06

STATE OF MARYLAND
STEVEN E. RICHARDSON
No. 9102
REGISTERED
PROFESSIONAL ENGINEER

7/24/06

OWNERS/DEVELOPERS
PARCEL 30 – GWENRIDGE LLC 8835-P COLUMBIA 100 PARKWAY COLUMBIA, MD 21045 PARCEL 38 – MEHTA CHARALUTA TRUST 5551 OAKLAND MILLS ROAD COLUMBIA, MD 21045
BRANTLY DEVELOPMENT GROUP, INC. 8835-P COLUMBIA 100 PARKWAY COLUMBIA, MD 21045

DRAWN: CND
DATE: MAR. 1, 2006
SCALE:
HORZ.= 1"=50'
VERT.= 1"=5'

DATE	REVISION	BY

ELKRIDGE–CROSSING–PHASE.ONE

PARCELS A–E
TAX MAP 38, GRID 2, PARCELS 30 & 38
FIRST ELECTION DISTRICT, HOWARD COUNTY, MARYLAND

PROFILES–SEWER No.3

JURI MAISTE – SITE DESIGN CONSULTANT
2823 Chenault Avenue, Baltimore, Maryland 21234
Phone: 410-661-8752 Fax: 410-661-8752
RICHARDSON ENGINEERING, LLC
730 W. Padonia Road, Suite 101, Cockeysville, Maryland 21030
Phone: 410-560-1502 Fax: 410-560-0827

SDP-04-017

G:\JOBS\JOB2620\A\DRAWINGS\PRIVATE\PLAN2SEW.DWG (LAYOUT=W3)

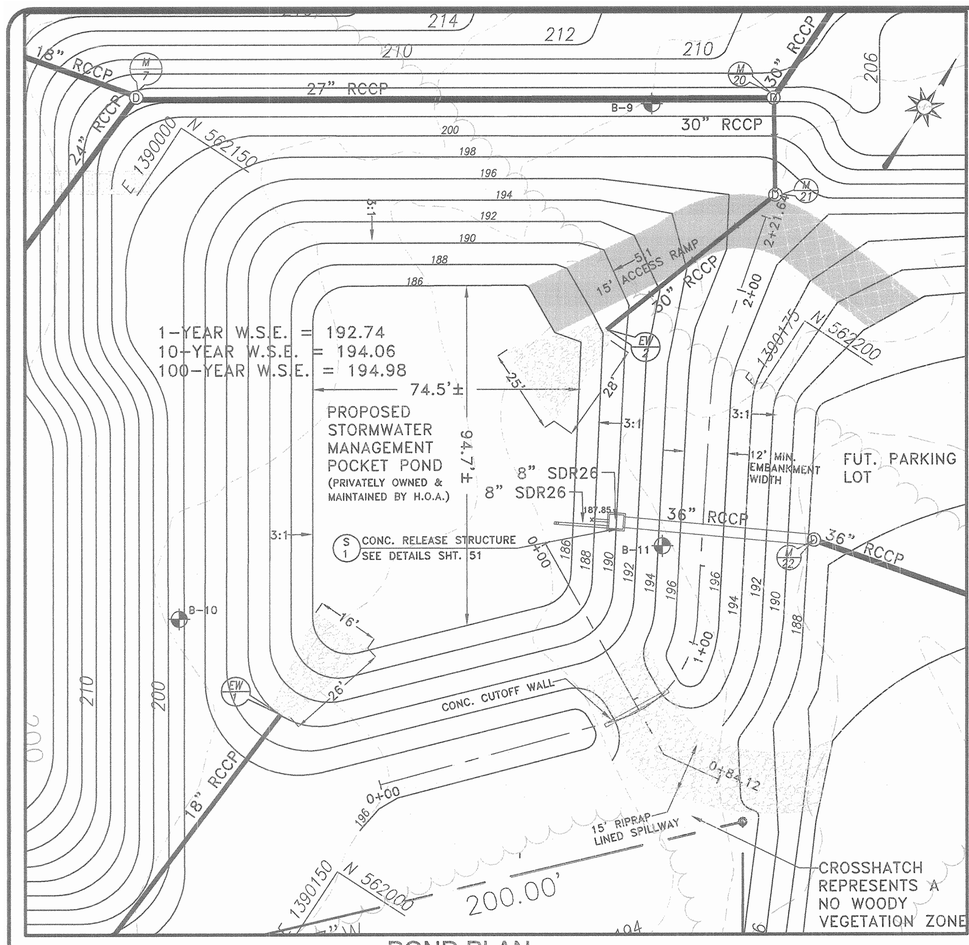

POND PLAN

SCALE: 1" = 20'

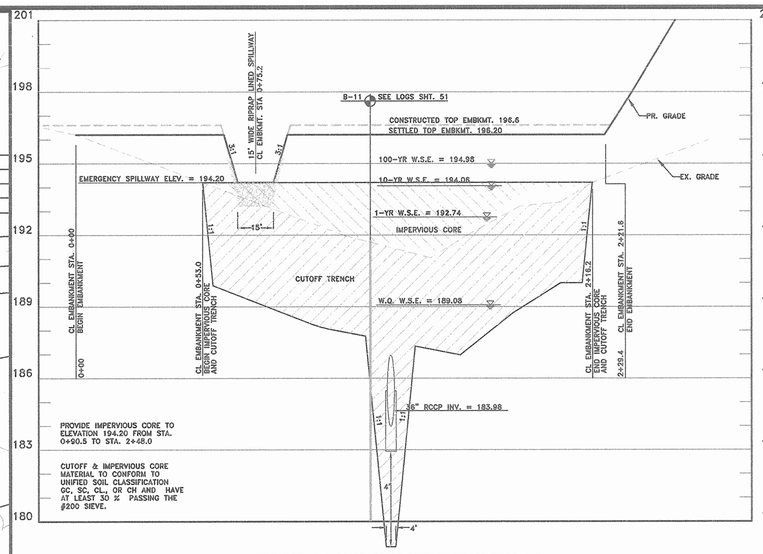

EMBANKMENT PROFILE

SCALE: HORZ. 1" = 30'
VERT. 1" = 3'

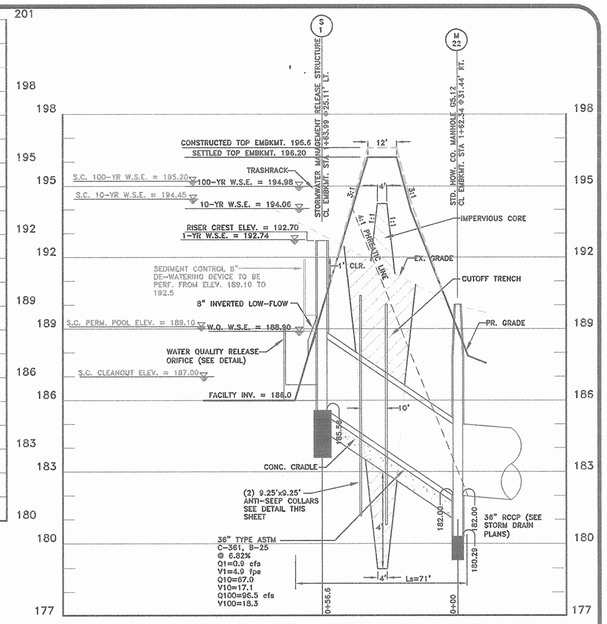

PRINCIPAL SPILLWAY PROFILE

SCALE: HORZ. 1" = 30'
VERT. 1" = 3'

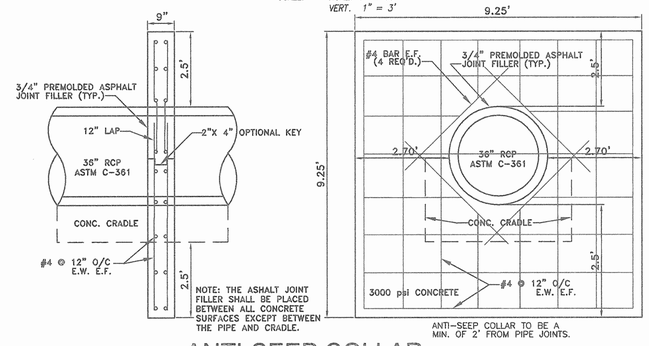

ANTI-SEEP COLLAR

NOT TO SCALE

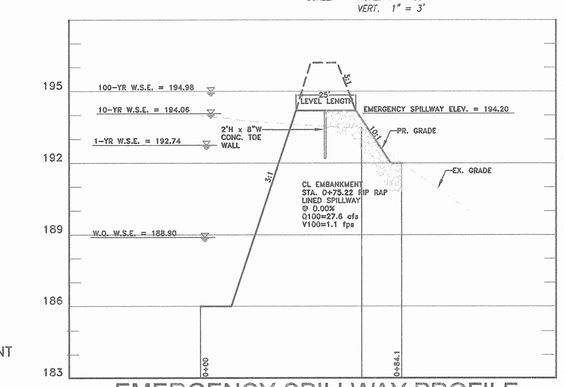

EMERGENCY SPILLWAY PROFILE

SCALE: HORZ. 1" = 30'
VERT. 1" = 3'

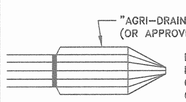

LOW FLOW TRASH RACK DETAIL

NO SCALE

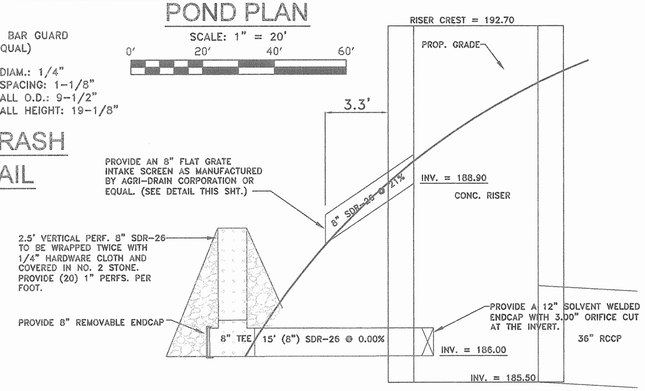

DE-WATERING DEVICE & LOW FLOW

NOT TO SCALE

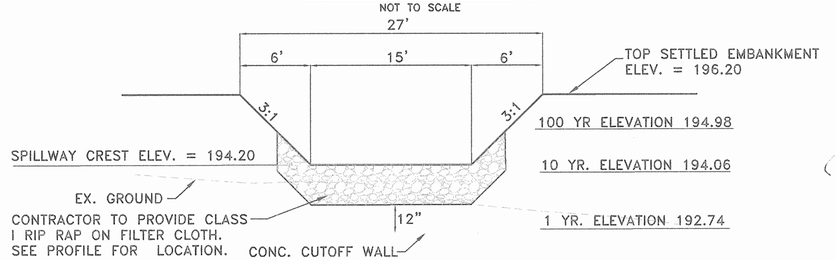

EMERGENCY SPILLWAY SECTION

NOT TO SCALE

CURVE	RADIUS	ARC LENGTH	CHORD LENGTH	CHORD BEARING	DELTA ANGLE
C1	31.0000'	38.6400'	36.1868'	N 06°04'18" E	71°24'59"
C2	35.0000'	9.6445'	9.6140'	N 21°44'32" W	15°47'18"

LINE	BEARING	DISTANCE
L1	N 41°32'37" E	67.8548'
L2	N 29°38'11" W	65.1529'
L3	N 13°50'54" W	40.3496'

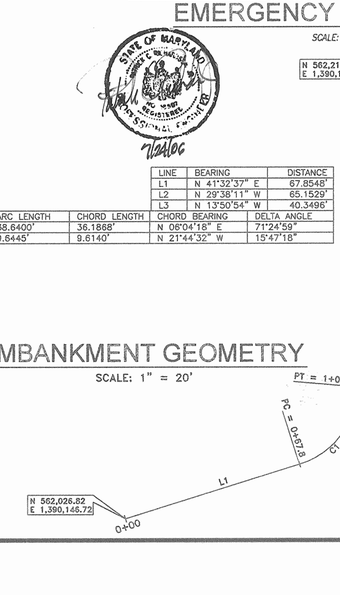

EMBANKMENT GEOMETRY

SCALE: 1" = 20'

OPERATION, MAINTENANCE & INSPECTION NOTE

INSPECTION OF THE POND SHOWN HEREON SHALL BE PERFORMED AT LEAST ANNUALLY, IN ACCORDANCE WITH THE CHECKLIST AND REQUIREMENTS CONTAINED WITHIN USDA, NRCS "STANDARDS AND SPECIFICATIONS FOR PONDS" (MD– 378). THE POND OWNER(S) AND ANY HEIRS, SUCCESSORS, OR ASSIGNS SHALL BE RESPONSIBLE FOR THE SAFETY OF THE POND AND THE CONTINUED OPERATION, SURVEILLANCE, INSPECTION, AND MAINTENANCE THEREOF. THE POND OWNER(S) SHALL PROMPTLY NOTIFY THE SOIL CONSERVATION DISTRICT OF ANY UNUSUAL OBSERVATIONS THAT MAY BE INDICATIONS OF DISTRESS SUCH AS EXCESSIVE SEEPAGE, TURBID SEEPAGE, SLIDING OR SLUMPING.

AS-BUILT CERTIFICATION

I HEREBY CERTIFY THAT THE FACILITY SHOWN ON THIS PLAN WAS CONSTRUCTED AS SHOWN ON THE "AS-BUILT PLANS, AND MEETS THE APPROVED PLANS AND SPECIFICATIONS.

SIGNATURE DATE

P.E. NO.

THESE PLANS HAVE BEEN REVIEWED FOR THE HOWARD SOIL CONSERVATION DISTRICT AND MEET THE TECHNICAL REQUIREMENTS FOR SMALL POND CONSTRUCTION, SOIL EROSION AND SEDIMENT CONTROL.

Jim Myers 8/22/06
USDA–NATURAL RESOURCES CONSERVATION SERVICE DATE

THESE PLANS FOR SMALL POND CONSTRUCTION, SOIL EROSION AND SEDIMENT CONTROL MEET THE REQUIREMENTS OF THE HOWARD SOIL CONSERVATION DISTRICT.

John R Robertson 8/22/06
HOWARD SOIL CONSERVATION DISTRICT DATE

APPROVED: DEPARTMENT OF PLANNING AND ZONING

CHIEF, DEVELOPMENT ENGINEERING DIVISION	DATE 9/6/06
CHIEF, DIVISION OF LAND DEVELOPMENT	DATE 9/11/06
DIRECTOR	DATE 9/12/06

OWNERS/DEVELOPERS

PARCEL 30 –
GWENRIDGE LLC
8835–P COLUMBIA 100 PARKWAY
COLUMBIA, MD 21045
PARCEL 38 –
MEHTA CHARALUTA TRUST
5551 OAKLAND MILLS ROAD
COLUMBIA, MD 21045

BRANTLY DEVELOPMENT GROUP, INC.
8835–P COLUMBIA 100 PARKWAY
COLUMBIA, MD 21045

DRAWN: J.D.	
DATE: MAY 10, 2006	
SCALE: AS SHOWN	

DATE	REVISION	BY

ELKRIDGE– CROSSING– PHASE ONE

PARCELS A–E
TAX MAP 38, GRID 2, PARCELS 30 & 38
FIRST ELECTION DISTRICT, HOWARD COUNTY, MARYLAND

STORMWATER MANAGEMENT PLAN, PROFILES & DETAILS

JURI MAISTE – SITE DESIGN CONSULTANT
2323 Chenault Avenue, Baltimore, Maryland 21234
Phone: 410–661–8752 Fax: 410–661–8752

RICHARDSON ENGINEERING, LLC
730 W. Padonia Road, Suite 101, Cockeysville, Maryland 21030
Phone: 410–560–1502 Fax: 410–560–0827

SDP-04-017

CONSTRUCTION SPECIFICATIONS

THESE SPECIFICATIONS ARE APPROPRIATE TO ALL PONDS WITHIN THE SCOPE OF THE STANDARD FOR PRACTICE MD-378. ALL REFERENCES TO ASTM AND AASHTO SPECIFICATIONS APPLY TO THE MOST RECENT VERSION.

A. SITE PREPARATION

AREAS DESIGNATED FOR BORROW AREAS, EMBANKMENT, AND STRUCTURAL WORKS SHALL BE CLEARED, GRUBBED AND STRIPPED OF TOPSOIL. ALL TREES, VEGETATION, ROOTS AND OTHER OBJECTIONABLE MATERIAL SHALL BE REMOVED. CHANNEL BANKS AND SHARP BREAKS SHALL BE SLOPED TO NO STEEPER THAN 1:1. ALL TREES SHALL BE CLEARED AND GRUBBED WITHIN 15 FEET OF THE TOE OF EMBANKMENT.

AREAS TO BE COVERED BY THE RESERVOIR WILL BE CLEARED OF ALL TREES, BRUSH, LOGS, FENCES, RUBBISH AND OTHER OBJECTIONABLE MATERIAL UNLESS OTHERWISE DESIGNATED ON THE PLANS. TREES, BRUSH AND STUMPS SHALL BE CUT APPROXIMATELY LEVEL WITH THE GROUND SURFACE. FOR DRY STORMWATER MANAGEMENT PONDS, A MIN OF A 25 FOOT RADIUS AROUND THE INLET STRUCTURE SHALL BE CLEARED.

ALL CLEARED AND GRUBBED MATERIAL SHALL BE DISPOSED OF OUTSIDE AND BELOW THE LIMITS OF THE DAM AND RESERVOIR AS DIRECTED BY THE OWNER OR HIS REPRESENTATIVE. WHEN SPECIFIED, A SUFFICIENT QUANTITY OF TOPSOIL WILL BE STOCKPILED IN A SUITABLE LOCATION FOR USE ON THE EMBANKMENT AND OTHER DESIGNATED AREAS.

B. EARTH FILL

1. MATERIAL: THE FILL MATERIAL SHALL BE TAKEN FROM APPROVED DESIGNATED BORROW AREAS. IT SHALL BE FREE OF ROOTS, STUMPS, WOOD, RUBBISH, STONES GREATER THAN 6", FROZEN OR OTHER OBJECTIONABLE MATERIALS. FILL MATERIAL FOR THE CENTER OF THE EMBANKMENT, AND CUT OFF TRENCH SHALL CONFORM TO UNIFIED SOIL CLASSIFICATION GC, SC, CH, OR CL AND MUST HAVE AT LEAST 30% PASSING THE #200 SIEVE. CONSIDERATION MAY BE GIVEN TO THE USE OF OTHER MATERIALS IN THE EMBANKMENT IF DESIGNED BY A GEOTECHNICAL ENGINEER. SUCH SPECIAL DESIGNS MUST HAVE CONSTRUCTION SUPERVISED BY A GEOTECHNICAL ENGINEER. MATERIALS USED IN THE OUTER SHELL OF THE EMBANKMENT MUST HAVE THE CAPABILITY TO SUPPORT VEGETATION OF THE QUALITY REQUIRED TO PREVENT EROSION OF THE EMBANKMENT.

2. PLACEMENT: AREAS ON WHICH FILL IS TO BE PLACED SHALL BE SCARIFIED PRIOR TO PLACEMENT OF FILL. FILL MATERIALS SHALL BE PLACED IN MAXIMUM 8 INCH THICK (BEFORE COMPACTION) LAYERS WHICH ARE TO BE CONTINUOUS OVER THE ENTIRE LENGTH OF THE FILL. THE MOST PERMEABLE BORROW MATERIAL SHALL BE PLACED IN THE DOWNSTREAM PORTIONS OF THE EMBANKMENT. THE PRINCIPAL SPILLWAY MUST BE INSTALLED CONCURRENTLY WITH FILL PLACEMENT AND NOT EXCAVATED INTO THE EMBANKMENT.

3. COMPACTION: THE MOVEMENT OF THE HAULING AND SPREADING EQUIPMENT OVER THE FILL SHALL BE CONTROLLED SO THAT THE ENTIRE SURFACE OF EACH LIFT SHALL BE TRAVERSED BY NOT LESS THAN ONE TREAD TRACK OF HEAVY EQUIPMENT OR COMPACTION SHALL BE ACHIEVED BY A MINIMUM OF FOUR COMPLETE PASSES OF A SHEEPSFOOT, RUBBER TIRED OR VIBRATORY ROLLER. FILL MATERIAL SHALL CONTAIN SUFFICIENT MOISTURE SUCH THAT THE REQUIRED DEGREE OF COMPACTION WILL BE OBTAINED WITH THE EQUIPMENT USED. THE FILL MATERIAL SHALL CONTAIN SUFFICIENT MOISTURE SO THAT IF FORMED INTO A BALL IT WILL NOT CRUMBLE, YET NOT BE SO WET THAT WATER CAN BE SQUEEZED OUT.

WHEN REQUIRED BY THE REVIEWING AGENCY THE MINIMUM REQUIRED DENSITY SHALL NOT BE LESS THAN 95% OF MAXIMUM DRY DENSITY WITH A MOISTURE CONTENT WITHIN Ñ2% OF THE OPTIMUM. EACH LAYER OF FILL SHALL BE COMPACTED AS NECESSARY TO OBTAIN THE DENSITY AND IS TO BE CERTIFIED BY THE ENGINEER AT THE TIME OF CONSTRUCTION. ALL COMPACTION IS TO BE DETERMINED BY AASHTO METHOD T-99 (STANDARD PROCTOR).

4. CUT OFF TRENCH: THE CUTOFF TRENCH SHALL BE EXCAVATED INTO IMPERVIOUS MATERIAL ALONG OR PARALLEL TO THE CENTERLINE OF THE EMBANKMENT AS SHOWN ON THE PLANS. THE BOTTOM WIDTH OF THE TRENCH SHALL BE GOVERNED BY THE EQUIPMENT USED FOR EXCAVATION, WITH THE MINIMUM WIDTH BEING FOUR FEET. THE DEPTH SHALL BE AT LEAST FOUR FEET BELOW EXISTING GRADE OR AS SHOWN ON THE PLANS. THE SIDE SLOPES OF THE TRENCH SHALL BE 1:1 OR FLATTER. THE BACKFILL SHALL BE COMPACTED WITH CONSTRUCTION EQUIPMENT, ROLLERS, OR HAND TAMPERS TO ASSURE MAXIMUM DENSITY AND MINIMUM PERMEABILITY.

5. EMBANKMENT CORE: THE CORE SHALL BE PARALLEL TO THE CENTERLINE OF THE EMBANKMENT AS SHOWN ON THE PLANS. THE TOP WIDTH OF THE CORE SHALL BE A MINIMUM OF FOUR FEET. THE HEIGHT SHALL EXTEND UP TO AT LEAST THE 10 YEAR WATER ELEVATION OR AS SHOWN ON THE PLANS. THE SIDE SLOPES SHALL BE 1:1 OR FLATTER. THE CORE SHALL BE COMPACTED WITH CONSTRUCTION EQUIPMENT, ROLLERS, OR HAND TAMPERS TO ASSURE MAXIMUM DENSITY AND MINIMUM PERMEABILITY. IN ADDITION, THE CORE SHALL BE PLACED CONCURRENTLY WITH THE OUTER SHELL OF THE EMBANKMENT.

C. STRUCTURE BACKFILL

BACKFILL ADJACENT TO PIPES OR STRUCTURES SHALL BE OF THE TYPE AND QUALITY CONFORMING TO THAT SPECIFIED FOR THE ADJOINING FILL MATERIAL. THE FILL SHALL BE PLACED IN HORIZONTAL LAYERS NOT TO EXCEED FOUR INCHES IN THICKNESS AND COMPACTED BY HAND TAMPERS OR OTHER MANUALLY DIRECTED COMPACTION EQUIPMENT. THE MATERIAL NEEDS TO FILL COMPLETELY ALL SPACES UNDER AND ADJACENT TO THE PIPE. AT NO TIME DURING THE BACKFILLING OPERATION SHALL DRIVEN EQUIPMENT BE ALLOWED TO OPERATE CLOSER THAN FOUR FEET, MEASURED HORIZONTALLY, TO ANY PART OF A STRUCTURE. UNDER NO CIRCUMSTANCES SHALL EQUIPMENT BE DRIVEN OVER ANY PART OF A CONCRETE STRUCTURE OR PIPE, UNLESS THERE IS A COMPACTED FILL OF 24" OR GREATER OVER THE STRUCTURE OR PIPE.

STRUCTURE BACKFILL MAY BE FLOWABLE FILL MEETING THE REQUIREMENTS OF MARYLAND DEPARTMENT OF TRANSPORTATION, STATE HIGHWAY ADMINISTRATION STANDARD SPECIFICATIONS FOR CONSTRUCTION AND MATERIALS, SECTION 313 AS MODIFIED. THE MIXTURE SHALL HAVE A 100-200 PSI; 28 DAY UNCONFINED COMPRESSIVE STRENGTH. THE FLOWABLE FILL SHALL HAVE A MINIMUM RESISTIVITY OF 2,000 OHM-CM. MATERIAL SHALL BE PLACED SUCH THAT A MINIMUM OF 6" (MEASURED PERPENDICULAR TO THE OUTSIDE OF THE PIPE) OF FLOWABLE FILL SHALL BE UNDER (BEDDING), OVER AND, ON THE SIDES OF THE PIPE. IT ONLY NEEDS TO EXTEND UP TO THE SPRING LINE FOR RIGID CONDUITS. AVERAGE SLUMP OF THE FILL SHALL BE OF THE FILL SHALL BE 7" TO ASSURE FLOWABILITY OF THE MATERIAL. ADEQUATE MEASURES SHALL BE TAKEN (SAND BAGS, ETC.) TO PREVENT FLOATING THE PIPE. WHEN USING FLOWABLE FILL, ALL METAL PIPE SHALL BE BITUMINOUS COATED. ANY ADJOINING SOIL FILL SHALL BE PLACED IN HORIZONTAL LAYERS NOT TO EXCEED FOUR INCHES IN THICKNESS AND COMPACTED BY HAND TAMPERS OR OTHER MANUALLY DIRECTED COMPACTION EQUIPMENT. THE MATERIAL SHALL COMPLETELY FILL ALL VOIDS ADJACENT TO THE FLOWABLE FILL ZONE. AT NOT TIME DURING THE BACKFILLING OPERATION SHALL DRIVEN EQUIPMENT BE ALLOWED TO OPERATE CLOSER THAN FOUR FEET, MEASURED HORIZONTALLY, TO ANY PART OF THE STRUCTURE. UNDER NO CIRCUMSTANCES SHALL BE EQUIPMENT BE DRIVEN OVER ANY PART OF THE STRUCTURE OR PIPE UNLESS THERE IS A COMPACTED FILL OF 24" OR GREATER OVER THE STRUCTURE OF PIPE. BACKFILL MATERIAL OUTSIDE THE STRUCTURAL BACKFILL (FLOWABLE FILL) ZONE SHALL BE OF THE TYPE AND QUALITY CONFORMING TO THAT SPECIFIED FOR THE CORE OF THE EMBANKMENT OR OTHER EMBANKMENT MATERIALS.

D. PIPE CONDUITS

ALL PIPES SHALL BE CIRCULAR IN CROSS SECTION.

1. REINFORCED CONCRETE PIPE

ALL OF THE FOLLOWING CRITERIA SHALL APPLY FOR REINFORCED CONCRETE PIPE:

A. MATERIALS: REINFORCED CONCRETE PIPE SHALL HAVE BELL AND SPIGOT JOINTS WITH RUBBER GASKETS AND SHALL EQUAL OR EXCEED ASTM C-361.

B. BEDDING: REINFORCED CONCRETE PIPE CONDUITS SHALL BE LAID IN A CONCRETE BEDDING/CRADLE FOR THEIR ENTIRE LENGTH. THIS BEDDING/CRADLE SHALL CONSIST OF HIGH SLUMP CONCRETE PLACED UNDER THE PIPE AND UP THE SIDES OF THE PIPE AT LEAST 50% OF ITS OUTSIDE DIAMETER WITH A MINIMUM THICKNESS OF 6 INCHES. WHEN A CONCRETE CRADLE IS NOT NEEDED FOR STRUCTURAL REASONS, FLOWABLE FILL MAY BE USED AS DESCRIBED IN THE "STRUCTURE BACKFILL" SECTION OF THIS STANDARD. GRAVEL BEDDING IS NOT PERMITTED.

C. LAYING PIPE: BELL AND SPIGOT PIPE SHALL BE PLACED WITH THE BELL END UPSTREAM. JOINTS SHALL BE MADE IN ACCORDANCE WITH RECOMMENDATIONS OF THE MANUFACTURER OF THE MATERIAL. AFTER THE JOINTS ARE SEALED FOR THE ENTIRE LINE, THE BEDDING SHALL BE PLACED SO THAT ALL SPACES UNDER THE PIPE ARE FILLED. CARE SHALL BE EXERCISED TO PREVENT ANY DEVIATION FROM THE ORIGINAL LINE AND GRADE OF THE PIPE. THE FIRST JOINT MUST BE LOCATED WITHIN 4 FEET FROM THE RISER.

D. BACKFILLING SHALL CONFORM TO "STRUCTURE BACKFILL".

E. OTHER DETAILS (ANTI-SEEP COLLARS, VALVES, ETC.) SHALL BE AS SHOWN ON THE DRAWINGS.

2. PLASTIC PIPE

THE FOLLOWING CRITERIA SHALL APPLY FOR PLASTIC PIPE:

A. MATERIALS: PVC PIPE SHALL BE PVC-1120 OR PVC-1220 CONFORMING TO ASTM D-1785 OR ASTM D-2241. CORRUGATED HIGH DENSITY POLYETHYLENE (HDPE) PIPE, COUPLINGS AND FITTINGS SHALL CONFORM TO THE FOLLOWING: 4"-10" INCH PIPE SHALL MEET THE REQUIREMENTS OF AASHTO M252 TYPE S, AND 12"-24" SHALL MEET THE REQUIREMENTS OF AASHTO M294 TYPE S.

B. JOINTS AND CONNECTIONS TO ANTI-SEEP COLLARS SHALL BE COMPLETELY WATERTIGHT.

C. BEDDING - THE PIPE SHALL BE FIRMLY AND UNIFORMLY BEDDED THROUGHOUT ITS ENTIRE LENGTH. WHERE ROCK OR SOFT, SPONGY OR OTHER UNSTABLE SOIL IS ENCOUNTERED, ALL SUCH MATERIAL SHALL BE REMOVED AND REPLACED WITH SUITABLE EARTH COMPACTED TO PROVIDE ADEQUATE SUPPORT.

D. BACKFILLING SHALL CONFORM TO "STRUCTURE BACKFILL".

E. OTHER DETAILS (ANTI-SEEP COLLARS, VALVES, ETC.) SHALL BE AS SHOWN ON THE DRAWINGS.

4. DRAINAGE DIAPHRAGMS: WHEN A DRAINAGE DIAPHRAGM IS USED, A REGISTERED PROFESSIONAL ENGINEER WILL SUPERVISE THE DESIGN AND CONSTRUCTION INSPECTION.

E. CONCRETE

CONCRETE SHALL MEET THE REQUIREMENTS OF MARYLAND DEPARTMENT OF TRANSPORTATION, STATE HIGHWAY ADMINISTRATION STANDARD SPECIFICATIONS FOR CONSTRUCTION AND MATERIALS, SECTION 414, MIX NO. 3.

F. ROCK RIPRAP

ROCK RIPRAP SHALL MEET THE REQUIREMENTS OF MARYLAND DEPARTMENT OF TRANSPORTATION, STATE HIGHWAY ADMINISTRATION STANDARD SPECIFICATIONS FOR CONSTRUCTION AND MATERIALS, SECTION 311. GEOTEXTILE SHALL BE PLACED UNDER ALL RIPRAP AND SHALL MEET THE REQUIREMENTS OF MARYLAND DEPARTMENT OF TRANSPORTATION, STATE HIGHWAY ADMINISTRATION STANDARD SPECIFICATIONS FOR CONSTRUCTION AND MATERIALS, SECTION 921.09, CLASS C.

I. EROSION AND SEDIMENT CONTROL

CONSTRUCTION OPERATIONS WILL BE CARRIED OUT IN SUCH A MANNER THAT EROSION WILL BE CONTROLLED AND WATER AND AIR POLLUTION MINIMIZED. STATE AND LOCAL LAWS CONCERNING POLLUTION ABATEMENT WILL BE FOLLOWED. CONSTRUCTION PLANS SHALL DETAIL EROSION AND SEDIMENT CONTROL MEASURES.

M. CONSTRUCTION INSPECT. BY DESIGNATED ENGINEERS

THE CONSTRUCTION OF THE STORMWATER MANAGEMENT FACILITY AND DECLARATION THAT THE FACILITY HAS BEEN BUILT IN ACCORDANCE WITH THE DRAWINGS AND SPECIFICATIONS SHALL BE UNDER THE SUPERVISION OF A REGISTERED PROFESSIONAL ENGINEER. THE CONTRACTOR SHALL PROVIDE THE ENGINEER WITH A MINIMUM OF TWO WEEKS ADVANCE NOTICE OF THE DATE THAT HE EXPECTS TO START CONSTRUCTION. AT THIS SAME TIME, THE CONTRACTOR SHALL ALSO PROVIDE THE ENGINEER, IN WRITING, A LIST OF ALL MATERIALS TO BE INCORPORATED INTO THE WORK, ALONG WITH THEIR SOURCES OF SUPPLY. THE ENGINEER SHALL BE GIVEN SUFFICIENT NOTICE OF ALL UPCOMING ACTIVITIES, PRIOR TO AND DURING THE PROCESS OF THE WORK, IN ORDER THAT ARRANGEMENTS CAN BE MADE FOR:

1. INSPECTION OF ALL MATERIALS AND THEIR ASSOCIATED CERTIFICATIONS PRIOR TO THEIR INSTALLATION/PLACEMENT IN THE PROPOSED WORK.
2. INSPECTION AND RELATED TESTING OF THE CONSTRUCTION OF THE CUTOFF/CORE TRENCH(ES), AND POND EMBANKMENT; INSTALLATION OF THE PRINCIPAL SPILLWAY, ANTI-SEEP COLLARS AND RISER ASSEMBLY; CONSTRUCTION OF THE EMERGENCY SPILLWAY AND OTHER CRITICAL FLOW CHANNELS.
3. INSPECTION OF ALL OTHER SIGNIFICANT CONSTRUCTION/INSTALLATION ITEMS FOR THE PROPOSED FACILITY AND RELATED PIPING, INCLUDING BACKFILLING AND SOIL COMPACTION. THE ENGINEER SHALL ALSO DIRECT THE HANDLING OF WATER DURING CONSTRUCTION, MINOR CHANGES NOT AFFECTING THE INTEGRITY OF THE DAM IN ORDER TO COMPENSATE FOR UNUSUAL SOIL CONDITIONS, AND THE REMOVAL AND REPLACEMENT OF DEFECTIVE FILL.

THESE PLANS HAVE BEEN REVIEWED FOR THE HOWARD SOIL CONSERVATION DISTRICT AND MEET THE TECHNICAL REQUIREMENTS FOR SMALL POND CONSTRUCTION, SOIL EROSION AND SEDIMENT CONTROL.

USDA-NATURAL RESOURCES CONSERVATION SERVICE — DATE 8/22/06

THESE PLANS FOR SMALL POND CONSTRUCTION, SOIL EROSION AND SEDIMENT CONTROL MEET THE REQUIREMENTS OF THE HOWARD SOIL CONSERVATION DISTRICT.

HOWARD SOIL CONSERVATION DISTRICT — DATE 8/22/06

APPROVED: DEPARTMENT OF PLANNING AND ZONING

CHIEF, DEVELOPMENT ENGINEERING DIVISION — DATE 9/6/06

CHIEF, DIVISION OF LAND DEVELOPMENT — DATE 9/14/06

DIRECTOR — DATE 9/14/06

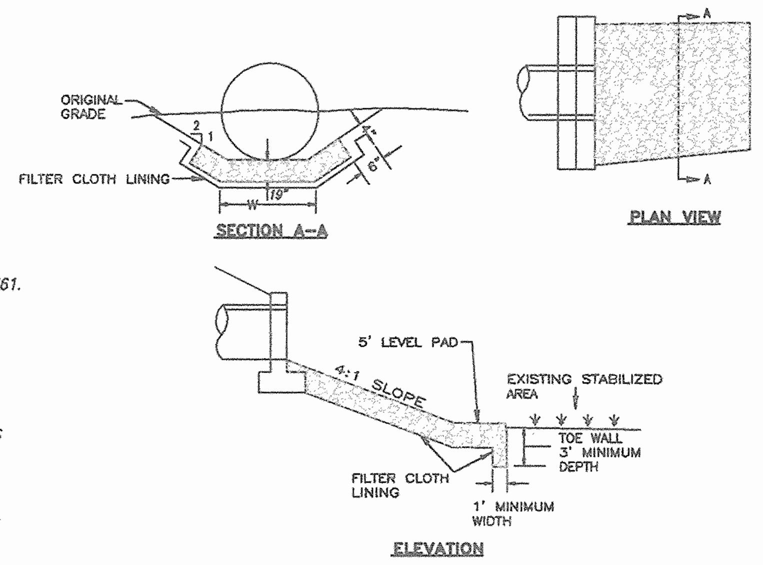

STRUCTURE	Q (CFS)	V (FPS)	RIP RAP CLASS	LENGTH	WIDTH (W)
EW - 1	7.75	7.68	I	26'	VARIES SEE PLAN
EW - 2	10.11	2.5	I	28'	

FILTER FABRIC LINING SHALL BE EMBEDDED A MINIMUM OF 4" AND SHALL EXTEND AT LEAST 6" BEYOND THE EDGE OF THE RIP-RAP

NOTES:
1. FILTER CLOTH SHALL BE GEOTEXTILE CLASS SE NONWOVEN FABRIC

OUTLET CHANNEL DETAILS

NOT TO SCALE

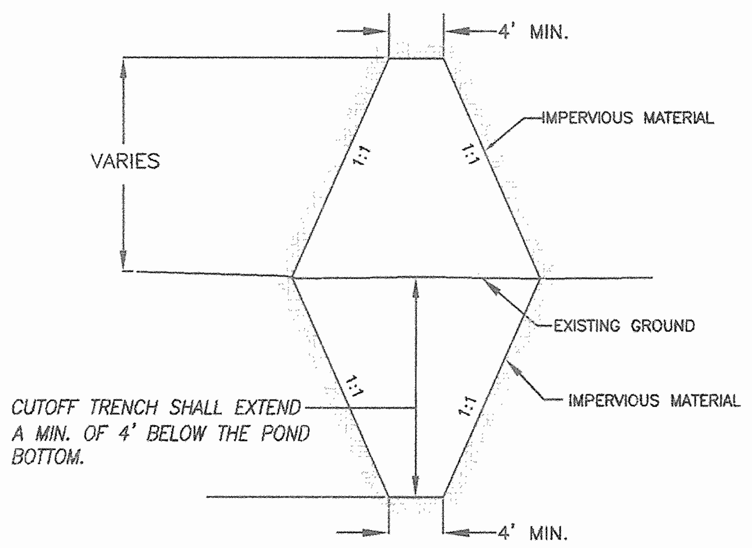

CUTOFF TRENCH SHALL EXTEND A MIN. OF 4' BELOW THE POND BOTTOM.

NOTE SOILS SHALL CONFORM TO 95% OF THE T-99 MOISTURE-DENSITY BASED UPON ASTM D-698. ALL SOILS SHALL ALSO BE WITHIN 2% OF THEIR OPTIMAL MOISTURE CONTENT. SOILS SHALL ALSO CONFORM TO UNIFIED SOIL CLASSIFICATION GC, SC, CH, OR CL AND SHALL HAVE A MINIMUM OF 30% PASSING THE #200 SIEVE.

IMPERVIOUS CORE DETAIL & CUTOFF TRENCH DETAIL

NOT TO SCALE

IMPERVIOUS CORE DETAIL

NOT TO SCALE

Qwq = 0.50 cfs
Vwq = 0.45 fps
Q10 = 3.9 cfs
V10 = 1.05 fps
SLOPE = 2.00%
FLOW DEPTH (10YR) = 0.60'

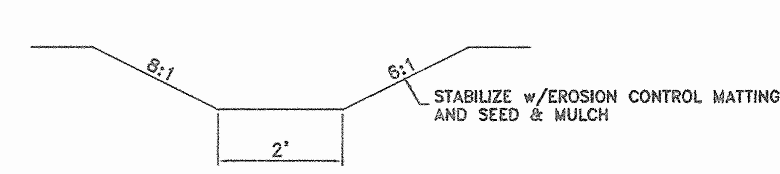

SWALE 1 SECTION

NOT TO SCALE

Qwq = 0.29 cfs
Vwq = 0.44 fps
Q10 = 1.8 cfs
V10 = 0.85 fps
SLOPE = 2.63%
FLOW DEPTH (10YR) = 0.44'

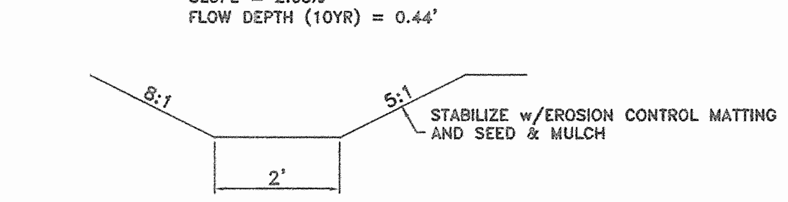

SWALE 2 SECTION

NOT TO SCALE

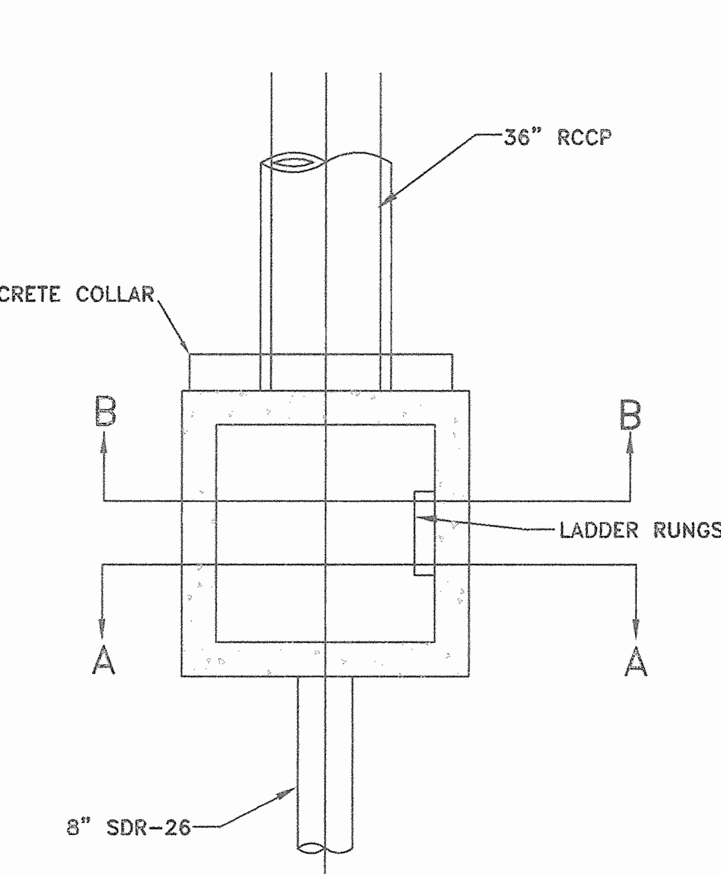

PLAN

NOT TO SCALE

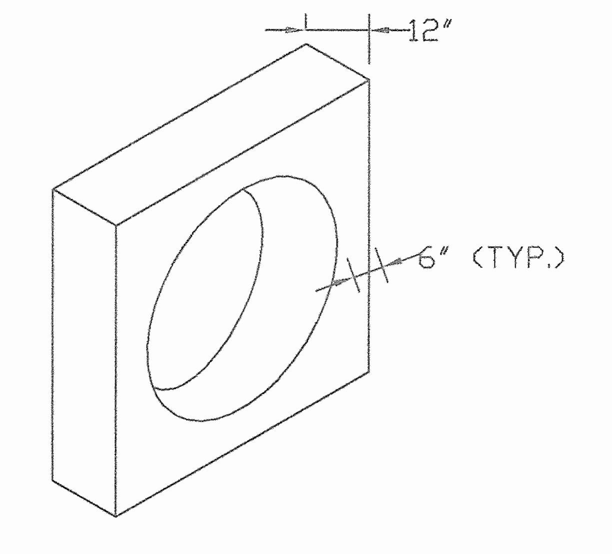

COLLAR DETAIL

NOT TO SCALE

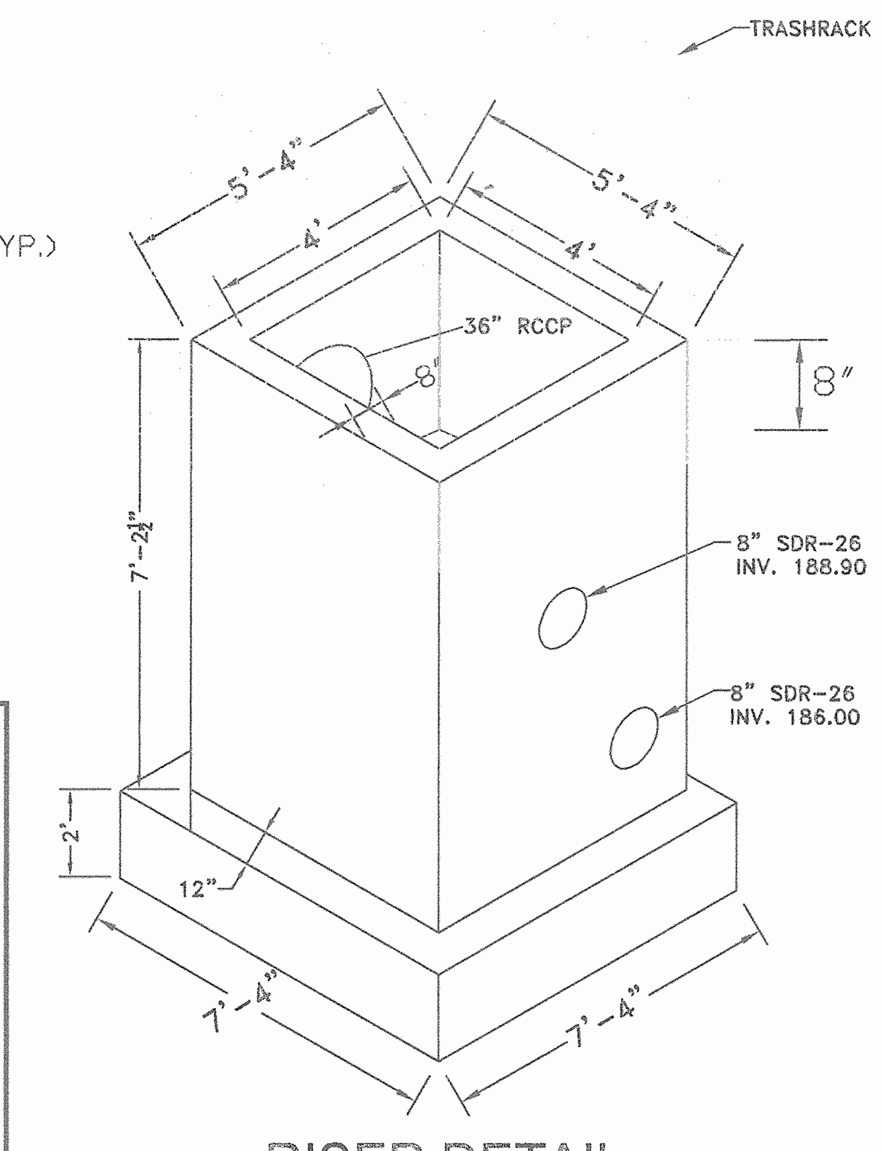

RISER DETAIL

NOT TO SCALE

STRUCTURAL NOTES

1. CONCRETE CONSTRUCTION SHALL BE DESIGNED, REINFORCED, AND CONSTRUCTED IN ACCORDANCE WITH ACI 318 "BUILDING CODE REQUIREMENTS FOR REINFORCED CONCRETE."
2. CONCRETE SHOWN ON THIS DRAWING SHALL BE SHA MIX NO. 3.
3. REINFORCING STEEL SHALL BE DEFORMED STEEL BARS CONFORMING TO ASTM A615, GRADE 60.
4. ADDITIONAL BARS SHALL BE PLACED AT ALL OPENINGS.
5. CONTRACTOR MAY (AT HIS OPTION) FURNISH THE RISER STRUCTURES AS PRECAST UNITS, PROVIDED THAT SHOP DRAWINGS OF THE PRECAST STRUCTURES ARE SUBMITTED TO, AND APPROVED BY, THE ENGINEER AND THE CITY OF ABERDEEN PRIOR TO CONSTRUCTION.
6. CHAMFER ALL EXPOSED CONCRETE EDGES 3/4-INCH.
7. TRASH RACK & ORIFICE GRATING ASSEMBLIES SHALL BE HOT DIPPED GALVANIZED AFTER FABRICATION.
8. IF RISERS ARE PRECAST, A WATERTIGHT CONNECTION SHALL BE PROVIDED BETWEEN THE RISERS AND THE BASES USING KEY AND REBAR CONNECTION
9. IF RISERS ARE PRECAST, PROVIDE A WATERTIGHT COLLAR 12" x 12" THICK AT BARREL PIPE CONNECTION AT RISER. IF RISER IS CAST IN PLACE, CAST WALL DIRECTLY AROUND BARREL PIPE TO FORM A WATERTIGHT SEAL.

SWM ELEVATION SUMMARY
1-YEAR W.S.E. = 192.74
10-YEAR W.S.E. = 194.06
100-YEAR W.S.E. = 194.98

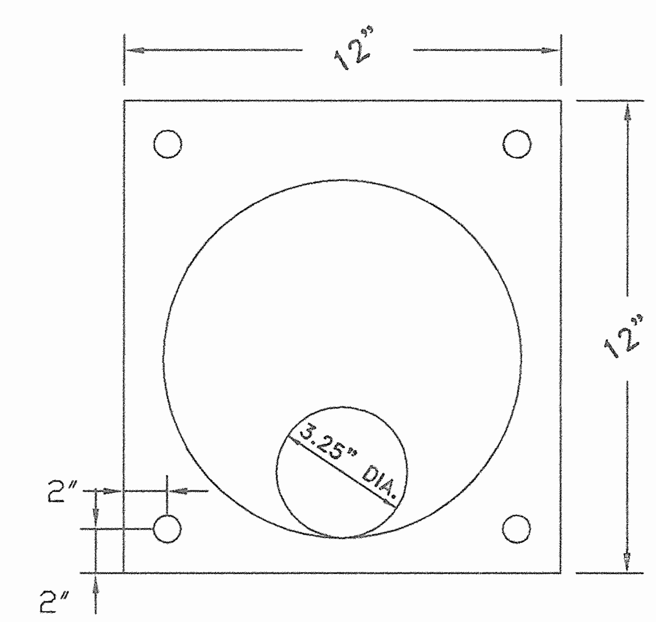

ATTACH A 12"x12"x1/4" STAINLESS STEEL PLATE USING A MIN. OF 4 (1/2") S.S. ANCHOR BOLTS. A SILICON SEALER SHALL BE PROVIDED ALONG THE PLATE PERIMETER.

ORIFICE PLATE DETAIL

NOT TO SCALE

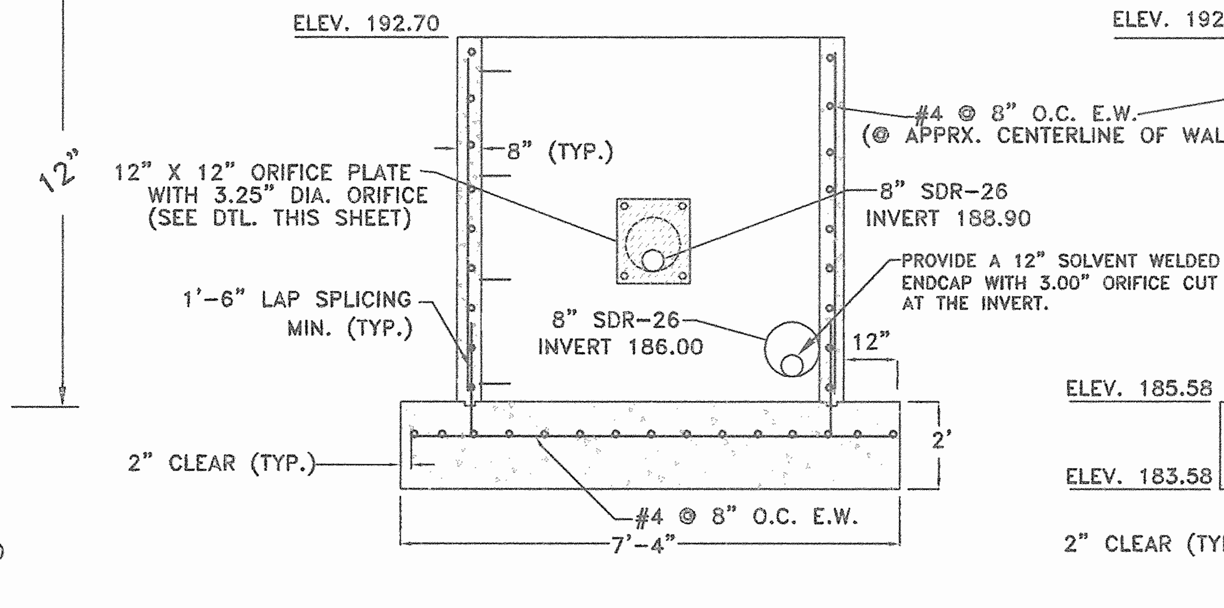

SECTION A-A

NOT TO SCALE

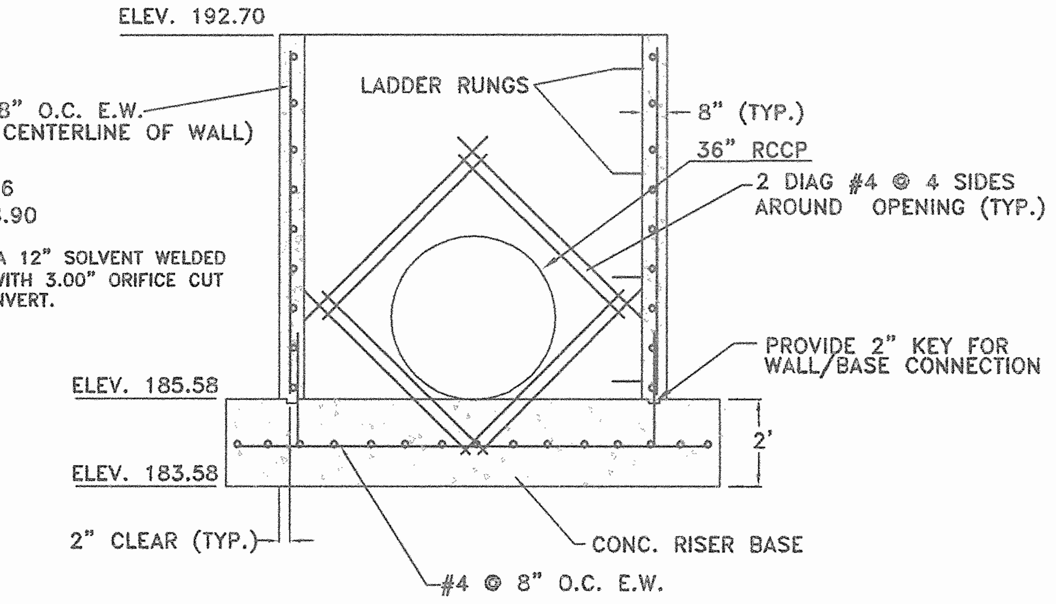

SECTION B-B

NOT TO SCALE

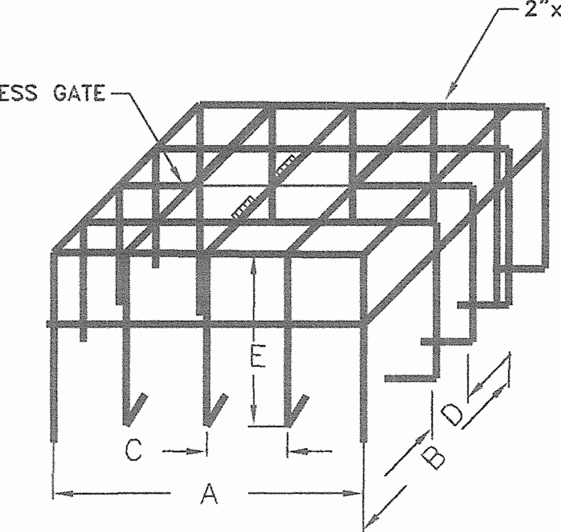

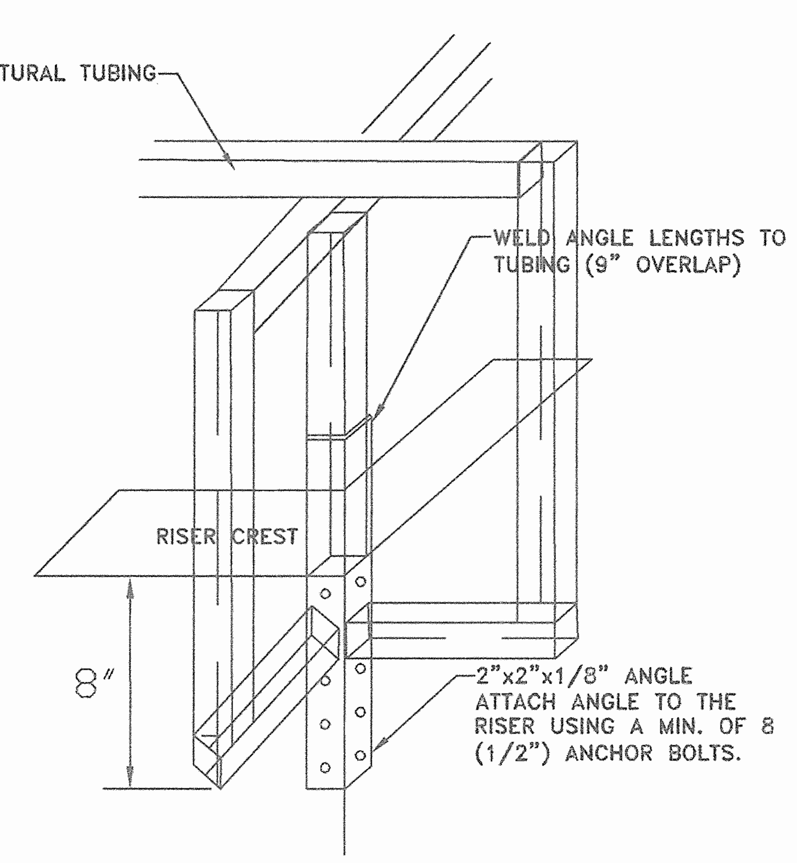

TRASHRACK NOTES

1. THE CONTRACTOR SHALL FIELD MEASURE EACH STRUCTURE TO VERIFY DIMENSIONS FOR PRE-FABRICATION OF THE TRASHRACKS
2. THE TRASHRACK SHALL BE CONSTRUCTED TO PROVIDE A 24"x24" HINGED ACCESS. A LOCKING MECHANISM SHALL BE PROVIDED IN ORDER TO LIMIT ACCESS.
3. THE TRASHRACK SHALL BE GALVANIZED AFTER FABRICATION.
4. UPON INSTALLATION OF THE TRASHRACK THE STRUCTURE TUBING SHALL BE PAINTED WITH BATTLESHIP GREY PAINT.

STRUCTURE	A	B	C	D	E
S-1	6'-0"	6'-0"	8"	8"	38"

TRASH RACK DETAIL

NOT TO SCALE

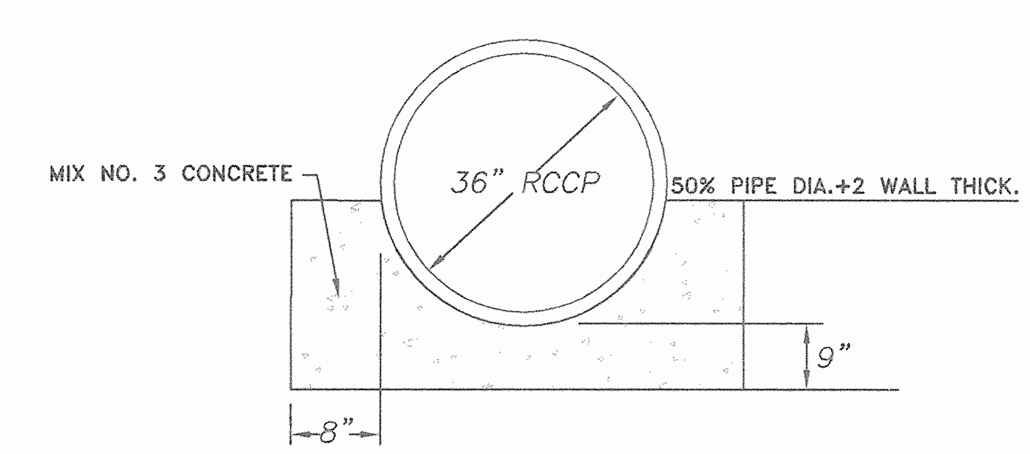

CONCRETE CRADLE

NOT TO SCALE

7/24/06

OWNERS/DEVELOPERS
PARCEL 30 - GWENRIDGE LLC 8835-P COLUMBIA 100 PARKWAY COLUMBIA, MD 21045 PARCEL 38 - MEHTA CHARALUTA TRUST 5551 OAKLAND MILLS ROAD COLUMBIA, MD 21045
BRANTLY DEVELOPMENT GROUP, INC. 8835-P COLUMBIA 100 PARKWAY COLUMBIA, MD 21045

DRAWN: J.D.
DATE: MAY 10, 2006
SCALE: AS SHOWN

DATE	REVISION	BY

ELKRIDGE-CROSSING-PHASE ONE
PARCELS A-E
TAX MAP 38, GRID 2, PARCELS 30 & 38
FIRST ELECTION DISTRICT, HOWARD COUNTY, MARYLAND
STORMWATER MANAGEMENT NOTES & DETAILS

JURI MAISTE - SITE DESIGN CONSULTANT
2923 Chenoak Avenue, Baltimore, Maryland 21234
Phone: 410-661-8752 Fax: 410-661-8752
RICHARDSON ENGINEERING, LLC
730 W. Padonia Road, Suite 101, Cockeysville, Maryland 21030
Phone: 410-560-1502 Fax: 410-560-0827

SDP-04-017

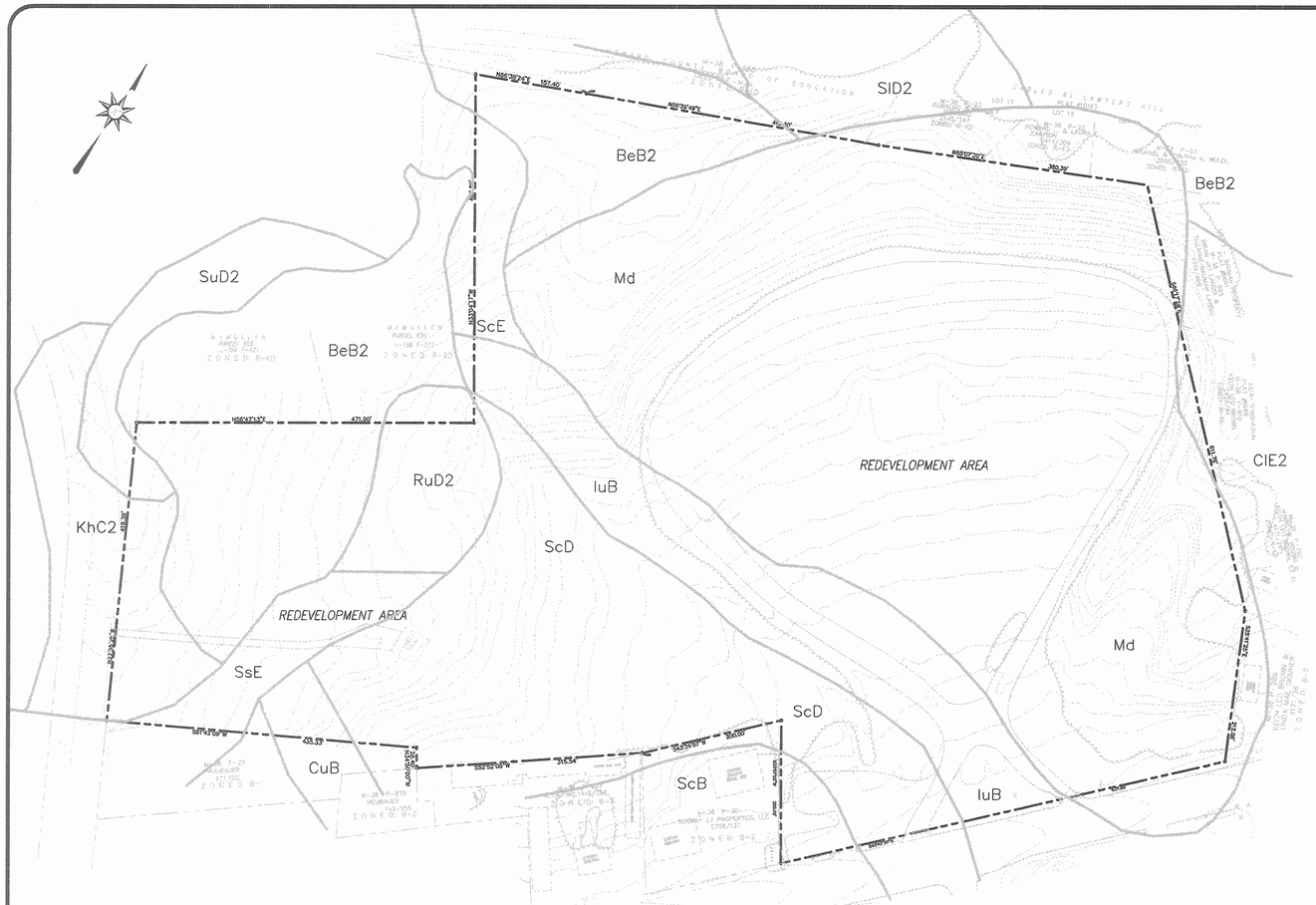

EXISTING DRAINAGE AREA MAP

SCALE: 1" = 100'

0' 100' 200' 300'

SOILS DATA

ID	NAME	SOIL GROUP
Br	BELTSVILLE	C
Cl	CHILLUM	B
Cu	CODORUS	C
Iu	IUKA	C
Kh	KEYPORT	C
Md	MADE	C
Sc	SAND & CLAY	C
Sl	SASSAFRAS	B
Ss	SASSAFRAS	B
Su	SUNNYSIDE	B

HILLIS - CARNES
ENGINEERING ASSOCIATES, INC.
RECORD OF SOIL EXPLORATION
Page 1 of 1

Project Name: Elkridge Crossing SWM
Location: Howard County, Maryland
Boring Number: B-10
Job #: 04327A

Datum:
Approx. Elev.: 188.50
Date Started: 06-18-04

SAMPLER: Hammer Wt. 140 Lbs.; Hammer Drop 30 Inches; Pipe Size 2.0 Inches OD
Hole Diameter: 6"; Rock Core Dia.: -; Boring Method: HSA
Foreman: Steven McManus; Inspector: ; Completed: 06-18-04

ELEV.	SOIL DESCRIPTION Color,Moisture,Density,Size,Proportion	STRA. DEPTH	DEPTH SCALE	CON.	SAMPLE BLOWS 6"	NO.	REC.	BORING & SAMPLING NOTES
	SURFACE		0.0					
	Grayish brown, moist, soft, silty clay, with sand and asphalt fragments (CL) FILL	2.0		D	5-2-2	1	10"	No ground-water encountered while drilling
	Brown to reddish brown, moist, stiff, sandy silt (ML)		5.0	I	7-9-10	2	12"	
				I	5-7-10	3	16"	Caved in at 6.5 at Completion
	Light brown, moist, stiff, silt, trace sand (ML)	7.5		I	5-5-7	4	16"	Caved in at 7.5 after 24 hours
	Orange and gray, moist, stiff, sandy clay, trace gravel and rock fragments (CL)	12.0		D	5-5-9	5	14"	
	Bottom of Test Hole at 15.0	15.0						
		20.0						

SAMPLER TYPE: CH SPLIT SPOON UNLESS OTHERWISE NOTED; PRESSED SHELBY TUBE; CONTINUOUS FLIGHT AUGER; ROCK CORE
SAMPLE CONDITIONS: D-DISINTEGRATED; I-INTACT; U-UNDISTURBED; L-LOST
GROUND WATER DEPTH: AT COMPLETION Dry FT; AFTER 24 hrs Dry FT; AFTER FT; AFTER FT
BORING METHOD: HSA-HOLLOW STEM AUGERS; CFA-CONT. FLIGHT AUGERS; DC-DRIVING CASING; MD-MUD DRILLING

HILLIS - CARNES
ENGINEERING ASSOCIATES, INC.
RECORD OF SOIL EXPLORATION
Page 1 of 1

Project Name: Elkridge Crossing SWM
Location: Howard County, Maryland
Boring Number: B-11
Job #: 04327A

Datum:
Approx. Elev.: 192.00
Date Started: 06-18-04

SAMPLER: Hammer Wt. 140 Lbs.; Hammer Drop 30 Inches; Pipe Size 2.0 Inches OD
Hole Diameter: 6"; Rock Core Dia.: -; Boring Method: HSA
Foreman: Steven McManus; Inspector: ; Completed: 06-18-04

ELEV.	SOIL DESCRIPTION Color,Moisture,Density,Size,Proportion	STRA. DEPTH	DEPTH SCALE	CON.	SAMPLE BLOWS 6"	NO.	REC.	BORING & SAMPLING NOTES
	SURFACE		0.0					2" Topsoil
	Dark grayish brown, moist, medium dense, clayey sand, trace gravel trace organics (SC)	3.0		D	6-9-11	1	4"	Groundwater encountered at 14.5' while drilling
	Dark grayish brown, moist, soft, sandy clay, trace gravel, trace organics (CL)	4.5		D	2-3-2	2	2"	Caved in at 4.0' at Completion
	Brown, wet, soft, clay, trace sand, trace organism (CL)	7.5	5.0	D	1-1-2	3	12"	Caved in at 4.3' after 24 hours
	Brown, wet, medium stiff to stiff, sandy clay, trace gravel and rock fragments in sample 5 (CL)	15.0		D	3-3-3	4	10"	
				D	8-13-16	5	16"	
	Bottom of Test Hole at 15.0'	20.0						

SAMPLER TYPE: CH SPLIT SPOON UNLESS OTHERWISE NOTED; PRESSED SHELBY TUBE; CONTINUOUS FLIGHT AUGER
SAMPLE CONDITIONS: D-DISINTEGRATED; I-INTACT; U-UNDISTURBED; L-LOST
GROUND WATER DEPTH: AT COMPLETION 4.5 FT; AFTER 24 hrs 5.0 FT; AFTER FT; AFTER FT
BORING METHOD: HSA-HOLLOW STEM AUGERS; CFA-CONT. FLIGHT AUGERS; DC-DRIVING CASING; MD-MUD DRILLING

HILLIS - CARNES
ENGINEERING ASSOCIATES, INC.
RECORD OF SOIL EXPLORATION
Page 1 of 1

Project Name: Elkridge Crossing SWM
Location: Howard County, Maryland
Boring Number: B-9
Job #: 04327A

Datum:
Approx. Elev.: 186.50
Date Started: 06-18-04

SAMPLER: Hammer Wt. 140 Lbs.; Hammer Drop 30 Inches; Pipe Size 2.0 Inches OD
Hole Diameter: 6"; Rock Core Dia.: -; Boring Method: HSA
Foreman: Steven McManus; Inspector: ; Completed: 06-18-04

ELEV.	SOIL DESCRIPTION Color,Moisture,Density,Size,Proportion	STRA. DEPTH	DEPTH SCALE	CON.	SAMPLE BLOWS 6"	NO.	REC.	BORING & SAMPLING NOTES
	SURFACE		0.0					
	Grayish brown, moist, loose silty sand, with rock fragments and gravel (SM)	2.0		D	6-5-6	1	10"	Groundwater encountered at 19.0' while drilling
	Brown, moist, medium dense, silty sand, trace gravel (SM)		5.0	I	8-11-11	2	16"	
				I	7-8-9	3	14"	
	Dark brown, moist, medium dense, clayey coarse sand, with gravel and rock fragments (SC)	7.0		D	5-7-9	4	14"	Caved in at 9.0' at Completion
	Brown, wet, loose, silty sand (SM)	12.0		D	3-1-5	5	12"	Caved in at 4.75 after 24 hours
	Bottom of Test Hole at 15.0	15.0						
		20.0						

SAMPLER TYPE: CH SPLIT SPOON UNLESS OTHERWISE NOTED; PRESSED SHELBY TUBE; CONTINUOUS FLIGHT AUGER; ROCK CORE
SAMPLE CONDITIONS: D-DISINTEGRATED; I-INTACT; U-UNDISTURBED; L-LOST
GROUND WATER DEPTH: AT COMPLETION 4.5 FT; AFTER 24 hrs 5.0 FT; AFTER FT; AFTER FT
BORING METHOD: HSA-HOLLOW STEM AUGERS; CFA-CONT. FLIGHT AUGERS; DC-DRIVING CASING; MD-MUD DRILLING

STANDARD PENETRATION TEST-DRIVING 2" OD SAMPLER 1' WITH 140# HAMMER FALLING 30" COUNT MADE AT 6" INTERVALS

THESE PLANS HAVE BEEN REVIEWED FOR THE HOWARD SOIL CONSERVATION DISTRICT AND MEET THE TECHNICAL REQUIREMENTS FOR SMALL POND CONSTRUCTION, SOIL EROSION AND SEDIMENT CONTROL.

USDA-NATURAL RESOURCES CONSERVATION SERVICE — DATE 8/22/06

THESE PLANS FOR SMALL POND CONSTRUCTION, SOIL EROSION AND SEDIMENT CONTROL MEET THE REQUIREMENTS OF THE HOWARD SOIL CONSERVATION DISTRICT.

HOWARD SOIL CONSERVATION DISTRICT — DATE 8/22/06

APPROVED: DEPARTMENT OF PLANNING AND ZONING

CHIEF, DEVELOPMENT ENGINEERING DIVISION	DATE 9/6/06
CHIEF, DIVISION OF LAND DEVELOPMENT	DATE 9/14/06
DIRECTOR	DATE 9/18/06

STATE OF MARYLAND — REX W. HARRISON — REGISTERED PROFESSIONAL ENGINEER
7/24/06

OWNERS/DEVELOPERS

PARCEL 30 –
GWENRIDGE LLC
8835-P COLUMBIA 100 PARKWAY
COLUMBIA, MD 21045
PARCEL 38 –
MEHTA CHARALUTA TRUST
5551 OAKLAND MILLS ROAD
COLUMBIA, MD 21045

BRANTLY DEVELOPMENT GROUP, INC.
8835-P COLUMBIA 100 PARKWAY
COLUMBIA, MD 21045

DRAWN: J.D.
DATE: MARCH 1, 2006
SCALE: AS SHOWN

DATE	REVISION	BY

ELKRIDGE – CROSSING – PHASE ONE

PARCELS A–E
TAX MAP 38, GRID 2, PARCELS 30 & 38
FIRST ELECTION DISTRICT, HOWARD COUNTY, MARYLAND

STORMWATER MANAGEMENT DRAINAGE AREA MAPS

JURI MAISTE – SITE DESIGN CONSULTANT
2923 Chenault Avenue, Baltimore, Maryland 21234
Phone: 410-661-8752 Fax: 410-661-8752
RICHARDSON ENGINEERING, LLC
730 W. Pedonia Road, Suite 101, Cockeysville, Maryland 21030
Phone: 410-560-1502 Fax: 410-560-0027

SDP-04-017

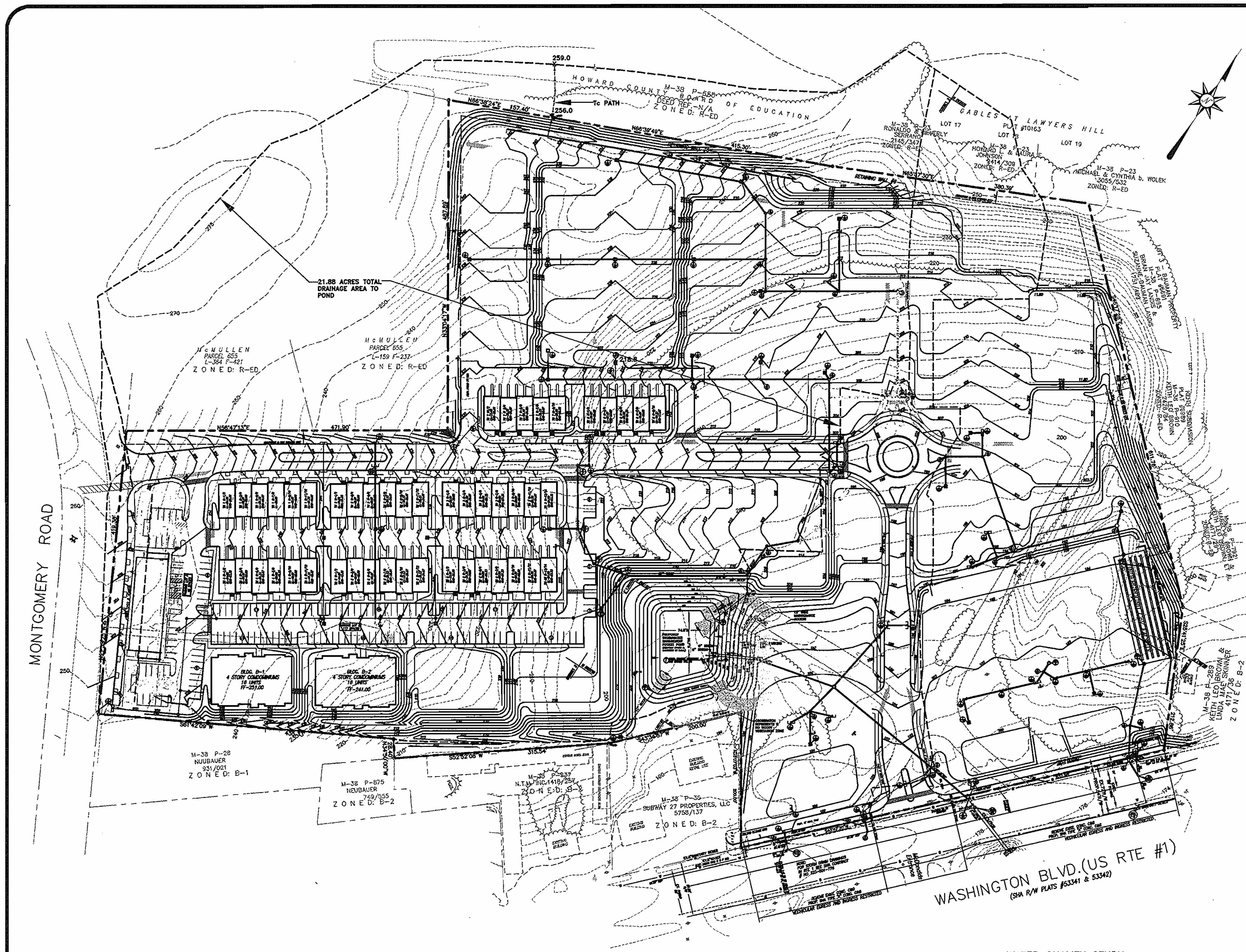

PROPOSED DRAINAGE AREA MAP

SCALE: 1" = 100'

0' 100' 200' 300'

WATER QUALITY STUDY
AREA = 20.75 ACRES

SWM DATA

1. TYPE OF FACILITY – **POCKET POND (P5)
2. STRUCTURE CLASSIFICATION – CLASS A MD-378
3. WATERSHED AREA TO FACILITY – 21.88 AC.±
4. MAINTENANCE RESPONSIBILITY – PRIVATE
5. FREEBOARD = 1.22'
6. WATER QUALITY REQUIRED = 0.21 AC-FT
7. WATER QUALITY PROVIDED = 0.54 AC-FT
8. CPv REQUIRED = 1.16 AC-FT
9. CPv PROVIDED = 1.16 AC-FT
10. Qp = NOT REQUIRED, Qf = NOT REQUIRED
11. RUNOFF CURVE NUMBER – 80
12. TIME OF CONCENTRATION – 0.20 HOURS
13. 100-YEAR SAFELY ROUTED
14. 1-YR W.S.E = 192.74
15. 10-YR W.S.E. = 194.06
16. 100-YR W.S.E. = 194.98

**DUE TO M.A.A. REGULATIONS THE POND WILL HAVE TO BE A DRY POND, THEREFORE 24 HOUR EXTENDED DETENTION HAS BEEN PROVIDED FOR THE WATER QUALITY VOLUME.

SOILS DATA

ID	NAME	SOIL GROUP
Br	BELTSVILLE	C
Cl	CHILLUM	B
Cu	CODORUS	C
Iu	IUKA	C
Kh	KEYPORT	C
Md	MADE	C
Sc	SAND & CLAY	C
Sl	SASSAFRAS	B
Ss	SASSAFRAS	B
Su	SUNNYSIDE	B

POCKET POND MAINTENANCE SCHEDULE

1. THE FACILITY SHALL BE INSPECTED TWICE ANNUALLY – MARCH AND SEPTEMBER. VISUAL INSPECTION OF ALL COMPONENTS SHALL BE COMPLETED BY THE OWNER. ALL DRAINS SHALL BE OPENED BY THE OWNER ONCE A YEAR. THE OWNER SHALL KEEP NOTES OF EACH INSPECTION.
2. GRASS AREAS SHALL BE MOWED ANYTIME THE GRASS IS OVER TWELVE (12) INCHES TALL.
3. VEGETATIVE COVER SHALL BE MAINTAINED BY MOWING, LIMING AND FERTILIZING. AS A MINIMUM REQUIREMENT, THE LIME AND FERTILIZER SHALL BE APPLIED ONE (1) TIME EVERY TWO (2) YEARS. NO TREES OR WOODY VEGETATION SHALL BE ALLOWED ON THE EMBANKMENT OR WITHIN FIFTEEN (15) FEET OF THE TOE OF THE EMBANKMENT, IN THE EMERGENCY SPILLWAY OR WITHIN TWENTY-FIVE (25) FEET OF THE OUTLET STRUCTURE.
4. ALL APURTENANCES SHALL BE KEPT FREE OF TRASH.
5. VISIBLE SIGNS OF DETERIORATION OF THE RISER, BARREL AND EMERGENCY SPILLWAY SHALL BE REPAIRED AS SOON AS POSSIBLE
6. ALL REQUIRED MAINTENANCE SHALL BE PERFORMED BY THE OWNER, OR THE OWNER'S REPRESENTATIVE AT THE OWNER'S EXPENSE.

SEQUENCE OF CONSTRUCTION

1. CLEAR & GRUB AREA OF STORMWATER MANAGEMENT POND ONLY AFTER SEDIMENT & EROSION CONTROLS HAVE BEEN INSTALLED. (THE POND SHALL INITIALLY BE CONSTRUCTED AS A SEDIMENT BASIN, THEREFORE REFER TO THE SEDIMENT AND EROSION CONTROL PLANS. (2 DAYS)
2. BEGIN CONSTRUCTION OF EMBANKMENT. (10 DAYS)
NOTE EMBANKMENT MATERIAL SHALL BE APPROVED BY THE ENGINEER AND SHALL CONSIST OF MATERIAL HAVING A UNIFIED SOIL CLASSIFICATION SC OR CL.
3. INSTALL THE BARREL, ANTI-SEEP COLLAR, RISER, LOW-FLOW, DE-WATERING DEVICE, AND OUTFALL STRUCTURE. (5 DAYS)
4. CONSTRUCT THE REMAINING EMBANKMENT, EMERGENCY SPILLWAY AND STABILIZE. (5 DAYS)
NOTE ALL SOILS SHALL CONFORM TO 95% OF THE T-99 MOISTURE-DENSITY BASED UPON ASTM D-698. ALL SOILS SHALL ALSO BE WITHIN 2% OF THEIR OPTIMAL MOISTURE CONTENT.
5. INITIAL RELEASE STRUCTURE CONFIGURATION SHALL BE IN ACCORDANCE WITH THE SEDIMENT AND EROSION CONTROL PLANS.
6. UPON COMPLETION OF STABILIZATION OF ALL CONTRIBUTORY DRAINAGE AREA TO THE SEDIMENT BASIN, CONVERT THE FACILITY FOR STORMWATER MANAGEMENT USAGE AS SEQUENCED IN THE SEDIMENT AND EROSION CONTROL SEQUENCE. (5 DAYS)
7. IMMEDIATELY STABILIZE ANY AREAS DISTURBED DURING THE CONVERSION. (2 DAYS)
8. WITH SEDIMENT CONTROL INSPECTOR'S APPROVAL REMOVE ANY REMAINING SEDIMENT CONTROL AND STABILIZE.

THESE PLANS HAVE BEEN REVIEWED FOR THE HOWARD SOIL CONSERVATION DISTRICT AND MEET THE TECHNICAL REQUIREMENTS FOR SMALL POND CONSTRUCTION, SOIL EROSION AND SEDIMENT CONTROL.

[signature] 8/22/06
USDA-NATURAL RESOURCES CONSERVATION SERVICE — DATE

THESE PLANS FOR SMALL POND CONSTRUCTION, SOIL EROSION AND SEDIMENT CONTROL MEET THE REQUIREMENTS OF THE HOWARD SOIL CONSERVATION DISTRICT.

[signature] 8/22/06
HOWARD SOIL CONSERVATION DISTRICT — DATE

APPROVED: DEPARTMENT OF PLANNING AND ZONING

CHIEF, DEVELOPMENT ENGINEERING DIVISION	DATE 9/6/06
CHIEF, DIVISION OF LAND DEVELOPMENT	DATE 9/14/06
DIRECTOR	DATE 9/18/06

STATE OF MARYLAND — REGISTERED PROFESSIONAL ENGINEER (seal)

OWNERS/DEVELOPERS

PARCEL 30 –
GWENRIDGE LLC
8835-P COLUMBIA 100 PARKWAY
COLUMBIA, MD 21045
PARCEL 38 –
MEHTA CHARALUTA TRUST
5551 OAKLAND MILLS ROAD
COLUMBIA, MD 21045

BRANTLY DEVELOPMENT GROUP, INC.
8835-P COLUMBIA 100 PARKWAY
COLUMBIA, MD 21045

DRAWN: J.D.
DATE: MARCH 1, 2006
SCALE: AS SHOWN

DATE	REVISION	BY
1/1/07	MEHTA Circle & Remove Bldg. A-2	CND

ELKRIDGE-CROSSING-PHASE ONE
PARCELS A-E
TAX MAP 38, GRID 2, PARCELS 30 & 38
FIRST ELECTION DISTRICT, HOWARD COUNTY, MARYLAND
STORMWATER MANAGEMENT DRAINAGE AREA MAPS

JURI MAISTE – SITE DESIGN CONSULTANT
2923 Chenoak Avenue, Baltimore, Maryland 21234
Phone: 410-661-8752 Fax: 410-661-8752
RICHARDSON ENGINEERING, LLC
730 W. Padonia Road, Suite 101, Cockeysville, Maryland 21030
Phone: 410-560-1502 Fax: 410-560-0827

SDP-04-017

DETAIL 5 – RIP-RAP INFLOW PROTECTION

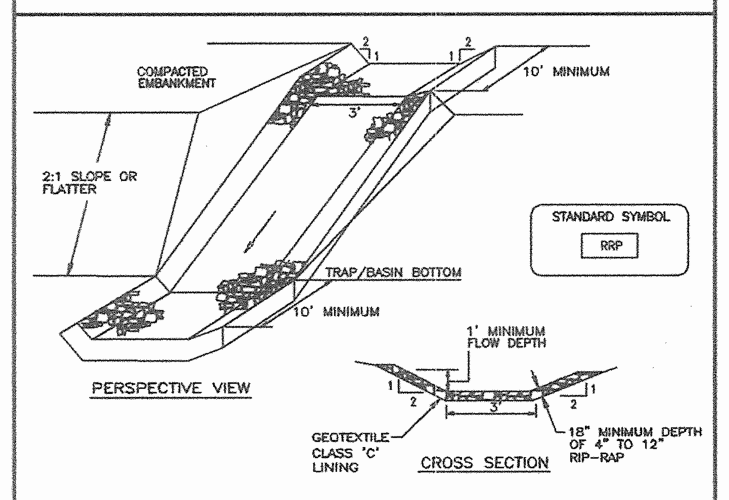

Construction Specifications

1. Rip-rap lined inflow channels shall be 1' in depth, have a trapezoidal cross section with 2:1 or flatter side slopes and 3' (min.) bottom width. The channel shall be lined with 4" to 12" rip- rap to a depth of 18".

2. Filter cloth shall be installed under all rip-rap. Filter cloth shall be Geotextile Class C.

3. Entrance and exit sections shall be installed as shown on the detail section.

4. Rip-rap used for the lining may be recycled for permanent outlet protection if the basin is to be converted to a stormwater management facility.

5. Gabion Inflow Protection may be used in lieu of Rip-rap Inflow Protection.

6. Rip-rap should blend into existing ground.

7. Rip-rap Inflow Protection shall be used where the slope is between 4:1 and 10:1, for slopes flatter than 10:1 use Earth Dike or Temporary Swale lining criteria.

U.S. DEPARTMENT OF AGRICULTURE SOIL CONSERVATION SERVICE	PAGE B - 6 - 2	MARYLAND DEPARTMENT OF ENVIRONMENT WATER MANAGEMENT ADMINISTRATION

DETAIL 15 – RISER BASE DETAIL

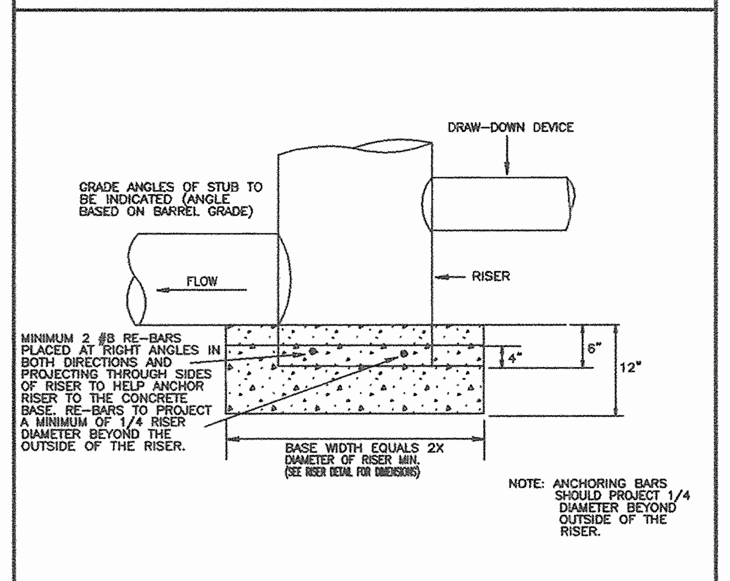

Construction Specifications

The riser shall have a base attached with a watertight connection and shall have sufficient weight to prevent flotation of the riser. Two approved bases for risers 10" or less in height are:

1. A concrete base 18" thick with the riser embedded 9" in the base.

2. A 1/4" minimum thickness steel plate attached to the riser by a continuous weld around the circumference of the riser to form a watertight connection. The plate shall have 2' of stone, gravel, or compacted earth placed on it to prevent flotation. In either case, each side of the square base shall be twice the riser diameter.

Note: For risers greater than ten feet high computations shall be made to design a base which will prevent floatation. The minimum factor of safety shall be 1.20 (downward forces = 1.20 x upward forces).

U.S. DEPARTMENT OF AGRICULTURE SOIL CONSERVATION SERVICE	PAGE C - 10 - 25	MARYLAND DEPARTMENT OF ENVIRONMENT WATER MANAGEMENT ADMINISTRATION

DETAIL 16 – CONCENTRIC TRASH RACK AND ANTI-VORTEX DEVICE SEDIMENT BASIN 2

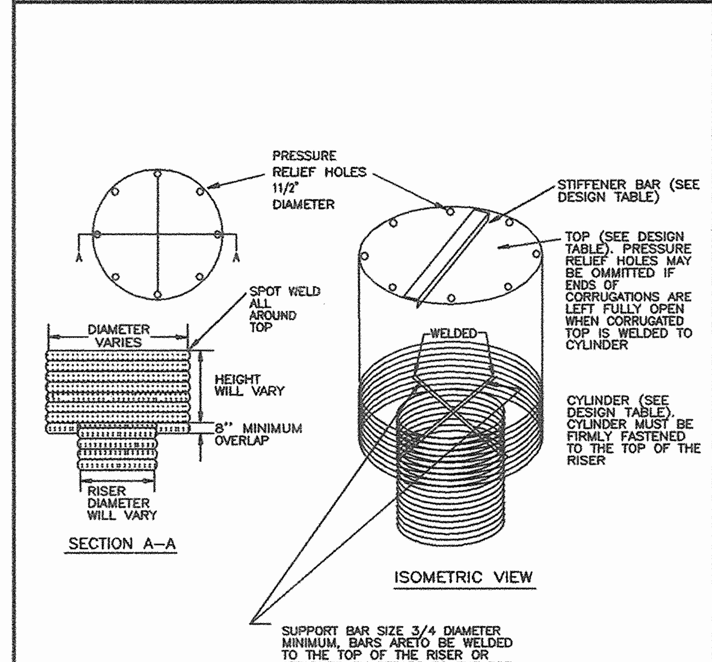

U.S. DEPARTMENT OF AGRICULTURE SOIL CONSERVATION SERVICE	PAGE C - 10 - 26	MARYLAND DEPARTMENT OF ENVIRONMENT WATER MANAGEMENT ADMINISTRATION

DETAIL 16 CONCENTRIC TRASH RACK AND ANTI-VORTEX DEVICE (continued)

Riser Diam., In.	Trash Rack Cylinder Diam. In.	Thick., gage	H, in.	Minimum Size Support Bar	Minimum Top Thickness	Stiffener
12	18	16	6	#6 Rebar	16 ga.	---
15	21	16	7	"	"	---
18	27	16	8	"	"	---
21	30	16	11	"	"	---
24	36	16	13	"	14 ga.	---
27	42	16	15	"	14 ga.	---
30	48	14	16	"	14 ga.	---
36	54	14	17	#8 Rebar	12 ga.	---
42	60	14	19	"	"	---
48	72	12	21	1-1/4" pipe or 1-1/4 x 1-1/4 x1/4 angle	10 ga.	---
54	78	12	25	"	"	---
				1-1/2 x 1-1/2 x1/4 angle		
66	96	10	33	2" pipe or 2x2x3/16 angle	8 ga., w/stiffener	2x2x1/4 angle
72	102	10	36	"	"	2-1/2x2-1/2x1/4 angle
78	114	10	39	2-1/2" pipe or 2x2x1/4 angle	"	"
84	120	10	42	2-1/2" pipe or 2-1/2x2-1/2x1/4 angle	"	2-1/2 x2-1/2x 5/16 angle

Note: The above trash rack and anti-vortex device information is only for corrugated metal pipe. Concrete risers must meet the requirements of MD 378.

U.S. DEPARTMENT OF AGRICULTURE SOIL CONSERVATION SERVICE	PAGE C - 10 - 26A	WATER MANAGEMENT ADMINISTRATION
		MARYLAND DEPARTMENT OF ENVIRONMENT

PRINCIPAL SPILLWAY PROFILE BASIN 2

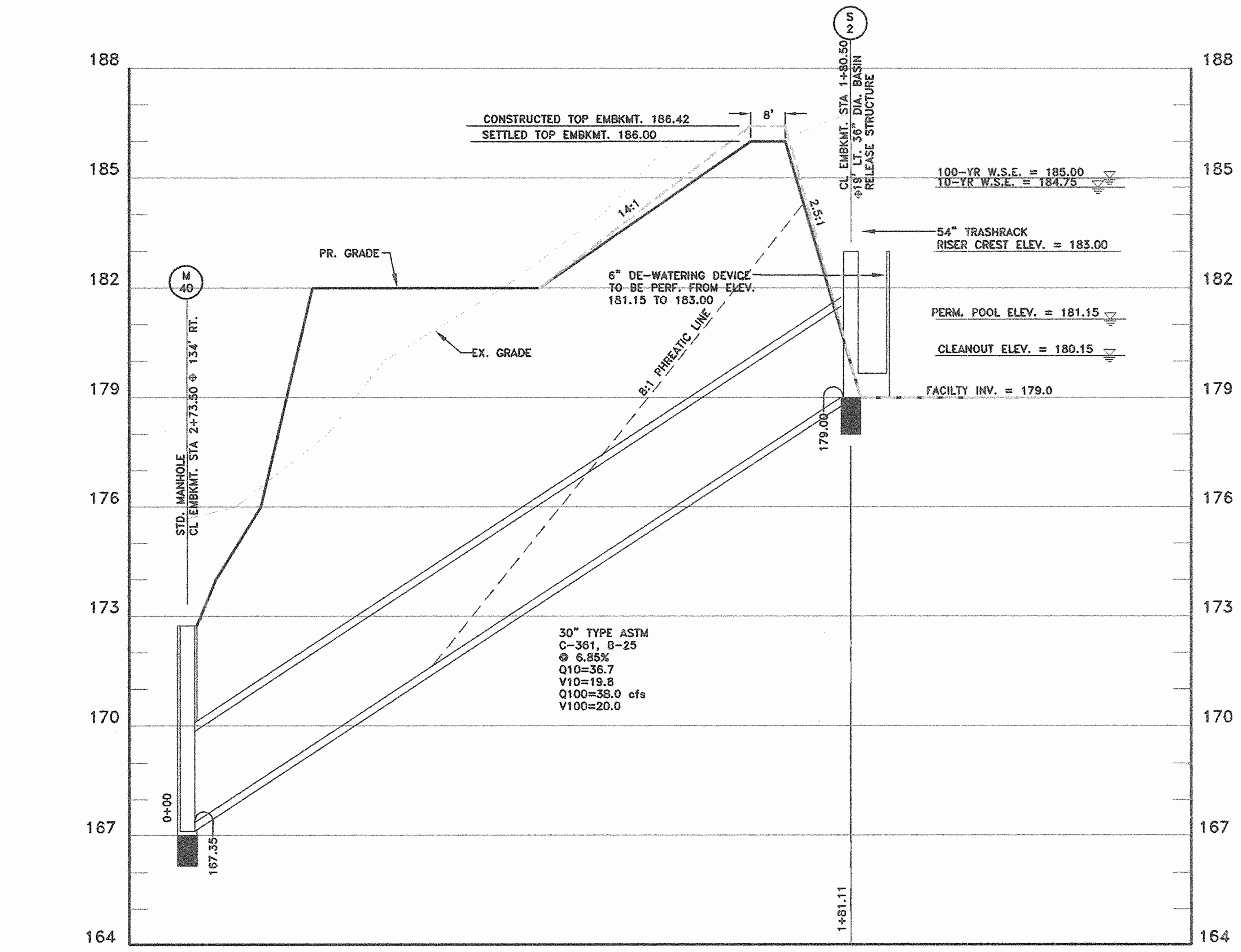

SCALE: HORZ. 1" = 30' VERT. 1" = 3'

BASIN DRAWDOWN SCHEMATIC VERTICAL DRAW-DOWN DEVICE

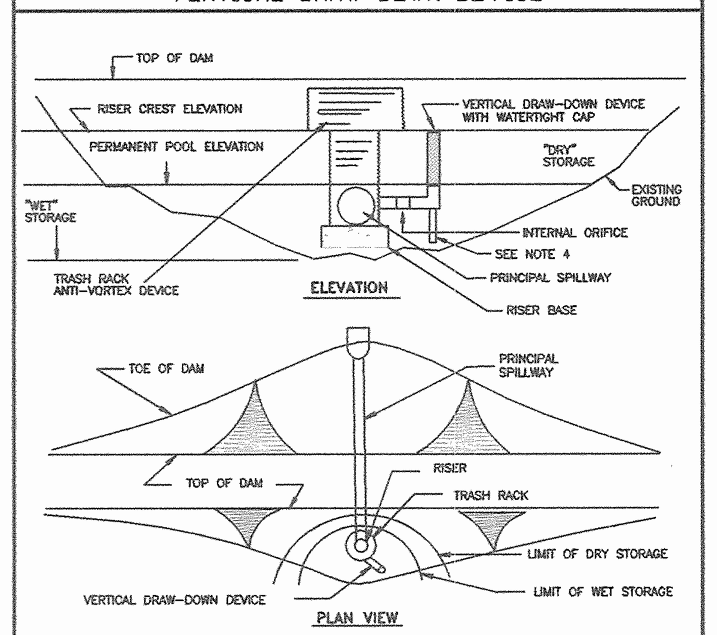

Construction Specifications

1. Perforations in the draw-down device may not extend into the wet storage.

2. The total area of the perforations must be greater than 2 times the area of the internal orifice.

3. The perforated portion of the draw-down device shall be wrapped with 1/2 " hardware cloth and geotextile fabric. The geotextile fabric shall meet the specifications for Geotextile Class E.

4. Provide support of draw-down device to prevent sagging and floatation. An acceptable preventative measure is to stake both sides of draw-down device with 1" steel angle, or 1' by 4" square, or 2" round wooden posts set 3" minimum into the ground then joining them to the device by wrapping with 12 guage minimum wire.

U.S. DEPARTMENT OF AGRICULTURE SOIL CONSERVATION SERVICE	PAGE C - 10 - 30	MARYLAND DEPARTMENT OF ENVIRONMENT WATER MANAGEMENT ADMINISTRATION

NOTE: PERFORATION LENGTH = 16'
PERFORATION SIZE = 1"
PERFORATION SPACING = 4"
INTERNAL ORIFICE DIAMETER = 8"

DETAIL 24 – STABILIZED CONSTRUCTION ENTRANCE

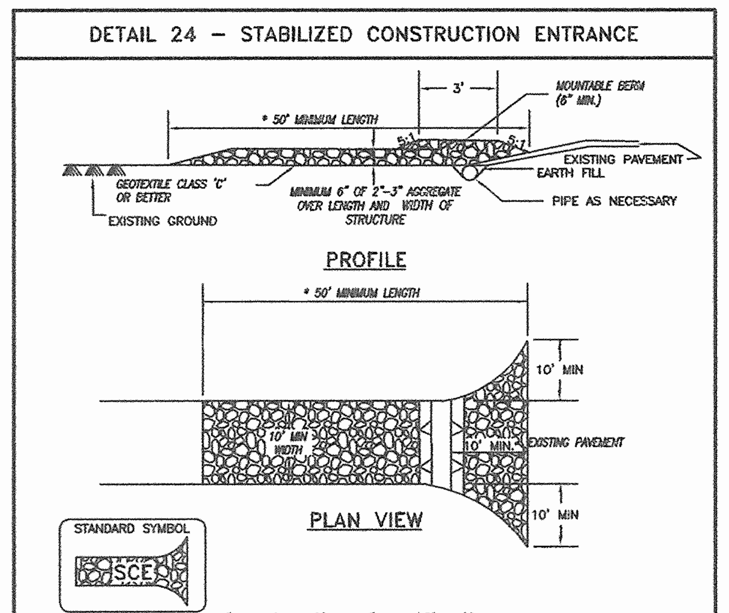

Construction Specifications

1. *LENGTH – Minimum of 50' (*30' for single residence lot.)*
2. *WIDTH – 10' minimum, should be flared at the existing road to provide a turning radius.*
3. *Geotextile fabric (filter cloth) shall be placed over the existing ground prior to placing stone. **The plan approval authority may not require single family residences to use geotextile.*
4. *STONE – Crushed aggregate (2"-3") or reclaimed or recycled concrete equivalent shall be placed at least 6" deep over the length and width of the entrance.*
5. *SURFACE WATER – All surface water flowing to or diverted toward construction entrances shall be piped through the entrance, maintaining positive drainage. Pipe installed through the stabilized construction entrance shall be protected with a mountable berm with 5:1 slopes and a minimum of 6" stone over the pipe. Pipe has to be sized according to the drainage. When the SCE is located at a high spot and has no drainage to convey, a pipe will not be necessary. Pipe should be sized according to th amount of runoff to be conveyed. A 6" minimum will be required.*
6. *LOCATION – A stabilized construction entrance shall be located at every point where construction traffic enters or leaves a construction site. Vehicles leaving the site must travel over the entire length of the stabilized construction entrance.*

U.S. DEPARTMENT OF AGRICULTURE SOIL CONSERVATION SERVICE	PAGE F - 17 - 3	MARYLAND DEPARTMENT OF ENVIRONMENT WATER MANAGEMENT ADMINISTRATION

DETAIL 22 – SILT FENCE

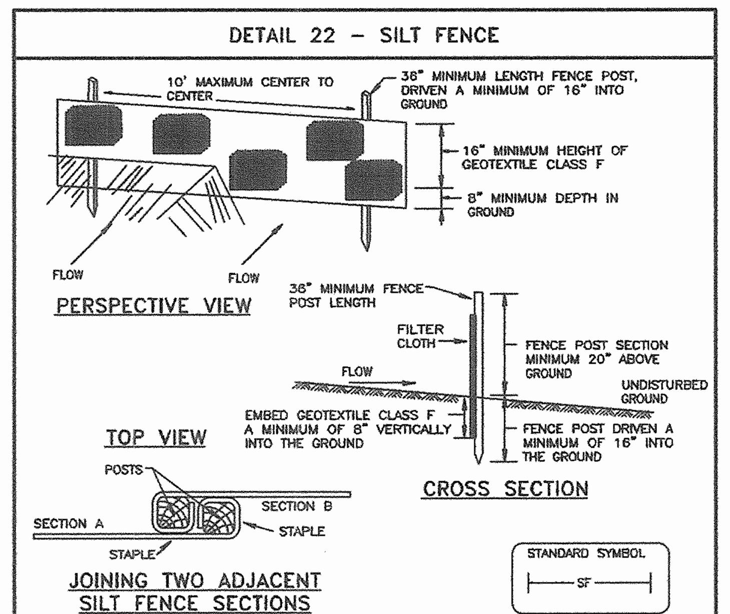

Construction Specifications

1. Fence posts shall be a minimum of 36" long driven 16" minimum into the ground. Wood posts shall be 11/2" x 11/2" square (minimum) cut, or 13/4" diameter (minimum) round and shall be of sound quality hardwood. Steel posts will be standard T or U section weighting not less than 1.00 pond per linear foot.

2. Geotextile shall be fastened securely to each fence post with wire ties or staples at top and mid-section and shall meet the following requirements for Geotextile Class F:

Tensile Strength	50 lbs/in (min.)	Test: MSMT 509
Tensile Modulus	20 lbs/in (min.)	Test: MSMT 509
Flow Rate	0.3 gal ft² / minute (max.)	Test: MSMT 322
Filtering Efficiency	75% (min.)	Test: MSMT 322

3. Where ends of geotextile fabric come together, they shall be overlapped, folded and stapled to prevent sediment bypass.

4. Silt Fence shall be inspected after each rainfall event and maintained when bulges occur or when sediment accumulation reached 50% of the fabric height.

U.S. DEPARTMENT OF AGRICULTURE SOIL CONSERVATION SERVICE	PAGE E - 15 - 3	MARYLAND DEPARTMENT OF ENVIRONMENT WATER MANAGEMENT ADMINISTRATION

DETAIL 33 – SUPER SILT FENCE

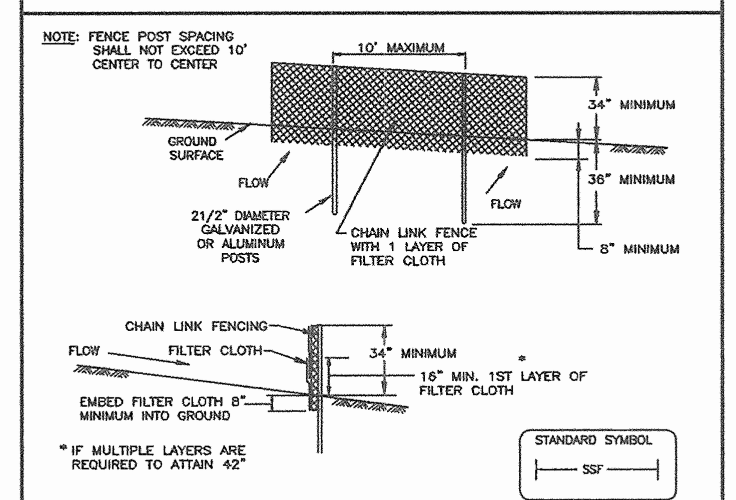

Construction Specifications

1. Fencing shall be 42" in height and constructed in accordance with the latest Maryland State Highway Details for Chain Link Fencing. The specification for a 6' fence shall be used, substituting 42" fabric and 6' length posts.

2. Chain link fence shall be fastened securely to the fence posts with wire ties. The lower tension wire, brace and truss rods, drive anchors and post caps are not required except on the ends of the fence.

3. Filter cloth shall be fastened securely to the chain link fence with ties spaced every 24" at the top and mid section.

4. Filter cloth shall be embedded a minimum of 8" into the ground.

5. When two sections of filter cloth adjoin each other, they shall be overlapped by 6" and folded.

6. Maintenance shall be performed as needed and silt buildups removed when "bulges" develop in the silt fence, or when silt reaches 50% of fence height

7. Filter cloth shall be fastened securely to each fence post with wire ties or staples at top and mid section and shall meet the following requirements for Geotextile Class F:

Tensile Strength	50 lbs/in (min)	Test: MSMT 509
Tensile Modulus	20 lbs/in (min)	Test: MSMT 509
Flow Rate	0.3 gal/ft²/minutes (max)	Test: MSMT 322
Filtering Efficiency	75% (min)	Test: MSMT 322

U.S. DEPARTMENT OF AGRICULTURE SOIL CONSERVATION SERVICE	PAGE H - 26 - 3	MARYLAND DEPARTMENT OF ENVIRONMENT WATER MANAGEMENT ADMINISTRATION

EMBANKMENT PROFILE BASIN 2

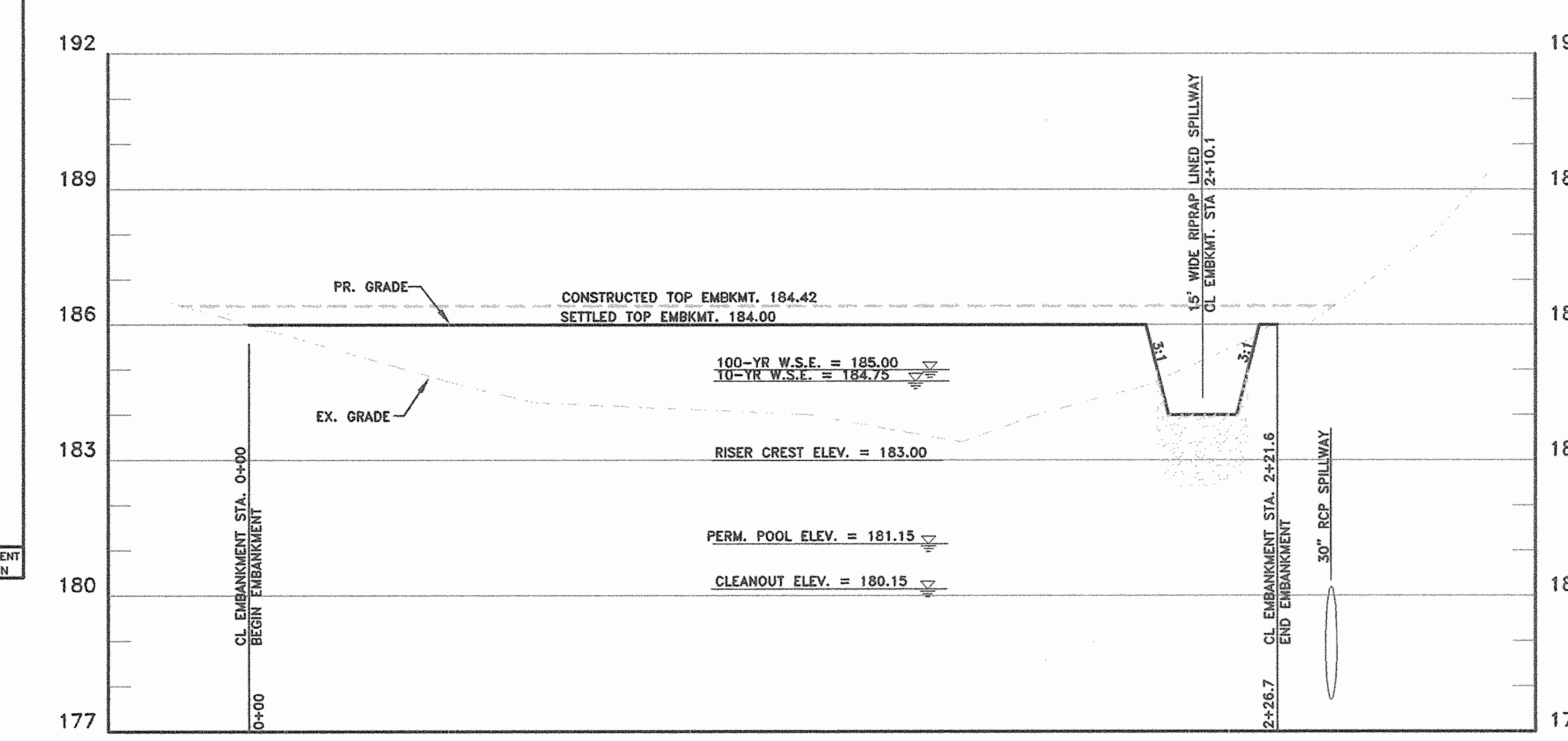

SCALE: HORZ. 1" = 30' VERT. 1" = 3'

DETAIL 1 – EARTH DIKE

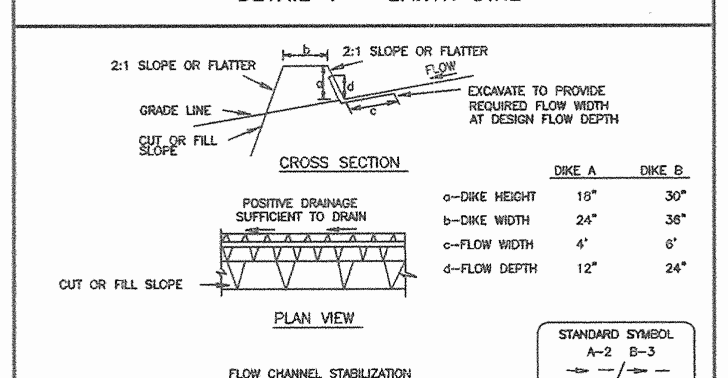

	DIKE A	DIKE B
a–DIKE HEIGHT	18"	30"
b–DIKE WIDTH	24"	36"
c–FLOW WIDTH	4'	6'
d–FLOW DEPTH	12"	24"

STANDARD SYMBOL A-2 B-3

FLOW CHANNEL STABILIZATION
GRADE 0.5% MIN. 10% MAX.

1. Seed and cover with straw mulch.
2. Seed and cover with Erosion Control Matting or line with sod.
3. 4" – 7" stone or recycled concrete equivalent pressed into the soil 7" minimum

Construction Specifications

1. All temporary earth dikes shall have uninterrupted positive grade to an outlet. Spot elevations may be necessary for grades less than 1%.

2. Runoff diverted from a disturbed area shall be conveyed to a sediment trapping device.

3. Runoff diverted from an undisturbed area shall outlet directly into an undisturbed, stabilized area at a non-erosive velocity.

4. All trees, brush, stumps, obstructions, and other objectional material shall be removed and disposed of so as not to interfere with the proper functioning of the dike.

5. The dike shall be excavated or shaped to line, grade and cross section as required to meet the criteria specified herein and be free of bank projections or other irregularities which will impede normal flow.

6. Fill shall be compacted by earth moving equipment.

7. All earth removed and not needed for construction shall be placed so that it will not interfere with the functioning of the dike.

8. Inspection and maintenance must be provided periodically and after each rain event.

U.S. DEPARTMENT OF AGRICULTURE SOIL CONSERVATION SERVICE	PAGE A - 1 - 6	MARYLAND DEPARTMENT OF ENVIRONMENT WATER MANAGEMENT ADMINISTRATION

EMERGENCY SPILLWAY SECTION BASIN 2

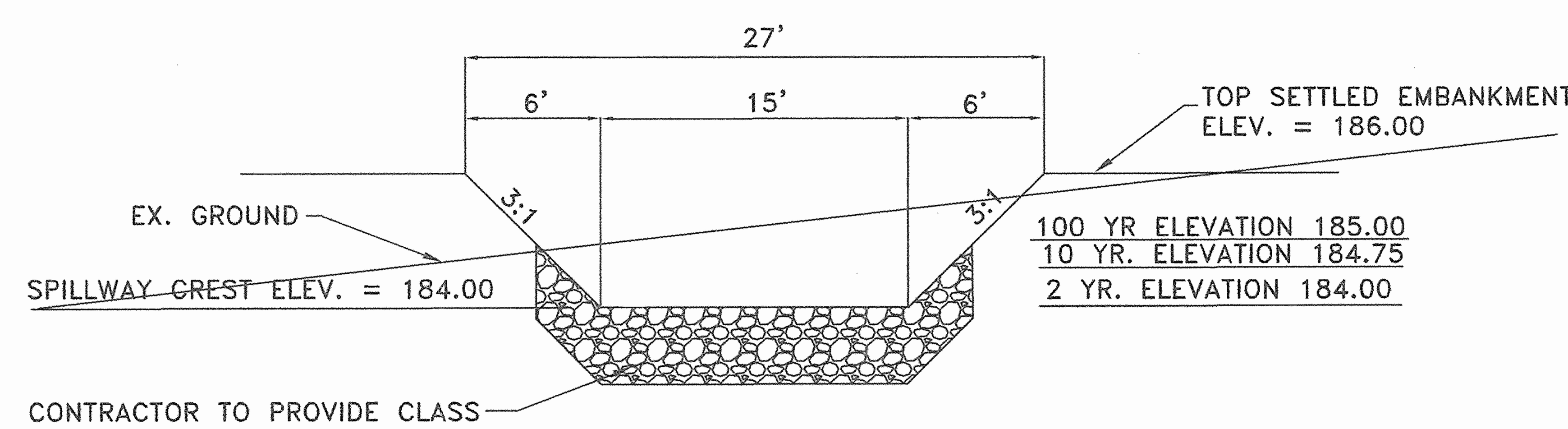

NOT TO SCALE

APPROVED: DEPARTMENT OF PLANNING AND ZONING

CHIEF, DEVELOPMENT ENGINEERING DIVISION	DATE 9/6/06
CHIEF, DIVISION OF LAND DEVELOPMENT	DATE 9/14/06
DIRECTOR	DATE 9/10/06

THESE PLANS HAVE BEEN REVIEWED FOR THE HOWARD SOIL CONSERVATION DISTRICT AND MEET THE TECHNICAL REQUIREMENTS FOR SMALL POND CONSTRUCTION, SOIL EROSION AND SEDIMENT CONTROL.

USDA-NATURAL RESOURCES CONSERVATION SERVICE — DATE 8/22/06

THESE PLANS FOR SMALL POND CONSTRUCTION, SOIL EROSION AND SEDIMENT CONTROL MEET THE REQUIREMENTS OF THE HOWARD SOIL CONSERVATION DISTRICT.

HOWARD SOIL CONSERVATION DISTRICT — DATE 8/22/06

OWNERS/DEVELOPERS
PARCEL 30 – GWENRIDGE LLC 8835-P COLUMBIA 100 PARKWAY COLUMBIA, MD 21045 PARCEL 38 – MEHTA CHARALUTA TRUST 5551 OAKLAND MILLS ROAD COLUMBIA, MD 21045
BRANTLY DEVELOPMENT GROUP, INC. 8835-P COLUMBIA 100 PARKWAY COLUMBIA, MD 21045

ENGINEER'S CERTIFICATE

"I CERTIFY THAT THIS PLAN FOR SEDIMENT AND EROSION CONTROL REPRESENTS A PRACTICAL AND WORKABLE PLAN BASED ON MY PERSONAL KNOWLEDGE OF THE SITE CONDITIONS AND THAT IT WAS PREPARED IN ACCORDANCE WITH THE REQUIREMENTS OF THE HOWARD SOIL CONSERVATION DISTRICT. I HAVE NOTIFIED THE DEVELOPER THAT HE/SHE MUST ENGAGE A REGISTERED PROFESSIONAL ENGINEER TO SUPERVISE POND CONSTRUCTION AND PROVIDE THE HOWARD SOIL CONSERVATION DISTRICT WITH AN "AS-BUILT" PLAN OF THE POND WITHIN 30 DAYS OF COMPLETION."

SIGNATURE OF ENGINEER (Print name below signature) — DATE 7/24/06
PATRICK C RICHARDSON

DEVELOPER'S CERTIFICATE

"I/WE CERTIFY THAT ALL DEVELOPMENT AND CONSTRUCTION WILL BE DONE ACCORDING TO THIS PLAN FOR EROSION AND SEDIMENT CONTROL AND THAT ALL RESPONSIBLE PERSONNEL INVOLVED IN THE CONSTRUCTION PROJECT WILL HAVE A CERTIFICATE OF ATTENDANCE AT A DEPARTMENT OF THE ENVIRONMENT APPROVED TRAINING PROGRAM FOR THE CONTROL OF SEDIMENT AND EROSION BEFORE BEGINNING THE PROJECT. I SHALL ENGAGE A REGISTERED PROFESSIONAL ENGINEER TO SUPERVISE POND CONSTRUCTION AND PROVIDE THE HOWARD SOIL CONSERVATION DISTRICT WITH AN "AS-BUILT" PLAN OF THE POND WITHIN 30 DAYS OF COMPLETION. I ALSO AUTHORIZE PERIODIC ON-SITE INSPECTION BY THE HOWARD SOIL CONSERVATION DISTRICT."

SIGNATURE OF DEVELOPER (Print name below signature) — DATE 8/11/06
JOHN F. LIPARINI

DRAWN: CND
DATE: MAY 10, 2006
SCALE: NTS

DATE	REVISION	BY

ELKRIDGE-CROSSING-PHASE ONE

PARCELS A-E
TAX MAP 38, GRID 2, PARCELS 30 & 38
FIRST ELECTION DISTRICT, HOWARD COUNTY, MARYLAND

SED. & EROSION CONTROL DETAILS

JURI MAISTE - SITE DESIGN CONSULTANT
2923 Chenoak Avenue, Baltimore, Maryland 21234
Phone: 410-661-8752 Fax: 410-661-8752
RICHARDSON ENGINEERING, LLC
730 W.Padonia Road, Suite 101, Cockeysville, Maryland 21030
Phone: 410-560-1502 Fax: 410-560-0827

G:\JOBS\JOBS2004\04037\Drawings\SHEET4.DWG (LAYOUT1)

SDP-04-017

SEDIMENT CONTROL NOTES

1. THE CONTRACTOR/OWNER IS RESPONSIBLE FOR OBTAINING ALL NECESSARY PERMITS. NO FURTHER CONSTRUCTION ACTIVITY SHALL TAKE PLACE UNTIL ALL REQUIRED PERMITS HAVE BEEN OBTAINED.
2. THE LIMITS OF DISTURBANCE SHALL BE CLEARLY DELINEATED IN THE FIELD PRIOR TO GRADING OF THE SITE TO ENSURE COMPLIANCE WITH APPROVED PLANS. ANY WORK BEYOND LIMITS OF DISTURBANCE IS CONSIDERED TO BE A VIOLATION OF THIS PLAN.
3. ALL SEDIMENT CONTROL PRACTICES MUST BE INSTALLED PRIOR TO ANY CONSTRUCTION ACTIVITY. UPON OMPLETION OF INSTALLATION OF PERIMETER SEDIMENT CONTROL PRACTICES, THE SITE MUST BE INSPECTED BY DPW. NO ADDITIONAL CONSTRUCTION ACTIVITY WILL BE AUTHORIZED WITHOUT THE APPROVAL OF DPW.
4. ALL POINTS OF INGRESS AND EGRESS SHALL BE PROTECTED TO PREVENT TRACKING OF MUD INTO PUBLIC WAYS. DURING CONSTRUCTION, EVERY MEANS WILL BE TAKEN TO CONTROL SOIL EROSION AND SILTATION. IF NECESSARY, A WASH RACK MAY NEED TO BE ESTABLISHED.
5. EARTH DIKES, SEDIMENT TRAPS, ETC. WILL BE LOCATED AS SHOWN ON THESE DRAWINGS. FIELD CHANGES AND MINOR ADJUSTMENTS ARE PERMISSABLE AS LONG AS THE INSTALLATION FUNCTIONS AND CONFORMS TO SPECIFICATIONS. ALL SUCH CHANGES MUST BE APPROVED BY THE SITE INSPECTOR PRIOR TO INSTALLATION. MAJOR CHANGES TO THE APPROVED PLAN WILL REQUIRE REAPPROVAL BY THE HOWARD SOIL CONSERVATION DISTRICT.
6. FOLLOWING INITIAL SOIL DISTURBANCE, PERMANENT OR TEMPORARY STABILIZATION SHALL BE COMPLETED WITHIN:
   A: SEVEN CALENDAR DAYS ON SLOPES GREATER THEN 3:1 AND ALL WATERWAYS, AND TO THE SURFACE OF ALL PERIMETER CONTROLS.
   B: FOURTEEN CALENDAR DAYS AS TO ALL OTHER DISTURBED OR GRADED AREAAS OF THE PROJECT SITE.
7. SEDIMENT BASINS MUST BE BUILT TO DESIGN SPECIFICATIONS SHOWN. IF THE BASIN IS TO BE USED AS A FUTURE SWM POND, THE BASIN WILL BE BUILT IN ACCORDANCE WITH THE LATEST MD-378 SPECIFICATIONS. SPECIFIED MATERIALS MUST BE USED. NO CHANGES OR MODIFIACTIONS WILL BE MADE WITHOUT WRITTEN AUTHORIZATION OF THE HOWARD SOIL CONSERVATION DISTRICT.
8. TEMPORARY FENCING SHALL BE PLACED AOUND ALL SEDIMENT BASINS, TRAPS, AND PONDS DURING CONSTRUCTION AND SITE GRADING.
9. AT THE END OF EACH WORKING DAY ALL SEDIMENT CONTROL PRACTICES WILL BE INSPECTED AND LEFT OPERATIONAL. A WEEKLY LOG WILL BE KEPT IN ACCORDANCE WITH NOI/NPDES REGULATIONS. A COPY OF THE APPROVED SEDIMENT CONTROL PLANS SHALL BE AVAILABLE AT THE SITE AT ALL TIMES.
10. CUT AND/OR FILL SHALL BE DONE IN CONFORMANCE WITH 1994 EROSION AND SEDIMENT CONTROL STANDARD AND SPECIFICATIONS FOR LAND GRADING.
11. SURFACE FLOWS OVER CUT AND FILL SLOPES SHALL BE CONTROLLED BY EITHER REDIRECTING FLOWS FROM TRAVERSING THE SLOPES OR BY INSTALLING MECHANICAL DEVICES TO SAFELY CONVEY WATER DOWN SLOPES WITHOUT CAUSING EROSION.
12. OFF-SITE WASTE OR BORROW AREAS SHALL HAVE AN APPROVED EROSION AND SEDIMENT CONTROL PLAN PRIOR TO THE IMPORT OR EXPORT OF MATERIAL TO THE PROJECT SITE.
13. ALL MATERIAL ORIGINATING FROM THE DEVELOPMENT OF THE PROPERTY AND DEPOSITED ON THE PUBLIC RIGHT-OF-WAY SHALL BE IMMEDIATELY REMOVED.
14. STORM DRAIN INLETS AND OUTLETS SHALL BE PROTECTED PER 1994 EROSION AND SEDIMENT CONTROL STANDARDS AND SPECIFICATIONS.
15. TOPSOILING, LIMING, FERTILIZING, SEEDING, MULCHING, SADDLING, ETC. ARE ALL ESSENTIAL PARTS OF SEDIMENT CONTROL AND MUST BE COMPLTED ALONG WITH ALL OTHER PRACTICES.
16. TRAPS TO BE REMOVED SHALL BE DEWATERED AS PER THE 1994 EROSION AND SEDIMENT CONTROL SATNDARDS AND SPECIFICATIONS.
17. PRIOR TO REMOVAL OR CONVERSION OF SEDIMENT BASINS TO SWM FACILITIES, THE STORM DRAINS WILL BE FLUSHED.
18. SEDIMENT CONTROL PRACTICES WILL BE MAINTAINED UNTIL ALL DISTURBED AREAS FOR WHICH PRACTICES WERE INSTALLED HAVE BEEN STABILIZED. SEDIMENT CONTROL PRACTICES MAY BE REMOVED ONLY WITH THE AUTHORIZATION OF DPW. ALL DISTURBED AREAS RESULTING FROM THE REMOVAL OF SEDIMENT CONTROL DEVICES SHALL BE STABILIZED IMMEDIATELY. REMOVAL PRIOR TO INSPECTOR APPROVAL CONSTITUTES A VIOLATION.

Permanent Seeding Summary

Seed Mixture (For Hardiness Zone 6 B) (From Table 25)					Fertilizer Rate (10-20-20)			Lime Rate
No.	Species	Application Rate (lb/ac)	Seeding Dates	Seeding Depths	N	P205	K20	
1	KENT. BLUEGRASS, CREEPING RED OR HARD FESCUE REDTOP	150	3/1 - 5/15 8/15 - 10/1	*	90 lb/ac (2.0 lb/ 1000 sf)	175 lb/ac (4.0 lb/ 1000 sf)	175 lb/ac (4.0 lb/ 1000 sf)	2 tons/ac (100 lb/ 1000 sf)
2	TALL FESCUE WEEPING LOVEGRASS SERECIA LEPEDEZA	110 3 20	5/16 - 8/14	*				

Temporary Seeding Summary

Seed Mixture (For Hardiness Zone 6 B) (From Table 26)					Fertilizer Rate (10-20-20)	Lime Rate
No.	Species	Application Rate (lb/ac)	Seeding Dates	Seeding Depths		
1	RYE	140	3/1 - 4/30 8/15 - 11/15	*	600 lb/ac (15 lb/1000 sf)	2 tons/ac (100 lb/ 1000 sf)
2	WEEPING LOVEGRASS	4	5/1 - 8/14	*		
3	TALL FESCUE	30	3/1 - 4/30 8/15 - 11/15	*		

* FOR HYDROSEEDING OR DRY SEEDING. APPLY AT SURFACE FOR DRILL OR CULTIPACKER SEEDING DEPTH = 1/4" MIN.

SPECIFICATIONS FOR VEGETATIVE ESTABLISHMENT

SITE PREPARATION

1. STABILIZE AS PER STANDARD RESPONSIBILITY NOTE #3.
2. TEMPORARY PERIMETER DIKES AND SILT TRAPS; ETC., ARE TO BE PROVIDED AS PER THIS PLAN PRIOR TO GRADING OPERATIONS WITH LOCATION ADJUSTMENTS TO BE MADE IN THE FIELD AS NECESSARY AND TO BE MAINTAINED AT THE END OF THE WORKING DAY. THE MINIMUM AREA PRACTICAL SHALL BE DISTURBED FOR THE MINIMUM AMOUNT OF TIME POSSIBLE.
3. PERMANENT SEEDING:
   A. SEEDBED PREPARATION: AREA TO BE SEEDED SHALL BE LOOSE AND FRIABLE TO A DEPTH OF AT LEAST 3 INCHES. THE TOP LAYER SHALL BE LOOSENED BY RAKING, DISCING OR OTHER ACCEPTABLE MEANS BEFORE SEEDING OCCURS. APPLY 2 TONS OF DOLOMITIC LIMESTONE AND 1,000 POUNDS OF 10-20-20 FERTILIZER PER ACRE. HARROW OR DISK LIME AND FERTILIZER INTO THE SOIL TO A DEPTH OF AT LEAST 3 INCHES ON SLOPES FLATTER THAN 3:1. NO ATTEMPT SHOULD BE MADE TO DRAG ANY DISKED AREA TO MAKE THE SOIL SURFACE SMOOTH AFTER DISKING.
   B. SEEDING: APPLY THE FOLLOWING SEED MIXTURES BETWEEN 1 FEBRUARY AND 31 OCTOBER: KENTUCKY 31 TALL FESCUE 100 POUNDS PER ACRE RED TOP 15 POUNDS PER ACRE SERICA LESPEDEZA 30 POUNDS PER ACRE ANNUAL RYE GRASS 25 POUNDS PER ACRE OR GERMAN MILLET 20 POUNDS PER ACRE TOTAL 165 TO 175 POUNDS PER ACRE USE GERMAN MILLET BETWEEN 1 JUNE AND 15 AUGUST. APPLY SEED UNIFORMLY ON A MOIST, FIRM SEEDBED WITH A CYCLONE SEED DRILL, CULTIPACKER SEEDER OR HYDROSEEDER (SLURRY INCLUDES SEEDS AND FERTILIZER, RECOMMENDED ON SLOPES ONLY). MAXIMUM SEED DEPTH SHOULD BE 1/4" IN CLAYEY SOILS AND 1/2" IN SANDY SOILS WHEN USING OTHER THAN THE HYDROSEEDER METHOD. IRRIGATE IF SOIL MOISTURE IS DEFICIENT TO SUPPORT ADEQUATE GROWTH, UNTIL VEGETATION IS FIRMLY ESTABLISHED.
   C. MULCHING: MULCH SHALL BE UNCHOPPED, UNROTTED, SMALL GRAIN STRAW APPLIED AT A RATE OF 2 TONS PER ACRE. MULCH MATERIALS SHALL BE RELATIVELY FREE OF ALL KINDS OF WEEDS AND SHALL BE FREE OF PROHIBITED NOXIOUS WEEDS.
   D. GUARANTEED PERMANENT VEGETATIVE STABILIZATION OF ALL AREAS AFFECTED BY THE EXECUTION OF THIS CONTRACT IS REQUIRED. AREAS NOT STABILIZED WITH A VIABLE STAND OF PERMANENT VEGETATIVE COVER MUST BE OVERSEEDED, LIMED AND FERTILIZED AND, IF NECESSARY, STRAW MULCHED AND TACKED BY NO LATER THAN THE FOLLOWING GROWING SEASON FOLLOWINGH INITIAL STABILIZATION EFFORTS.

4. TEMPORARY SEEDING:
LIME: 100 POUNDS OF DOLOMITIC LIMESTONE PER 1,000 SQUARE FEET
FERTILIZER: 15 POUNDS OF 10-10-10 PER 1,000 SQUARE FEET.
SEED: PERENNIAL RYE, ITALIAN RYE - 0.92 POUNDS PER 1,000 SQUARE FEET
(FEBRUARY 1 THROUGH APRIL 30 OR AUGUST 15 THROUGH NOVEMBER 1)
MILLET - 0.92 POUNDS PER 1,000 SQUARE FEET (MAY 1 THROUGH AUGUST 15)

5. NO FILLS MAY BE PLACED ON FROZEN GROUND. ALL FILL TO BE PLACED IN APPROXIMATELY HORIZONTAL LAYERS, EACH LAYER HAVING A LOOSE THICKNESS OF NOT MORE THAN 8". ALL FILL IN ROADWAYS AND PARKING AREAS IS TO BE COMPACTED TO 90% DENSITY; COMPACTION TO BE DETERMINED BY ASTM D-1557 (MODIFIED PROCTOR). ANY FILL WITHIN BUILDING AREA IS TO BE COMPACTED TO A MINIMUM OF 95% AS DETERMINED BY METHODS PREVIOUSLY MENTIONED. ALL OTHER FILLS SHALL BE COMPACTED SUFFICIENTLY SO AS TO BE STABLE AND PREVENT EROSION AND SLIPPAGE.

6. PERMANENT SOD:
PERMANENT SOD IS TO BE KENTUCKY 31 TALL FESCUE, STATE APPROVED SOD; LIME AND FERTILIZE PER PERMANENT SEEDING SPECIFICATIONS AND LIGHTLY IRRIGATE SOIL PRIOR TO LAYING SOD. SOD IS TO BE LAID ON THE CONTOUR WITH ALL ENDS TIGHTLY SHUTTING, JOINTS ARE TO BE STAGGERED BETWEEN ROWS. WATER AND ROLL OR TAMP SOD TO INSURE POSITIVE ROOT CONTACT WITH THE SOIL. ADDITIONAL WATERING FOR ESTABLISHMENT MAY BE REQUIRED. SOD IS NOT TO BE APPLIED ON FROZEN GROUND.

G:\JOBS\JOBS2004\04037\Drawings\SHEET5.DWG (LAYOUT1)

TOPSOIL SPECIFICATIONS

DEFINITION
PLACEMENT OF TOPSOIL OVER A PREPARED SUBSOIL PRIOR TO ESTABLISHMENT OF PERMANENT VEGETATION.

PURPOSE
TO PROVIDE A SUITABLE SOIL MEDIUM FOR VEGETATIVE GROWTH. SOILS OF CONCERN HAVE LOW MOISTURE CONTENT, LOW NUTRIENT LEVELS, LOW PH, MATERIALS TOXIC TO PLANTS, AND/OR UNACCEPTABLE SOIL GRADATION.

CONDITIONS WHERE PRACTICE APPLIES
I. THIS PRACTICE IS LIMITED TO AREAS HAVING 2:1 OR FLATTER SLOPES WHERE:

A. THE TEXTURE OF THE EXPOSED SUBSOIL/PARENT MATERIAL IS NOT ADEQUATE TO PRODUCE VEGETATIVE GROWTH.
B. THE SOIL MATERIAL IS SO SHALLOW THAT THE ROOTING ZONE IS NOT DEEP ENOUGH TO SUPPORT PLANTS OR FURNISH CONTINUING SUPPLIES OF MOISTURE AND PLANT NUTRIENTS.
C. THE ORIGINAL SOIL TO BE VEGETATED CONTAINS MATERIAL TOXIC TO PLANT GROWTH.

D. THE SOIL IS SO ACID'F6:1HAT TREATMENT WITH LIMESTONE IS NOT FEASIBLE.

II. FOR THE PURPOSE OF THESE STANDARDS AND SPECIFICATIONS, AREAS HAVING SLOPES STEEPER THAN 2: 1 REQUIRE SPECIAL CONSIDERATION AND DESIGN FOR ADEQUATE STABILIZATION. AREAS HAVING SLOPES STEEPER THAN 2:1 SHALL HAVE THE APPROPRIATE STABILIZATION SHOWN ON THE PLANS.

CONSTRUCTION AND MATERIAL SPECIFICATIONS
I. TOPSOIL SALVAGED FROM THE EXISTING SITE MAY BE USED PROVIDED THAT IT MEETS THE STANDARDS AS SET FORTH IN THESE SPECIFICATIONS. TYPICALLY, THE DEPTH OF TOPSOIL TO BE SALVAGED FOR A GIVEN SOIL TYPE CAN BE FOUND IN THE REPRESENTATIVE SOIL PROFILE SECTION IN THE SOIL SURVEY PUBLISHED BY USDA-SCS IN COOPERATION WITH MARYLAND AGRICULTURAL EXPERIMENTAL STATION.

II. TOPSOIL SPECIFICATIONS - SOIL TO BE USED AS TOPSOIL MUST MEET THE FOLLOWING:

A. TOPSOIL SHALL BE A LOAM, SANDY LOAM, CLAY LOAM, SILT LOAM, SANDY CLAY LOAM, LOAMY SAND. OTHER SOILS MAY BE USED IF RECOMMENDED BY AN AGRONOMIST OR SOIL SCIENTIST AND APPROVED BY THE APPROPRIATE APPROVAL AUTHORITY. REGARDLESS, TOPSOIL SHALL NOT BE A MIXTURE OF CONTRASTING TEXTURED SUBSOILS AND SHALL CONTAIN LESS THAN 5% BY VOLUME OF CINDERS, STONES, SLAG, COARSE FRAGMENTS, GRAVEL, STICKS, ROOTS, TRASH, OR OTHER MATERIALS LARGER THAN 1 ½" IN DIAMETER.

B. TOPSOIL MUST BE FREE OF PLANTS OR PLANT PARTS SUCH AS BERMUDA GRASS, QUACKGRASS, JOHNSONGRASS, NUTSEDGE, POISON IVY, THISTLE, OR OTHERS AS SPECIFIED.

C. WHERE THE SUBSOIL IS EITHER HIGHLY ACIDIC OR COMPOSED OF HEAVY CLAYS, GROUND LIMESTONE SHALL BE SPREAD AT THE RATE OF 4-8 TONS/ACRE (200-400 POUNDS/1,000 SQUARE FEET) PRIOT TO THE PLACEMENT OF TOPSOIL. LIME SHALL BE DISTRIBUTED UNIFORMLY OVER DESIGNATED AREAS AND WORKED INTO THE SOIL IN CONJUNCTION WITH TILLAGE OPERATIONS AS DESCRIBED IN THE FOLLOWING PROCEDURES.

III. PLACE TOPSOIL (IF REQUIRED) AND APPLY SOIL AMENDMENTS AS SPECIFIED IN 20.0 VEGETATIVE STABILIZATION - SECTION I - VEGETATIVE STABILIZATION METHODS & MATERIALS.

TOPSOIL APPLICATION
I. WHEN TOPSOILING, MAINTAIN NEEDED EROSION AND SEDIMENT CONTROL PRACTICES SUCH AS DIVERSIONS, DRADE STABILIZATION STRUCTURES, EARTH DIKES, SLOPE SILT FENCE AND SEDIMENT TRAPS & BASINS.

II. GRADES ON THE AREAS TO BE TOPSOILED, WHICH HAVE BEEN PREVIOUSLY ESTABLISHED, SHALL BE MAINTAINED, ALBEIT 4" OR 8" HIGHER IN ELEVATION.

III. TOPSOIL SHALL BE UNIFORMLY DISTRIBUTED IN A 4"-8" LAYER AND SLIGHTLY COMPACTED TO A MINIMUM THICKNESS OF 4". SPREADING SHALL BE PERFORMED IN SUCH A MANNER THAT SODDING OR SEEDING CAN PROCEED WITH A MINIMUM OF ADDITIONAL SOIL PREPARATION AND TILLAGE. ANY IRREGULARITIES IN THE SURFACE RESULTING FROM TOPSOILING OR OTHER OPERATIONS SHALL BE CORRECTED IN ORDER TO PREVENT THE FORMATION OF DEPRESSIONS OR WATER POCKETS.

IV. TOPSOIL SHALL NOT BE PLACED WHILE THE TOPSOIL OR SUBSOIL IS IN A FROZEN OR MUDDY CONDITION, WHEN THE SUBSOIL IS EXCESSIVELY WET OR IN A CONDITION THAT MAY OTHERWISE BE DETRIMENTAL TO PROPER GRADING AND SEEDBED PREPARATION.

APPROVED: DEPARTMENT OF PLANNING AND ZONING

CHIEF, DEVELOPMENT ENGINEERING DIVISION	DATE 9/6/06
CHIEF, DIVISION OF LAND DEVELOPMENT	DATE 9/14/06
DIRECTOR	DATE 9/18/06

OWNERS/DEVELOPERS
PARCEL 30 - GWENRIDGE LLC 8835-P COLUMBIA 100 PARKWAY COLUMBIA, MD 21045 PARCEL 38 - MEHTA CHARALUTA TRUST 5551 OAKLAND MILLS ROAD COLUMBIA, MD 21045
BRANTLY DEVELOPMENT GROUP, INC. 8835-P COLUMBIA 100 PARKWAY COLUMBIA, MD 21045

SEQUENCE OF OPERATIONS

1. OBTAIN GRADING PERMIT. NOTIFY HOWARD COUNTY DEPARTMENT OF INSPECTIONS, LICENSES & PERMITS AT LEAST 48 HOURS PRIOR TO ANY LAND DISTURBANCE @ 410-313-2455.
2. INSTALL EARTH DIKE, STABILIZED CONSTRUCTION ENTRANCE, SILT FENCE AND SUPER SILT FENCE AT LOCATION SHOWN ON PLAN. (2 DAYS)
3. CLEAR AND GRUB AREAS FOR BASIN CONSTRUCTION ONLY.
4. INSTALL STORM DRAIN SYSTEM FROM EXISTING SYSTEM IN WASHINGTON BOULEVARD AND THE PROPOSED BASINS ONLY AND CONSTRUCT BASINS #1 AND #2. FOR BASIN #1 SEE THE STORMWATER MANAGEMENT PLANS FOR CONSTRUCTION DETAILS, HOWEVER DEWATERING DEVICE SHALL BE CONSTRUCTED AS SHOWN ON THE SEDIMENT CONTROL PLANS. THE STORMWATER MANAGEMENT EMERGENCY DE-WATERING DEVICE SHALL BE INSTALLED HOWEVER THE VALVE SHALL BE LOCKED IN THE CLOSED POSITION. (20 DAYS)
5. UPON RECEIVING NOTIFICATION TO PROCEED FROM THE INSPECTOR, CLEAR AND GRUB THE REMAINDER OF THE SITE. BEGIN ROUGH GRADING OF SITE. BEGIN UTILITY INSTALLATION WHEN SITE IS TO GRADE. (30 DAYS)
6. INSTALL STONE BASE IN AREAS TO BE PAVED. (10 DAYS)
7. BEGIN BUILDING CONSTRUCTION (180 DAYS)
8. INSTALL PAVING AND COMPLETE BUILDING CONSTRUCTION. (30 DAYS)
9. FINE GRADE REMAINING AREAS AND PROVIDE PERMANENT STABILIZATION. (8 DAYS)
10. REMOVE SEDIMENT CONTROL MEASURES WITH APPROVAL FROM THE SEDIMENT CONTROL INSPECTOR. (SEE NOTE)
11. STABILIZE AREAS DISTURBED AS A RESULT OF SEDIMENT CONTROL MEASURE REMOVAL.

NOTE: THE SEDIMENT BASIN #1 SHALL NOT BE CONVERTED FOR STORMWATER MANAGEMENT UNTIL THE COMPLETION OF PHASE II. BASIN #2 SHALL NOT BE REMOVED UNTIL REMAINING PHASES ARE COMPLETED AND CONTRIBUTING AREA IS PERMANENTLY STABILIZED.

30.0 DUST CONTROL

DEFINITION

CONTROLLING DUST BLOWING AND MOVEMENT ON CONSTRUCTION SITES AND ROADS.

PURPOSE

TO PREVENT BLOWING AND MOVEMENT OF DUST FROM EXPOSED SOIL SURFACES, REDUCE ON AND OFF-SITE DAMAGE, HEALTH HAZARDS, AND IMPROVE TRAFFIC SAFETY.

CONDITIONS WHERE PRACTICE APPLIES

THIS PRACTICE IS APPLICABLE TO AREAS SUBJECT TO DUST BLOWING AND MOVEMENT WHERE ON AND OFF-SITE DAMAGE IS LIKELY WITHOUT TREATMENT.

SPECIFICATIONS

TEMPORARY METHODS

1. MULCHES - SEE STANDARDS FOR VEGETATIVE STABILIZATION WITH MULCHES ONLY. MULCH SHOULD BE CRIMPED OR TACKED TO PREVENT BLOWING.

2. VEGETATIVE COVER - SEE STANDARDS FOR TEMPORARY VEGETATIVE COVER.

3. TILLAGE - TO ROUGHEN SURFACE AND BRING CLODS TO THE SURFACE. THIS IS AN EMERGENCY MEASURE, WHICH SHOULD BE USED BEFORE SOIL BLOWING STARTS. BEGIN PLOWING ON WINDWARD SIDE OF SITE. CHISEL-TYPE PLOWS SPACED ABOUT 12" APART, SPRING-TOOTHED HARROWS, AND SIMILAR PLOWS ARE EXAMPLES OF EQUIPMENT WHICH MAY PRODUCE THE DESIRED EFFECT.
4. IRRIGATION - THIS IS GENERALLY DONE AS AN EMERGENCY TREATMENT. SITE IS SPRINKLED WITH WATER UNTIL THE SURFACE IS MOIST. REPEAT AS NEEDED. AT NO TIME SHOULD THE SITE BE IRRIGATED TO THE POINT THAT RUNOFF BEGINS TO FLOW.

5. BARRIERS - SOLID BOARD FENCES, SILT FENCES, SNOW FENCES, BURLAP FENCES, STRAW BALES, AND SIMILAR MATERIAL CAN BE USED TO CONTROL AIR CURRENTS AND SOIL BLOWING. BARRIERS PLACED AT RIGHT ANGLES TO PREVAILING CURRENTS AT INTERVALS OF ABOUT 10 TIMES THEIR HEIGHT ARE EFFECTIVE IN CONTROLLING SOIL BLOWING.
6. CALCIUM CHLORIDE - APPLY AT RATES THAT WILL KEEP SURFACE MOIST. MAY NEED RETREATMENT.

PERMANENT METHODS

1. PERMANENT VEGETATION - SEE STANDARDS FOR PERMANENT VEGETATIVE COVER. AND PERMANENT STABILIZATION WITH SOD. EXISTING TREES OR LARGE SHRUBS MAY AFFORD VALUABLE PROTECTION IF LEFT IN PLACE.
2. TOPSOILING - COVERING WITH LESS EROSIVE SOIL MATERIALS. SEE STANDARDS FOR TOPSOILING.
3. STONE - COVER SURFACE WITH CRUSHED STONE OR COARSE GRAVEL.

REFERENCES

1. AGRICULTURE HANDBOOK 346. WIND EROSION FORCES IN THE UNITED STATES AND THEIR USE IN PREDICTING SOIL LOSS.

2. AGRICULTURE INFORMATION BULLETIN 354. HOW TO CONTROL WIND EROSION. USDA-ARS.

SEDIMENT CONTROL NOTES

1. A MINIMUM OF 48 HOURS NOTICE MUST BE GIVEN TO THE HOWARD COUNTY DEPARTMENT OF INSPECTIONS, LICENSES AND PERMITS, SEDIMENT CONTROL DIVISION PRIOR TO THE START OF ANY CONSTRUCTION 313-1855 .

2. ALL VEGETATIVE AND STRUCTURAL PRACTICES ARE TO BE INSTALLED ACCORDING TO THE PROVISIONS OF THIS PLAN AND ARE TO BE IN CONFORMANCE WITH THE 1994 MARYLAND STANDARDS AND SPECIFICATIONS FOR SOIL EROSION AND SEDIMENT CONTROL AND REVISIONS THERETO.

3. FOLLOWING INITIAL SOIL DISTURBANCE OR REDISTURBANCE, PERMANENT OR TEMPORARY STABILIZATION SHALL BE COMPLETED WITHIN: A) 7 CALENDAR DAYS FOR ALL PERIMETER SEDIMENT CONTROL STRUCTURES, DIKES, PERIMETER SLOPES AND ALL SLOPES GREATER THAN 3:1, B) 14 DAYS AS TO ALL OTHER DISTURBED OR GRADED AREAS ON THE PROJECT SITE.

4. ALL SEDIMENT TRAPS/BASINS SHOWN MUST BE FENCED AND WARNING SIGNS POSTED AROUND THEIR PERIMETER IN ACCORDANCE WITH VOL. 1, CHAPTER 7, OF THE HOWARD COUNTY DESIGN MANUAL, STORM DRAINAGE.

5. ALL DISTURBED AREAS MUST BE STABILIZED WITHIN THE TIME PERIOD SPECIFIED ABOVE IN ACCORDANCE WITH THE 1994 MARYLAND STANDARDS AND SPECIFICATIONS FOR SOIL EROSION AND SEDIMENT CONTROL FOR PERMANENT SEEDING, SOD, TEMPORARY SEEDING, AND MULCHING SEC. G .
TEMPORARY STABILIZATION WITH MULCH ALONE CAN ONLY BE DONE WHEN RECOMMENDED SEEDING DATES DO NOT ALLOW FOR PROPER GERMINATION AND ESTABLISHMENT OF GRASSES.

6. ALL SEDIMENT CONTROL STRUCTURES ARE TO REMAIN IN PLACE AND ARE TO BE MAINTAINED IN OPERATIVE CONDITION UNTIL PERMISSION FOR THEIR REMOVAL HAS BEEN OBTAINED FROM THE HOWARD COUNTY SEDIMENT CONTROL INSPECTOR.

7. SITE ANALYSIS:

TOTAL AREA OF SITE	1,152,550 SF / 26.459 AC.
AREA DISTURBED	1,118,532 SF / 25.678 AC.
AREA TO BE:	
ROOFED OR PAVED	349,135 SF / 8.038 AC.
VEGETATIVELY STABILIZED	803,415 SF / 18.421 AC.
TOTAL CUT	113,126 CU. YDS
TOTAL FILL	113,126 CU. YDS
OFFSITE WASTE/BORROW AREA LOCATION	

8. ANY SEDIMENT CONTROL PRACTICE WHICH IS DISTURBED BY GRADING ACTIVITY FOR PLACEMENT OF UTILITIES MUST BE REPAIRED ON THE SAME DAY OF DISTURBANCE.

9. ADDITIONAL SEDIMENT CONTROL MUST BE PROVIDED, IF DEEMED NECESSARY BY THE HOWARD COUNTY SEDIMENT CONTROL INSPECTOR.

10. ON ALL SITES WITH DISTURBED AREAS IN EXCESS OF 2 ACRES, APPROVAL OF THE INSPECTION AGENCY SHALL BE REQUESTED UPON COMPLETION OF INSTALLATION OF PERIMETER EROSION AND SEDIMENT CONTROLS, BUT BEFORE PROCEEDING WITH ANY OTHER EARTH DISTURBANCE OR GRADING. OTHER BUILDING OR GRADING INSPECTION APPROVALS MAY NOT BE AUTHORIZED UNTIL THIS INITIAL APPROVAL BY THE INSPECTION AGENCY IS MADE.

11. TRENCHES FOR THE CONSTRUCTION OF UTILITIES IS LIMITED TO THREE PIPE LENGTHS OR THAT WHICH SHALL BE BACK-FILLED AND STABILIZED WITHIN ONE WORKING DAY, WHICHEVER IS SHORTER.

THESE PLANS HAVE BEEN REVIEWED FOR THE HOWARD SOIL CONSERVATION DISTRICT AND MEET THE TECHNICAL REQUIREMENTS FOR SMALL POND CONSTRUCTION, SOIL EROSION AND SEDIMENT CONTROL.

USDA-NATURAL RESOURCES CONSERVATION SERVICE — DATE 8/22/06

THESE PLANS FOR SMALL POND CONSTRUCTION, SOIL EROSION AND SEDIMENT CONTROL MEET THE REQUIREMENTS OF THE HOWARD SOIL CONSERVATION DISTRICT.

HOWARD SOIL CONSERVATION DISTRICT — DATE 8/22/06

ENGINEER'S CERTIFICATE

"I CERTIFY THAT THIS PLAN FOR SEDIMENT AND EROSION CONTROL REPRESENTS A PRACTICAL AND WORKABLE PLAN BASED ON MY PERSONAL KNOWLEDGE OF THE SITE CONDITIONS AND THAT IT WAS PREPARED IN ACCORDANCE WITH THE REQUIREMENTS OF THE HOWARD SOIL CONSERVATION DISTRICT. I HAVE NOTIFIED THE DEVELOPER THAT HE/SHE MUST ENGAGE A REGISTERED PROFESSIONAL ENGINEER TO SUPERVISE POND CONSTRUCTION AND PROVIDE THE HOWARD SOIL CONSERVATION DISTRICT WITH AN "AS-BUILT" PLAN OF THE POND WITHIN 30 DAYS OF COMPLETION."

SIGNATURE OF ENGINEER (Print name below signature) — DATE 7/24/06
PATRICK C RICHARDSON JR.

DEVELOPER'S CERTIFICATE

"I/WE CERTIFY THAT ALL DEVELOPMENT AND CONSTRUCTION WILL BE DONE ACCORDING TO THIS PLAN FOR EROSION AND SEDIMENT CONTROL AND THAT ALL RESPONSIBLE PERSONNEL INVOLVED IN THE CONSTRUCTION PROJECT WILL HAVE A CERTIFICATE OF ATTENDANCE AT A DEPARTMENT OF THE ENVIRONMENT APPROVED TRAINING PROGRAM FOR THE CONTROL OF SEDIMENT AND EROSION BEFORE BEGINNING THE PROJECT. I SHALL ENGAGE A REGISTERED PROFESSIONAL ENGINEER TO SUPERVISE POND CONSTRUCTION AND PROVIDE THE HOWARD SOIL CONSERVATION DISTRICT WITH AN "AS-BUILT" PLAN OF THE POND WITHIN 30 DAYS OF COMPLETION. I ALSO AUTHORIZE PERIODIC ON-SITE INSPECTION BY THE HOWARD SOIL CONSERVATION DISTRICT."

SIGNATURE OF DEVELOPER (Print name below signature) — DATE 6/11/06
JOHN F. LIPARINI

DRAWN: CND	
DATE: MAY 10, 2006	
SCALE: NTS	

DATE	REVISION	BY

ELKRIDGE-CROSSING-PHASE ONE
PARCELS A-E
TAX MAP 38, GRID 2, PARCELS 30 & 38
FIRST ELECTION DISTRICT, HOWARD COUNTY, MARYLAND
SED. & EROSION CONTROL NOTES

JURI MAISTE - SITE DESIGN CONSULTANT
2923 Chenoak Avenue, Baltimore, Maryland 21234
Phone: 410-661-8752 Fax: 410-661-8752
RICHARDSON ENGINEERING, LLC
110 Old Padonia Road, Suite LC, Cockeysville, Maryland 21030
Phone: 410-560-1502 Fax: 410-560-0827

SDP-04-017

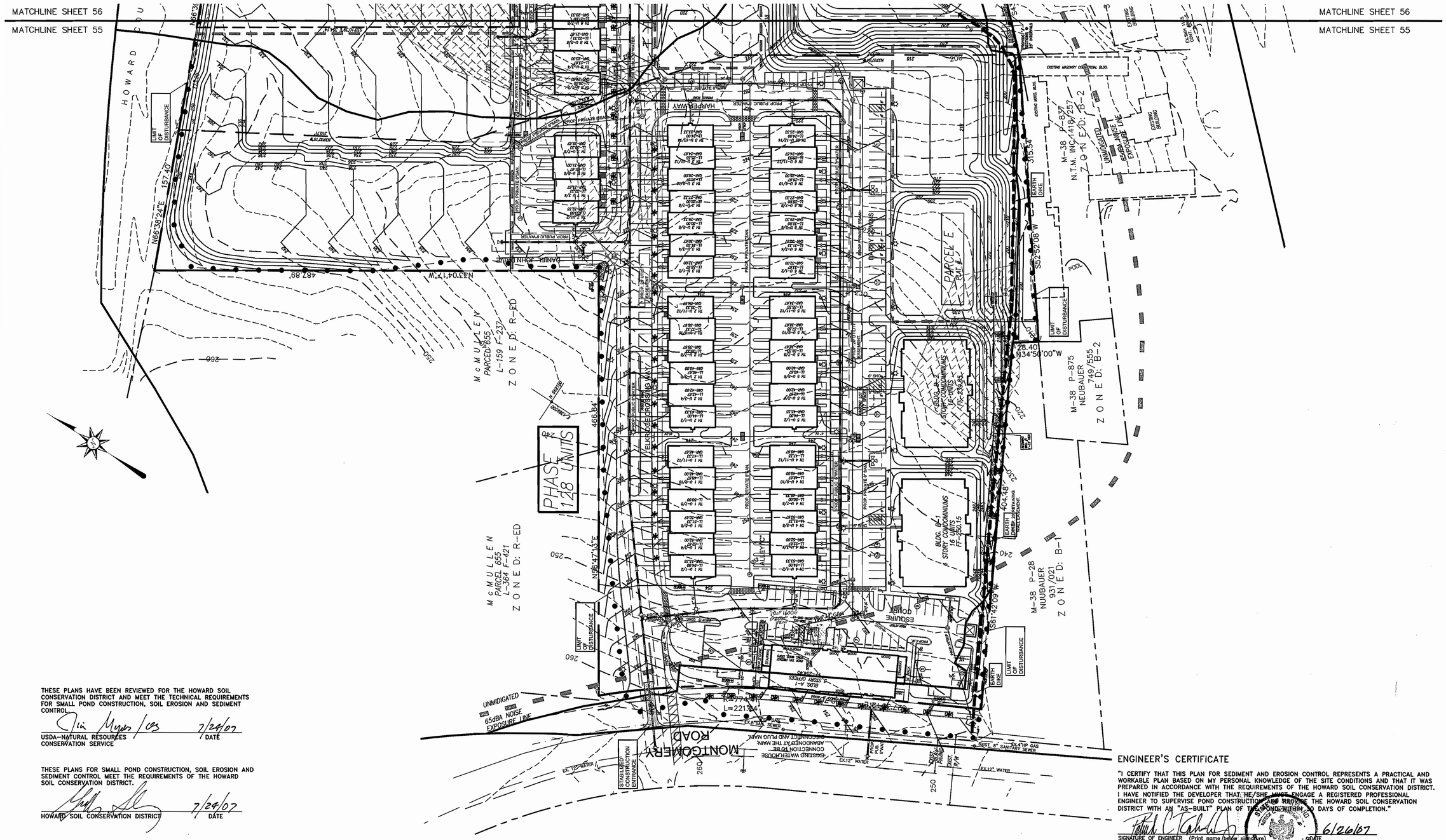

THESE PLANS HAVE BEEN REVIEWED FOR THE HOWARD SOIL CONSERVATION DISTRICT AND MEET THE TECHNICAL REQUIREMENTS FOR SMALL POND CONSTRUCTION, SOIL EROSION AND SEDIMENT CONTROL.

Jim Myers / CDS — 7/24/07
USDA–NATURAL RESOURCES CONSERVATION SERVICE — DATE

THESE PLANS FOR SMALL POND CONSTRUCTION, SOIL EROSION AND SEDIMENT CONTROL MEET THE REQUIREMENTS OF THE HOWARD SOIL CONSERVATION DISTRICT.

7/24/07
HOWARD SOIL CONSERVATION DISTRICT — DATE

APPROVED: DEPARTMENT OF PLANNING AND ZONNING

CHIEF, DEVELOPMENT ENGINEERING DIVISION	DATE 7/20/07
CHIEF, DIVISION OF LAND DEVELOPMENT	DATE 8/1/07
DIRECTOR	DATE 8/2/07

LEGEND

100	EXISTING CONTOUR
	EXISTING PAVED AREAS
	EXISTING BUILDING
	PROPOSED PAVING
100	PROPOSED CONTOUR
SF SF SF	SILT FENCE
SSF SSF SSF	SUPER SILT FENCE
	LIMIT OF DISTURBANCE

OWNERS/DEVELOPERS

PARCEL 30 –
GWENRIDGE LLC
8835–P COLUMBIA 100 PARKWAY
COLUMBIA, MD 21045
PARCEL 38 –
MEHTA CHARALUTA TRUST
5551 OAKLAND MILLS ROAD
COLUMBIA, MD 21045

BRANTLY DEVELOPMENT GROUP, INC.
8835–P COLUMBIA 100 PARKWAY
COLUMBIA, MD 21045

ENGINEER'S CERTIFICATE

"I CERTIFY THAT THIS PLAN FOR SEDIMENT AND EROSION CONTROL REPRESENTS A PRACTICAL AND WORKABLE PLAN BASED ON MY PERSONAL KNOWLEDGE OF THE SITE CONDITIONS AND THAT IT WAS PREPARED IN ACCORDANCE WITH THE REQUIREMENTS OF THE HOWARD SOIL CONSERVATION DISTRICT. I HAVE NOTIFIED THE DEVELOPER THAT HE/SHE MUST ENGAGE A REGISTERED PROFESSIONAL ENGINEER TO SUPERVISE POND CONSTRUCTION AND PROVIDE THE HOWARD SOIL CONSERVATION DISTRICT WITH AN "AS–BUILT" PLAN OF THE POND WITHIN 30 DAYS OF COMPLETION."

6/26/07
SIGNATURE OF ENGINEER (Print name below signature) — DATE

STEPHEN C. TAHLI — STATE OF MARYLAND — NO. 19915 — PROFESSIONAL ENGINEER

DEVELOPER'S CERTIFICATE

"I/WE CERTIFY THAT ALL DEVELOPMENT AND CONSTRUCTION WILL BE DONE ACCORDING TO THIS PLAN FOR EROSION AND SEDIMENT CONTROL AND THAT ALL RESPONSIBLE PERSONNEL INVOLVED IN THE CONSTRUCTION PROJECT WILL HAVE A CERTIFICATE OF ATTENDANCE AT A DEPARTMENT OF THE ENVIRONMENT APPROVED TRAINING PROGRAM FOR THE CONTROL OF SEDIMENT AND EROSION BEFORE BEGINNING THE PROJECT. I SHALL ENGAGE A REGISTERED PROFESSIONAL ENGINEER TO SUPERVISE POND CONSTRUCTION AND PROVIDE THE HOWARD SOIL CONSERVATION DISTRICT WITH AN "AS–BUILT" PLAN OF THE POND WITHIN 30 DAYS OF COMPLETION. I ALSO AUTHORIZE PERIODIC ON–SITE INSPECTION BY THE HOWARD SOIL CONSERVATION DISTRICT."

6/26/07
SIGNATURE OF DEVELOPER (Print name below signature) — DATE
JOHN F. LIPARINI

Rev./Replacement Sht.

DRAWN: CND
DATE: MARCH 7, 2006
06/07
SCALE: 1"=50'

DATE	REVISION	BY
1/1/07	W.H.C., BLDG. A-2 & MEHTA CIRCLE	CND
6/21/06	Grading revised & S.H.C. Tbl. 6.6(a)	CND
6/21/06	Wide Grade 17024	CND

ELKRIDGE–CROSSING–PHASE ONE

PARCELS A–E
TAX MAP 38, GRID 2, PARCELS 30 & 38
FIRST ELECTION DISTRICT, HOWARD COUNTY, MARYLAND

SED. & EROSION CONTROL PLAN

JURI MAISTE – SITE DESIGN CONSULTANT
2923 Chenoak Avenue, Baltimore, Maryland 21234
Phone: 410–661–8752 Fax: 410–661–8752

RICHARDSON ENGINEERING, LLC
110 Old Padonia Road, Suite 1C, Cockeysville, Maryland 21030
Phone: 410–560–1502 Fax: 410–560–0827

SDP-04-017

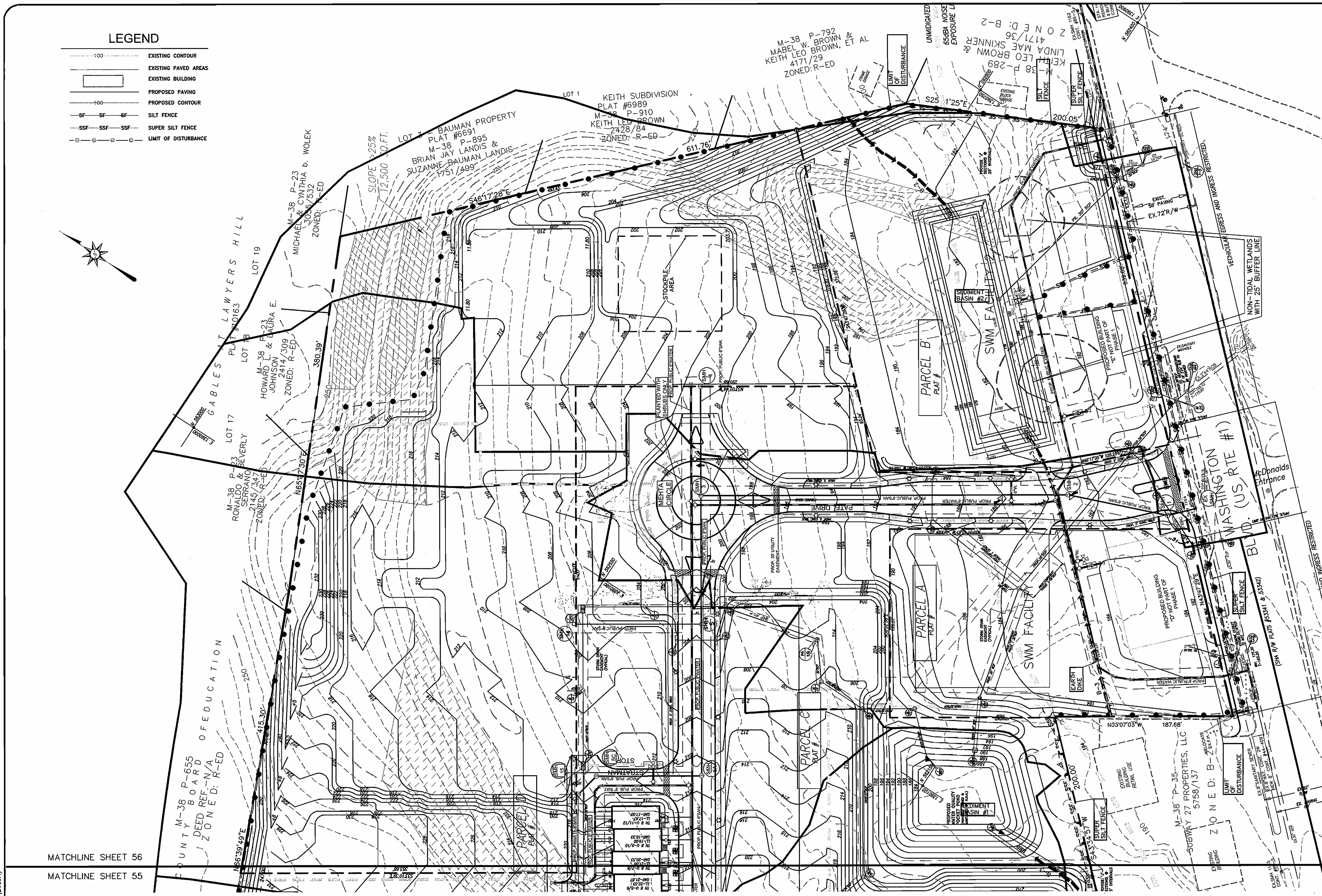

SEDIMENT BASIN NO. 1
PROPOSED D.A.: 21.88 AC.
EXISTING D.A.: 20.00 AC
STORAGE REQ'D.: 78,768 C.F.
STORAGE PROV'D.: 85,000 C.F.
WET STORAGE REQ'D. : 39,384 C.F.
WET STORAGE PROV'D. : 39,384 C.F.
WET STORAGE: 189.10
DRY STORAGE REQ'D. : 39,384 C.F.
DRY STORAGE PROV'D. : 62,652 C.F.
DRY STORAGE: 192.70 (WEIR CREST)
CLEAN OUT REQ'D. : 19,692 C.F.
CLEAN OUT PROV'D. : 19,692 C.F.
CLEAN OUT ELEV.: 187.00
SIDE SLOPE: 3:1
BARRELL PIPE SIZE: 36"
BARRELL INV. 185.58
STORAGE DEPTH= 8.7'
TOP ELEVATION: 196.20 (EMBANKMENT ELEV.)
EX. GROUND AT SPILLWAY: 194
BOTTOM ELEV.: 184.0

SEDIMENT BASIN NO. 2
PROPOSED D.A.: 14.87 AC.
EXISTING D.A.: 14.87 AC
STORAGE REQ'D.: 53 ,534 C.F.
STORAGE PROV'D.: 54,052 C.F.
WET STORAGE REQ'D. : 26,767 C.F.
WET STORAGE PROV'D. : 26,800 C.F.
WET STORAGE: 181.15 .
DRY STORAGE REQ'D. : 26,767 C.F.
DRY STORAGE PROV'D. : 27,252 C.F.
DRY STORAGE: 183.0 (WEIR CREST)
CLEAN OUT REQ'D. : 13,384 C.F.
CLEAN OUT PROV'D. : 13,400 C.F.
CLEAN OUT ELEV.: 180.15
SIDE SLOPE: 2:1
BARRELL PIPE SIZE: 30"
BARRELL INV. 178.5
STORAGE DEPTH= 4.0'
TOP ELEVATION: 186.0 (EMBANKMENT ELEV.)
EX. GROUND AT SPILLWAY: 184
BOTTOM ELEV.: 179

APPROVED: DEPARTMENT OF PLANNING AND ZONING

CHIEF, DEVELOPMENT ENGINEERING DIVISION — DATE 9/6/06

CHIEF, DIVISION OF LAND DEVELOPMENT — DATE 9/14/06

DIRECTOR — DATE 9/18/06

THESE PLANS HAVE BEEN REVIEWED FOR THE HOWARD SOIL CONSERVATION DISTRICT AND MEET THE TECHNICAL REQUIREMENTS FOR SMALL POND CONSTRUCTION, SOIL EROSION AND SEDIMENT CONTROL.

USDA-NATURAL RESOURCES CONSERVATION SERVICE — DATE 8/22/06

THESE PLANS FOR SMALL POND CONSTRUCTION, SOIL EROSION AND SEDIMENT CONTROL MEET THE REQUIREMENTS OF THE HOWARD SOIL CONSERVATION DISTRICT.

HOWARD SOIL CONSERVATION DISTRICT — DATE 8/22/06

ENGINEER'S CERTIFICATE

"I CERTIFY THAT THIS PLAN FOR SEDIMENT AND EROSION CONTROL REPRESENTS A PRACTICAL AND WORKABLE PLAN BASED ON MY PERSONAL KNOWLEDGE OF THE SITE CONDITIONS AND THAT IT WAS PREPARED IN ACCORDANCE WITH THE REQUIREMENTS OF THE HOWARD SOIL CONSERVATION DISTRICT. I HAVE NOTIFIED THE DEVELOPER THAT HE/SHE MUST ENGAGE A REGISTERED PROFESSIONAL ENGINEER TO SUPERVISE POND CONSTRUCTION AND PROVIDE THE HOWARD SOIL CONSERVATION DISTRICT WITH AN "AS-BUILT" PLAN OF THE POND WITHIN 30 DAYS OF COMPLETION."

SIGNATURE OF ENGINEER (Print name below signature) — DATE 7/24/06
PATRICK C RICHARDSON, P.E.

OWNERS/DEVELOPERS
PARCEL 30 - GWENRIDGE LLC 8835-P COLUMBIA 100 PARKWAY COLUMBIA, MD 21045 PARCEL 38 - MEHTA CHARALUTA TRUST 5551 OAKLAND MILLS ROAD COLUMBIA, MD 21045
BRANTLY DEVELOPMENT GROUP, INC. 8835-P COLUMBIA 100 PARKWAY COLUMBIA, MD 21045

DEVELOPER'S CERTIFICATE

"I/WE CERTIFY THAT ALL DEVELOPMENT AND CONSTRUCTION WILL BE DONE ACCORDING TO THIS PLAN FOR EROSION AND SEDIMENT CONTROL AND THAT ALL RESPONSIBLE PERSONNEL INVOLVED IN THE CONSTRUCTION PROJECT WILL HAVE A CERTIFICATE OF ATTENDANCE AT A DEPARTMENT OF THE ENVIRONMENT APPROVED TRAINING PROGRAM FOR THE CONTROL OF SEDIMENT AND EROSION BEFORE BEGINNING THE PROJECT. I SHALL ENGAGE A REGISTERED PROFESSIONAL ENGINEER TO SUPERVISE POND CONSTRUCTION AND PROVIDE THE HOWARD SOIL CONSERVATION DISTRICT WITH AN "AS-BUILT" PLAN OF THE POND WITHIN 30 DAYS OF COMPLETION. I ALSO AUTHORIZE PERIODIC ON-SITE INSPECTION BY THE HOWARD SOIL CONSERVATION DISTRICT."

SIGNATURE OF DEVELOPER (Print name below signature) — DATE 8/11/06
JOHN F. LIPARINI

G:\JOBS\JOBS2004\04037\Drawings\SHEET6.DWG (LAYOUT1)

DRAWN: CND
DATE: MARCH 1, 2006
SCALE: 1"=50'

DATE	REVISION	BY
1/1/07	SEWER, STORMDRAIN, EASEMENTS, MEHTA CIRCLE	CND

ELKRIDGE-CROSSING-PHASE ONE

PARCELS A-E
TAX MAP 38, GRID 2, PARCELS 30 & 38
FIRST ELECTION DISTRICT, HOWARD COUNTY, MARYLAND

SED. & EROSION CONTROL PLAN

JURI MAISTE - SITE DESIGN CONSULTANT
2923 Chenoak Avenue, Baltimore, Maryland 21234
Phone: 410-661-8752 Fax: 410-661-8752
RICHARDSON ENGINEERING, LLC
110 Old Padonia Road, Suite LC, Cockeysville, Maryland 21030
Phone: 410-560-1502 Fax: 410-560-0827

SDP-04-017