GLENELG COUNTRY SCHOOL UPPER SCHOOL ADDITION SITE DEVELOPMENT PLAN

GENERAL NOTES

1. ALL CONSTRUCTION AS SHOWN ON THESE PLANS IS TO BE TO CONDUCTED IN ACCORDANCE WITH HOWARD COUNTY STANDARD SPECIFICATIONS AND DETAILS FOR CONSTRUCTION VOLUME IV (OCT. 1990 AND ALL ADDENDA THERETO) UNLESS OTHERWISE NOTED.
2. THE LOCATION OF EXISTING UTILITIES AS SHOWN ON THIS PLAN ARE BASED ON FIELD LOCATIONS SUPPLEMENTED WITH EXISTING UTILITY DRAWINGS, AND SHOULD BE VERIFIED BY THE CONTRACTOR TO HIS SATISFACTION PRIOR TO CONSTRUCTION. CONTRACTOR SHALL TAKE ALL PRECAUTIONS NECESSARY TO PROTECT EXISTING UTILITIES, AND ANY DAMAGE DONE TO THEM DUE TO CONSTRUCTION ACTIVITY SHALL BE REPAIRED IMMEDIATELY AT HIS OWN EXPENSE.
3. CONTRACTOR TO NOTIFY HOWARD COUNTY, DEPARTMENT OF PUBLIC WORKS/BUREAU OF ENGINEERING/ CONSTRUCTION INSPECTION DIVISION (410-313-1880) AT LEAST 24 HOURS P[illegible] TO STARTING CONSTRUCTION.
4. CONTRACTOR TO SCHEDULE PRECONSTRUCTION MEETING WITH HOWARD COUNTY, CONSTRUCTION INSPECTION DIVISION (410-313-1880) PRIOR TO STARTING CONSTRUCTION.
5. CONTRACTOR TO NOTIFY MISS UTILITY (1-800-257-7777) AT LEAST 48 HOURS PRIOR TO BEGINNING ANY EXCAVATION WORK.
6. CONTRACTOR IS RESPONSIBLE FOR ALL SITE CONDITIONS, CONSTRUCTION REQUIREMENTS, AND SHALL CONFORM TO ALL STATE, FEDERAL, AND COUNTY CONSTRUCTION REGULATIONS. THE CONTRACTOR IS NOT RELIEVED OF RESPONSIBILITY SHOULD ANY REQUIRED ITEMS PERTAINING TO SITE CONSTRUCTION NOT BE INCLUDED ON THESE PLANS. CONTRACTOR IS RESPONSIBLE FOR ALL ITEMS NECESSARY TO COMPLETE THE SITE IMPROVEMENTS AS SHOWN ON THESE PLANS.
7. ANY DAMAGE TO EXISTING UTILITES, PAVEMENT, OR CURB AND GUTTER DUE TO CONSTRUCTION ACTIVITY OUTSIDE THE LIMITS OF DISTURBANCE IS TO BE REPLACED BY THE CONTRACTOR AT HIS OWN EXPENSE.

7.A. WHERE NECESSARY, THE CONTRACTOR SHALL TEST PIT ALL EXISTING UTILITIES AT LEAST FIVE (5) DAYS PRIOR TO STARTING ANY WORK SHOWN ON THESE DRAWINGS.

8. CONTRACTOR IS RESPONSIBLE FOR REPLACING ANY PROPERTY MONUMENTS, MARKERS, SIGNS, LIGHTS, OR ANY OTHER EXISTING SITE FEATURES DISTURBED DURING CONSTRUCTION.
9. ALL WORK SHALL COMPLY WITH ALL APPLICABLE PROVISIONS OF THE "1994 STANDARDS AND SPECIFICATIONS FOR SOIL EROSION AND SEDIMENT CONTROLS" PUBLISHED JOINTLY BY THE WATER RESOURCES ADMINISTRATION, SOIL CONSERVATION SERVICE, AND STATE SOIL CONSERVATION COMMITTEE.
10. TOPOGRAPHY IS BASED ON FIELD RUN SURVEYS BY MORRIS & RITCHIE ASSOCIATES, INC. DATED JANUARY 2002, AND SUPPLEMENTED WITH EXISTING AVAILABLE DESIGN PLANS.
11. THE SITE BOUNDARY, BEARINGS, AND COORDINATES SHOWN ARE BASED ON ELECTRONIC FILES OBTAINED FROM CLARK FINEFROCK AND SACKET, INC.
12. HORIZONTAL AND VERTICAL CONTROL BASED ON HOWARD COUNTY MONUMENTS NO'S 221A AND 22HA.
13. NO 100-YEAR FLOODPLAIN EXISTS IN OR NEAR THE PROPOSED CONSTRUCTION AREA.
14. WATER IS PRIVATE WELL SUPPLY. SEWER IS PRIVATE ON-SITE SEPTIC.
15. NO WETLANDS EXIST IN OR NEAR THE PROPOSED CONSTRUCTION AREA.
16. SEE PREVIOUS DEPARTMENT OF PLANNING AND ZONING FILES: SDP-02-126, SDP-01-69, SDP-97-07, SDP-85-75, SDP-82-101, SDP-80-144, SDP-78-15, BA 95-46-E, BA-99-51 E & V.
17. THE SUBJECT PROPERTY IS ZONED RR-DEO PER THE OCT. 18, 1993 COMPREHENSIVE ZONING PLAN.
18. FOREST STAND DELINEATION AND FOREST CONSERVATION PLAN APPROVED UNDER SDP-97-007. FOREST CONSERVATION IS BY RETENTION. AREAS OF RETENTION ARE 1.1958 AC., 5.6637 AC., AND 3.2043 AC.FOR A TOTAL OF 10.0638 AC. DEED OF FOREST CONSERVATION EASEMENT AGREEMENT RECORDED IN LIBER 5340 FOLIO 689.
19. FOREST CONSERVATION AREAS WERE REVISED UNDER RED-LINE REVISION TO SDP-01-69. REVISED AREAS OF RETENTION ARE 1.196 AC., 5.801 AC., AND 3.193 AC. FOR A TOTAL OF 10.190 AC. DEED OF FOREST CONSERVATION EASEMENT PLAT RECORDED AS PLAT #15507. FOREST CONSERVATION REQUIREMENTS FOR THE ENTIRE PROPERTY HAVE BEEN SATISFIED BY THIS PLAT.
20. NO CLEARING OF EXISTING FOREST CONSERVATION AREAS IS PROPOSED FOR THIS PROJECT.
21. A NOISE STUDY IS NOT REQUIRED FOR THIS PROJECT.
22. A GEOTECHNICAL STUDY WAS CONDUCTED FOR THIS PROJECT BY GEO-TECHNOLOGY ASSOCIATES, INC. DATED DECEMBER 16, 2002.
23. TRAFFIC CONTROL DEVICES, MARKINGS, AND SIGNING SHALL BE IN ACCORDANCE WITH THE LATEST EDITION OF THE MANUAL ON UNIFORM TRAFFIC CONTROL DEVICES (MUTCD). ALL STREET AND REGULATORY SIGNS SHALL BE IN PLACE PRIOR TO THE INSTALLATION OF ANY FINAL PAVING.
24. TRENCH COMPACTION FOR STORM DRAINS WITHIN ROADWAYS AND PARKING AREAS SHALL BE IN ACCORDANCE WITH HOWARD COUNTY DESIGN MANUAL, VOL. IV, STANDARD NO. G-2.01.
25. ALL COMPACTED FILL SHALL BE IN ACCORDANCE WITH AASHTO T-180 REQUIREMENTS.
26. ALL EXTERIOR LIGHTING SHALL COMPLY WITH ZONING REGULATIONS SECTION 134.
27. THIS PLAN HAS BEEN PREPARED IN ACCORDANCE WITH THE PROVISIONS OF SECTION 16.124 OF THE HOWARD COUNTY CODE AND THE LANDSCAPE MANUAL. FINANCIAL SURETY FOR THE REQUIRED 8 SHADE TREES AND 38 EVERGREENS IN THE AMOUNT OF $8,100.00 IS PART OF THE DEVELOPER'S AGREEMENT.
28. BOARD OF APPEALS BA-99-51 E&V WAS GRANTED ON MAY 16, 2000 FOR THE SPECIAL EXCEPTION. THE SPECIAL EXCEPTION REQUESTED THE ENLARGEMENT OF AN EXISTING PRIVATE SCHOOL AND A VARIANCE TO REDUCE THE REQUIRED 30' STRUCTURE AND USE SETBACK TO 0' FOR THE IMPROVEMENTS ASSOCIATED WITH THE PROPOSED NEW PRIMARY SCHOOL. THIS PROJECT IS SUBJECT TO THE FOLLOWING CONDITIONS:
    1. THE SPECIAL EXCEPTION SHALL APPLY TO THE INCLUSION OF PARCEL 345 INTO THE SPECIAL EXCEPTION SITE, AND THE CONSTRUCTION OF IMPROVEMENTS AS DEPICTED ON THE SPECIAL EXCEPTION PLAN DATED NOVEMBER 8, 1999, AND TO NO OTHER STRUCTURES AND/OR USES.
    2. EXISTING VEGETATION SHALL BE AUGMENTED TO CREATE A TYPE C LANDSCAPE BUFFER ALONG THE LOT LINES OF PARCEL 345 THAT DO NOT ADJOIN PARCEL 146.
    3. ALL NEW LIGHTING SHALL COMPLY WITH SECTION 134 OF THE HOWARD COUNTY ZONING REGULATIONS.
    4. THE PETITIONER SHALL COMPLY WITH THE REQUIREMENTS OF THE BUREAU OF ENVIRONMENTAL HEALTH REGARDING SEWAGE DISPOSAL.
    5. THE PETITIONER SHALL COMPLY WITH ALL APPLICABLE FEDERAL, STATE, & COUNTY LAWS & REGULATIONS.

    IT IS THE INTENTION OF THIS PROJECT TO COMPLY WITH ALL APPLICABLE CONDITIONS OF THE SPECIAL EXCEPTION APPROVAL.
29. WATER USAGE FOR THE ENTIRE CAMPUS WILL COMPLY WITH THE STATE OF MARYLAND WATER APPROPRIATION AND USE PERMIT NUMBER H075G009 (04).
30. PER THE DECISION AND ORDER OF BA-99-51E&V, THE MAXIMUM STUDENT CAPACITY IS 782 TOTAL STUDENTS, AND MAXIMUM STAFF ALLOWANCE IS 133 PERSONS.
31. HO-15 ON THE HOWARD COUNTY HISTORIC SITES INVENTORY IS LOCATED ON THE SITE, BUT IS NOT DIRECTLY IMPACTED BY THIS PLAN.

SITE ANALYSIS

A. TOTAL PROJECT AREA (PARCEL 146): 80.67 ± ACRES.
B. AREA OF PLAN SUBMISSION: SAME AS A.
C. LIMIT OF DISTURBED AREA: 8.04 ± ACRES.
D. PRESENT ZONING DESIGNATION IS: RR-DEO.
E. PROPOSED SITE USE IS: SECONDARY SCHOOL, GYMNASIUM.
F. GROSS FLOOR SPACE PROPOSED IS: 71,491 S.F.
I. MAXIMUM NUMBER OF EMPLOYEES, STUDENTS: 200.
J. NUMBER OF PARKING SPACES REQUIRED: 100 (1 SPACE, 2 STUDENTS)
K. NUMBER OF PARKING SPACES PROVIDED: 143 PAVED (INCLUDING 8 H.C.)
(PARKING PROVIDED MEETS THE CONDITIONS OF THE SPECIAL EXCEPTION ORDER.) 26 UNPAVED
169 TOTAL PARKING SPACES
L. OPEN SPACE ON SITE: 74.00 ACRES OR 91.7% OF GROSS AREA.
N. BUILDING COVERAGE OF SITE: 0.822 ACRES OR 1.02% OF GROSS AREA.
O. APPLICABLE DPZ FILE REFERENCES: SDP-02-126, SDP-01-69, SDP-97-07, SDP-85-75, SDP-82-101, SDP-80-144, SDP-78-15, BA 95-46-E, BA-99-51 E & V.
P. ANY OTHER RELEVANT INFORMATION: N/A.

GROSS BUILDING SQUARE FOOTAGE TABULATION

EXISTING GOULD BUILDING -	26,615 S.F.
PROPOSED GOULD BUILDING ADDITION -	2,534 S.F.
PROPOSED ANNEX -	22,856 S.F.
PROPOSED GYMNASIUM -	46,101 S.F.
TOTAL NEW PROPOSED BUILDING AREA -	71,491 S.F.

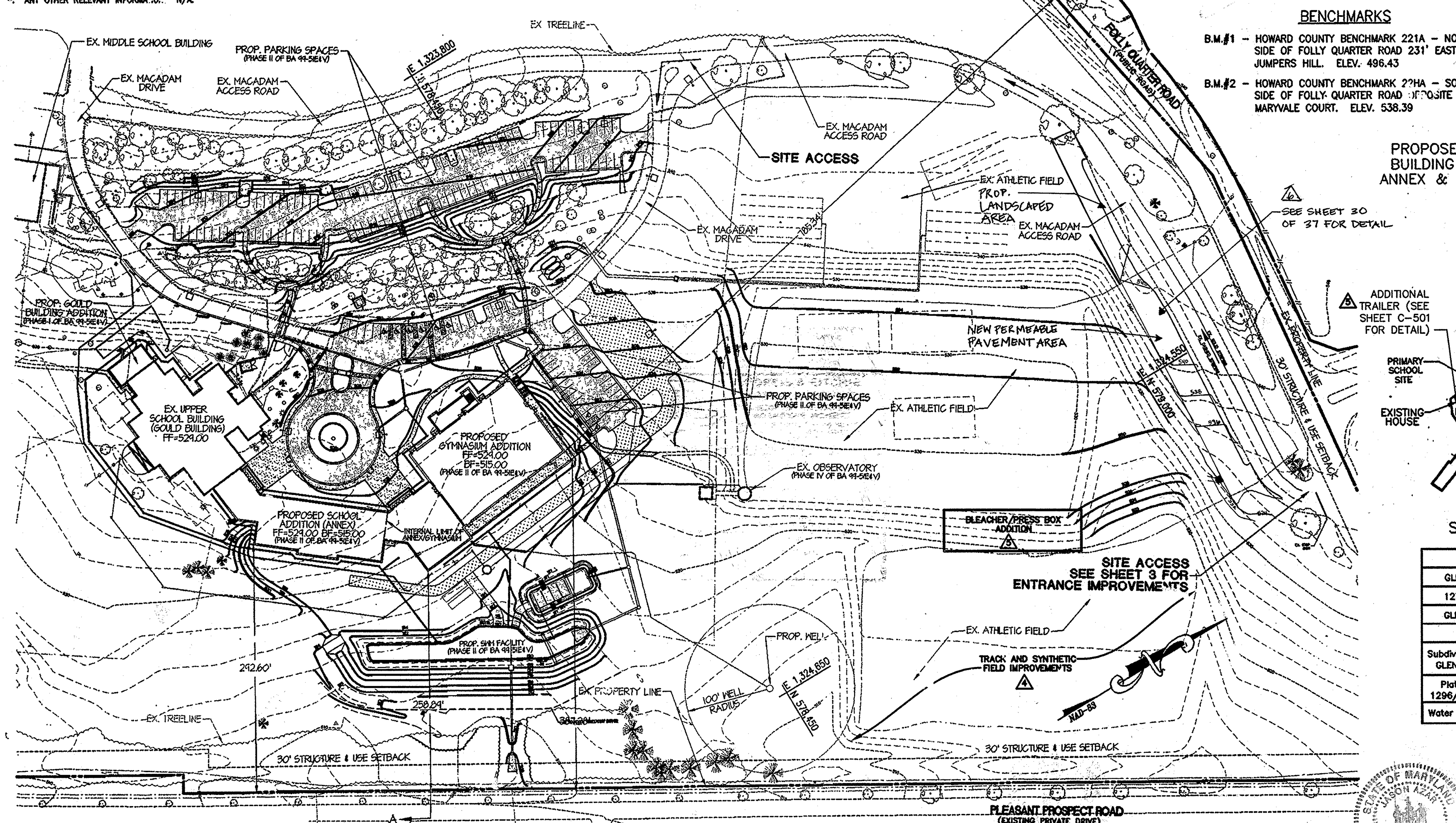

SITE LOCATION MAP
SCALE: 1"=80'

COPYRIGHT ADC THE MAP PEOPLE
PERMITTED USE NO. 20602149

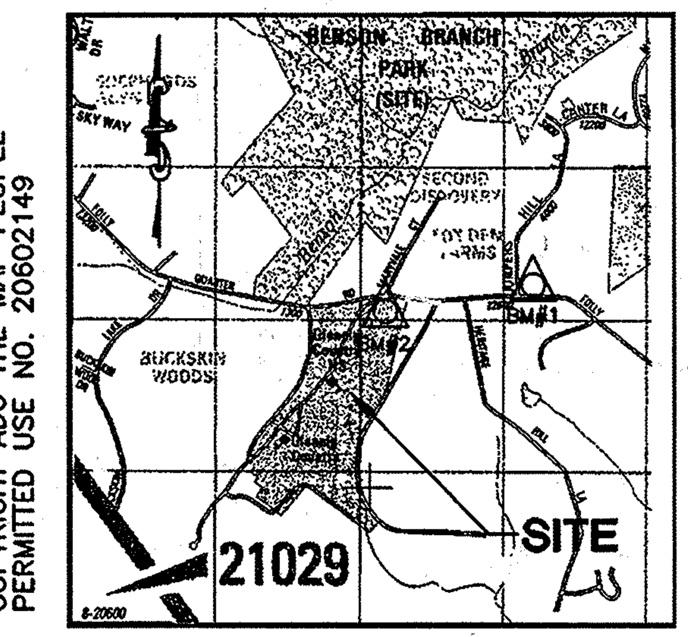

VICINITY MAP SCALE: 1"=2000'
MAP BOOK (ADC) PAGE 10 GRID B-12

BENCHMARKS

B.M.#1 - HOWARD COUNTY BENCHMARK 221A - NORTH SIDE OF FOLLY QUARTER ROAD 231' EAST OF JUMPERS HILL. ELEV. 496.43

B.M.#2 - HOWARD COUNTY BENCHMARK 22HA - SOUTH SIDE OF FOLLY QUARTER ROAD OPPOSITE MARYVALE COURT. ELEV. 538.39

ADDITIONAL TRAILER (SEE SHEET C-501 FOR DETAIL)

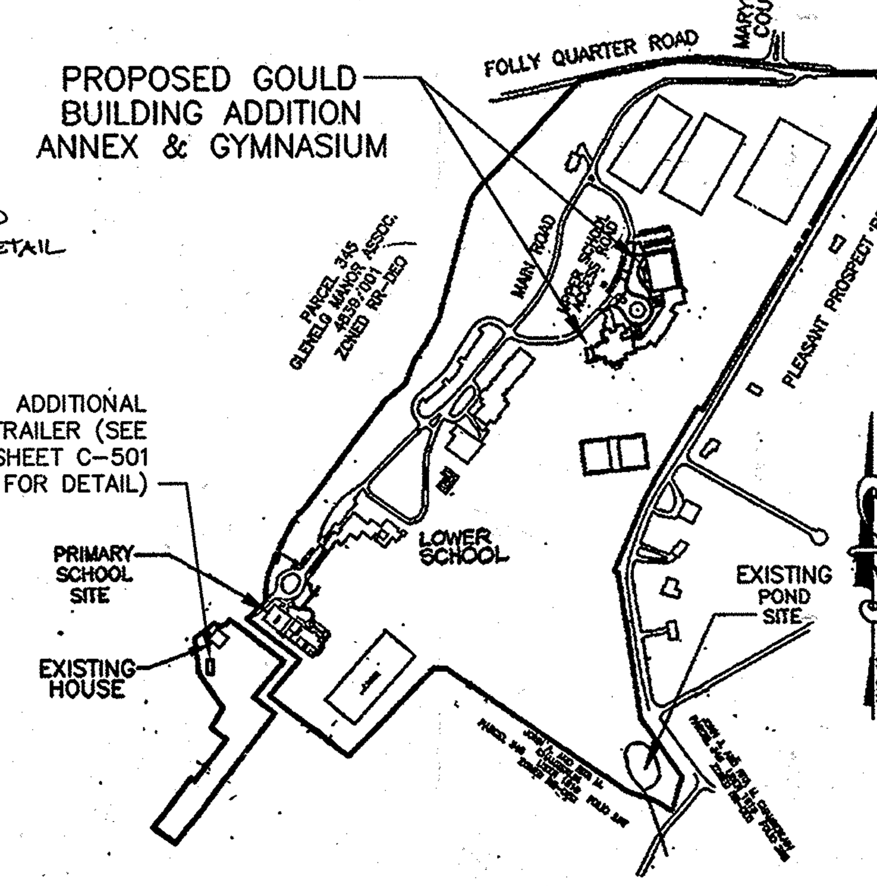

SITE LOCATION MAP SCALE: 1"=500'

ADDRESS CHART / OWNER INFORMATION				
GLENELG COUNTRY SCHOOL				
12793 FOLLY QUARTER ROAD				
GLENELG, MD 21737 PHONE: 410-531-2229				
PERMIT INFORMATION CHART				
Subdivision Name: GLENELG COUNTRY SCHOOL	Area: 80.67 AC.	Parcel #: 146		
Plat #: 1296/245	Zoning: RR-DEO	Tax Map: 22	Elec. District: 5TH	Census Tract: 6051.01
Water Code: PRIVATE WELL	Sewer Code: PRIVATE SEPTIC			

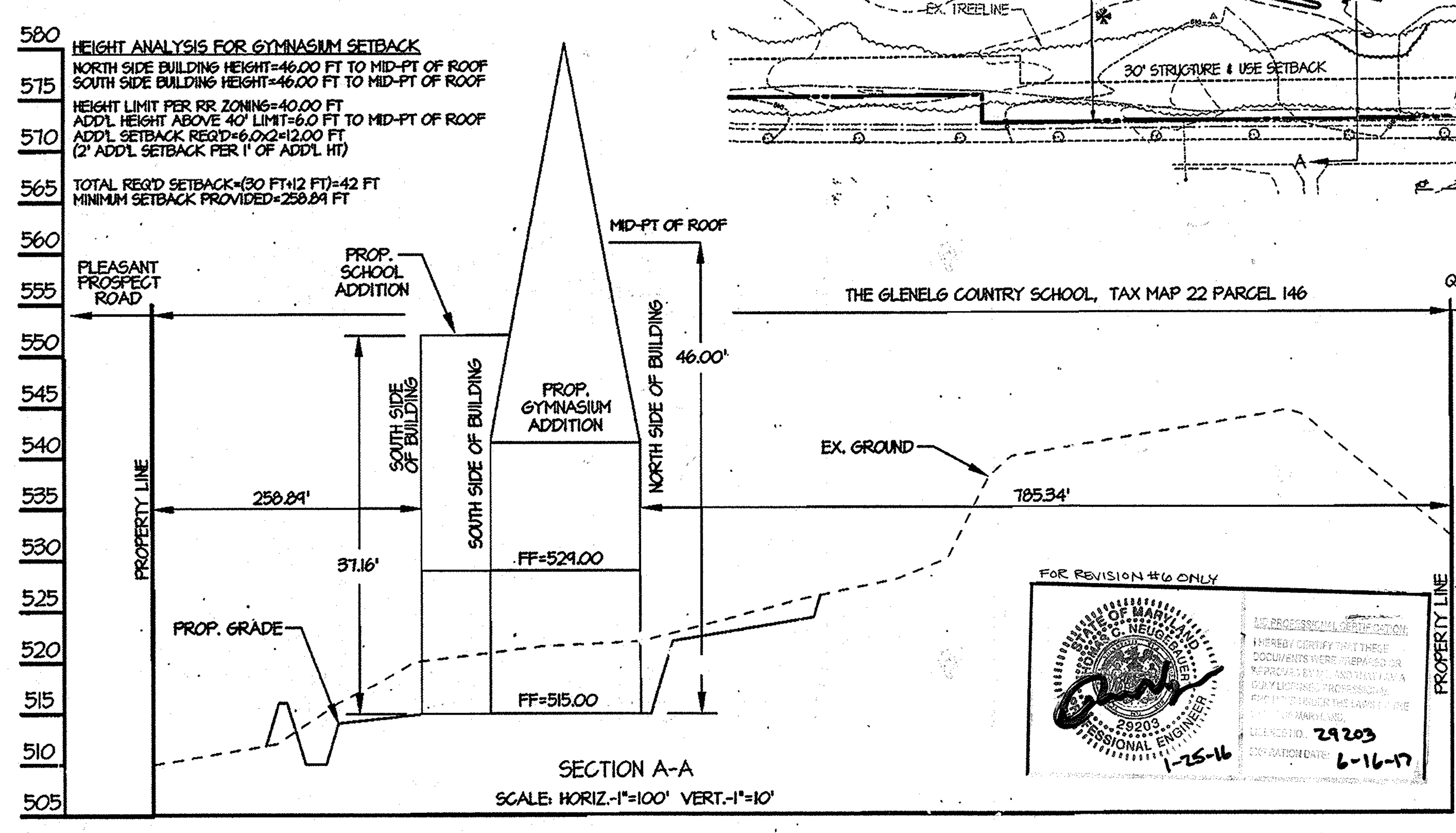

SECTION A-A
SCALE: HORIZ.-1"=100' VERT.-1"=10'

FOR REVISION #6 ONLY

STATE OF MARYLAND THOMAS C. NEUGEBAUER 29203 PROFESSIONAL ENGINEER 1-25-16

PROFESSIONAL CERTIFICATION: I HEREBY CERTIFY THAT THESE DOCUMENTS WERE PREPARED OR APPROVED BY ME, AND THAT I AM A DULY LICENSED PROFESSIONAL ENGINEER UNDER THE LAWS OF THE STATE OF MARYLAND. LICENSE NO. 29203 EXPIRATION DATE: 6-16-17

STORMWATER MANAGEMENT & DRAINAGE PLAN	24,25 OF 37
STORMWATER MANAGEMENT & DRAINAGE DETAILS	26,27,28 OF 37
BIORETENTION PLANTING PLAN	29 OF 37
(6) BIORETENTION PLANTING NOTES, PERMEABLE PAV. & CHECK DAM DETAILS	30 OF 37
EROSION & SEDIMENT CONTROL PLAN	31,32 OF 37
EROSION & SEDIMENT CONTROL DETAILS	33,34 OF 37
EROSION & SEDIMENT CONTROL NOTES & DETAILS	35 OF 37
UTILITY PLAN	36 OF 37
STORMWATER MANAGEMENT AND DRAINAGE DETAILS	37 OF 37

OPTION 5: PREVIOUSLY ADDRESSED (Including Use of FC Bank)	FOREST CONSERVATION DATA SUMMARY
File Number: SDP-03-84	Project/Subdivision Name: GLENELG COUNTRY SCHOOL, UPPER SCHOOL ADDITION
Comment: Addressed by How. Co. Subdivision & Land Development Regulations, Sec. 16.1202.(6)(1)(ii). See SDP-01-69 Plat # 15507.	

OWNER A. NAME:	RYLAND CHAPMAN, AGENT FOR THE GCS	FAX NO: 410-531-1882	B.TELEPHONE: 410-531-2229
C. COMPANY:	GLENELG COUNTRY SCHOOL		
D. ADDRESS:	12793 FOLLY QUARTER ROAD		
E. CITY:	GLENELG	STATE: MD	ZIP: 21737
DEVELOPER A. NAME:	JOEL R. CHERINGTON, AGENT FOR THE GCS	FAX NO: 410-234-1796	B.TELEPHONE: 443-604-0608
C. COMPANY:	GOULD PROPERTY COMPANY		
D. ADDRESS:	1336 SOUTH HANOVER STREET		
E. CITY:	BALTIMORE	STATE: MD	ZIP: 21230

SHEET INDEX

TITLE SHEET	1 OF ~~25~~ 37
DEMOLITION PLAN	2 OF ~~25~~ 37
SITE LAYOUT & PAVING PLAN	3 OF ~~25~~ 37
SITE GRADING PLAN	4 OF ~~25~~ 37
SITE DETAILS	5 OF ~~25~~ 37
STORM DRAIN PROFILES	6 OF ~~25~~ 37
STORM DRAIN & UTILITY PROFILES	7 OF ~~25~~ 37
SWM FACILITY #1 DETAILS	8 OF ~~25~~ 37
SWM FACILITY #2 DETAILS	9 OF ~~25~~ 37
SWM NOTES & SPECIFICATIONS	10 OF ~~25~~ 37
SEDIMENT CONTROL PLAN	11 OF ~~25~~ 37
SEDIMENT CONTROL DETAILS	12 OF ~~25~~ 37
BORING LOGS & GEOTECH RECOMMENDATIONS	13 OF ~~25~~ 37
STORM DRAIN & SWM DRAINAGE AREA MAPS	14 OF ~~25~~ 37
LANDSCAPE PLAN	15 OF ~~25~~ 37
LANDSCAPE DETAILS	16 OF ~~25~~ 37
SEPTIC SYSTEM SITE PLAN	17 OF ~~25~~ 37
SEWER PROFILES	18 OF ~~25~~ 37
FORCE MAIN PROFILES	19 OF ~~25~~ 37
GRINDER PUMPING STATION DETAILS	20 OF ~~25~~ 37
DOSING PUMPING STATION DETAILS	21 OF ~~25~~ 37
SEPTIC DETAILS, DESIGN CRITERIA & NOTES	22 OF ~~25~~ 37
ARCHITECTURAL BUILDING ELEVATIONS	23 OF ~~25~~ 37

APPROVED FOR PRIVATE WATER & PRIVATE SEWERAGE SYSTEMS	
COUNTRY HEALTH OFFICER, HOWARD COUNTY HEALTH DEPARTMENT	8-7-03 DATE
APPROVED: DEPARTMENT OF PLANNING AND ZONING	
CHIEF, DEVELOPMENT ENGINEERING DIVISION MK	8/5/03 DATE
CHIEF, DIVISION OF LAND DEVELOPMENT	8/12/03 DATE
DIRECTOR, DEPARTMENT OF PLANNING AND ZONING	DATE

STATE OF MARYLAND JASON AZAR 31168 REGISTERED PROFESSIONAL ENGINEER 6-4-13
FOR REVISIONS #4 & #5 ONLY

MORRIS & RITCHIE ASSOCIATES, INC.
ENGINEERS, PLANNERS, SURVEYORS AND LANDSCAPE ARCHITECTS
9090 JUNCTION DRIVE, SUITE 9
ANNAPOLIS JUNCTION, MARYLAND 20701
(410) 792-9792 or (301) 776-1690
FAX (410) 792-7395

THE GLENELG COUNTRY SCHOOL PROPOSED UPPER SCHOOL ADDITION

TITLE SHEET

TAX MAP 22 GRID 22 PARCEL 146
LIBER 1296 FOLIO 245
FIFTH (5TH) ELECTION DISTRICT
HOWARD COUNTY, MARYLAND

7/15/03

DATE	REVISIONS	
(1) 10/03	ADDED TRELLIS TO BUILDING FOOTPRINT. EXTENDED STABILIZED TURF FIRE LANE	JOB NO.: 12189.02
		SCALE: AS SHOWN
(2) 04/04	REVISED BUILDING FOOTPRINT TO SHOW ANNEX ADDITION	DATE: 07/14/03
(3) 09/06	IRRIGATION LINES FOR FIELD ADDED	DRAWN BY: TCN
(4) 07/12	TRACK AND SYNTHETIC FIELD ADDED	DESIGN BY: TCN
(5) 03/13	BLEACHER/PRESS BOX AND TRAILER ADDED	REVIEW BY: TCN
(6) 12/15	ADDED PERMEABLE PAVEMENT AREA BY MAIN ENTRANCE AND STORM DRAIN TO EX. GRASS CHANNEL	SHEET: 1 OF ~~25~~ ~~35~~ 37

SDP-03-84

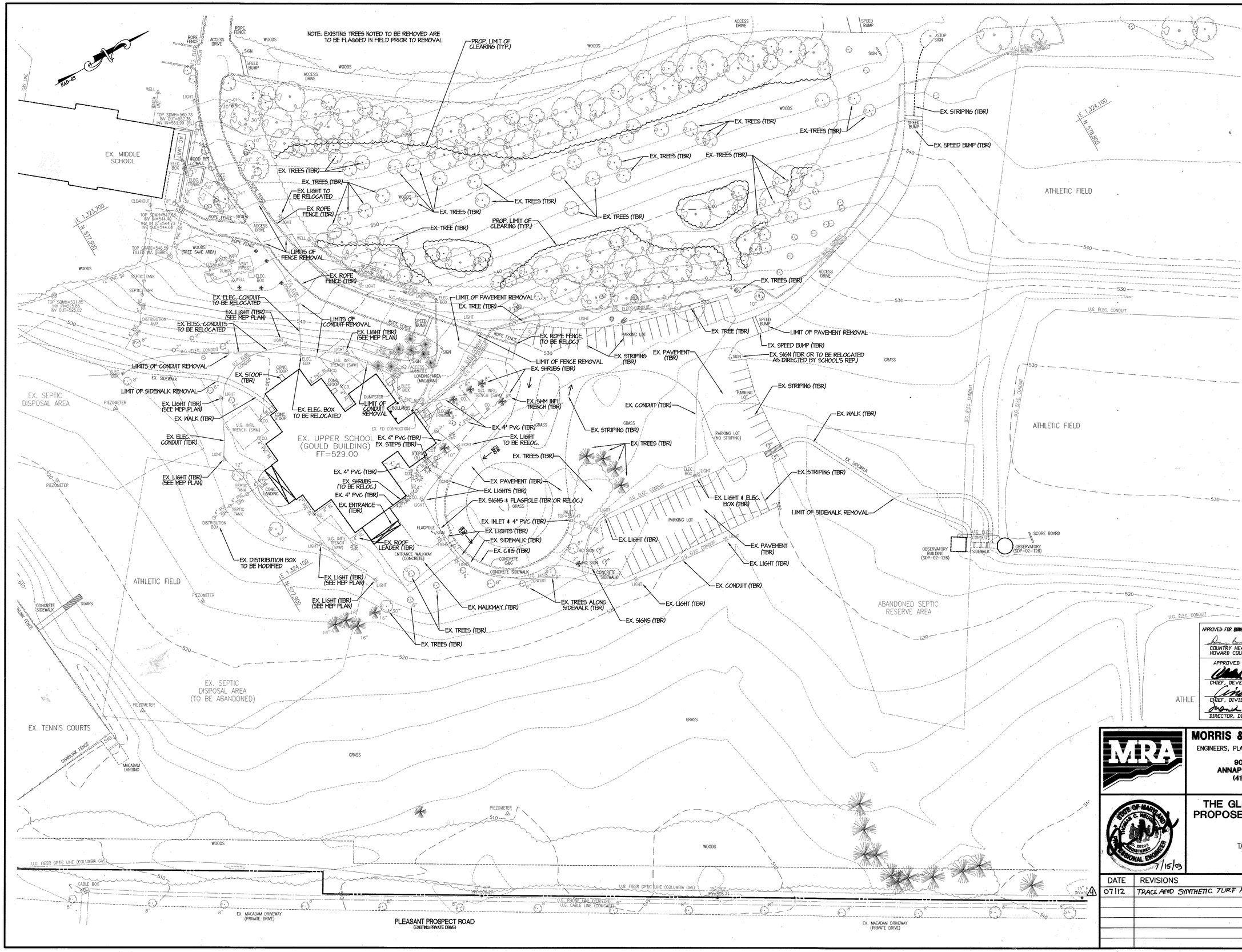

LEGEND

- 2' CONTOUR LINE
- 10' CONTOUR LINE
- EX. PROPERTY LINE
- EX. SETBACK LINE
- EX. EDGE OF PAVING
- EX. BUILDING
- EX. STRUCTURE
- EX. ELECTRIC CONDUIT
- EX. PHONE CONDUIT
- EX. TV CABLE CONDUIT
- EX. GAS MAIN
- EX. WATER MAIN
- EX. SANITARY LINE
- EX. STORM DRAIN
- EX. FENCE LINE
- EX. TREE LINE
- EX. TREES/SHRUBS
- EX. LIGHT/TRANSFORMER
- EX. WELL/HYDRANT
- EX. SAN. CLEANOUT/PIEZOMETER
- EX. STORM DRAIN INLET/MANHOLE
- (TBR) TO BE REMOVED

BEFORE YOU DIG!
CALL UTILITY
LOCATION SERVICES
IT'S THE LAW!
MISS UTILITY
1-800-257-7777

APPROVED FOR [redacted] PRIVATE WATER & [redacted] PRIVATE SEWERAGE SYSTEMS

COUNTRY HEALTH OFFICER — DATE 8-8-03
HOWARD COUNTY HEALTH DEPARTMENT

APPROVED: DEPARTMENT OF PLANNING AND ZONING

CHIEF, DEVELOPMENT ENGINEERING DIVISION MK — DATE 8/5/03

CHIEF, DIVISION OF LAND DEVELOPMENT HB — DATE 8/12/03

DIRECTOR, DEPARTMENT OF PLANNING AND ZONING — DATE 8/12/03

MORRIS & RITCHIE ASSOCIATES, INC.
ENGINEERS, PLANNERS, SURVEYORS AND LANDSCAPE ARCHITECTS
9090 JUNCTION DRIVE, SUITE 9
ANNAPOLIS JUNCTION, MARYLAND 20701
(410) 792-9792 or (301) 776-1690
FAX (410) 792-7395

STATE OF MARYLAND — THOMAS C. NEUGEBAUER — REGISTERED PROFESSIONAL ENGINEER — 7/15/03

THE GLENELG COUNTRY SCHOOL PROPOSED UPPER SCHOOL ADDITION

DEMOLITION PLAN

TAX MAP 22 GRID 22 PARCEL 146
LIBER 1296 FOLIO 245
FIFTH (5TH) ELECTION DISTRICT
HOWARD COUNTY, MARYLAND

DATE	REVISIONS	
07/12	TRACK AND SYNTHETIC TURF FIELD IMPROVEMENTS	JOB NO.: 12189.02
		SCALE: 1" = 40'
		DATE: 07/14/03
		DRAWN BY: TCN
		DESIGN BY: TCN
		REVIEW BY: TCN
		SHEET: 2 OF 38

SDP-03-84

LEGEND

- 2' CONTOUR LINE
- 10' CONTOUR LINE
- EX. PROPERTY LINE
- EX. SETBACK LINE
- EX. EDGE OF PAVING
- EX. BUILDING
- EX. STRUCTURE
- EX. ELECTRIC CONDUIT
- EX. PHONE CONDUIT
- EX. TV CABLE CONDUIT
- EX. GAS MAIN
- EX. WATER MAIN
- EX. SANITARY LINE
- EX. STORM DRAIN
- EX. FENCE LINE
- EX. TREE LINE
- EX. TREES/SHRUBS (TO REMAIN)
- EX. LIGHT/TRANSFORMER
- EX. WELL/HYDRANT
- EX. SAN. CLEANOUT/PIEZOMETER
- EX. STORM DRAIN INLET/MANHOLE
- PROP. BUILDING ADDITION
- PROP. CONCRETE SIDEWALK
- PROP. ASPHALT PAVEMENT
- PROP. STABILIZED TURF
- PROP. RETAINING WALL
- PROP. CONC. CURB & GUTTER
- PROP. B/B WOOD FENCE

ENTRANCE DETAIL

SCALE: 1" = 30'

APPROVED FOR PRIVATE WATER & SEWERAGE SYSTEMS

COUNTRY HEALTH OFFICER JAS — 8-8-03 DATE
HOWARD COUNTY HEALTH DEPARTMENT

APPROVED DEPARTMENT OF PLANNING AND ZONING

CHIEF, DEVELOPMENT ENGINEERING DIVISION MK — 8/5/03 DATE

CHIEF, DIVISION OF LAND DEVELOPMENT MB — 8/12/03 DATE

DIRECTOR, DEPARTMENT OF PLANNING AND ZONING — 8/12/03 DATE

MORRIS & RITCHIE ASSOCIATES, INC.
ENGINEERS, PLANNERS, SURVEYORS AND LANDSCAPE ARCHITECTS
9090 JUNCTION DRIVE, SUITE 9
ANNAPOLIS JUNCTION, MARYLAND 20701
(410) 792-9792 or (301) 776-1690
FAX (410) 792-7395

STATE OF MARYLAND — THOMAS C. NEWCOMB — PROFESSIONAL ENGINEER — 7/15/03

THE GLENELG COUNTRY SCHOOL
PROPOSED UPPER SCHOOL ADDITION

SITE PLAN

TAX MAP 22 GRID 22 PARCEL 146
LIBER 1296 FOLIO 245
FIFTH (5TH) ELECTION DISTRICT
HOWARD COUNTY, MARYLAND

DATE	REVISIONS
1 10/03	ADDED TRELLIS TO BUILDING FOOTPRINT. EXTENDED STABILIZED TURF FIRE LANE.
2 04/04	REVISED BUILDING FOOTPRINT TO SHOW ANNEX ADDITION
3 07/12	TRACK AND SYNTHETIC TURF FIELD IMPROVEMENTS

JOB NO.: 12189.02
SCALE: 1" = 30'
DATE: 07/14/03
DRAWN BY: TCN
DESIGN BY: TCN
REVIEW BY: TCN
SHEET: 3 OF 25 3A

SDP-03-84

LEGEND

- 2' CONTOUR LINE
- 10' CONTOUR LINE
- EX. PROPERTY LINE
- EX. SETBACK LINE
- EX. EDGE OF PAVING
- EX. BUILDING
- EX. STRUCTURE
- EX. ELECTRIC CONDUIT
- EX. PHONE CONDUIT
- EX. TV CABLE CONDUIT
- EX. GAS MAIN
- EX. WATER MAIN
- EX. SANITARY LINE
- EX. STORM DRAIN
- EX. FENCE LINE
- EX. TREE LINE
- EX. TREES/SHRUBS (TO REMAIN)
- EX. LIGHT/TRANSFORMER
- EX. WELL/HYDRANT
- EX. SAN. CLEANOUT/PIEZOMETER
- EX. STORM DRAIN INLET/MANHOLE
- PROP. BUILDING ADDITION
- PROP. CONCRETE SIDEWALK
- PROP. ASPHALT PAVEMENT
- PROP. STABILIZED TURF
- PROP. RETAINING WALL
- PROP. CONC. CURB & GUTTER
- PROP. B/B WOOD FENCE
- PROP. 1' CONTOUR LINE
- PROP. 2' CONTOUR LINE
- PROP. 10' CONTOUR LINE
- PROP. SPOT ELEVATION
- PROP. LIMIT OF CLEARING
- PROP. STORM DRAIN
- PROP. GAS MAIN
- PROP. ELECTRIC CONDUIT
- PROP. WATER LINE
- PROP. SANITARY LINE
- PROP. SANITARY FORCE MAIN
- PROP. SEPTIC SYSTEM TRENCH

SEE SHEET 12 FOR CONTINUATION

REQUIRED SEDIMENT CONTROLS WERE INSTALLED BY SPRINKLER CONTRACTOR PRIOR TO EARTH DISTURBANCE.

KEY FOR AS-BUILT LABELS

SH – SPRINKLER HEAD
ASV – AUTOMATIC SPRINKLER VALVE

AS-BUILT ELEVATION NOTE

NOTE: ALL PAVEMENT ELEVATIONS ARE FLOWLINE ELEVATIONS, AS-BUILT SPOT ELEVATIONS +500 FOR VALUE.

APPROVED FOR PUBLIC OR PRIVATE WATER & PUBLIC OR PRIVATE SEWERAGE SYSTEMS

COUNTRY HEALTH OFFICER JAS — HOWARD COUNTY HEALTH DEPARTMENT — 8-7-03 DATE

APPROVED DEPARTMENT OF PLANNING AND ZONING

CHIEF, DEVELOPMENT ENGINEERING DIVISION MK — DATE 8/12/03

CHIEF, DIVISION OF LAND DEVELOPMENT MB — DATE 8/12/03

DIRECTOR, DEPARTMENT OF PLANNING AND ZONING — DATE 8/14/03

MORRIS & RITCHIE ASSOCIATES, INC.
ENGINEERS, PLANNERS, SURVEYORS AND LANDSCAPE ARCHITECTS
9090 JUNCTION DRIVE, SUITE 9
ANNAPOLIS JUNCTION, MARYLAND 20701
(410) 792-9792 or (301) 776-1690
FAX (410) 792-7395

STATE OF MARYLAND — THOMAS C. NEUBERGER — PROFESSIONAL ENGINEER — 7/15/03

THE GLENELG COUNTRY SCHOOL
PROPOSED UPPER SCHOOL ADDITION

SITE GRADING PLAN

TAX MAP 22 GRID 22 PARCEL 146
LIBER 1296 FOLIO 245
FIFTH (5TH) ELECTION DISTRICT
HOWARD COUNTY, MARYLAND

DATE	REVISIONS
10/05	ADDED TRELLIS TO BUILDING FOOTPRINT. EXTENDED STABILIZED TURF FIRE LANE.
04/04	REVISED BUILDING FOOTPRINT TO SHOW ANNEX ADDITION
04/06	AS-BUILT INFORMATION ADDED.
09/06	IRRIGATION LINES FOR FIELDS #2 AND #3 ADDED
07/12	TRACK AND SYNTHETIC TURF FIELD IMPROVEMENTS

JOB NO.: 12189.02
SCALE: 1" = 40'
DATE: 07/14/03
DRAWN BY: TCN
DESIGN BY: TCN
REVIEW BY: TCN
SHEET: 4 OF 37

SDP-03-84

UTILITY TRENCH BACKFILL

I. Materials

A. Pipe Bedding Material – pipe bedding material shall consist of CR-6.

B. Backfill Materials – Use CR-6 as backfill material to the minimum extent shown on the plans. The backfill for the remainder of the trench shall consist of on-site or off-site soils conforming to the requirement of the geotechnical report and City /County specifications. No stones larger than 2 inches should be allowed within 2 feet of the utility. Larger stone, up to 6 inches in the largest dimension can be used in lifts 2 feet above the utility. No organic material shall be allowed. For granular soils (less than 35% passing #200 sieve), the soil moisture should be within 3 percentage points of optimum unless otherwise dictated by project engineer or County specifications. For fine-grained soils (greater than 35% passing #200 sieve), the soil moisture should be within 0 to plus 4 percent of optimum unless otherwise dictated by engineer or County specifications.

The compaction requirement shall be 92 percent of the Modified Proctor (ASTM D-1557) maximum dry density for material placed below the top 12-inches of roadway subgrade. The top 12 inches should be compacted to 97% unless otherwise recommended by the geotechnical engineer. The top 12 to 24 inches of soil may be required to meet certain material properties for subgrade support for pavements.

II. Backfilling Procedures

A. Contractor shall place level lifts of soil adjacent to and above the utility. The lift thickness shall be dependent upon the type of equipment being used for compaction and the materials. The following shall be used as a guide:

1. Fine-Grained Materials – fine-grained materials (materials with more than 35% passing #200 sieve) should be compacted with sheep's-foot type roller. The lift thickness should not exceed 4 inches if hand operated equipment is used. Hand equipment will be required for compaction around manholes, structures and adjacent to and over the utility. If heavy construction sheep's-foot compaction equipment is used, a maximum loose lift thickness should be no greater than the length of the sheeps-foot or a maximum of eight inches. Each lift should be uniformly compacted with a sufficient number of passes to obtain the required degree of compaction.

2. Granular Soils – granular soils (materials with less than 35% passing #200 sieve) should be compacted with a vibratory type compaction equipment. The loose lift thickness should not exceed 4 inches for hand operated equipment. Hand equipment will be required around manholes, structures and adjacent to and above the utility. If heavy vibratory compaction equipment is used, then the loose lift thickness can be increased to 8 inches. Each lift should be uniformly compacted with a sufficient number of passes to obtain the recommended degree of compaction.

3. The backfill should be worked using hand tools around pipe haunch to provide uniform and firm support.

B. If a lift fails to meet the required compaction, then the lift shall be re-compacted and retested. If the material is too wet or too dry, the moisture should be adjusted to within the required range prior to re-compaction.

III. Testing

Each lift of fill should be monitored for stability, lift thickness and compactive effort. A density test should be performed for each lift of fill placed per every 150 feet of trench. This requirement includes the utility lateral connections. The test procedure should be the sand cone method (ASTM D-1556) or the nuclear gauge method (ASTM D-2922). The test results shall be made available to the contractor upon the completion of the test. For each test, the technician shall record the following: Date; test location; test elevation; material type; degree of compaction; one-point results; lift thickness; and moisture content.

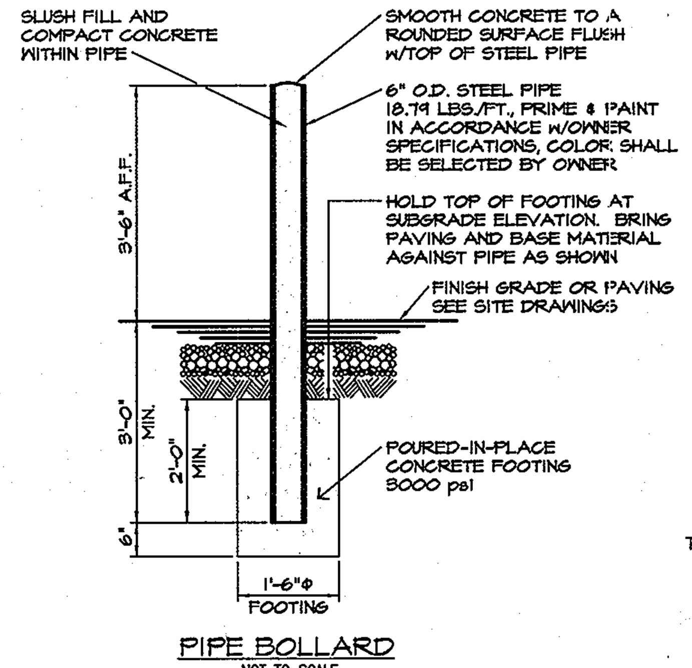

PIPE BOLLARD
NOT TO SCALE

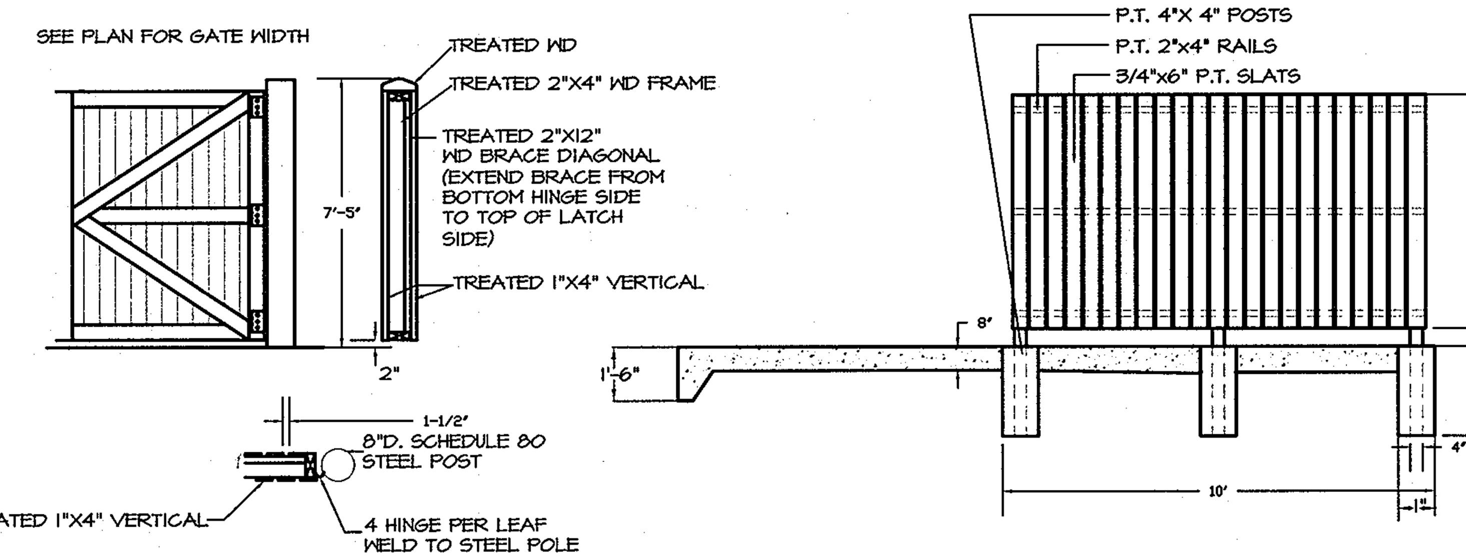

DUMPSTER PAD FENCE DETAIL
N.T.S.

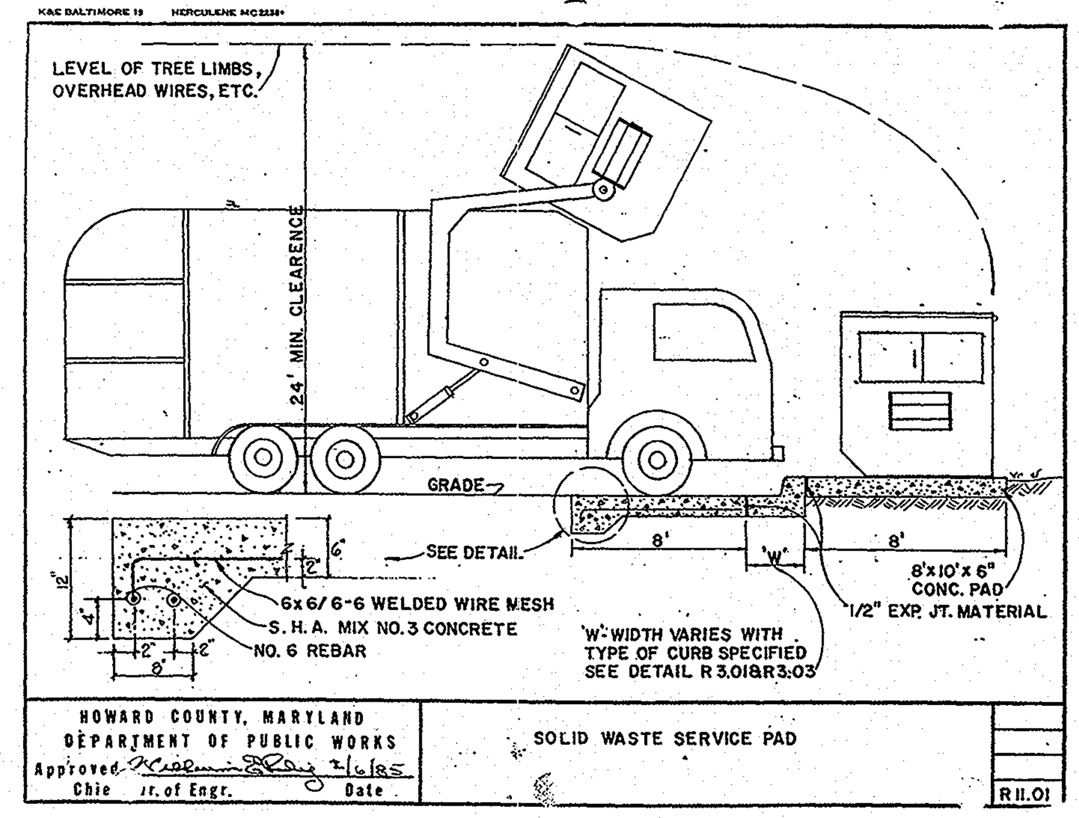

**NOTE: SEE HOWARD COUNTY STANDARD DETAIL R11.02 FOR OPTIONAL DUMPSTER ENCLOSURE DETAIL

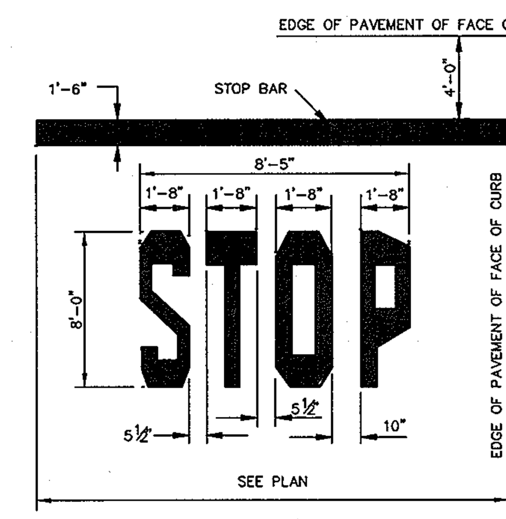

NOTE:
1. WORDS AND ARROWS FOR DRIVEWAYS SHALL BE APPLIED ACCORDING TO REQUIREMENTS AS OUTLINED IN SECTION 3B OF THE MANUAL ON UNIFORM TRAFFIC CONTROL DEVICES FOR STREETS AND HIGHWAYS
2. THESE WORDS AND BAR ARE TO BE PAINTED REFLECTIVE WHITE.

STOP BAR
N.T.S.

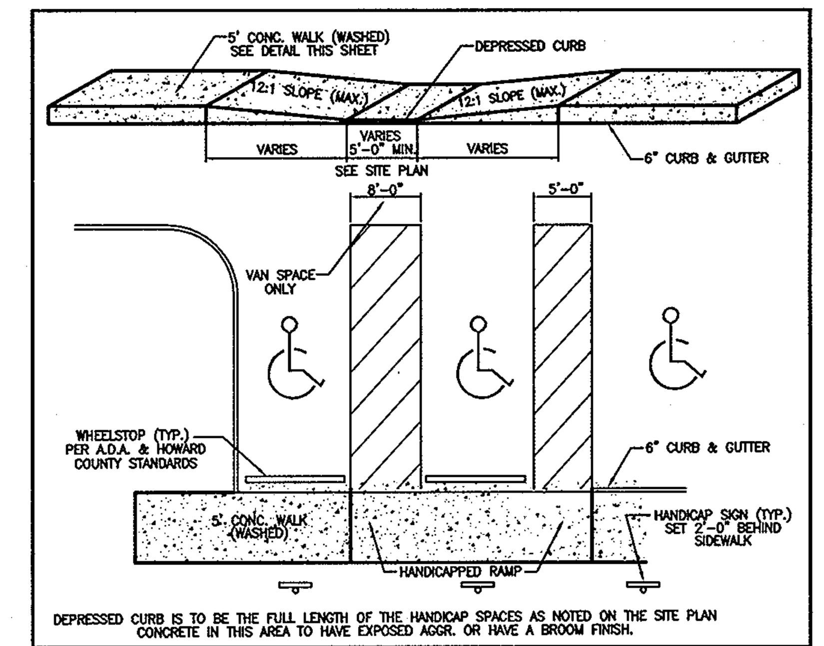

DEPRESSED CURB IS TO BE THE FULL LENGTH OF THE HANDICAP SPACES AS NOTED ON THE SITE PLAN CONCRETE IN THIS AREA TO HAVE EXPOSED AGGR. OR HAVE A BROOM FINISH.

DEPRESSED CURB — NOT TO SCALE

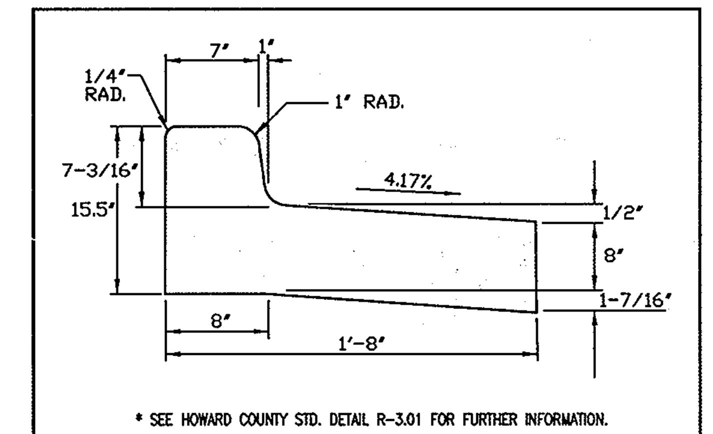

* SEE HOWARD COUNTY STD. DETAIL R-3.01 FOR FURTHER INFORMATION.

PRIVATE 7" REVERSE CURB & GUTTER — NOT TO SCALE

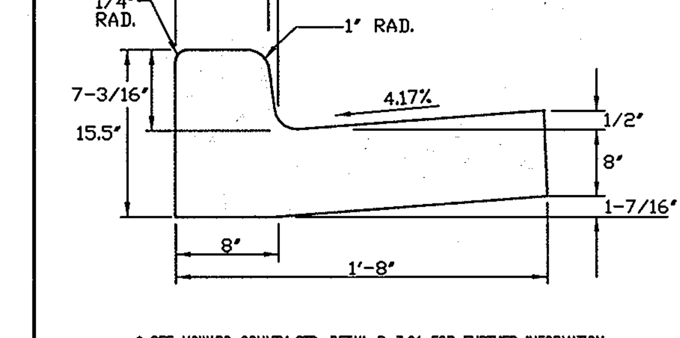

* SEE HOWARD COUNTY STD. DETAIL R-3.01 FOR FURTHER INFORMATION.

PRIVATE 7" CURB & GUTTER — NOT TO SCALE

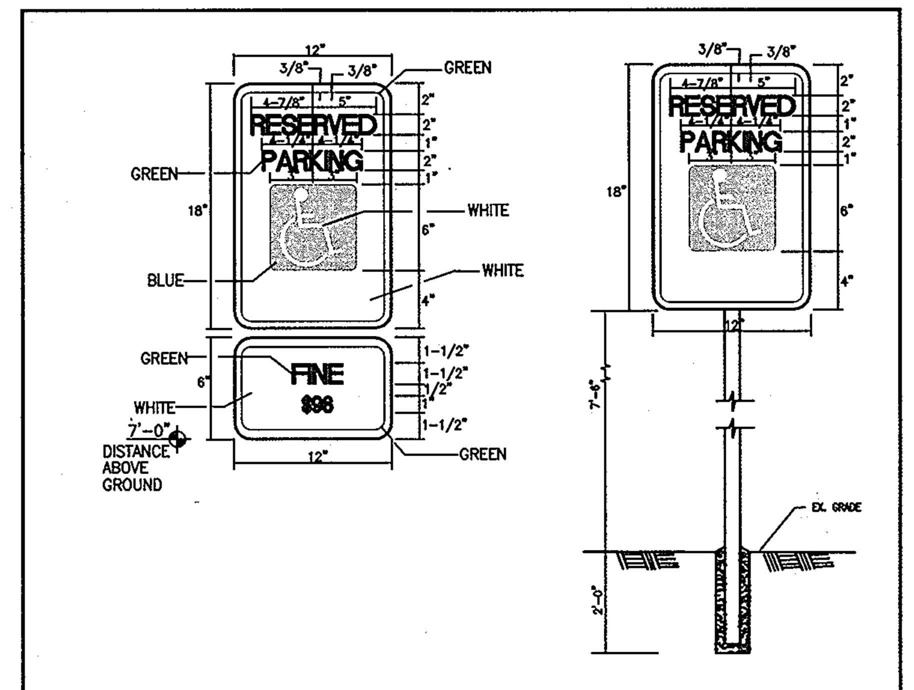

HANDICAP SIGN — NOT TO SCALE

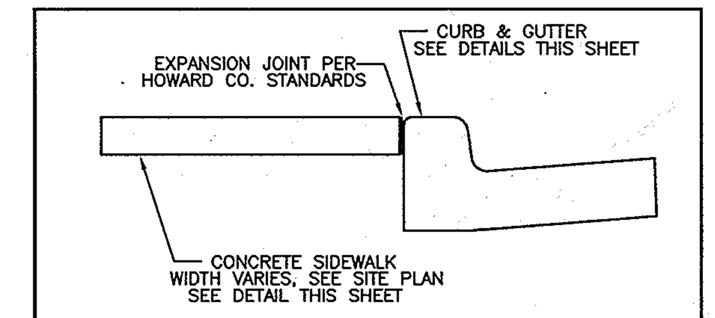

MONOLITHIC CURB DETAIL FOR CURB/SIDEWALK — NOT TO SCALE

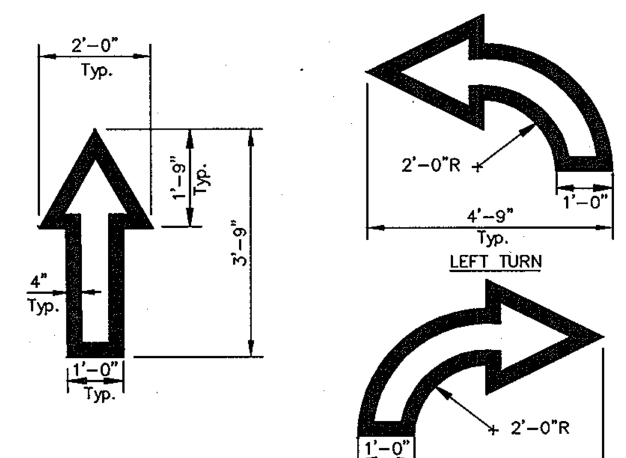

NOTE: ALL TRAFFIC FLOW ARROWS TO BE REFLECTIVE WHITE PAINT PER SPECS.

TRAFFIC FLOW ARROW
N.T.S.

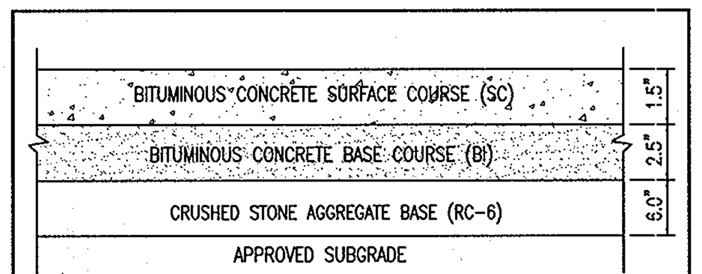

LIGHT DUTY PAVING — NOT TO SCALE

NOTE:
ALL FILL MATERIAL TO BE USED UNDER LIGHT DUTY PAVING SECTION IS TO BE SELECT FILL, CONTROLLED AND COMPACTED AS CERTIFIED BY AN APPROVED GEOTECHNICAL ENGINEER.

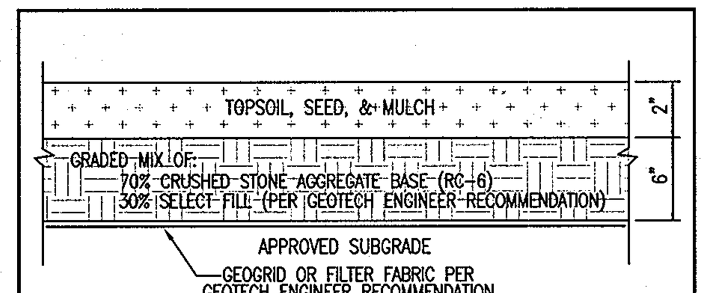

STABILIZED TURF DETAIL — NOT TO SCALE

NOTE:
ALL FILL MATERIAL TO BE USED UNDER STABILIZED TURF IS TO BE SELECT FILL, CONTROLLED AND COMPACTED AS CERTIFIED BY AN APPROVED GEOTECHNICAL ENGINEER.

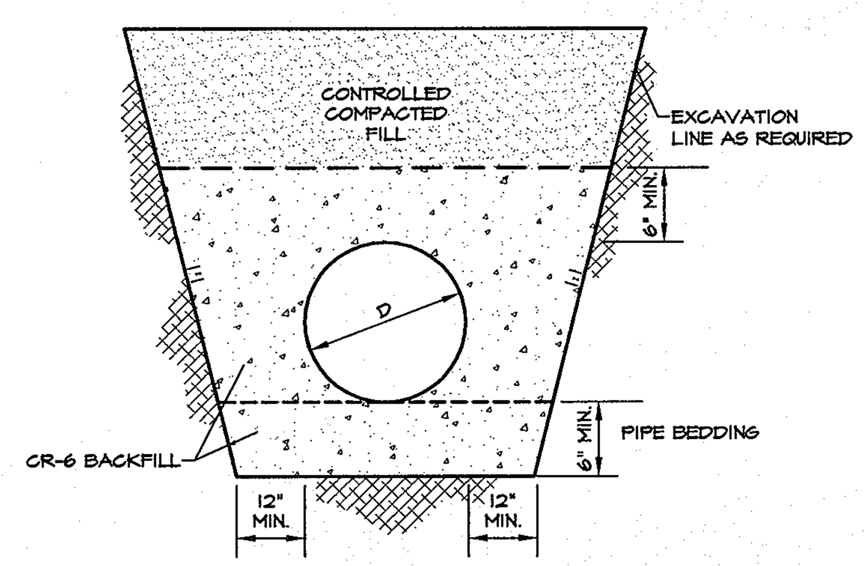

PVC/HDPE STORM DRAIN PIPE BACKFILL DETAIL
N.T.S.

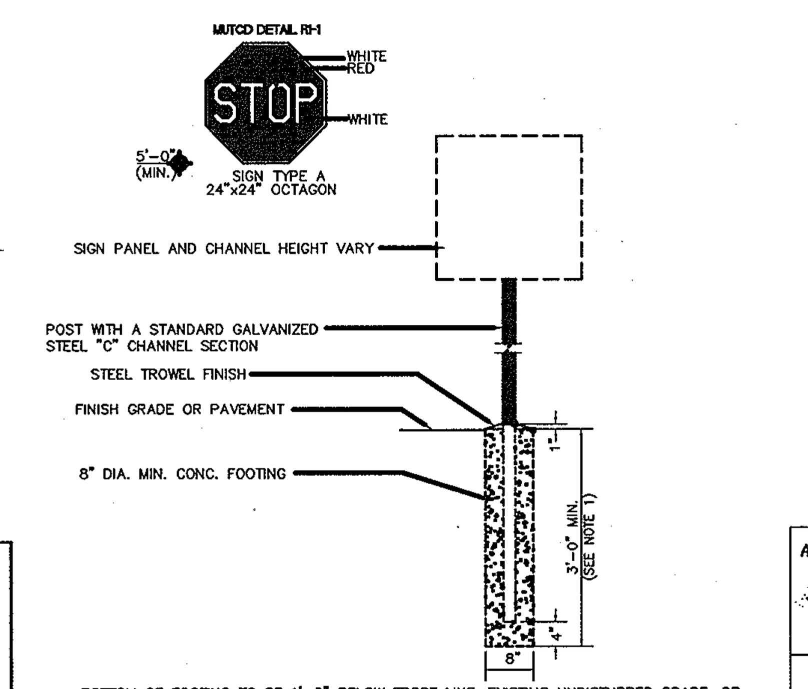

BOTTOM OF FOOTING TO BE 1'-0" BELOW FROST LINE, EXISTING UNDISTURBED GRADE, OR COMPACTED FINISHED GRADE, WHICHEVER IS GREATER.

STOP SIGN DETAIL
N.T.S.

NOTE: CONCRETE MIX SHALL BE EXPOSED AGGREGATE (ALSO KNOWN AS WASHED CONCRETE), AND SHALL MATCH EXISTING CONCRETE WALKS ON SCHOOL GROUNDS. CONTRACTOR TO VERIFY CONCRETE MIX WITH SCHOOL AGENT PRIOR TO THE CONSTRUCTION OF ANY CONCRETE SIDEWALKS.

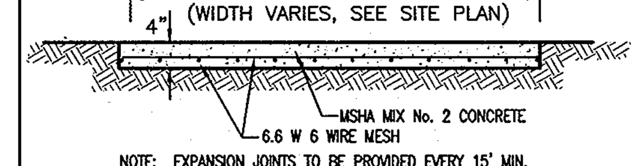

NOTE: EXPANSION JOINTS TO BE PROVIDED EVERY 15' MIN.
* Ho. Co. Std. Detail R-3.05
REFER TO HOW. CO. STD. DETAIL R-3.05 FOR ADDITIONAL INFORMATION.

SIDEWALK SECTION — NOT TO SCALE

SITE DETAILS NOTE

PRIOR TO CONSTRUCTION, CONTRACTOR SHALL REFER TO DRAWINGS ENTITLED "GLENELG COUNTRY SCHOOL, SITE STANDARD DETAILS," SHEETS 1-3, PREPARED BY LDR, INTERNATIONAL, DATED 8/6/01 FOR ADDITIONAL SITE DETAIL INFORMATION. CONTRACTOR SHALL COORDINATE ALL SITE DETAILS WITH SCHOOL REPRESENTATIVES PRIOR TO CONSTRUCTION ACTIVITIES.
THE CONTACT FOR LDR, INTERNATIONAL IS AS FOLLOWS:

LDR, INTERNATIONAL (AN HNTB COMPANY)
QUARRY PARK PLACE
9175 GUILFORD ROAD
COLUMBIA, MD 21046
PHONE: 410-792-4360

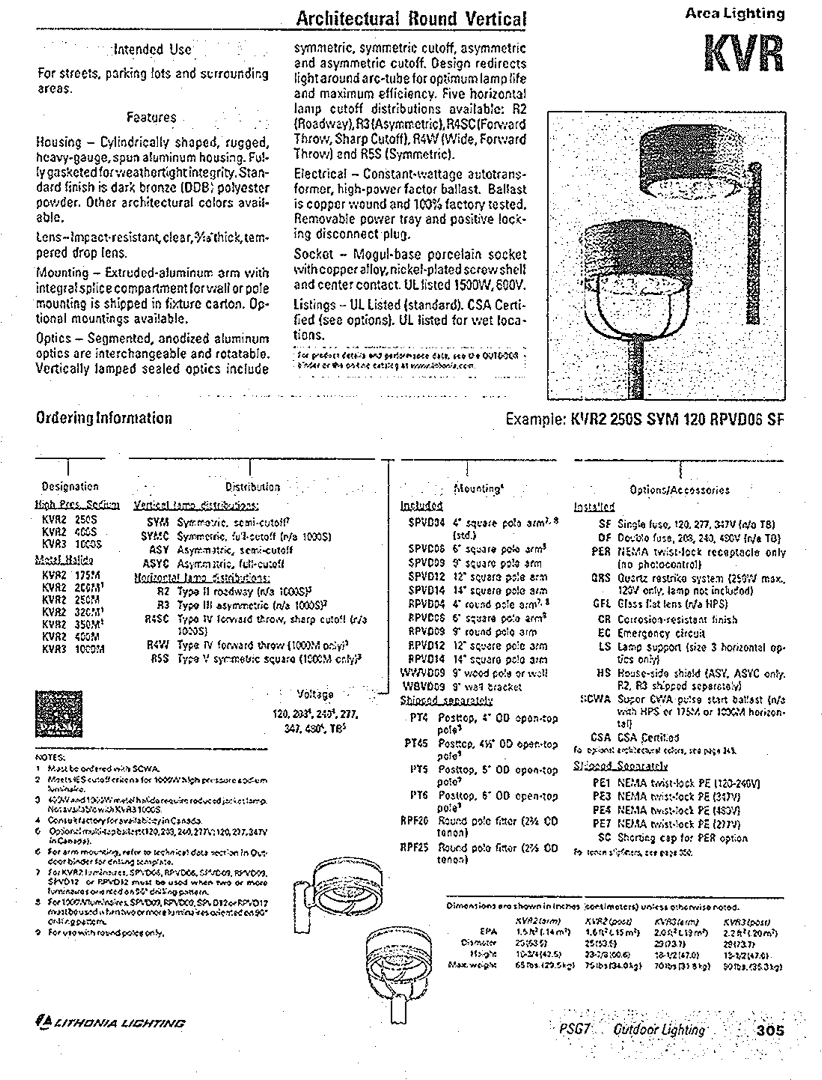
Architectural Round Vertical — Area Lighting — KVR

Intended Use
For streets, parking lots and surrounding areas.

Features
Housing – Cylindrically shaped, rugged, heavy-gauge, spun aluminum housing. Fully gasketed for weathertight integrity. Standard finish is dark bronze (DDB) polyester powder. Other architectural colors available.
Lens – Impact-resistant, clear, 3/16" thick, tempered drop lens.
Mounting – Extruded-aluminum arm with integral splice compartment for wall or pole mounting is shipped in fixture carton. Optional mountings available.
Optics – Segmented, anodized aluminum optics are interchangeable and rotatable. Vertically lamped sealed optics include symmetric, symmetric cutoff, asymmetric and asymmetric cutoff. Design redirects light around arc-tube for optimum lamp life and maximum efficiency. Five horizontal lamp cutoff distributions available: R2 (Roadway), R3 (Asymmetric), R4SC (Forward Throw, Sharp Cutoff), R4W (Wide, Forward Throw) and R5S (Symmetric).
Electrical – Constant-wattage autotransformer, high-power factor ballast. Ballast is copper wound and 100% factory tested. Removable power tray and positive locking disconnect plug.
Socket – Mogul-base porcelain socket with copper alloy, nickel-plated screw shell and center contact. UL listed 1500W, 600V.
Listings – UL Listed (standard). CSA Certified (see options). UL listed for wet locations.

Example: KVR2 250S SYM 120 RPVD06 SF

Ordering Information

LITHONIA LIGHTING — PSG7 Outdoor Lighting 305

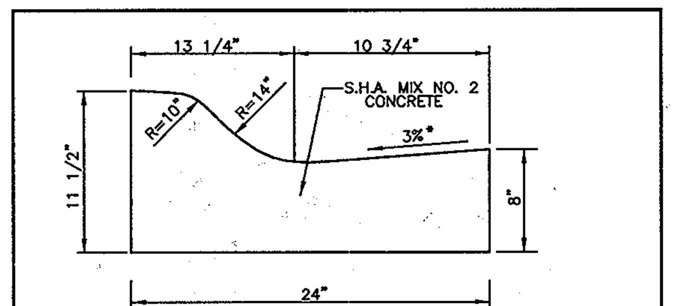

FOR ADDITIONAL DETAILS SEE HOWARD COUNTY STANDARD DETAIL R-3.01
* GUTTER PAN AT LOW SIDE OF SUPERELEVATED SECTIONS SHALL BE SLOPED AT THE SAME RATE AS PAVEMENT IF SLOPE OF PAVEMENT IS GREATER THAN 3%.

MODIFIED CURB & GUTTER — NOT TO SCALE — HOW. CO. R-3.01

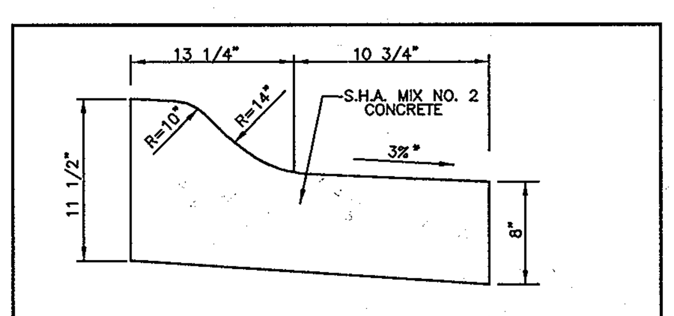

FOR ADDITIONAL DETAILS SEE HOWARD COUNTY STANDARD DETAIL R-3.01
* GUTTER PAN AT HIGH SIDE OF SUPERELEVATED SECTIONS SHALL BE SLOPED AT THE SAME RATE AS PAVEMENT IF SLOPE OF PAVEMENT IS GREATER THAN 3%.

REVERSE MODIFIED CURB & GUTTER — NOT TO SCALE — HOW. CO. R-3.01

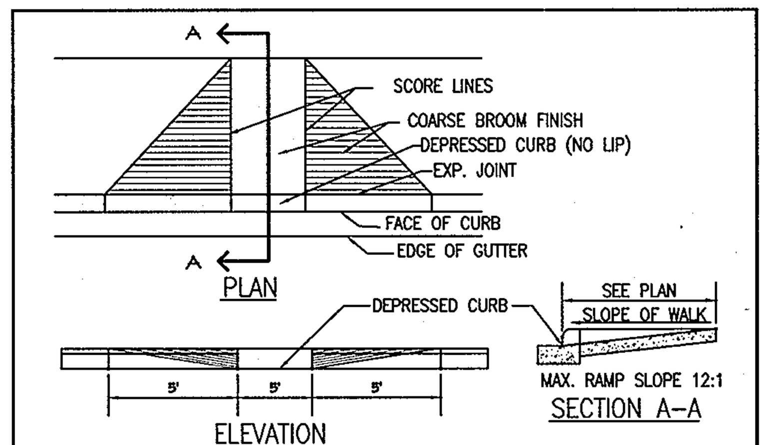

* SEE HOWARD COUNTY STD. DETAIL R-4.01 FOR FURTHER INFORMATION.

HANDICAPPED RAMP — NOT TO SCALE

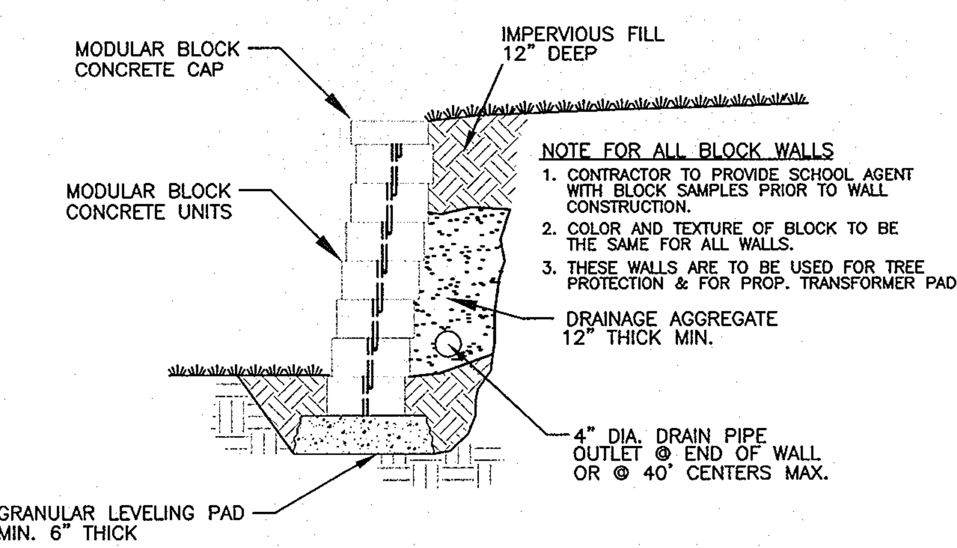

NOTE FOR ALL BLOCK WALLS
1. CONTRACTOR TO PROVIDE SCHOOL AGENT WITH BLOCK SAMPLES PRIOR TO WALL CONSTRUCTION.
2. COLOR AND TEXTURE OF BLOCK TO BE THE SAME FOR ALL WALLS.
3. THESE WALLS ARE TO BE USED FOR TREE PROTECTION & FOR PROP. TRANSFORMER PAD.

TYPICAL SECTION-UNREINFORCED RETAINING WALL
SCALE: NONE

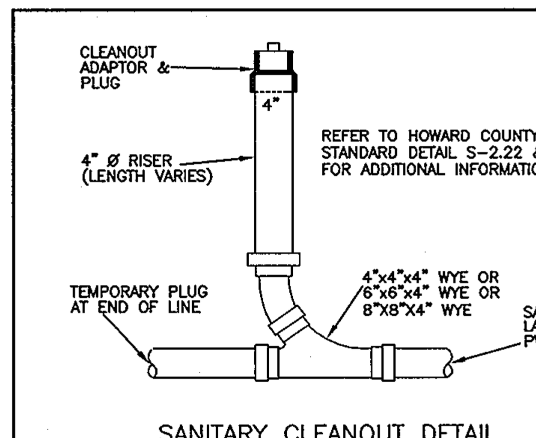

SANITARY CLEANOUT DETAIL
NOT TO SCALE

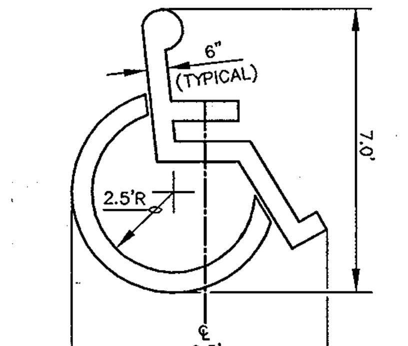

ACCESSIBLE PARKING SYMBOL
LOCATE AT EDGE OF PARKING SPACE UNLESS ACCOMPANIED BY "VAN" LETTERING, WHITE REFLECTIVE PAINT.

APPROVED FOR PUBLIC OR PRIVATE WATER & PUBLIC OR PRIVATE SEWERAGE SYSTEMS	
COUNTRY HEALTH OFFICER JAB / HOWARD COUNTY HEALTH DEPARTMENT	6-8-03 DATE
APPROVED: DEPARTMENT OF PLANNING AND ZONING	
CHIEF, DEVELOPMENT ENGINEERING DIVISION MK	8/5/03 DATE
CHIEF, DIVISION OF LAND DEVELOPMENT HB	8/12/03 DATE
DIRECTOR, DEPARTMENT OF PLANNING AND ZONING	8/12/03 DATE

MORRIS & RITCHIE ASSOCIATES, INC.
ENGINEERS, PLANNERS, SURVEYORS AND LANDSCAPE ARCHITECTS
9090 JUNCTION DRIVE, SUITE 9
ANNAPOLIS JUNCTION, MARYLAND 20701
(410) 792-9792 or (301) 776-1690
FAX (410) 792-7395

STATE OF MARYLAND — THOMAS C. NEUGEBAUER — NO. 203 — REGISTERED PROFESSIONAL ENGINEER — 7/15/03

THE GLENELG COUNTRY SCHOOL PROPOSED UPPER SCHOOL ADDITION

SITE DETAILS

TAX MAP 22 GRID 22 PARCEL 146
LIBER 1296 FOLIO 245
FIFTH (5TH) ELECTION DISTRICT
HOWARD COUNTY, MARYLAND

DATE	REVISIONS	
07/12	TRACK AND SYNTHETIC TURF FIELD IMPROVEMENTS	JOB NO.: 12189.02
		SCALE: N.T.S.
		DATE: 07/14/03
		DRAWN BY: TCN
		DESIGN BY: TCN
		REVIEW BY: TCN
		SHEET: 5 OF ~~23~~ 37

SDP-03-84

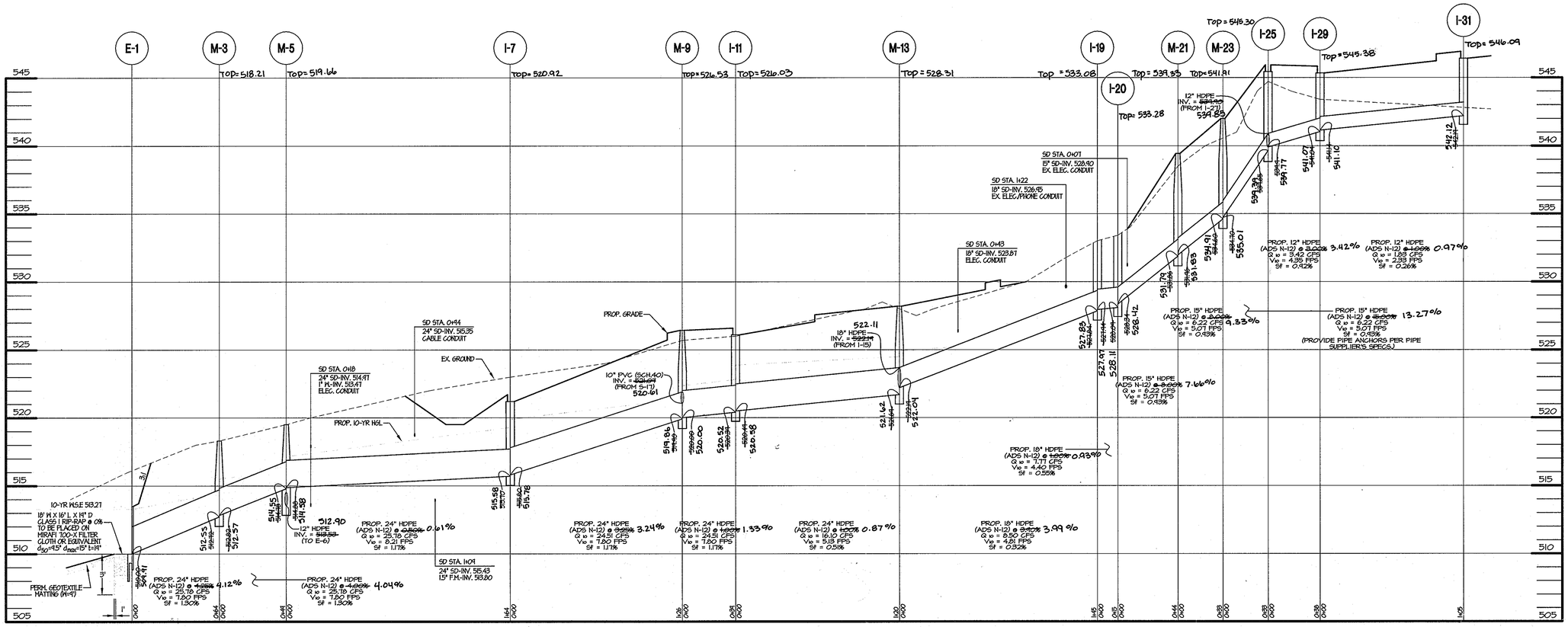

STORM DRAIN PROFILE

HOR. 1" = 40'
VERT. 1" = 4'

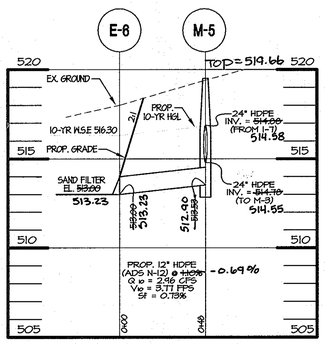

STORM DRAIN PROFILE

HOR. 1" = 40'
VERT. 1" = 4'

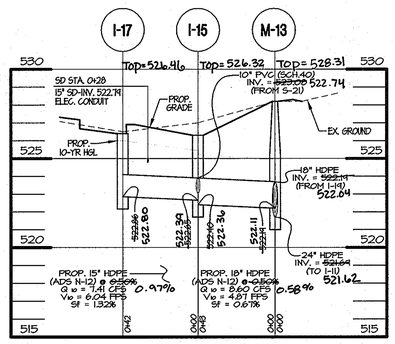

STORM DRAIN PROFILE

HOR. 1" = 40'
VERT. 1" = 4'

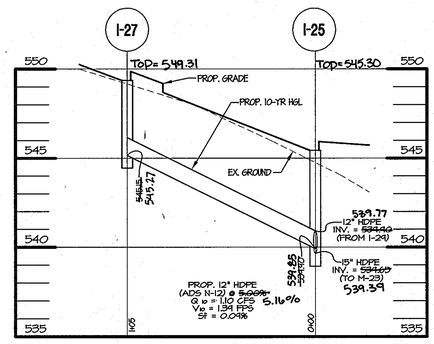

STORM DRAIN PROFILE

HOR. 1" = 40'
VERT. 1" = 4'

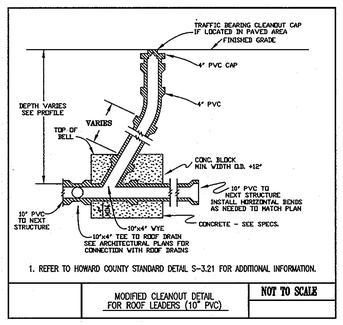

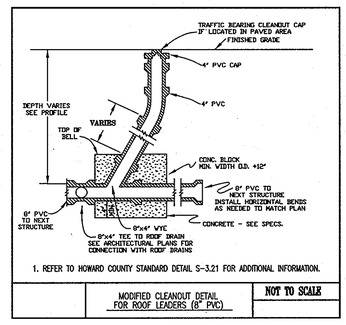

STORM DRAIN PIPE SCHEDULE		
SIZE	TYPE	LENGTH
12"	HPDE, A.D.S. N-12	248'
15"	HPDE, A.D.S. N-12	152'
18"	HPDE, A.D.S. N-12	203'
24"	HPDE, A.D.S. N-12	562'

NOTE: PIPE INSTALLATION TO BE IN ACCORDANCE WITH ALL SPECIFICATIONS AND RECOMMENDATIONS FROM PIPE SUPPLIER/MANUFACTURER.

APPROVED FOR PUBLIC (OR PRIVATE) WATER & PUBLIC (OR PRIVATE) SEWERAGE SYSTEMS
COUNTY HEALTH OFFICER — HOWARD COUNTY HEALTH DEPARTMENT — DATE 8-8-03

APPROVED: DEPARTMENT OF PLANNING AND ZONING
CHIEF, DEVELOPMENT ENGINEERING DIVISION — DATE 8/5/03
CHIEF, DIVISION OF LAND DEVELOPMENT — DATE 8/12/03
DIRECTOR, DEPARTMENT OF PLANNING AND ZONING — DATE 8/12/03

- COORDINATES TO CENTER OF STRUCTURE AT FACE OF CURB FOR INLETS, CENTER OF STRUCTURE FOR MANHOLES
* TOP OF GRATE ELEVATION AT CENTER OF STRUCTURE AT FACE OF CURB. MANHOLE ELEVATIONS ARE AT CENTER OF RIM

STORM DRAIN STRUCTURE SCHEDULE							LOCATION	
STR NO.	* TOP ELEV	INV IN	INV IN	INV OUT	TYPE	REMARKS	NORTHING	EASTING
E-1	513.50	----	----	510.00	TYPE 'A' HEADWALL, HOWARD COUNTY STANDARD DETAIL SD-5.11		578,289.59	1,324,466.78
M-3	518.33	512.82	----	512.72	SHALLOW PRECAST MANHOLE, HOWARD COUNTY STANDARD DETAIL G 5.12		578,353.33	1,324,473.65
M-5	519.54	514.88	----	514.78	SHALLOW PRECAST MANHOLE, HOWARD COUNTY STANDARD DETAIL G 5.12		578,367..86	1,324,426.77
I-7	521.20	515.80	----	515.70	PRECAST WR INLET, HOWARD COUNTY STANDARD DETAIL SD-4.35		578,415.79	1,324,272.21
M-9	526.43	520.00	521.07	519.90	STANDARD PRECAST MANHOLE, HOWARD COUNTY STANDARD DETAIL G 5.12		578,400.59	1,324,145.53
I-11	526.00	520.49	----	520.39	PRECAST WR INLET, HOWARD COUNTY STANDARD DETAIL SD-4.35		578,375.79	1,324,116.68
M-13	528.20	522.19	522.19	521.69	STANDARD PRECAST MANHOLE, HOWARD COUNTY STANDARD DETAIL G 5.12		578,258.95	1,324,092.00
I-19	533.00	527.94	----	527.84	PRECAST SINGLE WR INLET, HOWARD COUNTY STANDARD DETAIL SD-4.37		578,161.12	1,323,984.98
I-20	533.33	528.34	----	528.09	PRECAST SINGLE WR INLET, HOWARD COUNTY STANDARD DETAIL SD-4.37		578,174.10	1,323,973.33
M-21	539.43	531.96	----	531.86	STANDARD PRECAST MANHOLE, HOWARD COUNTY STANDARD DETAIL G 5.12		578,205.78	1,323,945.10
M-23	542.00	534.70	----	534.60	STANDARD PRECAST MANHOLE, HOWARD COUNTY STANDARD DETAIL G 5.12		578,238.78	1,323,942.00
I-25	545.30	539.90	539.90	539.65	PRECAST WR INLET, HOWARD COUNTY STANDARD DETAIL SD-4.35		578,255.79	1,323,916.08
I-29	545.30	541.14	----	541.04	PRECAST WR INLET, HOWARD COUNTY STANDARD DETAIL SD-4.35		578,290.80	1,323,931.09
I-31	546.38	----	----	542.19	PRECAST WR INLET, HOWARD COUNTY STANDARD DETAIL SD-4.35		578,393.83	1,323,951.37
I-15	526.30	522.65	523.08	522.40	PRECAST SINGLE WR INLET, HOWARD COUNTY STANDARD DETAIL SD-4.37		578,241.90	1,324,131.42
I-17	526.40	----	----	522.86	PRECAST SINGLE WR INLET, HOWARD COUNTY STANDARD DETAIL SD-4.37		578,202.42	1,324,134.83
I-27	549.36	----	----	545.15	PRECAST WR INLET, HOWARD COUNTY STANDARD DETAIL SD-4.35		578,168.05	1,323,858.48
E-6	N/A	----	----	513.00	12" HDPE END SECTION, A.D.S. STANDARD DETAIL DW-272, PART #1210-NP			

PLAN

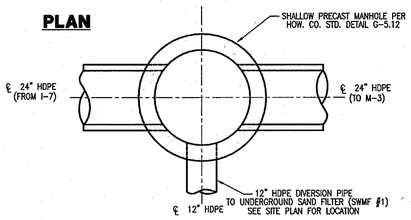

STRUCTURE M-5 DETAIL

SCALE: N.T.S.

PROFILE

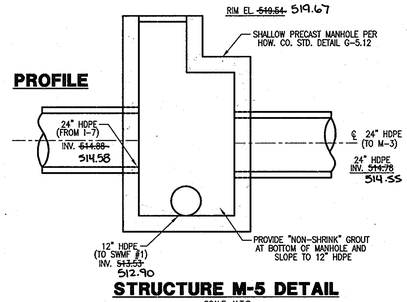

STRUCTURE M-5 DETAIL

SCALE: N.T.S.

MORRIS & RITCHIE ASSOCIATES, INC.
ENGINEERS, PLANNERS, SURVEYORS AND LANDSCAPE ARCHITECTS
9090 JUNCTION DRIVE, SUITE 9
ANNAPOLIS JUNCTION, MARYLAND 20701
(410) 792-9792 or (301) 776-1690
FAX (410) 792-7395

STATE OF MARYLAND — THOMAS E. MEDDERS — No. 21611 — PROFESSIONAL ENGINEER — 7/15/03

THE GLENELG COUNTRY SCHOOL PROPOSED UPPER SCHOOL ADDITION

STORM DRAIN & UTILITY PROFILES

TAX MAP 22 GRID 22 PARCEL 146
LIBER 1296 FOLIO 245
FIFTH (5TH) ELECTION DISTRICT
HOWARD COUNTY, MARYLAND

DATE	REVISIONS
04/06	AS-BUILT INFORMATION ADDED
4 07/12	TRACK AND SYNTHETIC TURF FIELD IMPROVEMENTS

JOB NO.: 12189.02
SCALE: AS SHOWN
DATE: 07/14/03
DRAWN BY: TCN
DESIGN BY: TCN
REVIEW BY: TCN
SHEET: 6 OF 37 4

SDP-03-84

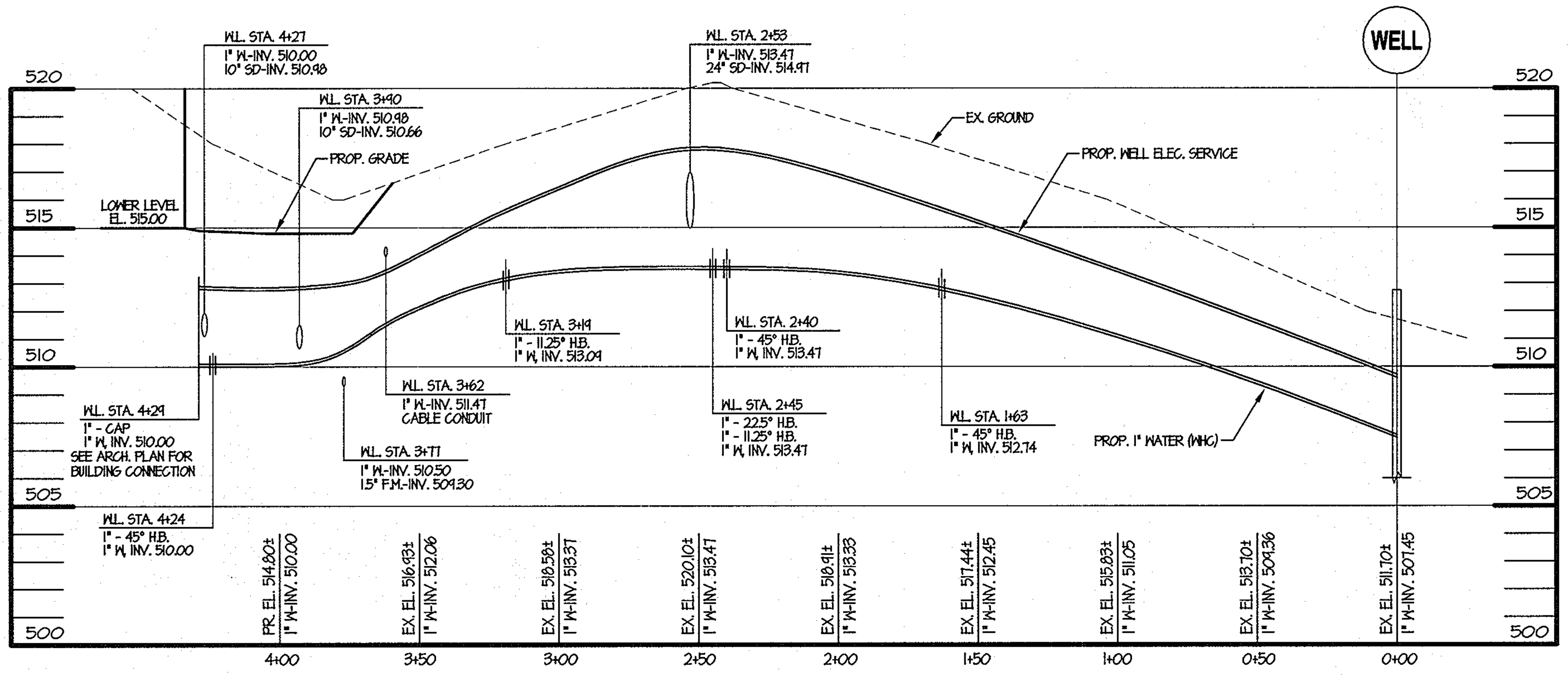

WATER LINE PROFILE

HOR. 1" = 40'
VERT. 1" = 4'

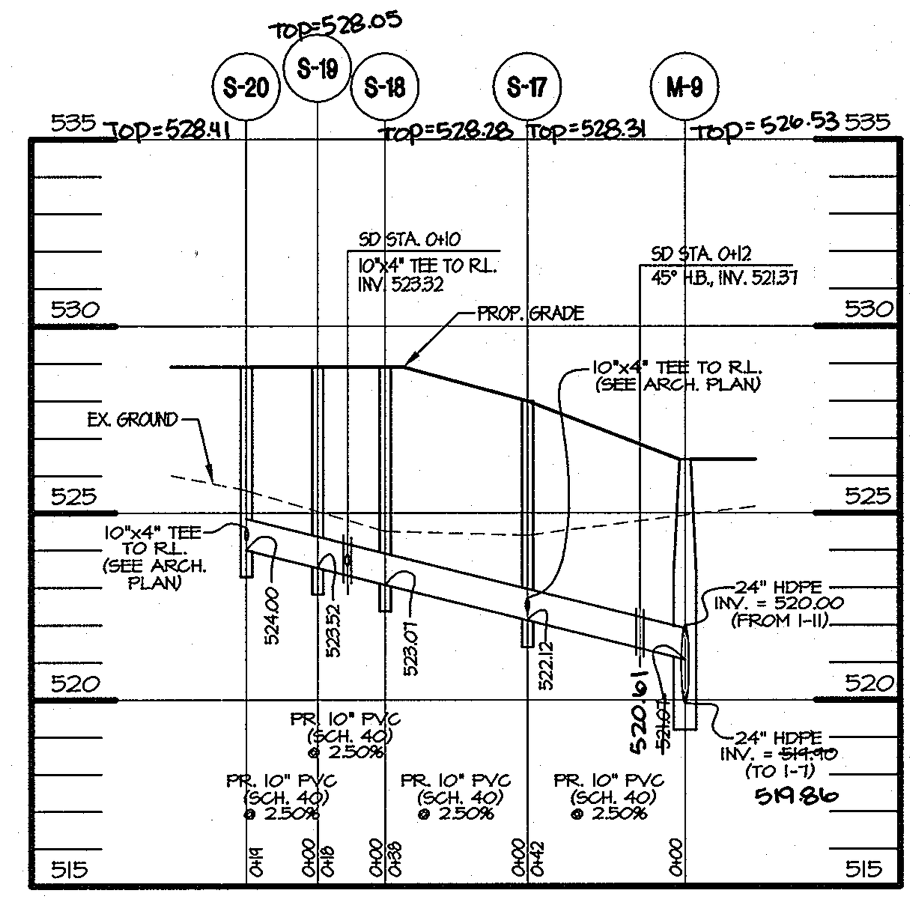

STORM DRAIN PROFILE

HOR. 1" = 40'
VERT. 1" = 4'

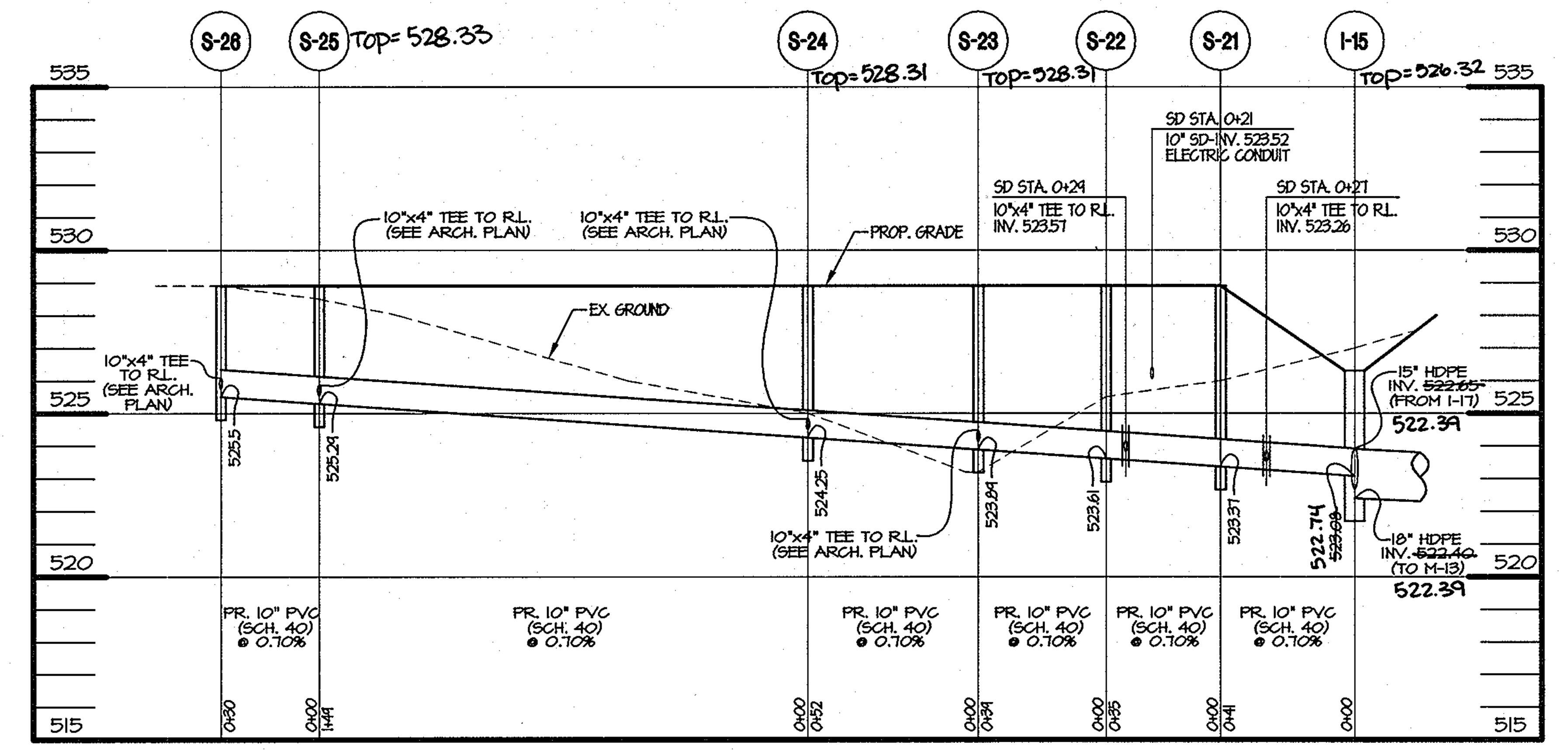

STORM DRAIN PROFILE

HOR. 1" = 40'
VERT. 1" = 4'

WATER LINE PIPE SCHEDULE		
SIZE	TYPE	LENGTH
1"	1" PVC AWWA C-900	429'

WATER LINE FITTINGS SCHEDULE		
SIZE	TYPE	NUMBER
1"	11.25° H.B.	2
1"	22.5° H.B.	1
1"	45° H.B.	3

ROOF LEADER PIPE SCHEDULE		
SIZE	TYPE	LENGTH
4"	PVC (SCH. 40) (CLEANOUT STACKS)	119'
8"	PVC (SCH. 40)	620'
10"	PVC (SCH. 40)	1125'

ROOF LEADERS FITTINGS SCHEDULE		
SIZE	TYPE	NUMBER
8"	45° H.B. (SCH. 40)	9
	10"x8" REDUCER (SCH. 40)	2
10"	45° H.B. (SCH. 40)	11
10"	90° H.B. (SCH. 40)	6
	10"x10" TEE (SCH. 40)	3
	10"x4" TEE (SCH. 40)	17
	8"x4" WYE (SCH. 40)	4
	10"x4" WYE (SCH. 40)	19
	10"x10" WYE (SCH. 40)	1
	10" CAP (SCH. 40)	4
	8" CAP (SCH. 40)	2
	8"x8" TEE (SCH. 40)	5
8"	90° H.B. (SCH. 40)	2
8"	11.25° H.B. (SCH. 40)	3
	8"x4" TEE (SCH. 40)	2

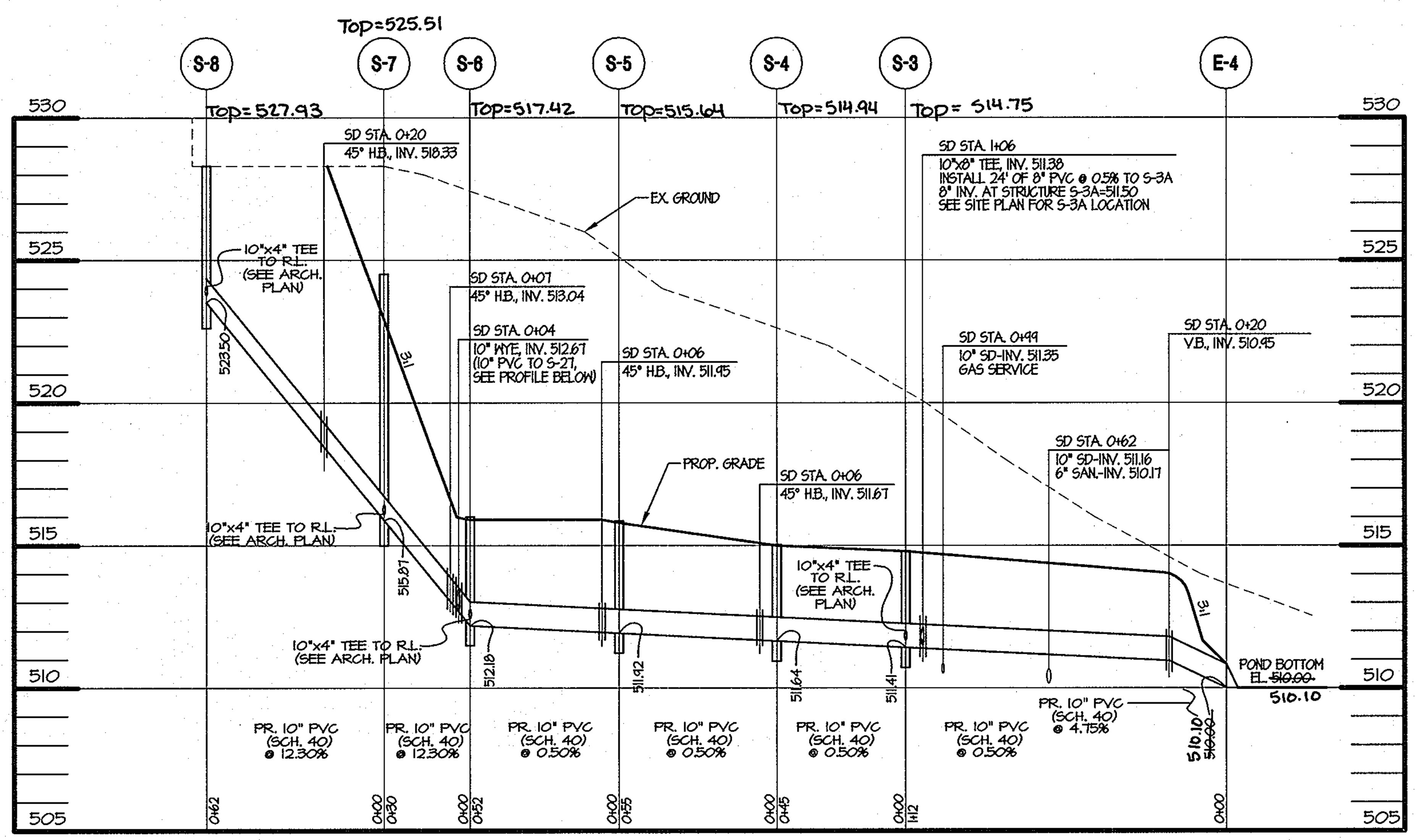

STORM DRAIN PROFILE

HOR. 1" = 40'
VERT. 1" = 4'

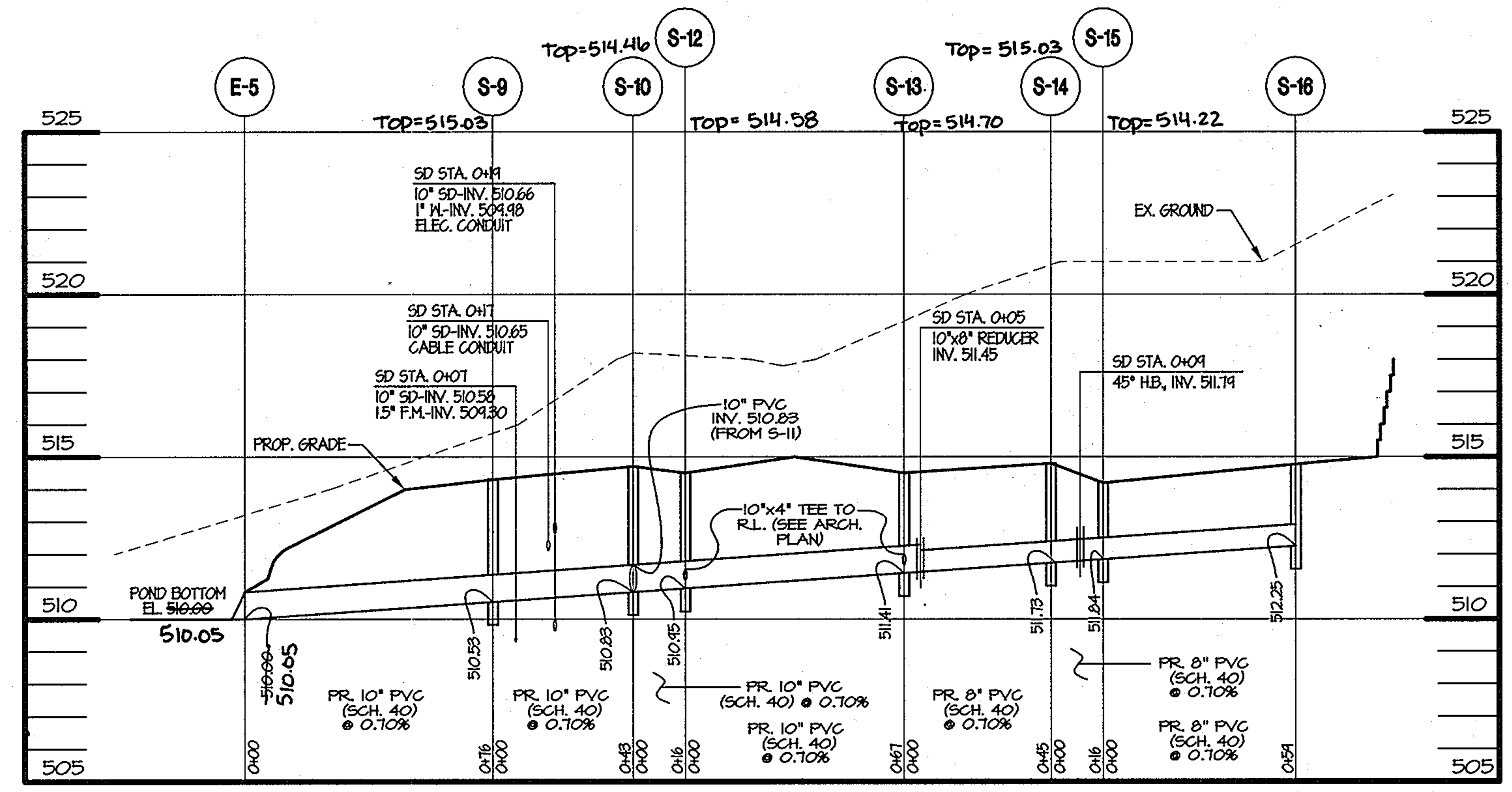

STORM DRAIN PROFILE

HOR. 1" = 40'
VERT. 1" = 4'

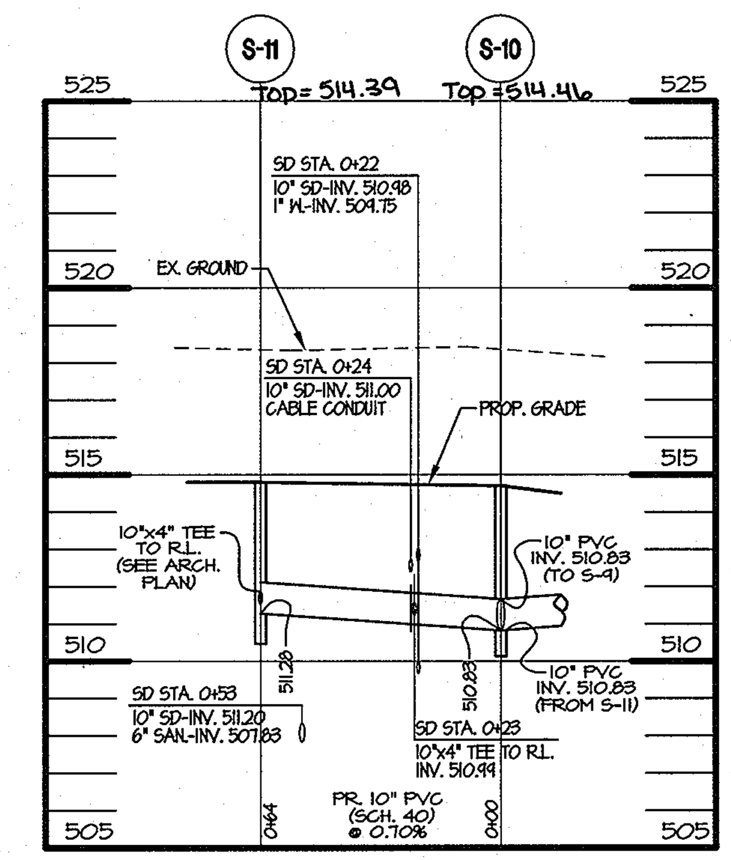

STORM DRAIN PROFILE

HOR. 1" = 40'
VERT. 1" = 4'

ROOF LEADER STRUCTURE SCHEDULE						
STR NO.	TOP ELEV	INV IN	INV IN	INV OUT	TYPE	REMARKS
E-4	N/A	---	---	510.00	10" HDPE END SECTION, A.D.S. STANDARD DETAIL DW-272, PART #1210-NP	
S-3	514.80	---	---	511.41	MODIFIED CLEANOUT, HOWARD CO. STD. DETAIL S-3.21, & DETAIL SHEET 6	
S-3A	514.30	---	---	511.80	10" HDPE INLINE DRAIN, A.D.S. PRODUCT #2710AG8N	
S-4	515.00	---	---	511.64	MODIFIED CLEANOUT, HOWARD CO. STD. DETAIL S-3.21, & DETAIL SHEET 6	
S-5	515.80	---	---	511.92	MODIFIED CLEANOUT, HOWARD CO. STD. DETAIL S-3.21, & DETAIL SHEET 6	
S-6	515.90	---	---	512.18	MODIFIED CLEANOUT, HOWARD CO. STD. DETAIL S-3.21, & DETAIL SHEET 6	
S-7	522.50	---	---	515.87	MODIFIED CLEANOUT, HOWARD CO. STD. DETAIL S-3.21, & DETAIL SHEET 6	
S-8	528.30	---	---	523.50	MODIFIED CLEANOUT, HOWARD CO. STD. DETAIL S-3.21, & DETAIL SHEET 6	
E-5	N/A	---	---	510.00	10" HDPE END SECTION, A.D.S. STANDARD DETAIL DW-272, PART #1210-NP	
S-9	514.30	---	---	510.53	MODIFIED CLEANOUT, HOWARD CO. STD. DETAIL S-3.21, & DETAIL SHEET 6	
S-10	514.70	---	---	510.83	MODIFIED CLEANOUT, HOWARD CO. STD. DETAIL S-3.21, & DETAIL SHEET 6	
S-11	514.80	---	---	511.28	MODIFIED CLEANOUT, HOWARD CO. STD. DETAIL S-3.21, & DETAIL SHEET 6	
S-12	514.50	---	---	510.95	18" HDPE INLINE DRAIN, A.D.S. PRODUCT #2718AG10N	
S-13	514.50	---	---	511.41	18" HDPE INLINE DRAIN, A.D.S. PRODUCT #2718AG10N	
S-14	514.80	---	---	511.73	MODIFIED CLEANOUT, HOWARD CO. STD. DETAIL S-3.21, & DETAIL SHEET 6	
S-15	514.20	---	---	511.84	10" HDPE INLINE DRAIN, A.D.S. PRODUCT #2710AG8N	
S-16	514.77	---	---	512.25	10" HDPE INLINE DRAIN, A.D.S. PRODUCT #2710AG8N	
S-17	528.00	---	---	522.12	MODIFIED CLEANOUT, HOWARD CO. STD. DETAIL S-3.21, & DETAIL SHEET 6	
S-18	528.90	---	---	523.07	MODIFIED CLEANOUT, HOWARD CO. STD. DETAIL S-3.21, & DETAIL SHEET 6	
S-19	528.50	---	---	523.52	MODIFIED CLEANOUT, HOWARD CO. STD. DETAIL S-3.21, & DETAIL SHEET 6	
S-20	528.50	---	---	524.00	MODIFIED CLEANOUT, HOWARD CO. STD. DETAIL S-3.21, & DETAIL SHEET 6	
S-21	528.90	---	---	523.37	MODIFIED CLEANOUT, HOWARD CO. STD. DETAIL S-3.21, & DETAIL SHEET 6	
S-22	528.40	---	---	523.61	MODIFIED CLEANOUT, HOWARD CO. STD. DETAIL S-3.21, & DETAIL SHEET 6	
S-23	528.90	---	---	523.89	MODIFIED CLEANOUT, HOWARD CO. STD. DETAIL S-3.21, & DETAIL SHEET 6	
S-24	528.90	---	---	524.25	MODIFIED CLEANOUT, HOWARD CO. STD. DETAIL S-3.21, & DETAIL SHEET 6	
S-25	528.90	---	---	525.29	MODIFIED CLEANOUT, HOWARD CO. STD. DETAIL S-3.21, & DETAIL SHEET 6	
S-26	528.90	---	---	525.50	MODIFIED CLEANOUT, HOWARD CO. STD. DETAIL S-3.21, & DETAIL SHEET 6	
S-27	525.80	---	---	522.73	MODIFIED CLEANOUT, HOWARD CO. STD. DETAIL S-3.21, & DETAIL SHEET 6	
S-28	526.50	---	---	523.79	MODIFIED CLEANOUT, HOWARD CO. STD. DETAIL S-3.21, & DETAIL SHEET 6	
S-29	528.30	---	---	524.52	MODIFIED CLEANOUT, HOWARD CO. STD. DETAIL S-3.21, & DETAIL SHEET 6	
S-30	530.50	---	---	525.83	10" HDPE INLINE DRAIN, A.D.S. PRODUCT #2710AG8N	
S-31	530.50	---	---	526.15	10" HDPE INLINE DRAIN, A.D.S. PRODUCT #2710AG8N	
S-32	531.00	---	---	526.48	10" HDPE INLINE DRAIN, A.D.S. PRODUCT #2710AG8N	

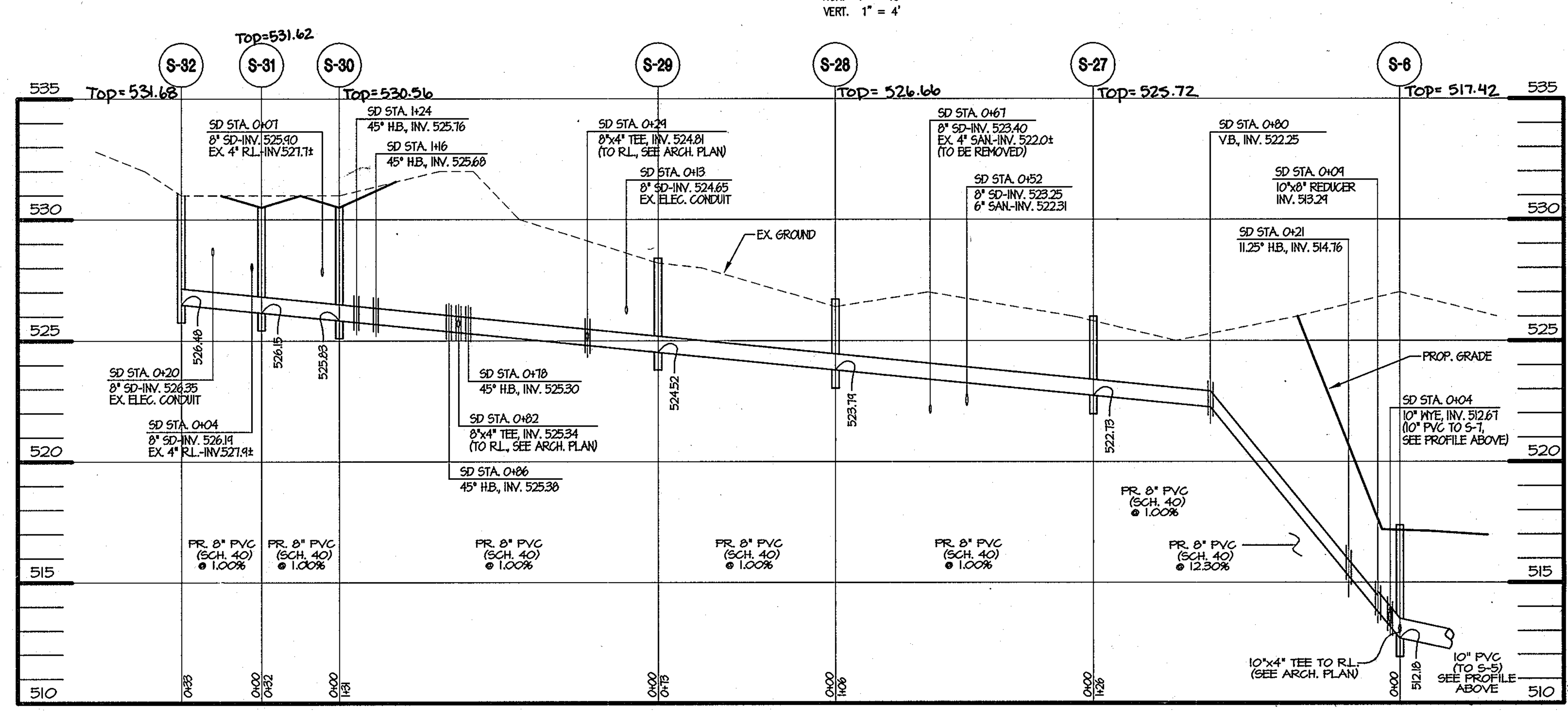

STORM DRAIN PROFILE

HOR. 1" = 40'
VERT. 1" = 4'

APPROVED: FOR PUBLIC OR PRIVATE WATER & PUBLIC OR PRIVATE SEVERAGE SYSTEMS

COUNTRY HEALTH OFFICER — HOWARD COUNTY HEALTH DEPARTMENT — DATE 8-8-03

APPROVED: DEPARTMENT OF PLANNING AND ZONING

CHIEF, DEVELOPMENT ENGINEERING DIVISION MK — DATE 8/5/03

CHIEF, DIVISION OF LAND DEVELOPMENT HB — DATE 8/12/03

DIRECTOR, DEPARTMENT OF PLANNING AND ZONING — DATE 8/12/03

MORRIS & RITCHIE ASSOCIATES, INC.

ENGINEERS, PLANNERS, SURVEYORS AND LANDSCAPE ARCHITECTS

9090 JUNCTION DRIVE, SUITE 9
ANNAPOLIS JUNCTION, MARYLAND 20701
(410) 792-9792 or (301) 776-1690
FAX (410) 792-7395

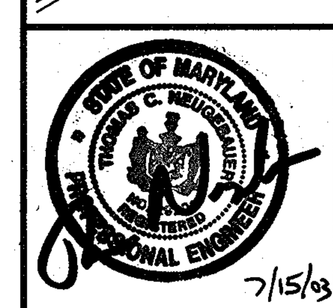

THE GLENELG COUNTRY SCHOOL PROPOSED UPPER SCHOOL ADDITION

STORM DRAIN & UTILITY PROFILES

TAX MAP 22 GRID 22 PARCEL 146
LIBER 1296 FOLIO 245
FIFTH (5TH) ELECTION DISTRICT
HOWARD COUNTY, MARYLAND

DATE	REVISIONS	
04/06	AS-BUILT INFORMATION ADDED	JOB NO.: 12189.02
07/12	TRACK AND SYNTHETIC TURF FIELD IMPROVEMENTS	SCALE: AS SHOWN
		DATE: 07/14/03
		DRAWN BY: TCN
		DESIGN BY: TCN
		REVIEW BY: TCN
		SHEET: 7 OF ~~28~~ 37

SDP-03-84

INFILTRATION TRENCH GENERAL NOTES AND SPECIFICATIONS

AN INFILTRATION TRENCH MAY NOT RECEIVE RUN-OFF UNTIL THE ENTIRE CONTRIBUTING DRAINAGE AERA TO THE INFILTRATION TRENCH HAS RECEIVED FINAL STABILIZATION.

1. HEAVY EQUIPMENT AND TRAFFIC SHALL BE RESTRICTED FROM TRAVELING OVER THE PROPOSED LOCATION OF THE INFILTRATION TRENCH TO MINIMIZE COMPACTION OF THE SOIL.

2. EXCAVATE THE INFILTRATION TRENCH TO THE DESIGN DIMENSIONS. EXCAVATED MATERIALS SHALL BE PLACED AWAY FROM THE TRENCH SIDES TO ENHANCE TRENCH WALL STABILITY. LARGE TREE ROOTS MUST BE TRIMMED FLUSH WITH THE TRENCH SIDES IN ORDER TO PREVENT FABRIC PUNCTURING OR TEARING OF THE FILTER FABRIC DURING SUBSEQUENT INSTALLATION PROCEDURES. THE SIDE WALLS OF THE TRENCH SHALL BE ROUGHENED WHERE SHEARED AND SEALED BY HEAVY EQUIPMENT.

3. A CLASS "C" GEOTEXTILE OR BETTER (SEE SECTION 24.0, MATERIAL SPECIFICATIONS, 1994 STANDARDS AND SPECIFICATIONS FOR SOIL EROSION AND SEDIMENT CONTROL, MDE, 1994) SHALL INTERFACE BETWEEN THE TRENCH SIDE WALLS AND BETWEEN STONE RESERVOIR AND GRAVEL FILTER LAYERS. A PARTIAL LIST OF NON-WOVEN FABRICS THAT MEET THE CLASS "C" CRITERIA FOLLOWS. ANY ALTERNATIVE FILTER FABRIC MUST BE APPROVED BY THE PLAN APPROVAL AUTHORITY.

AMOCO 4552	CARTHAGE FX-80S
GEOLON N70	MIRAFI 180-N
WEBTEC N07	

THE WIDTH OF GEOTEXTILE MUST INCLUDE SUFFICIENT MATERIAL TO CONFORM THE TRENCH PERIMETER IRREGULARITIES AND FOR A 6-INCH MINIMUM TOP OVERLAP. THE FILTER FABRIC SHALL BE TUCKED UNDER THE SAND LAYER ON THE BOTTOM OF THE INFILTRATION TRENCH FOR A DISTANCE OF 6 TO 12 INCHES. STONES OR OTHER ANCHORING OBJECTS SHOULD BE PLACED ON THE FABRIC AT THE EDGE OF THE TRENCH TO KEEP THE TRENCH OPEN DURING WINDY PERIODS. WHEN OVERLAPS ARE REQUIRED BETWEEN ROLLS, THE UPHILL ROLL SHOULD LAP A MINIMUM OF 2 FEET OVER THE DOWNHILL ROLL IN ORDER TO PROVIDE A SHINGLED EFFECT.

4. IF A 6" SAND FILTER LAYER IS PLACED ON THE BOTTOM OF THE INFILTRATION TRENCH, THE SAND FOR THE FILTRATION TRENCH SHALL BE WASHED AND MEET AASHTO-M-43, SIZE NO. 9 OR NO. 10. ANY ALTERNATIVE SAND GRADATION MUST BE APPROVED BY THE PLAN APPROVAL AUTHORITY.

5. THE STONE AGGREGATE SHOULD BE PLACED IN A MAXIMUM LOOSE LIFT THICKNESS OF 12 INCHES. THE GRAVEL (ROUNDED "BANK RUN" GRAVEL IS PREFERRED) FOR THE INFILTRATION TRENCH SHALL BE WASHED AND MEET ONE OF THE FOLLOWING AASHTO-M-43, SIZE NO. 2 OR NO. 3.

6. FOLLOWING THE STONE AGGREGATE PLACEMENT, THE FILTER FABRIC SHALL BE FOLDED OVER THE STONE AGGREGATE TO FORM A 6-INCH MINIMUM LONGITUDINAL LAP. THE DESIRED FILL SOIL OR STONE AGGREGATE SHALL BE PLACED OVER THE LAP AT SUFFICIENT INTERVALS TO MAINTAIN THE LAP DURING SUBSEQUENT BACKFILLING.

7. CARE SHALL BE EXERCISED TO PREVENT NATURAL OR FILL SOILS FROM INTERMIXING WITH THE STONE AGGREGATE. ALL CONTAMINATED STONE AGGREGATE SHALL BE REMOVED AND REPLACED WITH UNCONTAMINATED STONE AGGREGATE.

8. VOIDS MAY OCCUR BETWEEN FABRIC AND THE EXCAVATION SIDES SHALL BE AVOIDED. REMOVING BOULDERS OR OTHER OBSTACLES FROM THE TRENCH WALLS IS ONE SOURCE OF SUCH VOIDS. THEREFORE, NATURAL SOILS SHOULD BE PLACED IN THOSE VOIDS AT THE MOST CONVENIENT TIME DURING CONSTRUCTION TO ENSURE FABRIC CONFORMITY TO THE EXCAVATION SIDES.

9. VERTICALLY EXCAVATED WALLS MAY BE DIFFICULT TO MAINTAIN IN AREAS WHERE SOIL MOISTURE IS HIGH OR WHERE SOFT COHESIVE OR COHESIONLESS SOILS ARE DOMINANT. THESE CONDITIONS MAY REQUIRE LAYING BACK OF THE SIDE SLOPES TO MAINTAIN STABILITY.

10. PVC DISTRIBUTION PIPES SHALL BE SCHEDULE 40 AND MEET ASTM-D-1785. ALL FITTINGS SHALL MEET ASTM-D-2729. PERFORATIONS SHALL BE 3/8" IN DIAMETER. A PERFORATED PIPE SHALL BE PROVIDED ONLY WITHIN THE INFILTRATION TRENCH AND SHALL TERMINATE 1 FOOT SHORT FO THE INFILTRATION TRENCH WALL. THE END OF THE PVC PIPE SHALL BE CAPPED. NOTE: PVC PIPE WITH A WALL THICKNESS CLASSIFICATION OF SDR-35 MEETING ASTM-D-3034 IS AN ACCEPTABLE SUBSTITUTE FOR THE SCHEDULE 40 PIPE.

11. THE OBSERVATION WELL IS TO CONSIST OF 6-INCH DIAMETER PERFORATED PVC SCHEDULE 40 PIPE (M278 OR F758, TYPE PS 28) WITH A CAP SET FLUSH TO FINAL PAVED SURFACE AND IS TO BE LOCATED NEAR THE LONGITUDINAL CENTER OF THE INFILTRATION TRENCH. THE PIPE SHALL HAVE A PLASTIC COLLAR WITH RIBS TO PREVENT ROTATION WHEN REMOVING THE CAP. THE SCREW TOP LID SHALL BE A CLEANOUT WITH A LOCKING MECHANISM OR SPECIAL BOLT TO DISCOURAGE VANDALISM. THE DEPTH TO THE INVERT SHALL BE MARKED ON THE LID. THE PIPE SHALL BE PLACED VERTICALLY WITHIN THE GRAVEL PORTION OF THE INFILTRATION TRENCH AND A CAP PROVIDED AT THE BOTTOM OF THE PIPE. THE BOTTOM OF THE CAP SHALL REST ON THE INFILTRATION TRENCH BOTTOM.

12. CORRUGATED METAL DISTRIBUTION PIPES SHALL CONFORM TO AASHTO-M-36, AND SHALL BE ALUMINIZED IN ACCORDANCE WITH AASHTO-M-274. ALUMINIZED PIPE IN CONTACT WITH CONCRETE SHALL BE COATED WITH AN INERT COMPOUND CAPABLE OF PREVENTING THE DELETERIOUS EFFECT OF ALUMINUM ON THE CONCRETE. PERFORATED DISTRIBUTION PIPES SHALL CONFORM TO AASHTO-M-36, CLASS 2 AND SHALL BE PROVIDED ONLY WITHIN THE INFILTRATION TRENCH AND SHALL TERMINATE 1 FOOT SHORT OF THE INFILTRATION TRENCH WALL. AN ALUMINIZED METAL PLATE SHALL BE WELDED TO THE END OF THE PIPE.

13. IF A DISTRIBUTION STRUCTURE WITH A WET WELL IS USED, A 4-INCH DRAIN PIPE SHALL BE PROVIDED AT OPPOSITE ENDS OF THE INFILTRATION TRENCH DISTRIBUTION STRUCTURE. TWO (2) CUBIC FEET OF POROUS BACKFILL MEETING AASHTO-M-43, SIZE NO. 57 SHALL BE PROVIDED AT EACH DRAIN.

14. IF A DISTRIBUTION STRUCTURE IS USED, THE MANHOLE COVER SHALL BE BOLTED TO THE FRAME.

SAND FILTER SPECIFICATIONS

1. MATERIAL SPECIFICATIONS FOR SAND FILTER

THE ALLOWABLE MATERIALS FOR SAND FILTER CONSTRUCTION ARE DETAILED IN TABLE B.3.1. (SEE PAGE SDP-3)

2. SAND FILTER TESTING SPECIFICATIONS

UNDERGROUND SAND FILTERS, FACILITIES WITHIN SENSITIVE GROUNDWATER AQUIFERS, AND FILTERS DESIGNED TO SERVE URBAN HOT SPOTS ARE TO BE TESTED FOR WATER TIGHTNESS PRIOR TO PLACEMENT OF FILTER MEDIA. ENTRANCES AND EXITS SHOULD BE PLUGGED AND THE SYSTEM COMPLETELY FILLED WITH WATER TO DEMONSTRATE WATER TIGHTNESS. WATER TIGHTNESS MEANS NO LEAKAGE FOR A PERIOD OF 8 HOURS.

ALL OVERFLOW WEIRS, MULTIPLE ORIFICES AND FLOW DISTRIBUTION SLOTS ARE TO BE FIELD-TESTED TO VERIFY ADEQUATE DISTRIBUTION OF FLOWS.

3. SAND FILTER CONSTRUCTION SPECIFICATIONS

PROVIDE SUFFICIENT MAINTENANCE ACCESS (I.E., 12-FOOT-WIDE ROAD WITH LEGALLY RECORDED EASEMENT). VEGETATED ACCESS SLOPES ARE TO BE MAXIMUM OF 10%; GRAVEL SLOPES TO 15%; PAVED SLOPES TO 25%.
ABSOLUTELY NO RUNOFF IS TO ENTER THE FILTER UNTIL ALL CONTRIBUTING DRAINAGE AREAS HAVE BEEN STABILIZED.
SURFACE OR FILTER BED IS TO BE LEVEL.
ALL UNDERGROUND SAND FILTERS SHOULD BE CLEARLY DELINEATED WITH SIGNS SO THAT THEY MAY BE LOCATED WHEN MAINTENANCE IS DUE.
SURFACE SAND FILTERS MAY BE PLANTED WITH APPROPRIATE GRASSES. SEE APPENDIX A.
"POCKET" SAND FILTERS (AND RESIDENTIAL BIORETENTION FACILITIES TREATING AREAS LARGER THAN AN ACRE) SHALL BE SIZED WITH A STONE "WINDOW" THAT COVERS APPROXIMATELY 10% OF THE FILTER AREA. THIS "WINDOW" SHALL BE FILLED PEA GRAVEL (3/4 INCH STONE)

OPERATION AND MAINTENANCE SCHEDULE FOR PRIVATELY OWNED AND MAINTAINED SURFACE STORMAWATER FILTRATION SYSTEMS

1. THE STORMWATER WETLAND FACILITY SHALL BE INSPECTED ANNUALLY AND AFTER MAJOR STORMS. INSPECTIONS SHALL BE PERFORMED DURING WET WEATHER TO DETERMINE IF THE FACILITY IS FUNCTIONING PROPERLY.

2. THE TOP AND SIDE SLOPES OF THE EMBANKMENT SHALL BE MOWED A MINIMUM OF ONCE A YEAR , WHEN VEGETATION REACHES 18" IN HEIGHT OR AS NEEDED.

3. FILTERS THAT HAVE A GRASS COVER SHALL BE MOWED A MINIMUM OF 3 (THREE) TIMES PER GROWING SEASON TO MAINTAIN A MAXIMUM GRASS HEIGHT OF LESS THAN 12 INCHES.

4. DEBRIS AND LITTER SHALL BE REMOVED DURING REGULAR MOWING OPERATION AND AS NEEDED.

5. VISIBLE SIGNS OF EROSION IN THE FACILITY SHALL BE REPAIRED AS SOOS ASA IT IS NOTICED.

6. REMOVE SILT WHEN IT EXCEEDS 4 (FOUR) INCHES DEEP IN THE FOREBAY.

7. WHEN WATER PONDS ON THE SURFACE OF THE FILTER BED FOR MORE THAN 72 HOURS, THE TOP FEW INCHES OF DISCOLORED MATERIAL SHALL BE REPLACED WITH FRESH MATERIAL. PROPER CLEANING AND DISPOSAL OF THE REMOVED MATERIALS AND LIQUID MUST BE FOLLOWED BY THE OWNER.

8. A LOG BOOK SHALL BE MAINTAINED TO DETERMINE THE RATE AT WHICH FACILITY DRAINS.

9. THE MAINTENANCE LOG BOOK SHALL BE AVAILABLE TO HOWARD COUNTY FOR INSPECTION TO INSURE COMPLIANCE WITH OPERATION AND MAINTENANCE CRITERIA.

10. ONCE THE PERFORMANCE CHARACTERISTICS OF THE INFILTARTION SYSTEM HAVE BEEN VERIFIED, THE MONITORING SCHEDULE CAN BE REDUCED TO AN ANNUAL BASIS UNLESS THE PERFORMANCE DATA INDICATES THAT A MORE FREQUENT SCHEDULE IS REQUIRED.

BY THE ENGINEER

"I CERTIFY THAT THIS PLAN FOR POND CONSTRUCTION, EROSION AND SEDIMENT CONTROL REPRESENTS A PRACTICAL AND WORKABLE PLAN BASED ON MY PERSONAL KNOWLEDGE OF THE SITE CONDITIONS. THIS PLAN WAS PREPARED IN ACCORDANCE WITH THE REQUIREMENTS OF HOWARD SOIL CONSERVATION DISTRICT. I HAVE NOTIFIED THE DEVELOPER THAT HE/SHE MUST ENGAGE A REGISTERED PROFESSIONAL ENGINEER TO SUPERVISE POND CONSTRUCTION AND PROVIDE HOWARD SOIL CONSERVATION DISTRICT WITH AN "AS-BUILT" PLAN OF THE POND WITHIN 30 DAYS OF COMPLETION."

[signature] 7/15/03
SIGNATURE OF ENGINEER — DATE
THOMAS C. NEUGEBAUER, P.E. MD LIC.#29203

BY THE DEVELOPER

"I/WE CERTIFY THAT ALL DEVELOPMENT AND/OR CONSTRUCTION WILL BE DONE ACCORDING TO THESE PLANS, AND THAT ANY RESPONSIBLE PERSONNEL INVOLVED IN THE CONSTRUCTION PROJECT WILL HAVE A CERTIFICATE OF ATTENDANCE AT A DEPARTMENT OF THE ENVIRONMENT APPROVED TRAINING PROGRAM FOR THE CONTROL OF SEDIMENT AND EROSION BEFORE BEGINNING THE PROJECT. I SHALL ENGAGE A REGISTERED PROFESSIONAL ENGINEER TO SUPERVISE POND CONSTRUCTION AND PROVIDE THE HOWARD SOIL CONSERVATION DISTRICT WITH AN "AS-BUILT" PLAN OF THE POND WITHIN 30 DAYS OF COMPLETION. I ALSO AUTHORIZE PERIODIC ON-SITE INSPECTIONS BY THE HOWARD SOIL CONSERVATION DISTRICT."

Joel R Cher LS 7-14-03
SIGNATURE OF DEVELOPER — DATE
JOEL R. CHERINGTON, AGENT FOR THE GLENELG COUNTRY SCHOOL

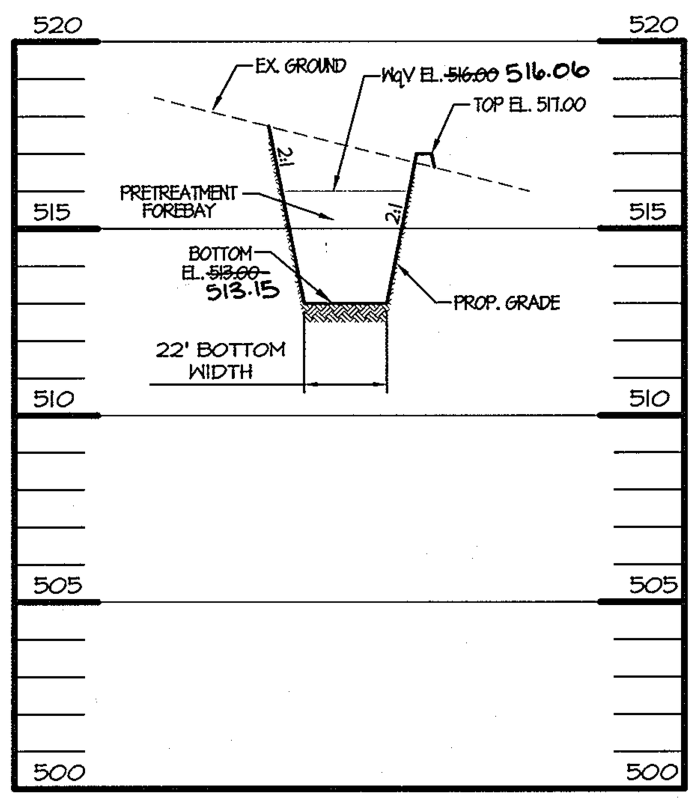

SAND FILTER SECTION
HOR. 1" = 40'
VERT. 1" = 4'

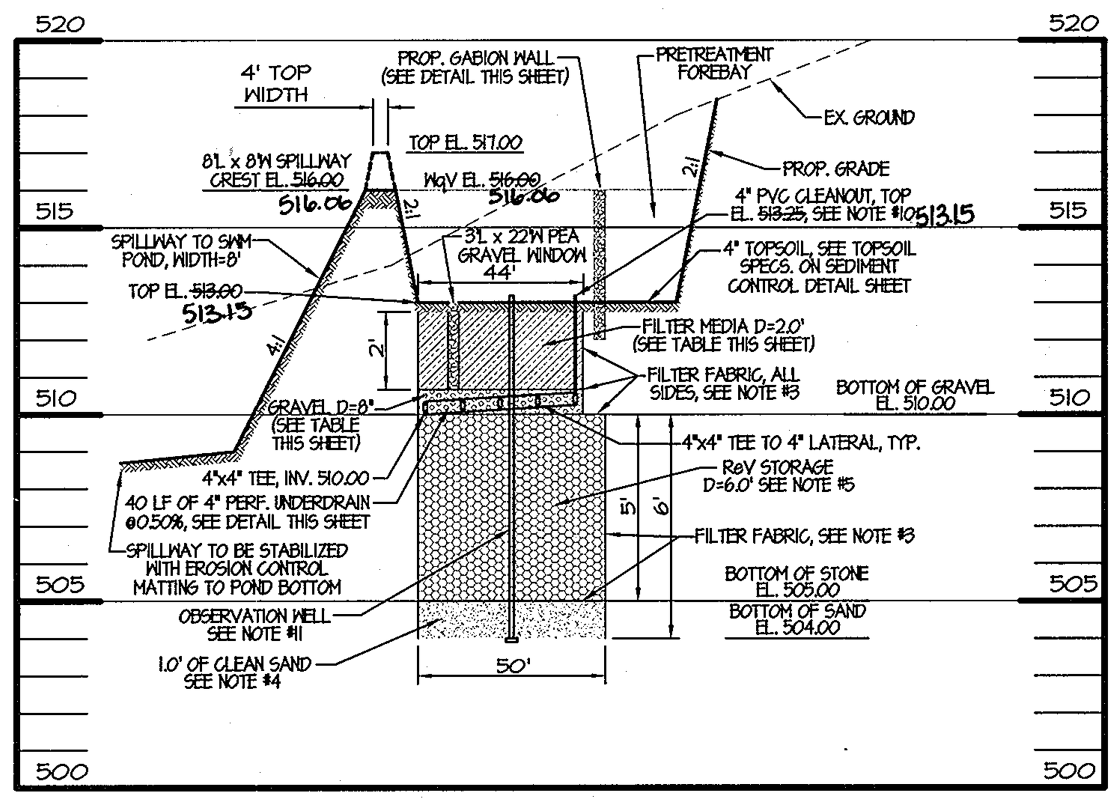

STORM DRAIN PROFILE
HOR. 1" = 40'
VERT. 1" = 4'

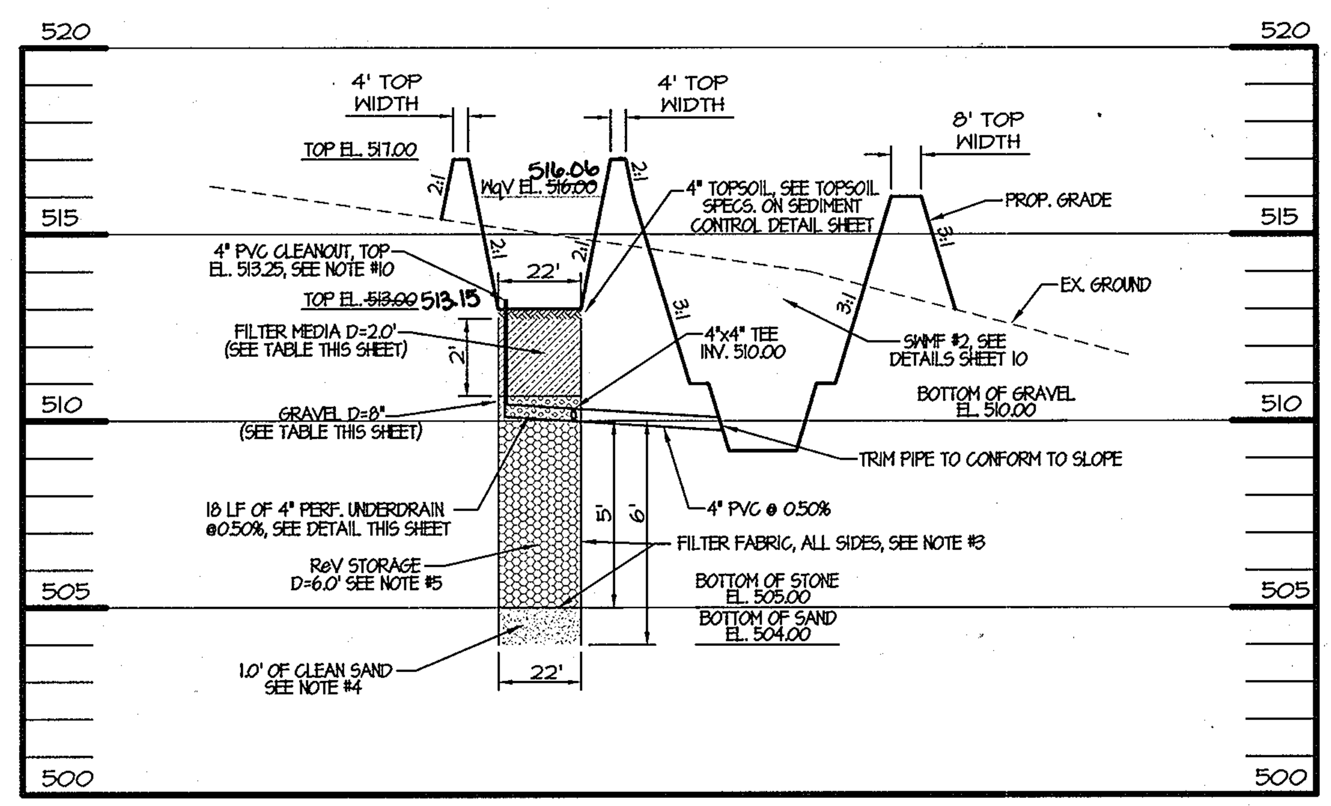

STORM DRAIN PROFILE
HOR. 1" = 40'
VERT. 1" = 4'

TABLE B.3.1 MATERIAL SPECIFICATIONS FOR SAND FILTERS

MATERIAL	SPECIFICATION/TEST METHOD	SIZE	NOTES
SAND	CLEAN AASHTO-M-6 OR ASTM-C-33 CONCRETE SAND	0.02" TO 0.04"	SAND SUBSTITUTIONS SUCH AS DIABASE AND GRAYSTONE #10 ARE NOT ACCEPTABLE. NO CALCIUM CARBONATED OR DOLOMITIC SAND SUBSTITUTIONS ARE ACCEPTABLE. NO "ROCK DUST" CAN BE USED FOR SAND.
PEAT	ASH CONTENT: <15% PH RANGE: 5.2 TO 4.9 LOOSE BULK DENSITY 0.12 TO 0.15 G/CC	N/A	THE MATERIAL MUST BE REED-SDGE HEMIC PEAT, SHREDDED, UNCOMPACTED, UNIFORM, AND CLEAN.
LEAF COMPOST		N/A	
UNDERDRAIN GRAVEL	AASHTO-M-43	0.375" TO 0.75"	
GEOTEXTILE FABRIC (IF REQUIRED)	ASTM-D-4833 (PUNCTURE STRENGTH-125 LB.) ASTM-D-4632 (TENSILE STRENGTH-300 LB.)	0.08" THICK EQUIVALENT OPENING SIZE OF #80 SIEVE	MUST MAINTAIN 125 GPM PER SQ. FT. FLOW RATE. NOTE: A 4" PEA GRAVEL LAYER MAY BE SUBSTITUTED FOR GEOTEXTILES MEANT TO "SEPARATE" SAND FILTER LAYERS.
IMPERMEABLE LINER (IF REQUIRED)	ASTM-D-4833 (THICKNESS) ASTM-D-412 (TENSILE STRENGTH 1,100 LB.,ELONGATION 200%) ASTM-D-624 (TEAR RESISTANCE - 150 LB./IN) ASTM-D-471 (WATER ADSORPTION: +8 TO -2% MASS)	30 MIL THICKNESS	LINER TO BE ULTRAVIOLET RESISTANT. A GEOTEXTILE FABRIC SHOULD BE USED TO PROTECT THE LINER FROM PUNCTURE.
UNDERDRAIN PIPING	F 758, TYPE PS 28 OR AASHTO-M-278	4"-6" RIGID SCH. 40 PVC OR SDR35	3/8" PERF. @ 6" ON CENTER, 4 HOLES PER ROW; MINIMUM OF 3" OF GRAVEL OVER PIPES; NOT NECESSARY UNDERNEATH PIPES
CONCRETE (CAST-IN-PLACE)	MSHA STANDARDS AND SPECS. SECTION 902, MIX NO. 3, F'c =3500 PSI, NORMAL WEIGHT, AIR ENTRAINED; REINFORCING TO MEET ASTM-615-60	N/A	ON SITE TESTING OF POURED-IN-PLACE CONCRETE REQUIRED: 28 DAY STRENGTH AND SLUMP TEST; ALL CONCRETE DESIGN (CAST-IN-PLACE OR PRE-CAST) NOT USING PREVIOUSLY APPROVED STATE OR LOCAL STANDARDS REQUIRES DESIGN DRAWINGS SEALED AND APPROVED BY A PROFESSIONAL STRUCTURAL ENGINEER LICENSED IN THE STATE OF MARYLAND.
CONCRETE (PRECAST)	PER PRE-CAST MANUFACTURER	N/A	SEE ABOVE NOTE
NON-REBAR STEEL	ASTM A-36	N/A	STRUCTURAL STEEL TO BE HOT-DIPPED GALVANIZED ASTM-A-123

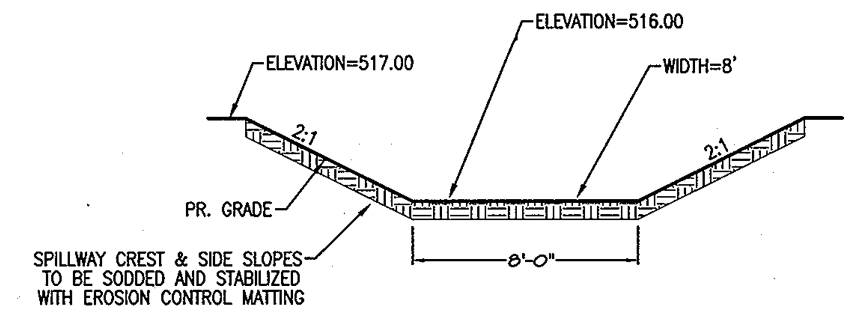

SPILLWAY DETAIL
SCALE: N.T.S.

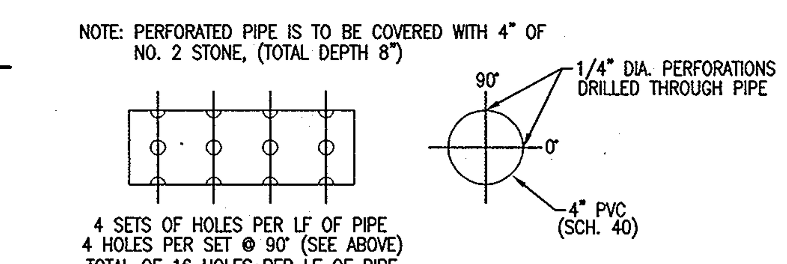

UNDERDRAIN PERFORATION DETAIL
SCALE: N.T.S.

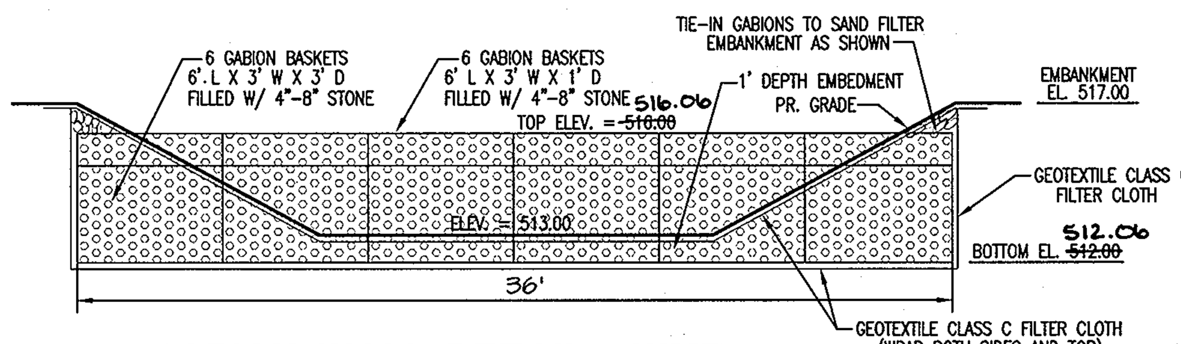

GABION WALL DETAIL SWMF #1
NOT TO SCALE

INSTALLATION NOTES
1. GABION BASKETS SHALL BE CONSTRUCTED OF GALVANIZED US GAUGE 11 MESH WIRE OR APPROVED EQUIVALENT.
2. GABION INSTALLATION SHALL BE PERFORMED ACCORDING TO GABION MANUFACTURER'S RECOMMENDATIONS AND SPECIFICATIONS.
3. TOP GABION BASKETS TO BE STAGGERED OVER BOTTOM BASKETS PER MANUFACTURER'S RECOMMENDATIONS.
4. TOP GABION BASKETS TO BE FASTENED TO BOTTOM BASKETS PER MANUFACTURER'S RECOMMENDATIONS.

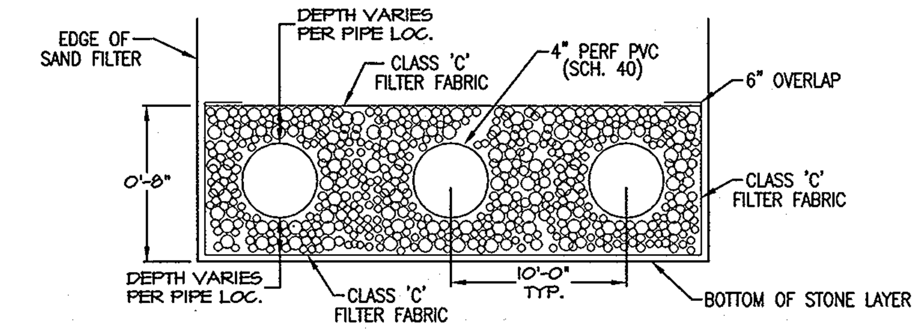

UNDERDRAIN DETAIL
SCALE: N.T.S.

THESE PLANS FOR SMALL POND CONSTRUCTION, SOIL EROSION AND SEDIMENT CONTROL MEET THE REQUIREMENTS OF THE HOWARD SOIL CONSERVATION DISTRICT.

[signature] 8/11/03
HOWARD SOIL CONSERVATION DISTRICT — DATE

THESE PLANS HAVE BEEN REVIEWED FOR THE HOWARD SOIL CONSERVATION DISTRICT AND MEET THE TECHNICAL REQUIREMENTS FOR SMALL POND CONSTRUCTION, SOIL EROSION AND SEDIMENT CONTROL.

[signature] 8/11/03
U.S.D.A.-NATURAL RESOURCES CONSERVATION SERVICE — DATE

APPROVED: FOR PUBLIC OR PRIVATE WATER & PUBLIC OR PRIVATE SEWERAGE SYSTEMS
[signature] 8-8-03
COUNTRY HEALTH OFFICER — DATE
HOWARD COUNTY HEALTH DEPARTMENT

APPROVED: DEPARTMENT OF PLANNING AND ZONING
[signature] 8/5/03
CHIEF, DEVELOPMENT ENGINEERING DIVISION MK — DATE
[signature] 8/12/03
CHIEF, DIVISION OF LAND DEVELOPMENT HB — DATE
[signature] 8/14/03
DIRECTOR, DEPARTMENT OF PLANNING AND ZONING — DATE

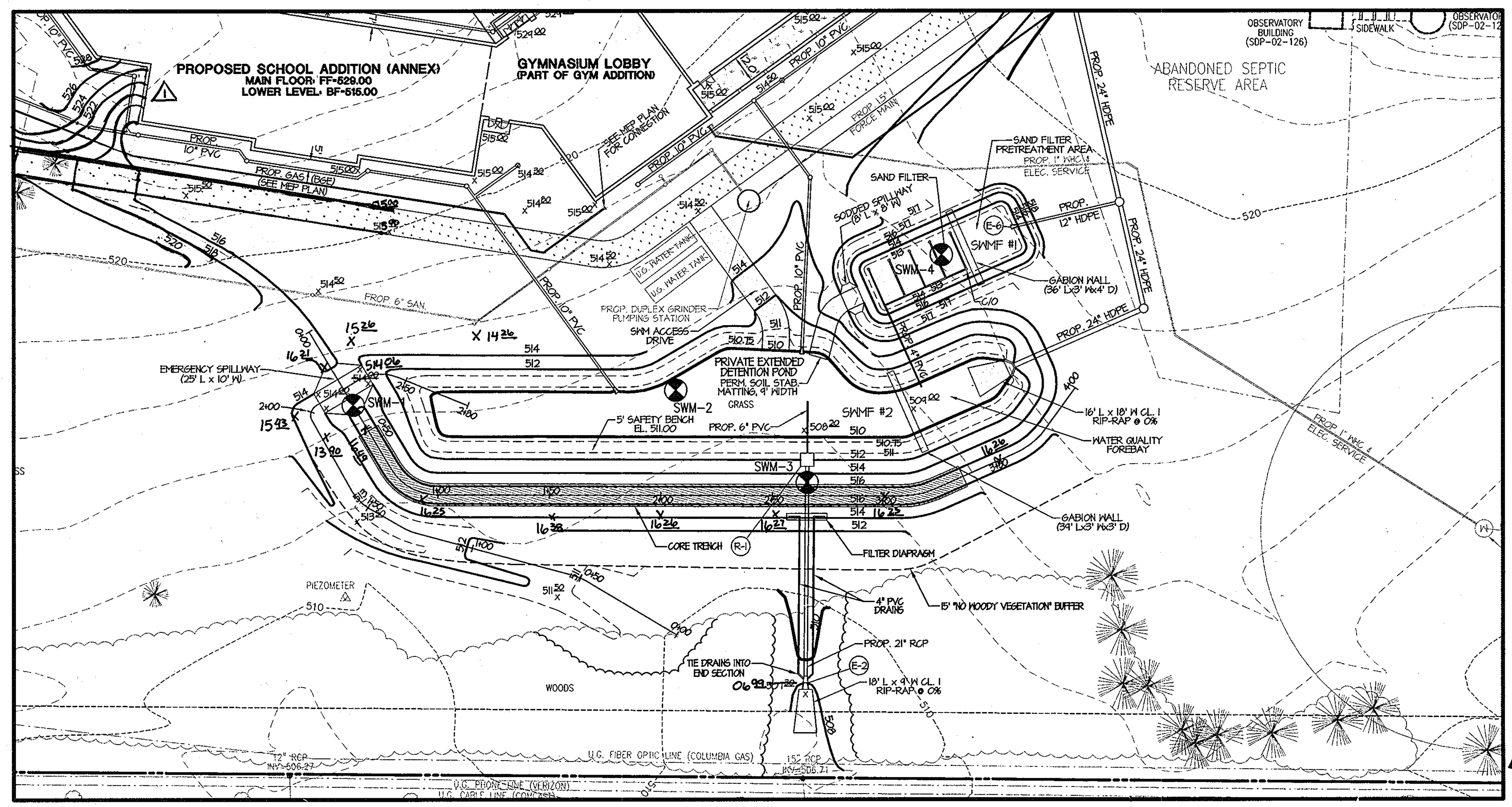

STORMWATER MANAGEMENT PLAN
SCALE: 1"=40'

MORRIS & RITCHIE ASSOCIATES, INC.
ENGINEERS, PLANNERS, SURVEYORS AND LANDSCAPE ARCHITECTS
9090 JUNCTION DRIVE, SUITE 9
ANNAPOLIS JUNCTION, MARYLAND 20701
(410) 792-9792 or (301) 776-1690
FAX (410) 792-7395

[seal: STATE OF MARYLAND, THOMAS C. NEUGEBAUER, NO. 29203, REGISTERED PROFESSIONAL ENGINEER] 7/15/03

THE GLENELG COUNTRY SCHOOL PROPOSED UPPER SCHOOL ADDITION

SWM FACILITY #1 DETAILS

TAX MAP 22 GRID 22 PARCEL 146
LIBER 1296 FOLIO 245
FIFTH (5TH) ELECTION DISTRICT
HOWARD COUNTY, MARYLAND

DATE	REVISIONS	
10/03	ADDED TRELLIS TO BUILDING FOOTPRINT. EXTENDED	JOB NO.: 12189.02
	STABILIZED TURF FIRE LANE	SCALE: AS SHOWN
		DATE: 07/14/03
04/06	AS-BUILT INFORMATION ADDED	DRAWN BY: TCN
07/12	TRACK AND SYNTHETIC TURF FIELD IMPROVEMENTS	DESIGN BY: TCN
		REVIEW BY: TCN
		SHEET: 8 OF 23 38

SDP-03-84

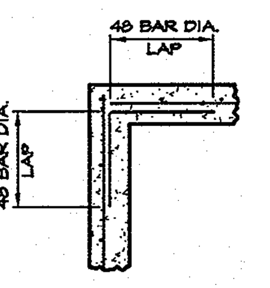

TYP. CORNER REINF DETAIL
SCALE: N.T.S.

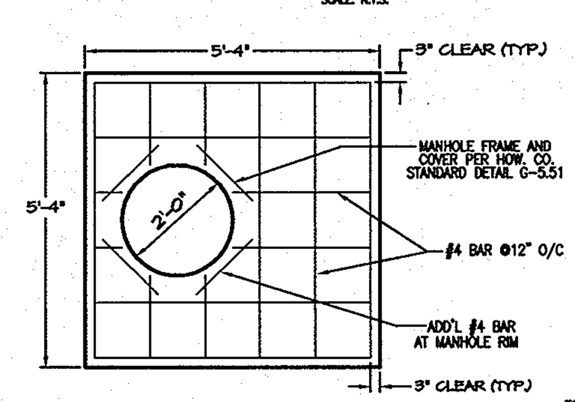

TOP OF SLAB DETAIL
SCALE: N.T.S.

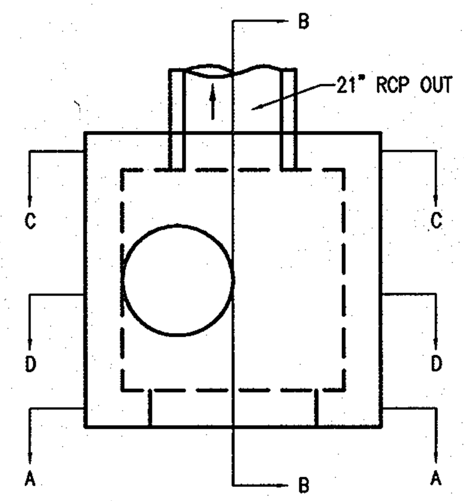

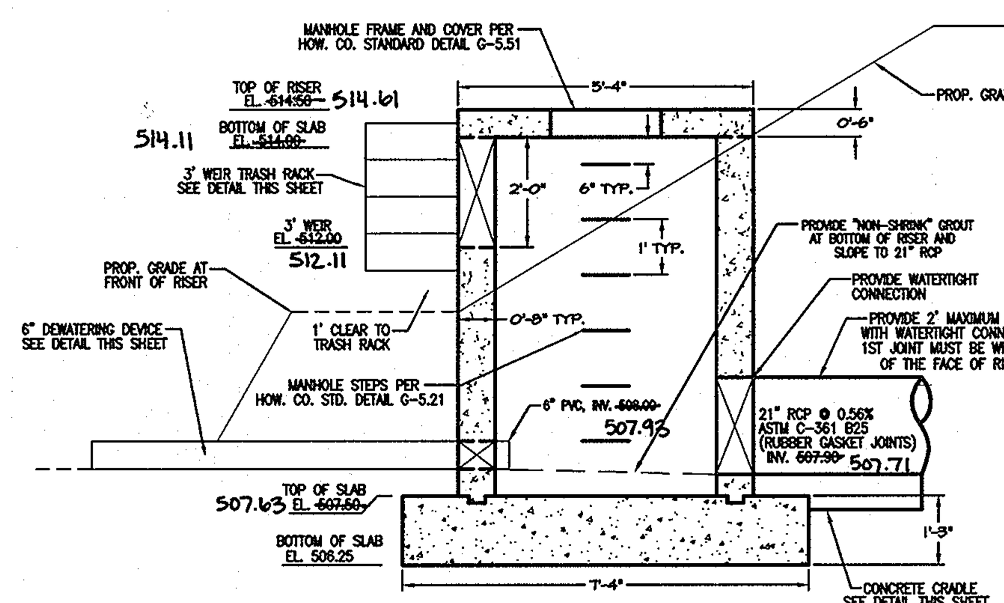

RISER STRUCTURE OPENING B-B
SCALE: N.T.S.

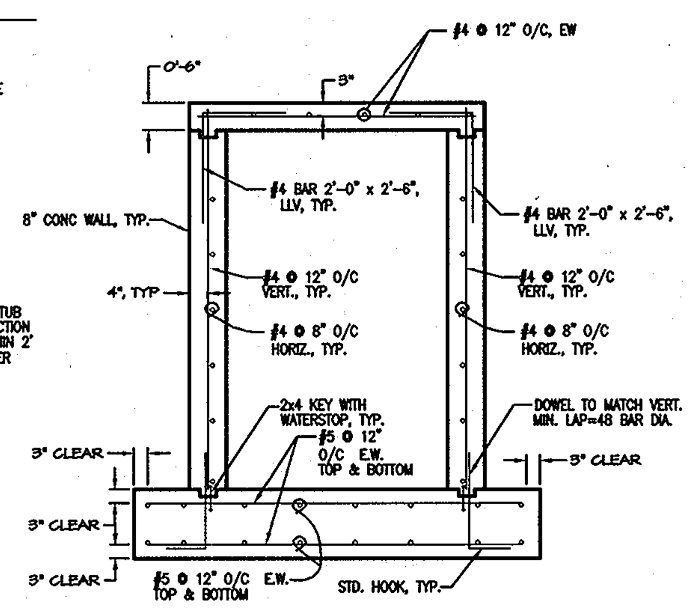

RISER STRUCTURE REINFORCEMENT DETAIL
SCALE: N.T.S.

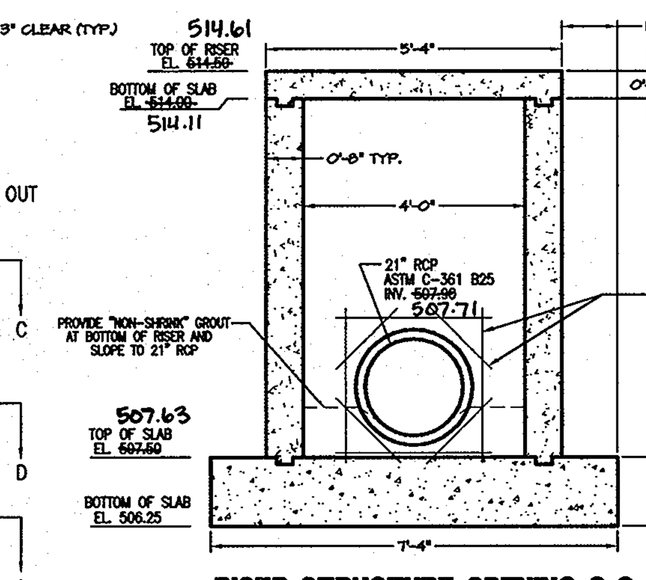

RISER STRUCTURE OPENING C-C
SCALE: N.T.S.

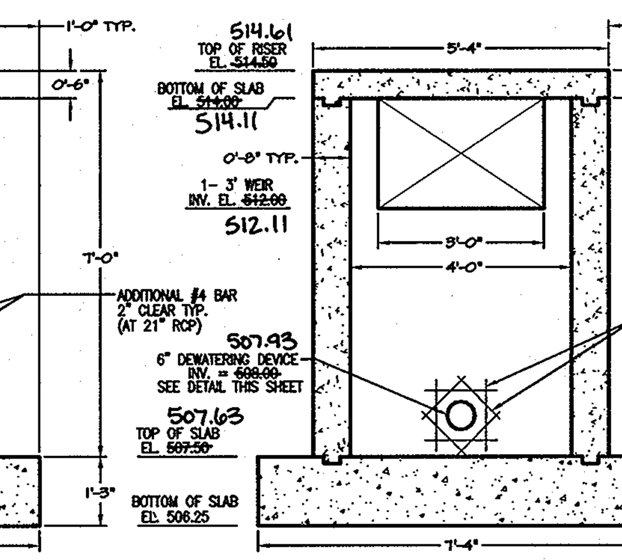

RISER STRUCTURE OPENING A-A
SCALE: N.T.S.

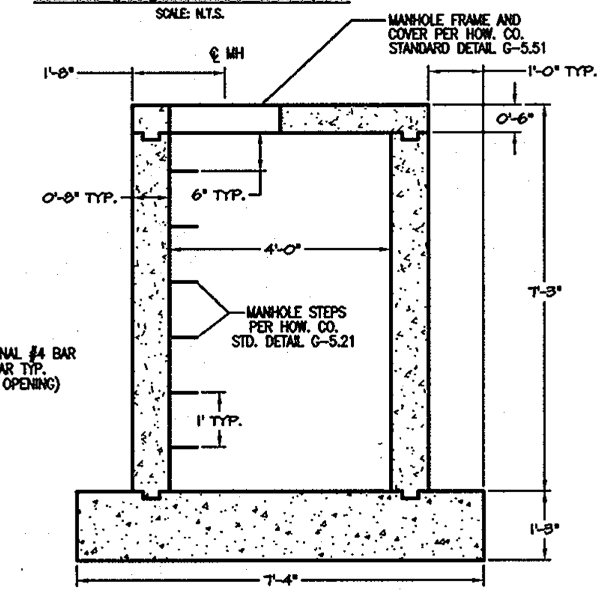

RISER STRUCTURE OPENING D-D
SCALE: N.T.S.

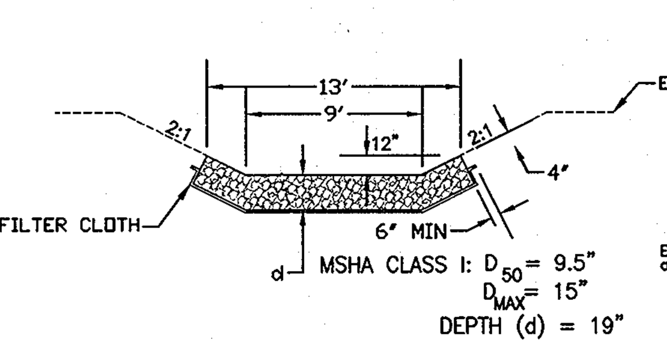

RIP RAP CHANNEL DETAIL
NOT TO SCALE

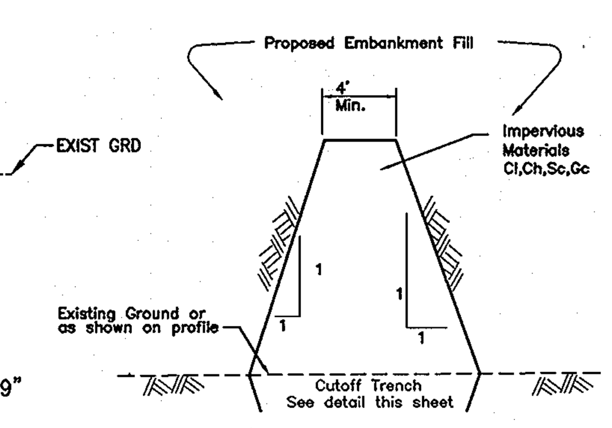

CORE TRENCH
NOT TO SCALE

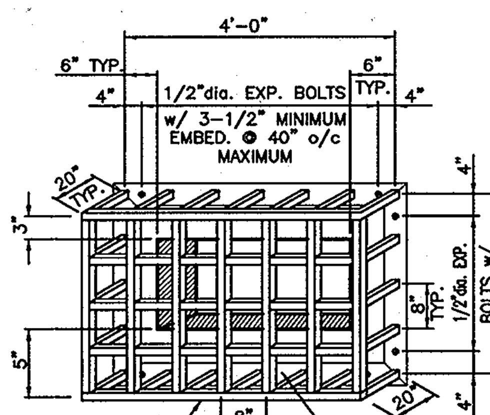

NOTES:
1. ALL MATERIALS SHALL BE HOT DIPPED GALVANIZED AFTER FABRICATION.
2. #5 BARS SHALL BE WELDED AT CROSS-POINTS AND WHERE BAR MEETS STEEL CONNECTION PLATE.
3. TRASH RACK BARS ARE TO BE PAINTED "BATTLESHIP GREY" IN ACCORDANCE WITH HOW. CO. STANDARDS.

3' WEIR TRASH RACK DETAIL
N.T.S.

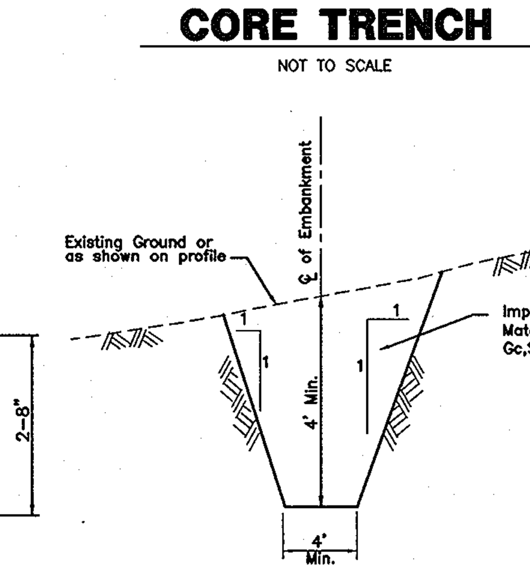

CUTOFF TRENCH
NOT TO SCALE

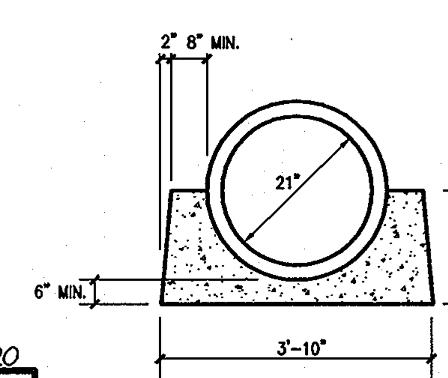

NOTES:
1. CRADLE TO BE CONTINUOUS ALONG PIPE.
2. CONCRETE FOR CRADLE TO BE MDSHA MIX No. 3.

CONCRETE CRADLE DETAIL
NOT TO SCALE

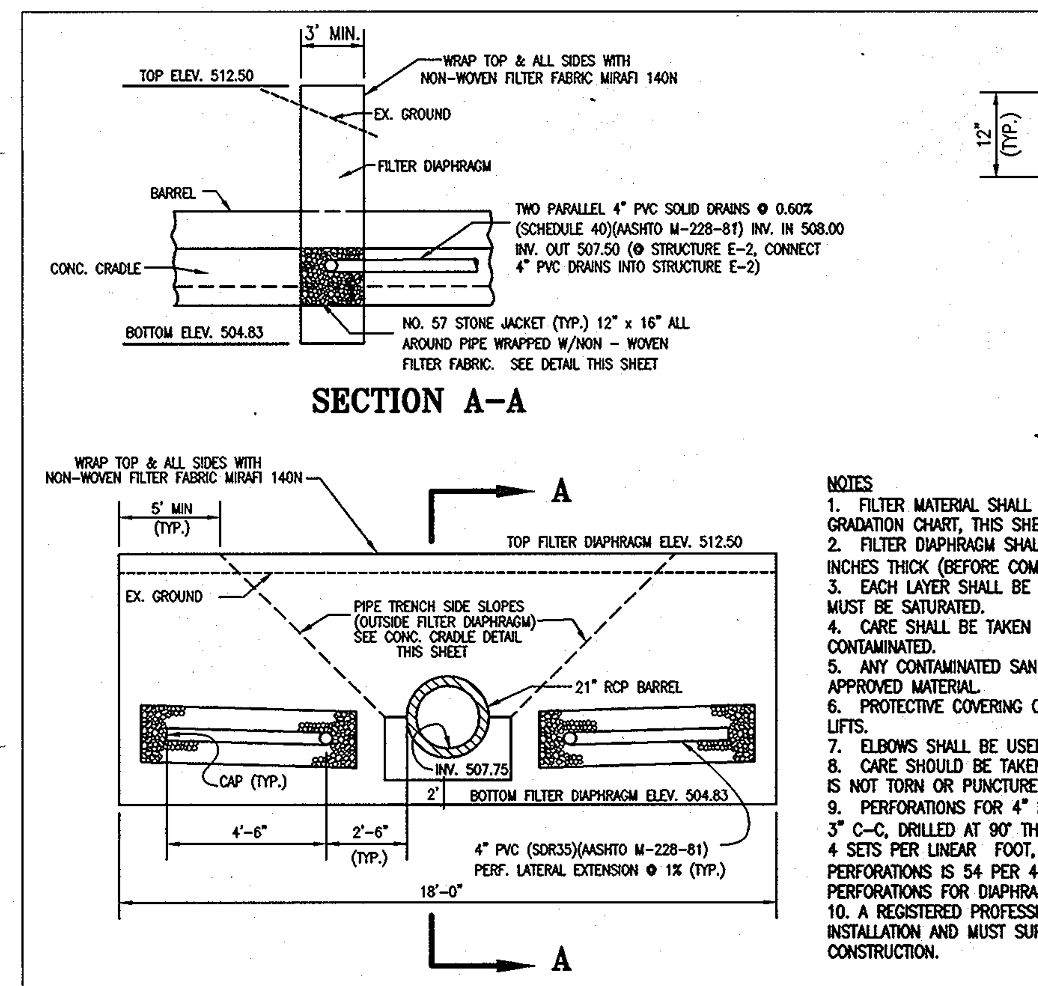

FILTER DIAPHRAGM DETAIL
NOT TO SCALE

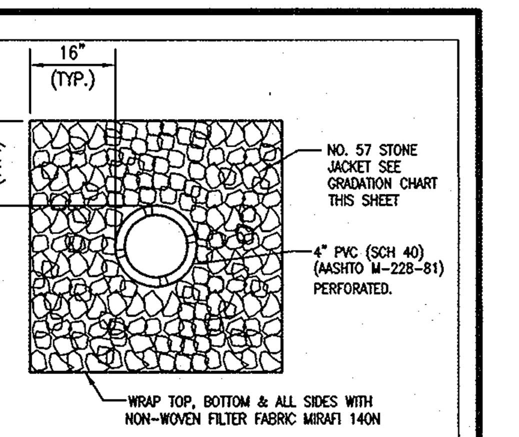

WRAP DETAIL

NOTES
1. FILTER MATERIAL SHALL CONFORM TO ASTM C-33 (CONCRETE SAND). SEE GRADATION CHART, THIS SHEET.
2. FILTER DIAPHRAGM SHALL BE CONSTRUCTED IN HORIZONTAL LAYERS 12 INCHES THICK (BEFORE COMPACTION).
3. EACH LAYER SHALL BE HYDROCOMPACTED USING A SPRINKLER. MATERIAL MUST BE SATURATED.
4. CARE SHALL BE TAKEN SO THAT THE FILTER MATERIAL IS NOT CONTAMINATED.
5. ANY CONTAMINATED SAND SHALL BE REMOVED AND REPLACED WITH APPROVED MATERIAL.
6. PROTECTIVE COVERING OVER THE FILTER SAND MAY BE REQUIRED BETWEEN LIFTS.
7. ELBOWS SHALL BE USED FOR PVC INTERCONNECTIONS.
8. CARE SHOULD BE TAKEN DURING INSTALLATION SO THAT THE FILTER CLOTH IS NOT TORN OR PUNCTURED DURING CONSTRUCTION.
9. PERFORATIONS FOR 4" PVC PIPE SHALL BE 3/8" IN DIAMETER, SPACED AT 3" C-C, DRILLED AT 90° THROUGH BOTH SIDES OF PIPE. 4 HOLES PER SET, 4 SETS PER LINEAR FOOT, 16 HOLES PER LINEAR FOOT OF PIPE. TOTAL PERFORATIONS IS 54 PER 4.50' PIPE SEGEMENT FOR A TOTAL OF 108 TOTAL PERFORATIONS FOR DIAPHRAGM.
10. A REGISTERED PROFESSIONAL ENGINEER MUST BE PRESENT DURING INSTALLATION AND MUST SUPERVISE AND INSPECT FILTER DIAPHRAGM DURING CONSTRUCTION.

GRADATION CHART FOR No.57 STONE

SIEVE SIZE	% PASSING
1-1/2"	100
1"	95-100
1/2"	25-60
No.4	0-10
No.8	0-5

GRADATION CHART FOR ASTM C-33 CONCRETE SAND

SIEVE SIZE	mm	% PASSING
3/8 IN.	9.5	100
No.4	4.75	90-100
No.10	2.00	70-100
No.20	0.850	50-85
No.50	0.300	25-50
No.100	0.150	8-30
No.140	0.106	0-15
No.200	0.075	0-5

NOTE:
Pipe perforations are to be per detail shown.
Perforated pipe to be covered with #2 stone for a minimum depth of 4" around and over pipe.

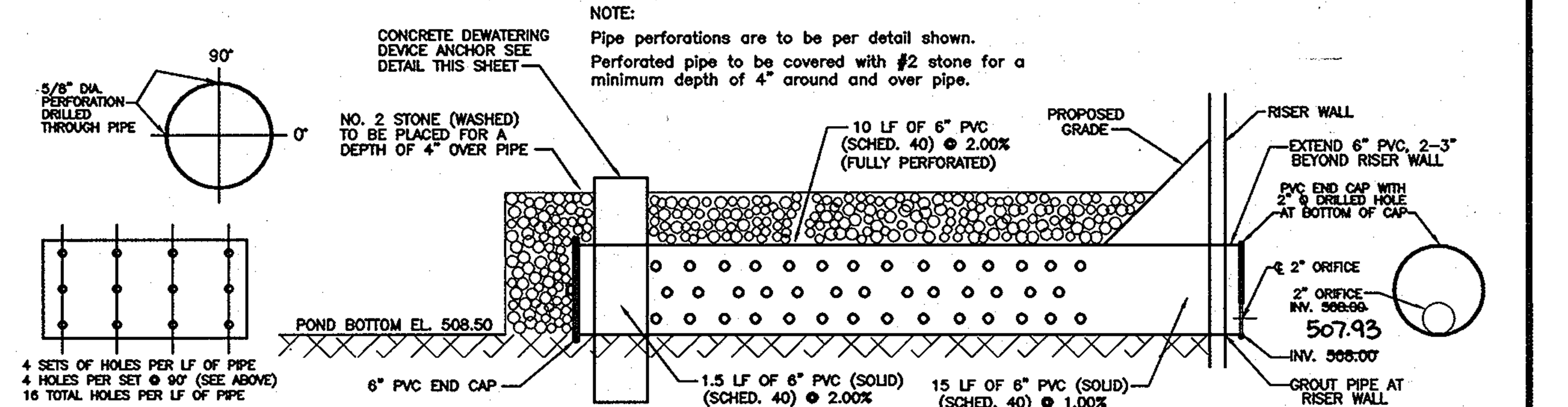

6" PVC DEWATERING DEVICE DETAIL
N.T.S.

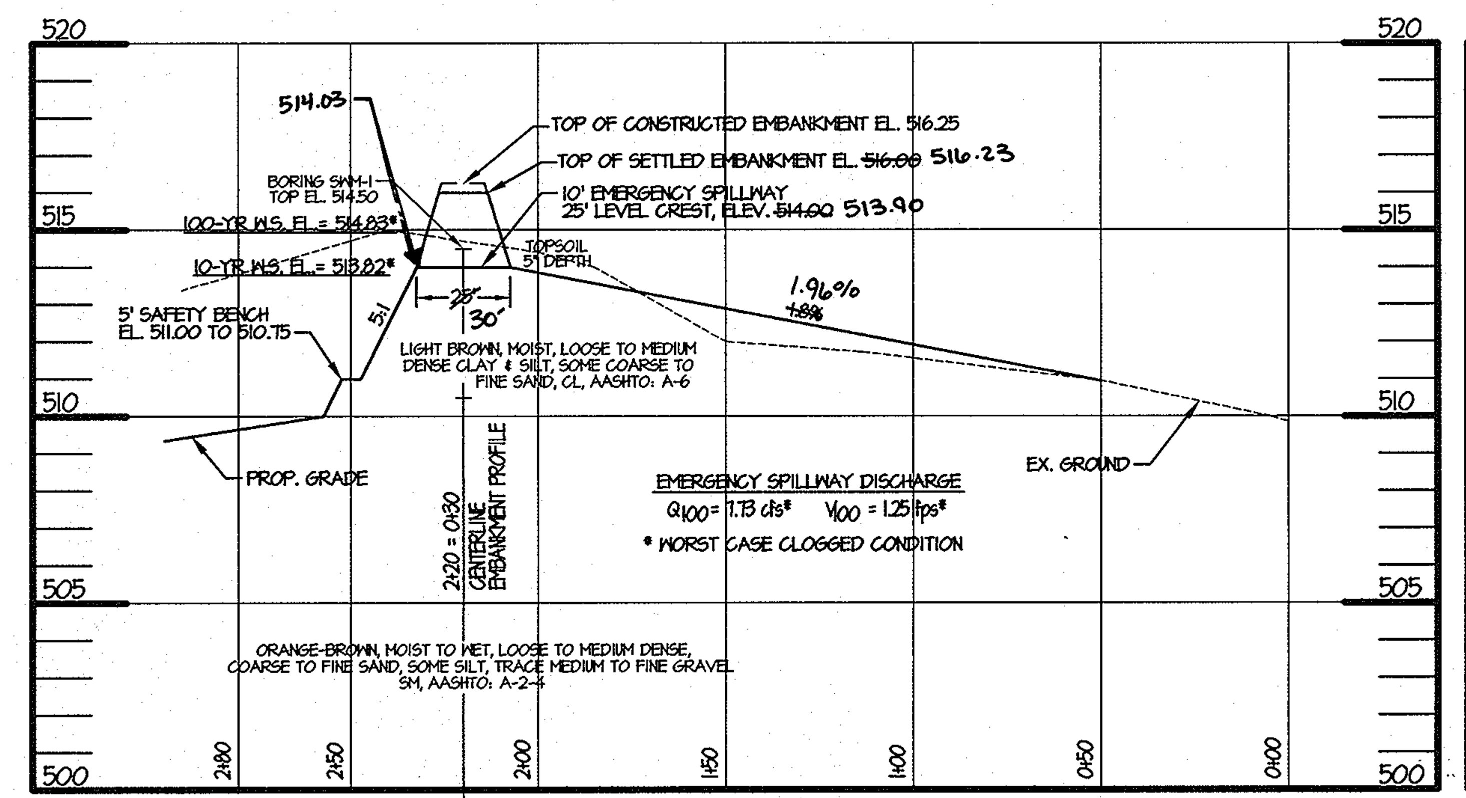

EMERGENCY SPILLWAY PROFILE
SCALE: HOR. 1" = 40' VERT. 1" = 4'

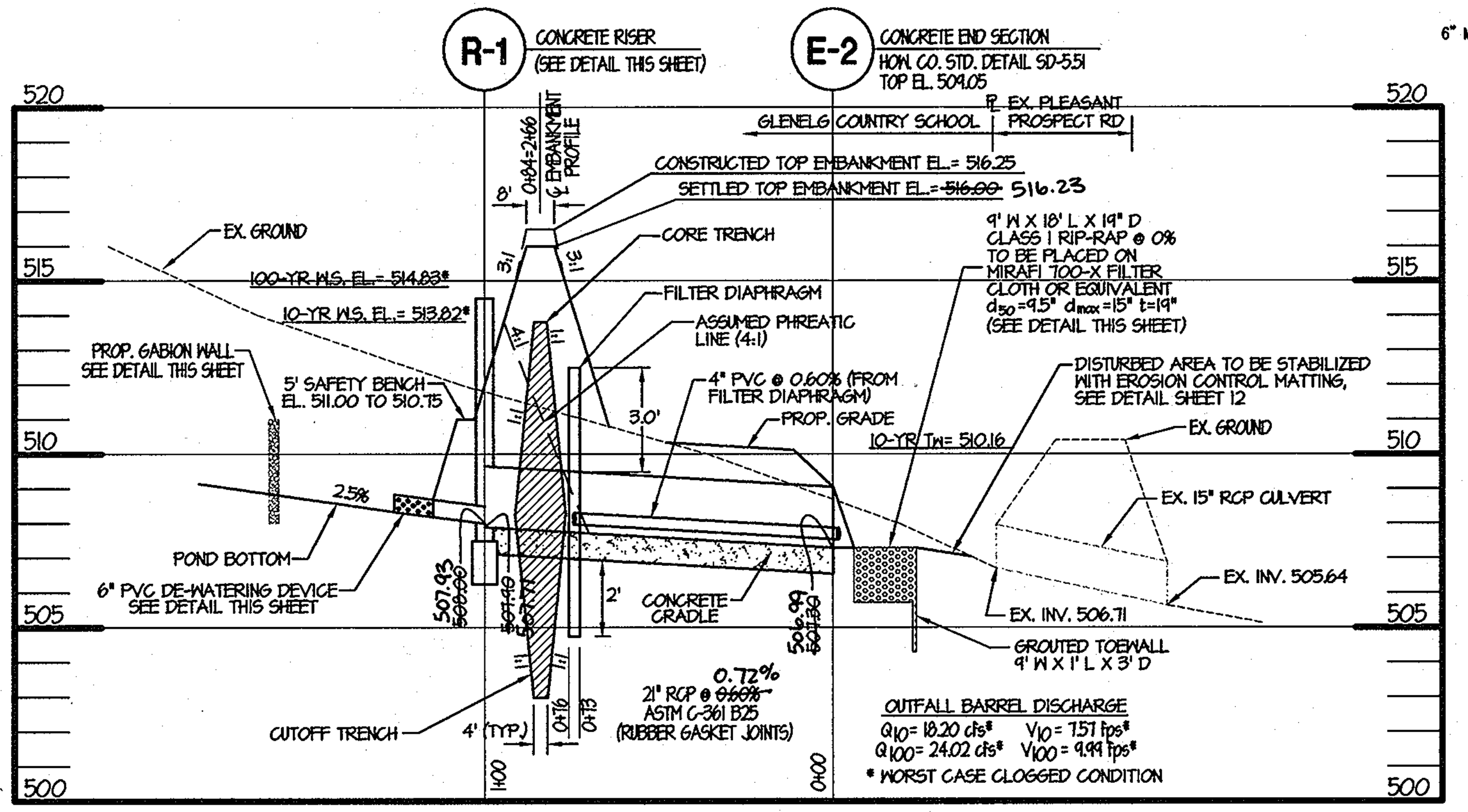

PRINCIPAL SPILLWAY PROFILE
SCALE: HOR. 1" = 40' VERT. 1" = 4'

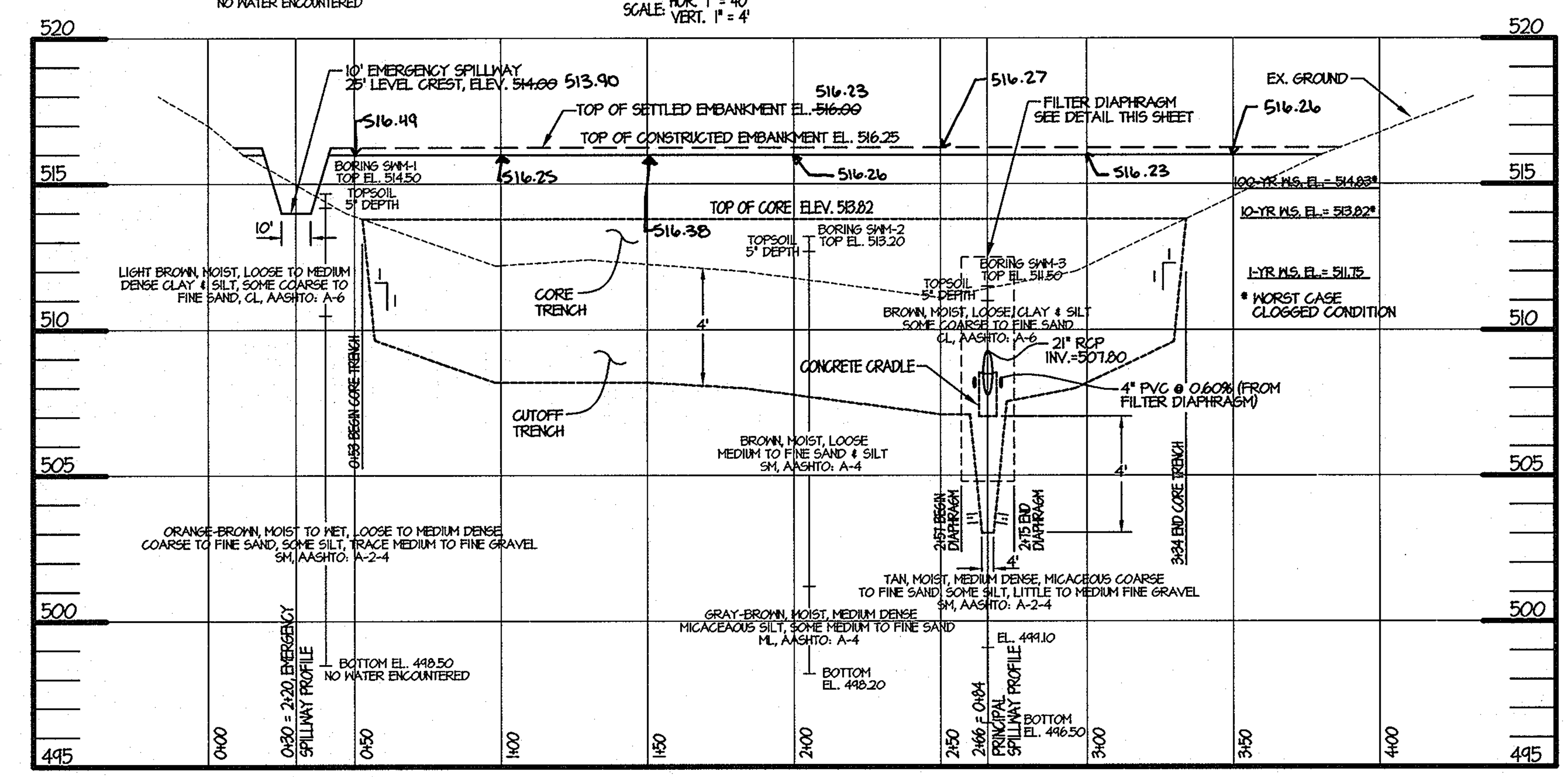

POND CENTERLINE OF EMBANKMENT PROFILE
SCALE: HOR. 1" = 40' VERT. 1" = 4'

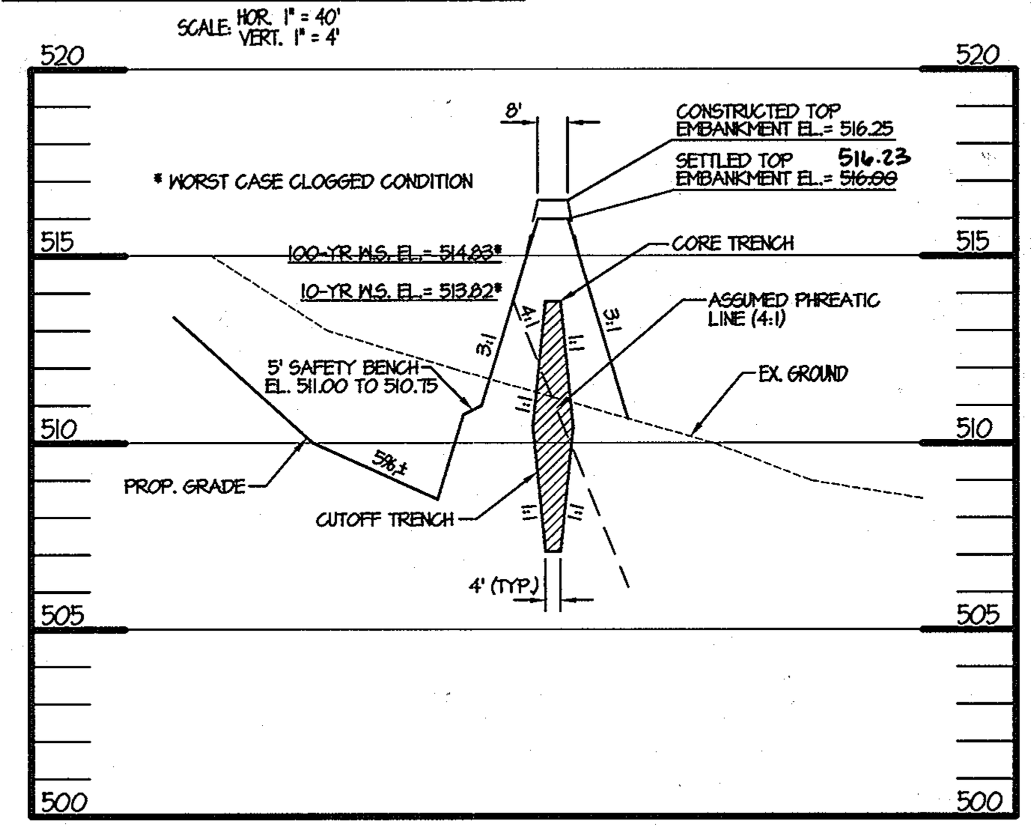

EMBANKMENT SECTION AT STA. 2+50
SCALE: HOR. 1" = 40' VERT. 1" = 4'

SUMMARY OF PROP. FACILITY

DESIGN STORM	Proposed Facility Inflow (cfs)	Proposed Facility Discharge (cfs)	Facility Water Surface Elevation (ft)	Facility Storage Volume (acre-ft)
1 year	6.18	0.20	511.75	0.364
5 year*	28.03	13.69	513.32	0.422
10 year*	39.43	18.20	513.82	0.685
100 year*	67.23	31.75	514.83	1.158

*WORST CASE CLOGGED CONDITION

Drainage Area 11.98 acres
Impervious Area 4.14 acres

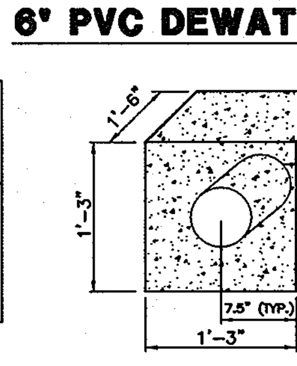

DEWATERING DEVICE ANCHOR
NOT TO SCALE

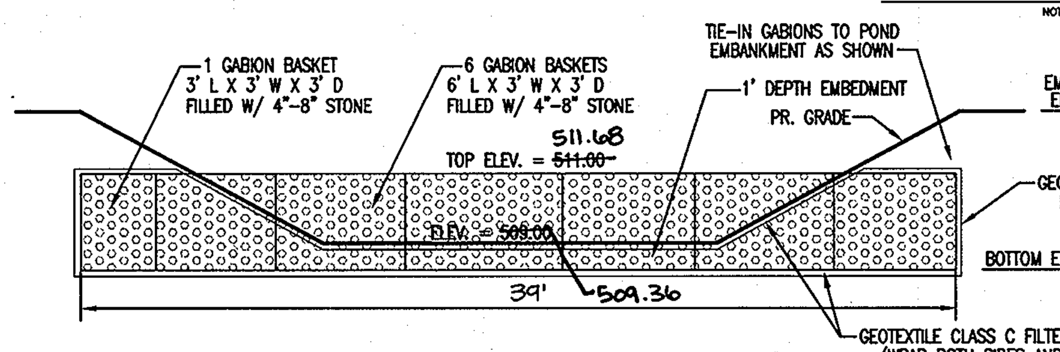

GABION WALL DETAIL SWMF #2
NOT TO SCALE

INSTALLATION NOTES
1. GABION BASKETS SHALL BE CONSTRUCTED OF GALVANIZED US GAUGE 11 MESH WIRE OR APPROVED EQUIVALENT.
2. GABION INSTALLATION SHALL BE PERFORMED ACCORDING TO GABION MANUFACTURER'S RECOMMENDATIONS AND SPECIFICATIONS.
3. TOP GABION BASKETS TO BE STAGGERED OVER BOTTOM BASKETS PER MANUFACTURER'S RECOMMENDATIONS.
4. TOP GABION BASKETS TO BE FASTENED TO BOTTOM BASKETS PER MANUFACTURER'S RECOMMENDATIONS.

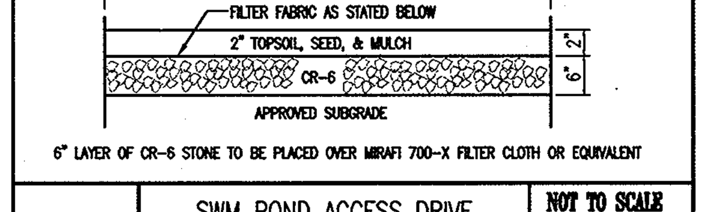

SWM POND ACCESS DRIVE TYPICAL SECTION — NOT TO SCALE

SWM PIPE SCHEDULE		
SIZE	TYPE	LENGTH
21"	ASTM C-361 B25	100'
6"	SCHEDULE 40	27'
6"	SDR 35 (FILTER DPM)	165'

● COORDINATES TO CENTER OF STRUCTURE.

STORM DRAIN AND STORMWATER MANAGEMENT STRUCTURE SCHEDULE

STR NO.	TOP ELEV	INV IN	INV IN	INV OUT	TYPE	REMARKS	NORTHING (● LOCATION)	EASTING (● LOCATION)
E-2	N/A	---	---	507.30	CONCRETE END SECTION, HOWARD CO. STD. DETAIL SD-5.51		578,137.66	1,324,543.75
R-1	514.50	508.00	---	507.90	RISER STRUCTURE (SEE DETAIL THIS SHEET)		578,188.57	1,324,457.22

THESE PLANS FOR SMALL POND CONSTRUCTION, SOIL EROSION AND SEDIMENT CONTROL MEET THE REQUIREMENTS OF THE HOWARD SOIL CONSERVATION DISTRICT.
HOWARD SOIL CONSERVATION DISTRICT — DATE 8/11/03

THESE PLANS HAVE BEEN REVIEWED FOR THE HOWARD SOIL CONSERVATION DISTRICT AND MEET THE TECHNICAL REQUIREMENTS FOR SMALL POND CONSTRUCTION, SOIL EROSION AND SEDIMENT CONTROL.
U.S.D.A.-NATURAL RESOURCES CONSERVATION SERVICE — DATE 8/11/03

APPROVED FOR PUBLIC/OR PRIVATED WATER & PUBLIC/OR PRIVATED SEVERAGE SYSTEMS
COUNTRY HEALTH OFFICER — HOWARD COUNTY HEALTH DEPARTMENT — DATE 8-8-03

APPROVED: DEPARTMENT OF PLANNING AND ZONING
CHIEF, DEVELOPMENT ENGINEERING DIVISION MK — DATE 8/5/03
CHIEF, DIVISION OF LAND DEVELOPMENT HB — DATE 8/12/03
DIRECTOR, DEPARTMENT OF PLANNING AND ZONING — DATE 8/12/03

MORRIS & RITCHIE ASSOCIATES, INC.
ENGINEERS, PLANNERS, SURVEYORS AND LANDSCAPE ARCHITECTS
9090 JUNCTION DRIVE, SUITE 9
ANNAPOLIS JUNCTION, MARYLAND 20701
(410) 792-9792 or (301) 776-1690
FAX (410) 792-7395

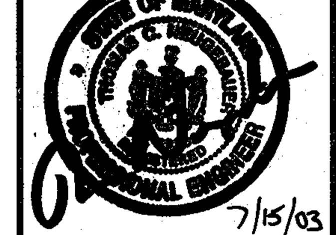

THE GLENELG COUNTRY SCHOOL PROPOSED UPPER SCHOOL ADDITION

SWM FACILITY #2 DETAILS

TAX MAP 22 GRID 22 PARCEL 146
LIBER 1296 FOLIO 245
FIFTH (5TH) ELECTION DISTRICT
HOWARD COUNTY, MARYLAND

DATE	REVISIONS	
		JOB NO.: 12189.02
04/06	AS-BUILT INFORMATION ADDED	SCALE: AS SHOWN
07/12	TRACK AND SYNTHETIC TURF FIELD IMPROVEMENTS	DATE: 07/14/03
		DRAWN BY: TCN
		DESIGN BY: TCN
		REVIEW BY: TCN
		SHEET: 9 OF 25 37

SDP-03-84

MD-378 STORMWATER MANAGEMENT CONSTRUCTION SPECIFICATIONS

I. SITE PREPARATION

AREAS DESIGNATED FOR BORROW AREAS, EMBANKMENT, AND STRUCTURAL WORKS SHALL BE CLEARED, GRUBBED AND STRIPPED OF TOPSOIL. ALL TREES, VEGETATION, ROOTS AND OTHER OBJECTIONABLE MATERIAL SHALL BE REMOVED. CHANNEL BANKS AND SHARP BREAKS SHALL BE SLOPED TO NO STEEPER THAN 1:1. ALL TREES SHALL BE CLEARED AND GRUBBED WITHIN 15 FEET OF THE TOE OF THE EMBANKMENT. AREAS TO BE COVERED BY THE RESERVOIR WILL BE CLEARED OF ALL TREES, BRUSH, LOGS, FENCES, RUBBISH AND OTHER OBJECTIONABLE MATERIAL UNLESS OTHERWISE DESIGNATED ON THE PLANS. TREES, BRUSH, AND STUMPS SHALL BE CUT APPROXIMATELY LEVEL WITH THE GROUND SURFACE. FOR DRY STORMWATER MANAGEMENT PONDS, A MINIMUM OF A 25-FOOT RADIUS AROUND THE INLET STRUCTURE SHALL BE CLEARED. ALL CLEARED AND GRUBBED MATERIAL SHALL BE DISPOSED OF OUTSIDE AND BELOW THE LIMITS OF THE DAM AND RESERVOIR AS DIRECTED BY THE OWNER OR HIS REPRESENTATIVE. WHEN SPECIFIED, A SUFFICIENT QUANTITY OF TOPSOIL WILL BE STOCKPILED IN A SUITABLE LOCATION FOR USE ON THE EMBANKMENT AND OTHER DESIGNATED AREAS.

II. EARTH FILL

A. MATERIAL

THE FILL MATERIAL SHALL BE TAKEN FROM APPROVED DESIGNATED BORROW AREAS. IT SHALL BE FREE OF ROOTS, STUMPS, WOOD, RUBBISH, STONES GREATER THAN 6", FROZEN OR OTHER OBJECTIONABLE MATERIALS. FILL MATERIAL FOR THE CENTER OF THE EMBANKMENT, AND CUT OFF TRENCH SHALL CONFORM TO UNIFIED SOIL CLASSIFICATION GC, SC, CH, OR CL AND MUST HAVE AT LEAST 30% PASSING THE #200 SIEVE. CONSIDERATION MAY BE GIVEN TO THE USE OF OTHER MATERIALS IN THE EMBANKMENT IF DESIGNED BY A GEOTECHNICAL ENGINEER. SUCH SPECIAL DESIGNS MUST HAVE CONSTRUCTION SUPERVISED BY A GEOTECHNICAL ENGINEER. MATERIALS USED IN THE OUTER SHELL OF THE EMBANKMENT MUST HAVE THE CAPABILITY TO SUPPORT VEGETATION OF THE QUALITY REQUIRED TO PREVENT EROSION OF THE EMBANKMENT.

B. PLACEMENT

AREAS ON WHICH FILL IS TO BE PLACED SHALL BE SCARIFIED PRIOR TO PLACEMENT OF FILL. FILL MATERIALS SHALL BE PLACED IN MAXIMUM 8 INCH THICK (BEFORE COMPACTION) LAYERS WHICH ARE TO BE CONTINUOUS OVER THE ENTIRE LENGTH OF THE FILL. THE MOST PERMEABLE BORROW MATERIAL SHALL BE PLACED IN THE DOWNSTREAM PORTIONS OF THE EMBANKMENT. THE PRINCIPAL SPILLWAY MUST BE INSTALLED CONCURRENTLY WITH FILL PLACEMENT AND NOT EXCAVATED INTO THE EMBANKMENT.

C. COMPACTION

THE MOVEMENT OF THE HAULING AND SPREADING EQUIPMENT OVER THE FILL SHALL BE CONTROLLED SO THAT THE ENTIRE SURFACE OF EACH LIFT SHALL BE TRAVERSED BY NOT LESS THAN ONE TREAD TRACK OF HEAVY EQUIPMENT OR COMPACTION SHALL BE ACHIEVED BY A MINIMUM OF FOUR COMPLETE PASSES OF A SHEEPSFOOT, RUBBER TIRED OR VIBRATORY ROLLER. FILL MATERIAL SHALL CONTAIN SUFFICIENT MOISTURE SUCH THAT THE REQUIRED DEGREE OF COMPACTION WILL BE OBTAINED WITH THE EQUIPMENT USED. THE FILL MATERIAL SHALL CONTAIN SUFFICIENT MOISTURE SO THAT IF FORMED INTO A BALL IT WILL NOT CRUMBLE, YET NOT BE SO WET THAT WATER CAN BE SQUEEZED OUT. WHEN REQUIRED BY THE REVIEWING AGENCY THE MINIMUM REQUIRED DENSITY SHALL NOT BE LESS THAN 95% OF MAXIMUM DRY DENSITY WITH A MOISTURE CONTENT WITHIN +/-2% OF THE OPTIMUM. EACH LAYER OF FILL SHALL BE COMPACTED AS NECESSARY TO OBTAIN THAT DENSITY, AND IS TO BE CERTIFIED BY THE ENGINEER AT THE TIME OF CONSTRUCTION. ALL COMPACTION IS TO BE DETERMINED BY AASHTO METHOD T-99 (STANDARD PROCTOR).

III. CUT OFF TRENCH

THE CUTOFF TRENCH SHALL BE EXCAVATED INTO IMPERVIOUS MATERIAL ALONG OR PARALLEL TO THE CENTERLINE OF THE EMBANKMENT AS SHOWN ON THE PLANS. THE BOTTOM WIDTH OF THE TRENCH SHALL BE GOVERNED BY THE EQUIPMENT USED FOR EXCAVATION, WITH THE MINIMUM WIDTH BEING FOUR FEET. THE DEPTH SHALL BE AT LEAST FOUR FEET BELOW EXISTING GRADE OR AS SHOWN ON THE PLANS. THE SIDE SLOPES OF THE TRENCH SHALL BE 1 TO 1 OR FLATTER. THE BACKFILL SHALL BE COMPACTED WITH CONSTRUCTION EQUIPMENT, ROLLERS, OR HAND TAMPERS TO ASSURE MAXIMUM DENSITY AND MINIMUM PERMEABILITY

IV. EMBANKMENT CORE

THE CORE SHALL BE PARALLEL TO THE CENTERLINE OF THE EMBANKMENT AS SHOWN ON THE PLANS. THE TOP WIDTH OF THE CORE SHALL BE A MINIMUM OF FOUR FEET. THE HEIGHT SHALL EXTEND UP TO AT LEAST THE 10 YEAR WATER ELEVATION OR AS SHOWN ON THE PLANS. THE SIDE SLOPES SHALL BE 1 TO 1 OR FLATTER. THE CORE SHALL BE COMPACTED WITH CONSTRUCTION EQUIPMENT, ROLLERS, OR HAND TAMPERS TO ASSURE MAXIMUM DENSITY AND MINIMUM PERMEABILITY. IN ADDITION, THE CORE SHALL BE PLACED CONCURRENTLY WITH THE OUTER SHELL OF THE EMBANKMENT.

V. STRUCTURE BACKFILL

BACKFILL ADJACENT TO PIPES OR STRUCTURES SHALL BE OF THE TYPE AND QUALITY CONFORMING TO THAT SPECIFIED FOR THE ADJOINING FILL MATERIAL. THE FILL SHALL BE PLACED IN HORIZONTAL LAYERS NOT TO EXCEED FOUR INCHES IN THICKNESS AND COMPACTED BY HAND TAMPERS OR OTHER MANUALLY DIRECTED COMPACTION EQUIPMENT. THE MATERIAL NEEDS TO FILL COMPLETELY ALL SPACES UNDER AND ADJACENT TO THE PIPE. AT NO TIME DURING THE BACKFILLING OPERATION SHALL DRIVEN EQUIPMENT BE ALLOWED TO OPERATE CLOSER THAN FOUR FEET, MEASURED HORIZONTALLY, TO ANY PART OF A STRUCTURE. UNDER NO CIRCUMSTANCES SHALL EQUIPMENT BE DRIVEN OVER ANY PART OF A CONCRETE STRUCTURE OR PIPE, UNLESS THERE IS A COMPACTED FILL OF 24" OR GREATER OVER THE STRUCTURE OR PIPE. STRUCTURE BACKFILL MAY BE FLOWABLE FILL MEETING THE REQUIREMENTS OF MARYLAND DEPARTMENT OF TRANSPORTATION, STATE HIGHWAY ADMINISTRATION STANDARD SPECIFICATIONS FOR CONSTRUCTION AND MATERIALS, SECTION 313 AS MODIFIED. THE MIXTURE SHALL HAVE A 100-200 PSI; 28 DAY UNCONFINED COMPRESSIVE STRENGTH. THE FLOWABLE FILL SHALL HAVE A MINIMUM PH OF 4.0 AND A MINIMUM RESISTIVITY OF 2,000 OHM-CM. MATE-RIAL SHALL BE PLACED SUCH THAT A MINIMUM OF 6" (MEASURED PERPENDICULAR TO THE OUTSIDE OF THE PIPE) OF FLOWABLE FILL SHALL BE UNDER (BEDDING), OVER AND, ON THE SIDES OF THE PIPE. IT ONLY NEEDS TO EXTEND UP TO THE SPRING LINE FOR RIGID CONDUITS. AVERAGE SLUMP OF THE FILL SHALL BE 7" TO ASSURE FLOWABILITY OF THE MATERIAL. ADEQUATE MEASURES SHALL BE TAKEN (SAND BAGS, ETC.) TO PREVENT FLOATING THE PIPE. WHEN USING FLOWABLE FILL, ALL METAL PIPE SHALL BE BITUMINOUS COATED. ANY ADJOINING SOIL FILL SHALL BE PLACED IN HORIZONTAL LAYERS NOT TO EXCEED FOUR INCHES IN THICKNESS AND COMPACTED BY HAND TAMPERS OR OTHER MANUALLY DIRECTED COMPACTION EQUIPMENT. THE MATERIAL SHALL COMPLETELY FILL ALL VOIDS ADJACENT TO THE FLOWABLE FILL ZONE. AT NO TIME DURING THE BACKFILLING OPERATION SHALL DRIVEN EQUIPMENT BE ALLOWED TO OPERATE CLOSER THAN FOUR FEET, MEASURED HORIZONTALLY, TO ANY PART OF A STRUCTURE. UNDER NO CIRCUMSTANCES SHALL EQUIPMENT BE DRIVEN OVER ANY PART OF A STRUCTURE OR PIPE UNLESS THERE IS A COMPACTED FILL OF 24" OR GREATER OVER THE STRUCTURE OR PIPE. BACKFILL MATERIAL OUTSIDE THE STRUCTURAL BACKFILL (FLOWABLE FILL) ZONE SHALL BE OF THE TYPE AND QUALITY CONFORMING TO THAT SPECIFIED FOR THE CORE OF THE EMBANKMENT OR OTHER EMBANKMENT MATERIALS.

VI. PIPE CONDUITS

ALL PIPES SHALL BE CIRCULAR IN CROSS SECTION.

A. CORRUGATED METAL PIPE

1. MATERIALS – (POLYMER COATED STEEL PIPE) –STEEL PIPES WITH POLYMERIC COATINGS SHALL HAVE A MINIMUM COATING THICKNESS OF 0.01 INCH (10 MIL) ON BOTH SIDES OF THE PIPE. THIS PIPE AND ITS APPURTENANCES SHALL CONFORM TO THE REQUIREMENTS OF AASHTO SPECIFICATIONS M-245 & M-246 WITH WATERTIGHT COUPLING BANDS OR FLANGES. MATERIALS – (ALUMINUM COATED STEEL PIPE) – THIS PIPE AND ITS APPURTENANCES SHALL CONFORM TO THE REQUIREMENTS OF AASHTO SPECIFICATION M-274 WITH WATERTIGHT COUPLING BANDS OR FLANGES. ALUMINUM COATED STEEL PIPE, WHEN USED WITH FLOWABLE FILL OR WHEN SOIL AND/OR WATER CONDITIONS WARRANT THE NEED FOR INCREASED DURABILITY, SHALL BE FULLY BITUMINOUS COATED PER REQUIREMENTS OF AASHTO SPECIFICATION M-190 TYPE A. ANY ALUMINUM COATING DAMAGED OR OTHERWISE REMOVED SHALL BE REPLACED WITH COLD APPLIED BITUMINOUS COATING COM-POUND. ALUMINUM SURFACES THAT ARE TO BE IN CONTACT WITH CONCRETE SHALL BE PAINTED WITH ONE COAT OF ZINC CHROMATE PRIMER OR TWO COATS OF ASPHALT. MATERIALS – (ALUMINUM PIPE) – THIS PIPE AND ITS APPURTENANCES SHALL CONFORM TO THE REQUIREMENTS OF AASHTO SPECIFICATION M-196 OR M-211 WITH WATERTIGHT COUPLING BANDS OR FLANGES. ALUMINUM PIPE, WHEN USED WITH FLOWABLE FILL OR WHEN SOIL AND/OR WATER CONDITIONS WARRANT FOR INCREASED DURABILITY, SHALL BE FULLY BITUMINOUS COATED PER REQUIREMENTS OF AASHTO SPECIFICATION M-190 TYPE A. ALUMINUM SURFACES THAT ARE TO BE IN CONTACT WITH CONCRETE SHALL BE PAINTED WITH ONE COAT OF ZINC CHROMATE PRIMER OR TWO COATS OF ASPHALT. HOT DIP GALVANIZED BOLTS MAY BE USED FOR CONNECTIONS. THE PH OF THE SURROUNDING SOILS SHALL BE BETWEEN 4 AND 9.
2. COUPLING BANDS, ANTI-SEEP COLLARS, END SECTIONS, ETC., MUST BE COMPOSED OF THE SAME MATERIAL AND COATINGS AS THE PIPE. METALS MUST BE INSULATED FROM DISSIMILAR MATERIALS WITH USE OF RUBBER OR PLASTIC INSULATING MATERIALS AT LEAST 24 MILS IN THICKNESS.
3. CONNECTIONS – ALL CONNECTIONS WITH PIPES MUST BE COMPLETELY WATERTIGHT. THE DRAIN PIPE OR BARREL CONNECTION TO THE RISER SHALL BE WELDED ALL AROUND WHEN THE PIPE AND RISER ARE METAL. ANTI-SEEP COLLARS SHALL BE CONNECTED TO THE PIPE IN SUCH A MANNER AS TO BE COMPLETELY WATERTIGHT. DIMPLE BANDS ARE NOT CONSIDERED TO BE WATERTIGHT. ALL CONNECTIONS SHALL USE A RUBBER OR NEOPRENE GASKET WHEN JOINING PIPE SECTIONS. THE END OF EACH PIPE SHALL BE RE-ROLLED AN ADEQUATE NUMBER OF CORRUGATIONS TO ACCOMMODATE THE BANDWIDTH. THE FOLLOWING TYPE CONNECTIONS ARE ACCEPTABLE FOR PIPES LESS THAN 24 INCHES IN DIAMETER: FLANGES ON BOTH ENDS OF THE PIPE WITH A CIRCULAR 3/8 INCH CLOSED CELL NEOPRENE GASKET, PRE-PUNCHED TO THE FLANGE BOLT CIRCLE, SANDWICHED BETWEEN ADJACENT FLANGES; A 12-INCH WIDE STANDARD LAP TYPE BAND WITH 12-INCH WIDE BY 3/8-INCH THICK CLOSED CELL CIRCULAR NEOPRENE GASKET; AND A 12-INCH WIDE HUGGER TYPE BAND WITH O-RING GASKETS HAVING A MINIMUM DIAMETER OF 1/2 INCH GREATER THAN THE CORRUGATION DEPTH. PIPES 24 INCHES IN DIAMETER AND LARGER SHALL BE CONNECTED BY A 24 INCH LONG ANNULAR CORRUGATED BAND USING A MINIMUM OF 4 (FOUR) RODS AND LUGS, 2 ON EACH CONNECTING PIPE END. A 24-INCH WIDE BY 3/8-INCH THICK CLOSED CELL CIRCULAR NEOPRENE GASKET WILL BE INSTALLED WITH 12 INCHES ON THE END OF EACH PIPE. FLANGED JOINTS WITH 3/8 INCH CLOSED CELL GASKETS THE FULL WIDTH OF THE FLANGE IS ALSO ACCEPTABLE. HELICALLY CORRUGATED PIPE SHALL HAVE EITHER CONTINUOUSLY WELDED SEAMS OR HAVE LOCK SEAMS WITH INTERNAL CAULKING OR A NEOPRENE BEAD.
4. BEDDING – THE PIPE SHALL BE FIRMLY AND UNIFORMLY BEDDED THROUGHOUT ITS ENTIRE LENGTH. WHERE ROCK OR SOFT, SPONGY OR OTHER UNSTABLE SOIL IS ENCOUNTERED, ALL SUCH MATERIAL SHALL BE REMOVED AND REPLACED WITH SUITABLE EARTH COMPACTED TO PROVIDE ADEQUATE SUPPORT.
5. BACKFILLING SHALL CONFORM TO "STRUCTURE BACKFILL".
6. OTHER DETAILS (ANTI-SEEP COLLARS, VALVES, ETC.) SHALL BE AS SHOWN ON THE DRAWINGS.

B. REINFORCED CONCRETE PIPE.

1. MATERIALS – REINFORCED CONCRETE PIPE SHALL HAVE BELL AND SPIGOT JOINTS WITH RUBBER GASKETS AND SHALL EQUAL OR EXCEED ASTM C-361.
2. BEDDING – REINFORCED CONCRETE PIPE CONDUITS SHALL BE LAID IN A CONCRETE BEDDING/CRADLE FOR THEIR ENTIRE LENGTH. THIS BEDDING/CRADLE SHALL CONSIST OF HIGH SLUMP CONCRETE PLACED UNDER THE PIPE AND UP THE SIDES OF THE PIPE AT LEAST 50% OF ITS OUTSIDE DIAMETER WITH A MINIMUM THICKNESS OF 6 INCHES. WHERE A CONCRETE CRADLE IS NOT NEEDED FOR STRUCTURAL REASONS, FLOWABLE FILL MAY BE USED AS DESCRIBED IN THE "STRUCTURE BACKFILL" SECTION OF THIS STANDARD. GRAVEL BEDDING IS NOT PERMITTED.
3. LAYING PIPE – BELL AND SPIGOT PIPE SHALL BE PLACED WITH THE BELL END UPSTREAM. JOINTS SHALL BE MADE IN ACCORDANCE WITH RECOMMENDATIONS OF THE MANUFACTURER OF THE MATERIAL. AFTER THE JOINTS ARE SEALED FOR THE ENTIRE LINE, THE BEDDING SHALL BE PLACED SO THAT ALL SPACES UNDER THE PIPE ARE FILLED. CARE SHALL BE EXERCISED TO PREVENT ANY DEVIATION FROM THE ORIGINAL LINE AND GRADE OF THE PIPE. THE FIRST JOINT MUST BE LOCATED WITHIN 4 FEET FROM THE RISER.
4. BACKFILLING SHALL CONFORM TO "STRUCTURE BACKFILL".
5. OTHER DETAILS (ANTI-SEEP COLLARS, VALVES, ETC.) SHALL BE AS SHOWN ON THE DRAWINGS.

C. PLASTIC PIPE

1. MATERIALS – PVC PIPE SHALL BE PVC-1120 OR PVC-1220 CONFORMING TO ASTM D-1785 OR ASTM D-2241. CORRUGATED HIGH DENSITY POLYETHYLENE (HDPE) PIPE, COUPLINGS AND FITTINGS SHALL CONFORM TO THE FOLLOWING: 4" 10" INCH PIPE SHALL MEET THE REQUIREMENTS OF AASHTO M252 TYPE S, AND 12" THROUGH 24" INCH SHALL MEET THE REQUIREMENTS OF AASHTO M294 TYPE S.

C. PLASTIC PIPE (CONTINUED)

2. JOINTS AND CONNECTIONS TO ANTI-SEEP COLLARS SHALL BE COMPLETELY WATERTIGHT.
3. BEDDING –THE PIPE SHALL BE FIRMLY AND UNIFORMLY BEDDED THROUGHOUT ITS ENTIRE LENGTH. WHERE ROCK OR SOFT, SPONGY OR OTHER UNSTABLE SOIL IS ENCOUNTERED, ALL SUCH MATERIAL SHALL BE REMOVED AND REPLACED WITH SUITABLE EARTH COMPACTED TO PROVIDE ADEQUATE SUPPORT.
4. BACKFILLING SHALL CONFORM TO "STRUCTURE BACKFILL".
5. OTHER DETAILS (ANTI-SEEP COLLARS, VALVES, ETC.) SHALL BE AS SHOWN ON THE DRAWINGS.

VII. DRAINAGE DIAPHRAGMS

WHEN A DRAINAGE DIAPHRAGM IS USED, A REGISTERED PROFESSIONAL ENGINEER WILL SUPERVISE THE DESIGN AND CONSTRUCTION INSPECTION.

VIII. CONCRETE STRUCTURES

A. CONCRETE SHALL MEET THE REQUIREMENTS OF MARYLAND DEPARTMENT OF TRANSPORTATION, STATE HIGHWAY ADMINISTRATION STANDARD SPECIFICATIONS FOR CONSTRUCTION AND MATERIALS, SECTION 414, MIX NO. 3.

B. REINFORCEMENT
REINFORCEMENT SHALL MEET THE MINIMUM REQUIREMENTS OF MARYLAND DEPARTMENT OF TRANSPORTATION STATE HIGHWAY ADMINISTRATION STANDARD SPECIFICATIONS FOR CONSTRUCTION AND MATERIALS, SECTION 416 (REINFORCEMENT FOR CONCRETE STRUCTURES): SECTION 908 (REINFORCING STEEL – GRADE 60, WIRE ROPE AND WIRE FARIC), AND SECTION 909.02 (STEEL FOR MISCELLANEOUS USE).

IX. ROCK RIPRAP

ROCK RIPRAP SHALL MEET THE REQUIREMENTS OF MARYLAND DEPARTMENT OF TRANSPORTATION, STATE HIGHWAY ADMINISTRATION STANDARD SPECIFICATIONS FOR CONSTRUCTION AND MATERIALS, SECTION 311. GEOTEXTILE SHALL BE PLACED UNDER ALL RIPRAP AND SHALL MEET THE REQUIREMENTS OF MARYLAND DEPARTMENT OF TRANSPORTATION, STATE HIGHWAY ADMINISTRATION STANDARD SPECIFICATIONS FOR CONSTRUCTION AND MATERIALS, SECTION 921.09, CLASS C.

X. CARE OF WATER DURING CONSTRUCTION

ALL WORK ON PERMANENT STRUCTURES SHALL BE CARRIED OUT IN AREAS FREE FROM WATER. THE CONTRACTOR SHALL CONSTRUCT AND MAINTAIN ALL TEMPORARY DIKES, LEVEES, COFFERDAMS, DRAINAGE CHANNELS, AND STREAM DIVERSIONS NECESSARY TO PROTECT THE AREAS TO BE OCCUPIED BY THE PERMANENT WORKS. THE CONTRACTOR SHALL ALSO FURNISH, INSTALL, OPERATE, AND MAINTAIN ALL NECESSARY PUMPING AND OTHER EQUIPMENT REQUIRED FOR REMOVAL OF WATER FROM VARIOUS PARTS OF THE WORK AND FOR MAINTAINING THE EXCAVATIONS, FOUNDATION, AND OTHER PARTS OF THE WORK FREE FROM WATER AS REQUIRED OR DIRECTED BY THE ENGINEER FOR CONSTRUCTING EACH PART OF THE WORK. AFTER HAVING SERVED THEIR PURPOSE, ALL TEMPORARY PROTECTIVE WORKS SHALL BE REMOVED OR LEVELED AND GRADED TO THE EXTENT REQUIRED TO PREVENT OBSTRUCTION IN ANY DEGREE WHATSOEVER OF THE FLOW OF WATER TO THE SPILLWAY OR OUTLET WORKS AND SO AS NOT TO INTERFERE IN ANY WAY WITH THE OPERATION OR MAINTENANCE OF THE STRUCTURE. STREAM DIVERSIONS SHALL BE MAINTAINED UNTIL THE FULL FLOW CAN BE PASSED THROUGH THE PERMANENT WORKS. THE REMOVAL OF WATER FROM THE REQUIRED EXCAVATION AND THE FOUNDATION SHALL BE ACCOMPLISHED IN A MANNER AND TO THE EXTENT THAT WILL MAINTAIN STABILITY OF THE EXCAVATED SLOPES AND BOTTOM REQUIRED EXCAVATIONS AND WILL ALLOW SATISFACTORY PERFORMANCE OF ALL CONSTRUCTION OPERATIONS. DURING THE PLACING AND COMPACTING OF MATERIAL IN REQUIRED EXCAVATIONS, THE WATER LEVEL AT THE LOCATIONS BEING REFILLED SHALL BE MAINTAINED BELOW THE BOTTOM OF THE EXCAVATION AT SUCH LOCATIONS WHICH MAY REQUIRE DRAINING THE WATER SUMPS FROM WHICH THE WATER SHALL BE PUMPED.

XI. STABILIZATION

ALL BORROW AREAS SHALL BE GRADED TO PROVIDE PROPER DRAINAGE AND LEFT IN A SIGHTLY CONDITION. ALL EXPOSED SURFACES OF THE EMBANKMENT, SPILLWAY, SPOIL AND BORROW AREAS, AND BERMS SHALL BE STABILIZED BY SEEDING, LIMING, FERTILIZING AND MULCHING IN ACCORDANCE WITH THE NATURAL RESOURCES CONSERVATION SERVICE STANDARDS AND SPECIFICATIONS FOR CRITICAL AREA PLANTING (MD-342) OR AS SHOWN ON THE ACCOMPANYING DRAWINGS.

A. SOD

1. SPECIFICATIONS – SOD SHALL BE "K-31" TALL FESCUE OR KENTUCKY BLUEGRASS/RED FESCUE MIXTURE OR APPROVED EQUAL. CLASS OF TURFGRASS SOD SHALL BE MARYLAND OR VIRGINIA STATE CERTIFIED OR APPROVED SOD.
2. SITE PREPARATION – WHERE SOIL IS ACIDIC OR COMPOSED OF HEAVY CLAYS, GROUND LIMESTONE SHALL BE SPREAD AT THE RATE OF 100 LBS./1000 SQ.FT. IN ALL SOILS 5-10-5 FERTILIZER OR APPROVED EQUAL SHALL BE APPLIED AT THE RATE OF 30 LBS/1000 SQ.FT. FERTILIZER SHALL BE UNIFORMLY APPLIED AND MIXED INTO THE TOP 3" OF SOIL WITH THE REQUIRED LIME. SLOW RELEASE NITROGEN, AT THE RATE OF 3.5 LBS/1000 SQ. FT., SHALL BE APPLIED TO THE PREPARED SOIL IMMEDIATELY PRIOR TO SOD INSTALLATION. THIS MATERIAL SHALL BE APPROXIMATELY ONE-THIRD IMMEDIATELY AVAILABLE AND TWO-THIRDS WATER INSOLUBLE NITROGEN. UREA FORMALDEHYDE (UF) AND ISOBUTYLIDENE (IBDU) MEET THESE STANDARDS.
3. SOD INSTALLATION – THE FIRST ROW OF SOD SHALL BE LAID IN A STRAIGHT LINE WITH SUBSEQUENT ROWS PLACE PARALLEL TO AND TIGHTLY WEDGED AGAINST EACH OTHER. LATERAL JOINTS SHALL BE STAGGERED TO PROMOTE MORE UNIFORM GROWTH AND STRENGTH. INSURE THAT SOD IS NOT STRETCHED OR OVERLAPPED AND THAT ALL JOINTS ARE BUTTED TIGHT IN ORDER TO PREVENT VOIDS WHICH WOULD CAUSE AIR DRYING OF THE ROOTS. ON SLOPING AREAS WHERE EROSION MAY BE A PROBLEM, SOD SHALL BE LAID WITH LONG EDGES PARALLEL TO THE CONTOUR AND WITH STAGGERED JOINTS. SECURE THE SOD BY TAMPING AND PEGGING OR OTHER APPROVED METHODS. AS SODDING IS COMPLETED IN ANY ONE SECTION, THE ENTIRE AREA SHALL BE ROLLED OR TAMPED TO INSURE SOLID CONTACT OF ROOTS WITH THE SOIL SURFACE. SOD SHALL BE WATERED IMMEDIATELY AFTER ROLLING OR TAMPING UNTIL THE UNDERSIDE OF THE NEW SOD PAD AND SOLID SURFACE BELOW THE SOD ARE THOROUGHLY WET. THE OPERATION OF LAYING, TAMPING AND IRRIGATING FOR ANY PIECE OF SOD SHALL BE COMPLETED WITHIN EIGHT HOURS.

B. PERMANENT SEEDING

ALL DISTURBED AREAS SHALL BE STABILIZED AS FOLLOWS:

1. SEEDBED PREPARATION – LOOSEN UPPER 3 INCHES OF SOIL BY RAKING, DISCING OR OTHER ACCEPTABLE MEANS BEFORE SEEDING.
2. SOIL AMENDMENTS – APPLY 2 TONS PER ACRE DOLOMITIC LIMESTONE (92 LBS./1000 SQ. FT.), 600 LBS. PER ACRE 10-10-10 FERTILIZER (14 LBS./1000 SQ. FT.) AND 400 LBS. PER ACRE OF 30-0-0 UREAFORM FERTILIZER (9.2 LBS./100 SQ. FT.). HARROW OR DISC LIME AND FERTILIZER INTO UPPER THREE INCHES OF SOIL. AT TIME OF SEEDING, APPLY 400 LBS PER ACRE (9.2 LBS./1000 SQ. FT.) OF 30-0-0 UREAFORM FERTILIZER AND 500 LBS. PER ACRE (11.5 LBS./1000 SQ.FT.) OF 10-10-10 FERTILIZER.
3. SEEDING – FOR THE PERIOD MARCH 1 THROUGH APRIL 30 SEED WITH 40 LBS. PER ACRE KENTUCKY 31 TALL FESCUE AND 15 LBS. PER ACRE INOCULATED CROWNVETCH. FOR THE PERIOD MAY 1 THROUGH JULY 31 SEED WITH 60 LBS. PER ACRE KENTUCKY 31 TALL FESCUE AND 2 LBS. PER ACRE INOCULATED WEEPING LOVEGRASS. FOR THE PERIOD OF AUGUST 1 THROUGH OCTOBER 15 SEED WITH 40 LBS. PER ACRE KENTUCKY 31 TALL FESCUE AND 20 LBS. PER ACRE INOCULATED INTERSTATE SERICA IESPEDEZA. DURING THE PERIOD OF OCTOBER 16 THROUGH FEBRUARY 28, PROTECT SITE BY: OPTION (1) – 2 TONS PER ACRE OF WELL ANCHORED STRAW MULCH AND SEED AS SOON AS POSSIBLE IN THE SPRING. OPTION (2) – USE SOD.. OPTION (3) – SEED WITH 60 LBS. PER ACRE KENTUCKY 31 TALL FESCUE AND MULCH WITH 2 TONS PER ACRE WELL ANCHORED STRAW. FOR THE PERIOD OF MAY 1 THROUGH FEBRUARY 28, INOCULATED CROWNVETCH SHALL BE APPLIED DURING THE SUBSEQUENT PERIOD OF MARCH 1 THROUGH APRIL 30 AT THE RATE OF 15 LBS. PER ACRE.
4. MULCHING – APPLY 1.5 TO 2 TONS PER ACRE OF UNROTTED SMALL GRAIN STRAW IMMEDIATELY AFTER SEEDING. ANCHOR MULCH IMMEDIATELY AFTER APPLICATION USING 218 GALLONS PER ACRE OF EMULSIFIED ASPHALT ON FLAT AREAS. ON SLOPE 8 FEET OR HIGHER, USE 348 GALLONS PER ACRE FOR ANCHORING.
5. MAINTENANCE – INSPECT ALL SEEDED AREAS AND MAKE NEEDED REPAIRS, REPLACEMENTS AND RESEEDING.

C. TEMPORARY SEEDING

1. SEEDBED PREPARATION – . LOOSEN UPPER 3 INCHES OF SOIL BY DISCING, RAKING OR OTHER ACCEPTABLE MEANS BEFORE SEEDING.
2. SOIL AMENDMENTS – APPLY 600 LBS. PER ACRE OF 10-10-10 FERTILIZER. WHERE SOIL IS ACIDIC OR COMPOSED OF HEAVY CLAYS, GROUND LIMESTONE SHALL BE APPLIED AT THE RATE OF 2 TONS PER ACRE (92 LBS./1000 SQ.FT.).
3. SEEDING – FOR PERIODS MARCH 1 THROUGH APRIL 30, AND FROM AUGUST 15 THROUGH NOVEMBER 15, SEED WITH 2.5 BUSHELS PER ACRE ANNUAL RYE. FOR THE PERIOD MAY 1 THROUGH AUGUST 14, SEED WITH 3 LBS. PER ACRES OF WEEPING LOVEGRASS. FOR THE PERIOD NOVEMBER 16 THROUGH FEBRUARY 28, PROTECT SITE BY APPLYING 2 TONS PER ACRE OF WELL ANCHORED STRAW MULCH AND SEED AS SOON AS POSSIBLE IN THE SPRING OR USE SOD.
4. MULCHING – SAME AS PERMANENT SEEDING.

X. EROSION AND SEDIMENT CONTROL

CONSTRUCTION OPERATIONS WILL BE CARRIED OUT IN SUCH A MANNER THAT EROSION WILL BE CONTROLLED AND WATER AND AIR POLLUTION MINIMIZED. STATE AND LOCAL LAWS CONCERNING POLLUTION ABATEMENT WILL BE FOLLOWED. CONSTRUCTION PLANS SHALL DETAIL EROSION AND SEDIMENT CONTROL MEASURES.

XI. FENCING

FENCING SHALL BE 42" HIGH CHAIN LINK FENCE CONSTRUCTED IN ACCORDANCE WITH THE LATEST MARYLAND STATE HIGHWAY ADMINISTRATION STANDARD DETAILS 615.02 AND 615.03. THE SPECIFICATIONS FOR A 6'-0" FENCE SHALL BE USED, SUBSTITUTING 42" FABRIC AND 6'-8" LINE POSTS. GATE SHALL BE CONSTRUCTED IN ACCORDANCE WITH STATE HIGHWAY ADMINISTRATION STANDARD DETAIL 692.01 WITH 42' FABRIC. FABRIC FOR FENCE AND GATE SHALL CONFORM TO ASSHTO DESIGNATION ML8L.74. DARK VINYL COATING IS REQUIRED FOR THE FENCE POSTS AND WIRE FABRIC IN ACCORDANCE WITH THE LANDSCAPE MANUAL ADOPTED BY RESOLUTION 56-90, OCTOBER 1, 1990.

XI. FILTER CLOTH

1. FILTER CLOTH TO BE MIRAFI 140N OR APPROVED EQUAL.

XII. GABIONS

1. GABIONS TO BE PVC COATED. SEE HOWARD COUNTY STANDARD SPECIFICATIONS AND DETAILS.

XIII. INSPECTION

THE CONTRACTOR SHALL NOTIFY THE ENGINEER AT LEAST 5 WORKING DAYS PRIOR TO STARTING ANY WORK SHOWN ON THESE PLANS SO THAT STORMWATER MANAGEMENT POND MAY BE INSPECTED DURING CONSTRUCTION.

XIV. REFERENCES

UNLESS OTHERWISE NOTED, ALL MATERIALS AND CONSTRUCTION PRACTICES SHALL CONFORM TO THE FOLLOWING:

1. "STANDARD SPECIFICATIONS AND DETAILS FOR CONSTRUCTION" OF THE HOWARD COUNTY, MARYLAND, DEPARTMENT OF PUBLIC WORKS, AS AMENDED.
2. "STANDARD SPECIFICATIONS FOR CONSTRUCTION AND MATERIALS", 1993, OF THE MARYLAND STATE HIGHWAY ADMINISTRATION, AS AMENDED.
3. "STANDARD AND SPECIFICATIONS FOR PONDS" OF THE SOIL CONSERVATION SERVICE OF MARYLAND (MD-378), JANUARY 2000 AND AS AMENDED.
4. "REVISED STORMWATER MANAGEMENT POLICY," REVISED SEPTEMBER 11, 1984, HOWARD COUNTY MARYLAND.

OPERATION, MAINTENANCE AND INSPECTION

INSPECTION OF THE POND(S) SHOWN HEREON SHALL BE PERFORMED AT LEAST ANNUALLY, IN ACCORDANCE WITH THE CHECKLIST AND REQUIREMENTS CONTAINED WITHIN USDA, SCS "STANDARDS AND SPECIFICATIONS FOR PONDS" (MD-378). THE POND OWNER(S) AND THE HEIRS, SUCCESSORS. OR ASSIGNS SHALL BE RESPONSIBLE FOR THE SAFETY OF THE POND AND THE CONTINUED OPERATION, SURVEILLANCE, INSPECTION, AND MAINTENANCE THEREOF. THE POND OWNER(S) SHALL PROMPTLY NOTIFY THE SOIL CONSERVATION DISTRICT OF ANY UNUSUAL OBSERVATIONS THAT MAY BE INDICATIONS OF DISTRESS SUCH AS EXCESSIVE SEEPAGE, TURBID SEEPAGE, SLIDING OR SLUMPING.

CONCRETE GENERAL NOTES

1. CODE
   A. ALL CONSTRUCTION SHALL CONFORM WITH THE PROVISIONS OF THE MARYLAND DEPARTMENT OF TRANSPORTATION STANDARD SPECIFICATIONS FOR CONSTRUCTION AND MATERIALS AND THE 1992 SPECIFICATIONS FOR CONSTRUCTION AND MATERIALS AND THE 1992 AASHTO STANDARD SPECIFICATION FOR HIGHWAY BRIDGES, AND ITS SUPPLEMENTS.
2. DESIGN LOADING
   A. DEAD LOAD – ACTUAL SOIL COVER PLUS 2' SURCHARGE.
3. CAST-IN-PLACE CONCRETE
   A. ALL CONCRETE WORK SHALL CONFORM TO ALL PROVISIONS OF THE "SPECIFICATIONS FOR STRUCTURAL CONCRETE FOR BUILDINGS" (ACI 301-84), AND TO THE "BUILDING CODE REQUIREMENTS FOR REINFORCED CONCRETE" (ACI 318-83).
   B. ADDITIONALLY THE CONCRETE SHALL CONFORM TO ALL PROVISIONS OF THE FOLLOWING PUBLICATIONS:
      1. ACI 305R-77 (82) RECOMMENDED PRACTICE FOR HOT WEATHER CONCRETING.
      2. ACI 306R-78 RECOMMENDED PRACTICE FOR COLD WEATHER CONCRETING.
      3. ACI 347-78 RECOMMENDED PRACTICE FOR CONCRETE FORMWORK.
   C. ALL CONCRETE SHALL BE MARYLAND DEPARTMENT OF TRANSPORTATION MIX NO. 3 HAVING A MINIMUM COMPRESIVE STRENGTH OF 3,500 PSI AT 28 DAYS.
   D. ALL REINFORCING BARS SHALL CONFORM TO ASTM A-615 GRADE 60. ALL REINFORCING SHALL BE DETAILED, FABRICATED AND PLACED IN ACCORDANCE WITH ACI'S MANUAL OF STANDARD PRACTICE FOR DETAILING CONCRETE STRUCTURES (ACI 315).
   E. PROVIDE MINIMUM 40 BAR DIAMETER LAP SPLICE FOR ALL REINFORCING STEEL, UNLESS OTHERWISE NOTED ON DRAWINGS.
   F. PROVIDE WATER STOPS IN ALL CONSTRUCTION AND CONTROL JOINTS IN CONCRETE BELOW SUBGRADE.
   G. LOADS GREATER THAN THE DESIGN LIVE LOADS SHALL NOT BE PLACED ON THE STRUCTURE. A CONCRETE STRUCTURE MAY NOT SUPPORT ITS DESIGN LIVE LOAD AND SUPERIMPOSED DEAD LOADS FOR 28 DAYS.

CONSTRUCTION INSPECTION SCHEDULE

DETENTION AND RETENTION STRUCTURES

I. INSPECTIONS SHALL BE CONDUCTED BY THE AS-BUILT CERTIFYING ENGINEER:

1. UPON THE COMPLETION OF EXCAVATION TO SUB-FOUNDATION AND WHEN REQUIRED, AND UPON THE INSTALLATION OF STRUCTURAL SUPPORTS OR REINFORCEMENT FOR STRUCTURES. INCLUDING BUT NOT LIMITED TO:
   A. CORE TRENCHES FOR STRUCTURAL EMBANKMENT.
   B. INLET OR OUTLET STRUCTURES AND ANTI-SEEP STRUCTURES.
   C. WATER-TIGHT CONNECTORS ON PIPES.
   D. TRENCHES FOR ENCLOSED STORM DRAIN FACILITIES.
   E. UTILITY CROSSINGS OF EMBANKMENT.
2. DURING THE PLACEMENT OF STRUCTURAL FILL AND CONCRETE, AND INSTALLATION OF PIPING AND CATCH BASINS.
3. DURING BACKFILL OF FOUNDATIONS AND TRENCHES.
4. DURING EMBANKMENT CONSTRUCTION.
5. UPON COMPLETION OF FINAL GRADING AND ESTABLISHMENT OF PERMANENT STABILIZATION.

MAINTENANCE & REPAIR SCHEDULE

MAINTENANCE AND REPAIR SHALL BE CONDUCTED IN ACCORDANCE WITH ALL FEDERAL, STATE, AND LOCAL REQUIREMENTS. IN GENERAL, THE PRACTICES CONTAINED IN THE "MAINTENANCE AND REPAIR" CHAPTER OF THE "MARYLAND DAM SAFETY MANUAL", DNR-WRA 1988, SHOULD BE FOLLOWED AND CONDUCTED UNDER THE SUPERVISION OF A QUALIFIED PROFESSIONAL ENGINEER FAMILIAR WITH DAM CONSTRUCTION, OPERATION, MAINTENANCE, AND REPAIR.

IN ADDITION, THE MD-378 DAM INSPECTION CHECKLIST MAY BE USED AS A GUIDE FOR MAINTENANCE AND INSPECTION.

AT A MINIMUM, THE STORMWATER MANAGEMENT FACILITY SHALL BE INSPECTED BI-ANNUALLY FOR THE FOLLOWING ITEMS.

1. CONDITION OF EMBANKMENT
2. CONDITION OF VEGETATIVE COVER
3. CONDITION OF FENCES AND MAINTENANCE ACCESS ROAD.
4. CONDITION OF SPILLWAYS AND PIPE OUTLETS.
5. CONDITION OF POND RESERVOIR STORAGE AREA.
6. CONDITION OF RISER STRUCTURE AND OR PIPE HEADWALLS.
7. SEDIMENT LOAD IN POND RESERVOIR STORAGE AREA OR OUTFALL CHANNEL.
8. SEEPAGE THROUGH EMBANKMENT.
9. ANY OTHER ITEMS WHICH COULD AFFECT THE FUNCTION OF THE SWM FACILITY.
10. EVIDENCE OF CLOGGING OF ALL OPENINGS AND EXTENDED DETENTION DEVICE.
11. EROSION OF EMBANKMENT, POND SIDE SLOPES, OR OUTFALL CHANNEL
12. CRACKING OF CONCRETE RISER AND HEADWALL.
13. EVIDENCE OF ANIMAL TUNNELING THROUGH POND EMBANKMENT.

THE EMBANKMENT AND STORAGE AREA SHALL BE MOWED TWICE A YEAR AND ANY TREES OR BUSHES GROWING ON OR ALONG THE EMBANKMENT SHALL BE REMOVED. ANY NEEDED MAINTENANCE OR REPAIR OF STRUCTURES, SPILLWAYS, CORE TRENCH OR POND EMBANKMENT SHALL BE DONE UNDER THE SUPERVISION OF A QUALIFIED GEOTECHNICAL ENGINEER.

IN ADDITION TO BIANNUAL INSPECTIONS, INSPECTIONS SHALL BE DONE DURING WET SEASON, AND AFTER MAJOR STORMS.

ALL DEBRIS, LITTER, OR SEDIMENT ACCUMULATED IN POND RESERVOIR STORAGE AREA AND OUTFALL CHANNEL SHALL BE REMOVED.

OPERATION AND MAINTENANCE AGREEMENT SCHEDULE FOR EXTENDED DETENTION POND

1. TOP AND SIDE SLOPES OF THE EMBANKMENT SHALL BE MOWED A MINIMUM OF TWO (2) TIMES PER YEAR, ONCE IN JUNE AND ONCE IN SEPTEMBER. OTHER SIDE SLOPES AND MAINTENANCE ACCESS SHALL BE MOWED AS NEEDED.
2. DEBRIS AND LITTER SHALL BE REMOVED DURING REGULAR MOWING OPERATIONS AND AS NEEDED.
3. WHEN DEEMED NECESSARY FOR AESTHETIC REASONS, AND UPON APPROVAL FROM THE DEPARTMENT OF PUBLIC WORKS, SEDIMENT SHALL BE REMOVED FROM THE POND.

GEOTECHNICAL NOTES & RECOMMENDATIONS

1. PER MD-378 SPECIFICATIONS, SOILS USED FOR CUTOFF TRENCH CONSTRUCTION SHALL MEET USCS CLASSIFICATION CL (LOW PLASTICITY CLAY), CH (HIGH PLASTICITY CLAY), SC (CLAYEY SAND), OR GC (CLAYEY GRAVEL).
2. MATERIALS USED FOR BACKFILL OF PIPE OUTFALL SHOULD BE SIMILAR TO THOSE USED FOR THE CUTOFF TRENCH.
3. ALTHOUGH SUBSURFACE EXPLORATIONS INDICATE THAT NO SUITABLE CUTOFF TRENCH MATERIAL EXISTS ON SITE, TEST PIT EXPLORATION MAY BE PERFORMED IN AN ATTEMPT TO IDENTIFY APPROPRIATE MATERIALS MEETING SCS SPECIFICATIONS FOR CUTOFF CONTRUCTION.
4. IF MATERIALS SUITABLE FOR CUTOFF TRENCH CONSTRUCTION ARE NOT IDENTIFIED ON SITE, OFF-SITE BORROW MAY BE UTILIZED PROVIDED THAT IT MEETS ALL CLASSIFICATIONS REQUIRED BY MD-378, AND BE APPROVED BY A QUALIFIED GEOTECHNICAL ENGINEER IN THE FIELD.
5. MD-378 SPECIFIES THAT REFERENCE SOIL CLASSIFICATIONS SUITABLE FOR CUTOFF TRENCH CONSTRUCTION ARE ALSO SUITABLE FOR EMBANKMENT CONSTRUCTION. THE MOST PLASTIC MATERIAL (PI=11 OR MORE) AVAILABLE ON SITE SHALL BE USED FOR EMBANKMENT CONSTRUCTION.
6. FILL FOR CUTOFF TRECH AND EMBANKMENT CONSTRUCTION SHOULD BE PLACED IN 8" LOOSE LIFTS, COMPACTED TO AT LEAST 95% OF THE MAXIMUM DRY DENSITY IN ACCORDANCE WITH THE STANDARD PROCTOR, ASTM D-698. FILL AROUND THE PIPE OUTFALL SHOULD BE PLACED IN 4" LIFTS AND COMPACTED TO THE SAME STANDARD WITH HAND EQUIPMENT. COMPACTION OF THESE AREAS SHOULD BE MONITORED BY A QUALIFIED GEOTECHNICAL ENGINEER.
7. WHERE INDICATED BY SUBSURFACE CONDITIONS, A 6" GRANULAR BEDDING SHOULD BE PLACED UNDER THE PIPE OUTFALL (BEYOND THE CONCRETE CRADLE) TO PROVIDE UNIFORM PIPE SUPPORT.

BY THE ENGINEER

"I CERTIFY THAT THIS PLAN FOR POND CONSTRUCTION, EROSION AND SEDIMENT CONTROL REPRESENTS A PRACTICAL AND WORKABLE PLAN BASED ON MY PERSONAL KNOWLEDGE OF THE SITE CONDITIONS. THIS PLAN WAS PREPARED IN ACCORDANCE WITH THE REQUIREMENTS OF HOWARD SOIL CONSERVATION DISTRICT. I HAVE NOTIFIED THE DEVELOPER THAT HE/SHE MUST ENGAGE A REGISTERED PROFESSIONAL ENGINEER TO SUPERVISE POND CONSTRUCTION AND PROVIDE HOWARD SOIL CONSERVATION DISTRICT WITH AN "AS-BUILT" PLAN OF THE POND WITHIN 30 DAYS OF COMPLETION."

7/15/03

SIGNATURE OF ENGINEER — DATE
THOMAS C. NEUGEBAUER, P.E. — MD LIC.#29203

BY THE DEVELOPER

"I/WE CERTIFY THAT ALL DEVELOPMENT AND/OR CONSTRUCTION WILL BE DONE ACCORDING TO THESE PLANS, AND THAT ANY RESPONSIBLE PERSONNEL INVOLVED IN THE CONSTRUCTION PROJECT WILL HAVE A CERTIFICATE OF ATTENDANCE AT A DEPARTMENT OF THE ENVIRONMENT APPROVED TRAINING PROGRAM FOR THE CONTROL OF SEDIMENT AND EROSION BEFORE BEGINNING THE PROJECT. I SHALL ENGAGE A REGISTERED PROFESSIONAL ENGINEER TO SUPERVISE POND CONSTRUCTION AND PROVIDE THE HOWARD SOIL CONSERVATION DISTRICT WITH AN "AS-BUILT" PLAN OF THE POND WITHIN 30 DAYS OF COMPLETION. I ALSO AUTHORIZE PERIODIC ON-SITE INSPECTIONS BY THE HOWARD SOIL CONSERVATION DISTRICT."

7-14-03

SIGNATURE OF DEVELOPER — DATE
JOEL R. CHERINGTON, AGENT FOR THE GLENELG COUNTRY SCHOOL

HOWARD SOIL CONSERVATION DISTRICTS
STANDARDS SEDIMENT CONTROL NOTES

1. A MIN. OF 48 HOURS NOTICE MUST BE GIVEN TO THE HOWARD CO. DEPARTMENT OF INSPECTIONS, LICENSES AND PERMITS, SEDIMENT CONTROL DIVISION PRIOR TO THE START OF ANY CONSTRUCTION (313-1855)
2. ALL VEGETATION AND STRUCTURAL ARE TO BE INSTALLED ACCORDING TO THE PROVISIONS OF THIS PLAN AND ARE TO BE IN CONFORMANCE WITH THE MOST CURRENT MARYLAND STANDARDS AND SPECIFICATIONS FOR SOIL EROSION AND SEDIMENT CONTROL AND REVISIONS THERETO.
3. FOLLOWING INITIAL SOIL DISTURBANCE OR RE-DISTURBANCE, PERMANENT OR TEMPORARY STABILIZATION SHALL BE COMPLETED WITHIN: A) 7 CALENDAR DAYS FOR ALL PERIMETER SEDIMENT CONTROL STRUCTURES, DIKES, PERIMETER SLOPES AND ALL SLOPES GREATER THAN 3:1, B) 14 DAYS AS TO ALL OTHER DISTURBED OR GRADED AREAS ON THE PROJECT SITE.
4. ALL SEDIMENT TRAPS/BASINS SHOWN MUST BE FENCED AND WARNING SIGNS POSTED AROUND THE PERIMETER IN ACCORDANCE WITH VOL. 1, CHAPTER 12 OF THE HOWARD COUNTY DESIGN MANUAL, STORM DRAINAGE.
5. ALL DISTURBED AREAS MUST BE STABILIZED WITHIN THE TIME PERIOD SPECIFIED ABOVE IN ACCORDANCE WITH THE 1994 MARYLAND STANDARDS AND SPECIFICATIONS FOR SOIL EROSION AND SEDIMENT CONTROL FOR PERMANENT SEEDING (SEC. 51), SOD (SEC. 54), TEMPORARY SEEDING (SEC. 50) AND MULCHING (SEC. 52). TEMPORARY STABILIZATION WITH MULCH ALONE CAN ONLY BE DONE WHEN RECOMMENDED SEEDING DATES DO NOT ALLOW FOR PROPER GERMINATION AND ESTABLISHMENT OF GRASSES.
6. ALL SEDIMENT CONTROL STRUCTURES ARE TO REMAIN IN PLACE AND ARE TO BE MAINTAINED IN OPERATIVE CONDITION UNTIL PERMISSION FOR THEIR REMOVAL HAS BEEN OBTAINED FROM HOWARD COUNTY SEDIMENT CONTROL INSPECTOR
7. SITE ANALYSIS:

TOTAL AREA OF SITE	80.67 AC.
AREA DISTURBED	8.04 AC
AREA TO BE ROOFED OR PAVED	2.65 AC
AREA TO BE VEGETATIVELY STABILIZED	5.39 AC
TOTAL CUT	16,496 CU. YDS.
TOTAL FILL	13,156 CU. YDS.
TOTAL TOPSOIL	1,192 CU. YDS.
OFF SITE WASTE/BORROW AREA LOCATION	ON-SITE

8. ANY SEDIMENT CONTROL PRACTICE WHICH IS DISTRIBUTED BY GRADING ACTIVITY FOR PLACEMENT OF UTILITIES MUST BE REPAIRED ON THE SAME DAY OF DISTURBANCE.
9. ADDITIONAL SEDIMENT MUST BE PROVIDED, IF DEEMED NECESSARY BY THE HOWARD COUNTY SEDIMENT CONTROL INSPECTOR.
10. ON ALL SITES WITH DISTURBED AREAS IN ACCESS OF 2 ACRES, APPROVAL OF THE INSPECTION AGENCY SHALL BE REQUESTED UPON COMPLETION OF INSTALLATION OF PERIMETER EROSION AND SEDIMENT CONTROLS, BUT BEFORE PROCEEDING WITH ANY OTHER EARTH DISTURBANCE OR GRADING. OTHER BUILDING OR GRADING INSPECTION APPROVALS MAY NOT BE AUTHORIZED UNTIL THIS INITIAL APPROVAL BY THE INSPECTION AGENCY IS MADE.
11. TRENCHES FOR THE UTILITIES IS LIMITED TO THREE PIPE LENGTHS OR THAT WHICH SHALL BE BACK-FILLED AND STABILIZED BY THE END OF EACH WORK DAY, WHICHEVER IS SHORTER.

NOTE: OWNER AND CONTRACTOR

THE ENGINEER SHALL BE NOTIFIED 2 WEEKS PRIOR TO THE COMMENCEMENT OF CONSTRUCTION. THE SWM AND WATER QUALITY FACILITIES MUST BE FIELD INSPECTED FOR AS-BUILT PLAN. THE CONTRACTOR SHALL CONSTRUCT THE SEDIMENT BASIN IN ACCORDANCE WITH THE APPROVED SWM PLANS.

THESE PLANS HAVE BEEN REVIEWED FOR THE HOWARD SOIL CONSERVATION DISTRICT AND MEET THE TECHNICAL REQUIREMENTS FOR SMALL POND CONSTRUCTION, SOIL EROSION AND SEDIMENT CONTROL.

8/11/03
U.S.D.A. NATURAL RESOURCES CONSERVATION SERVICE — DATE

THESE PLANS FOR SMALL POND CONSTRUCTION, SOIL EROSION AND SEDIMENT CONTROL MEET THE REQUIREMENTS OF THE HOWARD SOIL CONSERVATION DISTRICT.

8/11/03
HOWARD SOIL CONSERVATION DISTRICT — DATE

APPROVED FOR ~~PUBLIC~~ OR PRIVATE WATER & ~~PUBLIC~~ OR PRIVATE SEVERAGE SYSTEMS

8-8-03
COUNTRY HEALTH OFFICER — DATE
HOWARD COUNTY HEALTH DEPARTMENT

APPROVED: DEPARTMENT OF PLANNING AND ZONING

8/5/03
CHIEF, DEVELOPMENT ENGINEERING DIVISION MK — DATE

8/12/03
CHIEF, DIVISION OF LAND DEVELOPMENT — DATE

8/12/03
DIRECTOR, DEPARTMENT OF PLANNING AND ZONING — DATE

MORRIS & RITCHIE ASSOCIATES, INC.
ENGINEERS, PLANNERS, SURVEYORS AND LANDSCAPE ARCHITECTS
9090 JUNCTION DRIVE, SUITE 9
ANNAPOLIS JUNCTION, MARYLAND 20701
(410) 792-9792 or (301) 776-1690
FAX (410) 792-7395

7/15/03

THE GLENELG COUNTRY SCHOOL PROPOSED UPPER SCHOOL ADDITION
SWM NOTES & SPECIFICATIONS

TAX MAP 22 GRID 22 PARCEL 146
LIBER 1296 FOLIO 245
FIFTH (5TH) ELECTION DISTRICT
HOWARD COUNTY, MARYLAND

DATE	REVISIONS	
		JOB NO.: 12189.02
07/12	TRACK AND SYNTHETIC TURF FIELD IMPROVEMENTS (4)	SCALE: N.T.S.
		DATE: 07/14/03
		DRAWN BY: TCN
		DESIGN BY: TCN
		REVIEW BY: TCN
		SHEET: 10 OF ~~25~~ 37 (4)

SDP-03-84

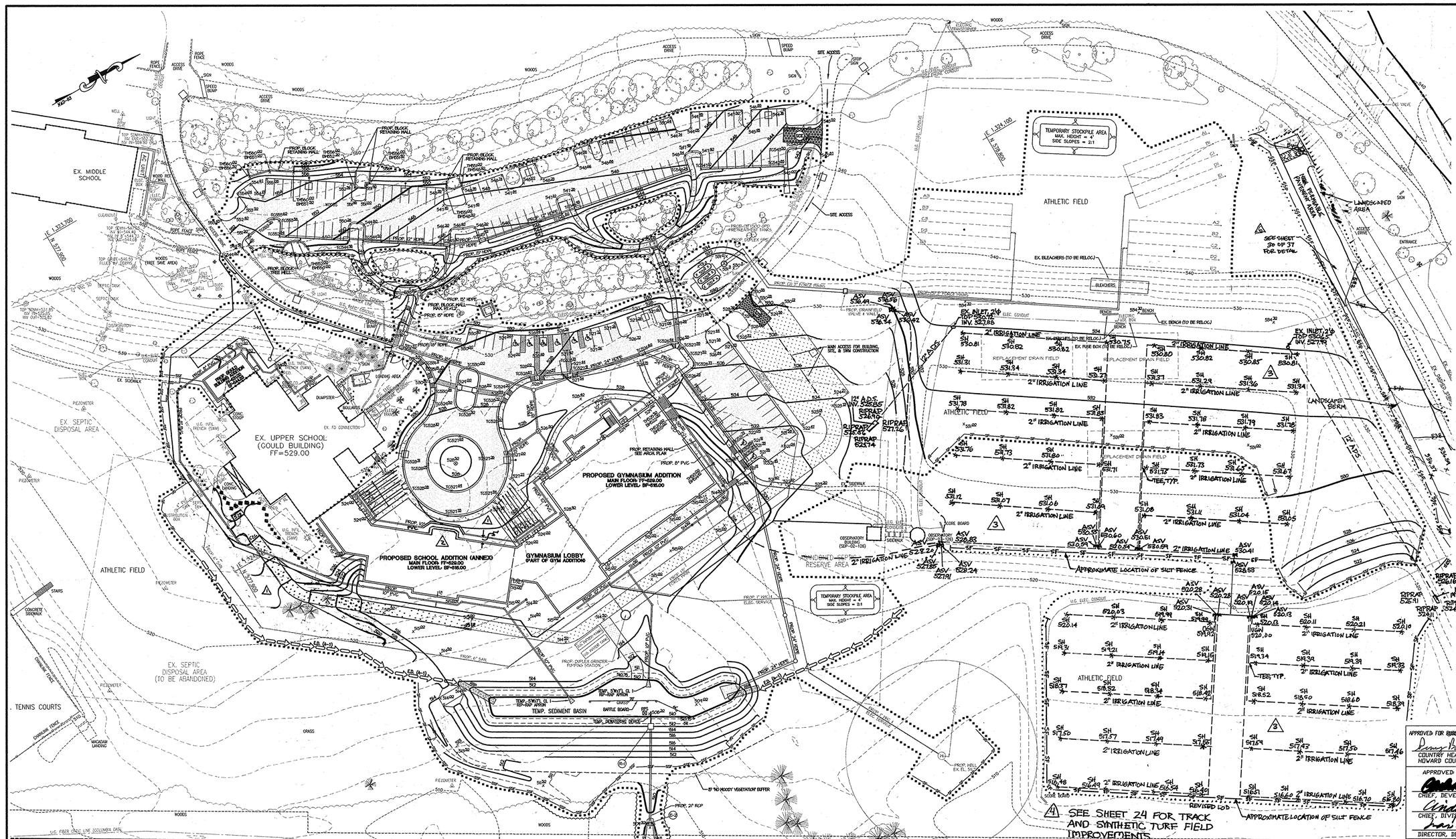

AREAS OF CONCENTRATED FLOW ARE TO BE STABILIZED WITH EROSION CONTROL MATTING (ECM). SEE DETAIL ON SHEET 12.

PR. SEDIMENT BASIN SUMMARY TABLE

EXISTING DRAINAGE AREA	9.29 ACRES
PROPOSED DRAINAGE AREA	9.29 ACRES
WET STORAGE VOLUME REQ'D 9.29 X 1800	16,722 C.F.
DRY STORAGE VOLUME REQ'D 9.29 X 1800	16,722 C.F.
TOTAL VOLUME REQUIRED	33,444 C.F.
TOTAL VOLUME PROVIDED	33,730 C.F.
WET STORAGE VOLUME PROVIDED	17,146 C.F.
DRY STORAGE VOLUME PROVIDED	16,548 C.F.
WET STORAGE DEPTH	3.25 FT.
DRY STORAGE DEPTH	1.25 FT.
BOTTOM ELEVATION	508.00
CLEANOUT ELEVATION	510.25
LIMIT OF WET STORAGE ELEVATION	511.25
MINIMUM RISER CREST ELEVATION	512.49
PROVIDED RISER CREST ELEVATION	512.50
EMBANKMENT ELEVATION	516.00
DRAW-DOWN DEVICE	6" PVC (4" ORIFICE)
OUTFALL BARREL TYPE	21" RCP
1-YR PRE-DEVELOPMENT SITE DISCHARGE	2.81 CFS
1-YR POST-DEVELOPMENT SITE DISCHARGE	20.94 CFS
1-YR POST-DEVELOPMENT BASIN DISCHARGE	2.23 CFS
1-YR STORM, WATER SURFACE ELEVATION	513.06
10-YR STORM, WATER SURFACE ELEVATION	514.52

BY THE ENGINEER

I CERTIFY THAT THIS PLAN FOR EROSION AND SEDIMENT CONTROL REPRESENTS A PRACTICAL AND WORKABLE PLAN BASED ON MY PERSONAL KNOWLEDGE OF THE SITE CONDITIONS AND THAT IT WAS PREPARED IN ACCORDANCE WITH THE REQUIREMENTS OF THE HOWARD SOIL CONSERVATION DISTRICT."

SIGNATURE OF ENGINEER — THOMAS C. NEUGEBAUER, P.E. MD LICENSE #29203 — DATE 7/15/03

BY THE DEVELOPER

"I/WE CERTIFY THAT ALL DEVELOPMENT AND CONSTRUCTION WILL BE DONE ACCORDING TO THIS PLAN, AND THAT ANY RESPONSIBLE PERSONNEL INVOLVED IN THE CONSTRUCTION PROJECT WILL HAVE A CERTIFICATE OF ATTENDANCE AT A DEPARTMENT OF THE ENVIRONMENT APPROVED TRAINING PROGRAM FOR THE CONTROL OF SEDIMENT AND SEDIMENT AND EROSION BEFORE BEGINNING THE PROJECT. I ALSO AUTHORIZE ON-SITE INSPECTION BY THE HOWARD SOIL CONSERVATION DISTRICT."

SIGNATURE OF DEVELOPER — JOEL R. CHERINGTON, AGENT FOR THE GLENELG COUNTRY SCHOOL — DATE 7-14-03

BY THE ENGINEER

"I CERTIFY THAT THIS PLAN FOR POND CONSTRUCTION, EROSION AND SEDIMENT CONTROL REPRESENTS A PRACTICAL AND WORKABLE PLAN BASED ON MY PERSONAL KNOWLEDGE OF THE SITE CONDITIONS. THIS PLAN WAS PREPARED IN ACCORDANCE WITH THE REQUIREMENTS OF HOWARD SOIL CONSERVATION DISTRICT. I HAVE NOTIFIED THE DEVELOPER THAT HE/SHE MUST ENGAGE A REGISTERED PROFESSIONAL ENGINEER TO SUPERVISE POND CONSTRUCTION AND PROVIDE HOWARD SOIL CONSERVATION DISTRICT WITH AN "AS-BUILT" PLAN OF THE POND WITHIN 30 DAYS OF COMPLETION."

SIGNATURE OF ENGINEER — THOMAS C. NEUGEBAUER, P.E. MD LIC.#29203 — DATE 7/15/03

BY THE DEVELOPER

"I/WE CERTIFY THAT ALL DEVELOPMENT AND CONSTRUCTION WILL BE DONE ACCORDING TO THIS PLAN, AND THAT ANY RESPONSIBLE PERSONNEL INVOLVED IN THE CONSTRUCTION PROJECT WILL HAVE A CERTIFICATE OF ATTENDANCE AT A DEPARTMENT OF THE ENVIRONMENT APPROVED TRAINING PROGRAM FOR THE CONTROL OF SEDIMENT AND SEDIMENT AND EROSION BEFORE BEGINNING THE PROJECT. I ALSO AUTHORIZE ON-SITE INSPECTION BY THE HOWARD SOIL CONSERVATION DISTRICT."

SIGNATURE OF DEVELOPER — JOEL R. CHERINGTON, AGENT FOR THE GLENELG COUNTRY SCHOOL — DATE 7-14-03

STATE OF MARYLAND — THOMAS C. NEUGEBAUER — 29203 — PROFESSIONAL ENGINEER — 1-25-16

FOR REVISION #6 ONLY

MD PROFESSIONAL CERTIFICATION:

I HEREBY CERTIFY THAT THESE DOCUMENTS WERE PREPARED OR APPROVED BY ME, AND THAT I AM A DULY LICENSED PROFESSIONAL ENGINEER UNDER THE LAWS OF THE STATE OF MARYLAND, LICENSE NO. 29203, EXPIRATION DATE: 6-16-17

THESE PLANS HAVE BEEN REVIEWED FOR THE HOWARD SOIL CONSERVATION DISTRICT AND MEET THE TECHNICAL REQUIREMENTS FOR SMALL POND CONSTRUCTION, SOIL EROSION AND SEDIMENT CONTROL.

U.S.D.A.-NATURAL RESOURCES CONSERVATION SERVICE — DATE 8/4/03

THESE PLANS FOR SMALL POND CONSTRUCTION, SOIL EROSION AND SEDIMENT CONTROL MEET THE REQUIREMENTS OF THE HOWARD SOIL CONSERVATION DISTRICT.

HOWARD SOIL CONSERVATION DISTRICT — DATE 8/4/03

REVIEWED FOR HOWARD S.C.D. AND MEETS TECHNICAL REQUIREMENTS.

U.S.D.A.-NATURAL RESOURCES CONSERVATION SERVICE — DATE

THIS DEVELOPMENT PLAN IS APPROVED FOR SOIL EROSION AND SEDIMENT CONTROL BY THE HOWARD SOIL CONSERVATION DISTRICT.

HOWARD S.C.D. — DATE

APPROVED FOR PUBLIC/PRIVATE WATER & PUBLIC/PRIVATE SEWERAGE SYSTEMS

COUNTY HEALTH OFFICER'S STAMP — HOWARD COUNTY HEALTH DEPARTMENT — DATE 8-8-03

APPROVED DEPARTMENT OF PLANNING AND ZONING

CHIEF, DEVELOPMENT ENGINEERING DIVISION MK — DATE 8/5/03

CHIEF, DIVISION OF LAND DEVELOPMENT MB — DATE 8/12/03

DIRECTOR, DEPARTMENT OF PLANNING AND ZONING — DATE 8/14/03

MORRIS & RITCHIE ASSOCIATES, INC.
ENGINEERS, PLANNERS, SURVEYORS AND LANDSCAPE ARCHITECTS
9090 JUNCTION DRIVE, SUITE 9
ANNAPOLIS JUNCTION, MARYLAND 20701
(410) 792-9792 or (301) 776-1890
FAX (410) 792-7395

STATE OF MARYLAND — THOMAS C. NEUGEBAUER — 29203 — PROFESSIONAL ENGINEER — 7/15/03

THE GLENELG COUNTRY SCHOOL
PROPOSED UPPER SCHOOL ADDITION

SEDIMENT CONTROL PLAN

TAX MAP 22 GRID 22 PARCEL 146
LIBER 1296 FOLIO 245
FIFTH (5TH) ELECTION DISTRICT
HOWARD COUNTY, MARYLAND

DATE	REVISIONS
10/03	ADDED TRELLIS TO BUILDING FOOTPRINT. EXTENDED STABILIZED TURF FIRE LANE
04/04	REVISED BUILDING FOOTPRINT TO SHOW ANNEX ADDITION.
09/06	IRRIGATION LINES FOR FIELDS #2 AND #3 ADDED
07/12	TRACK AND SYNTHETIC TURF FIELD IMPROVEMENTS
12/15	ADDED PERMEABLE PAVEMENT AREA BY MAIN ENTRANCE AND STORM DRAIN TO EX. GRASS CHANNEL.

JOB NO.: 12189.02
SCALE: 1" = 50'
DATE: 07/14/03
DRAWN BY: TCN
DESIGN BY: TCN
REVIEW BY: TCN
SHEET: 11 OF 24

SDP-03-84

STANDARDS AND SPECIFICATION FOR TOPSOIL

DEFINITION

PLACEMENT OF TOPSOIL OVER A PREPARED SUBSOIL PRIOR TO ESTABLISHMENT OF PERMANENT VEGETATION.

PURPOSE

TO PROVIDE A SUITABLE SOIL MEDIUM FOR VEGETATIVE GROWTH. SOILS OF CONCERN HAVE LOW MOISTURE CONTENT, LOW NUTRIENT LEVELS, LOW pH, MATERIAL TOXIC TO PLANTS, AND/OR UNACCEPTABLE SOIL GRADATION.

CONDITIONS WHERE PRACTICE APPLIES

I. THIS PRACTICE IS LIMITED TO AREAS HAVING 2:1 OR FLATTER SLOPES WHERE:

A. THE TEXTURE OF THE EXPOSED SUBSOIL/PARENT MATERIAL IS NOT ADEQUATE TO PRODUCE VEGETATIVE GROWTH.

B. THE SOIL MATERIAL IS SO SHALLOW THAT THE ROOTING ZONE IS NOT DEEP ENOUGH TO SUPPORT PLANTS OR FURNISH CONTINUING SUPPLIES OF MOISTURE AND PLANT NUTRIENTS.

C. THE ORIGINAL SOIL TO BE VEGETATED CONTAINS MATERIAL TOXIC TO PLANT GROWTH.

D. THE SOIL IS SO ACIDIC THAT TREATMENT WITH LIMESTONE IS NOT FEASIBLE.

II. FOR THE PURPOSE OF THESE STANDARDS AND SPECIFICATIONS, AREAS HAVING SLOPES STEEPER THAN 2:1 REQUIRE SPECIAL CONSIDERATION AND DESIGN FOR ADEQUATE STABILIZATION. AREA HAVING SLOPES STEEPER THAN 2:1 SHALL HAVE THE APPROPRIATE STABILIZATION SHOWN ON THE PLANS.

CONSTRUCTION AND MATERIAL SPECIFICATIONS

I. TOPSOIL SALVAGED FROM THE EXISTING SITE MAY BE USED PROVIDED THAT IT MEETS STANDARDS AS SET FORTH IN THESE SPECIFICATIONS. TYPICALLY, THE DEPTH OF TOPSOIL TO BE SALVAGED FOR A GIVEN SOIL TYPE CAN BE FOUND IN REPRESENTATIVES SOIL PROFILE SECTION IN THE SOIL SURVEY PUBLISHED BY USDA-SCS IN COOPERATION WITH MARYLAND AGRICULTURAL EXPERIMENTAL STATION.

II. TOPSOIL SPECIFICATIONS-SOIL TO BE USED AS TOPSOIL MUST MEET THE FOLLOWING:

I. TOPSOIL SHALL BE A LOAM, SANDY LOAM, CLAY LOAM, SILT LOAM, SANDY CLAY LOAM, LOAMY SAND. OTHER SOILS MAY USED IF RECOMMENDED BY AN AGRONOMIST OR SOIL SCIENTIST AND APPROVED BY THE APPROPRIATE APPROVAL AUTHORITY. REGARDLESS TOPSOIL SHALL NOT BE A MIXTURE OF CONTRASTING TEXTURED SUBSOILS AND SHALL CONTAIN LESS THAN 5% BY VOLUME OF CINDERS, STONES, SLAG, COARSE FRAGMENTS, GRAVELS, STICKS, ROOTS, TRASH, OR OTHER MATERIALS LARGER THAN 1 1/2" IN DIAMETER.

II. TOPSOIL MUST BE FREE OF PLANTS OR PLANT PARTS SUCH AS BERMUDA GRASS, QUICKGRASS, JOHNSONGRASS, NUTSEDGE, POISON IVY, THISTLE, OR OTHERS AS SPECIFIED.

III. WHERE THE SUBSOIL IS EITHER HIGHLY ACIDIC OR COMPOSED OF HEAVY CLAYS, GROUND LIMESTONE SHALL BE SPREAD AT THE RATE OF 4-8 TONS/ACRE (200-400 POUNDS PER 1,000 SF) PRIOR TO THE PLACEMENT OF TOPSOIL. LIME SHALL BE DISTRIBUTED UNIFORMLY OVER DESIGNATED AREAS AND WORKED INTO THE SOIL IN CONJUNCTION WITH TILLAGE OPERATIONS AS DESCRIBED IN THE FOLLOWING PROCEDURES.

II. FOR SITE HAVING DISTURBED AREAS UNDER 5 ACRE

I. PLACE TOPSOIL (IF REQUIRED) AND APPLY SOIL AMENDMENTS AS SPECIFIED IN 20.0 VEGETATIVE STABILIZATION-SECTION I-VEGETATIVE STABILIZATION METHODS AND MATERIALS.

III. TOPSOIL APPLICATION

I. WHEN TOPSOILING, MAINTAIN NEEDED EROSION AND SEDIMENT CONTROL PRACTICES SUCH AS DIVERSIONS, GRADE STABILIZATION STRUCTURES, EARTH DIKES, SLOPE SILT FENCE AND SEDIMENT TRAPS AND BASINS.

II. GRADES ON THE AREAS TO BE TOPSOILED, WHICH HAVE BEEN PREVIOUSLY ESTABLISHED, SHALL BE MAINTAINED, ALBEIT 4"-8" HIGHER IN ELEVATION.

III. TOPSOIL SHALL BE UNIFORMLY DISTURBED IN A 4"-8" LAYER AND LIGHTLY COMPACTED TO A MINIMUM THICKNESS OF 4". SPREADING SHALL BE PERFORMED IN SUCH A MANNER THAT SODDING OR SEEDING CAN PROCEED WITH A MINIMUM OF ADDITIONAL SOIL PREPARATION AND TILLAGE. ANY IRREGULARITIES IN THE SURFACE RESULTING FROM TOPSOILING OR OTHER OPERATIONS SHALL BE CORRECTED IN ORDER TO PREVENT THE FORMATION OF DEPRESSIONS OR WATER POCKETS.

IV. TOPSOIL SHALL NOT PLACED WHILE THE TOPSOIL OR SUBSOIL IS IN A FROZEN OR MUDDY CONDITION, WHEN THE SUBSOIL IS EXCESSIVELY WET OR IN A CONDITION THAT MAY OTHERWISE BE DETRIMENTAL TO PROPER GRADING AND SEEDBED PREPARATION.

VI. ALTERNATIVE FOR PERMANENT SEEDING-INSTEAD OF APPLYING THE FULL AMOUNTS OF LIME AND COMMERCIAL FERTILIZER, COMPOSTED SLUDGE AND AMENDMENTS MAY BE APPLIED AS SPECIFIED BELOW:

I. COMPOSTED SLUDGE MATERIAL FOR USE A SOIL CONDITIONER FOR SITES HAVING DISTURBED AREAS OVER 5 ACRE SHALL BE TESTED TO PRESCRIBE AMENDMENTS AND FOR SITES HAVING DISTURBED AREAS UNDER 5 ACRES SHALL CONFORM TO THE FOLLOWING REQUIREMENTS:

A. COMPOSTED SLUDGE SHALL BE SUPPLIED BY, OR ORIGINATE FROM, A PERSON OR PERSONS THAT ARE PERMITTED (AT THE TIME OF ACQUISITION OF THE COMPOST) BY THE MARYLAND DEPARTMENT OF THE ENVIRONMENT UNDER COMAR 26.04.06.

B. COMPOSTED SLUDGE SHALL CONTAIN AT LEAST 1 PERCENT NITROGEN, 1.5 PERCENT PHOSPHOROUS, AND 0.2 PERCENT POTASSIUM AND HAVE A pH OF 7.0 TO 8.0. IF COMPOST DOES NOT MEET THESE REQUIREMENTS, THE APPROPRIATE CONSTITUENTS MUST BE ADDED TO MEET THE REQUIREMENTS PRIOR TO USE.

C. COMPOSTED SLUDGE SHALL BE APPLIED AT A RATE OF 1 TON/1,000 SF.

II. COMPOSTED SLUDGE SHALL BE AMENDED WITH A POTASSIUM FERTILIZER APPLIED AT THE RATE OF 4LB/1,000 SF, AND 1/3 THE NORMAL LIME APPLICATION RATE.

REFERENCES: GUIDELINE SPECIFICATIONS, SOIL PREPARATION AND SODDING. MD-VA, PUB. #1, COOPERATIVE EXTENSION SERVICE, UNIVERSITY OF MARYLAND AND VIRGINIA POLYTECHNIC INSTITUTE. REVISED 1973.

STANDARDS AND SPECIFICATIONS FOR LAND GRADING

DEFINITION

RESHAPING OF THE EXISTING LAND SURFACE IN ACCORDANCE WITH A PLAN AS DETERMINED BY ENGINEERING SURVEY AND LAYOUT.

PURPOSE

THE PURPOSE OF A LAND GRADING SPECIFICATION IS TO PROVIDE FOR EROSION CONTROL AND VEGETATIVE ESTABLISHMENT ON THOSE AREAS WHERE THE EXISTING LAND SURFACE IS TO BE RESHAPED BY GRADING ACCORDING TO PLAN.

DESIGN CRITERIA

THE GRADING PLAN SHOULD BE BASED UPON THE INCORPORATION OF BUILDING DESIGNS AND STREET LAYOUTS THAT FIT AND UTILIZE EXISTING TOPOGRAPHY AND DESIRABLE NATURAL SURROUNDINGS TO AVOID EXTREME GRADE MODIFICATIONS. INFORMATION SUBMITTED MUST PROVIDE SUFFICIENT TOPOGRAPHIC SURVEYS AND SOIL INVESTIGATIONS TO DETERMINE LIMITATIONS THAT MUST BE IMPOSED ON THE GRADING OPERATION RELATED TO SLOPE STABILITY, EFFECT ON ADJACENT PROPERTIES AND DRAINAGE PATTERNS, MEASURES FOR DRAINAGE AND WATER REMOVAL AND VEGETATIVE TREATMENT, ETC.

MANY COUNTIES HAVE REGULATIONS AND DESIGN PROCEDURES ALREADY ESTABLISHED FOR LAND GRADING AND CUT AND FILL SLOPES. WHERE THESE REQUIREMENTS EXIST, THEY SHALL BE FOLLOWED. THE PLAN MUST SHOW EXISTING AND PROPOSED CONTOURS OF THE AREA(S) TO BE GRADED. THE PLAN SHALL ALSO INCLUDE PRACTICES FOR EROSION CONTROL, SLOPE STABILIZATION, SAFE DISPOSAL OF RUNOFF WATER AND DRAINAGE, SUCH AS WATERWAYS, LINED DITCHES, REVERSE SLOPE BENCHES (INCLUDE GRADE AND CROSS SECTION), GRADE STABILIZATION STRUCTURES, RETAINING WALLS, AND SURFACE AND SUBSURFACE DRAINS. THE PLAN SHALL ALSO INCLUDE PHASING OF THESE PRACTICES. THE FOLLOWING SHALL BE INCORPORATED INTO THE PLAN:

I. PROVISIONS SHALL BE MADE TO SAFELY CONDUCT SURFACE RUNOFF TO STORM DRAINS, PROTECTED OUTLETS OR TO STABLE WATER COURSES TO INSURE THAT SURFACE RUNOFF WILL NOT DAMAGE SLOPES OR OTHER GRADED AREAS.

II. CUT AND FILL SLOPES THAT ARE TO BE STABILIZED WITH GRASSES SHALL NOT BE STEEPER THAN 2:1. (WHERE THE SLOPE IS TO BE MOWED THE SLOPE SHOULD BE NO STEEPER THAN 3:1, 4:1 IS PREFERRED BECAUSE OF SAFETY FACTORS RELATED TO MOWING STEEP SLOPES.) SLOPES EXCEEDING 2:1 SHALL REQUIRE SPECIAL DESIGN AND STABILIZATION CONSIDERATIONS THAT SHALL BE ADEQUATELY SHOWN ON THE PLANS.

III. REVERSE BENCHES SHALL BE PROVIDED WHENEVER THE VERTICAL INTERVAL (HEIGHT) OF ANY 2:1 SLOPE EXCEEDS 20 FEET; FOR 3:1 SLOPE IT SHALL BE INCREASED TO 30 FEET AND FOR 4:1 TO 40 FEET. BENCHES SHALL BE LOCATED TO DIVIDE THE SLOPE FACE AS EQUALLY AS POSSIBLE AND SHALL CONVEY THE WATER TO A STABLE OUTLET. SOILS, SEEPS, ROCK OUTCROPS, ETC., SHALL ALSO BE TAKEN INTO CONSIDERATION WHEN DESIGNING BENCHES.

A. BENCHES SHALL BE A MINIMUM OF SIX FEET WIDE TO PROVIDE FOR EASE OF MAINTENANCE.

B. BENCHES SHALL BE DESIGNED WITH A REVERSE SLOPE OF 6:1 OR FLATTER TO THE TOE OF THE UPPER SLOPE AND WITH A MINIMUM OF ONE FOOT IN DEPTH. BENCH GRADIENT TO THE OUTLET SHALL BE BETWEEN 2 PERCENT AND 3 PERCENT, UNLESS ACCOMPANIED BY APPROPRIATE DESIGN AND COMPUTATIONS.

C. THE FLOW LENGTH WITHIN A BENCH SHALL NOT EXCEED 800' UNLESS ACCOMPANIED BY APPROPRIATE DESIGN AND COMPUTATIONS. FOR FLOW CHANNEL STABILIZATION SEE TEMPORARY SWALE.

IV. SURFACE WATER SHALL BE DIVERTED FROM THE FACE OF ALL CUT AND/OR FILL SLOPES BY THE USE OF EARTH DIKES, DITCHES AND SWALES OR CONVEYED DOWNSLOPE BY THE USE OF A DESIGNED STRUCTURE, EXCEPT WHERE:

A. THE FACE OF THE SLOPE IS OR SHALL BE STABILIZED AND THE FACE OF ALL GRADED SLOPES SHALL BE PROTECTED FORM SURFACE RUNOFF UNTIL THEY ARE STABILIZED.

B. THE FACE OF SLOPE SHALL NOT BE SUBJECT TO ANY CONCENTRATED FLOWS OF SURFACE WATER SUCH AS FROM NATURAL DRAINAGEWAYS, GRADED SWALES, DOWNSPOUTS, ETC.

C. THE FACE OF THE SLOPE WILL BE PROTECTED BY SPECIAL EROSION CONTROL MATERIALS, TO INCLUDE, BUT NOT LIMITED TO: APPROVED VEGETATIVE STABILIZATION PRACTICES (SEE SECTION G), RIP-RAP OR OTHER APPROVED STABILIZATION METHODS.

V. CUT SLOPES OCCURRING IN RIPABLE ROCK SHALL BE SERRATED AS SHOWN ON THE FOLLOWING DIAGRAM. THESE SERRATIONS SHALL BE MADE WITH CONVENTIONAL EQUIPMENT AS THE EXCAVATION IS MADE. EACH STEP OR SERRATION SHALL BE CONSTRUCTED ON THE CONTOUR AND WILL HAVE STEPS CUT AT NOMINAL TWO-FOOT INTERVALS WITH NOMINAL THREE-FOOT HORIZONTAL SHELVES. THESE STEPS WILL VARY DEPENDING ON THE SLOPE RATIO OR THE CUT SLOPE. THE NOMINAL SLOPE LINE IS 1:1. THESE STEPS WILL WEATHER AND ACT TO HOLD MOISTURE, LIME, FERTILIZER AND SEED THUS PRODUCING A MUCH QUICKER AND LONGER LIVED VEGETATIVE COVER AND BETTER SLOPE STABILIZATION. OVERLAND FLOW SHALL BE DIVERTED FROM THE TOP OF ALL SERRATED CUT SLOPES AND CARRIED TO A SUITABLE OUTLET.

VI. SUBSURFACE DRAINAGE SHALL BE PROVIDED WHERE NECESSARY TO INTERCEPT SEEPAGE THAT WOULD OTHERWISE ADVERSELY AFFECT SLOPE STABILITY OR CREATE EXCESSIVELY WET SITE CONDITIONS.

VII. SLOPES SHALL NOT BE CREATED SO CLOSE TO PROPERTY LINES AS TO ENDANGER ADJOINING PROPERTIES WITHOUT ADEQUATELY PROTECTING SUCH PROPERTIES AGAINST SEDIMENTATION, EROSION, SLIPPAGE, SETTLEMENT, SUBSIDENCE OR OTHER RELATED DAMAGES.

VIII. FILL MATERIAL SHALL BE FREE OF BRUSH, RUBBISH, ROCKS, LOGS, STUMPS, BUILDING DEBRIS, AND OTHER OBJECTIONABLE MATERIAL. IT SHOULD BE FREE OF STONES OVER TWO (2) INCHES IN DIAMETER WHERE COMPACTED BY HAND OR MECHANICAL TAMPERS OR OVER EIGHT (8) INCHES IN DIAMETER WHERE COMPACTED BY ROLLERS OR OTHER EQUIPMENT. FROZEN MATERIAL SHALL NOT BE PLACED IN THE FILL NOR SHALL THE FILL MATERIAL BE PLACED ON A FROZEN FOUNDATION.

IX. STOCKPILES, BORROW AREAS AND SPOIL SHALL BE SHOWN ON THE PLANS AND SHALL BE SUBJECT TO THE PROVISIONS OF THIS STANDARD AND SPECIFICATIONS.

X. ALL DISTURBED AREAS SHALL BE STABILIZED STRUCTURALLY OR VEGETATIVELY IN COMPLIANCE WITH 20.0 STANDARDS AND SPECIFICATIONS FOR VEGETATIVE STABILIZATION.

VEGETATIVE STABILIZATION

PERMANENT AND TEMPORARY SEEDING, SODDING AND MULCHING

I. SITE PREPARATION

PERMANENT OR TEMPORARY VEGETATION SHALL BE ESTABLISHED WITHIN SEVEN (7) DAYS ON THE SURFACE OF ALL SEDIMENT CONTROL PRACTICES SUCH AS DIVERSIONS, GRADE STABILIZATION STRUCTURES, BERMS, WATERWAYS, SEDIMENT CONTROL BASINS, AND ALL SLOPES GREATER THAN 3 HORIZONTAL TO 1 VERTICAL (3:1) AND WITHIN 14 DAYS FOR ALL OTHER DISTURBED OR GRADED AREAS ON THE PROJECT SITE. MULCHING MAY ONLY BE USED ON DISTURBED AREAS AS TEMPORARY COVER WHERE VEGETATION IS NOT FEASIBLE OR WHERE SEEDING CAN NOT BE COMPLETED BECAUSE OF WEATHER.

II. SEEDED PREPARATION AND SEEDING APPLICATION

LOOSEN THE TOP LAYER OF THE SOIL TO A DEPTH OF 3 TO 5 INCHES BY MEANS OF SUITABLE AGRICULTURAL OR CONSTRUCTION EQUIPMENT SUCH AS DISC HARROWS, CHISEL PLOWS OR RIPPERS MOUNTED ON CONSTRUCTION EQUIPMENT. INCORPORATE THE LIME AND FERTILIZER INTO THE TOP 3 TO 5 INCHES OF THE SOIL BY DISCING OR BY OTHER SUITABLE MEANS. ROUGH AREAS SHOULD NOT BE ROLLED OR DRAGGED SMOOTH , BUT LEFT IN A ROUGHENED CONDITION. STEEP SLOPES GREATER THAN 3:1 SHOULD BE TRACKED BY A DOZER, LEAVING THE SOIL IN AN IRREGULAR CONDITION WITH RIDGES RUNNING PARALLEL SHOULD BE LOOSE AND FRIABLE. PERMANENT COVER MAY REQUIRE AN APPLICATION OF TOPSOIL. IF SO, IT MUST MEET THE REQUIREMENTS SET FORTH IN SECTION 21.0 STANDARDS AND SPECIFICATIONS FOR TOPSOIL FROM THE 1994 STANDARDS AND SPECIFICATIONS.

III. SOIL AMENDMENTS

SOIL TESTS SHALL BE MADE ON SITES OVER FIVE ACRES TO DETERMINE THE EXACT REQUIREMENTS FOR BOTH LIME AND FERTILIZER. FOR SITES UNDER 5 ACRES, IN LIEU OF A SOIL TEST, APPLY THE FOLLOWING:

FERTILIZER NITROGEN 2 LBS/1000 SF (90 LBS/AC)
P205 4 LBS/1000 SF (175 LBS/AC)
K20 4 LBS/1000 SF (174 LBS/AC)

GROUND LIMESTONE 2 TONS/AC

IV. SEDIMENT CONTROL PRACTICE SEEDING

SELECT A SEEDING MIXTURE FROM TABLE 25 OR 26 IN SECTION "G" OF THE 1994 STANDARDS AND SPECIFICATIONS. DOCUMENT SEEDING ON THE EROSION AND SEDIMENT CONTROL PLAN USING APPROPRIATE CHART BELOW.
NOTE: IF SEDIMENT CONTROL PRACTICES ARE IN FOR LONGER THAN 12 MONTHS, PERMANENT SEEDING IS REQUIRED.

V. TEMPORARY/PERMANENT SEEDING MIXTURES AND RATES

SELECT A SEEDING MIXTURE FROM APPROPRIATE TABLE 25 OR 26 IN SECTION "G" OF THE 1994 STANDARDS AND SPECIFICATIONS. DOCUMENT SEEDING ON THE EROSION AND SEDIMENT CONTROL PLAN USING APPROPRIATE CHART BELOW.

TEMPORARY SEEDING SUMMARY

SEED MIXTURE(HARDINESS ZONE 6a) FROM MDE STANDARD 20, FIGURE 5					FERTILIZER RATE (10-10-10)	LIME RATE
NO.	SPECIES	APPLICATION RATE (LB/AC)	SEEDING DATE	SEEDING DEPTH		
1	RYE PLUS FOXTAIL MULLET	150 LBS/AC.	6/1-10/31	1"	600 LB/AC (15 LB/1000 SF)	2 TONS/AC (100 LB/1000 SF)
2	ANNUAL RYEGRASS	50 LBS/AC.	8/1-8/15	1/4"-1/2"		

PERMANENET SEEDING SUMMARY

SEED MIXTURE(HARDINESS ZONE 6a) FROM MDE STANDARD 20, FIGURE 5					FERTILIZER RATE (10-20-20)			LIME RATE
NO.	SPECIES	APPLICATION RATE (LB/AC)	SEEDING DATE	SEEDING DEPTH	N	P_2O_5	K_2O	
1	TALL FESCUE (75%) CANADA BLUEGRASS (10%) KENTUCKY BLUEGRASS (10%) REDTOP (5%)	150 LBS/AC.	8/1-10/1	1/4"-1/2"	90 LB/AC. 2 LB/1000 SF)	175 LB/AC. 4 LB/1000 SF)	175 LB/AC. 4 LB/1000 SF)	2 TONS/AC (100 LB/1000 SF)
2	KENTUCKY BLUEGRASS (50%) HARD FESCUE (40%) REDTOP (10%)	150 LBS/AC.	8/1-10/1	1/4"-1/2"				
3	TALL FESCUE (85%) CHEWINGS FESCUE (10%) KENTUCKY BLUEGRASS (5%)	125 LBS/AC. 15 LBS/AC. 10 LBS/AC.	8/1-10/1	1/4"-1/2"				

VI. TURFGRASS ESTABLISHMENT

THIS INCLUDES LAWNS, PARKS, PLAYGROUNDS, AND COMMERCIAL SITES WHICH WILL RECEIVE A MEDIUM TO HIGH LEVEL OF MAINTENANCE. AREA TO RECEIVE SEED SHALL BE TILLED BY DISCING OR BY OTHER APPROVED METHODS TO A DEPTH OF 3 TO 5 INCHES. LEVELED AND RAKED TO PREPARE A PROPER SEEDBED. STONES AND DEBRIS OVER 1 1/2 INCHES IN DIAMETER SHALL BE REMOVED. THE RESULTING SEEDBED SHALL BE IN SUCH CONDITION THAT FUTURE MOWING OF CHOOSE A TURFGRASS MIXTURE FROM PATE G-20 OF THE 1994 STANDARDS AND SPECIFICATIONS OR SELECT FROM THE LIST IN THE MOST CURRENT UNIVERSITY OF MARYLAND PUBLICATION, AGRONOMY MEMO #77, "TURFGRASS CULTIVAR RECOMMENDATIONS FOR MARYLAND".

VII. MULCHING

ALL SEEDING REQUIRE MULCHING. ALSO MULCH DURING NON-SEEDING DATES UNTIL SEEDING CAN BE DONE.
MULCH SHALL BE UNROTTED, UNCHOPPED, SMALL GRAIN STRAW APPLIED AT A RATE OF A 2 TONS/ACRE OR 90 LBS/1000 SF (2 BALES). IF A MULCH ANCHORING TOOL IS USED, APPLY 2.5 TONS/ACRE. MULCH MATERIAL SHALL BE RELATIVELY FREE OF ALL KINDS OF WEEDS AND SHALL BE COMPLETELY FREE OF PROHIBITED NOXIOUS WEEDS. SPREAD MULCH UNIFORMLY, MECHANICALLY OR BY HAND, TO A DEPTH OF 1-2 INCHES. MULCH ANCHORING SHALL BE ACCOMPLISHED IMMEDIATELY AFTER MULCH PLACEMENT TO MINIMIZE LOSS BY WIND OR WATER. THIS MAY BE DONE BY MULCH NETTINGS, MULCH ANCHORING TOOL, WOOD CELLULOSE FIBER OR LIQUID MULCH BINDERS.

APPLY WOOD CELLULOSE FIBER AT A DRY WEIGHT OF 1,500 LBS/ACRE. IF MIXED WITH WATER, USE 50 LBS. OF WOOD CELLULOSE FIBER PER 1000 GALLONS OF WATER.

LIQUID BINDER SHOULD BE APPLIED HEAVIER AT THE EDGE, WHERE WIND CATCHES MULCH IN VALLEYS, AND ON CREST OF BANKS. THE REMAINDER OF THE AREA SHOULD APPEAR UNIFORM AFTER BINDER APPLICATION. APPLY RATES RECOMMENDED BY THE MANUFACTURER TO ANCHOR AND MULCH. STABLE LIGHT WEIGHT, PLASTIC NETTING OVER THE MULCH ACCORDING TO MANUFACTURER'S RECOMMENDATIONS.

VIII. SODDING

CLASS OF TURFGRASS SOD SHALL BE MARYLAND OR VIRGINIA STATE CERTIFIED, OR MARYLAND OR VIRGINIA STATE APPROVED SOD. SOD SHALL BE HARVESTED, DELIVERED AND INSTALLED WITHIN A PERIOD OF 36 HOURS. SOD IS TO BE LAID WITH THE LONG EDGES PARALLEL TO THE CONTOUR USING STAGGERED JOINTS WITH ALL ENDS TIGHTLY ABUTTED AND NOT OVER LAPPING. SOD SHALL BE ROLLED AND THOROUGHLY WATERED AFTER INSTALLATION. DAILY WATERING TO MAINTAIN 4 INCH DEPTH OF MOISTURE FOR THE FIRST WEEK IS REQUIRED IN THE ABSENCE OF RAINFALL. SOD IS NOT TO BE APPLIED ON FROZEN GROUND.

IX. MAINTENANCE

A. IRRIGATE-APPLY MINIMUM 1" OF WATER EVERY 3 TO 4 DAYS DEPENDING ON SOIL TEXTURE, WHEN SOIL MOISTURE BECOMES DEFICIENT TO PREVENT LOSS OF STAND OF PROTECTIVE VEGETATION.

B. REPAIRS- IF STAND PROVIDES BETWEEN 40% TO 94% GROUND COVERAGE, OVERSEED AND FERTILIZER USING HALF OF THE RATES ORIGINALLY APPLIED. IF STAND PROVIDES LESS THAN 40% COVERAGE, REESTABLISH AND STAND FOLLOWING ORIGINAL RATES AND PROCEDURES.

NOTE: USE OF THIS INFORMATION DOES NOT PRECLUDE MEETING ALL OF THE REQUIREMENTS OF THE 1994 MARYLAND STANDARDS AND SPECIFICATIONS FOR SOIL EROSION AND SEDIMENT CONTROL VEGETATIVE PRACTICES.

NOTE:
Pipe perforations are to be per detail shown.
Perforated pipe to be wrapped with filter cloth and covered with #2 stone for a minimum depth of 6" around and over pipe.
See vertical draw-down device detail this sheet for additional installation information and pipe specifications.

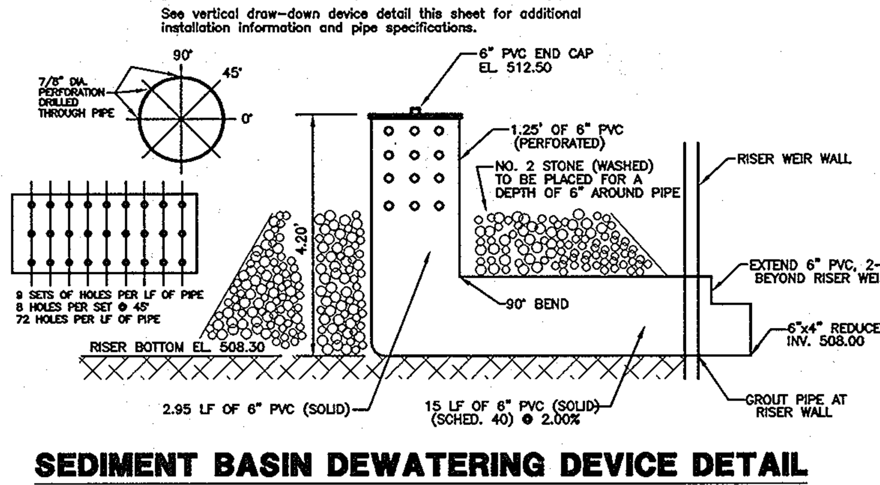

SEDIMENT BASIN DEWATERING DEVICE DETAIL

N.T.S.

BASIN DRAWDOWN SCHEMATIC VERTICAL DRAW-DOWN DEVICE

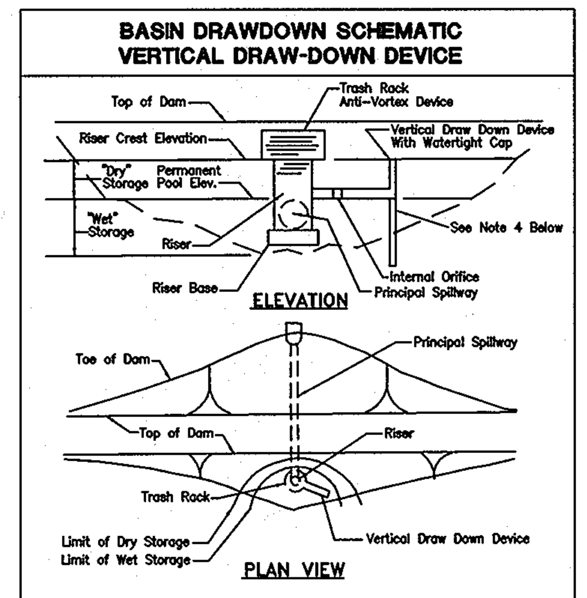

CONSTRUCTION SPECIFICATIONS

1. Perforations in the draw-down device may not extend into the wet storage.
2. The total area of the perforations must be greater than 2 times the area of the internal orifice.
3. The perforated portion of the draw-down device shall be wrapped with 1/2" hardware cloth and geotextile fabric. The geotextile fabric shall meet the specifications for for Geotextile Class E.
4. Provide support of draw-down device to prevent sagging and floatation. An acceptable preventative measure is to stake both sides of draw-down device with 1" steel angle, or by 1" by 4" square or 2" round wooden posts set 3" minimum into the ground then joining them to the device by wrapping with 12 gauge minimum wire.

U.S. DEPARTMENT OF AGRICULTURE SOIL CONSERVATION SERVICE | PAGE C-10-30 | MARYLAND DEPARTMENT OF ENVIRONMENT WATER MANAGEMENT ADMINISTRATION

DETAIL 1 - EARTH DIKE

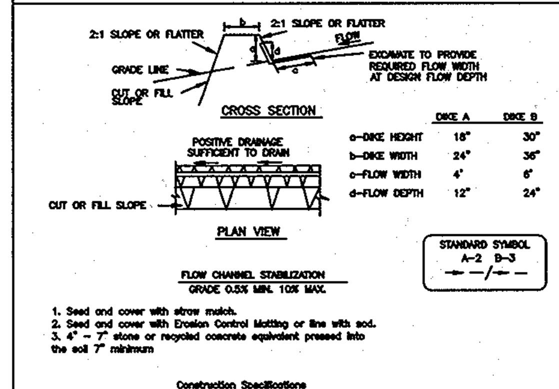

1. Seed and cover with straw mulch.
2. Seed and cover with Erosion Control Matting or line with sod.
3. 4" - 7" stone or recycled concrete equivalent pressed into the soil 7" minimum

Construction Specifications

1. All temporary earth dikes shall have uninterrupted positive grade to an outlet. Spot elevations may be necessary for grades less than 1%.
2. Runoff diverted from a disturbed area shall be conveyed to a sediment trapping device.
3. Runoff diverted from an undisturbed area shall outlet directly into an undisturbed, stabilized area at a non-erosive velocity.
4. All trees, brush, stumps, obstructions, and other objectional material shall be removed and disposed of so as not to interfere with the proper functioning of the dike.
5. The dike shall be excavated or shaped to line, grade and cross section as required to meet the criteria specified herein and be free of bank projections or other irregularities which will impede normal flow.
6. Fill shall be compacted by earth moving equipment.
7. All earth removed and not needed for construction shall be placed so that it will not interfere with the functioning of the dike.
8. Inspection and maintenance must be provided periodically and after each rain event.

U.S. DEPARTMENT OF AGRICULTURE SOIL CONSERVATION SERVICE | PAGE A-1-6 | MARYLAND DEPARTMENT OF ENVIRONMENT WATER MANAGEMENT ADMINISTRATION

DETAIL 33 - SUPER SILT FENCE

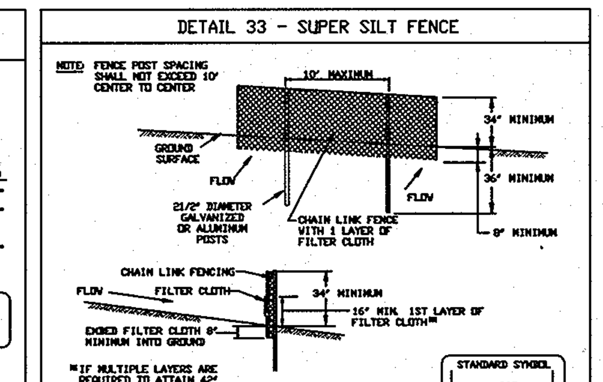

Construction Specifications

1. Fencing shall be 42" in height and constructed in accordance with the latest Maryland State Highway Details for Chain Link Fencing. The specification for a 6' fence shall be used, substituting 42" fabric and 6' length posts.
2. Chain link fence shall be fastened securely to the fence posts with wire ties. The lower tension wire, brace and truss rods, drive anchors and post caps are not required except on the ends of the fence.
3. Filter cloth shall be fastened securely to the chain link fence with ties spaced every 24" at the top and mid section.
4. Filter cloth shall be embedded a minimum of 8" into the ground.
5. When two sections of filter cloth adjoin each other, they shall be overlapped by 6" and folded.
6. Maintenance shall be performed as needed and silt buildups removed when "bulges" develop in the silt fence, or when silt reaches 50% of fence height.
7. Filter cloth shall be fastened securely to each fence post with wire ties or staples at top and mid section and shall meet the following requirements for Geotextile Class F:

Tensile Strength	50 lbs/in (min.)	Test: MSMT 509
Tensile Modulus	20 lbs/in (min.)	Test: MSMT 509
Flow Rate	0.3 gal/ft²/minute (max.)	Test: MSMT 322
Filtering Efficiency	75% (min.)	Test: MSMT 322

U.S. DEPARTMENT OF AGRICULTURE SOIL CONSERVATION SERVICE | PAGE H-26-3 | MARYLAND DEPARTMENT OF ENVIRONMENT WATER MANAGEMENT ADMINISTRATION

DETAIL 33 - SUPER SILT FENCE

Design Criteria

Slope	Slope Steepness	Slope Length (maximum)	Silt Fence Length (maximum)
0 - 10%	0 - 10:1	Unlimited	Unlimited
10 - 20%	10:1 - 5:1	200 Feet	1,500 Feet
20 - 33%	5:1 - 3:1	100 Feet	1,000 Feet
33 - 50%	3:1 - 2:1	100 Feet	500 Feet
50% +	2:1 +	50 Feet	250 Feet

U.S. DEPARTMENT OF AGRICULTURE SOIL CONSERVATION SERVICE | PAGE H-26-3A | MARYLAND DEPARTMENT OF ENVIRONMENT WATER MANAGEMENT ADMINISTRATION

DETAIL 24 - STABILIZED CONSTRUCTION ENTRANCE

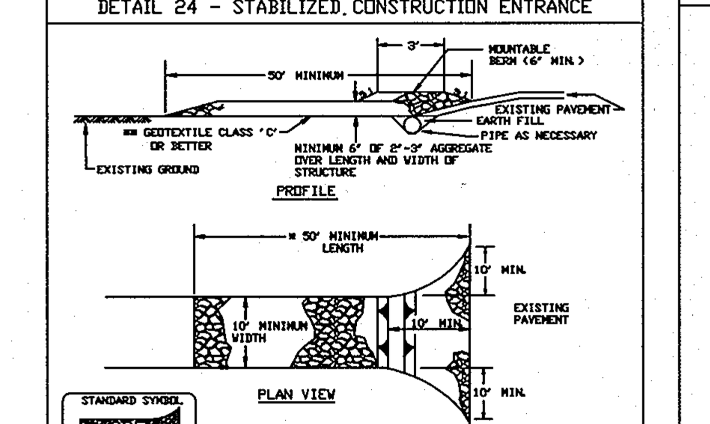

Construction Specification

1. Length - minimum of 50' (*30' for single residence lot).
2. Width - 10' minimum, should be flared at the existing road to provide a turning radius.
3. Geotextile fabric (filter cloth) shall be placed over the existing ground prior to placing stone. **The plan approval authority may not require single family residences to use geotextile.
4. Stone - crushed aggregate (2" to 3") or reclaimed or recycled concrete equivalent shall be placed at least 6" deep over the length and width of the entrance.
5. Surface Water - all surface water flowing to or diverted toward construction entrances shall be piped through the entrance, maintaining positive drainage. Pipe installed through the stabilized construction entrance shall be protected with a mountable berm with 5:1 slopes and a minimum of 6" of stone over the pipe. Pipe has to be sized according to the drainage. When the SCE is located at a high spot and has no drainage to convey a pipe will not be necessary. Pipe should be sized according to the amount of runoff to be conveyed. A 6" minimum will be required.
6. Location - A stabilized construction entrance shall be located at every point where construction traffic enters or leaves a construction site. Vehicles leaving the site must travel over the entire length of the stabilized construction entrance.

U.S. DEPARTMENT OF AGRICULTURE SOIL CONSERVATION SERVICE | PAGE F-17-3 | MARYLAND DEPARTMENT OF ENVIRONMENT WATER MANAGEMENT ADMINISTRATION

DETAIL 20A - REMOVABLE PUMPING STATION

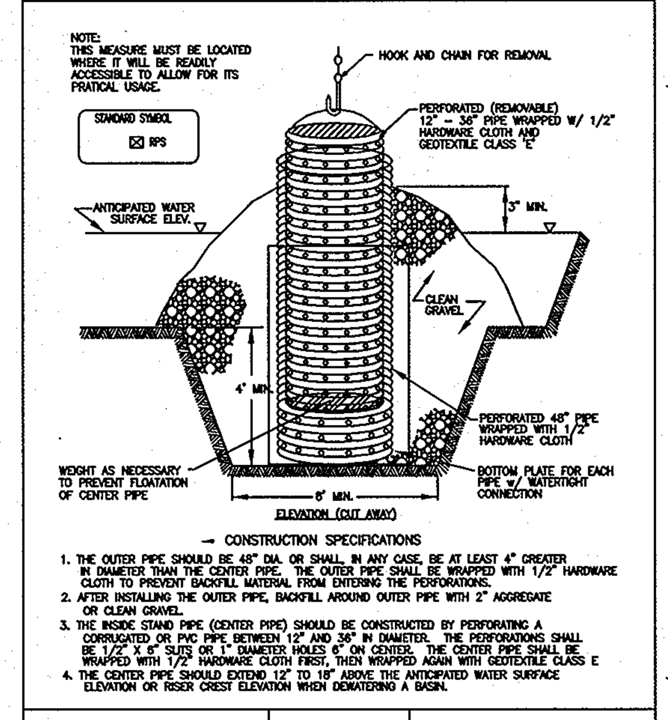

CONSTRUCTION SPECIFICATIONS

1. THE OUTER PIPE SHOULD BE 48" DIA. OR SHALL, IN ANY CASE, BE AT LEAST 4" GREATER IN DIAMETER THAN THE CENTER PIPE. THE OUTER PIPE SHALL BE WRAPPED WITH 1/2" HARDWARE CLOTH TO PREVENT BACKFILL MATERIAL FROM ENTERING THE PERFORATIONS.
2. AFTER INSTALLING THE OUTER PIPE, BACKFILL AROUND OUTER PIPE WITH 2" AGGREGATE OR CLEAN GRAVEL.
3. THE INSIDE STAND PIPE (CENTER PIPE) SHOULD BE CONSTRUCTED BY PERFORATING A CORRUGATED OR PVC PIPE BETWEEN 12" AND 36" IN DIAMETER. THE PERFORATIONS SHALL BE 1/2" X 6" SLITS OR 1" DIAMETER HOLES 6" ON CENTER. THE CENTER PIPE SHALL BE WRAPPED WITH 1/2" HARDWARE CLOTH FIRST, THEN WRAPPED AGAIN WITH GEOTEXTILE CLASS E
4. THE CENTER PIPE SHOULD EXTEND 12" TO 18" ABOVE THE ANTICIPATED WATER SURFACE ELEVATION OR RISER CREST ELEVATION WHEN DEWATERING A BASIN.

U.S. DEPARTMENT OF AGRICULTURE SOIL CONSERVATION SERVICE | PAGE D-12-5 | MARYLAND DEPARTMENT OF ENVIRONMENT WATER MANAGEMENT ADMINISTRATION

DETAIL 5 - RIP-RAP INFLOW PROTECTION

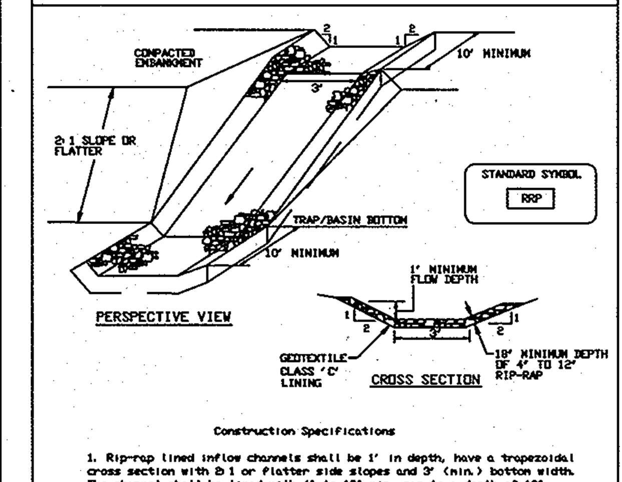

Construction Specifications

1. Rip-rap lined inflow channels shall be 1' in depth, have a trapezoidal cross section with 2:1 or flatter side slopes and 3' (min.) bottom width. The channel shall be lined with 4" to 12" rip- rap to a depth of 18".
2. Filter cloth shall be installed under all rip-rap. Filter cloth shall be Geotextile Class C.
3. Entrance and exit sections shall be installed as shown on the detail section.
4. Rip-rap used for the lining may be recycled for permanent outlet protection if the basin is to be converted to a stormwater management facility.
5. Gabion Inflow Protection may be used in lieu of Rip-rap Inflow Protection.
6. Rip-rap should blend into existing ground.
7. Rip-rap Inflow Protection shall be used where the slope is between 4:1 and 10:1, for slopes flatter than 10:1 use Earth Dike or Temporary Swale lining criteria.

U.S. DEPARTMENT OF AGRICULTURE SOIL CONSERVATION SERVICE | PAGE B-6-2 | MARYLAND DEPARTMENT OF ENVIRONMENT WATER MANAGEMENT ADMINISTRATION

DETAIL 18 - SEDIMENT BASIN BAFFLES

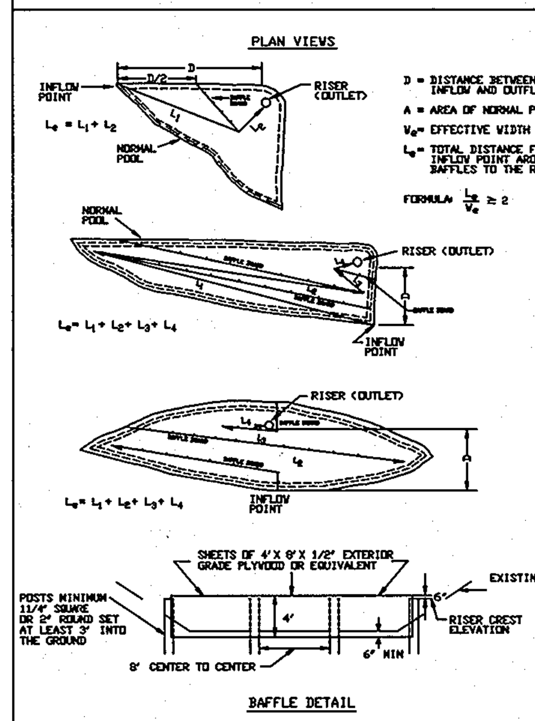

U.S. DEPARTMENT OF AGRICULTURE SOIL CONSERVATION SERVICE | PAGE C-18-28 | MARYLAND DEPARTMENT OF ENVIRONMENT WATER MANAGEMENT ADMINISTRATION

SEQUENCE OF CONSTRUCTION

1.	OBTAIN ALL NECESSARY PERMITS. CONTACT THE HOWARD COUNTY OFFICE OF INSPECTIONS AT LEAST 48 HOURS PRIOR TO BEGINNING ANY WORK.	1 DAY
2.	CLEAR AND GRUB FOR INSTALLATION OF SEDIMENT CONTROLS ONLY.	5 DAYS
3.	INSTALL ALL PERIMETER SEDIMENT AND EROSION CONTROL DEVICES AS SHOWN ON SEDIMENT CONTROL PLAN.	5 DAYS
4.	INSTALL SWM FACILITY PER SWM PLAN AND DETAILS. MODIFY SWM RISER STRUCTURE PER DETAILS SHOWN ON THIS SHEET.	15 DAYS
5.	WITH GRADING INSPECTOR'S APPROVAL, CLEAR AND GRUB AREAS FOR GRADING. BEGIN GRADING FOR BUILDING & PARKING AREAS. PROVIDE TEMPORARY STABILIZATION AS REQUIRED.	30 DAYS
6.	BEGIN BUILDING CONSTRUCTION.	180 DAYS
7.	INSTALL PAVING, STORM DRAIN, AND UTILITY SERVICES.	30 DAYS
8.	FINAL GRADE SITE AND PROVIDE PERMANENT STABILIZATION.	5 DAYS
9.	INSTALL SAND FILTER PER SWM PLAN.	10 DAYS
10.	WITH THE SEDIMENT CONTROL INSPECTOR'S APPROVAL, CONVERT SEDIMENT BASIN TO SWM FACILITY.	10 DAYS
11.	PERMANENTLY STABILIZE ANY REMAINING DISTURBED AREAS.	5 DAYS
12.	WITH THE SEDIMENT CONTROL INSPECTOR'S APPROVAL, REMOVE ALL REMAINING SEDIMENT CONTROLS AND STABILIZE ANY REMAINING DISTURBED AREAS.	2 DAYS

DETAIL 22 - SILT FENCE

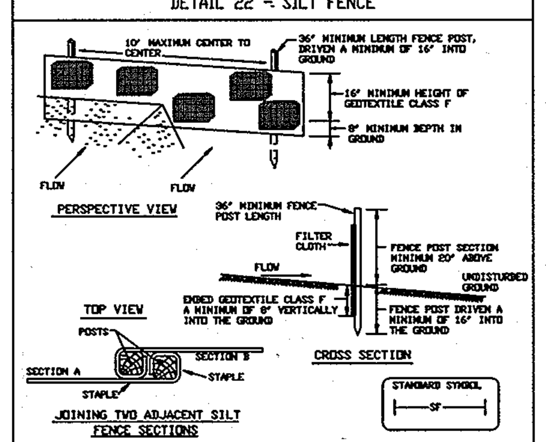

Construction Specifications

1. Fence posts shall be a minimum of 36" long driven 16" minimum into the ground. Wood posts shall be 1 1/2" x 1 1/2" square (minimum) cut, or 1 3/4" diameter (minimum) round and shall be of sound quality hardwood. Steel posts will be standard T or U section weighting not less than 1.00 pond per linear foot.
2. Geotextile shall be fastened securely to each fence post with wire ties or staples at top and mid-section and shall meet the following requirements for Geotextile Class F:

Tensile Strength	50 lbs/in (min.)	Test: MSMT 509
Tensile Modulus	20 lbs/in (min.)	Test: MSMT 509
Flow Rate	0.3 gal ft²/ minute (max.)	Test: MSMT 322
Filtering Efficiency	75% (min.)	Test: MSMT 322

3. Where ends of geotextile fabric come together, they shall be overlapped, folded and stapled to prevent sediment bypass.
4. Silt Fence shall be inspected after each rainfall event and maintained when bulges occur or when sediment accumulation reached 50% of the fabric height.

U.S. DEPARTMENT OF AGRICULTURE SOIL CONSERVATION SERVICE | PAGE E-15-3 | MARYLAND DEPARTMENT OF ENVIRONMENT WATER MANAGEMENT ADMINISTRATION

SILT FENCE

Silt Fence Design Criteria

Slope Steepness	(Maximum) Slope Length	(Maximum) Silt Fence Length
Flatter than 50:1	unlimited	unlimited
50:1 to 10:1	125 feet	1,000 feet
10:1 to 5:1	100 feet	750 feet
5:1 to 3:1	60 feet	500 feet
3:1 to 2:1	40 feet	250 feet
2:1 and steeper	20 feet	125 feet

Note: In areas of less than 2% slope and sandy soils (USDA general classification system, soil Class A) maximum slope length and silt fence length will be unlimited. In these areas a silt fence may be the only perimeter control required.

U.S. DEPARTMENT OF AGRICULTURE SOIL CONSERVATION SERVICE | PAGE E-15-3A | MARYLAND DEPARTMENT OF ENVIRONMENT WATER MANAGEMENT ADMINISTRATION

REVIEWED FOR HOWARD S.C.D. AND MEETS TECHNICAL REQUIREMENTS.

Jim Myers / CS. 8/6/03
U.S.D.A.-NATURAL RESOURCES CONSERVATION SERVICE — DATE

THIS DEVELOPMENT PLAN IS APPROVED FOR SOIL EROSION AND SEDIMENT CONTROL BY THE HOWARD SOIL CONSERVATION DISTRICT.

8/6/03
HOWARD S.C.D. — DATE

APPROVED: FOR ~~PUBLIC OR~~ PRIVATE WATER & ~~PUBLIC OR~~ PRIVATE SEWERAGE SYSTEMS

Penny Borenstein MD/mi F.S. 8-8-03
COUNTRY HEALTH OFFICER — DATE
HOWARD COUNTY HEALTH DEPARTMENT

APPROVED: DEPARTMENT OF PLANNING AND ZONING

8/5/03
CHIEF, DEVELOPMENT ENGINEERING DIVISION MK — DATE

Cindy Hamilton 8/12/03
CHIEF, DIVISION OF LAND DEVELOPMENT HB — DATE

8/12/03
DIRECTOR, DEPARTMENT OF PLANNING AND ZONING — DATE

DETAIL 30 - EROSION CONTROL MATTING

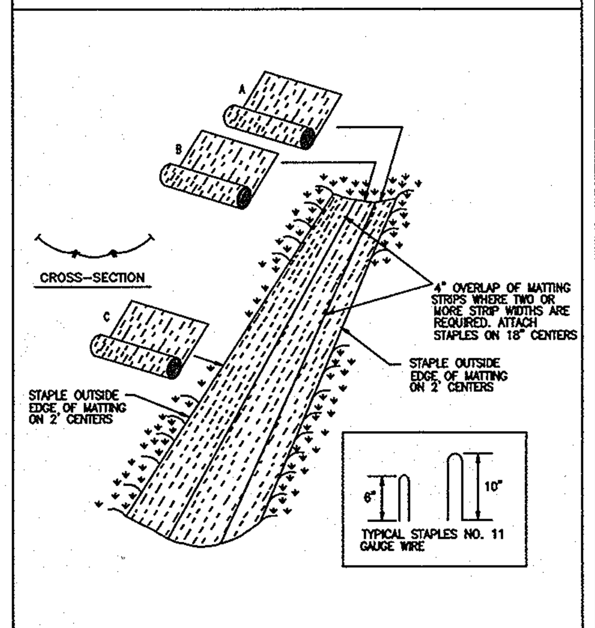

U.S. DEPARTMENT OF AGRICULTURE SOIL CONSERVATION SERVICE | PAGE G-22-2 | MARYLAND DEPARTMENT OF ENVIRONMENT WATER MANAGEMENT ADMINISTRATION

EROSION CONTROL MATTING

CONSTRUCTION SPECIFICATIONS

1. KEY-IN THE MATTING BY PLACING THE TOP ENDS OF THE MATTING IN A NARROW TRENCH, 6" IN DEPTH. BACKFILL THE TRENCH AND TAMP FIRMLY TO CONFORM TO THE CHANNEL CROSS-SECTION. SECURE WITH A ROW OF STAPLES ABOUT 4" DOWN SLOPE FROM THE TRENCH. SPACING BETWEEN STAPLES IS 6".
2. STAPLE THE 4" OVERLAP IN THE CHANNEL CENTER USING AN 18" SPACING BETWEEN STAPLES.
3. BEFORE STAPLING THE OUTER EDGES OF THE MATTING, MAKE SURE THE MATTING IS SMOOTH AND IN FIRM CONTACT WITH THE SOIL.
4. STAPLES SHALL BE PLACED 2' APART WITH 4 ROWS FOR EACH STRIP, 2 OUTER ROWS, AND 2 ALTERNATING ROWS DOWN THE CENTER.
5. WHERE ONE ROLL OF MATTING ENDS AND ANOTHER BEGINS, THE END OF THE TOP STRIP SHALL OVERLAP THE UPPER END OF THE LOWER STRIP BY 4", SHIPLAP FASHION. REINFORCE THE OVERLAP WITH A DOUBLE ROW OF STAPLES SPACED 6" APART IN A STAGGERED PATTERN ON EITHER SIDE.
6. THE DISCHARGE END OF THE MATTING LINER SHOULD BE SIMILARLY SECURED WITH 2 DOUBLE ROWS OF STAPLES.

NOTE: IF FLOW WILL ENTER FROM THE EDGE OF THE MATTING THEN THE AREA EFFECTED BY THE FLOW MUST BE KEYED-IN.

U.S. DEPARTMENT OF AGRICULTURE SOIL CONSERVATION SERVICE | PAGE G-22-2A | MARYLAND DEPARTMENT OF ENVIRONMENT WATER MANAGEMENT ADMINISTRATION

ROCK OUTLET PROTECTION I

Construction Specifications

1. The subgrade for the filter, rip-rap, or gabion shall be prepared to the required lines and grades. Any fill required in the subgrade shall be compacted to a density of approximately that of the surrounding undisturbed material.
2. The rock or gravel shall conform to the specified grading limits when installed respectively in the rip-rap or filter.
3. Geotextile shall be protected from punching, cutting, or tearing. Any damage other than an occasional small hole shall be repaired by placing another piece of geotextile over the damaged part or by completely replacing the geotextile. All overlaps whether for repairs or for joining two pieces of geotextile shall be a minimum of one foot.
4. Stone for the rip-rap or gabion outlets may be placed by equipment. They shall be constructed to the full course thickness in one operation and in such a manner as to avoid displacement of underlying materials. The stone for rip-rap or gabion outlets shall be delivered and placed in a manner that will ensure that it is reasonably homogeneous with the smaller stones and spalls filling the voids between the larger stones. Rip-rap shall be placed in a manner to prevent damage to the filter blanket or geotextile. Hand placement will be required to the extent necessary to prevent damage to the permanent works.
5. The stone shall be placed so that it blends in with the existing ground. If the stone is placed too high then the flow will be forced out of the channel and scour adjacent to the stone will occur.

U.S. DEPARTMENT OF AGRICULTURE SOIL CONSERVATION SERVICE | PAGE F-18-8A | MARYLAND DEPARTMENT OF ENVIRONMENT WATER MANAGEMENT ADMINISTRATION

DETAIL 25 - ROCK OUTLET PROTECTION I

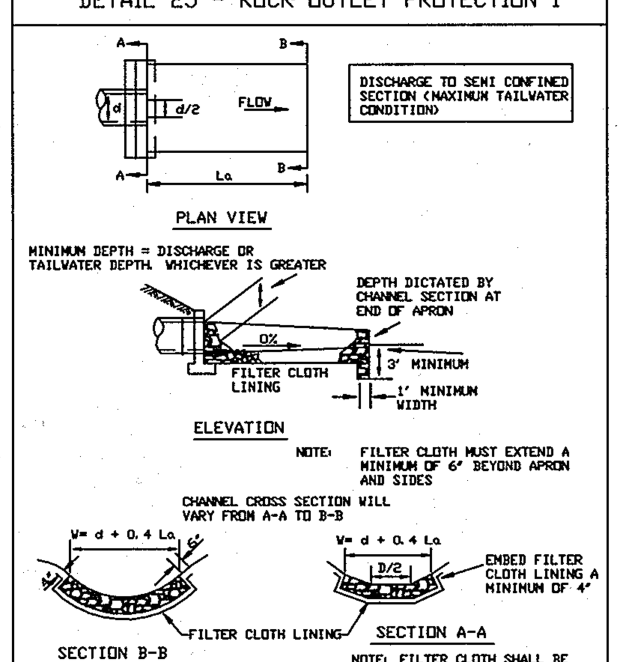

U.S. DEPARTMENT OF AGRICULTURE SOIL CONSERVATION SERVICE | PAGE F-18-8 | MARYLAND DEPARTMENT OF ENVIRONMENT WATER MANAGEMENT ADMINISTRATION

NOTE: THIS DETAIL IS FOR SEDIMENT CONTROL PURPOSES ONLY. REFER TO SWM DETAIL SHEETS FOR ALL RISER CONSTRUCTION DETAILS.

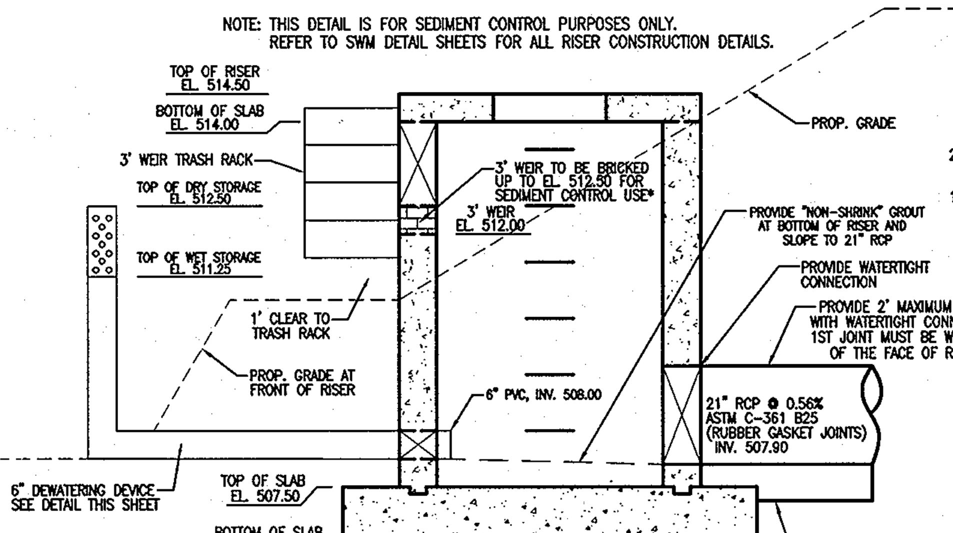

SEDIMENT BASIN RISER OPENING DETAIL

SCALE: N.T.S.

*ONCE ALL UPSTREAM AREAS ARE STABILIZED, SEDIMENT BASIN IS TO BE DEWATERED. ALL ACCUMULATED SEDIMENT IS TO BE REMOVED & POND BOTTOM IS TO BE STABILIZED. REMOVE BRICK FROM 3' WEIR. REMOVE TEMP. DEWATERING DEVICE & REPLACE WITH SWM DEWATERING DEVICE PER DETAIL SHOWN ON SWM DETAIL SHEET.

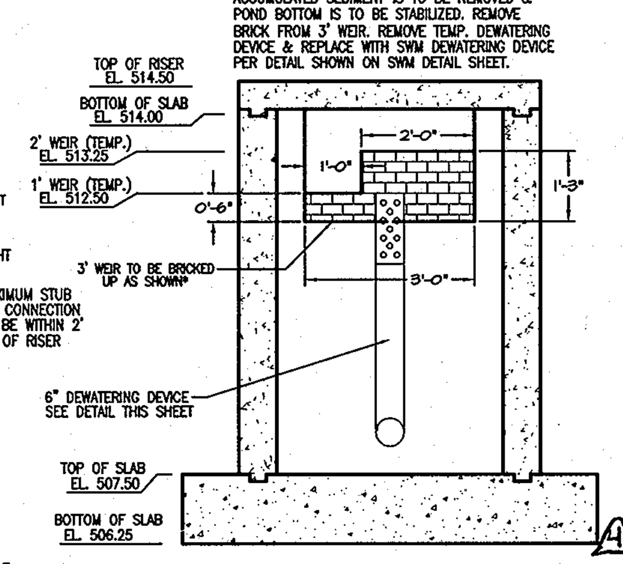

SEDIMENT BASIN RISER OPENING DETAIL

SCALE: N.T.S.

MORRIS & RITCHIE ASSOCIATES, INC.
ENGINEERS, PLANNERS, SURVEYORS AND LANDSCAPE ARCHITECTS
9090 JUNCTION DRIVE, SUITE 9
ANNAPOLIS JUNCTION, MARYLAND 20701
(410) 792-9792 or (301) 776-1690
FAX (410) 792-7395

THE GLENELG COUNTRY SCHOOL PROPOSED UPPER SCHOOL ADDITION

SEDIMENT CONTROL DETAILS

TAX MAP 22 GRID 22 PARCEL 146
LIBER 1296 FOLIO 245
FIFTH (5TH) ELECTION DISTRICT
HOWARD COUNTY, MARYLAND

7/15/03

DATE	REVISIONS	
07/12	TRACK AND SYNTHETIC FIELD IMPROVEMENTS	JOB NO.: 12189.02
		SCALE: N.T.S.
		DATE: 07/14/03
		DRAWN BY: TCN
		DESIGN BY: TCN
		REVIEW BY: TCN
		SHEET: 12 OF ~~28~~ 37

SDP-03-84

GEO-TECHNOLOGY ASSOCIATES, INC.

GEOTECHNICAL AND
ENVIRONMENTAL CONSULTANTS

A Practicing ASFE Member Firm

December 17, 2002

Gould Property Company
1336 South Hanover Street
Baltimore, MD 21230

Attn: Mr. Joel Cherington

Re: Stormwater Management Pond
Glenelg Country School
Howard County, Maryland

Gentlemen:

Upon your request, Geo-Technology Associates, Inc. (GTA) has performed a preliminary geotechnical exploration for a proposed Stormwater Management (SWM) facility located at the Glenelg School. The scope of this exploration included four Standard Penetration Test (SPT) Borings in the SWM pond location and one boring in the vicinity of the proposed tank excavation. Limited laboratory testing was performed on samples recovered from the borings. Recommendations based on engineering analysis of the field and laboratory data are included herein.

Proposed Construction

According to the Site Grading Plan, dated 10/15/02, prepared by Morris & Ritchie Associates, Inc. (MRA), the project civil engineer, the proposed SWM pond will be located to the southeast of the proposed school/gymnasium addition. The proposed facility will consist of an excavated basin with an earth embankment with a clay cut-off trench, and a reinforced concrete riser and outfall to control releases. In addition, an excavated pretreatment basin with a sand filter will be constructed to the northwest of the SWM pond. The proposed outfall will drain into a wooded area along the southeastern property boundary. The pond will predominantly be constructed by excavating to the planned pond bottom elevation of 510 feet above MSL and to the bottom of recharge facility elevation of 504 feet above MSL. Approximately 5 feet of fill will be required along the southeastern embankment to establish the proposed elevation of 516 feet above MSL.

In addition, excavations on the order of 10 to 16 feet deep will be required in the northern portion of the site for the installation of three pretreatment tanks and a pumping station associated with the proposed sewage treatment system. Based on information provided by MRA, the pretreatment tanks will be 6-foot diameter reinforced fiberglass tanks. The lowest planned invert elevation of the pretreatment tanks will be 522.8 feet above MSL (approximately 10 feet below existing grades) and the bottom of slab elevation of the proposed pumping station will be

approximately 516.5 feet above MSL. An additional pumping station is planned to the east of the proposed gymnasium addition. The planned bottom of slab elevation of this pumping station is 496.5 feet above MSL, which is approximately 24.5 feet below the existing surface grade at this location.

Site Conditions

The Glenelg Country School is located in Howard County, and is accessed from Folly Quarter Road, approximately one mile east of Route 32. A Site Location Map is included as Figure 1 in Appendix A. At the proposed pond location, the terrain is open and gently sloping, with drainage generally in the southeasterly direction. Surface drainage is toward a minor tributary of the Patuxent River. Existing surface grades in the proposed location of the SWM facilities vary from approximately 520 feet above Mean Sea Level (MSL) in the northern portion of the sand filter pretreatment area to approximate elevation 510 feet above MSL in the near the proposed outfall pipe location.

Site Geology

According to the Geologic Map of Maryland (1968) and the Geologic Map of Howard County (1993), the site is mapped within the Piedmont Physiographic Province, which is characterized by metamorphic rock formations. More specifically, the site is underlain by the Baltimore Gneiss and Setters Formation, which consist of tan to dark gray, fine- to coarse-grained banded and schistose gneiss. These rocks generally decompose to coarse to fine sand, with significant silt, clay and micaceous fractions in some instances. The geologic publication references inclusions of amphibolite and hornblende, which generally weather into clay-rich soils. Differential weathering is common, and as a result, the formation is characterized by irregular rock profiles. Typical Piedmont rocks weather into a saprolite of variable thickness, underlain by less weathered and then relatively sound rock. For further details regarding this geologic unit, please refer to the above-referenced publications.

Subsurface Exploration

Four SPT borings, referenced as SWM-1 through SWM-4, were drilled to the planned depth of 15 to 20 feet in the proposed pond area and one boring, referenced as T-1, was drilled to a depth of 25 feet in the vicinity of the sewer pretreatment tanks. The boring locations were selected and field located by MRA by an instrumented survey. The approximate test boring locations are indicated on the Soil Boring Exhibit provided as Figure 2 in Appendix A. The Soil Boring Exhibit is an altered reproduction of the referenced plan prepared by MRA.

The borings were drilled with an ATV-mounted drill rig, which utilizes a hollow-stem auger to advance the boring, and a split-spoon sampler to provide soil specimens and the SPT 'N' value. SPT testing was performed and soil samples were taken at approximate 2.5-foot intervals in the upper ten feet of each boring and at 5-foot intervals thereafter. Water levels and cave-in depths were measured at the completion of drilling and approximately 24 hours thereafter. Samples recovered from the borings were transported to GTA's laboratory for visual classification and limited testing. Classifications as provided on the logs are visual, supplemented by available laboratory test results. A generalized subsurface profile is included as Figure 3 within Appendix A.

GTA was requested by MRA to address infiltration feasibility at the proposed location of the sand filter. Therefore, an in-situ infiltration test was performed in the vicinity of Test Boring SWM-4. The infiltration test consists of measuring the drop in water level within a solid 5-inch PVC pipe for a period of 4 hours subsequent to a 24-hour pre-soak. The PVC pipes were set at a depth of approximately 12 feet below existing grade in the approximate location of SWM-4.

Subsurface Conditions

The borings generally confirm the description of materials in the Site Geology section of this report. Beneath a topsoil layer, approximately 5 inches thick, at the boring locations, the subsoils were predominantly residual, medium to fine sand and silt, with varying amounts of mica, clay, rock and weathered rock fragments. Quartz and rock fragments were observed at various depths within several of the borings. The native residual soils were visually classified predominantly as SM, ML and CL in accordance with the Unified Soil Classification System (USCS) and as A-2-4, A-4 and A-6 in accordance with the American Association of State Highway and Transportation Officials (AASHTO) classification system. Soils classified as CL, where encountered, were generally confined to within 2 to 4 feet of the ground surface.

The on-site, residual soils were generally characterized as loose to medium dense, based on SPT 'N' values ranging from approximately 4 to 27 blows per foot (bpf). Materials sufficiently dense to impede advancement of the augers or split spoons were not encountered in any of the borings.

Groundwater was encountered within Test Borings SWM-2, SWM-3 and SWM-4 during drilling at depths of approximately 14 to 19 feet below existing grades and was observed within Test Borings SWM-3 and SWM-4 at the completion of drilling at depths of 11.7 and 12.7 feet, respectively. In addition, groundwater was present in Test Borings SWM-3 and SWM-4 approximately 24 hours after completion, at depths of 8.4 and 13.0 feet, respectively. The remainder of the borings were observed to be dry to their cave-in depths which ranged from approximately 10.7

to 16.6 feet below existing grades 24 hours after the completion of drilling. The observed groundwater levels correspond to approximate elevations 497.2 to 503.5 feet above MSL in the SWM areas. Groundwater elevations may fluctuate several feet due to seasonal changes in precipitation, and may change as a result of development activities.

Borehole infiltration testing was performed in the proposed sand filter location (Test Boring SWM-4) at a depth of 12 feet below existing surface grades. Less than 0.01 foot of movement in the water level within the pipe was observed during the 4-hour infiltration. These results are indicative of a negligible infiltration rate.

Please see the idealized subsurface profile in Appendix A, the boring logs included in Appendix B, and the laboratory test results included as Appendix C for further details. The laboratory test results are also summarized in subsequent sections of this report.

Laboratory Tests

Samples recovered from the borings were submitted for limited laboratory analysis, including natural moisture content determination, grain-size analyses, plasticity testing, and moisture-density relationships.

Natural moisture contents of the soil samples tested ranged from 15.1 to 30.7 percent, with higher moisture contents generally observed in the more fine-grained soils. Two samples were classified in accordance with the USCS and AASHTO classification system. In addition, hydrometer testing was performed on the sample obtained from Test Boring SWM-4 to provide classification in accordance with the United States Department of Agriculture (USDA) classification system. The results of the testing are summarized in the following table.

TABLE A
SUMMARY OF LABORATORY DATA

Boring No.	Depth (ft)	Liquid Limit	Plastic Index	AASHTO Classification	USCS Classification	USDA Classification	Natural Moisture (%)
SWM-2	2.5-4.0	NP*	NP	A-4	SM	---	27.1
SWM-4	13.5-15.0	NP	NP	A-2-4	SM	Loamy Sand	20.0

*NP = Non-Plastic Soils

The bulk sample of sand and silt recovered from Test Boring SWM-2 was submitted for moisture-density relationship testing in accordance with the Modified Proctor (ASTM D-1557) Test. The results of the testing are summarized in the following table.

Boring No.	Depth (ft.)	Natural Moisture (%)	Maximum Dry Density (pcf)	Optimum Moisture (%)	AASHTO Classification
SWM-2	2.0 – 7.0	27.1	111.9	14.5	A-4

Please see the laboratory data sheets included in Appendix C for further details.

Conclusions and Recommendations

Based on the results of this exploration, it is our opinion that construction of the proposed facility is feasible, given that the following recommendations are observed, and that the standard level of care is maintained during construction. The presence of groundwater could potentially impact the installation of the proposed pumping stations and the construction of the sand filter and recharge facility. GTA understands that Maryland Specification 378 (MD 378), as accepted by Howard County governs design and construction of this facility.

1. Site Grading and Pond Construction

Based on the referenced pond drawings, excavation of up to 5 feet will be required to achieve the proposed basin bottom elevation and excavations on the order of 12 feet will be required to establish the proposed bottom elevation of the sand filter/recharge facility. Fills approaching 5 feet will be required to achieve the proposed embankment top elevation of 516 feet above MSL. Based on boring data and review of the referenced plans, excavation of the basin can generally be accomplished by standard means using standard excavation equipment. Although not likely, potential exists for very dense weathered/unweathered rock to be encountered in localized areas of excavations due to differential weathering.

Groundwater was observed in several of the borings in the vicinity of the proposed SWM pond, at elevations ranging from approximately 497.2 to 503.5 feet above MSL. Therefore, groundwater will not likely be encountered above the proposed basin elevation of 510 feet above MSL or the bottom of the recharge facility elevation of 504 feet above MSL. Similarly, the proposed invert elevation of the main outfall pipe ranges from approximately 507 to 508 feet above MSL, which is above the groundwater encountered in this area. However, depending upon the construction season, localized groundwater may be encountered in the excavations required for the construction of the sand filter/recharge facility or for installation of the outfall pipe. Therefore, dewatering of the excavations required for the recharge facility and the outfall structure may be required. However, this is not anticipated to be required on a widespread basis.

Bare slopes composed of the predominant sandy soils are subject to erosion. Proposed slopes should be maintained at a ratio of three horizontal to one vertical, and protected until vegetation is established.

Prior to the placement of compacted fill or the construction of the outfall cradle and structures, areas supporting proposed embankments and structures should be stripped and grubbed to remove all topsoil and other organic matter. After stripping, the subgrade should be proof-rolled as directed by a geotechnical engineer or his qualified representative. Unstable soils identified by proofrolling should be removed from subgrade. No fills should be placed constructed until the subgrade is approved by the geotechnical engineer.

Fills for cutoff trench and embankment construction should be placed in eight-inch loose lifts, and compacted to at least 95 percent of the maximum dry density in accordance with the Standard Proctor, ASTM D-698. Fills around the outfall works should be placed in 4-inch lifts and compacted to the same standard with hand equipment. Based on laboratory analysis, on-site soils are likely to be wet of the optimum moisture for compaction, and moisture conditioning may be required. Compactive effort should be monitored with in-place density testing as performed by a qualified representative under the direction of a professional engineer.

2. Material Requirements

MD 378 specifies that soils for use in cutoff trench construction meet USCS Classification CL (low plasticity clay), CH (high plasticity clay), SC (clayey sand), or GC (clayey gravel). Furthermore, GTA recommends that similar materials be used for backfill adjacent to the outfall structure. The use of the fine-grained or plastic material adjacent to the pipe should decrease the potential for embankment failure induced by "piping" erosion processes.

GTA's exploration identified native residual soils predominantly classified as USCS SM and ML, with CL classified soils in localized areas. Sufficient quantities of material suitable for cutoff trench construction are not likely to be present on site. A test pit exploration should be performed in an attempt to identify a sufficient quantity of appropriate on-site borrow materials prior to cutoff trench construction. If sufficient materials suitable for cutoff trench construction are not available on site, off-site borrow meeting the required classifications may be used. Any materials for use in the cut-off trench should be approved by GTA.

MD 378 specifies that all of the referenced soil classifications suitable for cutoff trench construction are also suitable for embankment construction. GTA recommends that the most plastic material available be used for embankment construction. Non-cohesive or very low plasticity silts, sandy soils or gravels may be prone to seepage, and are not recommended for use in embankment construction.

3. Groundwater Recharge and Infiltration Techniques

GTA was requested by MRA to evaluate the feasibility of infiltration water quality techniques within Test Boring SWM-4, located in the proposed location of the sand filter. Guidelines adopted by the Maryland Department of Environment (MDE) recommend a vertical buffer of 2 to 4 feet between the infiltration invert and groundwater or rock. In addition, the minimum acceptable average infiltration rate as indicated by the borehole permeability test is 0.5 inch per hour. The following table provides a summary of conditions at each of the locations evaluated.

Boring #	Test Location	Average Infiltration Rate (in/hr)	Comments
SWM-4	Sand Filter	<0.01	Infiltration rate below 0.5 inches/hour at 12 feet. Infiltration techniques not considered suitable.

Based on the results of field and laboratory testing, infiltration stormwater management techniques are not considered feasible at the locations explored. Infiltration techniques are generally precluded due to the low infiltration rate observed within the in-situ test. In addition, the presence of groundwater within approximately 2 feet of the bottom of the recharge facility is not desirable for infiltration techniques.

4. Sewer Pump Stations and Pretreatment Tanks

GTA understands that an excavation approaching 10 feet below existing grades will be required to install the proposed sewer pretreatment tanks. Test Boring T-1 was performed in the vicinity of the proposed pretreatment tanks to a depth of approximately 25 feet below existing grades. Based on the results of this boring, this excavation can likely be performed using standard excavation equipment. Groundwater was not encountered in this boring during or at the completion of drilling. In addition, approximately 24 hours after completion of drilling, this boring was observed to be dry to the cave-in depth of 16.6 feet. Therefore, the required 10-foot deep excavation will not likely be impacted by the presence of groundwater.

Excavations on the order of 16 feet and 24.5 feet, respectively, below existing grades will be required for the installation of the proposed pumping stations to the north and east of the proposed gymnasium addition. While test borings were not specifically performed in the locations of these facilities, based on the results of the other test borings, it is anticipated that groundwater could be encountered at depths on the order of 10 to 15 feet below existing grades. Therefore, a potential exists for these excavations to extend below the groundwater level and groundwater may impact the installation of the pumping stations. The contractor should be prepared to dewater these excavations during the construction phase.

In addition, the pumping stations could potentially be founded below the groundwater table and, therefore, the foundation/slab of the proposed pumping stations may be subjected to permanent uplift pressures. The structures will also be subjected to hydrostatic and unbalanced earth pressures. The pumping stations should be designed and properly installed to resist the uplift and lateral pressures. Use of a relatively thick mat slab may be required to balance the uplift forces. In addition, the pumping stations should be waterproof and the joints properly sealed to provide watertight facilities.

LIMITATIONS

This report has been prepared for the exclusive use of Gould Property Company, in accordance with generally accepted geotechnical engineering practice. No other warranty, express or implied, is made.

The analysis and recommendations contained in this report are based on the data obtained from limited observation and testing of the surface materials. The test borings indicate soil conditions only at specific locations and times, and only to the depths penetrated. They do not necessarily reflect strata variations that may exist between the test boring locations. Consequently, the analysis and recommendations must be considered preliminary until the subsurface conditions can be verified by direct observation at the time of construction. If variations in subsurface conditions from those described are noted during construction, recommendations in this report may need to be re-evaluated.

In the event that any changes in the nature, design, or location of the facilities are planned, the conclusions and recommendations contained in this report should not be considered valid unless the changes are reviewed and conclusions of this report are verified in writing. Geo-Technology Associates, Inc. is not responsible for any claims, damages, or liability associated with interpretation of subsurface data or reuse of the subsurface data or engineering analysis without the express written authorization of Geo-Technology Associates, Inc.

In accordance with the guidelines of ASFE/The Association of Engineering firms Practicing in the Geosciences, it is recommended that Geo-Technology Associates, Inc. be retained to provide continuous soils engineering services for this project. Participation of GTA will facilitate compliance with GTA's recommendations, and allow changes to be made in these recommendations, in the event that subsurface conditions are found to vary from those anticipated prior to the start of construction.

This report and the attached logs are instruments of service. If certain conditions or items are noted during our investigation, Geo-Technology Associates, Inc. may be required by prevailing statutes to notify and provide information to regulatory or enforcement agencies. Geo-Technology Associates, Inc. will notify our Client should a required disclosure condition exist.

This report was prepared by Geo-Technology Associates, Inc. (GTA) for the sole and exclusive use of Geo-Technology Associates, Inc. and Gould Property Company. Use and reproduction of this report by any other person without the expressed written permission of GTA and Gould Property Company is unauthorized and such use is at the sole risk of the user.

Thank you for the opportunity to assist with this project. Should you have any questions or require additional information, please do not hesitate to contact our office.

Very truly yours,
GEO-TECHNOLOGY ASSOCIATES, INC.

Benjamin T. Dinsmore
Benjamin T. Dinsmore, E.I.T.
Staff Engineer

Ravi Malviya, P.E.
Associate

STATE OF MARYLAND — RAVI MALVIYA — No. 24602 — PROFESSIONAL ENGINEER

S:\VOB-FILE\A thru F\Glenelg-01238\Report\SWM2.doc
J.O# 01238.1

cc: Mr. Tim Madden - MRA

LOG OF BORING NO. SWM-1

Sheet 1 of 1

PROJECT: Glenelg Country School
PROJECT NO: 01238.1
PROJECT LOCATION: Howard County
DATE STARTED: December 2, 2002
DATE COMPLETED: December 2, 2002
DRILLING CONTRACTOR: GTA
DRILLER: GTA
DRILLING METHOD: HSA
SAMPLING METHOD: Split Spoon

WATER LEVEL: Dry / Dry
DATE: 12/02/02 / 12/03/02
CAVED (ft): 12.5 / 11.0
GROUND SURFACE ELEVATION: 514.5
DATUM: MSL
EQUIPMENT: CME 550
LOGGED BY: SL/DG
CHECKED BY:

Sample Number	Sample Depth (ft)	Sample Recovery (in)	Sample Blows/6 inches	N (blows/ft)	Elevation (ft)	USCS	Description	Remarks
1	0.0	14	2-3-3	6	514.5	CL	Light brown, moist, loose to medium dense, CLAY & SILT, some coarse to fine SAND. AASHTO: A-6	Topsoil: 5.0 in.
2	2.5	18	4-6-7	13	510.5			Water Not Encountered While Drilling.
3	5.0	18	5-6-6	12		SM	Orange-brown, moist to wet, loose to medium dense, coarse to fine SAND, some Silt, trace medium to fine Gravel. AASHTO: A-2-4	
4	8.5	18	5-6-6	12				
5	13.5	6	4-4-5	9	498.5		Bottom of Hole at 15.0 Feet.	

Coordinates: N: 578024.0 E: 1324336.0

NOTES:

GEO-TECHNOLOGY ASSOCIATES, INC. 9090 Junction Drive, Suite 9 Annapolis Junction, MD 20701 — LOG OF BORING NO. SWM-1 — Sheet 1 of 1

LOG OF BORING NO. SWM-2

Sheet 1 of 1

PROJECT: Glenelg Country School
PROJECT NO: 01238.1
PROJECT LOCATION: Howard County
DATE STARTED: December 2, 2002
DATE COMPLETED: December 2, 2002
DRILLING CONTRACTOR: GTA
DRILLER: GTA
DRILLING METHOD: HSA
SAMPLING METHOD: Split Spoon

WATER LEVEL: Dry / Dry
DATE: 12/02/02 / 12/03/02
CAVED (ft): 12.2 / 10.7
GROUND SURFACE ELEVATION: 513.2
DATUM: MSL
EQUIPMENT: CME 550
LOGGED BY: SL/DG
CHECKED BY:

Sample Number	Sample Depth (ft)	Sample Recovery (in)	Sample Blows/6 inches	N (blows/ft)	Elevation (ft)	USCS	Description	Remarks
1	0.0	12	3-3-4	7	513.2	SM	Brown, moist, loose, medium to fine SAND and SILT. AASHTO: A-4	Topsoil: 5.0 in.
2	2.5	18	3-2-3	5				Water Encountered at 15.0 Feet.
3	5.0	18	3-4-3	7				
4	8.5	18	2-2-3	5	501.2	ML	Gray-brown, moist, medium dense, micaceous SILT, some medium to fine Sand. AASHTO: A-4	
5	13.5	14	6-6-5	11	498.2		Bottom of Hole at 15.0 Feet.	

Coordinates: N: 578153.0 E: 1324400.0

NOTES:

GEO-TECHNOLOGY ASSOCIATES, INC. 9090 Junction Drive, Suite 9 Annapolis Junction, MD 20701 — LOG OF BORING NO. SWM-2 — Sheet 1 of 1

LOG OF BORING NO. SWM-3

Sheet 1 of 1

PROJECT: Glenelg Country School
PROJECT NO: 01238.1
PROJECT LOCATION: Howard County
DATE STARTED: December 2, 2002
DATE COMPLETED: December 2, 2002
DRILLING CONTRACTOR: GTA
DRILLER: GTA
DRILLING METHOD: HSA
SAMPLING METHOD: Split Spoon

WATER LEVEL: 11.7 / Dry
DATE: 12/02/02 / 12/03/02
CAVED (ft): 12.4 / 10.7
GROUND SURFACE ELEVATION: 511.5
DATUM: MSL
EQUIPMENT: CME 550
LOGGED BY: SL/DG
CHECKED BY:

Sample Number	Sample Depth (ft)	Sample Recovery (in)	Sample Blows/6 inches	N (blows/ft)	Elevation (ft)	USCS	Description	Remarks
1	0.0	14	2-2-2	4	511.5	CL	Brown, moist, loose, clay & SILT, some coarse to fine Sand. AASHTO: A-6	Topsoil: 5.0 in.
2	2.5	18	3-4-6	10	508.5	SM	Tan-brown, moist, medium dense, micaceous coarse to fine Sand, some Silt, little medium to fine Gravel (Quartz Fragments). AASHTO: A-2-4	Water Encountered at 14.0 Feet.
3	5.0	18	4-6-6	11				
4	8.5	18	5-5-6	11				
5	13.5	18	8-10-9	19	496.5		Bottom of Hole at 15.0 Feet.	

Coordinates: N: 578183.0 E: 1324466.0

NOTES:

GEO-TECHNOLOGY ASSOCIATES, INC. 9090 Junction Drive, Suite 9 Annapolis Junction, MD 20701 — LOG OF BORING NO. SWM-3 — Sheet 1 of 1

LOG OF BORING NO. SWM-4

Sheet 1 of 1

PROJECT: Glenelg Country School
PROJECT NO: 01238.1
PROJECT LOCATION: Howard County
DATE STARTED: December 2, 2002
DATE COMPLETED: December 2, 2002
DRILLING CONTRACTOR: GTA
DRILLER: GTA
DRILLING METHOD: HSA
SAMPLING METHOD: Split Spoon

WATER LEVEL: 12.7 / 8.4
DATE: 12/02/02 / 12/03/02
CAVED (ft): 16.2 / 9.0
GROUND SURFACE ELEVATION: 516.2
DATUM: MSL
EQUIPMENT: CME 550
LOGGED BY: SL/DG
CHECKED BY:

Sample Number	Sample Depth (ft)	Sample Recovery (in)	Sample Blows/6 inches	N (blows/ft)	Elevation (ft)	USCS	Description	Remarks
1	0.0	12	3-3-4	7	516.2	SM	Brown, moist, loose, medium to fine SAND and SILT. AASHTO: A-4	Topsoil: 5.0 in.
					514.2	SM	Tan-brown, dry, loose, coarse to fine SAND, some Silt, little medium to fine Gravel (Quartz Fragments). AASHTO: A-2-4	
2	2.5	14	4-5-4	9				Water Encountered at 19.0 Feet.
3	5.0	18	4-4-5	9	511.2	ML	Orange-brown to gray,-brown, moist, loose, SILT and medium to fine SAND. AASHTO: A-4	
					509.2	SM	Brown, moist, medium dense, micaceous, medium to fine SAND, some Silt. AASHTO: A-2-4 USDA: Loamy Sand	
4	8.5	18	3-3-4	7				
5	13.5	18	6-6-9	15				
6	18.5	18	8-12-15	27	496.2		Bottom of Hole at 20.0 Feet.	

Coordinates: N: 578287.0 E: 1324407.0

NOTES:

GEO-TECHNOLOGY ASSOCIATES, INC. 9090 Junction Drive, Suite 9 Annapolis Junction, MD 20701 — LOG OF BORING NO. SWM-4 — Sheet 1 of 1

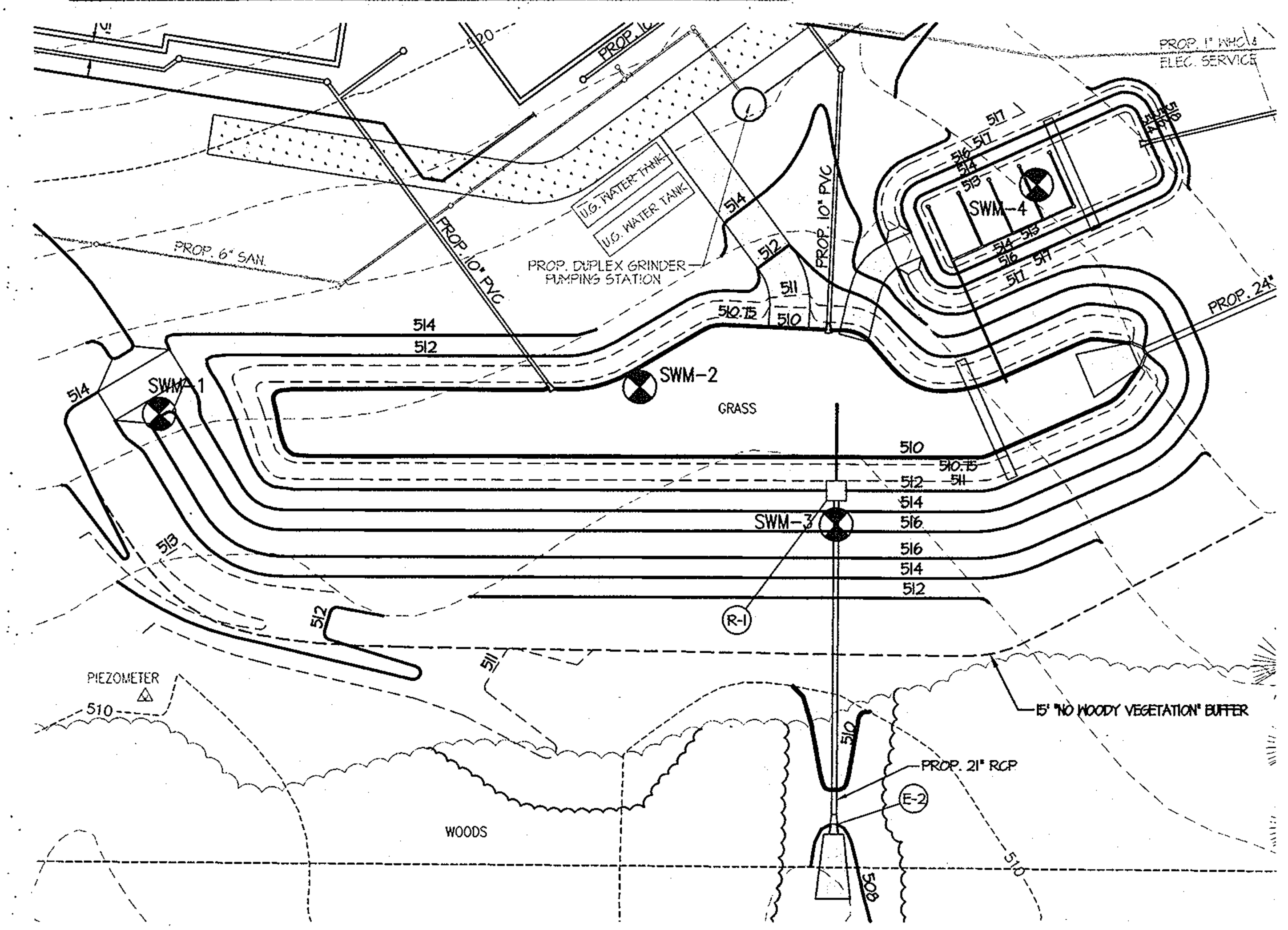

SOIL BORING LOCATION PLAN
SCALE: 1"=40'

APPROVED FOR PUBLIC OR PRIVATE WATER & PUBLIC OR PRIVATE SEWERAGE SYSTEMS
COUNTRY HEALTH OFFICER — DATE 8-8-03
HOWARD COUNTY HEALTH DEPARTMENT

APPROVED: DEPARTMENT OF PLANNING AND ZONING
CHIEF, DEVELOPMENT ENGINEERING DIVISION — DATE 8/5/03
CHIEF, DIVISION OF LAND DEVELOPMENT — DATE 8/12/03
DIRECTOR, DEPARTMENT OF PLANNING AND ZONING — DATE 8/12/03

MORRIS & RITCHIE ASSOCIATES, INC.
ENGINEERS, PLANNERS, SURVEYORS AND LANDSCAPE ARCHITECTS
9090 JUNCTION DRIVE, SUITE 9
ANNAPOLIS JUNCTION, MARYLAND 20701
(410) 792-9792 or (301) 776-1690
FAX (410) 792-7395

STATE OF MARYLAND — THOMAS C. NEUGEBAUER — REGISTERED PROFESSIONAL ENGINEER — 7/15/03

THE GLENELG COUNTRY SCHOOL
PROPOSED UPPER SCHOOL ADDITION
SEDIMENT CONTROL PLAN & SOIL BORING LOGS
TAX MAP 22 GRID 22 PARCEL 146
LIBER 1296 FOLIO 245
FIFTH (5TH) ELECTION DISTRICT
HOWARD COUNTY, MARYLAND

	DATE	REVISIONS	
			JOB NO.: 12189.02
4	07/12	TRACK AND SYNTHETIC TURF FIELD IMPROVEMENTS	SCALE: AS SHOWN
			DATE: 07/14/03
			DRAWN BY: TCN
			DESIGN BY: TCN
			REVIEW BY: TCN
			SHEET: 13 OF ~~23~~ 37 (4)

SDP-03-84

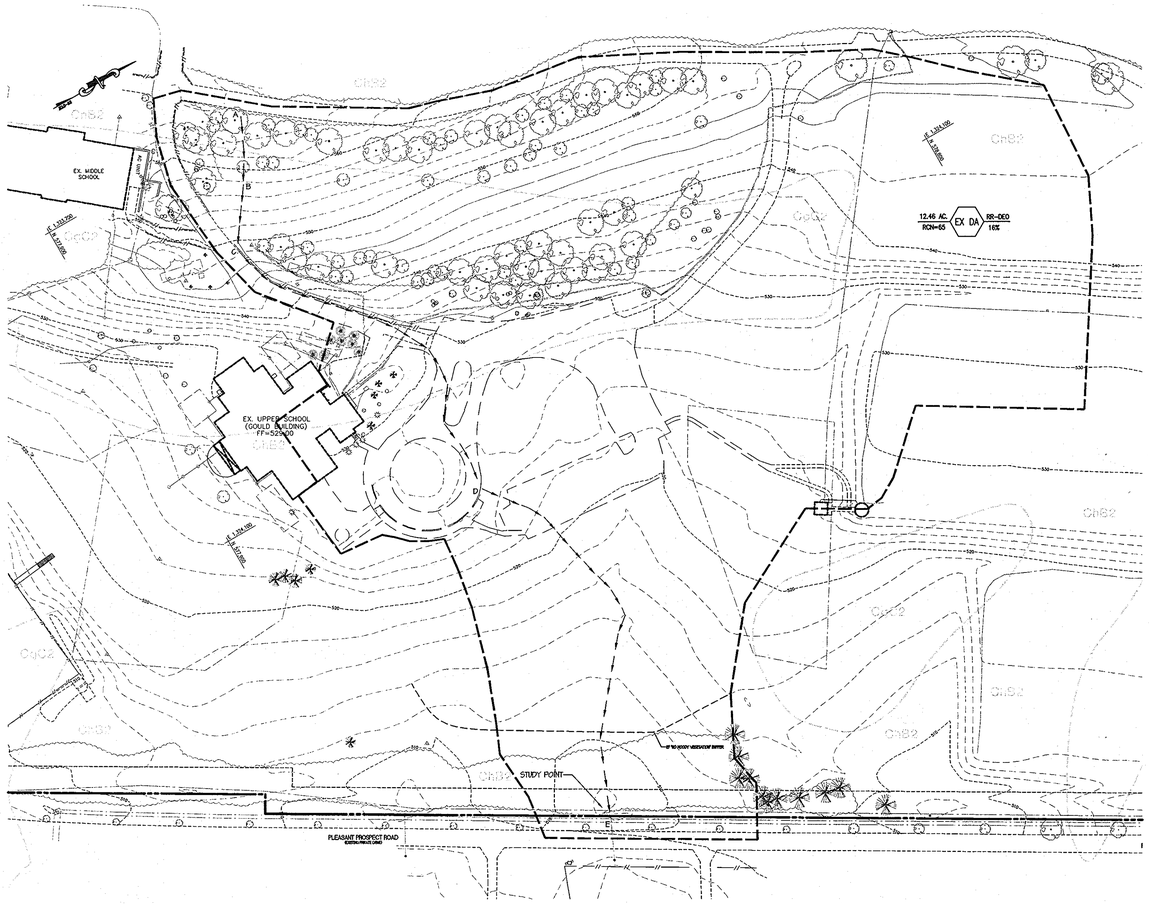

EXISTING CONDITION DRAINAGE AREA MAP
SCALE: 1"=80'

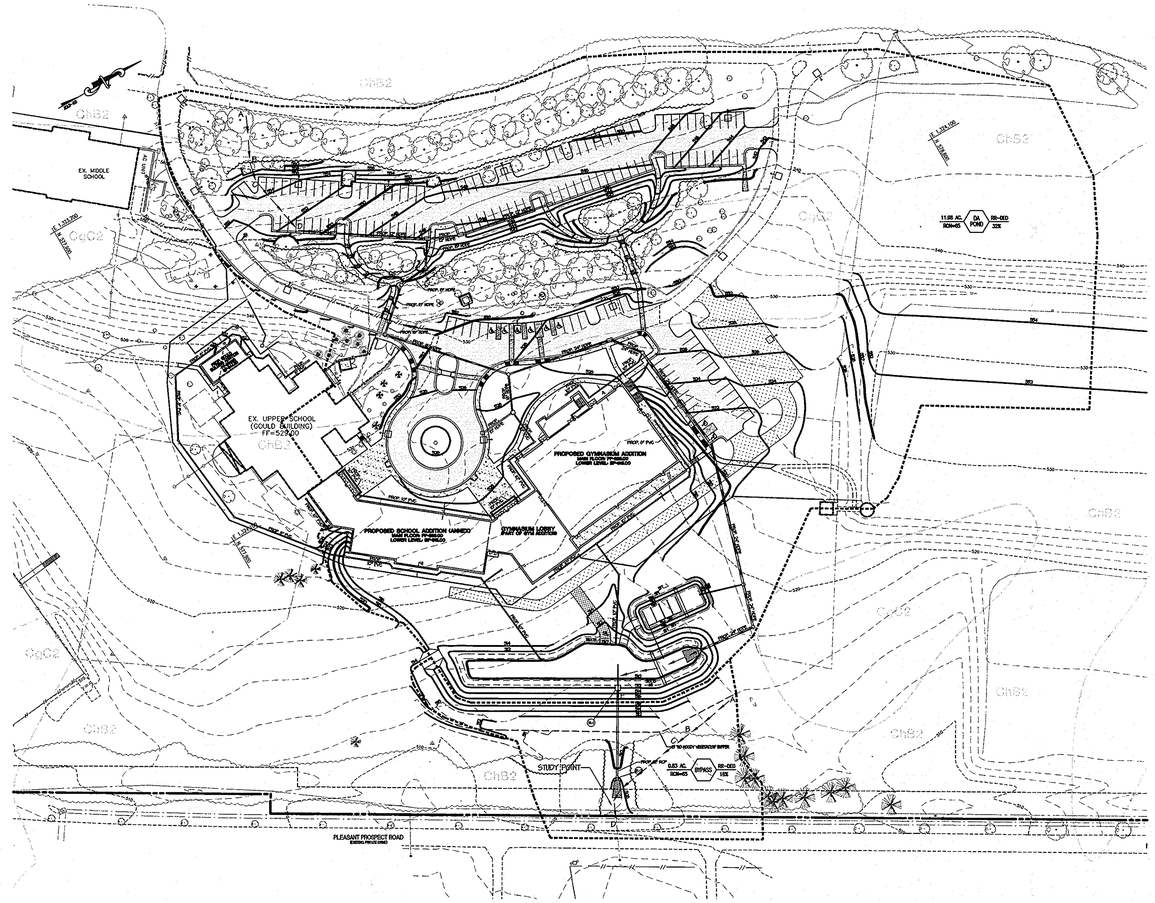

STORMWATER MANAGEMENT DRAINAGE AREA MAP
(PROPOSED CONDITION) SCALE: 1"=80'

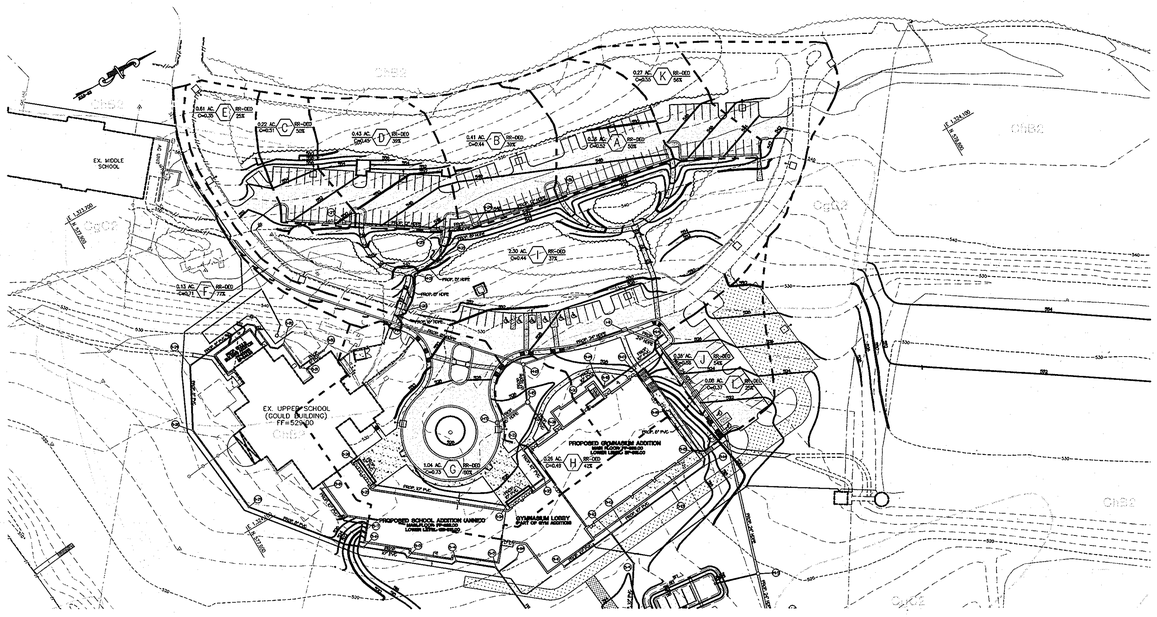

STORM DRAIN DRAINAGE AREA MAP
SCALE: 1"=80'

GENERAL SWM POND STORAGE REQUIREMENTS			
STEP	REQUIREMENT	VOLUME REQUIRED (ac-ft)	NOTES
1	Water Quality Volume (WqV)	0.2112 ac.-ft.	0.18 ac.-ft. provided with sand filter design (min. requirement: 75% of total WqV)
2	Recharge Volume (ReV)	0.0549 ac.-ft.	0.055 ac.-ft. provided by recharge trench
3	Channel Protection Volume (CpV)	0.40 ac.-ft./0.21 cfs release	CpV release rate is 0.20 cfs WSEL=511.75, 0.4823 ac.-ft. provided at WSEL=512.00
4	Overbank Flood Protection Volume (Qp)	N/A	10.38 cfs @ WSEL=513.06, Qp managed for downstream culvert
5	Extreme Flood volume (Qf)	N/A	Provide safe passage for the 100-year event in final design

SOILS LEGEND		
SYMBOL	NAME/DESCRIPTION	SOIL TYPE
CgC2	CHESTER GRAVELY SILT LOAM, 3% TO 9% SLOPES, MODERATELY ERODED	B
ChB2	CHESTER SILT LOAM, 3% TO 8% SLOPES, MODERATELY ERODED	B
ChC2	CHESTER SILT LOAM, 8% TO 15% SLOPES, MODERATELY ERODED	B

PLAN LEGEND
- STORM DRAIN DRAINAGE DIVIDE
- EX. CONDITION DRAINAGE DIVIDE
- PR. CONDITION DRAINAGE DIVIDE
- TIME OF CONCENTRATION PATH
- SOIL TYPE DIVIDE

APPROVED FOR (DIRECTOR PRIVATE) WATER & (DIRECTOR PRIVATE) SEWERAGE SYSTEMS
COUNTY HEALTH OFFICER, HOWARD COUNTY HEALTH DEPARTMENT — DATE 8-8-03

APPROVED: DEPARTMENT OF PLANNING AND ZONING
CHIEF, DEVELOPMENT ENGINEERING DIVISION — DATE 8/5/03
CHIEF, DIVISION OF LAND DEVELOPMENT — DATE 8/14/03
DIRECTOR, DEPARTMENT OF PLANNING AND ZONING — DATE 8/13/03

EXISTING CONDITION

DRAINAGE AREA DATA:

SITE AREA: 80.76 AC.

ZONING: RR-DEO

DRAINAGE AREA: 12.46 AC

IMPERVIOUS AREA: 2.00 AC

% IMPERVIOUS: 16.05% (DA), 2.48% (SITE)

TR-55 HYDROLOGIC DATA

DRAINAGE AREA: 12.46 AC
RCN: 65
SOIL TYPE: 'B'
AREA LAWN: 7.41 AC
AREA IMPERVIOUS: 2.00 AC
AREA WOODS: 3.05 AC
TIME OF CONC.: 0.33 HR

TIME OF CONCENTRATION PATH

A-B	75'	SHEET FLOW AT 10%, WOODS, DENSE
B-C	75'	SHALLOW CONC. FLOW AT 10%, UNPAVED
C-D	415'	SHALLOW CONC. FLOW AT 5%, PAVED
D-E	810'	OF OPEN CHANNEL FLOW AT 6 FPS

TIME OF CONCENTRATION: 0.33 HR

PROPOSED CONDITION

TR-55 HYDROLOGIC DATA (POND)

DRAINAGE AREA: 11.98 AC
RCN: 73
SOIL TYPE: 'B'
AREA LAWN: 6.97 AC
AREA IMPERVIOUS: 4.14 AC
AREA WOODS: 0.87 AC

TIME OF CONCENTRATION PATH (POND)

A-B	60'	SHEET FLOW AT 10%, WOODS, DENSE
B-C	25'	SHEET FLOW AT 33%, GRASS
C-D	75'	SHALLOW CONC. FLOW AT 5%, PAVED
D-E	1160'	OF OPEN CHANNEL FLOW AT 10 FPS

TIME OF CONCENTRATION: 0.28 HR

TR-55 HYDROLOGIC DATA (BYPASS)

DRAINAGE AREA: 0.83 AC
RCN: 61
SOIL TYPE: 'B'
AREA LAWN: 0.36 AC
AREA IMPERVIOUS: 0.06 AC
AREA WOODS: 0.41 AC

TIME OF CONCENTRATION PATH (BYPASS)

A-B	60'	SHEET FLOW AT 5%, GRASS
B-C	15'	SHEET FLOW AT 5%, WOODS, LIGHT
C-D	120'	SHALLOW CONC. FLOW AT 4%, PAVED

TIME OF CONCENTRATION: 0.17 HR

WORST CASE POND ROUTING (CLOGGED CONDITION)

DRAINAGE AREA: 11.98 AC
RCN: 74
SOIL TYPE: 'B'
AREA LAWN: 7.84 AC
AREA IMPERVIOUS: 4.14 AC
AREA WOODS: 0.00 AC

TIME OF CONCENTRATION PATH (POND)

A-B	60'	SHEET FLOW AT 10%, GRASS
B-C	25'	SHEET FLOW AT 33%, GRASS
C-D	75'	SHALLOW CONC. FLOW AT 5%, PAVED
D-E	1160'	OF OPEN CHANNEL FLOW AT 10 FPS

TIME OF CONCENTRATION: 0.15 HR

MORRIS & RITCHIE ASSOCIATES, INC.
ENGINEERS, PLANNERS, SURVEYORS AND LANDSCAPE ARCHITECTS
9090 JUNCTION DRIVE, SUITE 9
ANNAPOLIS JUNCTION, MARYLAND 20701
(410) 792-9792 or (301) 776-1690
FAX (410) 792-7395

THE GLENELG COUNTRY SCHOOL
PROPOSED UPPER SCHOOL ADDITION
STORM DRAIN & STORMWATER MANAGEMENT DRAINAGE AREA MAP

TAX MAP 22 GRID 22 PARCEL 146
LIBER 1296 FOLIO 245
FIFTH (5TH) ELECTION DISTRICT
HOWARD COUNTY, MARYLAND

7/15/03

DATE	REVISIONS	
		JOB NO.: 12189.02
07/12	TRACK AND SYNTHETIC TURF FIELD IMPROVEMENTS	SCALE: 1" = 40'
		DATE: 07/14/03
		DRAWN BY: TCN
		DESIGN BY: TCN
		REVIEW BY: TCN
		SHEET: 14 OF 28

SDP-03-84

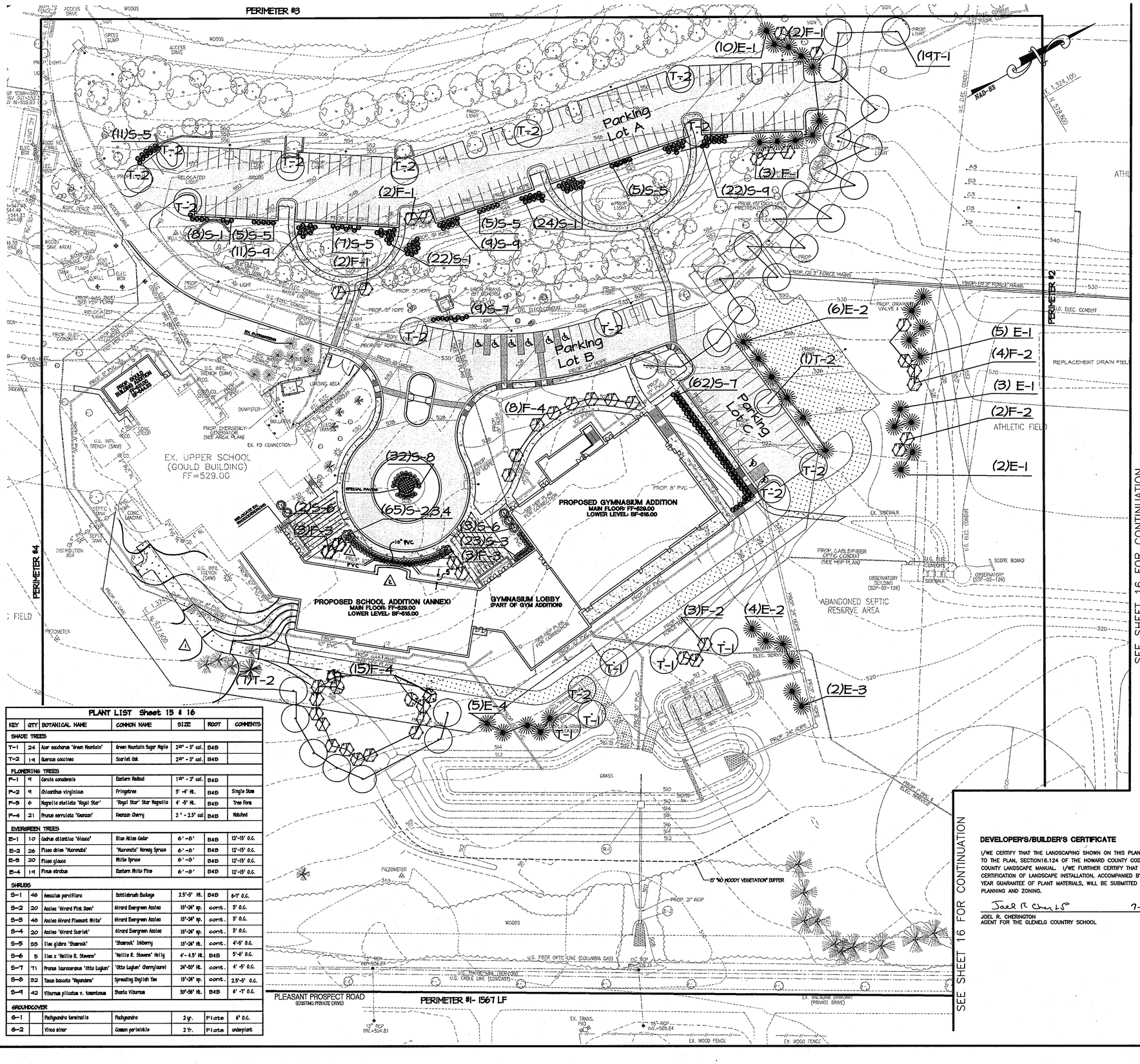

PLANT LIST Sheet 15 & 16

KEY	QTY	BOTANICAL NAME	COMMON NAME	SIZE	ROOT	COMMENTS
SHADE TREES						
T-1	24	Acer saccharum 'Green Mountain'	Green Mountain Sugar Maple	2½" - 3" cal.	B&B	
T-2	19	Quercus coccinea	Scarlet Oak	2½" - 3" cal.	B&B	
FLOWERING TREES						
F-1	9	Cercis canadensis	Eastern Redbud	1½" - 2" cal.	B&B	
F-2	9	Chionanthus virginicus	Fringetree	5' -6" Ht.	B&B	Single Stem
F-3	6	Magnolia stellata 'Royal Star'	'Royal Star' Star Magnolia	4' -5" Ht.	B&B	Tree Form
F-4	21	Prunus serrulata 'Kwanzan'	Kwanzan Cherry	2 " - 2.5" cal	B&B	Matched
EVERGREEN TREES						
E-1	10	Cedrus atlantica 'Glauca'	Blue Atlas Cedar	6' -8'	B&B	12'-15' O.C.
E-2	26	Picea abies 'Nuncnata'	'Nuncnata' Norway Spruce	6' -8'	B&B	12'-15' O.C.
E-3	20	Picea glauca	White Spruce	6' -8'	B&B	12'-15' O.C.
E-4	19	Pinus strobus	Eastern White Pine	6' -8'	B&B	12'-15' O.C.
SHRUBS						
S-1	46	Aesculus parviflora	Bottlebrush Buckeye	2.5'-3' Ht.	B&B	6'-7' O.C.
S-2	20	Azalea 'Girard Pink Dawn'	Girard Evergreen Azalea	15"-24" sp.	cont.	3' O.C.
S-3	48	Azalea Girard Pleasant White'	Girard Evergreen Azalea	15"-24" sp.	cont.	3' O.C.
S-4	20	Azalea 'Girard Scarlet'	Girard Evergreen Azalea	15"-24" sp.	cont.	3' O.C.
S-5	98	Ilex glabra 'Shamrock'	'Shamrock' Inkberry	15"-24" Ht.	cont.	4'-5' O.C.
S-6	5	Ilex x 'Nellie R. Stevens'	'Nellie R. Stevens' Holly	4'- 4.5' Ht.	B&B	5'-6' O.C.
S-7	71	Prunus laurocerasus 'Otto Luyken'	'Otto Luyken' Cherrylaurel	24"-30" Ht.	cont.	4' -5' O.C.
S-8	82	Taxus baccata 'Repandens'	Spreading English Yew	15"-24" sp.	cont.	2.5'-3' O.C.
S-9	42	Viburnum plicatum v. tomentosum	Shasta Viburnum	30"-36" Ht.	B&B	6' -7' O.C.
GROUNDCOVER						
G-1		Pachysandra terminalis	Pachysandra	2 yr.	Flats	6" O.C.
G-2		Vinca minor	Common periwinkle	2 Yr.	Flats	underplant

SCHEDULE 'B' PARKING LOT A INTERNAL LANDSCAPING				
NUMBER OF PKING SPACES	ISLANDS REQUIRED	ISLANDS PROVIDED	PLANTS REQUIRED	PLANTS PROVIDED
100	5	9	1:20 = 5 SHADE TREES	7 SHADE TREES & 2 FLOWERING TREES

SCHEDULE 'B' PARKING LOT B INTERNAL LANDSCAPING				
NUMBER OF PKING SPACES	ISLANDS REQUIRED	ISLANDS PROVIDED	PLANTS REQUIRED	PLANTS PROVIDED
18	1	1	1:20 = 1 SHADE TREES	2 SHADE TREES

SCHEDULE 'B' PARKING LOT C INTERNAL LANDSCAPING				
NUMBER OF PKING SPACES	ISLANDS REQUIRED	ISLANDS PROVIDED	PLANTS REQUIRED	PLANTS PROVIDED
25	1	1	1:20 = 2 SHADE TREES	4 SHADE TREES

SCHEDULE 'D' STORM WATER MANAGEMENT LANDSCAPE			
PERIMETER	PLANTS REQUIRED	PLANTS PROVIDED	EDGE TYPE
570 L.F. TO RESIDENTIAL	1:50= 10 SHADE TREES 1:40 = 14 EVERGREEN TREE	660' EXISTING WOODS FULFILL 100% OF REQUIREMENT EXISTING TREES, MINIMUM OF 40' WIDE	(B)

SCHEDULE 'A' PERIMETER LANDSCAPE EDGE				
PERIMETER	PLANT CREDITS	PLANTS REQ'D	PLANTS PROVIDED	EDGE TYPE
(1) 1561 L.F. NON-RESIDENTIAL REAR TO EXISTING PRIVATE DRIVE EAST PROPERTY LINE	100 L.F. EX. WOODS FULFILL 46% OF REQUIREMENT OR 17 SHADE TREES & 54 EVERGREEN TREES 21 SHADE TREES, SHOWN ON APPROVED SDP 97-07 FULFILLS REMAINING SHADE TREE REQUIREMENT. 54 SHRUBS SHOWN ON APPROVED SDP 97-07 FULFILLS 5 EVERGREEN TREE OBLIGATIONS.	861 LF 22 ST - 21 ST=0 ST 0 SHADE TREES 45 E6 = 5 E6 = 36 E6 36 EVERGREEN TREES	36 EVERGREEN TREES	(C)
(2) NON-RESIDENTIAL SIDE TO ATHLETIC FIELDS NORTH PROPERTY LINE	NONE	NONE	NONE REQUIRED - INTERNAL LOT LINE EXISTING TREES AND ATHLETIC FIELDS MEET THE INTENT OF THE MANUAL	(B)
(3) NON-RESIDENTIAL FRONT & PARKING TO EXISTING PRIVATE ACCESS DRIVE WEST PROPERTY LINE	NONE	NONE	NONE REQUIRED - INTERNAL LOT LINE EXISTING TREES MEET THE INTENT OF THE MANUAL	(B)
(4) NON-RESIDENTIAL TO NON-RESIDENTIAL	NONE	NONE	NONE REQUIRED - INTERNAL LOT LINE	(B)

TOTAL PLANTING OBLIGATION	TOTAL PLANTS PROVIDED
8 SHADE TREES	15 SHADE TREES
36 EVERGREEN TREES	2 FLOWERING TREES
	94 EVERGREEN TREES

NOTE:
THIS PLAN SHALL BE USED FOR LANDSCAPE PURPOSES ONLY. REFER TO SITE PLAN, SWM PLAN & SEDIMENT CONTROL PLAN FOR ALL OTHER SITE ISSUES.

ADDRESS CHART / OWNER INFORMATION				
GLENELG COUNTRY SCHOOL				
12793 FOLLY QUARTER ROAD				
GLENELG, MD 21737 PHONE: 410-531-2229				
PERMIT INFORMATION CHART				
Subdivision Name: GLENELG COUNTRY SCHOOL		Area: 80.67 AC.		Parcel #: 146
Plat #: 1296/245	Zoning: RR-DEO	Tax Map: 22	Elec. District: 5TH	Census Tract: 6051.01
Water Code: PRIVATE WELL		Sewer Code: PRIVATE SEPTIC		

APPROVED FOR SURFACE OR PRIVATE WATER & SEWERAGE OR PRIVATE SEWERAGE SYSTEMS
COUNTY HEALTH OFFICER, HOWARD COUNTY HEALTH DEPARTMENT — DATE 8-8-03

APPROVED DEPARTMENT OF PLANNING AND ZONING
CHIEF, DEVELOPMENT ENGINEERING DIVISION — DATE 8/5/03
CHIEF, DIVISION OF LAND DEVELOPMENT — DATE 8/12/03
DIRECTOR, DEPARTMENT OF PLANNING AND ZONING — DATE 8/14/03

DEVELOPER'S/BUILDER'S CERTIFICATE

I/WE CERTIFY THAT THE LANDSCAPING SHOWN ON THIS PLAN WILL BE DONE ACCORDING TO THE PLAN, SECTION16.124 OF THE HOWARD COUNTY CODE AND THE HOWARD COUNTY LANDSCAPE MANUAL. I/WE FURTHER CERTIFY THAT UPON COMPLETION A CERTIFICATION OF LANDSCAPE INSTALLATION, ACCOMPANIED BY AN EXECUTED ONE YEAR GUARANTEE OF PLANT MATERIALS, WILL BE SUBMITTED TO THE DEPARTMENT OF PLANNING AND ZONING.

Joel R Cherington — 7-14-03
JOEL R. CHERINGTON — DATE
AGENT FOR THE GLENELG COUNTRY SCHOOL

MORRIS & RITCHIE ASSOCIATES, INC.
ENGINEERS, PLANNERS, SURVEYORS AND LANDSCAPE ARCHITECTS
9090 JUNCTION DRIVE, SUITE 9
ANNAPOLIS JUNCTION, MARYLAND 20701
(410) 792-9792 or (301) 776-1690
FAX (410) 792-7395

THE GLENELG COUNTRY SCHOOL PROPOSED UPPER SCHOOL ADDITION

LANDSCAPE PLAN

TAX MAP 22 GRID 22 PARCEL 146
LIBER 1296 FOLIO 245
FIFTH (5TH) ELECTION DISTRICT
HOWARD COUNTY, MARYLAND

DATE	REVISIONS
1 10/03	ADDED TRELLIS TO BUILDING FOOTPRINT. EXTENDED STABILIZED TURF FIRE LANE.
2 09/04	REVISED BUILDING FOOTPRINT TO SHOW ANNEX ADDITION.
4 07/12	TRACK AND SYNTHETIC TURF FIELD IMPROVEMENTS

JOB NO.: 12189.02
SCALE: 1" = 40'
DATE: 07/14/03
DRAWN BY: TCN
DESIGN BY: TCN
REVIEW BY: TCN
SHEET: 15 OF 23 A

SDP-03-84

PLANTING SPECIFICATIONS

PART 1 GENERAL:

1.01 DESCRIPTION:

A. Work consists of all labor, materials, equipment and services necessary for and incidental to the execution and completion of THE FINAL LANDSCAPE PLAN as indicated on the Drawings and specified herein.
B. Include:
1. Layout.
2. Furnishing of tree protection and planting materials.
3. Preparation, planting operations, mulching and staking.
4. Maintenance.

1.02 REFERENCES AND QUALITY ASSURANCE:

A. Landscape Contractors Association MD-DC-VA (LCA), Landscape Specification Guidelines, latest edition except where superseded by specific requirements herein.
B. American Association of Nurserymen (A.A.N.): American Standard for Nursery Stock, A.N.S.I. Z60.1, latest edition.
C. Nomenclature: In accordance with Hortus Third, latest edition, by the staff of the L. H. Bailey Hortorium, Cornell University.
D. Federal Specification: Q-P-166e as applicable to Peat Moss.
E. National Arborist Association, Standard for Pruning of Shade Trees, Guying of Shade Trees, Fertilizing Shade and Ornamental Trees and Pesticides Application Operations, latest edition.
F. Maryland Department of Transportation, State Highway Administration (MSHA) Standard Specifications for Construction and Materials, October 1993, as amended to date. Delete references to "Measurement and Payment".

1.03 STANDARD OF COMPARISON:

A. When requested by the Owner's Representative, the Contractor shall obtain approval of a "standard" of comparison, prior to the delivery of plant material to the site.
1. Contact the Owner's Representative to schedule an inspection for approval of the "standards" for plant material to be installed at the project site.
2. "Standards" shall be assembled at the project site for review and approval, or at the Contractor's principal business location, as determined by the Owner's Representative. Approved "standards" may be planted at the project site.

1.04 SUBMITTALS:

A. Source: Notify the Owner's Representative, in writing, of the source of all material at least ten (10) working days prior to delivery at the project site.
B. Samples and Certifications:
1. If requested, a mulch sample shall be provided at the site for approval by the Owner's Representative (1 C.F. minimum).
2. Submit certification of peat moss compliance with referenced specifications.

1.05 DELIVERY, STORAGE AND HANDLING:

A. Store plants that cannot be planted within 8 hours in a sheltered place. Water and maintain as required until planted.
B. Transport and handle plants so that foliage and roots are protected from breakage, sun and wind. Tops or roots of plants allowed to dry out or which have been damaged or disturbed root systems may be rejected.
C. B & B (balled and burlapped) plants: Firm, natural balls of soil, with size and depth of ball in accordance with A.A.N. Standards.

1.06 QUANTITIES AND SUBSTITUTIONS:

A. Quantities of plant material are based upon the plant lists shown on the Drawings.
B. Substitutions
1. Bidders shall notify the Owner's Representative if specified plants are not available from sources within 100 miles of the project site, giving the names of all sources contacted.
2. If an acceptable source cannot be located for the specified plants, the Owner's Representative will select a substitute and notify the Bidders of the approved substitution for the Bid to be based upon, or provide a source for the originally specified plant.
3. Substituted plants shall be of the same size and condition as the original plant specified.

1.07 PROJECT CONDITIONS:

A. Planting Season:
1. Primary planting season: September 15 to May 15.
2. Other periods with written approval from the Owner's Representative.
B. Existing Conditions: Notify Miss Utility (1-800-257-7777), and the Owner's Representative prior to planting operations. Verify the location of underground utilities.

1.08 DEFINITIONS:

A. Diameter at Breast Height (DBH): The diameter of a tree measured at a point on the trunk 4.5 feet above the ground.
B. Initial Acceptance: Occurs when all plant material is in place in accordance with the specifications and approved by the Owner's Representative.
C. Maintenance Period: From initial acceptance of the plantings, and continuing thereafter for a period of 12 months.
D. Owner's Representative: The Landscape Architect or other Qualified Professional designated by the Owner or Developer of the Project.
E. Retention: The deliberate holding and protecting of existing trees, shrubs or herbaceous plants on the site.
F. Specimen Tree: A tree which exists on the project site prior to construction or planting having a 30 inch or greater DBH, or tree having 75 percent or more of the diameter of the current state or county champion tree of that same species.
G. Start of Planting: Installation of plant material into excavated pits or beds.
H. Final Acceptance: Occurs after Contractor has completed all outstanding items, as determined by the Owner's Representative, at the end of the maintenance period.

1.09 SURVIVAL REQUIREMENT AND REPLACEMENTS:

A. The minimum survival rate shall be 100 percent of the total number of trees and shrubs planted at the end of the 12-month maintenance period.
B. Replacement materials shall be the same size as the original plant material taking into account any growth that has occurred since original installation.
C. Methods of installation shall be identical to the original.

1.10 PENALTY FOR VIOLATION:

A. Immediately following the completion of construction and installation of the plantings, the owner or owner's representative will be notified for an inspection of the entire project site.
B. If, upon Final Acceptance Inspection, trees and other vegetation designated as retention plant material are found to be damaged or dead due to mechanical intrusion or related construction activities associated with the landscape contractors installation and maintenance of the said plan, then replacement equivalent will be required.

PART 2 PRODUCTS:

2.01 PLANTS:

A. Plant materials shall meet or exceed the requirements of A.A.N. standards, or as amended herein.
B. Plants shall be typical of the species and variety, and have a normal habit of growth with well established root systems.
C. Sound, healthy, vigorous, free from plant diseases, insect pests or their eggs and without suckers or evidence of suckering.
D. Trees and shrubs shall be freshly dug and nursery grown. They shall have been grown under climatic conditions similar to those in the locality of the project or properly acclimated to conditions of the project locality.
E. Plants cut back from larger sizes or pruned prior to delivery will not be accepted. of the project or properly acclimated to conditions of the project locality. All container grown plants shall be well rooted & established in the container in which they are sold.
F. Measurements: The caliper of deciduous trees (except seedlings and whips) shall be measured 6-inches above ground level for trees up to and including 4 inch caliper and 12 inches above ground level for material larger than 4 inch caliper. Seedlings and whips shall be measured at the root collar.

2.02 DECIDUOUS SHADE TREES:

A. Single straight leader, well branched, and symmetrical, without suckers or evidence of suckering, according to their normal habit.
B. Trees planted within five (5) feet of pedestrian ways, parking lots or roads shall be free from branches up to eight (8) feet in height from finish grade.

2.03 EVERGREENS:

Sheared evergreen plant material shall not be acceptable.

2.04 SHRUBS:

At least 75% of the individual branches or canes of a shrub shall be to the height specified.

2.05 HERBICIDES:

A. Contact herbicide shall be "Round-up" or approved equal.
B. Pre-emergence herbicide shall be "Snapshot" or approved equal.

2.06 TOPSOIL FOR AMENDING EXISTING SOIL:

A. General Requirements (only where required by details on the Drawings):
1. Natural, friable sand loam topsoil which is free of subsoil, clay lumps, stones, stumps, roots or similar objects larger than 1-inch.
2. Free of brush, objectionable weeds and litter or other substance which is harmful to plant growth.
B. In accordance with M.S.H.A. Item 920.01.02 for Furnished Topsoil if borrow topsoil is required from an off-site location.

2.07 FERTILIZER FOR POST PLANTING:

A. 5-10-5 (Plant food by minimum percentages.)
(N) Total Nitrogen 5
(P202) Available Phosphoric Acid 10
(K2) Soluble Potash 5
B. Fertilizer shall be slow release over a minimum 3 year period. Fertilizer shall be delivered to the site with formulas attached.

2.08 PEAT MOSS:

Baled sphagnum peat moss, Type I-A, conforming to Federal Specification Q-P-166e.

2.09 MULCH:

A. Mulch shall be the following as indicated on the Drawings.
1. Shredded hardwood.
2. Pine Straw.
B. Mulch shall have been prepared within the last four (4) months.

2.10 WATER:

Potable; if not available at the site from a public water supply, the Contractor shall provide water at no additional cost to the Owner.

2.11 ANTI-TRANSPIRANT:

Shall be the following or approved equal:
"Wilt-Pruf"
Wilt-Pruf Products Inc.
P. O. Box 469
Essex, CT 06426
(203) 767-7033
or approved equal.

2.12 ACCESSORIES:

A. Tree guying:
1. Stakes: 2 inch x 2 inch rough sawn oak stakes, notched to hold wire, length as required to secure the tree.
2. Wire: Galvanized steel wire, doubled.
3. Sleeves: Nylon reinforced green vinyl hose.
B. Tree shelters, netting and stakes: Extruded twin-walled polypropylene with ultra-violet stabilizer and anti-abrasion rim as manufactured by:

Tubex
P.O. Box 7097
Saint Paul, MN 55107
(612) 228-0535
or approved equal.

1. Stake shall be oak, pointed, 1 inch x 1 inch x 3 feet nominal.
2. Protective netting: Flexible plastic mesh capable of covering the top opening of the tube to prevent entry by birds.

PART 3 EXECUTION:

3.01 INITIAL INSPECTIONS:

A. Pre-construction meeting:
1. Prior to the beginning of any clearing, grading or disturbance of the site, a meeting at the project site shall be held with the Contractor and Owner's Representative.
2. The following items, and others as deemed necessary, will be reviewed as applicable to the Project:
a) Staked limits of required retention areas and protection fencing, proposed limits of clearing and grubbing, the proposed location of sediment control devices, and the sequence of operations.
b) Staking and flagging shall be completed by the Contractor prior to the pre-construction meeting.
3. Designated adjustments to the proposed limits and locations of items reviewed in the field during the pre-construction meeting shall be incorporated prior to beginning construction.

B. Pre-planting meeting:
1. Prior to the beginning of planting operations, a meeting shall be held at the project site with the Contractor and Owner's Representative to review the following, as applicable to the project:
a) Staked limits, of proposed planting areas, completed prior to the meeting.
b) Areas to receive selective application of herbicides prior to planting, if applicable.
c) Proposed location of temporary and permanent fencing.
d) Proposed schedule, sequence of planting operations and other requirements.

3.02 PREPARATION:

A. Tree protection fencing, signage and other pre-construction activities noted on the Drawings for retention areas shall be installed prior to any on-site clearing or grading operations.
B. Additional temporary, and permanent fencing, shall be installed in conjunction with or prior to planting operations as shown on the Drawings.
C. Plant Locations: As shown on the Drawings, to dimensions if shown, or as detailed if not specifically labeled. Locations subject to review by the Owner's Representative prior to planting.
D. Utilities: The Contractor shall locate existing and proposed utilities prior to excavation of planting holes.
1. If a conflict is identified between the location of utilities and proposed planting locations, the Owner's Representative shall establish an alternate location for plants as required to avoid the conflict.
2. Bidders shall notify the Owner's Representative of potential conflicts identified prior to submission of a Bid.
E. No plant material shall be installed until the Owner's Representative has approved the finish grade of areas to receive planting.

3.03 EXCAVATION:

A. Unclassified: Excavate and remove surplus materials encountered, without additional cost to the Owner. Retain only sufficient soil to form soil wells as shown on the Drawings. Disposal of surplus material may be on-site if approved by the Owner's Representative.
B. Underground obstruction, rock or other obstructions too massive to remove: Notify Owner's Representative for further direction. Alternate locations will be selected. Make such relocations without additional compensation.

3.04 PLANTING PROCEDURES:

A. Do not plant when ground is frozen or excessively wet.
B. Set plants straight and plumb and at such a level, that after settlement the first lateral root is flush with the adjacent ground surface.
C. When B&B or container plants are set, planting soil shall be carefully tamped around the base of the balls to prevent voids. All burlap, rope, wires, etc., shall be removed from the tops of balls. Plastic/nylon cords or cloth shall not be left in place on balled materials.
D. Backfill plants and tamp to two-thirds depth of pit and thoroughly water before bringing backfill up to proper grade. Thoroughly water the plant again after the soil well has been completely formed in-place.
E. Wells Around Trees and Shrubs: After planting is complete, form a soil well around designated plants, extending to the outer limit of the plant pit in accordance with the planting details shown on the Drawings.
F. Designated Planting Beds: All vegetative growth shall be removed to a sufficient depth to insure a weed-free bed. Till the existing soil to a depth of 8-inches throughout the designated bed areas. The edge of all planting beds shall be cut vertically and the soil recessed within 1 foot of the bed edge so that the mulch is flush with adjacent grade when the installation has been completed.

3.05 MULCHING:

A. Plants and beds shall receive a 2 to 4 inch cover of mulch. Mulch shall be installed within 8 hours after planting has been completed.
B. Mulch, surrounding planting mass areas, shall provide a uniform and contiguous surface, and appearance between and around all plant material, buildings and paved areas.

3.06 STAKING, WRAPPING AND GUYING:

A. Stake trees, which require staking as shown on the Drawings, during the same day as planting.
1. Guying shall be in accordance with the Details.
2. Stakes shall be securely driven in ground and plants guyed to provide and maintain adequate support.

3.07 PRUNING AND ANTI-TRANSPIRANT APPLICATION:

A. Pruning: Any broken or damaged branches shall be removed. Damage, removal or pruning of tree leaders shall be cause for rejection.
B. Anti-transpirant: Deciduous plants, installed from May 1st to September 15th shall receive application in accordance with the manufacturer's recommendations.

3.08 POST-PLANTING FERTILIZATION:

A. Notify Owner's Representative prior to fertilizing operations.
B. Approximately 1 year after planting, but prior to the maintenance agreement's expiration, the Contractor shall fertilize all plant material. Plant foliage shall be completely dry at the time of application. Fertilizer adhering to plant foliage after application shall be removed. Water thoroughly after application.
C. Rate of application shall be in accordance with the fertilizer manufacturer's recommendations or the following:
1. Shrubs: 4 pounds of 5-10-5 per 100 square feet.
2. Trees: 2 pounds of 5-10-5 per inch of caliper distributed uniformly in planting well.

3.09 CLEAN-UP:

A. Excess and waste materials shall be removed from the site before or upon completion of planting operations, or daily if required by the Owner's Representative.
B. Repair turf areas and other existing conditions damaged during planting operations, including regrading, seeding and mulching to the satisfaction of the Owner's Representative.

3.10 WARRATY:

A. Contractor shall warranty all plant material for a period of one (1) full year after the date of substantial completion against defects, unsatisfactory growth, disease or death.

3.11 MAINTENANCE:

A. Contractor shall inspect and provide necessary services throughout the 12-month maintenance period.
1. Watering as required for local conditions.
2. Inspection for pests and disease shall be performed a minimum of two (2) times within the initial year, after spring leaf-out and at mid-summer, or more frequently if necessary to control problems.
3. Weeding and removal of invasive plants shall be performed a minimum of four (4) times per year, during the first two weeks of the months of May, June, July and August.
4. Plant material shall be re-mulched, just prior to the maintenance agreement's expiration, with a minimum 1-inch depth of new mulch.
5. Fencing, signs, stakes and guys shall be tightened, repaired or replaced as necessary throughout the maintenance period in accordance with original details and installation requirements. Ensure trees to remain plumb and upright.
B. Remove and replace dead or damaged plant material to comply with the Minimal Survival requirement in accordance with Item 1.09 above.
C. Notify Owner's Representative prior to initiating maintenance operations.

3.12 ACCEPTANCE:

Contractor must contact the Owner at least ten working days in advance to schedule acceptance inspection(s).

Instructions - Ground Sleeve

INSTALLERS TAKE NOTICE! Overhead electrical lines, buried utility cables, and natural gas lines pose situations that require EXTREME CARE DURING INSTALLATION of foundation and flagpoles.

Use concrete (3000 psi), unless otherwise specified.
1. Dig hole approximately as shown on chart. Dimensions are for "normal soil conditions."
2. Set sleeve slightly above finished grade level.
3. Set sleeve plumb in center of hole and begin to pour concrete around outside of sleeve.
4. During pouring of concrete, stop and check to be sure sleeve stays in center and level.
5. Cover sleeve opening to prevent accumulation of debris and water.

Foundation Dimensions - Dimensions shown are the minimum recommended for foundations "under normal soil conditions." This suggests; good, firm, dry soil. If you have questions, consult with an engineer in your area.

FLAGPOLE		A	B	C	D	E	F
Exposed Height	Overall Length	Pole Butt	Sleeve Diameter	Sleeve Length	Foundation Base	Foundation Top	Base Plate
20'	22'	5"	8"	24"	24"	30"	12"
25'	28'	5/6"	8/10"	36"	24/30"	34"	12"
30'	33'	5/6"	8/10"	36"	30"	36"	12"
35'	38.5'	6/7"	10"	42"	30"	36"	14"
40'	44'	7/8"	10/12"	48"	36"	42"	14/16"
45'	49'	8/10"	12/15"	48"	36"	42"	16/18"
50'	55'	8/10"	12/15"	60"	42"	48"	16/18"
60'	66'	10/12"	15"	72"	42"	48"	18"
70'	77'	12"	15"	84"	48"	60"	20"
80'	88'	12"	15"	96"	54"	72"	20"
90'	99'	14"	18"	108"	60"	72"	24"
100'	110'	16"	21"	120"	66"	72"	24"

Foundation Detail

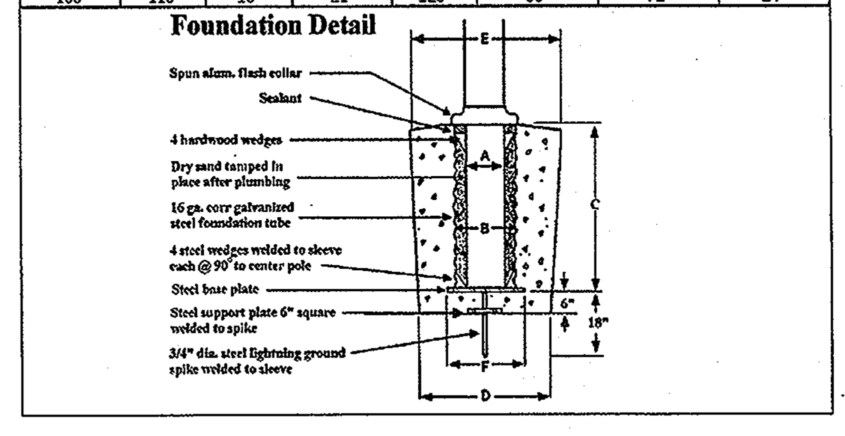

FLAG POLE FOUNDATION DETAIL

NOT TO SCALE

DETAIL PROVIDED BY POLE-TECH
TEL: 800-633-6733.
IF DIFFERENT MANUFACTURER IS USED, INSTALLATION INSTRUCTIONS MUST BE VERIFIED BY MANUFACTURER.

NOTE:
IF EXISTING FLAG POLE IS TO BE REUSED ON SITE, FOUNDATION DETAIL MUST BE VERIFIED BY A STRUCTURAL ENGINEER.

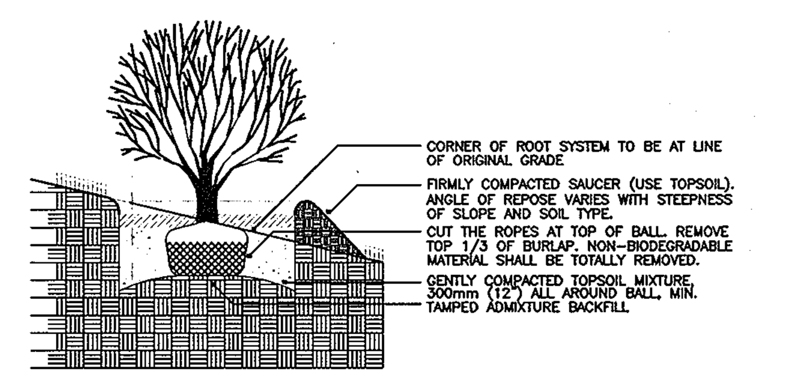

SHRUB PLANTING DETAIL
(BALL & BURLAP OR CONTAINER)

NOT TO SCALE

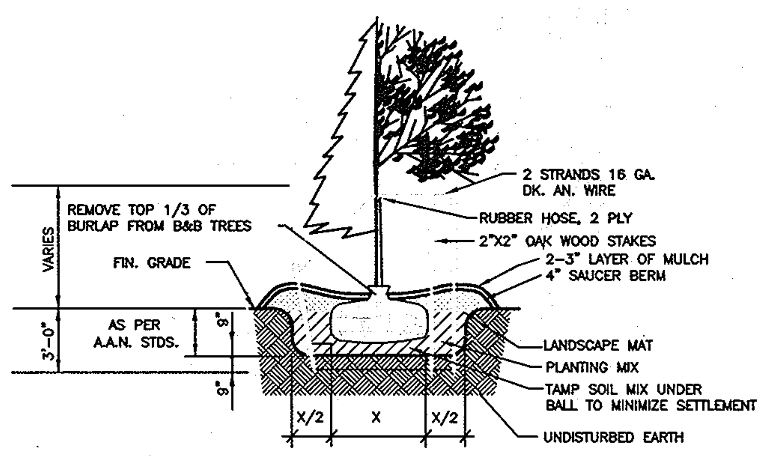

SHADE, FLOWERING OR EVERGREEN TREE PLANTING DETAIL

NOT TO SCALE

GENERAL NOTES:

1. NO SUBSTITUTIONS OF PLANT MATERIAL SHALL BE PERMITTED WITHOUT WRITTEN AUTHORIZATION OF THE LANDSCAPE ARCHITECT AND/OR HOWARD COUNTY PLANNING AND ZONING. THIS SHALL APPLY TO SUBSTITUTIONS OF SPECIES, SIZE, QUANTITY, AND LOCATION.

2. TREES SHALL BE LOCATED A MINIMUM OF 5' FROM SEWER/WATER CONNECTIONS. CONTRACTOR SHALL BE LIABLE FOR DAMAGE TO ANY AND ALL PUBLIC AND PRIVATE UTILITIES, WATER AND SEWER LINES.

3. CONTRACTOR SHALL SLIGHTLY ADJUST PLANT LOCATIONS IN THE FIELD AS NECESSARY TO BE CLEAR OF DRAINAGE SWALES AND UTILITIES. FINISHED PLANTING BEDS SHALL BE GRADED SO AS NOT TO IMPEDE DRAINAGE AWAY FROM BUILDINGS.

4. SEEDED AREAS THAT WASH OUT MUST BE FILLED AND GRADED AS NECESSARY AND THE RESEEDED. SOME TYPE OF ANCHORING METHOD SHOULD THEN BE USED TO HOLD SEED AND MULCH IN PLACE; THIS IS ESPECIALLY IMPORTANT AROUND WATER COURSED, IN SWALES AND AREAS OF CONCENTRATED FLOWS, AND ON SLOPES.

5. THIS PLAN HAS BEEN PREPARED IN ACCORDANCE WITH THE PROVISIONS OF SECTION 16.124 OF THE HOWARD COUNTY CODE AND THE LANDSCAPE MANUAL.

6. FINANCIAL SURETY FOR THE REQUIRED LANDSCAPING MUST BE POSTED AS PART OF THE DPW DEVELOPERS AGREEMENT IN THE AMOUNT OF $ 8,100.00. (8 SHADE TREES @ $300.00 ea., 38 EVERGREEN TREES @ $150.00 ea.).

ADDRESS CHART / OWNER INFORMATION				
GLENELG COUNTRY SCHOOL				
12793 FOLLY QUARTER ROAD				
GLENELG, MD 21737	PHONE: 410-531-2229			
PERMIT INFORMATION CHART				
Subdivision Name: GLENELG COUNTRY SCHOOL		Area: 80.67 AC.		Parcel #: 146
Plat #: 1296/245	Zoning: RR-DEO	Tax Map: 22	Elec. District: 5TH	Census Tract: 6051.01
Water Code: PRIVATE WELL		Sewer Code: PRIVATE SEPTIC		

APPROVED: FOR ~~PUBLIC OR~~ PRIVATE WATER & ~~PUBLIC OR~~ PRIVATE SEVERAGE SYSTEMS
[signature] 8-8-03
COUNTRY HEALTH OFFICER — DATE
HOWARD COUNTY HEALTH DEPARTMENT

APPROVED: DEPARTMENT OF PLANNING AND ZONING
[signature] 8/5/03
CHIEF, DEVELOPMENT ENGINEERING DIVISION — DATE
[signature] 8/12/03
CHIEF, DIVISION OF LAND DEVELOPMENT — DATE
[signature] 8/14/03
DIRECTOR, DEPARTMENT OF PLANNING AND ZONING — DATE

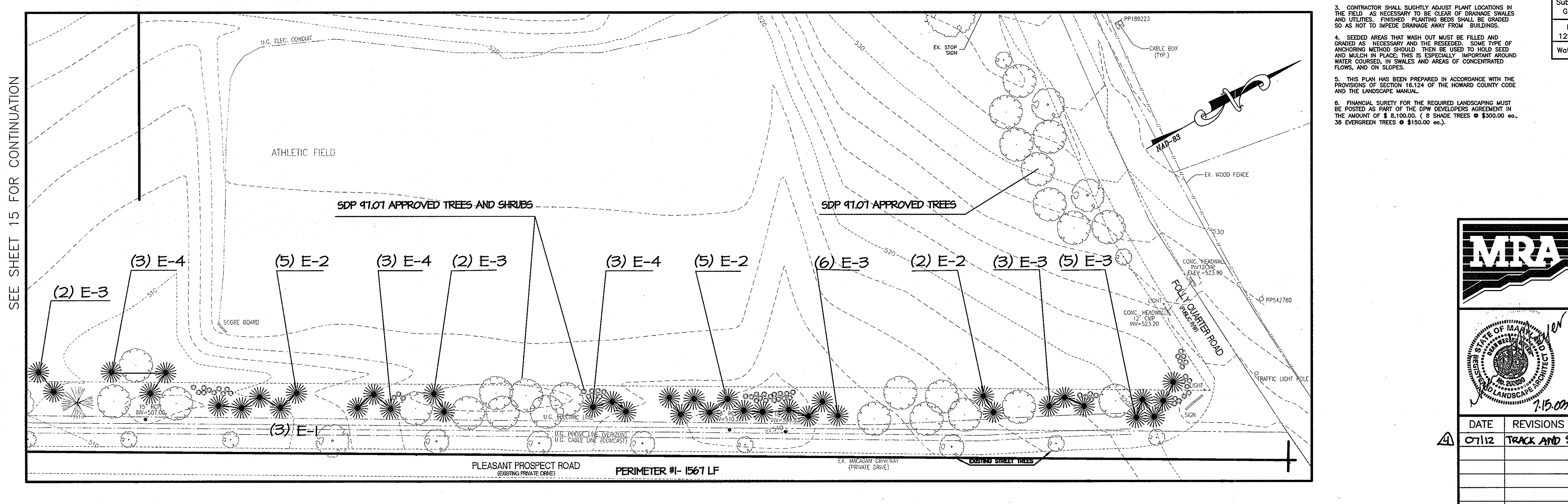

MORRIS & RITCHIE ASSOCIATES, INC.
ENGINEERS, PLANNERS, SURVEYORS AND LANDSCAPE ARCHITECTS
9090 JUNCTION DRIVE, SUITE 9
ANNAPOLIS JUNCTION, MARYLAND 20701
(410) 792-9792 or (301) 776-1690
FAX (410) 792-7395

THE GLENELG COUNTRY SCHOOL
PROPOSED UPPER SCHOOL ADDITION

LANDSCAPE DETAILS

TAX MAP 22 GRID 22 PARCEL 146
LIBER 1296 FOLIO 245
FIFTH (5TH) ELECTION DISTRICT
HOWARD COUNTY, MARYLAND

[Seal: STATE OF MARYLAND, REGISTERED LANDSCAPE ARCHITECT, NO. 200080] 7.15.03

	DATE	REVISIONS	
			JOB NO.: 12189.02
4	07/12	TRACK AND SYNTHETIC TURF FIELD IMPROVEMENTS	SCALE: 1" = 40'
			DATE: 07/14/03
			DRAWN BY: TCN
			DESIGN BY: TCN
			REVIEW BY: TCN
			SHEET: 16 OF ~~23~~ 37 (4)

SDP-03-84

NOTE:

REFER TO ELECTRICAL DRAWINGS, PREPARED BY SPEARS / VOTTA ASSOCIATES, INC., FOR POWER SUPPLY AND CONDUITS FROM THE NEW SCHOOL BUILDING TO THE GRINDER PUMPING STATION CONTROL PANEL, AND TO THE OVERALL ENCLOSURE FOR THE DOSING PUMPING STATION AND PRETREATMENT UNITS.

PERCOLATION TEST RESULTS

TEST HOLE I.D.	APPROX. DEPTH TO SUITABLE SOIL (FT.)	DEPTH OF PERC. TEST (FT.)	PERC. TEST RATE (MPI)	TOTAL DEPTH OF TEST HOLE (FT.)
PERC. TESTS BY GTA AND HOWARD COUNTY HEALTH DEPT. (07-18-02)				
TP-201	1	1	2	6.5
		3	4	
TP-202	2.5	1	>30	7.5
		3	2.5	
TP-203	4.5	5	3	13.5
TP-204	5	5	6	14.0
TP-205	6	-	OH	14.0
TP-206	6	6	13	14.5
TP-207	2.5	2.5	4	13.5
		6.5	18	
TP-208	9	5	>30	16.0
TP-208A	5	-	OH	10.0
TP-209	3	4.5	2	15.0

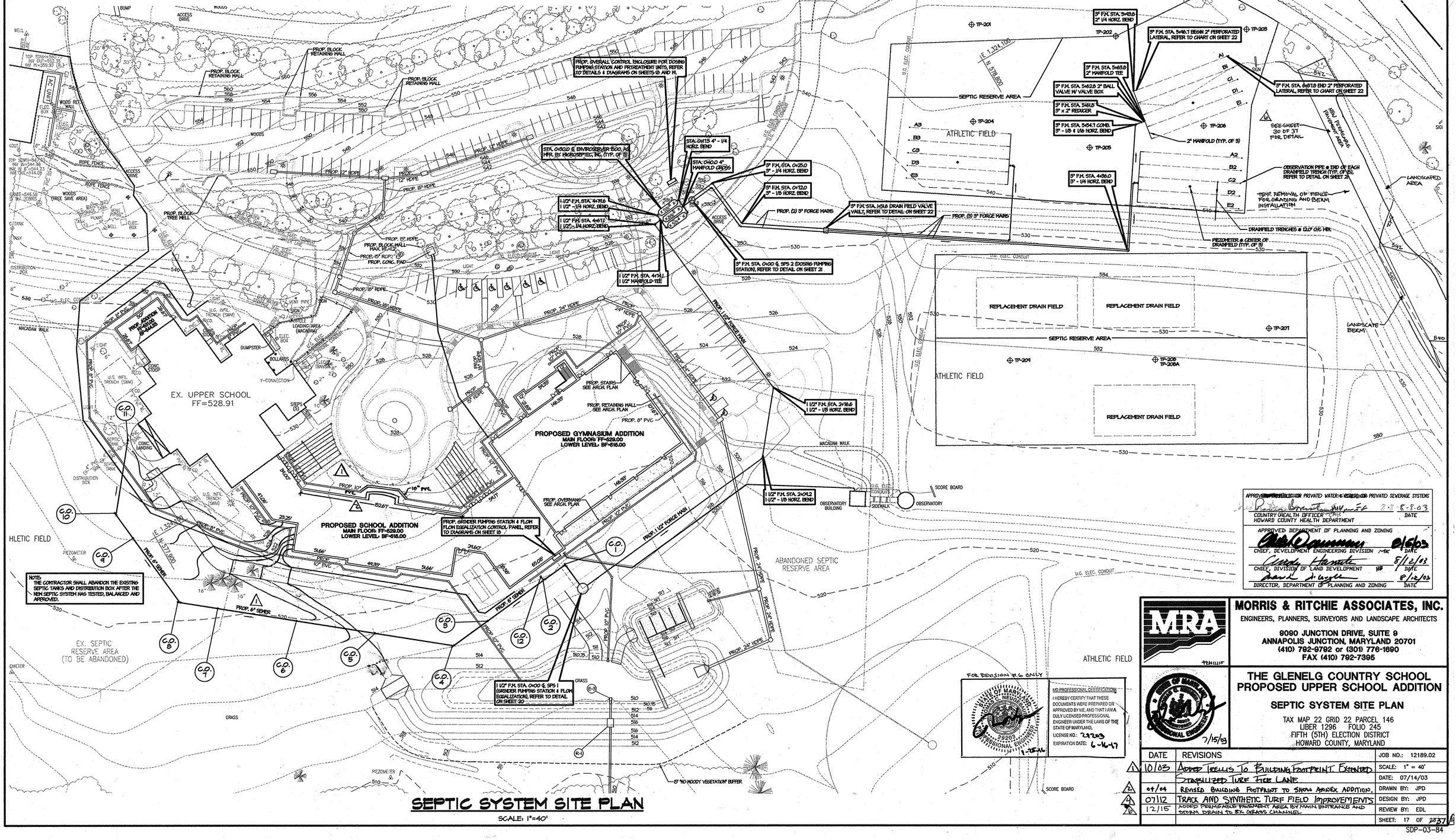

SEPTIC SYSTEM SITE PLAN

SCALE: 1"=40'

APPROVED: DEPARTMENT OF ENVIRONMENTAL PROTECTION FOR PRIVATE WATER & SEWERAGE SYSTEMS

COUNTRY HEALTH OFFICER, HOWARD COUNTY HEALTH DEPARTMENT — DATE 8-8-03

APPROVED: DEPARTMENT OF PLANNING AND ZONING

CHIEF, DEVELOPMENT ENGINEERING DIVISION — DATE 8/6/03

CHIEF, DIVISION OF LAND DEVELOPMENT — DATE 8/12/03

DIRECTOR, DEPARTMENT OF PLANNING AND ZONING — DATE 8/12/03

MORRIS & RITCHIE ASSOCIATES, INC.
ENGINEERS, PLANNERS, SURVEYORS AND LANDSCAPE ARCHITECTS
9090 JUNCTION DRIVE, SUITE 9
ANNAPOLIS JUNCTION, MARYLAND 20701
(410) 792-9792 or (301) 776-1690
FAX (410) 792-7395

THE GLENELG COUNTRY SCHOOL PROPOSED UPPER SCHOOL ADDITION

SEPTIC SYSTEM SITE PLAN

TAX MAP 22 GRID 22 PARCEL 146
LIBER 1296 FOLIO 245
FIFTH (5TH) ELECTION DISTRICT
HOWARD COUNTY, MARYLAND

FOR REVISION #6 ONLY

STATE OF MARYLAND — JAMES C. NEUBAUER — 29203 — PROFESSIONAL ENGINEER — 7/15/03

MD PROFESSIONAL CERTIFICATION

I HEREBY CERTIFY THAT THESE DOCUMENTS WERE PREPARED OR APPROVED BY ME, AND THAT I AM A DULY LICENSED PROFESSIONAL ENGINEER UNDER THE LAWS OF THE STATE OF MARYLAND, LICENSE NO.: 29203 EXPIRATION DATE: 6-16-07

DATE	REVISIONS
1 10/03	ADDED TRELLIS TO BUILDING FOOTPRINT. EXTENDED STABILIZED TURF FIRE LANE
2 04/04	REVISED BUILDING FOOTPRINT TO SHOW ADDITION.
4 07/12	TRACK AND SYNTHETIC TURF FIELD IMPROVEMENTS
6 12/15	ADDED PERMEABLE PAVEMENT AREA BY MAIN ENTRANCE AND STORM DRAIN TO EX. GRASS CHANNEL

JOB NO.: 12189.02
SCALE: 1" = 40'
DATE: 07/14/03
DRAWN BY: JPD
DESIGN BY: JPD
REVIEW BY: EDL
SHEET: 17 OF 37

SDP-03-84

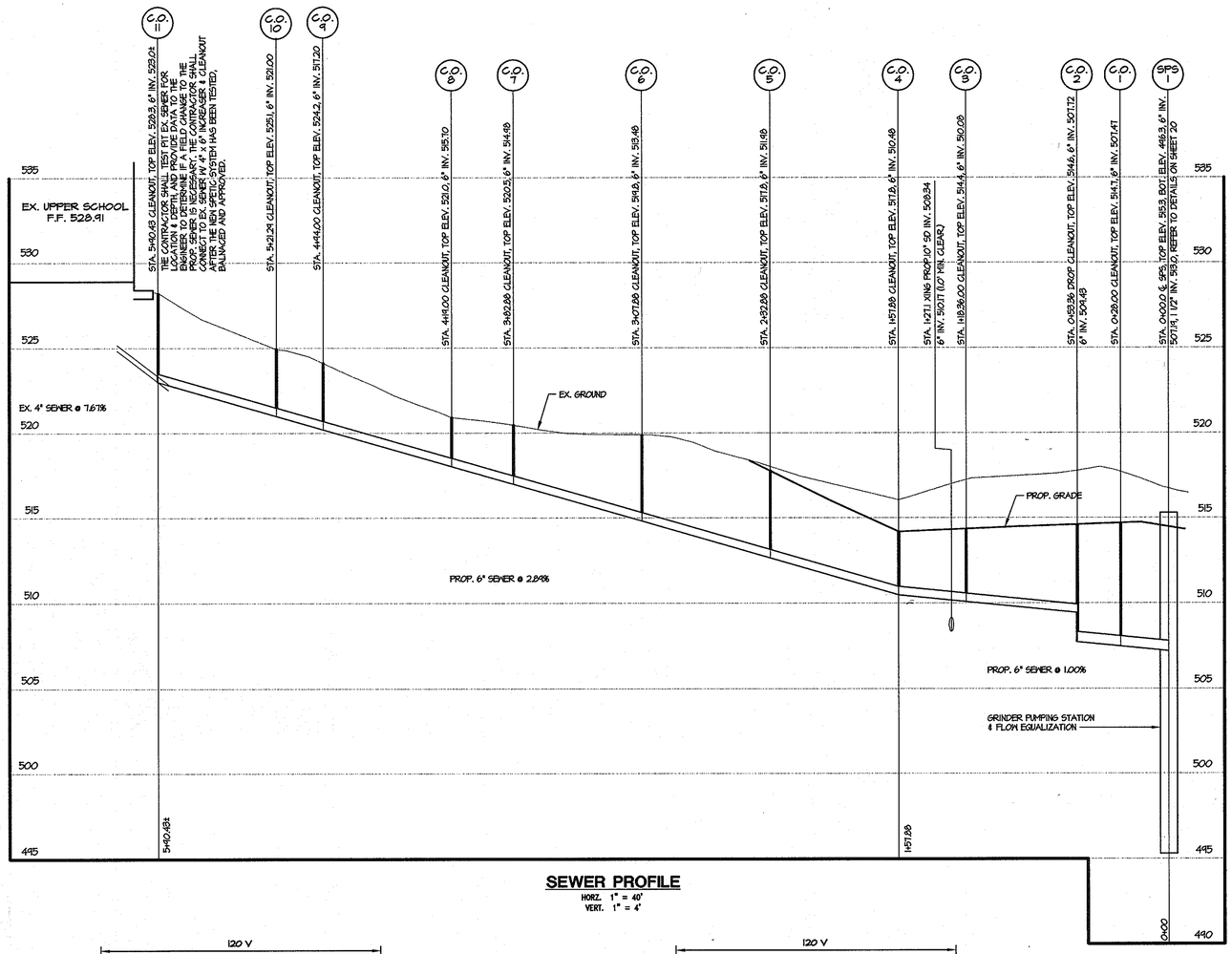

SEWER PROFILE

HORZ. 1" = 40'
VERT. 1" = 4'

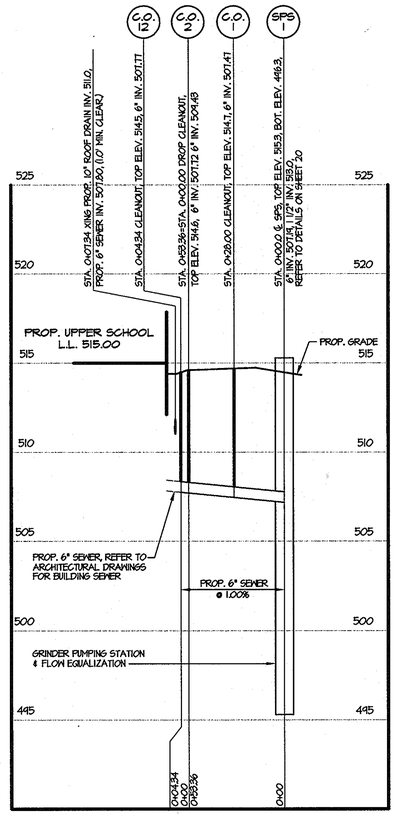

SEWER PROFILE

HORZ. 1" = 40'
VERT. 1" = 4'

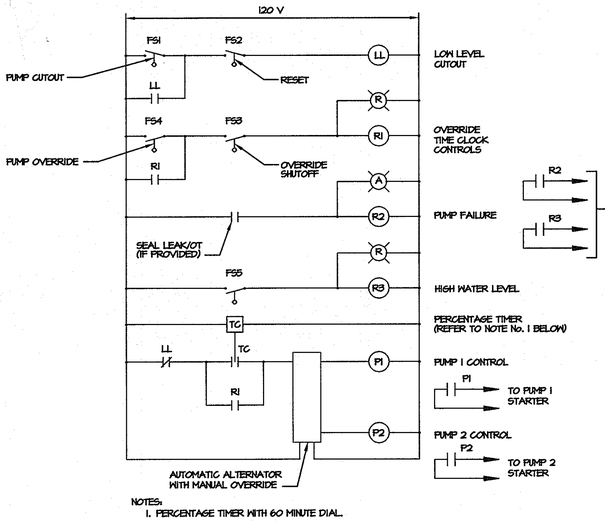

NOTES:
1. PERCENTAGE TIMER WITH 60 MINUTE DIAL.
2. PUMP SEAL LEAK AND OVERTEMPERATURE CONTROLS, (IF PROVIDED), NOT SHOWN.

GRINDER PUMP & FLOW EQUALIZATION CONTROL DIAGRAM

NO SCALE

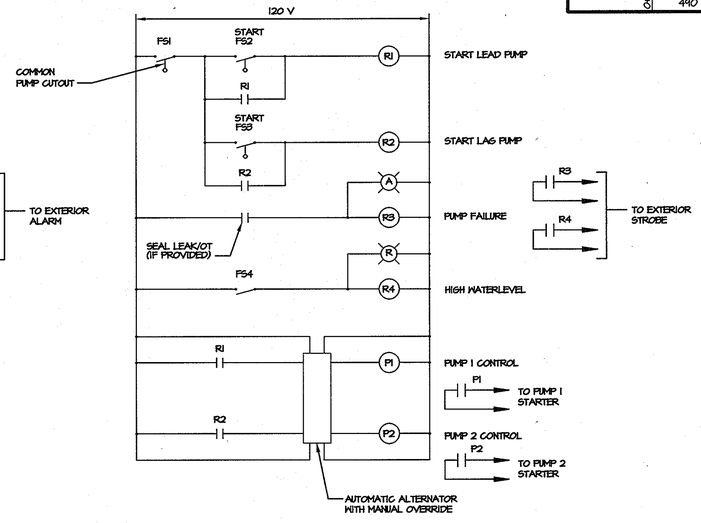

NOTE:
PUMP SEAL LEAK AND OVERTEMPERATURE CONTROLS, (IF PROVIDED), NOT SHOWN.

DOSING PUMP CONTROL DIAGRAM

NO SCALE

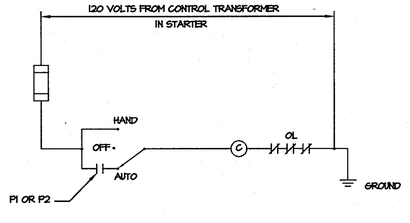

NOTE:
DIAGRAM IS TYPICAL FOR GRINDER PUMPS AND SEWAGE PUMPS.

PUMP STARTER DIAGRAM

NO SCALE

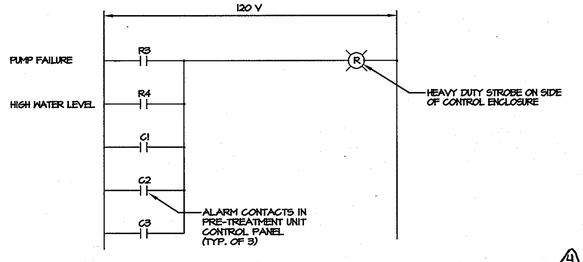

OVERALL CONTROL ENCLOSURE ALARM STROBE DIAGRAM

NO SCALE

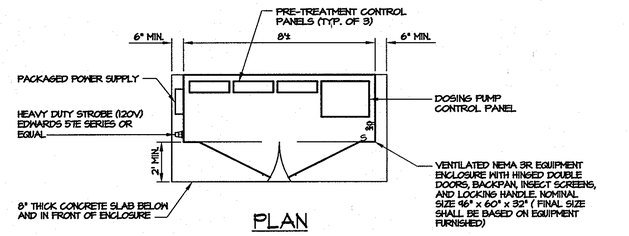

PLAN

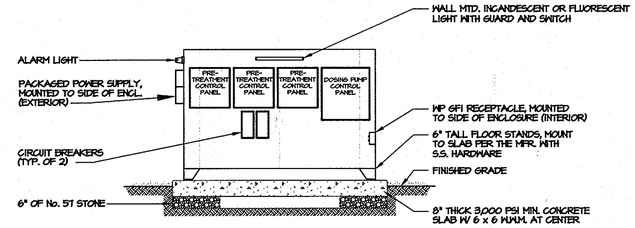

ELEVATION

OVERALL CONTROL ENCLOSURE DETAIL

NOT TO SCALE

GENERAL ELECTRICAL NOTES

1. THE CONTRACTOR SHALL OBTAIN AND PAY FOR ALL ELECTRICAL PERMITS AND INSPECTION.
2. ALL MATERIALS AND METHOD OF CONSTRUCTION SHALL BE IN CONFORMANCE WITH ALL APPLICABLE LOCAL AND NATIONAL CODES.
3. ALL MATERIALS AND ASSEMBLIES SHALL BEAR THE UNDERWRITERS LABORATORIES, INC. (U.L.) LISTING LABEL.
4. GROUNDING FOR ELECTRIC SERVICE SHALL BE PROVIDED IN ACCORDANCE WITH THE NATIONAL ELECTRIC CODE.
5. UNDERGROUND WIRING SHALL BE INSTALLED IN SCH. 40 PVC CONDUIT. CONDUCTORS SHALL BE COPPER WITH XHHW INSULATION.

APPROVED: FOR PUBLIC OR PRIVATE WATER & PUBLIC OR PRIVATE SEWERAGE SYSTEMS
COUNTY HEALTH OFFICER, HOWARD COUNTY HEALTH DEPARTMENT — DATE 8-18-03
APPROVED: DEPARTMENT OF PLANNING AND ZONING
CHIEF, DEVELOPMENT ENGINEERING DIVISION — DATE 8/5/03
CHIEF, DIVISION OF LAND DEVELOPMENT — DATE 8/12/03
DIRECTOR, DEPARTMENT OF PLANNING AND ZONING — DATE 8/12/03

MORRIS & RITCHIE ASSOCIATES, INC.
ENGINEERS, PLANNERS, SURVEYORS AND LANDSCAPE ARCHITECTS
9090 JUNCTION DRIVE, SUITE 9
ANNAPOLIS JUNCTION, MARYLAND 20701
(410) 792-9792 or (301) 776-1690
FAX (410) 792-7395

7/15/03

THE GLENELG COUNTRY SCHOOL PROPOSED UPPER SCHOOL ADDITION

SEWER PROFILES

TAX MAP 22 GRID 22 PARCEL 146
LIBER 1296 FOLIO 245
FIFTH (5TH) ELECTION DISTRICT
HOWARD COUNTY, MARYLAND

DATE	REVISIONS	
07/12	TRACK AND SYNTHETIC TURF FIELD IMPROVEMENTS	JOB NO.: 12189.02
		SCALE: AS SHOWN
		DATE: 07/14/03
		DRAWN BY: JPD
		DESIGN BY: JPD
		REVIEW BY: EDL
		SHEET: 18 OF 2837

SDP-03-84

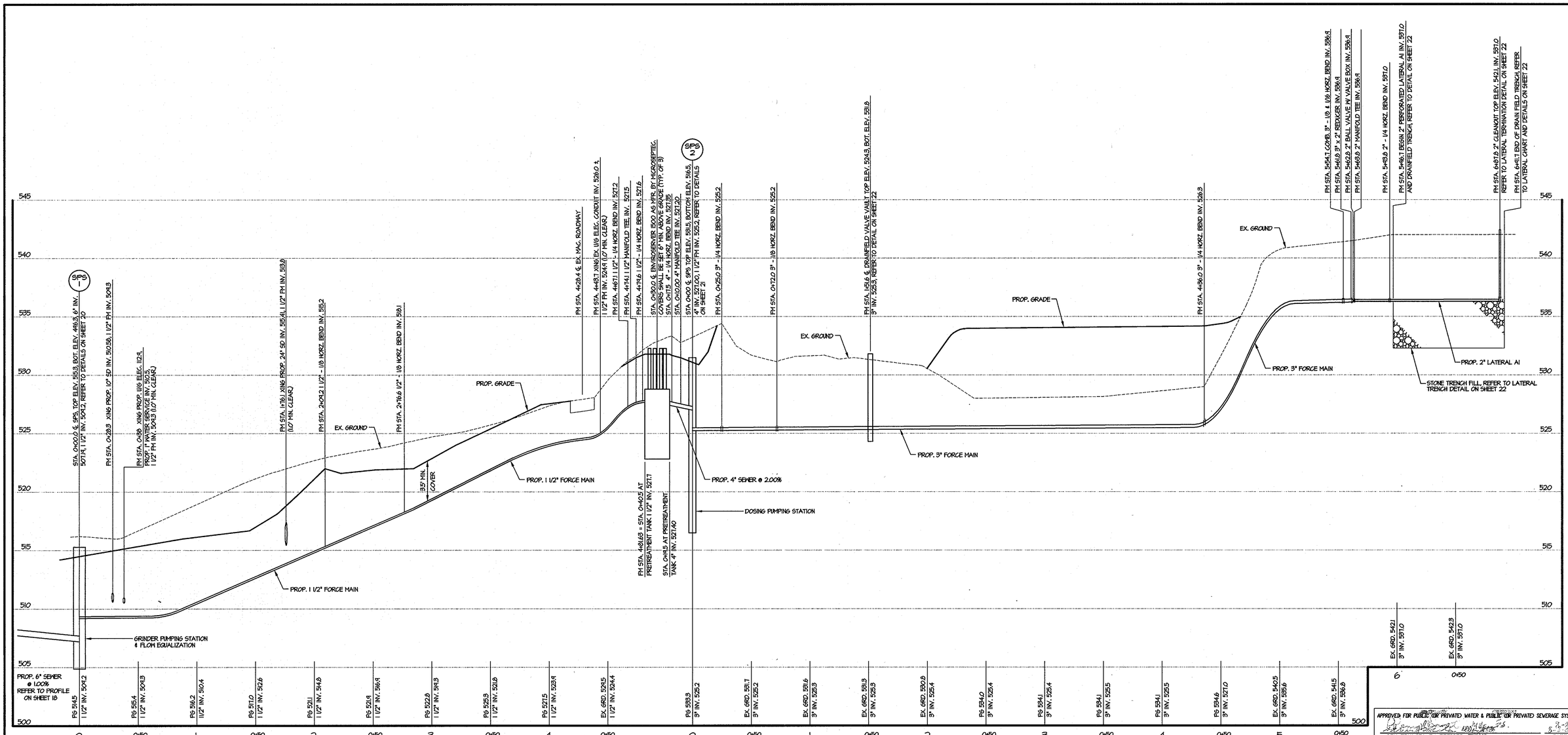

FORCE MAIN PROFILES

HORZ. 1" = 40'
VERT. 1" = 4'

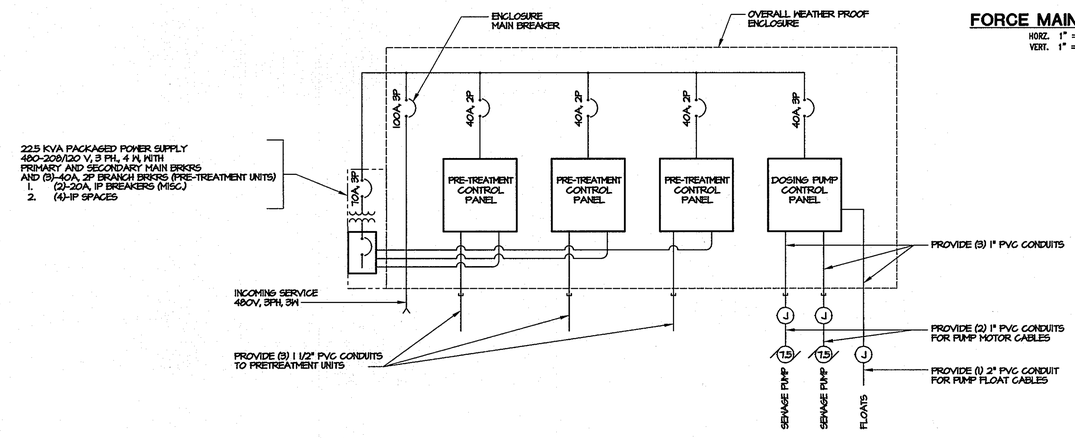

DOSING PUMPING STATION & PRETREATMENT UNITS
POWER SINGLE LINE DIAGRAM

NO SCALE

APPROVED FOR PUBLIC OR PRIVATE WATER & PUBLIC OR PRIVATE SEWERAGE SYSTEMS

COUNTRY HEALTH OFFICER, HOWARD COUNTY HEALTH DEPARTMENT — DATE

APPROVED DEPARTMENT OF PLANNING AND ZONING

CHIEF, DEVELOPMENT ENGINEERING DIVISION — DATE 8/5/03

CHIEF, DIVISION OF LAND DEVELOPMENT — DATE 8/12/03

DIRECTOR, DEPARTMENT OF PLANNING AND ZONING — DATE 8/14/03

MORRIS & RITCHIE ASSOCIATES, INC.
ENGINEERS, PLANNERS, SURVEYORS AND LANDSCAPE ARCHITECTS
9090 JUNCTION DRIVE, SUITE 9
ANNAPOLIS JUNCTION, MARYLAND 20701
(410) 792-9792 or (301) 776-1690
FAX (410) 792-7395

STATE OF MARYLAND — THOMAS C. RITCHEY — PROFESSIONAL ENGINEER — 7/15/03

THE GLENELG COUNTRY SCHOOL
PROPOSED UPPER SCHOOL ADDITION

FORCE MAIN PROFILES

TAX MAP 22 GRID 22 PARCEL 146
LIBER 1296 FOLIO 245
FIFTH (5TH) ELECTION DISTRICT
HOWARD COUNTY, MARYLAND

DATE	REVISIONS
07/12	4 TRACK AND SYNTHETIC TURF FIELD IMPROVEMENTS

JOB NO.: 12189.02
SCALE: AS SHOWN
DATE: 07/14/03
DRAWN BY: JPD
DESIGN BY: JPD
REVIEW BY: EDL
SHEET: 19 OF 25

37 4

SDP-03-84

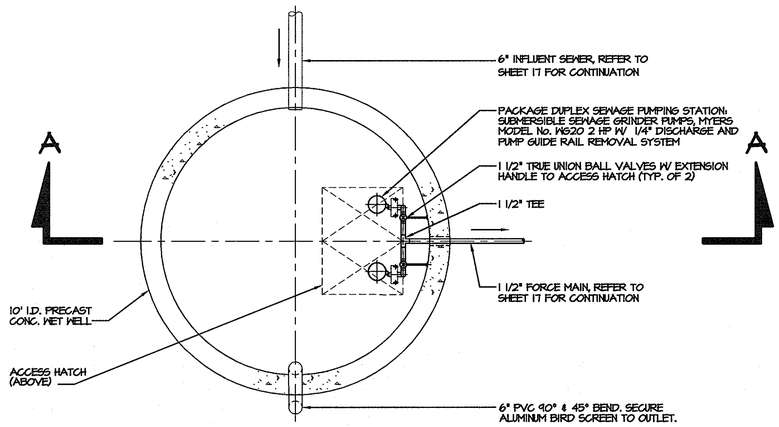

LOWER PLAN

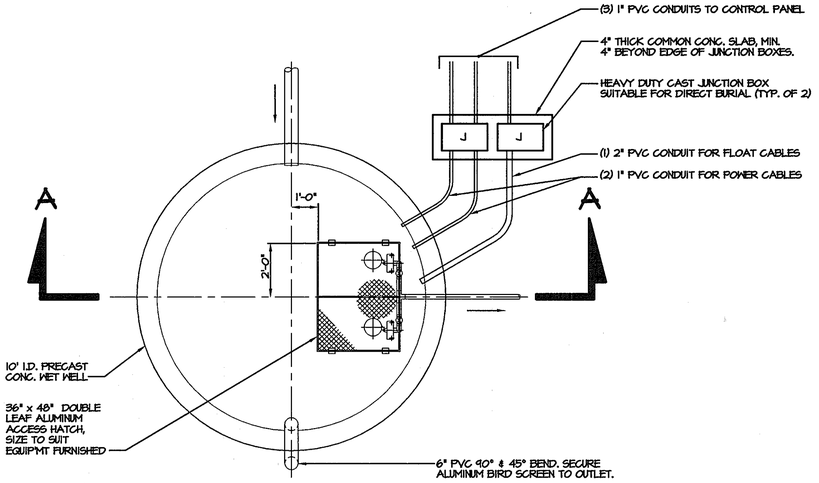

TOP PLAN

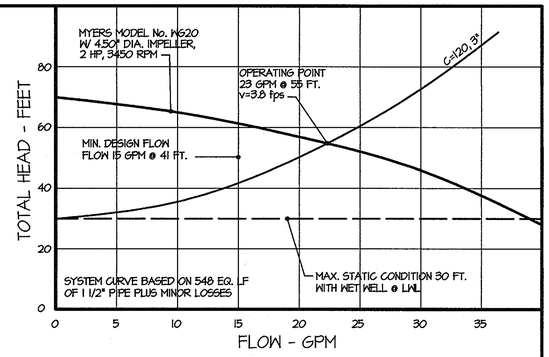

GRINDER PUMPING STATION & FLOW EQUALIZATION PUMP AND SYSTEM CURVE

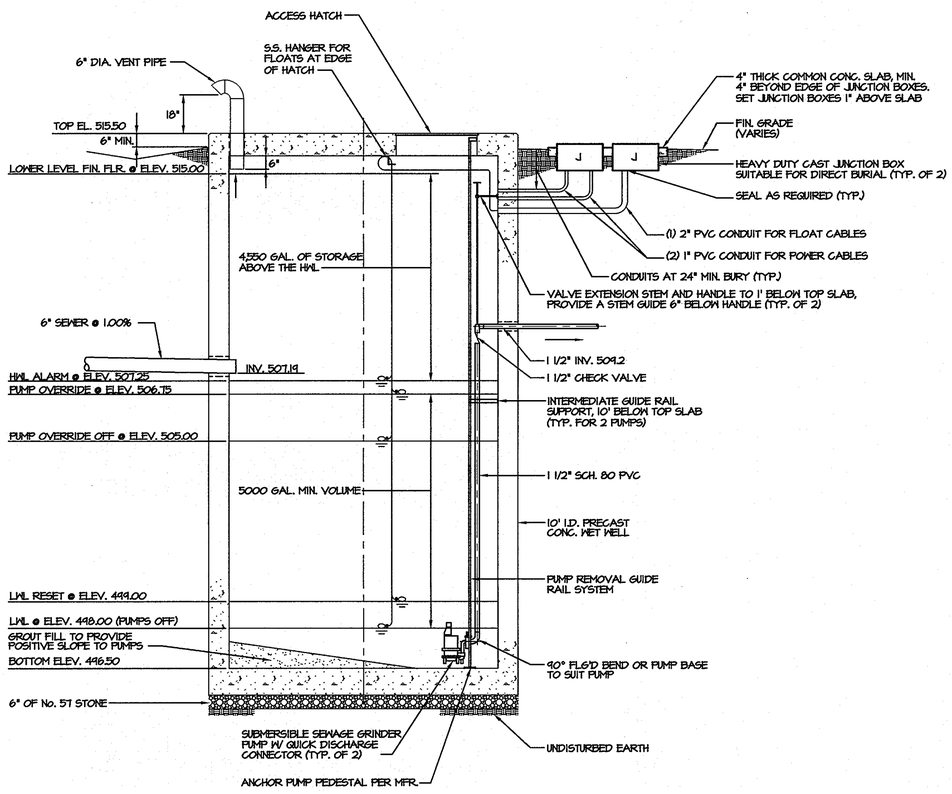

SECTION A-A

DETAIL-GRINDER PUMPING STATION & FLOW EQUALIZATION

SCALE: 3/8"=1'-0"

PACKAGE GRINDER PUMPING STATION & FLOW EQUALIZATION

A. GENERAL - Furnish and install a complete duplex grinder pump package consisting of two (2) grinder pumps and motors, internal discharge piping, check valves, shut off valves, quick-disconnect slide rail systems, lift chains, five (5) level controls, stainless steel level control bracket, junction box and control panel.

All equipment shall be furnished as a package from a single source, and be a product of F.E. Myers.

B. RAIL ASSEMBLIES - Refer to the Dosing Station specification, except guide rails are 1" diameter.

C. CHECK VALVES - A heavy duty spring loaded all rubber flapper type check valve with cast iron body shall be an integral part of the discharge seal assemblies. The valve design shall be such to allow for operation when negative heads, up to five feet, are encountered. The valves shall be designed to operate at all pressures in the sewer system created by the grinder pumps.

A flat set stainless steel spring, internally molded into the Buna-N rubber flapper, shall be furnished in order to prevent collection of debris in the check valve. All fasteners shall be stainless steel.

D. DISCHARGE PIPING - Schedule 80 PVC.

E. SHUT OFF VALVES - Refer to the drawings.

F. LEVEL CONTROLS - Refer to the Dosing Station specification, except five (5) are required.

G. SUBMERSIBLE GRINDER PUMP - Provide two centrifugal type grinder pumps, Myers Model MG-20, with 4 1/2 inch impeller, 23 gpm @ 55 feet, 3450 rpm submersible motor, suitable for operation in three phase, 480 volts. REFER TO DESIGN CRITERIA FOR OPERATING CONDITIONS.

H. CONTROL PANEL - Refer to the Dosing Station specification, except normal operation of the pumps will be by a repeat cycle timer with an override at HWL. Refer to the Control Diagrams for specific requirements.

I. The pump package manufacturer shall provide a minimum of eight (8) hours of field start-up assistance and training for both installations.

J. CONTROL PANEL - Furnish and install one (1) duplex control panel. The panel shall be a NEMA-4 door in door enclosure, for remote mounting, to include but not limited to the following:
(1) Main Disconnect Switch
(2) Circuit Breaker
(3) Magnetic starters with overload and low voltage protection
(2) Hand-off-automatic selector switch
(1) Automatic Electric Alternator
(2) Pump Running Lights
(3) Seal Failure Lights and Relays
(2) Overload Reset Buttons
(2) Elapsed Running Time Meters
(4) Mercury Float Switches
(2) Event counter for each pump
(1) Audible alarm with silence push-button and light
(1) Control Transformer
(1) Percentage timer w/ 60 minute dial

APPROVED: FOR PUBLIC OR PRIVATE WATER & PUBLIC OR PRIVATE SEWERAGE SYSTEMS
COUNTRY HEALTH OFFICER — DATE
HOWARD COUNTY HEALTH DEPARTMENT

APPROVED: DEPARTMENT OF PLANNING AND ZONING
CHIEF, DEVELOPMENT ENGINEERING DIVISION — DATE
CHIEF, DIVISION OF LAND DEVELOPMENT — DATE
DIRECTOR, DEPARTMENT OF PLANNING AND ZONING — DATE

MORRIS & RITCHIE ASSOCIATES, INC.
ENGINEERS, PLANNERS, SURVEYORS AND LANDSCAPE ARCHITECTS
9090 JUNCTION DRIVE, SUITE 9
ANNAPOLIS JUNCTION, MARYLAND 20701
(410) 792-9792 or (301) 776-1690
FAX (410) 792-7395

THE GLENELG COUNTRY SCHOOL
PROPOSED UPPER SCHOOL ADDITION
GRINDER PUMPING STATION, SPECIFICATION, AND PUMP & SYSTEM CURVE
TAX MAP 22 GRID 22 PARCEL 146
LIBER 1296 FOLIO 245
FIFTH (5TH) ELECTION DISTRICT
HOWARD COUNTY, MARYLAND

DATE	REVISIONS	JOB NO.: 12189.02
07112	TRACK AND SYNTHETIC TURF FIELD IMPROVEMENTS	SCALE: AS SHOWN
		DATE: 07/14/03
		DRAWN BY: JPD
		DESIGN BY: JPD
		REVIEW BY: EDL
		SHEET: 20 OF 23

SDP-03-84

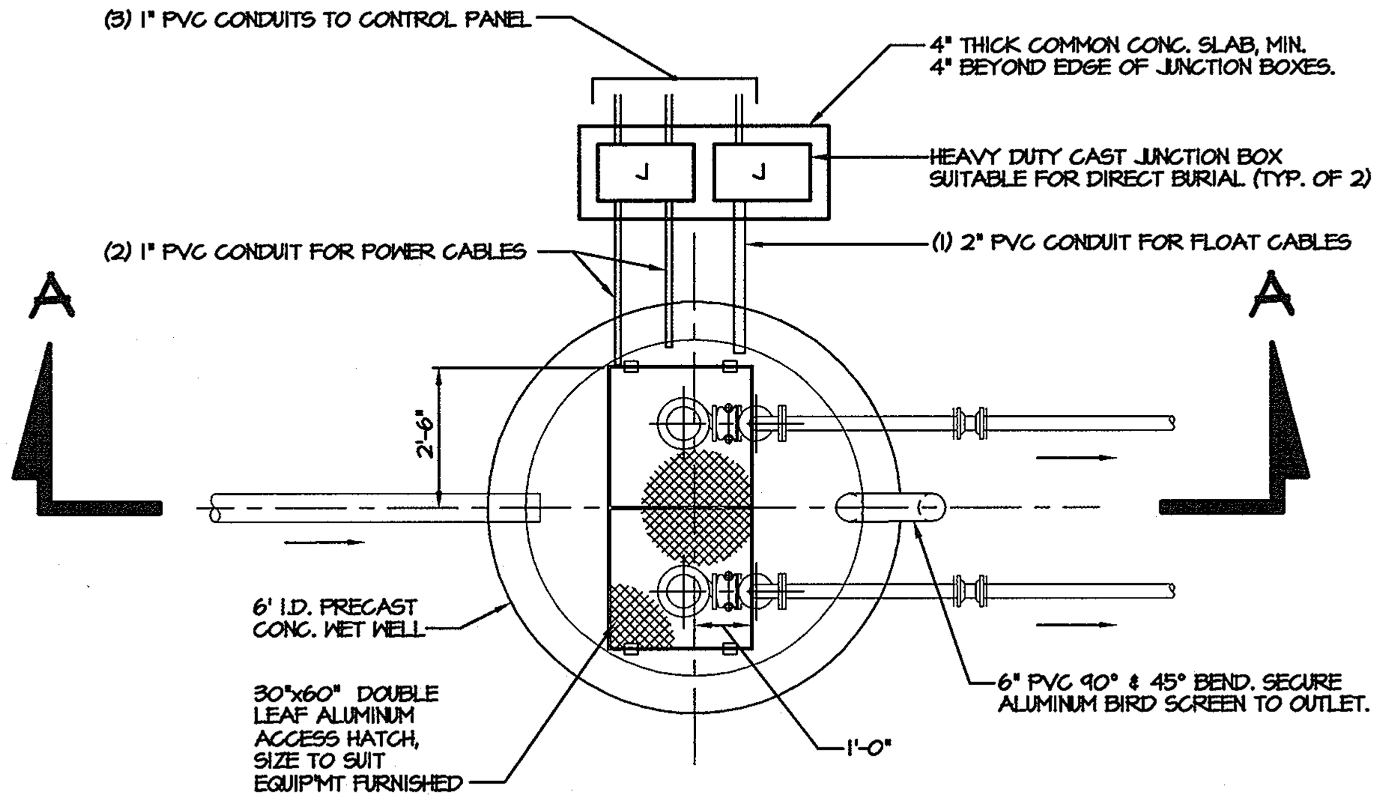

TOP PLAN

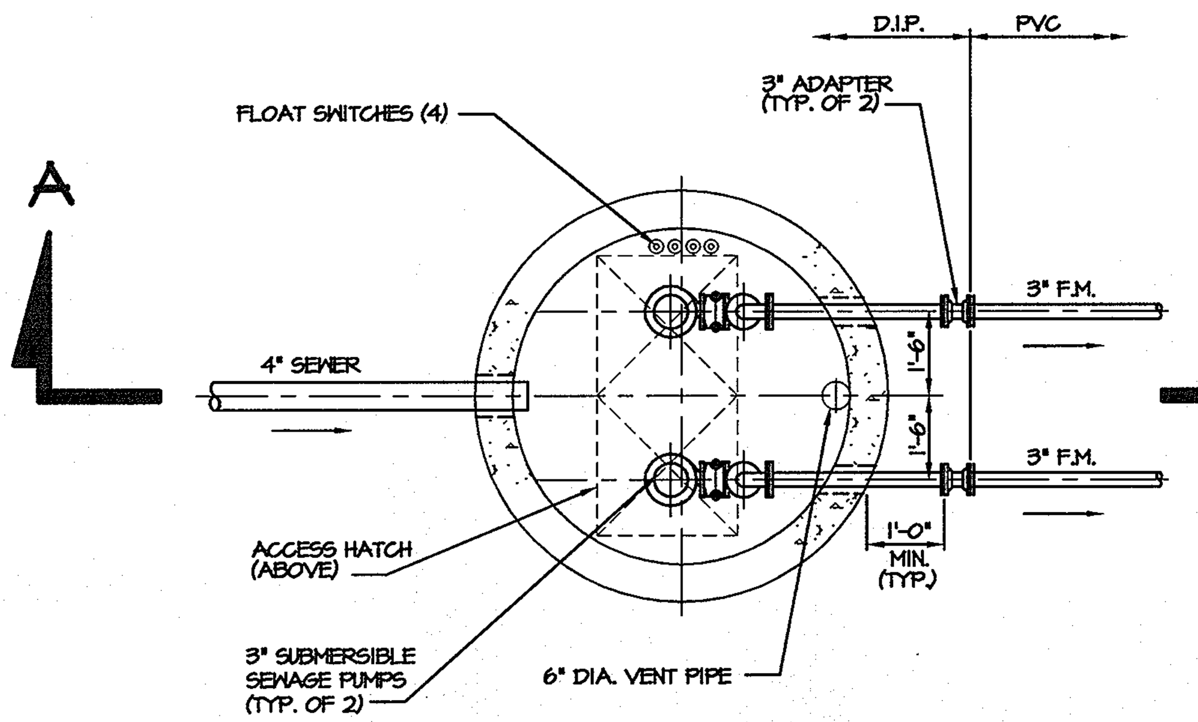

LOWER PLAN

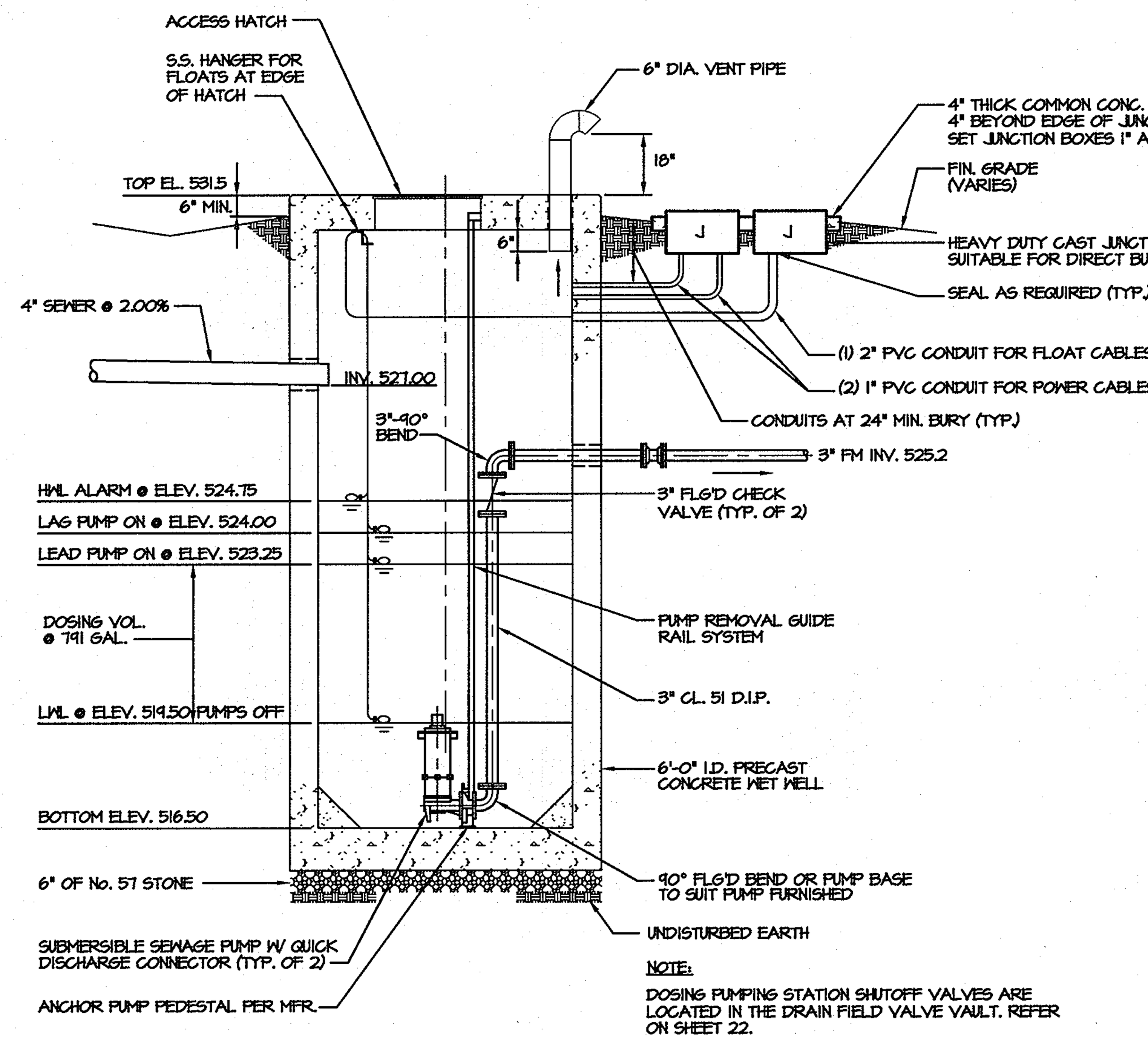

NOTE:

DOSING PUMPING STATION SHUTOFF VALVES ARE LOCATED IN THE DRAIN FIELD VALVE VAULT. REFER ON SHEET 22.

SECTION A-A
DETAIL-DOSING PUMPING STATION

SCALE: 3/8"=1'-0"

PRECAST CONCRETE STRUCTURES

A. PRECAST CONCRETE STRUCTURES - Precast concrete structures shall be the product of Atlantic Precast Concrete, Inc., Rotondo Precast, A.C. Miller Concrete Products, Monarch Products Company, Inc. or equal as approved.

B. DESIGN CRITERIA

1. Concrete - 5,000 PSI minimum strength @ 28 days.
2. Steel reinforcement - ASTM A-615, Grade 60.
3. Cover to steel - 1" minimum.
4. Design to meet ASTM C857 and ACI 318 with ASSHTO HS-20 loading.
5. Construction joints - sealed with butyl rubber resin or equivalent.

C. ACCESS HATCHES

1. Provide access hatches cast-in-place of the size and as shown on the drawings. Hatch shall have 1/4 inch thick aluminum checkered plate cover, reinforced for 300 pound per square foot live load, 180 degree swing heavy duty aluminum hinges with stainless steel lift handle, padlock, hasp and aluminum frame.
2. Aluminum frame to be in contact with concrete shall be bituminous coated.
3. Access hatches shall be a product of Washington Aluminum Co., Bilco, Halliday Products, or equal product as approved.

D. PIPE PENETRATIONS - All pipe penetrations shall have a cast-in-place compression type flexible gasket, A-LOK type for 4" and larger pipe, or a flexible rubber boot type gasket for pipe less than 4" in diameter.

E. EXECUTION

1. Installation shall be in accordance with the manufacturer's recommendation.
2. Lifting bars in top slabs and exposed surfaces shall be removed and voids finished smooth with sand cement grout.
3. Watertight testing shall be in accordance with MDE and local reqiurements.

SEWAGE PRETREATMENT UNITS

A. GENERAL - Furnish and install fully assembled sewage pretreatment units consisting of the tanks, pretreatment unit inserts, blower assemblies, blower controls & alarms (audible with silence push-button and light), and vent piping.

B. SEWAGE PRETREATMENT UNIT - Pretreatment units shall be the EnviroServer 1500, a product of MicroSepTec, Inc.

C. DESIGN CRITERIA

1. The pretreatment units shall reduce the strength of the waste effluent outflow to a maximum of 30 mg/l total suspended solids, 30 mg/l of biological oxygen demand (BOD5), and 10 mg/l of nitrogen.

D. EXECUTION

1. Installation shall be in accordance with the manufacturer's recommendation.
2. Watertight testing shall be in accordance with MDE and local reqiurements.

PACKAGE DOSING PUMPING STATION

A. GENERAL - Furnish and install a fully assembled duplex sewage pump package consisting of two (2) nonclog pumps and motors, basin assembly, internal discharge piping, check valves, shut off valves, quick-disconnect slide rail systems, lift chains, four (4) level controls, stainless steel level control bracket, junction box, inlet fitting, and control panel.

All equipment shall be factory installed except for the pumps, inlet fitting and externally mounted control panel. The package station shall be a product of F.E. Myers.

B. BASIN - The basin shall be 72" diameter with depth as shown on the drawings. The basin shall be molded of fiberglass reinforced polyester resin or precast concrete. If FRP, the basin shall have a minimum wall thickness of 1/4 inch and a steel anti-flotation plate shall be molded into the bottom of the basin.

C. BASIN COVER - Steel basin covers shall be provided with each FRP basin assembly. Each cover shall have a hinged access opening properly sized for installation and removal of pump and check valve assemblies. Precast concrete top slab shall have a cast-in-place aluminum hatch.

D. RAIL ASSEMBLIES - The lift-out rail system assemblies shall have structural guide brackets with guide yokes, guide rails of a minimum of 1-1/4 inch galvanized pipe running between an upper rail support and the discharge base, with dual 'O' rings for a hydraulic seal. All cast iron parts shall be coated with corrosion resistant baked on epoxy.

E. CHECK VALVES - Check valves shall be of the swing clapper type with rubber facing. A bronze seat bushing shall be mounted in face of valves to provide a corrosion-proof seat. The clapper shall be mounted on a stainless steel shaft and shall be spring loaded to prevent slamming when closing. Valve shall be suitable for operation in the vertical position.

F. DISCHARGE PIPING - Class 51 ductile iron pipe as shown on the drawings.

G. SHUT OFF VALVES - Refer to the drawings.

H. INLET FITTING - A one-piece inlet fitting for 4" SDR 26 plastic pipe shall be shipped loose for field installation for FRP basin, or A-LOK type gasket for precast concrete.

I. LEVEL CONTROLS - Pump on, off and alarm levels shall be controlled by four (4) mercury tube float switches. Switches shall consist of a mercury tube switch sealed in a corrosion-resistant polypropylene housing with a minimum of 18 gauge, 2-wire, SJOW/A jacketed cable. The cable shall be of sufficient length to reach the junction box with no splices. The level controls shall be suspended from a stainless steel bracket supplied by the float mfr. so that adjustment or replacement may be done without the use of any tools. Level controls shall be UL/CSA listed.

J. SUBMERSIBLE NON-CLOG PUMP - Provide two centrifugal type non-clog pumps, Myers Model 3RH with 7.5 HP, 3450 rpm submersible motor, suitable for operation in three phase, 480 volts. REFER TO DESIGN CRITERIA FOR OPERATING CONDITIONS.

K. CONTROL PANEL - Furnish and install one (1) duplex control panel. The panel shall be a NEMA-4 door in door enclosure, for remote mounting, to include but not limited to the following:

(1) Main Disconnect Switch
(2) Circuit Breaker
(3) Magnetic starters with overload and low voltage protection
(2) Hand-off-automatic selector switch
(1) Automatic Electric Alternator
(2) Pump Running Lights
(3) Seal Failure Lights and Relays
(2) Overload Reset Buttons
(2) Elapsed Running Time Meters
(4) Mercury Float Switches
(2) Event counter for each pump
(1) Audible alarm with silence push-button and light
(1) Control Transformer

L. MISCELLANEOUS - All fasteners shall be stainless steel.

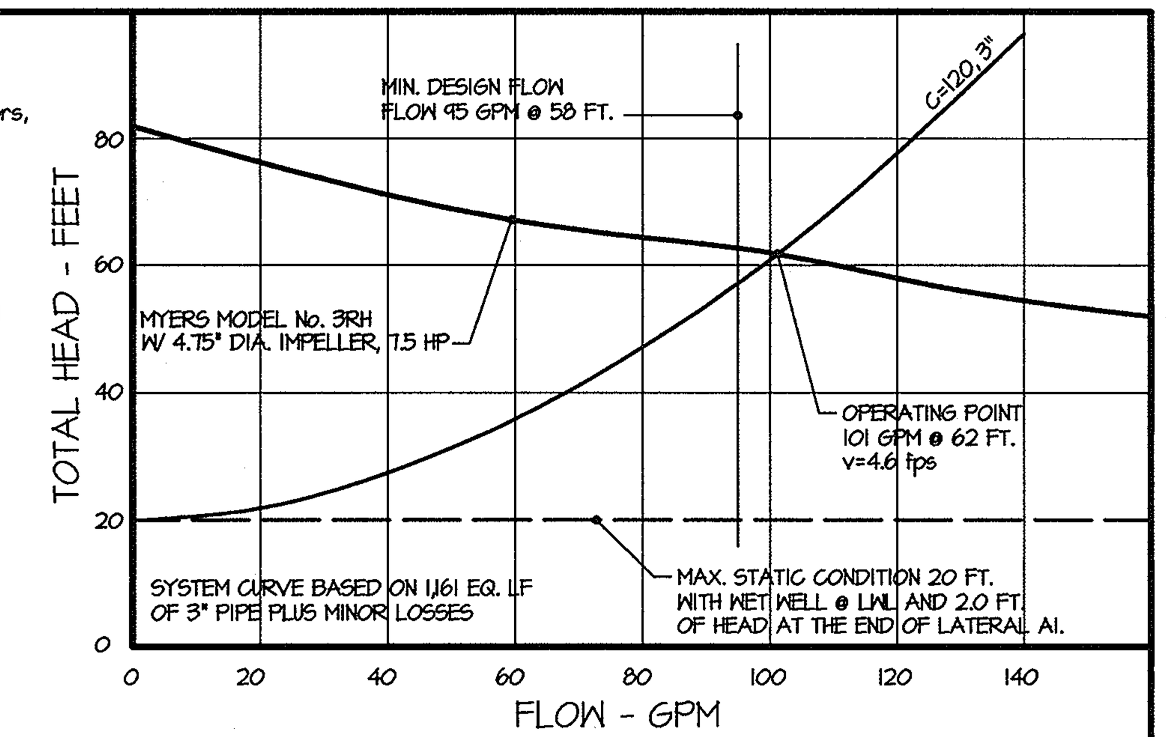

DOSING STATION
PUMP AND SYSTEM CURVE

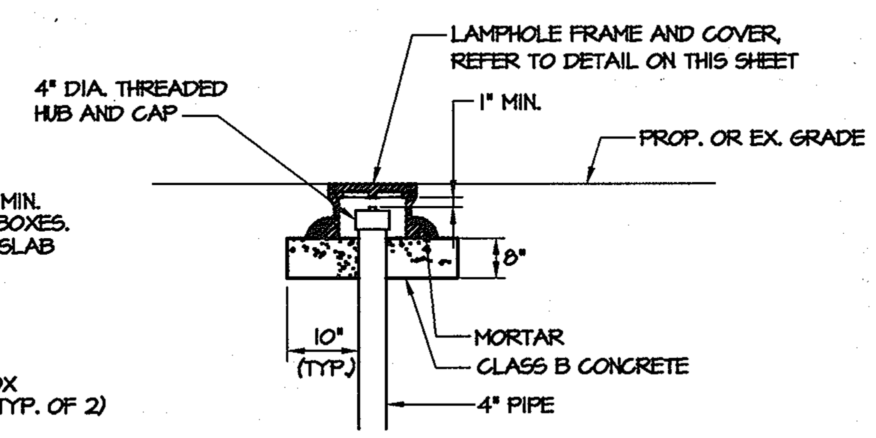

DETAIL-SEWER CLEANOUT

NOT TO SCALE

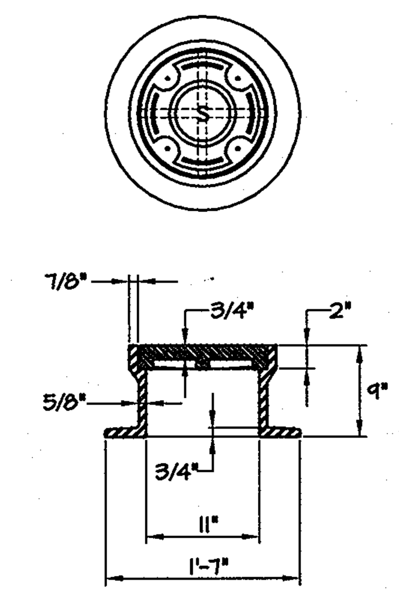

Wt FRAMR = 129 lbs
Wt COVER = 39 lbs

DETAIL-LAMPHOLE FRAME AND COVER

NOT TO SCALE

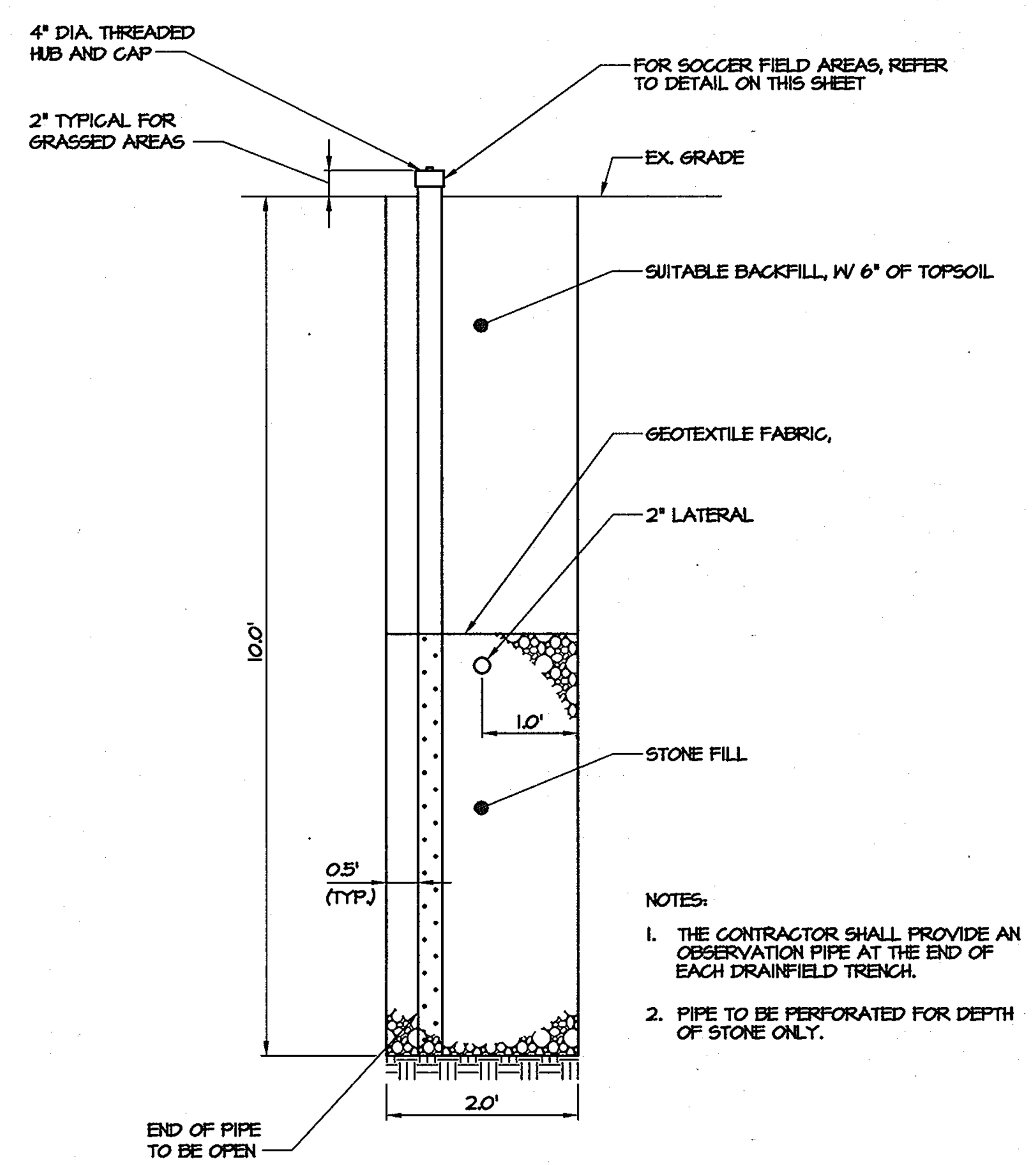

NOTES:

1. THE CONTRACTOR SHALL PROVIDE AN OBSERVATION PIPE AT THE END OF EACH DRAINFIELD TRENCH.
2. PIPE TO BE PERFORATED FOR DEPTH OF STONE ONLY.

(OUTSIDE OF SOCCER FIELD)
DETAIL-OBSERVATION PIPE

NOT TO SCALE

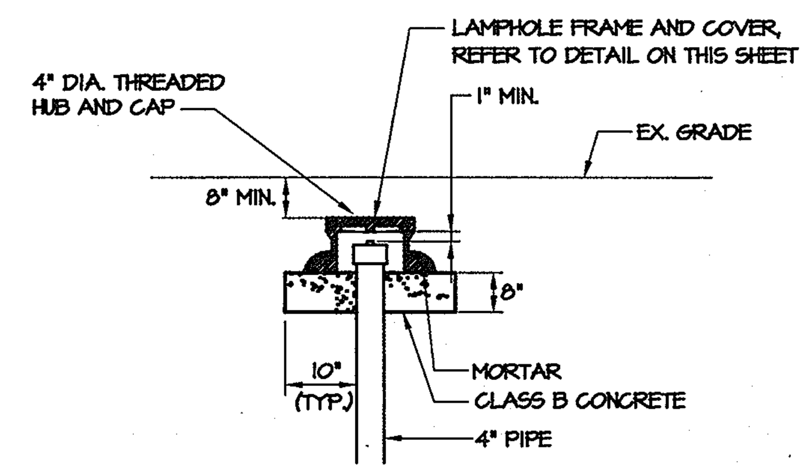

(IN SOCCER FIELD)
DETAIL- OBSERVATION PIPE

NOT TO SCALE

APPROVED: FOR PUBLIC OR PRIVATE WATER & PUBLIC OR PRIVATE SEWERAGE SYSTEMS

COUNTRY HEALTH OFFICER — DATE 8-8-2003
HOWARD COUNTY HEALTH DEPARTMENT

APPROVED: DEPARTMENT OF PLANNING AND ZONING

CHIEF, DEVELOPMENT ENGINEERING DIVISION — DATE 8/5/03

CHIEF, DIVISION OF LAND DEVELOPMENT — DATE 8/12/03

DIRECTOR, DEPARTMENT OF PLANNING AND ZONING — DATE 8/12/03

MORRIS & RITCHIE ASSOCIATES, INC.
ENGINEERS, PLANNERS, SURVEYORS AND LANDSCAPE ARCHITECTS
9090 JUNCTION DRIVE, SUITE 9
ANNAPOLIS JUNCTION, MARYLAND 20701
(410) 792-9792 or (301) 776-1690
FAX (410) 792-7395

STATE OF MARYLAND — THOMAS C. NEUGEBAUER — PROFESSIONAL ENGINEER — 7/15/03

THE GLENELG COUNTRY SCHOOL
PROPOSED UPPER SCHOOL ADDITION
DOSING PUMPING STATION, SPECIFICATION, PUMP & SYSTEM CURVE AND DETAILS

TAX MAP 22 GRID 22 PARCEL 146
LIBER 1296 FOLIO 245
FIFTH (5TH) ELECTION DISTRICT
HOWARD COUNTY, MARYLAND

DATE	REVISIONS	
		JOB NO.: 12189.02
07/12	TRACK AND SYNTHETIC TURF FIELD IMPROVEMENTS (4)	SCALE: AS SHOWN
		DATE: 07/14/03
		DRAWN BY: JPD
		DESIGN BY: JPD
		REVIEW BY: EDL
		SHEET: 21 OF 37 (4)

SDP-03-84

PRESSURE DISTRIBUTION ON SLOPING SITES												
LATERAL	LATERAL INVERT ELEV.	HEAD (FT.)	ORIFICE DIA. (IN.)	ORIFICE FLOW RATE (GPM)	ORIFICE SPACING (FT./IN.)	NUMBER OF ORIFICES	LATERAL FLOW RATE (GPM)	℄ MANIFOLD TO BEGIN. OF DRAINFIELD TRENCH (FT./IN.)	℄ MANIFOLD TO FIRST ORIFICE (FT./IN.)	LATERAL LENGTH (FT./IN.)	DRAINFIELD TRENCH LENGTH (FT./IN.)	LAST ORIFICE TO END OF TRENCH (FT./IN.)
DRAINFIELD No. 1												
A1	537.00	2.0	5/16	1.63	7'-11"	12	19.56	3'-0"	6'-11"	91'-1"	95'-0"	3'-11"
B1	537.00	2.0	5/16	1.63	7'-11"	12	19.56	3'-0"	6'-11"	91'-1"	95'-0"	3'-11"
C1	537.00	2.0	5/16	1.63	7'-11"	12	19.56	3'-0"	6'-11"	91'-1"	95'-0"	3'-11"
D1	537.00	2.0	5/16	1.63	7'-11"	12	19.56	3'-0"	6'-11"	91'-1"	95'-0"	3'-11"
E1	537.00	2.0	5/16	1.63	7'-11"	12	19.56	3'-0"	6'-11"	91'-1"	95'-0"	3'-11"
TOTAL FLOW RATE DRAINFIELD No. 1 = 97.80 GPM												
DRAINFIELD No. 2												
A2	535.00	2.0	5/16	1.63	7'-11"	12	19.56	3'-0"	6'-11"	91'-1"	95'-0"	3'-11"
B2	535.00	2.0	5/16	1.63	7'-11"	12	19.56	3'-0"	6'-11"	91'-1"	95'-0"	3'-11"
C2	535.00	2.0	5/16	1.63	7'-11"	12	19.56	3'-0"	6'-11"	91'-1"	95'-0"	3'-11"
D2	535.00	2.0	5/16	1.63	7'-11"	12	19.56	3'-0"	6'-11"	91'-1"	95'-0"	3'-11"
E2	535.00	2.0	5/16	1.63	7'-11"	12	19.56	3'-0"	6'-11"	91'-1"	95'-0"	3'-11"
TOTAL FLOW RATE DRAINFIELD No. 1 = 97.80 GPM												
DRAINFIELD No. 3												
A3	535.00	2.0	5/16	1.63	7'-11"	12	19.56	3'-0"	6'-11"	91'-1"	95'-0"	3'-11"
B3	535.00	2.0	5/16	1.63	7'-11"	12	19.56	3'-0"	6'-11"	91'-1"	95'-0"	3'-11"
C3	535.00	2.0	5/16	1.63	7'-11"	12	19.56	3'-0"	6'-11"	91'-1"	95'-0"	3'-11"
D3	535.00	2.0	5/16	1.63	7'-11"	12	19.56	3'-0"	6'-11"	91'-1"	95'-0"	3'-11"
E3	535.00	2.0	5/16	1.63	7'-11"	12	19.56	3'-0"	6'-11"	91'-1"	95'-0"	3'-11"
TOTAL FLOW RATE DRAINFIELD No. 1 = 97.80 GPM												

SEPTIC SYSTEM NOTES

1. ALL CONSTRUCTION METHODS AND MATERIALS SHALL BE IN ACCORDANCE WITH THE MARYLAND DEPARTMENT OF THE ENVIRONMENT (MDE) PRIVATE WASTEWATER DISPOSAL REGULATIONS AND HOWARD COUNTY HEALTH DEPARTMENT REGULATIONS.
2. THE SEPTIC SYSTEM CONTRACTOR MUST BE LICENSED BY HOWARD COUNTY TO INSTALL SEPTIC SYSTEMS, AND CERTIFIED BY THE MARYLAND DEPARTMENT OF THE ENVIRONMENT TO INSTALL SAND MOUND SYSTEMS.
3. STAKE OUT OF THE ENTIRE SEPTIC SYSTEM SHALL BE PERFORMED BY A PROFESSIONAL LAND SURVEYOR PRIOR TO SCHEDULING OF THE PRECONSTRUCTION MEETING.
4. THE CONTRACTOR SHALL COORDINATE A PRECONSTRUCTION MEETING WITH MDE, HOWARD COUNTY HEALTH DEPARTMENT, THE ENGINEER, AND THE SEPTIC SYSTEM SUBCONTRACTOR.
5. THE CONTRCATOR SHALL SUBMIT, FOR APPROVAL, SIX SETS OF SHOP DRAWINGS TO THE ENGINEER. SHOP DRAWING SUBMITTALS SHALL INCLUDE PIPE, FITTINGS, VALVES, VALVE BOXES, STRUCTURES, HATCHES, FRAMES & COVERS, PUMPS, GUIDE RAILS, CONTROLS, PRETREATMENT EQUIP. AND ELECTRICAL EQUIP.
6. THE GRINDER PUMPS, DOSING PUMPING STATION AND PRETREATMENT EQUIPMENT ARE LONG LEAD TIME ITEMS. THE CONTRACTOR SHOULD EXPECT A MINIMUM OF 8 WEEKS BETWEEN ORDER AND DELIVERY.
7. THE CONTRACTOR IS REQUIRED TO TEST AND BALANCE THE SEPTIC SYSTEM FOR APPROVAL BY MDE. PRELIMINARY TESTING AND BALANCING SHALL BE PERFORMED BY THE CONTRACTOR PRIOR TO THE FINAL WITH MDE. THE CONTRACTOR SHALL PROVIDE CLEAN WATER FOR CONTINUOUS TESTING.
8. ALL REQUESTS FOR FIELD CHANGES SHALL BE SUBMITTED TO THE ENGINEER FOR APPROVAL.
9. ALL CONSTRUCTION/INSTALLATIONS SHALL BE WITNESSED BY THE INSPECTOR PRIOR TO BACKFILL OPERATIONS.
10. ALL FITTINGS SHALL HAVE CONCRETE BUTTRESSES PER THE HOWARD COUNTY D.P.W. WATER & SEWER STANDARDS.
11. THE 2" BALL VALVES SHALL BE ADJUSTED TO PROVIDE 2.0 FEET OF HEAD TO THE DISTAL END OF THE HIGHEST ELEVATION LATERAL IT SERVES.
12. THE CONTRACTOR SHALL COORDINATE ALL PIPE PENETRATIONS IN PRECAST CONCRETE STRUCTURES TO SUIT PIPE MATERIAL AND LOCATIONS.
13. THE CONTRACTOR SHALL PROVIDE ONE COPY OF OPERATIONS & MAINTENANCE (O & M) MANUALS FOR THE GRINDER PUMPING STATION, DOSING PUMPING STATION, AND THE PRETREATMENT UNITS TO EACH OF THE FOLLOWING, THE OWNER, MDE, HOWARD COUNTY HEALTH DEPARTMENT, AND THE ENGINEER. THE O & M MANUALS SHALL BE DISTRIBUTED DURING THE PRELIMINARY TESTING AND BALANCING.

PIPE SPECIFICATION

GRAVITY SEWER

- ALL PIPE AND FITTINGS SHALL BE SDR-26 AND MUST COMPLY WITH ASTM D-3034.

FORCE MAINS AND DRAINFIELD LATERALS

- 1 1/2", 2" & 3" PIPE AND FITTINGS SHALL BE SCH. 40 PVC WITH SOLVENT WELD JOINTS UNLESS OTHERWISE NOTED.
- 1 1/2", 2" & 3" PIPE AND FITTINGS SHALL BE SCH. 80 PVC WITH SOLVENT WELD JOINTS FOR PAVED AREAS.
- SCHEDULE 80 PVC SHALL BE USED WHERE THREADED FITTINGS ARE REQUIRED.
- 2" & 3" BALL VALVES SHALL BE BRASS BODIED UNLESS OTHERWISE NOTED.

DOSING PUMPING STATION DESIGN CRITERIA

PROJECTED WASTEWATER FLOW

PROPOSED UPPER SCHOOL EXPANSION (1):
STUDENTS - 230 x 15 GPD = 3,450 GPD
FACULTY - 35 x 15 GPD = + 525 GPD
TOTAL 3,975 GPD

PROPOSED GYMNASIUM:
GYM CLASS (2) - 3/DAY x 40 STUDENTS x 10 GPD = 1,200 GPD
TEAM PRACTICE (3) - 120 STUDENTS x 10 GPD = 1,200 GPD
SPECIAL EVENT (4) - 320 SEATS x 3 GPD = + 960 GPD
TOTAL 3360 GPD

TOTAL MAXIMUM DAILY WASTEWATER FLOW TO DISPOSAL AREA No. 10 = 7,335 GPD

AVERAGE WASTEWATER FLOW = 3,668 GPD

DAILY AVERAGE WASTEWATER FLOW PER WEEK = 2,260 GPD

NOTES:

(1) NUMBER OF STUDENTS AND FACULTY ESTABLISHED BY THE " MASTERPLAN FOR SPECIAL EXCEPTION 1999.
(2) GYM CLASSES ARE HELD FROM 8:30 TO 3:30, 5 DAYS A WEEK. ONLY 2 TO 3 CLASSES PER DAY OF MIDDLE AND UPPER SCHOOL STUDENTS, WITH A MAXIMUM OF 40 STUDENTS PER CLASS, USE THE SHOWERS.
(3) ATHLETIC TEAM PRACTICES BEGIN AT 3:45. THE MAXIMUM NUMBER OF STUDENTS TO USE THE LOCKER ROOMS/SHOWERS DAILY IS APPROXIMATELY 120.
(4) IT IS ESTIMATED THAT ONE EVENT PER DAY MAY BE HELD IN THE GYM, SUCH AS SCHOOL ASSEMBLY, PARENT MEETING, FUNDRAISER, SPORTING EVENT, ETC. THE MAXIMUM SEATING CAPACITY IS 320.

DESIGN FLOW

BASED ON 4,500 GPD, (3) 1,500 GPD ENVIROSERVER PRETREATMENT TANKS, AND FLOW EQUALIZATION AT SPS 1.

STATIC HEAD (MAXIMUM)

INVERT OF LATERAL A1 537.0
LOW WATER LEVEL − 519.5
17.5 FT. ~ 18 FT.
+ 2 FT. AT DISTAL END OF LATERAL A1 = 20 FT. MAX. STATIC HEAD

MINOR LOSSES

3" 90° BEND	4 @ 8'	=32'
3" TEE	1 @ 16'	=16'
3" CHECK VALVE	1 @ 19'	=19'
3" BALL VALVE (OPEN)	2 @ 1.5'	=3'
3" 45° BEND	2 @ 3.8'	=7.6'
3" PIPE		+ 572'
		649.6 LF ~ 650 LF OF 3" PIPE
3" x 2" REDUCER	1 @ 2.5'	=2.5'
2" 90° BEND	2 @ 5.5'	=11'
2" TEE	3 @ 12'	=36'
2" BALL VALVE (OPEN)	1 @ 1.2'	=1.2'
2" PIPE		+ 125'
		175.7 ~ 176 LF OF 2" PIPE

CONVERT 2" PIPE TO EQUIVALENT LF OF 3" PIPE $\left(\frac{3"}{2"}\right)^{2.63}$ = 2.905 x 176 = 511 LF

DESIGN LENGTH = 650 LF + 511 LF = 1,161 EQUIVALENT LF OF 3" PIPE

SYSTEM CURVE

GPM	C=120	TOTAL HEAD
20	1.8	21.9
40	6.5	27.5
60	13.7	35.9
80	23.4	47.2
100	35.2	60.9
120	49.7	77.7
140	66.0	96.6

PUMPING UNITS

PROVIDED: 2 @ 101 GPM @ 62 FEET EACH
MOTOR: 7.5 HP, 3450 RPM
SELECTION FOR PUMP AND SYSTEM CURVE: MYERS MODEL No. 3RH, 3" DISCHARGE, 4.75" DIA. IMPELLER, PASSES 2" SOLIDS

WET WELL-6 FT. I.D.

MINIMUM PUMP CYCLE BASED ON 6 DOSES/DAY: Qd/6 DOSES PER DAY=MIN. VOLUME REQUIRED
MINIMUM VOLUME REQUIRED: 4,500 GPD/6 DOSES=750 GAL.
VOLUME PROVIDED: 791 GAL.

SEPTIC DRAINFIELD DEEP TRENCH LENGTH CALCULATIONS

1. THE REQUIRED ABSORPTIVE AREA IS GIVEN BY: A=Q/I

WHERE:
A=REQUIRED ABSORPTIVE AREA IN SQUARE FEET
Q=DESIGN FLOW RATE IN GALLONS PER DAY: 7,335 GPD
I=MAXIMUM APPLICATION RATE IN GALLONS PER DAY PER SQUARE FEET: 1.2 GPD/SQ. FT.

THUS, 7,335 GPD/1.2 GPD/SQ. FT.= 6,113 SQ. FT.

2. THE STANDARD TRENCH LENGTH IS GIVEN BY: L=A/a

WHERE:
L=STANDARD TRENCH LENGTH IN FEET
a=TRENCH BOTTOM AREA PER LINEAR FOOT OF TRENCH: 2 SQ. FT./FT.

THUS, L= 6,113 SQ. FT./2 SQ.FT./FT.= 3,057 FT.

3. THE PERCENT OF THE STANDARD TRENCH LENGTH IS GIVEN BY:

$$\frac{w+2}{w+1+2d} \times 100$$

WHERE:
w=TRENCH WIDTH IN FEET: 2 FT.
d=DEPTH OF USEABLE SIDEWALL: 5 FT.

THUS, THE APPLICABLE PERCENT OF STANDARD TERNCH LENGTH IS 36.4%

4. THE TOTAL TRENCH LENGTH, BASED ON 150% OF THE DESIGN FLOW, A 2 FOOT TRENCH WIDTH, 5 FEET OF USEABLE SIDEWALL, AND 30.8% OF THE STANDARD TRENCH LENGTH IS AS FOLLOWS:

1.5(0.308 x 3,057 FT.) = 1,412 FEET
1,412 FT./3 DRAINFIELDS = 471 FT. OF TRENCH/DRAINFIELD

5. PROVIDE A 150% SYSTEM CONSISTING OF 3 DRAINFIELDS AT 50% EACH.

3 DRAINFIELDS @ 150% OF THE DESIGN FLOW = 15 LATERALS @ 95 FT. EACH = 1,425 FT.

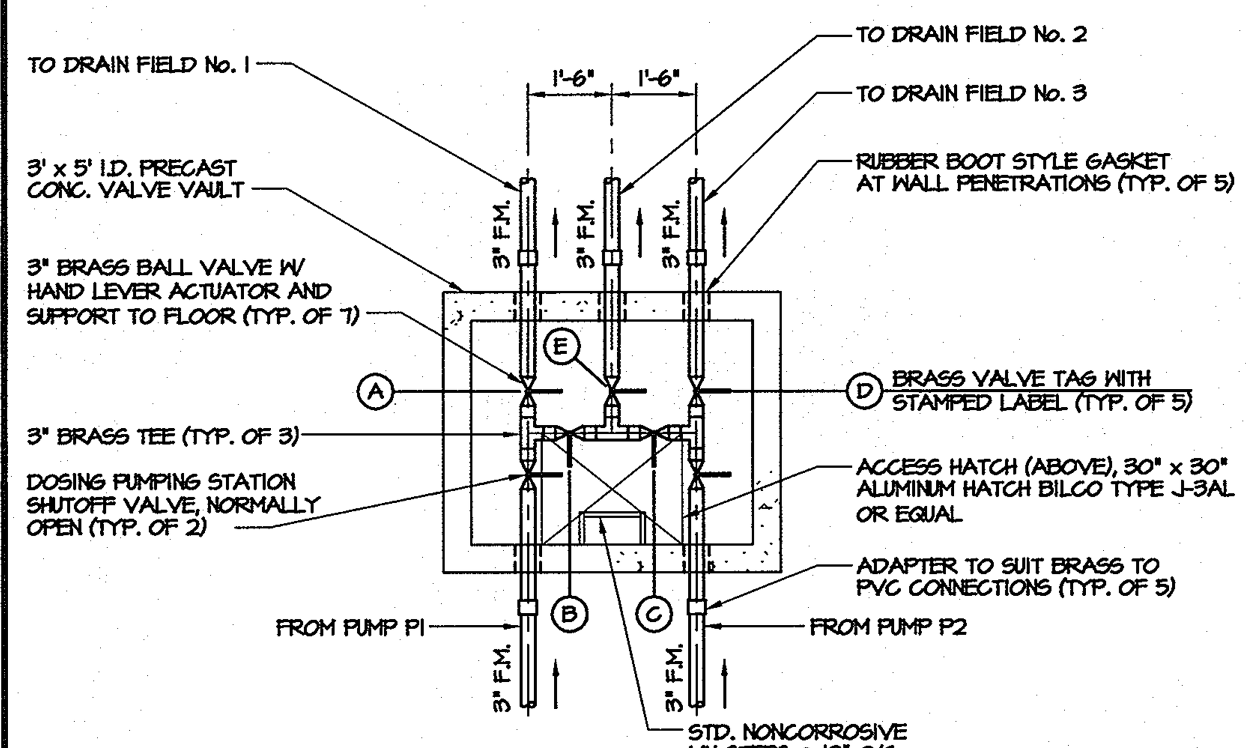

O = OPEN
C = CLOSED

DRAIN FIELD ROTATION SCHEDULE					
SCHEDULE No.	VALVE TAG				
	A	B	C	D	E
1	O	C	O	C	O
2	C	O	C	O	O
3	O	C	C	O	O

NOTES:

1. REFER TO PROFILE ON SHEET 19 FOR TOP ELEV., BOTTOM ELEV. AND PIPE INVERT.
2. VALVE 'E' TO BE OPEN NORMALLY. VALVE 'E' TO BE CLOSED ONLY IF IT BECOMES NECESSARY FOR P1 TO PUMP TO DRAIN FIELD No. 3 OR FOR P2 TO PUMP TO DRAIN FIELD No. 1.
3. OPERATE EACH SCHEDULE FOR SIX MONTHS BEFORE ROTATING TO THE NEXT SCHEDULE.

DETAIL-DRAIN FIELD VALVE VAULT

SCALE: 3/8"=1'-0"

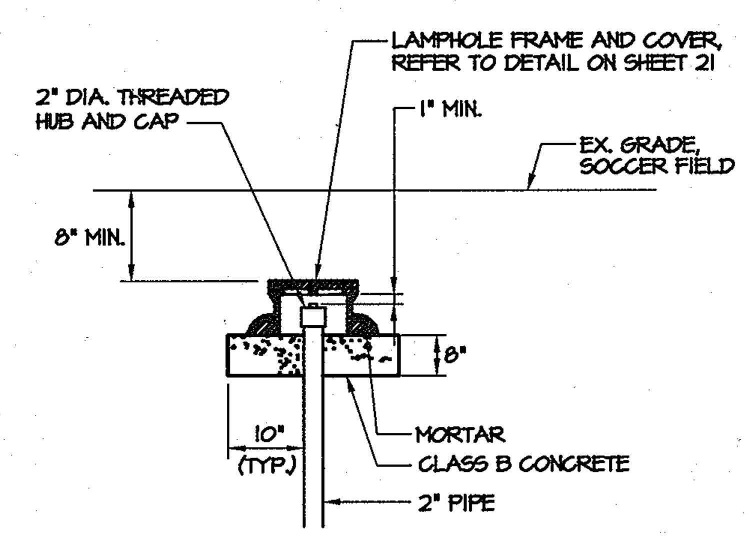

(TYP. FOR LATERALS A2 & A3)

(IN SOCCER FIELD)

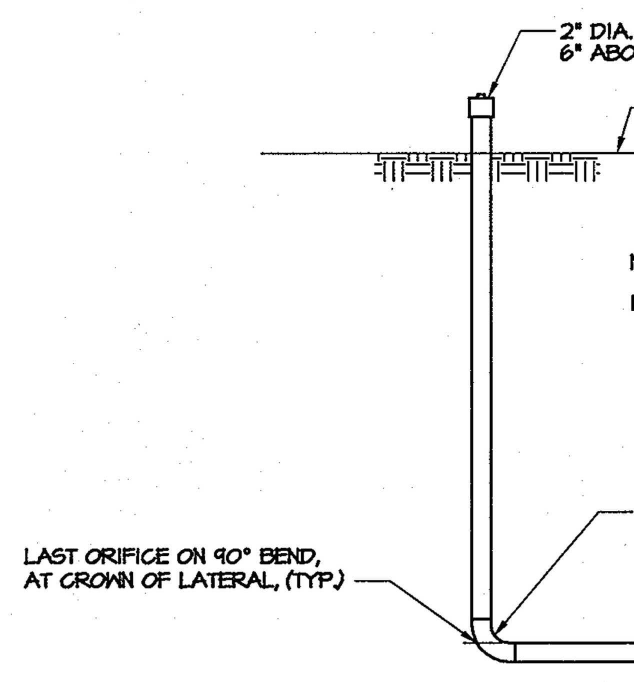

NOTES:

1. FOR LATERALS THAT TERMINATE BELOW GRADE WITHOUT A 90° BEND, THE CONTRACTOR SHALL INSTALL A THREADED END CAP WITH THE LAST ORIFICE DRILLED THROUGH THE CAP AT THE CROWN OF THE 2" LATERAL. TYP. FOR LATERALS B1, C1, D1, B2, C2, D2, B3, C3 & D3.

(TYP. FOR LATERALS A1)

(OUTSIDE OF SOCCER FIELD)

DETAIL-DRAIN FIELD LATERAL TERMINATION

NOT TO SCALE

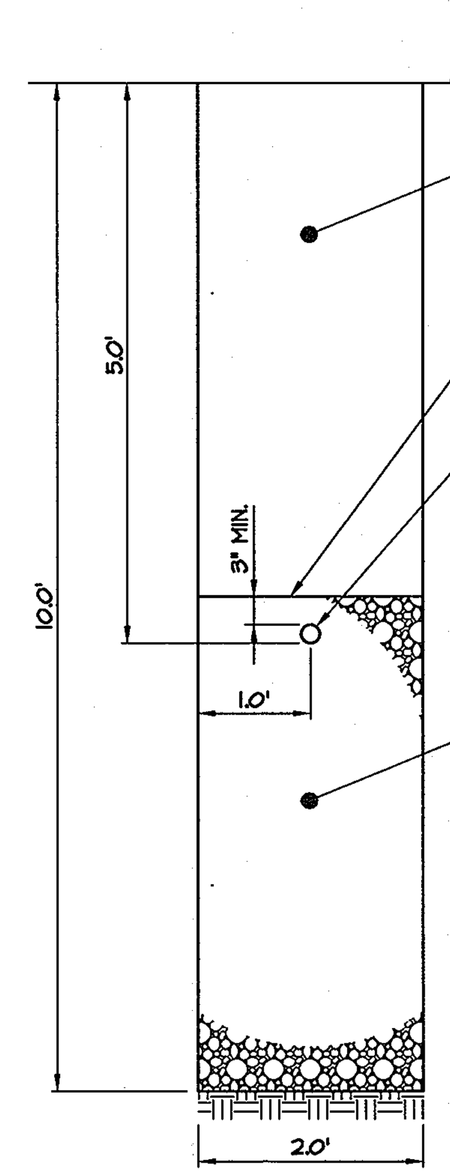

NOTES:

1. THE CONTRACTOR SHALL PROVIDE AN ORIFICE SHIELD AT EACH ORIFICE, AS MANUFACTURED BY GAG SIM/TECH FILTER OR EQUAL.
2. LATERAL TRENCHES SHALL BE SPACED AT 12.0' ON CENTER MINIMUM.
3. CONTRACTOR TO INSTALL TRACER WIRE ALONG THE CROWN OF EACH LATERAL PIPE.

DETAIL-DRAIN FIELD LATERAL TRENCH

NOT TO SCALE

APPROVED: FOR PUBLIC OR PRIVATE WATER & PUBLIC OR PRIVATE SEWERAGE SYSTEMS
COUNTRY HEALTH OFFICER — HOWARD COUNTY HEALTH DEPARTMENT — DATE 8-8-03
APPROVED: DEPARTMENT OF PLANNING AND ZONING
CHIEF, DEVELOPMENT ENGINEERING DIVISION — DATE 8/5/03
CHIEF, DIVISION OF LAND DEVELOPMENT — DATE 8/12/03
DIRECTOR, DEPARTMENT OF PLANNING AND ZONING — DATE 8/12/03

MORRIS & RITCHIE ASSOCIATES, INC.
ENGINEERS, PLANNERS, SURVEYORS AND LANDSCAPE ARCHITECTS
9090 JUNCTION DRIVE, SUITE 9
ANNAPOLIS JUNCTION, MARYLAND 20701
(410) 792-9792 or (301) 776-1690
FAX (410) 792-7395

7/15/03

THE GLENELG COUNTRY SCHOOL
PROPOSED UPPER SCHOOL ADDITION
DETAILS, DESIGN CRITERIA, NOTES AND TABLES
TAX MAP 22 GRID 22 PARCEL 146
LIBER 1296 FOLIO 245
FIFTH (5TH) ELECTION DISTRICT
HOWARD COUNTY, MARYLAND

DATE	REVISIONS	
07/12	TRACK AND SYNTHETIC TURF FIELD IMPROVEMENTS	JOB NO.: 12189.02
		SCALE: AS SHOWN
		DATE: 07/14/03
		DRAWN BY: JPD
		DESIGN BY: JPD
		REVIEW BY: EDL
		SHEET: 22 OF ~~35~~ 37

SDP-03-84

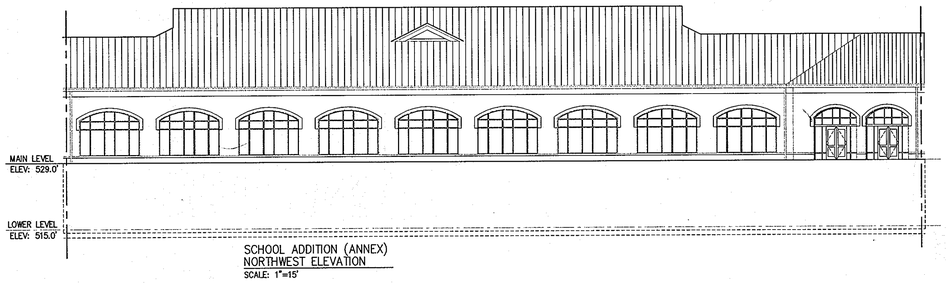

SCHOOL ADDITION (ANNEX)
NORTHWEST ELEVATION
SCALE: 1"=15'

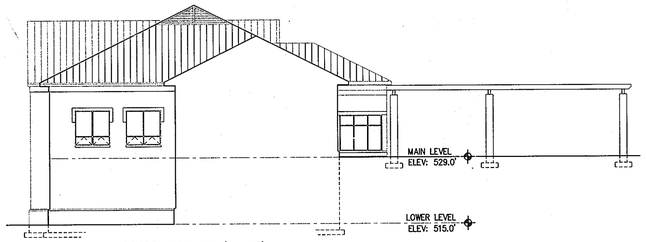

SCHOOL ADDITION (ANNEX)
NORTHEAST ELEVATION
SCALE: 1"=15'

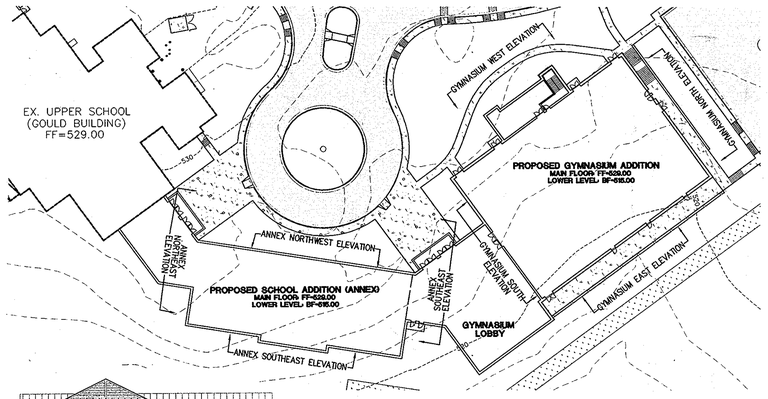

ELEVATION LOCATION PLAN
SCALE: 1"=50'

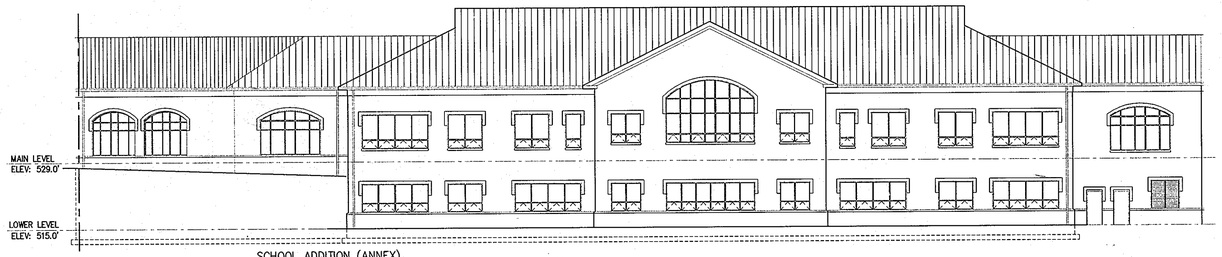

SCHOOL ADDITION (ANNEX)
SOUTHEAST ELEVATION
SCALE: 1"=15'

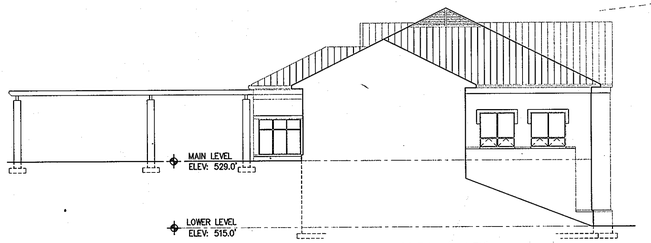

SCHOOL ADDITION (ANNEX)
SOUTHWEST ELEVATION
SCALE: 1"=15'

ARCHITECTURAL ELEVATION DISCLAIMER

THE ENCLOSED ARCHITECTURAL ELEVATIONS ARE SHOWN FOR REFERENCE ONLY. NO CONSTRUCTION WORK IS TO BE PERFORMED BASED ON INFORMATION SHOWN ON THIS PLAN. CONTRACTOR IS TO REFER TO ARCHITECTURAL PLANS FOR ALL BUILDING CONSTRUCTION ITEMS.

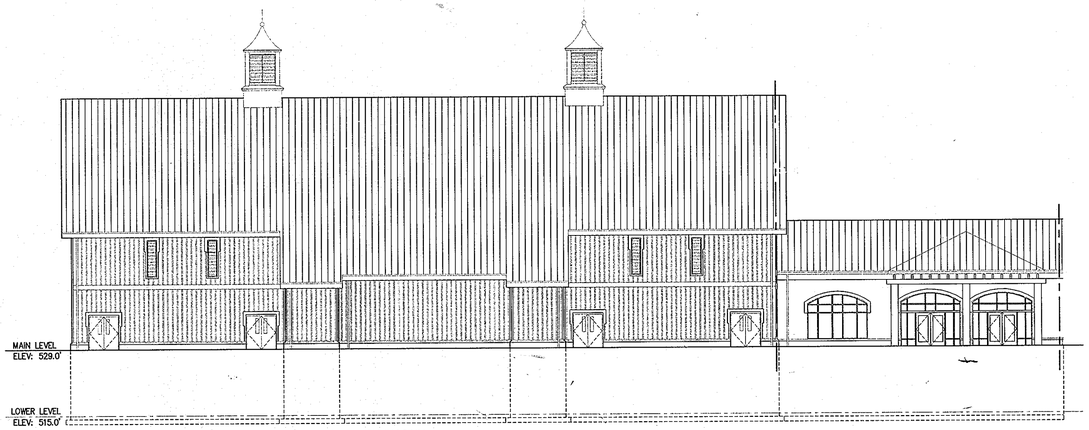

GYMNASIUM
WEST ELEVATION
SCALE: 1"=15'

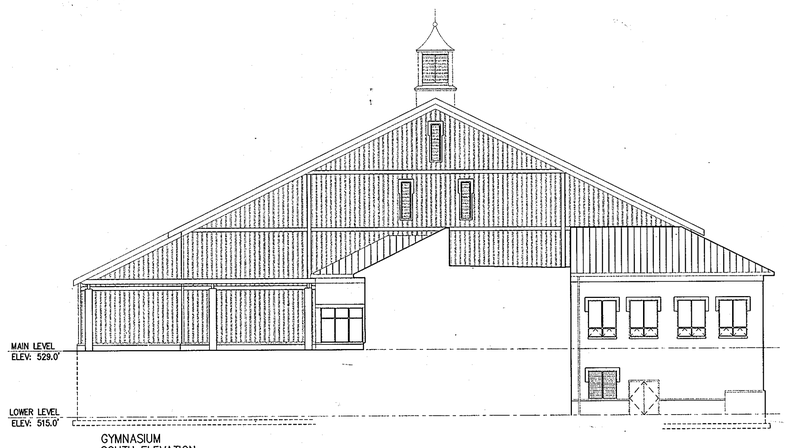

GYMNASIUM
SOUTH ELEVATION
SCALE: 1"=15'

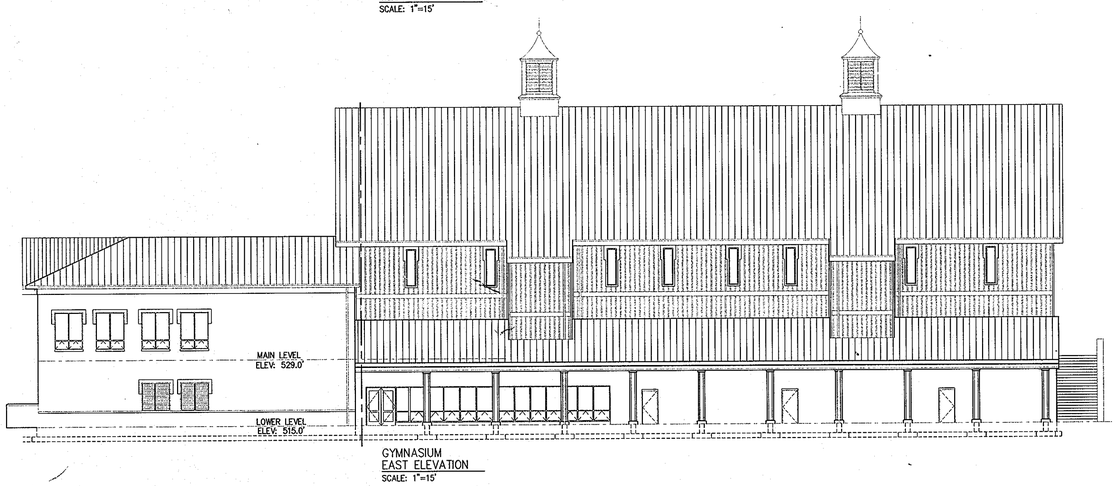

GYMNASIUM
EAST ELEVATION
SCALE: 1"=15'

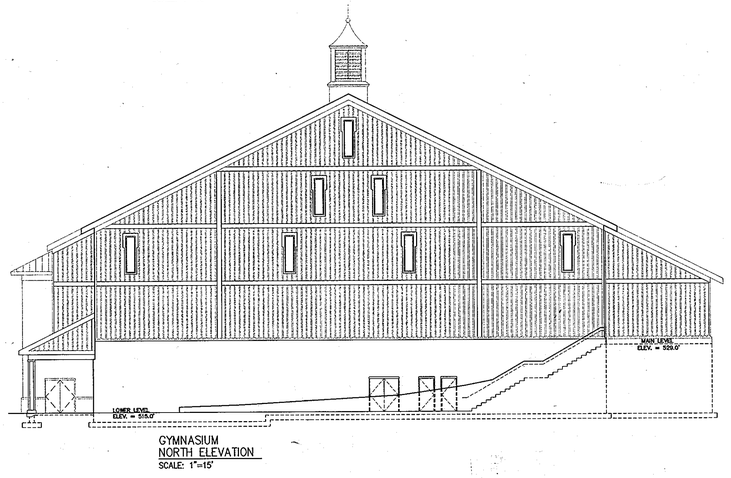

GYMNASIUM
NORTH ELEVATION
SCALE: 1"=15'

RUBELING
& ASSOCIATES, INC.
ARCHITECTURE
INTERIOR DESIGN

401 JEFFERSON AVENUE
TOWSON, MARYLAND 21286-5308
410-337-2886
FAX: 410-337-2974

APPROVED FOR PUBLIC OR PRIVATE WATER & PUBLIC/OR PRIVATE SEWERAGE SYSTEMS
COUNTY HEALTH OFFICER — DATE
HOWARD COUNTY HEALTH DEPARTMENT

APPROVED: DEPARTMENT OF PLANNING AND ZONING
CHIEF, DEVELOPMENT ENGINEERING DIVISION — DATE 8/5/03
CHIEF, DIVISION OF LAND DEVELOPMENT — DATE 8/4/03
DIRECTOR, DEPARTMENT OF PLANNING AND ZONING — DATE 8/12/03

MORRIS & RITCHIE ASSOCIATES, INC.
ENGINEERS, PLANNERS, SURVEYORS AND LANDSCAPE ARCHITECTS
9090 JUNCTION DRIVE, SUITE 9
ANNAPOLIS JUNCTION, MARYLAND 20701
(410) 792-9792 or (301) 776-1690
FAX (410) 792-7395

STATE OF MARYLAND — THOMAS C. WHITEHURST — No. 21611 — REGISTERED PROFESSIONAL ENGINEER
7/15/03

THE GLENELG COUNTRY SCHOOL
PROPOSED UPPER SCHOOL ADDITION

ARCHITECTURAL BUILDING ELEVATIONS

TAX MAP 22 GRID 22 PARCEL 146
LIBER 1296 FOLIO 245
FIFTH (5TH) ELECTION DISTRICT
HOWARD COUNTY, MARYLAND

DATE	REVISIONS	
A 07/12	TRACK AND SYNTHETIC TURF FIELD IMPROVEMENTS	JOB NO.: 12189.02
		SCALE: AS SHOWN
		DATE: 07/14/03
		DRAWN BY: TCN
		DESIGN BY: TCN
		REVIEW BY: TCN
		SHEET: 23 OF 2537 A

SDP-03-84

GENERAL NOTES:

1) ALL CONSTRUCTION SHALL BE IN ACCORDANCE WITH THE LATEST STANDARDS AND SPECIFICATIONS OF HOWARD COUNTY PLUS MSHA STANDARDS AND SPECIFICATIONS IF APPLICABLE.

2) THE CONTRACTOR SHALL NOTIFY THE DEPARTMENT OF PUBLIC WORKS/BUREAU OF ENGINEERING/CONSTRUCTION INSPECTION DIVISION AT (410) 313-1880 AT LEAST FIVE (5) WORKING DAYS PRIOR TO START OF WORK.

3) THE CONTRACTOR SHALL NOTIFY MISS UTILITY AT 1-800-257-7777 AT LEAST 48 HOURS PRIOR TO ANY EXCAVATION WORK BEING DONE.

4) TRAFFIC CONTROL DEVICES, MARKINGS AND SIGNING SHALL BE IN ACCORDANCE WITH THE LATEST EDITIONS OF THE MANUAL OF TRAFFIC CONTROL DEVICES (MUTCD). ALL STREET AND REGULATORY SIGNS SHALL BE IN PLACE PRIOR TO THE PLACEMENT OF ANY ASPHALT.

5) ALL PLAN DIMENSIONS ARE TO FACE OF CURB UNLESS OTHERWISE NOTED.

6) THE EXISTING TOPOGRAPHY IS TAKEN FROM FIELD RUN SURVEY WITH 2 FOOT CONTOUR INTERVALS PREPARED BY MORRIS & RICHIE ASSOCIATES INC DATED JANUARY 2002 AND SUPPLEMENTED WITH EXISTING AVAILABLE DESIGN PLANS.

7) THE COORDINATES SHOWN HERON ARE BASED UPON THE HOWARD COUNTY GEODETIC CONTROL WHICH IS BASED UPON THE MARYLAND STATE PLAN COORDINATE SYSTEM. HOWARD COUNTY MONUMENT NOS. 22IA AND 22HA WERE USED FOR THIS PROJECT.

8) WATER IS PRIVATE.

9) SEWER IS PRIVATE

10) STORMWATER MANAGEMENT IS PROVIDED BY BIORETENTION FACILITIES, GRASS SWALE AND GRASS SWALE WITH CHECK DAMS. GLENELG COUNTRY SCHOOL IS THE OWNER AND ACCEPTS MAINTENANCE RESPONSIBILITY.

11) THE LOCATION OF EXISTING UTILITIES AS SHOWN ON THIS PLAN ARE BASED ON FIELD LOCATIONS SUPPLEMENTED WITH EXISTING UTILITY DRAWINGS AND SHOULD BE VERIFIED BY THE CONTRACTOR PRIOR TO CONSTRUCTION.

12) THERE IS NO FLOODPLAIN ON THIS SITE

13) THERE ARE NO WETLANDS ON THIS SITE.

EXISTING IRRIGATION OUTSIDE OF PROPOSED SYNTHETIC TURF FIELD TO BE MAINTAINED

EX. SEPTIC RESERVE AREA

EXISTING STORM DRAIN PIPE TO BE DIVERTED

EX. ATHLETIC FIELD #2

REGRADE ALONG STORMDRAIN TO PROVIDE POSITIVE DRAINAGE TOWARD INLETS

26 PARKING SPACES

24 PARKING SPACES

TIE INTO EXISTING AND MATCH GRADE

PROPOSED 10' SIDEWALK TO BE BUILT WITH 1.5% MAX CROSS SLOPE

OBSERVATORY BUILDING (SDP-02-126)

APPROXIMATE LIMITS OF DISTURBANCE

P-20: 181 LF 10" HDPE TRENCH DRAIN CONNECTION @ 0.67%

PROPOSED 4' CHAIN LINK FENCE AROUND ENTIRE OUTSIDE PERIMETER OF TRACK

PROPOSED TRACK

PROPOSED SCOREBOARD

P-19: 48 LF 10" HDPE @ 0.70%

PROPOSED HDPE FLARED END SECTION "FE-16" AND "FE-15" INVERT ELEV.=515.7

EX. SWM

PROPOSED WATER QUALITY BIOSWALE "A-1" AREA=1712 SF

6" PERFORATED PVC UNDERDRAIN

PROPOSED 24" NYLOPLAST INLINE DRAIN WITH PEDESTRIAN GRATE GRATE ELEV.=~~528.3~~ 518.9 INV. IN ELEV.=~~524.3~~ 516.8 INV. OUT ELEV.=~~524.3~~ 516.7

PROPOSED 24" NYLOPLAST INLINE DRAIN WITH PEDESTRIAN GRATE GRATE ELEV.=~~528.3~~ 518.9 INV. IN ELEV.=~~523.3~~ 516.4 INV. OUT ELEV.=~~523.3~~ 516.3

PROPOSED 24" NYLOPLAST INLINE DRAIN WITH PEDESTRIAN GRATE GRATE ELEV.=~~528.3~~ 518.9 INV. IN ELEV.=~~522.3~~ 516.1 (10"PVC) (10"HDPE) INV. OUT ELEV.=~~522.3~~ 516.0

PROPOSED 24" NYLOPLAST INLINE DRAIN WITH PEDESTRIAN GRATE GRATE ELEV.=~~532.4~~ 520.0 INV. IN ELEV.=~~521.3~~ 515.7 INV. OUT ELEV.=~~521.3~~ 515.6

10" HDPE

P-7: 451 LF 10" HDPE @ 0.38% BEGINNING INVERT ELEV.=516.8

P-17: 137 LF 10" HDPE @ 0.51% BEGINNING INVERT ELEV.=518.8

TRENCH DRAIN CLOSING CAP TO SEPARATE DRAINAGE AREAS

PROPOSED TRENCH DRAIN TIE-IN

INSIDE OF TRACK SET AT ELEVATION 518.5 (TYP.)

OUTSIDE OF TRACK SET AT ELEVATION 518.75 (TYP.)

PROPOSED TRENCH DRAIN TIE-IN

TIE-IN INVERT ELEV=516.2

P-18: 54 LF 10" HDPE @ 0.56% BEGINNING INVERT ELEV.=516.5

P-15: 383 LF 10" HDPE @ 0.41% BEGINNING INVERT ELEV.=516.8

EXISTING WELL (SEE SHEET C-310 FOR MODIFICATION DETAIL)

P-13: 238 LF 10" HDPE @ 0.33% BEGINNING INVERT ELEV.=516.8

PROPOSED SYNTHETIC TURF FIELD (AREA OF TURF = 89,503 SF)

EX. ATHLETIC FIELD #3

1" ADVANTAGE DRAIN (TYP.)

EXISTING IRRIGATION WITHIN PROPOSED SYNTHETIC TURF FIELD TO BE REMOVED

PROPOSED 4' CHAIN LINK FENCE

P-10: 260 LF 8" HDPE @ 0.46% BEGINNING INVERT=517.0

TRENCH DRAIN CLOSING CAP TO SEPARATE DRAINAGE AREAS

PROPOSED SHOTPUT AREA

PROPOSED TRENCH DRAIN TIE-IN

P-11: 71 LF 12" HDPE @ 1.07% BEGINNING INVERT=515.8

TRENCH DRAIN CLOSING CAP TO SEPARATE DRAINAGE AREAS

INVERT ELEVATION=516.0

PROPOSED TRENCH DRAIN TIE-IN INVERT ELEVATION =515.2

P-10A: 185 LF 10" HDPE @ 0.54% BEGINNING INVERT=516.8

PROPOSED MANHOLE PER STANDARD G-5.12 TOP ELEV.=~~530.0~~ INV. IN ELEV.=~~526.25~~ INV. IN ELEV=~~526.5~~ INV. OUT ELEV.=~~525.4~~

P-8: 53 LF 10" HDPE PIPE CONNECTING FROM TRENCH DRAIN @ 1.17% ~~1.3%~~±

P-9: 22 LF ~~12"~~ 15" HDPE @ ~~0.38%~~

PROPOSED HDPE FLARED END SECTION "FE-9" INVERT ELEV.=~~515.0~~ 515.1

CLASS 1 RIP RAP INFLOW PROTECTIONS (TYP.)

P-6: 335 LF 12" HDPE DIVERSION PIPE @ 2.56%

PROPOSED GRASS WATER QUALITY SWALE "A-4" AREA=1,920 SF

PROPOSED HDPE FLARED END SECTION "FE-10" INVERT ELEV.=515.2

CLASS 1 RIP RAP INFLOW PROTECTION (TYP.)

PROPOSED PRE-TREATMENT SEDIMENTATION BASIN AREA=1257 SF

6" PERFORATED UNDERDRAIN (TYP.)

PROPOSED BIO-RETENTION AREA "A-5" AREA=2072 SF

PROPOSED FLARED END SECTION "FE-7" WITH CLASS 1 RIP RAP OUTFLOW PROTECTION INVERT ELEV.=513.2

PROPOSED TYPE "E" INLET RISER STRUCTURE PER STANDARD D-4.21 AND D-4.91 GRATE ELEV.=515.5 INV. IN ELEV=511.3 INV. OUT ELEV.=511.2

P-12: 38 LF 12" HDPE @ 1.8 %

PROPOSED FLARED END SECTION "FE-12" WITH CLASS 1 RIP RAP OUTFLOW PROTECTION INVERT ELEV.=510.5

EXISTING STORM DRAIN PIPES TO PROVIDE OUTFALL

PROPOSED GRASS WATER QUALITY SWALE "A-3" AREA=1184

ANY TREES THAT ARE REMOVED AS REQUIRED FOR GRADING OPERATIONS SHALL BE REPLACED

PROPOSED HDPE FLARED END SECTION "FE-14" WITH CLASS 1 RIP RAP INFLOW PROTECTION INVERT ELEV.=515.5

PROPOSED HDPE FLARED END SECTION "FE-13" WITH CLASS 1 RIP RAP INFLOW PROTECTION INVERT ELEV.=515.5

PROPOSED WATER QUALITY SWALE WITH CHECK DAMS "A-2" AREA=1824

PROPOSED (TYPE "E" INLET RISER STRUCTURE PER STANDARD D-4.21 AND D-4.91 GRATE ELEV.=512.3 INV. IN ELEV.=~~508.3~~ INV. OUT ELEV.=~~508.1~~

P-21: 23 LF 12" HDPE @ 1.30%

PROPOSED FLARED END SECTION "FE-18" WITH CLASS 1 RIP RAP OUTFLOW PROTECTION INV. ELEV.=507.

EXISTING STORM DRAIN PIPE TO PROVIDE OUTFALL

TRENCH DRAIN CLOSING CAP TO SEPARATE DRAINAGE AREAS

PLEASANT PROSPECT ROAD (EXISTING PRIVATE DRIVE)

LAND OF MARY C. ZINK 4496/170

LAND OF RALPH J. HENRY 1882/195

GRAPHIC SCALE

30 0 20 30 60 120

(IN FEET)
1 inch = 30 ft.

Professional Certification. I hereby certify that these documents were prepared or approved by me, and that I am a duly licensed professional engineer under the laws of the State of Maryland.

License No. 12548

Expiration Date 7-29-13

APPROVED: DEPARTMENT OF PLANNING AND ZONING

CHIEF, DEVELOPMENT ENGINEERING DIVISION — DATE 8/17/12

CHIEF, DIVISION OF LAND DEVELOPMENT — DATE 8/23/12

DIRECTOR — DATE 8/23/12

HURON CONSULTING
10410 CENTURY BLVD
SUITE 230
GERMANTOWN, MD. 20874
PHONE (301) 528-2010
FAX (301) 528-2020
www.huroncon.com

STATE OF MARYLAND — RICHARD E. HURNEY — PROFESSIONAL ENGINEER

DRW BY: JA
CHK BY: JA
APP BY: REH

REVISIONS

DATE	DESCRIPTION

GLENELG COUNTRY SCHOOL
12793 FOLLY QUARTER ROAD
ELLICOTT CITY, MD 21042

REVISED SHEET

STORMWATER MANAGEMENT AND DRAINAGE PLAN

SCALE
HORIZONTAL: 1" = 30'
VERTICAL: N/A

PROJECT NO.: 900-101

DRAWING NO.: C-300

SHEET: 24 OF 37

DATE: JULY 2012

SDP-03-084

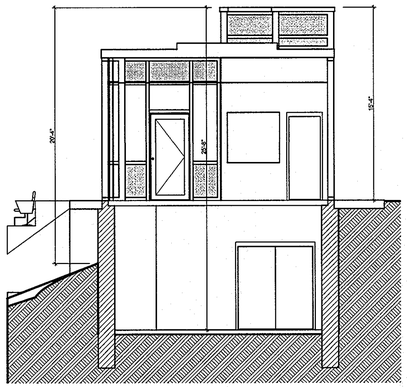

PRESS BOX ELEVATION DETAIL
NOT TO SCALE

GENERAL NOTES:

1) ALL CONSTRUCTION SHALL BE IN ACCORDANCE WITH THE LATEST STANDARDS AND SPECIFICATIONS OF HOWARD COUNTY PLUS MSHA STANDARDS AND SPECIFICATIONS IF APPLICABLE.

2) THE CONTRACTOR SHALL NOTIFY THE DEPARTMENT OF PUBLIC WORKS/BUREAU OF ENGINEERING/CONSTRUCTION INSPECTION DIVISION AT (410) 313-1880 AT LEAST FIVE (5) WORKING DAYS PRIOR TO START OF WORK.

3) THE CONTRACTOR SHALL NOTIFY MISS UTILITY AT 1-800-257-7777 AT LEAST 48 HOURS PRIOR TO ANY EXCAVATION WORK BEING DONE.

4) TRAFFIC CONTROL DEVICES, MARKINGS AND SIGNING SHALL BE IN ACCORDANCE WITH THE LATEST EDITIONS OF THE MANUAL OF TRAFFIC CONTROL DEVICES (MUTCD). ALL STREET AND REGULATORY SIGNS SHALL BE IN PLACE PRIOR TO THE PLACEMENT OF ANY ASPHALT.

5) ALL PLAN DIMENSIONS ARE TO FACE OF CURB UNLESS OTHERWISE NOTED.

6) THE EXISTING TOPOGRAPHY IS TAKEN FROM FIELD RUN SURVEY WITH 2 FOOT CONTOUR INTERVALS PREPARED BY MORRIS & RICHIE ASSOCIATES INC DATED JANUARY 2002 AND SUPPLEMENTED WITH EXISTING AVAILABLE DESIGN PLANS AND AS BUILT INFORMATION FROM THE CONTRACTOR DATED DECEMBER 2012

7) THE COORDINATES SHOWN HERON ARE BASED UPON THE HOWARD COUNTY GEODETIC CONTROL WHICH IS BASED UPON THE MARYLAND STATE PLAN COORDINATE SYSTEM. HOWARD COUNTY MONUMENT NOS. 22IA AND 22HA WERE USED FOR THIS PROJECT.

8) WATER IS PRIVATE.

9) SEWER IS PRIVATE

10) STORMWATER MANAGEMENT IS PROVIDED BY BIORETENTION FACILITIES, GRASS SWALE AND GRASS SWALE WITH CHECK DAMS. GLENELG COUNTRY SCHOOL IS THE OWNER AND ACCEPTS MAINTENANCE RESPONSIBILITY.

11) THE LOCATION OF EXISTING UTILITIES AS SHOWN ON THIS PLAN ARE BASED ON FIELD LOCATIONS SUPPLEMENTED WITH EXISTING UTILITY DRAWINGS AND SHOULD BE VERIFIED BY THE CONTRACTOR PRIOR TO CONSTRUCTION.

12) THERE IS NO FLOODPLAIN ON THIS SITE

13) THERE ARE NO WETLANDS ON THIS SITE.

EX. SEPTIC RESERVE AREA

EX. ATHLETIC FIELD #2

5' CONCRETE WALKWAY. 2% MAX CROSS SLOPE AND 5% MAX LONGITUDINAL SLOPE. FIELD ADJUST GRADE TO MAINTAIN ADA COMPLIANCE ALONG WALKWAY. CONCRETE TO BE 5" THICK WITH 6X6 WWF AND 4" GRADED AGGREGATE BASE AND SUBGRADE COMPACTED TO 95% PROCTOR, TYP. ALL CONCRETE WALKWAYS.

PROP. BLEACHERS AND PRESS BOX

TEMPORARY CONSTRUCTION ACCESS

REMOVE AND REPLACE EX. FENCE AS NECESSARY FOR CONSTRUCTION

OBSERVATORY BUILDING (SDP-02-128)

OBSERVATORY (SDP-02-126)

EXISTING 10' SIDEWALK

PROPOSED WATER CONNECTION SEE SHEET C-501 FOR DETAIL

SEE UTILITY PLAN SHEET C-501 FOR CONTINUATION OF PROPOSED SEWER.

EX. 24" NYLOPLAST INLINE DRAIN/ GRATE ELEV.=519.9 INV. OUT ELEV.=516.9

EX. 24" NYLOPLAST INLINE DRAIN GRATE ELEV.=518.9 INV. IN ELEV.=516.8 INV. OUT ELEV.=516.7

PROPOSED CONCRETE ACCESS FROM BASEMENT STORAGE AREA TO TRACK. TIE INTO EXISTING GRADE WITH A MAX LONGITUDINAL SLOPE OF 5.0% AND MAX CROSS SLOPE OF 2%

EX. 24" NYLOPLAST INLINE DRAIN GRATE ELEV.=518.9 INV. IN ELEV.=516.4 INV. OUT ELEV.=516.3

EX. 24" NYLOPLAST INLINE DRAIN GRATE ELEV.=518.9 INV. IN ELEV.=516.1 INV. IN ELEV.=516.1 INV. OUT ELEV.=516.0

EX. 24" NYLOPLAST INLINE DRAIN GRATE ELEV.=520.0 INV. IN ELEV.=515.7 INV. OUT ELEV.=515.6

EXISTING HDPE FLARED END SECTION INVERT ELEV.=515.1

CLASS 1 RIP RAP. INFLOW PROTECTION

EX. GRASS WATER QUALITY SWALE "A-4" AREA=1,920 SF

APPROXIMATE 12" HDPE

INSIDE OF TRACK SET AT ELEVATION 518.5

OUTSIDE OF TRACK SET AT ELEVATION 518.75

EXISTING SYNTHETIC TURF FIELD (AREA OF TURF = 89,503 SF)

EX. SPRINKLER LINE

EX. ELECTRICAL CONDUIT

EXISTING SCOREBOARD

EX. BIOSWALE

EXISTING WELL

EX. WATER QUALITY SWALE

EX. INLET

EXISTING TRACK

EX. WET SWALE

EX. BIO-RETENTION AREA "A-5" AREA=2072 SF

EX. FLARED END SECTION INVERT ELEV.=513.2

EXISTING STORM DRAIN PIPES TO PROVIDE OUTFALL

PLEASANT PROSPECT ROAD (EXISTING PRIVATE DRIVE)

EX. SWM

GRAPHIC SCALE
30 0 20 30 60 120
(IN FEET)
1 inch = 30 ft

Professional Certification. I hereby certify that these documents were prepared or approved by me, and that I am a duly licensed professional engineer under the laws of the State of Maryland.

License No. 31168

Expiration Date 11/12/2015

APPROVED: DEPARTMENT OF PLANNING AND ZONING

CHIEF, DEVELOPMENT ENGINEERING DIVISION — DATE 6/11/13

CHIEF, DIVISION OF LAND DEVELOPMENT — DATE 6/17/13

DIRECTOR — DATE 6/17/13

HURON CONSULTING
A Division of Noble Engineering, Inc.
20410 CENTURY BLVD
SUITE 330
GERMANTOWN, MD. 20874
PHONE: (301) 528-2010
FAX: (301) 528-0124
www.huronconsult.com

STATE OF MARYLAND — JASON A. ZAJAC — No. 31168 — PROFESSIONAL ENGINEER — 6-3-13

DRW BY: SL
CHK BY: JA
APP BY: REH

REVISIONS

DATE	DESCRIPTION

GLENELG COUNTRY SCHOOL

12793 FOLLY QUARTER ROAD
ELLICOTT CITY, MD 21042

REVISED SHEET

STORMWATER MANAGEMENT AND DRAINAGE PLAN

SCALE
HORIZONTAL: 1" = 30'
VERTICAL: N/A

PROJECT NO.: 86860.00

DRAWING NO.: C-301

SHEET: 25 OF 37

DATE: MARCH 2013

SDP-03-084

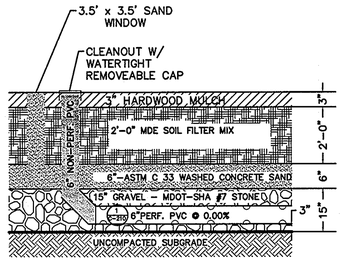

**RISER GRATE TO SERVE AS TRASHRACK
RISER TO BE PRECAST OR
MONOLITHICALLY POURED

1 TYPICAL BIO-RETENTION MEDIA SECTION

SCALE: 1" = 20'

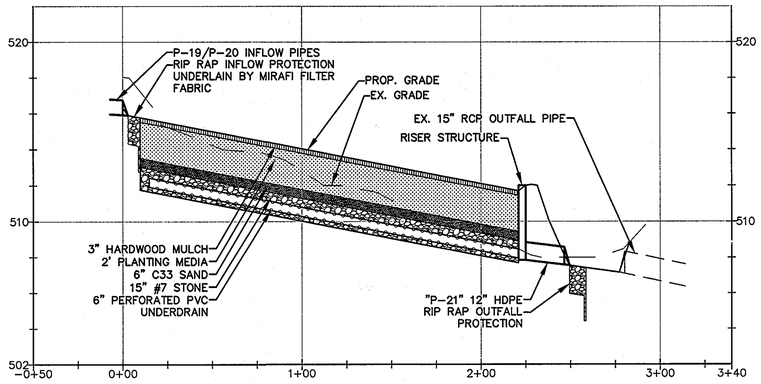

2 BIO-SWALE A-1 PROFILE

SCALE: 1"=40' (HOR) 1"=4' (VER)

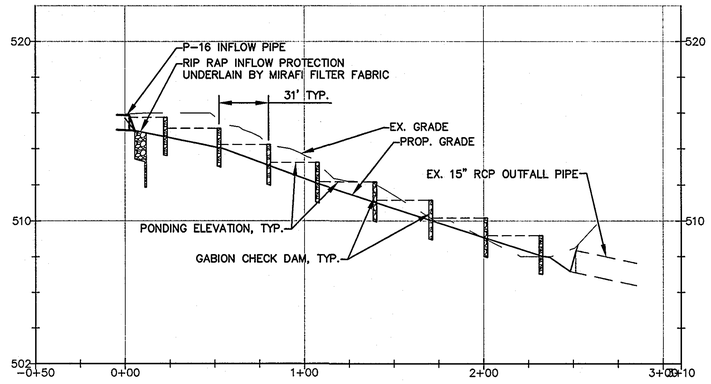

3 WET-SWALE A-2 PROFILE

SCALE: 1"=40' (HOR) 1"=4' (VER)

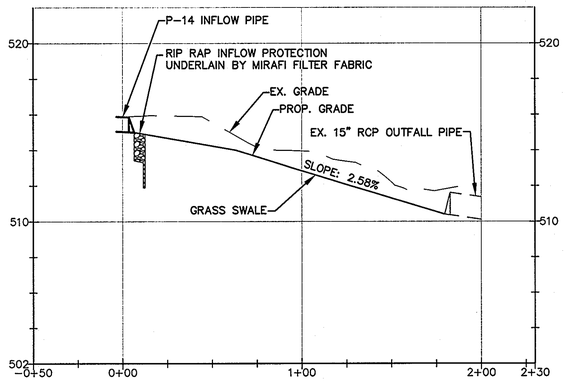

4 GRASS SWALE A-3 PROFILE

SCALE: 1"=40' (HOR) 1"=4' (VER)

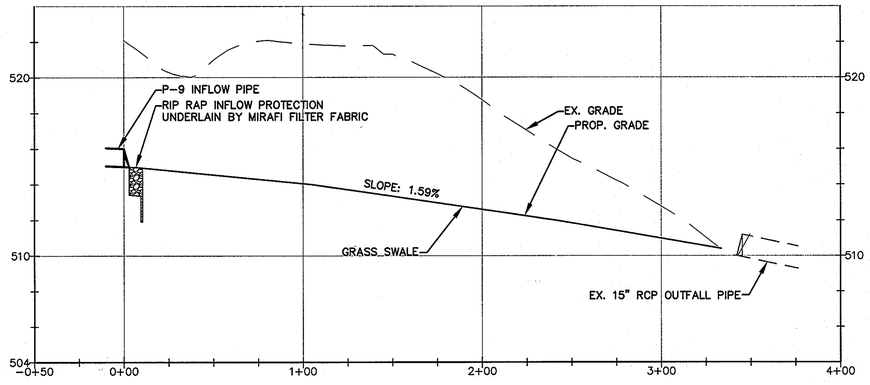

5 GRASS SWALE A-4 PROFILE

SCALE: 1"=40' (HOR) 1"=4' (VER)

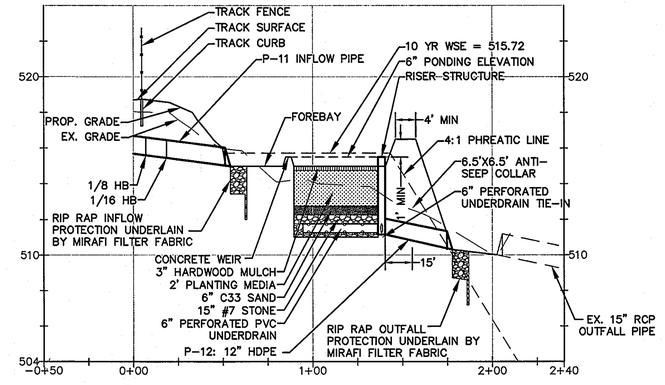

6 BIO-RETENTION AREA A-5 PROFILE

SCALE: 1"=40' (HOR) 1"=4' (VER)

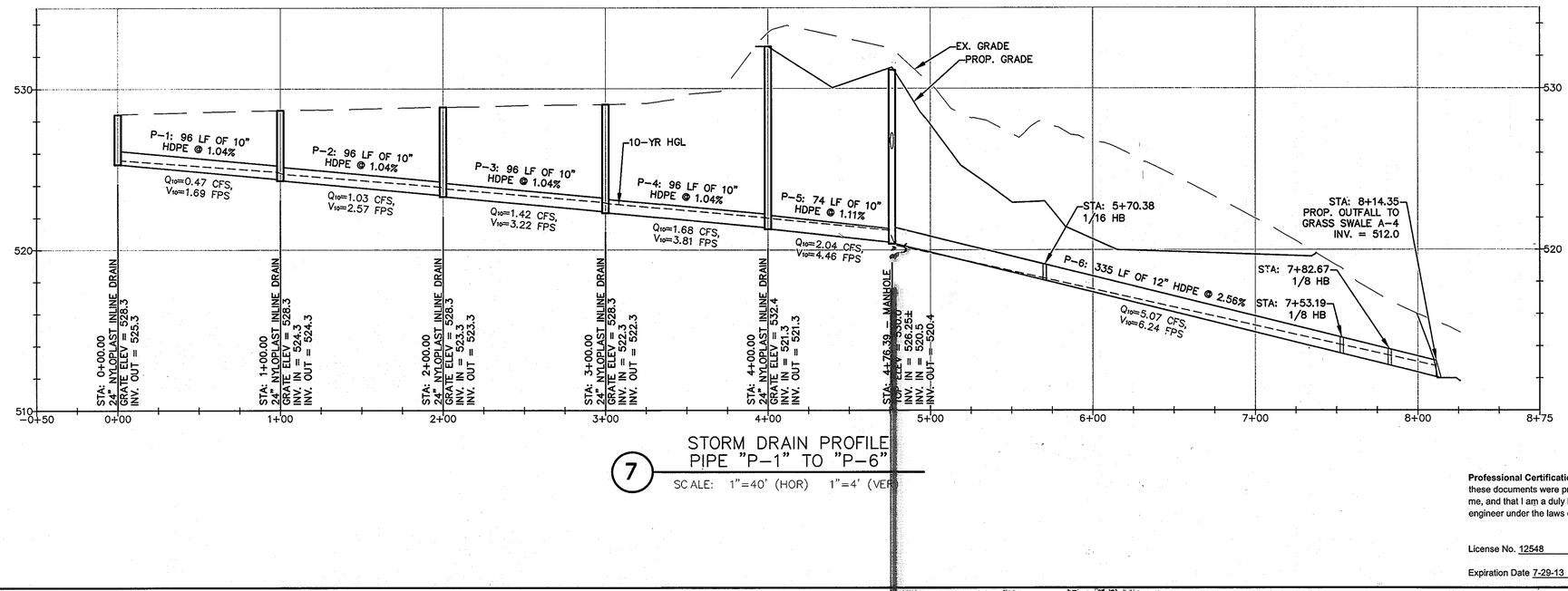

7 STORM DRAIN PROFILE PIPE "P-1" TO "P-6"

SCALE: 1"=40' (HOR) 1"=4' (VER)

Professional Certification. I hereby certify that these documents were prepared or approved by me, and that I am a duly licensed professional engineer under the laws of the State of Maryland.

License No. 12548

Expiration Date 7-29-13

APPROVED: DEPARTMENT OF PLANNING AND ZONING

CHIEF, DEVELOPMENT ENGINEERING DIVISION — DATE 8/7/12

CHIEF, DIVISION OF LAND DEVELOPMENT — DATE 8/23/12

DIRECTOR — DATE 8/29/12

HURON CONSULTING
20410 CENTURY BLVD
SUITE 230
GERMANTOWN, MD. 20874
PHONE: (301) 528-2010
FAX: (301) 528-0124
www.huroncon.com

STATE OF MARYLAND — RICHARD EDWARD HURNEY — PROFESSIONAL ENGINEER — 8-13-12

DRW BY: JA
CHK BY: JA
APP BY: REH

REVISIONS

	DESCRIPTION	DATE
1		

GLENELG COUNTRY SCHOOL
12793 FOLLY QUARTER ROAD
ELLICOTT CITY, MD 21042

REVISED SHEET
STORMWATER MANAGEMENT AND DRAINAGE DETAILS

SCALE
HORIZONTAL: N/A
VERTICAL: N/A

PROJECT NO.: 900-101
DRAWING NO.: C-311
SHEET: 26 OF 37
DATE: JULY 2012

SDP-03-089

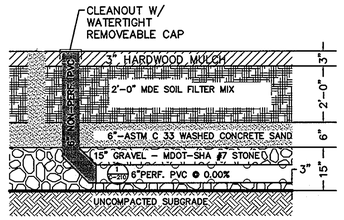

**RISER GRATE TO SERVE AS TRASHRACK
RISER TO BE PRECAST OR
MONOLITHICALLY POURED

1 TYPICAL BIO-RETENTION MEDIA SECTION

SCALE: 1" = 20'

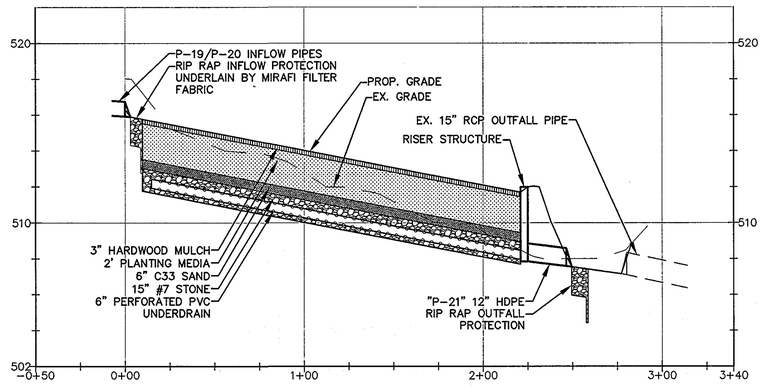

2 BIO-SWALE A-1 PROFILE

SCALE: 1"=40' (HOR) 1"=4' (VER)

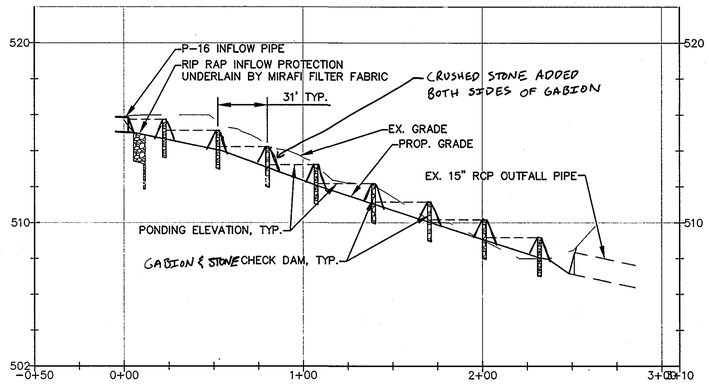

3 WET-SWALE A-2 PROFILE

SCALE: 1"=40' (HOR) 1"=4' (VER)

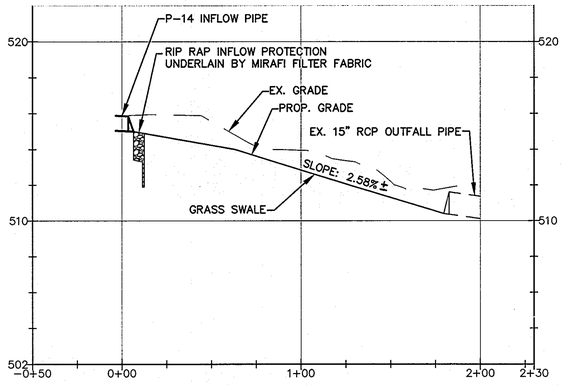

4 GRASS SWALE A-3 PROFILE

SCALE: 1"=40' (HOR) 1"=4' (VER)

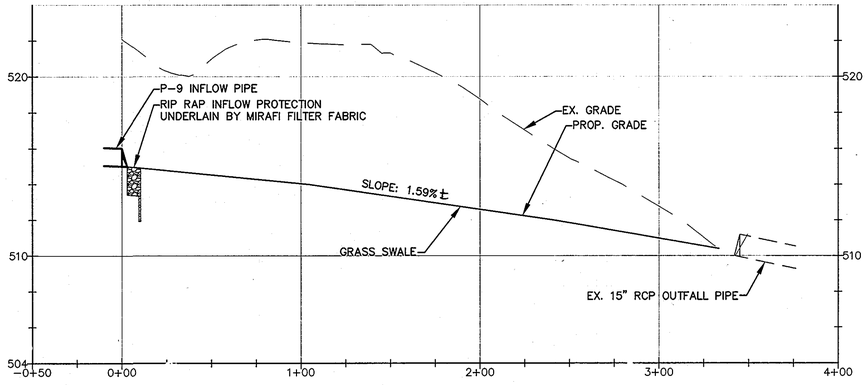

5 GRASS SWALE A-4 PROFILE

SCALE: 1"=40' (HOR) 1"=4' (VER)

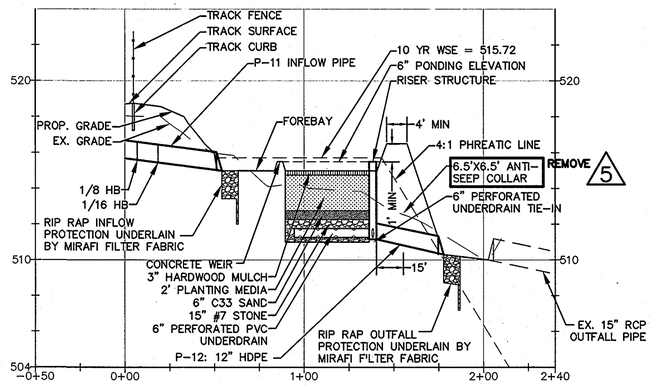

6 BIO-RETENTION AREA A-5 PROFILE

SCALE: 1"=40' (HOR) 1"=4' (VER)

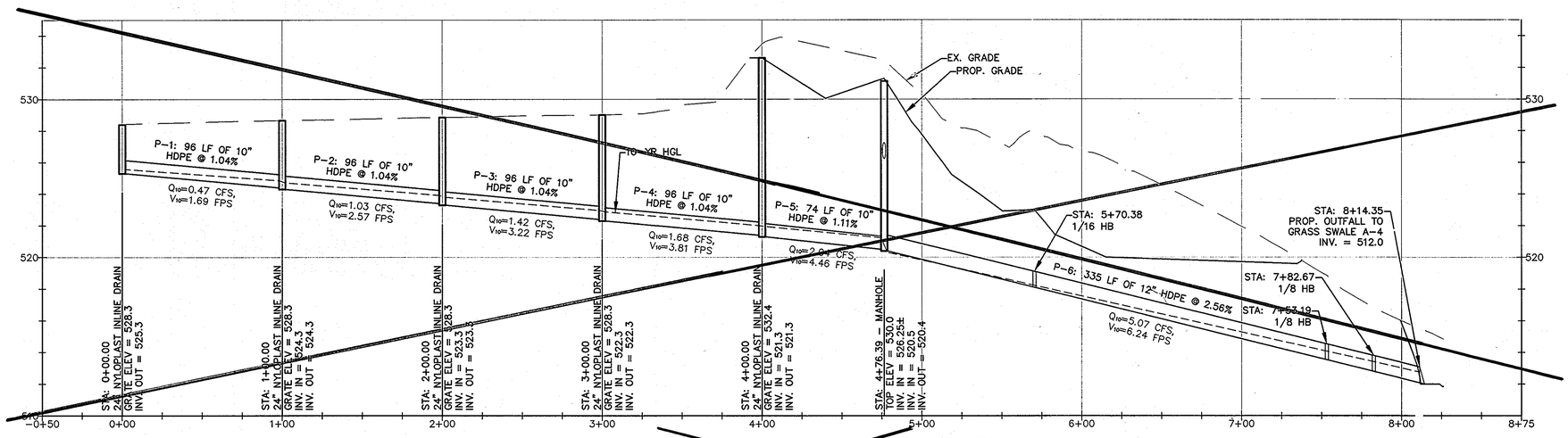

7 STORM DRAIN PROFILE PIPE "P-1" TO "P-6"

SCALE: 1"=40' (HOR) 1"=4' (VER)

See Sheet 24 For LOCATIONS AND ELEVATIONS

Professional Certification. I hereby certify that these documents were prepared or approved by me, and that I am a duly licensed professional engineer under the laws of the State of Maryland.

License No. 31168

Expiration Date 11/12/2015

APPROVED: DEPARTMENT OF PLANNING AND ZONING

CHIEF, DEVELOPMENT ENGINEERING DIVISION — DATE 6/6/13

CHIEF, DIVISION OF LAND DEVELOPMENT — DATE 6/7/13

DIRECTOR — DATE 6/7/13

HURON CONSULTING
A Division of Noble Engineering, Inc.
20410 CENTURY BLVD
SUITE 230
GERMANTOWN, MD. 20874
PHONE: (301) 528-2010
FAX: (301) 528-0124
www.huronconsulting.com

STATE OF MARYLAND — JASON A. ZIMMERMAN — 21615 — PROFESSIONAL ENGINEER — 6-3-13

DRW BY: JA
CHK BY: JA
APP BY: REH

REVISIONS

	DATE	DESCRIPTION
5	3/5/13	REMOVED ANTI-SEEP COLLAR

GLENELG COUNTRY SCHOOL

12793 FOLLY QUARTER ROAD
ELLICOTT CITY, MD 21042

REVISED SHEET

STORMWATER MANAGEMENT AND DRAINAGE DETAILS

SCALE
HORIZONTAL: N/A
VERTICAL: N/A

PROJECT NO.: 86860 00

DRAWING NO.: C-311

SHEET: 27 OF 37

DATE: MARCH 2013

SDP-03-084

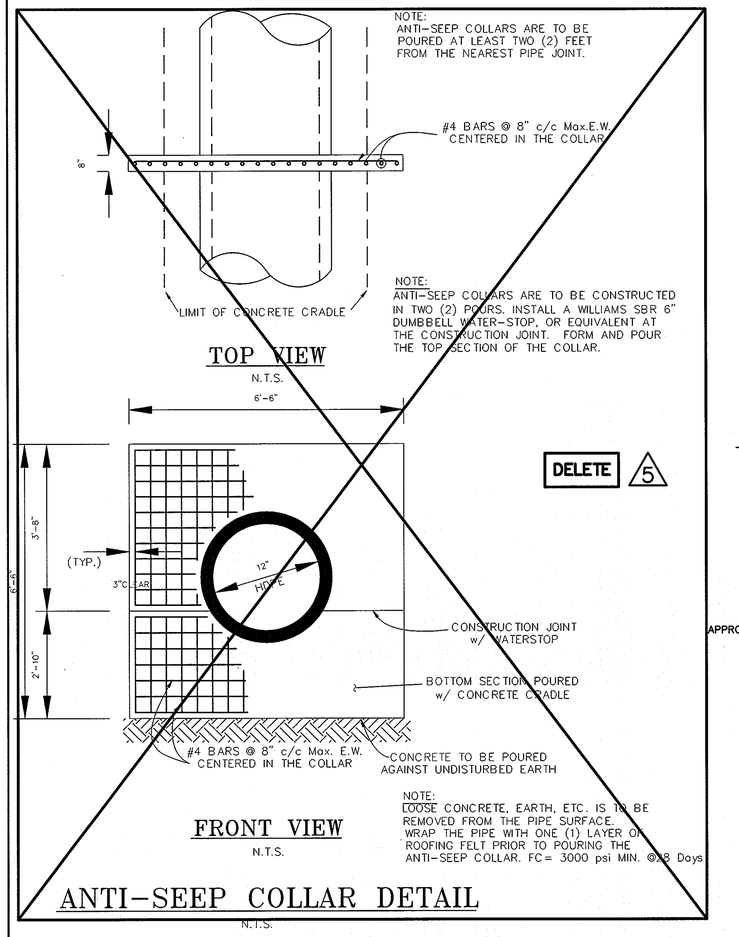

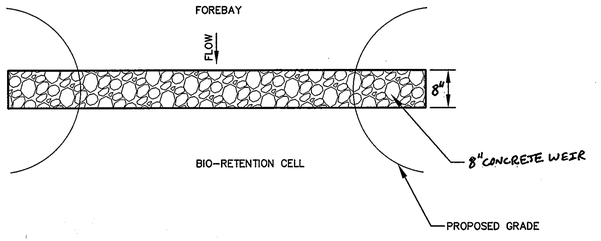

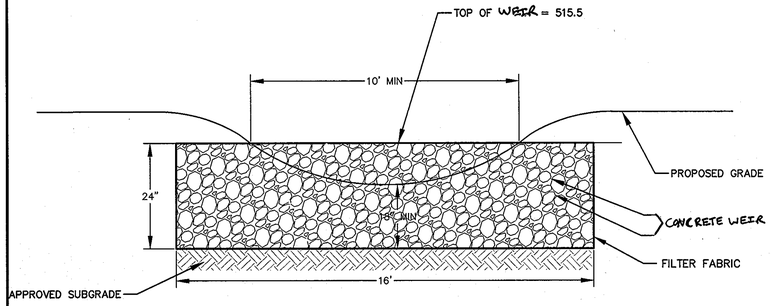

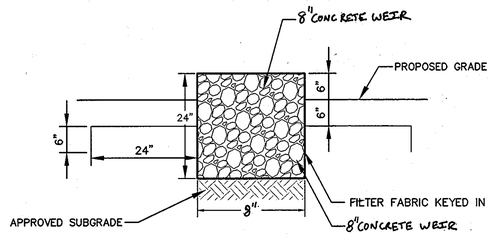

FOREBAY GABION DETAIL
N.T.S.

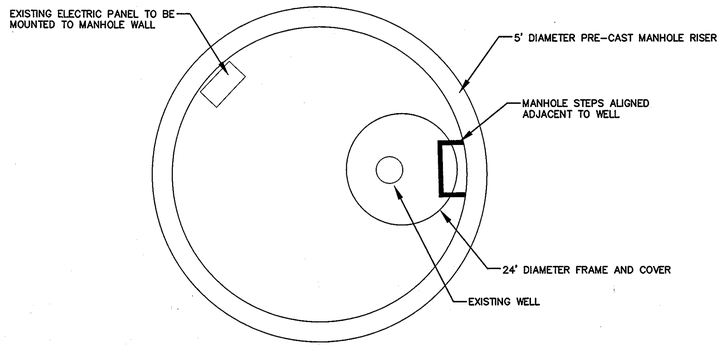

WELL ENCLOSURE DETAIL
N.T.S.

[OPERATION AND MAINTENANCE SCHEDULE FOR PRIVATELY OWNED AND MAINTAINED STORMWATER PONDS (P-1 THROUGH P-5)]

Routine Maintenance:

a. The Owner shall inspect the facility annually and after every heavy storm. Inspections shall be performed during wet weather to determine if the pond is functioning properly.

b. The Owner shall mow the top and side slopes of the embankment a minimum of two (2) times per year, once in June and once in September. Other side slopes and maintenance access shall be mowed as needed.

c. The Owner shall remove any debris and litter from the facility.

d. The Owner shall repair any erosion in the pond as well as the rip-rap or gabion outlet area as soon as it is noticed.

e. Structural components of the pond such as the dam, the riser, and the pipes shall be repaired upon the detection of any damage. The components shall be inspected during routine maintenance operations.

f. The Owner shall remove sediment from the pond, and forebay, no later than when the capacity of the pond, or forebay, is half full of sediment, or, when deemed necessary for aesthetic reasons, upon approval from the Department of Public Works.

[OPERATION AND MAINTENANCE SCHEDULE FOR LANDSCAPE INFILTRATION (M-3) MICRO-BIORETENTION (M-6), RAIN GARDENS (M-7), BIORETENTION SWALE (M-8), ENHANCED FILTERS (M-9)]

a. The Owner shall maintain the plant material, mulch layer and soil layer annually. Maintenance of mulch and soil is limited to correcting areas of erosion or wash out. Any mulch replacement shall be done in the spring. Plant material shall be checked for disease and insect infestation and maintenance will address dead material and pruning. Acceptable replacement plant material is limited to the following: 2000 Maryland Stormwater Design Manual Volume II, Table A.4.1 and 2.

b. The Owner shall perform a plant in the spring and in the fall of each year. During the inspection, the Owner shall remove dead and diseased vegetation considered beyond treatment, replace dead plant material with acceptable replacement plant material, treat diseased trees and shrubs, and replace all deficient stakes and wires.

c. The Owner shall inspect the mulch each spring. The mulch shall be replaced every two to three years. The previous mulch layer shall be removed before the new layer is applied.

d. The Owner shall correct soil erosion on an as needed basis, with a minimum of once per month and after each heavy storm..

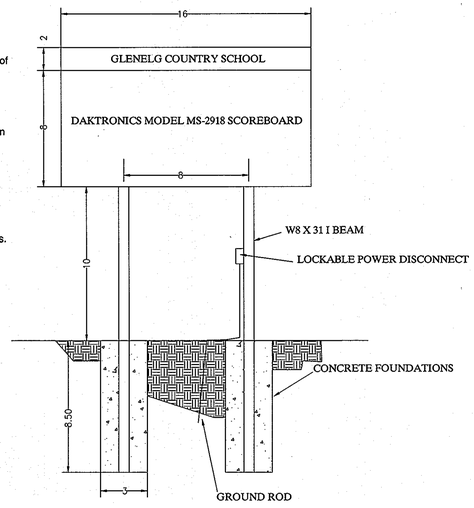

SCOREBOARD DETAIL
NOT TO SCALE

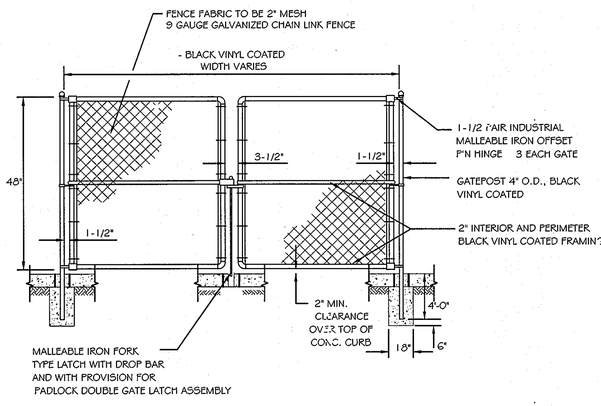

CHAIN-LINK FENCE DOUBLE GATE
NOT TO SCALE

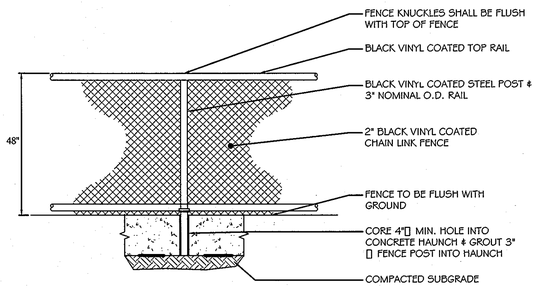

48" CHAIN-LINK FENCE DETAIL
NOT TO SCALE

Professional Certification. I hereby certify that these documents were prepared or approved by me, and that I am a duly licensed professional engineer under the laws of the State of Maryland.

License No. 31168

Expiration Date 1/12/2015

APPROVED: DEPARTMENT OF PLANNING AND ZONING

CHIEF, DEVELOPMENT ENGINEERING DIVISION — DATE 6/11/13

CHIEF, DIVISION OF LAND DEVELOPMENT — DATE 6/17/13

DIRECTOR — DATE 6/17/13

HURON CONSULTING
A Division of Noble Engineering, Inc.
20410 CENTURY BLVD
SUITE 270
GERMANTOWN, MD. 20874
PHONE: (301) 528-2010
FAX: (301) 528-24
www.huronconsulting.com

STATE OF MARYLAND — JASON NAILL — PROFESSIONAL ENGINEER
6-3-13

DRW BY: JA
CHK BY: JA
APP BY: REH

REVISIONS

	DATE	DESCRIPTION
5	3/5/13	REMOVED ANTI-SEEP COLLAR

GLENELG COUNTRY SCHOOL
12793 FOLLY QUARTER ROAD
ELLICOTT CITY, MD 21042

REVISED SHEET
STORMWATER MANAGEMENT AND DRAINAGE DETAILS

SCALE
HORIZONTAL: N/A
VERTICAL: N/A

PROJECT NO.: 86860.00
DRAWING NO.: C-312
SHEET: 28 OF 37
DATE: MARCH 2013

SDP-03-084

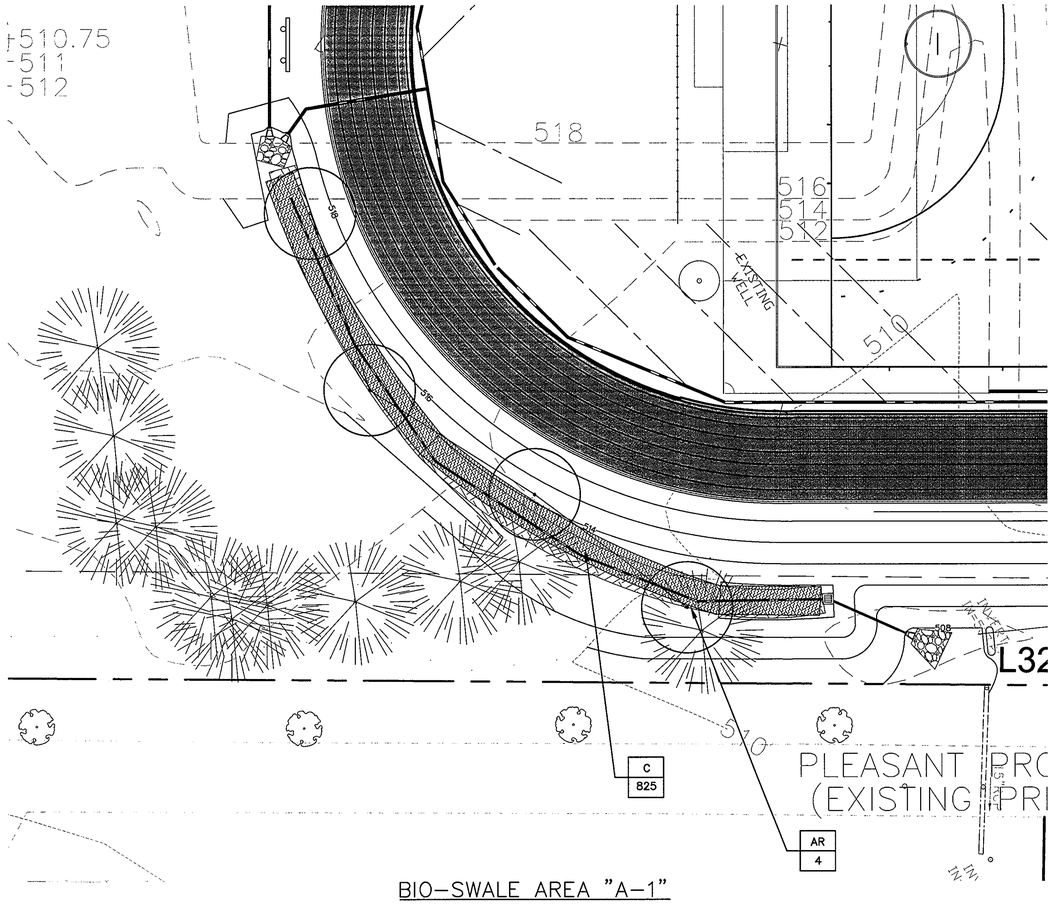

BIO-SWALE AREA "A-1"

SCALE: 1" = 20'

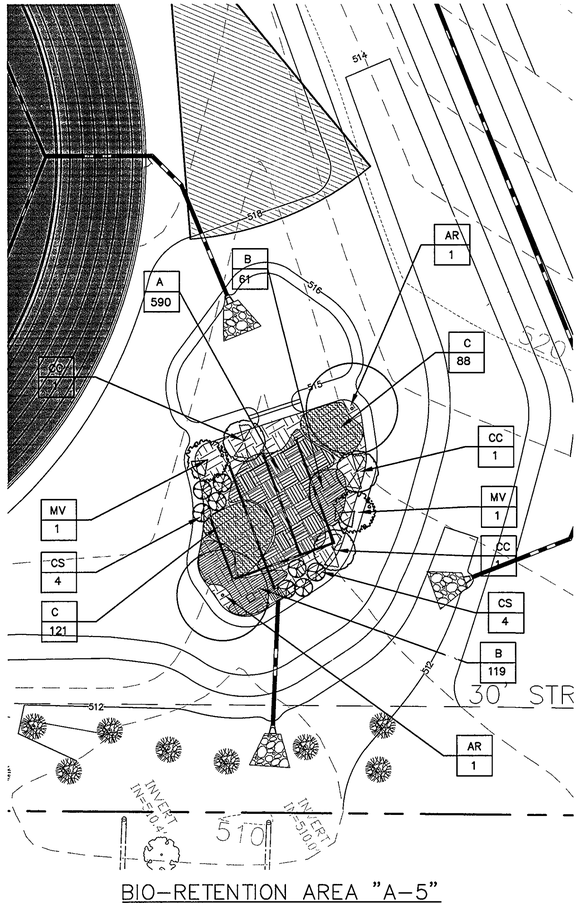

BIO-RETENTION AREA "A-5"

SCALE: 1" = 20'

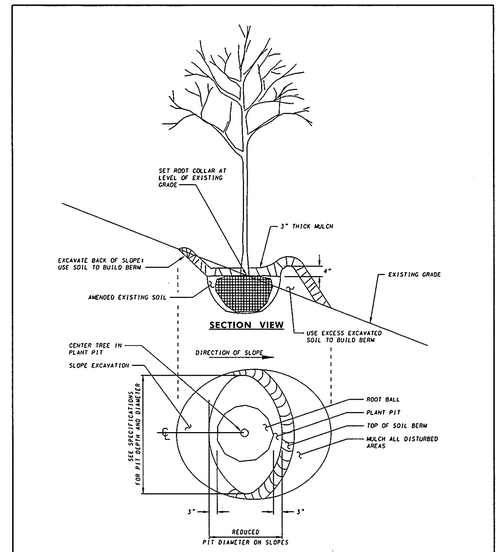

SPECIFICATION 710	CATEGORY CODE ITEMS
APPROVED	DIRECTOR - OFFICE OF HIGHWAY DEVELOPMENT

SHA State Highway Administration	APPROVAL + SHA REVISIONS	APPROVAL + FEDERAL HIGHWAY ADMINISTRATION
APPROVAL	10-28-97	6-18-97
REVISED	10-1-01	REVISED
REVISED		REVISED
REVISED		REVISED

Maryland Department of Transportation
STATE HIGHWAY ADMINISTRATION
STANDARDS FOR HIGHWAYS AND INCIDENTAL STRUCTURES

PLANTING TREES ON SLOPES FROM 3:1 TO 2:1

STANDARD NO. MD 710.03-14

Plant Schedule

Key	Symbol	Scientific/Common Name	Qty.	Size	Remarks
AR		Acer Rubrum 'October Glory' October Glory Red Maple	6	2" – 2 1/2" cal	WB
C		**Aster Novae Angliae** New England Aster	517	1 qt	18" O.C.
C		**Solidago Rugosa 'Fireworks'** Fireworks Goldenrod	517	1 qt	18" O.C.
CC		Cercis Canadensis Redbud	3	2" – 2 1/2" cal	WB
CS		Cornus Serica Red Twig Dogwood	8	2 1/2' – 3' ht	3 gal
A		Elymus Virginicus Virginia Wild Rye	590	4" plug	12" O.C.
MV		Magnolia Virginia Sweetbay Magnolia	2	8' – 10' ht	WB
B		Panicum Virgatum 'Shenandoah' Shenandoah Switchgrass	180	1 qt	18" O.C.

** TO BE PLANTED TOGETHER**

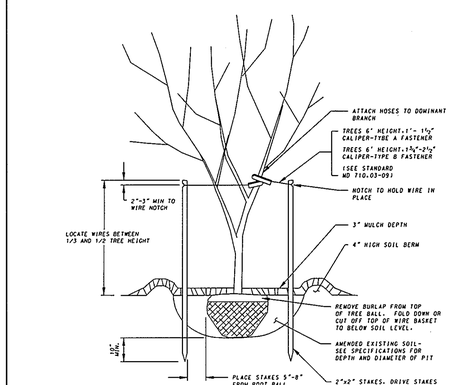

NOTES

1. LOCATE STAKES PARALLEL TO NEAREST ROADWAY OR PAVEMENT AREA FOR UNIFORM APPEARANCE.
2. CENTER TREE IN PLANTING PIT.

SPECIFICATION 710	CATEGORY CODE ITEMS
APPROVED	DIRECTOR - OFFICE OF HIGHWAY DEVELOPMENT

SHA State Highway Administration	APPROVAL + SHA REVISIONS	APPROVAL + FEDERAL HIGHWAY ADMINISTRATION
APPROVAL	10-28-97	6-18-97
REVISED	10-1-01	REVISED
REVISED		REVISED
REVISED		REVISED

Maryland Department of Transportation
STATE HIGHWAY ADMINISTRATION
STANDARDS FOR HIGHWAYS AND INCIDENTAL STRUCTURES

STAKING FLOWERING TREES 6 FEET HIGH TO 2 1/2 INCH CALIPER

STANDARD NO. MD 710.03-04

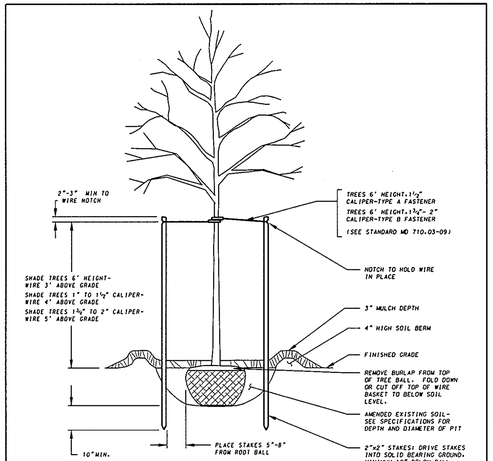

NOTES

1. LOCATE STAKES PARALLEL TO NEAREST ROADWAY OR PAVEMENT AREA FOR UNIFORM APPEARANCE.
2. CENTER TREE IN PLANTING PIT.

SPECIFICATION 710	CATEGORY CODE ITEMS
APPROVED	DIRECTOR - OFFICE OF HIGHWAY DEVELOPMENT

SHA State Highway Administration	APPROVAL + SHA REVISIONS	APPROVAL + FEDERAL HIGHWAY ADMINISTRATION
APPROVAL	10-28-97	6-18-97
REVISED	10-1-01	REVISED
REVISED		REVISED
REVISED		REVISED

Maryland Department of Transportation
STATE HIGHWAY ADMINISTRATION
STANDARDS FOR HIGHWAYS AND INCIDENTAL STRUCTURES

STAKING SHADE TREES 6' HIGH TO 2" CALIPER

STANDARD NO. MD 710.03-06

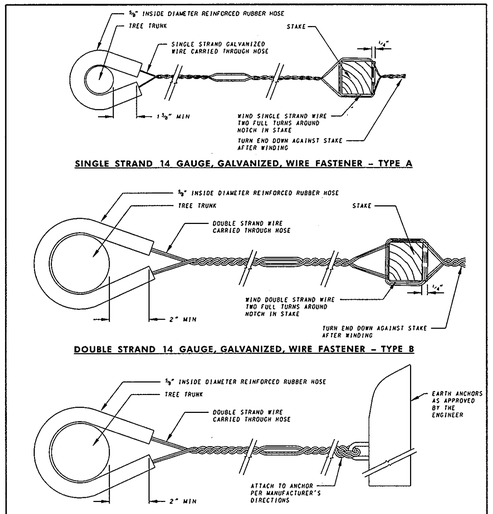

SPECIFICATION 710	CATEGORY CODE ITEMS
APPROVED	DIRECTOR - OFFICE OF HIGHWAY DEVELOPMENT

SHA State Highway Administration	APPROVAL + SHA REVISIONS	APPROVAL + FEDERAL HIGHWAY ADMINISTRATION
APPROVAL	10-28-97	6-18-97
REVISED	10-1-01	REVISED
REVISED		REVISED
REVISED		REVISED

Maryland Department of Transportation
STATE HIGHWAY ADMINISTRATION
STANDARDS FOR HIGHWAYS AND INCIDENTAL STRUCTURES

FASTENERS FOR TREE SUPPORT

STANDARD NO. MD 710.03-09

GRAPHIC SCALE

20 0 10 20 40 60

(IN FEET)
1 inch = 20 ft.

Professional Certification. I hereby certify that these documents were prepared or approved by me, and that I am a duly licensed professional engineer under the laws of the State of Maryland.

License No. 12548

Expiration Date 7-29-13

APPROVED: DEPARTMENT OF PLANNING AND ZONING

CHIEF, DEVELOPMENT ENGINEERING DIVISION — DATE 8/7/12

CHIEF, DIVISION OF LAND DEVELOPMENT — DATE 8/23/12

DIRECTOR — DATE 8/23/12

HURON CONSULTING
9010 CENTURY BLVD
SUITE 230
GERMANTOWN, MD. 20874
PHONE (301) 528-2010
FAX (301) 528-2014
www.huronconsulting.com

SEAL OF MARYLAND — EDWARD RICHARD HURNEY — No. 21442 — PROFESSIONAL ENGINEER — 8-17-12

DRW BY: JA
CHK BY: JA
APP BY: REH

REVISIONS

DATE	DESCRIPTION

GLENELG COUNTRY SCHOOL

12793 FOLLY QUARTER ROAD
ELLICOTT CITY, MD 21042

REVISED SHEET:
BIORETENTION PLANTING PLAN

SCALE
HORIZONTAL: N/A
VERTICAL: N/A

PROJECT NO.:
900-101

DRAWING NO.:
C-313

SHEET:
29 OF 37

DATE: JULY 2012

SDR-03-084

BIORETENTION BASIN AND SWALE PLANTING SPECIFICATIONS:

Consists of supplying and planting the trees, shrubs and herbaceous materials (ground covers) including the staking of trees as specified herein and the supplying of materials, labor, equipment and related services necessary for same as specified herein.

The work of this section includes, but is not limited to:

mulching	fertilizing
watering	wrapping
soil preparation	staking
planting	plant materials
maintenance	replacement

MATERIALS: Wherever the following items appear in the specifications, they shall be as follows:

Topsoil Texture and Structure: The planting media shall consist of 1/3 perlite, 1/3 compost and 1/3 soil. Topsoil for bioretention shall have a sandy loam, loamy sand, or loam texture per USDA textural triangle. Maximum clay content is 5%; soil mixture shall be 50%-60% sand; 20%-30% leaf mulch; and 20%-30% topsoil. The soil shall be a uniform mix, free of stones, stumps, roots, or othe stiliar objects larger than two inches. No other materials or substances shall be mixed or dumped within the bioretention that may be hamful to plant growth, or prove a hinderance to the planting or maintenance operations. The planting soil shall be free of Bermuda Grass, Quackgrass, Johnson Grass, Mugwort, Nutsedge, Poison Ivy, Canadian Thistle, Tearthub, or other noxious weeds.

Soil testing: Planting soil for bioretention areas must be tested prior to installation for PH and organic matter. The soil should meet the following criteria (Landscape Contractors Association, Latest Edition).

PH Range: 5.2-7.0
Organic Matter 1.5-4.0%
Magnesium: 35 lb/ac
Phosphorus (phosphate-P_2O_5): 75 lb/ac
Potassium (potash-K_2O): 85 lb/ac
Soluble Slats: not to exceed 500ppm

It is required that a sieve analysis, PH, phosphorus, potassium, soluble salts and Organic matter test must be performed per each bioretention area. A textural analysis is required from the site stockpiled topsoil. If topsoil is imported, then a texture analysis shall be performed for each location where the topsoil was excavated.

Since labs calibrate their testing equipment differently, all testing results shall come from the same testing facility.

Should the pH fall ou of the acceptable range, it may be modified (higher) with lime or (lower) with iron sulfate plus sulfur.

Soil Replacement: Placement of planting soil for bioretention area should be in lifts of 12 to 18 inches and lightly compacted. Minimal compaction effort can be applied to the soil by tamping with a bucket from a dozer or backhoe. Refer also to "compaction".

Mulch Specifications: Individual planting shall be mulched (refer to landscaping details, DWG Bio-2). Acceptable mulch shall be shredded hardwood only. Mulch must be well aged, uniform in color, and free of foreign material including plant material. Well aged mulch is defined as mulch that has been stockpiled or stored for at least twelve (12) months.

Gravel Filter Specifications: Coarse aggregate, MDSHA No. 7 stone per MDOT-SHA standards and specifications, 95% must pass through 1" sieve, double washed. Recycled asphalt pavement may be used as a component not to exceed 15% percent.

Sand Specifications: Provide clean sand, free of deleterious materials. Sand shall meet AASHTO M-6 or ASTM C-33 with grain size of 0.02"-0.04".

Geotextile Specifications: Geotextile fabric shall meet
ASTM D-751 (punture strength - 125 LB)
ASTM D-1117 (Mullen burst strength - 400 PSI)
ASTM D-1682 (Tensile Strength - 300 LB)

Fabric shall have 0.08" thick E.O.S. of #80 sieve, and maintain 125 GPM per SQ. FT.

Inspection requirements:
1. The contractor shall arrange a "preconstruction meeting" with the owner and architect/engineer prior to beginning work on the bioretention facility.
2. At the completion of excavation to inspect the subgrade.
3. During underdrain and filter installation.
4. Back fill of soil into the bioretention areas. Soil certifications for back fill are required.
5. The final topsoil layers should be thoroughly wetted achieve settlement of the soil/sand backfill mix.
6. Additional soil backfill should be placed as required to achieve the design top surface elevations.
7. The work shall be inspected by the owner/architect prior to final stabilization and planting.
8. Sediment control and erosion practices may be removed upon approval by the county inspector.

Fertilizer: Commercial slow release fertilizer for additional plant application shall be standard formula 10-6-4, nitrogen 10%, phosphoric acid 6%, potash 4% and contain minor trace elements. The formula shall be in conformity to applicable state fertilizer laws. Fertilizer shall be uniform in compostion, dry and free flowing, and shall be delivered to the project sitein the original unopened containers, each bearing the manufacturers guaranteed analisys. Any fertilizer which becomes wet, caked, or otherwise damaged will not be accepted. Tree, shrub, and potted herbaceous plants or grasses use: Osmocote 19-6-12, 12-14 month release at a rate of 1oz. per herbaceous plant or grass; 4oz. per shrub. Trees use Agriform 20-10-5, two year release, 10 gram tablets.

Water: Shall be furnished by the contractor for the execution of all work specified in this contract. The contractor shall verify that the water available is suitable for irrigation and free from ingredients harmful to plant life.

BRACE STAKES: Wood brace stakes shall be common lumber or the sizes in the following table:

Tree Size		Brace Stakes
1"-1.5 "Cal.or	< 8' tall	2"X2"X96"
1.5"-3" Cal.or > 8' tall		2"x2"x24",2"x2"x30" for conifers

Wire shall be good commercial quality of galvanized wire. Wire used to stake trees shall be No. 11 gauge minimum.

HOSE COLLARS: Hose collars shall be new two ply fabric bearing garden hose not less that 0.5 inch inside diameter.

PLANT MATERIAL STANDARDS:

NAMES AND GRADES: Plant material shall conform to nomenclature of "Standardized Plant Names" as adopted by the Joint Committee of Horticulture Nomenclature, latest edition. Size and grading standards shall conform to the American Association of Nurserymen, Inc., as published in the "American Standard for Nursery Stocks", latest edition. No substitutions of size or grade shall be permitted without written permission from the Landscape Architect. Each bundle of plants and all separate plants shall be properly identified with the legible waterproof tags securely fastened to each plant or bundle of plants. They shall remain on the plants until final inspection.

HEALTH: All plants including their roots shall be free from disease, insects, or other injurious qualities. All local, state, and federal laws pertaining to the inspection, sale, and shipment of plant materials shall be complied with. The trunk bark of all trees shall be sound, trees shall have no large wounds, and any small wounds shall have a satisfactory callus roll formed or forming over them. Plants shall show good annual growth. Buds shall be plump and well filled for the species. Evergreen foliage shall be of good intense

QUALITY: All plants shall be true to type; they shall have normal, well-developed branch systems, and a vigorous fibrous root system; they shall be sound, healthy, vigorous plants free from defects, disfiguring knots, sun scald injuries, abrasions of the bark, plant diseases, insect eggs, borers, and all forms of infestation. All new plants shall be nursery grown.

BALL AND BURLAP: All balled and burlapped plants shall conform to the "American Standard for Nursery Stock", latest edition. All balls shall be of natural earth in which the plant has been growing. No manufactured or artificially produced or mudded-balls shall be accepted. Balls shall be firm and unbroken, and of large enough size to adequately enclose the plant's fibrous root system.

PLANT LIST: The list of plants furnished with the specifications is for the information of the Contractor. The height and caliper of trees, the height or spread of shrubs, the diameter of the balls of roots are the minimum dimensions required. Plants indicated B" are to be dug with a ball of earth and wrapped in burlap.

MEASUREMENTS:

Shall conform to those specified on the plant list except as follows:

Oversize plants may be used only after approval by the Landscape Architect.

Use of such plants shall not increase the contract price.

Height and spread dimensions indicated refer to the main body of the plant and not from branch tip to branch tip. All trees and shrubs shall be measured when their branches are in normal position. Trees shall have straight trunks with the leader intact, undamaged and uncut.

INSPECTION: The Planting Contractor shall be responsible for all inspection and approval of the plant material that may be required by state, federal and other authorities, and he shall secure any permits and certificates that may be required.

All plants shall be subject to inspection, and approval at place of growth before digging, or upon delivery, for quality, size and variety; such approval shall not impair the right of rejection at the project site during progress of the work, for size, condition of balls, roots, latent defects or injuries. Rejected plants shall be removed immediately from the project site.

DIGGING AND HANDLING:

Protection from extremes in exposure and rough handling shall be provided all plant materials during transport and storage.

All plant materials shall be assembled in one location on the job site to permit inspection and approval by the Landscape Architect. The Contractor shall notify the Landscape Architect five (5) working days prior to planting so that a mutually agreeable time may be arranged for inspection. Stock with broken root balls or loose containers, and stock which shows evidence of being root-bound, over-grown, or recently canned, or in the opinion of the Landscape Architect is damaged or improperly cared for, shall be removed from the site immediately and replaced at the Contractor's expense with another plant meeting the original specifications. Plants shall not be pruned prior to approval by the landscape Architect.

PROCEDURE:

BIORETENTION PLANTING BED

A. SITE PREPARATION

1. Construct sediment control sequence of construction and features as shown on sediment control plan. Contractor is to conform to sediment control plan and notes, until site is stabilized and has been approved by DPS Inspector. Notify DPS Inspector, Owner and Landscape Architect prior to commencement of planting work.
2. Excavate site to grades shown on plan. Care should be taken to preclude sediments, or sediment-laden runoff from entering planting area.
3. Remove and dispose of excess soil in approved on-site spoil area. Contractor is to obtain approval from Owner of haul route on site. Following the bioretention construction plans and grading, the Contractor shall install Soil Filter/Planting Media for the Bioretention area as designated on the plans. Construction rubble, rocks, trash and sediments coarser than sand are excluded by this specification.
4. If boulders or a rock outcropping are encountered during excavation or substrate preparation, the Contractor shall notify the Landscape Architect for possible incorporate on site.
5. After excavation and use of heavy equipment, the graded planting area shall be tilled/plowed to a depth of one foot for a loose, friable planting soil condition.

B. PLANTING

1. During planting operations and excavations for planting pits, exercise care to maintain level grading across site, as shown on grading plan. Avoid depressions or mounding as a result of planting.
2. Planting will be done between March 15 through June 30 and September 15 through November 15. Exeption: Oaks to be planted in Spring.
3. Exact location of plants shall be determined in the field by the planting Contractor based on hydraulic tolerances. Any major changes to the planting scheme are to be approved by the landscape architect.
4. Fertilizer shall be placed in each planting pit and consist of Osmocote 19-6-12, 12-14 month release, at a rate of 1 oz. per herbaceous plant; 4 oz. per shrub. Trees use Agriform 20-10-5, two-year release, 10 gram tablets at the manufacturer's recommended rate. Seeded areas use standard 10-10-10 fertilizer at a rate of 60 lb./acre. Also see Note 10.
5. All container grown plants are to be planted with crown or top of soil ball approximately 1" above grade of planting substrate.
6. Backfill in planting pits is to be of same material as planting substrate and is to be firmed around root system, not excessively compacted.
7. Root stock of the plant material shall be kept moist during transport from the source to the job site and until planted. Substitutions of balled and burlapped for container grown stock must be approved by landscape architect.
8. Wetland plants must be wet cultured for a minimum of 3 months and supplied by a recognized wetland nursery which will provide certification of the culture process. Upland plants can be supplied from standard upland grown nursery operations. See list for wetland planting sources.
9. Upland seed mixes shall be broadcast or hydroseeded in upper areas. Mulch shall consist of straw and be anchored by a fiberlack. Asphalt emulsion will not be acceptable. The seed mix shall be a blend of 90% Rebel II Tall Fescue and 10% Red Top.
10. Lowland (flood prone) seed mixes shall be cultivated to a depth of 0 to ¼-inch, followed by dragging, then packing or rolling. In graded areas, fertilizing of these areas shall be deferred until seedlings are 2 inches tall.

TREE PLANTING WITHIN THE BIORETENTION PLANTING MEDIA

PLANTING PITS: Shall be a diameter one (1) foot greater than the diameter of the ball of the tree. The depth of the pit shall be enough to accommodate the ball or roots of the tree when the tree is set to finish grade, allowing for six inches of compacted planting media soil below the roots of the plant.

LAYOUT: All trees shall be located as designated in the field by the planting plan. Where below ground or overhead obstructions are encountered, the trees shall be relocated by the Landscape Architect.

SETTING OF TREES: Before setting the trees, pits shall thoroughly tamped and watered. All plants shall be placed at such a level that, after settlement, the natural relationship between the original grade at which the plant grew, the ball shall be 2" higher than the finish grading. Trees shall be planted plumb, oriented for desired effect or as directed by the Landscape Architect. Planting soil shall be tamped under and around the base of each ball to fill all voids and shall be placed in 6 to 8 inch layers, each thoroughly tamped and puddled. Burlap shall be removed from the sides and top of balls and from under the balls. When planting bare root trees, care shall be taken to work topsoil in around the roots and to spread them in a natural position before backfilling.

TREE PLANTING OUTSIDE OF PLANTING MEDIA ADJACENT TO THE BASIN

PLANTING PITS: Shall be a diameter two (2) feet greater than the diameter of the ball of the tree. The depth of the pit shall be enough to accommodate the ball or roots of the tree when the tree is set to finish grade, allowing for six inches of compacted topsoil below the roots of the plant. Prior to installing the 6" of topsoil to the pit, 3" of existing soil shall be broken up and mixed with the topsoil at a 1:1 ratio to reduce puddling beneath plantings.

PLANTING SOIL PREPARATION: Mix 5 lbs. of 10-6-4 slow release fertilizer per cubic yard of topsoil and then one part peat moss with five parts topsoil. Mix all components thoroughly before backfilling.

SETTING OF TREES: Before setting the trees, pits shall be backfilled with topsoil to a depth of 6", thoroughly tamped and watered. All plants shall be placed at such a level that, after settlement, the natural relationship between the original grade at which the plant grew, the ball shall be 1/8 higher than the finish grading. Trees shall be planted plumb, oriented for desired effect as directed by the Landscape Architect. Topsoil shall be tamped under and around the base of each ball to fill all voids and shall be placed in 6 to 8 inch layers, each thoroughly tamped and puddled. Burlap shall be removed from the sides and top of balls and from under the balls. When planting bare root trees, care shall be taken to work topsoil in around the roots and to spread them in a natural position before backfilling. Shallow basin or saucers a little larger than the diameter of the ball shall be formed around all trees to hold additional water.

ALL PLANTING AREAS

MULCH: Shall be applied to all tree pits to a depth of 2-3".

PRUNING: All trees shall be neatly pruned after planting in accordance with the best standard practices and as directed by the Landscape Architect. The tree shall be pruned to preserve its natural form and character and in a manner appropriate to its particular requirements. In general, at least one third of the deciduous trees shall be removed by thinning or shortening of branches but no leaders shall be cut. All pruning shall be done with clean, sharp tools.

SHRUB AND HERBACEOUS MATERIALS (GROUND COVER) PLANTING WITHIN THE BIORETENTION PLANTING MEDIA ADJACENT TO THE BASIN:

LAYOUT: Herbaceous planting beds and shrub pit locations shall be in accordance with the plant list and the tentative locations shown on the planting plan.

PREPARATION OF HERBACEOUS PLANTING BEDS: All holes, depressions and rivulets shall be filled and brought to a smooth grade.

SHRUB PLANTING PITS: Shall have vertical sides. The diameter of the pits shall be six (6) inches greater than the diameter of the ball of the shrub. The depth of the pit shall be enough to accommodate the ball or roots of the shrub when the shrub is set to finish grade.

SHRUB BACKFILL SOIL: Mix 5 lbs. 10-6-4 slow release fertilizer per cubic yard of topsoil and then one part peat moss with five parts topsoil. Mix all components thoroughly before backfilling.

SETTING OF SHRUBS: All materials shall be planted 2" higher in relation to the finish grade as they had before transplanting. The depth of the holes, as hereafter specified, shall be understood to be the depth below finish grade. Balled and burlapped plants shall have topsoil tamped under the balls. All burlap, ropes, staves, etc., shall be taken off the tops of the balls and removed from the ball before backfilling. Roots of bare root plants shall not be left matted together, but shall be arranged in natural positions and shall have topsoil worked in among them. All broken and frayed roots shall be properly removed by trimming.

THE BACKFILL OF PLANTING MEDIA SOIL: Shall be tamped in successive 4" layers. When the hole has been 2/3 backfilled, water shall be poured in filling the hole, and allowed to soak away so that all voids or air pockets under or around the roots are eliminated. After the water has soaked away, the hole shall be completely backfilled with "planting media soil". After the backfill settles, additional soil shall be filled in, to the level of the finish grade.

SHRUB AND HERBACEOUS MATERIALS (GROUND COVER) OUTSIDE OF THE BIORETENTION PLANTING MEDIA:

LAYOUT: Herbaceous planting beds and shrub pit locations shall be designated by the Landscape Architect in accordance with the plant list and the tentative locations shown on the planting plan. The general form of the planting bed shall be staked out and excavations performed within the stakes.

PREPARATION OF HERBACEOUS PLANTING BEDS: The ground shall be thoroughly broken to a depth of 12 inches. The top 4 inches shall be worked by the Contractor until the soil is completely fined and in a mellow condition to finish grade. All organic material shall either be worked into the soil or removed from the site. Clumps shall be removed from the site. All work shall be performed perpendicular to the direction of surface drainage. All holes, depressions and rivulets shall be filled and brought to a smooth grade.

SHRUB PLANTING PITS: Shall have vertical sides. The diameter of the pits shall be one (1) foot greater than the diameter of the ball of the shrub. The depth of the pit shall be enough to accommodate the ball or roots of the shrub when the shrub is set to finish grade compacted allowing for six inches topsoil below the roots of the plant. Prior to installing the 6" of topsoil to the pit, 3" of existing soil shall be mixed with the topsoil at a 1:1 ratio to reduce puddling beneath plantings.

SHRUB PLANTING SOIL: Mix 5 lbs. 10-6-4 slow release fertilizer per cubic yard of topsoil and then one part peat moss with five parts topsoil. Mix all components thoroughly before backfilling.

SETTING OF SHRUBS: All materials shall be planted 2" higher in relation to the finish grade as they had before transplanting. The depth of the holes, as hereafter specified, shall be understood to be the depth below finish grade. Balled and burlapped plants shall have topsoil tamped under the balls. All burlap, ropes, staves, etc., shall be taken off the tops of the balls and removed from the ball before backfilling. Roots of bare root plants shall not be left matted together, but shall be arranged in natural positions and shall have topsoil worked in among them. All broken and frayed roots shall be properly removed by

THE BACKFILL OF TOPSOIL: Shall be tamped in successive 8" layers. When the hole has been 2/3 backfilled, water shall be poured in filling the hole, and allowed to soak away so that all voids or air pockets under or around the roots are eliminated. After the water has soaked away, the hole shall be completely backfilled with "topsoil". After the backfill settles, additional soil shall be filled in, to the level of the finish grade. A shallow saucer of soil shall be formed around the edge of each hole to hold additional water.

ALL PLANTING AREAS

PRUNING: All shrubs shall be neatly pruned or thinned immediately after planting in accordance with best standard practices and as directed by the Landscape Architect. Broken or bruised branches shall be removed with a clean cut. Each shrub shall be pruned to preserve its natural form or character and in a manner appropriate to its particular requirements. All pruning and thinning shall be done with sharp, clean tools.

MULCH: Shall be applied to all shrub beds and pits to a depth of 3" and to all herbaceous planting beds to a depth of 2".

SOD: Shall be in conformance with Maryland Department of Transportation, State Highway Administration, Standards and Specifications for Materials and Construction - Sections 708 & 920. Sod shall be well established cultured sod consisting of densely rooted tall fescue or other approved permanent and desirable grasses. The sod shall be free of noxious weeds, undesirable grasses and foreign matter.

LAWN AND STABILIZATION GRASS SEEDING: Shall be in conformance with Maryland Department of Transportation, State Highway Administration, Standards and Specifications for Materials and Construction - Sections 705 & 920. Seed shall conform with SHA Mixture No. 1 and be applied to all areas indicated on the plan and at a rate appropriate to develop a full, well established cover. Seed mixture shall a mixture of turf type tall fescues and bluegrass or other approved permanent and desirable grasses as specified. Reseed areas within 21 days that are bare or sparse in cover.

BIORETENTION AREA CONSERVATION SEEDING: Shall confom with seeding schedules and rates as indicated on planting schedule as shown on the plans. Seed shall be applied to all areas indicated on the plan and at a rate appropriate to develop a full, well established cover. Seed mixture shall a mixture of native grasses of plant diversity and wildlife benifit or other approved permanent and desirable grasses as specified. Reseed areas within 21 days that are bare or sparse in cover.

STAKING: Staking shall be completed by the end of the day for all materials planted during the day. Trees 1" to 4.5" in diameter shall be staked with three stakes placed evenly around the sides of the tree, outside of the ball. All stakes shall be oriented to a line parallel with the normal prevailing winds, or as directed by the Landscape Architect. See planting details for staking locations.

TEMPORARY STORAGE AND HEELING-IN: No heel-in plant material will be accepted, nor will any temporary heeling-in storage be permitted. Plant material unloaded and accepted by the inspector shall be immediately transported to the planting site and planted. Material left out of ground overnight or left with its roots bare to the sun, or otherwise unprotected during transit, unloading or storage shall be rejected by the Landscape Architect, if in his judgment such lack of protection has caused damage to the roots of the plant or in any other way injured the plant material.

MAINTENANCE: The planting contractor shall be required to make periodic checks on the total project to make certain that the materials are properly cared for and that the sum of all conditions are contributing to the satisfactory progress of the materials, until such time as the work is approved by the Landscape Architect.

The Contractor shall conduct monthly inspections of the site during the 18 month warranty period after planting on a quarterly basis: During these quarterly inspections, the Contractor shall:

1. Remove all litter and debris throughout the site.
2. Replant failed materials and/or reseed all erosion control stabilizing grasses, rushes, sedges or ground covers, as required to prevent erosion.
3. Conduct fertilizations as may be required or requested
4. Take appropriate measures to exclude wildlife, if destructive depredation occurs.
5. Conduct soils tests for pH, substrate salinity and moisture content, and notify Landscape Architect of conditions that may cause plant mortality. Correct conditions that are unsatisfactory, to insure plant success. Note: salinity may fluctuate, especially in early Spring, due to uphill runoff from driveway or road treated with de-icing salts.
6. Maintain planted and seeded areas by watering, mowing, rolling, or replanting and implementing erosion controls as required to establish vegetation, free of bare or eroded areas.
7. Contractor shall furnish and install temporary irrigation hose & sprinkler system for warranty period. The owner shall provide water.

SOIL FILTER/PLANTING MEDIA: The planting media shall consist of 1/3 perlite, 1/3 compost and 1/3 soil. The perlite shall be coarse grade horticultural perlite. The compost shall be high grade compost free of stones and partially composted woody material. The soil shall meet the following minimum criteda: contain no more than 10% clay, 30 - 55% silt and 35 - 60% sand. The soil shall be free of stones, stumps, roots or other similar objects larger than 2 inches. The first layer of the planting media shall be lightly tilled to mix it into the sand layer, so not to create a definitive boundary. The planting material shall be flooded after placement. Any settlement that occurs shall be filled back to the design elevation.

COMPOST: The compost shall be high grade compost free of stones and containing 20% partially composted woody material. Compost materials of: peat humus, finely divided or granular texture, with a pH range of 5.5 to 6.5, or composed of partially decomposed moss peat (other than sphagnum), peat humus, or reed -sedge peat, or well-rounded ground-bark, humus decomposed and nitrogen-treated or leaf humis? leafgro?, or unleached stable or cattle manure; containing not more than 25 percent by volume of straw, sawdust, or other bedding materials shall be permitted. All compost shall be free of toxic substances, stones, sticks, soil, weed seed, and material harmful to plant growth.

TOPSOIL: The Contractor shall provide required natural, friable, fertile, fine sandy loam possessing the characteristics of representative topsoil in the vicinity which produce heavy growths of vegetation. The topsoil shall be free from subsoil, noxious weeds, stones, lime, cement, ashes, slag or other deleterious matter. Topsoil shall be well drained in its original condition and free of toxic quantities of acid or alkaline elements. It shall contain sand and clay in approximately equal proportions, and shall have an organic content by weight of not less than 2% nor more than 20% as determined by laboratory tests. The pH shall be between 5.5 and 6.5.

FERTILIZER: Commercial slow release fertilizer for additional plant application shall be standard formula 10-6-4, nitrogen 10%, phosphoric acid 6%, potash 4%, and shall contain minor trace elements. The formula shall be in conformity to applicable state fertilizer laws. Fertilizer shall be uniform in composition, dry and free flowing, and shall be delivered to the project site in the original unopened containers, each bearing the manufacturer's guaranteed analysis. Any fertilizer which becomes wet, caked, or otherwise damaged will not be accepted. Tree, shrub and potted herbaceous plants or grasses use: Osmocote 19-6-12, 12-14 month release, at a rate of 1 oz. per herbaceous plant or grass; 4 oz. per shrub. Trees use Agriform 20-10-5, two-year release, 10 gram tablets.

MULCH: Shredded hardwood mulch, free from deleterious materials and suitable as a top dressing of trees, shrubs and herbaceous plant areas. Must be well aged, at least 12 months, and uniform in color. Pine bark and other non-aged bark or hardwood mulch is not acceptable.

WATER: Shall be furnished by the Contractor for the execution of all work specified in this contract. The Contractor shall verify that the water available is suitable for irrigation and free from ingredients harmful to plant life.

PEAT: Shall be only moss (sphagnum) peat; brown acid reaction approximately 4 to 5 pH; of standard commercial quality delivered to the site in bags or other convenient containers, in air dry condition. Peat shall be fully warranted by the producer.

CLEANUP AND PROTECTION:

1. During landscape work, store materials and equipment where directed. Keep pavements clean and work areas and adjoining areas in an orderly condition.
2. Protect landscape work and materials from damage due to landscape operations, operations by other trades and trespassers. Maintain protection during installation and maintenance periods. Treat, repair or replace damaged landscape work as directed by landscape architect.

INSPECTION AND ACCEPTANCE: Inspection of this work will be made by the Landscape Architect at the conclusion of the planting period upon written notice by the Contractor at least five (5) days prior to anticipated date. Condition of all plant materials will be noted and recorded for reference. After inspection, the planting contractor will be notified in writing by the Landscape Architect if there are any deficiencies of the requirements for acceptance of the work.

1. The Landscape Architect reserves the right to inspect seeds and plant materials, either at place of growth or at site before planting, for compliance with requirements for name, variety, size, quantity, quality and mix proportion.
2. Supply written affidavit certifying composition of seed mixtures and integrity of plant materials with respect to species, variety and source.
3. No tify the Landscape Architect within 5 days after completing initial and/or supplemental plantings in wetland areas.
4. When the landscape work is completed, including maintenance, the Landscape Architect will, upon request, make a final inspection to determine acceptability. After final acceptance, the Owner will be responsible for maintenance and watering of plants.
5. The Contractor shall be responsible for the satisfactory growth of trees, shrubs grasses, forbs and sedge species on all areas seeded and/or planted under the contract until final acceptance of the work. Acceptance of the work will be determined using a time meander search. The Landscape Architect shall conduct a time meander search at the site. The search shall be conducted at the end of the warrantee period (not to exceed 18 months). The search will randomly sample 20% of the area for each area that was seeded and/or planted. If 85% of the species seeded and/or planted are alive and apparent, and the sample area has 85% ground cover of acceptable species, the work will be accepted.
6. Where inspected landscape work does not comply with the requirements, replace rejected work and continue specified maintenance until reinspected by the Landscape Architect and found to be acceptable. Remove rejected plants and materials promptly from the project site. Re-sow or replant deficient areas.

GUARANTEE AND REPLACEMENT: The Contractor will guarantee an 85% survival rate of plants (each species) after two years. If at this time the total number of plants has fallen below this threshold, the Contractor will make a one-time replacement to bring plant numbers to the 85% levels for each species. Care shall be taken such that the activities involved in replacement planting do not cause damage or detrimental effect to the surviving flora. Any plants damaged by these activities will also be replaced by the Contractor to the 85% threshold.

Trees, shrubs and ground covers shall be guaranteed for a maximum 2 years after installation and shall be alive and in satisfactory condition at the end of the guarantee period. Such guarantee excludes vandalism.

DEFINITION FOR FURNISHED AND INSTALLING PLANT MATERIAL: The unit price contained in the bid proposal for furnished and installing plant and shrub material shall be defined to include furnishing and installing material, all planting soils (if applicable), staking and a guarantee for 24 months (excluding vandalism).

PROTECTION OF PRIVATE PROPERTY: Contractor shall repair or replace all fences, concrete walls, concrete curbs, gravel and asphalt driveways, signs, culverts, and all other miscellaneous improvements, at no additional expense to owner, damaged by Contractor due to his operations on the project, to a condition equal to or better than their condition before construction.

JOB CONDITIONS:

1. Examine and evaluate grades, soils and water levels, observe the conditions under which work is to be performed, and notify the Landscape Architect of unsatisfactory conditions. Do not proceed with the work until unsatisfactory conditions have been corrected in an acceptable manner.
2. Utilities: Review underground utilities location maps and plans provided by owner; demonstrate an awareness of utility locations, and certify acceptance of liability for the protection of utilities during course of work. Contractor shall be responsible for any damage to utilities or property.
3. Excavation: When conditions detrimental to plant growth are encountered, such as rubble fill, adverse drainage conditions, or obstructions, notify Landscape Architect before planting.

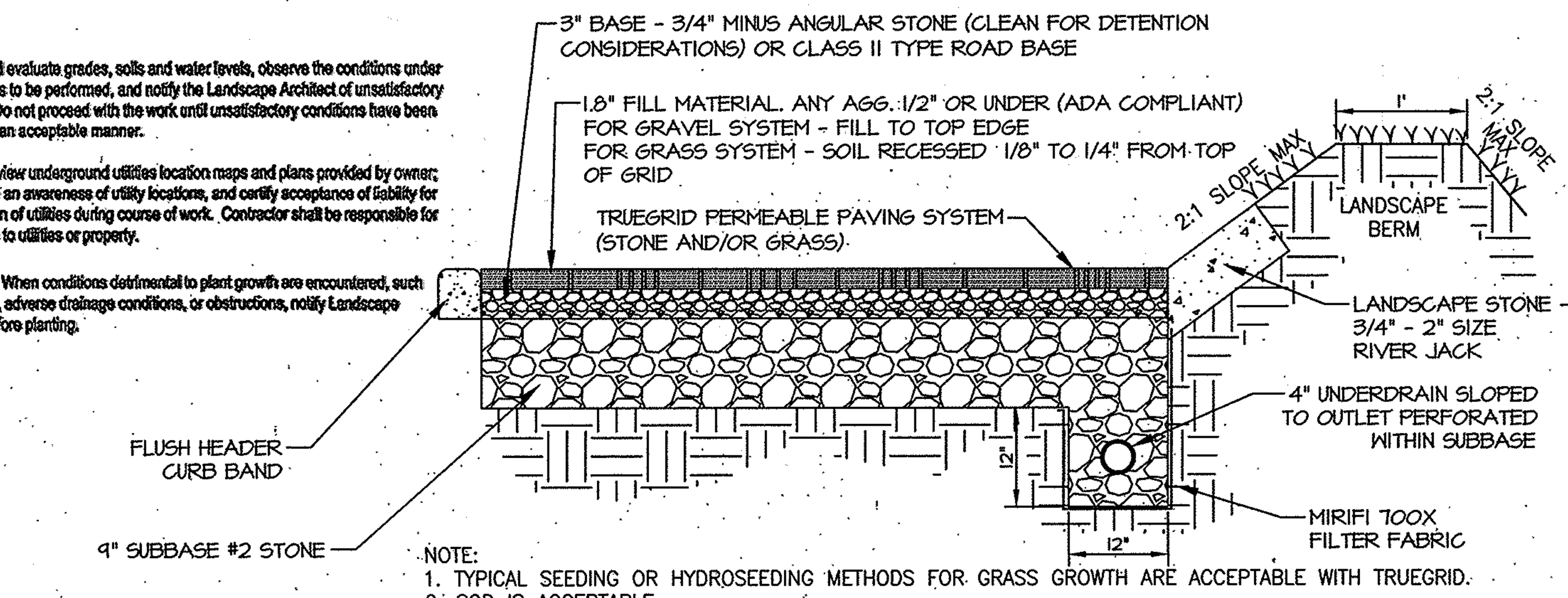

NOTE:
1. TYPICAL SEEDING OR HYDROSEEDING METHODS FOR GRASS GROWTH ARE ACCEPTABLE WITH TRUEGRID.
2. SOD IS ACCEPTABLE.
3. NO STAKING NECESSARY WITH TRUEGRID.

PERMEABLE PAVER DETAIL 6

NOT TO SCALE

6 NEW PERMEABLE PAVEMENT AREA PLAN

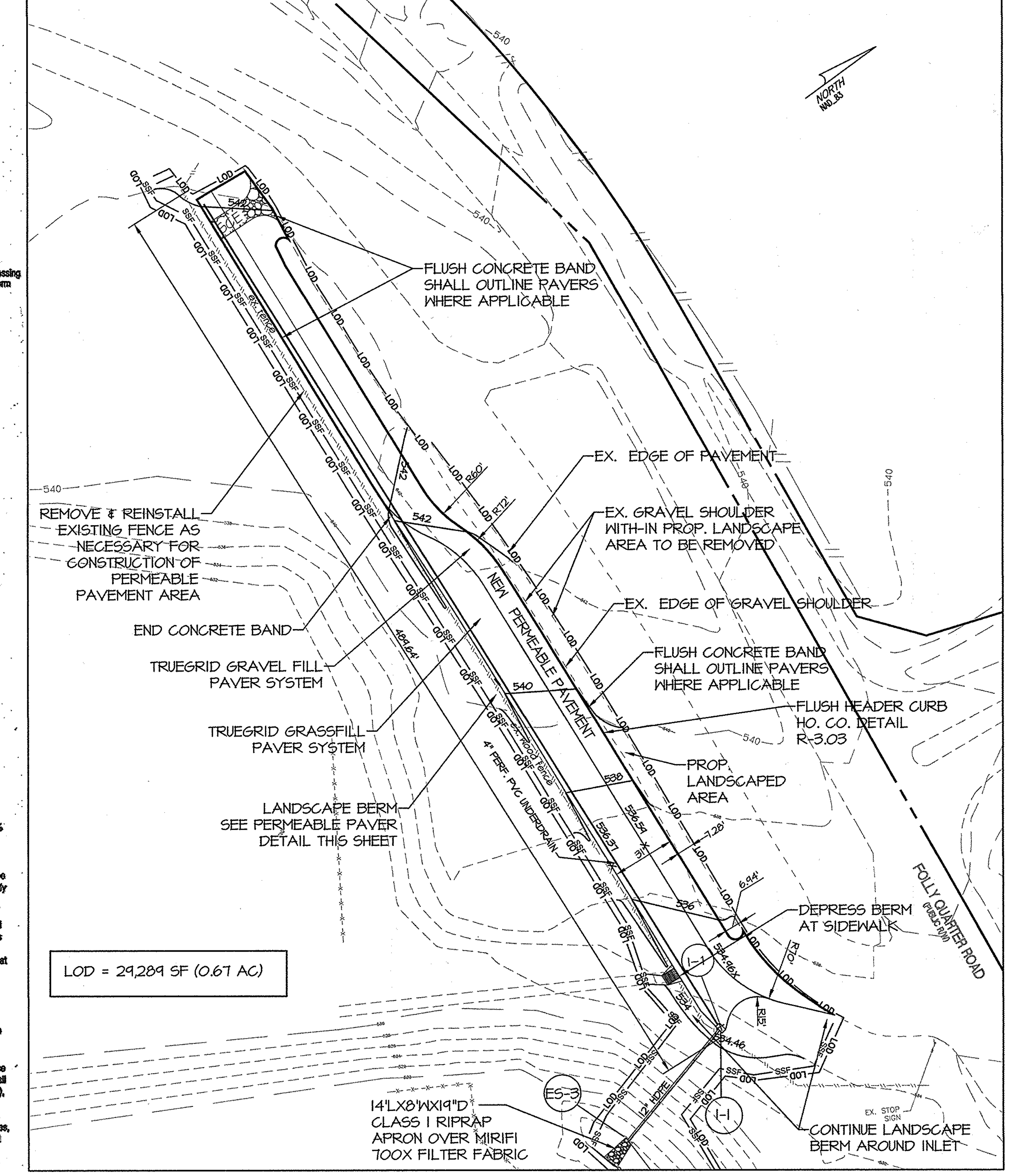

SCALE: 1"=40'

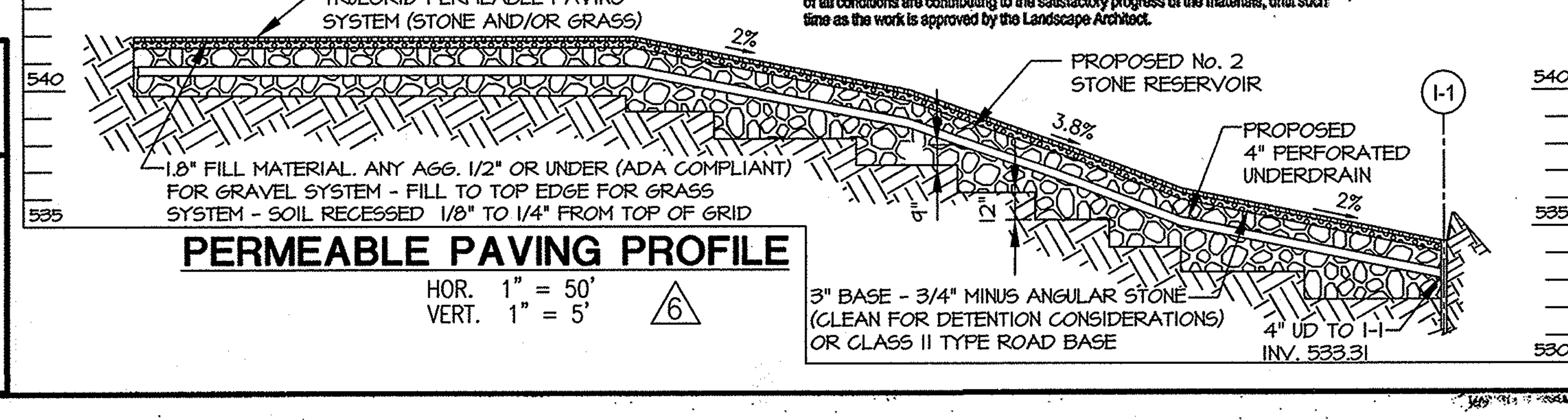

PERMEABLE PAVING PROFILE
HOR. 1" = 50'
VERT. 1" = 5' 6

MORRIS & RITCHIE ASSOCIATES, INC.
ENGINEERS, PLANNERS, SURVEYORS AND LANDSCAPE ARCHITECTS
14280 PARK CENTER DRIVE - LAUREL, MD 20707
(410) 792-9792 / (301) 776-1690 FAX: (410) 792-7395
MRAGTA.COM

COPYRIGHT 2015 MORRIS & RITCHIE ASSOCIATES

FOR REVISION #6 ONLY
STATE OF MARYLAND THOMAS C. NEUGEBAUER 29203 PROFESSIONAL ENGINEER 1-25-16

MD PROFESSIONAL CERTIFICATION:
I HEREBY CERTIFY THAT THESE DOCUMENTS WERE PREPARED OR APPROVED BY ME, AND THAT I AM A DULY LICENSED PROFESSIONAL ENGINEER UNDER THE LAWS OF THE STATE OF MARYLAND, LICENSE NO. 29203, EXPIRATION DATE: 06/16/2017.

Professional Certification. I hereby certify that these documents were prepared or approved by me, and that I am a duly licensed professional engineer under the laws of the State of Maryland.

License No. 12548

Expiration Date 7-29-13

6

APPROVED: HOWARD COUNTY DEPARTMENT OF PLANNING AND ZONING

CHIEF, DEVELOPMENT ENGINEERING DIVISION NY	5.13.16 DATE
CHIEF, DIVISION OF LAND DEVELOPMENT	5-16-16 DATE
DIRECTOR, DEPARTMENT OF PLANNING AND ZONING	5-16-16 DATE

HURON CONSULTING
20410 CENTURY BLVD
SUITE 230
GERMANTOWN, MD. 20874
PHONE: (301) 528-2010
FAX: (301) 528-0124
www.huroncon.com

STATE OF MARYLAND EDWARD HURNEY RICHARD REGISTERED PROFESSIONAL ENGINEER 8-13-12

DRW BY: DWC
CHK BY: JA
APP BY: REH

REVISIONS

	DATE	DESCRIPTION
6	01/16	ADDED PERMEABLE PAVEMENT AREA BY MAIN ENTRANCE AND STORM DRAIN TO EX. GRASS CHANNEL

GLENELG COUNTRY SCHOOL
12793 FOLLY QUARTER ROAD
ELLICOTT CITY, MD 21042

REVISED SHEET
BIORETENTION PLANTING NOTES & NEW ASPHALT AREA DETAIL 6

SCALE
HORIZONTAL: ~~N/A~~ 1" = 40'
VERTICAL: N/A

PROJECT NO.: 900-101
DRAWING NO.: C-314
SHEET: 30 OF 37
DATE: JULY 2012

SDP-03-084

EX. SEPTIC RESERVE AREA

EX. ATHLETIC FIELD #2

CONSTRUCT INLETS AND STORM DRAIN WITH ESC MEASURES AS A CLEAN WATER DIVERSION FOR FIELD #2 RUNOFF. TYPICAL OF 5 INLETS.

OBSERVATORY BUILDING (SDP-02-126)

PROPOSED 10' SIDEWALK

PROPOSED SILT FENCE

LIMITS OF DISTURBANCE

EX. SWM

EX. ATHLETIC FIELD #4

PROPOSED SYNTHETIC TURF FIELD

EX. ATHLETIC FIELD #3

PROPOSED SCOREBOARD

PROPOSED UNDERDRAINS
ADD INLET PROTECTION AFTER INLET IS CONSTRUCTED

PROPOSED TRACK

EXISTING WELL

10'Lx4'Wx4'D STONE INFILTRATION TRENCH SEE DETAIL THIS SHEET

9' PARKING SPACES

24 PARKING SPACES

SEE SHEET 30 OF 37 FOR DETAIL 6

REMOVE TREES AFFECTED BY GRADING OPERATIONS; MINIMIZE DISTURBANCE TO THE MAXIMUM EXTENT PRACTICABLE. ANY TREES THAT ARE REMOVED SHALL BE REPLACED

ADD INLET PROTECTION AFTER INLET IS CONSTRUCTED

EXISTING 15" RCP STORM DRAIN CULVERT

PLEASANT PROSPECT ROAD (EXISTING PRIVATE DRIVE)

LANDSCAPED AREA

LANDSCAPE BERM

EXISTING 12" HDPE PIPE DRAIN PART OF FIELD 1 AND FIELD 2. PIPE TO BE EXTENDED AS SHOWN TO BYPASS CLEAN WATER

PROPOSED 4' MANHOLE

EXISTING STORM DRAIN PIPE TO BE DIVERTED

10'Lx4'Wx4'D STONE INFILTRATION TRENCH SEE DETAIL THIS SHEET

WOOD CHECK DAM SEE DETAIL THIS SHEET

14'Lx8'Wx18"D RIP-RAP APRON OVER MIRIFI 700X FILTER FABRIC

TEMPORARY STOCKPILE AREA

CLEAN WATER DIVERSION PIPE DAYLIGHT INTO SWALE

20' STRUCTURE & USE SETBACK

CONSTRUCT PORTION OF SWALE AS REQUIRED TO ACCEPT CLEAN WATER DIVERSION PIPE AND STABILIZE IMMEDIATELY WITH SOD.

EXISTING 15" RCP STORM DRAIN CULVERTS

MARYVALE ROAD

FOLLY QUARTER ROAD (PUBLIC R/W)

LAND OF MARY C. ZINK 4496/170

LAND OF RALPH J. HENRY 1882/195

LAND OF DALE N. COX 1414/696

LAND OF MARC J. EBERSBERGER 1677/264

LAND OF DONALD J. PERRAULT 4962/13

SINGLE WR-INLET HO. CO. DETAIL D-4.37
TOP OF GRATE=534.46 (I-1)

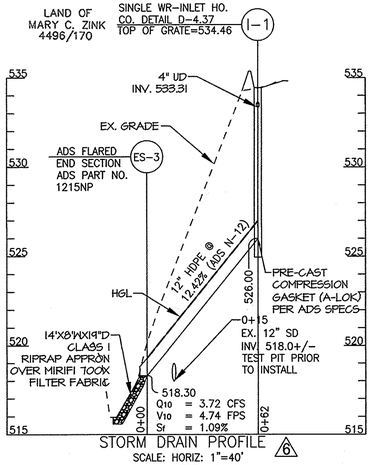

STORM DRAIN PROFILE 6
SCALE: HORIZ: 1"=40'
VERT: 1"=4'

( ) BY THE DEVELOPER:

"I/WE CERTIFY THAT ALL DEVELOPMENT AND CONSTRUCTION WILL BE DONE ACCORDING TO THIS PLAN, AND THAT ANY RESPONSIBLE PERSONNEL INVOLVED IN THE CONSTRUCTION PROJECT WILL HAVE A CERTIFICATE OF ATTENDANCE AT A DEPARTMENT OF THE ENVIRONMENT APPROVED TRAINING PROGRAM FOR THE CONTROL OF SEDIMENT AND EROSION BEFORE BEGINNING THE PROJECT. I ALSO AUTHORIZE PERIODIC ON-SITE INSPECTION BY THE HOWARD SOIL CONSERVATION DISTRICT."

W. Barry Shadrach — 7-20-12
SIGNATURE OF DEVELOPER — DATE

Wm. Barry Shadrach
PRINT NAME BELOW SIGNATURE

( ) BY THE ENGINEER:

"I CERTIFY THAT THIS PLAN FOR EROSION AND SEDIMENT CONTROL REPRESENTS A PRACTICAL AND WORKABLE PLAN BASED ON MY PERSONAL KNOWLEDGE OF THE SITE CONDITIONS AND THAT IT WAS PREPARED IN ACCORDANCE WITH THE REQUIREMENTS OF THE HOWARD SOIL CONSERVATION DISTRICT."

8-17-12
SIGNATURE OF ENGINEER — DATE

RICHARD E HURLEY
PRINT NAME BELOW SIGNATURE

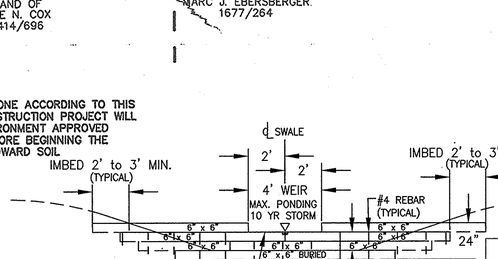

CHECK DAM DETAIL 6
NOT TO SCALE

Professional Certification. I hereby certify that these documents were prepared or approved by me, and that I am a duly licensed professional engineer under the laws of the State of Maryland.

License No. 12548

Expiration Date 7-29-13

BY THE ENGINEER 6

"I CERTIFY THAT THIS PLAN FOR EROSION AND SEDIMENT CONTROL REPRESENTS A PRACTICAL AND WORKABLE PLAN BASED ON MY PERSONAL KNOWLEDGE OF THE SITE CONDITIONS AND THAT IT WAS PREPARED IN ACCORDANCE WITH THE REQUIREMENTS OF THE HOWARD SOIL CONSERVATION DISTRICT."

1/25/16
SIGNATURE OF ENGINEER — DATE
THOMAS C. NEUGEBAUER, P.E. MD LICENSE #29203

THIS DEVELOPMENT PLAN IS APPROVED FOR SOIL EROSION AND SEDIMENT CONTROL BY THE HOWARD SOIL CONSERVATION DISTRICT.

HOWARD S.C.D. — DATE

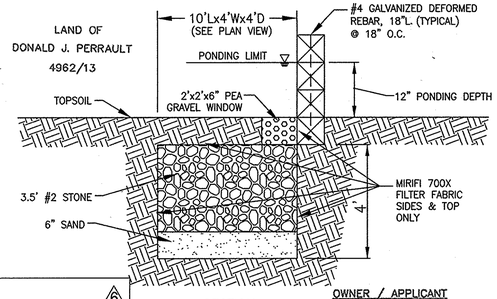

SECTION
CHECK DAM DETAIL 6
NOT TO SCALE

OWNER / APPLICANT
GLENELG COUNTRY SCHOOL
12793 FOLLY QUARTER ROAD
ELLICOTT CITY, MD 21042
TEL: 410-531-8600

6
APPROVED: HOWARD COUNTY DEPARTMENT OF PLANNING AND ZONING

CHIEF, DEVELOPMENT ENGINEERING DIVISION — DATE 5-13-16

CHIEF, DIVISION OF LAND DEVELOPMENT — DATE 5-16-16

DIRECTOR, DEPARTMENT OF PLANNING AND ZONING — DATE 5-16-16

CHECK DAM DETAIL 6
NOT TO SCALE

LEGEND

- ROCK INFLOW/OUTLET PROTECTION
- SILT FENCE — SF
- SUPER SILT FENCE — SSF
- AT GRADE INLET PROTECTION — AGIP
- STABILIZED CONSTRUCTION ENTRANCE — SCE
- LIMITS OF DISTURBANCE — LOD

NOTES:
1) SEE SHEET C-410 AND C-411 FOR STANDARD NOTES AND DETAILS
2) SWALES TO BE STABILIZED WITH EROSION CONTROL MATTING PER MDE STANDARD G-22-2

MORRIS & RITCHIE ASSOCIATES, INC.
ENGINEERS, PLANNERS, SURVEYORS AND LANDSCAPE ARCHITECTS
14280 PARK CENTER DRIVE - LAUREL, MD 20707
(410) 792-9792 / (301) 776-1690 FAX: (410) 792-7395
MRAGTA.COM

COPYRIGHT 2016 MORRIS & RITCHIE ASSOCIATES

FOR REVISION #6 ONLY
STATE OF MARYLAND — THOMAS C. NEUGEBAUER — 29203 — PROFESSIONAL ENGINEER — 1-25-16

MD PROFESSIONAL CERTIFICATION:
I HEREBY CERTIFY THAT THESE DOCUMENTS WERE PREPARED OR APPROVED BY ME, AND THAT I AM A DULY LICENSED PROFESSIONAL ENGINEER UNDER THE LAWS OF THE STATE OF MARYLAND, LICENSE NO. 29203, EXPIRATION DATE: 06/16/2017.

HURON CONSULTING
20410 CENTURY BLVD
SUITE 300
GERMANTOWN, MD. 20874
PHONE: (301) 528-2010
FAX: (301) 528-0124
www.huronconsult.com

STATE OF MARYLAND — RICHARD EDWARD HURLEY — 21542 — PROFESSIONAL ENGINEER — 8-17-12

DRW BY: JA
CHK BY: JA
APP BY: REH

REVISIONS

NO.	DATE	DESCRIPTION
6	01/16	ADDED PERMEABLE PAVEMENT AREA BY MAIN ENTRANCE AND STORM DRAIN TO EX. GRASS CHANNEL, CHECK DAMS AND INFILTRATION TRENCHES IN EX. GRASS CHANNEL

GLENELG COUNTRY SCHOOL
12793 FOLLY QUARTER ROAD
ELLICOTT CITY, MD 21042

REVISED SHEET
EROSION & SEDIMENT CONTROL PLAN

SCALE
HORIZONTAL: 1" = 30'40'
VERTICAL: N/A

PROJECT NO.: 900-101
DRAWING NO.: C-400
SHEET: 31 OF 37

DATE: MAY 2012

SDP-03-084

\PROJ\12189 Glenelg Country School\ACS Pkg EXPAND\MYLAR\PLOT\ACS-SDP-MYLAR-31.dwg, 1/25/2016 11:59:41 AM, JGundel
1, Copyright 2016 Morris & Ritchie Associates, Inc.

EX. UPPER SCHOOL GYMNASIUM ADDITION SDP-03-84

24 PARKING SPACES

EX. ATHLETIC FIELD #2

EX. SEPTIC RESERVE AREA

FOR AREA OUTSIDE OF PERIMETER CONTROLS, ONLY CONSTRUCT WHAT CAN BE STABILIZED AT THE END EACH DAY. OTHERWISE USE SILT FENCE ON THE DOWNSTREAM SLOPE FOR EROSION CONTROL

PROPOSED 12' GRAVEL ACCESS ROAD CONTRACTOR TO PROVIDE MIN. 6" STONE OVER FILTER FABRIC

OBSERVATORY BUILDING (SDP-02-126)

EXISTING TRACK

PROPOSED SILT FENCE, TYP.

PROPOSED AT GRADE INLET PROTECTION

LIMITS OF DISTURBANCE AREA = 23,614 SF

EXISTING SYNTHETIC TURF FIELD

EX. SWM

EXISTING OUTFALL PIPE
Q2=1.49 CFS
V2=3.81 FPS

14'L@W=19'D RIP-RAP APRON OVER MIRAFI 700X FILTER FABRIC

EXISTING OUTFALL PIPE
Q2=2.32 CFS
V2=3.23 FPS

New permeable pavement area

LANDSCAPED AREA

SEE SHEET 30 OF 37 FOR DETAIL

REMOVE AND REPLACE PORTIONS OF EXISTING SPLIT RAIL FENCE AS NECESSARY

LANDSCAPED BERM

MARYVALE ROAD

FOLLY QUARTER ROAD (PUBLIC R/W)

30' STRUCTURE & USE SETBACK

PLEASANT PROSPECT ROAD (EXISTING PRIVATE DRIVE)

LAND OF MARY C. ZINK 4496/170

LAND OF RALPH J. HENRY 1882/195

LAND OF DALE N. COX 1414/696

LAND OF MARC J. EBERSBERGER 1677/264

LAND OF DONALD J. PERRAULT 4962/13

LEGEND

- STONE CONSTRUCTION ACCESS
- SILT FENCE — SF —
- SUPER SILT FENCE — SSF —
- AT GRADE INLET PROTECTION — AGIP
- STABILIZED CONSTRUCTION ENTRANCE — SCE
- LIMITS OF DISTURBANCE — LOD

NOTES:
1. SEE SHEET C-410 AND C-411 FOR STANDARD NOTES AND DETAILS
2. FOR TRAILER LOCATION, SEE SHEET C-301.

( ) BY THE DEVELOPER:

"I/WE CERTIFY THAT ALL DEVELOPMENT AND CONSTRUCTION WILL BE DONE ACCORDING TO THIS PLAN, AND THAT ANY RESPONSIBLE PERSONNEL INVOLVED IN THE CONSTRUCTION PROJECT WILL HAVE A CERTIFICATE OF ATTENDANCE AT A DEPARTMENT OF THE ENVIRONMENT APPROVED TRAINING PROGRAM FOR THE CONTROL OF SEDIMENT AND EROSION BEFORE BEGINNING THE PROJECT. I ALSO AUTHORIZE PERIODIC ON-SITE INSPECTION BY THE HOWARD SOIL CONSERVATION DISTRICT."

SIGNATURE OF DEVELOPER — DATE 5-28-13

PRINT NAME BELOW SIGNATURE

( ) BY THE ENGINEER:

"I CERTIFY THAT THIS PLAN FOR EROSION AND SEDIMENT CONTROL REPRESENTS A PRACTICAL AND WORKABLE PLAN BASED ON MY PERSONAL KNOWLEDGE OF THE SITE CONDITIONS AND THAT IT WAS PREPARED IN ACCORDANCE WITH THE REQUIREMENTS OF THE HOWARD SOIL CONSERVATION DISTRICT."

SIGNATURE OF ENGINEER — DATE 5/28/13

PRINT NAME BELOW SIGNATURE

SEQUENCE OF CONSTRUCTION

1) OBTAIN A GRADING PERMIT
2) STAKEOUT THE ENTIRE LIMITS OF DISTURBANCE FOR THE PROJECT
3) PRIOR TO ANY CONSTRUCTION ACTIVITY A PRECONSTRUCTION MEETING SHALL BE HELD ONSITE WITH HOWARD COUNTY SEDIMENT CONTROL INSPECTOR. PROVIDE 48 HOURS NOTICE TO INSPECTOR. OBTAIN PERMISSION TO INSTALL PERIMETER ESC MEASURES FROM THE SEDIMENT CONTROL INSPECTOR.
4) INSTALL PERIMETER SILT FENCE, THE STABILIZED CONSTRUCTION ENTRANCE AND INLET PROTECTION.
5) OBTAIN APPROVAL FROM THE HOWARD COUNTY SEDIMENT CONTROL INSPECTOR FOR THE ESC MEASURES PRIOR TO PERFORMING ANY FURTHER CONSTRUCTION ACTIVITIES.
6) BEGIN TOPSOIL STRIPPING OPERATIONS AND STOCKPILE AS REQUIRED FOR REUSE.
7) CONSTRUCT GRAVEL ACCESS ROAD
8) BEGIN EXCAVATION AND CONSTRUCTION OF WATER AND SEWER AND BLEACHERS AND PRESS BOX.
9) BEGIN CONSTRUCTING PAVED WALKWAYS
10) INSTALL NEW TRAILER.
11) REMOVE GRAVEL ACCESS ROAD
12) CONSTRUCT REMAINING WALKWAYS
13) PERMANENTLY STABILIZE ALL DISTURBED AREAS
14) OBTAIN PERMISSION FROM THE SEDIMENT CONTROL INSPECTOR TO REMOVE SEDIMENT CONTROL DEVICES.
15) REMOVE SEDIMENT CONTROL DEVICES AND PERMANENTLY STABILIZE AREAS IMMEDIATELY.
16) PREPARE AND SUBMIT AS-BUILTS TO HOWARD COUNTY.

TASKS MAY BE PERFORMED CUT OF ORDER OR CONCURRENTLY **WITH PRIOR APPROVAL FROM THE HOWARD COUNTY SEDIMENT CONTROL INSPECTOR.** THE SEQUENCE OF CONSTRUCTION MAY NOT BE ALTERED WITHOUT PRIOR HOWARD COUNTY SOIL CONSERVATION DISTRICT APPROVAL.

DURATION SCHEDULE*

ESC INSTALLATION & ACCESS ROAD INSTALLATION	4 DAYS
GRADING AND EARTHWORK OPERATIONS	3 DAYS
BLEACHER AND PRESSBOX INSTALLATION	60 DAYS
PAVING	3 DAYS
TRAILER INSTALLATION	1 DAYS
PERMANENT STABILIZATION	3 DAYS

* SOME TASKS MAY OVERLAP. TOTAL CONSTRUCTION DURATION IS ESTIMATED AT 75 DAYS

STANDARD STABILIZATION NOTE

FOLLOWING INITIAL SOIL DISTURBANCE OR RE-DISTURBANCE, PERMANENT OR TEMPORARY STABILIZATION MUST BE COMPLETED WITHIN:

A) THREE (3) CALENDAR DAYS AS TO THE SURFACE OF ALL PERIMETER DIKES, SWALES, DITCHES, PERIMETER SLOPES, AND ALL SLOPES STEEPER THAN 3 HORIZONTAL TO 1 VERTICAL (3:1); AND

B SEVEN (7) CALENDAR DAYS AS TO ALL OTHER DISTURBED OR GRADED AREAS ON THE PROJECT SITE NOT UNDER ACTIVE GRADING

MORRIS & RITCHIE ASSOCIATES, INC.
ENGINEERS, PLANNERS, SURVEYORS AND LANDSCAPE ARCHITECTS
14280 PARK CENTER DRIVE • LAUREL, MD 20707
(410) 792-9792 / (301) 776-1691 FAX: (410) 792-7205
MRAGTA.COM
COPYRIGHT MORRIS & RITCHIE ASSOCIATES, INC.

FOR REVISION #6 ONLY

STATE OF MARYLAND — JAMES C. NEIDIGH — 21648 — REGISTERED PROFESSIONAL ENGINEER — 1-25-16

MD PROFESSIONAL CERTIFICATION

I HEREBY CERTIFY THAT THESE DOCUMENTS WERE PREPARED OR APPROVED BY ME, AND THAT I AM A DULY LICENSED PROFESSIONAL ENGINEER UNDER THE LAWS OF THE STATE OF MARYLAND, LICENSE NO. 21648 EXPIRATION DATE: 6-16-17

Professional Certification. I hereby certify that these documents were prepared or approved by me, and that I am a duly licensed professional engineer under the laws of the State of Maryland.

License No. 12648

Expiration Date 7-29-13

THIS DEVELOPMENT PLAN IS APPROVED FOR SOIL EROSION AND SEDIMENT CONTROL BY THE HOWARD COUNTY SOIL CONSERVATION DISTRICT

SIGNATURE — DATE 5/28/13

OWNER / APPLICANT

GLENELG COUNTRY SCHOOL
12793 FOLLY QUARTER ROAD
ELLICOTT CITY, MD 21042
TEL: 410-531-8600

APPROVED: DEPARTMENT OF PLANNING AND ZONING

CHIEF, DEVELOPMENT ENGINEERING DIVISION — DATE 6/4/13

CHIEF, DIVISION OF LAND DEVELOPMENT — DATE 6/12/13

DIRECTOR — DATE 6/12/13

SCALE
HORIZONTAL: 1" = 30'
VERTICAL: N/A

PROJECT NO.: 86860.00

DRAWING NO.: C-401

SHEET: 32 OF 37

DATE: MARCH 2013

SDP-03-084

REVISIONS

DATE	DESCRIPTION
12/15	ADDED PERVIOUS PAVEMENT AREA, SWALE DRAINING TO EX. GRASS

DRW BY: SL
CHK. BY: JA
APP BY: REH

HURON CONSULTING
A Division of Hobbs Engineering, Inc.
20410 CENTURY BLVD
SUITE 230
GERMANTOWN, MD. 20874
PHONE: (301) 528-2010
FAX: (301) 528-0124
www.huroncon.com

STATE OF MARYLAND — RICHARD THURNET — 21648 — PROFESSIONAL ENGINEER — 5-28-13

GLENELG COUNTRY SCHOOL
12793 FOLLY QUARTER ROAD
ELLICOTT CITY, MD 21042

REVISED SHEET
EROSION & SEDIMENT CONTROL PLAN

DETAIL B-1 STABILIZED CONSTRUCTION ENTRANCE

STANDARD SYMBOL: SCE

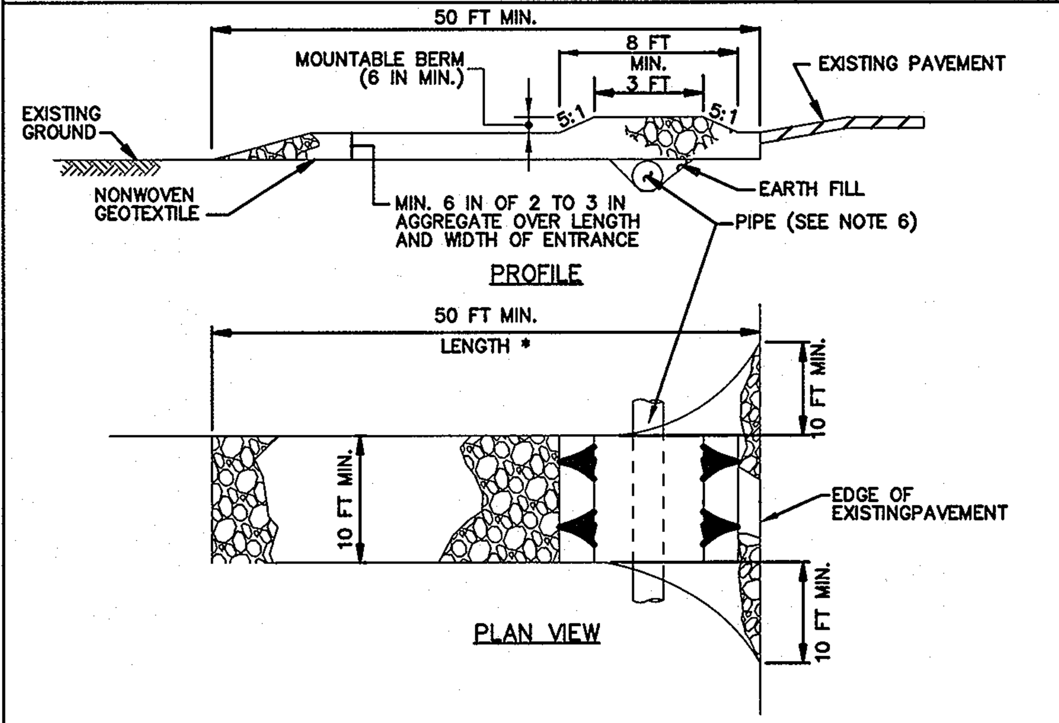

CONSTRUCTION SPECIFICATIONS

1. PLACE STABILIZED CONSTRUCTION ENTRANCE IN ACCORDANCE WITH THE APPROVED PLAN. VEHICLES MUST TRAVEL OVER THE ENTIRE LENGTH OF THE SCE. USE MINIMUM LENGTH OF 50 FEET (*30 FEET FOR SINGLE RESIDENCE LOT). USE MINIMUM WIDTH OF 10 FEET. FLARE SCE 10 FEET MINIMUM AT THE EXISTING ROAD TO PROVIDE A TURNING RADIUS.
2. PIPE ALL SURFACE WATER FLOWING TO OR DIVERTED TOWARD THE SCE UNDER THE ENTRANCE, MAINTAINING POSITIVE DRAINAGE. PROTECT PIPE INSTALLED THROUGH THE SCE WITH A MOUNTABLE BERM WITH 5:1 SLOPES AND A MINIMUM OF 12 INCHES OF STONE OVER THE PIPE. PROVIDE PIPE AS SPECIFIED ON APPROVED PLAN. WHEN THE SCE IS LOCATED AT A HIGH SPOT AND HAS NO DRAINAGE TO CONVEY, A PIPE IS NOT NECESSARY. A MOUNTABLE BERM IS REQUIRED WHEN SCE IS NOT LOCATED AT A HIGH SPOT.
3. PREPARE SUBGRADE AND PLACE NONWOVEN GEOTEXTILE, AS SPECIFIED IN SECTION H–1 MATERIALS.
4. PLACE CRUSHED AGGREGATE (2 TO 3 INCHES IN SIZE) OR EQUIVALENT RECYCLED CONCRETE (WITHOUT REBAR) AT LEAST 6 INCHES DEEP OVER THE LENGTH AND WIDTH OF THE SCE.
5. MAINTAIN ENTRANCE IN A CONDITION THAT MINIMIZES TRACKING OF SEDIMENT. ADD STONE OR MAKE OTHER REPAIRS AS CONDITIONS DEMAND TO MAINTAIN CLEAN SURFACE, MOUNTABLE BERM, AND SPECIFIED DIMENSIONS. IMMEDIATELY REMOVE STONE AND/OR SEDIMENT SPILLED, DROPPED, OR TRACKED ONTO ADJACENT ROADWAY BY VACUUMING, SCRAPING, AND/OR SWEEPING. WASHING ROADWAY TO REMOVE MUD TRACKED ONTO PAVEMENT IS NOT ACCEPTABLE UNLESS WASH WATER IS DIRECTED TO AN APPROVED SEDIMENT CONTROL PRACTICE.

MARYLAND STANDARDS AND SPECIFICATIONS FOR SOIL EROSION AND SEDIMENT CONTROL

U.S. DEPARTMENT OF AGRICULTURE NATURAL RESOURCES CONSERVATION SERVICE	2011	MARYLAND DEPARTMENT OF ENVIRONMENT WATER MANAGEMENT ADMINISTRATION

DETAIL D-3-1 RIPRAP INFLOW PROTECTION

STANDARD SYMBOL: RRP

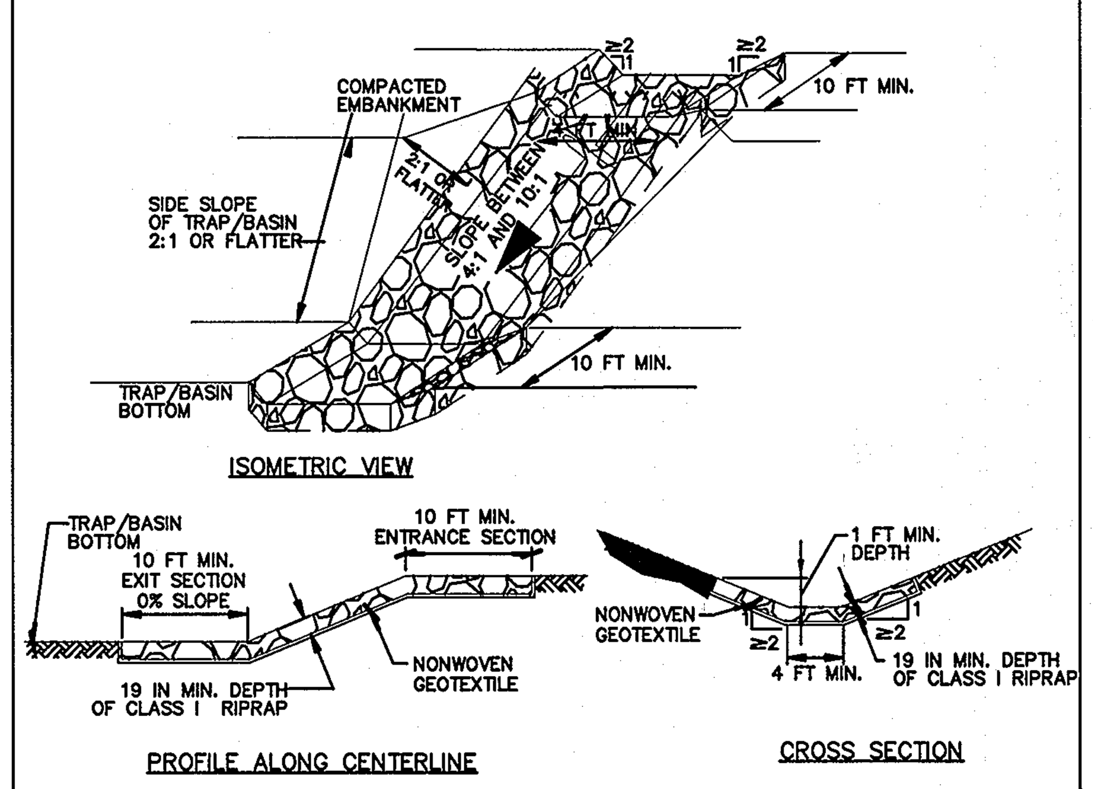

CONSTRUCTION SPECIFICATIONS

1. PROVIDE NONWOVEN GEOTEXTILE, AS SPECIFIED IN SECTION H–1 MATERIALS, UNDER THE BOTTOM AND ALONG SIDES OF ALL RIPRAP.
2. CONSTRUCT INFLOW CHANNEL WITH CLASS I RIPRAP OR EQUIVALENT RECYCLED CONCRETE LINING TO A MINIMUM DEPTH OF 19 INCHES (2 x D_{50}) AND A 1 FOOT DEEP FLOW CHANNEL. INFLOW RIPRAP PROTECTION CHANNEL MUST HAVE A TRAPEZOIDAL CROSS SECTION WITH 2:1 OR FLATTER SIDE SLOPES AND A 4 FOOT MINIMUM BOTTOM WIDTH.
3. INSTALL ENTRANCE AND EXIT SECTIONS AS SHOWN ON THE PROFILE.
4. BLEND RIPRAP INTO EXISTING GROUND.
5. MAINTAIN LINE, GRADE, AND CROSS SECTION. REMOVE ACCUMULATED SEDIMENT AND DEBRIS. KEEP POINTS OF INFLOW AND OUTFLOW FREE OF EROSION.

MARYLAND STANDARDS AND SPECIFICATIONS FOR SOIL EROSION AND SEDIMENT CONTROL

U.S. DEPARTMENT OF AGRICULTURE NATURAL RESOURCES CONSERVATION SERVICE	2011	MARYLAND DEPARTMENT OF ENVIRONMENT WATER MANAGEMENT ADMINISTRATION

DETAIL E-9-2 AT-GRADE INLET PROTECTION

STANDARD SYMBOL: AGIP

MAXIMUM DRAINAGE AREA = 1 ACRE

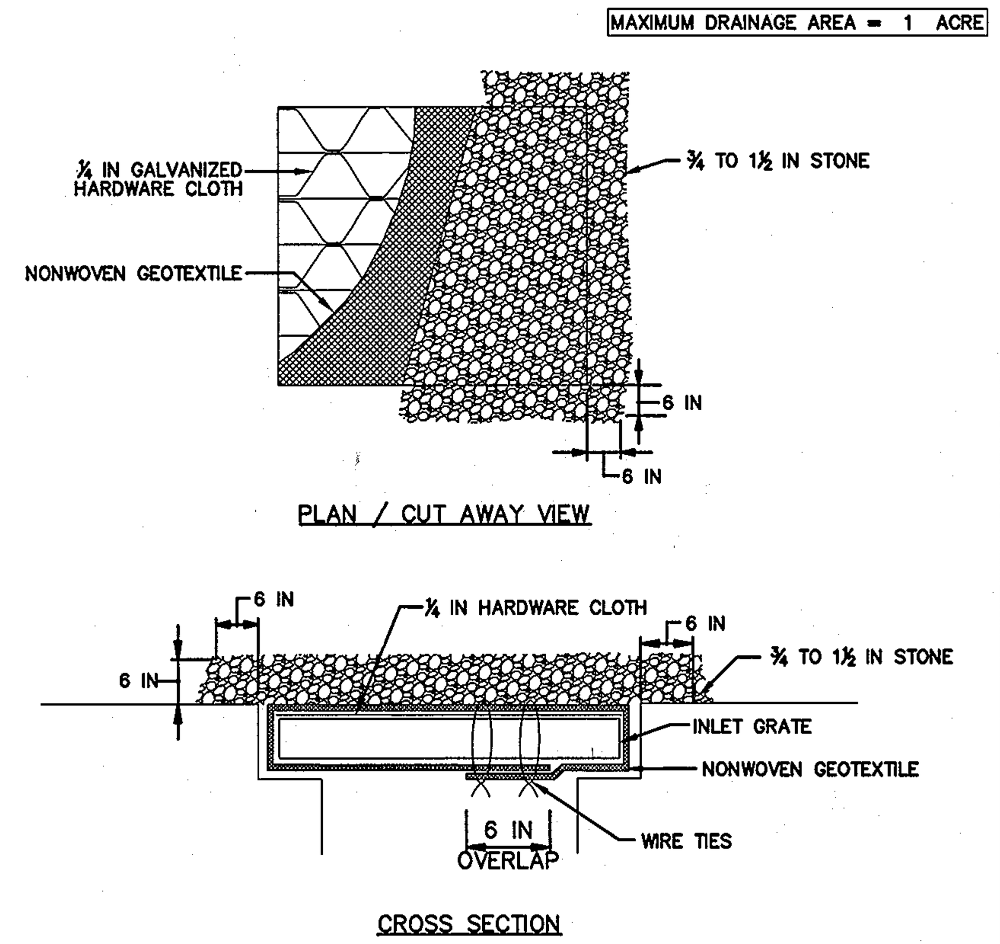

CONSTRUCTION SPECIFICATIONS

1. USE NONWOVEN GEOTEXTILE AS SPECIFIED IN SECTION H–1 MATERIALS.
2. LIFT GRATE AND WRAP WITH NONWOVEN GEOTEXTILE TO COMPLETELY COVER ALL OPENINGS. SECURE WITH WIRE TIES AND SET GRATE BACK IN PLACE.
3. PLACE CLEAN ¾ TO 1½ INCH STONE OR EQUIVALENT RECYCLED CONCRETE 6 INCHES THICK ON THE GRATE.
4. STORM DRAIN INLET PROTECTION REQUIRES FREQUENT MAINTENANCE. REMOVE ACCUMULATED SEDIMENT AFTER EACH RAIN EVENT TO MAINTAIN FUNCTION AND AVOID PREMATURE CLOGGING. IF INLET PROTECTION DOES NOT COMPLETELY DRAIN WITHIN 24 HOURS AFTER A STORM EVENT, IT IS CLOGGED. WHEN THIS OCCURS, REMOVE ACCUMULATED SEDIMENT AND CLEAN, OR REPLACE GEOTEXTILE AND STONE.

MARYLAND STANDARDS AND SPECIFICATIONS FOR SOIL EROSION AND SEDIMENT CONTROL

U.S. DEPARTMENT OF AGRICULTURE NATURAL RESOURCES CONSERVATION SERVICE	2011	MARYLAND DEPARTMENT OF ENVIRONMENT WATER MANAGEMENT ADMINISTRATION

DETAIL E-3 SUPER SILT FENCE

STANDARD SYMBOL: SSF

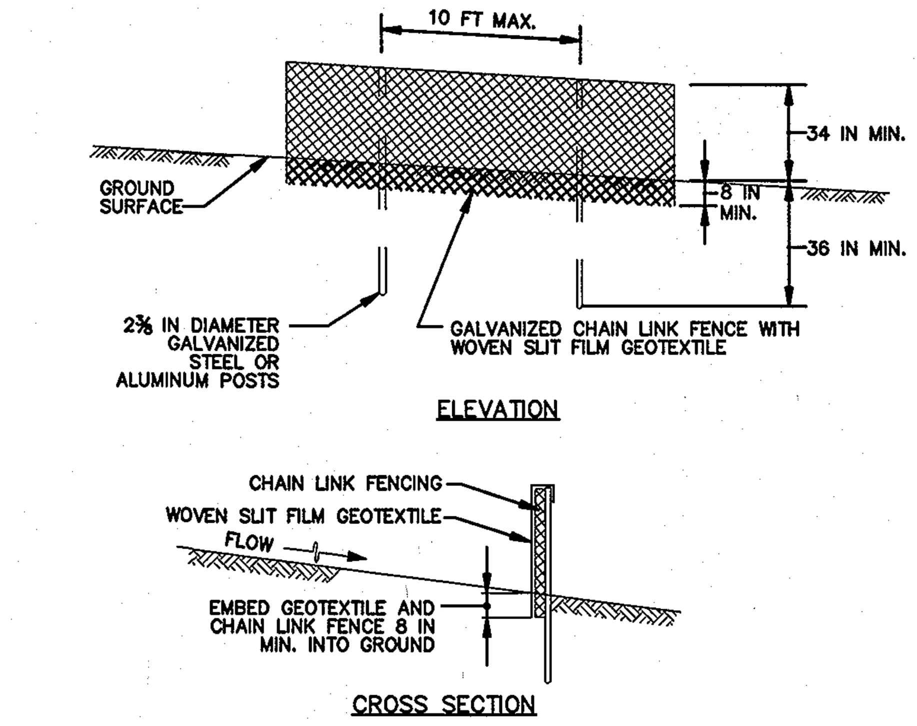

CONSTRUCTION SPECIFICATIONS

1. INSTALL 2⅜ INCH DIAMETER GALVANIZED STEEL POSTS OF 0.095 INCH WALL THICKNESS AND SIX FOOT LENGTH SPACED NO FURTHER THAN 10 FEET APART. DRIVE THE POSTS A MINIMUM OF 36 INCHES INTO THE GROUND.
2. FASTEN 9 GAUGE OR HEAVIER GALVANIZED CHAIN LINK FENCE (2⅜ INCH MAXIMUM OPENING) 42 INCHES IN HEIGHT SECURELY TO THE FENCE POSTS WITH WIRE TIES OR HUG RINGS.
3. FASTEN WOVEN SLIT FILM GEOTEXTILE AS SPECIFIED IN SECTION H–1 MATERIALS, SECURELY TO THE UPSLOPE SIDE OF CHAIN LINK FENCE WITH TIES SPACED EVERY 24 INCHES AT THE TOP AND MID SECTION. EMBED GEOTEXTILE AND CHAIN LINK FENCE A MINIMUM OF 8 INCHES INTO THE GROUND.
4. WHERE ENDS OF THE GEOTEXTILE COME TOGETHER, THE ENDS SHALL BE OVERLAPPED BY 6 INCHES, FOLDED, AND STAPLED TO PREVENT SEDIMENT BY PASS.
5. EXTEND BOTH ENDS OF THE SUPER SILT FENCE A MINIMUM OF FIVE HORIZONTAL FEET UPSLOPE AT 45 DEGREES TO THE MAIN FENCE ALIGNMENT TO PREVENT RUNOFF FROM GOING AROUND THE ENDS OF THE SUPER SILT FENCE.
6. PROVIDE MANUFACTURER CERTIFICATION TO THE INSPECTION/ENFORCEMENT AUTHORITY SHOWING THAT GEOTEXTILE USED MEETS THE REQUIREMENTS IN SECTION H–1 MATERIALS.
7. REMOVE ACCUMULATED SEDIMENT AND DEBRIS WHEN BULGES DEVELOP IN FENCE OR WHEN SEDIMENT REACHES 25% OF FENCE HEIGHT. REPLACE GEOTEXTILE IF TORN. IF UNDERMINING OCCURS, REINSTALL CHAIN LINK FENCING AND GEOTEXTILE.

MARYLAND STANDARDS AND SPECIFICATIONS FOR SOIL EROSION AND SEDIMENT CONTROL

U.S. DEPARTMENT OF AGRICULTURE NATURAL RESOURCES CONSERVATION SERVICE	2011	MARYLAND DEPARTMENT OF ENVIRONMENT WATER MANAGEMENT ADMINISTRATION

DETAIL E-1 SILT FENCE

STANDARD SYMBOL: SF

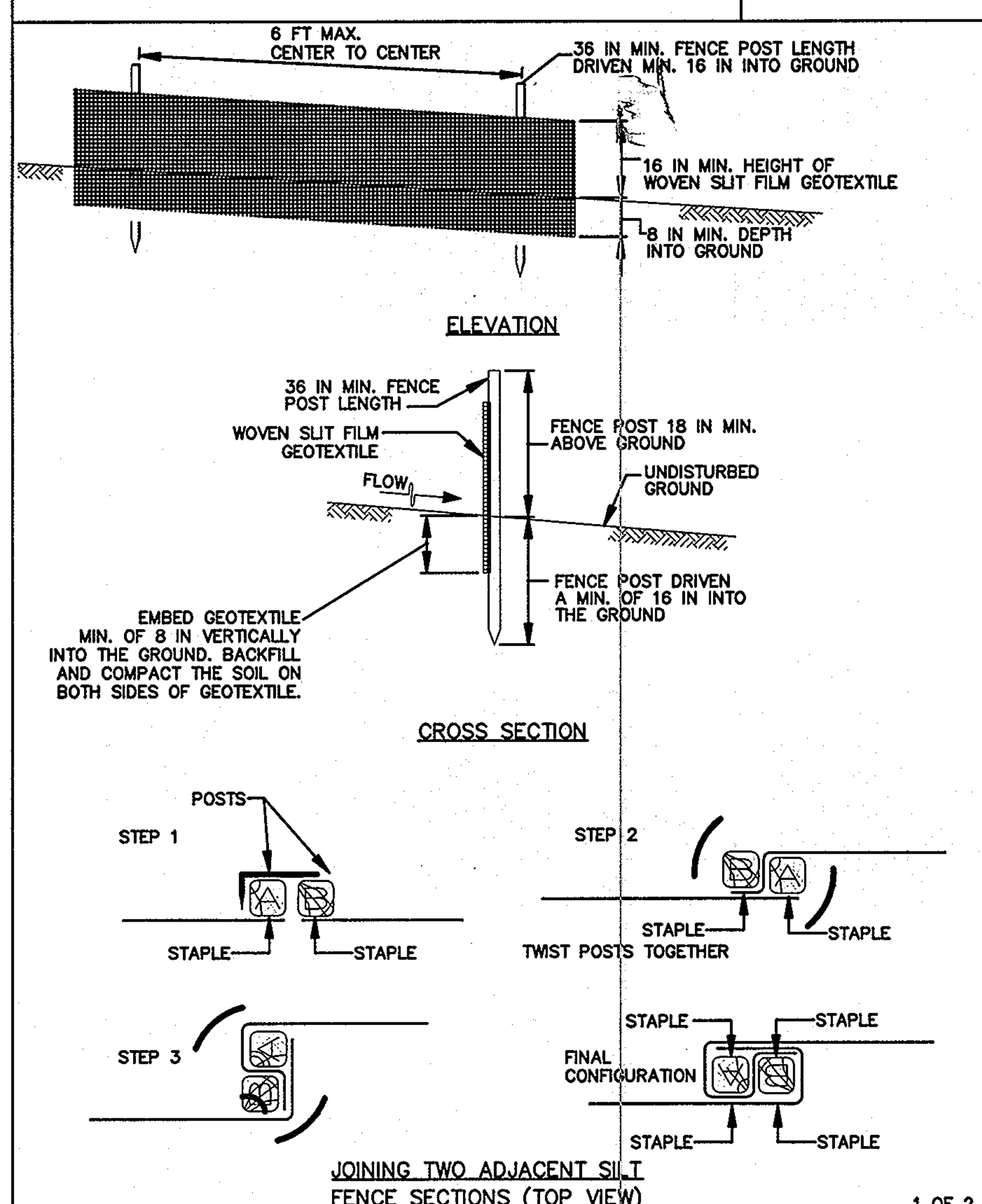

1 OF 2

MARYLAND STANDARDS AND SPECIFICATIONS FOR SOIL EROSION AND SEDIMENT CONTROL

U.S. DEPARTMENT OF AGRICULTURE NATURAL RESOURCES CONSERVATION SERVICE	2011	MARYLAND DEPARTMENT OF ENVIRONMENT WATER MANAGEMENT ADMINISTRATION

DETAIL E-1 SILT FENCE

STANDARD SYMBOL: SF

CONSTRUCTION SPECIFICATIONS

1. USE WOOD POSTS 1¾ X 1¾ ± ⅙ INCH (MINIMUM) SQUARE CUT OF SOUND QUALITY HARDWOOD. AS AN ALTERNATIVE TO WOODEN POST USE STANDARD "T" OR "U" SECTION STEEL POSTS WEIGHING NOT LESS THAN 1 POUND PER LINEAR FOOT.
2. USE 36 INCH MINIMUM POSTS DRIVEN 16 INCH MINIMUM INTO GROUND NO MORE THAN 6 FEET APART.
3. USE WOVEN SLIT FILM GEOTEXTILE AS SPECIFIED IN SECTION H–1 MATERIALS AND FASTEN GEOTEXTILE SECURELY TO UPSLOPE SIDE OF FENCE POSTS WITH WIRE TIES OR STAPLES AT TOP AND MID–SECTION.
4. PROVIDE MANUFACTURER CERTIFICATION TO THE AUTHORIZED REPRESENTATIVE OF THE INSPECTION/ENFORCEMENT AUTHORITY SHOWING THAT THE GEOTEXTILE USED MEETS THE REQUIREMENTS IN SECTION H–1 MATERIALS.
5. EMBED GEOTEXTILE A MINIMUM OF 8 INCHES VERTICALLY INTO THE GROUND. BACKFILL AND COMPACT THE SOIL ON BOTH SIDES OF FABRIC.
6. WHERE TWO SECTIONS OF GEOTEXTILE ADJOIN: OVERLAP, TWIST, AND STAPLE TO POST IN ACCORDANCE WITH THIS DETAIL.
7. EXTEND BOTH ENDS OF THE SILT FENCE A MINIMUM OF FIVE HORIZONTAL FEET UPSLOPE AT 45 DEGREES TO THE MAIN FENCE ALIGNMENT TO PREVENT RUNOFF FROM GOING AROUND THE ENDS OF THE SILT FENCE.
8. REMOVE ACCUMULATED SEDIMENT AND DEBRIS WHEN BULGES DEVELOP IN SILT FENCE OR WHEN SEDIMENT REACHES 25% OF FENCE HEIGHT. REPLACE GEOTEXTILE IF TORN. IF UNDERMINING OCCURS, REINSTALL FENCE.

2 OF 2

MARYLAND STANDARDS AND SPECIFICATIONS FOR SOIL EROSION AND SEDIMENT CONTROL

U.S. DEPARTMENT OF AGRICULTURE NATURAL RESOURCES CONSERVATION SERVICE	2011	MARYLAND DEPARTMENT OF ENVIRONMENT WATER MANAGEMENT ADMINISTRATION

PIPE OUTLET TO FLAT AREA

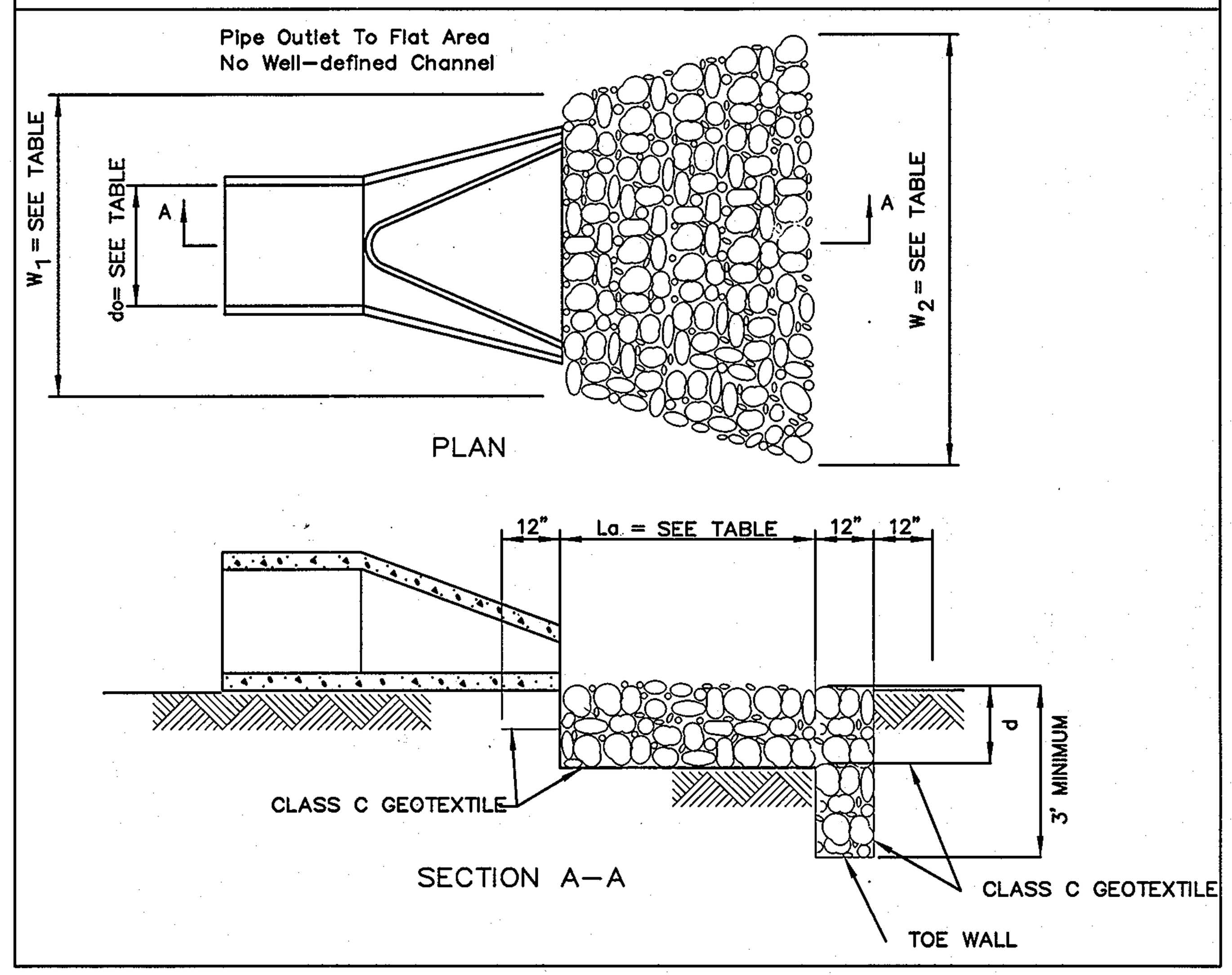

Outflow Pipe	Pipe Size	10 Year Discharge	Tailwater	Rip Rap Length, La	Rip Rap W_1	Rip Rap W_2	Rip Rap Depth, d	d_{50}
	(in)	(cfs)	Condition	(ft)	(ft)	(ft)	(in)	(ft)
9	12	2.17	minimum	8	3	9	19	0.2
11	12	3.83	minimum	8	3	9	19	0.2
12	12	3.43	minimum	8	3	9	19	0.2
14	10	1.06	minimum	8	3	9	19	0.2
16	10	1.61	minimum	9	3	9	19	0.2
19	10	1.6	minimum	10	3	9	19	0.2
20	10	1.41	minimum	11	3	9	19	0.2
21	12	2.61	minimum	12	3	9	19	0.2

Professional Certification. I hereby certify that these documents were prepared or approved by me, and that I am a duly licensed professional engineer under the laws of the State of Maryland.

License No. 12548

Expiration Date 7-29-13

THIS DEVELOPMENT PLAN IS APPROVED FOR SOIL EROSION AND SEDIMENT CONTROL BY THE HOWARD COUNTY SOIL CONSERVATION DISTRICT

SIGNATURE John R Roberts — DATE 8/23/12

APPROVED: DEPARTMENT OF PLANNING AND ZONING

CHIEF, DEVELOPMENT ENGINEERING DIVISION — DATE 8/17/12

CHIEF, DIVISION OF LAND DEVELOPMENT — DATE 8/23/12

DIRECTOR — DATE 8/23/12

OWNER / APPLICANT

GLENELG COUNTRY SCHOOL
12793 FOLLY QUARTER ROAD
ELLICOTT CITY, MD 21042
TEL: 410–531–8600

HURON CONSULTING
20410 CENTURY BLVD
SUITE 230
GERMANTOWN, MD. 20874
PHONE: (301) 528–2010
FAX: (301) 528–0124
www.huroncon.com

STATE OF MARYLAND — RICHARD EDWARD HURNEY — No. 12548 REGISTERED PROFESSIONAL ENGINEER — 8-12-12

DRW BY: JA
CHK BY: JA
APP BY: REH

REVISIONS

DATE	DESCRIPTION

GLENELG COUNTRY SCHOOL
12793 FOLLY QUARTER ROAD
ELLICOTT CITY, MD 21042

REVISED SHEET

EROSION AND SEDIMENT CONTROL DETAILS

SCALE
HORIZONTAL: 1" = 30'
VERTICAL: N/A

PROJECT NO.: 900–101

DRAWING NO.: C–410

SHEET: 33 OF 37

DATE: JULY 2012

SDP-03-084

DETAIL B-1 STABILIZED CONSTRUCTION ENTRANCE

STANDARD SYMBOL: SCE

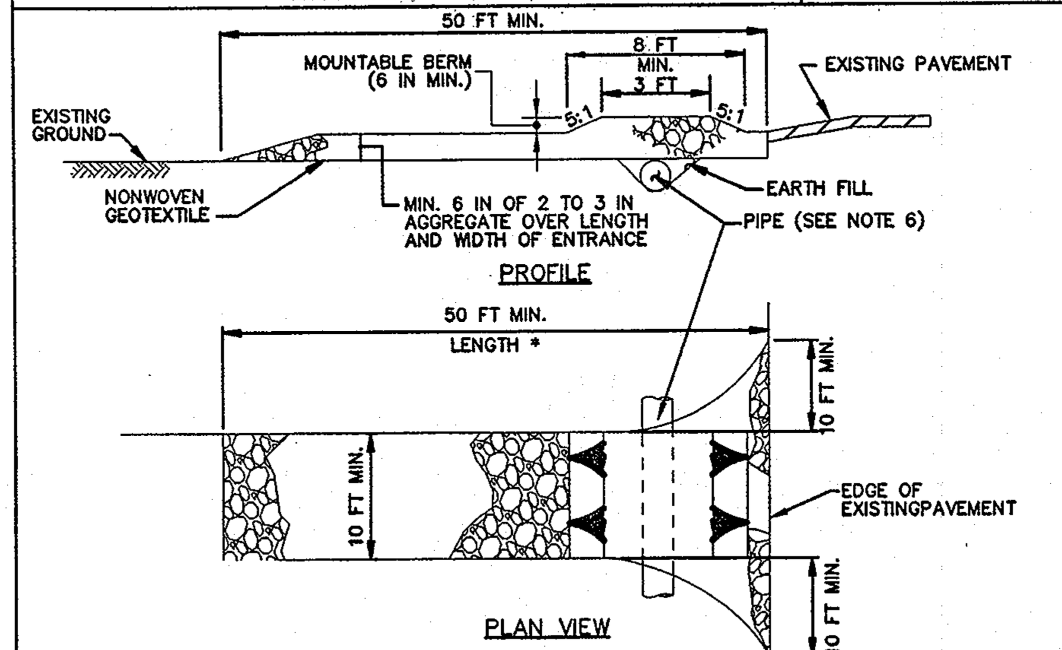

CONSTRUCTION SPECIFICATIONS

1. PLACE STABILIZED CONSTRUCTION ENTRANCE IN ACCORDANCE WITH THE APPROVED PLAN. VEHICLES MUST TRAVEL OVER THE ENTIRE LENGTH OF THE SCE. USE MINIMUM LENGTH OF 50 FEET (*30 FEET FOR SINGLE RESIDENCE LOT). USE MINIMUM WIDTH OF 10 FEET. FLARE SCE 10 FEET MINIMUM AT THE EXISTING ROAD TO PROVIDE A TURNING RADIUS.
2. PIPE ALL SURFACE WATER FLOWING TO OR DIVERTED TOWARD THE SCE UNDER THE ENTRANCE, MAINTAINING POSITIVE DRAINAGE. PROTECT PIPE INSTALLED THROUGH THE SCE WITH A MOUNTABLE BERM WITH 5:1 SLOPES AND A MINIMUM OF 12 INCHES OF STONE OVER THE PIPE. PROVIDE PIPE AS SPECIFIED ON APPROVED PLAN. WHEN THE SCE IS LOCATED AT A HIGH SPOT AND HAS NO DRAINAGE TO CONVEY, A PIPE IS NOT NECESSARY. A MOUNTABLE BERM IS REQUIRED WHEN SCE IS NOT LOCATED AT A HIGH SPOT.
3. PREPARE SUBGRADE AND PLACE NONWOVEN GEOTEXTILE, AS SPECIFIED IN SECTION H–1 MATERIALS.
4. PLACE CRUSHED AGGREGATE (2 TO 3 INCHES IN SIZE) OR EQUIVALENT RECYCLED CONCRETE (WITHOUT REBAR) AT LEAST 6 INCHES DEEP OVER THE LENGTH AND WIDTH OF THE SCE.
5. MAINTAIN ENTRANCE IN A CONDITION THAT MINIMIZES TRACKING OF SEDIMENT. ADD STONE OR MAKE OTHER REPAIRS AS CONDITIONS DEMAND TO MAINTAIN CLEAN SURFACE, MOUNTABLE BERM, AND SPECIFIED DIMENSIONS. IMMEDIATELY REMOVE STONE AND/OR SEDIMENT SPILLED, DROPPED, OR TRACKED ONTO ADJACENT ROADWAY BY VACUUMING, SCRAPING, AND/OR SWEEPING. WASHING ROADWAY TO REMOVE MUD TRACKED ONTO PAVEMENT IS NOT ACCEPTABLE UNLESS WASH WATER IS DIRECTED TO AN APPROVED SEDIMENT CONTROL PRACTICE.

MARYLAND STANDARDS AND SPECIFICATIONS FOR SOIL EROSION AND SEDIMENT CONTROL

U.S. DEPARTMENT OF AGRICULTURE NATURAL RESOURCES CONSERVATION SERVICE	2011	MARYLAND DEPARTMENT OF ENVIRONMENT WATER MANAGEMENT ADMINISTRATION

DETAIL D-3-1 RIPRAP INFLOW PROTECTION

STANDARD SYMBOL: RRP

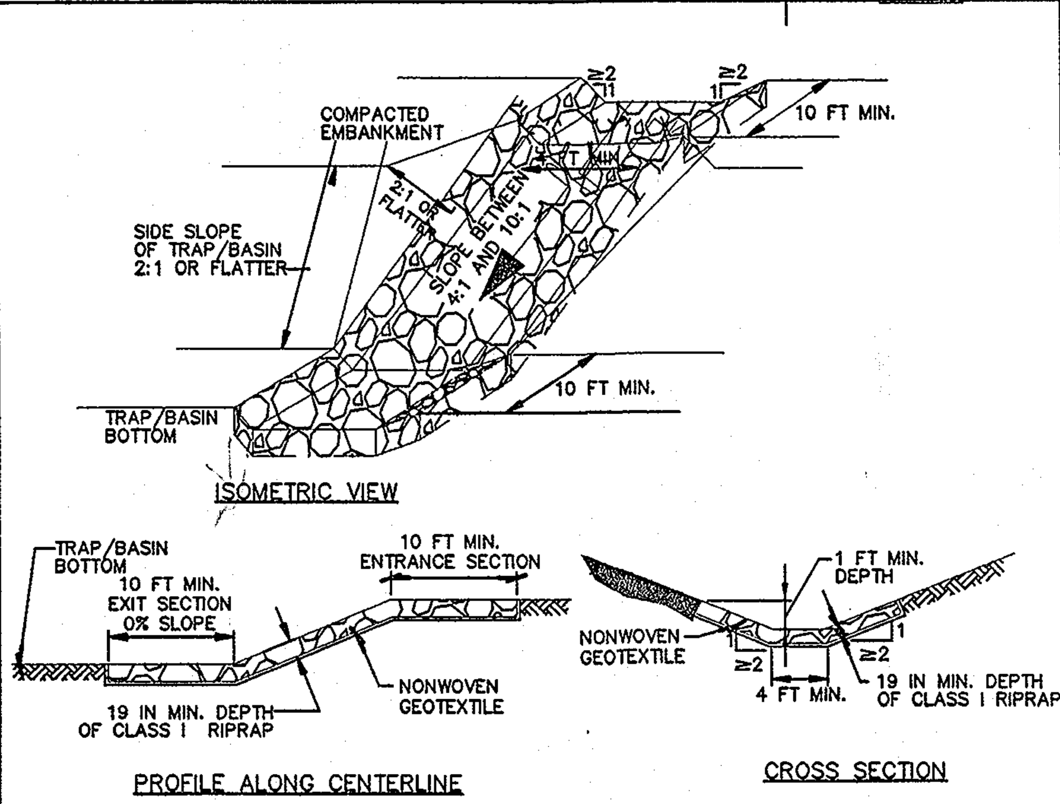

CONSTRUCTION SPECIFICATIONS

1. PROVIDE NONWOVEN GEOTEXTILE, AS SPECIFIED IN SECTION H–1 MATERIALS, UNDER THE BOTTOM AND ALONG SIDES OF ALL RIPRAP.
2. CONSTRUCT INFLOW CHANNEL WITH CLASS I RIPRAP OR EQUIVALENT RECYCLED CONCRETE LINING TO A MINIMUM DEPTH OF 19 INCHES (2 x D_{50}) AND A 1 FOOT DEEP FLOW CHANNEL. INFLOW RIPRAP PROTECTION CHANNEL MUST HAVE A TRAPEZOIDAL CROSS SECTION WITH 2:1 OR FLATTER SIDE SLOPES AND A 4 FOOT MINIMUM BOTTOM WIDTH.
3. INSTALL ENTRANCE AND EXIT SECTIONS AS SHOWN ON THE PROFILE.
4. BLEND RIPRAP INTO EXISTING GROUND.
5. MAINTAIN LINE, GRADE, AND CROSS SECTION. REMOVE ACCUMULATED SEDIMENT AND DEBRIS. KEEP POINTS OF INFLOW AND OUTFLOW FREE OF EROSION.

MARYLAND STANDARDS AND SPECIFICATIONS FOR SOIL EROSION AND SEDIMENT CONTROL

U.S. DEPARTMENT OF AGRICULTURE NATURAL RESOURCES CONSERVATION SERVICE	2011	MARYLAND DEPARTMENT OF ENVIRONMENT WATER MANAGEMENT ADMINISTRATION

DETAIL E-9-2 AT-GRADE INLET PROTECTION

STANDARD SYMBOL: AGIP

MAXIMUM DRAINAGE AREA = 1 ACRE

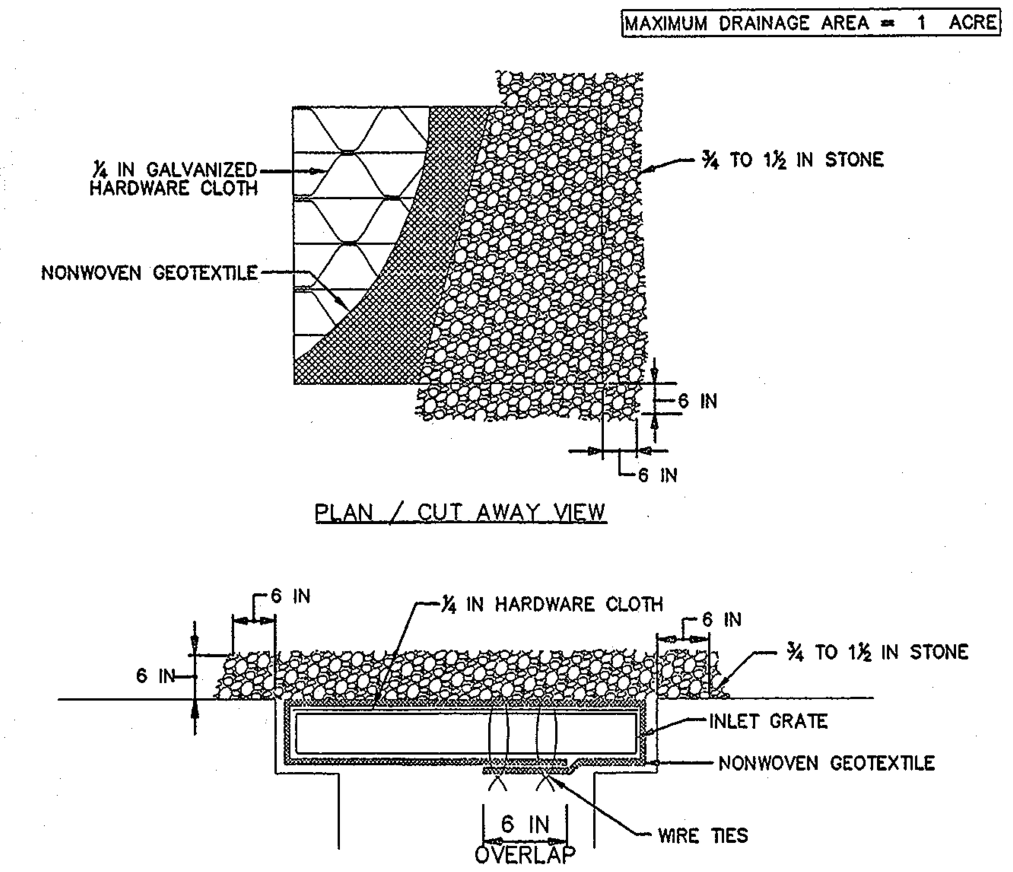

CONSTRUCTION SPECIFICATIONS

1. USE NONWOVEN GEOTEXTILE AS SPECIFIED IN SECTION H–1 MATERIALS.
2. LIFT GRATE AND WRAP WITH NONWOVEN GEOTEXTILE TO COMPLETELY COVER ALL OPENINGS. SECURE WITH WIRE TIES AND SET GRATE BACK IN PLACE.
3. PLACE CLEAN ¾ TO 1½ INCH STONE OR EQUIVALENT RECYCLED CONCRETE 6 INCHES THICK ON THE GRATE.
4. STORM DRAIN INLET PROTECTION REQUIRES FREQUENT MAINTENANCE. REMOVE ACCUMULATED SEDIMENT AFTER EACH RAIN EVENT TO MAINTAIN FUNCTION AND AVOID PREMATURE CLOGGING. IF INLET PROTECTION DOES NOT COMPLETELY DRAIN WITHIN 24 HOURS AFTER A STORM EVENT, IT IS CLOGGED. WHEN THIS OCCURS, REMOVE ACCUMULATED SEDIMENT AND CLEAN, OR REPLACE GEOTEXTILE AND STONE.

MARYLAND STANDARDS AND SPECIFICATIONS FOR SOIL EROSION AND SEDIMENT CONTROL

U.S. DEPARTMENT OF AGRICULTURE NATURAL RESOURCES CONSERVATION SERVICE	2011	MARYLAND DEPARTMENT OF ENVIRONMENT WATER MANAGEMENT ADMINISTRATION

DETAIL E-3 SUPER SILT FENCE

STANDARD SYMBOL: SSF

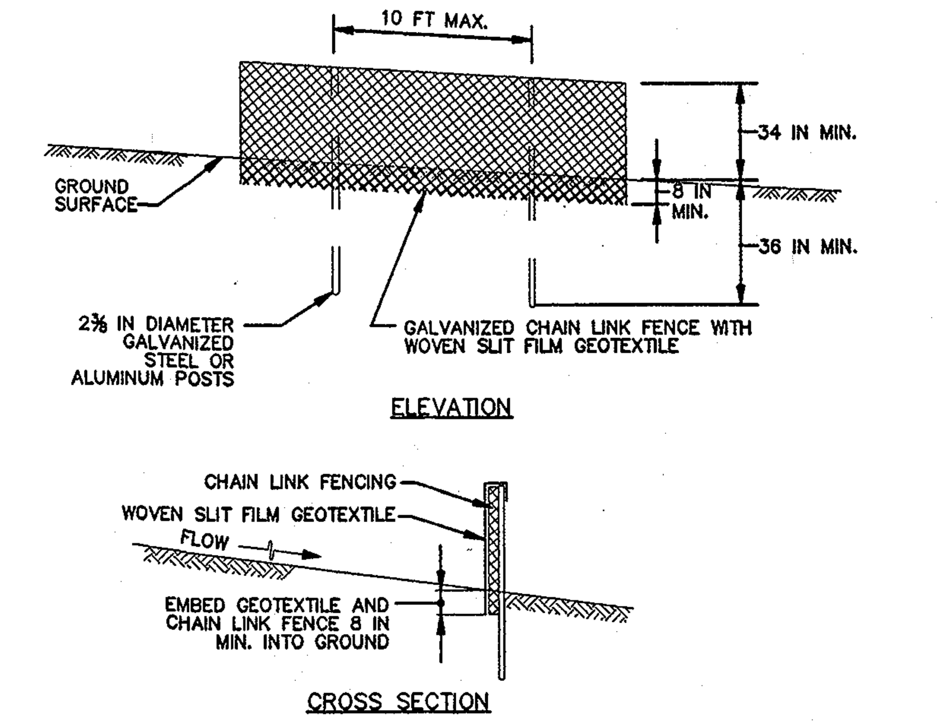

CONSTRUCTION SPECIFICATIONS

1. INSTALL 2⅜ INCH DIAMETER GALVANIZED STEEL POSTS OF 0.095 INCH WALL THICKNESS AND SIX FOOT LENGTH SPACED NO FURTHER THAN 10 FEET APART. DRIVE THE POSTS A MINIMUM OF 36 INCHES INTO THE GROUND.
2. FASTEN 9 GAUGE OR HEAVIER GALVANIZED CHAIN LINK FENCE (2⅜ INCH MAXIMUM OPENING) 42 INCHES IN HEIGHT SECURELY TO THE FENCE POSTS WITH WIRE TIES OR HUG RINGS.
3. FASTEN WOVEN SLIT FILM GEOTEXTILE AS SPECIFIED IN SECTION H–1 MATERIALS, SECURELY TO THE UPSLOPE SIDE OF CHAIN LINK FENCE WITH TIES SPACED EVERY 24 INCHES AT THE TOP AND MID SECTION. EMBED GEOTEXTILE AND CHAIN LINK FENCE A MINIMUM OF 8 INCHES INTO THE GROUND.
4. WHERE ENDS OF THE GEOTEXTILE COME TOGETHER, THE ENDS SHALL BE OVERLAPPED BY 6 INCHES, FOLDED, AND STAPLED TO PREVENT SEDIMENT BY PASS.
5. EXTEND BOTH ENDS OF THE SUPER SILT FENCE A MINIMUM OF FIVE HORIZONTAL FEET UPSLOPE AT 45 DEGREES TO THE MAIN FENCE ALIGNMENT TO PREVENT RUNOFF FROM GOING AROUND THE ENDS OF THE SUPER SILT FENCE.
6. PROVIDE MANUFACTURER CERTIFICATION TO THE INSPECTION/ENFORCEMENT AUTHORITY SHOWING THAT GEOTEXTILE USED MEETS THE REQUIREMENTS IN SECTION H–1 MATERIALS.
7. REMOVE ACCUMULATED SEDIMENT AND DEBRIS WHEN BULGES DEVELOP IN FENCE OR WHEN SEDIMENT REACHES 25% OF FENCE HEIGHT. REPLACE GEOTEXTILE IF TORN. IF UNDERMINING OCCURS, REINSTALL CHAIN LINK FENCING AND GEOTEXTILE.

MARYLAND STANDARDS AND SPECIFICATIONS FOR SOIL EROSION AND SEDIMENT CONTROL

U.S. DEPARTMENT OF AGRICULTURE NATURAL RESOURCES CONSERVATION SERVICE	2011	MARYLAND DEPARTMENT OF ENVIRONMENT WATER MANAGEMENT ADMINISTRATION

DETAIL E-1 SILT FENCE

STANDARD SYMBOL: SF

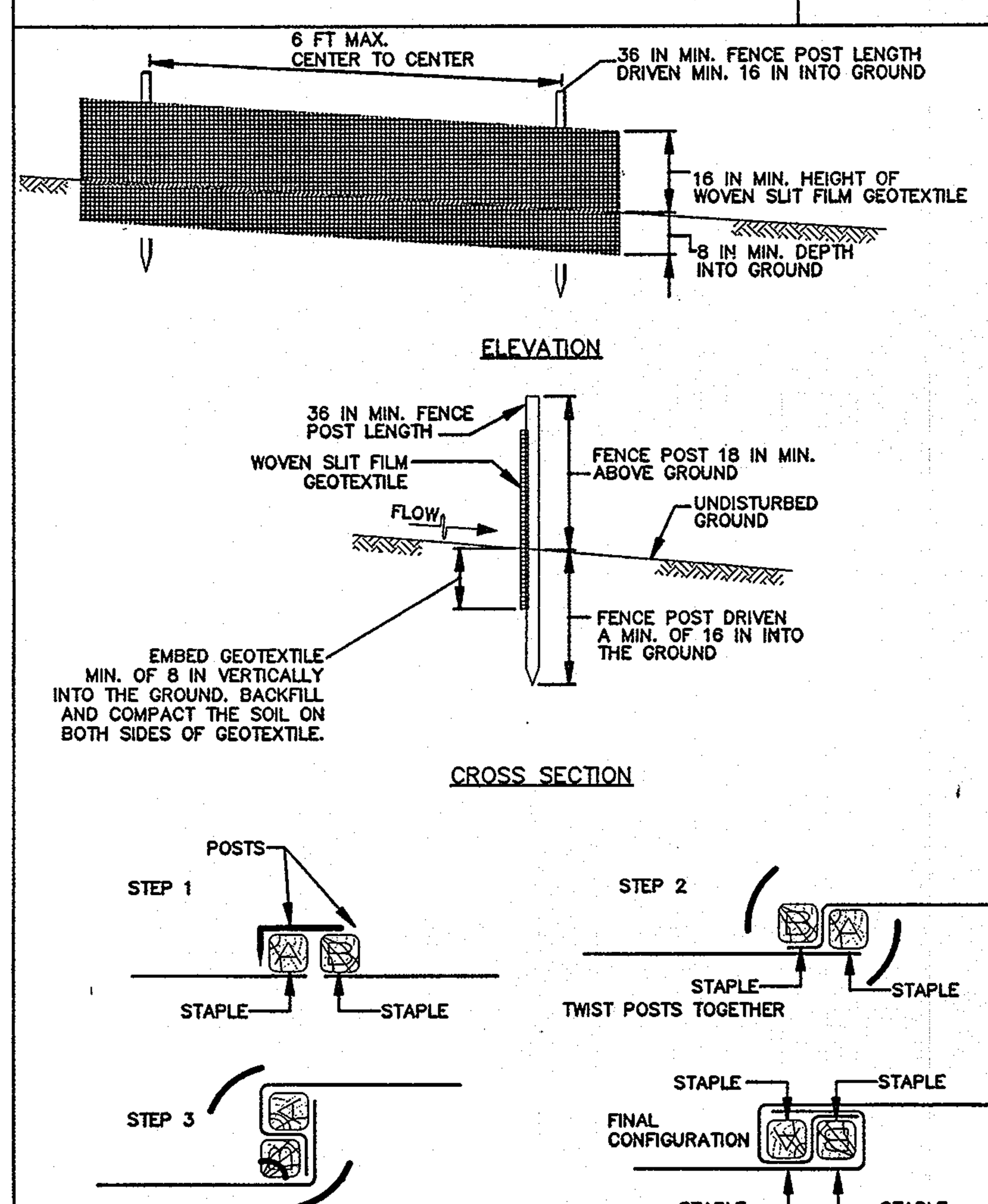

1 OF 2

MARYLAND STANDARDS AND SPECIFICATIONS FOR SOIL EROSION AND SEDIMENT CONTROL

U.S. DEPARTMENT OF AGRICULTURE NATURAL RESOURCES CONSERVATION SERVICE	2011	MARYLAND DEPARTMENT OF ENVIRONMENT WATER MANAGEMENT ADMINISTRATION

DETAIL E-1 SILT FENCE

STANDARD SYMBOL: SF

CONSTRUCTION SPECIFICATIONS

1. USE WOOD POSTS 1¾ X 1¾ ± ⅙ INCH (MINIMUM) SQUARE CUT OF SOUND QUALITY HARDWOOD. AS AN ALTERNATIVE TO WOODEN POST USE STANDARD "T" OR "U" SECTION STEEL POSTS WEIGHING NOT LESS THAN 1 POUND PER LINEAR FOOT.
2. USE 36 INCH MINIMUM POSTS DRIVEN 16 INCH MINIMUM INTO GROUND NO MORE THAN 6 FEET APART.
3. USE WOVEN SLIT FILM GEOTEXTILE AS SPECIFIED IN SECTION H–1 MATERIALS AND FASTEN GEOTEXTILE SECURELY TO UPSLOPE SIDE OF FENCE POSTS WITH WIRE TIES OR STAPLES AT TOP AND MID–SECTION.
4. PROVIDE MANUFACTURER CERTIFICATION TO THE AUTHORIZED REPRESENTATIVE OF THE INSPECTION/ENFORCEMENT AUTHORITY SHOWING THAT THE GEOTEXTILE USED MEETS THE REQUIREMENTS IN SECTION H–1 MATERIALS.
5. EMBED GEOTEXTILE A MINIMUM OF 8 INCHES VERTICALLY INTO THE GROUND. BACKFILL AND COMPACT THE SOIL ON BOTH SIDES OF FABRIC.
6. WHERE TWO SECTIONS OF GEOTEXTILE ADJOIN: OVERLAP, TWIST, AND STAPLE TO POST IN ACCORDANCE WITH THIS DETAIL.
7. EXTEND BOTH ENDS OF THE SILT FENCE A MINIMUM OF FIVE HORIZONTAL FEET UPSLOPE AT 45 DEGREES TO THE MAIN FENCE ALIGNMENT TO PREVENT RUNOFF FROM GOING AROUND THE ENDS OF THE SILT FENCE.
8. REMOVE ACCUMULATED SEDIMENT AND DEBRIS WHEN BULGES DEVELOP IN SILT FENCE OR WHEN SEDIMENT REACHES 25% OF FENCE HEIGHT. REPLACE GEOTEXTILE IF TORN. IF UNDERMINING OCCURS, REINSTALL FENCE.

2 OF 2

MARYLAND STANDARDS AND SPECIFICATIONS FOR SOIL EROSION AND SEDIMENT CONTROL

U.S. DEPARTMENT OF AGRICULTURE NATURAL RESOURCES CONSERVATION SERVICE	2011	MARYLAND DEPARTMENT OF ENVIRONMENT WATER MANAGEMENT ADMINISTRATION

PIPE OUTLET TO FLAT AREA

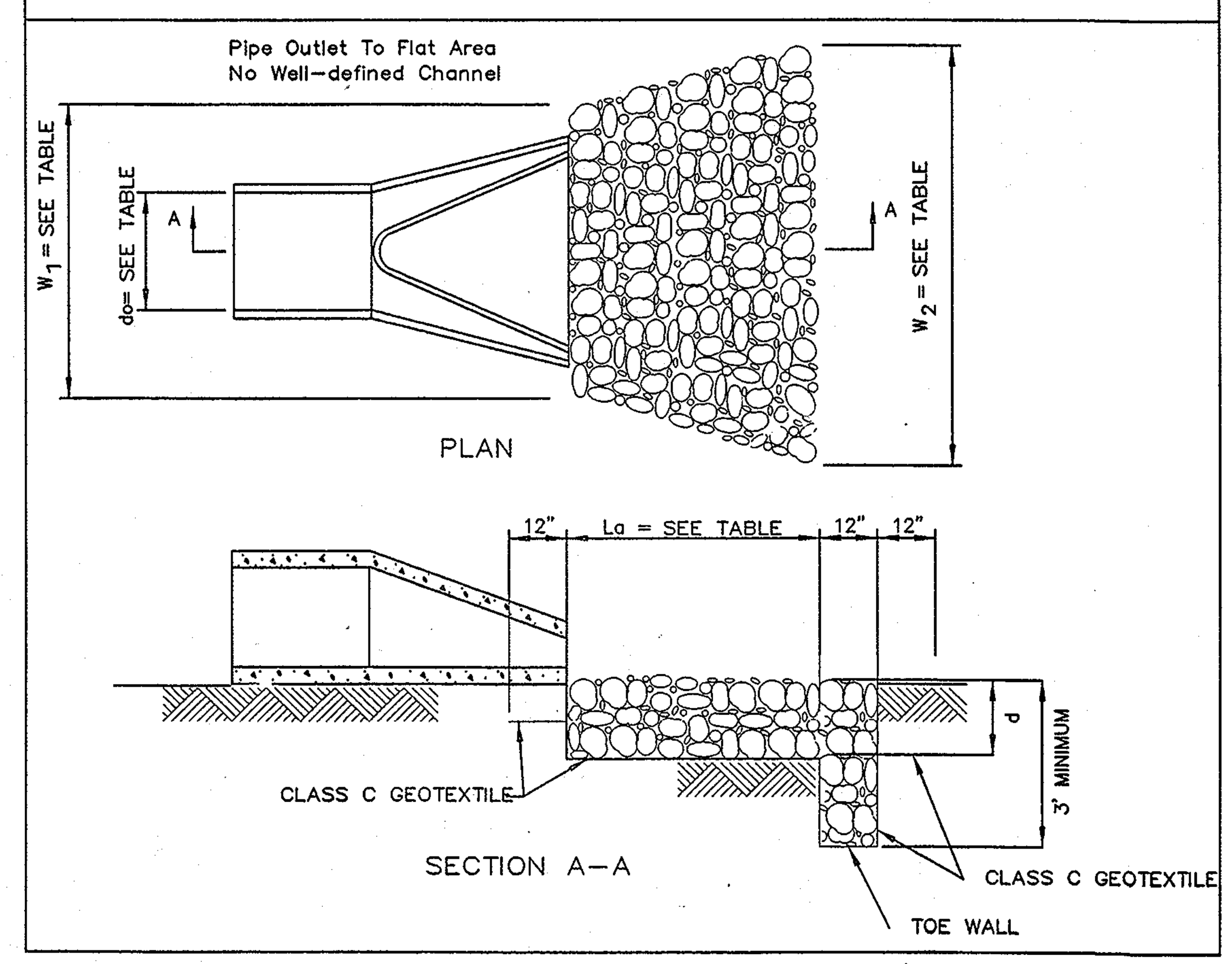

Outflow Pipe	Pipe Size	10 Year Discharge	Tailwater	Rip Rap Length, La	Rip Rap W_1	Rip Rap W_2	Rip Rap Depth, d	d_{50}
	(in)	(cfs)	Condition	(ft)	(ft)	(ft)	(in)	(ft)
9	12	2.17	minimum	8	3	9	19	0.2
11	12	3.83	minimum	8	3	9	19	0.2
12	12	3.43	minimum	8	3	9	19	0.2
14	10	1.06	minimum	8	3	9	19	0.2
16	10	1.61	minimum	9	3	9	19	0.2
19	10	1.6	minimum	10	3	9	19	0.2
20	10	1.41	minimum	11	3	9	19	0.2
21	12	2.61	minimum	12	3	9	19	0.2

TEMPORARY STABILIZATION

1) SELECT ONE OR MORE OF THE SPECIES OR SEED MIXTURES LISTED IN TABLE B.1 BELOW FOR THE APPROPRIATE PLANT HARDINESS ZONE.
2) FOR SITES HAVING SOIL TESTS PERFORMED, USE AND SHOW THE RECOMMENDED RATES BY THE TESTING AGENCY. SOIL TESTS ARE NOT REQUIRED FOR TEMPORARY SEEDING.
3) WHEN STABILIZATION IS REQUIRED OUTSIDE OF A SEEDING SEASON, APPLY SEED AND MULCH OR STRAW MULCH ALONE AS PRESCRIBED IN SECTION B–4–3A.1b AND MAINTAIN UNTIL THE NEXT SEEDING SEASON.

TEMPORARY SEEDING TABLE B.1

SEED MIXTURE (HARDINESS ZONE 6b) (FROM TABLE B.1)					FERTILIZER RATE (10–10–10)	LIME RATE
NO.	SPECIES	APPLICATION RATE (lb/ac)	SEEDING DATES	SEEDING DEPTHS		
	BARLEY	96	3/1–5/15 8/1–10/15	1"	436 lb/ac (10 lb/1000 sf)	2 tons/ac (90 lb/1000 sf)
	CEREAL RYE	112	3/1–5/15 8/1–11/15	1"		
	WHEAT	120	3/1–5/15 8/1–10/15	1"		
	FOXTAIL MILLET	30	5/16–7/31	1/2"		

APPLIES TO EXPOSED SOILS WHERE GROUND COVER IS NEEDED FOR A PERIOD OF 6 MONTHS OR LESS. FOR LONGER DURATION OF TIME, PERMANENT STABILIZATION PRACTICES ARE REQUIRED.

OWNER / APPLICANT

GLENELG COUNTRY SCHOOL
12793 FOLLY QUARTER ROAD
ELLICOTT CITY, MD 21042
TEL: 410–531–8600

Professional Certification. I hereby certify that these documents were prepared or approved by me, and that I am a duly licensed professional engineer under the laws of the State of Maryland.

License No. 12548

Expiration Date 7-29-13

THIS DEVELOPMENT PLAN IS APPROVED FOR SOIL EROSION AND SEDIMENT CONTROL BY THE HOWARD COUNTY SOIL CONSERVATION DISTRICT

[signature] 5/28/13
SIGNATURE DATE

APPROVED: DEPARTMENT OF PLANNING AND ZONING

[signature] 6/11/13
CHIEF, DEVELOPMENT ENGINEERING DIVISION DATE

[signature] 6/17/13
CHIEF, DIVISION OF LAND DEVELOPMENT DATE

[signature] 6/13/13
DIRECTOR DATE

HURON CONSULTING
A Division of Nobis Engineering, Inc.
20410 CENTURY BLVD
SUITE 230
GERMANTOWN, MD. 20874
PHONE: (301) 528–2010
FAX: (301) 528–0124
www.huroncon.com

STATE OF MARYLAND · EDWARD RICHARD HURNEY · REGISTERED No. 12548 · PROFESSIONAL ENGINEER
5-3-13

DRW BY: JA
CHK BY: JA
APP BY: REH

REVISIONS		
△	DATE	DESCRIPTION
5	3/05/13	REVISED NOTES PER SCD COMMENTS

GLENELG COUNTRY SCHOOL
12793 FOLLY QUARTER ROAD
ELLICOTT CITY, MD 21042

REVISED SHEET

EROSION AND SEDIMENT CONTROL DETAILS

SCALE
HORIZONTAL: 1" = 30'
VERTICAL: N/A

PROJECT NO.: 86860.00

DRAWING NO.: C–410

SHEET: 34 OF 37

DATE: MARCH 2013

SDP-03-084

SDP-03-084

HOWARD SOIL CONSERVATION DISTRICT
STANDARD SEDIMENT CONTROL NOTES

1. A MINIMUM OF 48 HOURS NOTICE MUST BE GIVEN TO THE HOWARD COUNTY DEPARTMENT OF INSPECTIONS, LICENSES AND PERMITS, SEDIMENT CONTROL DIVISION PRIOR TO THE START OF ANY CONSTRUCTION (313-1855).
2. ALL VEGETATIVE AND STRUCTURAL PRACTICES ARE TO BE INSTALLED ACCORDING TO THE PROVISIONS OF THIS PLAN AND ARE TO BE IN CONFORMANCE WITH THE MOST CURRENT MARYLAND STANDARDS AND SPECIFICATIONS FOR SOIL EROSION AND SEDIMENT CONTROL AND REVISIONS THERETO.
3. FOLLOWING INITIAL SOIL DISTURBANCE OR RE-DISTURBANCE, PERMANENT OR TEMPORARY STABILIZATION SHALL BE COMPLETED WITHIN: A) 3 CALENDAR DAYS FOR ALL PERIMETER SEDIMENT CONTROL STRUCTURES, DIKES, PERIMETER SLOPES AND ALL SLOPES GREATER THAN 3:1, B) 7 DAYS AS TO ALL OTHER DISTURBED OR GRADED AREAS ON THE PROJECT SITE.
4. ALL DISTURBED AREAS MUST BE STABILIZED WITHIN THE TIME PERIOD SPECIFIED ABOVE IN ACCORDANCE WITH THE 2011 MARYLAND STANDARDS AND SPECIFICATIONS FOR SOIL EROSION AND SEDIMENT CONTROL FOR PERMANENT SEEDING (SEC. B-4-5), TEMPORARY SEEDING (SEC. B-4-4) AND MULCHING (SEC. B-4-3). TEMPORARY STABILIZATION WITH MULCH ALONE CAN ONLY BE DONE WHEN RECOMMENDED SEEDING DATES DO NOT ALLOW FOR PROPER GERMINATION AND ESTABLISHMENT OF GRASSES.
5. ALL SEDIMENT CONTROL STRUCTURES ARE TO REMAIN IN PLACE AND ARE TO BE MAINTAINED IN OPERATIVE CONDITION UNTIL PERMISSION FOR THEIR REMOVAL HAS BEEN OBTAINED FROM THE HOWARD COUNTY SEDIMENT CONTROL INSPECTOR.
6. SITE ANALYSIS:

TOTAL AREA OF SITE	80.67	ACRES
AREA DISTURBED	0.412	ACRES
AREA TO BE ROOFED OR PAVED	0.223	ACRES
AREA TO BE VEGETATIVELY STABILIZED	0.189	ACRES
TOTAL CUT	500±	CU. YDS.
TOTAL FILL	500±	CU. YDS.
OFFSITE WASTE/BORROW AREA LOCATION:	TBD BY THE CONTRACTOR	

7. ANY SEDIMENT CONTROL PRACTICE WHICH IS DISTURBED BY GRADING ACTIVITY FOR PLACEMENT OF UTILITIES MUST BE REPAIRED ON THE SAME DAY OF DISTURBANCE.
8. ADDITIONAL SEDIMENT CONTROL MUST BE PROVIDED, IF DEEMED NECESSARY BY THE HOWARD COUNTY SEDIMENT CONTROL INSPECTOR.
9. ON ALL SITES WITH DISTURBED AREAS IN EXCESS OF 2 ACRES, APPROVAL OF THE INSPECTION AGENCY SHALL BE REQUESTED UPON COMPLETION OF INSTALLATION OF PERIMETER EROSION AND SEDIMENT CONTROLS, BUT BEFORE PROCEEDING WITH ANY OTHER EARTH DISTURBANCE OR GRADING. OTHER BUILDING OR GRADING INSPECTION APPROVALS MAY NOT BE AUTHORIZED UNTIL THIS INITIAL APPROVAL BY THE INSPECTION AGENCY IS MADE.
10. TRENCHES FOR THE CONSTRUCTION OF UTILITIES IS LIMITED TO THREE PIPE LENGTHS OR THAT WHICH SHALL BE BACK-FILLED AND STABILIZED BY THE END OF EACH WORK DAY, WHICHEVER IS SHORTER.
11. ANY CHANGES OR REVISIONS TO THE SEQUENCE OF CONSTRUCTION MUST BE REVIEWED AND APPROVED BY THE PLAN APPROVAL AUTHORITY PRIOR TO PROCEEDING WITH CONSTRUCTION
12. A PROJECT IS TO BE SEQUENCED SO THAT GRADING ACTIVITIES BEGIN ON ONE GRADING UNIT (MAXIMUM ACREAGE OF 20 AC. PER GRADING UNIT) AT A TIME. WORK MAY PROCEED TO A SUBSEQUENT GRADING UNIT WHEN AT LEAST 50 PERCENT OF THE DISTURBED AREA IN THE PRECEDING GRADING UNIT HAS BEEN STABILIZED AND APPROVED BY THE ENFORCEMENT AUTHORITY. UNLESS OTHERWISE SPECIFIED AND APPROVED BY THE APPROVAL AUTHORITY, NO MORE THAN 30 ACRES CUMULATIVELY MAY BE DISTURBED AT A GIVEN TIME.

REV 4/2013

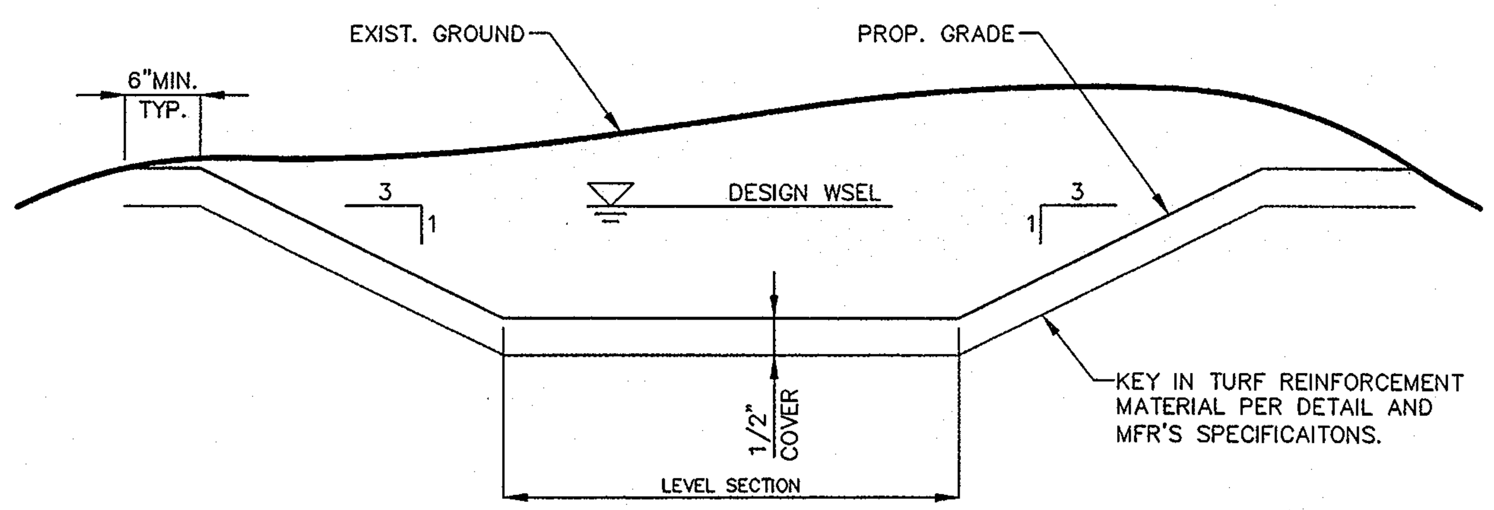

(1) TURF REINFORCEMENT TYPICAL SECTION
NOT TO SCALE

TURF REINFORCEMENT NOTES:

1. INSTALL THE MATERIAL PER THE MANUFACTURER'S INSTRUCTIONS INCLUDING SURFACE PREPERATION AND STAPLING. IT IS VERY IMPORTANT THAT THE MATERIAL BE INSTALLED IN GOOD CONTACT WITH THE GROUND WITH NO WRINKLES OR VOID SPACES BELOW THE FABRIC. STAPLES MUST BE PLACED IN A DIAMOND PATTERN APPROXIMATELY 18" APART.

2. FILL VOIDS IN THE MATERIAL WITH TOPSOIL BEFORE SODDING OR SEEDING. DO NOT PLACE MORE THAN ONE HALF INCH (½") OF TOPSOIL OVER THE MATERIAL. THE MATERIAL MUST BE WITHIN THE ROOT ZONE FOR IT TO FUNCTION PROPERLY.

3. MATERIAL MUST BE ENKAMAT 7010, EMKAMAT 7020, TENSAR TM-3000, PYRAMAT, OR OTHER HOWARD COUNTY APPROVED EQUIVALENT. TO BE CONSIDERED AS AN EQUIVALENT, THE MATERIAL MUST BE A SINGLE, BONDED TURF REINFORCEMENT MATERIAL. PROPOSED ALTERNATIVES MUST BE APPROVED BY HOWARD COUNTY IN WRITING PRIOR TO PLACEMENT.

4. TURF REINFORCEMENT IS NOT MEANT TO SERVE AS AN EROSION CONTROL MAT. IF NECESSARY, A BIODEGRADABLE MATERIAL SUCH AS EXCELSIOR MAY BE PLACED OVER THE PREPARED SEED BED TO HOLD THE SEED IN PLACE. THE PURPOSE OF THE TURF REINFORCEMENT MATERIAL IS TO ADD STRENGTH TO THE ROOT SYSTEM AFTER GERMINATION.

5. TURF REINFORCEMENT TO BE USED FOR ALL WATER QUALITY SWALES INDICATED ON PLANS.

SEQUENCE OF CONSTRUCTION

REV. 9/03

1) OBTAIN A GRADING PERMIT
2) STAKEOUT THE ENTIRE LIMITS OF DISTURBANCE FOR THE PROJECT
3) PRIOR TO ANY CONSTRUCTION ACTIVITY A PRECONSTRUCTION MEETING SHALL BE HELD ONSITE WITH HOWARD COUNTY SEDIMENT CONTROL INSPECTOR. PROVIDE 48 HOURS NOTICE TO INSPECTOR. OBTAIN PERMISSION TO INSTALL PERIMETER ESC MEASURES FROM THE SEDIMENT CONTROL INSPECTOR.
4) INSTALL PERIMETER SUPER SILT FENCE, SILT FENCE, THE STABILIZED CONSTRUCTION ENTRANCE, CLEAN WATER DIVERSION INLETS AND PIPE, AND GRADE PORTION OF SWALE TO RECEIVE CLEAN WATER DIVERSION. STABILIZE PORTION OF THE GRADED SWALE WITH SOD.
5) OBTAIN APPROVAL FROM THE HOWARD COUNTY SEDIMENT CONTROL INSPECTOR FOR THE ESC MEASURES PRIOR TO PERFORMING ANY FURTHER CONSTRUCTION ACTIVITIES.
6) BEGIN TOPSOIL STRIPPING OPERATIONS AND STOCKPILE AS REQUIRED FOR REUSE.
7) CONDUCT EARTHWORK OPERATION AND PREPARE TRACK AND SYNTHETIC TURF SUBGRADES
8) INSTALL UNDERDRAINS AND TRENCH DRAINS FOR TRACK AND SYNTHETIC TURF.
9) INSTALL RISER STRUCTURES AT BIORETENTION AREA A-5 AND BIOSWALE A-1. PROVIDE AT-GRADE INLET PROTECTION UPON COMPLETION OF INSTALLATION.
10) INSTALL STONE BASE FOR TRACK AND SYNTHETIC TURF
11) UPON STABILIZATION OF TRACK AND FIELD AREA WITH STONE BASE, FINISH GRADE WATER QUALITY SWALES, BIO-SWALE AND BIORETENTION AREA.
12) INSTALL ASPHALT AT TRACK AND SYNTHETIC TURF
13) INSTALL FENCING AT TRACK
14) INSTALL FILTER MEDIA AT BIOSWALE AND BIORETENTION AREA
15) INSTALL LANDSCAPING AT BIOSWALE AND BIORETENTION AREA.
16) PERMANENT STABILIZE ALL DISTURBED AREAS.
17) OBTAIN PERMISSION FROM THE SEDIMENT CONTROL INSPECTOR TO REMOVE SEDIMENT CONTROL DEVICES.
18) REMOVE SEDIMENT CONTROL DEVICES AND PERMANENTLY STABILIZE AREAS IMMEDIATELY.
19) PREPARE AND SUBMIT AS-BUILTS TO HOWARD COUNTY.

TASKS MAY BE PERFORMED OUT OF ORDER OR CONCURRENTLY WITH PRIOR APPROVAL FROM THE HOWARD COUNTY SEDIMENT CONTROL INSPECTOR.

DETAIL 30 EROSION CONTROL MATTING

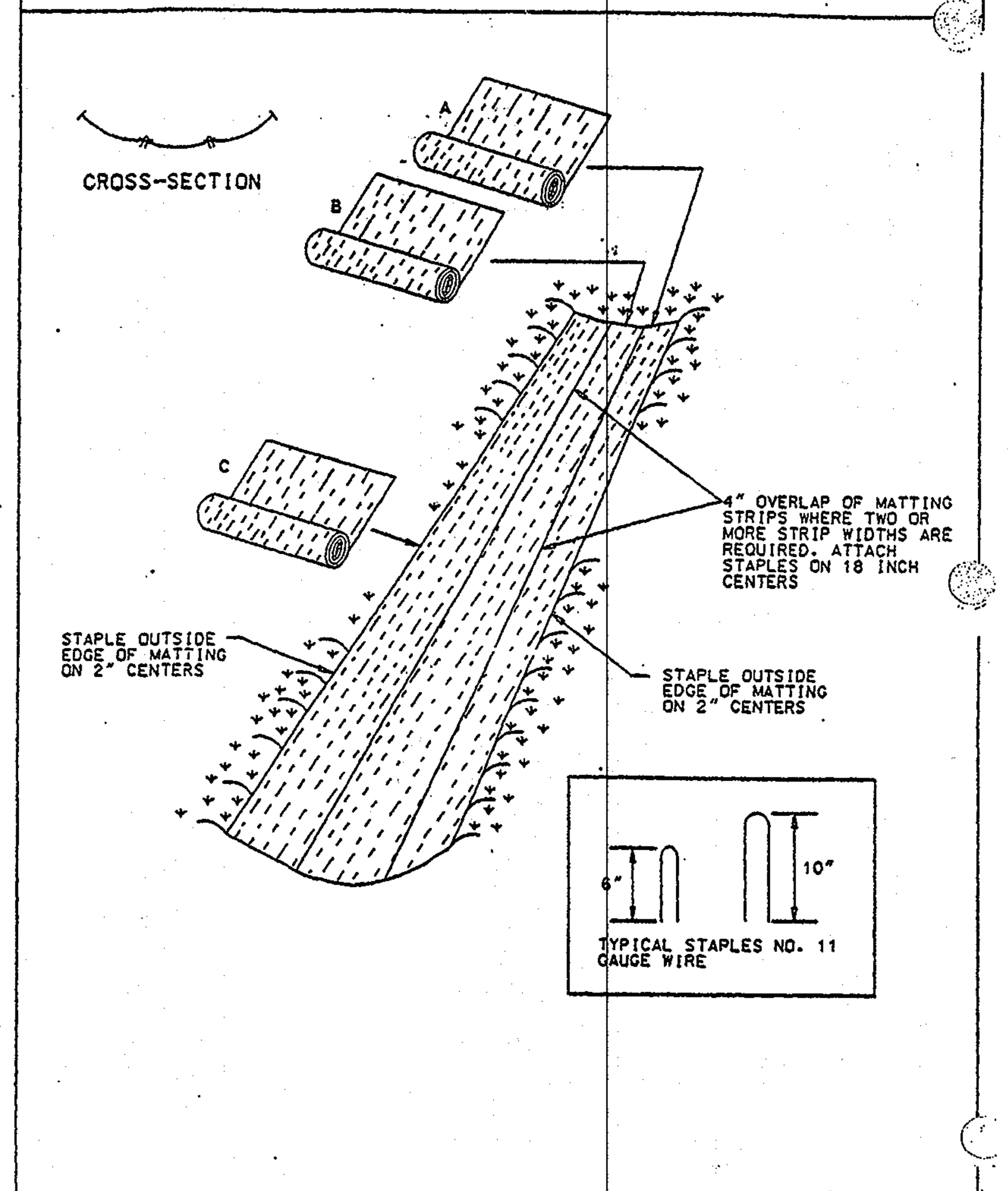

U.S. DEPARTMENT OF AGRICULTURE SOIL CONSERVATION SERVICE	PAGE G - 22 - 2	MARYLAND DEPARTMENT OF ENVIRONMENT WATER MANAGEMENT ADMINISTRATION

DURATION SCHEDULE*

ESC INSTALLATION & BYPASS INSTALLATION	10 DAYS
GRADING AND EARTHWORK OPERATIONS	20 DAYS
UTILITIES (STORM DRAINAGE)	15 DAYS
STONE BASE	7 DAYS
SWM FACILITIES INSTALLATION	15 DAYS
SITE AMENTIES INSTALLATION (FENCE, ETC)	15 DAYS
PAVING	5 DAYS
SYNTHETIC TURF INSTALLATION	15 DAYS
PERMANENT STABILIZATION	5 DAYS

* SOME TASKS MAY OVERLAP. TOTAL CONSTRUCTION DURATION IS ESTIMATED AT 90 DAYS

PERMANENT SEEDING TABLE B.3

SEED MIXTURE (HARDINESS ZONE 6b) (FROM TABLE B.3)				FERTILIZER RATE (10-20-20)			LIME RATE
MIX NO.	SPECIES	APPLICATION RATE (lb/ac)	SEEDING DATES	N	P_2O_5	K_2O	
9	TALL FESCUE(50%)	60	3/1-5/15 8/1-10/15	45 lb/ac (1.0 lb/ 1000 sf)	90 lb/ac (2 lb/ 1000 sf)	90 lb/ac (2 lb/ 1000 sf)	2 tons/ac (90 lb/ 1000 sf)
	PERENNIAL RYEGRASS(15%)	20					
	KENTUCKY BLUEGRASS(35%)	40					

APPLIES TO EXPOSED SOILS WHERE GROUND COVER IS NEEDED FOR 6 MONTHS OR MORE.

SEEDING OR SODDING FOR PLAYING FIELDS SHALL BE PER SPECIFICATIONS ALL OTHER AREAS SHALL RECEIVE THE ABOVE PERMANENT SEED MIX

EROSION CONTROL MATTING

Construction Specifications

1. Key-in the matting by placing the top ends of the matting in a narrow trench, 6" in depth. Backfill the trench and tamp firmly to conform to the channel cross-section. Secure with a row of staples about 4" down slope from the trench. Spacing between staples is 6".

2. Staple the 4" overlap in the channel center using an 18" spacing between staples.

3. Before stapling the outer edges of the matting, make sure the matting is smooth and in firm contact with the soil.

4. Staples shall be placed 2' apart with 4 rows for each strip, 2 outer rows, and 2 alternating rows down the center.

5. Where one roll of matting ends and another begins, the end of the top strip shall overlap the upper end of the lower strip by 4", shiplap fashion. Reinforce the overlap with a double row of staples spaced 6" apart in a staggered pattern on either side.

6. The discharge end of the matting liner should be similarly secured with 2 double rows of staples.

Note: If flow will enter from the edge of the matting then the area effected by the flow must be keyed-in.

U.S. DEPARTMENT OF AGRICULTURE SOIL CONSERVATION SERVICE	PAGE G - 22 - 2A	MARYLAND DEPARTMENT OF ENVIRONMENT WATER MANAGEMENT ADMINISTRATION

PERMANENT STABILIZATION

A. SEED MIXTURES

1. GENERAL USE

A. SELECT ONE OR MORE OF THE SPECIES OR MIXTURES LISTED IN TABLE B.3 FOR THE APPROPRIATE PLANT HARDINESS ZONE (FROM FIGURE B.3) AND BASED ON THE SITE CONDITION OR PURPOSE FOUND ON TABLE B.2. ENTER SELECTED MIXTURE(S), APPLICATION RATES, AND SEEDING DATES IN THE PERMANENT SEEDING SUMMARY. THE SUMMARY IS TO BE PLACED ON THE PLAN.

B. ADDITIONAL PLANTING SPECIFICATIONS FOR EXCEPTIONAL SITES SUCH AS SHORELINES, STREAM BANKS, OR DUNES OR FOR SPECIAL PURPOSES SUCH AS WILDLIFE OR AESTHETIC TREATMENT MAY BE FOUND IN USDA-NRCS TECHNICAL FIELD OFFICE GUIDE, SECTION 342 – CRITICAL AREA PLANTING.

C. FOR SITES HAVING DISTURBED AREA OVER 5 ACRES, USE AND SHOW THE RATES RECOMMENDED BY THE SOIL TESTING AGENCY.

D. FOR AREAS RECEIVING LOW MAINTENANCE, APPLY UREA FORM FERTILIZER (46-0-0) AT 3 ½ POUNDS PER 1000 SQUARE FEET (150 POUNDS PER ACRE) AT THE TIME OF SEEDING IN ADDITION TO THE SOIL AMENDMENTS SHOWN IN THE PERMANENT SEEDING SUMMARY .

2. TURFGRASS MIXTURES

A. AREAS WHERE TURFGRASS MAY BE DESIRED INCLUDE LAWNS, PARKS, PLAYGROUNDS, AND COMMERCIAL SITES WHICH WILL RECEIVE A MEDIUM TO HIGH LEVEL OF MAINTENANCE.

B. SELECT ONE OR MORE OF THE SPECIES OR MIXTURES LISTED BELOW BASED ON THE SITE CONDITIONS OR PURPOSE. ENTER SELECTED MIXTURE(S), APPLICATION RATES, AND SEEDING DATES IN THE PERMANENT SEEDING SUMMARY. THE SUMMARY IS TO BE PLACED ON THE PLAN.

I. KENTUCKY BLUEGRASS: FULL SUN MIXTURE: FOR USE IN AREAS THAT RECEIVE INTENSIVE
MANAGEMENT. IRRIGATION REQUIRED IN THE AREAS OF CENTRAL MARYLAND AND EASTERN SHORE. RECOMMENDED CERTIFIED KENTUCKY BLUEGRASS CULTIVARS SEEDING RATE: 1.5 TO 2.0 POUNDS PER 1000 SQUARE FEET. CHOOSE A MINIMUM OF THREE KENTUCKY BLUEGRASS CULTIVARS WITH EACH RANGING FROM 10 TO 35 PERCENT OF THE TOTAL MIXTURE BY WEIGHT.

II. KENTUCKY BLUEGRASS/PERENNIAL RYE: FULL SUN MIXTURE: FOR USE IN FULL SUN AREAS WHERE RAPID ESTABLISHMENT IS NECESSARY AND WHEN TURF WILL RECEIVE MEDIUM TO INTENSIVE MANAGEMENT. CERTIFIED PERENNIAL RYEGRASS CULTIVARS/CERTIFIED KENTUCKY BLUEGRASS SEEDING RATE: 2 POUNDS MIXTURE PER 1000 SQUARE FEET. CHOOSE A MINIMUM OF THREE KENTUCKY BLUEGRASS CULTIVARS WITH EACH RANGING FROM 10 TO 35 PERCENT OF THE TOTAL MIXTURE BY WEIGHT.

III. TALL FESCUE/KENTUCKY BLUEGRASS: FULL SUN MIXTURE: FOR USE IN DROUGHT PRONE AREAS AND/OR FOR AREAS RECEIVING LOW TO MEDIUM MANAGEMENT IN FULL SUN TO MEDIUM SHADE. RECOMMENDED MIXTURE INCLUDES; CERTIFIED TALL FESCUE CULTIVARS 95 TO 100 PERCENT, CERTIFIED KENTUCKY BLUEGRASS CULTIVARS 0 TO 5 PERCENT. SEEDING RATE: 5 TO 8 POUNDS PER 1000 SQUARE FEET. ONE OR MORE CULTIVARS MAY BE BLENDED.

IV. KENTUCKY BLUEGRASS/FINE FESCUE: SHADE MIXTURE: FOR USE IN AREAS WITH SHADE IN BLUEGRASS LAWNS. FOR ESTABLISHMENT IN HIGH QUALITY, INTENSIVELY MANAGED TURF AREA. MIXTURE INCLUDES; CERTIFIED KENTUCKY BLUEGRASS CULTIVARS 30 TO 40 PERCENT AND CERTIFIED FINE FESCUE AND 60 TO 70 PERCENT. SEEDING RATE: 1½ TO 3 POUNDS PER 1000 SQUARE FEET.

NOTES: SELECT TURFGRASS VARIETIES FROM THOSE LISTED IN THE MOST CURRENT UNIVERSITY OF MARYLAND PUBLICATION, AGRONOMY MEMO #77, "TURFGRASS CULTIVAR RECOMMENDATIONS FOR MARYLAND"

CHOOSE CERTIFIED MATERIAL. CERTIFIED MATERIAL IS THE BEST GUARANTEE OF CULTIVAR PURITY. THE CERTIFICATION PROGRAM OF THE MARYLAND DEPARTMENT OF AGRICULTURE, TURF AND SEED SECTION, PROVIDES A RELIABLE MEANS OF CONSUMER PROTECTION AND ASSURES A PURE GENETIC LINE

C. IDEAL TIMES OF SEEDING FOR TURF GRASS MIXTURES ARE: MARCH 1 TO MAY 15, AUGUST 15 TO OCTOBER 15 (HARDINESS ZONE: 6B)

D. TILL AREAS TO RECEIVE SEED BY DISKING OR OTHER APPROVED METHODS TO A DEPTH OF 2 TO 4 INCHES, LEVEL AND RAKE THE AREAS TO PREPARE A PROPER SEEDBED. REMOVE STONES AND DEBRIS OVER 1½ INCHES IN DIAMETER. THE RESULTING SEEDBED MUST BE IN SUCH CONDITION THAT FUTURE MOWING OF GRASSES WILL POSE NO DIFFICULTY.

E. IF SOIL MOISTURE IS DEFICIENT, SUPPLY NEW SEEDINGS WITH ADEQUATE WATER FOR PLANT GROWTH (½ TO 1 INCH EVERY 3 TO 4 DAYS DEPENDING ON SOIL TEXTURE) UNTIL THEY ARE FIRMLY ESTABLISHED. THIS IS ESPECIALLY TRUE WHEN SEEDINGS ARE MADE LATE IN THE PLANTING SEASON, IN ABNORMALLY DRY OR HOT SEASONS, OR ON ADVERSE SITES.

B. SOD: TO PROVIDE QUICK COVER ON DISTURBED AREAS (2:1 GRADE OR FLATTER).

1. GENERAL SPECIFICATIONS

A. CLASS OF TURFGRASS SOD MUST BE MARYLAND STATE CERTIFIED. SOD LABELS MUST BE MADE AVAILABLE TO THE JOB FOREMAN AND INSPECTOR.

B. SOD MUST BE MACHINE CUT AT A UNIFORM SOIL THICKNESS OF ¾INCH, PLUS OR MINUS ¼ INCH, AT THE TIME OF CUTTING. MEASUREMENT FOR THICKNESS MUST EXCLUDE TOP GROWTH AND THATCH. BROKEN PADS AND TORN OR UNEVEN ENDS WILL NOT BE ACCEPTABLE.

C. STANDARD SIZE SECTIONS OF SOD MUST BE STRONG ENOUGH TO SUPPORT THEIR OWN WEIGHT AND RETAIN THEIR SIZE AND SHAPE WHEN SUSPENDED VERTICALLY WITH A FIRM GRASP ON THE UPPER 10 PERCENT OF THE SECTION.

D. SOD MUST NOT BE HARVESTED OR TRANSPLANTED WHEN MOISTURE CONTENT (EXCESSIVELY DRY OR WET) MAY ADVERSELY AFFECT ITS SURVIVAL.

E. SOD MUST BE HARVESTED, DELIVERED, AND INSTALLED WITHIN A PERIOD OF 36 HOURS. SOD NOT TRANSPLANTED WITHIN THIS PERIOD MUST BE APPROVED BY AN AGRONOMIST OR SOIL SCIENTIST PRIOR TO ITS INSTALLATION.

2. SOD INSTALLATION

A. DURING PERIODS OF EXCESSIVELY HIGH TEMPERATURE OR IN AREAS HAVING DRY SUBSOIL, LIGHTLY IRRIGATE THE SUBSOIL IMMEDIATELY PRIOR TO LAYING THE SOD.

B. LAY THE FIRST ROW OF SOD IN A STRAIGHT LINE WITH SUBSEQUENT ROWS PLACED PARALLEL TO IT AND TIGHTLY WEDGED AGAINST EACH OTHER. STAGGER LATERAL JOINTS TO PROMOTE MORE UNIFORM GROWTH AND STRENGTH. ENSURE THAT SOD IS NOT STRETCHED OR OVERLAPPED AND THAT ALL JOINTS ARE BUTTED TIGHT IN ORDER TO PREVENT VOIDS WHICH WOULD CAUSE AIR DRYING OF THE ROOTS.

C. WHEREVER POSSIBLE, LAY SOD WITH THE LONG EDGES PARALLEL TO THE CONTOUR AND WITH STAGGERING JOINTS. ROLL AND TAMP, PEG OR OTHERWISE SECURE THE SOD TO PREVENT SLIPPAGE ON SLOPES. ENSURE SOLID CONTACT EXISTS BETWEEN SOD ROOTS AND THE UNDERLYING SOIL SURFACE.

D. WATER THE SOD IMMEDIATELY FOLLOWING ROLLING AND TAMPING UNTIL THE UNDERSIDE OF THE NEW SOD PAD AND SOIL SURFACE BELOW THE SOD ARE THOROUGHLY WET. COMPLETE THE OPERATIONS OF LAYING, TAMPING AND IRRIGATING FOR ANY PIECE OF SOD WITHIN EIGHT HOURS.

3. SOD MAINTENANCE

A. IN THE ABSENCE OF ADEQUATE RAINFALL, WATER DAILY DURING THE FIRST WEEK OR AS OFTEN AND SUFFICIENTLY AS NECESSARY TO MAINTAIN MOIST SOIL TO A DEPTH OF 4 INCHES. WATER SOD DURING THE HEAT OF THE DAY TO PREVENT WILTING.

B. AFTER THE FIRST WEEK, SOD WATERING IS REQUIRED AS NECESSARY TO MAINTAIN ADEQUATE MOISTURE CONTENT.

C. DO NOT MOW UNTIL THE SOD IS FIRMLY ROOTED. NO MORE THAN ⅓ OF THE GRASS LEAF MUST BE REMOVED BY THE INITIAL CUTTING OR SUBSEQUENT CUTTINGS. MAINTAIN A GRASS HEIGHT OF AT LEAST 3 INCHES UNLESS OTHERWISE SPECIFIED.

OWNER / APPLICANT

GLENELG COUNTRY SCHOOL
12793 FOLLY QUARTER ROAD
ELLICOTT CITY, MD 21042
TEL: 410-531-8600

Professional Certification. I hereby certify that these documents were prepared or approved by me, and that I am a duly licensed professional engineer under the laws of the State of Maryland.

License No. 12548

Expiration Date 7-29-13

THIS DEVELOPMENT PLAN IS APPROVED FOR SOIL EROSION AND SEDIMENT CONTROL BY THE HOWARD COUNTY SOIL CONSERVATION DISTRICT

SIGNATURE 5/28/13 DATE

APPROVED: DEPARTMENT OF PLANNING AND ZONING

CHIEF, DEVELOPMENT ENGINEERING DIVISION 6/11/13 DATE

CHIEF, DIVISION OF LAND DEVELOPMENT 6/17/13 DATE

DIRECTOR 6/17/13 DATE

HURON CONSULTING
A Division of Nobis Engineering, Inc.
20410 CENTURY BLVD
SUITE 230
GERMANTOWN, MD. 20874
PHONE: (301) 528-2010
FAX: (301) 528-0124
www.huroncon.com

STATE OF MARYLAND – RICHARD EDWARD HURNEY – PROFESSIONAL ENGINEER 5-3-13

DRW BY: JA
CHK BY: JA
APP BY: REH

REVISIONS

△	DATE	DESCRIPTION
5	3/05/13	REVISED NOTES PER SCD COMMENTS

GLENELG COUNTRY SCHOOL
12793 FOLLY QUARTER ROAD
ELLICOTT CITY, MD 21042

REVISED SHEET

EROSION AND SEDIMENT CONTROL NOTES AND DETAILS

SCALE
HORIZONTAL: 1" = 30'
VERTICAL: N/A

PROJECT NO.: 86860.00

DRAWING NO.: C-411

SHEET: 35 OF 37

DATE: MARCH 2013

SDP-03-084

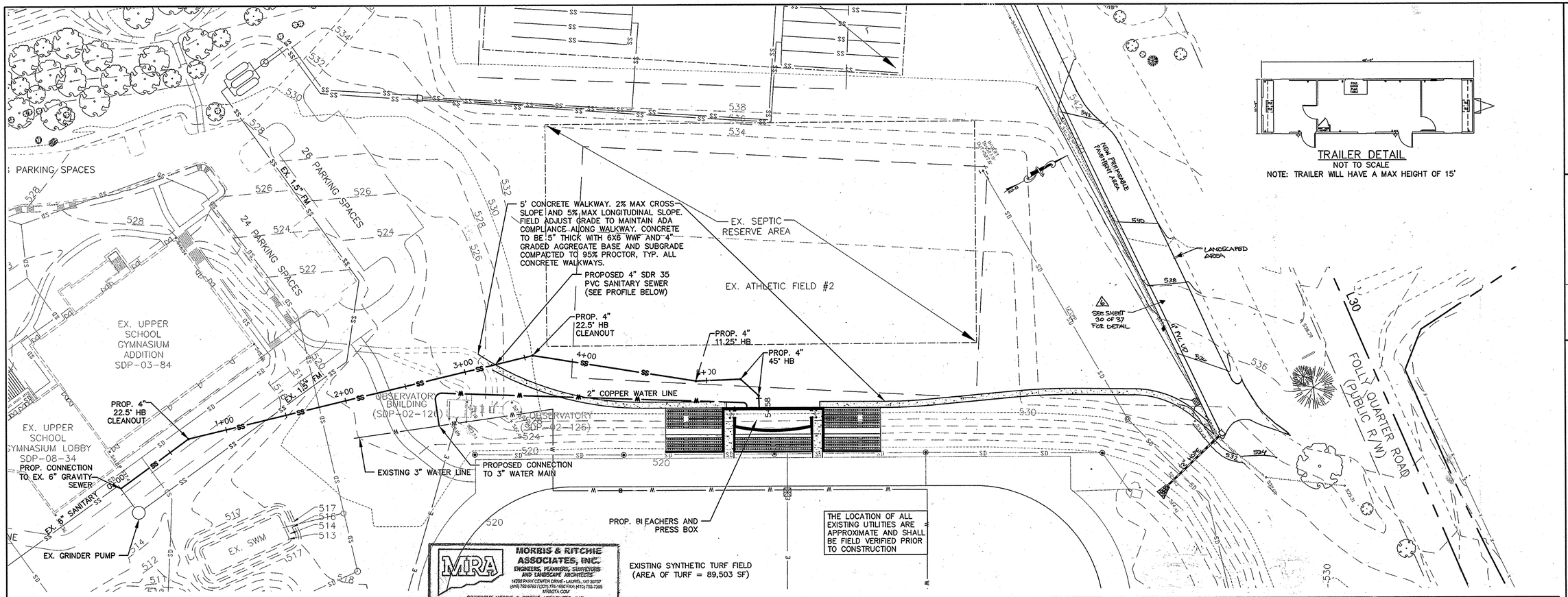

UTILITY PLAN
SCALE: 1" = 40'

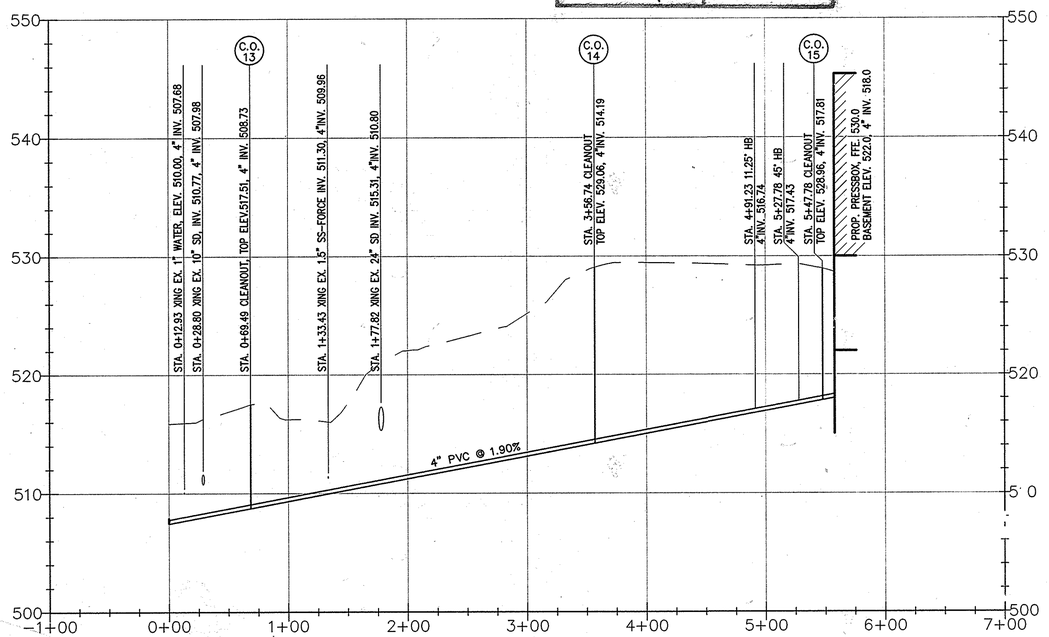

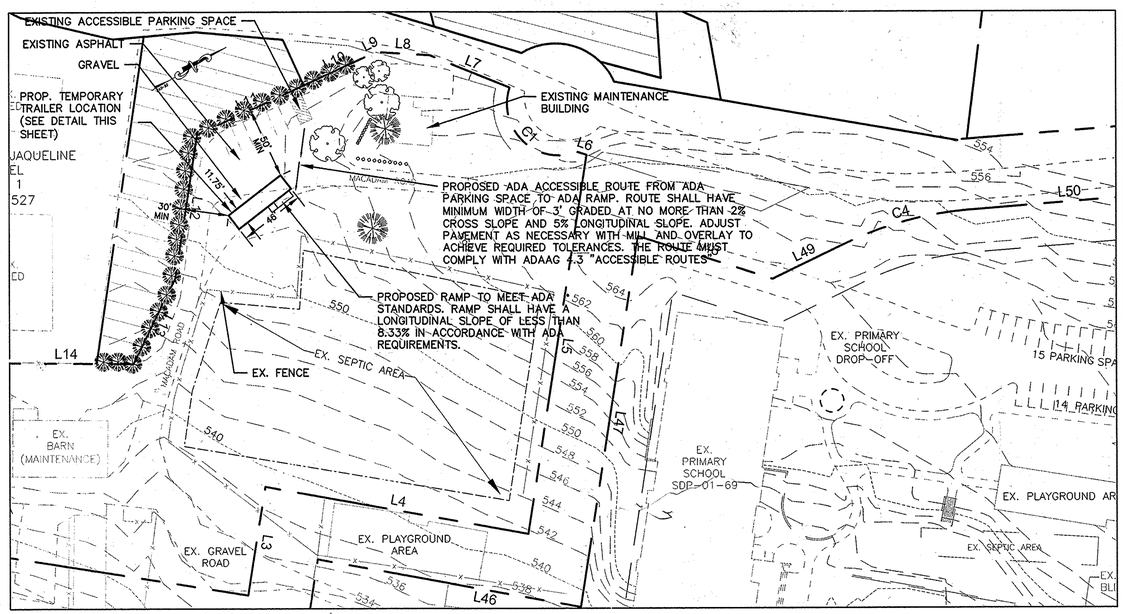

TRAILER PLAN
SCALE: 1" = 50'
SEE COVER SHEET FOR LOCATION MAP

GRAPHIC SCALE
40 0 20 40 80 160
(IN FEET)
1 inch = 40 ft.

MORRIS & RITCHIE ASSOCIATES, INC.
ENGINEERS, PLANNERS, SURVEYORS AND LANDSCAPE ARCHITECTS
1220 PARK CENTER DRIVE - VIADEL, MD 20737
(410) 752-6787 (301) 776-1550 FAX: (410) 739-2385
MRA-CIVIL.COM
COPYRIGHT MORRIS & RITCHIE ASSOCIATES, INC.

FOR REVISION #6 ONLY

PROFESSIONAL CERTIFICATION:
I HEREBY CERTIFY THAT THESE DOCUMENTS WERE PREPARED OR APPROVED BY ME, AND THAT I AM A DULY LICENSED PROFESSIONAL ENGINEER UNDER THE LAWS OF THE STATE OF MARYLAND, LICENSE NO.: 22203 EXPIRATION DATE: 6-16-17
1-25-16

Professional Certification. I hereby certify that these documents were prepared or approved by me, and that I am a duly licensed professional engineer under the laws of the State of Maryland.
License No. 31168
Expiration Date 11/12/2015

APPROVED: DEPARTMENT OF PLANNING AND ZONING
CHIEF, DEVELOPMENT ENGINEERING DIVISION — 6/11/13 DATE
CHIEF, DIVISION OF LAND DEVELOPMENT — 6/10/13 DATE
DIRECTOR — 6/7/13 DATE

HURON CONSULTING
A Division of Hobbs Engineering, Inc.
14 ROCKVILLE PIKE
SUITE 230
GERMANTOWN, MD. 20874
PHONE: (301) 528-0010
FAX: (301) 528-0124
www.huroncon.com

STATE OF MARYLAND — JASON M. KEAR — 22203 — REGISTERED PROFESSIONAL ENGINEER
6-3-13

DRW BY: SL
CHK BY: JA
APP BY: REH

REVISIONS

NO.	DATE	DESCRIPTION
1	5-27-13	REVISED PER COUNTY COMMENTS ON TEMPORARY TRAILER
2	12/15	ADDED PERMEABLE PAVEMENT AREA BY MAIN ENTRANCE AND STORM DRAIN TO EX. GRASS CHANNEL

GLENELG COUNTRY SCHOOL
12793 FOLLY QUARTER ROAD
ELLICOTT CITY, MD 21042

REVISED SHEET
UTILITY PLAN

SCALE
HORIZONTAL: AS SHOWN
VERTICAL: N/A

PROJECT NO.: 86860.00
DRAWING NO.: C-501
SHEET: 35 OF 37
DATE: MARCH 2013

SDP-03-084

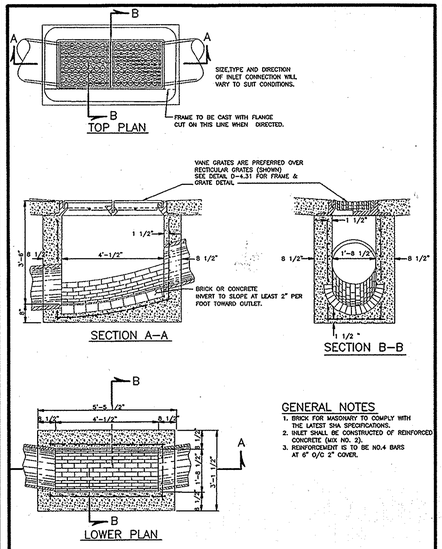

Revised	Howard County, Maryland Department of Public Works	Type 'E' Inlet	Detail D-4.21
Revised 5/1/2007	Approved: Chief, Bureau of Engineering		
Approved			

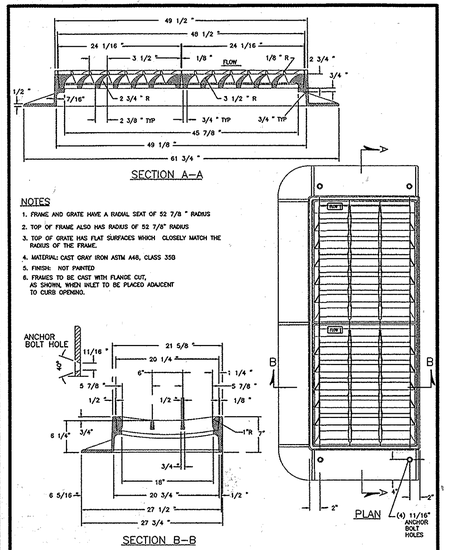

Revised	Howard County, Maryland Department of Public Works	Type 'E' Inlet Frame & Grate	Detail D-4.91
Revised 5/1/2007	Approved: Chief, Bureau of Engineering		
Approved			

ACO SPORT Dec 07

System 2000

Slot channel trench drain system

One meter channel

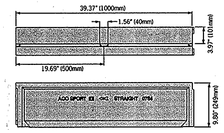

Half meter channel

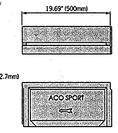

In-line catch basin

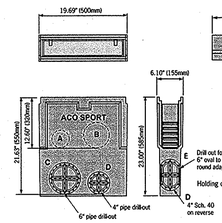

Catch basin cover

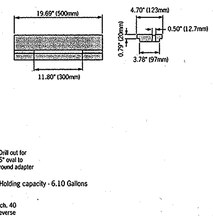

Outlet flow rates

Outlet	Product	Outlet size (Sch. 40)	Invert Depth	GPM	CFS
A	Inline catch basin*	4" round	12.60	175	0.40
B	Inline catch basin*	6" round	12.60	379	0.87
C	Inline catch basin*	6" round	21.63	530	1.22
D	Inline catch basin*	4" round	21.63	530	1.22
E	Inline catch basin*	6" round	21.63	242	0.54
F	Inline catch basin*	6" oval	21.63	372	0.86

* Inline catch basin flow rate without trash bucket - using trash bucket reduces flow

www.acousa.com

ACO SPORT Dec 07

System 4000

Open channel trench drain system

One meter channel

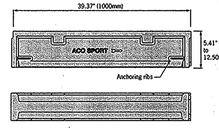

In-line catch basin

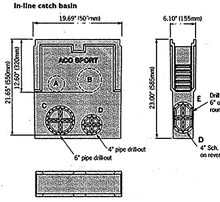

Half meter channel

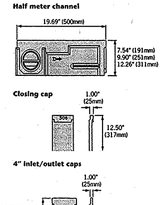

Closing cap

Total capacity = 6.50 gallons

4" inlet/outlet caps

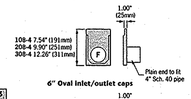

Outlet flow rates

Outlet	Product	Outlet size (Sch. 40)	Invert Depth	GPM	CFS
A	Inline catch basin*	4" round	12.60	175	0.40
B	Inline catch basin*	6" round	12.60	379	0.87
C	Inline catch basin*	6" round	21.63	530	1.22
D	Inline catch basin*	4" round	21.63	241	0.54
E	Inline catch basin*	6" oval	21.63	372	0.86
F	108-4 outlet cap	4" round	6.77	119	0.27
F	208-4 outlet cap	4" round	9.13	220	0.50
F	308-4 outlet cap	4" round	11.50	168	0.39
G	208-6 outlet cap	6" oval	9.13	220	0.50
G	308-6 outlet cap	6" oval	11.50	248	0.57

* Inline catch basin flow rate without trash bucket - using trash bucket reduces flow

6" Oval inlet/outlet caps

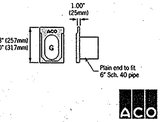

www.acousa.com

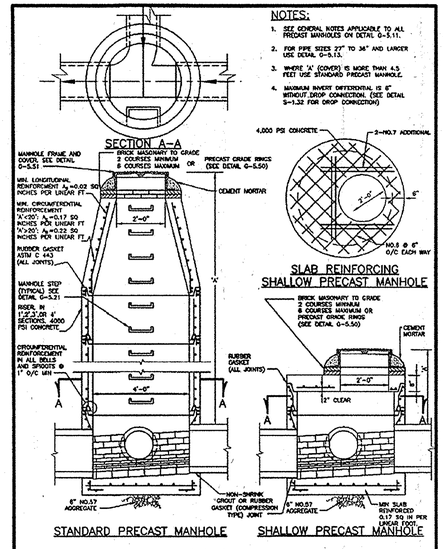

Revised	Howard County, Maryland Department of Public Works	PRECAST MANHOLE Standard and Shallow 4'-0" for 24" Pipe and smaller	Detail G-5.12
Revised 5/1/2007	Approved: Chief, Bureau of Engineering		
Approved			

3 PIPE PERFORATION DETAIL
NOT TO SCALE

4 TYPICAL WQ SWALE PROFILE
NOT TO SCALE

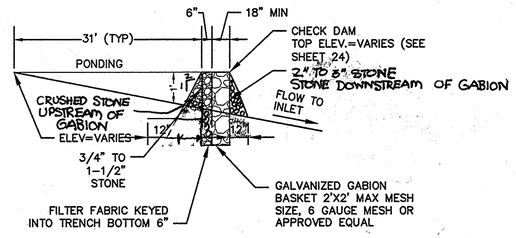

1 CHECK DAM DETAIL
NOT TO SCALE

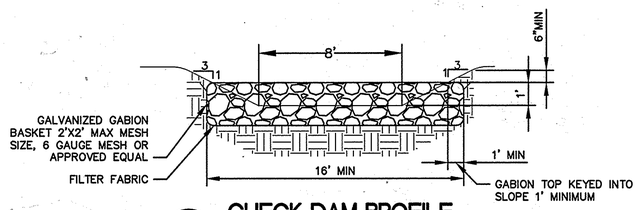

5 CHECK DAM PROFILE
NOT TO SCALE

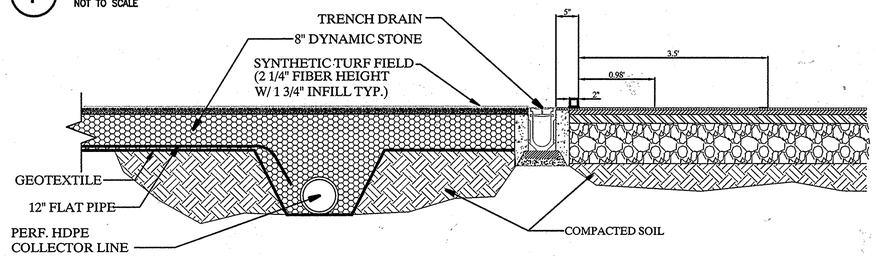

2 SECTION THRU TRACK AND FIELD
NOT TO SCALE

NYLOPLAST INLINE DRAIN WITH PEDESTRIAN GRATE

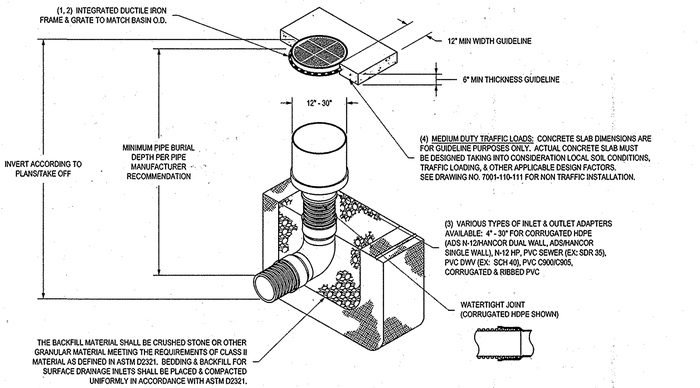

1 - 12" - 30" PEDESTRIAN GRATES SHALL BE DUCTILE IRON PER ASTM A536 GRADE 70-50-05.
2 - 12" - 30" FRAMES SHALL BE DUCTILE IRON PER ASTM A536 GRADE 70-50-05.
3 - DRAINAGE CONNECTION STUB JOINT TIGHTNESS SHALL CONFORM TO ASTM D3212 FOR CORRUGATED HDPE (ADS N-12/HANCOR DUAL WALL), N-12 HP, & PVC SEWER (4" - 24").
4 - 12" - 24" PEDESTRIAN GRATES SHALL MEET H-10 LOAD RATING. 30" PEDESTRIAN GRATE SHALL MEET H-20 LOAD RATING (SEE DRAWING NO. 7003-110-022 FOR H-20 TRAFFIC LOAD GUIDELINES).

THIS PRINT DISCLOSES SUBJECT MATTER IN WHICH NYLOPLAST HAS PROPRIETARY RIGHTS. THE RECEIPT OR POSSESSION OF THIS PRINT DOES NOT CONFER, TRANSFER, OR LICENSE THE USE OF THE DESIGN OR TECHNICAL INFORMATION SHOWN HEREIN. REPRODUCTION OF THIS PRINT OR ANY INFORMATION CONTAINED HEREIN, OR MANUFACTURE OF ANY ARTICLE HEREFROM, FOR THE DISCLOSURE TO OTHERS IS FORBIDDEN, EXCEPT BY SPECIFIC WRITTEN PERMISSION FROM NYLOPLAST.

DRAWN BY	EBC	MATERIAL	
DATE	4-20-07		
REVISED BY	EBC	PROJECT NO./NAME	
DATE	3-21-10		
DWG SIZE	A	SCALE 1:40	SHEET 1 OF 1

Nyloplast — 3130 VERONA AVE BUFORD, GA 30518 PHN (770) 932-2443 FAX (770) 932-2490 www.nyloplastus.com

TITLE: INLINE DRAIN WITH PEDESTRIAN GRATE QUICK SPEC INSTALLATION DETAIL

DWG NO. 7003-110-037 REV B

Professional Certification. I hereby certify that these documents were prepared or approved by me, and that I am a duly licensed professional engineer under the laws of the State of Maryland.

License No. 12548

Expiration Date 7-29-13

APPROVED: DEPARTMENT OF PLANNING AND ZONING

CHIEF, DEVELOPMENT ENGINEERING DIVISION — DATE 8/17/12

CHIEF, DIVISION OF LAND DEVELOPMENT — DATE 8/23/12

DIRECTOR — DATE 8/23/12

HURON CONSULTING
20410 CENTURY BLVD
SUITE 230
GERMANTOWN, MD. 20874
PHONE: (301) 528-2010
FAX: (301) 528-2014
www.huroncon.com

STATE OF MARYLAND — RICHARD HURNEY BROWN — PROFESSIONAL ENGINEER

DRW BY: JA
CHK BY: JA
APP BY: REH

REVISIONS		
	DATE	DESCRIPTION
1		

GLENELG COUNTRY SCHOOL
12793 FOLLY QUARTER ROAD
ELLICOTT CITY, MD 21042

REVISED SHEET
STORMWATER MANAGEMENT AND DRAINAGE DETAILS

SCALE
HORIZONTAL: N/A
VERTICAL: N/A

PROJECT NO.: 900-101
DRAWING NO.: C-310
SHEET: 37 OF 37
DATE: JULY 2012

SDP-03-084

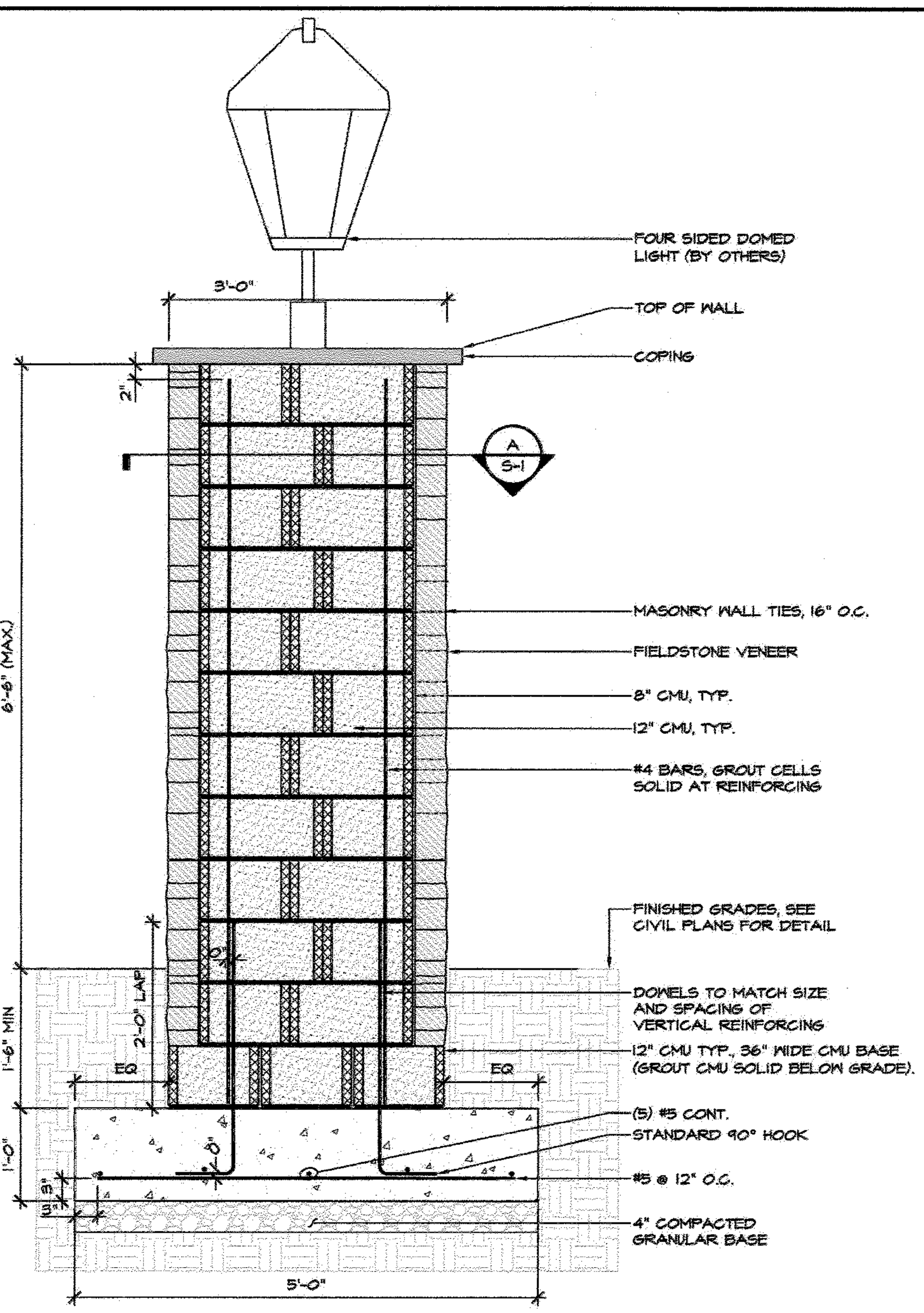

1/S-1 3'-0" ENTRY MONUMENT PIER
SCALE: ¾" = 1'-0"

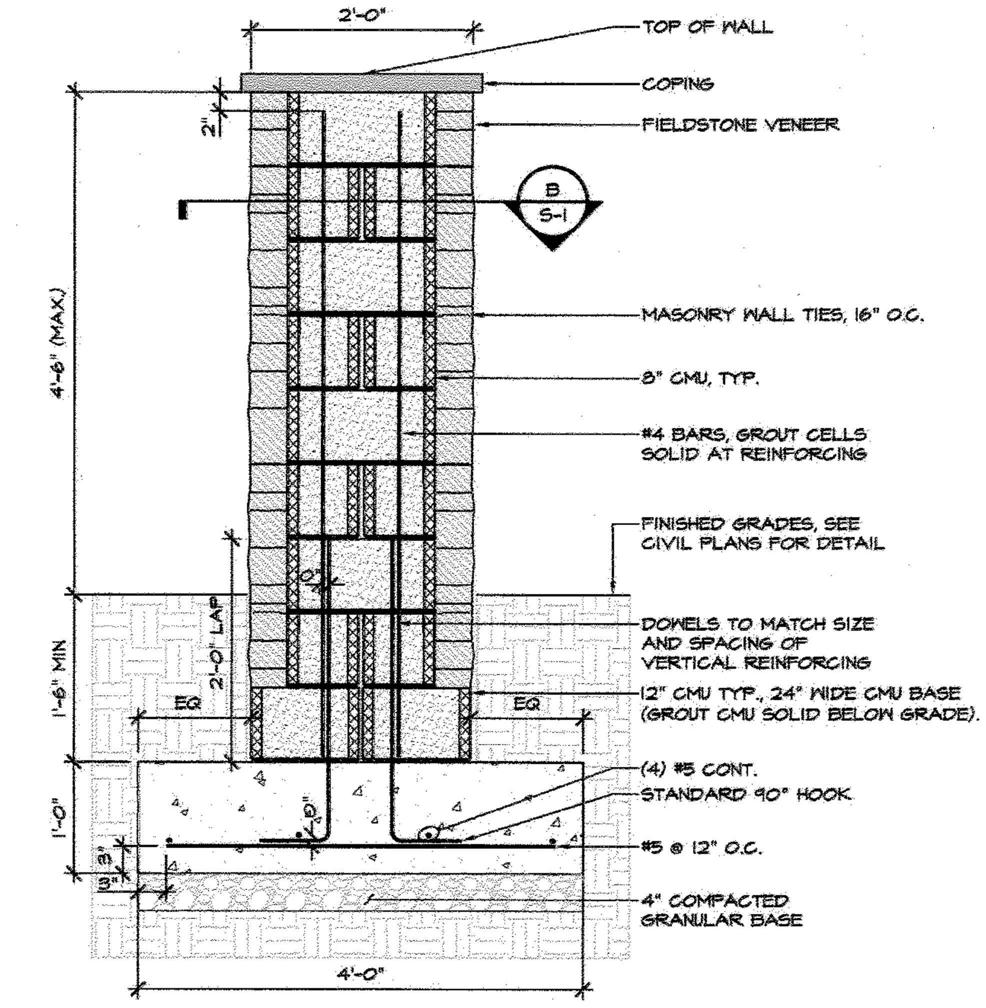

2/S-1 2'-0" ENTRY MONUMENT PIER
SCALE: ¾" = 1'-0"

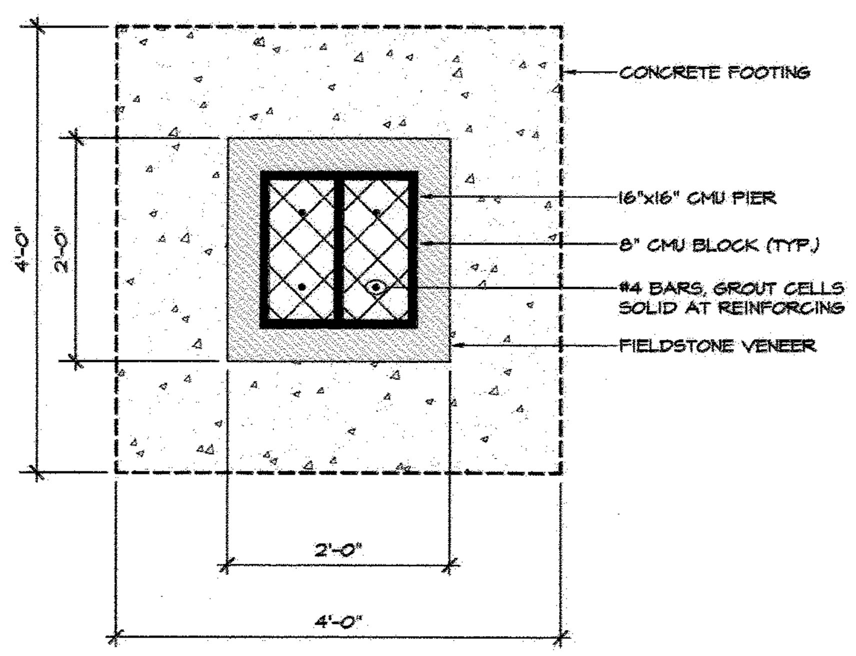

B/S-1 SECTION VIEW
SCALE: ¾" = 1'-0"

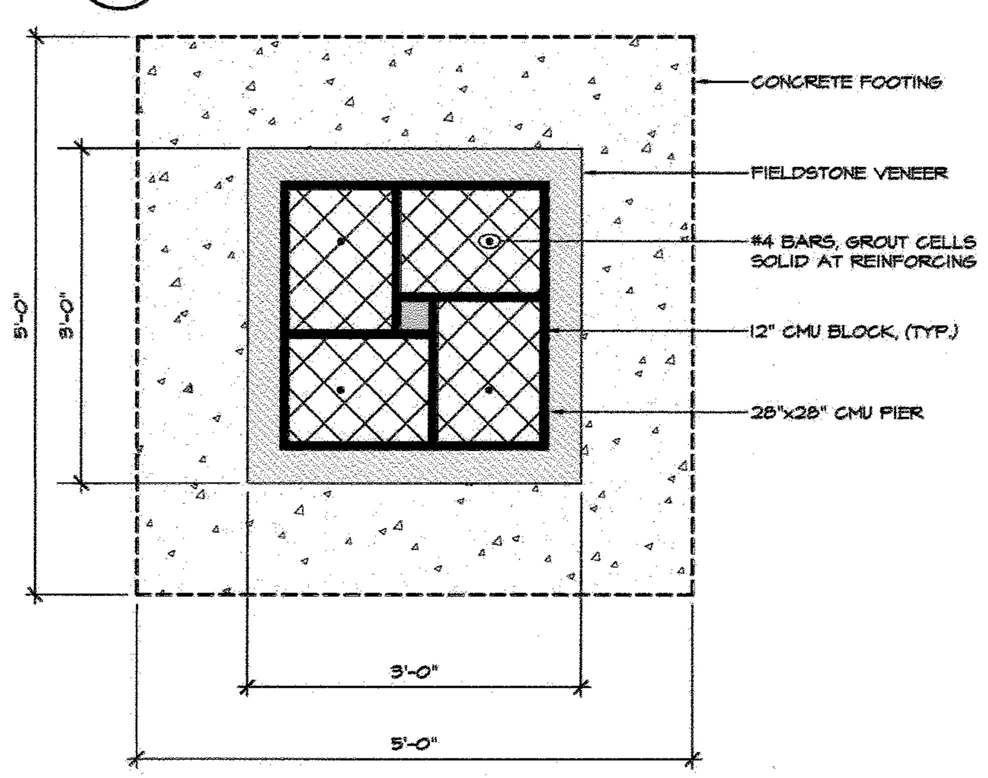

A/S-1 SECTION VIEW
SCALE: ¾" = 1'-0"

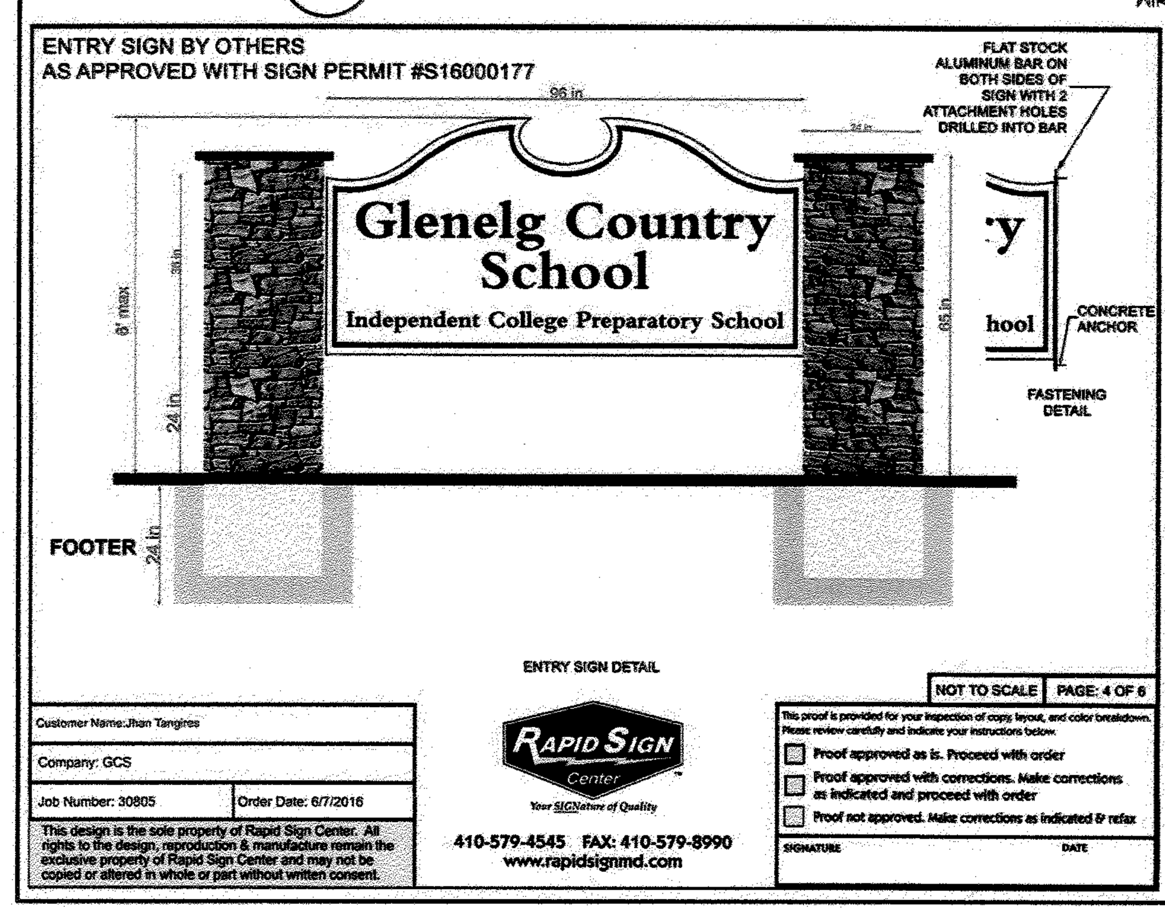

PRIVATE LIGHT POST

NOT TO SCALE

FIVE PROPOSED LIGHT POLES TO MATCH EXISTING LIGHT POLES ON SITE CURRENTLY AT THE UPPER SCHOOL

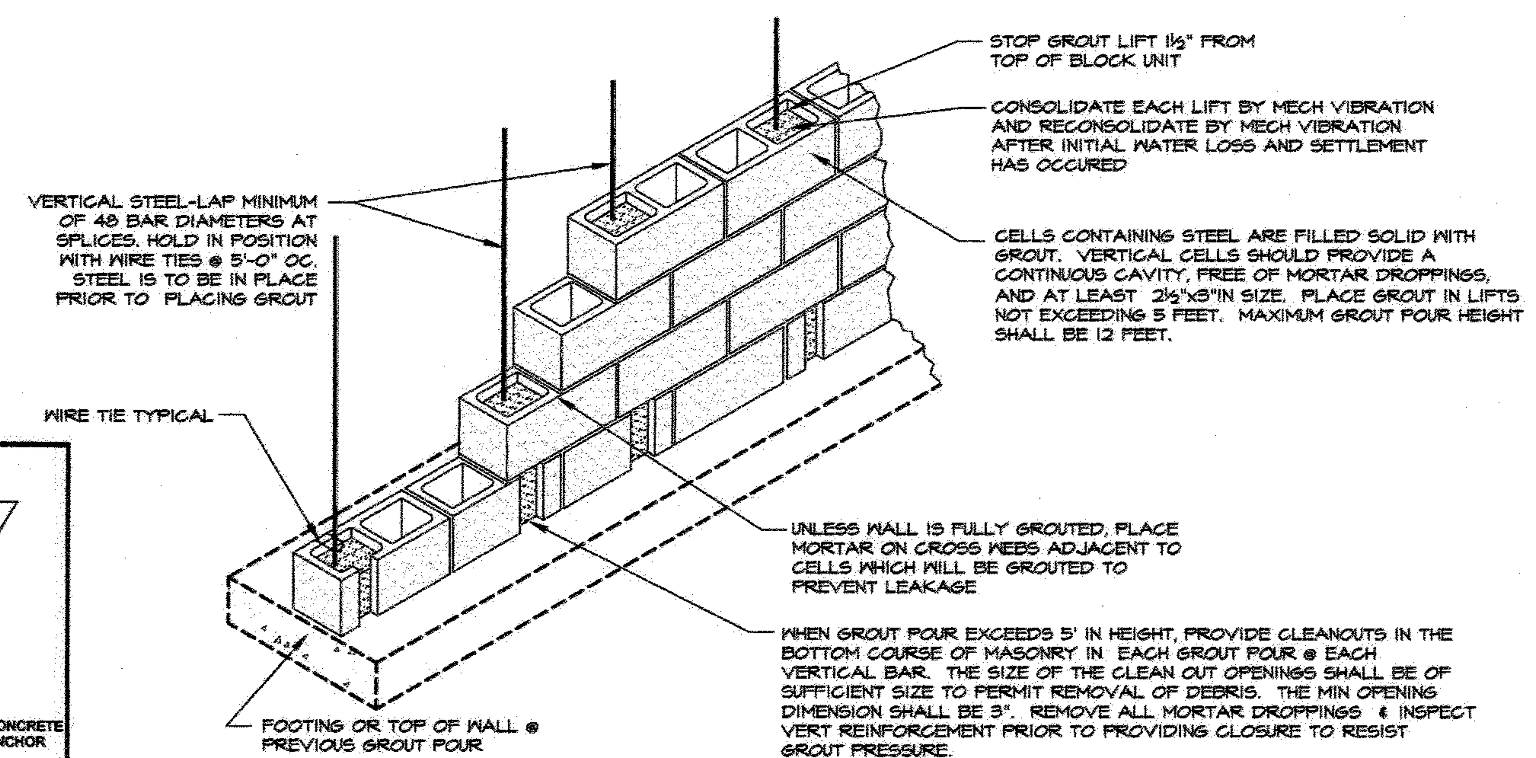

C/S-1 TYPICAL MASONRY CONSTRUCTION
SCALE: ¾" = 1'-0"

STRUCTURAL NOTES

BUILDING CODES

A. ALL CONSTRUCTION SHALL CONFORM WITH:
- THE INTERNATIONAL BUILDING CODE (IBC-2015) AND ALL APPLICABLE SUPPLEMENTS.
- MINIMUM DESIGN LOADS FOR BUILDINGS AND OTHER STRUCTURES (ASCE7-10).

B. IN ADDITION, ALL CONSTRUCTION SHALL CONFORM WITH THE GOVERNING LOCAL BUILDING CODE.

DESIGN LOAD

A. THE DESIGN DEAD LOADING FOR ALL COMPONENTS IS BASED ON THE CONSTRUCTION MATERIALS SHOWN ON THE DRAWINGS AND INDICATED IN THE SPECIFICATIONS. ALL COMPONENTS ARE DESIGNED FOR THE FOLLOWING UNIFORM SUPERIMPOSED DEAD LOADS APPLIED IN ADDITION TO STRUCTURE SELF WEIGHT:

B. RISK CATEGORY: II

C. WIND LOAD DESIGN CRITERIA:
- A DISTRIBUTED DESIGN LOAD OF 15 PSF WAS APPLIED TO ALL STEM FACES ABOVE GROUND.

MISCELLANEOUS

A. SHOP DRAWINGS FOR ALL STRUCTURAL ELEMENTS SHOWN ON THE CONTRACT DOCUMENTS MUST BE SUBMITTED BY THE CONTRACTOR OR OWNER FOR REVIEW BY THE ENGINEER. IF THE CONTRACTOR OR OWNER FAILS TO SUBMIT THE SHOP DRAWINGS, THE ENGINEER WILL NOT BE RESPONSIBLE FOR STRUCTURAL CERTIFICATION AND DESIGN OF THE PROJECT. THE SHOP DRAWINGS SHALL INDICATE ANY DEVIATIONS OR OMISSIONS FROM THE CONTRACT DOCUMENTS. THE GENERAL CONTRACTOR SHALL REVIEW ALL SHOP DRAWINGS PRIOR TO SUBMISSION AND MAKE ALL CORRECTIONS DEEMED NECESSARY.

B. SEE CIVIL CONTRACT DOCUMENTS FOR ADDITIONAL INFORMATION RELATING TO THE COORDINATION OF STRUCTURAL COMPONENTS.

C. THE CONTRACTOR SHALL REVIEW THE CIVIL DRAWINGS FOR LOCATION AND DIMENSION OF CHASES, INSERTS, OPENINGS, SLEEVES, DEPRESSIONS AND OTHER PROJECT REQUIREMENTS WHICH IMPACT THE STRUCTURAL COMPONENTS. THE STRUCTURAL CONSTRUCTION DRAWINGS DO NOT SHOW ALL OPENINGS REQUIRED. ADDITIONAL OPENINGS, BLOCKOUTS AND SLEEVES MAY BE REQUIRED BY OTHER DISCIPLINES AND SHALL BE CONSTRUCTED USING THE TYPICAL DETAILS AND/OR CRITERIA INDICATED THE STRUCTURAL DRAWINGS. OPENINGS REQUIRED BUT NOT SHOWN ON THE STRUCTURAL DRAWINGS MUST BE APPROVED BY THE STRUCTURAL ENGINEER.

D. IN CASES OF CONFLICT BETWEEN THE DRAWINGS AND OTHER DISCIPLINES OR EXISTING CONDITIONS, CONTRACTOR SHALL NOTIFY THE DESIGN PROFESSIONALS AND OBTAIN CLARIFICATION PRIOR TO BIDDING AND PROCEEDING WITH WORK.

E. THE CONTRACTOR SHALL CHECK AND VERIFY ALL DIMENSIONS SHOWN ON THE CONTRACT DRAWINGS BEFORE PROCEEDING WITH CONSTRUCTION. ALL DISCREPANCIES AND OMISSIONS SHALL BE BROUGHT TO THE ATTENTION OF THE ENGINEER.

F. THE CONTRACTOR SHALL NOT SUBMIT REPRODUCTIONS OF THE STRUCTURAL CONTRACT DOCUMENTS AS SHOP DRAWINGS.

G. SCALES SHOWN ON THE STRUCTURAL CONTRACT DRAWINGS ARE FOR GENERAL INFORMATION ONLY. DIMENSIONAL INFORMATION SHALL NOT BE OBTAINED BY SCALING THE DRAWINGS.

H. APPLY DETAILS, SECTIONS AND NOTES ON THE DRAWINGS WHERE CONDITIONS ARE SIMILAR TO THOSE INDICATED BY DETAIL, DETAIL TITLE OR NOTE.

I. THE CONTRACTOR SHALL VERIFY THAT CONSTRUCTION LOADS DO NOT EXCEED THE CAPACITY OF THE STRUCTURE AT THE TIME THE LOAD IS APPLIED.

SPREAD FOOTING FOUNDATIONS

A. THE BOTTOM OF ALL EXTERIOR FOOTINGS SHALL BE A MINIMUM OF 2'-6" BELOW FINISH GRADE FOR FROST PROTECTION.

B. ALL FOOTINGS HAVE BEEN DESIGNED FOR AN ASSUMED NET ALLOWABLE SOIL BEARING PRESSURE OF 2000 PSF. THE ALLOWABLE SOIL BEARING PRESSURE SHALL BE FIELD VERIFIED BY A REGISTERED GEOTECHNICAL ENGINEER AND APPROVED PRIOR TO PLACING FOUNDATIONS. SHOULD THE ACTUAL SOIL BEARING PRESSURE BE LESS THAN 2000 PSF, THE CONTRACTOR SHALL IMMEDIATELY NOTIFY THE ENGINEER.

C. ALL FILL PLACED UNDER SPREAD FOOTINGS SHALL BE COMPACTED TO A DRY DENSITY OF AT LEAST 95 PERCENT OF MAXIMUM DRY DENSITY AS DETERMINED BY ASTM D 698.

D. ALL EXCAVATION AND BACKFILLING OPERATIONS WITHIN THE BUILDING FOOTPRINT, INCLUDING ALL COMPACTION TESTS AND INSPECTIONS, SHALL BE DONE UNDER THE DIRECTION AND SUPERVISION OF A REGISTERED GEOTECHNICAL ENGINEER.

E. THE CONTRACTOR SHALL NOTIFY THE ENGINEER OF ALL FOUNDATION AND SOIL CONDITIONS WHICH DIFFER FROM THOSE ANTICIPATED OR INDICATED IN THE CONTRACT DOCUMENTS.

F. ALL EXISTING SOIL CONTAINING GRAVEL, CONSTRUCTION OR DEMOLITION DEBRIS, ORGANIC SUBSTANCES, OR OTHER FOREIGN OBJECTS SHALL BE REMOVED FROM THE REGION WITHIN THE FOOTPRINT OF THE STRUCTURE.

GENERAL/ADDITIONAL NOTES

A. IN ACCORDANCE WITH SECTION 128.0.A.I.F OF THE ZONING REGULATIONS, PILLARS AND GATES WHICH SERVE AS ENTRANCE FEATURES FOR A LOT DO NOT NEED TO MEET THE SETBACK REQUIREMENT PROVIDED THE ENTRANCE FEATURE IS NO MORE THAN 8 FEET HIGH AND DOES NOT INTERFERE WITH SIGHT DISTANCE ALONG PUBLIC ROADS.

B. IN ACCORDANCE WITH SECTION 103.0.5 OF THE ZONING REGULATIONS SIGNS ARE NOT CONSIDERED TO BE STRUCTURE OR PART OF A STRUCTURE AND ARE REGULATED BY TITLE 3, SUBTITLE 5 OF THE HOWARD COUNTY CODE.

CAST IN PLACE CONCRETE

A. ALL CONCRETE CONSTRUCTION SHALL CONFORM TO THE "SPECIFICATIONS FOR STRUCTURAL CONCRETE FOR BUILDINGS (ACI 301)"; AND TO THE "BUILDING CODE REQUIREMENTS FOR REINFORCED CONCRETE (ACI 318)".

B. IN ADDITION TO THE ABOVE, ALL CONCRETE WORK SHALL CONFORM TO THE FOLLOWING:

RECOMMENDED PRACTICE FOR HOT WEATHER CONCRETING (ACI 305).
RECOMMENDED PRACTICE FOR COLD WEATHER CONCRETING (ACI 306).
RECOMMENDED PRACTICE FOR CONCRETE FORMWORK (ACI 347).
STANDARD SPECIFICATION FOR TOLERANCES FOR CONCRETE CONSTRUCTION AND MATERIALS (ACI 117).
CHEMICAL ADMIXTURES FOR CONCRETE (ACI 212.3).
STANDARD SPECIFICATION FOR CURING CONCRETE (ACI 308.1).

C. ALL CONCRETE EXPOSED TO PUBLIC VIEW SHALL CONFORM TO THE REQUIREMENTS FOR ARCHITECTURAL CONCRETE CONTAINED IN ACI 301.

D. ALL CONCRETE, UNLESS NOTED OTHERWISE, SHALL BE STONE AGGREGATE CONCRETE HAVING A MINIMUM 28 DAY COMPRESSIVE STRENGTH OF 3500 PSI. ALL CONCRETE EXPOSED TO WEATHER SHALL HAVE AN AIR ENTRAINMENT OF 6% +/- 1%. NO ADMIXTURES CONTAINING CALCIUM CHLORIDE SHALL BE PERMITTED. MAXIMUM AGGREGATE SIZE SHALL BE 1", AND MAXIMUM SLUMP SHALL BE 5". ALL CONCRETE, EXCEPT FOOTINGS, SHALL CONTAIN A WATER REDUCING ADMIXTURE. PORTLAND CEMENT SHALL CONFORM TO ASTM C150 AND NORMAL WEIGHT AGGREGATES SHALL CONFORM TO ASTM C33.

E. ALL CONCRETE MIX DESIGNS, INCLUDING CEMENT CONTENT, WATER CEMENT RATIO, FINE AND COARSE AGGREGATE CONTENT AND ALL ADMIXTURES, SHALL BE REVIEWED BY ENGINEER PRIOR TO PLACING FIRST CONCRETE.

F. ALL CONCRETE SHALL BE SAMPLED AND TESTED BY THE TESTING AGENCY. THE CONTRACTOR SHALL NOTIFY THE TESTING AGENCY 48 HOURS PRIOR TO THE PLACING OF ANY CONCRETE. TESTING SHALL BE IN ACCORDANCE WITH ASTM C172.

G. THE CONCRETE STRUCTURE SHALL NOT SUPPORT THE DESIGN LIVE LOAD FOR A MINIMUM OF 28 DAYS AND ALL SHORING AND RE-SHORING REQUIRED TO SUPPORT THE CONCRETE STRUCTURE DURING CONSTRUCTION SHALL BE DESIGNED AND PROVIDED BY THE CONTRACTOR. SHOP DRAWINGS, SIGNED AND SEALED BY A REGISTERED ENGINEER IN THE STATE OF MARYLAND, SHALL BE SUBMITTED FOR REVIEW. SHOP DRAWINGS SHALL INDICATE THE TYPE, EXTENT, SIZE, AND LOCATION OF ALL SHORING AND RE-SHORING AS WELL AS THE SEQUENCE OF CONSTRUCTION.

H. GROUND BLAST FURNACE SLAG MAY BE USED TO REPLACE UP TO 50 PERCENT OF THE PORTLAND CEMENT IN A CONCRETE MIX, AND FLY ASH OR POZZOLAN MAY BE USED TO REPLACE UP TO 25 PERCENT OF PORTLAND CEMENT, SUBJECT TO THE APPROVAL OF THE STRUCTURAL ENGINEER AND SHALL CONFORM TO ASTM C989.

I. ALL REINFORCING BARS SHALL BE NEW BILLET STEEL CONFORMING TO ASTM A615 GRADE 60 (F_y = 60 KSI).

J. LAP ALL REINFORCING BARS A MINIMUM OF 48 BAR DIAMETERS, UNLESS OTHERWISE INDICATED.

K. ALL REINFORCING SHALL BE DETAILED, FABRICATED AND PLACED IN ACCORDANCE WITH THE CRSI "MANUAL OF STANDARD PRACTICE", ACI 315" DETAILS AND DETAILING OF CONCRETE REINFORCEMENT", ACI SP 66 "DETAILING MANUAL".

L. DOWELS SHALL MATCH SIZE AND SPACING OF MAIN REINFORCEMENT, UNLESS NOTED OTHERWISE.

M. WHERE A 90°, 135° OR 180° HOOK IS GRAPHICALLY INDICATED, PROVIDE CORRESPONDING ACI STANDARD HOOKS, UNLESS NOTED OTHERWISE.

N. MINIMUM COVER FOR ALL REINFORCING SHALL BE AS FOLLOWS UNLESS OTHERWISE INDICATED:

FOOTINGS — 3 INCHES (BOTTOM & SIDES), 2 INCHES (TOP)

CONCRETE MASONRY

A. ALL MASONRY CONSTRUCTION SHALL CONFORM TO THE "BUILDING CODE REQUIREMENTS FOR MASONRY STRUCTURES (ACI 530/ASCE 5/TMS 402)" AND TO THE "SPECIFICATIONS FOR MASONRY STRUCTURES (ACI 530.1/ASCE 6/TMS 602)".

B. ALL CONCRETE MASONRY SHALL HAVE A SPECIFIED COMPRESSIVE STRENGTH OF MASONRY, f'm = 1500 PSI.

C. ALL EXTERIOR WALLS AND ALL WALLS SUPPORTING LOADS OTHER THAN THEIR OWN WEIGHT SHALL BE CONSTRUCTED OF NORMAL WEIGHT HOLLOW LOAD BEARING UNITS CONFORMING TO ASTM C 90 WITH A NET COMPRESSIVE STRENGTH OF 1900 PSI. PROVIDE TYPE N I BLOCK BELOW GRADE AND WHERE BLOCK IS SUBJECTED TO MOISTURE PENETRATION, OTHERWISE PROVIDE TYPE S I.

D. ALL EXTERIOR WALLS AND BEARING WALLS SHALL BE CONSTRUCTED WITH TYPE "S" CEMENT LIME MORTAR ABOVE GRADE, AND TYPE "M" BELOW GRADE. ALL MORTAR SHALL CONFORM TO ASTM C 270.

E. ALL FILL FOR CONCRETE MASONRY SHALL BE GROUT CONFORMING TO ASTM C476 WITH A COMPRESSIVE STRENGTH OF 2500 PSI AT 28 DAYS.

F. ALL VERTICAL REINFORCING SHALL BE LAP SPLICED A MINIMUM OF 48 BAR DIAMETERS UNLESS OTHERWISE INDICATED.

G. VERTICAL WALL REINFORCING SHALL BE CUT AND LAP SPLICED FOR MAXIMUM 5'-0" GROUT LIFTS. MASONRY CORES CONTAINING VERTICAL REINFORCING SHALL BE GROUTED SOLID.

H. THE CONTRACTOR SHALL PROVIDE HOLLOW BLOCK FILLED SOLID WITH GROUT DIRECTLY BELOW ALL CHANGES IN WALL THICKNESS.

APPROVED: DEPARTMENT OF PLANNING AND ZONING

CHIEF, DEVELOPMENT ENGINEERING DIVISION	9.22.16 DATE
CHIEF, DIVISION OF LAND DEVELOPMENT	9-26-16 DATE
DIRECTOR, DEPARTMENT OF PLANNING AND ZONING	9-30-16 DATE

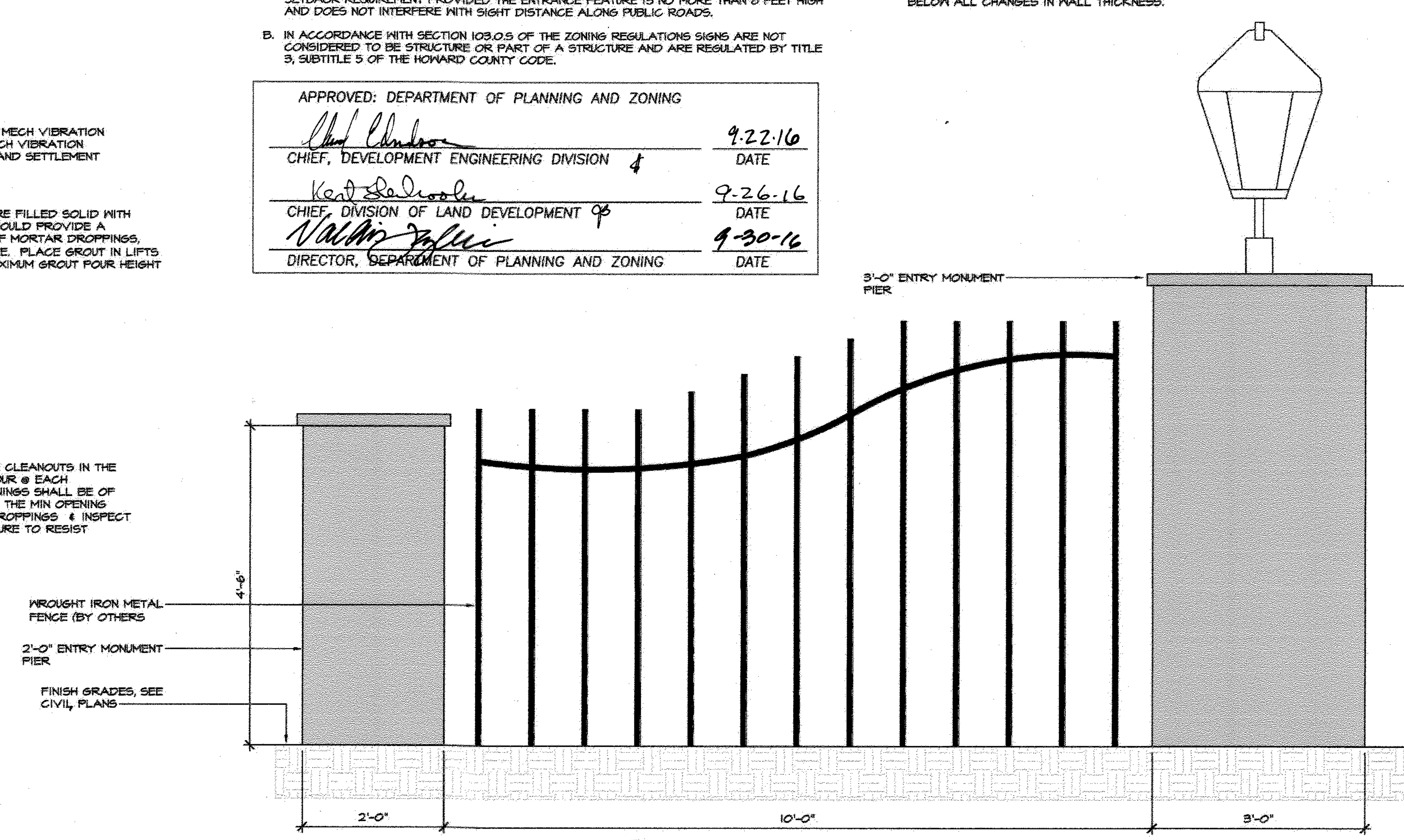

D/S-1 TYPICAL PIER CONFIGURATION
SCALE: ¾" = 1'-0"

MRA
Buildings Group
MORRIS & RITCHIE ASSOCIATES, INC.
Architects, Engineers, Planners, Surveyors, and Landscape Architects
1220-C East Joppa Road
Suite 505
Towson, Maryland 21286
410-821-1690
410-821-1748 Fax

Owner/Developer
GLENELG COUNTRY SCHOOL
12793 FOLLY QUARTER ROAD
GLENELG, MARYLAND 21737
PHONE: 410.531.2229
ATTN: JHAN TANGIRES
CHIEF FINANCIAL OFFICER
tangires@glenelg.org

THE GLENELG COUNTRY SCHOOL
PROPOSED UPPER SCHOOL ADDITION
CONSTRUCTION DETAILS FOR ENTRY FEATURES

TAX MAP 22 GRID 22 PARCEL 146
LIBER 1296 FOLIO 245 T
FIFTH (5TH) ELECTION DISTRICT
HOWARD COUNTY, MARYLAND

9-14-16
STATE OF MARYLAND · THOMAS C. NEUGEBAUER · 29203 · PROFESSIONAL ENGINEER

PROFESSIONAL CERTIFICATION
I hearby certify that these documents were prepared or approved by me, and that I am a duly licensed professional engineer under the laws of the State of Maryland, license no. 29203, expiration date: 6-16-17

NO.	REVISION	DATE
7	ADDED SHEET 38	9/14/16

FILE	DRAWN	ISSUED
12189.07	SRM	06/30/16

SHEET TITLE
CONSTRUCTION DETAILS FOR ENTRY FEATURES

HOWARD COUNTY ASSOCIATED PERMITS
#S16000177 – MAIN ENTRY SIGN ISSUED 07/12/16
#B16003093 – ENTRY FEATURES AND STONE PILLARS

JOB NO.: 12890
SCALE: VARIES, SEE DIAGRAMS

SDP-03-084