PUBLIC SAFETY TRAINING CENTER
THIRD ELECTION DISTRICT
HOWARD COUNTY, MARYLAND

SITE DATA:

TOTAL PROJECT AREA:.....38.23ac
LIMITS OF DISTURBED AREA:.....15.93ac
PRESENT ZONING DESIGNATION:.....RC-DEO
HEIGHT OF BUILDINGS:.....SEE TABLE G-2
PROPOSED USES FOR STRUCTURES:.....TEMPORARY ADMINISTRATION/TRAINING
PROPOSED USE OF SITE:.....POLICE AND FIRE TRAINING
NUMBER OF PARKING SPACES REQUIRED:.....50 (PER POLICE AND FIRE TRAINING REQUIREMENTS)
NUMBER OF PARKING SPACES PROVIDED:.....64 SPACES
BUILDING COVERAGE:.....0.4ac
DPZ FILE REFERENCES:.....WP-03-36, WP-02-102

BENCHMARKS					
MONUMENT	NORTHING	EASTING	ELEVATION	HORIZ. DATUM	VERT DATUM
16DA	593712.91	1332332.00	469.674	NAD83(91)	NAGVD29
16DC	593095.51	1333961.17	529.506	NAD83(91)	NAGVD29

LEGEND

EXISTING	PROPOSED	DESCRIPTION
260	260	MAJOR CONTOUR
258	258	MINOR CONTOUR
12"SD	12"SD	STORM DRAIN
8"W	8"W	WATER
6"SAN	6"SAN	SANITARY SEWER
UE	UE	UNDERGROUND ELECTRIC
		VALVE
		FIRE HYDRANT
		MANHOLE/INLET
		STREET LIGHT
X X	X X	FENCE
		TREES/WOODSLINE
		STREAM
		WETLAND
	SW-1	STORMWATER MANAGEMENT BORING LOCATION
		PATCH TO MATCH EXISTING
		NO WOODY ZONE
		ABANDON EXISTING UTILITY/STRUCTURE
		EXISTING UTILITY/STRUCTURE TO BE REMOVED
	21	STAKEOUT POINTS
	H	ELECTRICAL HANDBOX
	C	CONTROL PANEL
	1	ELECTRICAL NOTES
		CONNECT TO EXISTING
	W	WELL CAP

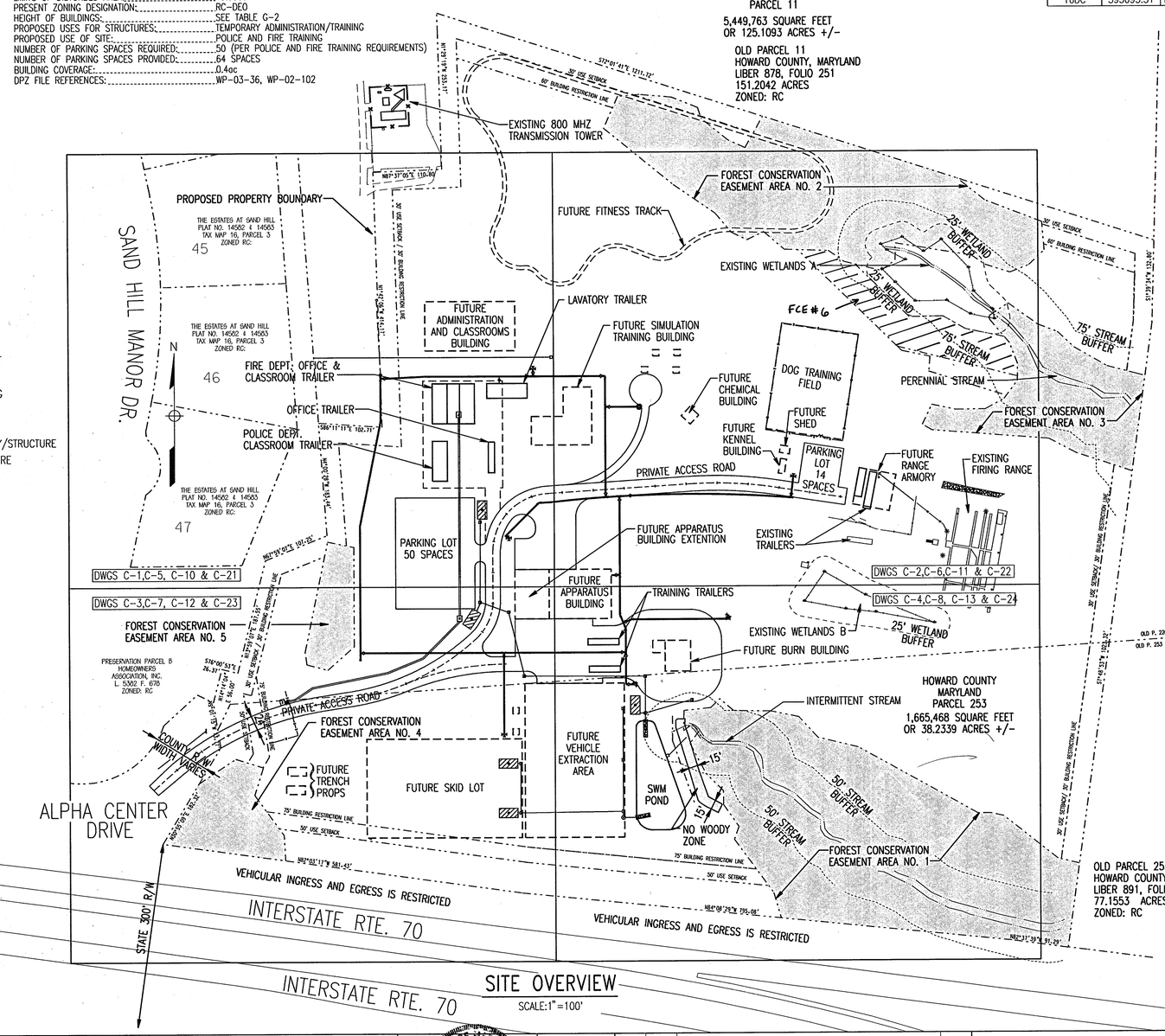

SITE OVERVIEW
SCALE:1"=100'

HOWARD COUNTY
MARYLAND
PARCEL 220

7,827,264 SQUARE FEET
OR 179.6893 ACRES +/-

OLD PARCEL 220
HOWARD COUNTY, MARYLAND
LIBER 891, FOLIO 314
114.6760 ACRES +/-
ZONED:RC

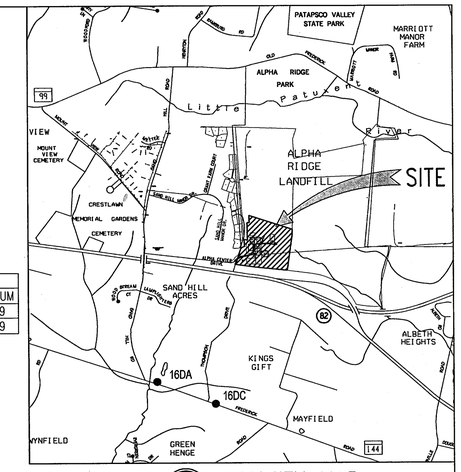

VICINITY MAP
SCALE:1"=2000'

GRAPHIC SCALE
100 0 100 200
SCALE: 1" = 100'
2000 0 2000 4000
SCALE: 1" = 2000'

GENERAL NOTES

NON-RESIDENTIAL SITE DEVELOPMENT PLAN

1. ALL CONSTRUCTION SHALL BE IN ACCORDANCE WITH THE LATEST STANDARDS AND SPECIFICATIONS OF HOWARD COUNTY PLUS MSHA STANDARDS AND SPECIFICATIONS IF APPLICABLE.
2. THE CONTRACTOR SHALL NOTIFY THE DEPARTMENT OF PUBLIC WORKS/BUREAU OF ENGINEERING/CONSTRUCTION INSPECTION DIVISION AT (410) 313-1880 AT LEAST FIVE (5) WORKING DAYS PRIOR TO THE START OF WORK.
3. THE CONTRACTOR SHALL NOTIFY "MISS UTILITY" AT 1-800-257-7777 AT LEAST 48 HOURS PRIOR TO ANY EXCAVATION WORK BEING DONE.
4. TRAFFIC CONTROL DEVICES, MARKINGS AND SIGNING SHALL BE IN ACCORDANCE WITH THE LATEST EDITION OF THE MANUAL OF UNIFORM TRAFFIC CONTROL DEVICES (MUTCD). ALL STREET AND REGULATORY SIGNS SHALL BE IN PLACE PRIOR TO THE PLACEMENT OF ANY ASPHALT.
5. ALL PLAN DIMENSIONS ARE TO FACE OF CURB UNLESS OTHERWISE NOTED.
6. THE EXISTING TOPOGRAPHY IS TAKEN FROM FIELD RUN SURVEY WITH ONE FOOT CONTOUR INTERVALS PREPARED BY WHITMAN REQUARDT & ASSOCIATES L.L.P. DATED 07/11/02. .
7. THE COORDINATES SHOWN HEREON ARE BASED UPON THE HOWARD COUNTY GEODETIC CONTROL WHICH IS BASED UPON THE MARYLAND STATE PLANE COORDINATE SYSTEM. HOWARD COUNTY MONUMENT NUMBERS 16DA AND 16DC WERE USED FOR THIS PROJECT.
8. WATER IS PUBLIC. CONTRACT NUMBER IS 44-4072 AND DRAINAGE AREA IS LITTLE PATUXENT (108P.S.).
9. SEWER IS PROVIDED BY A PRIVATE ON-SITE HOLDING TANK.
10. STORM WATER MANAGEMENT WILL BE PROVIDED BY A COMBINATION OF AN ON-SITE P-5 POCKET POND (QUALITY/CPv MANAGEMENT), A STORMCEPTOR (QUALITY PRE-TREATMENT), INFILTRATION STRUCTURES, (RECHARGE), GRASS CHANNEL (QUALITY + RECHARGE), NON-ROOFTOP + ROOFTOP DISCONNECTION (QUALITY + RECHARGE). THESE FACILITIES ARE TO BE PUBLICLY MAINTAINED.
11. EXISTING UTILITIES ARE BASED ON PROPOSED LOCATIONS PROVIDED BY THE HOWARD COUNTY DEPARTMENT OF PUBLIC WORKS UTILITY DESIGN DIVISION.
12. THERE IS NO FLOODPLAIN ON THIS SITE.
13. THE WETLANDS DELINEATION STUDY FOR THIS PROJECT WAS PREPARED BY WHITMAN REQUARDT & ASSOCIATES L.L.P., JULY 22, 2002.
14. NO TRAFFIC STUDY IS REQUIRED FOR THIS PROJECT.
15. A WAIVER DEFERRING THE PLACEMENT OF BITUMINOUS PAVING TO A LATER DATE WAS APPROVED ON JULY 16, 2002 BY HOWARD COUNTY DPW) PROVIDED THAT APPROPRIATE DUST CONTROL MEASURES ARE INSTITUTED. APPROPRIATE DUST CONTROL MEASURE ARE TO BE APPLIED TO ALL GRAVEL SURFACES.
16. THIS SITE IS EXEMPT FROM THE APFO TEST REQUIREMENTS AS STATED IN SECTIONS 16,1107-(2)-(I) AND 16,1110-(h)-(2) OF THE HOWARD COUNTY CODE.
17. A WAIVER FOR SECTION 16.147 OF THE HOWARD COUNTY SUBDIVISION AND LAND DEVELOPMENT REGULATIONS WAS APPROVED ON APRIL 23, 2002, WP-02-102 TO ALLOW RECORDING OF ADJOINER DEEDS TO RECONFIGURE 3 COUNTY OWNED PARCELS OF LAND TO ESTABLISH REVISED PARCEL 253
18. USE OF A SEWAGE HOLDING TANK WAS APPROVED BY THE HOWARD COUNTY HEALTH DEPARTMENT ON MARCH 25, 2002.
19. THE FIRE DEPT. OFFICE & CLASSROOM TRAILER, POLICE DEPT. CLASSROOM, OFFICE TRAILER, TRAINING TRAILERS AND LAVATORY TRAILERS WILL BE PLACED ON THE SITE UNDER A SEPARATE CONTRACT.
20. THE PROPERTY BOUNDARIES SHOWN ON THESE PLANS HAVE BEEN RECORDED AS NEW DEED LIBER 6689 FOLIO 619 AND PLAT OF FOREST CONSERVATION REFERENCE NUMBER 15834
21. NO GRADING, REMOVAL OF VEGETATIVE COVER OR TREES, OR PLACEMENT OF NEW STRUCTURES IS PERMITTED WITHIN THE LIMITS OF WETLANDS, STREAMS OR THEIR REQUIRED BUFFERS AND FOREST CONSERVATION EASEMENT AREAS EXCEPT AS APPROVED BY WAIVER APPLICATION WP-03-36.
22. THIS PLAN HAS BEEN PREPARED IN ACCORDANCE WITH THE PROVISIONS OF SECTION 16.124 OF THE HOWARD COUNTY CODE AND THE LANDSCAPE MANUAL.
23. THIS PROJECT COMPLIES WITH THE REQUIREMENTS OF SECTION 16.1200 OF THE HOWARD COUNTY CODE AND THE FOREST CONSERVATION MANUAL WITH A TOTAL FOREST CONSERVATION OBLIGATION OF 7.63 oc HAS BEEN INCLUDED AS 7.19 oc IN RETENTION AND 0.44 oc IN REFORESTATION
24. ALL EXTERIOR LIGHT FIXTURES SHALL BE ORIENTED TO DIRECT LIGHT DOWNWARDS ON-SITE AWAY FROM ALL ADJOINING RESIDENTIAL PROPERTIES AND PUBLIC ROADS IN ACCORDANCE WITH SECTION 134 OF THE HOWARD COUNTY ZONING REGULATIONS.
25. THERE ARE NO CEMETERIES OR GRAVE SITES ON THE SUBJECT PROPERTY.
26. THIS PROJECT IS SUBJECT TO THE FIFTH EDITION OF SUBDIVISION AND LAND DEVELOPMENT REGULATIONS.
27. THE FOREST CONSERVATION EASEMENTS ON THIS PLAN HAVE BEEN ESTABLISHED TO FULFILL THE REQUIREMENTS OF SECTION 16.1200 OF THE HOWARD COUNTY CODE AND FOREST CONSERVATION MANUAL. NO CLEARING, GRADING OR CONSTRUCTION IS PERMITTED WITHIN THE FOREST CONSERVATION EASEMENTS, HOWEVER, FOREST MANAGEMENT PRACTICES AS DEFINED IN THE DEED OF FOREST CONSERVATION EASEMENT ARE ALLOWED.
28. STORMWATER MANAGEMENT HAS BEEN PROVIDED FOR ALL FACILITIES AND FUTURE STRUCTURES AS SHOWN ON THESE PLANS. ANY ADDITIONAL DEVELOPMENT ON THIS SITE WILL REQUIRE RE-EVALUATION OF THE STORM WATER MANAGEMENT REQUIREMENTS.
29. ALL UTILITIES CONSTRUCTED WITHIN FILL MATERIAL MUST BE PLACED IN ACCORDANCE WITH AASHTO-T180.
30. THE CONTRACTOR OR DEVELOPER SHALL CONTACT THE HOWARD COUNTY CONSTRUCTION INSPECTION DIVISION 24 HOURS IN ADVANCE OF THE COMMENCEMENT OF WORK AT (410) 313-1880
31. A WAIVER PERTAINING TO THE REQUIREMENT OF A 12' MAINTENANCE BENCH AS DESCRIBED UNDER SECTION 5.2.7.A.2 OF THE HOWARD COUNTY DESIGN MANUAL VOLUME I - STORM DRAINAGE HAS BEEN APPROVED BY THE HOWARD COUNTY DEPARTMENT OF PUBLIC WORKS ON OCTOBER 15, 2002.
32. REFER TO SHEET 2 FOR A LIST OF APPROVED WAIVERS TABLE.

APPROVED: FOR PUBLIC WATER AND PRIVATE SEWERAGE SYSTEMS, HOWARD COUNTY HEALTH DEPARTMENT
COUNTY HEALTH OFFICER — DATE 3-5-03

APPROVED: HOWARD COUNTY DEPARTMENT OF PLANNING AND ZONING
DIRECTOR — DATE 3/6/03
CHIEF, DEVELOPMENT ENGINEERING DIVISION — DATE 3/11/03
CHIEF, DIVISION OF LAND DEVELOPMENT — DATE 3/7/03

DEPARTMENT OF PUBLIC WORKS
HOWARD COUNTY, MARYLAND
CHIEF, BUREAU OF UTILITIES — DATE

PREPARED BY:
WR&A
Whitman, Requardt and Associates, LLP.
801 South Caroline Street.
Baltimore, Maryland. 21231
410-235-3450

STATE OF MARYLAND — JAMES A. AVIRETT — PROFESSIONAL ENGINEER

DES: C.D.
DRN: C.K.
CHK: A.O.
DATE: 12/16/2002

BY	NO.	REVISION	DATE

COVER SHEET

600' SCALE MAP NO. 16 BLOCK NO. 2 / 8

OWNER:	WATER CODE: 730	SEWER CODE: PRIVATE-HOLDING TANK	ADDRESS CHART: BUILDING	STREET ADDRESS 2200 ALPHA CENTER DRIVE	
HOWARD COUNTY MARYLAND DEPARTMENT OF PUBLIC WORKS 3430 COURTHOUSE DRIVE ELLICOTT CITY, MD 21043 PH: 410 313-2700	PROJECT NAME: PUBLIC SAFETY EDUCATION CENTER		SECTION/AREA N/A	PARCEL 253	
	PLAT 15716 L.6689 F.619	FOREST CONS. PLAT 15834	ZONE RC-DEO	TAX MAP 16 / BLOCK 2/8	ELEC. DIST. 3rd / CENSUS TRACT 6030

G-1

PUBLIC SAFETY TRAINING CENTER
AT ALPHA RIDGE LANDFILL
CAPITAL PROJECT NO. C-0182
HOWARD COUNTY, MARYLAND

SCALE AS SHOWN

SHEET 1 OF 39

SDP-03-36

MrU3490\getgold.dgn
Thu Feb 20 15:42:12 2003

ABBREVIATIONS

AASHTO	AMERICAN ASSOCIATION OF STATE HIGHWAY AND TRANSPORTATION OFFICIALS
ASTM.	ASSOCIATION FOR STANDARD TESTING METHODS
APPROX.	APPROXIMATELY
BLDG.	BUILDING
BIT.	BITUMINOUS
B.M.	BENCH MARK
CFS.	CUBIC FEET PER SECOND
CO.	CLEANOUT
COMP.	COMPACTED
CONN.	CONNECTION
CMP.	CORRUGATED METAL PIPE
DIA., DIAM.	DIAMETER
DWG., DRWG	DRAWING
EL., ELEV.	ELEVATION
ELECT., ELEC.	ELECTRICAL
ESAN.	EXISTING SANITARY
UE.	UNDERGROUND ELECTRIC
EUGT&E.	EXISTING UNDERGROUND TELEPHONE & ELECTRIC
EXST., EX.	EXISTING
FM	FORCE MAIN
FPS.	FEET PER SECOND
INV.	INVERT
IP.	INLET PROTECTION
MECH.	MECHANICAL
MFR.	MANUFACTURER
M.H.	MANHOLE
MIN.	MINIMUM
MW	MONITORING WELL
OHE.	OVERHEAD ELECTRIC
OHT.	OVERHEAD TELEPHONE
P.I.	POINT OF INTERSECTION, POST INDICATOR
PC.	POINT OF CURVATURE
P.T.	POINT OF TANGENCY
PVC	POINT OF VERTICAL CURVE
PROP.	PROPOSED
SDR.	STANDARD DIMENSION RATIO
S	SOUTH, SLOPE, SANITARY
SAN	SANITARY
TEL	TELEPHONE
W-4	WATER PROFILE IDENTIFICATION
T/G	TOP OF GRATE
T/MH	TOP OF MANHOLE
T/W	TOP OF WELL

LIST OF DRAWINGS

SHEET NO.	DRAWING NO.	SHEET TITLE
1	G-1	COVER SHEET
2	G-2	GENERAL NOTES AND LIST OF DRAWINGS
3	C-1	SURVEY / DEMOLITION PLAN
4	C-2	SURVEY / DEMOLITION PLAN
5	C-3	SURVEY / DEMOLITION PLAN
6	C-4	SURVEY / DEMOLITION PLAN
7	C-5	GRADING / PAVING PLAN
8	C-6	GRADING / PAVING PLAN
9	C-7	GRADING / PAVING PLAN
10	C-8	GRADING / PAVING PLAN
11	C-9	PROFILE - PRIVATE ACCESS ROAD
12	C-10	UTILITY PLAN
13	C-11	UTILITY PLAN
14	C-12	UTILITY PLAN
15	C-13	UTILITY PLAN
16	C-14	PROFILES - STORM DRAINS
17	C-15	PROFILES
18	C-16	PROFILES - WATER MAINS
19	C-17	PROFILES - WATER MAINS
20	C-18	PROFILES - SANITARY SEWER AND DETAILS
21	C-19	DETAILS
22	C-20	FENCE AND GATE DETAILS
23	C-21	EROSION AND SEDIMENT CONTROL PLAN
24	C-22	EROSION AND SEDIMENT CONTROL PLAN
25	C-23	EROSION AND SEDIMENT CONTROL PLAN
26	C-24	EROSION AND SEDIMENT CONTROL PLAN
27	C-25	EROSION AND SEDIMENT CONTROL NOTES
28	C-26	EROSION AND SEDIMENT CONTROL NOTES
29	C-27	EROSION AND SEDIMENT CONTROL DETAILS
30	C-28	DRAINAGE AREA MAP
31	C-29	FOREST STAND DELINEATION
32	C-30	FOREST STAND DELINEATION ANALYSIS TABLE
33	C-31	FOREST CONSERVATION PLAN
34	C-32	FOREST CONSERVATION NOTES AND DETAILS
35	LS-1	LANDSCAPE PLAN - NORTH
36	LS-2	LANDSCAPE PLAN - SOUTH
37	LS-3	STORMWATER FACILITY LANDSCAPE PLAN, NOTES AND DETAILS
38	LS-4	LANDSCAPE NOTES AND DETAILS
39	E-01	LEVEL ALARM CONTROL ECD FLOAT INSTALLATION DETAIL CONDUIT DETAIL

BUILDING TABLE:

STRUCTURE		HEIGHT	STREET ADDRESS
POLICE DEPT. CLASSROOM TRAILER	TEMPORARY MODULAR BUILDING	12' +/-	2220
OFFICE TRAILER	TEMPORARY MODULAR BUILDING	12' +/-	2230
FIRE DEPT. OFFICE & CLASSROOM TRAILER	TEMPORARY MODULAR BUILDING	12' +/-	2210
LAVATORY TRAILER	TEMPORARY MODULAR BUILDING	12' +/-	2240
TRAINING TRAILER	TEMPORARY MODULAR BUILDING	12' +/-	

LIST OF APPROVED WAIVERS

WIAVER #	ACTION	DATE APPROVED	APPROVED BY
WRITTEN APPROVAL	DEFER PLACEMENT OF BITUMINOUS PAVING UNTIL A LATER PHASE OF WORK ON THIS SITE.	JULY 16, 2002	HOWARD COUNTY DEPARTMENT OF PUBLIC WORKS
WP-02-102	ALLOWS RECORDING OF ADJOINER DEEDS TO RECONFIGURE PARCELS 253, 220 AND 11.	APRIL 23, 2002	HOWARD COUNTY DEPARTMENT OF PLANNING AND ZONING
WRITTEN APPROVAL	APPROVED THE USE OF A SEWAGE HOLDING TANK	MARCH 25, 2002	HOWARD COUNTY HEALTH DEPARTMENT
WRITTEN APPROVAL	WAIVES THE REQUIREMENT FOR A 12' BENCH, 1' ABOVE THE NORMAL POOL ELEVATION, WITHIN THE SWM POND AS DESCRIBED UNDER SECTION 5.2.7.A.2 OF THE HOWARD COUNTY DESIGN MANUAL, VOLUME 1.	OCTOBER 15, 2002	HOWARD COUNTY DEPARTMENT OF PUBLIC WORKS
WP-03-36	ALLOWS DISTURBANCE WITHIN THE STREAM BUFFER ON THE SOUTH EAST PORTION OF THE SITE IN THE VICINITY OF THE SWM POND AND FUTURE BURN BUILDING.	DECEMBER 9, 2002	HOWARD COUNTY DEPARTMENT OF PLANNING AND ZONING
WRITTEN APPROVAL	ALLOWS THE USE OF A STORMCEPTOR	OCTOBER 7, 2002	HOWARD COUNTY DEPARTMENT OF PUBLIC WORKS

SEQUENCE OF CONSTRUCTION

WEEKS

1. CONTRACTOR MUST OBTAIN A GRADING PERMIT PRIOR TO COMMENCEMENT OF CONSTRUCTION. 1

2. ONCE GRADING PERMIT IS OBTAINED NOTIFY "MISS UTILITY" AT 1-800-257-7777 AT LEAST 48 HOURS PRIOR TO THE START OF ANY CONSTRUCTION. 1

3. A MINIMUM OF 24 HOURS MUST BE GIVEN TO THE HOWARD COUNTY OFFICE OF INSPECTION AND PERMITS PRIOR TO THE START OF ANY CONSTRUCTION. (410) 313-1855. 1

4. CONTACT BGE TO HAVE THE POWER FOR THE EXISTING POLICE TRAILERS DISCONNECTED. 1-2

5. INSTALL SEDIMENT CONTROL MEASURES (SCE, EARTH DIKES, AND SILT FENCE). 1-2

6. BEGIN DEMOLITION. RELOCATE EXISTING POLICE TRAILERS AND ALL SALVAGED MATERIALS TO THE AREA INDICATED ON SHEET C-1. 2-4

7. INSTALL SUPER SILT FENCE LOCATED AT THE NORTH END OF THE GRASS SWALE THEN GRADE AND STABILIZE THE GRASS SWALE WEST OF THE FUTURE RANGE ARMORY (SHEET C-22). ONCE SWALE IS GRADED INSTALL EROSION CONTROL MATTING AND SILT FENCE ON THE UPHILL (WEST SIDE) OF THE SWALE. THE SUPER SILT FENCE NORTH OF THE SWALE MAY BE REMOVED UPON FULL STABILIZATION OF THE SWALE AND WITH PERMISSION OF THE INSPECTOR. 4-6

8. WITH THE PERMISSION OF THE INSPECTOR, INSTALL SUPER SILT FENCE LOCATED AT THE SOUTH-WEST ENDS OF THE SWALES LOCATED ON BOTH SIDES OF THE SITE ENTRANCE. GRADE THE AREA NORTH OF THE SITE ENTRANCE (SHEET C-23). STABILIZE ALL GRADED AREAS UPON COMPLETION WITH EROSION CONTROL MATTING. ONCE AREA HAS BEEN STABILIZED INSTALL SILT FENCE AND BEGIN INSTALLATION OF THE CULVERT. ONCE THE CULVERT IS INSTALLED AND THE SWALES ARE FULLY STABILIZED THE SUPER SILT FENCE MAY BE REMOVED WITH PERMISSION OF THE INSPECTOR. 4-6

9. CONSTRUCT SEDIMENT TRAPS ST-1 AND ST-2 AND ASSOCIATED EARTH DIKES. CONSTRUCT THE STORMWATER MANAGEMENT POND/SEDIMENT TRAP ST-3. DO NOT GRADE THE FOREBAY. BRICK THE OPENNINGS IN THE OUTLET STRUCTURE SHUT. DO NOT INTALL THE ORIFICE PLATE INSIDE THE OUTLET STRUCTURE AND INSTALL THE TEMPORARY RISER. UTILIZE REMOVABLE PUMP STATION TO ALLOW FOR DEWATERING OF SEDIMENT TRAPS AS NECESSARY. PROVIDE GROUTED CUT-OFFS AT THE END OF ALL APRONS AND AT THE END OF ALL INFLOW PROTECTION. 6-8

10. WITH PERMISSION FROM THE INSPECTOR, BEGIN GRADING THE ACCESS ROAD AND FUTURE KENNEL/RANGE ARMORY AREA. STABILIZE DITCHES WITH EROSION CONTROL MATTING AS INDICATED. STOCKPILE ANY MATERIAL SUITABLE FOR THE POND LINER AND POND EMBANKMENT. PROVIDE DUST CONTROL MEASURES AT THE END OF EACH DAY PER THE SPECIFICATIONS ON SHEET C-27. 8-10

11. WITH PERMISSION FROM THE INSPECTOR, GRADE AND PERMANENTLY STABILIZE FUTURE KENNEL/RANGE ARMORY AREA. ONCE THE AREA IS STABLE PLACE THE EXISTING TRAILERS AS INDICATED ON THE PLANS AND REINSTALL THE OVERHEAD ELECTRIC POLES AND ORIGINAL METER EQUIPMENT. 10-11

12. INSTALL STORM DRAINS, INLETS AND ASSOCIATED RECHARGE DEVICES. TEMPORARILY BRICK SHUT PIPE OPENINGS FROM THE INLETS TO THE RECHARGE DEVICES. 11-13

13. WITH PERMISSION FROM THE INSPECTOR, GRADE THE SITE. STABILIZE DITCHES WITH EROSION CONTROL MATTING AS INDICATED. PROVIDE DUST CONTROL MEASURES AT THE END OF EACH DAY PER THE SPECIFICATIONS ON SHEET C-27. 13-15

14. ONCE SITE HAS BEEN PERMANENTLY STABILIZED AND PERMISSION HAS BEEN GRANTED BY THE SEDIMENT CONTROL INSPECTOR:
    - i. REMOVE SEDIMENT TRAPS ST-1 AND ST-2
    - ii. FLUSH THE STORM DRAIN SYSTEM WITH CLEAN WATER TO REMOVE ANY RESIDUAL SEDIMENT.
    - iii. GRADE THE FOREBAY AREA AND THE STORAGE BASIN IN THE STORMWATER MANAGEMENT POND/SEDIMENT TRAP ST-3 AND PERMANENTLY STABILIZE. RESET/REPLACE ALL INFLOW PROTECTION AT THE STORM DRAIN OUTFALLS.
    - iv. UNBLOCK THE PIPE OPENINGS FROM THE INLETS TO THE RECHARGE DEVICES.
    - v. ONCE THE MICRO POOL AREA AND THE STORAGE BASIN ARE PERMANENTLY STABILIZED, UNBLOCK THE OUTLET STRUCTURE IN THE STORMWATER MANAGEMENT POND/SEDIMENT TRAP ST-3, REMOVE THE TEMPORARY DRAWDOWN DEVICE AND INSTALL THE PERMANENT DRAWDOWN DEVICE.
    - vi. GRADE THE SWALE SOUTH OF THE STORMWATER MANAGEMENT POND / SEDIMENT TRAP ST-3 AS INDICATED BY THE DASHED CONTOURS. STABILIZE WITH EROSION CONTROL MATTING WHEN GRADING IS COMPLETE. 15-16

15. WITH PERMISSION FROM THE SEDIMENT CONTROL INSPECTOR REMOVE ALL REMAINING EARTH DIKES, SILT FENCE AND SUPER SILT FENCE. 16-17

APPROVED: FOR PUBLIC WATER AND PRIVATE SEWERAGE SYSTEMS, HOWARD COUNTY HEALTH DEPARTMENT

3-5-03

COUNTY HEALTH OFFICER — DATE

APPROVED: HOWARD COUNTY DEPARTMENT OF PLANNING AND ZONING

3/18/03

DIRECTOR — DATE

3/17/03

CHIEF, DEVELOPMENT ENGINEERING DIVISION — DATE

3/17/03

CHIEF, DIVISION OF LAND DEVELOPMENT — DATE

DEPARTMENT OF PUBLIC WORKS
HOWARD COUNTY, MARYLAND

CHIEF, BUREAU OF UTILITIES — DATE

PREPARED BY :

WR&A

Whitman, Requardt and Associates, LLP.
801 South Caroline Street.
Baltimore, Maryland. 21231
410-235-3450

STATE OF MARYLAND — JAMES A. AVIRETT — No. 18210 — PROFESSIONAL ENGINEER

DES: C.D.
DRN: C.K.
CHK: A.O.
DATE: 12/16/2002

BY	NO.	REVISION	DATE

GENERAL NOTES AND LIST OF DRAWINGS

600' SCALE MAP NO. 16 BLOCK NO. 2 / 8

PUBLIC SAFETY TRAINING CENTER
AT ALPHA RIDGE LANDFILL
CAPITAL PROJECT NO. C-0182
HOWARD COUNTY, MARYLAND

G-2

SCALE AS SHOWN

SHEET 2 OF 39

SDP-03-36

M:\13490\pstcg02.dgn
Thu Feb 20 15:42:24 2003

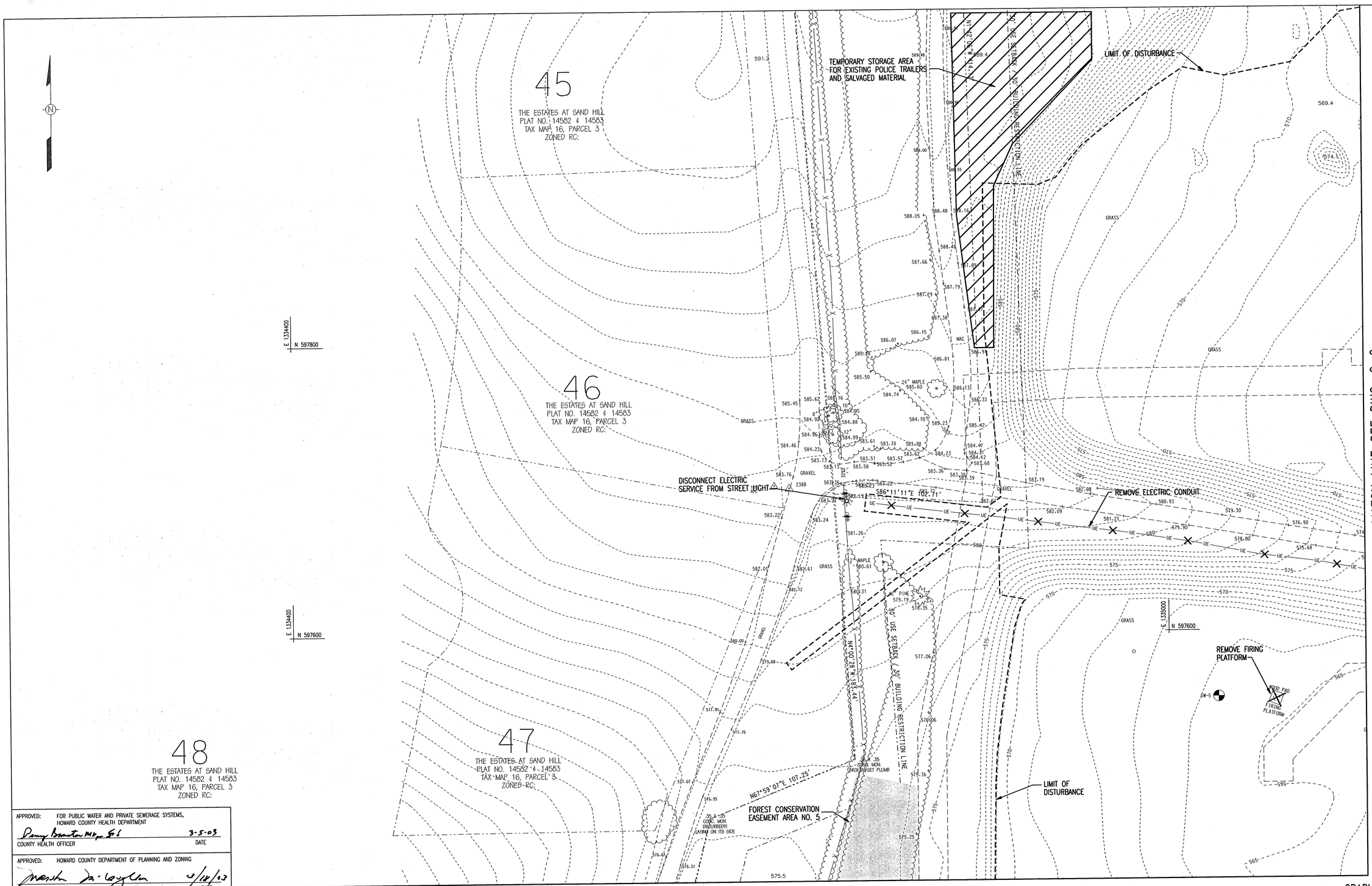

MATCH LINE SEE DWG. C-2

MATCH LINE SEE DWG. C-3

GRAPHIC SCALE

30 20 10 0 30 60

SCALE: 1" = 30'

APPROVED: FOR PUBLIC WATER AND PRIVATE SEWERAGE SYSTEMS, HOWARD COUNTY HEALTH DEPARTMENT

COUNTY HEALTH OFFICER — DATE 3-5-03

APPROVED: HOWARD COUNTY DEPARTMENT OF PLANNING AND ZONING

DIRECTOR — DATE 3/18/03

CHIEF, DEVELOPMENT ENGINEERING DIVISION — DATE 3/11/03

CHIEF, DIVISION OF LAND DEVELOPMENT — DATE 3/17/03

DEPARTMENT OF PUBLIC WORKS
HOWARD COUNTY, MARYLAND

CHIEF, BUREAU OF UTILITIES — DATE

PREPARED BY :

WR&A

Whitman, Requardt and Associates, LLP.
801 South Caroline Street.
Baltimore, Maryland. 21231
410-235-3450

STATE OF MARYLAND — JAMES A. AVIRETT, JR. — PROFESSIONAL ENGINEER

DES: C.D.
DRN: C.K.
CHK: A.O.
DATE: 12/16/2002

BY	NO.	REVISION	DATE

SURVEY/DEMOLITION PLAN

600' SCALE MAP NO. 16 BLOCK NO. 2 / 8

PUBLIC SAFETY TRAINING CENTER
AT ALPHA RIDGE LANDFILL
CAPITAL PROJECT NO. C-0182
HOWARD COUNTY, MARYLAND

C-1

SCALE AS SHOWN

SHEET 3 OF 39

SDP-03-36

M:\13490\pstcc01.dgn
Thu Feb 20 15:34:12 2003

MATCH LINE SEE DWG. C-1

FOREST CONSERVATION EASEMENT AREA NO. 2

LIMIT OF DISTURBANCE

REMOVE VEGETATION/WOODS WITHIN LIMITS OF DISTURBANCE PATTERN

LIMIT OF DISTURBANCE

CONTACT BGE FOR OVERHEAD ELECTRIC DISCONNECTION

REMOVE SIGNS

REMOVE AND TEMPORARILY STORE DUMPSTER

REMOVE HAND-BOX

REMOVE FIRING PLATFORM AND STEPS

REMOVE WALL

REMOVE AND TEMPORARILY STORE ELECTRICAL POLE & EQUIPMENT

REMOVE ELECTRIC CONDUIT

RELOCATE TRAILERS

REMOVE PLATFORM AND STEPS

REMOVE WOOD RAMP

REMOVE ELECTRIC CONDUIT

REMOVE FENCE AND SALVAGE

REMOVE METAL/FOAM PAD

REMOVE FALLEN TARGET PAD

REMOVE AND SALVAGE 4'x6' PAD

REMOVE WOOD WALL AND SALVAGE

REMOVE STEPS AND SALVAGE

LIMIT OF DISTURBANCE

LIMIT OF DISTURBANCE

WETLAND A

WETLAND B

25' WETLAND BUFFER

75' STREAM BUFFER

30' USE SETBACK

60' BUILDING RESTRICTION LINE

NOTE: ALL STREAMS AND WETLANDS ARE WATERS OF THE U.S.

PERENNIAL STREAM

FOREST CONSERVATION EASEMENT AREA NO. 3

PILE 545

MATCH LINE SEE DWG. C-4

GRAPHIC SCALE

30 20 10 0 30 60

SCALE: 1" = 30'

C-2

APPROVED: FOR PUBLIC WATER AND PRIVATE SEWERAGE SYSTEMS, HOWARD COUNTY HEALTH DEPARTMENT

COUNTY HEALTH OFFICER — DATE 3-5-03

APPROVED: HOWARD COUNTY DEPARTMENT OF PLANNING AND ZONING

DIRECTOR — DATE 3/12/03

CHIEF, DEVELOPMENT ENGINEERING DIVISION — DATE 3/11/03

CHIEF, DIVISION OF LAND DEVELOPMENT — DATE 3/17/03

DEPARTMENT OF PUBLIC WORKS
HOWARD COUNTY, MARYLAND

CHIEF, BUREAU OF UTILITIES — DATE

PREPARED BY :

WR&A

Whitman, Requardt and Associates, LLP.
801 South Caroline Street.
Baltimore, Maryland. 21231
410-235-3450

STATE OF MARYLAND — JAMES A. AVIRETT — PROFESSIONAL ENGINEER

DES: C.D.
DRN: C.K.
CHK: A.O.
DATE: 12/16/2002

BY	NO.	REVISION	DATE

SURVEY/DEMOLITION PLAN

600' SCALE MAP NO. 16 BLOCK NO. 2 / 8

PUBLIC SAFETY TRAINING CENTER
AT ALPHA RIDGE LANDFILL
CAPITAL PROJECT NO. C-0182
HOWARD COUNTY, MARYLAND

SCALE AS SHOWN

SHEET 4 OF 39

SDP-03-36

M:\13490\pstcc02.dgn
Thu Feb 20 10:34:39 2003

MATCH LINE SEE DWG. C-1

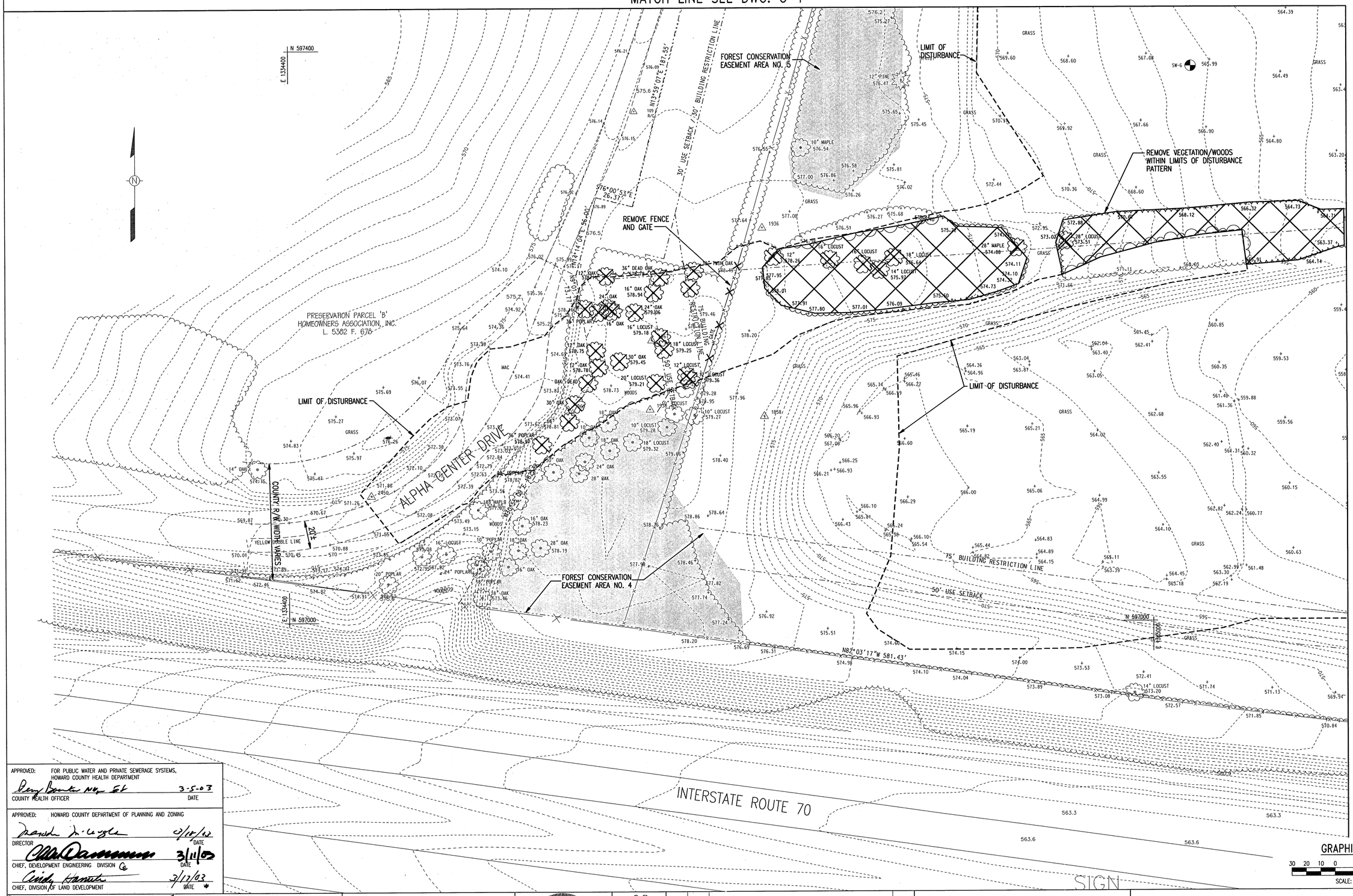

MATCH LINE SEE DWG. C-4

APPROVED: FOR PUBLIC WATER AND PRIVATE SEWERAGE SYSTEMS, HOWARD COUNTY HEALTH DEPARTMENT

COUNTY HEALTH OFFICER — DATE 3-5-03

APPROVED: HOWARD COUNTY DEPARTMENT OF PLANNING AND ZONING

DIRECTOR — DATE 3/10/03

CHIEF, DEVELOPMENT ENGINEERING DIVISION — DATE 3/11/03

CHIEF, DIVISION OF LAND DEVELOPMENT — DATE 3/17/03

DEPARTMENT OF PUBLIC WORKS
HOWARD COUNTY, MARYLAND

CHIEF, BUREAU OF UTILITIES — DATE

PREPARED BY :

WR&A
Whitman, Requardt and Associates, LLP.
801 South Caroline Street.
Baltimore, Maryland. 21231
410-235-3450

STATE OF MARYLAND — JAMES A. AVIRE — No. 10214 — PROFESSIONAL ENGINEER

DES: C.D.
DRN: C.K.
CHK: A.O.
DATE: 12/16/2002

BY	NO.	REVISION	DATE

SURVEY/DEMOLITION PLAN

600' SCALE MAP NO. 16 BLOCK NO. 2 / 8

PUBLIC SAFETY TRAINING CENTER
AT ALPHA RIDGE LANDFILL
CAPITAL PROJECT NO. C-0182
HOWARD COUNTY, MARYLAND

C-3

SCALE AS SHOWN

SHEET 5 OF 39

SDP-03-36

M:\13490\pstcc03.dgn
Thu Feb 20 16:35:55 2003

MATCH LINE SEE DWG. C-2

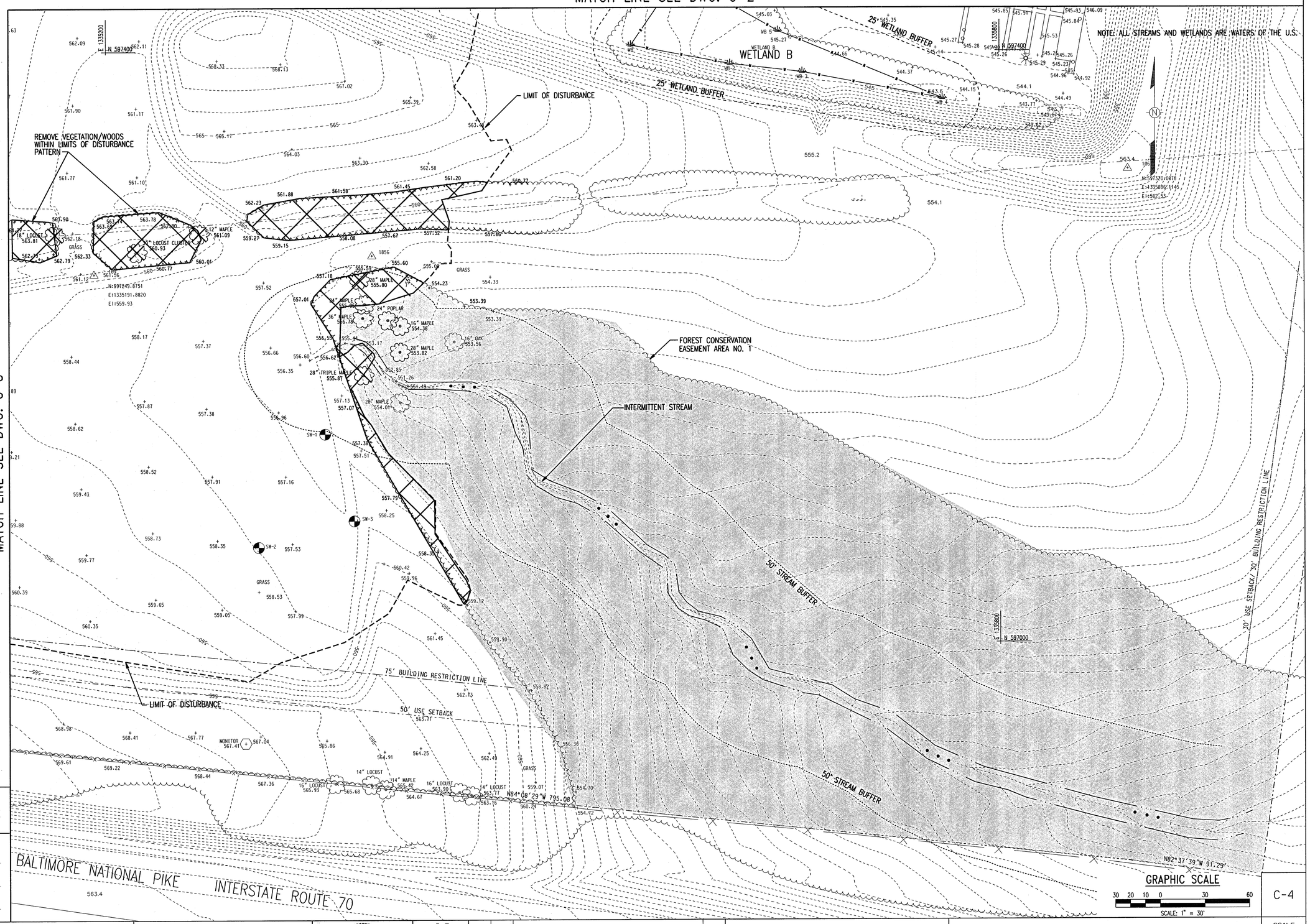

MATCH LINE SEE DWG. C-3

APPROVED: FOR PUBLIC WATER AND PRIVATE SEWERAGE SYSTEMS, HOWARD COUNTY HEALTH DEPARTMENT

COUNTY HEALTH OFFICER — DATE 3-5-03

APPROVED: HOWARD COUNTY DEPARTMENT OF PLANNING AND ZONING

DIRECTOR — DATE 3/18/03

CHIEF, DEVELOPMENT ENGINEERING DIVISION — DATE 3/11/03

CHIEF, DIVISION OF LAND DEVELOPMENT — DATE 3/17/03

DEPARTMENT OF PUBLIC WORKS
HOWARD COUNTY, MARYLAND

CHIEF, BUREAU OF UTILITIES — DATE

PREPARED BY :

WR&A

Whitman, Requardt and Associates, LLP.
801 South Caroline Street.
Baltimore, Maryland. 21231
410-235-3450

STATE OF MARYLAND — JAMES A. AVIRETT — 10210 — PROFESSIONAL ENGINEER

DES: C.D.
DRN: C.K.
CHK: A.O.
DATE: 12/16/2002

BY	NO.	REVISION	DATE

SURVEY/DEMOLITION PLAN

600' SCALE MAP NO. 16 BLOCK NO. 2 / 8

PUBLIC SAFETY TRAINING CENTER
AT ALPHA RIDGE LANDFILL
CAPITAL PROJECT NO. C-0182
HOWARD COUNTY, MARYLAND

C-4

SCALE AS SHOWN

SHEET 6 OF 39

SDP-03-36

M:\13490\pstcc04.dgn
Thu Feb 20 15:36:20 2003

STRUCTURE SCHEDULE									
NO.	TYPE	WIDTH (DIA.)	TOP ELEVATION		INVERT ELEVATION		STANDARD DETAIL	LOCATIONS	REMARK
			UPPER	LOWER	UPPER	LOWER			
I-1	OPEN END GRATE	4'-10"	566.50	- - - -	- - -	563.75	HO CO. SD4.36	NORTH EAST CORNER OF PARKING LOT	
I-2	OPEN END GRATE	4'-10"	566.00	- - - -	562.46	562.06	HO Co. SD4.36	SOUTH EAST CORNER OF PARKING LOT	
I-3	OPEN END GRATE	4'-10"	564.10	- - - -	561.57	561.47	HO Co. SD4.36	SOUTH EAST CORNER OF APPARATUS BAY	
I-4	OPEN END GRATE	4'-10"	563.60	- - - -	560.40	560.30	HO Co. SD4.36	NORTH WEST CORNER OF VEHICLE EXTRACTION	
I-5	DOUBLE TYPE 'S' INLET	5'-0.54"	561.30	- - - -	558.35	557.30	HO Co. SD4.23	SOUTH EAST OF TRAINING TRAILERS	
I-6	DBL. TYPE 'S' COMB.	5'-0.54"	559.75	- - - -	- - -	557.10	HO Co. SD4.34	SOUTH OF FUTURE BURN BUILDING	
I-7	DOUBLE TYPE 'S' INLET	5'-0.54"	564.08	- - - -	- - -	561.30	HO Co. SD4.23	EAST SIDE OF FUTURE SKID LOT	
I-8	DOUBLE TYPE 'S' INLET	5'-0.54"	564.08	- - - -	561.60	560.40	HO Co. SD4.23	EAST SIDE OF FUTURE SKID LOT	
I-9	DOUBLE TYPE 'S' INLET	5'-0.54"	560.53	- - - -	- - -	557.80	HO Co. SD4.23	EAST SIDE OF VEHICLE EXTRACTION AREA	
I-10	DOUBLE TYPE 'S' INLET	5'-0.54"	560.27	- - - -	557.00	556.90	HO Co. SD4.23	EAST SIDE OF VEHICLE EXTRACTION AREA	
I-11	DOUBLE TYPE 'S' INLET	5'-0.54"	560.30	- - - -	556.20	555.75	HO Co. SD4.23	EAST SIDE OF VEHICLE EXTRACTION AREA	
SD-1	MANHOLE	4'-0"	560.08	- - - -	556.70	556.60	HO Co. GS.12	NORTH END OF POND FOREBAY	
E-1	ENDWALL	11'-6"	- - - -	- - - -	- - -	556.50	HO Co. SD5.21	SWM POND FOREBAY	
E-2	ENDWALL	11'-6"	- - - -	- - - -	- - -	555.30	HO Co. SD5.21	SOUTH WEST CORNER OF SWM POND	
E-3	ENDWALL	6'-6"	- - - -	- - - -	- - -	555.00	HO Co. SD5.21	NORTH EAST CORNER OF SWM POND	
E-4	ENDWALL	6'-6"	- - - -	- - - -	- - -	572.00	HO Co. SD5.21	NORTH SIDE OF ACCESS ROAD AT THE ENTRANCE	
ES-1	END SECTION	12"	- - - -	- - - -	- - -	553.56	HO Co. SD5.52	END OF SWM POND OUTLET BARREL	
ES-2	END SECTION	12"	- - - -	- - - -	- - -	571.00	HO Co. SD5.52	NORTH SIDE OF ACCESS ROAD AT THE ENTRANCE	

PIPE SCHEDULE			
SIZE	TYPE	QUANTITY (L.F)	REMARKS
15"	CP, CLASS I	563	
18"	CP, CLASS I	339	
21"	CP, CLASS I	84	

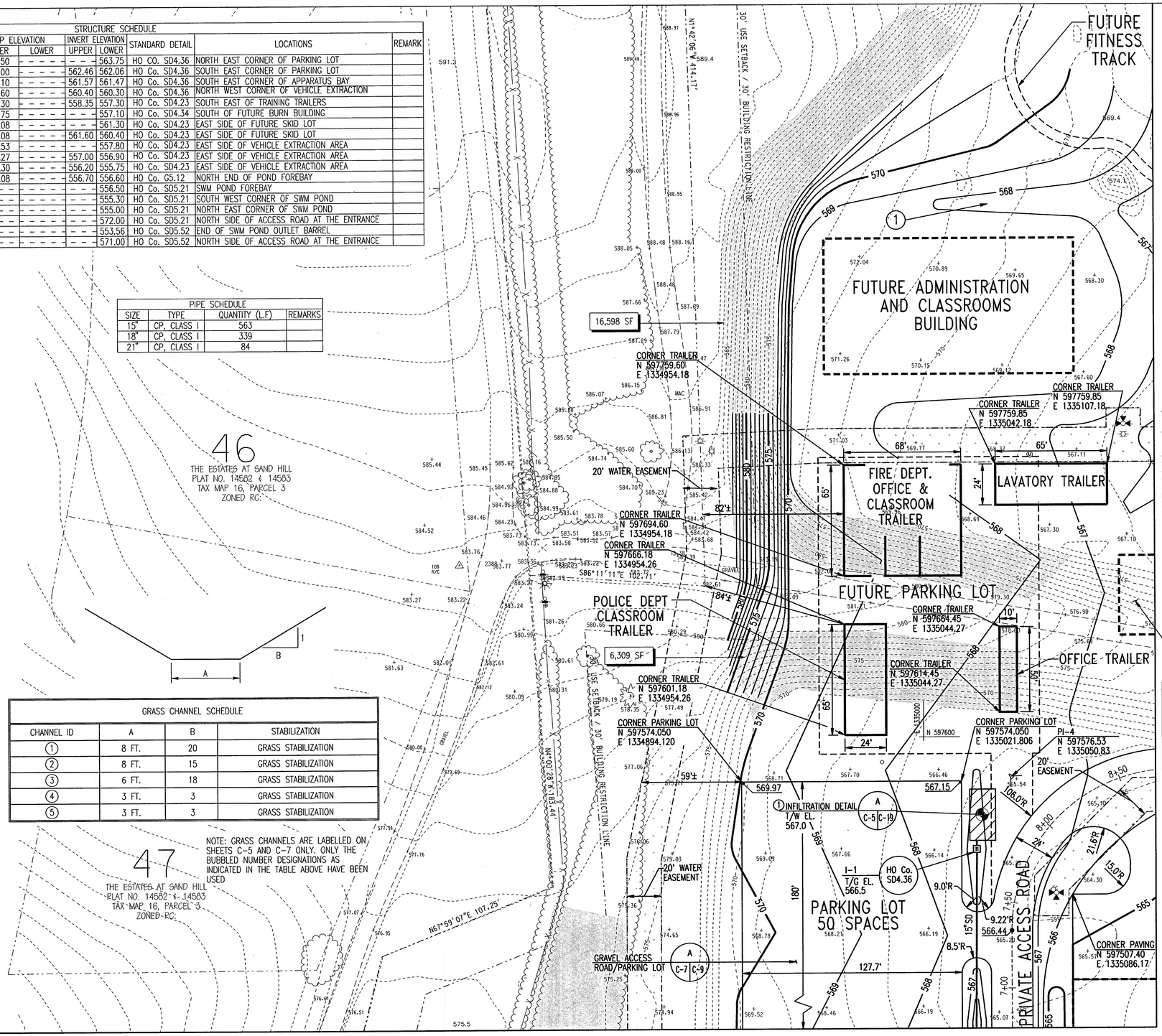

GRASS CHANNEL SCHEDULE			
CHANNEL ID	A	B	STABILIZATION
1	8 FT.	20	GRASS STABILIZATION
2	8 FT.	15	GRASS STABILIZATION
3	6 FT.	18	GRASS STABILIZATION
4	3 FT.	3	GRASS STABILIZATION
5	3 FT.	3	GRASS STABILIZATION

NOTE: GRASS CHANNELS ARE LABELLED ON SHEETS C-5 AND C-7 ONLY. ONLY THE BUBBLED NUMBER DESIGNATIONS AS INDICATED IN THE TABLE ABOVE HAVE BEEN USED

KEY

EXISTING SLOPES 25% OR GREATER

EXISTING SLOPES 15% TO 24.9%

CURVE DATA
CURVE #4 (PI-4)
DELTA = 87.7°
D = 60.95°
R = 94.0 ft.
L = 136.3 ft.
T = 90.4ft.
E = 36.4.0 ft.

APPROVED: FOR PUBLIC WATER AND PRIVATE SEWERAGE SYSTEMS, HOWARD COUNTY HEALTH DEPARTMENT
COUNTY HEALTH OFFICER — DATE 3-5-03

APPROVED: HOWARD COUNTY DEPARTMENT OF PLANNING AND ZONING
DIRECTOR — DATE 3/10/03
CHIEF, DEVELOPMENT ENGINEERING DIVISION — DATE 3/11/03
CHIEF, DIVISION OF LAND DEVELOPMENT — DATE 3/17/03

DEPARTMENT OF PUBLIC WORKS
HOWARD COUNTY, MARYLAND
CHIEF, BUREAU OF UTILITIES — DATE

PREPARED BY :
WR&A
Whitman, Requardt and Associates, LLP.
801 South Caroline Street.
Baltimore, Maryland. 21231
410-235-3450

STATE OF MARYLAND — JAMES K. KUNDE — No. 10210 — PROFESSIONAL ENGINEER

DES: C.D.
DRN: C.K.
CHK: A.O.
DATE: 12/16/2002

BY	NO.	REVISION	DATE

GRADING / PAVING PLAN

600' SCALE MAP NO. 16 BLOCK NO. 2 / 8

PUBLIC SAFETY TRAINING CENTER
AT ALPHA RIDGE LANDFILL
CAPITAL PROJECT NO. C-0182
HOWARD COUNTY, MARYLAND

GRAPHIC SCALE
30 20 10 0 30 60
SCALE: 1" = 30'

C-5

SCALE AS SHOWN

SHEET 7 OF 39

SDP-03-36

M:\13490\pstcc05.dgn
Thu Feb 20 15:36:59 2003

WETLANDS TABLE

LINE	COURSE	DIST.
WL6	N31°15'28"W	41.64'
WL7	N40°16'02"W	45.55'
WL8	N48°01'45"W	26.93'
WL9	N48°27'54"W	53.44'
WL10	N11°43'02"W	39.39'
WL11	N43°41'11"W	63.11'
WL12	S56°27'17"W	34.58'
WL13	N55°39'09"W	41.28'
WL14	S71°33'08"W	36.37'
WL15	S45°23'32"E	13.63'
WL16	S62°01'33"E	33.46'
WL17	S67°57'13"W	40.26'
WL18	S44°19'14"E	30.08'
WL19	S46°16'56"E	44.31'
WL20	N89°06'56"E	50.56'
WL21	S60°06'27"E	44.28'
WL22	S78°22'40"E	39.20'
WL23	S65°16'16"E	23.79'
WL24	S41°43'34"E	47.63'
WL25	S23°53'42"E	41.92'
WL26	S58°50'57"E	37.93'
WL27	S77°42'10"E	27.87'
WL37	N60°28'02"W	76.27'
WL38	S34°17'33"W	57.21'

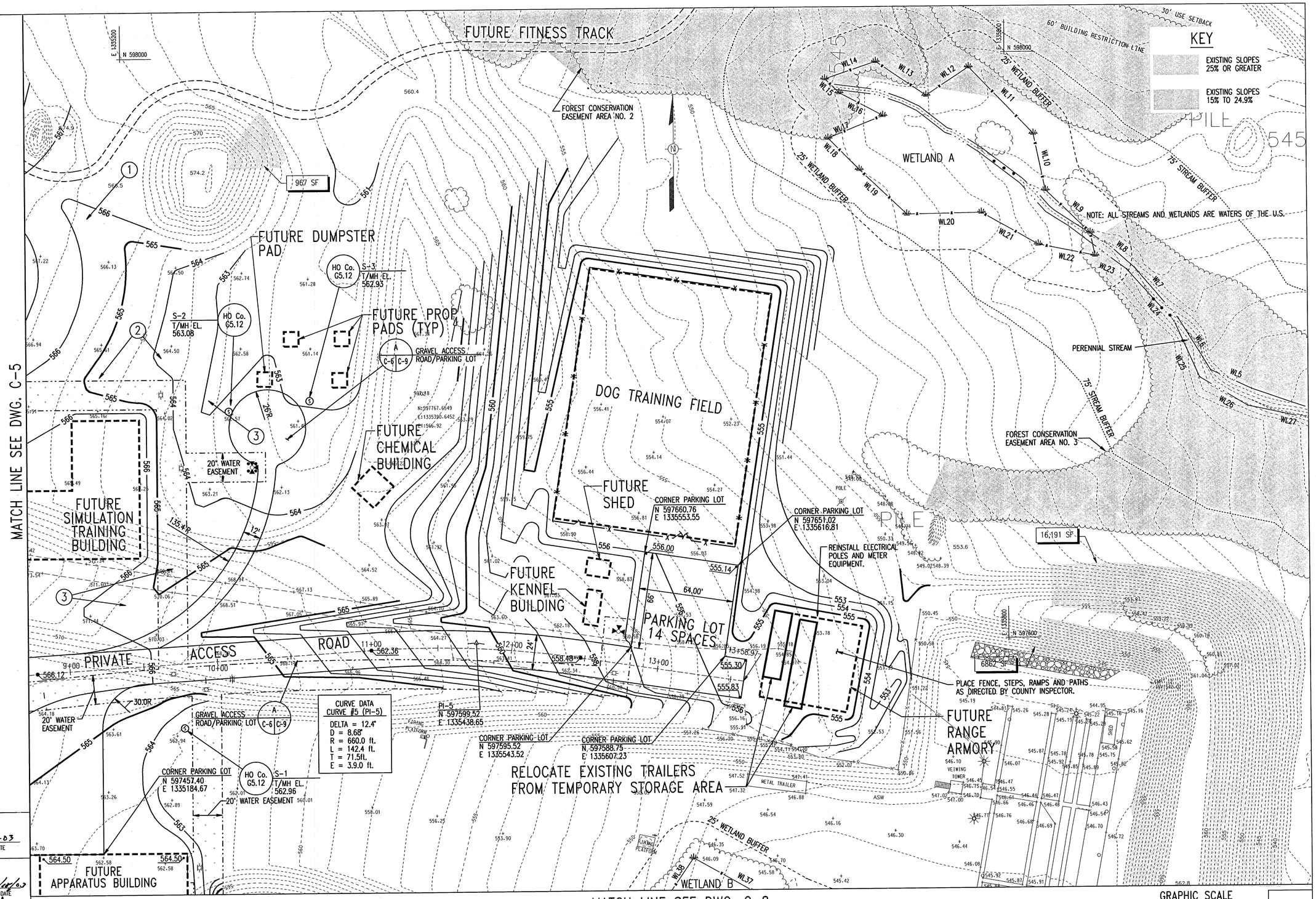

APPROVED: FOR PUBLIC WATER AND PRIVATE SEWERAGE SYSTEMS, HOWARD COUNTY HEALTH DEPARTMENT

COUNTY HEALTH OFFICER — DATE 3-5-03

APPROVED: HOWARD COUNTY DEPARTMENT OF PLANNING AND ZONING

DIRECTOR — DATE 3/10/03

CHIEF, DEVELOPMENT ENGINEERING DIVISION — DATE 3/11/03

CHIEF, DIVISION OF LAND DEVELOPMENT — DATE 3/17/03

DEPARTMENT OF PUBLIC WORKS
HOWARD COUNTY, MARYLAND

CHIEF, BUREAU OF UTILITIES — DATE

PREPARED BY :

WR&A
Whitman, Requardt and Associates, LLP.
801 South Caroline Street.
Baltimore, Maryland. 21231
410-235-3450

STATE OF MARYLAND — JAMES A. AVIRETT — No. 12619 — PROFESSIONAL ENGINEER

DES: C.D.
DRN: C.K.
CHK: A.O.
DATE: 12/16/2002

BY	NO.	REVISION	DATE

GRADING / PAVING PLAN

600' SCALE MAP NO. 16 BLOCK NO. 2 / 8

PUBLIC SAFETY TRAINING CENTER
AT ALPHA RIDGE LANDFILL
CAPITAL PROJECT NO. C-0182
HOWARD COUNTY, MARYLAND

GRAPHIC SCALE
30 20 10 0 30 60
SCALE: 1" = 30'

C-6

SCALE AS SHOWN

SHEET 8 OF 39

SDP-03-36

M:\13490\pstcc06.dgn
Thu Feb 20 15:37:23 2003

MATCH LINE SEE DWG. C-5

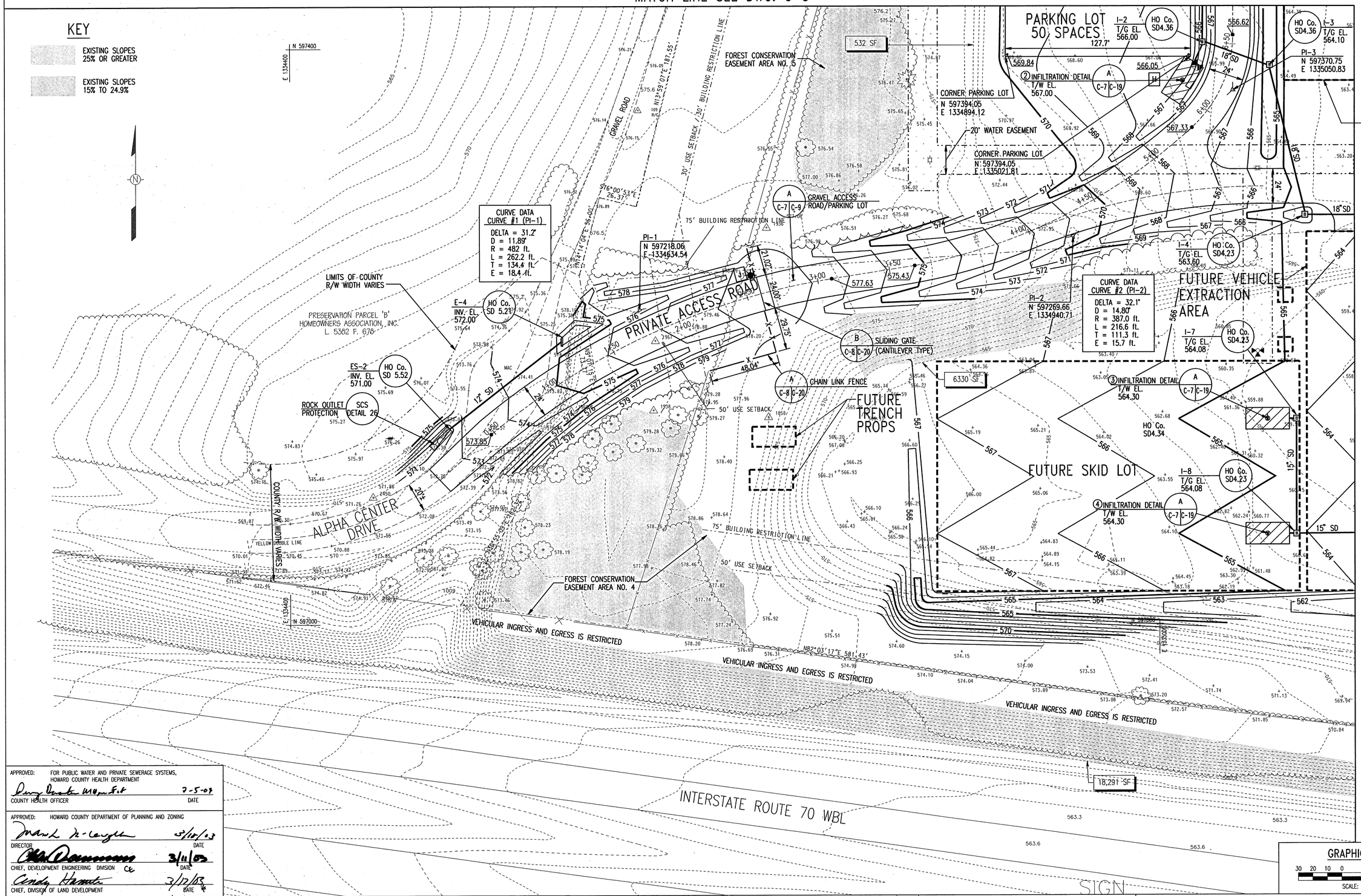

MATCH LINE SEE DWG. C-8

APPROVED: FOR PUBLIC WATER AND PRIVATE SEWERAGE SYSTEMS, HOWARD COUNTY HEALTH DEPARTMENT

COUNTY HEALTH OFFICER — DATE 7-5-03

APPROVED: HOWARD COUNTY DEPARTMENT OF PLANNING AND ZONING

DIRECTOR — DATE 3/10/03

CHIEF, DEVELOPMENT ENGINEERING DIVISION — DATE 3/11/03

CHIEF, DIVISION OF LAND DEVELOPMENT — DATE 3/17/03

DEPARTMENT OF PUBLIC WORKS
HOWARD COUNTY, MARYLAND

CHIEF, BUREAU OF UTILITIES — DATE

PREPARED BY:

WR&A
Whitman, Requardt and Associates, LLP.
801 South Caroline Street.
Baltimore, Maryland. 21231
410-235-3450

STATE OF MARYLAND — CHRISTOPHER J. DEMAN — 10210 — PROFESSIONAL ENGINEER

DES:	C.D.
DRN:	C.K.
CHK:	A.O.
DATE:	12/16/2002

BY	NO.	REVISION	DATE

GRADING / PAVING PLAN

600' SCALE MAP NO. 16 BLOCK NO. 2 / 8

PUBLIC SAFETY TRAINING CENTER
AT ALPHA RIDGE LANDFILL
CAPITAL PROJECT NO. C-0182
HOWARD COUNTY, MARYLAND

GRAPHIC SCALE
30 20 10 0 30 60
SCALE: 1" = 30'

C-7

SCALE AS SHOWN

SHEET 9 OF 39

SDP-03-36

MN\3490\pstcc07.dgn
Thu Feb 20 15:37:49 2003

WETLANDS TABLE

LINE	COURSE	DIST.
WL33	S79°15'56"E	67.74'
WL34	S83°34'43"E	48.80'
WL35	S79°16'55"E	95.68'
WL36	N67°35'49"W	119.49'
WL37	N60°28'02"W	76.27'
WL38	S34°17'33"W	57.21'

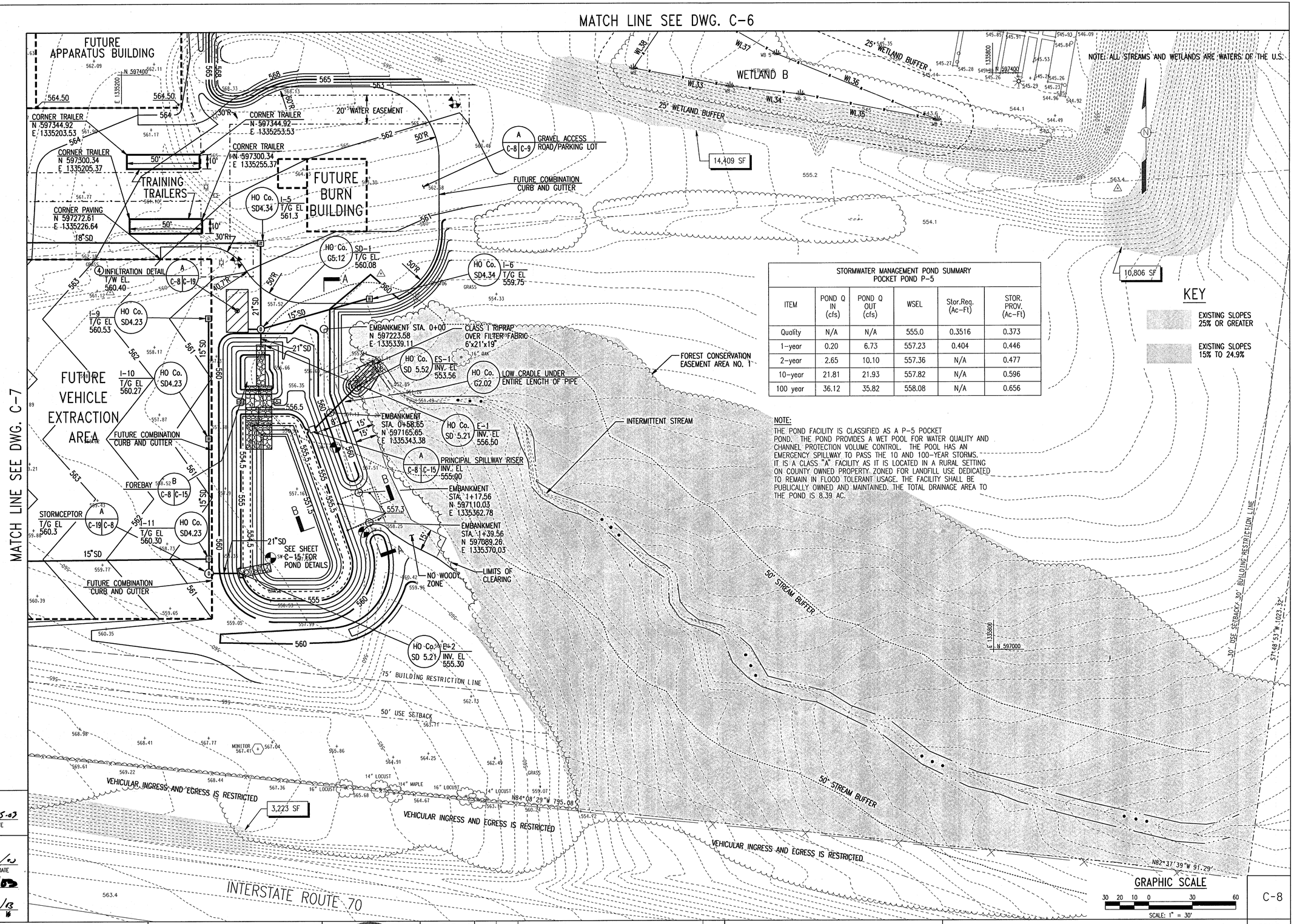

STORMWATER MANAGEMENT POND SUMMARY
POCKET POND P-5

ITEM	POND Q IN (cfs)	POND Q OUT (cfs)	WSEL	Stor.Req. (Ac-Ft)	STOR. PROV. (Ac-Ft)
Quality	N/A	N/A	555.0	0.3516	0.373
1-year	0.20	6.73	557.23	0.404	0.446
2-year	2.65	10.10	557.36	N/A	0.477
10-year	21.81	21.93	557.82	N/A	0.596
100 year	36.12	35.82	558.08	N/A	0.656

NOTE:
THE POND FACILITY IS CLASSIFIED AS A P-5 POCKET POND. THE POND PROVIDES A WET POOL FOR WATER QUALITY AND CHANNEL PROTECTION VOLUME CONTROL. THE POOL HAS AN EMERGENCY SPILLWAY TO PASS THE 10 AND 100-YEAR STORMS. IT IS A CLASS "A" FACILITY AS IT IS LOCATED IN A RURAL SETTING ON COUNTY OWNED PROPERTY. ZONED FOR LANDFILL USE DEDICATED TO REMAIN IN FLOOD TOLERANT USAGE. THE FACILITY SHALL BE PUBLICALLY OWNED AND MAINTAINED. THE TOTAL DRAINAGE AREA TO THE POND IS 8.39 AC.

APPROVED: FOR PUBLIC WATER AND PRIVATE SEWERAGE SYSTEMS, HOWARD COUNTY HEALTH DEPARTMENT

COUNTY HEALTH OFFICER — DATE 3-5-03

APPROVED: HOWARD COUNTY DEPARTMENT OF PLANNING AND ZONING

DIRECTOR — DATE 3/10/03

CHIEF, DEVELOPMENT ENGINEERING DIVISION — DATE 3/11/03

CHIEF, DIVISION OF LAND DEVELOPMENT — DATE 3/17/03

DEPARTMENT OF PUBLIC WORKS
HOWARD COUNTY, MARYLAND

CHIEF, BUREAU OF UTILITIES — DATE

PREPARED BY :

WR&A
Whitman, Requardt and Associates, LLP.
801 South Caroline Street.
Baltimore, Maryland. 21231
410-235-3450

STATE OF MARYLAND — ANDREW A. OLIVERO — No. 16618 — PROFESSIONAL ENGINEER

DES: C.D.
DRN: C.K.
CHK: A.O.
DATE: 12/16/2002

BY	NO.	REVISION	DATE

GRADING / PAVING PLAN

600' SCALE MAP NO. 16 BLOCK NO. 2 / 8

PUBLIC SAFETY TRAINING CENTER
AT ALPHA RIDGE LANDFILL
CAPITAL PROJECT NO. C-0182
HOWARD COUNTY, MARYLAND

C-8

SCALE AS SHOWN

SHEET 10 OF 39

W.O./13490/

SDP-03-36

M:\13490\pstcc08.dgn
Thu Feb 20 15:38:30 2003

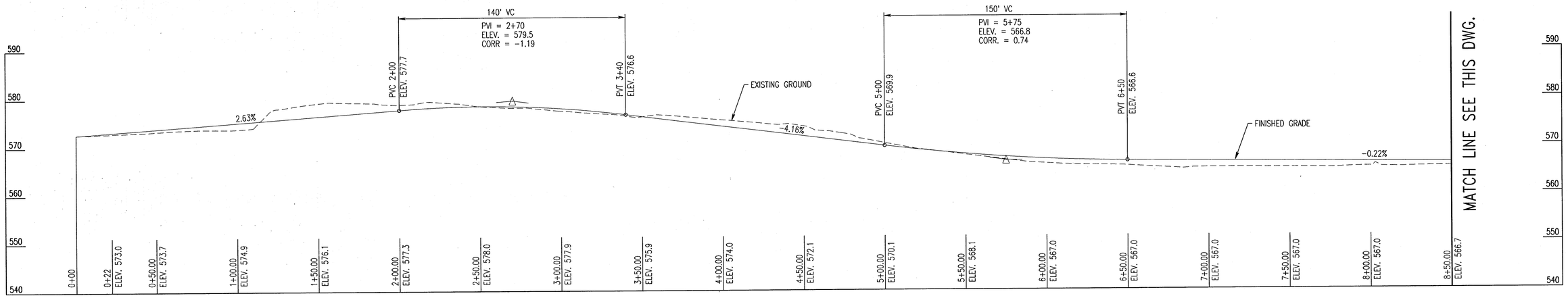

PROFILE - PRIVATE ACCESS ROAD

SCALE: 1" = 30' HORIZ
1" = 10' VERT

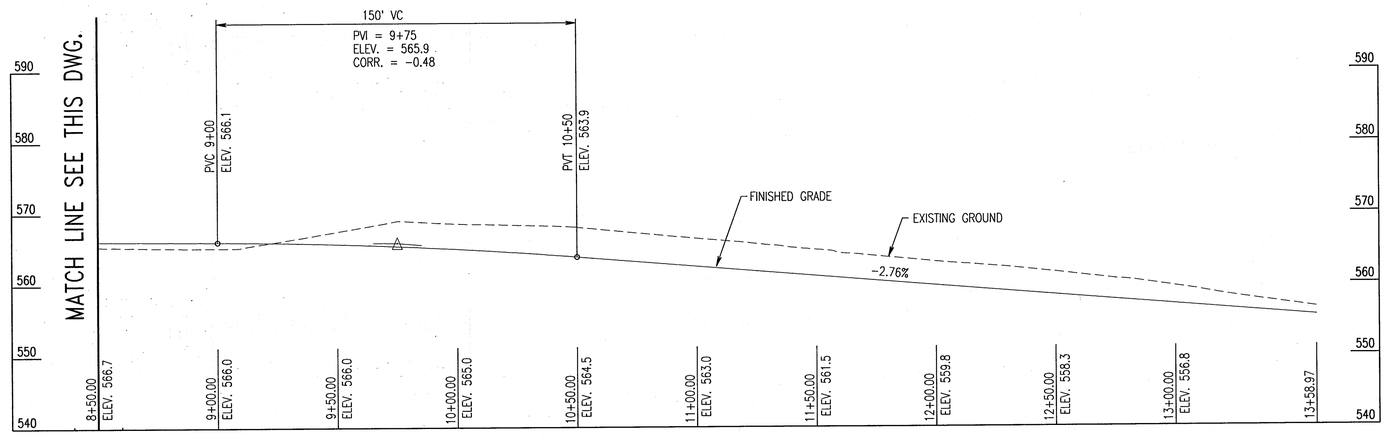

PROFILE - PRIVATE ACCESS ROAD

SCALE: 1" = 30' HORIZ
1" = 10' VERT

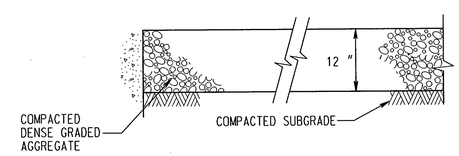

GRAVEL PRIVATE ACCESS ROAD/PARKING LOT

NO SCALE

A
C-5 | C-9
C-6, C-7, C-8

APPROVED: FOR PUBLIC WATER AND PRIVATE SEWERAGE SYSTEMS, HOWARD COUNTY HEALTH DEPARTMENT

COUNTY HEALTH OFFICER — DATE 3-5-03

APPROVED: HOWARD COUNTY DEPARTMENT OF PLANNING AND ZONING

DIRECTOR — DATE 3/14/03

CHIEF, DEVELOPMENT ENGINEERING DIVISION — DATE 3/14/03

CHIEF, DIVISION OF LAND DEVELOPMENT — DATE 3/17/03

DEPARTMENT OF PUBLIC WORKS
HOWARD COUNTY, MARYLAND

CHIEF, BUREAU OF UTILITIES — DATE

PREPARED BY :

WR&A
Whitman, Requardt and Associates, LLP.
801 South Caroline Street.
Baltimore, Maryland. 21231
410-235-3450

STATE OF MARYLAND — JAMES A. AURETT — No. 11210 — PROFESSIONAL ENGINEER

DES: C.D.
DRN: C.K.
CHK: A.O.
DATE: 12/16/2002

BY.	NO.	REVISION	DATE

PROFILE - PRIVATE ACCESS ROAD

600' SCALE MAP NO. 16 BLOCK NO. 2 / 8

PUBLIC SAFETY TRAINING CENTER
AT ALPHA RIDGE LANDFILL
CAPITAL PROJECT NO. C-0182
HOWARD COUNTY, MARYLAND

C-9

SCALE AS SHOWN

SHEET 11 OF 39

SDP-03-36

M:\3490\pstcc09.dgn
Thu Feb 20 15:39:23 2003

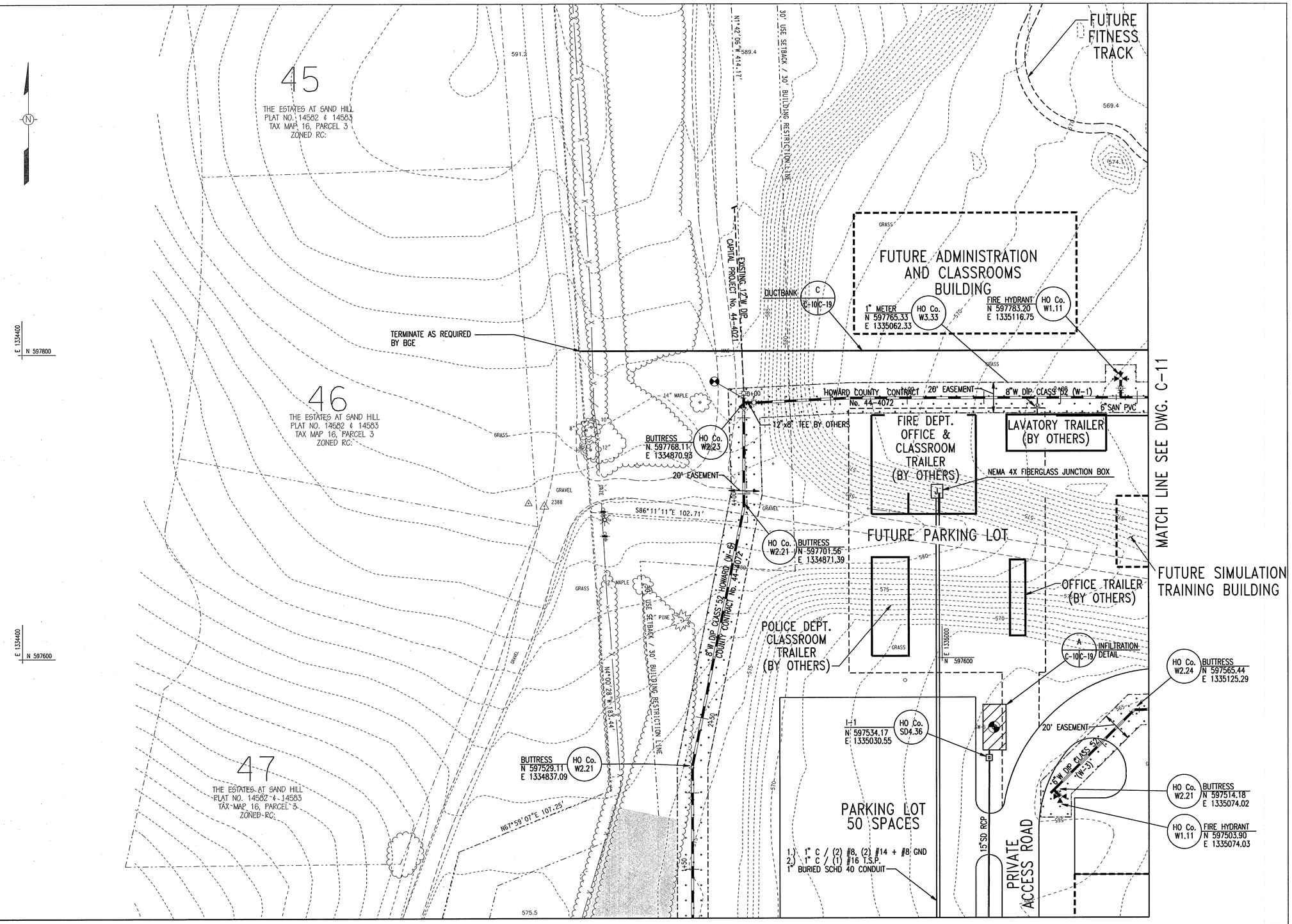

APPROVED: FOR PUBLIC WATER AND PRIVATE SEWERAGE SYSTEMS, HOWARD COUNTY HEALTH DEPARTMENT

COUNTY HEALTH OFFICER — DATE 3-5-03

APPROVED: HOWARD COUNTY DEPARTMENT OF PLANNING AND ZONING

DIRECTOR — DATE 3/10/03

CHIEF, DEVELOPMENT ENGINEERING DIVISION — DATE 3/6/03

CHIEF, DIVISION OF LAND DEVELOPMENT — DATE 3/17/03

DEPARTMENT OF PUBLIC WORKS
HOWARD COUNTY, MARYLAND

CHIEF, BUREAU OF UTILITIES — DATE

PREPARED BY :

WR&A

Whitman, Requardt and Associates, LLP.
801 South Caroline Street.
Baltimore, Maryland. 21231
410-235-3450

STATE OF MARYLAND — JAMES A. AVIRETT — 10210 — PROFESSIONAL ENGINEER

DES: C.D.
DRN: C.K.
CHK: A.O.
DATE: 12/16/2002

BY	NO.	REVISION	DATE

UTILITY PLAN

600' SCALE MAP NO. 16 BLOCK NO. 2 / 8

PUBLIC SAFETY TRAINING CENTER
AT ALPHA RIDGE LANDFILL
CAPITAL PROJECT NO. C-0182
HOWARD COUNTY, MARYLAND

GRAPHIC SCALE
30 20 10 0 30 60
SCALE: 1" = 30'

C-10

SCALE AS SHOWN

SHEET 12 OF 39

SDP-03-36

M:\13490\pstcc10.dgn
Thu Feb 20 15:38:44 2003

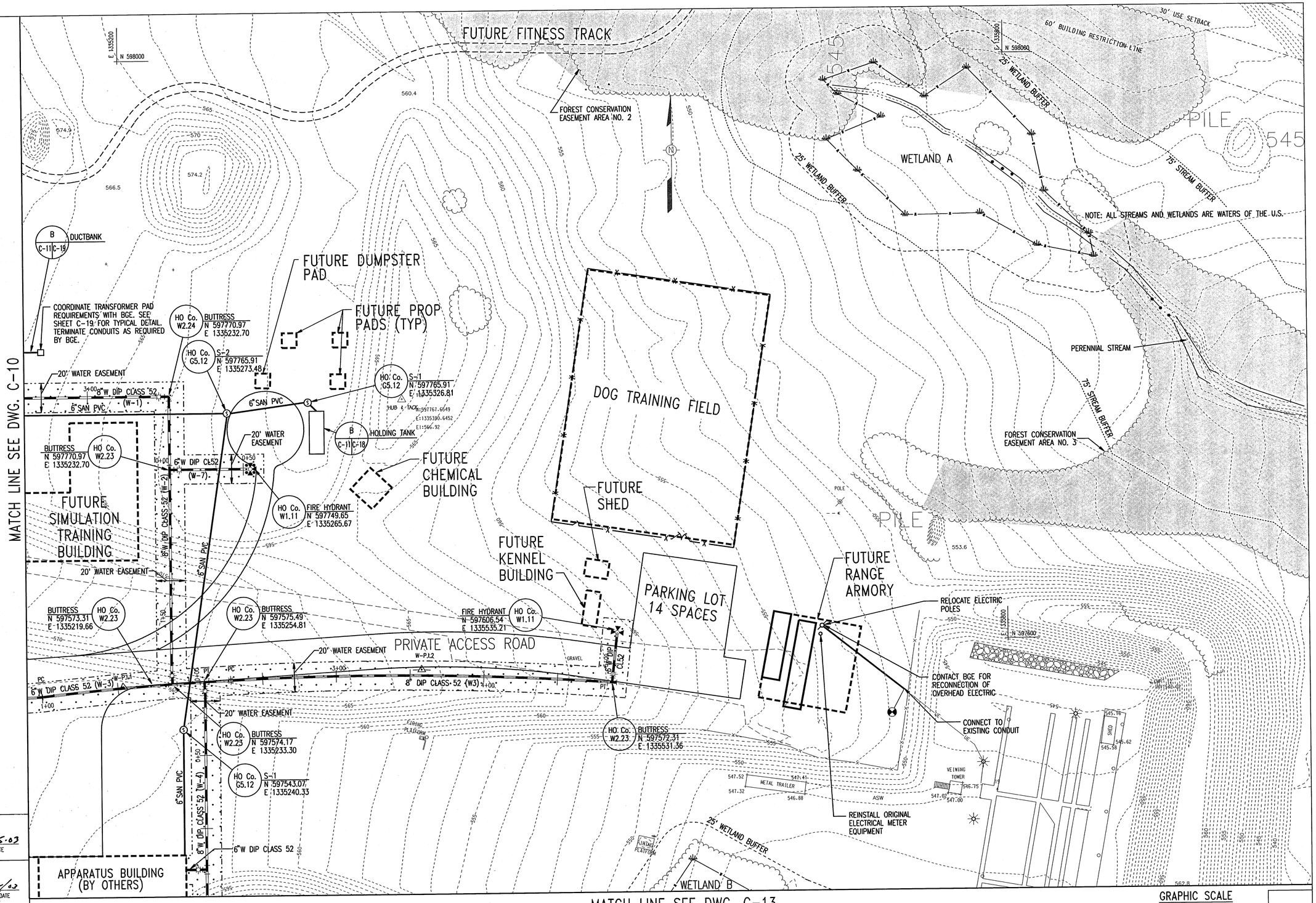

APPROVED: FOR PUBLIC WATER AND PRIVATE SEWERAGE SYSTEMS, HOWARD COUNTY HEALTH DEPARTMENT

COUNTY HEALTH OFFICER — DATE 3-5-03

APPROVED: HOWARD COUNTY DEPARTMENT OF PLANNING AND ZONING

DIRECTOR — DATE 3/10/03

CHIEF, DEVELOPMENT ENGINEERING DIVISION — DATE 3/11/03

CHIEF, DIVISION OF LAND DEVELOPMENT — DATE 3/17/03

DEPARTMENT OF PUBLIC WORKS
HOWARD COUNTY, MARYLAND

CHIEF, BUREAU OF UTILITIES — DATE

PREPARED BY :

WR&A
Whitman, Requardt and Associates, LLP.
801 South Caroline Street.
Baltimore, Maryland. 21231
410-235-3450

STATE OF MARYLAND — JOSEPH A. AVIRETT — PROFESSIONAL ENGINEER

DES: C.D.
DRN: C.K.
CHK: A.O.
DATE: 12/16/2002

BY	NO.	REVISION	DATE

UTILITY PLAN

600' SCALE MAP NO. 16 BLOCK NO. 2 / 8

PUBLIC SAFETY TRAINING CENTER
AT ALPHA RIDGE LANDFILL
CAPITAL PROJECT NO. C-0182
HOWARD COUNTY, MARYLAND

C-11

SCALE AS SHOWN

SHEET 13 OF 39

SDP-03-36

M:\13490\pstcc11.dgn
Thu Feb 20 15:38:55 2003

MATCH LINE SEE DWG. C-10

N 597400
E 1334400

FOREST CONSERVATION EASEMENT AREA NO. 5

N13°39'07"E 181.55'

30' USE SETBACK / 30' BUILDING RESTRICTION LINE

BUTTRESS
N 597322.60
E 1334837.09
HO Co. W2.23

8" W DIP CLASS 52 (W-5)

1.) 1" C / (2) #8, (2) #14 + #8 GND
2.) 1" C / (1) #16 T/S.P.
1" BURIED SCHD 40 CONDUIT

BUTTRESS
N 597311.33
E 1334837.09
HO Co. W2.21

NEMA 4X FIBERGLASS JUNCTION BOX
N 597243.60
E 1334710.42

PRIVATE ACCESS ROAD

PARKING LOT 50 SPACES

I-2
N 597404.06
E 1335029.82
HO Co. SD4.36

15" SD RCP CLASS IV

18" SD RCP CL IV

PRECAST HANDHOLE
N 597378.04
E 1334996.84
A C-12 E-1

20' EASEMENT

4+00 8" W DIP CLASS 52 (W-5) 3+00

INFILTRATION DETAIL
N 597377.51
E 1335016.15
A C-12 C-19

16" W DIP CLASS 52

18" SD RCP CLASS IV

HO Co. SD4.36 I-3
N 597388.19
E 1335076.24

HO Co. W2.23 BUTTRESS
N 597322.60
E 1335067.91

FUTURE APPARATUS BUILDING EXTENSION

I-4
N 597284.48
E 1335100.55
HO Co. SD4.36

HO Co. W1.31

FIRE HYDRANT
N 597189.85
E 1335067.91

FUTURE VEHICLE EXTRACTION AREA

I-7
N 597142.61
E 1335094.53
MD STD 374.27

INFILTRATION DETAIL
N 597142.61
E 1335074.53
A C-12 C-19

FUTURE SKID LOT

I-8
N 597062.61
E 1335094.53
MD STD 374.27

15" SD CLASS IV

INFILTRATION DETAIL
N 597062.61
E 1335074.53
A C-12 C-19

15" SD CLASS IV

MATCH LINE SEE DWG. C-13

PRESERVATION PARCEL 'B'
HOMEOWNERS ASSOCIATION, INC.
L. 5362 F. 678

E-4
N 597197.06
E 1334587.64
HO Co. SD 5.21

P-3
MATCH TO EXISTING PAVING
HO Co. R2.01

ES-2
N 597136.10
E 1334509.96
HO Co. SD 5.52

ROCK OUTLET PROTECTION
SCS DETAIL 27

12" RCP CLASS IV

MAC

N14°14'04"E 96.00'

50' USE SETBACK

75' BUILDING RESTRICTION LINE

FUTURE TRENCH PROPS

ALPHA CENTER DRIVE

COUNTY R/W WIDTH VARIES

YELLOW DOUBLE LINE

FOREST CONSERVATION EASEMENT AREA NO. 4

E 1334400
N 597000

N 597000
E 1335000

N82°03'17"W 581.43'

INTERSTATE ROUTE 70

563.3
563.6

SIGN

GRAPHIC SCALE
30 20 10 0 30 60
SCALE: 1" = 30'

C-12

APPROVED: FOR PUBLIC WATER AND PRIVATE SEWERAGE SYSTEMS, HOWARD COUNTY HEALTH DEPARTMENT
COUNTY HEALTH OFFICER — DATE 3-5-03

APPROVED: HOWARD COUNTY DEPARTMENT OF PLANNING AND ZONING
DIRECTOR — DATE 3/10/03
CHIEF, DEVELOPMENT ENGINEERING DIVISION — DATE 3/11/03
CHIEF, DIVISION OF LAND DEVELOPMENT — DATE 3/17/03

DEPARTMENT OF PUBLIC WORKS
HOWARD COUNTY, MARYLAND
CHIEF, BUREAU OF UTILITIES — DATE

PREPARED BY :
WR&A
Whitman, Requardt and Associates, LLP.
801 South Caroline Street.
Baltimore, Maryland. 21231
410-235-3450

STATE OF MARYLAND — JAMES A. AVIRETT III — PROFESSIONAL ENGINEER

DES: C.D.
DRN: C.K.
CHK: A.O.
DATE: 12/16/2002

BY	NO.	REVISION	DATE

UTILITY PLAN

600' SCALE MAP NO. 16 BLOCK NO. 2 / 8

PUBLIC SAFETY TRAINING CENTER
AT ALPHA RIDGE LANDFILL
CAPITAL PROJECT NO. C-0182
HOWARD COUNTY, MARYLAND

SCALE AS SHOWN

SHEET 14 OF 39

SDP-03-36

M:\13490\pstccl2.dgn
Thu Feb 20 16:39:8 2003

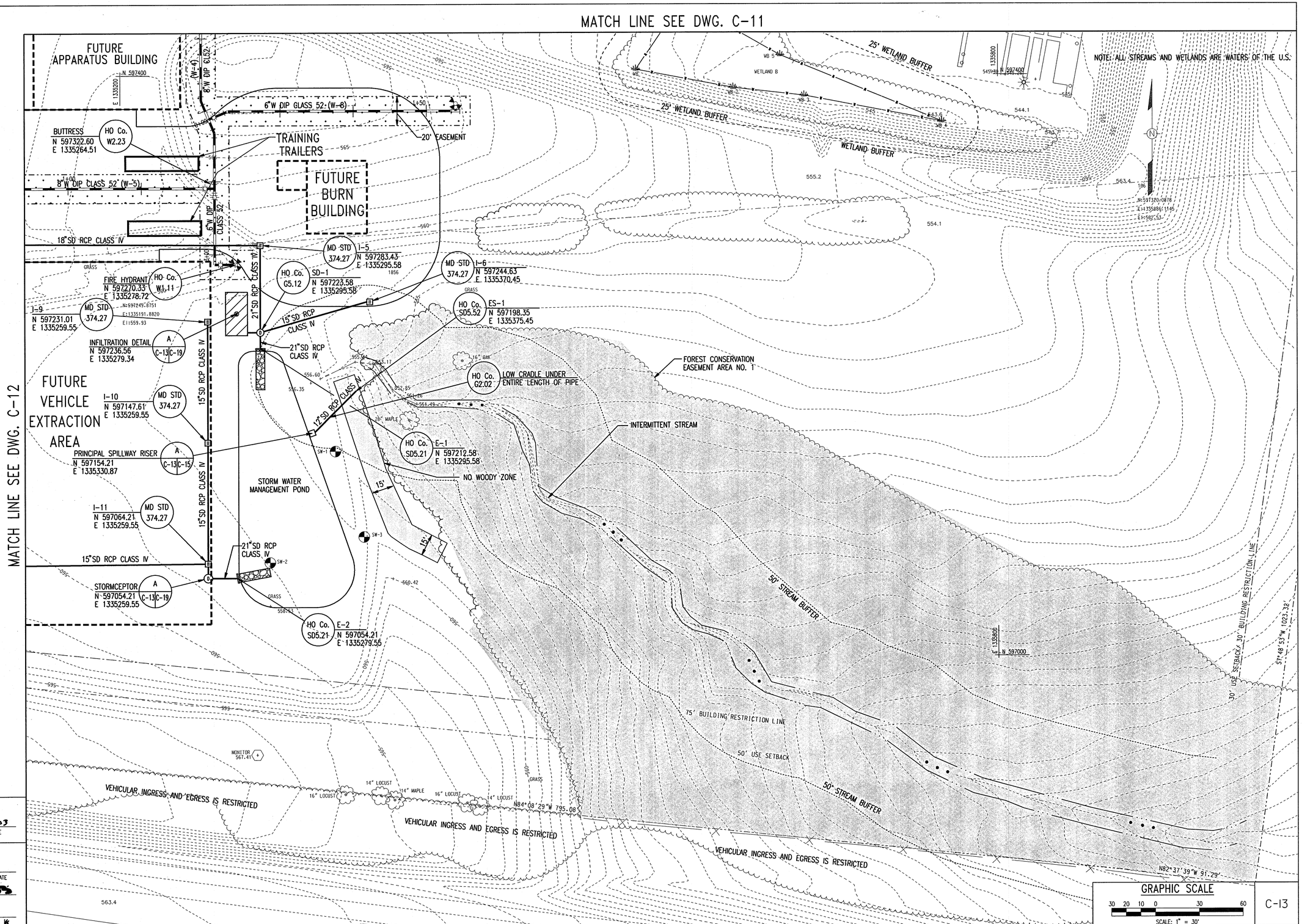

APPROVED: FOR PUBLIC WATER AND PRIVATE SEWERAGE SYSTEMS, HOWARD COUNTY HEALTH DEPARTMENT

COUNTY HEALTH OFFICER — DATE 3-5-03

APPROVED: HOWARD COUNTY DEPARTMENT OF PLANNING AND ZONING

DIRECTOR — DATE 3/18/03

CHIEF, DEVELOPMENT ENGINEERING DIVISION — DATE 3/11/03

CHIEF, DIVISION OF LAND DEVELOPMENT — DATE 3/17/03

DEPARTMENT OF PUBLIC WORKS
HOWARD COUNTY, MARYLAND

CHIEF, BUREAU OF UTILITIES — DATE

PREPARED BY :

WR&A

Whitman, Requardt and Associates, LLP.
801 South Caroline Street.
Baltimore, Maryland. 21231
410-235-3450

STATE OF MARYLAND — JAMES A. AVIRETT — 10230 — PROFESSIONAL ENGINEER

DES: C.D.
DRN: C.K.
CHK: A.O.
DATE: 12/16/2002

BY	NO.	REVISION	DATE

UTILITY PLAN

600' SCALE MAP NO. 16 BLOCK NO. 2 / 8

PUBLIC SAFETY TRAINING CENTER
AT ALPHA RIDGE LANDFILL
CAPITAL PROJECT NO. C-0182
HOWARD COUNTY, MARYLAND

C-13

SCALE AS SHOWN

SHEET 15 OF 39

SDP-03-36

M:\13490\pstcc13.dgn
Thu Feb 20 15:39:09 2003

NOTE:
1. SHADING INDICATES FILL AREAS

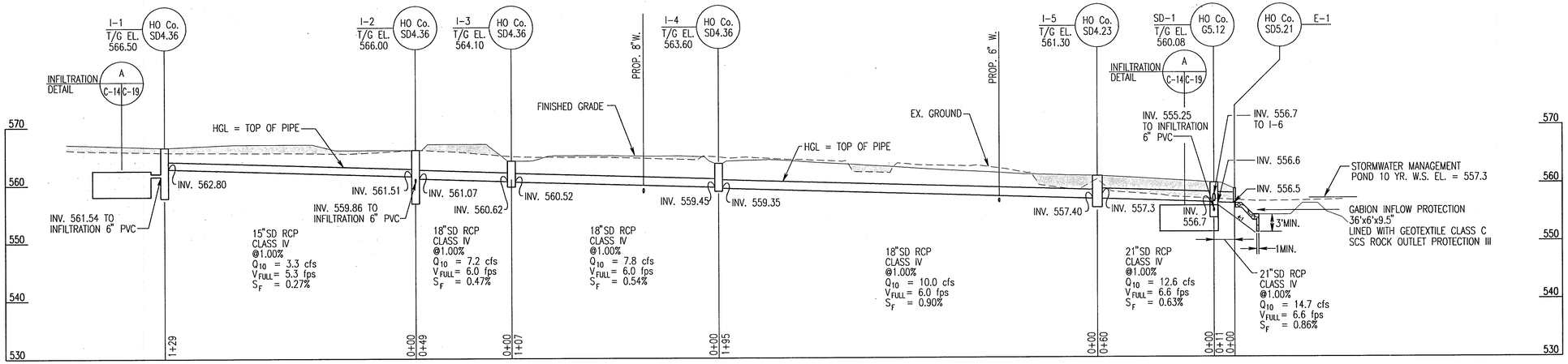

I-1 TO POND

SCALE: 1" = 30' HORIZ
1" = 10' VERT

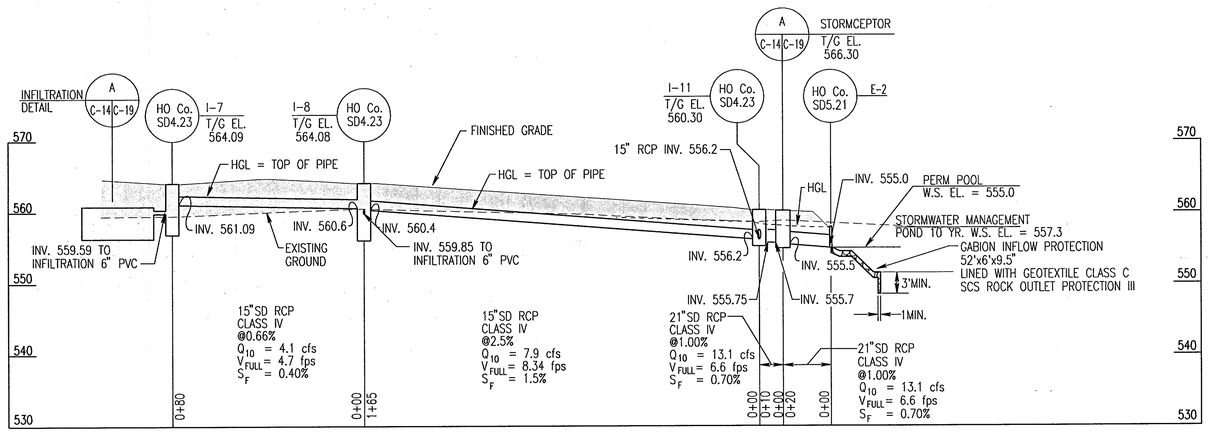

I-7 TO POND

SCALE: 1" = 30' HORIZ
1" = 10' VERT

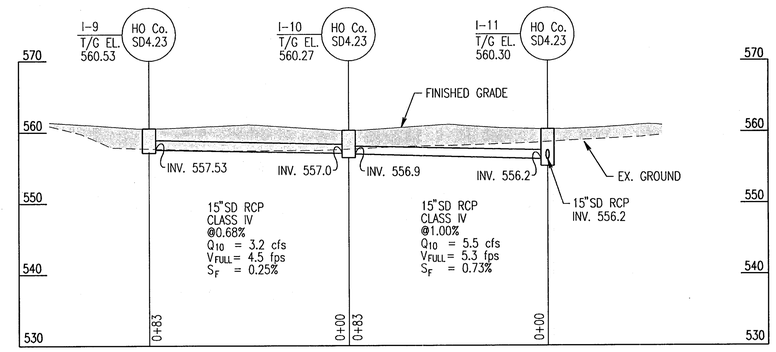

I-9 TO I-11

SCALE: 1" = 30' HORIZ
1" = 10' VERT

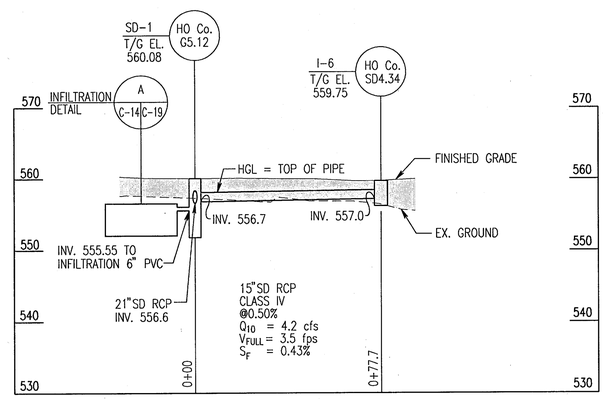

S-1 TO I-6

SCALE: 1" = 30' HORIZ
1" = 10' VERT

GRAPHIC SCALE

30 20 10 0 30 60
SCALE: 1" = 30'

10 5 0 10 20
SCALE: 1" = 10'

APPROVED: FOR PUBLIC WATER AND PRIVATE SEWERAGE SYSTEMS, HOWARD COUNTY HEALTH DEPARTMENT
COUNTY HEALTH OFFICER — DATE 3-5-03

APPROVED: HOWARD COUNTY DEPARTMENT OF PLANNING AND ZONING
DIRECTOR — DATE 3/6/03
CHIEF, DEVELOPMENT ENGINEERING DIVISION — DATE 3/4/03
CHIEF, DIVISION OF LAND DEVELOPMENT — DATE 3/7/03

DEPARTMENT OF PUBLIC WORKS
HOWARD COUNTY, MARYLAND
CHIEF, BUREAU OF UTILITIES — DATE

PREPARED BY :
WR&A
Whitman, Requardt and Associates, LLP.
801 South Caroline Street.
Baltimore, Maryland. 21231
410-235-3450

STATE OF MARYLAND — JAMES A. AVRETT — PROFESSIONAL ENGINEER

DES: C.D.
DRN: C.K.
CHK: A.O.
DATE: 12/16/2002

BY	NO.	REVISION	DATE

PROFILES - STORM DRAINS

600' SCALE MAP NO. 16 BLOCK NO. 2 / 8

PUBLIC SAFETY TRAINING CENTER
AT ALPHA RIDGE LANDFILL
CAPITAL PROJECT NO. C-0182
HOWARD COUNTY, MARYLAND

C-14

SCALE AS SHOWN

SHEET 16 OF 39

SDP-03-36

M:\13490\pstccl4.dgn
Thu Feb 20 15:37:30 2003

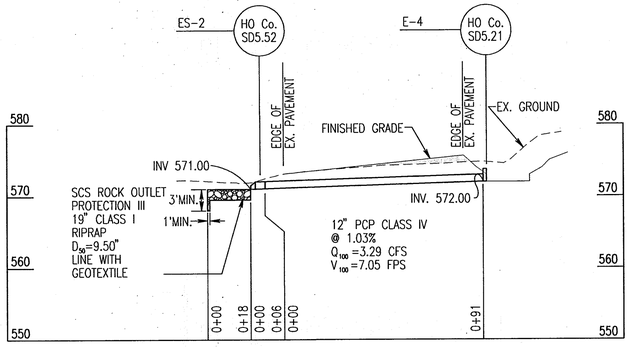

ROAD CULVERT PROFILE – E-4 TO ES-2

SCALE: 1" = 30' HORIZ
1" = 10' VERT

NOTE:
1. SHADING INDICATES FILL AREAS

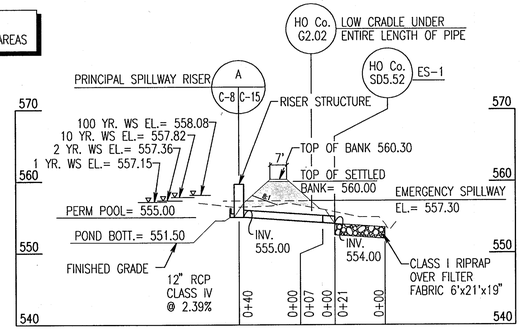

SPILLWAY PROFILE

SCALE: 1" = 30' HORIZ
1" = 10' VERT

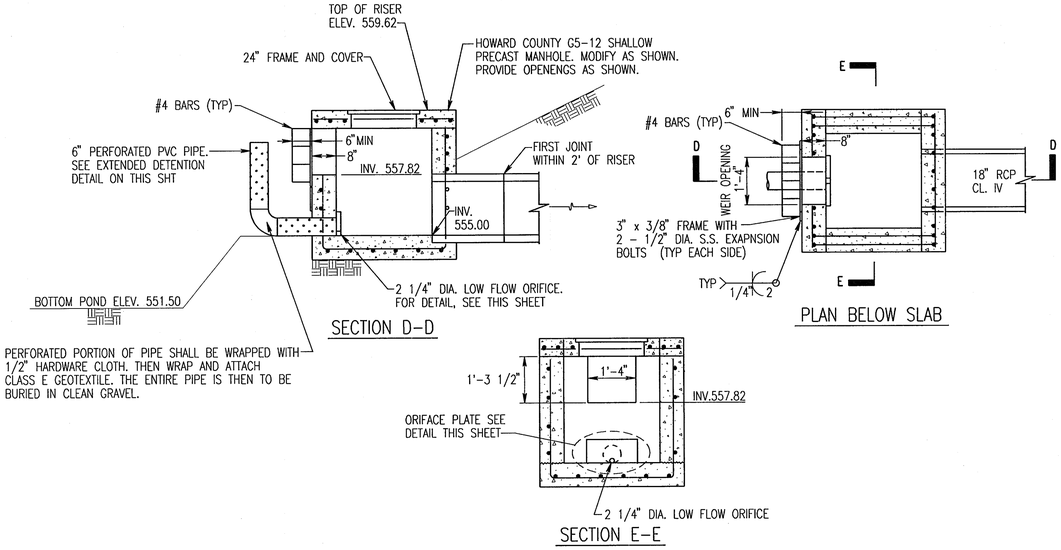

POND NO. 1 – PRINCIPAL SPILLWAY RISER DETAIL

A
C-8 C-15

SCALE: 1/2" = 1'-0"

*WRAP JOINTS BELOW SOIL SURFACE W/ FILTER CLOTH AND SECURE WITH STAINLESS METAL STRAPS BOLTED TO EITHER SIDE OF THE JOINT OPENING.

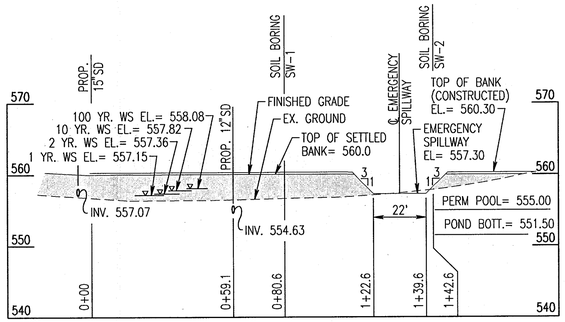

SECTION A–A: CENTERLINE OF EMBANKMENT

SCALE: 1" = 30' HORIZ
1" = 10' VERT

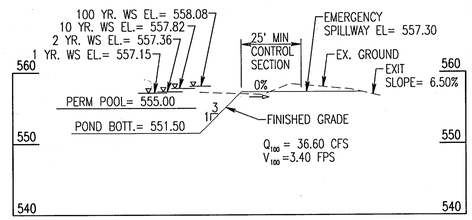

SECTION B–B: EMERGENCY SPILLWAY

SCALE: 1" = 30' HORIZ
1" = 10' VERT

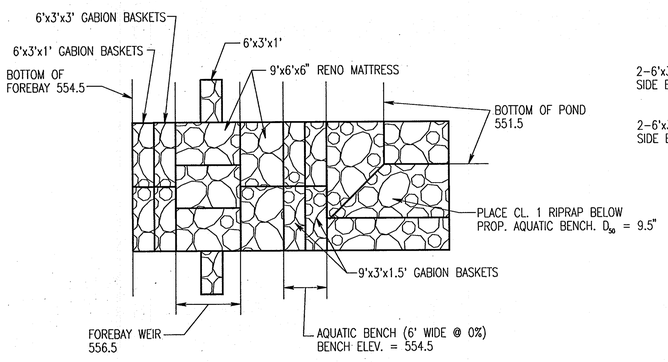

FOREBAY OUTLET DETAIL–PLAN VIEW

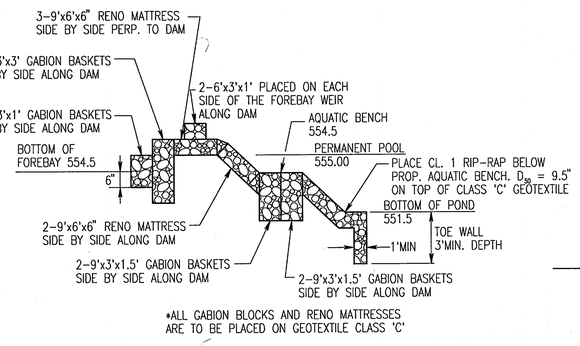

*ALL GABION BLOCKS AND RENO MATTRESSES ARE TO BE PLACED ON GEOTEXTILE CLASS 'C'

SECTION THROUGH FOREBAY OUTLET

FOREBAY

B
C-8 C-15

SCALE: NOT TO SCALE

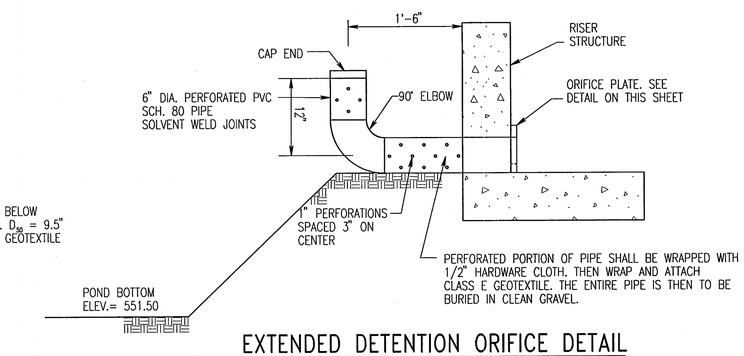

EXTENDED DETENTION ORIFICE DETAIL

SCALE: 1"= 1'-0"

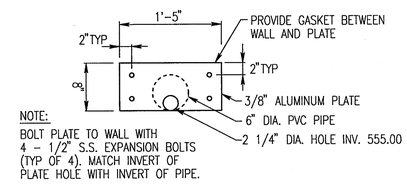

NOTE:
BOLT PLATE TO WALL WITH 4 – 1/2" S.S. EXPANSION BOLTS (TYP OF 4). MATCH INVERT OF PLATE HOLE WITH INVERT OF PIPE.

ORIFICE PLATE DETAIL

SCALE : 1" = 1' -0"

STORMWATER MANAGEMENT POND LINER NOTES

1. A LINER IS TO BE PLACED ON THE SIDES AND BOTTOM OF THE STORMWATER MANAGEMENT POND. THE LINER IS TO BE PLACED UP TO AN ELEVATION OF 560' (TOP OF EMBANKMENT).
2. THE POND LINER IS TO BE A MINIMUM OF 1' THICK. THE LINER IS TO BE STEPPED OR BENCHED INTO EXISTING GROUND AS IT IS PLACED ON THE SIDES OF THE POND.
3. THE POND LINER SHALL BE COMPRISED OF A SILT, SAND AND CLAY MIXTURE HAVING BETWEEN 30% AND 75% PASSING THE NO. 200 SIEVE, AND A PLASTICITY INDEX (PI) BETWEEN 9 AND 25.
4. POND LINER IS TO BE PLACED 12" BELOW GROUND SURFACE ELEVATIONS SHOWN IN THESE PLANS. POND GRADES ARE TO BE BROUGHT UP TO ELEVATION USING THE APPROPRIATE PLANTING SOIL AS INDICATED ON SHEET LS-3.

GRAPHIC SCALE
30 20 10 0 30 60
SCALE: 1" = 30'

GRAPHIC SCALE
10 5 0 10 20
SCALE: 1" = 10'

APPROVED: FOR PUBLIC WATER AND PRIVATE SEWERAGE SYSTEMS, HOWARD COUNTY HEALTH DEPARTMENT
COUNTY HEALTH OFFICER — DATE 3-5-03

APPROVED: HOWARD COUNTY DEPARTMENT OF PLANNING AND ZONING
DIRECTOR — DATE 3/10/03
CHIEF, DEVELOPMENT ENGINEERING DIVISION — DATE 3/4/03
CHIEF, DIVISION OF LAND DEVELOPMENT — DATE 3/7/03

DEPARTMENT OF PUBLIC WORKS
HOWARD COUNTY, MARYLAND
CHIEF, BUREAU OF UTILITIES — DATE

PREPARED BY :
WR&A
Whitman, Requardt and Associates, LLP.
801 South Caroline Street.
Baltimore, Maryland. 21231
410-235-3450

STATE OF MARYLAND — WILLIAM R. ALLEN — No. 11870 — PROFESSIONAL ENGINEER

DES: C.D.
DRN: C.K.
CHK: A.O.
DATE:

BY	NO.	REVISION	DATE

PROFILES

600' SCALE MAP NO. 16 BLOCK NO. 2 / 8

PUBLIC SAFETY TRAINING CENTER
AT ALPHA RIDGE LANDFILL
CAPITAL PROJECT NO. C-0182
HOWARD COUNTY, MARYLAND

C-15

SCALE AS SHOWN

SHEET 17 OF 39

SDP-03-36

M:\13490\pstccl5.dgn
Thu Feb 20 15:39:11 2003

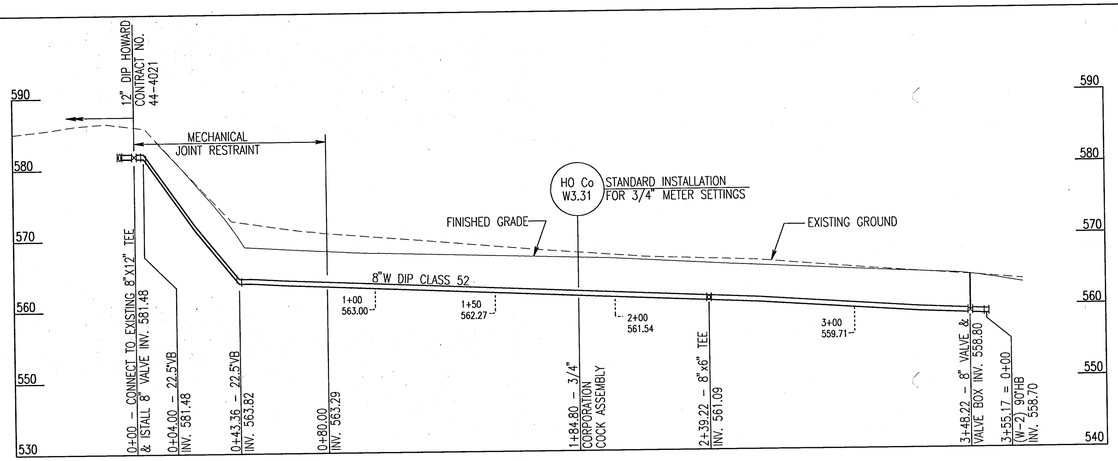

PROFILE 8" WATER MAIN (W-1)

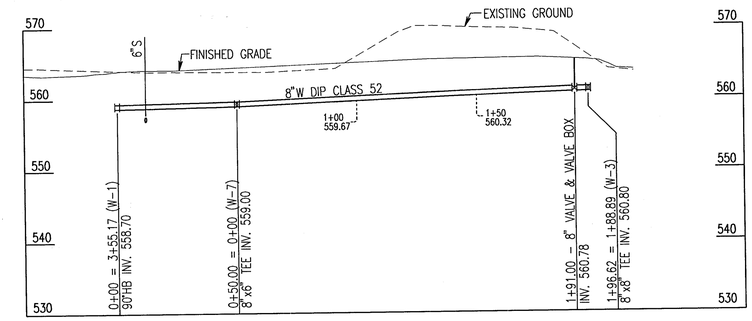

PROFILE 8" WATER MAIN (W-2)

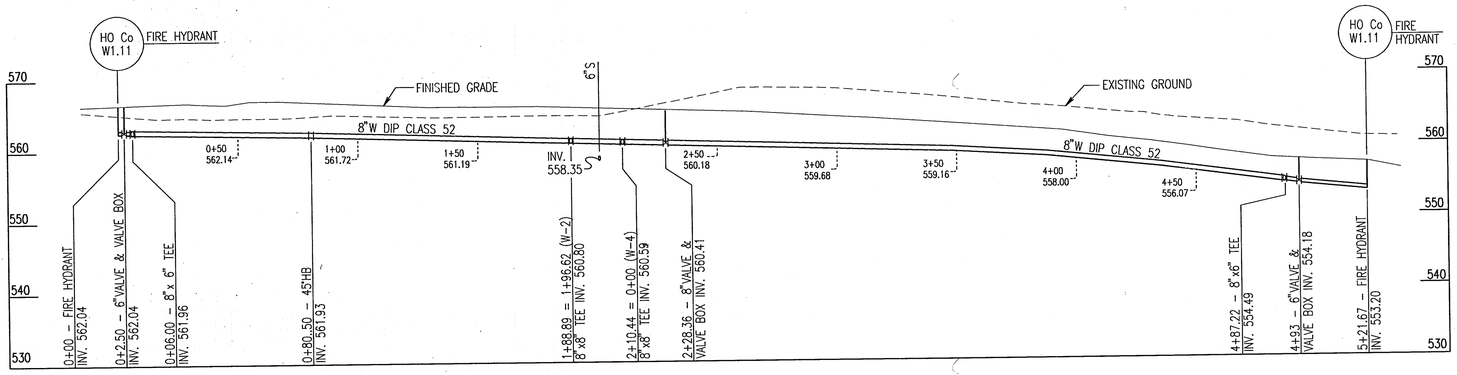

PROFILE 8" WATER MAIN (W-3)

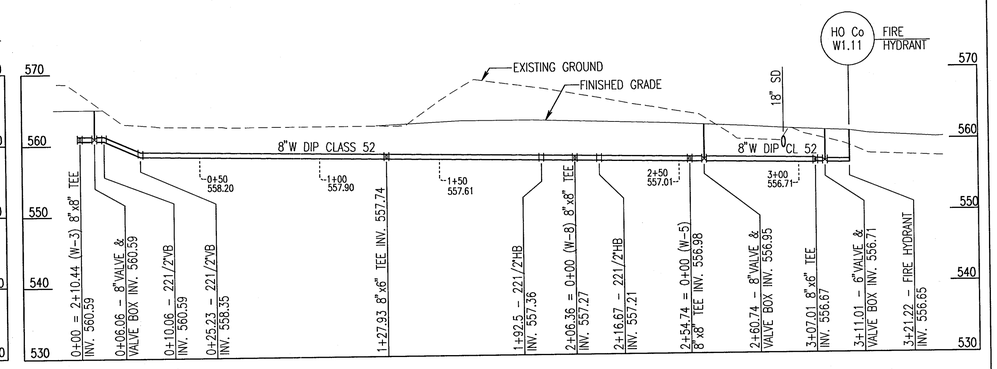

PROFILE 8" WATER MAIN (W-4)

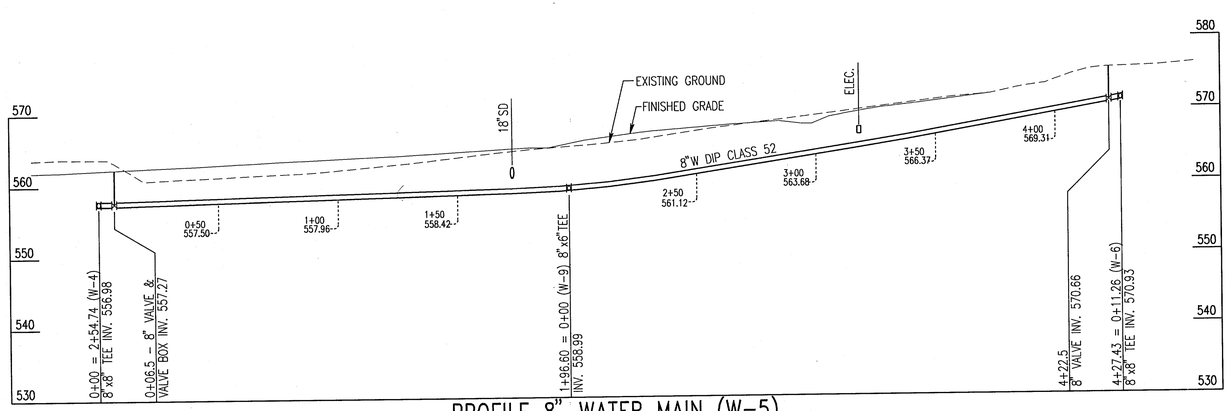

PROFILE 8" WATER MAIN (W-5)

APPROVED: FOR PUBLIC WATER AND PRIVATE SEWERAGE SYSTEMS, HOWARD COUNTY HEALTH DEPARTMENT

COUNTY HEALTH OFFICER — DATE 3-5-03

APPROVED: HOWARD COUNTY DEPARTMENT OF PLANNING AND ZONING

DIRECTOR — DATE 3/10/03

CHIEF, DEVELOPMENT ENGINEERING DIVISION — DATE 3/10/03

CHIEF, DIVISION OF LAND DEVELOPMENT — DATE 3/17/03

DEPARTMENT OF PUBLIC WORKS
HOWARD COUNTY, MARYLAND

CHIEF, BUREAU OF UTILITIES — DATE

PREPARED BY :

WR&A
Whitman, Requardt and Associates, LLP.
801 South Caroline Street.
Baltimore, Maryland. 21231
410-235-3450

STATE OF MARYLAND — JAMES A. WHITMAN — No. 10210 — PROFESSIONAL ENGINEER

DES: C.D.
DRN: C.K.
CHK: A.O.
DATE: 12/16/2002

BY	NO.	REVISION	DATE

PROFILES - WATER MAINS

600' SCALE MAP NO. 16 BLOCK NO. 2 / 8

PUBLIC SAFETY TRAINING CENTER
AT ALPHA RIDGE LANDFILL
CAPITAL PROJECT NO. C-0182
HOWARD COUNTY, MARYLAND

GRAPHIC SCALE
30 20 10 0 30 60
SCALE: 1" = 30'
10 5 0 10 20
SCALE: 1" = 10'

C-16

SCALE AS SHOWN

SHEET 18 OF 39

SDP-03-36

M:\0490\pstcc16.dgn
Thu Feb 20 15:39:51 2003

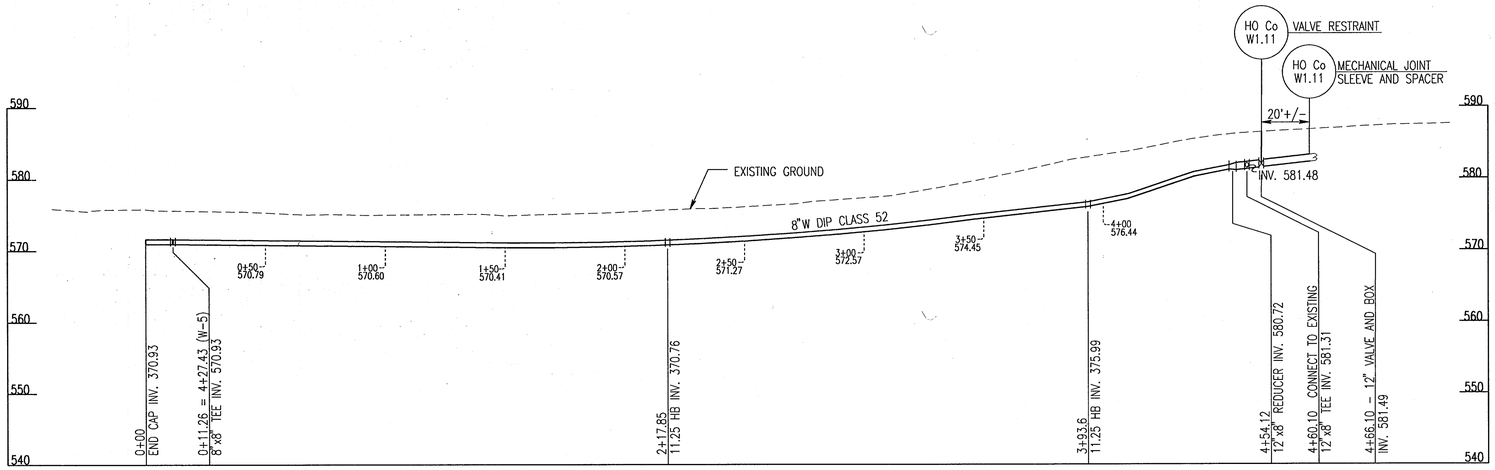

PROFILE 8" WATER MAIN (W-6)

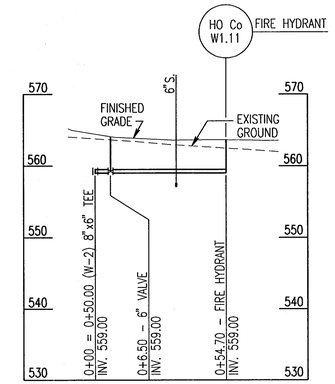

PROFILE 6" WATER MAIN (W-7)

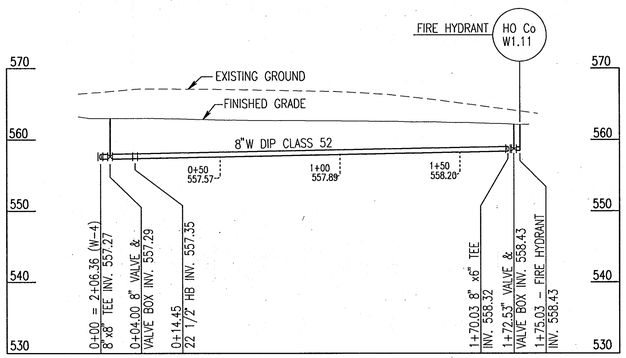

PROFILE 8" WATER MAIN (W-8)

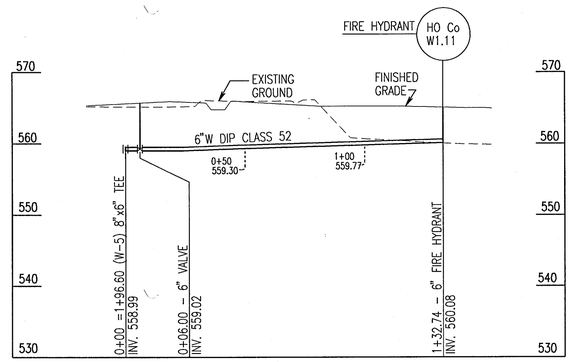

PROFILE 6" WATER MAIN (W-9)

APPROVED: FOR PUBLIC WATER AND PRIVATE SEWERAGE SYSTEMS, HOWARD COUNTY HEALTH DEPARTMENT

COUNTY HEALTH OFFICER — DATE 3-5-03

APPROVED: HOWARD COUNTY DEPARTMENT OF PLANNING AND ZONING

DIRECTOR — DATE 3/18/03

CHIEF, DEVELOPMENT ENGINEERING DIVISION — DATE 3/11/03

CHIEF, DIVISION OF LAND DEVELOPMENT — DATE 3/11/03

DEPARTMENT OF PUBLIC WORKS
HOWARD COUNTY, MARYLAND

CHIEF, BUREAU OF UTILITIES — DATE

PREPARED BY :

WR&A

Whitman, Requardt and Associates, LLP.
801 South Caroline Street.
Baltimore, Maryland. 21231
410-235-3450

STATE OF MARYLAND — JAMES A. AVIRETT — 10210 — PROFESSIONAL ENGINEER

DES: C.D.
DRN: C.K.
CHK: A.O.
DATE: 12/16/2002

BY	NO.	REVISION	DATE

PROFILES - WATER MAINS

600' SCALE MAP NO. 16 BLOCK NO. 2 / 8

PUBLIC SAFETY TRAINING CENTER
AT ALPHA RIDGE LANDFILL
CAPITAL PROJECT NO. C-0182
HOWARD COUNTY, MARYLAND

GRAPHIC SCALE

30 20 10 0 30 60
SCALE: 1" = 30'

10 5 0 10 20
SCALE: 1" = 10'

C-17

SCALE AS SHOWN

SHEET 19 OF 39

SDP-03-36

M:\13490\pstcc17.dgn
Thu Feb 20 15:39:58 2003

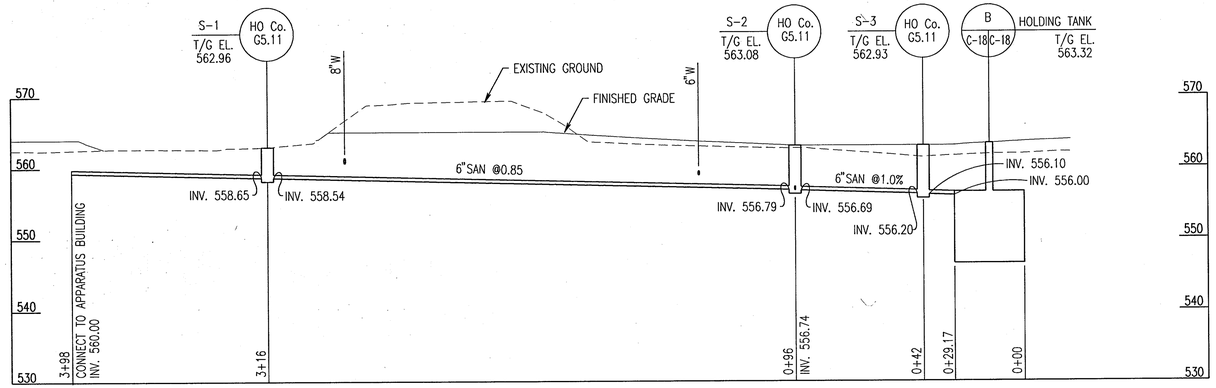

6" SANITARY FROM APPARATUS BUILDING TO THE HOLDING TANK

SCALE: 1" = 30' HORIZ
1" = 10' VERT

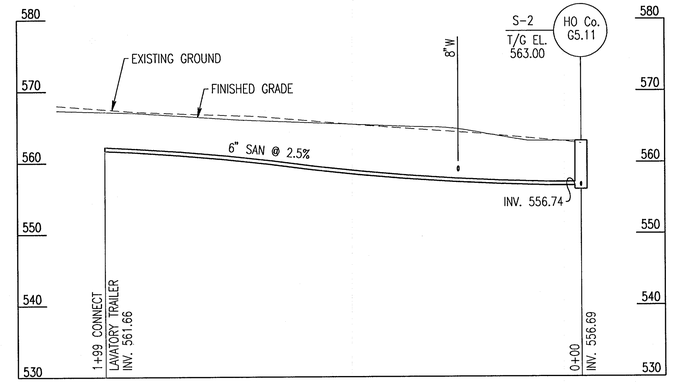

6" SANITARY FROM LAVATORY TRAILER TO MH-2

SCALE: 1" = 30' HORIZ
1" = 10' VERT

NOTES:

- ⊠ HOLD DOWN STRAP CLIP
- ◀▶ HOLD DOWN STRAP LOCATION
- ▬ TOP MOUNTED LIFT LUG
- ◠ SIDE MOUNTED LIFT LUG

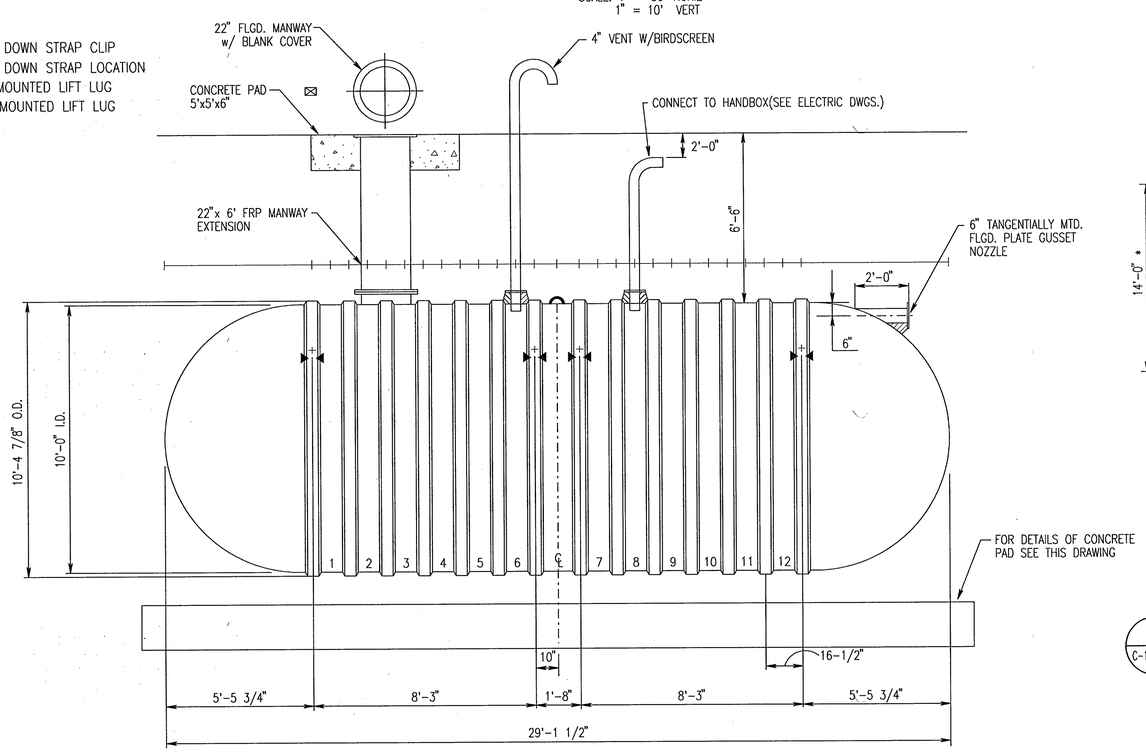

HOLDING TANK (B / C-18 C-18)

NO SCALE

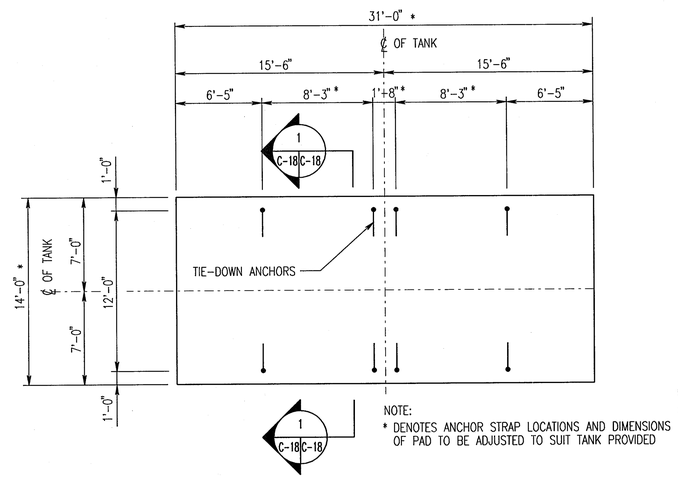

NOTE:
* DENOTES ANCHOR STRAP LOCATIONS AND DIMENSIONS OF PAD TO BE ADJUSTED TO SUIT TANK PROVIDED

PLAN OF FRP TANK HOLD-DOWN PAD

SCALE: 3/16" = 1'=0"

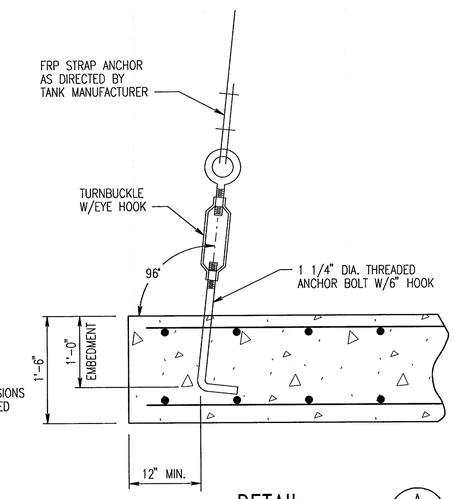

DETAIL (A / C-18 C-18)

SCALE: 1" = 1'=0"

NOTES:
1. PEA GRAVEL SHALL BE CLEAN AND SIZED TO CONFORMED THE TANK MANUFACTURERS RECOMMENDATIONS.
2. AS SOON AS FRP STRAP ANCHORS ARE INSTALLED, THE GRAVEL SHALL BE FILLED UP TO 3 FT. FROM THE TOP OF TANK OR HIGHER

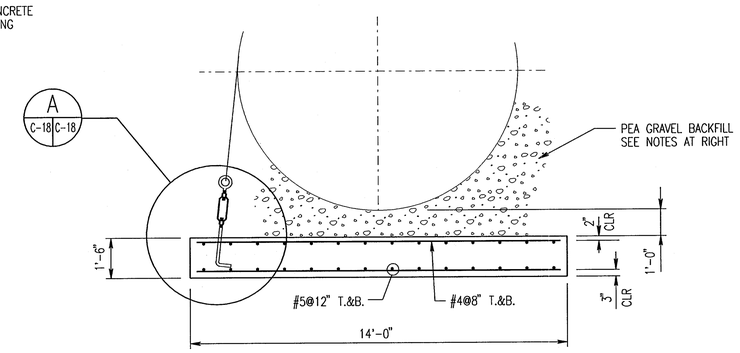

SECTION (1 / C-18 C-18)

SCALE: 3/8" = 1'=0"

APPROVED: FOR PUBLIC WATER AND PRIVATE SEWERAGE SYSTEMS, HOWARD COUNTY HEALTH DEPARTMENT

COUNTY HEALTH OFFICER — DATE 3-5-03

APPROVED: HOWARD COUNTY DEPARTMENT OF PLANNING AND ZONING

DIRECTOR — DATE 3/18/03

CHIEF, DEVELOPMENT ENGINEERING DIVISION — DATE 3/11/03

CHIEF, DIVISION OF LAND DEVELOPMENT — DATE 3/17/03

DEPARTMENT OF PUBLIC WORKS
HOWARD COUNTY, MARYLAND

CHIEF, BUREAU OF UTILITIES — DATE

PREPARED BY :

WR&A

Whitman, Requardt and Associates, LLP.
801 South Caroline Street.
Baltimore, Maryland. 21231
410-235-3450

STATE OF MARYLAND — ANDREW J. OBERSTEIN — PROFESSIONAL ENGINEER

DES: C.D.
DRN: C.K.
CHK: A.O.
DATE: 12/16/2002

BY	NO.	REVISION	DATE

PROFILES - SANITARY SEWER AND DETAILS

600' SCALE MAP NO. 16 BLOCK NO. 2 / 8

PUBLIC SAFETY TRAINING CENTER
AT ALPHA RIDGE LANDFILL
CAPITAL PROJECT NO. C-0182
HOWARD COUNTY, MARYLAND

GRAPHIC SCALE
30 20 10 0 30 60
SCALE: 1" = 30'

C-18

SCALE AS SHOWN

SHEET 20 OF 39

SDP-03-36

M:\13490\pstcc18.dgn
Thu Feb 20 15:40:06 2003

Stormceptor®	Hydro Conduit	DR. BY: N. BALDWIN
	STC 4800 Precast Concrete Stormceptor (4800 US Gallon Capacity)	CK. BY:
	PROJECT:	DATE: FEB. 13, 2001
	LOCATION:	SCALE: N.T.S.
		DWG.#

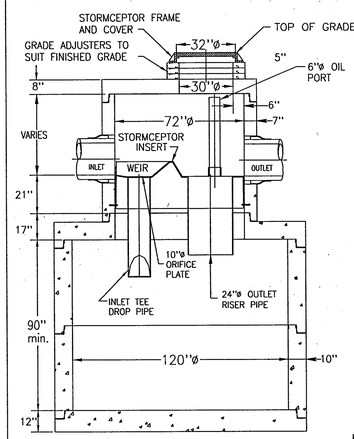

SECTION THROUGH CHAMBER

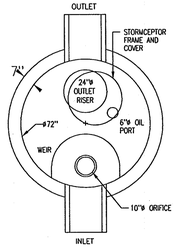

PLAN VIEW OF INSERT

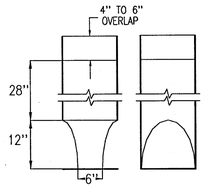

ENLARGED INLET TEE DROP PIPE

NOTE :

1. THE USE OF FLEXIBLE CONNECTIONS IS RECOMMENDED AT THE INLET AND OUTLET WHERE APPLICABLE.
2. THE COVER SHOULD BE POSITIONED OVER THE 24"ø OUTLET RISER PIPE AND THE 6"ø OIL PORT.
3. THE STORMCEPTOR SYSTEM IS PROTECTED BY ONE OR MORE OF THE FOLLOWING U.S. PATENTS: #4985148, #5498331, #5725760, #5753115, #5849181.

REV.	DESCRIPTION	BY:	DATE

Precast Concrete Stormceptor® Order Request Form

Contractor Information

Name
Address
City
State
Zip Code
Contact
Phone
Fax

Owner Information

Name: DAVID LOUDERMILK (HOWARD Co. BUREAU OF FACILITIES)
Phone: 410 313-6139
Fax: 410 313-5777

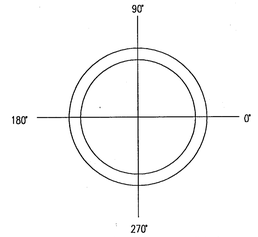

Please draw orientation of inlet and outlet pipes on diagram along with the pipe inside diameter (in). and invert elevation (ft). Clearly mark inlet pipes with an "I" and outlet pipes with an "O". Please provide the inlet/outlet pipe angle in degrees.

IMPERVIOUS DRAINAGE AREA FOR THIS UNIT 8.39 ac

Stormceptor® Model			
STC 450i	☐		
900	☐	3600	☐
1200	☐	4800	☒
1800	☐	6000	☐
2400	☐	7200	☐

Manhole Number	STORMCEPTOR
Top Elevation (ft)	560.3
Inlet Pipe Invert (ft)	555.7
Outlet Pipe Invert (ft)	555.5
Pipe Type	RCP CLASS IV
Inlet Pipe Inside Diameter (ID)	21"
Inlet Pipe Outside Diameter (OD)	28"
Outlet Pipe Inside Diameter (ID)	21"
Outlet Pipe Outside Diameter (OD)	28"

Project Name * HOWARD Co. PUBLIC SAFETY EDUCATION CENTER
Approximate time frame of delivery (weeks)
Delivery Address Street (For Permits) *
City: * State: * Zip Code *
Designer Company WHITMAN REQUARDT & ASSOCIATES
Designer Contact CHRIS HO Phone 410 235-3450 Fax 410 243-5716

* These fields must be filled out for processing.

Hydro Conduit

PLEASE FILL OUT COMPLETELY AND FAX TO:
ATTN: DUANE THOMAS FAX: (301)698-5351, PHONE: (800)414-7960

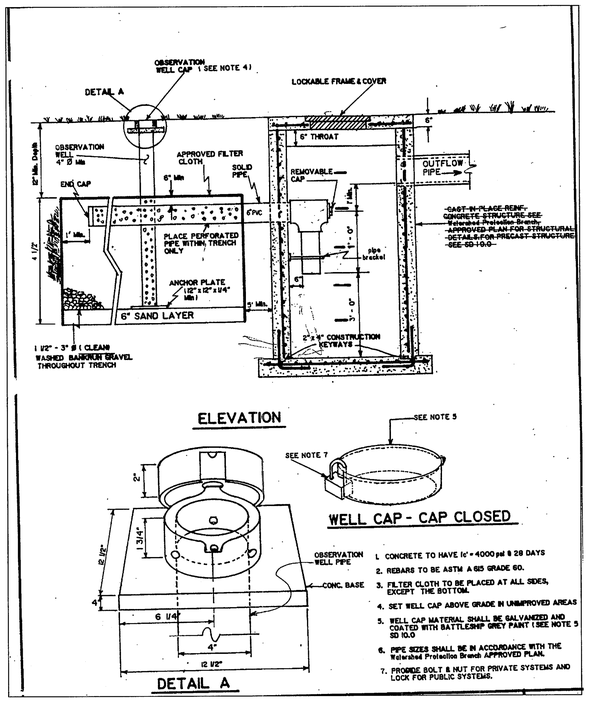

1. CONCRETE TO HAVE f'c = 4000 psi @ 28 DAYS
2. REBARS TO BE ASTM A 615 GRADE 60.
3. FILTER CLOTH TO BE PLACED AT ALL SIDES, EXCEPT THE BOTTOM.
4. SET WELL CAP ABOVE GRADE IN UNIMPROVED AREAS
5. WELL CAP MATERIAL SHALL BE GALVANIZED AND COATED WITH BATTLESHIP GREY PAINT (SEE NOTE 5 SD 10.0
6. PIPE SIZES SHALL BE IN ACCORDANCE WITH THE Maryland Protection Branch APPROVED PLAN.
7. PROVIDE BOLT & NUT FOR PRIVATE SYSTEMS AND LOCK FOR PUBLIC SYSTEM.

INFILTRATION DETAIL (B)

NO SCALE — C-7 | C-19 — C-8

INFILTRATION STRUCTURES 1, 2, 3, 4, AND 5 ARE TO BE CONSTRUCTED WITH THE SAME DIMENSIONS. DIMENSIONS FOR THE INFILTRATION STRUCURES ARE OUTLINED IN THAT TABLE BELOW.

INFILTRATION STRUCTURE	DEPTH (FT.)	LENGTH (FT.)	WIDTH (FT.)
ALL STRUCTURES	4.5	30	15

STORMCEPTOR (A)

NO SCALE — C-8 | C-19 — C-13

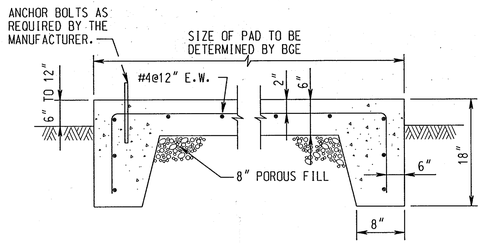

TYPICAL EXTERIOR EQUIPMENT PAD

NO SCALE

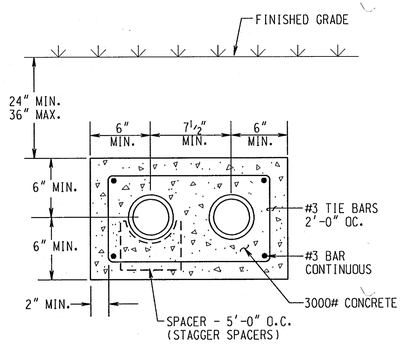

DUCTBANK DETAIL (C)

NO SCALE — C-10 | C-19

OPERATION AND MAINTENANCE SCHEDULE FOR RETENTION POND/POCKET POND

Routine Maintenance

1. Top and side slopes of the embankment shall be mowed a minimum of two (2) times per year, once in June and once in September. Other side slopes and maintenance access shall be mowed as needed.
2. Debris and litter shall be removed during regular mowing operations and as needed.
3. When deemed necessary for aesthetic reasons, and upon approval from the Department of Public Works, sediment shall be removed from the pond.

OPERATION AND MAINTENANCE SCHEDULE FOR STORMCEPTOR WATER QUALITY DEVICE

1. The Stormceptor water quality structure shall be periodically inspected and cleaned to maintain operation and function. The owner shall inspect the Stormceptor unit yearly at a minimum, utilizing the Stormceptor Inspection/Monitoring Form. Inspections shall be done by using a clear Plexiglass tube ("sludge judge") to extract a water column sample. When the sediment depths exceed the level specified in Table 6 of the Stormceptor Technical Manual, the unit must be cleaned.
2. The Stormceptor water quality structure shall be checked and cleaned immediately after petroleum spills. The owner shall contact the appropriate regulatory agencies.
3. The maintenance of the Stormceptor unit shall be done using a vacuum truck which will remove the water, sediment, debris, floating hydrocarbons and other materials in the unit. Proper cleaning and disposal of the removed materials and liquid must be followed by the owner.
4. The inlet and outlet pipes shall be checked for any obstructions at least once every six months. If obstructions are found the owner shall have them removed. Structural parts of the Stormceptor unit shall be repaired as needed.
5. The owner shall retain and make the Stormceptor Inspection/Monitoring Forms available the Howard County officials upon their request.

APPROVED: FOR PUBLIC WATER AND PRIVATE SEWERAGE SYSTEMS, HOWARD COUNTY HEALTH DEPARTMENT
COUNTY HEALTH OFFICER — DATE 3-5-03

APPROVED: HOWARD COUNTY DEPARTMENT OF PLANNING AND ZONING
DIRECTOR — DATE 3/18/03
CHIEF, DEVELOPMENT ENGINEERING DIVISION — DATE 3/11/03
CHIEF, DIVISION OF LAND DEVELOPMENT — DATE 3/17/03

DEPARTMENT OF PUBLIC WORKS
HOWARD COUNTY, MARYLAND
CHIEF, BUREAU OF UTILITIES — DATE

PREPARED BY :
WR&A
Whitman, Requardt and Associates, LLP.
801 South Caroline Street.
Baltimore, Maryland. 21231
410-235-3450

STATE OF MARYLAND — JUDITH A. AVIRETT — No. 15847 — PROFESSIONAL ENGINEER

DES: C.D.
DRN: C.K.
CHK: A.O.
DATE: 12/16/2002

BY	NO.	REVISION	DATE

DETAILS

600' SCALE MAP NO. 16 BLOCK NO. 2 / 8

PUBLIC SAFETY TRAINING CENTER
AT ALPHA RIDGE LANDFILL
CAPITAL PROJECT NO. C-0182
HOWARD COUNTY, MARYLAND

C-19

SCALE AS SHOWN

SHEET 21 OF 39

SDP-03-36

M:\13490\pstcc19.dgn
Thu Feb 20 15:40:05 2003

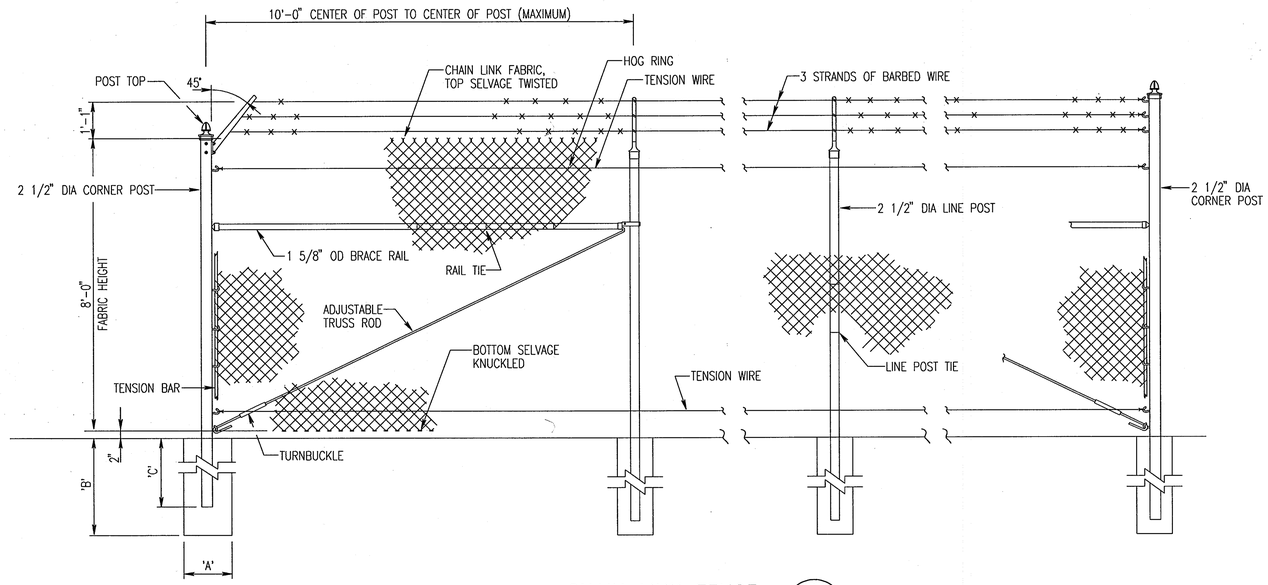

CHAIN LINK FENCE

NOT TO SCALE

A C-7 C-20

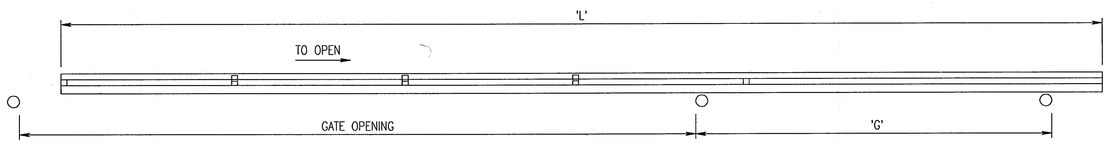

GATE PLAN

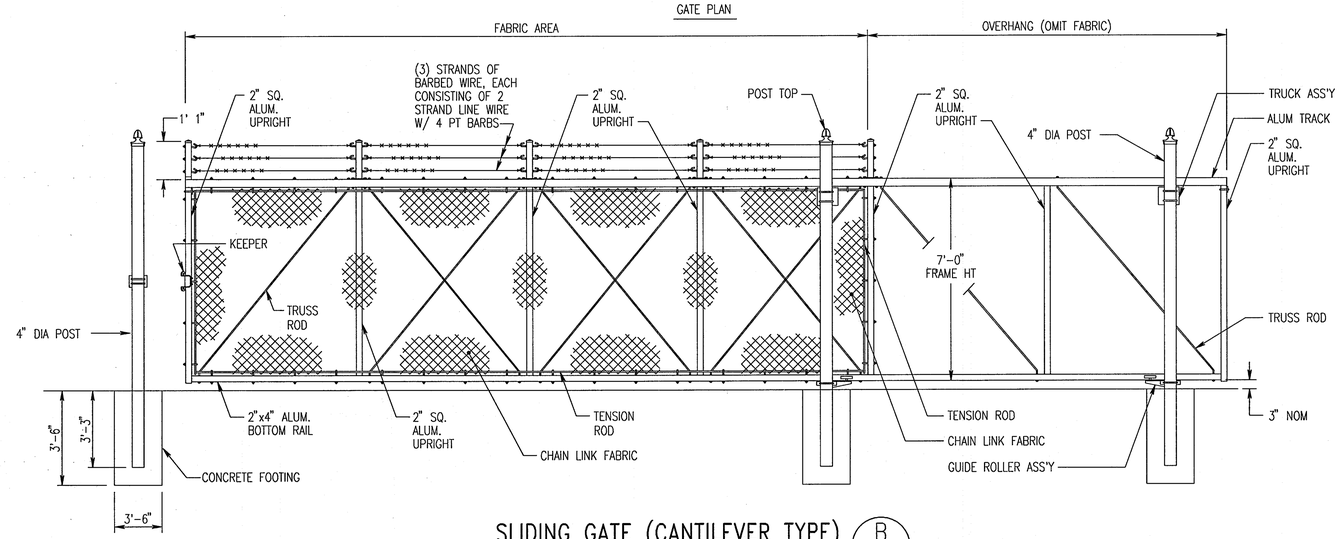

SLIDING GATE (CANTILEVER TYPE)

NOT TO SCALE

B C-7 C-20

LINE AND TERMINAL POSTS

FABRIC HEIGHT	TYPE POST	"A" DIA	"B" DEPTH	"C" POST EMBEDMENT
2108	LINE	1'-0"	3'-6"	3'-3"
	TERMINAL	1'-0"	3'-6"	3'-3"

NOTE: TERMINAL POSTS INCLUDE END, CORNER, AND PULL POSTS

SLIDING GATE

GATE OPENING (I/S POST FACE TO I/S POST FACE)	LENGTH ('L')	GATE POSTS ('G)	BAYS (WITH CHAINLINK)	OVERHANG (BAYS WITHOUT CHAINLINK)
24'-0"	36'-3"	12'-0"	3	2

APPROVED: FOR PUBLIC WATER AND PRIVATE SEWERAGE SYSTEMS, HOWARD COUNTY HEALTH DEPARTMENT

COUNTY HEALTH OFFICER — DATE 3-5-03

APPROVED: HOWARD COUNTY DEPARTMENT OF PLANNING AND ZONING

DIRECTOR — DATE 3/18/03

CHIEF, DEVELOPMENT ENGINEERING DIVISION — DATE 3/11/03

CHIEF, DIVISION OF LAND DEVELOPMENT — DATE 3/17/03

DEPARTMENT OF PUBLIC WORKS
HOWARD COUNTY, MARYLAND

CHIEF, BUREAU OF UTILITIES — DATE

PREPARED BY :

WR&A

Whitman, Requardt and Associates, LLP.
801 South Caroline Street.
Baltimore, Maryland. 21231
410-235-3450

STATE OF MARYLAND — JAMES A. AVIRETT, JR. — PROFESSIONAL ENGINEER

DES: C.D.
DRN: C.K.
CHK: A.O.
DATE: 12/16/2002

BY	NO.	REVISION	DATE

FENCE AND GATE DETAILS

600' SCALE MAP NO. 16 BLOCK NO. 2 / 8

PUBLIC SAFETY TRAINING CENTER
AT ALPHA RIDGE LANDFILL
CAPITAL PROJECT NO. C-0182
HOWARD COUNTY, MARYLAND

C-20

SCALE AS SHOWN

SHEET 22 OF 39

SDP-03-36

M:\13490\pstcc20.dgn
Thu Feb 20 15:40:27 2003

SEDIMENT AND EROSION CONTROL LEGEND

	STABILIZED CONSTRUCTION ENTRANCE
—— SF ——	SILT FENCE
A-2 B-3	EARTH DIKE
	LIMIT OF DISTURBANCE
CD	STONE CHECK DAM
TSOS	STONE OUTLET STRUCTURE
	ROCK OUTLET PROTECTION
SIP	STANDARD INLET PROTECTION
RRP	RIP-RAP INFLOW PROTECTION
	SEDIMENT BASIN BAFFLE
RPS	REMOVABLE PUMPING STATION

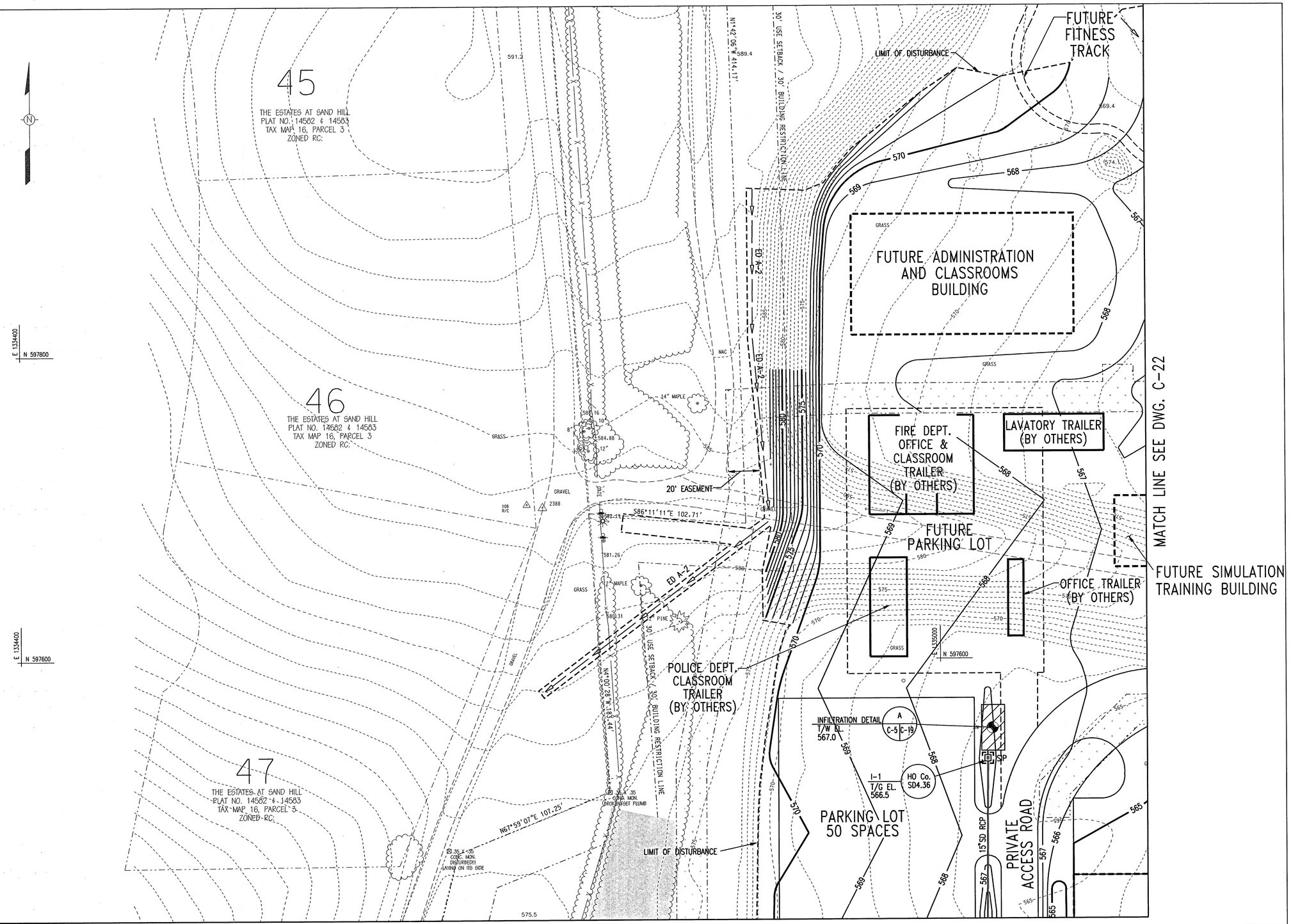

THIS DEVELOPMENT PLAN IS APPROVED FOR SOIL EROSION AND SEDIMENT CONTROL BY THE HOWARD SOIL CONSERVATION DISTRICT.

HOWARD S.C.D. — DATE 3/4/03

REVIEWED FOR HOWARD S.C.D. AND MEETS THE TECHNICAL REQUIREMENTS.

USDA-Natural Resources Conservation Service — DATE 3/4/03

BY THE ENGINEER:
"I CERTIFY THAT THIS PLAN FOR EROSION AND SEDIMENT CONTROL REPRESENTS A PRACTICAL AND WORKABLE PLAN BASED ON MY PERSONAL KNOWLEDGE OF THE SITE CONDITIONS AND THAT IT WAS PREPARED IN ACCORDANCE WITH THE REQUIREMENTS OF THE HOWARD SOIL CONSERVATION DISTRICT".

JAMES A. AVIRETT, Jr. — DATE 2/21/03

BY THE DEVELOPER:
"I/WE CERTIFY THAT ALL DEVELOPMENT AND CONSTRUCTION WILL BE DONE ACCORDING TO THIS PLAN, AND THAT ANY RESPONSIBLE PERSONNEL INVOLVED IN THE CONSTRUCTION PROJECT WILL HAVE A CERTIFICATE OF ATTENDANCE AT A DEPARTMENT OF ENVIRONMENT APPROVED TRAINING PROGRAM FOR THE CONTROL OF SEDIMENT AND EROSION BEFORE BEGINNING THE PROJECT. I ALSO AUTHORIZE PERIODIC ON-SITE INSPECTION BY THE HOWARD SOIL CONSERVATION DISTRICT".

Michael A. Giovaniello
x — DATE 2/20/03

APPROVED: FOR PUBLIC WATER AND PRIVATE SEWERAGE SYSTEMS, HOWARD COUNTY HEALTH DEPARTMENT

COUNTY HEALTH OFFICER — DATE 3-5-03

APPROVED: HOWARD COUNTY DEPARTMENT OF PLANNING AND ZONING

DIRECTOR — DATE 3/10/03

CHIEF, DEVELOPMENT ENGINEERING DIVISION — DATE 3/11/03

CHIEF, DIVISION OF LAND DEVELOPMENT — DATE 3/12/03

DEPARTMENT OF PUBLIC WORKS
HOWARD COUNTY, MARYLAND

CHIEF, BUREAU OF UTILITIES — DATE

PREPARED BY :

WR&A
Whitman, Requardt and Associates, LLP.
801 South Caroline Street.
Baltimore, Maryland. 21231
410-235-3450

STATE OF MARYLAND — JAMES A. AVIRETT — 10219 — PROFESSIONAL ENGINEER

DES: C.D.
DRN: C.K.
CHK: A.O.
DATE: 12/16/2002

BY	NO.	REVISION	DATE

EROSION AND SEDIMENT CONTROL PLAN

600' SCALE MAP NO. 16 BLOCK NO. 2 / 8

PUBLIC SAFETY TRAINING CENTER
AT ALPHA RIDGE LANDFILL
CAPITAL PROJECT NO. C-0182
HOWARD COUNTY, MARYLAND

GRAPHIC SCALE
30 20 10 0 30 60
SCALE: 1" = 30'

C-21

SCALE AS SHOWN

SHEET 23 OF 39

SDP-03-36

M:\13490\pstcc2l.dgn
Thu Feb 20 15:40:36 2003

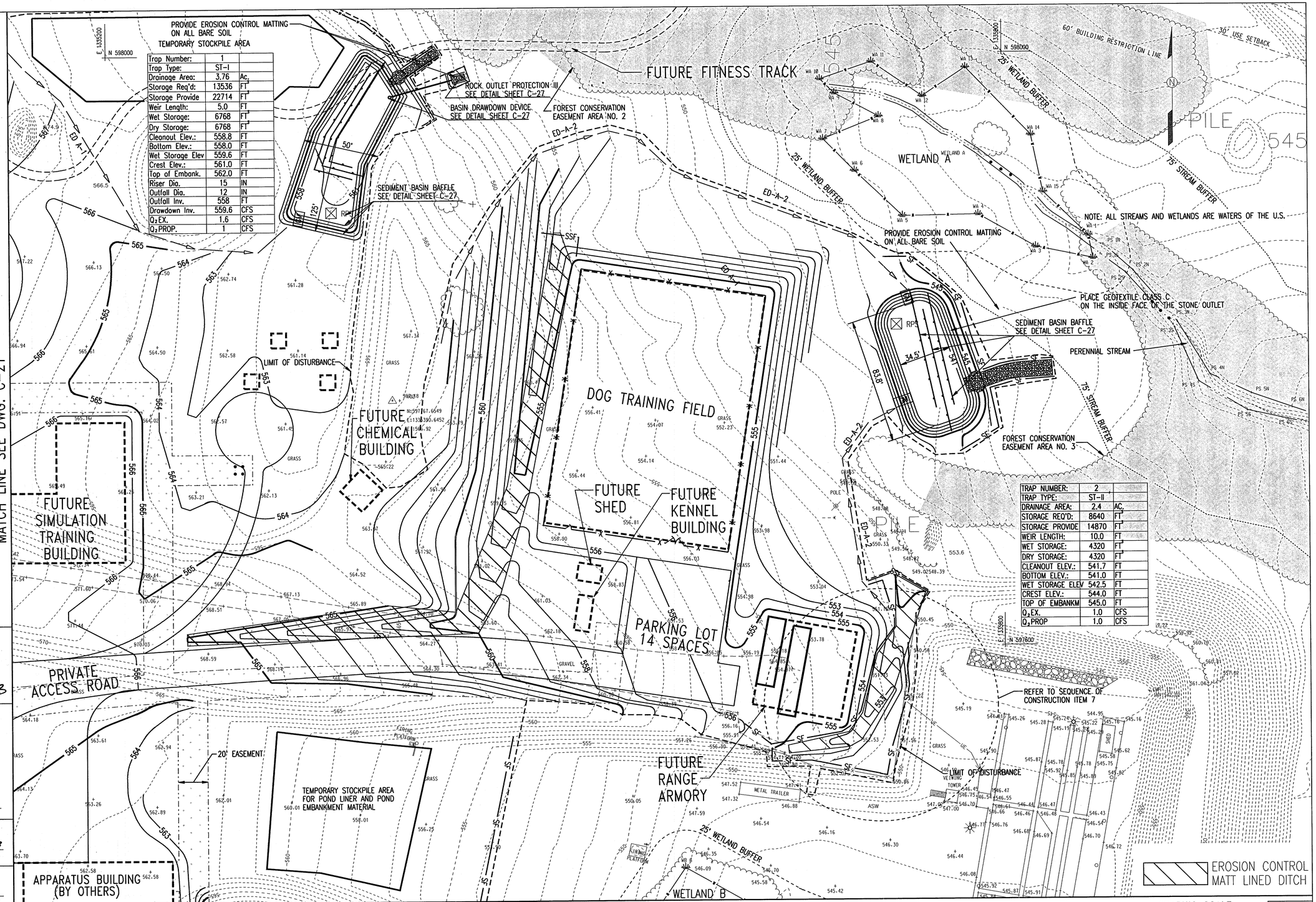

Trap Number:	1	
Trap Type:	ST-I	
Drainage Area:	3.76	Ac.
Storage Req'd:	13536	FT³
Storage Provide	22714	FT³
Weir Length:	5.0	FT
Wet Storage:	6768	FT³
Dry Storage:	6768	FT³
Cleanout Elev.:	558.8	FT
Bottom Elev.:	558.0	FT
Wet Storage Elev	559.6	FT
Crest Elev.:	561.0	FT
Top of Embank.	562.0	FT
Riser Dia.	15	IN
Outfall Dia.	12	IN
Outfall Inv.	558	FT
Drawdown Inv.	559.6	CFS
Q_2 EX.	1.6	CFS
Q_2 PROP.	1	CFS

TRAP NUMBER:	2	
TRAP TYPE:	ST-II	
DRAINAGE AREA:	2.4	AC.
STORAGE REQ'D:	8640	FT³
STORAGE PROVIDE	14870	FT³
WEIR LENGTH:	10.0	FT
WET STORAGE:	4320	FT³
DRY STORAGE:	4320	FT³
CLEANOUT ELEV.:	541.7	FT
BOTTOM ELEV.:	541.0	FT
WET STORAGE ELEV	542.5	FT
CREST ELEV.:	544.0	FT
TOP OF EMBANKM	545.0	FT
Q_2 EX.	1.0	CFS
Q_2 PROP	1.0	CFS

THIS DEVELOPMENT PLAN IS APPROVED FOR SOIL EROSION AND SEDIMENT CONTROL BY THE HOWARD SOIL CONSERVATION DISTRICT.

HOWARD S.C.D. — DATE 3/4/03

REVIEWED FOR HOWARD S.C.D. AND MEETS THE TECHNICAL REQUIREMENTS.

USDA-Natural Resources Conservation Service — DATE 3/4/03

BY THE ENGINEER:
"I CERTIFY THAT THIS PLAN FOR EROSION AND SEDIMENT CONTROL REPRESENTS A PRACTICAL AND WORKABLE PLAN BASED ON MY PERSONAL KNOWLEDGE OF THE SITE CONDITIONS AND THAT IT WAS PREPARED IN ACCORDANCE WITH THE REQUIREMENTS OF THE HOWARD SOIL CONSERVATION DISTRICT".

JAMES A. AVIRETT, Jr. — DATE 2/21/03

BY THE DEVELOPER:
"I/WE CERTIFY THAT ALL DEVELOPMENT AND CONSTRUCTION WILL BE DONE ACCORDING TO THIS PLAN, AND THAT ANY RESPONSIBLE PERSONNEL INVOLVED IN THE CONSTRUCTION PROJECT WILL HAVE A CERTIFICATE OF ATTENDANCE AT A DEPARTMENT OF ENVIRONMENT APPROVED TRAINING PROGRAM FOR THE CONTROL OF SEDIMENT AND EROSION BEFORE BEGINNING THE PROJECT. I ALSO AUTHORIZE PERIODIC ON-SITE INSPECTION BY THE HOWARD SOIL CONSERVATION DISTRICT".

Michael A. Giovanniello — DATE 2/27/03

APPROVED: FOR PUBLIC WATER AND PRIVATE SEWERAGE SYSTEMS, HOWARD COUNTY HEALTH DEPARTMENT

COUNTY HEALTH OFFICER — DATE 3-5-03

APPROVED: HOWARD COUNTY DEPARTMENT OF PLANNING AND ZONING

DIRECTOR — DATE 3/10/03

CHIEF, DEVELOPMENT ENGINEERING DIVISION — DATE 3/11/03

CHIEF, DIVISION OF LAND DEVELOPMENT — DATE 3/17/03

DEPARTMENT OF PUBLIC WORKS
HOWARD COUNTY, MARYLAND

CHIEF, BUREAU OF UTILITIES — DATE

PREPARED BY:
WR&A
Whitman, Requardt and Associates, LLP.
801 South Caroline Street.
Baltimore, Maryland. 21231
410-235-3450

STATE OF MARYLAND — JAMES A. AVIRETT JR. — 10210 — PROFESSIONAL ENGINEER

DES: C.D.
DRN: C.K.
CHK: A.O.
DATE: 12/16/2002

BY	NO.	REVISION	DATE

EROSION AND SEDIMENT CONTROL PLAN

600' SCALE MAP NO. 16 BLOCK NO. 2 / 8

PUBLIC SAFETY TRAINING CENTER
AT ALPHA RIDGE LANDFILL
CAPITAL PROJECT NO. C-0182
HOWARD COUNTY, MARYLAND

GRAPHIC SCALE
30 20 10 0 30 60
SCALE: 1" = 30'

C-22

SCALE AS SHOWN

SHEET 24 OF 39

SDP-03-36

M:\13490\pstcc22.dgn
Thu Feb 20 15:40:48 2003

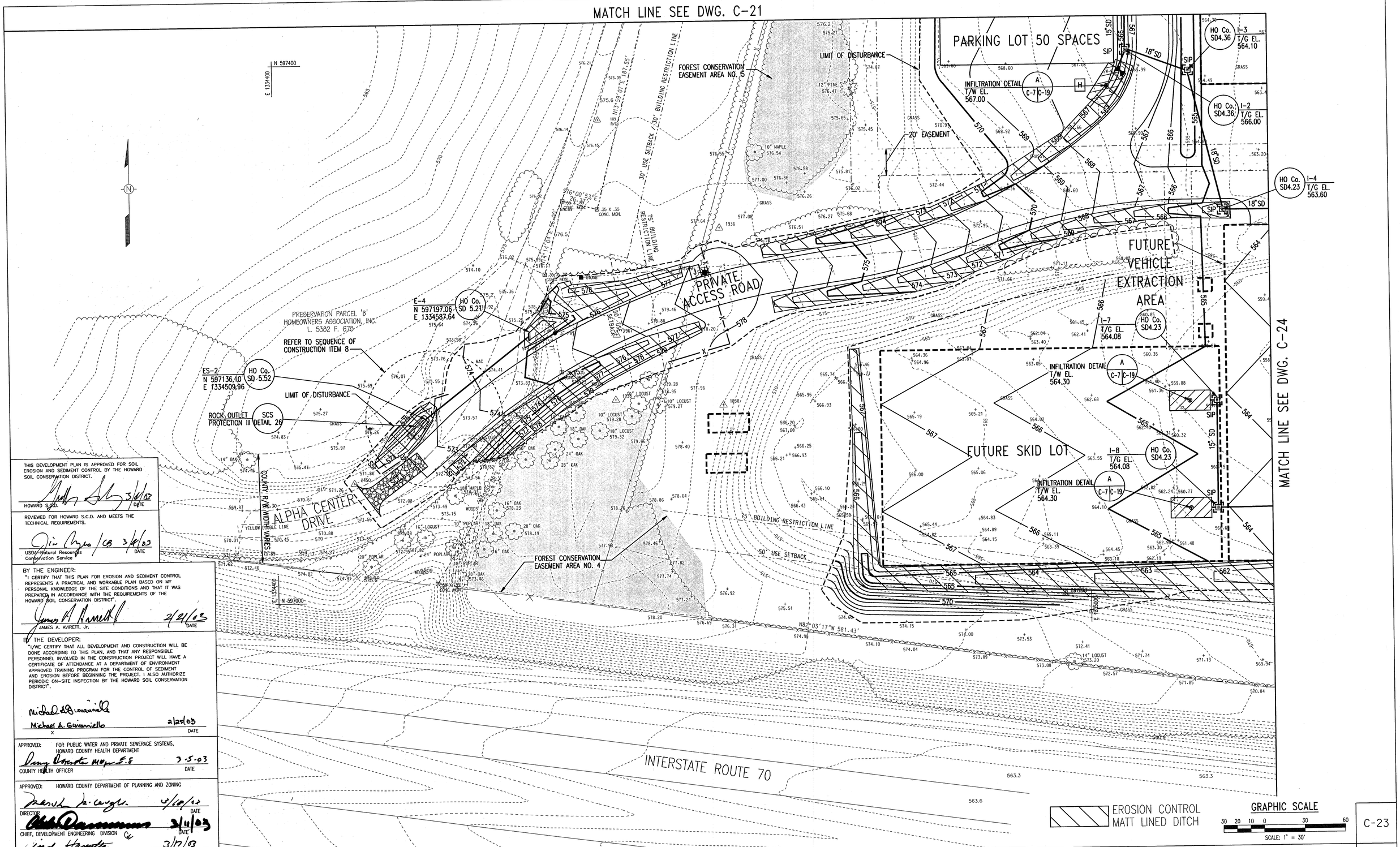

THIS DEVELOPMENT PLAN IS APPROVED FOR SOIL EROSION AND SEDIMENT CONTROL BY THE HOWARD SOIL CONSERVATION DISTRICT.

HOWARD S.C.D. — DATE 3/4/03

REVIEWED FOR HOWARD S.C.D. AND MEETS THE TECHNICAL REQUIREMENTS.

USDA-Natural Resources Conservation Service — DATE 3/4/03

BY THE ENGINEER:
"I CERTIFY THAT THIS PLAN FOR EROSION AND SEDIMENT CONTROL REPRESENTS A PRACTICAL AND WORKABLE PLAN BASED ON MY PERSONAL KNOWLEDGE OF THE SITE CONDITIONS AND THAT IT WAS PREPARED IN ACCORDANCE WITH THE REQUIREMENTS OF THE HOWARD SOIL CONSERVATION DISTRICT".

JAMES A. AVIRETT, Jr. — DATE 2/21/03

BY THE DEVELOPER:
"I/WE CERTIFY THAT ALL DEVELOPMENT AND CONSTRUCTION WILL BE DONE ACCORDING TO THIS PLAN, AND THAT ANY RESPONSIBLE PERSONNEL INVOLVED IN THE CONSTRUCTION PROJECT WILL HAVE A CERTIFICATE OF ATTENDANCE AT A DEPARTMENT OF ENVIRONMENT APPROVED TRAINING PROGRAM FOR THE CONTROL OF SEDIMENT AND EROSION BEFORE BEGINNING THE PROJECT. I ALSO AUTHORIZE PERIODIC ON-SITE INSPECTION BY THE HOWARD SOIL CONSERVATION DISTRICT".

Michael A. Giovaniello — DATE 2/25/03

APPROVED: FOR PUBLIC WATER AND PRIVATE SEWERAGE SYSTEMS, HOWARD COUNTY HEALTH DEPARTMENT

COUNTY HEALTH OFFICER — DATE 3-5-03

APPROVED: HOWARD COUNTY DEPARTMENT OF PLANNING AND ZONING

DIRECTOR — DATE 3/10/03

CHIEF, DEVELOPMENT ENGINEERING DIVISION — DATE 3/4/03

CHIEF, DIVISION OF LAND DEVELOPMENT — DATE 3/17/03

DEPARTMENT OF PUBLIC WORKS
HOWARD COUNTY, MARYLAND

CHIEF, BUREAU OF UTILITIES — DATE

PREPARED BY:

WR&A
Whitman, Requardt and Associates, LLP.
801 South Caroline Street.
Baltimore, Maryland. 21231
410-235-3450

STATE OF MARYLAND — JAMES A. AVIRETT — No. 10210 — PROFESSIONAL ENGINEER

DES: C.D.
DRN: C.K.
CHK: A.O.
DATE: 12/16/2002

BY	NO.	REVISION	DATE

EROSION AND SEDIMENT CONTROL PLAN

600' SCALE MAP NO. 16 BLOCK NO. 2 / 8

PUBLIC SAFETY TRAINING CENTER
AT ALPHA RIDGE LANDFILL
CAPITAL PROJECT NO. C-0182
HOWARD COUNTY, MARYLAND

C-23

SCALE AS SHOWN

SHEET 25 OF 39

SDP-03-36

M:\13490\psfcc23.dgn
Thu Feb 20 15:41:00 2003

MATCH LINE SEE DWG. C-22

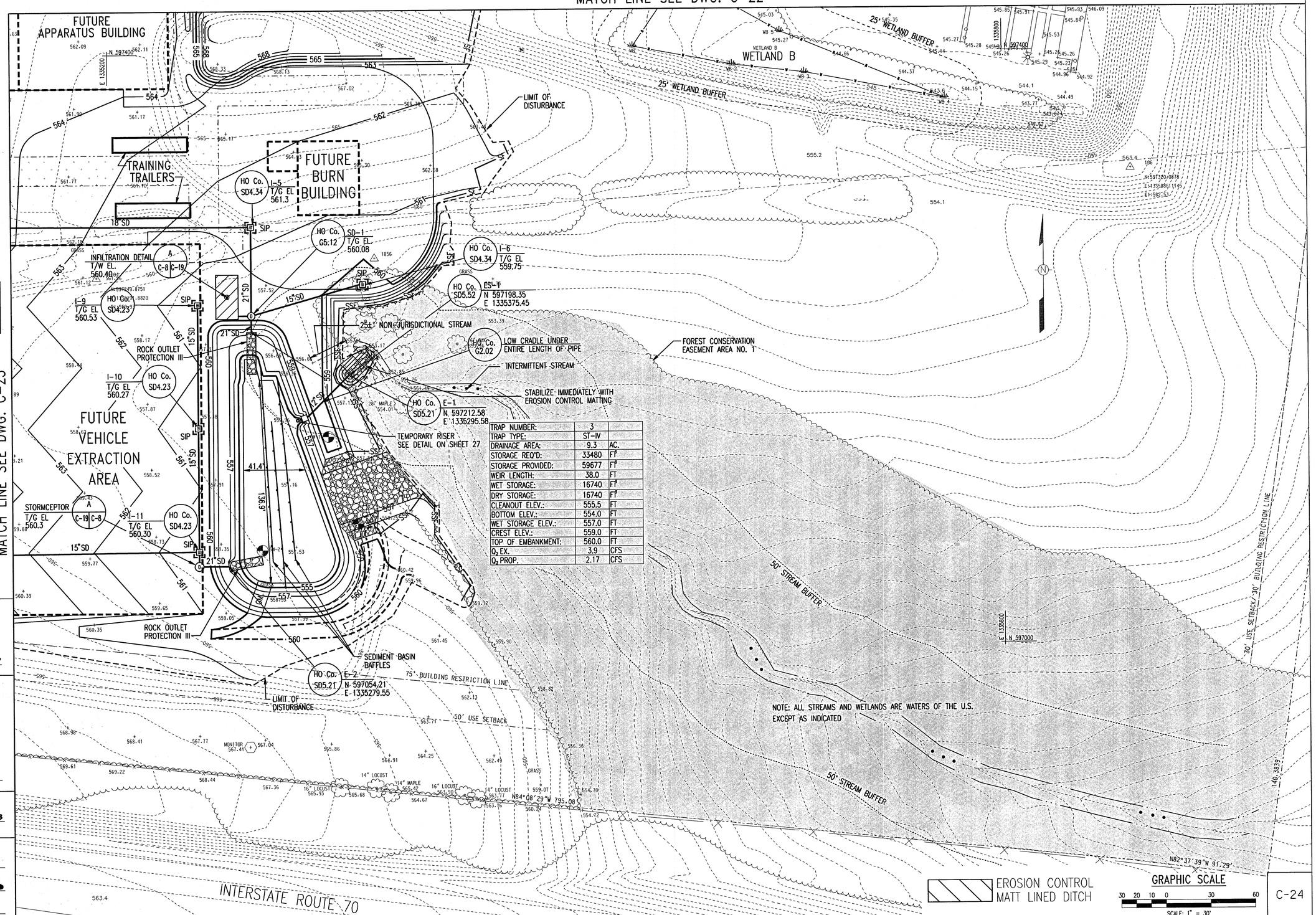

TRAP NUMBER:	3	
TRAP TYPE:	ST-IV	
DRAINAGE AREA:	9.3	AC.
STORAGE REQ'D:	33480	FT³
STORAGE PROVIDED:	59677	FT³
WEIR LENGTH:	38.0	FT
WET STORAGE:	16740	FT³
DRY STORAGE:	16740	FT³
CLEANOUT ELEV.:	555.5	FT
BOTTOM ELEV.:	554.0	FT
WET STORAGE ELEV.:	557.0	FT
CREST ELEV.:	559.0	FT
TOP OF EMBANKMENT:	560.0	FT
Q_2 EX.	3.9	CFS
Q_2 PROP.	2.17	CFS

* NOTE:
CONTOURS SHOWN ON THIS SHEET ARE FOR TEMPORARY SEDIMENT CONTROL MEASURES ONLY. FOR FINAL CONSTRUCTED CONDITIONS. SEE SHEET C-8.

THIS DEVELOPMENT PLAN IS APPROVED FOR SOIL EROSION AND SEDIMENT CONTROL BY THE HOWARD SOIL CONSERVATION DISTRICT.

HOWARD S.C.D. 3/4/03 DATE

REVIEWED FOR HOWARD S.C.D. AND MEETS THE TECHNICAL REQUIREMENTS.

USDA-Natural Resources Conservation Service 3/4/03 DATE

BY THE ENGINEER:
"I CERTIFY THAT THIS PLAN FOR EROSION AND SEDIMENT CONTROL REPRESENTS A PRACTICAL AND WORKABLE PLAN BASED ON MY PERSONAL KNOWLEDGE OF THE SITE CONDITIONS AND THAT IT WAS PREPARED IN ACCORDANCE WITH THE REQUIREMENTS OF THE HOWARD SOIL CONSERVATION DISTRICT".

JAMES A. AVIRETT, JR. 2/21/03 DATE

BY THE DEVELOPER:
"I/WE CERTIFY THAT ALL DEVELOPMENT AND CONSTRUCTION WILL BE DONE ACCORDING TO THIS PLAN, AND THAT ANY RESPONSIBLE PERSONNEL INVOLVED IN THE CONSTRUCTION PROJECT WILL HAVE A CERTIFICATE OF ATTENDANCE AT A DEPARTMENT OF ENVIRONMENT APPROVED TRAINING PROGRAM FOR THE CONTROL OF SEDIMENT AND EROSION BEFORE BEGINNING THE PROJECT. I ALSO AUTHORIZE PERIODIC ON-SITE INSPECTION BY THE HOWARD SOIL CONSERVATION DISTRICT".

Michael A. Giovanniello 2/25/03 DATE

APPROVED: FOR PUBLIC WATER AND PRIVATE SEWERAGE SYSTEMS, HOWARD COUNTY HEALTH DEPARTMENT

COUNTY HEALTH OFFICER 3-5-03 DATE

APPROVED: HOWARD COUNTY DEPARTMENT OF PLANNING AND ZONING

DIRECTOR 3/18/03 DATE

CHIEF, DEVELOPMENT ENGINEERING DIVISION 3/11/03 DATE

CHIEF, DIVISION OF LAND DEVELOPMENT 3/17/03 DATE

DEPARTMENT OF PUBLIC WORKS
HOWARD COUNTY, MARYLAND

CHIEF, BUREAU OF UTILITIES DATE

PREPARED BY :
WR&A
Whitman, Requardt and Associates, LLP.
801 South Caroline Street.
Baltimore, Maryland. 21231
410-235-3450

STATE OF MARYLAND — JAMES A. AVIRETT, JR. — 20310 — PROFESSIONAL ENGINEER

DES: C.D.
DRN: C.K.
CHK: A.O.
DATE: 12/16/2002

BY	NO.	REVISION	DATE

EROSION AND SEDIMENT CONTROL PLAN

600' SCALE MAP NO. 16 BLOCK NO. 2 / 8

PUBLIC SAFETY TRAINING CENTER
AT ALPHA RIDGE LANDFILL
CAPITAL PROJECT NO. C-0182
HOWARD COUNTY, MARYLAND

C-24

SCALE AS SHOWN

SHEET 26 OF 39

SDP-03-36

M:\13490\psfcc24.dgn
Thu Feb 20 15:48:14 2003

SEDIMENT CONTROL NOTES

1. A MINIMUM OF 24 HOURS NOTICE MUST BE GIVEN TO THE HOWARD COUNTY OFFICE OF INSPECTION AND PERMITS PRIOR TO THE START OF ANY CONSTRUCTION (410) 313-1855.

2. ALL VEGETATIVE AND STRUCTURAL PRACTICES ARE TO BE INSTALLED ACCORDING TO THE PROVISIONS OF THIS PLAN AND ARE TO BE IN CONFORMANCE WITH THE 1994 MARYLAND STANDARDS AND SPECIFICATION FOR SOIL EROSION AND SEDIMENT CONTROL AND REVISIONS THERETO.

3. FOLLOWING INITIAL SOIL DISTURBANCE OR REDISTURBANCE, PERMANENT OR TEMPORARY STABILIZATION SHALL BE COMPLETED WITHIN: A) 7 CALENDAR DAYS FOR ALL PERIMETER SEDIMENT CONTROL STRUCTURES, DIKES AND PERIMETER SLOPES AND ALL SLOPES GREATER THAN 3:1, B) 14 DAYS AS TO ALL OTHER DISTURBED OR GRADED AREAS ON THE PROJECT SITE.

4. ALL SEDIMENT TRAPS/BASINS SHOWN MUST BE FENCED AND WARNING SIGNS POSTED AROUND THEIR PERIMETER IN ACCORDANCE WITH VOL. 1, CHAPTER 12, OF THE HOWARD COUNTY DESIGN MANUAL, STORM DRAINAGE.

5. ALL DISTURBED AREAS MUST BE STABILIZED WITHIN THE TIME PERIOD SPECIFIED ABOVE IN ACCORDANCE WITH THE 1994 MARYLAND STANDARDS AND SPECIFICATIONS FOR SOIL EROSION AND SEDIMENT CONTROL FOR PERMANENT SEEDINGS, SOD, TEMPORARY SEEDINGS AND MULCHING (SEC. G). TEMPORARY STABILIZATION, WITH MULCH ALONE, CAN ONLY BE DONE WHEN RECOMMENDED SEEDING DATES DO NOT ALLOW FOR PROPER GERMINATION AND ESTABLISHMENT OF GRASSES.

6. ALL SEDIMENT CONTROL STRUCTURES ARE TO REMAIN IN PLACE AND ARE TO BE MAINTAINED IN OPERATIVE CONDITIONS UNTIL PERMISSION FOR THEIR REMOVAL HAS BEEN OBTAINED FROM THE HOWARD COUNTY SEDIMENT CONTROL INSPECTOR.

7. SITE ANALYSIS:

TOTAL AREA OF SITE	= 38.23 ACRES
AREA DISTURBED	= 15.93 ACRES
AREA TO BE ROOFED OR PAVED	= 3.74 ACRES
AREA TO BE VEGETATIVELY STABILIZED	= 11.12 ACRES
TOTAL CUT	= 21,191 CU. YDS.
TOTAL FILL	= 17,205 CU. YDS.
WASTE/BORROW AREA LOCATION	= (3,986 CU.YDS.) AS SHOWN ON SEDIMENT & EROSION CONTROL SHEETS

8. ANY SEDIMENT CONTROL PRACTICE WHICH IS DISTURBED BY GRADING ACTIVITY FOR PLACEMENT OF UTILITIES MUST BE REPAIRED ON THE SAME DAY.

9. ADDITIONAL SEDIMENT CONTROL MUST BE PROVIDED, IF DEEMED NECESSARY BY THE HOWARD COUNTY DPW SEDIMENT CONTROL INSPECTOR.

10. ON ALL SITES WITH DISTURBED AREAS IN EXCESS OF 2 ACRES, APPROVAL OF THE INSPECTION AGENCY SHALL BE REQUESTED UPON COMPLETION OF INSTALLATION OF PERIMETER EROSION AND SEDIMENT CONTROLS, BUT BEFORE PROCEEDING WITH ANY OTHER EARTH DISTURBANCE OR GRADING. OTHER BUILDING OR GRADING INSPECTION APPROVALS MAY NOT BE AUTHORIZED UNTIL THIS INITIAL APPROVAL BY THE INSPECTION AGENCY IS MADE.

11. TRENCHES FOR THE CONSTRUCTION OF UTILITIES IS LIMITED TO 3 PIPE LENGTHS OR THAT WHICH SHALL BE BACKFILLED AND STABILIZED WITHIN 1 WORKING DAY, WHICHEVER IS SHORTER.

20.0 STANDARDS AND SPECIFICATIONS FOR VEGETATIVE STABILIZATION

Definition

Using vegetation as cover for barren soil to protect it from forces that cause erosion.

Purpose

Vegetative Stabilization specifications are used to promote the establishment of vegetation on exposed soil. When soil is stabilized with vegetation, the soil is less likely to erode and more likely to allow infiltration of rainfall, thereby reducing sediment loads and runoff to downstream areas, and improving wildlife habitat and visual resources.

Conditions Where Practice Applies

This practice shall be used on denuded areas as specified on the plans and may be used on highly erodible or critically eroding areas. This specification is divided into Temporary Seeding, to quickly establish vegetative cover for short duration (up to one year), and Permanent Seeding, for long term vegetative cover. Examples of applicable areas for Temporary Seeding are temporary soil stockpiles, cleared areas being left idle between construction phases, earth dikes, etc. and for Permanent Seeding are lawns, dams, cut and fill slopes and other areas at final grade, former stockpile and staging areas, etc.

Effects on Water Quality and Quantity

Planting vegetation in disturbed areas will have an effect on the water budget, especially on volumes and rates of runoff, infiltration, evaporation, transpiration, percolation, and groundwater recharge. Vegetation, over time, will increase organic matter content and improve the water holding capacity of the soil and subsequent plant growth.

Vegetation will help reduce the movement of sediment, nutrients, and other chemicals carried by runoff to receiving waters. Plants will also help protect groundwater supplies by assimilating those substances present within the root zone.

Sediment control devices must remain in place during grading, seedbed preparation, seeding, mulching and vegetative establishment to prevent large quantities of sediment and associated chemicals and nutrients from washing into surface waters.

Section I - Vegetative Stabilization Methods and Materials

A. Site Preparation

i. install erosion and sediment control structures (either temporary or permanent) such as diversions, grade stabilization structures, berms, waterways, or sediment control basins.

ii. Perform all grading operations at right angles to the slope. Final grading and shaping is not usually necessary for temporary seeding.

iii. Schedule required soil tests to determine soil amendment composition and application rates for sites having disturbed area over 5 acres.

B. Soil Amendments (Fertilizer and Lime Specifications)

i. Soil tests must be performed to determine the exact ratios and application rates for both lime and fertilizer on sites having disturbed areas over 5 acres. Soil analysis may be performed by the University of Maryland or a recognized commercial laboratory. Soil samples taken for engineering purposes may also be used for chemical analyses.

ii. Fertilizers shall be uniform in composition, free flowing and suitable for accurate application by approved equipment. Manure may be substituted for fertilizer with prior approval from the appropriate approval authority. Fertilizers shall all be delivered to the site fully labeled according to the applicable state fertilizer laws and shall bear the name, trade name or trademark and warrantee of the producer.

iii. Lime materials shall be ground limestone (hydrated or burnt lime may be substituted) which contains at least 50% total oxides (calcium oxide plus magnesium oxide) . Limestone shall be ground to such fineness that at least 50% will pass through a #100 mesh sieve and 98 - 100% will pass through a #20 mesh sieve.

iv. Incorporate lime and fertilizer into the top 3 - 5" of soil by disking or other suitable means.

C. Seedbed Preparation

i. Temporary Seeding

a. Seedbed preparation shall consist of loosening soil to a depth of 3" to 5" by means of suitable agricultural or construction equipment, such as disc harrows or chisel plows or rippers mounted on construction equipment. After the soil is loosened it should not be rolled or dragged smooth but left in the roughened condition. Sloped areas (greater than 3:1) should be tracked leaving the surface in an irregular condition with ridges running parallel to the contour of the slope.

b. Apply fertilizer and lime as prescribed on the plans.

c. Incorporate lime and fertilizer into the top 3 - 5" of soil by disking or other suitable means.

ii. Permanent Seeding

a. Minimum soil conditions required for permanent vegetative establishment:

1. Soil pH shall be between 6.0 and 7.0
2. Soluble salts shall be less than 500 parts per million (ppm).
3. The soil shall contain less than 40% clay but enough fine grained material (> 30% silt plus clay) to provide the capacity to hold a moderate amount of moisture. An exception is if lovegrass or serecia lespedeza is to be planted, then a sandy soil (< 30% silt plus clay) would be acceptable.
4. Soil shall contain 1.5% minimum organic matter by weight.
5. Soil must contain sufficient pore space to permit adequate root penetration.
6. If these conditions cannot be met by soils on site, adding topsoil is required in accordance with Section 21 Standard and Specification for Topsoil.

b. Areas previously graded in conformance with the drawings shall be maintained in a true and even grade, then scarified or otherwise loosened to a depth of 3 - 5" to permit bonding of the topsoil to the surface area and to create horizontal erosion check slots to prevent topsoil from sliding down a slope.

c. Apply soil amendments as per soil test or as included on the plans.

d. Mix soil amendments into the top 3 - 5" of topsoil by disking or other suitable means. Lawn areas should be raked to smooth the surface, remove large objects like stones and branches, and ready the area for seed application. Where site conditions will not permit normal seedbed preparation, loosen surface soil by dragging with a heavy chain or other equipment to roughen the surface Steep slopes (steeper than 3:1) should be tracked by a dozer leaving the soil in an irregular condition with ridges running parallel to the contour of the slope. The top 1 - 3" of soil should be loose and friable. seedbed loosening may not be necessary on newly disturbed areas.

D. Seed Specifications

i. All seed must meet the requirements of the Maryland State Seed Law. All seed shall be subject to re-testing by a recognized seed laboratory. All seed used shall have been tested within the 6 months immediately preceding the date of sowing such material on this job.

Note: Seed tags shall be made available to the inspector to verify type and rate of seed used.

ii. Inoculant - The inoculant for treating legume seed in the seed mixtures shall be a pure culture of nitrogen-fixing bacteria prepared specifically for the species. Inoculants shall not be used later than the date indicated on the container. Add fresh inoculant as directed on package. Use four times the recommended rate when hydroseeding. Note: It is very important to keep inoculant as cool as possible until used. Temperatures above 75 - 80-F. can weaken bacteria and make the inoculant less effective.

E. Methods of Seeding

i. Hydroseeding: Apply seed uniformly with hydroseeder (slurry includes seed and fertilizer), broadcast or drop seeder, or a cultipacker seeder.

a. If fertilizer is being applied at the time of seeding, the application rates amounts will not exceed the following: nitrogen; maximum of 100 lbs. per acre total of soluble nitrogen; P205 (phosphorous): 200 lbs/ac; K20 (potassium): 200 lbs/ac.

b. Lime - use only ground agricultural limestone, (Up to 3 tons per acre may be applied by hydroseeding). Normally, not more than 2 tons are applied by hydroseeding at any one time.
Do not use burnt or hydrated lime when hydroseeding.

c. Seed and fertilizer shall be mixed on site and seeding shall be done immediately and without interruption.

ii. Dry Seeding: This includes use of conventional drop or broadcast spreaders.

a. Seed spread dry shall be incorporated into the subsoil at the rates prescribed on the temporary or Permanent Seeding Summaries or Tables 25 or 26. The seeded area shall then be rolled with a weighted roller to provide good seed to soil contact.

b. Where practical, seed should be applied in two directions perpendicular to each other. Apply half the seeding rate in each direction.

iii. Drill or Cultipacker Seeding: Mechanized seeders that apply and cover seed with soil.

a. Cultipacker seeders are required to bury the seed in such a fashion as to provide at least ½ inch of soil covering. Seedbed must be firm after planting.

b. Where practical, seed should be applied in two directions perpendicular to each other. Apply half the seeding rate in each direction.

F. Mulch Specifications (In order of preference)

i. Straw shall consist of thoroughly threshed wheat, rye or oat straw, reasonably bright in color, and shall not be musty, moldy, caked, decayed, or excessively dusty and shall be free of noxious weed seeds as specified in the Maryland Seed Law.

ii. Wood Cellulose Fiber Mulch (WCFM)

a. WCFM shall consist of specially prepared wood cellulose processed into a uniform fibrous physical state.

b. WCFM shall be dyed green or contain a green dye in the package that will provide an appropriate color to facilitate visual inspection of the uniformly spread slurry.

c. WCFM, including dye, shall contain no germination or growth inhibiting factors.

d. WCFM materials shall be manufactured and processed in such a manner that the wood cellulose fiber mulch will remain in uniform suspension in water under agitation and will blend with seed, fertilizer and other additives to form a homogeneous slurry. The mulch material shall form a blotter-like ground cover, on application, having moisture absorption and percolation properties and shall cover and hold grass seed in contact with the soil without inhibiting the growth of the grass seedlings.

e. WCFM material shall contain no elements or compounds at concentration levels that will be phyto-toxic.

f. WCFM must conform to the following physical requirements: fiber length to approximately 10 mm., diameter approximately 1 mm., pH range of 4.0 to 8.5, ash content of 1.6% maximum and water holding capacity of 90% minimum.

Note: Only sterile straw mulch should be used in areas where one species of grass is desired.

G. Mulching Seeded Areas - Mulch shall be applied to all seeded areas immediately after seeding.

i. If grading is completed outside of the seeding season, mulch alone shall be applied as prescribed in this section and maintained until the seeding season returns and seeding can be performed in accordance with these specifications.

ii. When straw mulch is used, it shall be spread over all seedbed areas at the rate of 2 tons/acre. Mulch shall be applied to a uniform loose depth of between 1" and 2". Mulch applied shall achieve a uniform distribution and depth so that the soil surface is not exposed. If a mulch anchoring tool is to be used , the rate should be increased to 2.5 tons/acre.

iii. Wood cellulose fiber used as a mulch shall be applied at a net dry weight of 1,500 lbs. per acre. The wood cellulose fiber shall be mixed with water, and the mixture shall contain a maximum of 50 lbs. of wood cellulose fiber per 100 gallons of water.

H. Securing Straw Mulch (Mulch Anchoring): Mulch anchoring shall be performed immediately following mulch application to minimize loss by wind or water. This may be done by one of the following methods (listed by preference), depending upon size of area and erosion hazard:

i. A mulch anchoring tool is a tractor drawn implement designed to punch and anchor mulch into the soil surface a minimum of two (2) inches. This practice is most effective on large areas, but is limited to flatter slopes where equipment can operate safely. If used on sloping land, this practice should be used on the contour if possible.

ii. Wood cellulose fiber may be used for anchoring straw. The fiber binder shall be applied at a net dry weight of 750 pounds/acre. The wood cellulose fiber shall be mixed with water and the mixture shall contain a maximum of 50 pounds of wood cellulose fiber per 100 gallons of water.

iii. Application of liquid binders should be heavier at the edges where wind catches mulch, such as in valleys and on crests of banks. The remainder of area should be appear uniform after binder application. Synthetic binders - such as Acrylic DLR (Agro-Tack), DCA-70, Petroset, Terra Tax II, Terra Tack AR or other approved equal may be used at rates recommended by the manufacturer to anchor mulch.

iv. Lightweight plastic netting may be stapled over the mulch according to manufacturer's recommendations. Netting is usually available in rolls 4' to 15' feet wide and 300 to 3,000 feet long.

I. Incremental Stabilization - Cut Slopes

i. All cut slopes shall be dressed, prepared, seeded and mulched as the work progresses. Slopes shall be excavated and stabilized in equal increments not to exceed 15'.

ii. Construction sequence (Refer to Figure 4 below):

a. Excavate and stabilize all temporary swales, side ditches, or berms that will be used to convey runoff from the excavation.

b. Perform phase 1 excavation, dress, and stabilize.

c. Perform phase 2 excavation, dress, and stabilize. Overseed phase 1 areas as necessary.

d. Perform final phase excavation, dress, and stabilize. Overseed previously seeded areas as necessary.

Note: Once excavation has begun the operation should be continuous from grubbing through the completion of grading and placement of topsoil (if required) and permanent seed and mulch. Any interruptions in the operation or completing the operation out of the seeding season will necessitate the application of temporary stabilization.

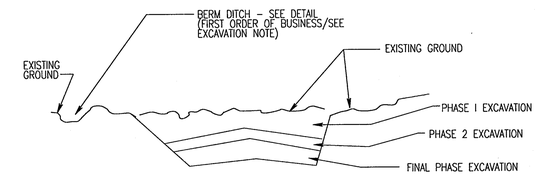

Figure 4 Incremental Stabilization - Cut

J. Incremental Stabilization of Embankments - File Slopes

i. Embankments shall be constructed in lifts as prescribed on the plans.

ii. Slopes shall be stabilized immediately when the vertical height of the multiple lifts reaches 15', or when the grading operation ceases as prescribed in the plans.

iii. At the end of each day, temporary berms and pipe slope drains should be constructed along the top edge of the embankment to intercept surface runoff and convey it down the slope in a non-erosive manner to a sediment trapping device.

iv. Construction sequence: Refer to Figure 5 (below).

a. Excavate and stabilize all temporary swales, side ditches, or berms that will be used to divert runoff around the fill. Construct Slope Silt Fence on low side of fill as shown in Figure 5, unless other methods shown on the plans address this area.

b. Place phase 1 embankment, dress and stabilize.

c. Place phase 2 embankment, dress and stabilize.

d. Place final phase embankment, dress and stabilize. Overseed previously seeded areas as necessary.

Note: Once the placement of fill has begun the operation should be continuous from grubbing through the completion of grading and placement of topsoil (if required) and permanent seed and mulch. Any interruptions in the operation or completing the operation out of the seeding season will necessitate the application of temporary stabilization.

APPROVED: FOR PUBLIC WATER AND PRIVATE SEWERAGE SYSTEMS, HOWARD COUNTY HEALTH DEPARTMENT

7-5-03
COUNTY HEALTH OFFICER — DATE

APPROVED: HOWARD COUNTY DEPARTMENT OF PLANNING AND ZONING

3/10/03
DIRECTOR — DATE

3/11/03
CHIEF, DEVELOPMENT ENGINEERING DIVISION — DATE

3/17/03
CHIEF, DIVISION OF LAND DEVELOPMENT — DATE

BY THE DEVELOPER:
"I/WE CERTIFY THAT ALL DEVELOPMENT AND CONSTRUCTION WILL BE DONE ACCORDING TO THIS PLAN, AND THAT ANY RESPONSIBLE PERSONNEL INVOLVED IN THE CONSTRUCTION PROJECT WILL HAVE A CERTIFICATE OF ATTENDANCE AT A DEPARTMENT OF ENVIRONMENT APPROVED TRAINING PROGRAM FOR THE CONTROL OF SEDIMENT AND EROSION BEFORE BEGINNING THE PROJECT. I ALSO AUTHORIZE PERIODIC ON-SITE INSPECTION BY THE HOWARD SOIL CONSERVATION DISTRICT".

Michael A. Giovanniello
X — 2/07/03 DATE

BY THE ENGINEER:
"I CERTIFY THAT THIS PLAN FOR EROSION AND SEDIMENT CONTROL REPRESENTS A PRACTICAL AND WORKABLE PLAN BASED ON MY PERSONAL KNOWLEDGE OF THE SITE CONDITIONS AND THAT IT WAS PREPARED IN ACCORDANCE WITH THE REQUIREMENTS OF THE HOWARD SOIL CONSERVATION DISTRICT".

2/21/03
JAMES A. AVIRETT, JR. — DATE

REVIEWED FOR HOWARD S.C.D. AND MEETS THE TECHNICAL REQUIREMENTS.

3/4/03
USDA-Natural Resources Conservation Service — DATE

THIS DEVELOPMENT PLAN IS APPROVED FOR SOIL EROSION AND SEDIMENT CONTROL BY THE HOWARD SOIL CONSERVATION DISTRICT.

3/4/03
HOWARD S.C.D. — DATE

C-25

DEPARTMENT OF PUBLIC WORKS
HOWARD COUNTY, MARYLAND

CHIEF, BUREAU OF UTILITIES — DATE

PREPARED BY :

WR&A
Whitman, Requardt and Associates, LLP.
801 South Caroline Street.
Baltimore, Maryland. 21231
410-235-3450

STATE OF MARYLAND — JAMES A. AVIRETT, JR. — No. 10210 — PROFESSIONAL ENGINEER

DES: C.D.
DRN: C.K.
CHK: A.O.
DATE: 12/16/2002

BY	NO.	REVISION	DATE

EROSION AND SEDIMENT CONTROL NOTES

600' SCALE MAP NO. 16 BLOCK NO. 2 / 8

PUBLIC SAFETY TRAINING CENTER
AT ALPHA RIDGE LANDFILL
CAPITAL PROJECT NO. C-0182
HOWARD COUNTY, MARYLAND

SCALE AS SHOWN

SHEET 27 OF 39

SDP-03-36

MN13490\pstcc25.dgn
Thu Feb 20 15:46:31 2003

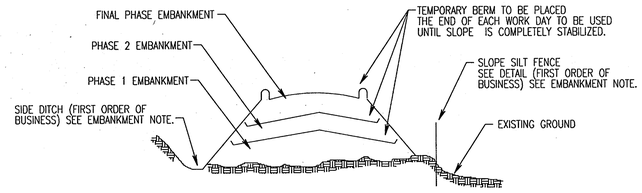

Figure 5. Incremental Stabilization – Fill

Section II – Temporary Seeding

Vegetation – annual grass of grain used to provide cover on disturbed areas for up to 12 months. For longer duration of vegetative cover, Permanent Seeding is required.

A. Seed Mixtures – Temporary Seeding

i. Select one or more of the species or mixtures listed in Table 26 for the appropriate Plant Hardiness Zone (from Figure 5) and enter them in the Temporary Seeding Summary below, along with application rates, seeding dates and seeding depths. If this Summary is not put on the plans and completed, then Table 26 must be put on the plans.

ii. For sites having soil tests performed, the rates shown on this table shall be deleted and the rates recommended by the testing agency shall be written in. Soil tests are not required for Temporary Seeding.

TEMPORARY SEEDING SUMMARY

SEED MIXTURE 9HARDINESS ZONE) FROM TABLE 26					FERTILIZER RATE (10-10-10)	LIME RATE
NO.	SPECIES	APPLICATION RATE(lb/ac)	SEEDING DATES	SEEDING DEPTHS		
3	ANNUAL RYEGRASS	140	3/1 – 4/30 5/1 – 8/14	1/4"–1/2"		
	WEEPING LOVEGRASS	150	5/1 – 8/14	1"	600 lb/ac (15 lb/1000 sf)	1 tons/ac (46 lb/1000 sf)

Section III: Permanent Seeding

Seeding grass and legumes to establish ground cover for a minimum period of one year on disturbed areas generally receiving low maintenance.

A. Seed Mixtures – Permanent Seeding

i. Select one or more of the species or mixtures listed in Table 25 for the appropriate Plant Hardiness Zone (from Figure 5) and enter them in the Permanent Seeding Summary below, along with application rates and seeding dates. Seeding depths can be estimated using Table 26. If this summary is not put on the construction plans and completed, then Table 25 must be put on the plans. Additional planting specifications for exceptional sites such as shorelines, streambanks, or dunes or for special purposes such as wildlife or aesthetic treatment may be found in USDA-SCS Technical Field Office Guide, Section 342 – Critical Area Planting. For special lawn maintenance areas, see Section IV Sod and V Turfgrass.

ii. For sites having disturbed area over 5 acres, the rates shown on this table shall be deleted and the rates recommended by the soil testing agency shall be written in.

iii. For areas receiving low maintenance, apply ureaform fertilizer (46-0-0) at 3 1/2 lbs/1000 sq.ft. (150 lbs/ac.), in addition to the above soil amendments shown in the table below, to be performed at the time of seeding.

PERMANENT SEEDING SUMMARY

Seed Mixture (For Hardiness Zone 7A) (From Table 25)					Fertilizer Rate (10-10-10)	Lime Rate
NO.	Species	Application Rate (lb/ac)	Seeding Dates	Seeding Depths		
1	TALL FESCUE	60	3/1 – 4/30 8/1 – 10/15	1/2"	1,000 lbs/ac	2 tons/ac (100 lb/ 1000 sf)
2	TALL FESCUE 85% WEEPING LOVEGRASS 15%	60 2	5/1 – 7/31	1/2"		
6	TALL FESCUE	60	10/16– 2/28	1/2"		

Table 24 Maintenance fertilization for Permanent Seedings

Use Soil Test Results or Rates Shown Below

Seeding Mixture	Type	lb/ac	lb/1000 sf	Time	Mowing
Tall fescue makes up 70% or more of cover	10–10–10 or 30–10–10	500 400	11.5 9.2	Yearly or as needed. Fall	Not closer than 3" if occasional mowing is desired.
Crownvetch Sericea Lespedeza Birdsfoot Trefoil	0–20–0	400	9.2	Spring, the year following establishment and every 4–5 years thereafter	Do not mow crownvetch
Fairly uniform stand of tall fescue and sericea lespedeza, or birdsfoot trefoil	50–10–10	500	11.5	Fall the year following establishment and every 4–5 years thereafter	Not required, no closer than 4" in the fall after seed has matured.
Weeping lovegrass & sericea lespedeza fairly uniform plant distribution.	5–10–10	500	11.5	Spring, the year following establishment and every 3–4 years thereafter	Not required, not closer than 4" in fall after seed has matured.
Red & chewing fescue, Kentucky bluegrass, hard fescue mixtures	20–10–10	250 100	5.8 2.3	September, 30 days later December, May 20, June 30, if needed	Mow no closer than 2" for red fescue and K. bluegrass 3" for fescue.

Section IV – Sod: To provide quick cover on disturbed areas (2:1 grade or flatter).

A. General Specifications

i. Class of turfgrass sod shall be Maryland or Virginia State Certified or Approved. Sod labels shall be made available to the job foreman and inspector.

ii. Sod shall be machine cut at a uniform soil thickness of 3/4 ", plus or minus 1/4 ", at the time of cutting. Measurement for thickness shall exclude top growth and thatch. Individual pieces of sod shall be cut to the suppliers width and length. Maximum allowable deviation from standard widths and lengths shall be 5 percent. Broken pads and torn or uneven ends will not be acceptable.

iii. Standard size sections of sod shall be strong enough to support their own weight and retain their size and shape when suspended vertically with a firm grasp on the upper 10 percent of the section.

iv. Sod shall not be harvested or transplanted when moisture content (excessively dry or wet) may adversely affect its survival.

v. Sod shall be harvested, delivered, and installed within a period of 36 hours. Sod not transplanted within this period shall be approved by an agronomist or soil scientist prior to its installation.

B. Sod Installation

i. During periods of excessively high temperature or in areas having dry subsoil, the subsoil shall be lightly irrigated immediately prior to laying the sod.

ii. The first row of sod shall be laid in a straight line with subsequent rows placed parallel to and tightly wedged against each other. Lateral joints shall be staggered to promote more uniform growth and strength. Ensure that sod is not stretched or overlapped and that all joints are butted light in order to prevent voids which would cause air drying of the roots.

iii. Wherever possible, sod shall be laid with the long edges parallel to the contour and with staggering joints. Sod shall be rolled and tamped, pegged or otherwise secured to prevent slippage on slopes and to ensure solid contact between sod roots and the underlying soil surface.

iv. Sod shall be watered immediately following rolling or tamping until the underside of the new sod pad and soil surface below the sod are thoroughly wet. The operations of laying, tamping and irrigating for any piece of sod shall be completed within eight hours.

C. Sod Maintenance

i. In the absence of adequate rainfall, watering shall be performed daily or as often as necessary during the first week and in sufficient quantities to maintain moist soil to a depth of 4". Watering should be done during the heat of the day to prevent wilting.

ii. After the first week, sod watering is required as necessary to maintain adequate moisture content.

iii. The first mowing of sod should not be attempted until the sod is firmly rooted. No more than 1/3 of the grass leaf shall be removed by the initial cutting or subsequent cuttings. Grass height shall be maintained between 2" and 3" unless otherwise specified.

SECTION IV – TURFGRASS ESTABLISHMENT

Areas where turfgrass may be desired include lawns, parks, playgrounds, and commercial sites which will receive a medium to high level of maintenance. Areas to receive seed shall be tilled by disking or other approved methods to a depth of 2 to 4 inches, leveled and raked to prepare a proper seedbed. Stones and debris over 1 1/2 inches in diameter shall be removed. The resulting seedbed shall be in such condition that future mowing of grasses will pose no difficulty.

NOTE: Choose certified material. Certified material is the best guarantee of cultivar purity. The certification program of the Maryland Department of Agriculture, Turf and Seed Section, provides a reliable means of consumer protection and assures a pure genetic line.

A. Turfgrass Mixtures

i. Kentucky Bluegrass – Full sun mixture – For use in areas that receive intensive management. Irrigation required in the areas of central Maryland and eastern shore. Recommended Certified Kentucky Bluegrass Cultivars Seeding Rate: 1.5 to 2.0 pounds/1000 square feet. A minimum of three bluegrass cultivars should be chosen ranging from a minimum of 10% to a maximum of 35% of the mixture by weight.

ii. Kentucky Bluegrass/Perennial Rye – Full sun mixture – For use in full sun areas where rapid establishment is necessary and when turf will receive medium to intensive management. Certified Perennial Ryegrass Cultivars/Certified Kentucky Bluegrass Seeding rate: 2 pounds mixture/1000 square feet. A minimum of 3 Kentucky Bluegrass Cultivars must be chosen, with each cultivar ranging from 10% to 35% of the mixture by weight.

iii. Tall Fescue/Kentucky Bluegrass – Full sun mixture – For use in drought prone areas and/or for areas receiving low to medium management in full sun to medium shade. Recommended mixture includes; certified Tall Fescue Cultivars 95 – 100%, certified Kentucky Bluegrass Cultivars 0 – 5%. Seeding rate: 5 to 8 lb/1000 sf. One or more cultivars may be blended.

iv. Kentucky Bluegrass/Fine Fescue – Shade Mixture – For use in areas with shade in Bluegrass lawns. For establishment in high quality, intensively managed turf area. Mixture includes; certified Kentucky Bluegrass Cultivars 30–40% and certified Fine Fescue and 60–70%. Seeding rate: 1 1/2 – 3 lbs/1000 square feet. A minimum of 3 Kentucky bluegrass cultivars must be chosen, with each cultivar ranging from a minimum of 10% to a maximum of 35% of the mixture by weight.

NOTE: Turfgrass varieties should be selected from those listed in the most current University of Maryland Publication, Agronomy Mimeo #77, "Turfgrass Cultivar Recommendations for Maryland".

B. Ideal times of seeding

Western MD: March 15 – June 1, August 1 – October 1
(Hardiness Zones – 5b, 6a.

Central MD: March 1 – May 15 – October 15
(Hardiness Zone – 6b)

Southern MD, Eastern Shore: March 1 – May 15, August 15 – October 15
(Hardiness Zones – 7a, 7b)

C. Irrigation

If soil moisture is deficient, supply new seedings with adequate water for plant growth (1/2" – 1" every 3 to 4 days depending on soil texture) until they are firmly established. This is especially true when seedings are made late in the planting season, in abnormally dry or hot seasons, or on adverse sites.

D. Repair and Maintenance

Inspect all seeded areas for failures and make necessary repairs, replacements, and reseedings within the planting season.

i. Once the vegetation is established, the site shall have 95% groundcover to be considered adequately stabilized.

ii. If the stand provides less than 40% ground coverage, reestablish following original lime, fertilizer, seedbed preparation and seeding recommendations.

iii. If the stand provides between 40% and 94% ground coverage, overseeding and fertilizing using half of the rates originally applied may be necessary.

iv. Maintenance fertilizer rates for permanent seedings are shown in Table 24. For lawns and other medium to high maintenance turfgrass areas, refer to the University of Maryland publication "Lawn Care in Maryland" Bulletin No.171.

APPROVED: FOR PUBLIC WATER AND PRIVATE SEWERAGE SYSTEMS, HOWARD COUNTY HEALTH DEPARTMENT
COUNTY HEALTH OFFICER — DATE 3-5-03

APPROVED: HOWARD COUNTY DEPARTMENT OF PLANNING AND ZONING
DIRECTOR — DATE 3/12/03
CHIEF, DEVELOPMENT ENGINEERING DIVISION — DATE 3/12/03
CHIEF, DIVISION OF LAND DEVELOPMENT — DATE 3/12/03

BY THE DEVELOPER:
"I/WE CERTIFY THAT ALL DEVELOPMENT AND CONSTRUCTION WILL BE DONE ACCORDING TO THIS PLAN, AND THAT ANY RESPONSIBLE PERSONNEL INVOLVED IN THE CONSTRUCTION PROJECT WILL HAVE A CERTIFICATE OF ATTENDANCE AT A DEPARTMENT OF ENVIRONMENT APPROVED TRAINING PROGRAM FOR THE CONTROL OF SEDIMENT AND EROSION BEFORE BEGINNING THE PROJECT. I ALSO AUTHORIZE PERIODIC ON-SITE INSPECTION BY THE HOWARD SOIL CONSERVATION DISTRICT".
Michael A. Givanniello
X — Michael A. Givanniello — DATE 2/25/03

BY THE ENGINEER:
"I CERTIFY THAT THIS PLAN FOR EROSION AND SEDIMENT CONTROL REPRESENTS A PRACTICAL AND WORKABLE PLAN BASED ON MY PERSONAL KNOWLEDGE OF THE SITE CONDITIONS AND THAT IT WAS PREPARED IN ACCORDANCE WITH THE REQUIREMENTS OF THE HOWARD SOIL CONSERVATION DISTRICT".
JAMES A. AVIRETT, Jr. — DATE 2/21/03

REVIEWED FOR HOWARD S.C.D. AND MEETS THE TECHNICAL REQUIREMENTS.
USDA–Natural Resources Conservation Service — DATE 3/10/03

THIS DEVELOPMENT PLAN IS APPROVED FOR SOIL EROSION AND SEDIMENT CONTROL BY THE HOWARD SOIL CONSERVATION DISTRICT.
HOWARD S.C.D. — DATE 3/10/03

DEPARTMENT OF PUBLIC WORKS
HOWARD COUNTY, MARYLAND
CHIEF, BUREAU OF UTILITIES — DATE

PREPARED BY :
WR&A
Whitman, Requardt and Associates, LLP.
801 South Caroline Street.
Baltimore, Maryland. 21231
410-235-3450

STATE OF MARYLAND — JAMES A. AVIRETT — No. 10210 — PROFESSIONAL ENGINEER

DES: C.D.
DRN: C.K.
CHK: A.O.
DATE: 12/16/2002

BY	NO.	REVISION	DATE

EROSION AND SEDIMENT CONTROL NOTES

600' SCALE MAP NO. 16 BLOCK NO. 2 / 8

PUBLIC SAFETY TRAINING CENTER
AT ALPHA RIDGE LANDFILL
CAPITAL PROJECT NO. C-0182
HOWARD COUNTY, MARYLAND

C-26

SCALE AS SHOWN

SHEET 28 OF 39

SDP-03-36

M:\13490\pstcc26.dgn
Thu Feb 20 15:43:29 2003

DETAIL 18 – SEDIMENT BASIN BAFFLES

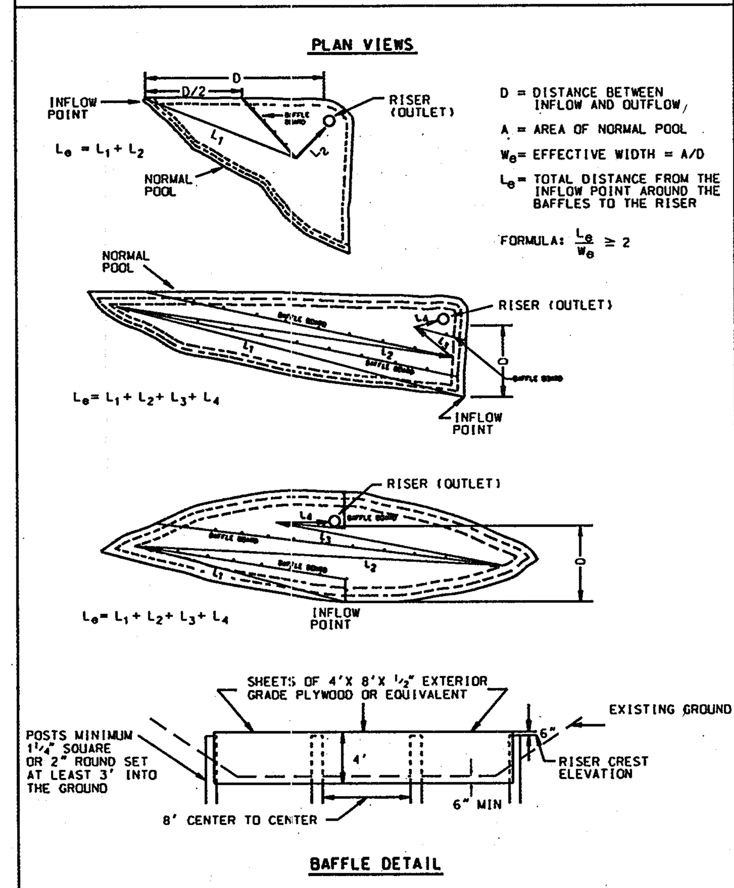

U.S. DEPARTMENT OF AGRICULTURE SOIL CONSERVATION SERVICE	PAGE C – 10 – 28	MARYLAND DEPARTMENT OF ENVIRONMENT WATER MANAGEMENT ADMINISTRATION

DETAIL 9 – STONE OUTLET SEDIMENT TRAP – ST II

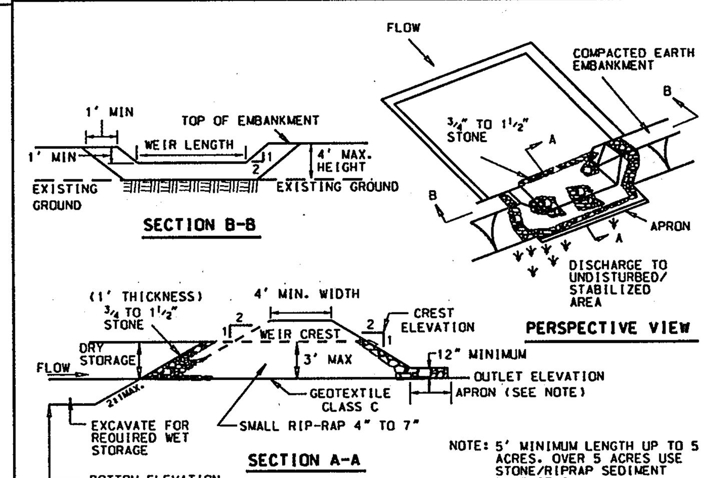

Construction Specifications

1. Area under embankment shall be cleared, grubbed and stripped of any vegetation and root mat. The pool area shall be cleared.
2. The fill material for the embankment shall be free of roots and other woody vegetation as well as over-sized stones, rocks, organic material or other objectionable material. The embankment shall be compacted by traversing with equipment while it is being constructed.
3. All cut and fill slopes shall be 2:1 or flatter.
4. The stone used in the outlet shall be small rip-rap 4" to 7" in size with a 1' thick layer of 3/4" to 1 1/2" washed aggregate placed on the upstream face of the outlet. Stone facing shall be as necessary to prevent clogging. Geotextile Class C may be substituted for the stone facing by placing it on the inside face of the stone outlet.
5. Sediment shall be removed and trap restored to its original dimensions when the sediment has accumulated to one half of the wet storage depth of the trap. Removed sediment shall be deposited in a suitable area and in such a manner that it will not erode.

U.S. DEPARTMENT OF AGRICULTURE SOIL CONSERVATION SERVICE	PAGE C – 9 – 10	MARYLAND DEPARTMENT OF ENVIRONMENT WATER MANAGEMENT ADMINISTRATION

DETAIL 1 – EARTH DIKE

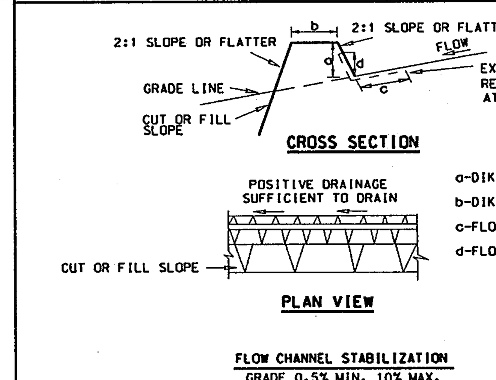

	DIKE A	DIKE B
a-DIKE HEIGHT	18"	30"
b-DIKE WIDTH	24"	36"
c-FLOW WIDTH	4'	6'
d-FLOW DEPTH	12"	24"

1. Seed and cover with straw mulch.
2. Seed and cover with Erosion Control Matting or line with sod.
3. 4" – 7" stone or recycled concrete equivalent pressed into the soil 7" minimum

Construction Specifications

1. All temporary earth dikes shall have uninterrupted positive grade to an outlet. Spot elevations may be necessary for grades less than 1%.
2. Runoff diverted from a disturbed area shall be conveyed to a sediment trapping device.
3. Runoff diverted from an undisturbed area shall outlet directly into an undisturbed, stabilized area at a non-erosive velocity.
4. All trees, brush, stumps, obstructions, and other objectional material shall be removed and disposed of so as not to interfere with the proper functioning of the dike.
5. The dike shall be excavated or shaped to line, grade and cross section as required to meet the criteria specified herein and be free of bank projections or other irregularities which will impede normal flow.
6. Fill shall be compacted by earth moving equipment.
7. All earth removed and not needed for construction shall be placed so that it will not interfere with the functioning of the dike.
8. Inspection and maintenance must be provided periodically and after each rain event.

U.S. DEPARTMENT OF AGRICULTURE SOIL CONSERVATION SERVICE	PAGE A – 1 – 6	MARYLAND DEPARTMENT OF ENVIRONMENT WATER MANAGEMENT ADMINISTRATION

DETAIL 23A – STANDARD INLET PROTECTION

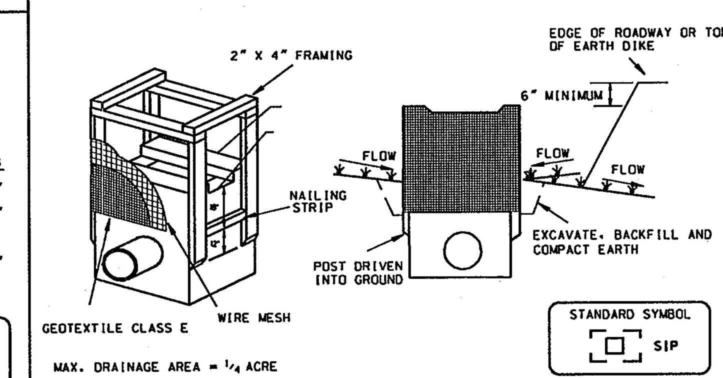

MAX. DRAINAGE AREA = 1/4 ACRE

Construction Specifications

1. Excavate completely around the inlet to a depth of 18" below the notch elevation.
2. Drive the 2" x 4" construction grade lumber posts 1' into the ground at each corner of the inlet. Place nail strips between the posts on the ends of the inlet. Assemble the top portion of the 2" x 4" frame using the overlap joint shown on Detail 23A. The top of the frame (weir) must be 6" below adjacent roadways where flooding and safety issues may arise.
3. Stretch the 1/2" x 1/2" wire mesh tightly around the frame and fasten securely. The ends must meet and overlap at a post.
4. Stretch the Geotextile Class E tightly over the wire mesh with the geotixtile extending from the top of the frame to 18" below the inlet notch elevation. Fasten the geotextile firmly to the frame. The ends of the geotextile must meet at a post, be overlapped and folded, then fastened down.
5. Backfill around the inlet in compacted 6" layers until the layer of earth is level with the notch elevation on the ends and top elevation on the sides.
6. If the inlet is not in a sump, construct a compacted earth dike across the ditch line directly below it. The top of the earth dike should be at least 6" higher than the top of the frame.
7. The structure must be inspected periodically and after each rain and the geotextile replaced when it becomes clogged.

U.S. DEPARTMENT OF AGRICULTURE SOIL CONSERVATION SERVICE	PAGE E – 16 – 5	MARYLAND DEPARTMENT OF ENVIRONMENT WATER MANAGEMENT ADMINISTRATION

DETAIL 6 – GABION INFLOW PROTECTION

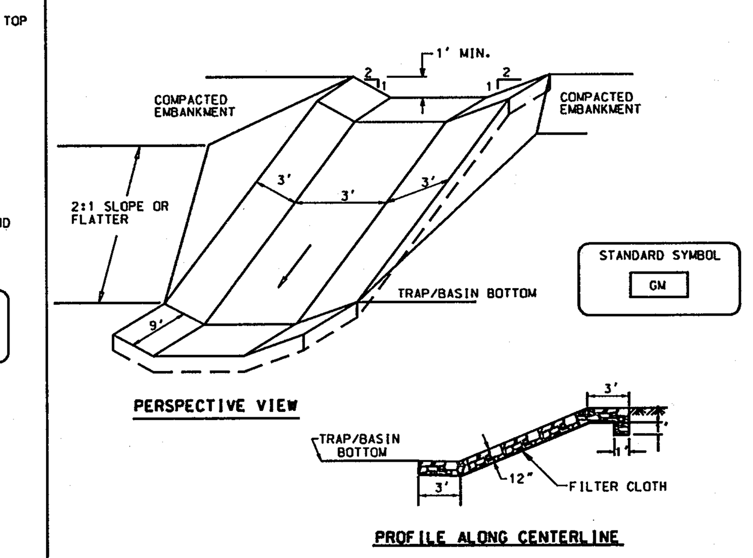

Construction Specifications

1. Gabion inflow protection shall be constructed of 9' x 3' x 9" gabion baskets forming a trapezoidal cross section 1' deep, with 2:1 side slopes, and a 3' bottom width.
2. Geotextile Class C shall be installed under all gabion baskets.
3. The stone used to fill the gabion baskets shall be 4" – 7".
4. Gabions shall be installed in accordance with manufacturers recommendations.
5. Gabion Inflow Protection shall be used where concentrated flow is present on slopes steeper than 4:1.

U.S. DEPARTMENT OF AGRICULTURE SOIL CONSERVATION SERVICE	PAGE B – 7 – 2	MARYLAND DEPARTMENT OF ENVIRONMENT WATER MANAGEMENT ADMINISTRATION

DETAIL 8 – PIPE OUTLET SEDIMENT TRAP – ST I

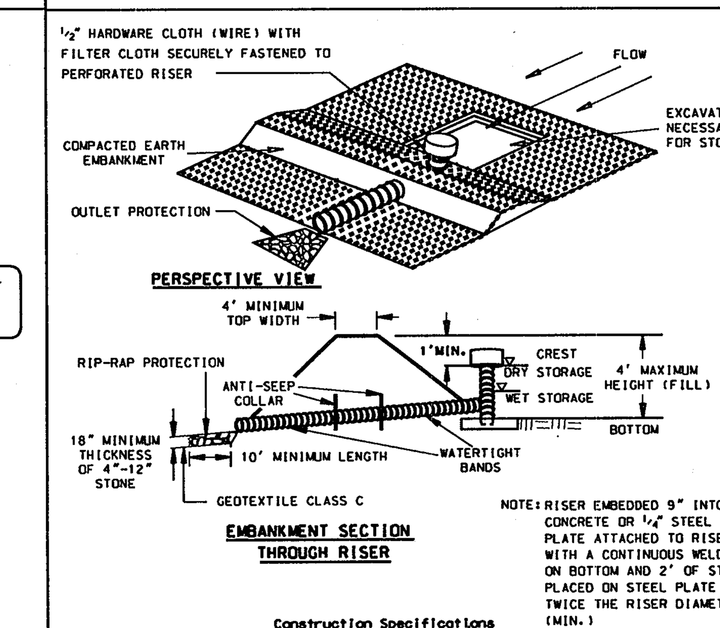

Construction Specifications

1. The area under the embankment shall be cleared, grubbed and stripped of any vegetation and root mat. The pool area shall be cleared.
2. The fill material for the embankment shall be free of roots or other woody vegetation as well as oversized stones, rocks, organic material, or other objectionable material. The embankment shall be compacted by traversing with equipment while it is being constructed.
3. The total trap volume as measured from the bottom to riser crest elevation shall be 3600 cubic feet per acre of drainage area (see Table 9). The top of embankment must be ≥1' above the riser crest elevation.
4. Sediment shall be removed and the trap restored to its original dimensions when the sediment has occumulated to one half of the wet storage depth of the trap (900cf/ac). The sediment shall be deposited in a suitable area and in such a manner that it will not erode.
5. The structure shall be inspected periodically and after each rain and repairs made as necessary.

U.S. DEPARTMENT OF AGRICULTURE SOIL CONSERVATION SERVICE	PAGE C – 9 – 7	MARYLAND DEPARTMENT OF ENVIRONMENT WATER MANAGEMENT ADMINISTRATION

DETAIL 16 – CONCENTRIC TRASH RACK AND ANTI-VORTEX DEVICE

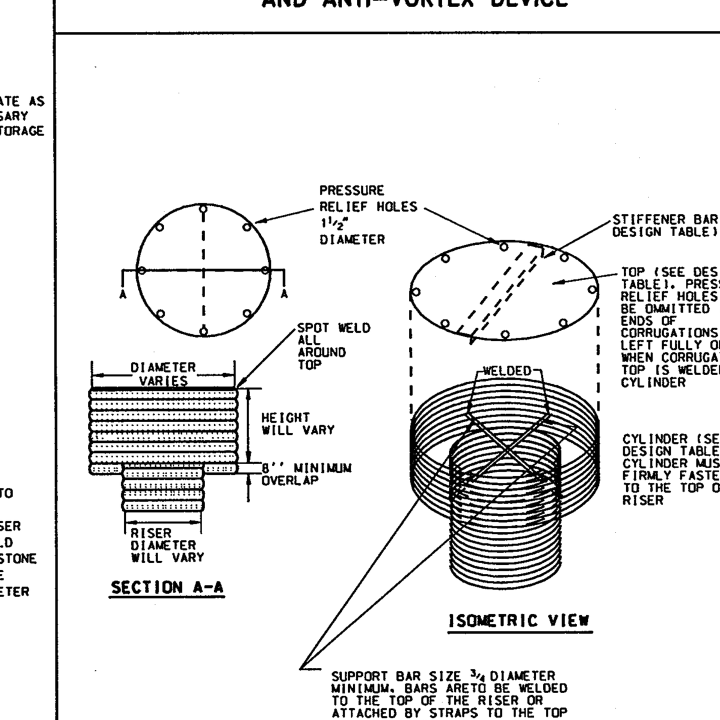

U.S. DEPARTMENT OF AGRICULTURE SOIL CONSERVATION SERVICE	PAGE C – 10 – 26	MARYLAND DEPARTMENT OF ENVIRONMENT WATER MANAGEMENT ADMINISTRATION

DETAIL 10A - STONE /RIP-RAP OUTLET SEDIMENT TRAP - ST IV

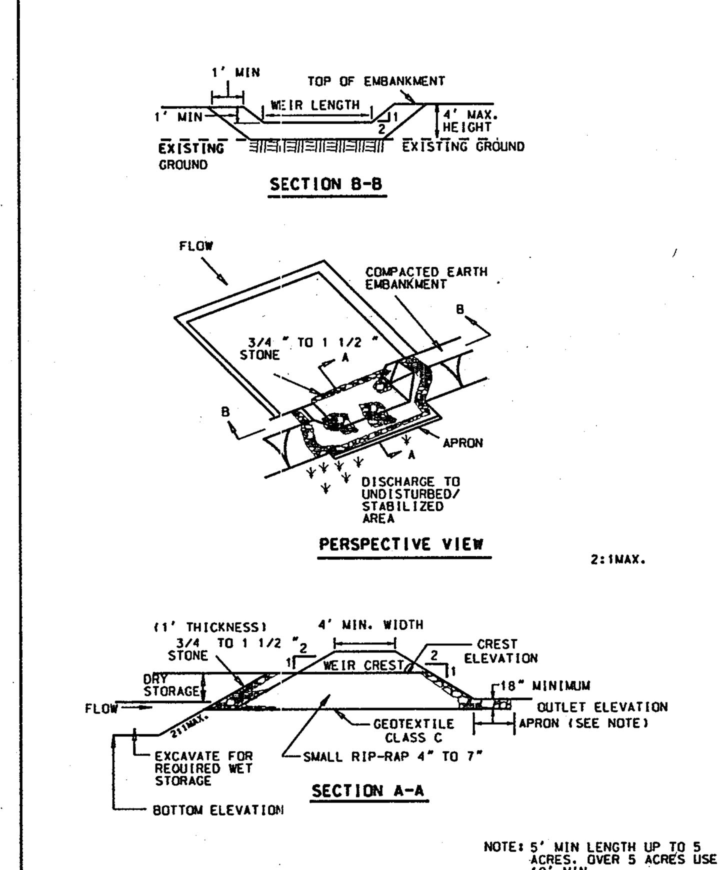

U.S. DEPARTMENT OF AGRICULTURE SOIL CONSERVATION SERVICE	PAGE C - 9 - 16	MARYLAND DEPARTMENT OF ENVIRONMENT WATER MANAGEMENT ADMINISTRATION

DETAIL 27 – ROCK OUTLET PROTECTION III

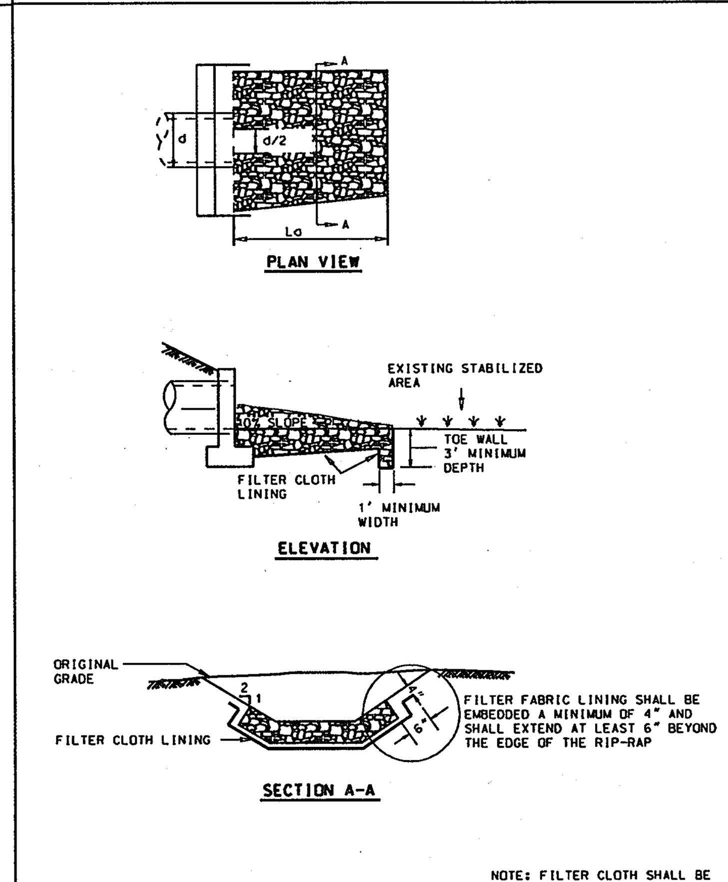

U.S. DEPARTMENT OF AGRICULTURE SOIL CONSERVATION SERVICE	PAGE F – 18 – 10	MARYLAND DEPARTMENT OF ENVIRONMENT WATER MANAGEMENT ADMINISTRATION

DETAIL 22 – SILT FENCE

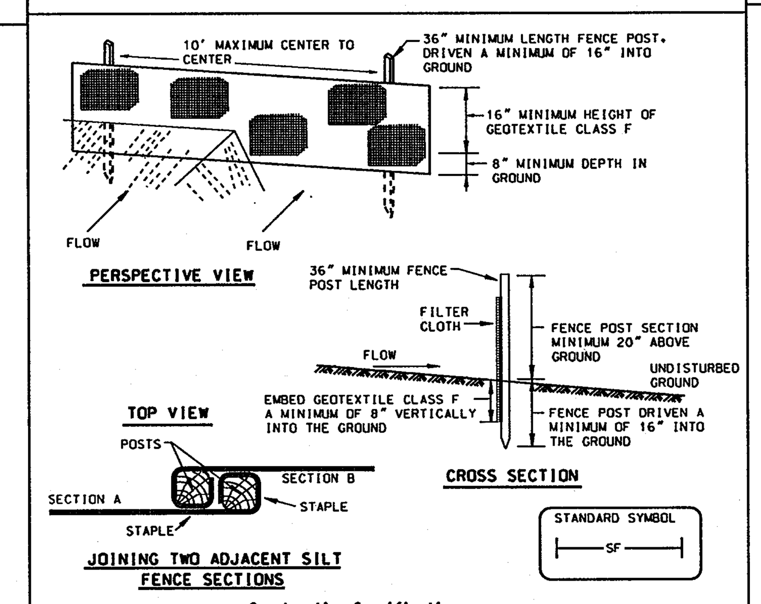

Construction Specifications

1. Fence posts shall be a minimum of 36" long driven 16" minimum into the ground. Wood posts shall be 1 1/2" x 1 1/2" square (minimum) cut, or 1 3/4" diameter (minimum) round and shall be of sound quality hardwood. Steel posts will be standard T or U section weighting not less than 1.00 pond per linear foot.
2. Geotextile shall be fastened securely to each fence post with wire ties or staples at top and mid-section and shall meet the following requirements for Geotextile Class F:

Tensile Strength	50 lbs/in (min.)	Test: MSMT 509
Tensile Modulus	20 lbs/in (min.)	Test: MSMT 509
Flow Rate	0.3 gal ft²/ minute (max.)	Test: MSMT 322
Filtering Efficiency	75% (min.)	Test: MSMT 322

3. Where ends of geotextile fabric come together, they shall be overlapped, folded and stapled to prevent sediment bypass.
4. Silt Fence shall be inspected after each rainfall event and maintained when bulges occur or when sediment accumulation reached 50% of the fabric height.

U.S. DEPARTMENT OF AGRICULTURE SOIL CONSERVATION SERVICE	PAGE E – 15 – 3	MARYLAND DEPARTMENT OF ENVIRONMENT WATER MANAGEMENT ADMINISTRATION

DETAIL 24 – STABILIZED CONSTRUCTION ENTRANCE

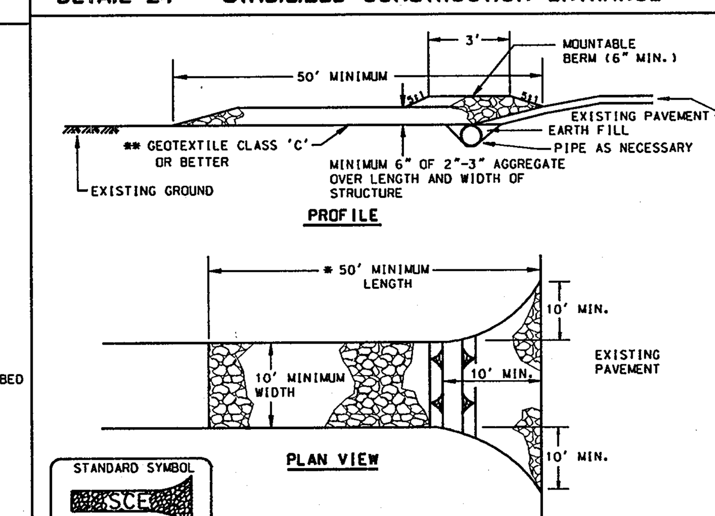

Construction Specification

1. Length – minimum of 50' (*30' for single residence lot).
2. Width – 10' minimum, should be flared at the existing road to provide a turning radius.
3. Geotextile fabric (filter cloth) shall be placed over the existing ground prior to placing stone. **The plan approval authority may not require single family residences to use geotextile.
4. Stone – crushed aggregate (2" to 3") or reclaimed or recycled concrete equivalent shall be placed at least 6" deep over the length and width of the entrance.
5. Surface Water – all surface water flowing to or diverted toward construction entrances shall be piped through the entrance, maintaining positive drainage. Pipe installed through the stabilized construction entrance shall be protected with a mountable berm with 5:1 slopes and a minimum of 6" of stone over the pipe. Pipe has to be sized according to the drainage. When the SCE is located at a high spot and has no drainage to convey a pipe will not be necessary. Pipe should be sized according to the amount of runoff to be conveyed. A 6" minimum will be required.
6. Location – A stabilized construction entrance shall be located at every point where construction traffic enters or leaves a construction site. Vehicles leaving the site must travel over the entire length of the stabilized construction entrance.

U.S. DEPARTMENT OF AGRICULTURE SOIL CONSERVATION SERVICE	PAGE F – 17 – 3	MARYLAND DEPARTMENT OF ENVIRONMENT WATER MANAGEMENT ADMINISTRATION

DETAIL 20A – REMOVABLE PUMPING STATION

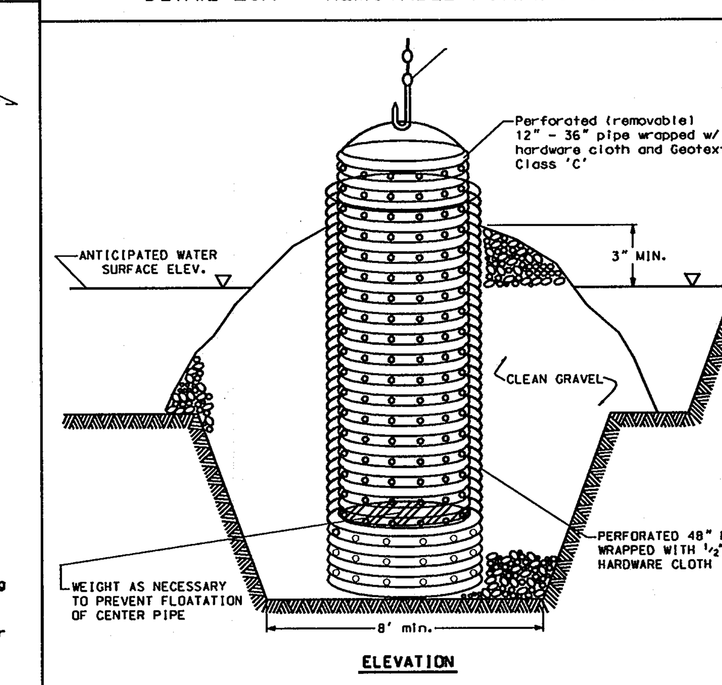

Construction Specifications

1. The outer pipe should be 48" dia. or shall, in any case, be at least 4" greater in diameter than the center pipe. The outer pipe shall be wrapped with 1/2" hardware cloth to prevent backfill material from entering the perforations.
2. After installing the outer pipe, backfill around outer pipe with 2" aggregate or clean gravel.
3. The inside stand pipe (center pipe) should be constructed by perforating a corrugated or PVC pipe between 12" and 36" in diameter. The perforations shall be 1/2" X 6" slits or 1" diameter holes 6" on center. The center pipe shall be wrapped with 1/2" hardware cloth first, then wrapped again with Geotextile Class C.
4. The center pipe should extend 12" to 18" above the anticipated water surface elevation or riser crest elevation when dewatering a basin.

U.S. DEPARTMENT OF AGRICULTURE SOIL CONSERVATION SERVICE	PAGE D – 12 – 4	MARYLAND DEPARTMENT OF ENVIRONMENT WATER MANAGEMENT ADMINISTRATION

BASIN DRAWDOWN SCHEMATIC HORIZONTAL DRAW–DOWN DEVICE

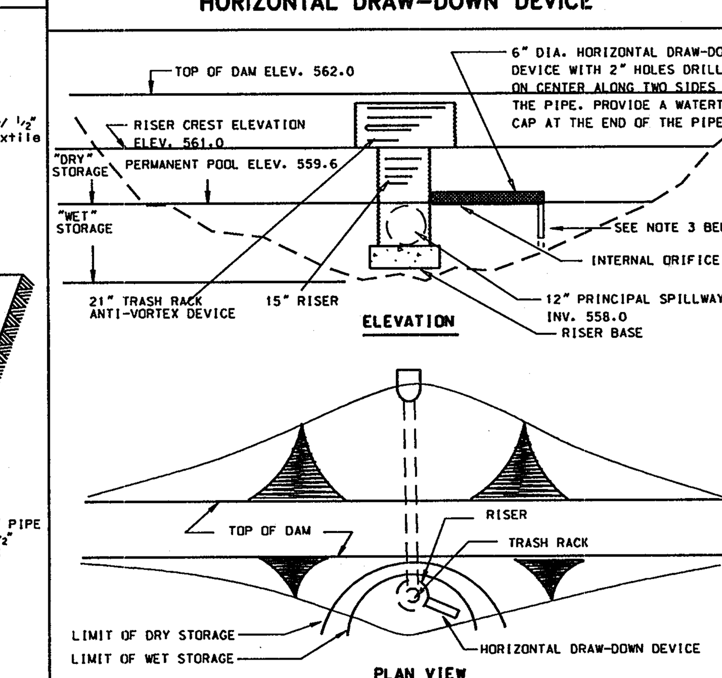

Construction Specifications

1. The total area of the perforations must be greater than 2 times the area of the internal orifice.
2. The perforated portion of the draw-down device shall be wrapped with 1/2" hardware cloth and geotextile fabric. The geotextile fabric shall meet the specifications for Geotextile Class E.
3. Provide support of draw-down device to prevent sagging and floatation. An acceptable preventative measure is to stake both sides of draw-down device with 1" steel angle, or 1' by 4" square or 2" round wooden posts set 3' minimum into the ground then joining them to the device by wrapping with 12 gauge minimum wire.

U.S. DEPARTMENT OF AGRICULTURE SOIL CONSERVATION SERVICE	PAGE C – 10 – 29	MARYLAND DEPARTMENT OF ENVIRONMENT WATER MANAGEMENT ADMINISTRATION

DETAIL 16 CONCENTRIC TRASH RACK AND ANTI–VORTEX DEVICE (continued)

Riser Diam., In.	Trash Rack Cylinder Diam. In.	Thick., gage	H. In.	Minimum Size Support Bar	Minimum Top Thickness	Stiffener
12	18	16	6	#6 Rebar	16 ga.	--
15	21	16	7	"	"	--
18	27	16	8	"	"	--
21	30	16	11	"	"	--
24	36	16	13	"	14 ga.	--
27	42	16	15	"	14 ga.	--
36	54	14	17	#8 Rebar	12 ga.	--
42	60	14	19	"	"	--
48	72	12	21	1-1/4" pipe or 1-1/4 x 1-1/4 x1/4 angle	10 ga.	--
54	78	12	25	"	"	--
60	90	12	29	1-1/2" pipe or 1-1/2 x 1-1/2 x1/4 angle	8 ga.	--
66	96	10	33	2" pipe or 2x2x3/16 angle	8 ga., w/stiffener	2x2x1/4 angle
72	102	10	36	"	"	2-1/2x2-1/2x1/4 angle
78	114	10	39	2-1/2" pipe or 2x2x1/4 angle	"	"
84	120	10	42	2-1/2" pipe or 2-1/2x2-1/2x1/4 angle	"	2-1/2 x2-1/2x 5/16 angle

Note: The above trash rack and anti-vortex device information is only for corrugated metal pipe. Concrete risers must meet the requirements of MD 378.

U.S. DEPARTMENT OF AGRICULTURE SOIL CONSERVATION SERVICE	PAGE C – 10 – 26A	MARYLAND DEPARTMENT OF ENVIRONMENT WATER MANAGEMENT ADMINISTRATION

DUST CONTROL SPECIFICATIONS

Temporary Methods

1. Mulches – See standards for vegetative stabilization with mulches only. Mulch should be crimped or tacked to prevent blowing.
2. Vegetative Cover – See standards for temporary vegetative cover.
3. Tillage – To roughen surface and bring clods to the surface. This is an emergency measure which should be used before soil blowing starts. Begin plowing on windward side of site. Chisel-type plows spaced about 12" apart, spring-toothed harrows, and similar plows are examples of equipment which may produce the desire effect.
4. Irrigation – This is generally done as an emergency treatment. Site is sprinkled with water until the surface is moist. Repeat as needed. At no time should the site be irrigated to the point that runoff begins to flow.
5. Barriers – Solid board fences, silt fences, snow fences, burlap fences, straw bales, and similar material can be used to control air currents and soil blowing. Barriers placed at right angles to prevailing currents at intervals of about 10 times their height are effective in controlling soil blowing.
6. Calcium Chloride – Apply at rates that keep surface moist. May needretreatment.

TEMPORARY DRAW–DOWN DEVICE SPECIFICATIONS

	TRAP 1	TRAP 3
TOP OF DAM ELEV.	562.0	560.0
RISER CREST ELEV.	561.0	557.0
PERMANENT POOL ELEV.	559.6	557.0
DRAWDOWN INV.	559.6	NO DRAWDOWN DEVICE
PRINCIPAL SPILLWAY INV.	558.0	555.0
PRINCIPAL SPILLWAY DIA.	12"	12"
DRAWDOWN DIA.	6"	NO DRAWDOWN DEVICE
RISER DIA.	15"	15"
TRASH RACK DIA.	21"	21"
LENGTH OF DRAWDOWN	4.5'	NO DRAWDOWN DEVICE

APPROVED: FOR PUBLIC WATER AND PRIVATE SEWERAGE SYSTEMS, HOWARD COUNTY HEALTH DEPARTMENT

[signature] 3-5-03
COUNTY HEALTH OFFICER — DATE

APPROVED: HOWARD COUNTY DEPARTMENT OF PLANNING AND ZONING

[signature] 3/14/03
DIRECTOR — DATE

[signature] 3/14/03
CHIEF, DEVELOPMENT ENGINEERING DIVISION — DATE

[signature] 3/17/03
CHIEF, DIVISION OF LAND DEVELOPMENT — DATE

DEPARTMENT OF PUBLIC WORKS
HOWARD COUNTY, MARYLAND

CHIEF, BUREAU OF UTILITIES — DATE

PREPARED BY :

WR&A
Whitman, Requardt and Associates, LLP.
801 South Caroline Street.
Baltimore, Maryland. 21231
410-235-3450

STATE OF MARYLAND — JAMES A. AVIRETT, JR. — PROFESSIONAL ENGINEER

DES: C.D.
DRN: C.K.
CHK: A.O.
DATE: 12/16/2002

BY	NO.	REVISION	DATE

EROSION AND SEDIMENT CONTROL DETAILS

600' SCALE MAP NO. 16 BLOCK NO. 2 / 8

PUBLIC SAFETY TRAINING CENTER
AT ALPHA RIDGE LANDFILL
CAPITAL PROJECT NO. C-0182
HOWARD COUNTY, MARYLAND

C-27

SCALE AS SHOWN

SHEET 29 OF 39

SDP-03-36

M:\13490\pstcc27.dgn
Thu Feb 20 15:43:54 2003

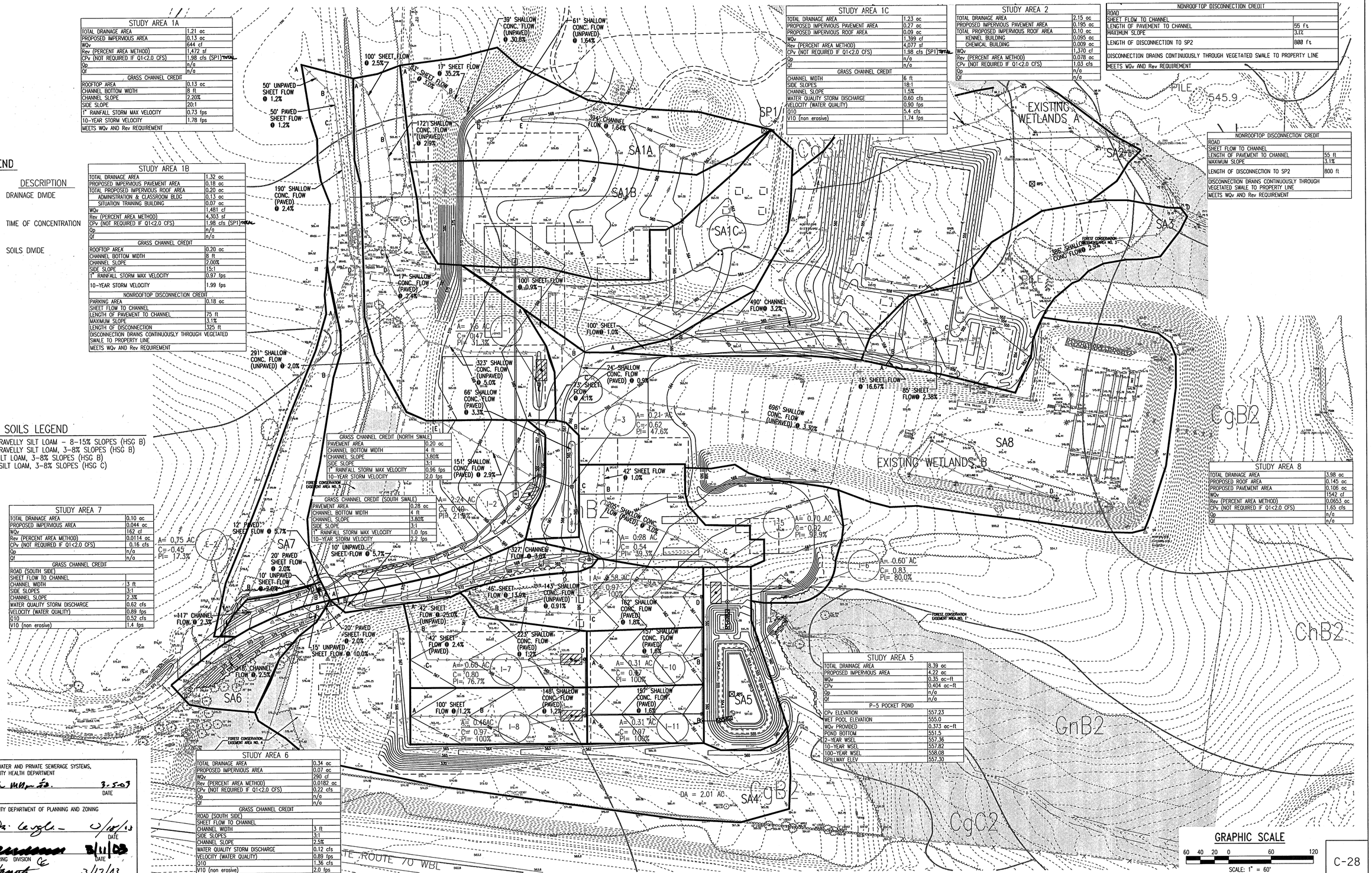

STUDY AREA 1A	
TOTAL DRAINAGE AREA	1.21 ac
PROPOSED IMPERVIOUS AREA	0.13 ac
WQv	644 cf
Rev (PERCENT AREA METHOD)	1,472 sf
CPv (NOT REQUIRED IF Q1<2.0 CFS)	1.98 cfs (SP1) TOTAL
Qp	n/a
Qf	n/a
GRASS CHANNEL CREDIT	
ROOFTOP AREA	0.13 ac
CHANNEL BOTTOM WIDTH	8 ft
CHANNEL SLOPE	2.20%
SIDE SLOPE	20:1
1" RAINFALL STORM MAX VELOCITY	0.73 fps
10-YEAR STORM VELOCITY	1.78 fps
MEETS WQv AND Rev REQUIREMENT	

STUDY AREA 1B	
TOTAL DRAINAGE AREA	1.32 ac
PROPOSED IMPERVIOUS PAVEMENT AREA	0.18 ac
TOTAL PROPOSED IMPERVIOUS ROOF AREA	0.20 ac
ADMINISTRATION & CLASSROOM BLDG	0.13 ac
SITUATION TRAINING BUILDING	0.07 ac
WQv	1,481 cf
Rev (PERCENT AREA METHOD)	4,303 sf
CPv (NOT REQUIRED IF Q1<2.0 CFS)	1.98 cfs (SP1) TOTAL
Qp	n/a
Qf	n/a
GRASS CHANNEL CREDIT	
ROOFTOP AREA	0.20 ac
CHANNEL BOTTOM WIDTH	8 ft
CHANNEL SLOPE	2.00%
SIDE SLOPE	15:1
1" RAINFALL STORM MAX VELOCITY	0.97 fps
10-YEAR STORM VELOCITY	1.99 fps
NONROOFTOP DISCONNECTION CREDIT	
PARKING AREA	0.18 ac
SHEET FLOW TO CHANNEL	
LENGTH OF PAVEMENT TO CHANNEL	75 ft
MAXIMUM SLOPE	3.1%
LENGTH OF DISCONNECTION	325 ft
DISCONNECTION DRAINS CONTINUOUSLY THROUGH VEGETATED SWALE TO PROPERTY LINE	
MEETS WQv AND Rev REQUIREMENT	

STUDY AREA 1C	
TOTAL DRAINAGE AREA	1.23 ac
PROPOSED IMPERVIOUS PAVEMENT AREA	0.27 ac
PROPOSED IMPERVIOUS ROOF AREA	0.09 ac
WQv	1,399 cf
Rev (PERCENT AREA METHOD)	4,077 sf
CPv (NOT REQUIRED IF Q1<2.0 CFS)	1.98 cfs (SP1) TOTAL
Qp	n/a
Qf	n/a
GRASS CHANNEL CREDIT	
CHANNEL WIDTH	6 ft
SIDE SLOPES	18:1
CHANNEL SLOPE	1.5%
WATER QUALITY STORM DISCHARGE	0.60 cfs
VELOCITY (WATER QUALITY)	0.90 fps
Q10	5.4 cfs
V10 (non erosive)	1.74 fps

STUDY AREA 2	
TOTAL DRAINAGE AREA	2.15 ac
PROPOSED IMPERVIOUS PAVEMENT AREA	0.195 ac
TOTAL PROPOSED IMPERVIOUS ROOF AREA	0.10 ac
KENNEL BUILDING	0.095 ac
CHEMICAL BUILDING	0.009 ac
WQv	1,370 cf
Rev (PERCENT AREA METHOD)	0.078 ac
CPv (NOT REQUIRED IF Q1<2.0 CFS)	1.03 cfs
Qp	n/a
Qf	n/a

NONROOFTOP DISCONNECTION CREDIT	
ROAD	
SHEET FLOW TO CHANNEL	
LENGTH OF PAVEMENT TO CHANNEL	55 ft
MAXIMUM SLOPE	3.1%
LENGTH OF DISCONNECTION TO SP2	800 ft
DISCONNECTION DRAINS CONTINUOUSLY THROUGH VEGETATED SWALE TO PROPERTY LINE	
MEETS WQv AND Rev REQUIREMENT	

NONROOFTOP DISCONNECTION CREDIT	
ROAD	
SHEET FLOW TO CHANNEL	
LENGTH OF PAVEMENT TO CHANNEL	55 ft
MAXIMUM SLOPE	3.1%
LENGTH OF DISCONNECTION TO SP2	800 ft
DISCONNECTION DRAINS CONTINUOUSLY THROUGH VEGETATED SWALE TO PROPERTY LINE	
MEETS WQv AND Rev REQUIREMENT	

STUDY AREA 8	
TOTAL DRAINAGE AREA	3.98 ac
PROPOSED ROOF AREA	0.145 ac
PROPOSED PAVEMENT AREA	0.106 ac
WQv	1542 cf
Rev (PERCENT AREA METHOD)	0.0653 ac
CPv (NOT REQUIRED IF Q1<2.0 CFS)	1.65 cfs
Qp	n/a
Qf	n/a

STUDY AREA 7	
TOTAL DRAINAGE AREA	0.10 ac
PROPOSED IMPERVIOUS AREA	0.044 ac
WQv	162 cf
Rev (PERCENT AREA METHOD)	0.0114 ac
CPv (NOT REQUIRED IF Q1<2.0 CFS)	0.16 cfs
Qp	n/a
Qf	n/a
GRASS CHANNEL CREDIT	
ROAD (SOUTH SIDE)	
SHEET FLOW TO CHANNEL	
CHANNEL WIDTH	3 ft
SIDE SLOPES	3:1
CHANNEL SLOPE	2.3%
WATER QUALITY STORM DISCHARGE	0.62 cfs
VELOCITY (WATER QUALITY)	0.89 fps
Q10	0.52 cfs
V10 (non erosive)	1.4 fps

GRASS CHANNEL CREDIT (NORTH SWALE)	
PAVEMENT AREA	0.20 ac
CHANNEL BOTTOM WIDTH	4 ft
CHANNEL SLOPE	3.80%
SIDE SLOPE	3:1
1" RAINFALL STORM MAX VELOCITY	0.96 fps
10-YEAR STORM VELOCITY	2.0 fps

GRASS CHANNEL CREDIT (SOUTH SWALE)	
PAVEMENT AREA	0.28 ac
CHANNEL BOTTOM WIDTH	4 ft
CHANNEL SLOPE	3.80%
SIDE SLOPE	3:1
1" RAINFALL STORM MAX VELOCITY	1.0 fps
10-YEAR STORM VELOCITY	2.2 fps

STUDY AREA 6	
TOTAL DRAINAGE AREA	0.34 ac
PROPOSED IMPERVIOUS AREA	0.07 ac
WQv	290 cf
Rev (PERCENT AREA METHOD)	0.0182 ac
CPv (NOT REQUIRED IF Q1<2.0 CFS)	0.22 cfs
Qp	n/a
Qf	n/a
GRASS CHANNEL CREDIT	
ROAD (SOUTH SIDE)	
SHEET FLOW TO CHANNEL	
CHANNEL WIDTH	3 ft
SIDE SLOPES	3:1
CHANNEL SLOPE	2.5%
WATER QUALITY STORM DISCHARGE	0.12 cfs
VELOCITY (WATER QUALITY)	0.89 fps
Q10	1.36 cfs
V10 (non erosive)	2.0 fps

STUDY AREA 5	
TOTAL DRAINAGE AREA	8.39 ac
PROPOSED IMPERVIOUS AREA	4.22 ac
WQv	0.35 ac-ft
CPv	0.404 ac-ft
Qp	n/a
Qf	n/a
P-5 POCKET POND	
CPv ELEVATION	557.23
WET POOL ELEVATION	555.0
WQv PROVIDED	0.373 ac-ft
POND BOTTOM	551.5
2-YEAR WSEL	557.36
10-YEAR WSEL	557.82
100-YEAR WSEL	558.08
SPILLWAY ELEV	557.30

SOILS LEGEND

CgC2 - CHESTER GRAVELLY SILT LOAM - 8-15% SLOPES (HSG B)
CgB2 - CHESTER GRAVELLY SILT LOAM, 3-8% SLOPES (HSG B)
ChB2 - CHESTER SILT LOAM, 3-8% SLOPES (HSG B)
GnB2 - BLENVILLE SILT LOAM, 3-8% SLOPES (HSG C)

GRAPHIC SCALE
60 40 20 0 60 120
SCALE: 1" = 60'

APPROVED: FOR PUBLIC WATER AND PRIVATE SEWERAGE SYSTEMS, HOWARD COUNTY HEALTH DEPARTMENT
COUNTY HEALTH OFFICER — DATE 3-5-03

APPROVED: HOWARD COUNTY DEPARTMENT OF PLANNING AND ZONING
DIRECTOR — DATE 3/18/03
CHIEF, DEVELOPMENT ENGINEERING DIVISION — DATE 3/11/03
CHIEF, DIVISION OF LAND DEVELOPMENT — DATE 3/17/03

DEPARTMENT OF PUBLIC WORKS
HOWARD COUNTY, MARYLAND
CHIEF, BUREAU OF UTILITIES — DATE

PREPARED BY:
WR&A
Whitman, Requardt and Associates, LLP.
801 South Caroline Street.
Baltimore, Maryland. 21231
410-235-3450

STATE OF MARYLAND — JAMES A. LAVERTY, JR. — PROFESSIONAL ENGINEER

DES: C.D.
DRN: C.K.
CHK: A.O.
DATE: 12/16/2002

BY	NO.	REVISION	DATE

DRAINAGE AREA MAP
600' SCALE MAP NO. 16 BLOCK NO. 2 / 8

PUBLIC SAFETY TRAINING CENTER
AT ALPHA RIDGE LANDFILL
CAPITAL PROJECT NO. C-0182
HOWARD COUNTY, MARYLAND

C-28
SCALE AS SHOWN
SHEET 30 OF 39

SDP-03-36

M:\13490\petcc28.dgn
Thu Feb 20 15:44:07 2003

Forest Stand Narrative

FS1-FS1 is a Maple and Oak stand. The stand is the largest associated stand and the onsite portions are approximately 4.6 acres of a much larger stand. The onsite canopy species include Red Oak, Red Maple, Black Oak and Tulip Poplar. This stand contains some large maple trees including a 36 inch dba Red Maple. The understory is shrubby and viney and dense. Species include Greenbrier, Multiflora Rose, Poison Ivy, Japanese Honeysuckle and grape. One of two separate stream branches run through each of the two onsite portions of FS1. The stream branch running through the southern, onsite portion of FS1 is dry. The stream branch running through the northern, onsite portion of FS1 is a perennial tributary of the Little Patuxent River. The canopy is approximately 70 to 90 percent closed. The portion of the stand, which is located directly behind the onsite gun/shooting range, was not accessible at the time of inspection. No disturbance to this area is proposed. This onsite portions of this stand are of moderately good structure and habitat value.

The adjacent treeline running along Interstate Route 70 is a stand of Tree of Heaven.

Trees Indicated on FSD Map
Specimen Tree: 36" Red Maple
Large Trees: 28" Red Maple
28" Red Maple
28" Red Maple

FS2-FS2 is a Red Maple stand. The canopy species include Red Maple, Red Oak, Tulip Poplar and a few American Elm trees. In some areas of the stand Red Maple is the only canopy species. The canopy is approximately 90 percent closed in the western portion of the stand and is as low as 65 percent closed in the eastern portion of the stand. The eastern portion of the stand is in closer proximity to Wetland A. The shrub layer consists of Multiflora Rose which is concentrated in the eastern portion of the stand. The dominant herbaceous species consist of Poison Ivy, Virginia Creeper and Japanese Honeysuckle. Groundcover is at approximately 70 percent. This stand has moderately good forest structure, but has limited habitat value due to it's small size and disconnection from FS1. A corridor linking FS1 and FS2 would improve the value.

Trees Indicated on FSD Map
Specimen Trees: 33" Tulip Poplar
35" WhiteOak

FS3-FS3 is a disturbed, low quality stand of Tree of Heaven. Some Tulip Poplar, Red Maple, Black Cherry and Red Oak are also growing in this stand. This stand has been subject to much disturbance from Interstate Route 70, the unnamed access road, and the clearing and grading of the site.

Tree Stands
The tree rows adjacent to and buffering the unnamed access road consist of Red Maple, White Pine, Tree of Heaven, and some Red Oak and Huckleberry. Multiflora Rose and Honeysuckle are growing here as well.

The tree stands on the inside of the site consist primarily of Tree of Heaven.

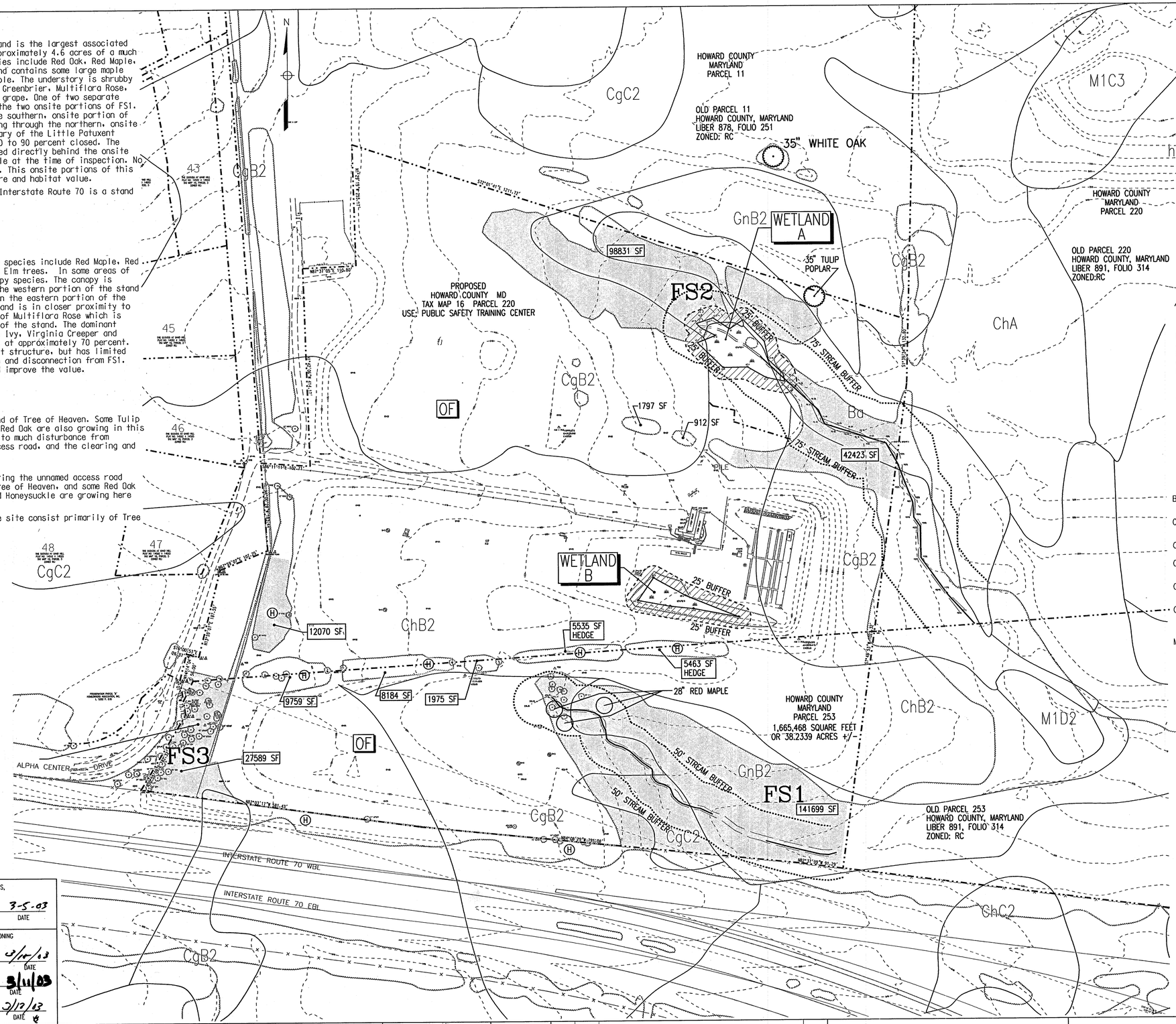

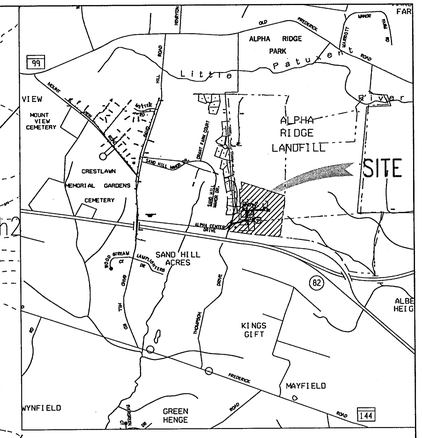

VICINITY MAP
SCALE: 1"=2000'

BASE DATA

A. GROSS TRACT AREA	38.23 ac
B. FLOOD PLAIN	0 ac
C. NET TRACT AREA	38.23 ac
D. EXISTING FOREST COVER	7.41ac
E. AFFORESTATION THRESHOLD 15%	5.73 ac
F. REFORESTATION THRESHOLD 20%	7.65 ac
G. AREA OF FOREST ABOVE AFORRESTATION THRESHOLD	1.68 ac
H. AREA OF FOREST ABOVE CONSERVATION THRESHOLD BREAKEVEN POINT	0.00 ac
I. FOREST RETENTION ABOVE THRESHOLD WITH NO MITIGATION	0.00 ac
J. CLEARING PERMITTED WITHOUT MITIGATION	0.00 ac

SOILS

BA BAILE SILT LOAM.
NEARLY LEVEL IN UPLAND DEPRESSIONS. POORLY DRAINED

CHA CHESTER SILT LOAM.
0 TO 3 PERCENT SLOPES. WELL DRAINED.

CGB2 CHESTER GRAVELLY SILT LOAM.
3 TO 8 PERCENT SLOPES, MODERATELY ERODED. WELL DRAINED.

CGC2 CHESTER GRAVELLY SILT LOAM.
8 TO 15 PERCENT SLOPES, MODERATELY ERODED. WELL DRAINED.

CHB2 CHESTER SILT LOAM.
3 TO 8 PERCENT SLOPES, MODERATELY ERODED. WELL DRAINED.

GNB2 GLENVILLE SILT LOAM.
3 TO 8 PERCENT SLOPES, MODERATELY ERODED.
MODERATELY WELL DRAINED.

MLD2 MANOR LOAM.
15 TO 25 PERCENT SLOPES, MODERATELY ERODED. WELL DRAINED TO SOMEWHAT EXCESSIVELY DRAINED.

LEGEND

- LARGE TREE
- SPECIMEN TREE
- EXISTING TREELINE
- FS1 FOREST STAND LABEL
- OF OPEN FIELD
- H HEDGE
- WETLAND
- 25' WETLAND BUFFER
- STREAM
- STREAM BUFFER
- CgC2 SOIL TYPE
- SOIL BOUNDARY
- SITE LIMITS / PROPERTY LINE
- EX. FOREST

PREPARED BY: SHERYL H. BERNARDO
STATE OF MARYLAND
LICENSED LANDSCAPE ARCHITECT
LICENSE REGISTRATION NO. 3127
NAME: Sheryl Bernardo DATE: 2/21/03

GRAPHIC SCALE
100 0 100 200
SCALE: 1" = 100'

APPROVED: FOR PUBLIC WATER AND PRIVATE SEWERAGE SYSTEMS, HOWARD COUNTY HEALTH DEPARTMENT
COUNTY HEALTH OFFICER — DATE 3-5-03

APPROVED: HOWARD COUNTY DEPARTMENT OF PLANNING AND ZONING
DIRECTOR — DATE 3/10/03
CHIEF, DEVELOPMENT ENGINEERING DIVISION — DATE 3/11/03
CHIEF, DIVISION OF LAND DEVELOPMENT — DATE 3/12/03

DEPARTMENT OF PUBLIC WORKS
HOWARD COUNTY, MARYLAND
CHIEF, BUREAU OF UTILITIES — DATE

PREPARED BY:
WR&A
Whitman, Requardt and Associates, LLP.
801 South Caroline Street.
Baltimore, Maryland. 21231
410-235-3450

STATE OF MARYLAND — SHERYL A. BERNARDO — 10210 — PROFESSIONAL ENGINEER

DES: S.H.B.
DRN: P.L.B.
CHK: S.H.B.
DATE:

BY	NO.	REVISION	DATE

FOREST STAND DELINEATION

600' SCALE MAP NO. 16 BLOCK NO. 2 / 8

PUBLIC SAFETY TRAINING CENTER
AT ALPHA RIDGE LANDFILL
CAPITAL PROJECT NO. C-0182
HOWARD COUNTY, MARYLAND

C-29

SCALE AS SHOWN

SHEET 31 OF 39

SDP-03-36

M:\3490\pstcc29.dgn
Thu Feb 20 15:44:32 2003

APPENDIX C

FOREST STAND ANALYSIS TABLE

Applicant: Project Name: Submission No.:

A. TYPE OF COMMUNITY	B. AREA*	C. SOIL INFORMATION**				D. EXISTING VEGETATION (DOMINANT SPECIES AND APPROX. %)	E. STAND CHARACTERISTICS			F. FOREST AREA IN SENSITIVE ENVIRONMENTS* (ACRES)
		1. SOIL TYPES	2. TYPICAL FOREST COVER FOR SOIL TYPE*	3. WOODLAND SUITABILITY INDEX	4. HABITAT VALUE FOR SOIL TYPE		1. SIZE (DIA.)	2. AGE	3. GENERAL CONDITIONS	
FS-1, WETLAND B AND H 1-4	3.26 ac	gnB2	water tolerant hardwoods	Good	1 (WELL SUITED)	Maple / Oak Stand	26"-38" dbh large trees	25-50 yrs	Moderate - good forest structure	Greater than 5,000 s.f.
		CgC2	oaks and other upland hardwoods	Good	1					
		MID2	Mixed upland hardwods, mainly oaks,Virginia Pine has invaded some areas	Good	1					
		CgB2	oaks to other upland hardwoods	Good	1					
FS-2, WETLAND A	3.24 ac	GnB2	water tolerant hardwoods	Good	1	Red Maple Stand	33"-35" dbh large trees	25-50 yrs	Moderate - good forest structure	Greater than 5,000 s.f.
		ChA	oaks to other upland hardwoods	Good	1					
		CgB2	oaks to other upland hardwoods	Good	1					
		CgC2	oaks to other upland hardwoods	Good	1					
FS-3, H 5-7	0.91 ac	ChB2	oaks to other upland hardwoods	Good	1	Tulip - Tree of Heaven	12"-30" dbh large trees	25-50 yrs	Disturbed low quality forest	0
		ChB2	oaks to other upland hardwoods	Good	1					

* Area measured to the nearest 1/10 acre
** Source: Howard County Soil Survey. USDA

APPROVED: FOR PUBLIC WATER AND PRIVATE SEWERAGE SYSTEMS, HOWARD COUNTY HEALTH DEPARTMENT
COUNTY HEALTH OFFICER — DATE 3-5-03

APPROVED: HOWARD COUNTY DEPARTMENT OF PLANNING AND ZONING
DIRECTOR — DATE 3/18/03
CHIEF, DEVELOPMENT ENGINEERING DIVISION — DATE 3/11/03
CHIEF, DIVISION OF LAND DEVELOPMENT — DATE 3/17/03

DEPARTMENT OF PUBLIC WORKS
HOWARD COUNTY, MARYLAND
CHIEF, BUREAU OF UTILITIES — DATE

PREPARED BY :
WR&A
Whitman, Requardt and Associates, LLP.
801 South Caroline Street.
Baltimore, Maryland. 21231
410-235-3450

STATE OF MARYLAND — JAMES A. AVIRETT — PROFESSIONAL ENGINEER

DES: S.H.B.
DRN: P.L.B.
CHK: S.H.B.
DATE:

BY	NO.	REVISION	DATE

FOREST STAND DELINEATION ANALYSIS TABLE

600' SCALE MAP NO. 16 BLOCK NO. 2 / 8

PUBLIC SAFETY TRAINING CENTER
AT ALPHA RIDGE LANDFILL
CAPITAL PROJECT NO. C-0182
HOWARD COUNTY, MARYLAND

C-30

SCALE AS SHOWN

SHEET 32 OF 39

SDP-03-36

M:\13490\pstcc30.dgn
Thu Feb 20 15:44:40 2003

Forest Stand Narrative

FS1-3.26 ac. FS1 is a Maple and Oak stand. The stand is the largest associated stand and the onsite portions are approximately 4.6 acres of a much larger stand. The onsite canopy species include Red Oak, Red Maple, Black Oak and Tulip Poplar. This stand contains some large maple trees including a 36 inch dba Red Maple. The understory is shrubby and viney and dense. Species include Greenbrier, Multiflora Rose, Poison Ivy, Japanese Honeysuckle and grape. One of two separate stream branches run through each of the two onsite portions of FS1. The stream branch running through the southern, onsite portion of FS1 is dry. The stream branch running through the northern, onsite portion of FS1 is a perennial tributary of the Little Patuxent River. The canopy is approximately 70 to 90 percent closed. The portion of the stand, which is located directly behind the onsite gun/shooting range, was not accessible at the time of inspection. No disturbance to this area is proposed. This onsite portions of this stand are of moderately good structure and habitat value.

The adjacent treeline running along Interstate Route 70 is a stand of Tree of Heaven.

Trees Indicated on FSD Map
Specimen Tree: 36" Red Maple
Large Trees: 28" Red Maple
28" Red Maple
28" Red Maple

FS2-3.24 ac. FS2 is a Red Maple stand. The canopy species include Red Maple, Red Oak, Tulip Poplar and a few American Elm trees. In some areas of the stand Red Maple is the only canopy species. The canopy is approximately 90 percent closed in the western portion of the stand and is as low as 65 percent closed in the eastern portion of the stand. The eastern portion of the stand is in closer proximity to Wetland A. The shrub layer consists of Multiflora Rose which is concentrated in the eastern portion of the stand. The dominant herbaceous species consist of Poison Ivy, Virginia Creeper and Japanese Honeysuckle. Groundcover is at approximately 70 percent. This stand has moderately good forest structure, but has limited habitat value due to it's small size and disconnection from FS1. A corridor linking FS1 and FS2 would improve the value.

Trees Indicated on FSD Map
Specimen Trees: 33" Tulip Poplar
35" White Oak

FS3-0.91 ac. FS3 is a disturbed, low quality stand of Tree of Heaven. Some Tulip Poplar, Red Maple, Black Cherry and Red Oak are also growing in this stand. This stand has been subject to much disturbance from Interstate Route 70, the unnamed access road, and the clearing and grading of the site.

Tree Stands

The tree rows adjacent to and buffering the unnamed access road consist of Red Maple, White Pine, Tree of Heaven, and some Red Oak and Huckleberry. Multiflora Rose and Honeysuckle are growing here as well.

The tree stands on the inside of the site consist primarily of Tree of Heaven.

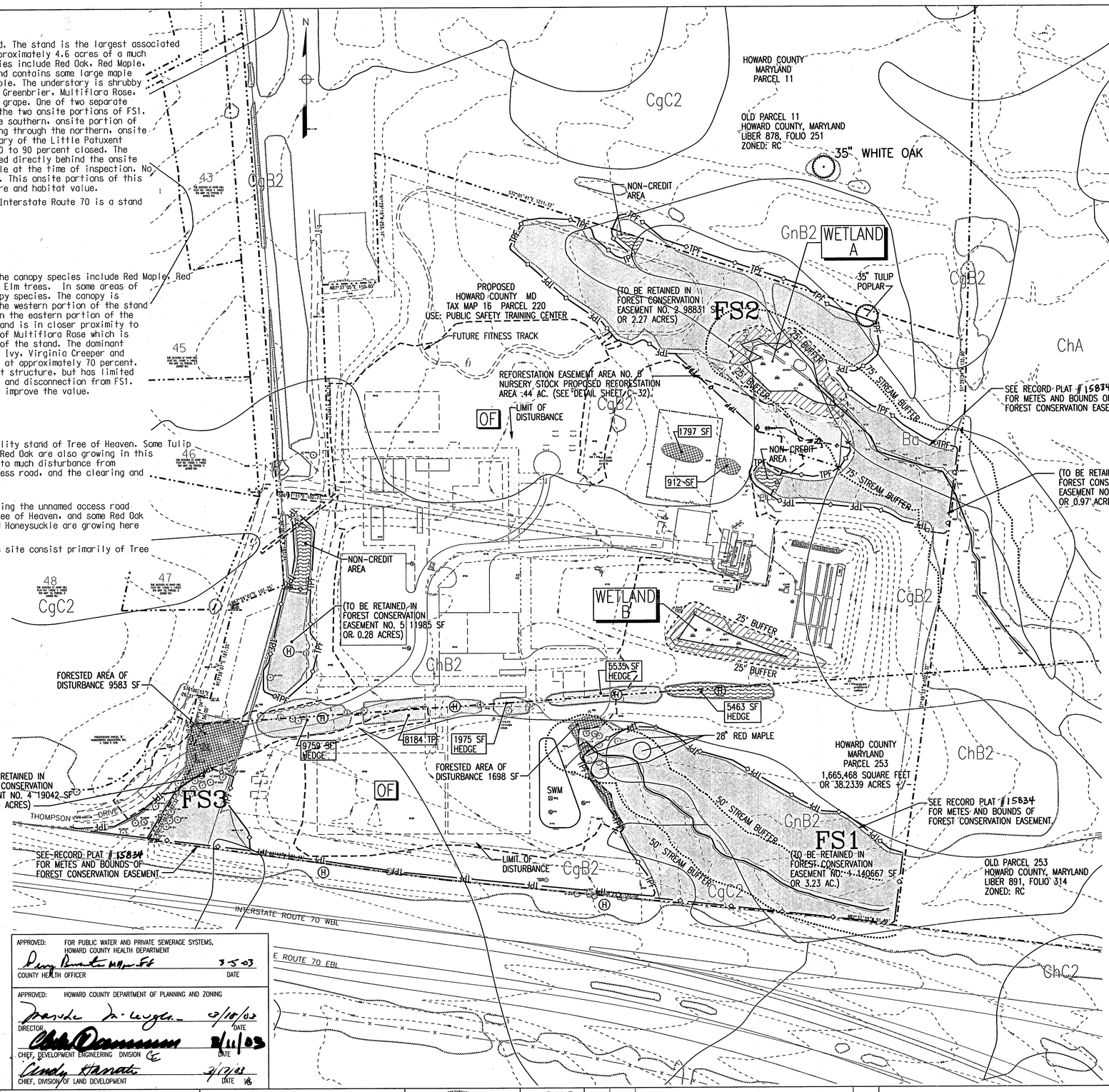

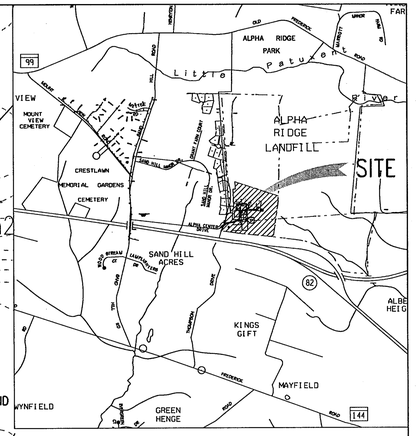

VICINITY MAP
SCALE: 1"=2000'

HOWARD COUNTY FOREST CONSERVATION WORKSHEET
HOWARD COUNTY PUBLIC SAFETY SITE

NET TRACT AREA:

A. TOTAL TRACT AREA	38.23 ACRES
B. AREA WITHIN 100 YEAR FLOOD PLAIN	0
C. AREA WITHIN AGRICULTURAL USE OR PRESERVATION PARCEL	0
D. NET TRACT AREA	38.23 ACRES

LAND USE CATEGORY: (I)
INPUT THE NUMBER "1" UNDER THE APPROPRIATE LAND USE ZONING. AND LIMIT TO ONLY ONE ENTRY.

ARA	MDR	IDA	HDR	MOP	CIA
0	0	1	0	0	0

E. AFFORESTATION MINIMUM (15% X A)	5.73 ACRES
F. REFORESTATION THRESHOLD (20% X A)	7.65 ACRES

EXISTING FOREST COVER:

G. EXISTING FOREST ON NET TRACT AREA (EXCLUDING FLOODPLAIN)	7.41 ACRES
H. AREAS OF FOREST ABOVE AFFORESTATION THRESHOLD	1.68 ACRES
I. AREAS OF FOREST ABOVE CONSERVATION THRESHOLD	0.00 ACRES

BREAKEVEN POINT:

J. FOREST RETENTION ABOVE THRESHOLD WITH NO MITIGATION	0.00 ACRES
K. CLEARING PERMITTED WITHOUT MITIGATION	0.00 ACRES

PROPOSED FOREST

L. TOTAL AREA OF FOREST TO BE CLEARED	0.22 ACRES
M. TOTAL AREA OF FOREST TO BE RETAINED	7.19 ACRES

PLANTING REQUIREMENTS:

N. REFORESTATION FOR CLEARING ABOVE CONSERVATION THRESHOLD	0.00 ACRES
O. REFORESTATION FOR CLEARING BELOW CONSERVATION THRESHOLD	0.44 ACRES
P. CREDIT FOR RETENTION ABOVE CONSERVATION THRESHOLD	0.00 ACRES
Q. TOTAL REFORESTATION REQUIRED	0.44 ACRES
R. TOTAL AFFORESTATION REQUIRED	0.00 ACRES
S. TOTAL AFFORESTATION AND REFORESTATION REQUIRED	0.44 ACRES

SOILS

Ba BAILE SILT LOAM.
NEARLY LEVEL IN UPLAND DEPRESSIONS. POORLY DRAINED

ChA CHESTER SILT LOAM.
0 TO 3 PERCENT SLOPES. WELL DRAINED.

CgB2 CHESTER GRAVELLY SILT LOAM.
3 TO 8 PERCENT SLOPES, MODERATELY ERODED. WELL DRAINED.

CgC2 CHESTER GRAVELLY SILT LOAM.
8 TO 15 PERCENT SLOPES, MODERATELY ERODED. WELL DRAINED.

ChB2 CHESTER SILT LOAM.
3 TO 8 PERCENT SLOPES, MODERATELY ERODED. WELL DRAINED.

GnB2 GLENVILLE SILT LOAM.
3 TO 8 PERCENT SLOPES, MODERATELY ERODED.
MODERATELY WELL DRAINED.

MID2 MANOR LOAM.
15 TO 25 PERCENT SLOPES, MODERATELY ERODED. WELL DRAINED
TO SOMEWHAT EXCESSIVELY DRAINED.

LEGEND

- LARGE TREE
- SPECIMEN TREE
- EXISTING TREELINE
- PROPOSED TREELINE
- TPF — TREE PROTECTION FENCE
- FS1 — FOREST STAND LABEL
- FOREST CONSERVATION EASEMENT SIGNPOST
- OF — OPEN FIELD
- H — HEDGE
- WETLAND
- 25' WETLAND BUFFER
- STREAM
- STREAM BUFFER
- CgB2 — SOIL TYPE
- SOIL BOUNDARY
- SITE LIMITS
- PROPERTY LINE
- LIMITS OF DISTURBANCE
- EX. FOREST TO BE SAVED
- EX. FOREST TO BE REMOVED
- EX. VEGETATION TO BE SAVED NOT INCLUDED IN FOREST CONSERVATION EASEMENT VEGETATION LESS THAN 10000 SF AND LESS THAN 35 FT WIDE.
- REFORESTATION AREA

APPROVED: FOR PUBLIC WATER AND PRIVATE SEWERAGE SYSTEMS, HOWARD COUNTY HEALTH DEPARTMENT
COUNTY HEALTH OFFICER — DATE 3-5-03

APPROVED: HOWARD COUNTY DEPARTMENT OF PLANNING AND ZONING
DIRECTOR — DATE 3/18/03
CHIEF, DEVELOPMENT ENGINEERING DIVISION — DATE 3/14/03
CHIEF, DIVISION OF LAND DEVELOPMENT — DATE 3/17/03

PREPARED BY: SHERYL H. BERNARDO
STATE OF MARYLAND
LICENSED LANDSCAPE ARCHITECT
LICENSE REGISTRATION NO. 3127
Name: Sheryl Bernardo Date: 2/21/03

GRAPHIC SCALE
100 0 100 200
SCALE: 1" = 100'

C-31

DEPARTMENT OF PUBLIC WORKS
HOWARD COUNTY, MARYLAND
CHIEF, BUREAU OF UTILITIES — DATE

PREPARED BY:
WR&A
Whitman, Requardt and Associates, LLP.
801 South Caroline Street.
Baltimore, Maryland. 21231
410-235-3450

STATE OF MARYLAND — JAMES A. AVRUTIN — PROFESSIONAL ENGINEER

DES: S.H.B.
DRN: P.L.B.
CHK: S.H.B.
DATE:

BY	NO.	REVISION	DATE

FOREST CONSERVATION PLAN

600' SCALE MAP NO. 16 BLOCK NO. 2 / 8

PUBLIC SAFETY TRAINING CENTER
AT ALPHA RIDGE LANDFILL
CAPITAL PROJECT NO. C-0182
HOWARD COUNTY, MARYLAND

SCALE AS SHOWN

SHEET 33 OF 39

SDP-03-36

M:\3490\pstcc3l.dgn
Thu Feb 20 15:44:53 2003

GENERAL NOTES

1. ALL FOREST RETENTION AREAS SHALL BE TEMPORARILY PROTECTED BY WELL ANCHORED TEMPORARY ORANGE CONSTRUCTION FENCING AND SIGNAGE AS INDICATED ON THE PLANS. DEVICES SHALL BE INSTALLED PRIOR TO ANY LAND CLEARING, GRUBBING OR GRADING ACTIVITIES. ALL DEVICES SHALL REMAIN UNTIL ALL CONSTRUCTION HAS CEASED IN THE IMMEDIATE VICINITY. DEVICES SHALL BE FIELD LOCATED AND APPROVED PRIOR TO THE START OF CONSTRUCTION.
2. FOREST RETENTION AREA TO BE STAKED AND FLAGGED PRIOR TO PROTECTION DEVICE INSTALLATION. PROTECTIVE FENCING AND SIGNAGE SHALL BE INSTALLED AS A FIRST ORDER OF BUSINESS.
3. FOREST PROTECTION DEVICES SHALL BE INSTALLED SUCH THAT THE CRITICAL ROOT ZONES OF ALL TREES WITHIN THE RETENTION AREA WILL BE WITHIN PROTECTION DEVICES.
4. THERE SHALL BE NO CLEARING, GRADING, CONSTRUCTION OR EXCESSIVE PEDESTRIAN DISTURBANCE WITHIN THE FOREST CONSERVATION EASEMENT EXCEPT AS PERMITTED BY THE HOWARD COUNTY.
5. AFTER INSTALLATION OF TEMPORARY FOREST PROTECTION DEVICES, REVIEWING AUTHORITY IS TO BE NOTIFIED AND SHALL INSPECT THE DEVICES. REVIEWING AUTHORITY TO INSPECT COMPLETED CONSTRUCTION SITE.
6. STOCKPILE AREAS TO BE RELOCATED PER CONSTRUCTION STAGE. STOCKPILE AREAS TO BE LOCATED WITHIN LOD DURING ALL STAGES OF CONSTRUCTION AND THROUGHOUT ALL CONSTRUCTION ACTIVITIES.
7. A POST CONSTRUCTION PROTECTION AND MANAGEMENT PROGRAM WILL BE IMPLEMENTED TO ENSURE THE SURVIVAL RATES OF FOREST RESOURCES SAVED OF PLANTED AS PART OF THE DEVELOPMENT PROPOSAL. ON SITE MEASURES SUCH AS FENCING WILL BE MAINTAINED DURING CONSTRUCTION, AND WILL BE REMOVED AFTER CONSTRUCTION. INSPECTION FOR COMPLIANCE WITH FOREST CONSERVATION REQUIREMENTS WILL BE CARRIED OUT AND CERTIFICATION WILL BE PROVIDED TO IDENTIFY THAT SPECIFIC SURVIVAL RATES HAVE BEEN MET.
8. THE COUNTY WILL ASSUME LONG TERM RESPONSIBILITY FOR PROTECTING THE INTEGRITY OF FOREST CONSERVATION AREAS AND PERFORMING AND DESIRED MAINTENANCE AFTER DEVELOPER GUARANTEES AND OBLIGATIONS HAVE BEEN MET.
9. THIS PROJECT COMPLIES WITH THE REQUIREMENTS OF SECTION 16.1200 OF THE HOWARD COUNTY CODE AND THE FOREST CONSERVATION MANUAL WITH A FOREST CONSERVATION OBLIGATION OF 7.63 AC HAS BEEN INCLUDED AS 7.19 AC. IN RETENTION AND 0.44 AC IN REFORESTATION.
10. THE FOREST CONSERVATION EASEMENTS ON THIS PLAN HAVE BEEN ESTABLISHED TO FULFILL THE REQUIREMENTS OF SECTION 16.1200 OF THE HOWARD COUNTY CODE AND FOREST CONSERVATION MANUAL. NO CLEARING, GRADING, OR CONSTRUCTION IS PERMITTED WITHIN THE FOREST CONSERVATION EASEMENTS, HOWEVER, FOREST MANAGEMENT PRACTICES AS DEFINED IN THE DEED OF FOREST CONSERVATION EASEMENT ARE ALLOWED.

WRITTEN STATEMENT FOR EXPLANATION OF FOREST CLEARING

1. THE PURPOSE OF THE PROJECT IS FOR THE CONSTRUCTION OF THE HOWARD COUNTY PUBLIC SAFETY TRAINING CENTER AT THE EDGE OF THE ALPHA RIDGE LANDFILL. BECAUSE OF THE CONFIGURATION OF THE TRAINING FACILITIES AND THE LOCATION OF THE STORMWATER MANAGEMENT AREA, FOREST IMPACTS ARE REQUIRED. THE NECESSITY TO CLEAR .22 ACRES OF FOREST IS DUE TO THE LOCATION PLUS CONSTRUCTION OF THE STORMWATER MANAGEMENT FACILITY AND THE ADJACENT BURN BUILDING. A FOREST CONSERVATION EASEMENT WILL BE PLATTED FOR 7.63 ACRES OF REMAINING FOREST AND REFORESTATION AREAS.
2. THE AREA OF CLEARING WILL BE LOCATED WITHIN PRIORITY RETENTION AREAS THAT INCLUDE: STREAMS AND THEIR REQUIRED BUFFERS, FORESTS CONTIGUOUS TO SENSITIVE AREAS, AND TREES 30 INCHES IN DIAMETER.
3. REFORESTATION/AFFORESTATION CALCULATIONS HAVE IDENTIFIED .44 ACRES OF FORESTED AREA REQUIRED TO BE REPLANTED.
4. THE LANDSCAPE PLANTING PLAN WILL INCLUDE REQUIREMENTS OUTLINED IN THE LANDSCAPE MANUAL. LANDSCAPE PLANTINGS WILL INCLUDE REQUIRED PERIMETERS PLANTING BUFFERS PARKING LOTS, AND STORMWATER MANAGEMENT FACILITY PLANTINGS.

*NOTE: FUTURE PARKING LOT PARKING PLAN AND PAVING PLAN WILL BE SUBMITTED AT A LATER DATE.

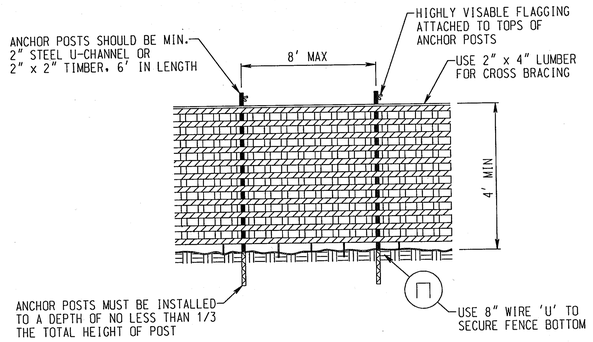

NOTES:
1. BLAZE ORANGE OR BLUE PLASTIC MESH FENCE FOR FOREST PROTECTION DEVICE, ONLY.
2. BOUNDARIES OF RETENTION AREA WILL BE ESTABLISHED AS PART OF THE FOREST CONSERVATION PLAN REVIEW PROCESS.
3. BOUNDARIES OF RETENTION AREA SHOULD BE STAKED AND FLAGGED PRIOR TO INSTALLING DEVICE.
4. AVOID DAMAGE TO CRITICAL ROOT ZONE. DO NOT DAMAGE OR SEVER LARGE ROOTS WHEN INSTALLING POSTS.
5. PROTECTION SIGNAGE IS REQUIRED.
6. DEVICE SHOULD BE MAINTAINED THROUGHOUT CONSTRUCTION.

PLASTIC MESH TREE PROTECTION FENCE

NO SCALE

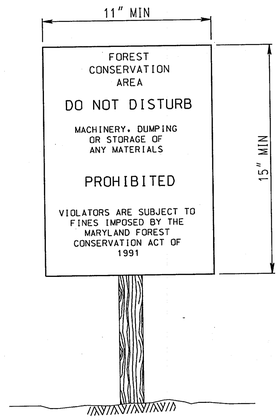

NOTES:
1. BOTTOM OF SIGN TO BE HIGHER THAN TOP OF TREE PROTECTION FENCE.
2. SIGNS TO BE PLACED 50' TO 100' APART, ON AVERAGE AT EACH PROPERTY CORNER.
3. ATTACHMENT OF SIGNS TO TREES IS PROHIBITED.

FOREST CONSERVATION SIGN

NO SCALE

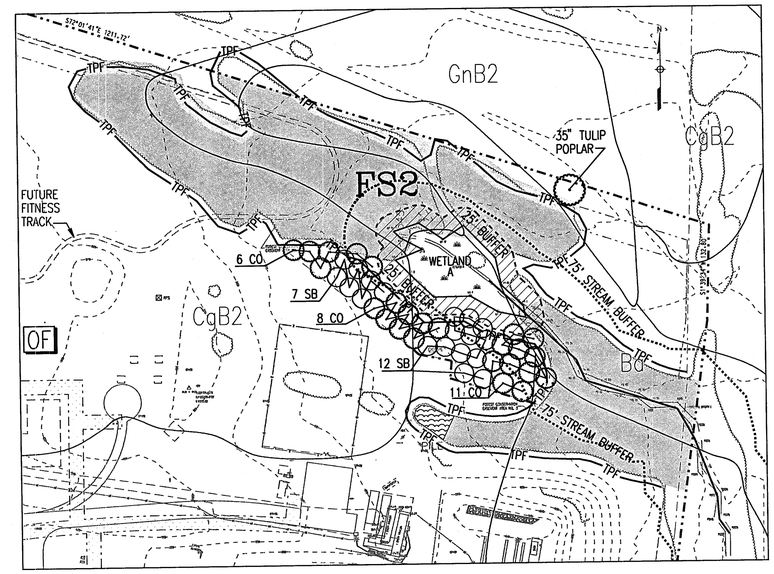

REFORESTATION DETAIL

SCALE: 1" = 100'

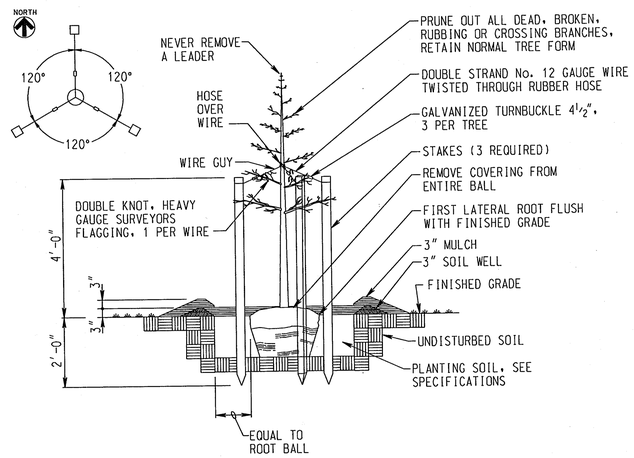

PLANTING DETAIL - DECIDUOUS TREE

NO SCALE

REFORESTATION PLANT LIST

SYMBOL	QUANTITY	KEY	BOTANICAL NAME	COMMON NAME	SIZE	SPACING	ROOTS
·	25	CO	CELTIS OCCIDENTALIS	COMMON HACKBERRY	2" CAL.	20'x20'	B&B
·	19	SB	SALIX BABYLONICA	BABYLON WEEPING WILLOW	2" CAL.	20'x20'	B&B

*PLANT DENSITY:
100 2" CALIPER TREES/ACRE (20'x20' SPACING) x .44 ACRES= 44 TREES.

*REFORESTATION METHOD: NURSERY STOCK
PLANT SIZE: GREATER THAN 1" SHOULD MEET OR EXCEED AMERICAN ASSOCIATION OF NURSERYMEN SPECIFICATIONS. PLANTING STOCK LESS THAN 1" CALIPER SHOULD MEET THE FOLLOWING STANDARDS:
SEEDLINGS/WHIPS (HARDWOODS 1/4" -1/2" CALIPER WITH 8" ROOTS; CONIFERS 1/8" - 1/4" CALIPER WITH ROOTS 8" AND TOP HEIGHT OF 6" OR MORE. SHRUBS SHOULD BE PLANTED 1/8" OR LARGER CALIPER WITH 8" ROOT SYSTEMS.

APPROVED: FOR PUBLIC WATER AND PRIVATE SEWERAGE SYSTEMS, HOWARD COUNTY HEALTH DEPARTMENT
COUNTY HEALTH OFFICER — DATE 3-5-03

APPROVED: HOWARD COUNTY DEPARTMENT OF PLANNING AND ZONING
DIRECTOR — DATE 3/14/03
CHIEF, DEVELOPMENT ENGINEERING DIVISION — DATE 3/11/03
CHIEF, DIVISION OF LAND DEVELOPMENT — DATE 3/17/03

DEPARTMENT OF PUBLIC WORKS
HOWARD COUNTY, MARYLAND
CHIEF, BUREAU OF UTILITIES — DATE

PREPARED BY :
WR&A
Whitman, Requardt and Associates, LLP.
801 South Caroline Street.
Baltimore, Maryland. 21231
410-235-3450

STATE OF MARYLAND — JAMES H. AVIRETT — No. 19810 — PROFESSIONAL ENGINEER

DES: S.H.B.
DRN: P.L.B.
CHK: S.H.B.
DATE:

BY	NO.	REVISION	DATE

FOREST CONSERVATION NOTES AND DETAILS

600' SCALE MAP NO. 16 BLOCK NO. 2 / 8

PUBLIC SAFETY TRAINING CENTER
AT ALPHA RIDGE LANDFILL
CAPITAL PROJECT NO. C-0182
HOWARD COUNTY, MARYLAND

GRAPHIC SCALE
100 0 100 200
SCALE: 1" = 100'

C-32

SCALE AS SHOWN

SHEET 34 OF 39

SDP-03-36

M:\13490\pstcc32.dgn
Thu Feb 20 15:41:45 2003

PREPARED BY: SHERYL H. BERNARDO
STATE OF MARYLAND
LICENSED LANDSCAPE ARCHITECT
LICENSE REGISTRATION NO. 3127
NAME: Sheryl Bernardo DATE: 2/21/03

DEVELOPER'S/BUILDER'S CERTIFICATE

I/WE CERTIFY THAT THE LANDSCAPING SHOWN ON THIS PLAN WILL BE DONE ACCORDING TO THE PLAN. SECTION 16.124 OF THE HOWARD COUNTY CODE AND THE HOWARD COUNTY LANDSCAPE MANUAL. I/WE FURTHER CERTIFY THAT UPON COMPLETION A LETTER OF LANDSCAPE INSTALLATION, ACCOMPANIED BY AN EXECUTED ONE YEAR GUARANTEE OF PLANT MATERIALS, WILL BE SUBMITTED TO THE DEPARTMENT OF PLANNING AND ZONING.

NAME: Michael A. Giovanniello DATE: 2/25/03

LEGEND

EXISTING	DESCRIPTION
258	PROPOSED CONTOUR
258	EXISTING CONTOUR
	EXISTING WOODS LINE
	PROPOSED WOODS LINE
	STREAM
	WETLAND
	NO WOODY ZONE
	WETLAND BOUNDARY
	EXISTING FENCE
	PROPOSED FENCE
	EXISTING TREE

PLANTING SCHEDULE

SYMBOL	KEY	QUANTITY	BOTANICAL NAME	COMMON NAME	SIZE	ROOTS
TREES						
	AR	19	ACER RUBRUM "OCTOBER GLORY"	OCTOBER GLORY RED MAPLE	2½"-3" CAL	B&B
	QR	34	QUERCUS RUBRA	RED OAK	2½"-3"" CAL	B&B
	LC	72	CUPPRESSOCYPARIS LEYLANDI	LEYLAND CYPRESS	5'- 6' HT	B&B
	PT	45	PINUS THUNBERGIANA	JAPANESE BLACK PINE	6'- 8' HT	B&B
SHRUBS						
	IC	71	ILEX GLABRA "COMPACTA"	COMPACT INKBERRY	18"- 24"	CONT
	RG	65	BERBERIS THUNBERGII "ROSE GLOW"	ROSE GLOW BARBERRY	15"- 18"	CONT.
	EG	75	ABELIA "EDWARD GOUCHER"	EDWARD GOUCHER ABELIA	15"- 18"	CONT.

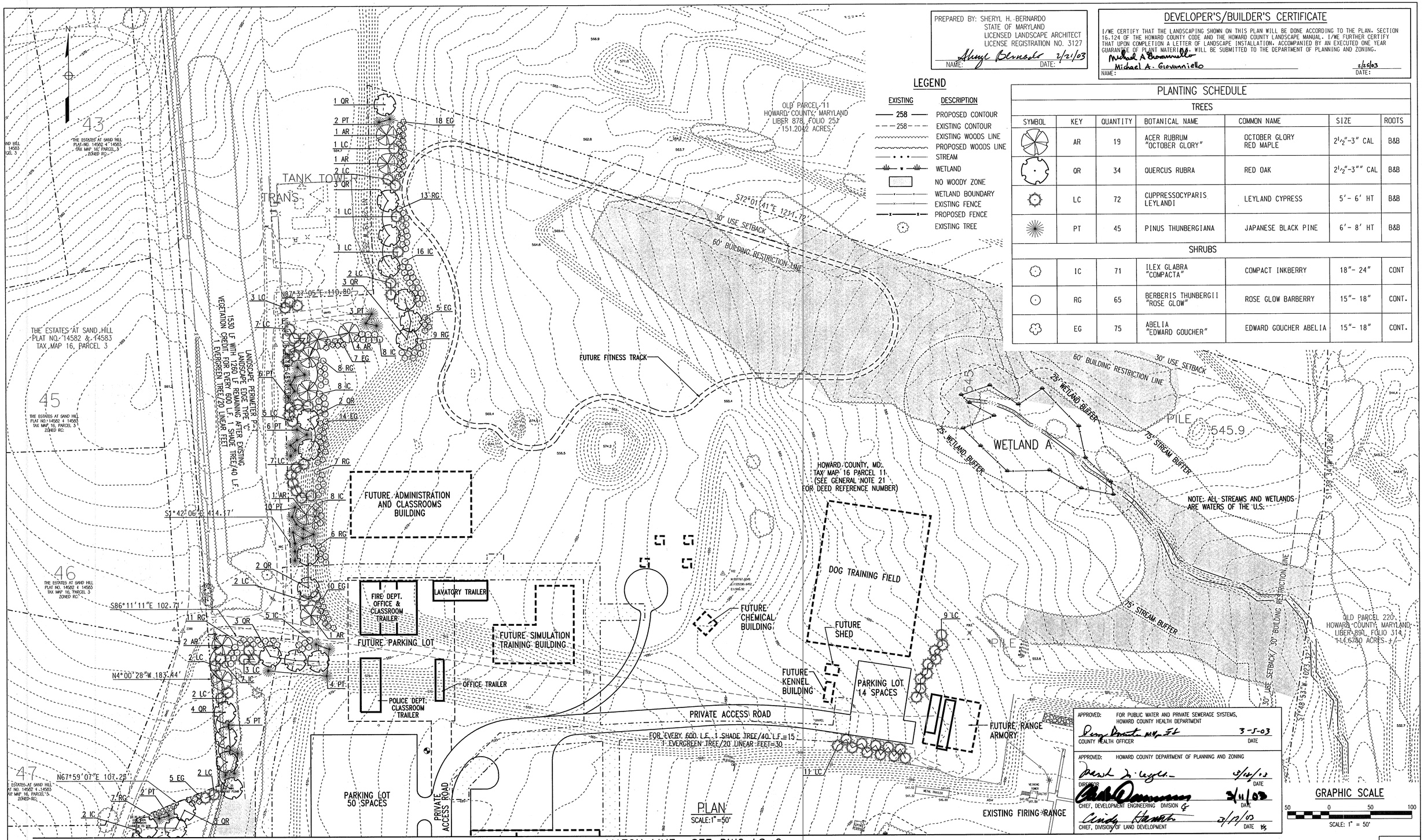

APPROVED: FOR PUBLIC WATER AND PRIVATE SEWERAGE SYSTEMS, HOWARD COUNTY HEALTH DEPARTMENT
COUNTY HEALTH OFFICER — DATE 3-5-03

APPROVED: HOWARD COUNTY DEPARTMENT OF PLANNING AND ZONING
DIRECTOR — DATE 3/4/03
CHIEF, DEVELOPMENT ENGINEERING DIVISION — DATE 3/4/03
CHIEF, DIVISION OF LAND DEVELOPMENT — DATE 3/7/03

MATCH LINE SEE DWG LS-2

LS-1

DEPARTMENT OF PUBLIC WORKS
HOWARD COUNTY, MARYLAND
CHIEF, BUREAU OF UTILITIES DATE

PREPARED BY:
WR&A
Whitman, Requardt and Associates, LLP.
801 South Caroline Street.
Baltimore, Maryland. 21231
410-235-3450

STATE OF MARYLAND — JAMES A. AVIOLI — PROFESSIONAL ENGINEER

DES: H.W.P. S.H.B.
DRN: E.M.
CHK: H.W.P.
DATE: 12/16/2002

BY	NO.	REVISION	DATE

LANDSCAPE PLAN - NORTH

600' SCALE MAP NO. 16 BLOCK NO. 2 / 8

PUBLIC SAFETY TRAINING CENTER
AT ALPHA RIDGE LANDFILL
CAPITAL PROJECT NO. C-0182
HOWARD COUNTY, MARYLAND

SCALE AS SHOWN

SHEET 35 OF 39

W.O. /13490/

SDP-03-36

M:\13490\PSTCLS1.DGN
Thu Feb 20 15:42:37 2003

MATCH LINE SEE DWG. LS-1

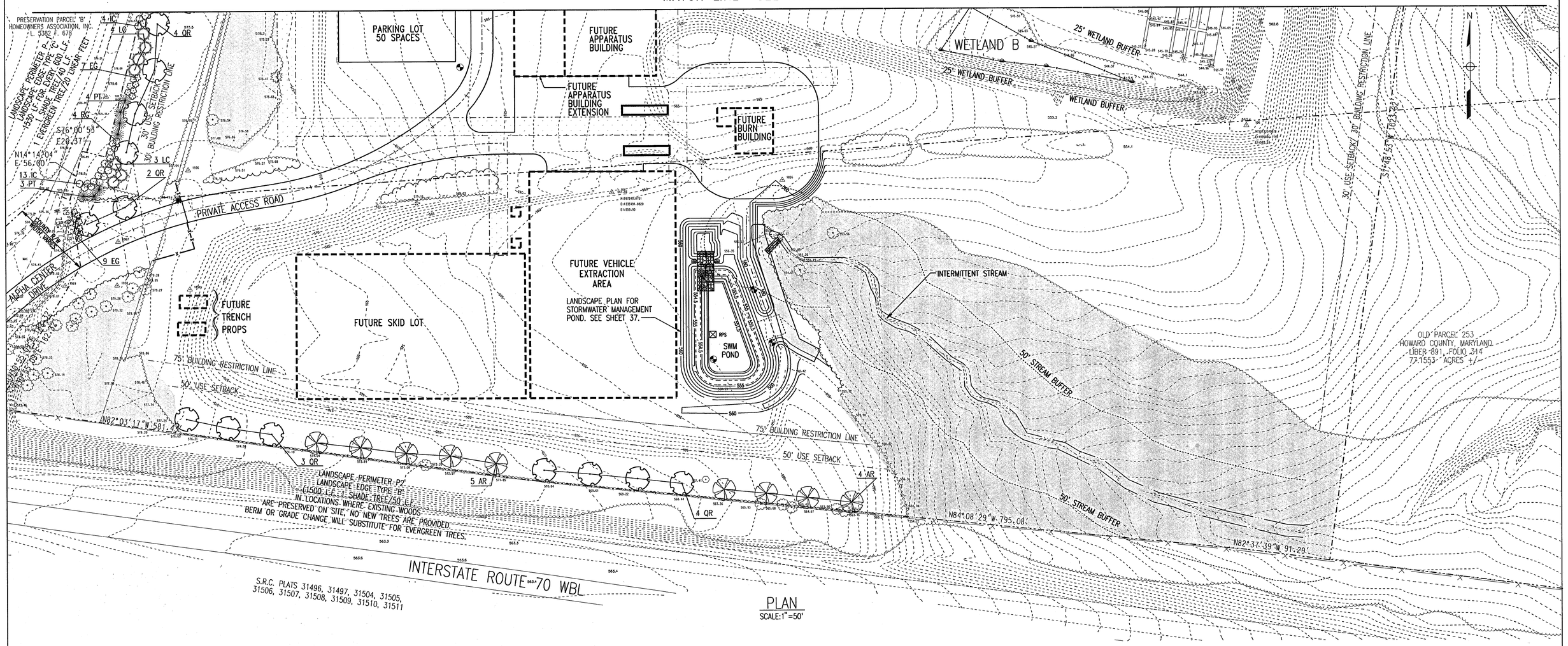

PLAN
SCALE: 1" = 50'

APPROVED: FOR PUBLIC WATER AND PRIVATE SEWERAGE SYSTEMS, HOWARD COUNTY HEALTH DEPARTMENT

COUNTY HEALTH OFFICER — DATE 3-6-03

APPROVED: HOWARD COUNTY DEPARTMENT OF PLANNING AND ZONING

DIRECTOR — DATE 3/10/03

CHIEF, DEVELOPMENT ENGINEERING DIVISION — DATE 3/11/03

CHIEF, DIVISION OF LAND DEVELOPMENT — DATE 3/17/03

DEPARTMENT OF PUBLIC WORKS
HOWARD COUNTY, MARYLAND

CHIEF, BUREAU OF UTILITIES — DATE

PREPARED BY :

WR&A

Whitman, Requardt and Associates, LLP.
801 South Caroline Street.
Baltimore, Maryland. 21231
410-235-3450

STATE OF MARYLAND — JAMES A. AUBERT, JR. — 10210 — PROFESSIONAL ENGINEER

DES: H.W.P. S.H.B.
DRN: E.M.
CHK: H.W.P.
DATE: 12/16/2002

BY	NO.	REVISION	DATE

LANDSCAPE PLAN - SOUTH

600' SCALE MAP NO. 16 BLOCK NO. 2 / 8

PUBLIC SAFETY TRAINING CENTER
AT ALPHA RIDGE LANDFILL
CAPITAL PROJECT NO. C-0182
HOWARD COUNTY, MARYLAND

GRAPHIC SCALE
50 0 50 100
SCALE: 1" = 50'

LS-2

SCALE AS SHOWN

SHEET 36 OF 39

W.O./13490/

SDP-03-36

M:\13490\PSTCLS2.DGN
Thu Feb 20 15:42:54 2003

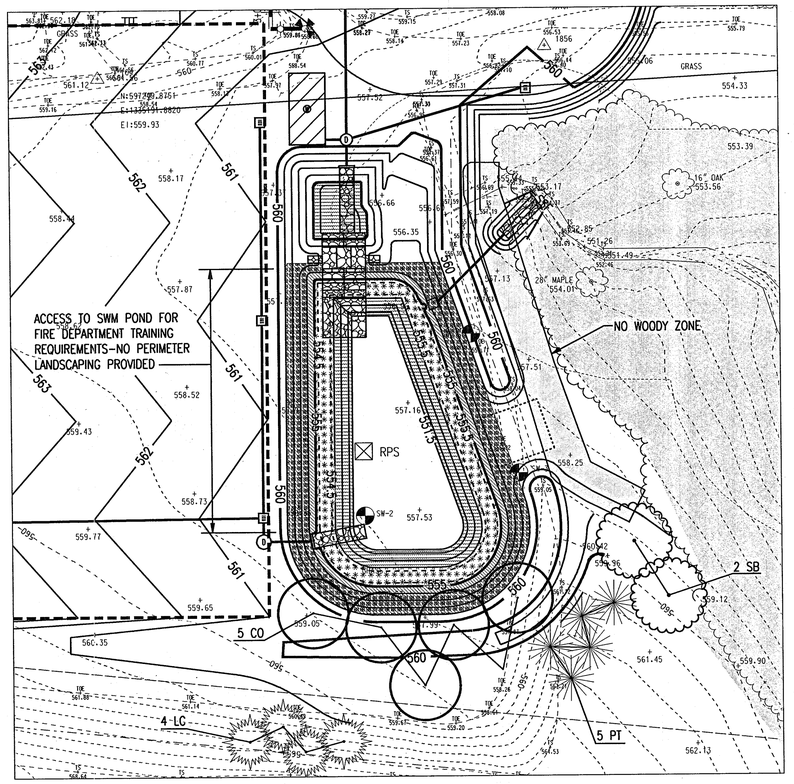

PARTIAL PLAN

SCALE 1"=30'

LEGEND

EXISTING	DESCRIPTION
258	PROPOSED CONTOUR
258	EXISTING CONTOUR
	EXISTING WOODS LINE
	PROPOSED WOODS LINE
	STREAM
W	WETLAND
	NO WOODY ZONE
	WETLAND BOUNDARY
	EXISTING FENCE
X	PROPOSED FENCE
	EXISTING TREE

PREPARATION OF THE WETLAND SUBSTRATE

THE WETLAND SUBSTRATE SHALL BE DEVELOPED BY FIRST PLACING ONE (1) TWELVE-INCH LIFT OF TOPSOIL ON THE SUB-GRADE OF THE CONSTRUCTION AREA. THE PLANTING BED SHALL NOT BE COMPACTED EXCEPT IN MINIMAL AMOUNTS NECESSARY FOR PLACEMENT OF THE MATERIAL. ONLY LIGHT BEARING EQUIPMENT SHALL BE USED FOR PLACEMENT.

TO FACILITATE PLANTING, THE TOP FOUR (4) INCHES OF TOPSOIL SHALL BE ROTOTILLED TO LOOSEN AND MIX SOIL MATERIALS, WHICH MAY HAVE BEEN COMPACTED DURING PLACEMENT.

THE CONTRACTOR SHALL REMOVE ROCKS AND OTHER DEBRIS TWO (2) INCHES OR LARGER IN DIAMETER THAT MAY BE HARMFUL TO PLANT GROWTH OR AS DIRECTED BY THE LANDSCAPE ARCHITECT.

PLANT BED LOCATIONS SHALL BE IDENTIFIED ON THE GROUND.

PLANTING

THE LANDSCAPE ARCHITECT WILL INSPECT PLANTS FOR INJURY, INFESTATION AND IMPROPER PRUNING. THE CONTRACTOR SHALL NOT BEGIN PLANTING UNTIL THE INSPECTION IS COMPLETED AND DEFICIENCIES ARE CORRECTED. ALL REJECTED PLANTS SHALL BE REPLACED AND INSPECTED BY THE LANDSCAPE ARCHITECT.

POTTED PLANTS AND RHIZOMES SHALL BE PLANTED APPROXIMATELY THREE (3) INCHES DEEP (OR AS APPROPRIATE FOR EACH POT) BY HAND, IN MOIST TO WET SOILS, LEAVING GROWING STEMS ABOVE GROUND.

TUBERS AND ROOTSTOCK ROOTS SHALL BE PUSHED ONE (1) TO THREE (3) INCHES INTO MOIST TO SATURATED SOILS BY HAND, ENOUGH TO COVER THE ROOTS. FIRM SOIL AROUND ROOT BY HAND. WHEN PLANTING IN WATER, SUFFICIENT WEIGHT TO HOLD THE PLANT IN PLACE SHALL BE USED. UTILIZING WEIGHTS SUCH AS #8 PENNY NAILS HELD WITH RUBBER BANDS OR PLACING ROOTS IN A MESH BAG WITH ROCKS SHALL BE ACCEPTABLE. SPACING FOR PLANTS IS SPECIFIED ON THE TYPICAL SECTION FOR HERBACEOUS PLANTS.

BARE ROOT PLANTS (BR) SHALL BE CUT OFF CLEAN, ALL BROKEN OR FRAYED ROOTS SHALL BE TREATED WITH A PLANT HORMONE SUCH AS "TRANSPLANTONE", "ROOTONE" OR AN APPROVED EQUAL IN STRICT ACCORDANCE WITH THE MANUFACTURER'S PRINTED INSTRUCTIONS.

EXCAVATE THE PLANTING PITS TO SUFFICIENT SIZE TO EXCEED THE ROOT BALL DIAMETER OR BARE ROOT SPREAD AS APPROVED BY THE PROFESSIONAL LANDSCAPER. SPREAD ROOTS OUT IN THE PIT AND CAREFULLY WORK SOIL IN AND AMONG THE ROOTS OF THE SEEDLINGS, TUBERS, AND ROOTSTOCK AS DIRECTED BY THE PROFESSIONAL LANDSCAPER.

PLANT VARIETIES SHALL BE PLANTED ON TWO (2) FOOT CENTERS, UNIFORMLY MIXED THROUGHOUT THE CONSTRUCTION AREA.

CARE OF PLANTINGS AFTER CONSTRUCTION

IF SOILS ARE NOT WET, THE AREA SHALL BE WATERED IMMEDIATELY AFTER PLANTING. THE SOIL SUBSTRATE MUST BE KEPT SATURATED DURING PLANTING AND CONTINUED ACCORDING TO CLIMATIC CONDITIONS AND UNTIL PLANTINGS BECOME FULLY ESTABLISHED AS DETERMINED BY THE LANDSCAPE ARCHITECT.

GENERAL NOTES

1. ALL WETLAND CONSTRUCTION ACTIVITIES SHALL BE UNDER THE DIRECTION OF A PROFESSIONAL LANDSCAPER FAMILIAR WITH WETLAND CONSTRUCTION TECHNIQUES.
2. IDENTIFY WETLAND CONSTRUCTION AREA BY SURVEY AND FIELD MARK WITH FLAGGING.
3. TEMPORARILY DIVERT DRAINAGE AWAY FROM PROPOSED CONSTRUCTION AREAS WHERE POSSIBLE TO PREVENT WORKING IN SATURATED OR INUNDATED CONDITIONS.
4. INSTALL SILT FENCING WHERE NECESSARY BETWEEN EXCAVATION AREAS AND WETLANDS AND/OR DRAINAGE. USE BEST MANAGEMENT PRACTICES (BMP) IN ACCORDANCE WITH THE E&S CONTROL PLAN FOR SEDIMENTATION AND EROSION CONTROL. SILT FENCES MUST BE NATURAL MATERIALS (I.E. WOODEN STAKES, BURLAP, HAY BALES).
5. REMOVE WOODY VEGETATION AND TRANSPORT AWAY FROM WORK AREA. DISPOSE OF WOODY MATERIAL AND DEBRIS AS PER APPROPRIATE FEDERAL, STATE AND LOCAL CODES.
6. GRADE SITE TO DESIRED SUBGRADE ELEVATION(S) (1 FOOT BELOW FINAL GRADE), SHAPE AND SIZE. REMOVE SURPLUS MATERIAL FROM WORK AREAS USING (BMP)'S FOR E&S CONTROL.
7. PLACE A TWELVE-INCH LIFT OF TOPSOIL ON THE SURFACE IN THE CONSTRUCTION AREA TO BRING THE AREA UP TO FINAL GRADE. UNEVEN, IRREGULAR SURFACES WILL ADD DIVERSITY TO THE SITE.
8. DELINEATE AND IDENTIFY PLANTING LOCATIONS IN THE FIELD.
9. PLANT PROPOSED TREES, SHRUBS, NURSERY PLANTS, STOCK AND/OR SEED ACCORDING TO SPECIFICATIONS AND CONSTRUCTION DRAWINGS.
10. REMOVE WATER FLOW AND DRAINAGE DIVERSIONS AND ALLOW FLOODING SATURATION TO OCCUR.
11. REMOVE EROSION AND SEDIMENTATION CONTROL DEVICES IN ACCORDANCE WITH MDE REGULATIONS.
12. WATER PLANTINGS AS NEEDED ACCORDING TO PLANT SPECIFICATIONS DURING DRY PERIODS.
13. OPTIMUM SEASON TO UNDERTAKE THIS WORK IS SPRING FOR ESTABLISHMENT OF PLANTS.
14. ALL PLANTING AND MULCHING SHALL BE DONE IN ACCORDANCE WITH THE MD SHA BOOK OF STANDARDS, HIGHWAYS AND INCIDENTAL STRUCTURES, CATEGORY 7, LANDSCAPING OR THE HOWARD COUNTY LANDSCAPE MANUAL.
15. ALL 2" OR GREATER CALIPER TREES SHALL HAVE A MULCH BED TEN FOOT (10') IN DIAMETER.

STORMWATER MANAGEMENT PLANTING SCHEME

WETLAND PLANTING MIX	COVERAGE	SPECIES	
1.	2339 S.F.	VIRGINIA BLUEFLAG SWAMP ASTER CARDINAL FLOWER	IRIS VIRGINICA ASTER PUNICEUS LOBELIA CARDINALIS
2.	2380 S.F.	LIZARDS TAIL BENT SEDGE VIRGINIA WILD RYE	SAURURUS CEMUUS CAREX STYLOFLEXA ELYMUS VIRGINICUS
3.	1037 S.F.	NEW ENGLAND ASTER BLUE VERVAIN BLUNT SPIKERUSH	ASTER NOVAE-ANGLIAE VERBENA HASTATA ELEOCHARIS OBTUSA
4.	3389 S.F.	ORANGE CONEFLOWER BIRDS-FOOT TREFOIL SOFT RUSH	RUDBECKIA FULGIDA LOTUS CORNICULATUS JUNCUS EFFUSUS

WHEN SPECIFIED PLANT SIZES OR TYPES ARE NOT AVAILABLE, SUBSTITUTIONS MAY BE MADE BY THE CONTRACTOR AFTER REVIEW BY THE LANDSCAPE ARCHITECT PROVIDED SUBSTITUTIONS PROVIDE EQUAL OR GREATER WETLAND FUNCTION AND VALVE SUCH AS HABITAT VALUE AND EROSION AND SEDIMENTATION CONTROL AND PROVIDED THE SPECIES HAVE SIMILAR WETLAND INDICATOR STATUS AND CAN THRIVE UNDER ANTICIPATED SITE CONDITIONS. STANDARD REFERENCES AS TO SPECIFIC SPECIES VALUE MUST BE UTILIZED FOR COMPARISON AND DETERMINATION OF SUBSTITUTED SPECIES SUITABILITY. INCREASED COSTS WHICH MAY BE ASSOCIATED WITH SUBSTITUTIONS SHALL BE BORNE BY THE CONTRACTOR.

PLANT AND ROOTSTOCK SHALL BE TRUE TO TYPE AND NAME IN ACCORDANCE WITH THE CURRENT EDITION OF STANDARDIZED PLANT NAMES, AMERICAN JOINT COMMITTEE OF HORTICULTURE NOMENCLATURE. BAGGED OR BUNDLED STOCK SHALL BE LABELED WITH COMMON PLANT NAME AND TYPICAL OF THE SPECIES OF VARIETY INDICATED. ALL PLANTS AND ROOTSTOCK SHALL BE FREE FROM DISEASE AND INJURIOUS INSECTS IN ACCORDANCE WITH STATE AND FEDERAL LAWS. PLANTS AND ROOTSTOCK SHALL BE FREE OF MECHANICAL INJURIES, CUT BACK LEADER, DECAY, ROT, MOLD, OR OTHER DEFECTS. NURSERY GROWN PLANTS OR ROOTSTOCK SHALL BE ACCLIMATED TO SITE SOIL AND CLIMATIC CONDITIONS. ROOTSTOCK MUST BE FIBROUS AND HAVE WELL-BRANCHED ROOT SYSTEMS CHARACTERISTIC OF THE SPECIES.

STORMWATER MANAGEMENT PLANT LIST

	QUANTITY	KEY	BOTANICAL NAME	COMMON NAME	SIZE	ROOTS
	5	CO	CELTIS OCCIDENTALIS	COMMON HACKBERRY	2½" CAL.	B&B
	2	SB	SALIX BABYLONICA	BABYLON WEEPING WILLOW	2½" CAL.	B&B
	5	PT	PINUS THUNBERGIANA	JAPANESE BLACK PINE	6'-8' HT	B&B
	4	LC	CUPRESSOCYPARIS LEYLANDI	LEYLAND CYPRESS	5'-6' HT	B&B

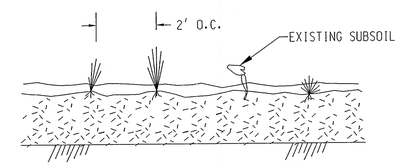

TYPICAL HERBACEOUS PLANTINGS

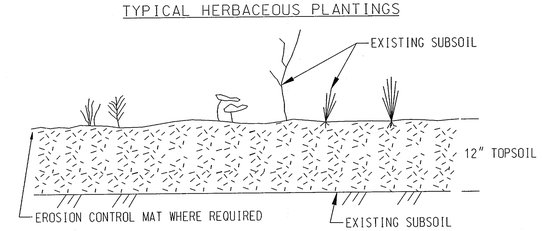

TYPICAL SOIL CROSS SECTION
EMERGENT AREAS

LS-3

APPROVED: FOR PUBLIC WATER AND PRIVATE SEWERAGE SYSTEMS, HOWARD COUNTY HEALTH DEPARTMENT
COUNTY HEALTH OFFICER — DATE 3-5-03

APPROVED: HOWARD COUNTY DEPARTMENT OF PLANNING AND ZONING
DIRECTOR — DATE 3/10/03
CHIEF, DEVELOPMENT ENGINEERING DIVISION — DATE 3/11/03
CHIEF, DIVISION OF LAND DEVELOPMENT — DATE 3/17/03

DEPARTMENT OF PUBLIC WORKS
HOWARD COUNTY, MARYLAND
CHIEF, BUREAU OF UTILITIES — DATE

PREPARED BY :
WR&A
Whitman, Requardt and Associates, LLP.
801 South Caroline Street.
Baltimore, Maryland. 21231
410-235-3450

STATE OF MARYLAND — JAMES A. KAUFFMAN — 11021O — PROFESSIONAL ENGINEER

DES: HWP
DRN: KRS
CHK: HWP
DATE: 12/16/2002

BY	NO.	REVISION	DATE

STORMWATER FACILITY
LANDSCAPE PLAN,
NOTES AND DETAILS

600' SCALE MAP NO. 16 BLOCK NO. 2 / 8

PUBLIC SAFETY TRAINING CENTER
AT ALPHA RIDGE LANDFILL
CAPITAL PROJECT NO. C-0182
HOWARD COUNTY, MARYLAND

SCALE AS SHOWN

SHEET 37 OF 39

SDP-03-36

M:\13490\PSTCLS3.DGN
Thu Feb 20 15:13:08 2003

W.O. /13490/

NOTES:

1. CONTRACTOR SHALL VERIFY PLANT MATERIAL QUANTITIES SHOWN ON PLAN WITH TOTALS IN PLANT SCHEDULE. NOTIFY LANDSCAPE ARCHITECT OF ANY DISCREPANCIES PRIOR TO FINAL BIDDING. UNIT PRICES SHALL BE SUBMITTED TO LANDSCAPE ARCHITECT WITH BID.
2. CONTRACTOR IS RESPONSIBLE FOR CONTACTING MISS UTILITY PRIOR TO BEGINNING CONSTRUCTION FOR LOCATION OF ALL UTILITY LINES.
3. ALL PLANT MATERIALS, TOPSOIL, MULCH FERTILIZERS, SOIL AMENITIES, PLANTING SUPPLIES AND METHODS SHALL BE IN CONFORMANCE WITH THE LANDSCAPE SPECIFICATIONS AND SUBJECT TO LANDSCAPE ARCHITECT'S APPROVAL. REJECTED MATERIAL SHALL BE REMOVED FROM THE SITE WITHOUT DELAY.
4. ALL LANDSCAPING SHALL BE IN ACCORDANCE WITH THE HOWARD COUNTY LANDSCAPE MANUAL, ADOPTED JANUARY 4, 1993, AMENDED MARCH 2 1998.
5. ALL PLANTS SHALL HAVE BEEN NURSERY GROWN AND SHALL HAVE BEEN GROWN UNDER THE SAME CLIMATIC CONDITIONS AS THE LOCATION OF THIS PROJECT FOR AT LEAST TWO YEARS BEFORE PLANTING. NEITHER HEELED IN PLANTS NOR PLANTS FROM COLD STORAGE WILL BE ACCEPTED
6. ALL PLANTING BED AREAS SHALL BE COVERED WITH A 3" MINIMUM LAYER OF MEDIUM TEXTURE SHREDDED HARDWOOD MULCH.
7. ALL SUBSTITUTIONS OF PLANT MATERIAL SHALL BE REQUESTED IN WRITING TO THE LANDSCAPE ARCHITECT AND APPROVED IN WRITING BY THE HOWARD COUNTY DEPARTMENT OF PLANNING AND ZONING. FAILURE TO OBTAIN SUBSTITUTIONS IN WRITING MAY RESULT IN LIABILITY TO THE CONTRACTOR.
8. ALL PLANTING OPERATIONS SHALL BE UNDER THE SUPERVISION OF AN EXPERIENCED PLANTSMEN.
9. ALL TREES SHALL HAVE A MULCH BED EIGHT FOOT (8') IN DIAMETER. ALL SHRUBS SHALL BE PLACED IN A CONTINUOUS FOUR FOOT (4') WIDE MULCH BED.
10. THIS PLAN HAS BEEN PREPARED IN ACCORDANCE WITH THE PROVISIONS OF SECTION 16.124 OF THE HOWARD COUNTY CODE AND THE LANDSCAPE MANUAL.
11. INTERNAL PARKING LOT LANDSCAPING WILL BE PROVIDED ON SITE DEVELOPMENT PLANS FOR FUTURE PHASES OF THE PROJECT WHEN THE PARKING LOTS ARE PAVED.

SCHEDULE A

PERIMETER LANDSCAPE EDGE

CATEGORY	ADJACENT TO ROADWAYS	ADJACENT TO PERIMETER PROPERTIES	
LANDSCAPE TYPE	(LANDSCAPE PERIMETER P-2) B	A	(LANDSCAPE PERIMETER P-1) C
LINEAR FEET OF ROADWAY FRONTAGE/PERIMETER	1500 L.F.	NOT REQUIRED	1530 L.F.
CREDIT FOR EXISTING VEGETATION (YES, NO, LINEAR FEET) (DESCRIBE BELOW IF NEEDED)	YES EX. VEGETATION 700 L.F. (800 L.F. REMAINING)	NOT REQUIRED	YES 270 L.F. (1260 L.F. REMAINING)
CREDIT FOR WALL, FENCE OR BERM (YES, NO, LINEAR FEET) (DESCRIBE BELOW IF NEEDED)	SLOPE CREDIT YES	NOT REQUIRED	SLOPE CREDIT NO
NUMBER OF PLANTS REQUIRED SHADE TREES EVERGREEN TREES SHRUBS	(PROVIDED) 1 SHADE TREE/50 L.F. (16) 1 EVERGREEN/40 L.F. (0*)	NOT REQUIRED	1 SHADE TREE/40 L.F. (32) 1 EVERGREEN/20 L.F. (63)
NUMBER OF PLANTS PROVIDED SHADE TREES EVERGREEN TREES OTHER TREES (2:1 SUBSTITUTION) SHRUBS (10:1 SUBSTITUTION) DESCRIBE PLANT SUBSTITUTION CREDITS BELOW IF NEEDED)	1:50 SHADE TREE 1:40 EVERGREEN SHADE: (16) EVERGREEN: *(0) SHRUBS: (0) SEE NOTE*	NOT REQUIRED	1:40 SHADE TREE 1:20 EVERGREEN SHADE: (37) EVERGREEN: (97) SHRUBS: (211) SEE NOTE**

NOTE:
* LANDSCAPE EDGE TYPE B: ADJACENT TO HIGHWAY.
NO NEW TREES PROVIDED IN LOCATIONS WHERE EXISTING WOODS ARE PRESERVED ALONG LANDSCAPE EDGE B.
GRADE CHANGE 6'-10' ALONG LANDSCAPE EDGE WILL SUBSTITUTE FOR EVERGREEN TREES.
**LANDSCAPE EDGE TYPE C: ADJACENT TO RESIDENTIAL. ADDITIONAL LANDSCAPING PROVIDED TO BUFFER RESIDENTIAL USE.

SCHEDULE D

STORMWATER MANAGEMENT AREA LANDSCAPING

LINEAR FEET OF PERIMETER	540 L.F.
TYPE 'B' BUFFER NUMBER OF TREES REQUIRED: SHADE TREES EVERGREEN TREES	1 SHADE TREE/50 L.F.= 7 1 EVERGREEN TREE/40 L.F.= 9
CREDIT FOR EXISTING VEGETATION (NO, YES AND %)	YES 180 L.F. (360 L.F. REMAINING)
CREDIT FOR OTHER LANDSCAPING (NO, YES AND %)	NO
NUMBER OF TREES PROVIDED: SHADE TREES EVERGREEN TREES OTHER TREES (2:1 SUBSTITUTION)	SHADE: 7 EVERGREEN: 9 OTHER: 9000 S.F. OF WETLAND PLANT SPECIES PROVIDED.

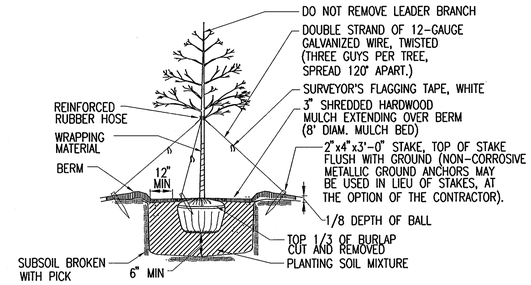

DECIDUOUS TREE PLANTING DETAIL
NOT TO SCALE

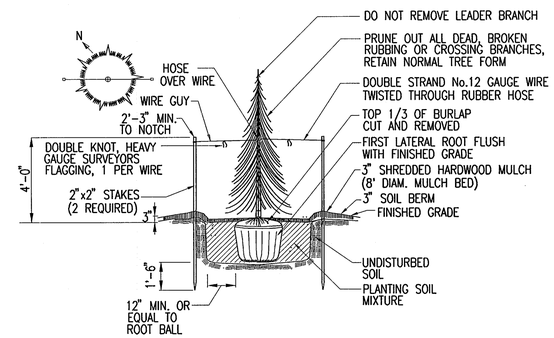

EVERGREEN TREE PLANTING DETAIL
NOT TO SCALE

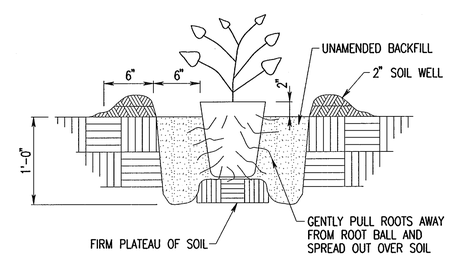

PLANTING DETAIL - CONTAINER PLANT
NO SCALE

APPROVED: FOR PUBLIC WATER AND PRIVATE SEWERAGE SYSTEMS, HOWARD COUNTY HEALTH DEPARTMENT
COUNTY HEALTH OFFICER — DATE 3-5-03

APPROVED: HOWARD COUNTY DEPARTMENT OF PLANNING AND ZONING
DIRECTOR — DATE 3/10/03
CHIEF, DEVELOPMENT ENGINEERING DIVISION — DATE 3/11/03
CHIEF, DIVISION OF LAND DEVELOPMENT — DATE 3/12/03

DEPARTMENT OF PUBLIC WORKS
HOWARD COUNTY, MARYLAND
CHIEF, BUREAU OF UTILITIES — DATE

PREPARED BY :
WR&A
Whitman, Requardt and Associates, LLP.
801 South Caroline Street.
Baltimore, Maryland. 21231
410-235-3450

STATE OF MARYLAND — HARRY W. PHILLIPS JR. — No. 10210 — PROFESSIONAL ENGINEER

DES: H.W.P. S.H.B.
DRN: E.M.
CHK: H.W.P.
DATE: 12/16/2002

BY	NO.	REVISION	DATE

LANDSCAPE NOTES AND DETAILS
600' SCALE MAP NO. 16 BLOCK NO. 2 / 8

PUBLIC SAFETY TRAINING CENTER
AT ALPHA RIDGE LANDFILL
CAPITAL PROJECT NO. C-0182
HOWARD COUNTY, MARYLAND

LS-4
SCALE AS SHOWN
SHEET 38 OF 39

W.O./13490/
SDP-03-36
M:\13490\PSTCLS4.dgn Thu Feb 20 10:43:20 2003

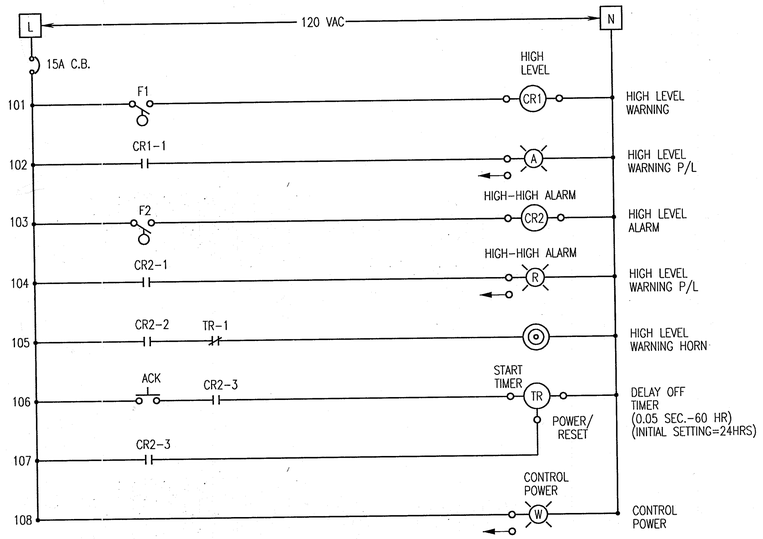

EQUIPMENT LEGEND:

- AUDIBLE ALARM (PANEL MOUNTED)
- CIRCUIT BREAKER (C.B.) (SQUARE-D TYPE Q04 OR EQUAL)
- FLOAT SWITCH
- NORMALLY OPEN (N.O.) CONTACT
- NORMALLY CLOSED (N.C.) CONTACT
- PUSH BUTTON (N.O.)
- PILOT LIGHT/PUSH TO TEST (COLOR AS INDICATED) R=RED W=WHITE A=AMBER
- CR1 — CONTROL RELAY (IDEC RH SERIES W/ LED)
- TR — TIME RELAY (TIME OFF DELAY) (ALLEN BRADLEY 700-FS-B-4-U-U23, OR EQUAL)

PANEL DEVICES:

- AUDIBLE ALARM DEVICE (MALLORY SONALERT (LOUD), OR EQUAL)
- X — 30.5MM PILOT LIGHT-COLOR AS INDICATED (ALLEN BRADLEY 800T, OR EQUAL) R=RED W=WHITE A=AMBER
- 30.5MM PUSH BUTTON (ALLEN BRADLEY 800T, OR EQUAL)

DRAWING NOTES:

1. CONTRACTOR SHALL PROVIDE FLANGE CONNECTION TO FIBREGLASS HOLDING TANK AND SEAL AROUND CONDUIT. CONTRACTORS SHALL PROVIDE AND INSTALL TWO FLOAT SWITCHES INSIDE SEPTAGE HOLDING TANK AT ELEVATIONS INDICATED. FLOAT SWITCHES SHALL BE HERMETICALLY SEALED STAINLESS STEEL MERCURY SWITCH WITH A NORMALLY OPEN/NORMALLY CLOSED DOUBLE THROW CONTACTS. FLOAT SWITCHES SHALL HAVE ZINC PLATED SPLIT TETHER WEIGHTS. SWITCHES SHALL BE AS MANUFACTURED BY CONERY, MODEL #2900, OR EQUAL.
2. CONTRACTOR SHALL MAKE WATER TIGHT, SUBMERSIBLE SPLICES FROM FLOAT CABLES TO CONDUCTORS IN HAND HOLE.
3. CONTRACTOR SHALL LEAVE AT LEAST 50' EXTRA LENGTH ON EACH CONDUCTOR FOR FUTURE CONNECTORS AND COIL UP INSIDE HAND HOLE. PROVIDE 2' CONDUIT STUB ON EACH SIDE OF HAND HOLE AND CAP AS SHOWN.
4. ALARM PANEL ENCLOSURE SHALL BE NEMA 12 RATED 14 GAUGE STEEL ENCLOSURE WITH CONTINUOUS HINGE. PANEL SHALL BE SIZED BY CONTRACTOR, BUT SHALL NOT EXCEED 12" X 12". ALARM PANEL INSTALLATION AND FINAL TERMINATIONS SHALL BE COMPLETED BY OTHERS. ALARM PANEL SHALL BE FABRICATED AND CERTIFIED IN ACCORDANCE TO U.L. 508 GUIDELINES BY A U.L. CERTIFIED INDUSTRIAL CONTROL PANEL FABRICATOR.

NAME PLATE SCHEDULE (BLACK W/ WHITE LETTERS)	
1	SEPTIC HOLDING TANK ALARM PANEL
2	CONTROL POWER
3	HIGH LEVEL WARNING
4	HIGH LEVEL ALARM
5	ALARM SILENCE

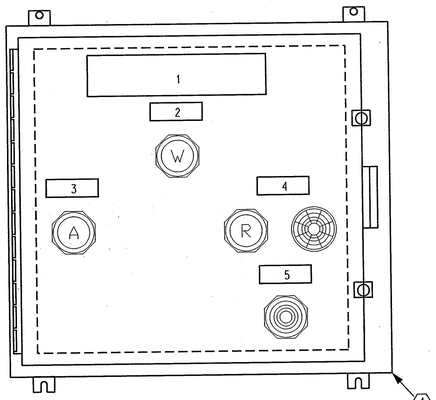

ALARM PANEL
SCALE: NTS

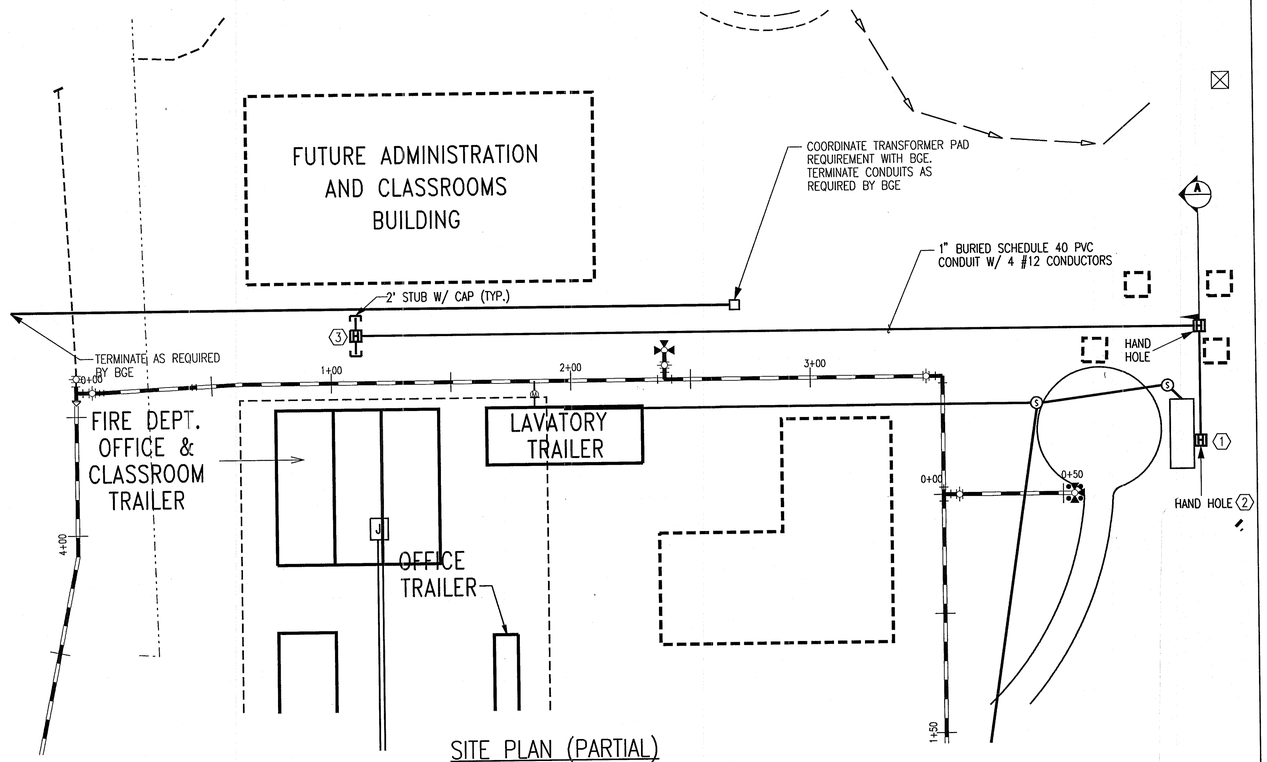

SITE PLAN (PARTIAL)
SCALE: 1"=30'

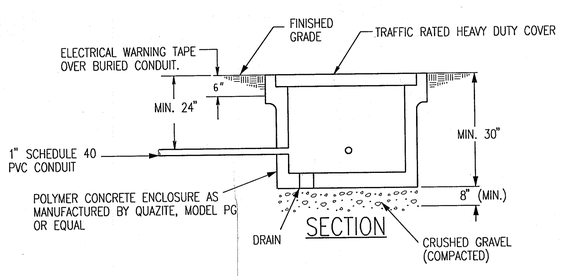

SECTION

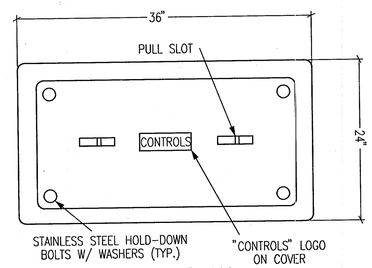

PLAN

A
E-1 | E-1
C-12

PRE CAST HANDHOLE
SCALE: NTS

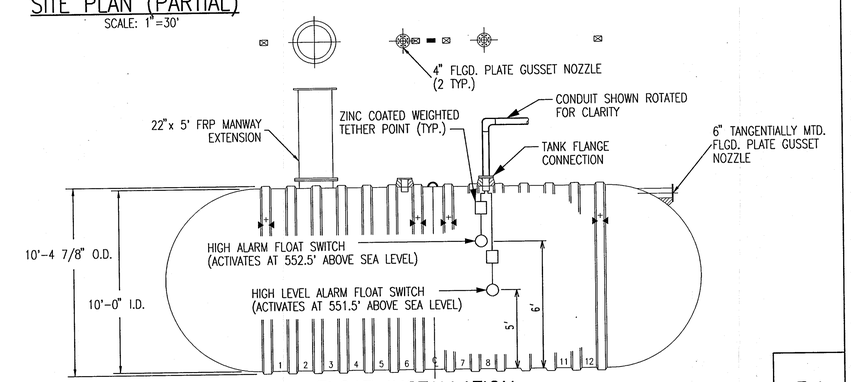

FLOAT INSTALLATION
SCALE: NTS

APPROVED: FOR PUBLIC WATER AND PRIVATE SEWERAGE SYSTEMS, HOWARD COUNTY HEALTH DEPARTMENT
COUNTY HEALTH OFFICER — DATE 3-5-03

APPROVED: HOWARD COUNTY DEPARTMENT OF PLANNING AND ZONING
DIRECTOR — DATE 3/10/03
CHIEF, DEVELOPMENT ENGINEERING DIVISION — DATE 3/10/03
CHIEF, DIVISION OF LAND DEVELOPMENT — DATE 3/7/03

DEPARTMENT OF PUBLIC WORKS
HOWARD COUNTY, MARYLAND
CHIEF, BUREAU OF UTILITIES — DATE

PREPARED BY :
WR&A
Whitman, Requardt and Associates, LLP.
801 South Caroline Street.
Baltimore, Maryland. 21231
410-235-3450

STATE OF MARYLAND — JAMES A. AVIRETT — No. 10210 — PROFESSIONAL ENGINEER

DES: PWG	
DRN: JMV	
CHK: PWG	
DATE: 12/16/2002	

BY	NO.	REVISION	DATE

LEVEL ALARM CONTROL ECD
FLOAT INSTALLATION DETAIL
CONDUIT DETAIL

600' SCALE MAP NO. 16 BLOCK NO. 2 / 8

PUBLIC SAFETY TRAINING CENTER
AT ALPHA RIDGE LANDFILL
CAPITAL PROJECT NO. C-0182
HOWARD COUNTY, MARYLAND

E-1

SCALE AS SHOWN

SHEET 39 OF 39

SDP-03-36

M:\3490\pstce01.dgn
THU Feb 20 15:45:58 2003

ABBREVIATIONS

AASHTO	AMERICAN ASSOCIATION OF STATE HIGHWAY AND TRANSPORTATION OFFICIALS
ASTM.	ASSOCIATION FOR STANDARD TESTING METHODS
APPROX.	APPROXIMATELY
BLDG.	BUILDING
BIT.	BITUMINOUS
B.M.	BENCH MARK
CFS.	CUBIC FEET PER SECOND
CO.	CLEANOUT
COMP.	COMPACTED
CONN.	CONNECTION
CMP.	CORRUGATED METAL PIPE
DIA., DIAM.	DIAMETER
DWG., DRWG	DRAWING
EL., ELEV.	ELEVATION
ELECT., ELEC.	ELECTRICAL
ESAN.	EXISTING SANITARY
UE.	UNDERGROUND ELECTRIC
EUGT&E.	EXISTING UNDERGROUND TELEPHONE & ELECTRIC
EXST., EX.	EXISTING
FM	FORCE MAIN
FPS.	FEET PER SECOND
INV.	INVERT
IP.	INLET PROTECTION
MECH.	MECHANICAL
MFR.	MANUFACTURER
M.H.	MANHOLE
MIN.	MINIMUM
MW	MONITORING WELL
OHE.	OVERHEAD ELECTRIC
OHT.	OVERHEAD TELEPHONE
P.I.	POINT OF INTERSECTION, POST INDICATOR
PC.	POINT OF CURVATURE
P.T.	POINT OF TANGENCY
PVC	POINT OF VERTICAL CURVE
PROP.	PROPOSED
SDR.	STANDARD DIMENSION RATIO
S	SOUTH, SLOPE, SANITARY
SAN	SANITARY
TEL	TELEPHONE
W-4	WATER PROFILE IDENTIFICATION
T/G	TOP OF GRATE
T/MH	TOP OF MANHOLE
T/W	TOP OF WELL

BUILDING TABLE:

	STRUCTURE		HEIGHT	STREET ADDRESS
	POLICE DEPT. CLASSROOM TRAILER	TEMPORARY MODULAR BUILDING	12' +/-	2220
2	~~OFFICE TRAILER~~	~~TEMPORARY MODULAR BUILDING~~	~~12' +/-~~	~~2230~~
	FIRE DEPT. OFFICE & CLASSROOM TRAILER	TEMPORARY MODULAR BUILDING	12' +/-	2210
	LAVATORY TRAILER	TEMPORARY MODULAR BUILDING	12' +/-	2240
	TRAINING TRAILER	TEMPORARY MODULAR BUILDING	12' +/-	
2	APPARATUS BUILDING	PERMANENT BUILDING	24' +/-	2280
	POLICE RANGE TRAILER	TEMPORARY MODULAR BLDG.	12' +/-	2260

LIST OF DRAWINGS

SHEET NO.	DRAWING NO.	SHEET TITLE
1	G-1	COVER SHEET
2	G-2	GENERAL NOTES AND LIST OF DRAWINGS
3	C-1	SURVEY / DEMOLITION PLAN
4	C-2	SURVEY / DEMOLITION PLAN
5	C-3	SURVEY / DEMOLITION PLAN
6	C-4	SURVEY / DEMOLITION PLAN
7	C-5	GRADING / PAVING PLAN
8	C-6	GRADING / PAVING PLAN
9	C-7	GRADING / PAVING PLAN
10	C-8	GRADING / PAVING PLAN
11	C-9	PROFILE - PRIVATE ACCESS ROAD
12	C-10	UTILITY PLAN
13	C-11	UTILITY PLAN
14	C-12	UTILITY PLAN
15	C-13	UTILITY PLAN
16	C-14	PROFILES - STORM DRAINS
17	C-15	PROFILES
18	C-16	PROFILES - WATER MAINS
19	C-17	PROFILES - WATER MAINS
20	C-18	PROFILES - SANITARY SEWER AND DETAILS
21	C-19	DETAILS
22	C-20	FENCE AND GATE DETAILS
23	C-21	EROSION AND SEDIMENT CONTROL PLAN
24	C-22	EROSION AND SEDIMENT CONTROL PLAN
25	C-23	EROSION AND SEDIMENT CONTROL PLAN
26	C-24	EROSION AND SEDIMENT CONTROL PLAN
27	C-25	EROSION AND SEDIMENT CONTROL NOTES
28	C-26	EROSION AND SEDIMENT CONTROL NOTES
29	C-27	EROSION AND SEDIMENT CONTROL DETAILS
30	C-28	DRAINAGE AREA MAP
31	C-29	FOREST STAND DELINEATION
32	C-30	FOREST STAND DELINEATION ANALYSIS TABLE
33	C-31	FOREST CONSERVATION PLAN
34	C-32	FOREST CONSERVATION NOTES AND DETAILS
35	LS-1	LANDSCAPE PLAN - NORTH
36	LS-2	LANDSCAPE PLAN - SOUTH
37	LS-3	STORMWATER FACILITY LANDSCAPE PLAN, NOTES AND DETAILS
38	LS-4	LANDSCAPE NOTES AND DETAILS
39	E-01	LEVEL ALARM CONTROL ECD FLOAT INSTALLATION DETAIL CONDUIT DETAIL

SEQUENCE OF CONSTRUCTION

WEEKS

1. CONTRACTOR MUST OBTAIN A GRADING PERMIT PRIOR TO COMMENCEMENT OF CONSTRUCTION. 1
2. ONCE GRADING PERMIT IS OBTAINED NOTIFY "MISS UTILITY" AT 1-800-257-7777 AT LEAST 48 HOURS PRIOR TO THE START OF ANY CONSTRUCTION. 1
3. A MINIMUM OF 24 HOURS MUST BE GIVEN TO THE HOWARD COUNTY OFFICE OF INSPECTION AND PERMITS PRIOR TO THE START OF ANY CONSTRUCTION. (410) 313-1855. 1
4. CONTACT BGE TO HAVE THE POWER FOR THE EXISTING POLICE TRAILERS DISCONNECTED. 1-2
5. INSTALL SEDIMENT CONTROL MEASURES (SCE, EARTH DIKES, AND SILT FENCE). 1-2
6. BEGIN DEMOLITION. RELOCATE EXISTING POLICE TRAILERS AND ALL SALVAGED MATERIALS TO THE AREA INDICATED ON SHEET C-1. 2-4
7. INSTALL SUPER SILT FENCE LOCATED AT THE NORTH END OF THE GRASS SWALE THEN GRADE AND STABILIZE THE GRASS SWALE WEST OF THE FUTURE RANGE ARMORY (SHEET C-22). ONCE SWALE IS GRADED INSTALL EROSION CONTROL MATTING AND SILT FENCE ON THE UPHILL (WEST SIDE) OF THE SWALE. THE SUPER SILT FENCE NORTH OF THE SWALE MAY BE REMOVED UPON FULL STABILIZATION OF THE SWALE AND WITH PERMISSION OF THE INSPECTOR. 4-6
8. WITH THE PERMISSION OF THE INSPECTOR, INSTALL SUPER SILT FENCE LOCATED AT THE SOUTH-WEST ENDS OF THE SWALES LOCATED ON BOTH SIDES OF THE SITE ENTRANCE. GRADE THE AREA NORTH OF THE SITE ENTRANCE (SHEET C-23). STABILIZE ALL GRADED AREAS UPON COMPLETION WITH EROSION CONTROL MATTING. ONCE AREA HAS BEEN STABILIZED INSTALL SILT FENCE AND BEGIN INSTALLATION OF THE CULVERT. ONCE THE CULVERT IS INSTALLED AND THE SWALES ARE FULLY STABILIZED THE SUPER SILT FENCE MAY BE REMOVED WITH PERMISSION OF THE INSPECTOR. 4-6
9. CONSTRUCT SEDIMENT TRAPS ST-1 AND ST-2 AND ASSOCIATED EARTH DIKES. CONSTRUCT THE STORMWATER MANAGEMENT POND/SEDIMENT TRAP ST-3. DO NOT GRADE THE FOREBAY. BRICK THE OPENNINGS IN THE OUTLET STRUCTURE SHUT. DO NOT INTALL THE ORIFICE PLATE INSIDE THE OUTLET STRUCTURE AND INSTALL THE TEMPORARY RISER. UTILIZE REMOVABLE PUMP STATION TO ALLOW FOR DEWATERING OF SEDIMENT TRAPS AS NECESSARY. PROVIDE GROUTED CUT-OFFS AT THE END OF ALL APRONS AND AT THE END OF ALL INFLOW PROTECTION. 6-8
10. WITH PERMISSION FROM THE INSPECTOR, BEGIN GRADING THE ACCESS ROAD AND FUTURE KENNEL/RANGE ARMORY AREA. STABILIZE DITCHES WITH EROSION CONTROL MATTING AS INDICATED. STOCKPILE ANY MATERIAL SUITABLE FOR THE POND LINER AND POND EMBANKMENT. PROVIDE DUST CONTROL MEASURES AT THE END OF EACH DAY PER THE SPECIFICATIONS ON SHEET C-27. 8-10
11. WITH PERMISSION FROM THE INSPECTOR, GRADE AND PERMANENTLY STABILIZE FUTURE KENNEL/RANGE ARMORY AREA. ONCE THE AREA IS STABLE PLACE THE EXISTING TRAILERS AS INDICATED ON THE PLANS AND REINSTALL THE OVERHEAD ELECTRIC POLES AND ORIGINAL METER EQUIPMENT. 10-11
12. INSTALL STORM DRAINS, INLETS AND ASSOCIATED RECHARGE DEVICES. TEMPORARILY BRICK SHUT PIPE OPENINGS FROM THE INLETS TO THE RECHARGE DEVICES. 11-13
13. WITH PERMISSION FROM THE INSPECTOR, GRADE THE SITE. STABILIZE DITCHES WITH EROSION CONTROL MATTING AS INDICATED. PROVIDE DUST CONTROL MEASURES AT THE END OF EACH DAY PER THE SPECIFICATIONS ON SHEET C-27. 13-15
14. ONCE SITE HAS BEEN PERMANENTLY STABILIZED AND PERMISSION HAS BEEN GRANTED BY THE SEDIMENT CONTROL INSPECTOR:
    i. REMOVE SEDIMENT TRAPS ST-1 AND ST-2
    ii. FLUSH THE STORM DRAIN SYSTEM WITH CLEAN WATER TO REMOVE ANY RESIDUAL SEDIMENT.
    iii. GRADE THE FOREBAY AREA AND THE STORAGE BASIN IN THE STORMWATER MANAGEMENT POND/SEDIMENT TRAP ST-3 AND PERMANENTLY STABILIZE. RESET/REPLACE ALL INFLOW PROTECTION AT THE STORM DRAIN OUTFALLS.
    iv. UNBLOCK THE PIPE OPENINGS FROM THE INLETS TO THE RECHARGE DEVICES.
    v. ONCE THE MICRO POOL AREA AND THE STORAGE BASIN ARE PERMANENTLY STABILIZED, UNBLOCK THE OUTLET STRUCTURE IN THE STORMWATER MANAGEMENT POND/SEDIMENT TRAP ST-3, REMOVE THE TEMPORARY DRAWDOWN DEVICE AND INSTALL THE PERMANENT DRAWDOWN DEVICE.
    vi. GRADE THE SWALE SOUTH OF THE STORMWATER MANAGEMENT POND / SEDIMENT TRAP ST-3 AS INDICATED BY THE DASHED CONTOURS. STABILIZE WITH EROSION CONTROL MATTING WHEN GRADING IS COMPLETE. 15-16
15. WITH PERMISSION FROM THE SEDIMENT CONTROL INSPECTOR REMOVE ALL REMAINING EARTH DIKES, SILT FENCE AND SUPER SILT FENCE. 16-17

LIST OF APPROVED WAIVERS

WIAVER #	ACTION	DATE APPROVED	APPROVED BY
WRITTEN APPROVAL	DEFER PLACEMENT OF BITUMINOUS PAVING UNTIL A LATER PHASE OF WORK ON THIS SITE.	JULY 16, 2002	HOWARD COUNTY DEPARTMENT OF PUBLIC WORKS
WP-02-102	ALLOWS RECORDING OF ADJOINER DEEDS TO RECONFIGURE PARCELS 253, 220 AND 11.	APRIL 23, 2002	HOWARD COUNTY DEPARTMENT OF PLANNING AND ZONING
WRITTEN APPROVAL	APPROVED THE USE OF A SEWAGE HOLDING TANK	MARCH 25, 2002	HOWARD COUNTY HEALTH DEPARTMENT
WRITTEN APPROVAL	WAIVES THE REQUIREMENT FOR A 12' BENCH, 1' ABOVE THE NORMAL POOL ELEVATION, WITHIN THE SWM POND AS DESCRIBED UNDER SECTION 5.2.7.A.2 OF THE HOWARD COUNTY DESIGN MANUAL, VOLUME 1.	OCTOBER 15, 2002	HOWARD COUNTY DEPARTMENT OF PUBLIC WORKS
WP-03-36	ALLOWS DISTURBANCE WITHIN THE STREAM BUFFER ON THE SOUTH EAST PORTION OF THE SITE IN THE VICINITY OF THE SWM POND AND FUTURE BURN BUILDING.	DECEMBER 9, 2002	HOWARD COUNTY DEPARTMENT OF PLANNING AND ZONING
WRITTEN APPROVAL	ALLOWS THE USE OF A STORMCEPTOR	OCTOBER 7, 2002	HOWARD COUNTY DEPARTMENT OF PUBLIC WORKS

APPROVED: FOR PUBLIC WATER AND PRIVATE SEWERAGE SYSTEMS, HOWARD COUNTY HEALTH DEPARTMENT

COUNTY HEALTH OFFICER — DATE 3-5-03

APPROVED: HOWARD COUNTY DEPARTMENT OF PLANNING AND ZONING

DIRECTOR — DATE 3/18/03

CHIEF, DEVELOPMENT ENGINEERING DIVISION — DATE

CHIEF, DIVISION OF LAND DEVELOPMENT — DATE 3/17/03

~~DEPARTMENT OF PUBLIC WORKS HOWARD COUNTY, MARYLAND~~

~~CHIEF, BUREAU OF UTILITIES — DATE~~

PREPARED BY :

WR&A

Whitman, Requardt and Associates, LLP.
801 South Caroline Street.
Baltimore, Maryland. 21231
410-235-3450

STATE OF MARYLAND — JAMES A. AVIRETT, JR. — 16210 — PROFESSIONAL ENGINEER

DES: C.D.
DRN: C.K.
CHK: A.O.
DATE: 12/16/2002

BY	NO.	REVISION	DATE
CMD	2	REMOVED OFFICE TRAILER, ADDED APPARATUS BLDG. + POLICE RANGE TRAILER TO BLDG. TABLE.	10/26/04

GENERAL NOTES AND LIST OF DRAWINGS

600' SCALE MAP NO. 16 BLOCK NO. 2 / 8

PUBLIC SAFETY TRAINING CENTER AT ALPHA RIDGE LANDFILL
CAPITAL PROJECT NO. C-0182
HOWARD COUNTY, MARYLAND

G-2

SCALE AS SHOWN

SHEET 2 OF 39

SDP-03-36

M:\13490\pstcg02.dgn Thu Feb 20 15:42:24 2003

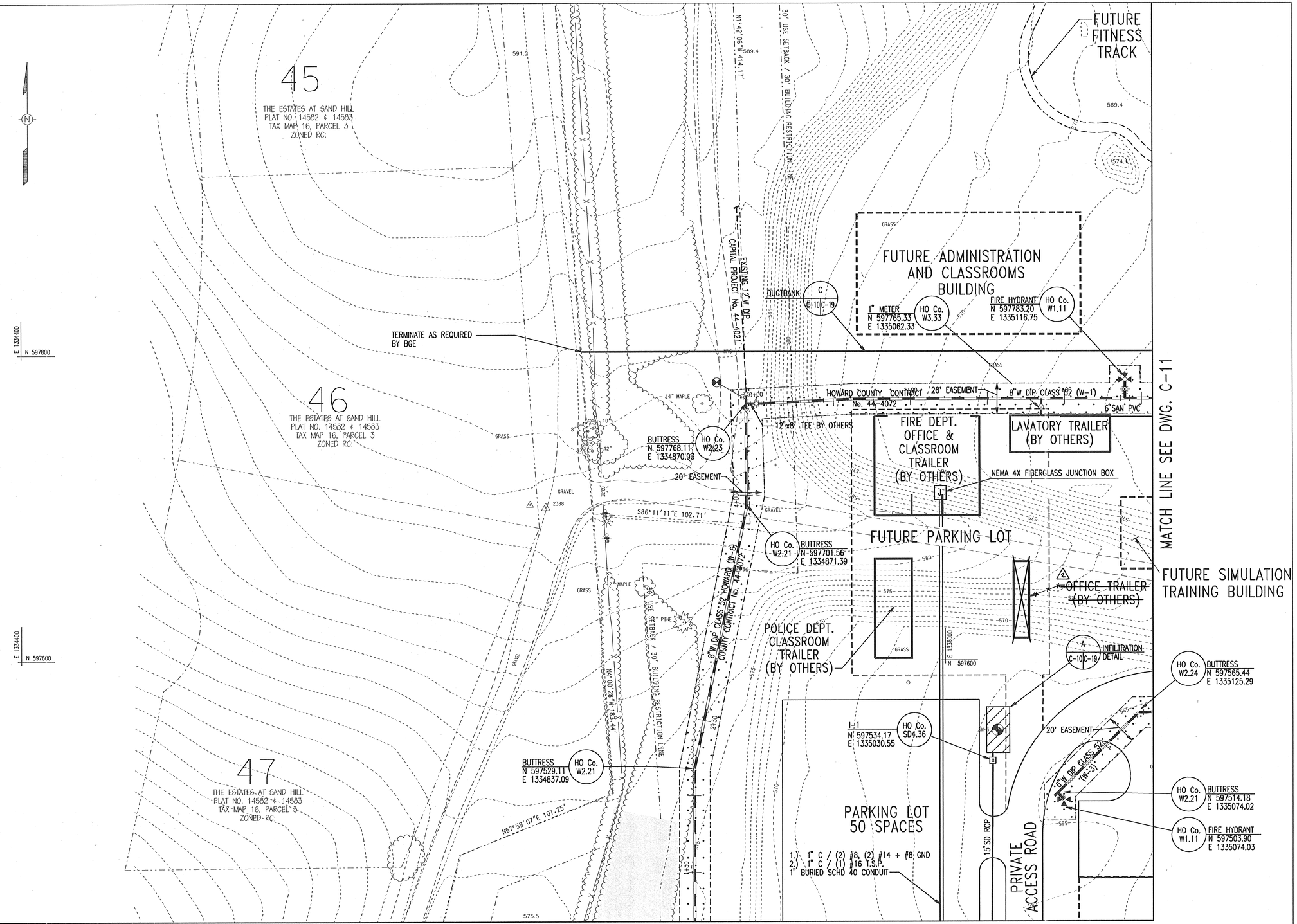

APPROVED: FOR PUBLIC WATER AND PRIVATE SEWERAGE SYSTEMS, HOWARD COUNTY HEALTH DEPARTMENT

COUNTY HEALTH OFFICER — DATE 3-5-03

APPROVED: HOWARD COUNTY DEPARTMENT OF PLANNING AND ZONING

DIRECTOR — DATE 3/10/03

CHIEF, DEVELOPMENT ENGINEERING DIVISION — DATE 3/10/03

CHIEF, DIVISION OF LAND DEVELOPMENT — DATE 3/10/03

DEPARTMENT OF PUBLIC WORKS
HOWARD COUNTY, MARYLAND

CHIEF, BUREAU OF UTILITIES — DATE

PREPARED BY :

WR&A

Whitman, Requardt and Associates, LLP.
801 South Caroline Street.
Baltimore, Maryland. 21231
410-235-3450

STATE OF MARYLAND — JAMES E. WIRTH — No. 10210 — PROFESSIONAL ENGINEER

DES: C.D.
DRN: C.K.
CHK: A.O.
DATE: 12/16/2002

BY	NO.	REVISION	DATE
CMD	2	REMOVE OFFICE TRAILER	10/20/04

UTILITY PLAN

600' SCALE MAP NO. 16 BLOCK NO. 2 / 8

PUBLIC SAFETY TRAINING CENTER
AT ALPHA RIDGE LANDFILL
CAPITAL PROJECT NO. C-0182
HOWARD COUNTY, MARYLAND

GRAPHIC SCALE
30 20 10 0 30 60
SCALE: 1" = 30'

C-10

SCALE AS SHOWN

SHEET 12 OF 39

SDP-03-36

M:\13490\pstcc10.dgn
Thu Feb 20 10:38:44 2003

SEDIMENT AND EROSION CONTROL LEGEND

	STABILIZED CONSTRUCTION ENTRANCE
SF	SILT FENCE
A-2 B-3	EARTH DIKE
	LIMIT OF DISTURBANCE
CD	STONE CHECK DAM
TSOS	STONE OUTLET STRUCTURE
	ROCK OUTLET PROTECTION
SIP	STANDARD INLET PROTECTION
RRP	RIP-RAP INFLOW PROTECTION
	SEDIMENT BASIN BAFFLE
RPS	REMOVABLE PUMPING STATION

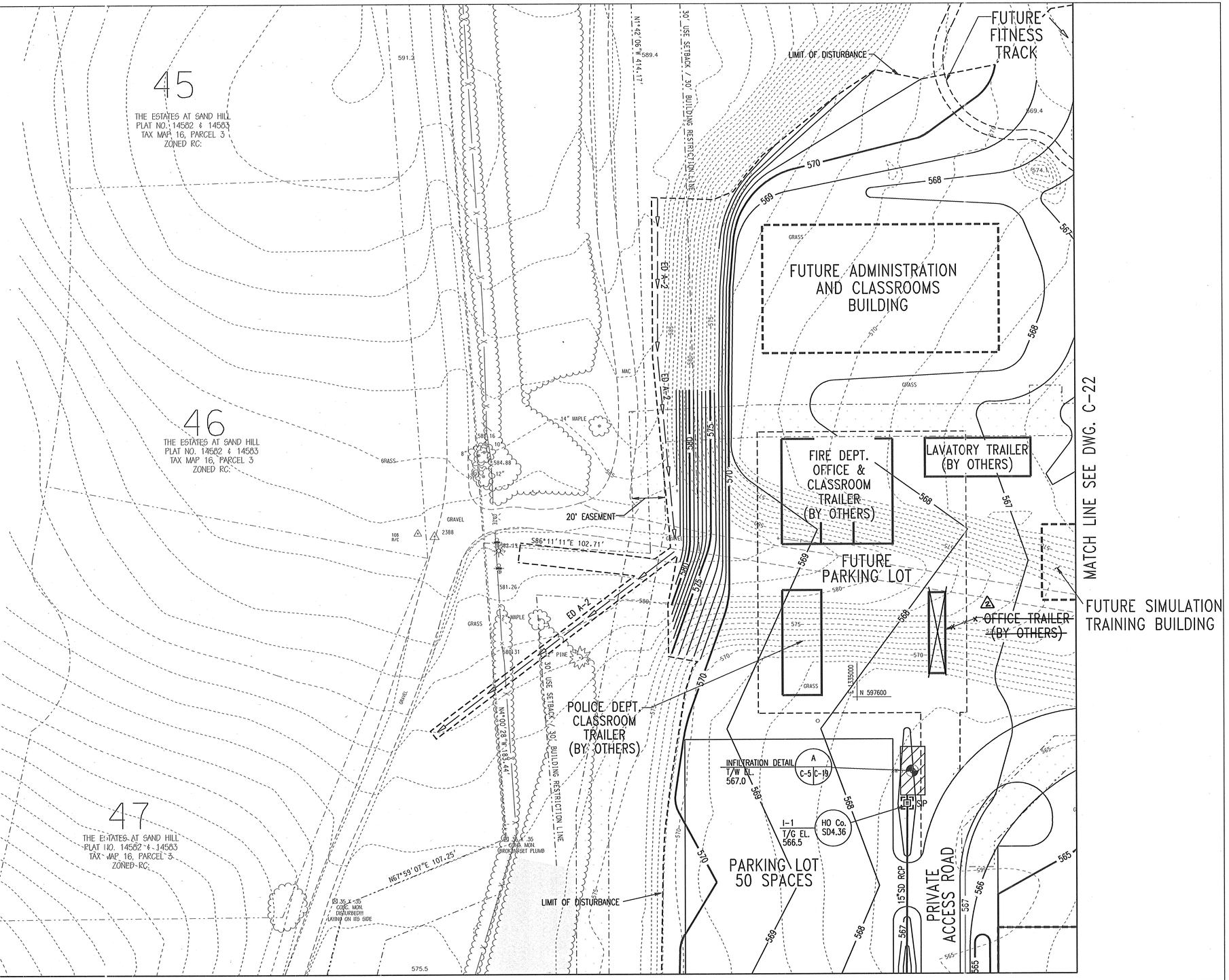

THIS DEVELOPMENT PLAN IS APPROVED FOR SOIL EROSION AND SEDIMENT CONTROL BY THE HOWARD SOIL CONSERVATION DISTRICT.

HOWARD S.C.D. — DATE 3/4/03

REVIEWED FOR HOWARD S.C.D. AND MEETS THE TECHNICAL REQUIREMENTS.

USDA - Natural Resources Conservation Service — DATE 3/4/03

BY THE ENGINEER:
"I CERTIFY THAT THIS PLAN FOR EROSION AND SEDIMENT CONTROL REPRESENTS A PRACTICAL AND WORKABLE PLAN BASED ON MY PERSONAL KNOWLEDGE OF THE SITE CONDITIONS AND THAT IT WAS PREPARED IN ACCORDANCE WITH THE REQUIREMENTS OF THE HOWARD SOIL CONSERVATION DISTRICT".

JAMES A. AVIRETT, Jr. — DATE 2/21/03

BY THE DEVELOPER:
"I/WE CERTIFY THAT ALL DEVELOPMENT AND CONSTRUCTION WILL BE DONE ACCORDING TO THIS PLAN, AND THAT ANY RESPONSIBLE PERSONNEL INVOLVED IN THE CONSTRUCTION PROJECT WILL HAVE A CERTIFICATE OF ATTENDANCE AT A DEPARTMENT OF ENVIRONMENT APPROVED TRAINING PROGRAM FOR THE CONTROL OF SEDIMENT AND EROSION BEFORE BEGINNING THE PROJECT. I ALSO AUTHORIZE PERIODIC ON-SITE INSPECTION BY THE HOWARD SOIL CONSERVATION DISTRICT".

X Michael A. Giovannielli — DATE 2/25/03

APPROVED: FOR PUBLIC WATER AND PRIVATE SEWERAGE SYSTEMS, HOWARD COUNTY HEALTH DEPARTMENT

COUNTY HEALTH OFFICER — DATE 3-5-03

APPROVED: HOWARD COUNTY DEPARTMENT OF PLANNING AND ZONING

DIRECTOR — DATE 3/18/03

CHIEF, DEVELOPMENT ENGINEERING DIVISION — DATE 3/11/03

CHIEF, DIVISION OF LAND DEVELOPMENT — DATE 3/17/03

DEPARTMENT OF PUBLIC WORKS
HOWARD COUNTY, MARYLAND

CHIEF, BUREAU OF UTILITIES — DATE

MATCH LINE SEE DWG. C-23

GRAPHIC SCALE
30 20 10 0 30 60
SCALE: 1" = 30'

C-21

PREPARED BY :
WR&A
Whitman, Requardt and Associates, LLP.
801 South Caroline Street.
Baltimore, Maryland. 21231
410-235-3450

STATE OF MARYLAND — JAMES A. AVIRETT, JR. — 20819 — PROFESSIONAL ENGINEER

DES: C.D.
DRN: C.K.
CHK: A.O.
DATE: 12/16/2002

BY	NO.	REVISION	DATE
CMD	2	REMOVE OFFICE TRAILER.	10/26/04

EROSION AND SEDIMENT CONTROL PLAN

600' SCALE MAP NO. 16 BLOCK NO. 2 / 8

PUBLIC SAFETY TRAINING CENTER
AT ALPHA RIDGE LANDFILL
CAPITAL PROJECT NO. C-0182
HOWARD COUNTY, MARYLAND

SCALE AS SHOWN

SHEET 23 OF 39

SDP-03-36

M:\13490\pstcc2.dgn
Thu Feb 20 15:40:36 2003

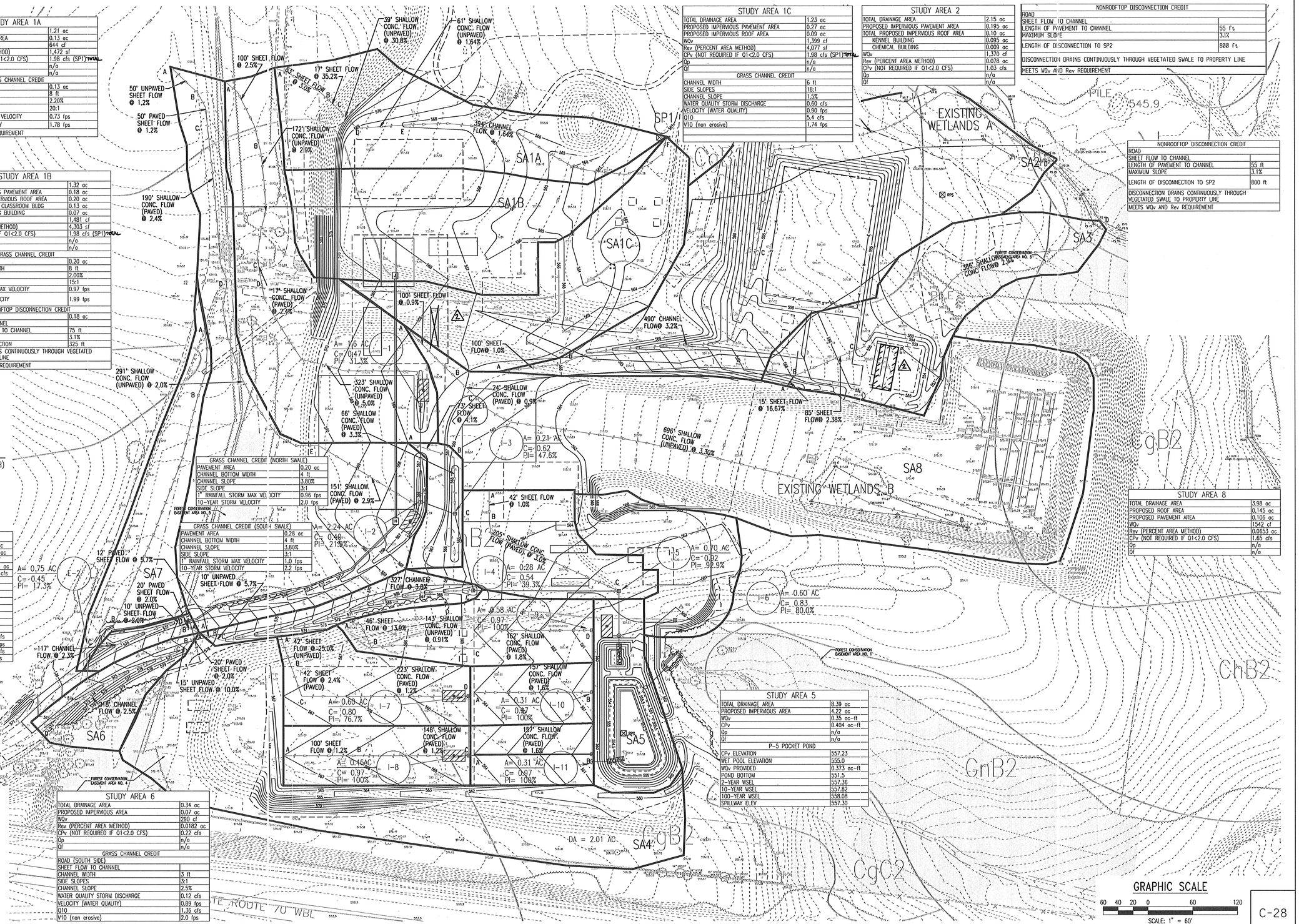

STUDY AREA 1A	
TOTAL DRAINAGE AREA	1.21 ac
PROPOSED IMPERVIOUS AREA	0.13 ac
WQv	644 cf
Rev (PERCENT AREA METHOD)	1,472 sf
CPv (NOT REQUIRED IF Q1<2.0 CFS)	1.98 cfs (SP1) TOTAL
Qp	n/a
Qf	n/a
GRASS CHANNEL CREDIT	
ROOFTOP AREA	0.13 ac
CHANNEL BOTTOM WIDTH	8 ft
CHANNEL SLOPE	2.20%
SIDE SLOPE	20:1
1" RAINFALL STORM MAX VELOCITY	0.73 fps
10-YEAR STORM VELOCITY	1.78 fps
MEETS WQv AND Rev REQUIREMENT	

STUDY AREA 1B	
TOTAL DRAINAGE AREA	1.32 ac
PROPOSED IMPERVIOUS PAVEMENT AREA	0.18 ac
TOTAL PROPOSED IMPERVIOUS ROOF AREA	0.20 ac
ADMINISTRATION & CLASSROOM BLDG	0.13 ac
SITUATION TRAINING BUILDING	0.07 ac
WQv	1,481 cf
Rev (PERCENT AREA METHOD)	4,303 sf
CPv (NOT REQUIRED IF Q1<2.0 CFS)	1.98 cfs (SP1) TOTAL
Qp	n/a
Qf	n/a
GRASS CHANNEL CREDIT	
ROOFTOP AREA	0.20 ac
CHANNEL BOTTOM WIDTH	8 ft
CHANNEL SLOPE	2.00%
SIDE SLOPE	15:1
1" RAINFALL STORM MAX VELOCITY	0.97 fps
10-YEAR STORM VELOCITY	1.99 fps
NONROOFTOP DISCONNECTION CREDIT	
PARKING AREA	0.18 ac
SHEET FLOW TO CHANNEL	
LENGTH OF PAVEMENT TO CHANNEL	75 ft
MAXIMUM SLOPE	3.1%
LENGTH OF DISCONNECTION	325 ft
DISCONNECTION DRAINS CONTINUOUSLY THROUGH VEGETATED SWALE TO PROPERTY LINE	
MEETS WQv AND Rev REQUIREMENT	

STUDY AREA 1C	
TOTAL DRAINAGE AREA	1.23 ac
PROPOSED IMPERVIOUS PAVEMENT AREA	0.27 ac
PROPOSED IMPERVIOUS ROOF AREA	0.09 ac
WQv	1,399 cf
Rev (PERCENT AREA METHOD)	4,077 sf
CPv (NOT REQUIRED IF Q1<2.0 CFS)	1.98 cfs (SP1) TOTAL
Qp	n/a
Qf	n/a
GRASS CHANNEL CREDIT	
CHANNEL WIDTH	6 ft
SIDE SLOPES	18:1
CHANNEL SLOPE	1.5%
WATER QUALITY STORM DISCHARGE	0.60 cfs
VELOCITY (WATER QUALITY)	0.90 fps
Q10	5.4 cfs
V10 (non erosive)	1.74 fps

STUDY AREA 2	
TOTAL DRAINAGE AREA	2.15 ac
PROPOSED IMPERVIOUS PAVEMENT AREA	0.195 ac
TOTAL PROPOSED IMPERVIOUS ROOF AREA	0.10 ac
KENNEL BUILDING	0.095 ac
CHEMICAL BUILDING	0.009 ac
WQv	1,370 cf
Rev (PERCENT AREA METHOD)	0.078 ac
CPv (NOT REQUIRED IF Q1<2.0 CFS)	1.03 cfs
Qp	n/a
Qf	n/a

NONROOFTOP DISCONNECTION CREDIT	
ROAD	
SHEET FLOW TO CHANNEL	
LENGTH OF PAVEMENT TO CHANNEL	55 ft
MAXIMUM SLOPE	3.1%
LENGTH OF DISCONNECTION TO SP2	800 ft
DISCONNECTION DRAINS CONTINUOUSLY THROUGH VEGETATED SWALE TO PROPERTY LINE	
MEETS WQv AND Rev REQUIREMENT	

NONROOFTOP DISCONNECTION CREDIT	
ROAD	
SHEET FLOW TO CHANNEL	
LENGTH OF PAVEMENT TO CHANNEL	55 ft
MAXIMUM SLOPE	3.1%
LENGTH OF DISCONNECTION TO SP2	800 ft
DISCONNECTION DRAINS CONTINUOUSLY THROUGH VEGETATED SWALE TO PROPERTY LINE	
MEETS WQv AND Rev REQUIREMENT	

STUDY AREA 8	
TOTAL DRAINAGE AREA	3.98 ac
PROPOSED ROOF AREA	0.145 ac
PROPOSED PAVEMENT AREA	0.106 ac
WQv	1542 cf
Rev (PERCENT AREA METHOD)	0.0653 ac
CPv (NOT REQUIRED IF Q1<2.0 CFS)	1.65 cfs
Qp	n/a
Qf	n/a

STUDY AREA 7	
TOTAL DRAINAGE AREA	0.10 ac
PROPOSED IMPERVIOUS AREA	0.044 ac
WQv	162 cf
Rev (PERCENT AREA METHOD)	0.0114 ac
CPv (NOT REQUIRED IF Q1<2.0 CFS)	0.16 cfs
Qp	n/a
Qf	n/a
GRASS CHANNEL CREDIT	
ROAD (SOUTH SIDE)	
SHEET FLOW TO CHANNEL	
CHANNEL WIDTH	3 ft
SIDE SLOPES	3:1
CHANNEL SLOPE	2.3%
WATER QUALITY STORM DISCHARGE	0.62 cfs
VELOCITY (WATER QUALITY)	0.89 fps
Q10	0.52 cfs
V10 (non erosive)	1.4 fps

STUDY AREA 6	
TOTAL DRAINAGE AREA	0.34 ac
PROPOSED IMPERVIOUS AREA	0.07 ac
WQv	290 cf
Rev (PERCENT AREA METHOD)	0.0182 ac
CPv (NOT REQUIRED IF Q1<2.0 CFS)	0.22 cfs
Qp	n/a
Qf	n/a
GRASS CHANNEL CREDIT	
ROAD (SOUTH SIDE)	
SHEET FLOW TO CHANNEL	
CHANNEL WIDTH	3 ft
SIDE SLOPES	3:1
CHANNEL SLOPE	2.5%
WATER QUALITY STORM DISCHARGE	0.12 cfs
VELOCITY (WATER QUALITY)	0.89 fps
Q10	1.36 cfs
V10 (non erosive)	2.0 fps

GRASS CHANNEL CREDIT (NORTH SWALE)	
PAVEMENT AREA	0.20 ac
CHANNEL BOTTOM WIDTH	4 ft
CHANNEL SLOPE	3.80%
SIDE SLOPE	3:1
1" RAINFALL STORM MAX VELOCITY	0.96 fps
10-YEAR STORM VELOCITY	2.0 fps

GRASS CHANNEL CREDIT (SOUTH SWALE)	
PAVEMENT AREA	0.28 ac
CHANNEL BOTTOM WIDTH	4 ft
CHANNEL SLOPE	3.80%
SIDE SLOPE	3:1
1" RAINFALL STORM MAX VELOCITY	1.0 fps
10-YEAR STORM VELOCITY	2.2 fps

STUDY AREA 5	
TOTAL DRAINAGE AREA	8.39 ac
PROPOSED IMPERVIOUS AREA	4.22 ac
WQv	0.35 ac-ft
CPv	0.404 ac-ft
Qp	n/a
Qf	n/a
P-5 POCKET POND	
CPv ELEVATION	557.23
WET POOL ELEVATION	555.0
WQv PROVIDED	0.373 ac-ft
POND BOTTOM	551.5
2-YEAR WSEL	557.36
10-YEAR WSEL	557.82
100-YEAR WSEL	558.08
SPILLWAY ELEV	557.30

LEGEND

PROPOSED	DESCRIPTION
	DRAINAGE DIVIDE
A B	TIME OF CONCENTRATION
GnB2 CgB2	SOILS DIVIDE

SOILS LEGEND

CgC2 – CHESTER GRAVELLY SILT LOAM – 8–15% SLOPES (HSG B)
CgB2 – CHESTER GRAVELLY SILT LOAM, 3–8% SLOPES (HSG B)
ChB2 – CHESTER SILT LOAM, 3–8% SLOPES (HSG B)
GnB2 – BLENVILLE SILT LOAM, 3–8% SLOPES (HSG C)

APPROVED: FOR PUBLIC WATER AND PRIVATE SEWERAGE SYSTEMS, HOWARD COUNTY HEALTH DEPARTMENT

COUNTY HEALTH OFFICER — DATE 3-5-03

APPROVED: HOWARD COUNTY DEPARTMENT OF PLANNING AND ZONING

DIRECTOR — DATE 3/18/03

CHIEF, DEVELOPMENT ENGINEERING DIVISION — DATE 3/11/03

CHIEF, DIVISION OF LAND DEVELOPMENT — DATE 3/17/03

DEPARTMENT OF PUBLIC WORKS
HOWARD COUNTY, MARYLAND

CHIEF, BUREAU OF UTILITIES — DATE

PREPARED BY:

WR&A
Whitman, Requardt and Associates, LLP.
801 South Caroline Street.
Baltimore, Maryland. 21231
410-235-3450

STATE OF MARYLAND — JAMES A. AVIRETT — No. 9241 — PROFESSIONAL ENGINEER

DES: C.D.
DRN: C.K.
CHK: A.O.
DATE: 12/16/2002

BY	NO.	REVISION	DATE
CMD	2	ADDED 24'x60' DOUBLE WIDE TRAILER. REMOVED OFFICE TRAILER	10/26/04

DRAINAGE AREA MAP

600' SCALE MAP NO. 16 BLOCK NO. 2 / 8

PUBLIC SAFETY TRAINING CENTER
AT ALPHA RIDGE LANDFILL
CAPITAL PROJECT NO. C-0182
HOWARD COUNTY, MARYLAND

GRAPHIC SCALE
60 40 20 0 60 120
SCALE: 1" = 60'

C-28

SCALE AS SHOWN

SHEET 30 OF 39

SDP-03-36

M:\3490\pstcc28.dgn
Thu Feb 20 15:44:07 2003

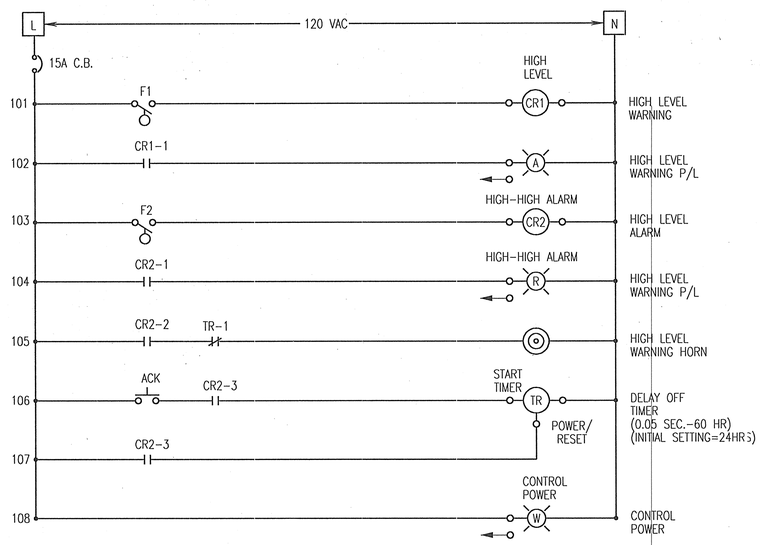

EQUIPMENT LEGEND:

- AUDIBLE ALARM (PANEL MOUNTED)
- CIRCUIT BREAKER (C.B.) (SQUARE-D TYPE Q04 OR EQUAL)
- FLOAT SWITCH
- NORMALLY OPEN (N.O.) CONTACT
- NORMALLY CLOSED (N.C.) CONTACT
- PUSH BUTTON (N.O.)
- PILOT LIGHT/PUSH TO TEST (COLOR AS INDICATED) R=RED W=WHITE A=AMBER
- CR1 — CONTROL RELAY (IDEC RH SERIES W/ LED)
- TR — TIME RELAY (TIME OFF DELAY) (ALLEN BRADLEY 700-FS-B-4-U-U23, OR EQUAL)

PANEL DEVICES:

- AUDIBLE ALARM DEVICE (MALLORY SONALERT (LOUD), OR EQUAL)
- X — 30.5MM PILOT LIGHT-COLOR AS INDICATED (ALLEN BRADLEY 800T, OR EQUAL) R=RED W=WHITE A=AMBER
- 30.5MM PUSH BUTTON (ALLEN BRADLEY 800T, OR EQUAL)

DRAWING NOTES:

1. CONTRACTOR SHALL PROVIDE FLANGE CONNECTION TO FIBREGLASS HOLDING TANK AND SEAL AROUND CONDUIT. CONTRACTORS SHALL PROVIDE AND INSTALL TWO FLOAT SWITCHES INSIDE SEPTAGE HOLDING TANK AT ELEVATIONS INDICATED. FLOAT SWITCHES SHALL BE HERMETICALLY SEALED STAINLESS STEEL MERCURY SWITCH WITH A NORMALLY OPEN/NORMALLY CLOSED DOUBLE THROW CONTACTS. FLOAT SWITCHES SHALL HAVE ZINC PLATED SPLIT TETHER WEIGHTS. SWITCHES SHALL BE AS MANUFACTURED BY CONERY, MODEL #2900, OR EQUAL.
2. CONTRACTOR SHALL MAKE WATER TIGHT, SUBMERSIBLE SPLICES FROM FLOAT CABLES TO CONDUCTORS IN HAND HOLE.
3. CONTRACTOR SHALL LEAVE AT LEAST 50' EXTRA LENGTH ON EACH CONDUCTOR FOR FUTURE CONNECTORS AND COIL UP INSIDE HAND HOLE. PROVIDE 2' CONDUIT STUB ON EACH SIDE OF HAND HOLE AND CAP AS SHOWN.
4. ALARM PANEL ENCLOSURE SHALL BE NEMA 12 RATED 14 GAUGE STEEL ENCLOSURE WITH CONTINUOUS HINGE. PANEL SHALL BE SIZED BY CONTRACTOR, BUT SHALL NOT EXCEED 12" X 12". ALARM PANEL INSTALLATION AND FINAL TERMINATIONS SHALL BE COMPLETED BY OTHERS. ALARM PANEL SHALL BE FABRICATED AND CERTIFIED IN ACCORDANCE TO U.L. 508 GUIDELINES BY A U.L. CERTIFIED INDUSTRIAL CONTROL PANEL FABRICATOR.

NAME PLATE SCHEDULE (BLACK W/ WHITE LETTERS)	
1	SEPTIC HOLDING TANK ALARM PANEL
2	CONTROL POWER
3	HIGH LEVEL WARNING
4	HIGH LEVEL ALARM
5	ALARM SILENCE

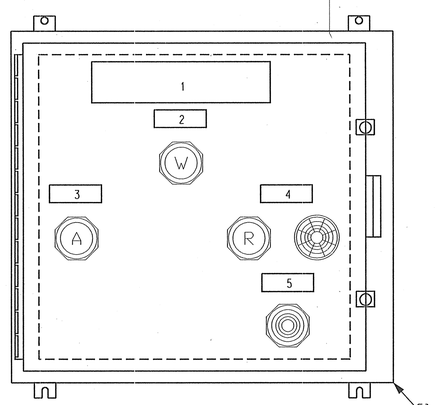

ALARM PANEL
SCALE: NTS

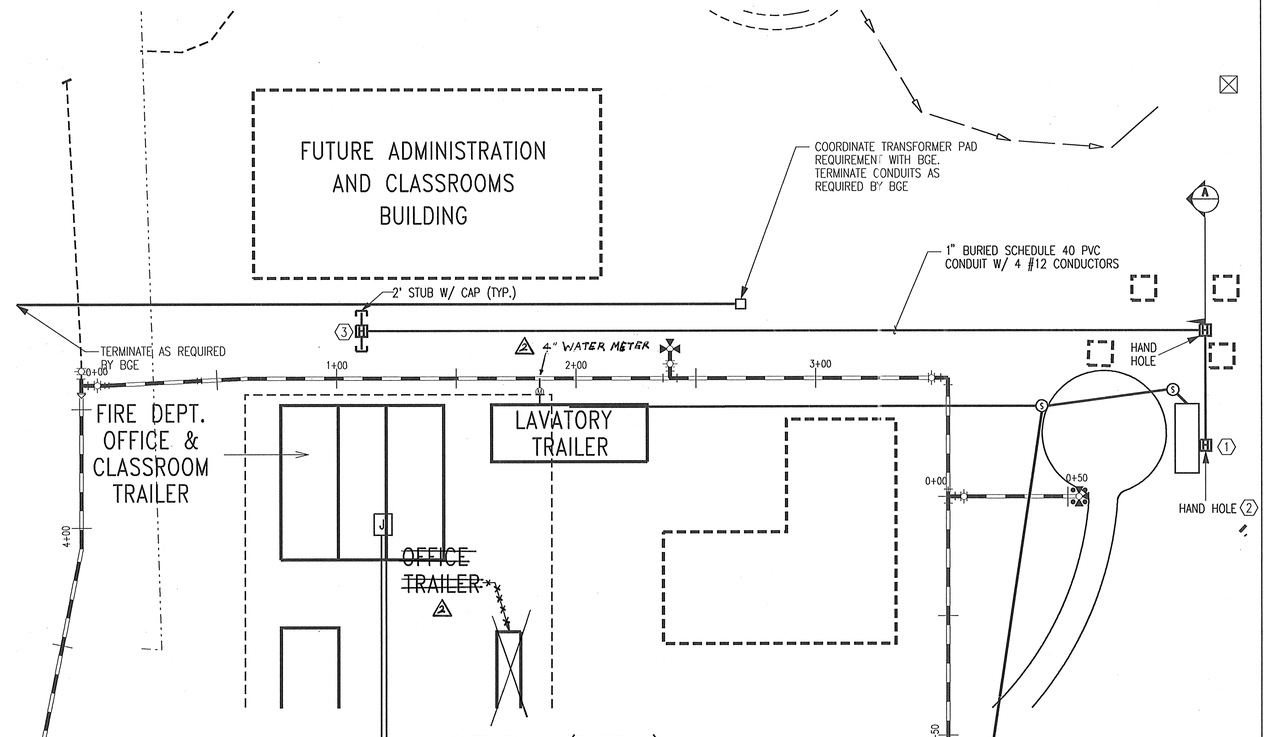

SITE PLAN (PARTIAL)
SCALE: 1"=30'

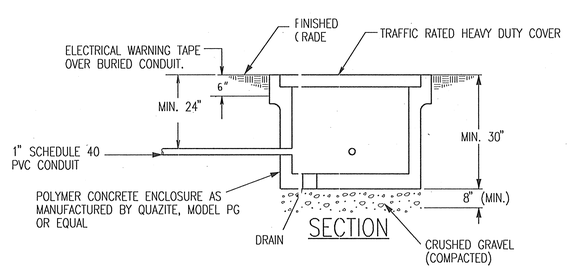

SECTION

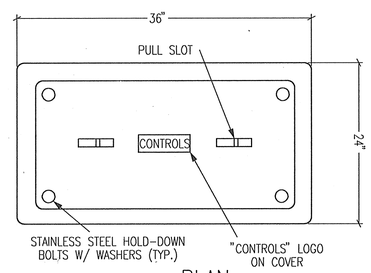

PLAN

A / E-1 | E-1 — C-12

PRE CAST HANDHOLE
SCALE: NTS

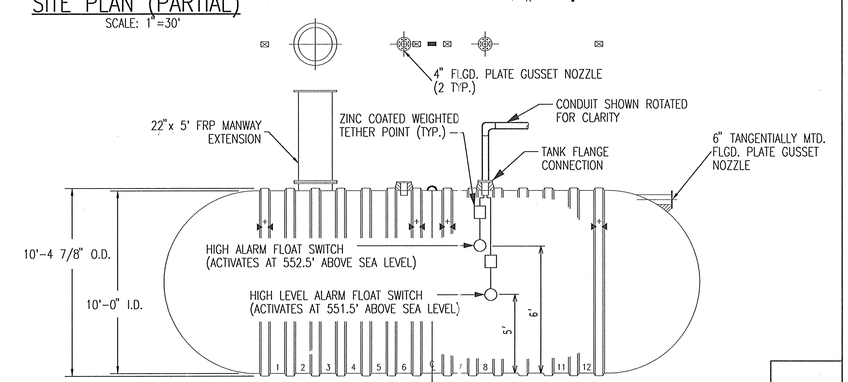

FLOAT INSTALLATION
SCALE: NTS

APPROVED: FOR PUBLIC WATER AND PRIVATE SEWERAGE SYSTEMS, HOWARD COUNTY HEALTH DEPARTMENT
COUNTY HEALTH OFFICER — DATE 3-5-03

APPROVED: HOWARD COUNTY DEPARTMENT OF PLANNING AND ZONING
DIRECTOR — DATE 4/18/03
CHIEF, DEVELOPMENT ENGINEERING DIVISION — DATE
CHIEF, DIVISION OF LAND DEVELOPMENT — DATE 4/17/03

DEPARTMENT OF PUBLIC WORKS
HOWARD COUNTY, MARYLAND
CHIEF, BUREAU OF UTILITIES — DATE

PREPARED BY :
WR&A
Whitman, Requardt and Associates, LLP.
801 South Caroline Street.
Baltimore, Maryland. 21231
410-235-3450

STATE OF MARYLAND — JAMES A. WHITTEN — No. 10210 — PROFESSIONAL ENGINEER

DES: PWG
DRN: JMV
CHK: PWG
DATE: 12/16/2002

BY	NO.	REVISION	DATE
CMD	2	ADD SIZE OF WATER METER/ REMOVE OFFICE BLDG.	10/27/03

LEVEL ALARM CONTROL ECD
FLOAT INSTALLATION DETAIL
CONDUIT DETAIL

600' SCALE MAP NO. 16 BLOCK NO. 2 / 8

PUBLIC SAFETY TRAINING CENTER
AT ALPHA RIDGE LANDFILL
CAPITAL PROJECT NO. C-0182
HOWARD COUNTY, MARYLAND

E-1

SCALE AS SHOWN

SHEET 39 OF 39

SDP-03-36

M:\13490\pstce01.dgn
THU Feb 20 10:19:58 2003

PUBLIC SAFETY TRAINING CENTER
THIRD ELECTION DISTRICT
HOWARD COUNTY, MARYLAND

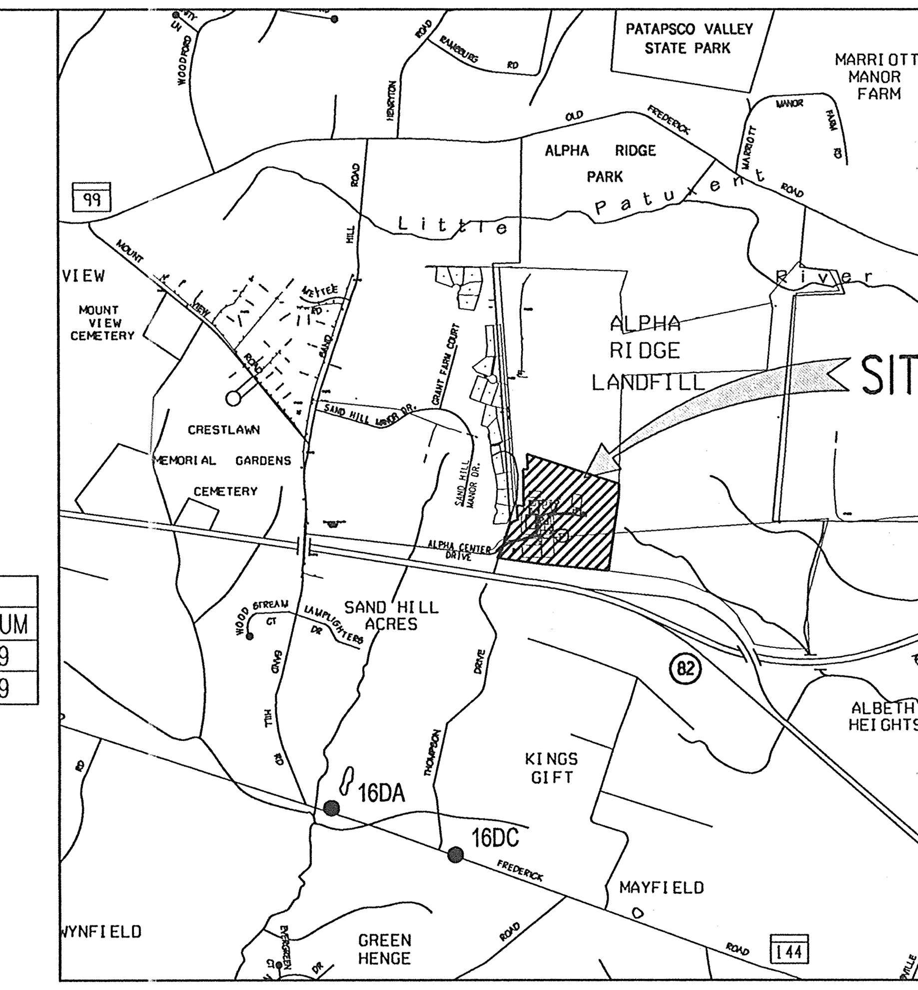

VICINITY MAP

SCALE:1"=2000'

SITE DATA:

TOTAL PROJECT AREA:........................38.23ac
LIMITS OF DISTURBED AREA:........................15.93ac
PRESENT ZONING DESIGNATION:........................RC-DEO
HEIGHT OF BUILDINGS:........................SEE TABLE G-2
PROPOSED USES FOR STRUCTURES:........................TEMPORARY ADMINISTRATION/TRAINING
PROPOSED USE OF SITE:........................POLICE AND FIRE TRAINING
NUMBER OF PARKING SPACES REQUIRED:........................50 (PER POLICE AND FIRE TRAINING REQUIREMENTS)
NUMBER OF PARKING SPACES PROVIDED:........................64 SPACES
BUILDING COVERAGE:........................0.4ac
DPZ FILE REFERENCES:........................WP-03-36, WP-02-102

LEGEND

EXISTING	PROPOSED	DESCRIPTION
260	260	MAJOR CONTOUR
258	258	MINOR CONTOUR
12"SD	12"SD	STORM DRAIN
8"W	8"W	WATER
6"SAN	6"SAN	SANITARY SEWER
UE	UE	UNDERGROUND ELECTRIC
		VALVE
		FIRE HYDRANT
		MANHOLE/INLET
		STREET LIGHT
x x	X X	FENCE
		TREES/WOODSLINE
		STREAM
w		WETLAND
	SW-1	STORMWATER MANAGEMENT BORING LOCATION
		PATCH TO MATCH EXISTING
		NO WOODY ZONE
		ABANDON EXISTING UTILITY/STRUCTURE
		EXISTING UTILITY/STRUCTURE TO BE REMOVED
	(21)	STAKEOUT POINTS
	H	ELECTRICAL HANDBOX
	C	CONTROL PANEL
	1	ELECTRICAL NOTES
		CONNECT TO EXISTING
	W	WELL CAP

BENCHMARKS					
MONUMENT	NORTHING	EASTING	ELEVATION	HORIZ. DATUM	VERT DATUM
16DA	593712.91	1332332.00	469.674	NAD83(91)	NAGVD29
16DC	593095.51	1333961.17	529.506	NAD83(91)	NAGVD29

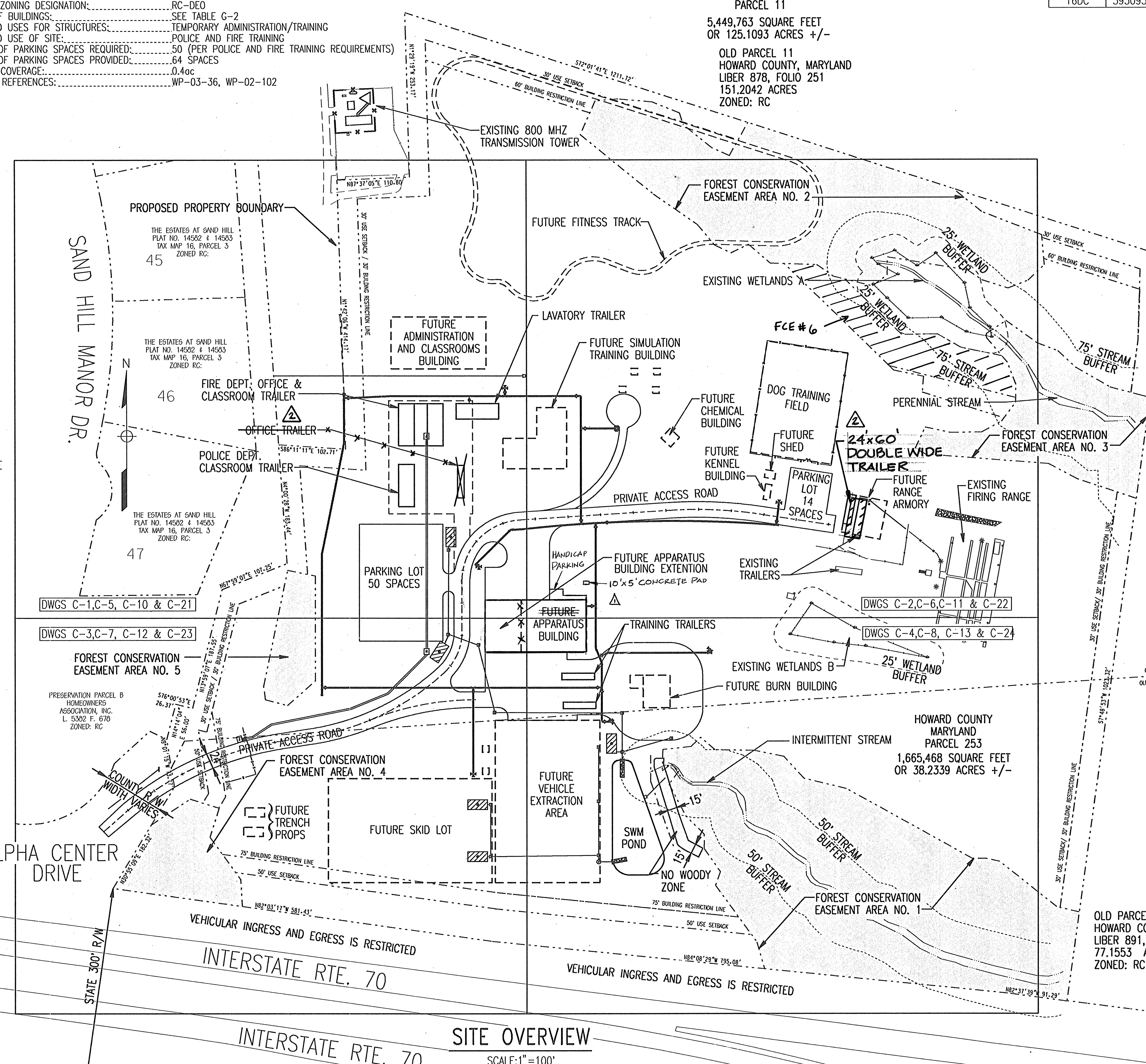

SITE OVERVIEW

SCALE:1"=100'

GRAPHIC SCALE

100 0 100 200
SCALE: 1" = 100'

2000 0 2000 4000
SCALE: 1" = 2000'

GENERAL NOTES

NON-RESIDENTIAL SITE DEVELOPMENT PLAN

1. ALL CONSTRUCTION SHALL BE IN ACCORDANCE WITH THE LATEST STANDARDS AND SPECIFICATIONS OF HOWARD COUNTY PLUS MSHA STANDARDS AND SPECIFICATIONS IF APPLICABLE.
2. THE CONTRACTOR SHALL NOTIFY THE DEPARTMENT OF PUBLIC WORKS/BUREAU OF ENGINEERING/CONSTRUCTION INSPECTION DIVISION AT (410) 313-1880 AT LEAST FIVE (5) WORKING DAYS PRIOR TO THE START OF WORK.
3. THE CONTRACTOR SHALL NOTIFY "MISS UTILITY" AT 1-800-257-7777 AT LEAST 48 HOURS PRIOR TO ANY EXCAVATION WORK BEING DONE.
4. TRAFFIC CONTROL DEVICES, MARKINGS AND SIGNING SHALL BE IN ACCORDANCE WITH THE LATEST EDITION OF THE MANUAL OF UNIFORM TRAFFIC CONTROL DEVICES (MUTCD). ALL STREET AND REGULATORY SIGNS SHALL BE IN PLACE PRIOR TO THE PLACEMENT OF ANY ASPHALT.
5. ALL PLAN DIMENSIONS ARE TO FACE OF CURB UNLESS OTHERWISE NOTED.
6. THE EXISTING TOPOGRAPHY IS TAKEN FROM FIELD RUN SURVEY WITH ONE FOOT CONTOUR INTERVALS PREPARED BY WHITMAN REQUARDT & ASSOCIATES L.L.P. DATED 07/11/02. .
7. THE COORDINATES SHOWN HEREON ARE BASED UPON THE HOWARD COUNTY GEODETIC CONTROL WHICH IS BASED UPON THE MARYLAND STATE PLANE COORDINATE SYSTEM. HOWARD COUNTY MONUMENT NUMBERS 16DA AND 16DC WERE USED FOR THIS PROJECT.
8. WATER IS PUBLIC. CONTRACT NUMBER IS 44-4072 AND DRAINAGE AREA IS LITTLE PATUXENT (108P.S.).
9. SEWER IS PROVIDED BY A PRIVATE ON-SITE HOLDING TANK.
10. STORM WATER MANAGEMENT WILL BE PROVIDED BY A COMBINATION OF AN ON-SITE P-5 POCKET POND (QUALITY/CPv MANAGEMENT), A STORMCEPTOR (QUALITY PRE-TREATMENT), INFILTRATION STRUCTURES, (RECHARGE), GRASS CHANNEL (QUALITY + RECHARCE), NON-ROOFTOP + ROOFTOP DISCONNECTION (QUALITY + RECHARGE). THESE FACILITIES ARE TO BE PUBLICLY MAINTAINED.
11. EXISTING UTILITIES ARE BASED ON PROPOSED LOCATIONS PROVIDED BY THE HOWARD COUNTY DEPARTMENT OF PUBLIC WORKS UTILITY DESIGN DIVISION.
12. THERE IS NO FLOODPLAIN ON THIS SITE.
13. THE WETLANDS DELINEATION STUDY FOR THIS PROJECT WAS PREPARED BY WHITMAN REQUARDT & ASSOCIATES L.L.P., JULY 22, 2002.
14. NO TRAFFIC STUDY IS REQUIRED FOR THIS PROJECT.
15. A WAIVER DEFERRING THE PLACEMENT OF BITUMINOUS PAVING TO A LATER DATE WAS APPROVED ON JULY 16, 2002 BY HOWARD COUNTY DPW) PROVIDED THAT APPROPRIATE DUST CONTROL MEASURES ARE INSTITUTED. APPROPRIATE DUST CONTROL MEASURE ARE TO BE APPLIED TO ALL GRAVEL SURFACES.
16. THIS SITE IS EXEMPT FROM THE APFO TEST REQUIREMENTS AS STATED IN SECTIONS 16,1107-(2)-(i) AND 16,1110-(h)-(2) OF THE HOWARD COUNTY CODE.
17. A WAIVER FOR SECTION 16.147 OF THE HOWARD COUNTY SUBDIVISION AND LAND DEVELOPMENT REGULATIONS WAS APPROVED ON APRIL 23, 2002, WP-02-102 TO ALLOW RECORDING OF ADJOINER DEEDS TO RECONFIGURE 3 COUNTY OWNED PARCELS OF LAND TO ESTABLISH REVISED PARCEL 253
18. USE OF A SEWAGE HOLDING TANK WAS APPROVED BY THE HOWARD COUNTY HEALTH DEPARTMENT ON MARCH 25, 2002.
19. THE FIRE DEPT. OFFICE & CLASSROOM TRAILER, POLICE DEPT. CLASSROOM, OFFICE TRAILER, TRAINING TRAILERS AND LAVATORY TRAILERS WILL BE PLACED ON THE SITE UNDER A SEPARATE CONTRACT.
20. THE PROPERTY BOUNDARIES SHOWN ON THESE PLANS HAVE BEEN RECORDED AS NEW DEED LIBER 6689 FOLIO 619 AND PLAT OF FOREST CONSERVATION REFERENCE NUMBER 15834
21. NO GRADING, REMOVAL OF VEGETATIVE COVER OR TREES, OR PLACEMENT OF NEW STRUCTURES IS PERMITTED WITHIN THE LIMITS OF WETLANDS, STREAMS OR THEIR REQUIRED BUFFERS AND FOREST CONSERVATION EASEMENT AREAS EXCEPT AS APPROVED BY WAIVER APPLICATION WP-03-36.
22. THIS PLAN HAS BEEN PREPARED IN ACCORDANCE WITH THE PROVISIONS OF SECTION 16.124 OF THE HOWARD COUNTY CODE AND THE LANDSCAPE MANUAL.
23. THIS PROJECT COMPLIES WITH THE REQUIREMENTS OF SECTION 16.1200 OF THE HOWARD COUNTY CODE AND THE FOREST CONSERVATION MANUAL WITH A TOTAL FOREST CONSERVATION OBLIGATION OF 7.63 ac HAS BEEN INCLUDED AS 7.19 ac IN RETENTION AND 0.44 ac IN REFORESTATION
24. ALL EXTERIOR LIGHT FIXTURES SHALL BE ORIENTED TO DIRECT LIGHT DOWNWARDS ON-SITE AWAY FROM ALL ADJOINING RESIDENTIAL PROPERTIES AND PUBLIC ROADS IN ACCORDANCE WITH SECTION 134 OF THE HOWARD COUNTY ZONING REGULATIONS.
25. THERE ARE NO CEMETERIES OR GRAVE SITES ON THE SUBJECT PROPERTY.
26. THIS PROJECT IS SUBJECT TO THE FIFTH EDITION OF SUBDIVISION AND LAND DEVELOPMENT REGULATIONS.
27. THE FOREST CONSERVATION EASEMENTS ON THIS PLAN HAVE BEEN ESTABLISHED TO FULFILL THE REQUIREMENTS OF SECTION 16.1200 OF THE HOWARD COUNTY CODE AND FOREST CONSERVATION MANUAL. NO CLEARING, GRADING OR CONSTRUCTION IS PERMITTED WITHIN THE FOREST CONSERVATION EASEMENTS, HOWEVER, FOREST MANAGEMENT PRACTICES AS DEFINED IN THE DEED OF FOREST CONSERVATION EASEMENT ARE ALLOWED.
28. STORMWATER MANAGEMENT HAS BEEN PROVIDED FOR ALL FACILITIES AND FUTURE STRUCTURES AS SHOWN ON THESE PLANS. ANY ADDITIONAL DEVELOPMENT ON THIS SITE WILL REQUIRE RE-EVALUATION OF THE STORM WATER MANAGEMENT REQUIREMENTS.
29. ALL UTILITIES CONSTRUCTED WITHIN FILL MATERIAL MUST BE PLACED IN ACCORDANCE WITH AASHTO-T180.
30. THE CONTRACTOR OR DEVELOPER SHALL CONTACT THE HOWARD COUNTY CONSTRUCTION INSPECTION DIVISION 24 HOURS IN ADVANCE OF THE COMMENCEMENT OF WORK AT (410) 313-1880
31. A WAIVER PERTAINING TO THE REQUIREMENT OF A 12' MAINTENANCE BENCH AS DESCRIBED UNDER SECTION 5.2.7.A.2 OF THE HOWARD COUNTY DESIGN MANUAL VOLUME I - STORM DRAINAGE HAS BEEN APPROVED BY THE HOWARD COUNTY DEPARTMENT OF PUBLIC WORKS ON OCTOBER 15, 2002.
32. REFER TO SHEET 2 FOR A LIST OF APPROVED WAIVERS TABLE.

APPROVED: FOR PUBLIC WATER AND PRIVATE SEWERAGE SYSTEMS, HOWARD COUNTY HEALTH DEPARTMENT
Penny Borenstein MD 3-5-03
COUNTY HEALTH OFFICER — DATE

APPROVED: HOWARD COUNTY DEPARTMENT OF PLANNING AND ZONING
Marsha McLaughlin (Acting) 3/18/03
DIRECTOR — DATE
3/11/03
CHIEF, DEVELOPMENT ENGINEERING DIVISION — DATE
Cindy Hamilton 3/17/03
CHIEF, DIVISION OF LAND DEVELOPMENT — DATE

DEPARTMENT OF PUBLIC WORKS
HOWARD COUNTY, MARYLAND
CHIEF, BUREAU OF UTILITIES — DATE

PREPARED BY :
WR&A
Whitman, Requardt and Associates, LLP.
801 South Caroline Street.
Baltimore, Maryland. 21231
410-235-3450

STATE OF MARYLAND — JAMES A. AVIRETT, JR. — 10210 — PROFESSIONAL ENGINEER

DES: C.D.
DRN: C.K.
CHK: A.O.
DATE: 12/16/2002

BY	NO.	REVISION	DATE
CMD	2	REMOVED OFFICE TRAILER, ADDED 24'x60' DOUBLE WIDE TRAILER	10/26/04
CMD	1	REMOVE "FUTURE", ADDED PARKING + 10'x5' CONC. PAD	7/23/04

COVER SHEET

600' SCALE MAP NO. 16 BLOCK NO. 2 / 8

OWNER:	WATER CODE:	SEWER CODE:	ADDRESS CHART	
HOWARD COUNTY MARYLAND DEPARTMENT OF PUBLIC WORKS 3430 COURTHOUSE DRIVE ELLICOTT CITY, MD 21043 PH: 410 313-2700	730	PRIVATE-HOLDING TANK	BUILDING	STREET ADDRESS 2200 ALPHA CENTER DRIVE

PROJECT NAME:			SECTION/AREA		PARCEL	
PUBLIC SAFETY EDUCATION CENTER			N/A		253	
PLAT	FOREST CONS. PLAT	ZONE	TAX MAP	BLOCK	ELEC. DIST.	CENSUS TRACT
15716 L.6689 F.619	15834	RC-DEO	16	2/8	3rd	6030

G-1

PUBLIC SAFETY TRAINING CENTER
AT ALPHA RIDGE LANDFILL
CAPITAL PROJECT NO. C-0182
HOWARD COUNTY, MARYLAND

SCALE AS SHOWN

SHEET 1 OF 39

SDP-03-36

M:\13490\pstcg01.dgn
Thu Feb 20 15:42:12 2003

STRUCTURE SCHEDULE									
NO.	TYPE	WIDTH (DIA.)	TOP ELEVATION UPPER	TOP ELEVATION LOWER	INVERT ELEVATION UPPER	INVERT ELEVATION LOWER	STANDARD DETAIL	LOCATIONS	REMARK
I-1	OPEN END GRATE	4'-10"	566.50	- - - -	- - - -	563.75	HO CO. SD4.36	NORTH EAST CORNER OF PARKING LOT	
I-2	OPEN END GRATE	4'-10"	566.00	- - - -	562.46	562.06	HO Co. SD4.36	SOUTH EAST CORNER OF PARKING LOT	
I-3	OPEN END GRATE	4'-10"	564.10	- - - -	561.57	561.47	HO Co. SD4.36	SOUTH EAST CORNER OF APPARATUS BAY	
I-4	OPEN END GRATE	4'-10"	563.60	- - - -	560.40	560.30	HO Co. SD4.36	NORTH WEST CORNER OF VEHICLE EXTRACTION	
I-5	DOUBLE TYPE 'S' INLET	5'-0.54"	561.30	- - - -	558.35	557.30	HO Co. SD4.23	SOUTH EAST OF TRAINING TRAILERS	
I-6	DBL. TYPE 'S' COMB.	5'-0.54"	559.75	- - - -	- - - -	557.10	HO Co. SD4.34	SOUTH OF FUTURE BURN BUILDING	
I-7	DOUBLE TYPE 'S' INLET	5'-0.54"	564.08	- - - -	- - - -	561.30	HO Co. SD4.23	EAST SIDE OF FUTURE SKID LOT	
I-8	DOUBLE TYPE 'S' INLET	5'-0.54"	564.08	- - - -	561.60	560.40	HO Co. SD4.23	EAST SIDE OF FUTURE SKID LOT	
I-9	DOUBLE TYPE 'S' INLET	5'-0.54"	560.53	- - - -	- - - -	557.80	HO Co. SD4.23	EAST SIDE OF VEHICLE EXTRACTION AREA	
I-10	DOUBLE TYPE 'S' INLET	5'-0.54"	560.27	- - - -	557.00	556.90	HO Co. SD4.23	EAST SIDE OF VEHICLE EXTRACTION AREA	
I-11	DOUBLE TYPE 'S' INLET	5'-0.54"	560.30	- - - -	556.20	555.75	HO Co. SD4.23	EAST SIDE OF VEHICLE EXTRACTION AREA	
SD-1	MANHOLE	4'-0"	560.08	- - - -	556.70	556.60	HO Co. G5.12	NORTH END OF POND FOREBAY	
E-1	ENDWALL	11'-6"	- - - -	- - - -	- - - -	556.50	HO Co. SD5.21	SWM POND FOREBAY	
E-2	ENDWALL	11'-6"	- - - -	- - - -	- - - -	555.30	HO Co. SD5.21	SOUTH WEST CORNER OF SWM POND	
E-3	ENDWALL	6'-6"	- - - -	- - - -	- - - -	555.00	HO Co. SD5.21	NORTH EAST CORNER OF SWM POND	
E-4	ENDWALL	6'-6"	- - - -	- - - -	- - - -	572.00	HO Co. SD5.21	NORTH SIDE OF ACCESS ROAD AT THE ENTRANCE	
ES-1	END SECTION	12"	- - - -	- - - -	- - - -	553.56	HO Co. SD5.52	END OF SWM POND OUTLET BARREL	
ES-2	END SECTION	12"	- - - -	- - - -	- - - -	571.00	HO Co. SD5.52	NORTH SIDE OF ACCESS ROAD AT THE ENTRANCE	

PIPE SCHEDULE			
SIZE	TYPE	QUANTITY (L.F)	REMARKS
15"	CP, CLASS I	563	
18"	CP, CLASS I	339	
21"	CP, CLASS I	84	

GRASS CHANNEL SCHEDULE			
CHANNEL ID	A	B	STABILIZATION
1	8 FT.	20	GRASS STABILIZATION
2	8 FT.	15	GRASS STABILIZATION
3	6 FT.	18	GRASS STABILIZATION
4	3 FT.	3	GRASS STABILIZATION
5	3 FT.	3	GRASS STABILIZATION

NOTE: GRASS CHANNELS ARE LABELLED ON SHEETS C-5 AND C-7 ONLY. ONLY THE BUBBLED NUMBER DESIGNATIONS AS INDICATED IN THE TABLE ABOVE HAVE BEEN USED

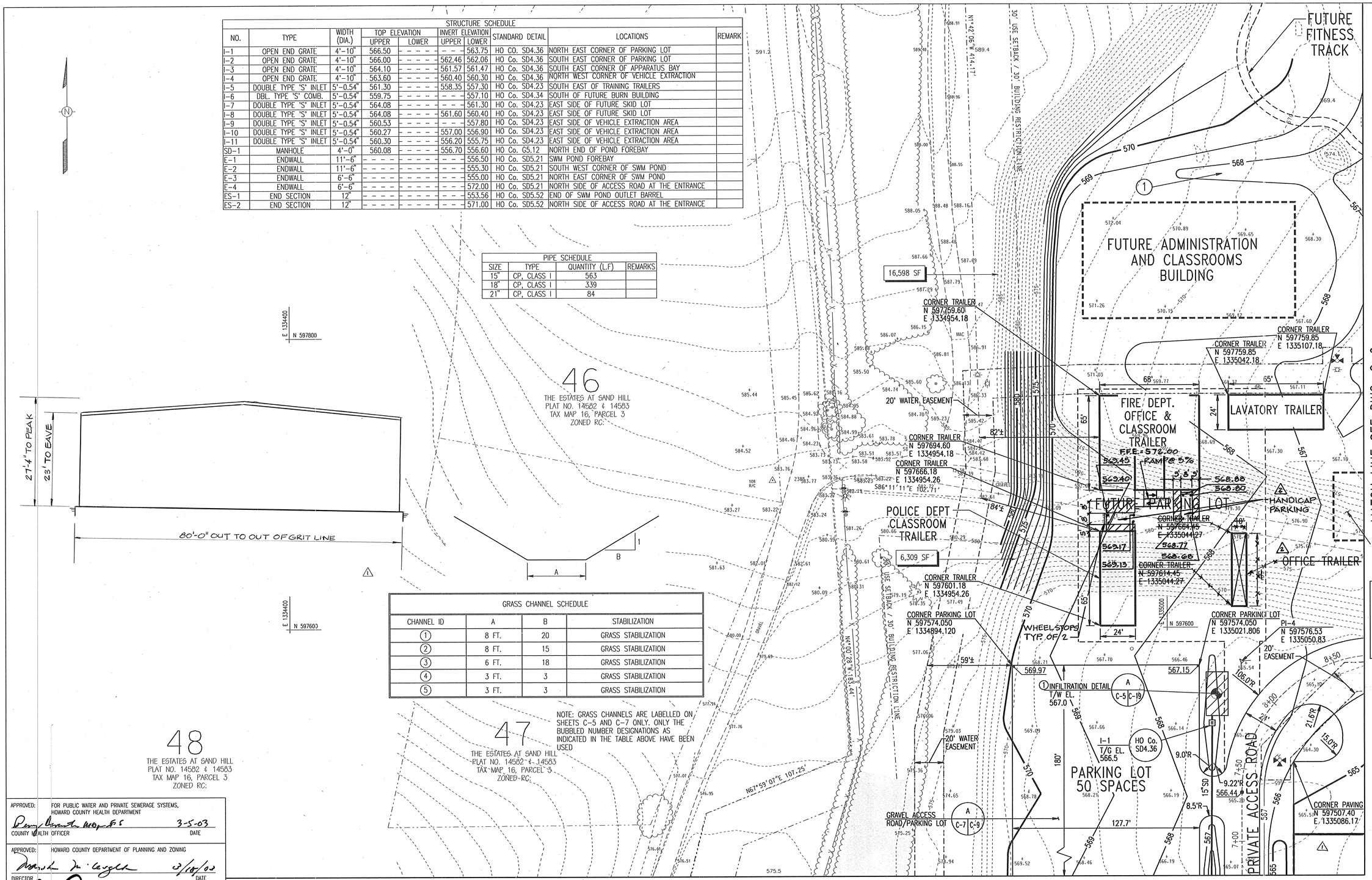

APPROVED: FOR PUBLIC WATER AND PRIVATE SEWERAGE SYSTEMS, HOWARD COUNTY HEALTH DEPARTMENT

COUNTY HEALTH OFFICER — DATE 3-5-03

APPROVED: HOWARD COUNTY DEPARTMENT OF PLANNING AND ZONING

DIRECTOR — DATE 3/10/03

CHIEF, DEVELOPMENT ENGINEERING DIVISION — DATE 3/11/03

CHIEF, DIVISION OF LAND DEVELOPMENT — DATE 3/17/03

DEPARTMENT OF PUBLIC WORKS
HOWARD COUNTY, MARYLAND

CHIEF, BUREAU OF UTILITIES — DATE

PREPARED BY :

WR&A
Whitman, Requardt and Associates, LLP.
801 South Caroline Street.
Baltimore, Maryland. 21231
410-235-3450

STATE OF MARYLAND — JAMES T. ANTRETTER — No. 10210 — PROFESSIONAL ENGINEER

DES: C.D.
DRN: C.K.
CHK: A.O.
DATE: 12/16/2002

BY	NO.	REVISION	DATE
CMD	2	ADDED 2 HANDICAP PARKING SPACES, REMOVED OFFICE TRAILER	10/26/04
CMD	1	REMOVE "FUTURE" LINE SYMBOLOGY + ADD BLDG. PROFILE	7/23/04

GRADING / PAVING PLAN

600' SCALE MAP NO. 16 BLOCK NO. 2 / 8

PUBLIC SAFETY TRAINING CENTER
AT ALPHA RIDGE LANDFILL
CAPITAL PROJECT NO. C-0182
HOWARD COUNTY, MARYLAND

C-5

SCALE AS SHOWN

SHEET 7 OF 39

SDP-03-36

M:\13490\postcc05.dgn
Thu Feb 20 10:16:59 2003

WETLANDS TABLE

LINE	COURSE	DIST.
WL6	N31°15'28"W	41.64'
WL7	N40°16'02"W	45.55'
WL8	N48°01'45"W	26.93'
WL9	N48°27'54"W	53.44'
WL10	N11°43'02"W	39.39'
WL11	N43°41'11"W	63.11'
WL12	S56°27'17"W	34.58'
WL13	N55°39'09"W	41.28'
WL14	S71°33'08"W	36.37'
WL15	S45°23'32"E	13.63'
WL16	S62°01'33"E	33.46'
WL17	S67°57'13"W	40.26'
WL18	S44°19'14"E	30.08'
WL19	S46°16'56"E	44.31'
WL20	N89°06'56"E	50.56'
WL21	S60°06'27"E	44.28'
WL22	S78°22'40"E	39.20'
WL23	S65°16'16"E	23.79'
WL24	S41°43'34"E	47.63'
WL25	S23°53'42"E	41.92'
WL26	S58°50'57"E	37.93'
WL27	S77°42'10"E	27.87'
WL37	N60°28'02"W	76.27'
WL38	S34°17'33"W	57.21'

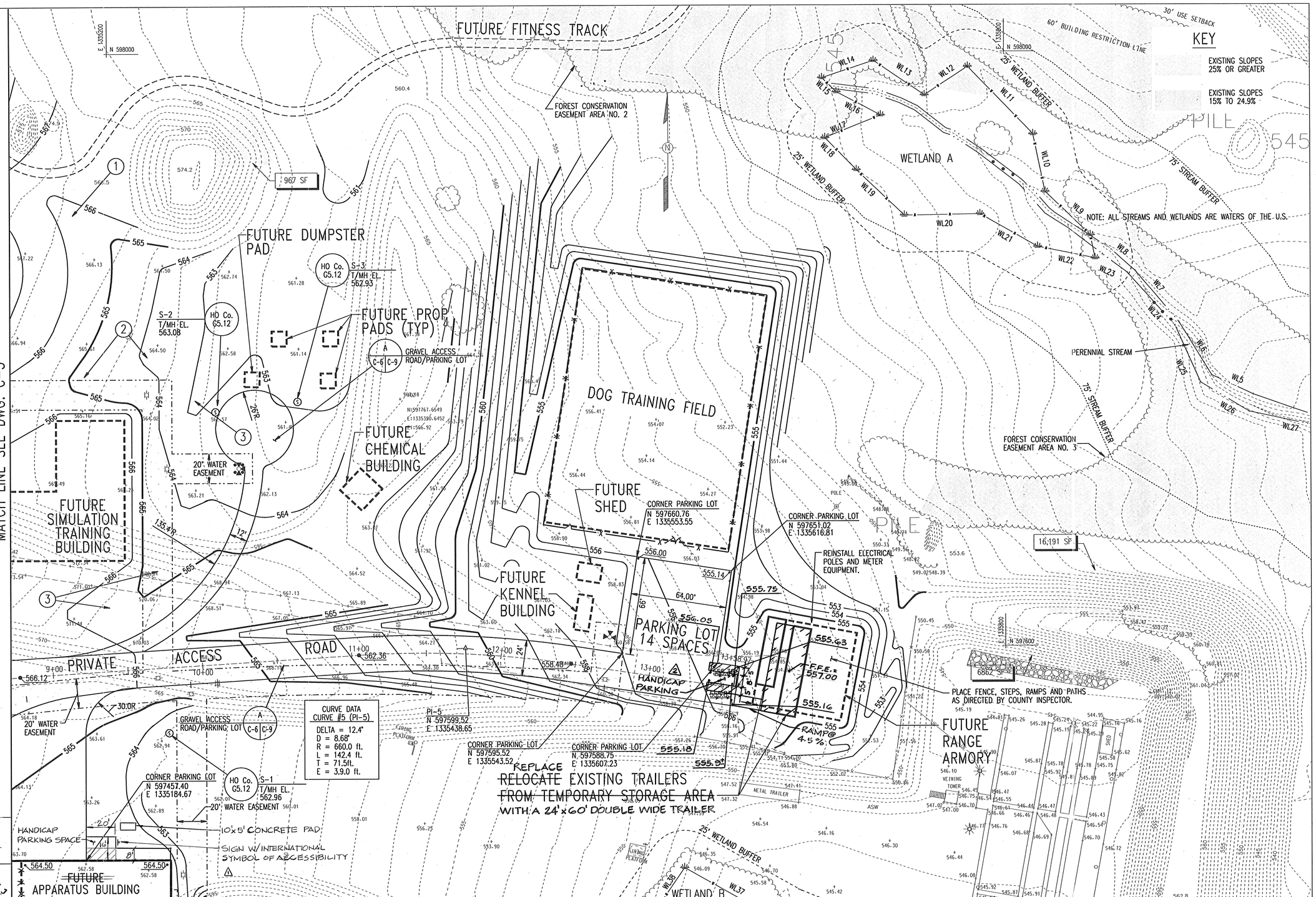

APPROVED: FOR PUBLIC WATER AND PRIVATE SEWERAGE SYSTEMS, HOWARD COUNTY HEALTH DEPARTMENT

COUNTY HEALTH OFFICER — DATE 3-5-03

APPROVED: HOWARD COUNTY DEPARTMENT OF PLANNING AND ZONING

DIRECTOR — DATE 3/10/03

CHIEF, DEVELOPMENT ENGINEERING DIVISION — DATE 3/11/03

CHIEF, DIVISION OF LAND DEVELOPMENT — DATE 3/12/03

DEPARTMENT OF PUBLIC WORKS
HOWARD COUNTY, MARYLAND

CHIEF, BUREAU OF UTILITIES — DATE

PREPARED BY :

WR&A
Whitman, Requardt and Associates, LLP.
801 South Caroline Street.
Baltimore, Maryland. 21231
410-235-3450

STATE OF MARYLAND — JAMES A. AVIRETT — No. 10210 — PROFESSIONAL ENGINEER

DES: C.D.
DRN: C.K.
CHK: A.O.
DATE: 12/16/2002

BY	NO.	REVISION	DATE
CMD	2	ADDED 1 HANDICAP PARKING SPACE + 24'x60' DOUBLE WIDE TRAILER	10/26/04
CMD	1	REMOVE 'FUTURE' ADDED PARKING + 10'x5' CONC PAD	7/23/04

GRADING / PAVING PLAN

600' SCALE MAP NO. 16 BLOCK NO. 2 / 8

PUBLIC SAFETY TRAINING CENTER
AT ALPHA RIDGE LANDFILL
CAPITAL PROJECT NO. C-0182
HOWARD COUNTY, MARYLAND

SCALE AS SHOWN

SHEET 8 OF 39

C-6

SDP-03-36

M:\13490\pstcc06.dgn
Thu Feb 20 15:31:23 2003

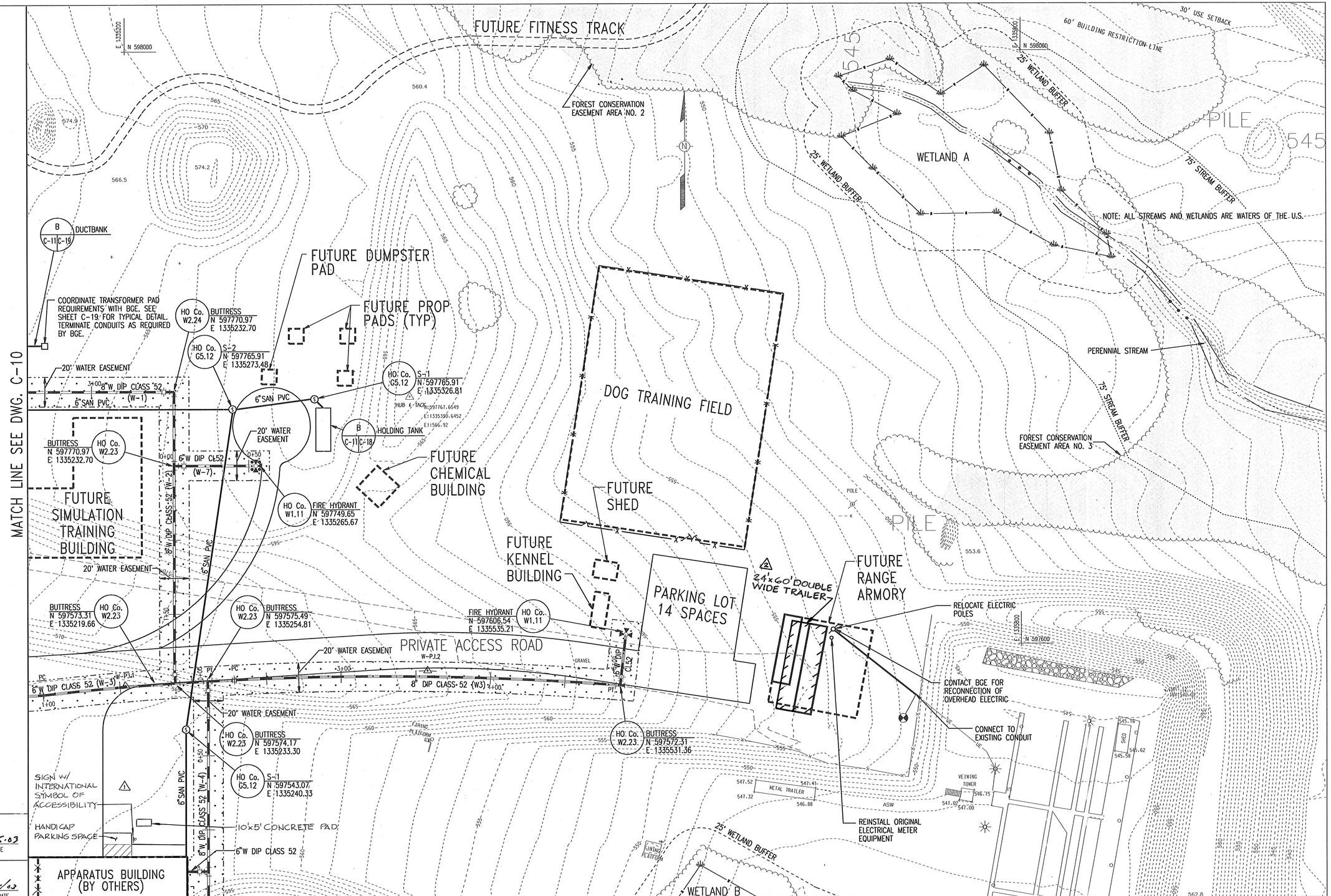

APPROVED: FOR PUBLIC WATER AND PRIVATE SEWERAGE SYSTEMS, HOWARD COUNTY HEALTH DEPARTMENT

COUNTY HEALTH OFFICER — DATE 3-5-03

APPROVED: HOWARD COUNTY DEPARTMENT OF PLANNING AND ZONING

DIRECTOR — DATE 3/10/03

CHIEF, DEVELOPMENT ENGINEERING DIVISION — DATE 3/11/03

CHIEF, DIVISION OF LAND DEVELOPMENT — DATE 3/12/03

DEPARTMENT OF PUBLIC WORKS
HOWARD COUNTY, MARYLAND

CHIEF, BUREAU OF UTILITIES — DATE

PREPARED BY :

WR&A

Whitman, Requardt and Associates, LLP.
801 South Caroline Street.
Baltimore, Maryland. 21231
410-235-3450

STATE OF MARYLAND — JAMES A. AVIRETT — No. 10410 — PROFESSIONAL ENGINEER

DES: C.D.
DRN: C.K.
CHK: A.O.
DATE: 12/16/2002

BY	NO.	REVISION	DATE
CMD	2	ADDED 24'x60' DOUBLE WIDE TRAILER	10/26/04
CMD	1	REMOVE 'FUTURE' ADDED PARKING + 10'x5' CONC. PAD	7/23/04

UTILITY PLAN

600' SCALE MAP NO. 16 BLOCK NO. 2 / 8

PUBLIC SAFETY TRAINING CENTER
AT ALPHA RIDGE LANDFILL
CAPITAL PROJECT NO. C-0182
HOWARD COUNTY, MARYLAND

GRAPHIC SCALE
30 20 10 0 30 60
SCALE: 1" = 30'

C-11

SCALE AS SHOWN

SHEET 13 OF 39

SDP-03-36

MrUI3490\pstcdl.dgn
Thu Feb 20 09:05:5 2003

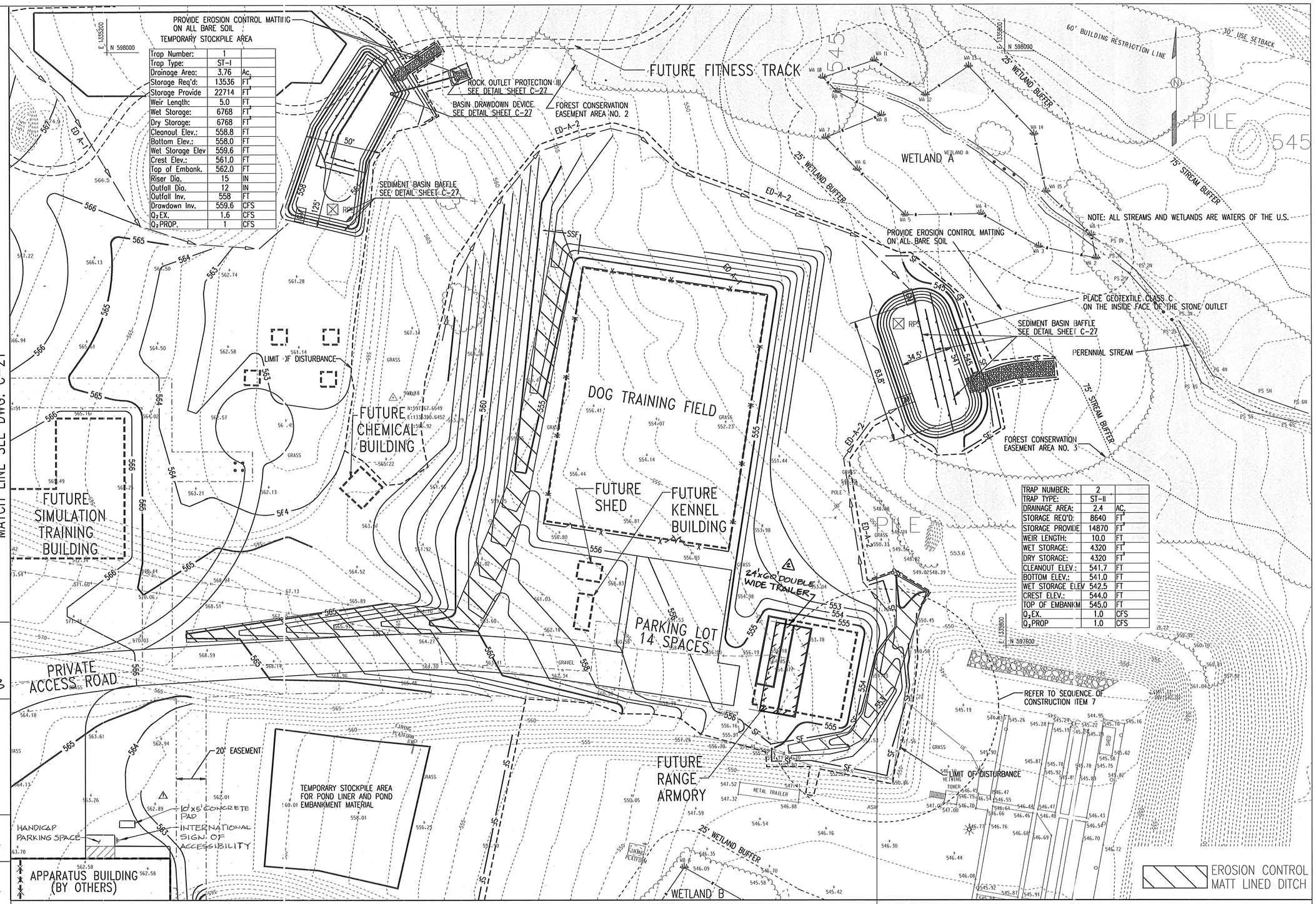

Trap Number:	1	
Trap Type:	ST-I	
Drainage Area:	3.76	Ac.
Storage Req'd:	13536	FT^3
Storage Provide	22714	FT^3
Weir Length:	5.0	FT
Wet Storage:	6768	FT^3
Dry Storage:	6768	FT^3
Cleanout Elev.:	558.8	FT
Bottom Elev.:	558.0	FT
Wet Storage Elev	559.6	FT
Crest Elev.:	561.0	FT
Top of Embank.	562.0	FT
Riser Dia.	15	IN
Outfall Dia.	12	IN
Outfall Inv.	558	FT
Drawdown Inv.	559.6	CFS
Q_2 EX.	1.6	CFS
Q_2 PROP.	1	CFS

TRAP NUMBER:	2	
TRAP TYPE:	ST-II	
DRAINAGE AREA:	2.4	AC.
STORAGE REQ'D:	8640	FT^3
STORAGE PROVIDE	14870	FT^3
WEIR LENGTH:	10.0	FT
WET STORAGE:	4320	FT^3
DRY STORAGE:	4320	FT^3
CLEANOUT ELEV.:	541.7	FT
BOTTOM ELEV.:	541.0	FT
WET STORAGE ELEV	542.5	FT
CREST ELEV.:	544.0	FT
TOP OF EMBANKM	545.0	FT
Q_2 EX.	1.0	CFS
Q_2 PROP	1.0	CFS

THIS DEVELOPMENT PLAN IS APPROVED FOR SOIL EROSION AND SEDIMENT CONTROL BY THE HOWARD SOIL CONSERVATION DISTRICT.

HOWARD S.C.D. — DATE 3/4/03

REVIEWED FOR HOWARD S.C.D. AND MEETS THE TECHNICAL REQUIREMENTS.

USDA - Natural Resources Conservation Service — DATE 3/4/03

BY THE ENGINEER:
"I CERTIFY THAT THIS PLAN FOR EROSION AND SEDIMENT CONTROL REPRESENTS A PRACTICAL AND WORKABLE PLAN BASED ON MY PERSONAL KNOWLEDGE OF THE SITE CONDITIONS AND THAT IT WAS PREPARED IN ACCORDANCE WITH THE REQUIREMENTS OF THE HOWARD SOIL CONSERVATION DISTRICT".

JAMES A. AVIRETT, Jr. — DATE 2/21/03

BY THE DEVELOPER:
"I/WE CERTIFY THAT ALL DEVELOPMENT AND CONSTRUCTION WILL BE DONE ACCORDING TO THIS PLAN, AND THAT ANY RESPONSIBLE PERSONNEL INVOLVED IN THE CONSTRUCTION PROJECT WILL HAVE A CERTIFICATE OF ATTENDANCE AT A DEPARTMENT OF ENVIRONMENT APPROVED TRAINING PROGRAM FOR THE CONTROL OF SEDIMENT AND EROSION BEFORE BEGINNING THE PROJECT. I ALSO AUTHORIZE PERIODIC ON-SITE INSPECTION BY THE HOWARD SOIL CONSERVATION DISTRICT".

Michael A. Giovaniello — DATE 2/20/03

APPROVED: FOR PUBLIC WATER AND PRIVATE SEWERAGE SYSTEMS, HOWARD COUNTY HEALTH DEPARTMENT

COUNTY HEALTH OFFICER — DATE 3-5-03

APPROVED: HOWARD COUNTY DEPARTMENT OF PLANNING AND ZONING

DIRECTOR — DATE 3/10/03

CHIEF, DEVELOPMENT ENGINEERING DIVISION — DATE 3/11/03

CHIEF, DIVISION OF LAND DEVELOPMENT — DATE 3/17/03

DEPARTMENT OF PUBLIC WORKS
HOWARD COUNTY, MARYLAND

CHIEF, BUREAU OF UTILITIES — DATE

PREPARED BY:
WR&A
Whitman, Requardt and Associates, LLP.
801 South Caroline Street
Baltimore, Maryland 21231
410-235-3450

STATE OF MARYLAND — JAMES A. AVIRETT — 10210 — PROFESSIONAL ENGINEER

DES: C.D.
DRN: C.K.
CHK: A.O.
DATE: 12/16/2002

BY	NO.	REVISION	DATE
CMD	2	ADDED 24'x60' DOUBLE WIDE TRAILER	10/26/04
CMD	1	REMOVE 'FUTURE', ADDED PARKING & 10'x5' CONC PAD	7/23/04

EROSION AND SEDIMENT CONTROL PLAN

600' SCALE MAP NO. 16 BLOCK NO. 2 / 8

PUBLIC SAFETY TRAINING CENTER
AT ALPHA RIDGE LANDFILL
CAPITAL PROJECT NO. C-0182
HOWARD COUNTY, MARYLAND

GRAPHIC SCALE
30 20 10 0 30 60
SCALE: 1" = 30'

C-22

SCALE AS SHOWN

SHEET 24 OF 39

SDP-03-36

MHJ3490\pstcc22.dgn
Thu Feb 20 15:40:48 2003

Forest Stand Narrative

FS1-3.26 ac. FS1 is a Maple and Oak stand. The stand is the largest associated stand and the onsite portions are approximately 4.6 acres of a much larger stand. The onsite canopy species include Red Oak, Red Maple, Black Oak and Tulip Poplar. This stand contains some large maple trees including a 36 inch dba Red Maple. The understory is shrubby and viney and dense. Species include Greenbrier, Multiflora Rose, Poison Ivy, Japanese Honeysuckle and grape. One of two separate stream branches run through each of the two onsite portions of FS1. The stream branch running through the southern, onsite portion of FS1 is dry. The stream branch running through the northern, onsite portion of FS1 is a perennial tributary of the Little Patuxent River. The canopy is approximately 70 to 90 percent closed. The portion of the stand, which is located directly behind the onsite gun/shooting range, was not accessible at the time of inspection. No disturbance to this area is proposed. This onsite portions of this stand are of moderately good structure and habitat value.

The adjacent treeline running along Interstate Route 70 is a stand of Tree of Heaven.

Trees Indicated on FSD Map
Specimen Tree: 36" Red Maple
Large Trees: 28" Red Maple
28" Red Maple
28" Red Maple

FS2-3.24 ac. FS2 is a Red Maple stand. The canopy species include Red Maple, Red Oak, Tulip Poplar and a few American Elm trees. In some areas of the stand Red Maple is the only canopy species. The canopy is approximately 90 percent closed in the western portion of the stand and is as low as 65 percent closed in the eastern portion of the stand. The eastern portion of the stand is in closer proximity to Wetland A. The shrub layer consists of Multiflora Rose which is concentrated in the eastern portion of the stand. The dominant herbaceous species consist of Poison Ivy, Virginia Creeper and Japanese Honeysuckle. Groundcover is at approximately 70 percent. This stand has moderately good forest structure, but has limited habitat value due to it's small size and disconnection from FS1. A corridor linking FS1 and FS2 would improve the value.

Trees Indicated on FSD Map
Specimen Trees: 33" Tulip Poplar
35" WhiteOak

FS3-0.91 ac. FS3 is a disturbed, low quality stand of Tree of Heaven. Some Tulip Poplar, Red Maple, Black Cherry and Red Oak are also growing in this stand. This stand has been subject to much disturbance from Interstate Route 70, the unnamed access road, and the clearing and grading of the site.

Tree Stands

The tree rows adjacent to and buffering the unnamed access road consist of Red Maple, White Pine, Tree of Heaven, and some Red Oak and Huckleberry. Multiflora Rose and Honeysuckle are growing here as well.

The tree stands on the inside of the site consist primarily of Tree of Heaven.

LEGEND

- LARGE TREE
- SPECIMEN TREE
- EXISTING TREELINE
- PROPOSED TREELINE
- TPF — TREE PROTECTION FENCE
- FS1 — FOREST STAND LABEL
- FOREST CONSERVATION EASEMENT SIGNPOST
- OF — OPEN FIELD
- H — HEDGE
- WETLAND
- 25' WETLAND BUFFER
- STREAM
- STREAM BUFFER
- CgB2 — SOIL TYPE
- SOIL BOUNDARY
- SITE LIMITS
- PROPERTY LINE
- LIMITS OF DISTURBANCE
- EX. FOREST TO BE SAVED
- EX. FOREST TO BE REMOVED
- EX. VEGETATION TO BE SAVED NOT INCLUDED IN FOREST CONSERVATION EASEMENT VEGETATION LESS THAN 10000 SF AND LESS THAN 35 FT WIDE.
- REFORESTATION AREA

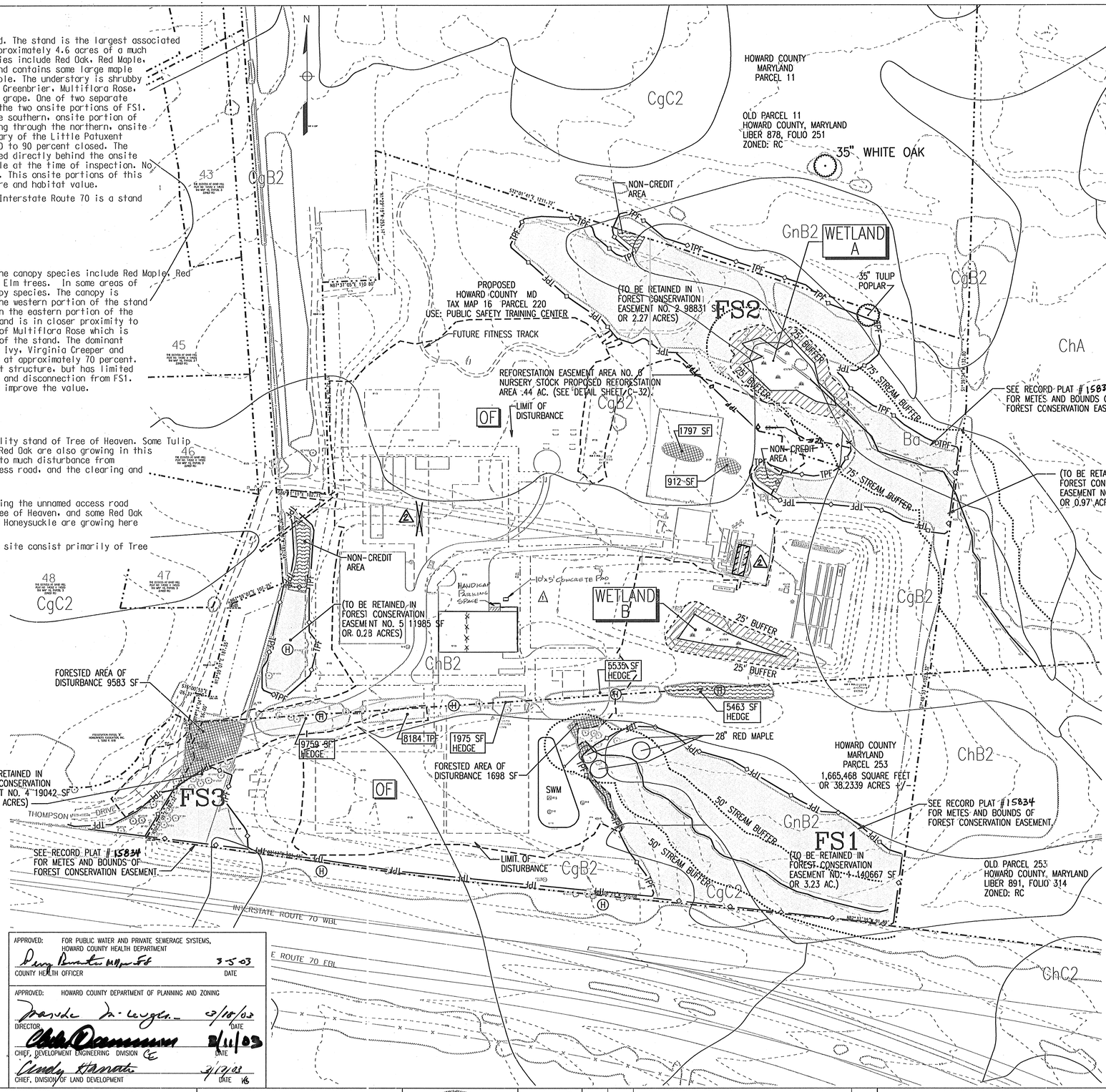

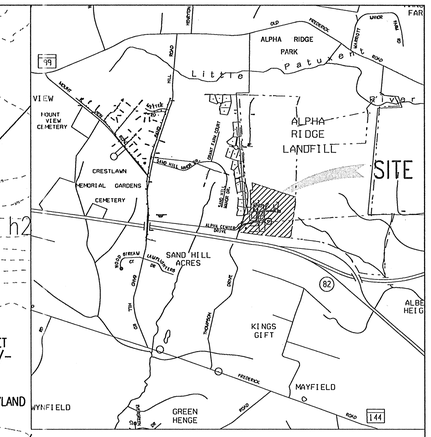

VICINITY MAP

SCALE: 1"=2000'

HOWARD COUNTY FOREST CONSERVATION WORKSHEET
HOWARD COUNTY PUBLIC SAFETY SITE

NET TRACT AREA:

A. TOTAL TRACT AREA	38.23 ACRES
B. AREA WITHIN 100 YEAR FLOOD PLAIN	0
C. AREA WITHIN AGRICULTURAL USE OR PRESERVATION PARCEL	0
D. NET TRACT AREA	38.23 ACRES

LAND USE CATEGORY: (1)
INPUT THE NUMBER "1" UNDER THE APPROPRIATE LAND USE ZONING, AND LIMIT TO ONLY ONE ENTRY.

ARA	MDR	IDA	HDR	MDP	CIA
0	0	1	0	0	0

E. AFFORESTATION MINIMUM (15% X A)	5.73 ACRES
F. REFORESTATION THRESHOLD (20% X A)	7.65 ACRES

EXISTING FOREST COVER:

G. EXISTING FOREST ON NET TRACT AREA (EXCLUDING FLOODPLAIN)	7.41 ACRES
H. AREAS OF FOREST ABOVE AFFORESTATION THRESHOLD	1.68 ACRES
I. AREAS OF FOREST ABOVE CONSERVATION THRESHOLD	0.00 ACRES

BREAKEVEN POINT:

J. FOREST RETENTION ABOVE THRESHOLD WITH NO MITIGATION	0.00 ACRES
K. CLEARING PERMITTED WITHOUT MITIGATION	0.00 ACRES

PROPOSED FOREST

L. TOTAL AREA OF FOREST TO BE CLEARED	0.22 ACRES
M. TOTAL AREA OF FOREST TO BE RETAINED	7.19 ACRES

PLANTING REQUIREMENTS:

N. REFORESTATION FOR CLEARING ABOVE CONSERVATION THRESHOLD	0.00 ACRES
O. REFORESTATION FOR CLEARING BELOW CONSERVATION THRESHOLD	0.44 ACRES
P. CREDIT FOR RETENTION ABOVE CONSERVATION THRESHOLD	0.00 ACRES
Q. TOTAL REFORESTATION REQUIRED	0.44 ACRES
R. TOTAL AFFORESTATION REQUIRED	0.00 ACRES
S. TOTAL AFFORESTATION AND REFORESTATION REQUIRED	0.44 ACRES

SOILS:

Ba BAILE SILT LOAM.
NEARLY LEVEL IN UPLAND DEPRESSIONS. POORLY DRAINED

ChA CHESTER SILT LOAM.
0 TO 3 PERCENT SLOPES. WELL DRAINED.

CgB2 CHESTER GRAVELLY SILT LOAM.
3 TO 8 PERCENT SLOPES, MODERATELY ERODED. WELL DRAINED.

CgC2 CHESTER GRAVELLY SILT LOAM.
8 TO 15 PERCENT SLOPES, MODERATELY ERODED. WELL DRAINED.

ChB2 CHESTER SILT LOAM.
3 TO 8 PERCENT SLOPES, MODERATELY ERODED. WELL DRAINED.

GnB2 GLENVILLE SILT LOAM.
3 TO 8 PERCENT SLOPES, MODERATELY ERODED.
MODERATELY WELL DRAINED.

MID2 MANOR LOAM.
15 TO 25 PERCENT SLOPES, MODERATELY ERODED. WELL DRAINED
TO SOMEWHAT EXCESSIVELY DRAINED.

PREPARED BY: SHERYL H. BERNARDO
STATE OF MARYLAND
LICENSED LANDSCAPE ARCHITECT
LICENSE REGISTRATION NO. 3127
Name: Sheryl Bernardo Date: 2/21/03

APPROVED: FOR PUBLIC WATER AND PRIVATE SEWERAGE SYSTEMS, HOWARD COUNTY HEALTH DEPARTMENT
COUNTY HEALTH OFFICER — DATE 3-5-03

APPROVED: HOWARD COUNTY DEPARTMENT OF PLANNING AND ZONING
DIRECTOR — DATE 3/10/03
CHIEF, DEVELOPMENT ENGINEERING DIVISION — DATE 3/11/03
CHIEF, DIVISION OF LAND DEVELOPMENT — DATE 3/13/03

GRAPHIC SCALE
100 0 100 200
SCALE: 1" = 100'

C-31

DEPARTMENT OF PUBLIC WORKS
HOWARD COUNTY, MARYLAND
CHIEF, BUREAU OF UTILITIES — DATE

PREPARED BY:
WR&A
Whitman, Requardt and Associates, LLP.
801 South Caroline Street.
Baltimore, Maryland. 21231
410-235-3450

STATE OF MARYLAND — JAMES A. AMBERG — No. 10610 — PROFESSIONAL ENGINEER

DES: S.H.B.
DRN: P.L.B.
CHK: S.H.B.
DATE:

BY	NO.	REVISION	DATE
CMD	2	ADDED 24'x60' DOUBLE WIDE TRAILER REMOVED OFFICE TRAILER	10/26/04
CMD	1	REMOVED "FUTURE", ADDED PARKING + 10'x5' CONC. PAD	7/23/04

FOREST CONSERVATION PLAN

600' SCALE MAP NO. 16 BLOCK NO. 2 / 8

PUBLIC SAFETY TRAINING CENTER
AT ALPHA RIDGE LANDFILL
CAPITAL PROJECT NO. C-0182
HOWARD COUNTY, MARYLAND

SCALE AS SHOWN

SHEET 33 OF 39

SDP-03-36

M:\13490\pstfcc3l.dgn
Thu Feb 20 15:44:53 2003

PREPARED BY: SHERYL H. BERNARDO
STATE OF MARYLAND
LICENSED LANDSCAPE ARCHITECT
LICENSE REGISTRATION NO. 3127
NAME: Sheryl Bernardo DATE: 2/21/03

DEVELOPER'S/BUILDER'S CERTIFICATE

I/WE CERTIFY THAT THE LANDSCAPING SHOWN ON THIS PLAN WILL BE DONE ACCORDING TO THE PLAN. SECTION 16.124 OF THE HOWARD COUNTY CODE AND THE HOWARD COUNTY LANDSCAPE MANUAL. I/WE FURTHER CERTIFY THAT UPON COMPLETION A LETTER OF LANDSCAPE INSTALLATION, ACCOMPANIED BY AN EXECUTED ONE YEAR GUARANTEE OF PLANT MATERIALS, WILL BE SUBMITTED TO THE DEPARTMENT OF PLANNING AND ZONING.

Michael A. Giovanniello
NAME: Michael A. Giovanniello DATE: 2/25/03

LEGEND

EXISTING	DESCRIPTION
258	PROPOSED CONTOUR
258	EXISTING CONTOUR
	EXISTING WOODS LINE
	PROPOSED WOODS LINE
	STREAM
	WETLAND
	NO WOODY ZONE
	WETLAND BOUNDARY
	EXISTING FENCE
	PROPOSED FENCE
	EXISTING TREE

PLANTING SCHEDULE

SYMBOL	KEY	QUANTITY	BOTANICAL NAME	COMMON NAME	SIZE	ROOTS
TREES						
	AR	19	ACER RUBRUM "OCTOBER GLORY"	OCTOBER GLORY RED MAPLE	2½"-3" CAL	B&B
	QR	34	QUERCUS RUBRA	RED OAK	2½"-3"" CAL	B&B
	LC	72	CUPPRESSOCYPARIS LEYLANDI	LEYLAND CYPRESS	5'- 6' HT	B&B
	PT	45	PINUS THUNBERGIANA	JAPANESE BLACK PINE	6'- 8' HT	B&B
SHRUBS						
	IC	71	ILEX GLABRA "COMPACTA"	COMPACT INKBERRY	18"- 24"	CONT
	RG	65	BERBERIS THUNBERGII "ROSE GLOW"	ROSE GLOW BARBERRY	15"- 18"	CONT.
	EG	75	ABELIA "EDWARD GOUCHER"	EDWARD GOUCHER ABELIA	15"- 18"	CONT.

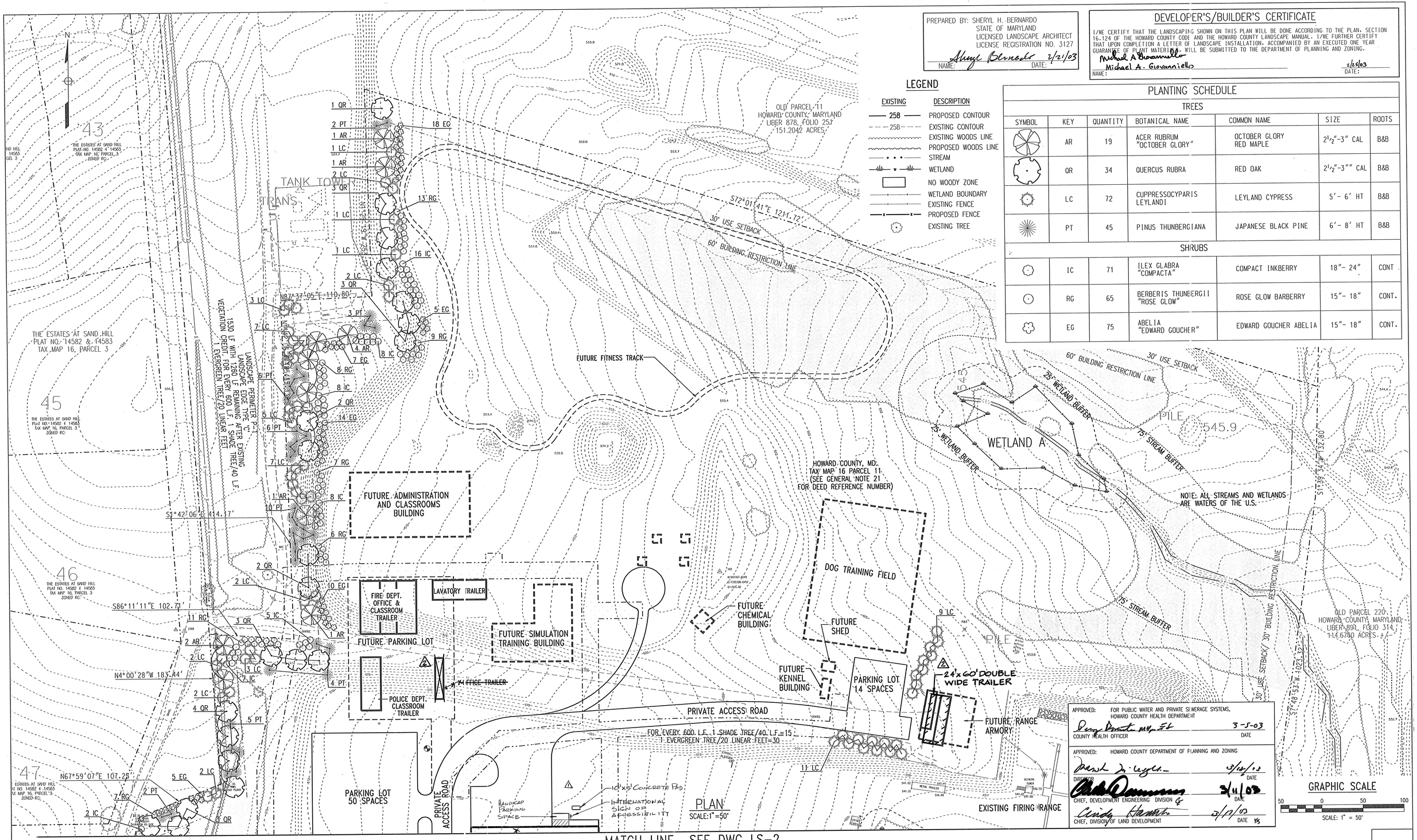

APPROVED: FOR PUBLIC WATER AND PRIVATE SEWERAGE SYSTEMS, HOWARD COUNTY HEALTH DEPARTMENT
COUNTY HEALTH OFFICER — DATE 3-5-03

APPROVED: HOWARD COUNTY DEPARTMENT OF PLANNING AND ZONING
DIRECTOR — DATE 3/10/03
CHIEF, DEVELOPMENT ENGINEERING DIVISION — DATE 3/11/03
CHIEF, DIVISION OF LAND DEVELOPMENT — DATE 3/12/03

MATCH LINE SEE DWG LS-2

LS-1

DEPARTMENT OF PUBLIC WORKS
HOWARD COUNTY, MARYLAND
CHIEF, BUREAU OF UTILITIES — DATE

PREPARED BY:
WR&A
Whitman, Requardt and Associates, LLP.
801 South Caroline Street.
Baltimore, Maryland. 21231
410-235-3450

STATE OF MARYLAND — JAMES A. AVIRETT — PROFESSIONAL ENGINEER

DES: H.W.P. S.H.B.
DRN: E.M.
CHK: H.W.P.
DATE: 12/16/2002

BY	NO.	REVISION	DATE
CMD	2	ADDED 24'x60' DOUBLE WIDE TRAILER REMOVED OFFICE TRAILER	10/6/04
CMD	1	ADDED PARKING + 10'x5' CONCRETE PAD	7/23/04

LANDSCAPE PLAN - NORTH

600' SCALE MAP NO. 16 BLOCK NO. 2 / 8

PUBLIC SAFETY TRAINING CENTER
AT ALPHA RIDGE LANDFILL
CAPITAL PROJECT NO. C-0182
HOWARD COUNTY, MARYLAND

SCALE AS SHOWN

SHEET 35 OF 39

SDP-03-36

W.O./13490/

M:\13490\PSTCLS.DGN
Thu Feb 20 15:42:17 2003

STRUCTURE SCHEDULE									
NO.	TYPE	WIDTH (DIA.)	TOP ELEVATION UPPER	TOP ELEVATION LOWER	INVERT ELEVATION UPPER	INVERT ELEVATION LOWER	STANDARD DETAIL	LOCATIONS	REMARK
I-1	OPEN END GRATE	4'-10"	566.50	- - - -	- - -	563.75	HO CO. SD4.36	NORTH EAST CORNER OF PARKING LOT	
I-2	OPEN END GRATE	4'-10"	566.00	- - - -	562.46	562.06	HO Co. SD4.36	SOUTH EAST CORNER OF PARKING LOT	
I-3	OPEN END GRATE	4'-10"	564.10	- - - -	561.57	561.47	HO Co. SD4.36	SOUTH EAST CORNER OF APPARATUS BAY	
I-4	OPEN END GRATE	4'-10"	563.60	- - - -	560.40	560.30	HO Co. SD4.36	NORTH WEST CORNER OF VEHICLE EXTRACTION	
I-5	DOUBLE TYPE 'S' INLET	5'-0.54"	561.30	- - - -	558.35	557.30	HO Co. SD4.23	SOUTH EAST OF TRAINING TRAILERS	
I-6	DBL. TYPE 'S' COMB.	5'-0.54"	559.75	- - - -	- - -	557.10	HO Co. SD4.34	SOUTH OF FUTURE BURN BUILDING	
I-7	DOUBLE TYPE 'S' INLET	5'-0.54"	564.08	- - - -	- - -	561.30	HO Co. SD4.23	EAST SIDE OF FUTURE SKID LOT	
I-8	DOUBLE TYPE 'S' INLET	5'-0.54"	564.08	- - - -	561.60	560.40	HO Co. SD4.23	EAST SIDE OF FUTURE SKID LOT	
I-9	DOUBLE TYPE 'S' INLET	5'-0.54"	560.53	- - - -	- - -	557.80	HO Co. SD4.23	EAST SIDE OF VEHICLE EXTRACTION AREA	
I-10	DOUBLE TYPE 'S' INLET	5'-0.54"	560.27	- - - -	557.00	556.90	HO Co. SD4.23	EAST SIDE OF VEHICLE EXTRACTION AREA	
I-11	DOUBLE TYPE 'S' INLET	5'-0.54"	560.30	- - - -	556.20	555.75	HO Co. SD4.23	EAST SIDE OF VEHICLE EXTRACTION AREA	
SD-1	MANHOLE	4'-0"	560.08	- - - -	556.70	556.60	HO Co. G5.12	NORTH END OF POND FOREBAY	
E-1	ENDWALL	11'-6"	- - - -	- - - -	- - -	556.50	HO Co. SD5.21	SWM POND FOREBAY	
E-2	ENDWALL	11'-6"	- - - -	- - - -	- - -	555.30	HO Co. SD5.21	SOUTH WEST CORNER OF SWM POND	
E-3	ENDWALL	6'-6"	- - - -	- - - -	- - -	555.00	HO Co. SD5.21	NORTH EAST CORNER OF SWM POND	
E-4	ENDWALL	6'-6"	- - - -	- - - -	- - -	572.00	HO Co. SD5.21	NORTH SIDE OF ACCESS ROAD AT THE ENTRANCE	
ES-1	END SECTION	12"	- - - -	- - - -	- - -	553.56	HO Co. SD5.52	END OF SWM POND OUTLET BARREL	
ES-2	END SECTION	12"	- - - -	- - - -	- - -	571.00	HO Co. SD5.52	NORTH SIDE OF ACCESS ROAD AT THE ENTRANCE	

PIPE SCHEDULE			
SIZE	TYPE	QUANTITY (L.F)	REMARKS
15"	CP, CLASS I	563	
18"	CP, CLASS I	339	
21"	CP, CLASS I	84	

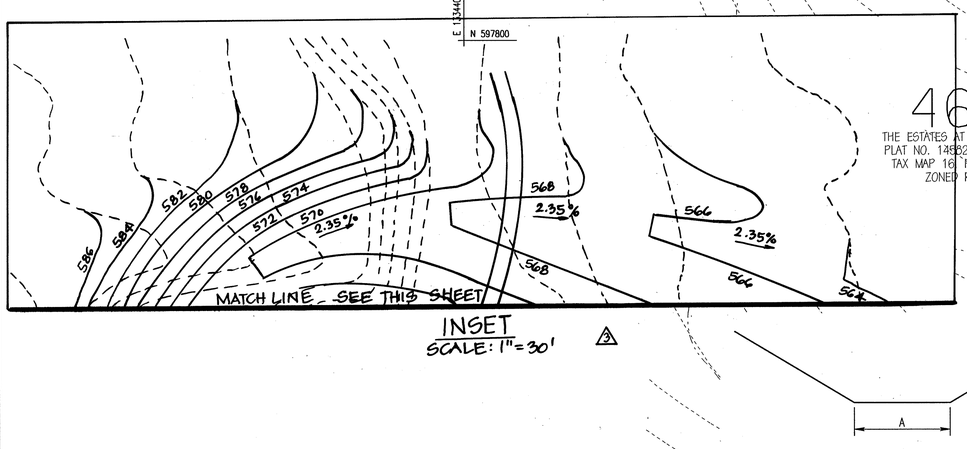

INSET
SCALE: 1"=30'

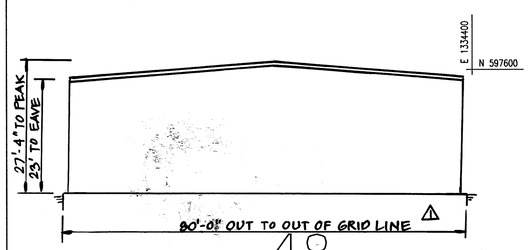

GRASS CHANNEL SCHEDULE			
CHANNEL ID	A	B	STABILIZATION
1	8 FT.	20	GRASS STABILIZATION
2	8 FT.	15	GRASS STABILIZATION
3	6 FT.	18	GRASS STABILIZATION
4	3 FT.	3	GRASS STABILIZATION
5	3 FT.	3	GRASS STABILIZATION

NOTE: GRASS CHANNELS ARE LABELLED ON SHEETS C-5 AND C-7 ONLY. ONLY THE BUBBLED NUMBER DESIGNATIONS AS INDICATED IN THE TABLE ABOVE HAVE BEEN USED

46
THE ESTATES AT SAND HILL
PLAT NO. 14582 & 14583
TAX MAP 16, PARCEL 3
ZONED RC

47
THE ESTATES AT SAND HILL
PLAT NO. 14582 & 14583
TAX MAP 16, PARCEL 3
ZONED RC

48
THE ESTATES AT SAND HILL
PLAT NO. 14582 & 14583
TAX MAP 16, PARCEL 3
ZONED RC

For Rev. & by Site Resources only

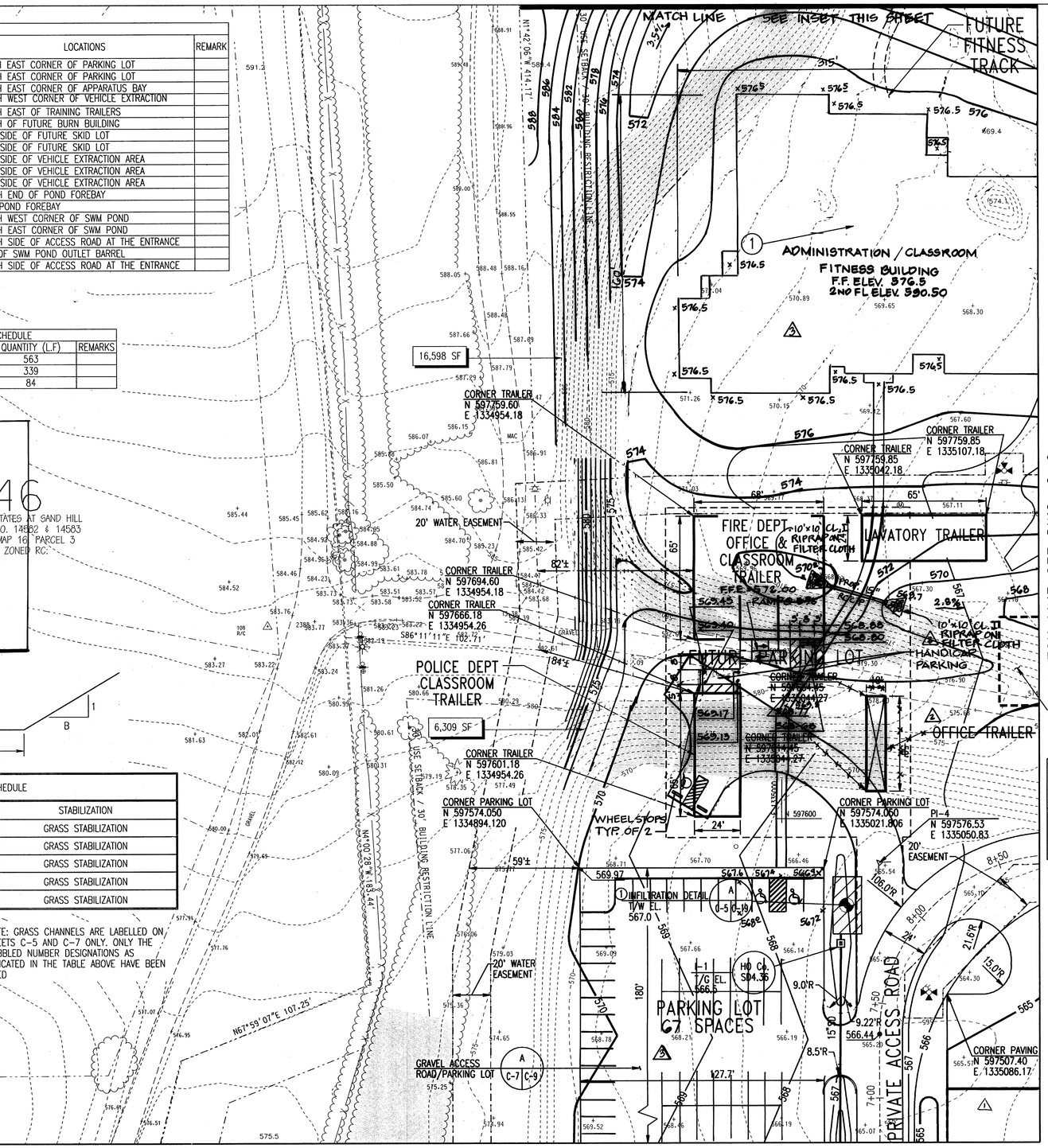

CURVE DATA
CURVE #4 (PI-4)
DELTA = 87.7°
D = 60.95'
R = 94.0 ft.
L = 136.3 ft.
T = 90.4ft.
E = 36.4.0 ft.

KEY
EXISTING SLOPES 25% OR GREATER
EXISTING SLOPES 15% TO 24.9%

GRAPHIC SCALE
30 20 10 0 30 60
SCALE: 1" = 30'

APPROVED: FOR PUBLIC WATER AND PRIVATE SEWERAGE SYSTEMS, HOWARD COUNTY HEALTH DEPARTMENT
COUNTY HEALTH OFFICER — DATE 3-5-03

APPROVED: HOWARD COUNTY DEPARTMENT OF PLANNING AND ZONING
DIRECTOR — DATE 3/10/03
CHIEF, DEVELOPMENT ENGINEERING DIVISION — DATE 3/11/03
CHIEF, DIVISION OF LAND DEVELOPMENT — DATE 3/17/03

DEPARTMENT OF PUBLIC WORKS
HOWARD COUNTY, MARYLAND
CHIEF, BUREAU OF UTILITIES — DATE

PREPARED BY:
WR&A
Whitman, Requardt and Associates, LLP.
801 South Caroline Street.
Baltimore, Maryland. 21231
410-235-3450

STATE OF MARYLAND — JAMES Z. WHITMAN — PROFESSIONAL ENGINEER — 10210

DES: C.D.
DRN: C.K.
CHK: A.O.
DATE: 12/16/2002

BY	NO.	REVISION	DATE
SRI	3	REVISED THE ADMIN./CLASS ROOM BLDG. W/WALKWAY AND PARKING AREA W/3 HANDICAPPED SPACES	7/13/05
SRI	3	REVISED NUMBER OF PARKING SPACES	7/13/05
CMD	2	ADDED 2 HANDICAP PARKING SPACES, REMOVED OFFICE TRAILER	10/26/04
CMD	1	REMOVE "FUTURE" LINE SYMBOLOGY + ADD BLDG. PROFILE	7/23/04

GRADING / PAVING PLAN

600' SCALE MAP NO. 16 BLOCK NO. 2 / 8

PUBLIC SAFETY TRAINING CENTER
AT ALPHA RIDGE LANDFILL
CAPITAL PROJECT NO. C-0182
HOWARD COUNTY, MARYLAND

SCALE AS SHOWN

SHEET 7 OF 39

C-5

SDP-03-36

M:\13490\pstcc05.dgn
Thu Feb 20 15:16:59 2003

PREPARED BY: SHERYL H. BERNARDO
STATE OF MARYLAND
LICENSED LANDSCAPE ARCHITECT
LICENSE REGISTRATION NO. 3127
NAME: Sheryl Bernardo DATE: 2/21/03

DEVELOPER'S/BUILDER'S CERTIFICATE

I/WE CERTIFY THAT THE LANDSCAPING SHOWN ON THIS PLAN WILL BE DONE ACCORDING TO THE PLAN. SECTION 16.124 OF THE HOWARD COUNTY CODE AND THE HOWARD COUNTY LANDSCAPE MANUAL. I/WE FURTHER CERTIFY THAT UPON COMPLETION A LETTER OF LANDSCAPE INSTALLATION, ACCOMPANIED BY AN EXECUTED ONE YEAR GUARANTEE OF PLANT MATERIALS, WILL BE SUBMITTED TO THE DEPARTMENT OF PLANNING AND ZONING.

Michael A. Giovanniello
NAME: Michael A. Giovanniello DATE: 2/25/03

LEGEND

EXISTING	DESCRIPTION
258	PROPOSED CONTOUR
258	EXISTING CONTOUR
	EXISTING WOODS LINE
	PROPOSED WOODS LINE
	STREAM
	WETLAND
	NO WOODY ZONE
	WETLAND BOUNDARY
	EXISTING FENCE
	PROPOSED FENCE
	EXISTING TREE

PLANTING SCHEDULE

SYMBOL	KEY	QUANTITY	BOTANICAL NAME	COMMON NAME	SIZE	ROOTS
TREES						
	AR	19	ACER RUBRUM "OCTOBER GLORY"	OCTOBER GLORY RED MAPLE	2½"-3" CAL	B&B
	QR	34	QUERCUS RUBRA	RED OAK	2½"-3"" CAL	B&B
	LC	72	CUPPRESSOCYPARIS LEYLANDI	LEYLAND CYPRESS	5'- 6' HT	B&B
	PT	45	PINUS THUNBERGIANA	JAPANESE BLACK PINE	6'- 8' HT	B&B
SHRUBS						
	IC	71	ILEX GLABRA "COMPACTA"	COMPACT INKBERRY	18"- 24"	CONT
	RG	65	BERBERIS THUNBERGII "ROSE GLOW"	ROSE GLOW BARBERRY	15"- 18"	CONT.
	EG	75	ABELIA "EDWARD GOUCHER"	EDWARD GOUCHER ABELIA	15"- 18"	CONT.

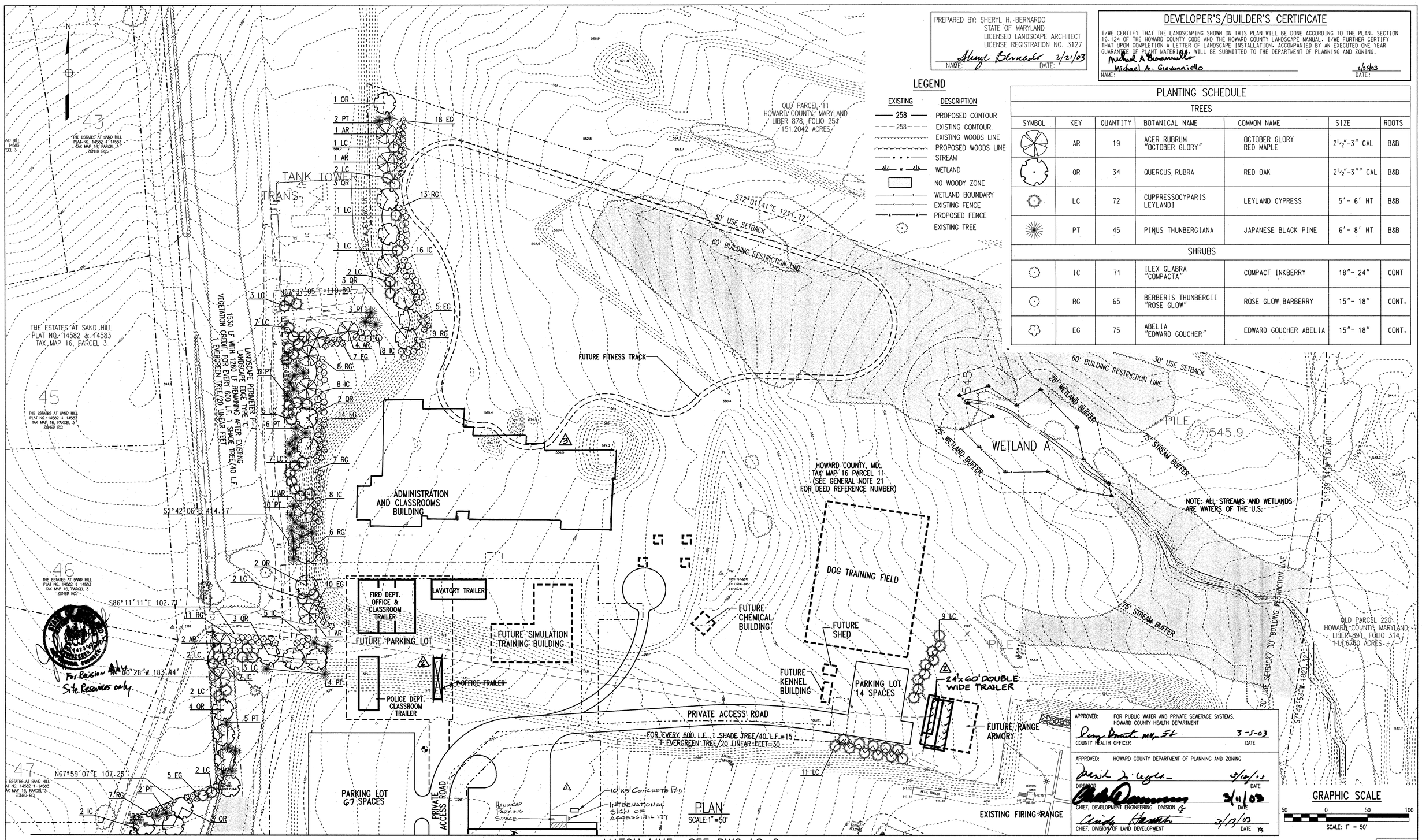

PLAN
SCALE: 1" = 50'

MATCH LINE SEE DWG LS-2

APPROVED: FOR PUBLIC WATER AND PRIVATE SEWERAGE SYSTEMS, HOWARD COUNTY HEALTH DEPARTMENT
COUNTY HEALTH OFFICER — DATE 3-5-03

APPROVED: HOWARD COUNTY DEPARTMENT OF PLANNING AND ZONING
DIRECTOR — DATE 3/12/03
CHIEF, DEVELOPMENT ENGINEERING DIVISION — DATE 3/11/03
CHIEF, DIVISION OF LAND DEVELOPMENT — DATE 3/11/03

GRAPHIC SCALE
50 0 50 100
SCALE: 1" = 50'

LS-1

DEPARTMENT OF PUBLIC WORKS
HOWARD COUNTY, MARYLAND
CHIEF, BUREAU OF UTILITIES DATE

PREPARED BY:
Whitman, Requardt and Associates, LLP.
801 South Caroline Street.
Baltimore, Maryland. 21231
410-235-3450

STATE OF MARYLAND — JAMES A. AVERITT — PROFESSIONAL ENGINEER

BY	NO.	REVISION	DATE
SR1	3	REVISED TRE ADMIN/CLASS ROOM BLDG W/ WALKWAY AND PARKING AREA W/ 3 HANDICAPPED SPACES REVISED NUMBER OF PARKING SPACES	7/13/05
CMD	2	ADDED 24'x60' DOUBLE WIDE TRAILER REMOVED OFFICE TRAILER	10/26/04
CMD	1	ADDED PARKING + 10'x5' CONCRETE PAD	7/23/04

DES: H.W.P. S.H.B.
DRN: E.M.
CHK: H.W.P.
DATE: 12/16/2002

LANDSCAPE PLAN - NORTH

600' SCALE MAP NO. 16 BLOCK NO. 2 / 8

PUBLIC SAFETY TRAINING CENTER
AT ALPHA RIDGE LANDFILL
CAPITAL PROJECT NO. C-0182
HOWARD COUNTY, MARYLAND

SCALE AS SHOWN

SHEET 35 OF 39

W.O./13490/

SDP-03-36

M:\13490\PSTCLS1.DGN
Thu Feb 20 15:42:37 2003

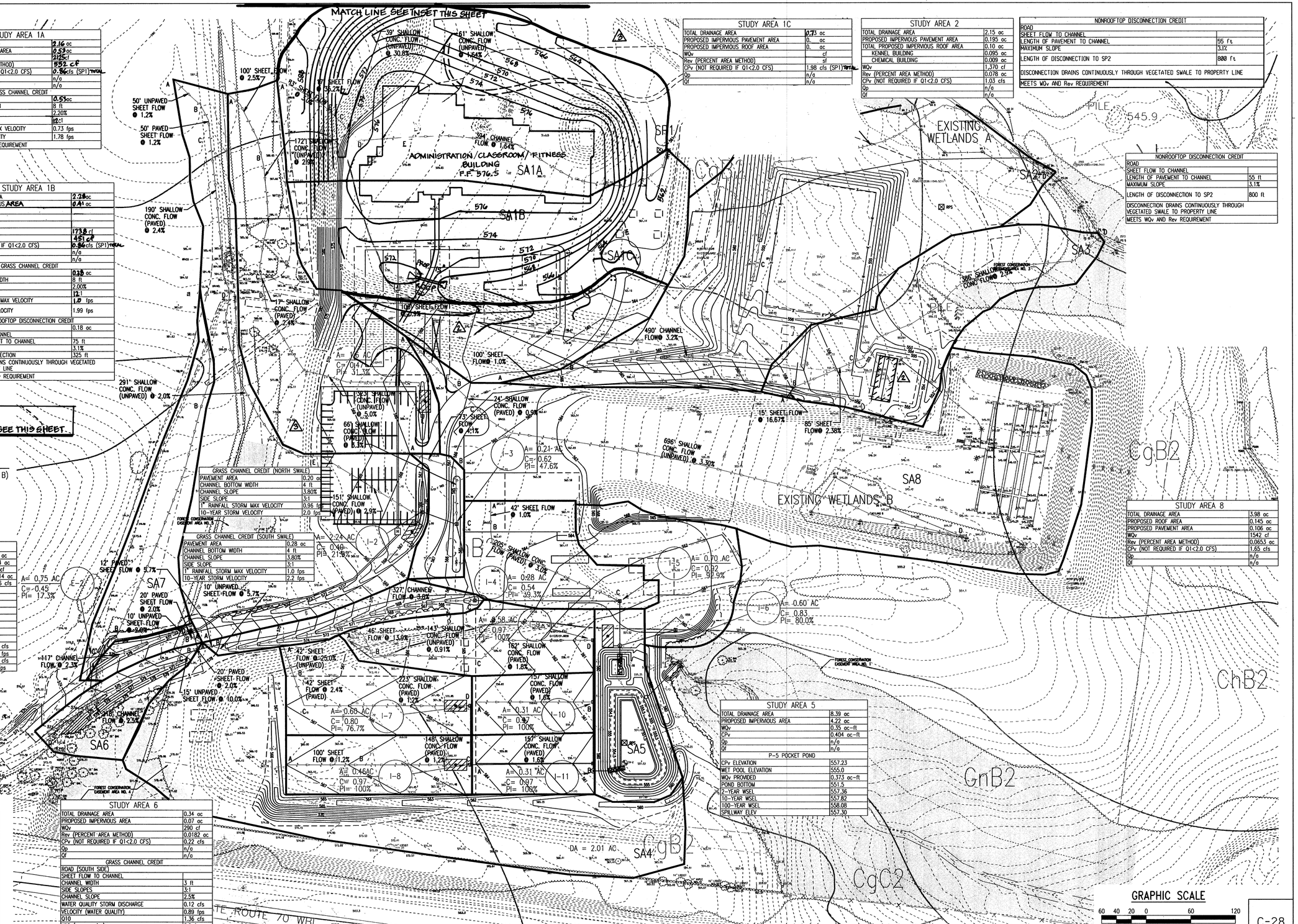

STUDY AREA 1A	
TOTAL DRAINAGE AREA	2.16 ac
PROPOSED IMPERVIOUS AREA	0.53 ac
WQv	2125 cf
Rev (PERCENT AREA METHOD)	552 cf
CPv (NOT REQUIRED IF Q1<2.0 CFS)	0.86 cfs (SP1) TOTAL
Qp	n/a
Qf	n/a
GRASS CHANNEL CREDIT	
ROOFTOP AREA	0.53 ac
CHANNEL BOTTOM WIDTH	8 ft
CHANNEL SLOPE	2.20%
SIDE SLOPE	2:1
1" RAINFALL STORM MAX VELOCITY	0.73 fps
10-YEAR STORM VELOCITY	1.78 fps
MEETS WQv AND Rev REQUIREMENT	

STUDY AREA 1B	
TOTAL DRAINAGE AREA	2.28 ac
PROPOSED IMPERVIOUS AREA	0.41 ac
WQv	1738 cf
Rev	451 cf
CPv (NOT REQUIRED IF Q1<2.0 CFS)	0.94 cfs (SP1) TOTAL
Qp	n/a
Qf	n/a
GRASS CHANNEL CREDIT	
ROOFTOP AREA	0.13 ac
CHANNEL BOTTOM WIDTH	8 ft
CHANNEL SLOPE	2.00%
SIDE SLOPE	2:1
1" RAINFALL STORM MAX VELOCITY	1.0 fps
10-YEAR STORM VELOCITY	1.99 fps
NONROOFTOP DISCONNECTION CREDIT	
PARKING AREA	0.18 ac
SHEET FLOW TO CHANNEL	
LENGTH OF PAVEMENT TO CHANNEL	75 ft
MAXIMUM SLOPE	3.1%
LENGTH OF DISCONNECTION	325 ft
DISCONNECTION DRAINS CONTINUOUSLY THROUGH VEGETATED SWALE TO PROPERTY LINE	
MEETS WQv AND Rev REQUIREMENT	

STUDY AREA 1C	
TOTAL DRAINAGE AREA	0.73 ac
PROPOSED IMPERVIOUS PAVEMENT AREA	0. ac
PROPOSED IMPERVIOUS ROOF AREA	0. ac
WQv	cf
Rev (PERCENT AREA METHOD)	sf
CPv (NOT REQUIRED IF Q1<2.0 CFS)	1.98 cfs (SP1) TOTAL
Qp	n/a
Qf	n/a

STUDY AREA 2	
TOTAL DRAINAGE AREA	2.15 ac
PROPOSED IMPERVIOUS PAVEMENT AREA	0.195 ac
TOTAL PROPOSED IMPERVIOUS ROOF AREA	0.10 ac
KENNEL BUILDING	0.095 ac
CHEMICAL BUILDING	0.009 ac
WQv	1,370 cf
Rev (PERCENT AREA METHOD)	0.078 ac
CPv (NOT REQUIRED IF Q1<2.0 CFS)	1.03 cfs
Qp	n/a
Qf	n/a

NONROOFTOP DISCONNECTION CREDIT	
ROAD	
SHEET FLOW TO CHANNEL	
LENGTH OF PAVEMENT TO CHANNEL	55 ft
MAXIMUM SLOPE	3.1%
LENGTH OF DISCONNECTION TO SP2	800 ft
DISCONNECTION DRAINS CONTINUOUSLY THROUGH VEGETATED SWALE TO PROPERTY LINE	
MEETS WQv AND Rev REQUIREMENT	

NONROOFTOP DISCONNECTION CREDIT	
ROAD	
SHEET FLOW TO CHANNEL	
LENGTH OF PAVEMENT TO CHANNEL	55 ft
MAXIMUM SLOPE	3.1%
LENGTH OF DISCONNECTION TO SP2	800 ft
DISCONNECTION DRAINS CONTINUOUSLY THROUGH VEGETATED SWALE TO PROPERTY LINE	
MEETS WQv AND Rev REQUIREMENT	

LEGEND

PROPOSED	DESCRIPTION
	DRAINAGE DIVIDE
A — B	TIME OF CONCENTRATION
GnB2 / CgB2	SOILS DIVIDE

MATCH LINE SEE THIS SHEET

INSET
SCALE: 1"=30'

SOILS LEGEND

CgC2 - CHESTER GRAVELLY SILT LOAM - 8-15% SLOPES (HSG B)
CgB2 - CHESTER GRAVELLY SILT LOAM, 3-8% SLOPES (HSG B)
ChB2 - CHESTER SILT LOAM, 3-8% SLOPES (HSG B)
GnB2 - BLENVILLE SILT LOAM, 3-8% SLOPES (HSG C)

GRASS CHANNEL CREDIT (NORTH SWALE)	
PAVEMENT AREA	0.20 ac
CHANNEL BOTTOM WIDTH	4 ft
CHANNEL SLOPE	3.80%
SIDE SLOPE	3:1
1" RAINFALL STORM MAX VELOCITY	0.96 fps
10-YEAR STORM VELOCITY	2.0 fps

GRASS CHANNEL CREDIT (SOUTH SWALE)	
PAVEMENT AREA	0.28 ac
CHANNEL BOTTOM WIDTH	4 ft
CHANNEL SLOPE	3.80%
SIDE SLOPE	3:1
1" RAINFALL STORM MAX VELOCITY	1.0 fps
10-YEAR STORM VELOCITY	2.2 fps

STUDY AREA 7	
TOTAL DRAINAGE AREA	0.10 ac
PROPOSED IMPERVIOUS AREA	0.044 ac
WQv	162 cf
Rev (PERCENT AREA METHOD)	0.0114 ac
CPv (NOT REQUIRED IF Q1<2.0 CFS)	0.16 cfs
Qp	n/a
Qf	n/a
GRASS CHANNEL CREDIT	
ROAD (SOUTH SIDE)	
SHEET FLOW TO CHANNEL	
CHANNEL WIDTH	3 ft
SIDE SLOPES	3:1
CHANNEL SLOPE	2.3%
WATER QUALITY STORM DISCHARGE	0.62 cfs
VELOCITY (WATER QUALITY)	0.89 fps
Q10	0.52 cfs
V10 (non erosive)	1.4 fps

STUDY AREA 6	
TOTAL DRAINAGE AREA	0.34 ac
PROPOSED IMPERVIOUS AREA	0.07 ac
WQv	290 cf
Rev (PERCENT AREA METHOD)	0.0182 ac
CPv (NOT REQUIRED IF Q1<2.0 CFS)	0.22 cfs
Qp	n/a
Qf	n/a
GRASS CHANNEL CREDIT	
ROAD (SOUTH SIDE)	
SHEET FLOW TO CHANNEL	
CHANNEL WIDTH	3 ft
SIDE SLOPES	3:1
CHANNEL SLOPE	2.5%
WATER QUALITY STORM DISCHARGE	0.12 cfs
VELOCITY (WATER QUALITY)	0.89 fps
Q10	1.36 cfs
V10 (non erosive)	2.0 fps

STUDY AREA 5	
TOTAL DRAINAGE AREA	8.39 ac
PROPOSED IMPERVIOUS AREA	4.22 ac
WQv	0.35 ac-ft
CPv	0.404 ac-ft
Qp	n/a
Qf	n/a
P-5 POCKET POND	
CPv ELEVATION	557.23
WET POOL ELEVATION	555.0
WQv PROVIDED	0.373 ac-ft
POND BOTTOM	551.5
2-YEAR WSEL	557.36
10-YEAR WSEL	557.82
100-YEAR WSEL	558.08
SPILLWAY ELEV	557.30

STUDY AREA 8	
TOTAL DRAINAGE AREA	3.98 ac
PROPOSED ROOF AREA	0.145 ac
PROPOSED PAVEMENT AREA	0.106 ac
WQv	1542 cf
Rev (PERCENT AREA METHOD)	0.0653 ac
CPv (NOT REQUIRED IF Q1<2.0 CFS)	1.65 cfs
Qp	n/a
Qf	n/a

GRAPHIC SCALE
60 40 20 0 60 120
SCALE: 1" = 60'

For Revision 3 by Site Resources Only

APPROVED: FOR PUBLIC WATER AND PRIVATE SEWERAGE SYSTEMS, HOWARD COUNTY HEALTH DEPARTMENT
COUNTY HEALTH OFFICER — DATE 3-5-03

APPROVED: HOWARD COUNTY DEPARTMENT OF PLANNING AND ZONING
DIRECTOR — DATE 3/18/03
CHIEF, DEVELOPMENT ENGINEERING DIVISION — DATE 3/11/03
CHIEF, DIVISION OF LAND DEVELOPMENT — DATE 3/17/03

DEPARTMENT OF PUBLIC WORKS
HOWARD COUNTY, MARYLAND
CHIEF, BUREAU OF UTILITIES — DATE

PREPARED BY :
WR&A
Whitman, Requardt and Associates, LLP.
801 South Caroline Street.
Baltimore, Maryland. 21231
410-235-3450

STATE OF MARYLAND — JOHN A. AWNETT JR. — PROFESSIONAL ENGINEER

DES: C.D.
DRN: C.K.
CHK: A.O.
DATE: 12/16/2002

BY	NO.	REVISION	DATE
SR1	3	REVISED THE ADMIN./ CLASS ROOM BLDG. W/ WALKWAY AND PARKING AREA W/ 3 HANDICAPPED SPACES	7/13/05
SR1	3	REVISED NUMBER OF PARKING SPACES	7/13/05
CMD	2	ADDED 24'X60' DOUBLE WIDE TRAILER REMOVED OFFICE TRAILER	10/26/04

DRAINAGE AREA MAP

600' SCALE MAP NO. 16 BLOCK NO. 2 / 8

PUBLIC SAFETY TRAINING CENTER
AT ALPHA RIDGE LANDFILL
CAPITAL PROJECT NO. C-0182
HOWARD COUNTY, MARYLAND

C-28

SCALE AS SHOWN

SHEET 30 OF 39

SDP-03-36

MyU3490\psfcc28.dgn
Thu Feb 20 15:44:07 2003

TRAP NUMBER	1	
Trap Type	ST-II	
Drainage Area :	4.9	Ac.
Storage Req'd :	17640	Ft.³
Storage Provide	20,732	Ft.³
Weir Length :	22'	Ft.
Wet Storage :	8,820	Ft.³
Dry Storage	8,820	Ft.³
Cleanout Elev.	560.0	Ft.
Bottom Elev.	553.0	Ft.
Wet Storage Elev.	561.25	Ft.
Crest Elev.	563.00	Ft.
Top of Embank.	564.00	Ft.
Riser Dia.	–	
Outfall Dia.	–	
Outfall Inv.	–	
Drawdown Inv.	–	
Q2 Ex.	1.6	cfs
Q2 Prop.	1	cfs

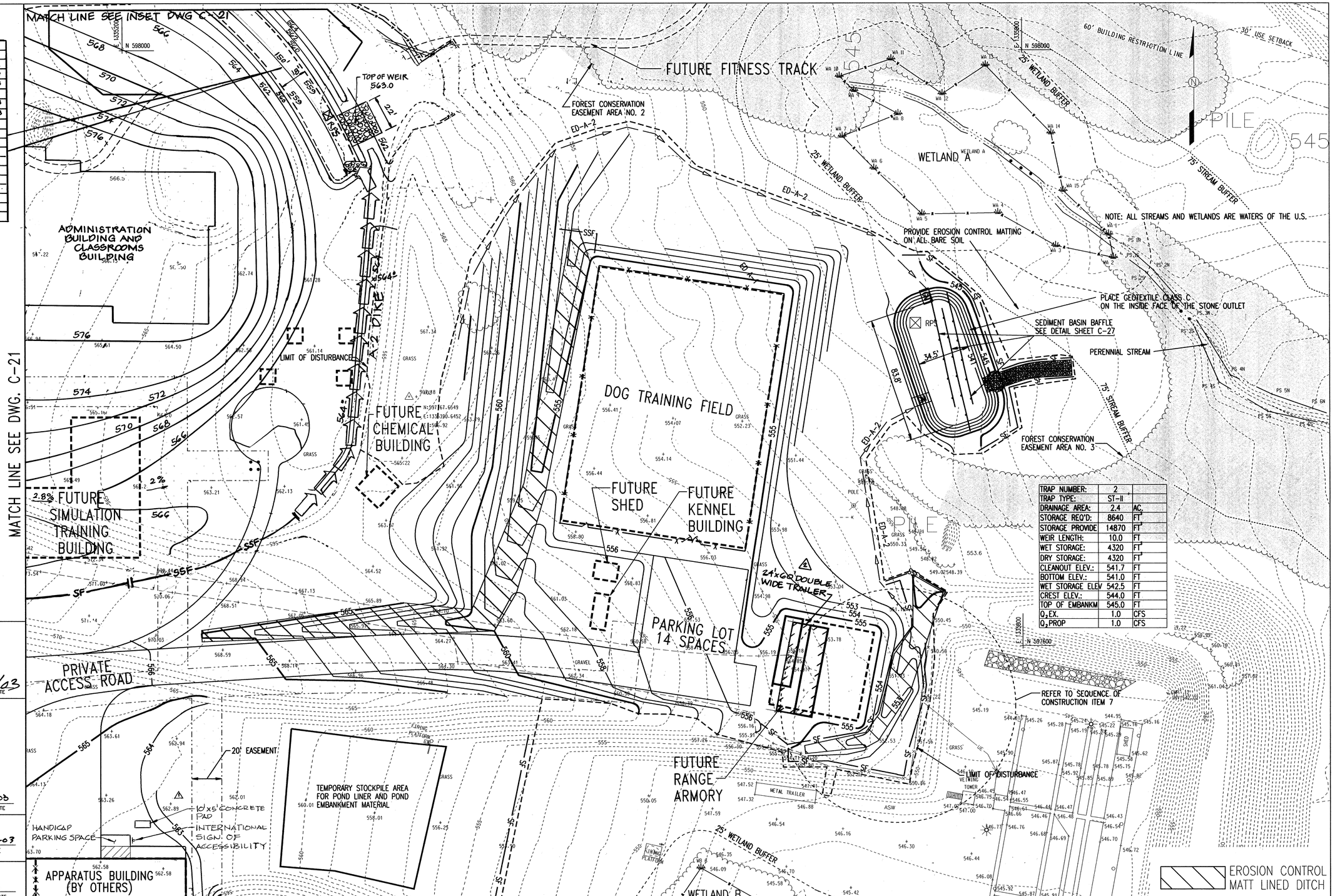

TRAP NUMBER:	2	
TRAP TYPE:	ST-II	
DRAINAGE AREA:	2.4	AC.
STORAGE REQ'D:	8640	FT³
STORAGE PROVIDE	14870	FT³
WEIR LENGTH:	10.0	FT
WET STORAGE:	4320	FT³
DRY STORAGE:	4320	FT³
CLEANOUT ELEV.:	541.7	FT
BOTTOM ELEV.:	541.0	FT
WET STORAGE ELEV	542.5	FT
CREST ELEV.:	544.0	FT
TOP OF EMBANKM	545.0	FT
Q_2EX.	1.0	CFS
Q_2PROP	1.0	CFS

For Revision 3 by Site Resources only

THIS DEVELOPMENT PLAN IS APPROVED FOR SOIL EROSION AND SEDIMENT CONTROL BY THE HOWARD SOIL CONSERVATION DISTRICT.

HOWARD S.C.D. — DATE 3/4/03

REVIEWED FOR HOWARD S.C.D. AND MEETS THE TECHNICAL REQUIREMENTS.

USDA-Natural Resources Conservation Service — DATE 3/4/03

BY THE ENGINEER:
"I CERTIFY THAT THIS PLAN FOR EROSION AND SEDIMENT CONTROL REPRESENTS A PRACTICAL AND WORKABLE PLAN BASED ON MY PERSONAL KNOWLEDGE OF THE SITE CONDITIONS AND THAT IT WAS PREPARED IN ACCORDANCE WITH THE REQUIREMENTS OF THE HOWARD SOIL CONSERVATION DISTRICT".

JAMES A. AVIRETT, Jr. — DATE 2/21/03

BY THE DEVELOPER:
"I/WE CERTIFY THAT ALL DEVELOPMENT AND CONSTRUCTION WILL BE DONE ACCORDING TO THIS PLAN, AND THAT ANY RESPONSIBLE PERSONNEL INVOLVED IN THE CONSTRUCTION PROJECT WILL HAVE A CERTIFICATE OF ATTENDANCE AT A DEPARTMENT OF ENVIRONMENT APPROVED TRAINING PROGRAM FOR THE CONTROL OF SEDIMENT AND EROSION BEFORE BEGINNING THE PROJECT. I ALSO AUTHORIZE PERIODIC ON-SITE INSPECTION BY THE HOWARD SOIL CONSERVATION DISTRICT".

Michael A. Giovanniello — DATE 2/27/03

APPROVED: FOR PUBLIC WATER AND PRIVATE SEWERAGE SYSTEMS, HOWARD COUNTY HEALTH DEPARTMENT

COUNTY HEALTH OFFICER — DATE 3-5-03

APPROVED: HOWARD COUNTY DEPARTMENT OF PLANNING AND ZONING

DIRECTOR — DATE 3/10/03

CHIEF, DEVELOPMENT ENGINEERING DIVISION — DATE 3/11/03

CHIEF, DIVISION OF LAND DEVELOPMENT — DATE 3/17/03

DEPARTMENT OF PUBLIC WORKS
HOWARD COUNTY, MARYLAND

CHIEF, BUREAU OF UTILITIES — DATE

PREPARED BY :
WR&A
Whitman, Requardt and Associates, LLP.
801 South Caroline Street.
Baltimore, Maryland. 21231
410-235-3450

STATE OF MARYLAND — JAMES A. AVIRETT JR. — No. 10810 — PROFESSIONAL ENGINEER

DES: C.D.
DRN: C.K.
CHK: A.O.
DATE: 12/16/2002

BY	NO.	REVISION	DATE
SRI	3	REVISED THE ADMIN./CLASS ROOM BLDG. W/ WALKWAY AND PARKING AREA W/ 3 HANDICAPPED SPACES.	7/13/05
CMD	2	ADDED 24'x60' DOUBLE WIDE TRAILER	10/26/04
CMD	1	REMOVE 'FUTURE', ADDED PARKING + 10'x5' CONC PAD	7/23/03

EROSION AND SEDIMENT CONTROL PLAN

600' SCALE MAP NO. 16 BLOCK NO. 2 / 8

PUBLIC SAFETY TRAINING CENTER
AT ALPHA RIDGE LANDFILL
CAPITAL PROJECT NO. C-0182
HOWARD COUNTY, MARYLAND

GRAPHIC SCALE
30 20 10 0 30 60
SCALE: 1" = 30'

C-22

SCALE AS SHOWN

SHEET 24 OF 39

SDP-03-36

M:\13490\pstcc22.dgn
Thu Feb 20 15:40:18 2003

SEDIMENT AND EROSION CONTROL LEGEND

	STABILIZED CONSTRUCTION ENTRANCE
SF	SILT FENCE
A-2 B-3	EARTH DIKE
	LIMIT OF DISTURBANCE
CD	STONE CHECK DAM
TSOS	STONE OUTLET STRUCTURE
	ROCK OUTLET PROTECTION
SIP	STANDARD INLET PROTECTION
RRP	RIP-RAP INFLOW PROTECTION
	SEDIMENT BASIN BAFFLE
RPS	REMOVABLE PUMPING STATION

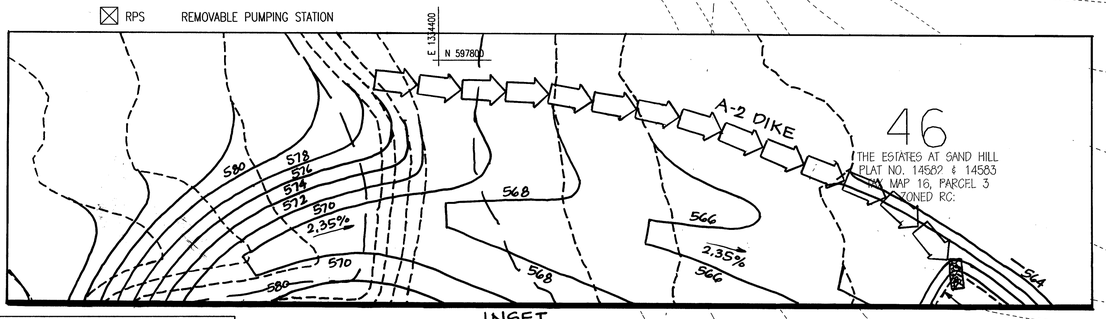

INSET
SCALE: 1"=30'

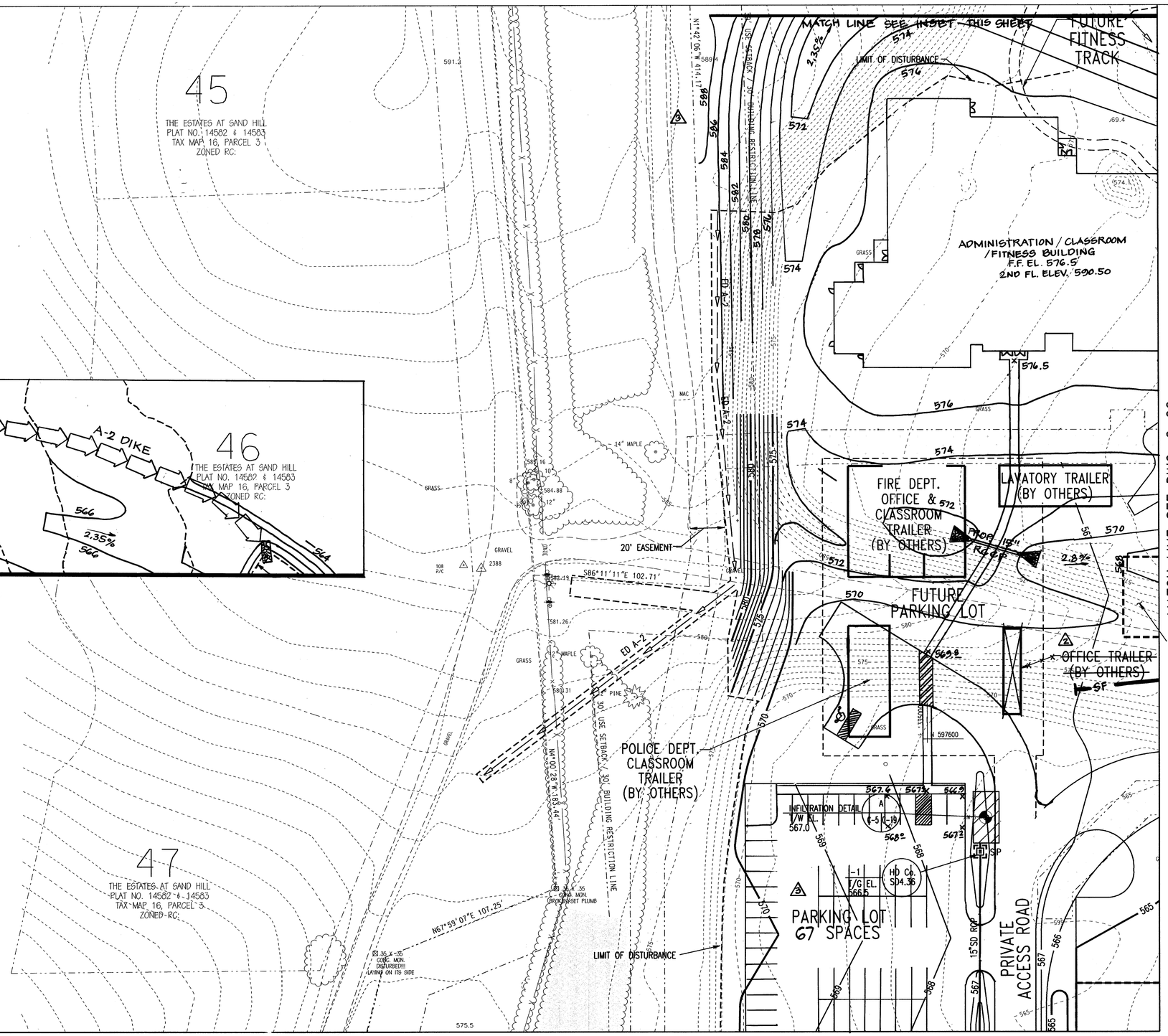

THIS DEVELOPMENT PLAN IS APPROVED FOR SOIL EROSION AND SEDIMENT CONTROL BY THE HOWARD SOIL CONSERVATION DISTRICT.

HOWARD S.C.D. — DATE 3/4/03

REVIEWED FOR HOWARD S.C.D. AND MEETS THE TECHNICAL REQUIREMENTS.

USDA-Natural Resources Conservation Service — DATE 3/4/03

BY THE ENGINEER:
"I CERTIFY THAT THIS PLAN FOR EROSION AND SEDIMENT CONTROL REPRESENTS A PRACTICAL AND WORKABLE PLAN BASED ON MY PERSONAL KNOWLEDGE OF THE SITE CONDITIONS AND THAT IT WAS PREPARED IN ACCORDANCE WITH THE REQUIREMENTS OF THE HOWARD SOIL CONSERVATION DISTRICT".

JAMES A. AVIRETT, Jr. — DATE 2/21/03

BY THE DEVELOPER:
"I/WE CERTIFY THAT ALL DEVELOPMENT AND CONSTRUCTION WILL BE DONE ACCORDING TO THIS PLAN, AND THAT ANY RESPONSIBLE PERSONNEL INVOLVED IN THE CONSTRUCTION PROJECT WILL HAVE A CERTIFICATE OF ATTENDANCE AT A DEPARTMENT OF ENVIRONMENT APPROVED TRAINING PROGRAM FOR THE CONTROL OF SEDIMENT AND EROSION BEFORE BEGINNING THE PROJECT. I ALSO AUTHORIZE PERIODIC ON-SITE INSPECTION BY THE HOWARD SOIL CONSERVATION DISTRICT".

Michael A. Giovaniello
X — DATE 2/25/03

APPROVED: FOR PUBLIC WATER AND PRIVATE SEWERAGE SYSTEMS, HOWARD COUNTY HEALTH DEPARTMENT

COUNTY HEALTH OFFICER — DATE 3-5-03

APPROVED: HOWARD COUNTY DEPARTMENT OF PLANNING AND ZONING

DIRECTOR — DATE 3/10/03

CHIEF, DEVELOPMENT ENGINEERING DIVISION — DATE 3/11/03

CHIEF, DIVISION OF LAND DEVELOPMENT — DATE 3/12/03

DEPARTMENT OF PUBLIC WORKS
HOWARD COUNTY, MARYLAND

CHIEF, BUREAU OF UTILITIES — DATE

GRAPHIC SCALE
30 20 10 0 30 60
SCALE: 1" = 30'

C-21

PREPARED BY:
WR&A
Whitman, Requardt and Associates, LLP.
801 South Caroline Street.
Baltimore, Maryland. 21231
410-235-3450

DES: C.D.	SRI	3	REVISED THE ADMIN./CLASS ROOM BLDG. w/ WALKWAY AND PARKING AREA w/ 3 HANDICAPPED SPACES	7/13/05
DRN: C.K.	SRI	3	REVISED NUMBER OF PARKING SPACES.	7/13/05
CHK: A.O.				
DATE: 12/16/2002	CMD	2	REMOVE OFFICE TRAILER	10/26/04
	BY	NO.	REVISION	DATE

EROSION AND SEDIMENT CONTROL PLAN

600' SCALE MAP NO. 16 BLOCK NO. 2 / 8

PUBLIC SAFETY TRAINING CENTER
AT ALPHA RIDGE LANDFILL
CAPITAL PROJECT NO. C-0182
HOWARD COUNTY, MARYLAND

SCALE AS SHOWN

SHEET 23 OF 39

SDP-03-36

M:\13490\pstcc2L.dgn
Thu Feb 20 15:40:36 2003

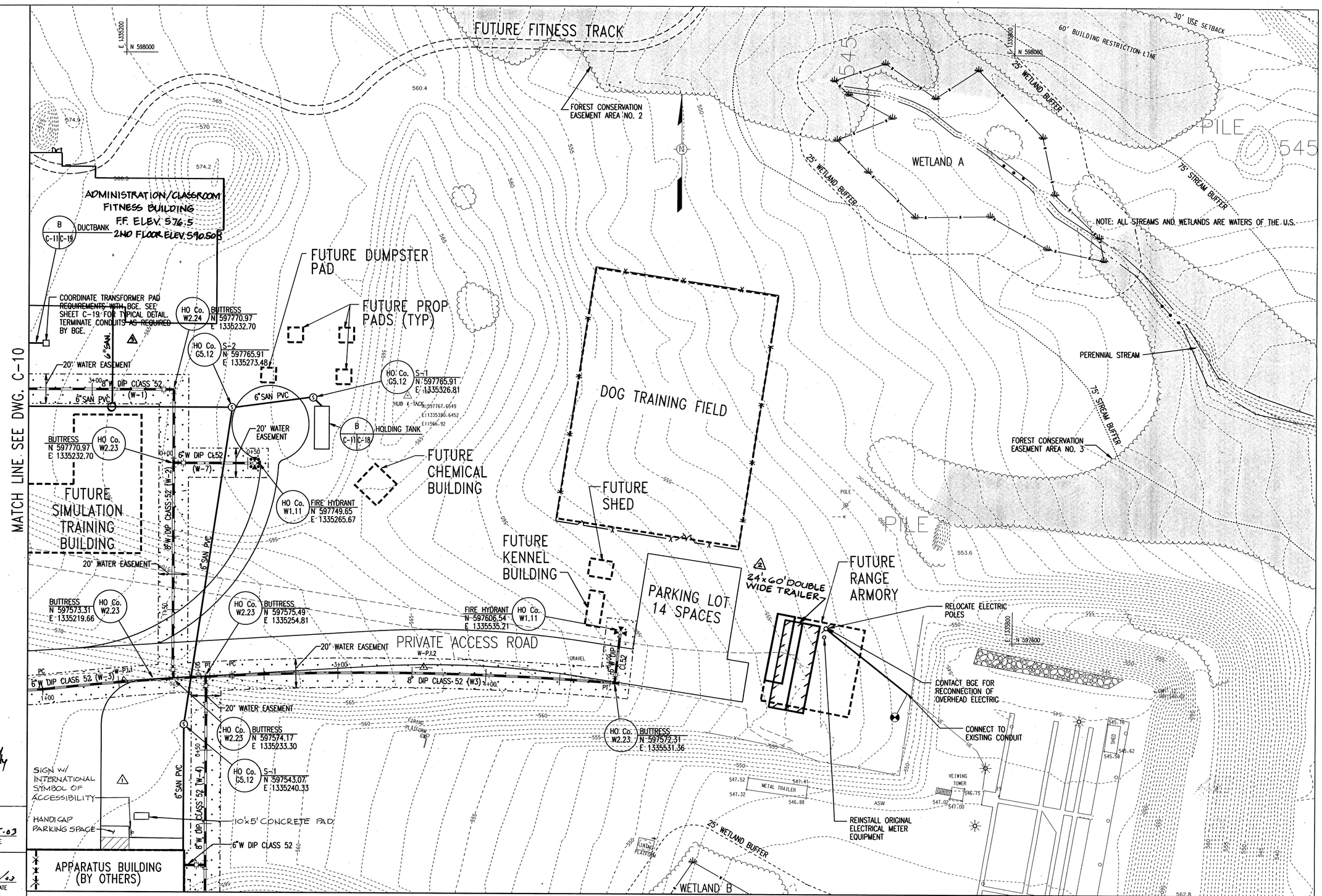

For Revision 3 by Site Resources only

APPROVED: FOR PUBLIC WATER AND PRIVATE SEWERAGE SYSTEMS, HOWARD COUNTY HEALTH DEPARTMENT

COUNTY HEALTH OFFICER — DATE 3-5-03

APPROVED: HOWARD COUNTY DEPARTMENT OF PLANNING AND ZONING

DIRECTOR — DATE 3/18/03

CHIEF, DEVELOPMENT ENGINEERING DIVISION — DATE 3/11/03

CHIEF, DIVISION OF LAND DEVELOPMENT — DATE 3/17/03

DEPARTMENT OF PUBLIC WORKS
HOWARD COUNTY, MARYLAND

CHIEF, BUREAU OF UTILITIES — DATE

PREPARED BY :

WR&A
Whitman, Requardt and Associates, LLP.
801 South Caroline Street.
Baltimore, Maryland. 21231
410-235-3450

STATE OF MARYLAND — JAMES A. AVIRETT — PROFESSIONAL ENGINEER

DES: C.D.
DRN: C.K.
CHK: A.O.
DATE: 12/16/2002

BY	NO.	REVISION	DATE
SRI	3	REVISED THE ADMIN./CLASS ROOM BLDG. W/ WALKWAY AND PARKING AREA W/ 3 HANDICAPPED SPACES	7/13/05
CMD	2	ADDED 24'x60' DOUBLE WIDE TRAILER	10/26/04
CMD	1	REMOVE 'FUTURE', ADDED PARKING + 10'x5' CONC. PAD	7/23/04

UTILITY PLAN

600' SCALE MAP NO. 16 BLOCK NO. 2 / 8

PUBLIC SAFETY TRAINING CENTER
AT ALPHA RIDGE LANDFILL
CAPITAL PROJECT NO. C-0182
HOWARD COUNTY, MARYLAND

C-11

SCALE AS SHOWN

SHEET 13 OF 39

SDP-03-36

M:\13490\pstccll.dgn
Thu Feb 29 15:38:55 2003

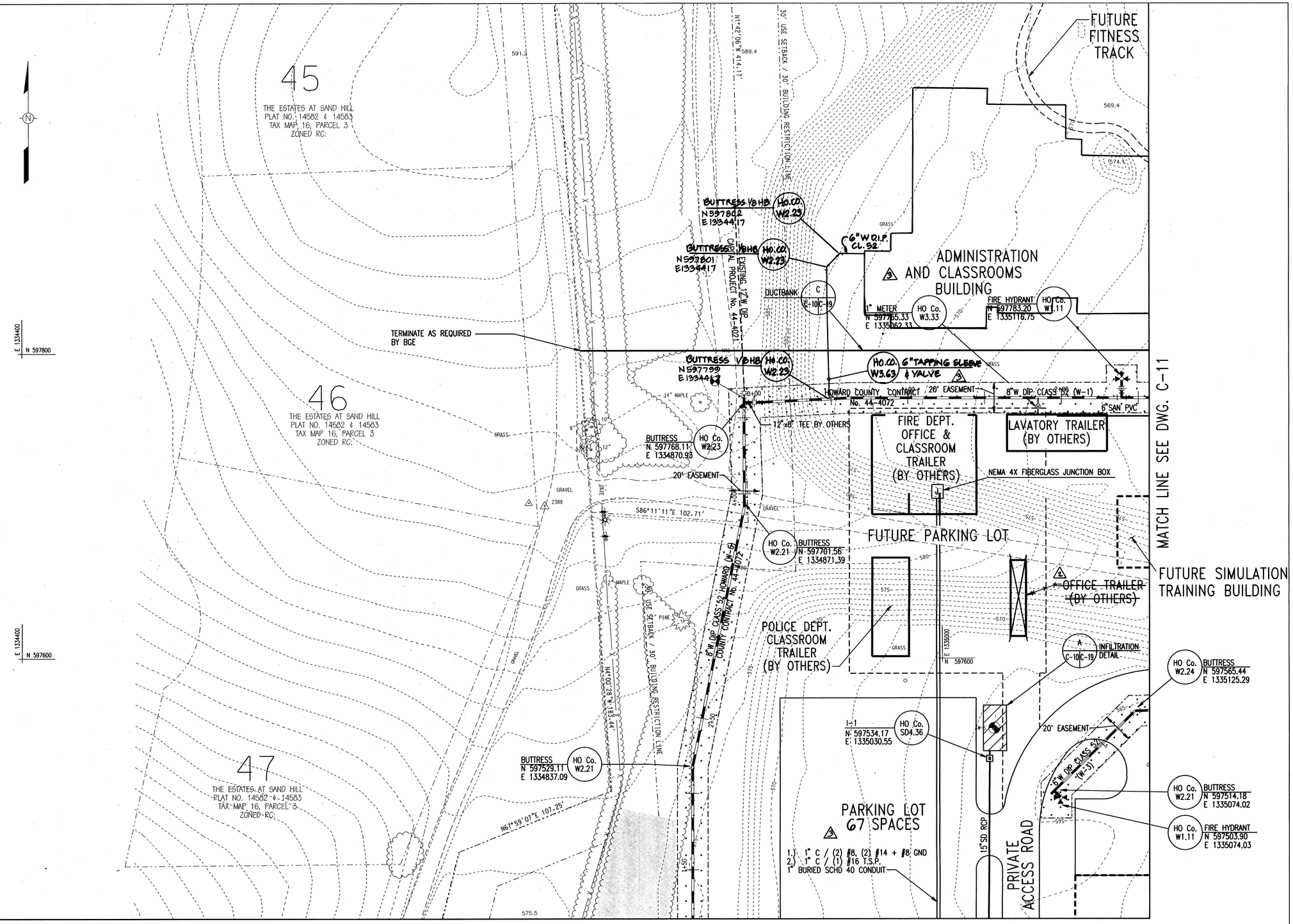

For Kaiser by Site Resources Inc.

APPROVED: FOR PUBLIC WATER AND PRIVATE SEWERAGE SYSTEMS, HOWARD COUNTY HEALTH DEPARTMENT

COUNTY HEALTH OFFICER — DATE 3-5-03

APPROVED: HOWARD COUNTY DEPARTMENT OF PLANNING AND ZONING

DIRECTOR — DATE 3/10/03

CHIEF, DEVELOPMENT ENGINEERING DIVISION — DATE 3/10/03

CHIEF, DIVISION OF LAND DEVELOPMENT — DATE 3/12/03

DEPARTMENT OF PUBLIC WORKS
HOWARD COUNTY, MARYLAND

CHIEF, BUREAU OF UTILITIES — DATE

PREPARED BY :

WR&A

Whitman, Requardt and Associates, LLP.
801 South Caroline Street.
Baltimore, Maryland. 21231
410-235-3450

STATE OF MARYLAND — JAMES A. AVIRETT — No. 10210 — PROFESSIONAL ENGINEER

DES: C.D.
DRN: C.K.
CHK: A.O.
DATE: 12/16/2002

BY	NO.	REVISION	DATE
SRI	3	REVISED THE ADMIN./CLASS ROOM BLDG. W/WALKWAY AND PARKING AREA W/ 3 HANDICAPPED SPACES.	7/13/05
SRI	3	REVISED NUMBER OF PARKING SPACES	7/13/05
CMD	2	REMOVE OFFICE TRAILER	10/26/04

UTILITY PLAN

600' SCALE MAP NO. 16 BLOCK NO. 2 / 8

PUBLIC SAFETY TRAINING CENTER
AT ALPHA RIDGE LANDFILL
CAPITAL PROJECT NO. C-0182
HOWARD COUNTY, MARYLAND

GRAPHIC SCALE
30 20 10 0 30 60
SCALE: 1" = 30'

C-10

SCALE AS SHOWN

SHEET 12 OF 39

SDP-03-36

M:\13490\pstcal0.dgn
Thu Feb 20 15:38:44 2003

WETLANDS TABLE

LINE	COURSE	DIST.
WL6	N31°15'28"W	41.64'
WL7	N40°16'02"W	45.55'
WL8	N48°01'45"W	26.93'
WL9	N48°27'54"W	53.44'
WL10	N11°43'02"W	39.39'
WL11	N43°41'11"W	63.11'
WL12	S56°27'17"W	34.58'
WL13	N55°39'09"W	41.28'
WL14	S71°33'08"W	36.37'
WL15	S45°23'32"E	13.63'
WL16	S62°01'33"E	33.46'
WL17	S67°57'13"W	40.26'
WL18	S44°19'14"E	30.08'
WL19	S46°16'56"E	44.31'
WL20	N89°06'56"E	50.56'
WL21	S60°06'27"E	44.28'
WL22	S78°22'40"E	39.20'
WL23	S65°16'16"E	23.79'
WL24	S41°43'34"E	47.63'
WL25	S23°53'42"E	41.92'
WL26	S58°50'57"E	37.93'
WL27	S77°42'10"E	27.87'
WL37	N60°28'02"W	76.27'
WL38	S34°17'33"W	57.21'

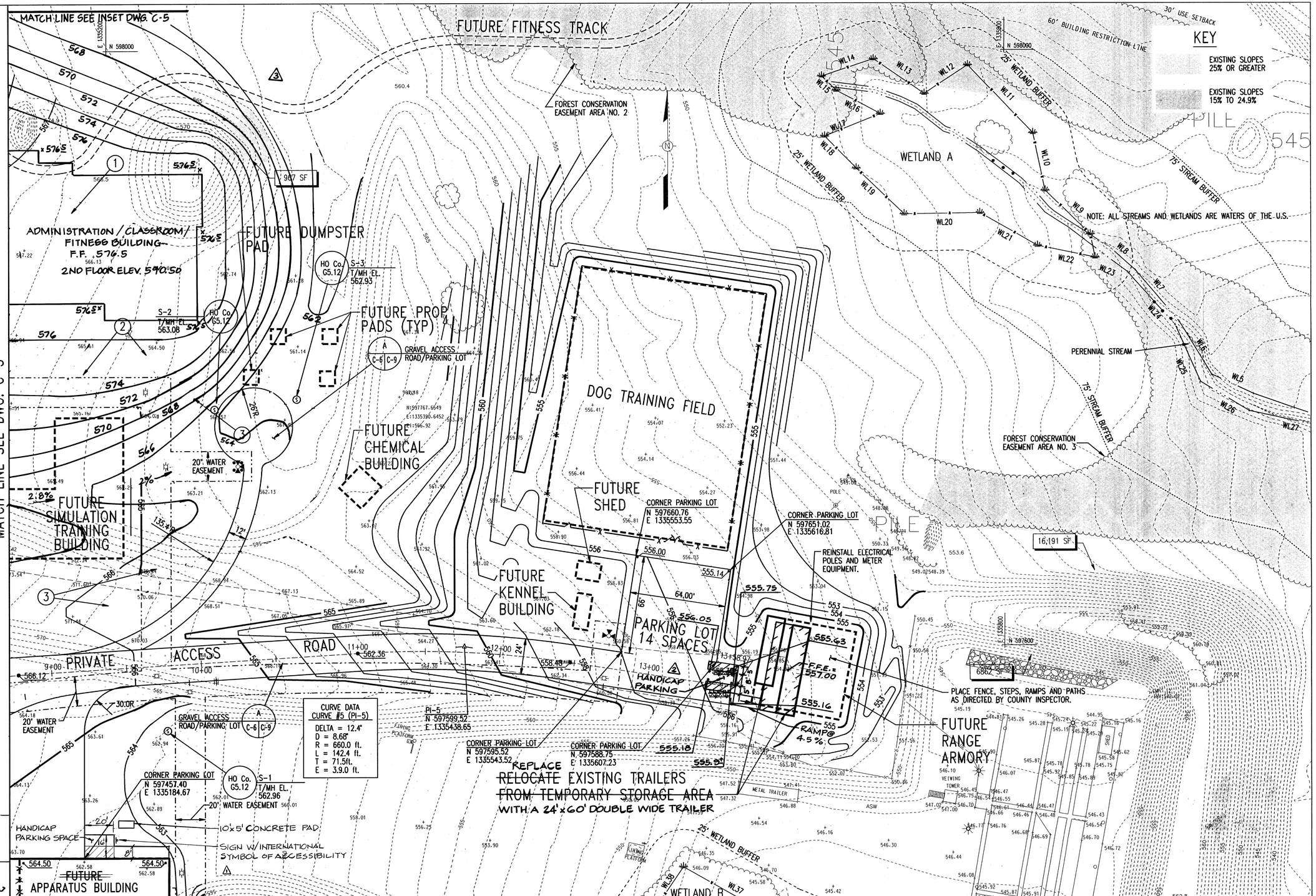

For Review by Site Resources only.

APPROVED: FOR PUBLIC WATER AND PRIVATE SEWERAGE SYSTEMS, HOWARD COUNTY HEALTH DEPARTMENT

COUNTY HEALTH OFFICER — DATE 3-5-03

APPROVED: HOWARD COUNTY DEPARTMENT OF PLANNING AND ZONING

DIRECTOR — DATE 3/10/03

CHIEF, DEVELOPMENT ENGINEERING DIVISION — DATE 3/11/03

CHIEF, DIVISION OF LAND DEVELOPMENT — DATE 3/17/03

DEPARTMENT OF PUBLIC WORKS
HOWARD COUNTY, MARYLAND

CHIEF, BUREAU OF UTILITIES — DATE

PREPARED BY :

WR&A
Whitman, Requardt and Associates, LLP.
801 South Caroline Street.
Baltimore, Maryland. 21231
410-235-3450

STATE OF MARYLAND — JAMES A. AVIRETT — No. 10210 — PROFESSIONAL ENGINEER

DES: C.D.
DRN: C.K.
CHK: A.O.
DATE: 12/16/2002

BY	NO.	REVISION	DATE
SRI	3	REVISED THE ADMIN./CLASS ROOM BLDG W/WALKWAY AND PARKING AREA W/3 HANDICAPPED SPACES	7/13/05
CMD	2	ADDED 1 HANDICAP PARKING SPACE + 24'x60' DOUBLE WIDE TRAILER	10/26/04
CMD	1	REMOVE 'FUTURE', ADDED PARKING + 10'x5' CONC PAD	7/23/04

GRADING / PAVING PLAN

600' SCALE MAP NO. 16 BLOCK NO. 2 / 8

PUBLIC SAFETY TRAINING CENTER
AT ALPHA RIDGE LANDFILL
CAPITAL PROJECT NO. C-0182
HOWARD COUNTY, MARYLAND

GRAPHIC SCALE
30 20 10 0 30 60
SCALE: 1" = 30'

C-6

SCALE AS SHOWN

SHEET 8 OF 39

SDP-03-36

M:\13490\pstcc06.dgn
Thu Feb 20 15:31:23 2003

PUBLIC SAFETY TRAINING CENTER
THIRD ELECTION DISTRICT
HOWARD COUNTY, MARYLAND

SITE DATA:

TOTAL PROJECT AREA:.....38.23ac
LIMITS OF DISTURBED AREA:.....17.30ac (3)
PRESENT ZONING DESIGNATION:.....RC-DEO
HEIGHT OF BUILDINGS:.....SEE TABLE G-2
PROPOSED USES FOR STRUCTURES:.....TEMPORARY ADMINISTRATION/TRAINING
PROPOSED USE OF SITE:.....POLICE AND FIRE TRAINING
NUMBER OF PARKING SPACES REQUIRED:.....81 (PER POLICE AND FIRE TRAINING REQUIREMENTS)
NUMBER OF PARKING SPACES PROVIDED:.....81 SPACES
BUILDING COVERAGE:.....0.4ac
DPZ FILE REFERENCES:.....WP-03-36, WP-02-102

BENCHMARKS					
MONUMENT	NORTHING	EASTING	ELEVATION	HORIZ. DATUM	VERT DATUM
16DA	593712.91	1332332.00	469.674	NAD83(91)	NAGVD29
16DC	593095.51	1333961.17	529.506	NAD83(91)	NAGVD29

LEGEND

EXISTING	PROPOSED	DESCRIPTION
260	260	MAJOR CONTOUR
258	258	MINOR CONTOUR
12"SD	12"SD	STORM DRAIN
8"W	8"W	WATER
6"SAN	6"SAN	SANITARY SEWER
UE	UE	UNDERGROUND ELECTRIC
		VALVE
		FIRE HYDRANT
		MANHOLE/INLET
		STREET LIGHT
X X	X X	FENCE
		TREES/WOODSLINE
		STREAM
W		WETLAND
	SW-1	STORMWATER MANAGEMENT BORING LOCATION
		PATCH TO MATCH EXISTING
		NO WOODY ZONE
		ABANDON EXISTING UTILITY/STRUCTURE
		EXISTING UTILITY/STRUCTURE TO BE REMOVED
21		STAKEOUT POINTS
H		ELECTRICAL HANDBOX
C		CONTROL PANEL
1		ELECTRICAL NOTES
		CONNECT TO EXISTING
W		WELL CAP

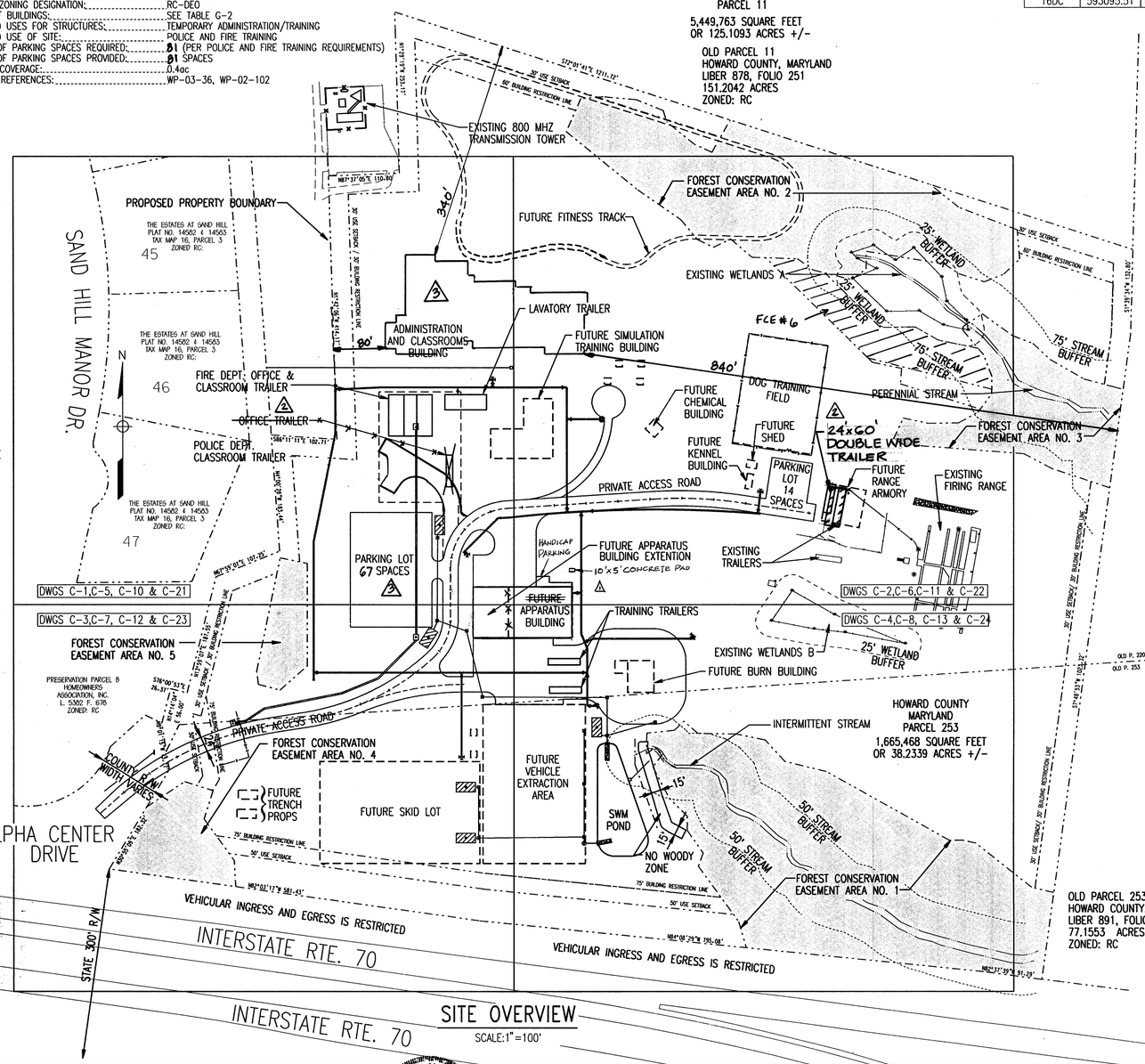

SITE OVERVIEW
SCALE:1"=100'

HOWARD COUNTY
MARYLAND
PARCEL 220

7,827,264 SQUARE FEET
OR 179.6893 ACRES +/-

OLD PARCEL 220
HOWARD COUNTY, MARYLAND
LIBER 891, FOLIO 314
114.6760 ACRES +/-
ZONED:RC

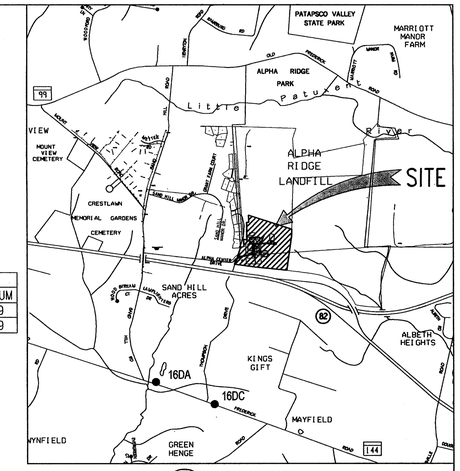

VICINITY MAP
SCALE:1"=2000'

GENERAL NOTES

NON-RESIDENTIAL SITE DEVELOPMENT PLAN

1. ALL CONSTRUCTION SHALL BE IN ACCORDANCE WITH THE LATEST STANDARDS AND SPECIFICATIONS OF HOWARD COUNTY PLUS MSHA STANDARDS AND SPECIFICATIONS IF APPLICABLE.
2. THE CONTRACTOR SHALL NOTIFY THE DEPARTMENT OF PUBLIC WORKS/BUREAU OF ENGINEERING/CONSTRUCTION INSPECTION DIVISION AT (410) 313-1880 AT LEAST FIVE (5) WORKING DAYS PRIOR TO THE START OF WORK.
3. THE CONTRACTOR SHALL NOTIFY "MISS UTILITY" AT 1-800-257-7777 AT LEAST 48 HOURS PRIOR TO ANY EXCAVATION WORK BEING DONE.
4. TRAFFIC CONTROL DEVICES, MARKINGS AND SIGNING SHALL BE IN ACCORDANCE WITH THE LATEST EDITION OF THE MANUAL OF UNIFORM TRAFFIC CONTROL DEVICES (MUTCD). ALL STREET AND REGULATORY SIGNS SHALL BE IN PLACE PRIOR TO THE PLACEMENT OF ANY ASPHALT.
5. ALL PLAN DIMENSIONS ARE TO FACE OF CURB UNLESS OTHERWISE NOTED.
6. THE EXISTING TOPOGRAPHY IS TAKEN FROM FIELD RUN SURVEY WITH ONE FOOT CONTOUR INTERVALS PREPARED BY WHITMAN REQUARDT & ASSOCIATES L.L.P. DATED 07/11/02. .
7. THE COORDINATES SHOWN HEREON ARE BASED UPON THE HOWARD COUNTY GEODETIC CONTROL WHICH IS BASED UPON THE MARYLAND STATE PLANE COORDINATE SYSTEM, HOWARD COUNTY MONUMENT NUMBERS 16DA AND 16DC WERE USED FOR THIS PROJECT.
8. WATER IS PUBLIC. CONTRACT NUMBER IS 44-4072 AND DRAINAGE AREA IS LITTLE PATUXENT (108P.S.).
9. SEWER IS PROVIDED BY A PRIVATE ON-SITE HOLDING TANK.
10. STORM WATER MANAGEMENT WILL BE PROVIDED BY A COMBINATION OF AN ON-SITE P-5 POCKET POND (QUALITY/CPv MANAGEMENT), A STORMCEPTOR (QUALITY PRE-TREATMENT), INFILTRATION STRUCTURES, (RECHARGE), GRASS CHANNEL (QUALITY + RECHARGE), NON-ROOFTOP + ROOFTOP DISCONNECTION (QUALITY + RECHARGE). THESE FACILITIES ARE TO BE PUBLICLY MAINTAINED.
11. EXISTING UTILITIES ARE BASED ON PROPOSED LOCATIONS PROVIDED BY THE HOWARD COUNTY DEPARTMENT OF PUBLIC WORKS UTILITY DESIGN DIVISION.
12. THERE IS NO FLOODPLAIN ON THIS SITE.
13. THE WETLANDS DELINEATION STUDY FOR THIS PROJECT WAS PREPARED BY WHITMAN REQUARDT & ASSOCIATES L.L.P., JULY 22, 2002.
14. NO TRAFFIC STUDY IS REQUIRED FOR THIS PROJECT.
15. A WAIVER DEFERRING THE PLACEMENT OF BITUMINOUS PAVING TO A LATER DATE WAS APPROVED ON JULY 16, 2002 BY HOWARD COUNTY DPW) PROVIDED THAT APPROPRIATE DUST CONTROL MEASURES ARE INSTITUTED. APPROPRIATE DUST CONTROL MEASURE ARE TO BE APPLIED TO ALL GRAVEL SURFACES.
16. THIS SITE IS EXEMPT FROM THE APFO TEST REQUIREMENTS AS STATED IN SECTIONS 16,1107-(2)-(I) AND 16,1110-(h)-(2) OF THE HOWARD COUNTY CODE.
17. A WAIVER FOR SECTION 16.147 OF THE HOWARD COUNTY SUBDIVISION AND LAND DEVELOPMENT REGULATIONS WAS APPROVED ON APRIL 23, 2002, WP-02-102 TO ALLOW RECORDING OF ADJOINER DEEDS TO RECONFIGURE 3 COUNTY OWNED PARCELS OF LAND TO ESTABLISH REVISED PARCEL 253
18. USE OF A SEWAGE HOLDING TANK WAS APPROVED BY THE HOWARD COUNTY HEALTH DEPARTMENT ON MARCH 25, 2002.
19. THE FIRE DEPT. OFFICE & CLASSROOM TRAILER, POLICE DEPT. CLASSROOM, OFFICE TRAILER, TRAINING TRAILERS AND LAVATORY TRAILERS WILL BE PLACED ON THE SITE UNDER A SEPARATE CONTRACT.
20. THE PROPERTY BOUNDARIES SHOWN ON THESE PLANS HAVE BEEN RECORDED AS NEW DEED LIBER 6689 FOLIO 619 AND PLAT OF FOREST CONSERVATION REFERENCE NUMBER 15834
21. NO GRADING, REMOVAL OF VEGETATIVE COVER OR TREES, OR PLACEMENT OF NEW STRUCTURES IS PERMITTED WITHIN THE LIMITS OF WETLANDS, STREAMS OR THEIR REQUIRED BUFFERS AND FOREST CONSERVATION EASEMENT AREAS EXCEPT AS APPROVED BY WAIVER APPLICATION WP-03-36.
22. THIS PLAN HAS BEEN PREPARED IN ACCORDANCE WITH THE PROVISIONS OF SECTION 16.124 OF THE HOWARD COUNTY CODE AND THE LANDSCAPE MANUAL.
23. THIS PROJECT COMPLIES WITH THE REQUIREMENTS OF SECTION 16.1200 OF THE HOWARD COUNTY CODE AND THE FOREST CONSERVATION MANUAL WITH A TOTAL FOREST CONSERVATION OBLIGATION OF 7.63 ac HAS BEEN INCLUDED AS 7.19 ac IN RETENTION AND 0.44 ac IN REFORESTATION
24. ALL EXTERIOR LIGHT FIXTURES SHALL BE ORIENTED TO DIRECT LIGHT DOWNWARDS ON-SITE AWAY FROM ALL ADJOINING RESIDENTIAL PROPERTIES AND PUBLIC ROADS IN ACCORDANCE WITH SECTION 134 OF THE HOWARD COUNTY ZONING REGULATIONS.
25. THERE ARE NO CEMETERIES OR GRAVE SITES ON THE SUBJECT PROPERTY.
26. THIS PROJECT IS SUBJECT TO THE FIFTH EDITION OF SUBDIVISION AND LAND DEVELOPMENT REGULATIONS.
27. THE FOREST CONSERVATION EASEMENTS ON THIS PLAN HAVE BEEN ESTABLISHED TO FULFILL THE REQUIREMENTS OF SECTION 16.1200 OF THE HOWARD COUNTY CODE AND FOREST CONSERVATION MANUAL. NO CLEARING, GRADING OR CONSTRUCTION IS PERMITTED WITHIN THE FOREST CONSERVATION EASEMENTS, HOWEVER, FOREST MANAGEMENT PRACTICES AS DEFINED IN THE DEED OF FOREST CONSERVATION EASEMENT ARE ALLOWED.
28. STORMWATER MANAGEMENT HAS BEEN PROVIDED FOR ALL FACILITIES AND FUTURE STRUCTURES AS SHOWN ON THESE PLANS. ANY ADDITIONAL DEVELOPMENT ON THIS SITE WILL REQUIRE RE-EVALUATION OF THE STORM WATER MANAGEMENT REQUIREMENTS.
29. ALL UTILITIES CONSTRUCTED WITHIN FILL MATERIAL MUST BE PLACED IN ACCORDANCE WITH AASHTO-T180.
30. THE CONTRACTOR OR DEVELOPER SHALL CONTACT THE HOWARD COUNTY CONSTRUCTION INSPECTION DIVISION 24 HOURS IN ADVANCE OF THE COMMENCEMENT OF WORK AT (410) 313-1880
31. A WAIVER PERTAINING TO THE REQUIREMENT OF A 12' MAINTENANCE BENCH AS DESCRIBED UNDER SECTION 5.2.7.A.2 OF THE HOWARD COUNTY DESIGN MANUAL VOLUME I - STORM DRAINAGE HAS BEEN APPROVED BY THE HOWARD COUNTY DEPARTMENT OF PUBLIC WORKS ON OCTOBER 15, 2002.
32. REFER TO SHEET 2 FOR A LIST OF APPROVED WAIVERS TABLE.

GRAPHIC SCALE
100 0 100 200
SCALE: 1" = 100'
2000 0 2000 4000
SCALE: 1" = 2000'

For Rev. (3) by Site Resources Inc. only.

APPROVED: FOR PUBLIC WATER AND PRIVATE SEWERAGE SYSTEMS, HOWARD COUNTY HEALTH DEPARTMENT
COUNTY HEALTH OFFICER — DATE 3-5-03

APPROVED: HOWARD COUNTY DEPARTMENT OF PLANNING AND ZONING
DIRECTOR — DATE 3/10/03
CHIEF, DEVELOPMENT ENGINEERING DIVISION — DATE 3/11/03
CHIEF, DIVISION OF LAND DEVELOPMENT — DATE 3/17/03

DEPARTMENT OF PUBLIC WORKS
HOWARD COUNTY, MARYLAND
CHIEF, BUREAU OF UTILITIES — DATE

PREPARED BY :
WR&A
Whitman, Requardt and Associates, LLP.
801 South Caroline Street.
Baltimore, Maryland. 21231
410-235-3450

DES: C.D.
DRN: C.K.
CHK: A.O.
DATE: 12/16/2002

BY	NO.	REVISION	DATE
GRI	3	REVISED THE ADMIN/CLASS ROOM BLDG. W WALKWAY AND PARKING AREA W/ 3 HANDICAPPED SPACES REVISED NUMBER OF PARKING SPACES.	7/13/05
CMD	2	REMOVED OFFICE TRAILER, ADDED 24'x60' DOUBLE WIDE TRAILER	10/24/04
CMD	1	REMOVE 'FUTURE', ADDED PARKING + 10'X5' CONC. PAD	7/23/04

COVER SHEET

600' SCALE MAP NO. 16 BLOCK NO. 2 / 8

OWNER:	WATER CODE:	SEWER CODE:	ADDRESS CHART: BUILDING	STREET ADDRESS
HOWARD COUNTY MARYLAND DEPARTMENT OF PUBLIC WORKS 3430 COURTHOUSE DRIVE ELLICOTT CITY, MD 21043 PH: 410 313-2700	730	PRIVATE-HOLDING TANK		2200 ALPHA CENTER DRIVE

PROJECT NAME:	SECTION/AREA	PARCEL
PUBLIC SAFETY EDUCATION CENTER	N/A	253

PLAT	FOREST CONS. PLAT	ZONE	TAX MAP	BLOCK	ELEC. DIST.	CENSUS TRACT
15716 L.6689 F.619	15834	RC-DEO	16	2/8	3rd	6030

G-1

PUBLIC SAFETY TRAINING CENTER
AT ALPHA RIDGE LANDFILL
CAPITAL PROJECT NO. C-0182
HOWARD COUNTY, MARYLAND

SCALE AS SHOWN

SHEET 1 OF 39

SDP-03-36

M:\13490\pstcg01.dgn
Thu Feb 20 10:42:22 2003

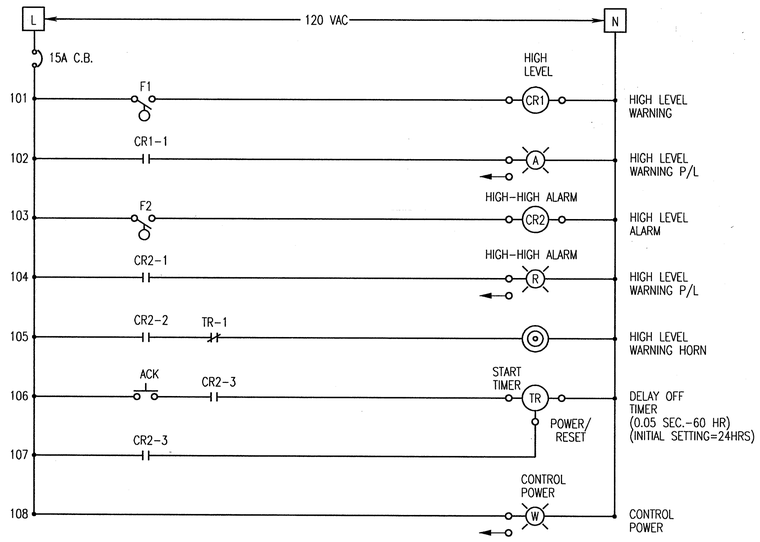

EQUIPMENT LEGEND:

- AUDIBLE ALARM (PANEL MOUNTED)
- CIRCUIT BREAKER (C.B.) (SQUARE-D TYPE Q04 OR EQUAL)
- FLOAT SWITCH
- NORMALLY OPEN (N.O.) CONTACT
- NORMALLY CLOSED (N.C.) CONTACT
- PUSH BUTTON (N.O.)
- PILOT LIGHT/PUSH TO TEST (COLOR AS INDICATED) R=RED W=WHITE A=AMBER
- CR1 — CONTROL RELAY (IDEC RH SERIES W/ LED)
- TR — TIME RELAY (TIME OFF DELAY) (ALLEN BRADLEY 700-FS-B-4-U-U23, OR EQUAL)

PANEL DEVICES:

- AUDIBLE ALARM DEVICE (MALLORY SONALERT (LOUD), OR EQUAL)
- X — 30.5MM PILOT LIGHT-COLOR AS INDICATED (ALLEN BRADLEY 800T, OR EQUAL) R=RED W=WHITE A=AMBER
- 30.5MM PUSH BUTTON (ALLEN BRADLEY 800T, OR EQUAL)

NAME PLATE SCHEDULE (BLACK W/ WHITE LETTERS)	
1	SEPTIC HOLDING TANK ALARM PANEL
2	CONTROL POWER
3	HIGH LEVEL WARNING
4	HIGH LEVEL ALARM
5	ALARM SILENCE

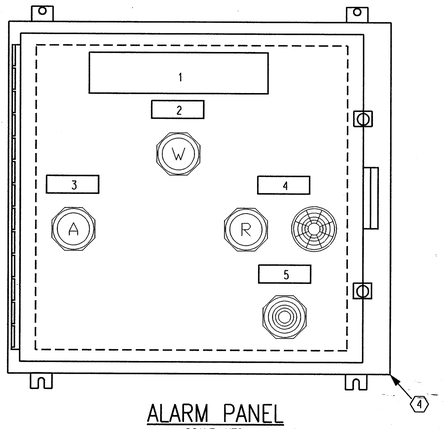

ALARM PANEL
SCALE: NTS

DRAWING NOTES:

1. CONTRACTOR SHALL PROVIDE FLANGE CONNECTION TO FIBREGLASS HOLDING TANK AND SEAL AROUND CONDUIT. CONTRACTORS SHALL PROVIDE AND INSTALL TWO FLOAT SWITCHES INSIDE SEPTAGE HOLDING TANK AT ELEVATIONS INDICATED. FLOAT SWITCHES SHALL BE HERMETICALLY SEALED STAINLESS STEEL MERCURY SWITCH WITH A NORMALLY OPEN/NORMALLY CLOSED DOUBLE THROW CONTACTS. FLOAT SWITCHES SHALL HAVE ZINC PLATED SPLIT TETHER WEIGHTS. SWITCHES SHALL BE AS MANUFACTURED BY CONERY, MODEL #2900, OR EQUAL.
2. CONTRACTOR SHALL MAKE WATER TIGHT, SUBMERSIBLE SPLICES FROM FLOAT CABLES TO CONDUCTORS IN HAND HOLE.
3. CONTRACTOR SHALL LEAVE AT LEAST 50' EXTRA LENGTH ON EACH CONDUCTOR FOR FUTURE CONNECTORS AND COIL UP INSIDE HAND HOLE. PROVIDE 2' CONDUIT STUB ON EACH SIDE OF HAND HOLE AND CAP AS SHOWN.
4. ALARM PANEL ENCLOSURE SHALL BE NEMA 12 RATED 14 GAUGE STEEL ENCLOSURE WITH CONTINUOUS HINGE. PANEL SHALL BE SIZED BY CONTRACTOR, BUT SHALL NOT EXCEED 12" X 12". ALARM PANEL INSTALLATION AND FINAL TERMINATIONS SHALL BE COMPLETED BY OTHERS. ALARM PANEL SHALL BE FABRICATED AND CERTIFIED IN ACCORDANCE TO U.L. 508 GUIDELINES BY A U.L. CERTIFIED INDUSTRIAL CONTROL PANEL FABRICATOR.

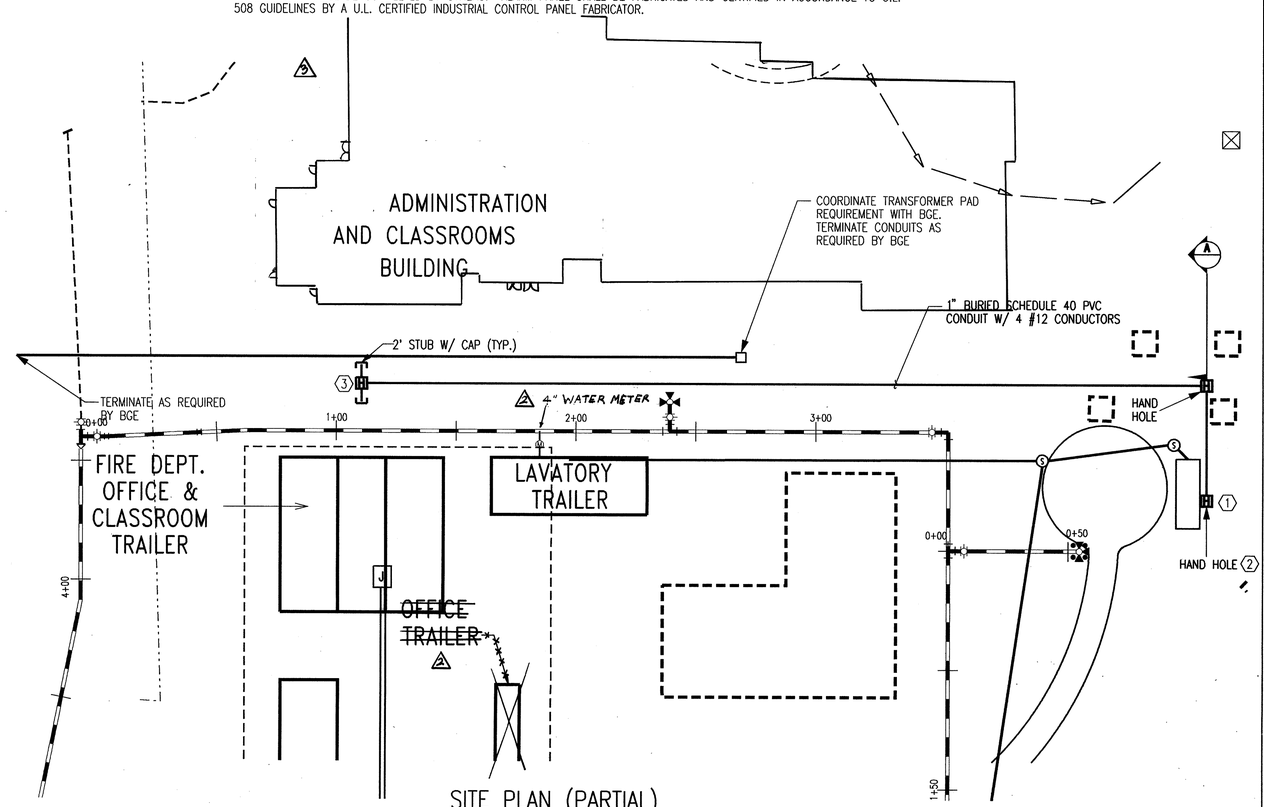

SITE PLAN (PARTIAL)
SCALE: 1"=30'

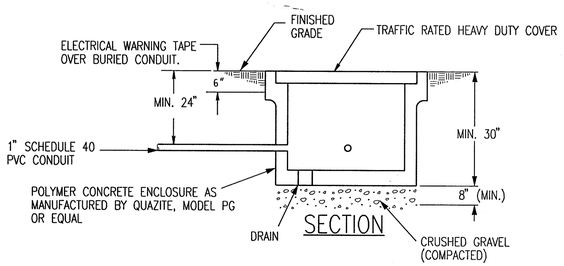

SECTION

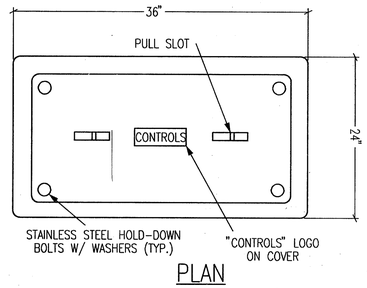

PLAN

A
C-12 E-1 E-1
PRE CAST HANDHOLE
SCALE: NTS

For Raision 3 by Site Resource only

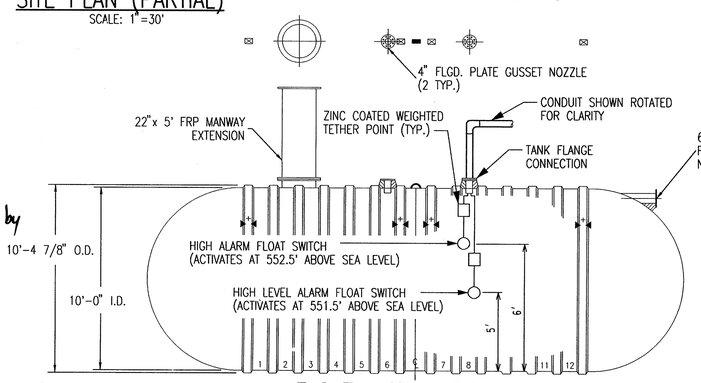

FLOAT INSTALLATION
SCALE: NTS

APPROVED: FOR PUBLIC WATER AND PRIVATE SEWERAGE SYSTEMS, HOWARD COUNTY HEALTH DEPARTMENT
COUNTY HEALTH OFFICER — DATE 3-5-03

APPROVED: HOWARD COUNTY DEPARTMENT OF PLANNING AND ZONING
DIRECTOR — DATE 3/10/03
CHIEF, DEVELOPMENT ENGINEERING DIVISION — DATE 3/10/03
CHIEF, DIVISION OF LAND DEVELOPMENT — DATE 3/12/03

DEPARTMENT OF PUBLIC WORKS
HOWARD COUNTY, MARYLAND
CHIEF, BUREAU OF UTILITIES — DATE

PREPARED BY :
WR&A
Whitman, Requardt and Associates, LLP.
801 South Caroline Street.
Baltimore, Maryland. 21231
410-235-3450

STATE OF MARYLAND — JAMES A. AVIRETT — No. 10210 — PROFESSIONAL ENGINEER

DES: PWG
DRN: JMV
CHK: PWG
DATE: 12/16/2002

BY	NO.	REVISION	DATE
SRI	3	REVISED THE ADMIN./CLASSROOM BLDG. W/ WALKWAY AND PARKING AREA W/3 HANDICAPPED SPACES.	7/13/05
CMD	2	ADD SIZE OF WATER METER/REMOVE OFFICE BLDG.	10/27/04

LEVEL ALARM CONTROL ECD
FLOAT INSTALLATION DETAIL
CONDUIT DETAIL

600' SCALE MAP NO. 16 BLOCK NO. 2 / 8

PUBLIC SAFETY TRAINING CENTER
AT ALPHA RIDGE LANDFILL
CAPITAL PROJECT NO. C-0182
HOWARD COUNTY, MARYLAND

E-1

SCALE AS SHOWN

SHEET 39 OF 39

SDP-03-36

M:\13490\petce01.dgn
THU Feb 20 15:40:58 2003

MATCH LINE SEE DWG. C-21

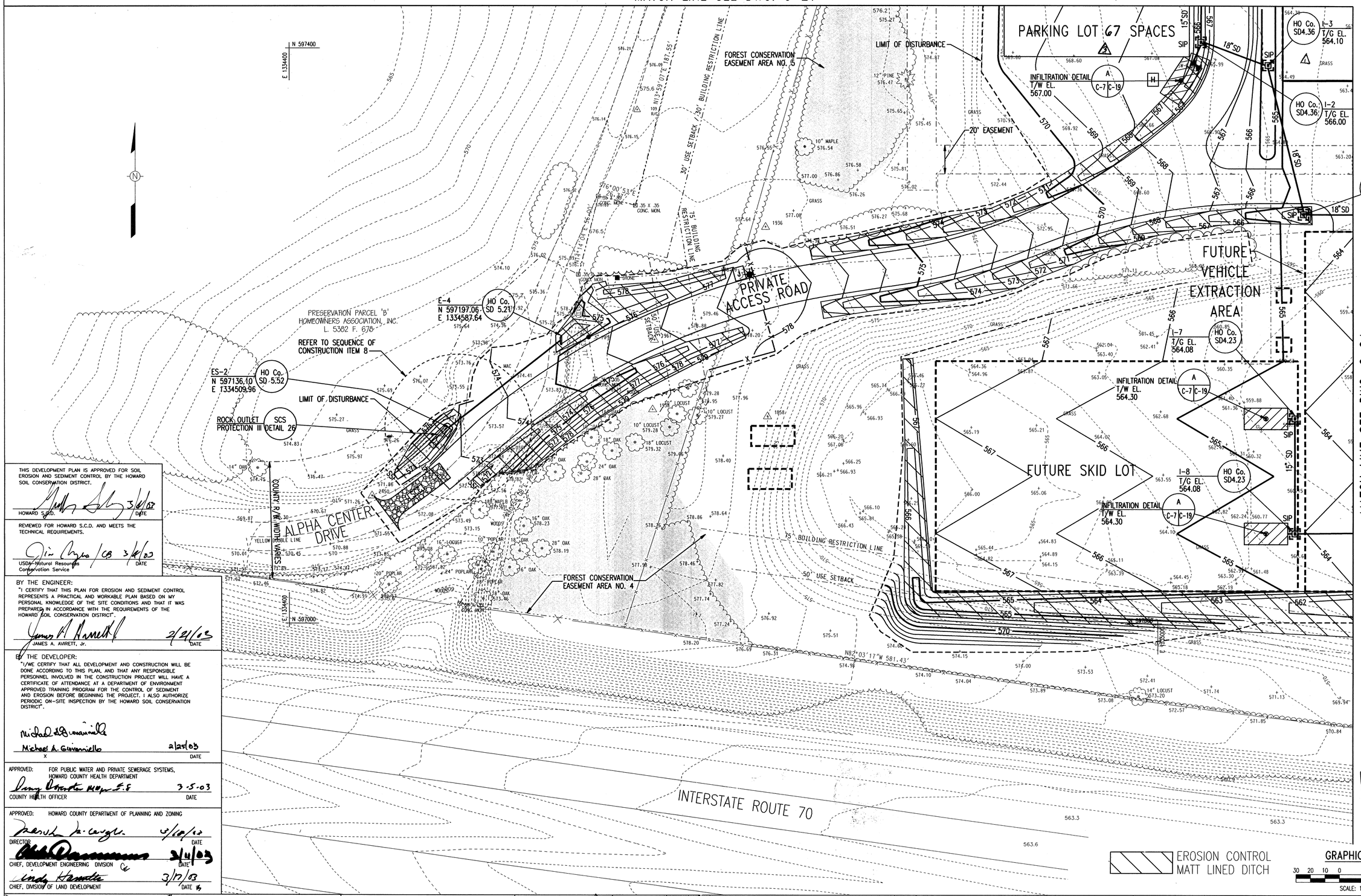

THIS DEVELOPMENT PLAN IS APPROVED FOR SOIL EROSION AND SEDIMENT CONTROL BY THE HOWARD SOIL CONSERVATION DISTRICT.

HOWARD S.C.D. — DATE 3/6/03

REVIEWED FOR HOWARD S.C.D. AND MEETS THE TECHNICAL REQUIREMENTS.

USDA-Natural Resources Conservation Service — DATE 3/6/03

BY THE ENGINEER:
"I CERTIFY THAT THIS PLAN FOR EROSION AND SEDIMENT CONTROL REPRESENTS A PRACTICAL AND WORKABLE PLAN BASED ON MY PERSONAL KNOWLEDGE OF THE SITE CONDITIONS AND THAT IT WAS PREPARED IN ACCORDANCE WITH THE REQUIREMENTS OF THE HOWARD SOIL CONSERVATION DISTRICT".

JAMES A. AVIRETT, Jr. — DATE 2/21/03

BY THE DEVELOPER:
"I/WE CERTIFY THAT ALL DEVELOPMENT AND CONSTRUCTION WILL BE DONE ACCORDING TO THIS PLAN, AND THAT ANY RESPONSIBLE PERSONNEL INVOLVED IN THE CONSTRUCTION PROJECT WILL HAVE A CERTIFICATE OF ATTENDANCE AT A DEPARTMENT OF ENVIRONMENT APPROVED TRAINING PROGRAM FOR THE CONTROL OF SEDIMENT AND EROSION BEFORE BEGINNING THE PROJECT. I ALSO AUTHORIZE PERIODIC ON-SITE INSPECTION BY THE HOWARD SOIL CONSERVATION DISTRICT".

Michael A. Giovanniello — DATE 2/25/03

APPROVED: FOR PUBLIC WATER AND PRIVATE SEWERAGE SYSTEMS, HOWARD COUNTY HEALTH DEPARTMENT

COUNTY HEALTH OFFICER — DATE 3-5-03

APPROVED: HOWARD COUNTY DEPARTMENT OF PLANNING AND ZONING

DIRECTOR — DATE 3/10/03

CHIEF, DEVELOPMENT ENGINEERING DIVISION — DATE 3/4/03

CHIEF, DIVISION OF LAND DEVELOPMENT — DATE 3/17/03

DEPARTMENT OF PUBLIC WORKS
HOWARD COUNTY, MARYLAND

CHIEF, BUREAU OF UTILITIES — DATE

PREPARED BY :

WR&A
Whitman, Requardt and Associates, LLP.
801 South Caroline Street.
Baltimore, Maryland. 21231
410-235-3450

STATE OF MARYLAND — JAMES A. AVIRETT — No. 10210 — PROFESSIONAL ENGINEER

DES: C.D.
DRN: C.K.
CHK: A.O.
DATE: 12/16/2002

BY	NO.	REVISION	DATE
SRI	3	REVISED NUMBER OF PARKING SPACES	7/13/05
CMD	4	REMOVED "FUTURE" LINE SYMBOLOGY	7/23/04

EROSION AND SEDIMENT CONTROL PLAN

600' SCALE MAP NO. 16 BLOCK NO. 2 / 8

PUBLIC SAFETY TRAINING CENTER
AT ALPHA RIDGE LANDFILL
CAPITAL PROJECT NO. C-0182
HOWARD COUNTY, MARYLAND

EROSION CONTROL MATT LINED DITCH

GRAPHIC SCALE
30 20 10 0 30 60
SCALE: 1" = 30'

C-23

SCALE AS SHOWN

SHEET 25 OF 39

SDP-03-36

MN13490\pdtcc23.dgn
Thu Feb 20 15:46:01 2003

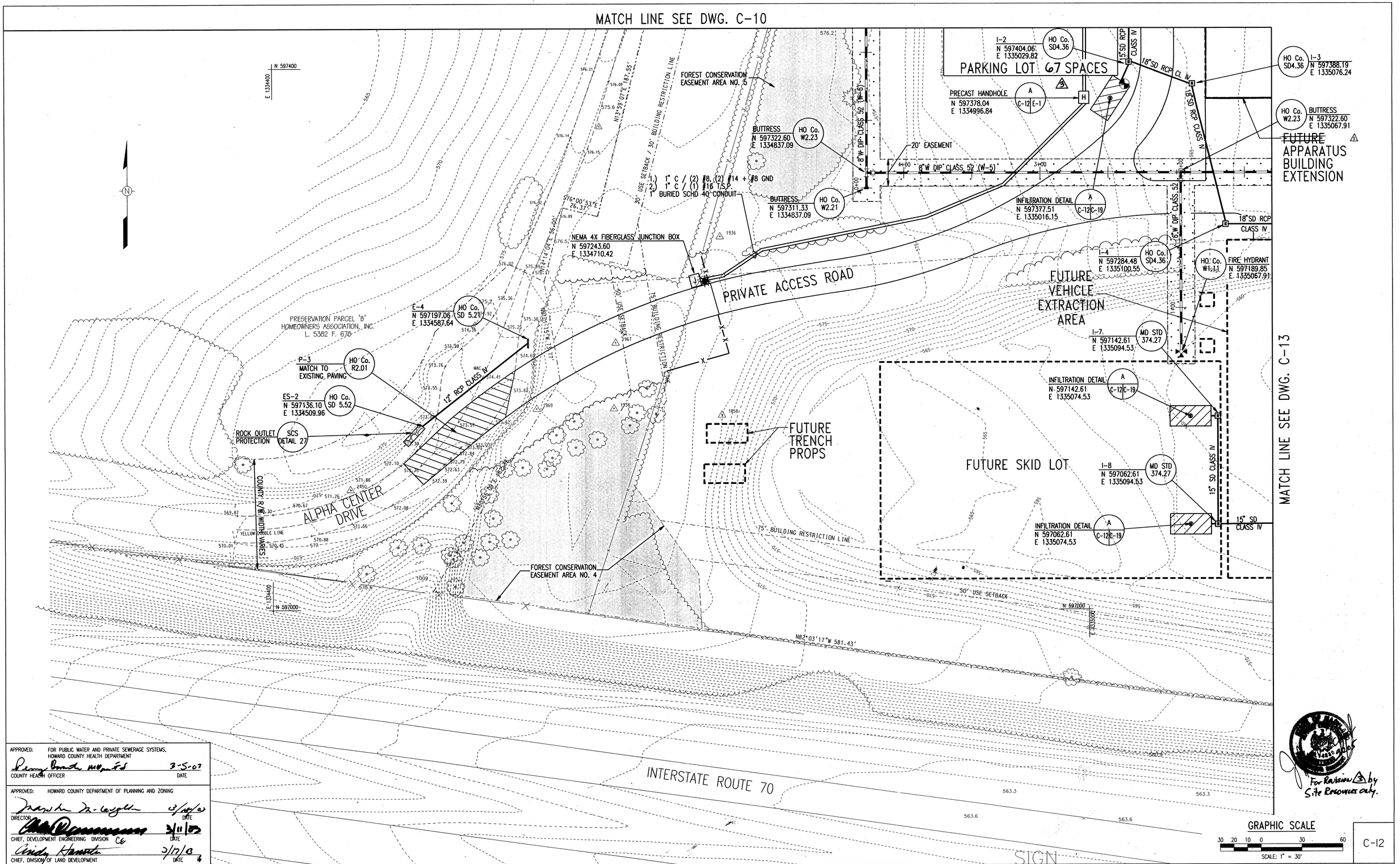

APPROVED: FOR PUBLIC WATER AND PRIVATE SEWERAGE SYSTEMS, HOWARD COUNTY HEALTH DEPARTMENT

COUNTY HEALTH OFFICER — DATE 3-5-03

APPROVED: HOWARD COUNTY DEPARTMENT OF PLANNING AND ZONING

DIRECTOR — DATE 3/14/03

CHIEF, DEVELOPMENT ENGINEERING DIVISION — DATE 3/11/03

CHIEF, DIVISION OF LAND DEVELOPMENT — DATE 3/17/03

DEPARTMENT OF PUBLIC WORKS
HOWARD COUNTY, MARYLAND

CHIEF, BUREAU OF UTILITIES — DATE

PREPARED BY :

WR&A

Whitman, Requardt and Associates, LLP.
801 South Caroline Street.
Baltimore, Maryland. 21231
410-235-3450

STATE OF MARYLAND — JAMES A. AVIRETT — PROFESSIONAL ENGINEER

DES: C.D.
DRN: C.K.
CHK: A.O.
DATE: 12/16/2002

BY	NO.	REVISION	DATE
SRI	3	REVISED NUMBER OF PARKING SPACES	7/13/05
CMD	1	REMOVED "FUTURE"	7/23/04

UTILITY PLAN

600' SCALE MAP NO. 16 BLOCK NO. 2 / 8

PUBLIC SAFETY TRAINING CENTER
AT ALPHA RIDGE LANDFILL
CAPITAL PROJECT NO. C-0182
HOWARD COUNTY, MARYLAND

C-12

SCALE AS SHOWN

SHEET 14 OF 39

SDP-03-36

M:\13490\pstccl2.dgn
Thu Feb 20 15:39:42 2003

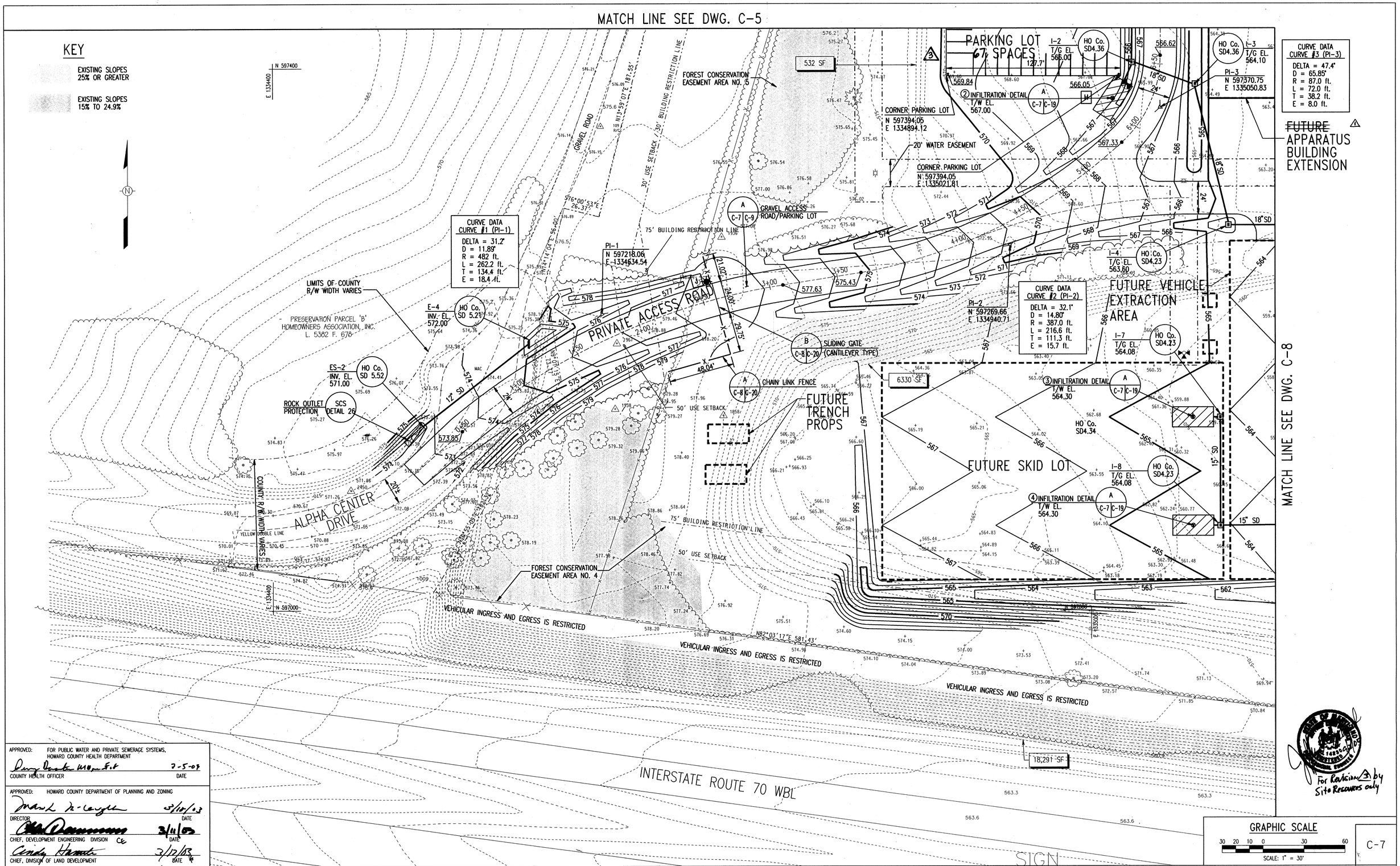

APPROVED: FOR PUBLIC WATER AND PRIVATE SEWERAGE SYSTEMS, HOWARD COUNTY HEALTH DEPARTMENT

COUNTY HEALTH OFFICER — DATE 2-5-03

APPROVED: HOWARD COUNTY DEPARTMENT OF PLANNING AND ZONING

DIRECTOR — DATE 3/10/03

CHIEF, DEVELOPMENT ENGINEERING DIVISION — DATE 3/11/03

CHIEF, DIVISION OF LAND DEVELOPMENT — DATE 3/12/03

DEPARTMENT OF PUBLIC WORKS
HOWARD COUNTY, MARYLAND

CHIEF, BUREAU OF UTILITIES — DATE

PREPARED BY:

WR&A
Whitman, Requardt and Associates, LLP.
801 South Caroline Street.
Baltimore, Maryland. 21231
410-235-3450

STATE OF MARYLAND — PROFESSIONAL ENGINEER — 10210

DES: C.D.	SRI	3	REVISED NUMBER OF PARKING SPACES — 7/13/05
DRN: C.K.			
CHK: A.O.			
DATE: 12/16/2002	CMD	1	REMOVE "FUTURE" — 7/23/04
	BY	NO.	REVISION — DATE

GRADING / PAVING PLAN

600' SCALE MAP NO. 16 BLOCK NO. 2 / 8

PUBLIC SAFETY TRAINING CENTER
AT ALPHA RIDGE LANDFILL
CAPITAL PROJECT NO. C-0182
HOWARD COUNTY, MARYLAND

C-7

SCALE AS SHOWN

SHEET 9 OF 39

SDP-03-36

M:\13490\pstcc07.dgn
Thu Feb 20 15:37:49 2003

ABBREVIATIONS

AASHTO	AMERICAN ASSOCIATION OF STATE HIGHWAY AND TRANSPORTATION OFFICIALS
ASTM.	ASSOCIATION FOR STANDARD TESTING METHODS
APPROX.	APPROXIMATELY
BLDG.	BUILDING
BIT.	BITUMINOUS
B.M.	BENCH MARK
CFS.	CUBIC FEET PER SECOND
CO.	CLEANOUT
COMP.	COMPACTED
CONN.	CONNECTION
CMP.	CORRUGATED METAL PIPE
DIA., DIAM.	DIAMETER
DWG., DRWG	DRAWING
EL., ELEV.	ELEVATION
ELECT., ELEC.	ELECTRICAL
ESAN.	EXISTING SANITARY
UE.	UNDERGROUND ELECTRIC
EUGT&E.	EXISTING UNDERGROUND TELEPHONE & ELECTRIC
EXST., EX.	EXISTING
FM	FORCE MAIN
FPS.	FEET PER SECOND
INV.	INVERT
IP.	INLET PROTECTION
MECH.	MECHANICAL
MFR.	MANUFACTURER
M.H.	MANHOLE
MIN.	MINIMUM
MW	MONITORING WELL
OHE.	OVERHEAD ELECTRIC
OHT.	OVERHEAD TELEPHONE
P.I.	POINT OF INTERSECTION, POST INDICATOR
PC.	POINT OF CURVATURE
P.T.	POINT OF TANGENCY
PVC	POINT OF VERTICAL CURVE
PROP.	PROPOSED
SDR.	STANDARD DIMENSION RATIO
S	SOUTH, SLOPE, SANITARY
SAN	SANITARY
TEL	TELEPHONE
W-4	WATER PROFILE IDENTIFICATION
T/G	TOP OF GRATE
T/MH	TOP OF MANHOLE
T/W	TOP OF WELL

LIST OF DRAWINGS

SHEET NO.	DRAWING NO.	SHEET TITLE
1	G-1	COVER SHEET
2	G-2	GENERAL NOTES AND LIST OF DRAWINGS
3	C-1	SURVEY / DEMOLITION PLAN
4	C-2	SURVEY / DEMOLITION PLAN
5	C-3	SURVEY / DEMOLITION PLAN
6	C-4	SURVEY / DEMOLITION PLAN
7	C-5	GRADING / PAVING PLAN
8	C-6	GRADING / PAVING PLAN
9	C-7	GRADING / PAVING PLAN
10	C-8	GRADING / PAVING PLAN
11	C-9	PROFILE - PRIVATE ACCESS ROAD
12	C-10	UTILITY PLAN
13	C-11	UTILITY PLAN
14	C-12	UTILITY PLAN
15	C-13	UTILITY PLAN
16	C-14	PROFILES - STORM DRAINS
17	C-15	PROFILES
18	C-16	PROFILES - WATER MAINS
19	C-17	PROFILES - WATER MAINS
20	C-18	PROFILES - SANITARY SEWER AND DETAILS
21	C-19	DETAILS
22	C-20	FENCE AND GATE DETAILS
23	C-21	EROSION AND SEDIMENT CONTROL PLAN
24	C-22	EROSION AND SEDIMENT CONTROL PLAN
25	C-23	EROSION AND SEDIMENT CONTROL PLAN
26	C-24	EROSION AND SEDIMENT CONTROL PLAN
27	C-25	EROSION AND SEDIMENT CONTROL NOTES
28	C-26	EROSION AND SEDIMENT CONTROL NOTES
29	C-27	EROSION AND SEDIMENT CONTROL DETAILS
30	C-28	DRAINAGE AREA MAP
31	C-29	FOREST STAND DELINEATION
32	C-30	FOREST STAND DELINEATION ANALYSIS TABLE
33	C-31	FOREST CONSERVATION PLAN
34	C-32	FOREST CONSERVATION NOTES AND DETAILS
35	LS-1	LANDSCAPE PLAN - NORTH
36	LS-2	LANDSCAPE PLAN - SOUTH
37	LS-3	STORMWATER FACILITY LANDSCAPE PLAN, NOTES AND DETAILS
38	LS-4	LANDSCAPE NOTES AND DETAILS
39	E-01	LEVEL ALARM CONTROL ECD FLOAT INSTALLATION DETAIL CONDUIT DETAIL

SEQUENCE OF CONSTRUCTION

WEEKS

1. CONTRACTOR MUST OBTAIN A GRADING PERMIT PRIOR TO COMMENCEMENT OF CONSTRUCTION. 1
2. ONCE GRADING PERMIT IS OBTAINED NOTIFY "MISS UTILITY" AT 1-800-257-7777 AT LEAST 48 HOURS PRIOR TO THE START OF ANY CONSTRUCTION. 1
3. A MINIMUM OF 24 HOURS MUST BE GIVEN TO THE HOWARD COUNTY OFFICE OF INSPECTION AND PERMITS PRIOR TO THE START OF ANY CONSTRUCTION. (410) 313-1855. 1
4. CONTACT BGE TO HAVE THE POWER FOR THE EXISTING POLICE TRAILERS DISCONNECTED. 1-2
5. INSTALL SEDIMENT CONTROL MEASURES (SCE, EARTH DIKES, AND SILT FENCE). 1-2
6. BEGIN DEMOLITION. RELOCATE EXISTING POLICE TRAILERS AND ALL SALVAGED MATERIALS TO THE AREA INDICATED ON SHEET C-1. 2-4
7. INSTALL SUPER SILT FENCE LOCATED AT THE NORTH END OF THE GRASS SWALE THEN GRADE AND STABILIZE THE GRASS SWALE WEST OF THE FUTURE RANGE ARMORY (SHEET C-22). ONCE SWALE IS GRADED INSTALL EROSION CONTROL MATTING AND SILT FENCE ON THE UPHILL (WEST SIDE) OF THE SWALE. THE SUPER SILT FENCE NORTH OF THE SWALE MAY BE REMOVED UPON FULL STABILIZATION OF THE SWALE AND WITH PERMISSION OF THE INSPECTOR. 4-6
8. WITH THE PERMISSION OF THE INSPECTOR, INSTALL SUPER SILT FENCE LOCATED AT THE SOUTH-WEST ENDS OF THE SWALES LOCATED ON BOTH SIDES OF THE SITE ENTRANCE. GRADE THE AREA NORTH OF THE SITE ENTRANCE (SHEET C-23). STABILIZE ALL GRADED AREAS UPON COMPLETION WITH EROSION CONTROL MATTING. ONCE AREA HAS BEEN STABILIZED INSTALL SILT FENCE AND BEGIN INSTALLATION OF THE CULVERT. ONCE THE CULVERT IS INSTALLED AND THE SWALES ARE FULLY STABILIZED THE SUPER SILT FENCE MAY BE REMOVED WITH PERMISSION OF THE INSPECTOR. 4-6
9. CONSTRUCT SEDIMENT TRAPS ST-1 AND ST-2 AND ASSOCIATED EARTH DIKES. CONSTRUCT THE STORMWATER MANAGEMENT POND/SEDIMENT TRAP ST-3. DO NOT GRADE THE FOREBAY. BRICK THE OPENNINGS IN THE OUTLET STRUCTURE SHUT. DO NOT INTALL THE ORIFICE PLATE INSIDE THE OUTLET STRUCTURE AND INSTALL THE TEMPORARY RISER. UTILIZE REMOVABLE PUMP STATION TO ALLOW FOR DEWATERING OF SEDIMENT TRAPS AS NECESSARY. PROVIDE GROUTED CUT-OFFS AT THE END OF ALL APRONS AND AT THE END OF ALL INFLOW PROTECTION. 6-8
10. WITH PERMISSION FROM THE INSPECTOR, BEGIN GRADING THE ACCESS ROAD AND FUTURE KENNEL/RANGE ARMORY AREA. STABILIZE DITCHES WITH EROSION CONTROL MATTING AS INDICATED. STOCKPILE ANY MATERIAL SUITABLE FOR THE POND LINER AND POND EMBANKMENT. PROVIDE DUST CONTROL MEASURES AT THE END OF EACH DAY PER THE SPECIFICATIONS ON SHEET C-27. 8-10
11. WITH PERMISSION FROM THE INSPECTOR, GRADE AND PERMANENTLY STABILIZE FUTURE KENNEL/RANGE ARMORY AREA. ONCE THE AREA IS STABLE PLACE THE EXISTING TRAILERS AS INDICATED ON THE PLANS AND REINSTALL THE OVERHEAD ELECTRIC POLES AND ORIGINAL METER EQUIPMENT. 10-11
12. INSTALL STORM DRAINS, INLETS AND ASSOCIATED RECHARGE DEVICES. TEMPORARILY BRICK SHUT PIPE OPENINGS FROM THE INLETS TO THE RECHARGE DEVICES. 11-13
13. WITH PERMISSION FROM THE INSPECTOR, GRADE THE SITE. STABILIZE DITCHES WITH EROSION CONTROL MATTING AS INDICATED. PROVIDE DUST CONTROL MEASURES AT THE END OF EACH DAY PER THE SPECIFICATIONS ON SHEET C-27. 13-15
14. ONCE SITE HAS BEEN PERMANENTLY STABILIZED AND PERMISSION HAS BEEN GRANTED BY THE SEDIMENT CONTROL INSPECTOR:
    - i. REMOVE SEDIMENT TRAPS ST-1 AND ST-2
    - ii. FLUSH THE STORM DRAIN SYSTEM WITH CLEAN WATER TO REMOVE ANY RESIDUAL SEDIMENT.
    - iii. GRADE THE FOREBAY AREA AND THE STORAGE BASIN IN THE STORMWATER MANAGEMENT POND/SEDIMENT TRAP ST-3 AND PERMANENTLY STABILIZE. RESET/REPLACE ALL INFLOW PROTECTION AT THE STORM DRAIN OUTFALLS.
    - iv. UNBLOCK THE PIPE OPENINGS FROM THE INLETS TO THE RECHARGE DEVICES.
    - v. ONCE THE MICRO POOL AREA AND THE STORAGE BASIN ARE PERMANENTLY STABILIZED, UNBLOCK THE OUTLET STRUCTURE IN THE STORMWATER MANAGEMENT POND/SEDIMENT TRAP ST-3, REMOVE THE TEMPORARY DRAWDOWN DEVICE AND INSTALL THE PERMANENT DRAWDOWN DEVICE.
    - vi. GRADE THE SWALE SOUTH OF THE STORMWATER MANAGEMENT POND / SEDIMENT TRAP ST-3 AS INDICATED BY THE DASHED CONTOURS. STABILIZE WITH EROSION CONTROL MATTING WHEN GRADING IS COMPLETE. 15-16
15. WITH PERMISSION FROM THE SEDIMENT CONTROL INSPECTOR REMOVE ALL REMAINING EARTH DIKES, SILT FENCE AND SUPER SILT FENCE. 16-17

BUILDING TABLE:

STRUCTURE		HEIGHT	STREET ADDRESS
POLICE DEPT. CLASSROOM TRAILER	TEMPORARY MODULAR BUILDING	12'±	2220
2 ~~OFFICE TRAILER~~	~~TEMPORARY MODULAR BUILDING~~	~~12'±~~	~~2230~~
FIRE DEPT. OFFICE & CLASSROOM TRAILER	TEMPORARY MODULAR BUILDING	12'±	2210
LAVATORY TRAILER	TEMPORARY MODULAR BUILDING	12'±	2240
TRAINING TRAILER	TEMPORARY MODULAR BUILDING	12'±	
2 APPARATUS BUILDING	PERMANENT BUILDING	24'±	2280
POLICE RANGE TRAILER	TEMPORARY MODULAR BUILDING	12'±	2260
ADMINISTRATION BUILDING CLASSROOM	PERMANENT BUILDING	SEE NOTE	2200 ALPHA CENTER DR
ALPHA RIDGE WATER TANK	PERMANENT STRUCTURE		2101
OLD 150 MHz RADIO TOWER	PERMANENT STRUCTURE		2170
NEW 800 MHz RADIO TOWER	PERMANENT STRUCTURE		2180
POLICE PISTOL RANGE	PERMANENT STRUCTURE		2264 3
	PERMANENT BUILDING		2260
RANGE ARMORY	PERMANENT BUILDING		2270
BURN BUILDING	PERMANENT BUILDING		2258
SIMULATION TRNG. BUILDING	PERMANENT BUILDING		2250
CHEMICAL BUILDING	PERMANENT BUILDING		2254 ALPHA CENTER DR.

SOUTH ELEVATION 3
SCALE: 1"=40'

NOTE: THE HEIGHT OF THE BUILDING IS 39.75' TO THE MIDPOINT OF HALF GABLED ROOF

LIST OF APPROVED WAIVERS

WIAVER #	ACTION	DATE APPROVED	APPROVED BY
WRITTEN APPROVAL	DEFER PLACEMENT OF BITUMINOUS PAVING UNTIL A LATER PHASE OF WORK ON THIS SITE.	JULY 16, 2002	HOWARD COUNTY DEPARTMENT OF PUBLIC WORKS
WP-02-102	ALLOWS RECORDING OF ADJOINER DEEDS TO RECONFIGURE PARCELS 253, 220 AND 11.	APRIL 23, 2002	HOWARD COUNTY DEPARTMENT OF PLANNING AND ZONING
WRITTEN APPROVAL	APPROVED THE USE OF A SEWAGE HOLDING TANK	MARCH 25, 2002	HOWARD COUNTY HEALTH DEPARTMENT
WRITTEN APPROVAL	WAIVES THE REQUIREMENT FOR A 12' BENCH, 1' ABOVE THE NORMAL POOL ELEVATION, WITHIN THE SWM POND AS DESCRIBED UNDER SECTION 5.2.7.A.2 OF THE HOWARD COUNTY DESIGN MANUAL, VOLUME 1.	OCTOBER 15, 2002	HOWARD COUNTY DEPARTMENT OF PUBLIC WORKS
WP-03-36	ALLOWS DISTURBANCE WITHIN THE STREAM BUFFER ON THE SOUTH EAST PORTION OF THE SITE IN THE VICINITY OF THE SWM POND AND FUTURE BURN BUILDING.	DECEMBER 9, 2002	HOWARD COUNTY DEPARTMENT OF PLANNING AND ZONING
WRITTEN APPROVAL	ALLOWS THE USE OF A STORMCEPTOR	OCTOBER 7, 2002	HOWARD COUNTY DEPARTMENT OF PUBLIC WORKS

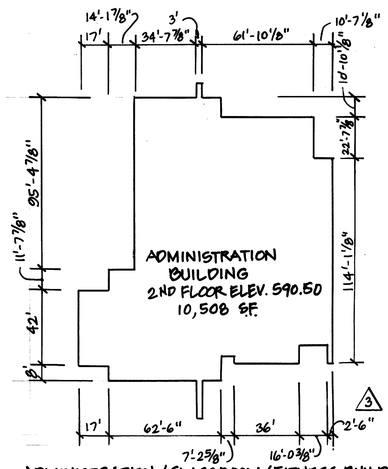

ADMINISTRATION/CLASSROOM/FITNESS BUILDING
SCALE: 1"=40'

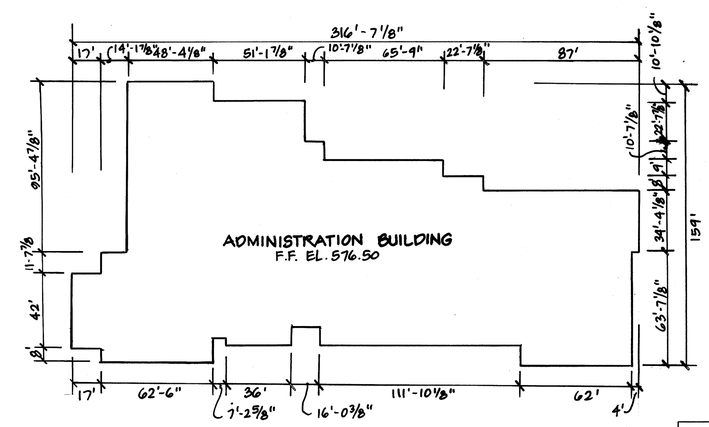

ADMINISTRATION/CLASSROOM/FITNESS BUILDING 3
SCALE: 1"=40'

APPROVED: FOR PUBLIC WATER AND PRIVATE SEWERAGE SYSTEMS, HOWARD COUNTY HEALTH DEPARTMENT

3-5-03
COUNTY HEALTH OFFICER — DATE

APPROVED: HOWARD COUNTY DEPARTMENT OF PLANNING AND ZONING

3/18/03
DIRECTOR — DATE

3/4/03
CHIEF, DEVELOPMENT ENGINEERING DIVISION — DATE

3/17/03
CHIEF, DIVISION OF LAND DEVELOPMENT — DATE

For Revision 3 by Site Resources only

DEPARTMENT OF PUBLIC WORKS
HOWARD COUNTY, MARYLAND

CHIEF, BUREAU OF UTILITIES — DATE

PREPARED BY:

WR&A
Whitman, Requardt and Associates, LLP.
801 South Caroline Street.
Baltimore, Maryland. 21231
410-235-3450

STATE OF MARYLAND — JAMES A. AVIRETT — No. 18819 — PROFESSIONAL ENGINEER

DES: C.D.
DRN: C.K.
CHK: A.O.
DATE: 12/16/2002

BY	NO.	REVISION	DATE
SR1	3	REVISED THE ADMIN./CLASS ROOM BLDG. W/WALKWAY AND PARKING AREA W/ 3 HANDICAPPED SPACES.	7/13/05
CMD	2	REMOVED OFFICE TRAILER, ADDED APPARATUS BLDG. + POLICE RANGE TRAILER TO BLDG. TABLE.	10/24/04

GENERAL NOTES AND LIST OF DRAWINGS

600' SCALE MAP NO. 16 BLOCK NO. 2 / 8

PUBLIC SAFETY TRAINING CENTER
AT ALPHA RIDGE LANDFILL
CAPITAL PROJECT NO. C-0182
HOWARD COUNTY, MARYLAND

G-2

SCALE AS SHOWN

SHEET 2 OF 39

SDP-03-36

M:\13490\pstcg02.dgn
Thu Feb 20 8:42:27 2003

MATCH LINE SEE DWG. LS-1

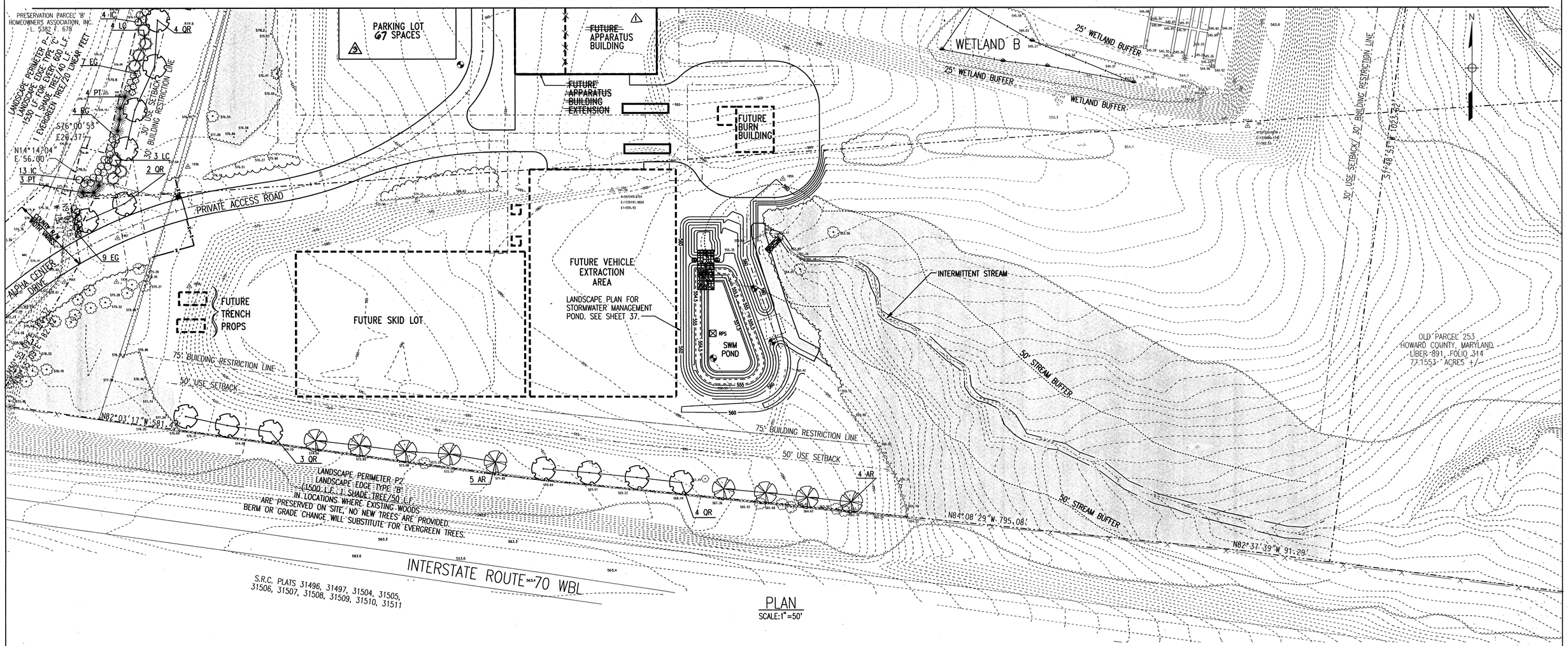

PLAN
SCALE: 1" = 50'

APPROVED: FOR PUBLIC WATER AND PRIVATE SEWERAGE SYSTEMS, HOWARD COUNTY HEALTH DEPARTMENT

COUNTY HEALTH OFFICER — DATE 3-5-03

APPROVED: HOWARD COUNTY DEPARTMENT OF PLANNING AND ZONING

DIRECTOR — DATE 3/14/03

CHIEF, DEVELOPMENT ENGINEERING DIVISION — DATE 3/11/03

CHIEF, DIVISION OF LAND DEVELOPMENT — DATE 3/17/03

For Revision 3 by Site Resources only

DEPARTMENT OF PUBLIC WORKS
HOWARD COUNTY, MARYLAND

CHIEF, BUREAU OF UTILITIES — DATE

PREPARED BY :

WR&A
Whitman, Requardt and Associates, LLP.
801 South Caroline Street.
Baltimore, Maryland. 21231
410-235-3450

DES: H.W.P. S.H.B.	SRI	3	REVISED NUMBER OF PARKING SPACES	7/13/03
DRN: E.M.				
CHK: H.W.P.				
DATE: 12/16/2002	CWD	1	REMOVED 'FUTURE'	7/23/09
	BY	NO.	REVISION	DATE

LANDSCAPE PLAN - SOUTH

600' SCALE MAP NO. 16 BLOCK NO. 2 / 8

PUBLIC SAFETY TRAINING CENTER
AT ALPHA RIDGE LANDFILL
CAPITAL PROJECT NO. C-0182
HOWARD COUNTY, MARYLAND

GRAPHIC SCALE
50 0 50 100
SCALE: 1" = 50'

LS-2

SCALE AS SHOWN

SHEET 36 OF 39

W.O. /13490/

SDP-03-36

M:\13490\PSTCLS2.DGN
Thu Feb 20 15:42:54 2003

DETAIL 18 – SEDIMENT BASIN BAFFLES

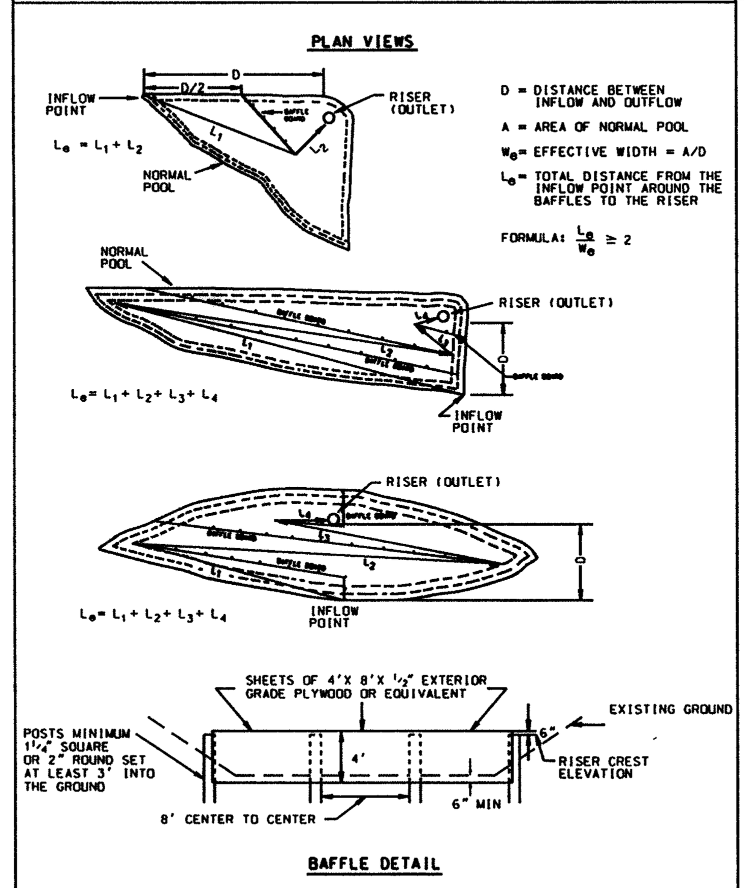

U.S. DEPARTMENT OF AGRICULTURE SOIL CONSERVATION SERVICE	PAGE C – 10 – 28	MARYLAND DEPARTMENT OF ENVIRONMENT WATER MANAGEMENT ADMINISTRATION

DETAIL 9 – STONE OUTLET SEDIMENT TRAP – ST II

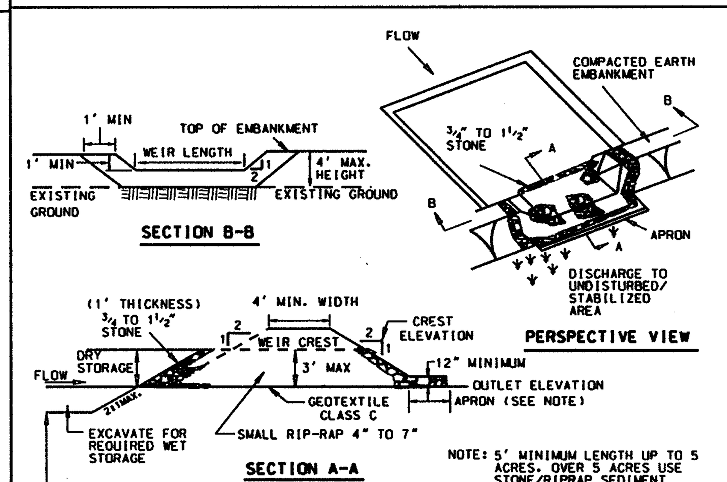

Construction Specifications

1. Area under embankment shall be cleared, grubbed and stripped of any vegetation and root mat. The pool area shall be cleared.

2. The fill material for the embankment shall be free of roots and other woody vegetation as well as over-sized stones, rocks, organic material or other objectionable material. The embankment shall be compacted by traversing with equipment while it is being constructed.

3. All cut and fill slopes shall be 2:1 or flatter.

4. The stone used in the outlet shall be small rip-rap 4" to 7" in size with a 1' thick layer of 3/4" to 1 1/2" washed aggregate placed on the upstream face of the outlet. Stone facing shall be as necessary to prevent clogging. Geotextile Class C may be substituted for the stone facing by placing it on the inside face of the stone outlet.

5. Sediment shall be removed and trap restored to its original dimensions when the sediment has accumulated to one half of the wet storage depth of the trap. Removed sediment shall be deposited in a suitable area and in such a manner that it will not erode.

U.S. DEPARTMENT OF AGRICULTURE SOIL CONSERVATION SERVICE	PAGE C – 9 – 10	MARYLAND DEPARTMENT OF ENVIRONMENT WATER MANAGEMENT ADMINISTRATION

DETAIL 1 – EARTH DIKE

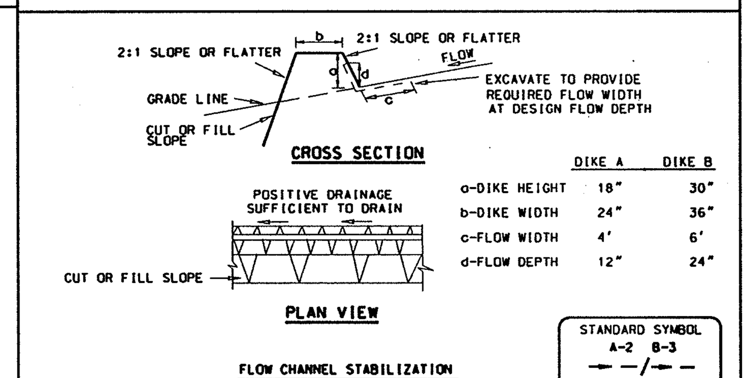

	DIKE A	DIKE B
a-DIKE HEIGHT	18"	30"
b-DIKE WIDTH	24"	36"
c-FLOW WIDTH	4'	6'
d-FLOW DEPTH	12"	24"

1. Seed and cover with straw mulch.
2. Seed and cover with Erosion Control Matting or line with sod.
3. 4" – 7" stone or recycled concrete equivalent pressed into the soil 7" minimum

Construction Specifications

1. All temporary earth dikes shall have uninterrupted positive grade to an outlet. Spot elevations may be necessary for grades less than 1%.

2. Runoff diverted from a disturbed area shall be conveyed to a sediment trapping device.

3. Runoff diverted from an undisturbed area shall outlet directly into an undisturbed, stabilized area at a non-erosive velocity.

4. All trees, brush, stumps, obstructions, and other objectional material shall be removed and disposed of so as not to interfere with the proper functioning of the dike.

5. The dike shall be excavated or shaped to line, grade and cross section as required to meet the criteria specified herein and be free of bank projections or other irregularities which will impede normal flow.

6. Fill shall be compacted by earth moving equipment.

7. All earth removed and not needed for construction shall be placed so that it will not interfere with the functioning of the dike.

8. Inspection and maintenance must be provided periodically and after each rain event.

U.S. DEPARTMENT OF AGRICULTURE SOIL CONSERVATION SERVICE	PAGE A – 1 – 6	MARYLAND DEPARTMENT OF ENVIRONMENT WATER MANAGEMENT ADMINISTRATION

DETAIL 23A – STANDARD INLET PROTECTION

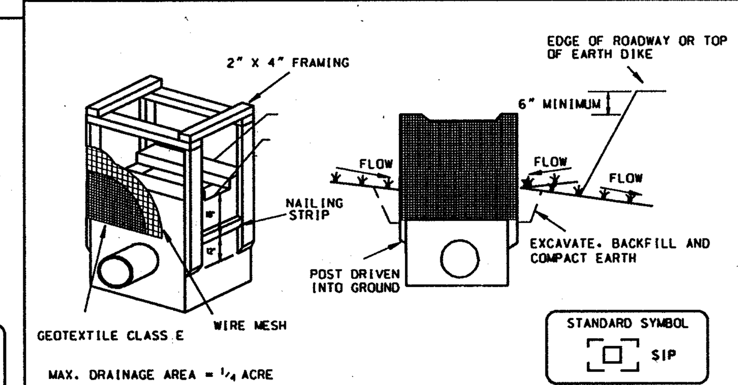

Construction Specifications

1. Excavate completely around the inlet to a depth of 18" below the notch elevation.

2. Drive the 2" x 4" construction grade lumber posts 1' into the ground at each corner of the inlet. Place nail strips between the posts on the ends of the inlet. Assemble the top portion of the 2" x 4" frame using the overlap joint shown on Detail 23A. The top of the frame (weir) must be 6" below adjacent roadways where flooding and safety issues may arise.

3. Stretch the 1/2" x 1/2" wire mesh tightly around the frame and fasten securely. The ends must meet and overlap at a post.

4. Stretch the Geotextile Class E tightly over the wire mesh with the geotixtile extending from the top of the frame to 18" below the inlet notch elevation. Fasten the geotextile firmly to the frame. The ends of the geotextile must meet at a post, be overlapped and folded, then fastened down.

5. Backfill around the inlet in compacted 6" layers until the layer of earth is level with the notch elevation on the ends and top elevation on the sides.

6. If the inlet is not in a sump, construct a compacted earth dike across the ditch line directly below it. The top of the earth dike should be at least 6" higher than the top of the frame.

7. The structure must be inspected periodically and after each rain and the geotextile replaced when it becomes clogged.

U.S. DEPARTMENT OF AGRICULTURE SOIL CONSERVATION SERVICE	PAGE E – 16 – 5	MARYLAND DEPARTMENT OF ENVIRONMENT WATER MANAGEMENT ADMINISTRATION

DETAIL 6 – GABION INFLOW PROTECTION

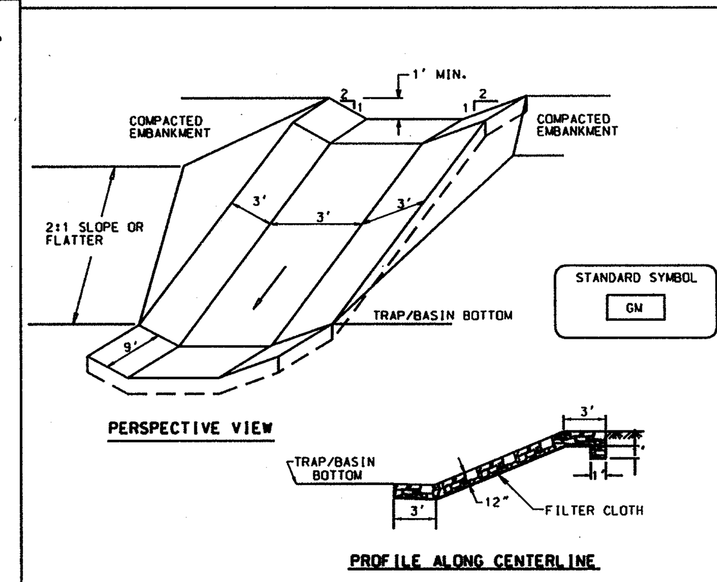

Construction Specifications

1. Gabion inflow protection shall be constructed of 9' x 3' x 9" gabion baskets forming a trapezoidal cross section 1' deep, with 2:1 side slopes, and a 3' bottom width.

2. Geotextile Class C shall be installed under all gabion baskets.

3. The stone used to fill the gabion baskets shall be 4" – 7".

4. Gabions shall be installed in accordance with manufacturers recommendations.

5. Gabion Inflow Protection shall be used where concentrated flow is present on slopes steeper than 4:1.

U.S. DEPARTMENT OF AGRICULTURE SOIL CONSERVATION SERVICE	PAGE B – 7 – 2	MARYLAND DEPARTMENT OF ENVIRONMENT WATER MANAGEMENT ADMINISTRATION

DETAIL 8 – PIPE OUTLET SEDIMENT TRAP – ST I

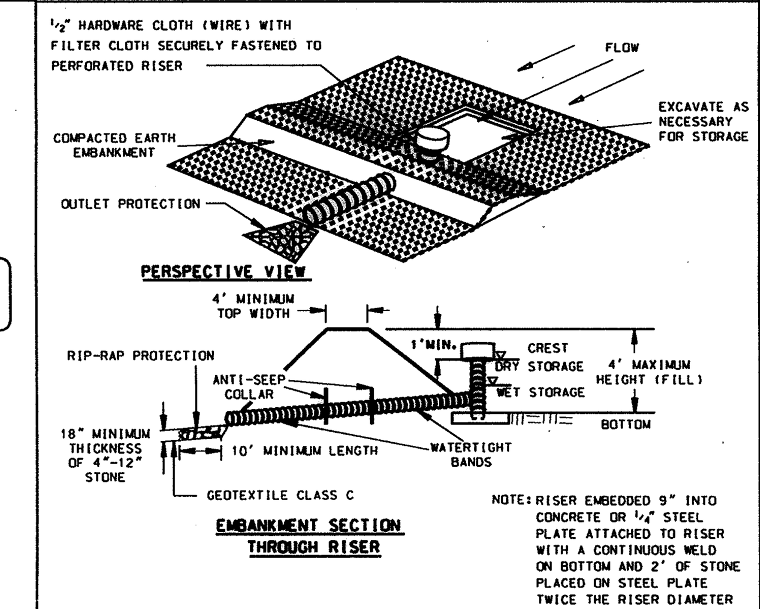

Construction Specifications

1. The area under the embankment shall be cleared, grubbed and stripped of any vegetation and root mat. The pool area shall be cleared.

2. The fill material for the embankment shall be free of roots or other woody vegetation as well as oversized stones, rocks, organic material, or other objectionable material. The embankment shall be compacted by traversing with equipment while it is being constructed.

3. The total trap volume as measured from the bottom to riser crest elevation shall be 3600 cubic feet per acre of drainage area (see Table 9). The top of embankment must be ≥1' above the riser crest elevation.

4. Sediment shall be removed and the trap restored to its original dimensions when the sediment has accumulated to one half of the wet storage depth of the trap (900cf/ac). The sediment shall be deposited in a suitable area and in such a manner that it will not erode.

5. The structure shall be inspected periodically and after each rain and repairs made as necessary.

U.S. DEPARTMENT OF AGRICULTURE SOIL CONSERVATION SERVICE	PAGE C – 9 – 7	MARYLAND DEPARTMENT OF ENVIRONMENT WATER MANAGEMENT ADMINISTRATION

DETAIL 16 – CONCENTRIC TRASH RACK AND ANTI-VORTEX DEVICE

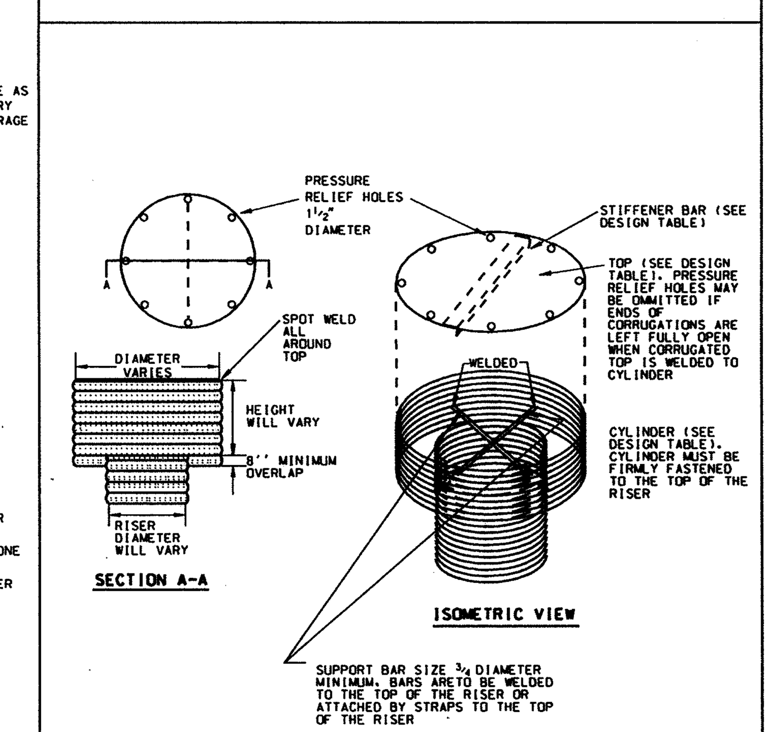

U.S. DEPARTMENT OF AGRICULTURE SOIL CONSERVATION SERVICE	PAGE C – 10 – 28	MARYLAND DEPARTMENT OF ENVIRONMENT WATER MANAGEMENT ADMINISTRATION

DETAIL 10A – STONE /RIP-RAP OUTLET SEDIMENT TRAP – ST IV

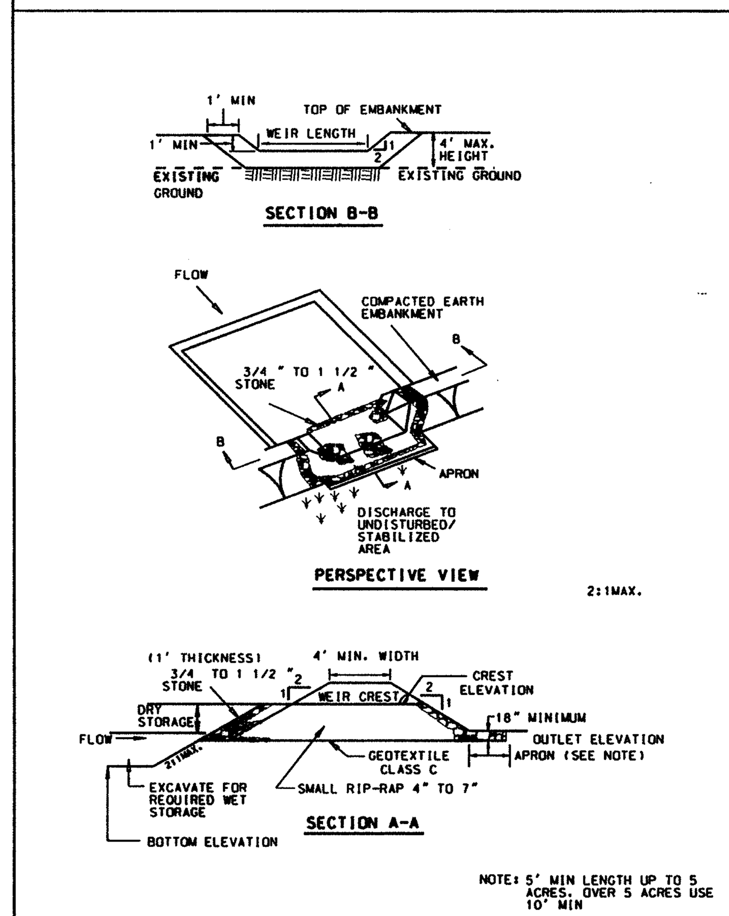

U.S. DEPARTMENT OF AGRICULTURE SOIL CONSERVATION SERVICE	PAGE C - 9 - 16	MARYLAND DEPARTMENT OF ENVIRONMENT WATER MANAGEMENT ADMINISTRATION

DETAIL 27 – ROCK OUTLET PROTECTION III

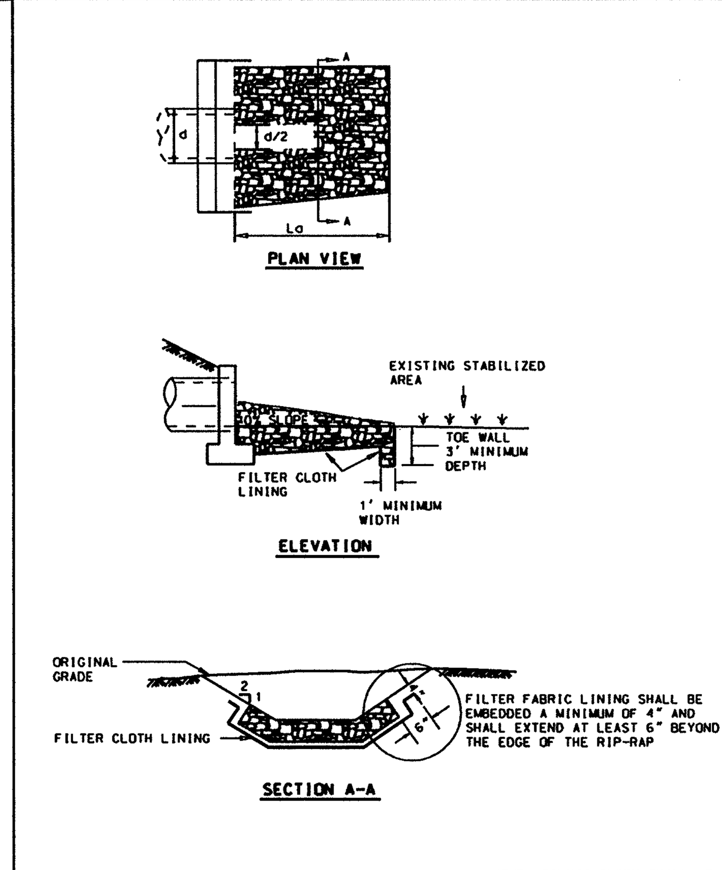

U.S. DEPARTMENT OF AGRICULTURE SOIL CONSERVATION SERVICE	PAGE F – 18 – 10	MARYLAND DEPARTMENT OF ENVIRONMENT WATER MANAGEMENT ADMINISTRATION

DETAIL 22 – SILT FENCE

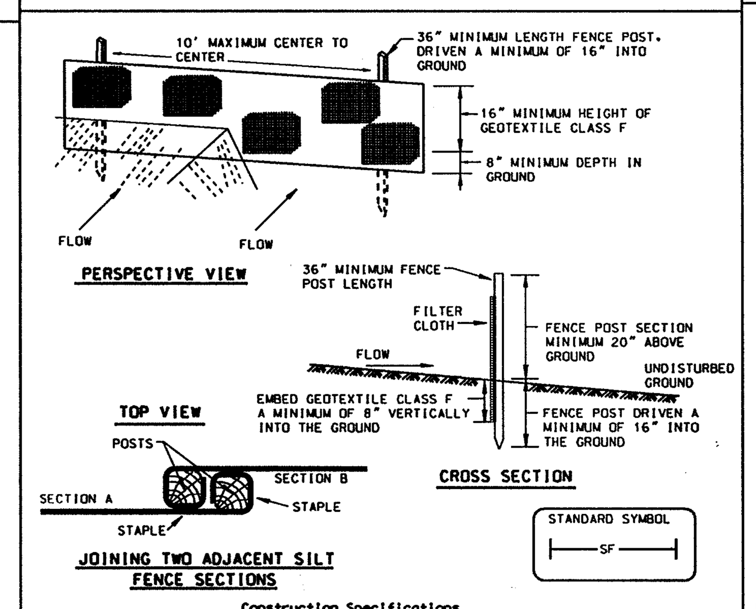

Construction Specifications

1. Fence posts shall be a minimum of 36" long driven 16" minimum into the ground. Wood posts shall be 1 1/2" x 1 1/2" square (minimum) cut, or 1 3/4" diameter (minimum) round and shall be of sound quality hardwood. Steel posts will be standard T or U section weighting not less than 1.00 pond per linear foot.

2. Geotextile shall be fastened securely to each fence post with wire ties or staples at top and mid-section and shall meet the following requirements for Geotextile Class F:

Tensile Strength	50 lbs/in (min.)	Test: MSMT 509
Tensile Modulus	20 lbs/in (min.)	Test: MSMT 509
Flow Rate	0.3 gal ft²/ minute (max.)	Test: MSMT 322
Filtering Efficiency	75% (min.)	Test: MSMT 322

3. Where ends of geotextile fabric come together, they shall be overlapped, folded and stapled to prevent sediment bypass.

4. Silt Fence shall be inspected after each rainfall event and maintained when bulges occur or when sediment accumulation reached 50% of the fabric height.

U.S. DEPARTMENT OF AGRICULTURE SOIL CONSERVATION SERVICE	PAGE E – 15 – 3	MARYLAND DEPARTMENT OF ENVIRONMENT WATER MANAGEMENT ADMINISTRATION

DETAIL 24 – STABILIZED CONSTRUCTION ENTRANCE

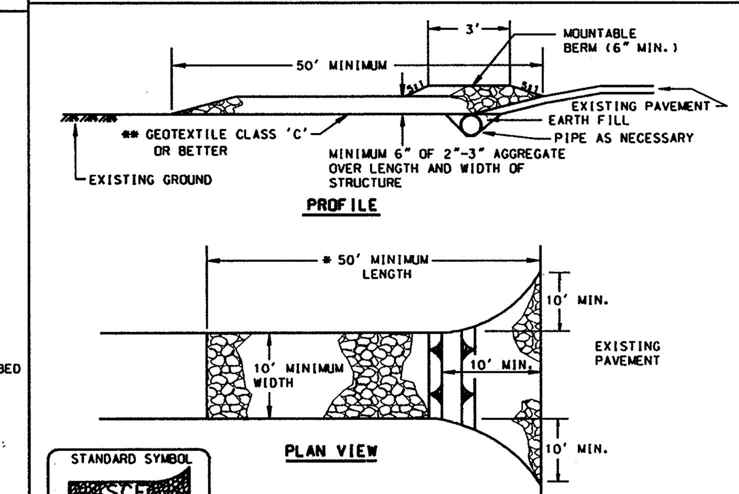

Construction Specification

1. Length – minimum of 50' (*30' for single residence lot).

2. Width – 10' minimum, should be flared at the existing road to provide a turning radius.

3. Geotextile fabric (filter cloth) shall be placed over the existing ground prior to placing stone. **The plan approval authority may not require single family residences to use geotextile.

4. Stone – crushed aggregate (2" to 3") or reclaimed or recycled concrete equivalent shall be placed at least 6" deep over the length and width of the entrance.

5. Surface Water – all surface water flowing to or diverted toward construction entrances shall be piped through the entrance, maintaining positive drainage. Pipe installed through the stabilized construction entrance shall be protected with a mountable berm with 5:1 slopes and a minimum of 6" of stone over the pipe. Pipe has to be sized according to the drainage. When the SCE is located at a high spot and has no drainage to convey a pipe will not be necessary. Pipe should be sized according to the amount of runoff to be conveyed. A 6" minimum will be required.

6. Location – A stabilized construction entrance shall be located at every point where construction traffic enters or leaves a construction site. Vehicles leaving the site must travel over the entire length of the stabilized construction entrance.

U.S. DEPARTMENT OF AGRICULTURE SOIL CONSERVATION SERVICE	PAGE F – 17 – 3	MARYLAND DEPARTMENT OF ENVIRONMENT WATER MANAGEMENT ADMINISTRATION

DETAIL 20A – REMOVABLE PUMPING STATION

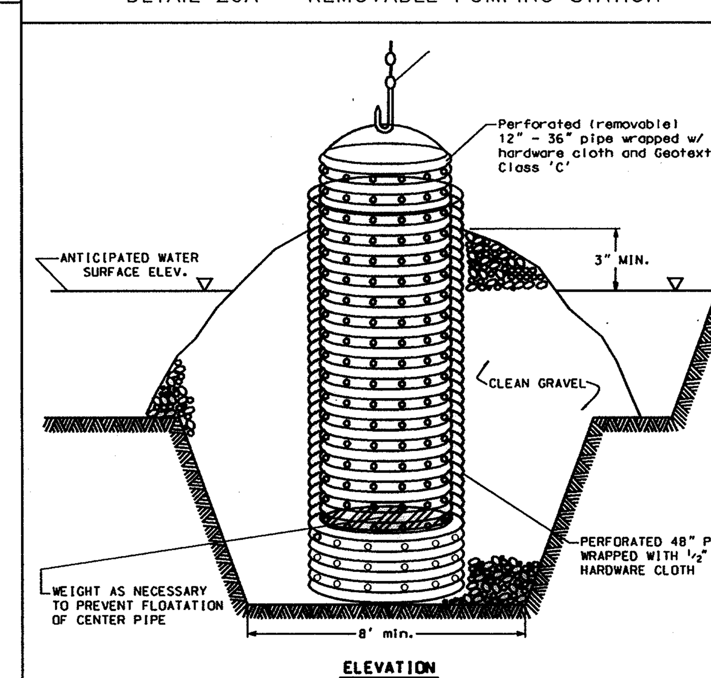

Construction Specifications

1. The outer pipe should be 48" dia. or shall, in any case, be at least 4" greater in diameter than the center pipe. The outer pipe shall be wrapped with 1/2" hardware cloth to prevent backfill material from entering the perforations.

2. After installing the outer pipe, backfill around outer pipe with 2" aggregate or clean gravel.

3. The inside stand pipe (center pipe) should be constructed by perforating a corrugated or PVC pipe between 12" and 36" in diameter. The perforations shall be 1/2" X 6" slits or 1" diameter holes 6" on center. The center pipe shall be wrapped with 1/2" hardware cloth first, then wrapped again with Geotextile Class C.

4. The center pipe should extend 12" to 18" above the anticipated water surface elevation or riser crest elevation when dewatering a basin.

U.S. DEPARTMENT OF AGRICULTURE SOIL CONSERVATION SERVICE	PAGE D – 12 – 4	MARYLAND DEPARTMENT OF ENVIRONMENT WATER MANAGEMENT ADMINISTRATION

BASIN DRAWDOWN SCHEMATIC HORIZONTAL DRAW–DOWN DEVICE

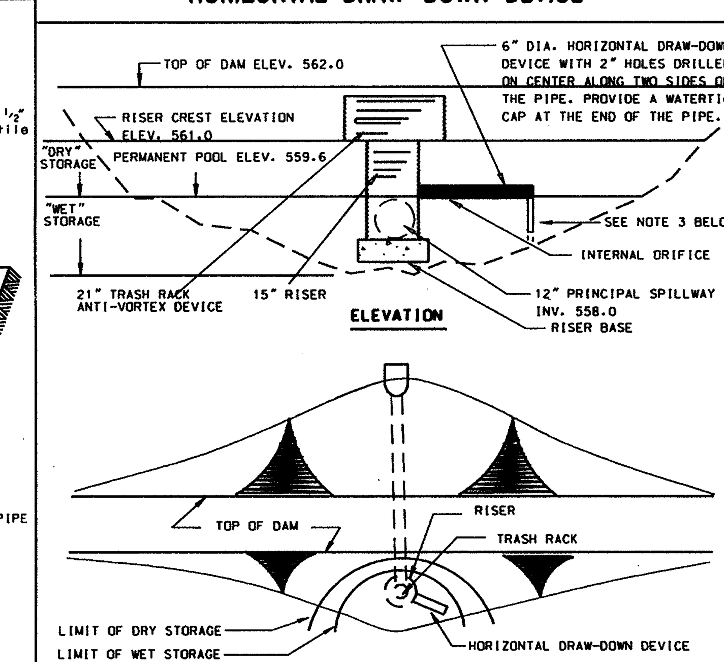

Construction Specifications

1. The total area of the perforations must be greater than 2 times the area of the internal orifice.

2. The perforated portion of the draw-down device shall be wrapped with 1/2" hardware cloth and geotextile fabric. The geotextile fabric shall meet the specifications for Geotextile Class E.

3. Provide support of draw-down device to prevent sagging and floatation. An acceptable preventative measure is to stake both sides of draw-down device with 1" steel angle, or 1' by 4" square or 2" round wooden posts set 3' minimum into the ground then joining them to the device by wrapping with 12 gauge minimum wire.

U.S. DEPARTMENT OF AGRICULTURE SOIL CONSERVATION SERVICE	PAGE C – 10 – 29	MARYLAND DEPARTMENT OF ENVIRONMENT WATER MANAGEMENT ADMINISTRATION

DETAIL 16 CONCENTRIC TRASH RACK AND ANTI–VORTEX DEVICE (continued)

Riser Diam., in.	Trash Rack Cylinder Diam. in.	Thick., gage	H, in.	Minimum Size Support Bar	Minimum Top Thickness	Stiffener
12	18	16	6	#6 Rebar	16 ga.	--
15	21	16	7	"	"	--
18	27	16	8	"	"	--
21	30	16	11	"	"	--
24	36	16	13	"	14 ga.	--
27	42	16	15	"	14 ga.	--
36	54	14	17	#8 Rebar	12 ga.	--
42	60	14	19	"	"	--
48	72	12	21	1-1/4" pipe or 1-1/4 x 1-1/4 x1/4 angle	10 ga.	--
54	78	12	25	"	"	--
60	90	12	29	1-1/2" pipe or 1-1/2 x 1-1/2 x1/4 angle	8 ga.	--
66	96	10	33	2" pipe or 2x2x3/16 angle	8 ga., w/stiffener	2x2x1/4 angle
72	102	10	36	"	"	2-1/2x2-1/2x1/4 angle
78	114	10	39	2-1/2" pipe or 2x2x1/4 angle	"	"
84	120	10	42	2-1/2" pipe or 2-1/2x2-1/2x1/4 angle	"	2-1/2 x2-1/2x 5/16 angle

Note: The above trash rack and anti-vortex device information is only for corrugated metal pipe. Concrete risers must meet the requirements of MD 378.

U.S. DEPARTMENT OF AGRICULTURE SOIL CONSERVATION SERVICE	PAGE C – 10 – 28A	MARYLAND DEPARTMENT OF ENVIRONMENT WATER MANAGEMENT ADMINISTRATION

DUST CONTROL SPECIFICATIONS

Temporary Methods

1. Mulches – See standards for vegetative stabilization with mulches only. Mulch should be crimped or tacked to prevent blowing.
2. Vegetative Cover – See standards for temporary vegetative cover.
3. Tillage – To roughen surface and bring clods to the surface. This is an emergency measure which should be used before soil blowing starts. Begin plowing on windward side of site. Chisel-type plows spaced about 12" apart, spring-toothed harrows, and similar plows are examples of equipment which may produce the desire effect.
4. Irrigation – This is generally done as an emergency treatment. Site is sprinkled with water until the surface is moist. Repeat as needed. At no time should the site be irrigated to the point that runoff begins to flow.
5. Barriers – Solid board fences, silt fences, snow fences, burlap fences, straw bales, and similar material can be used to control air currents and soil blowing. Barriers placed at right angles to prevailing currents at intervals of about 10 times their height are effective in controlling soil blowing.
6. Calcium Chloride – Apply at rates that keep surface moist. May needretreatment.

TEMPORARY DRAW–DOWN DEVICE SPECIFICATIONS

△3

	TRAP 3
TOP OF DAM ELEV.	560.0
RISER CREST ELEV.	557.0
PERMANENT POOL ELEV.	557.0
DRAWDOWN INV.	NO DRAWDOWN DEVICE
PRINCIPAL SPILLWAY INV.	555.0
PRINCIPAL SPILLWAY DIA	12"
DRAWDOWN DIA.	NO DRAWDOWN DEVICE
RISER DIA.	15"
TRASH RACK DIA.	21"
LENGTH OF DRAWDOWN	NO DRAWDOWN DEVICE

For Raision △3 by Site Resources only

APPROVED: FOR PUBLIC WATER AND PRIVATE SEWERAGE SYSTEMS, HOWARD COUNTY HEALTH DEPARTMENT
COUNTY HEALTH OFFICER — DATE 3-5-03

APPROVED: HOWARD COUNTY DEPARTMENT OF PLANNING AND ZONING
DIRECTOR — DATE 3/14/03
CHIEF, DEVELOPMENT ENGINEERING DIVISION — DATE 3/4/03
CHIEF, DIVISION OF LAND DEVELOPMENT — DATE 3/17/03

DEPARTMENT OF PUBLIC WORKS
HOWARD COUNTY, MARYLAND
CHIEF, BUREAU OF UTILITIES — DATE

PREPARED BY :
WR&A
Whitman, Requardt and Associates, LLP.
801 South Caroline Street.
Baltimore, Maryland. 21231
410-235-3450

DES: C.D.
DRN: C.K.
CHK: A.O.
DATE: 12/16/2002

BY	NO.	REVISION	DATE
SRI	3	REVISED THE ADMIN./CLASS ROOM BLDG. W/ WALKWAY AND PARKING AREA W/ 3 HANDICAPPED SPACES.	7/13/05

EROSION AND SEDIMENT CONTROL DETAILS

600' SCALE MAP NO. 16 BLOCK NO. 2 / 8

PUBLIC SAFETY TRAINING CENTER
AT ALPHA RIDGE LANDFILL
CAPITAL PROJECT NO. C-0182
HOWARD COUNTY, MARYLAND

C-27

SCALE AS SHOWN

SHEET 29 OF 39

SDP-03-36

M:\13490\pstcc27.dgn
Thu Feb 20 15:43:54 2003

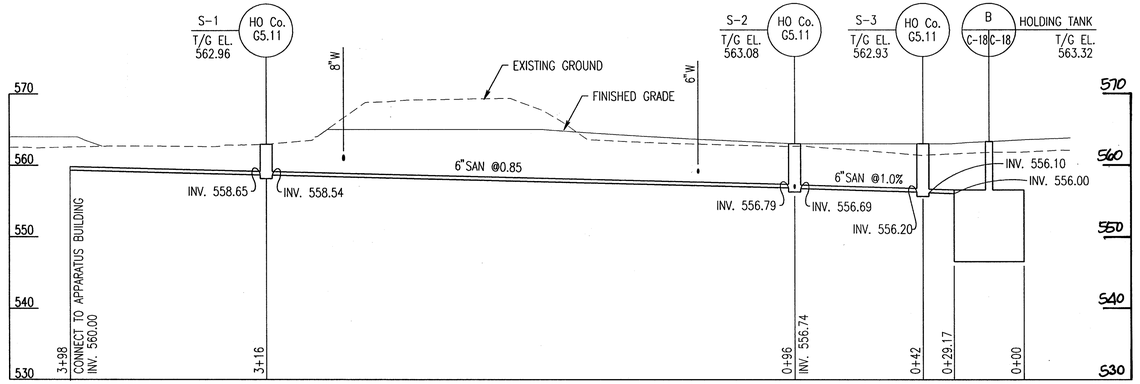

6" SANITARY FROM APPARATUS BUILDING TO THE HOLDING TANK

SCALE: 1" = 30' HORIZ
1" = 10' VERT

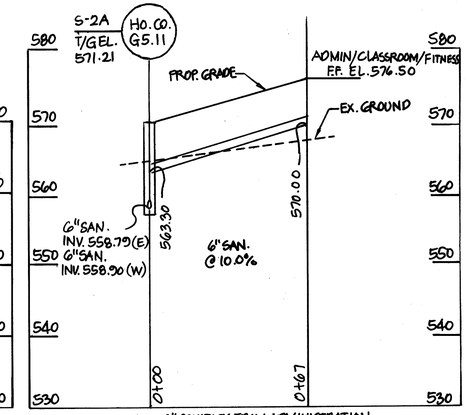

3 6" SANITARY FROM ADMINISTRATION BUILDING TO MH2-A
SCALE: 1"=30' HORIZ.
1"=5' VERT.

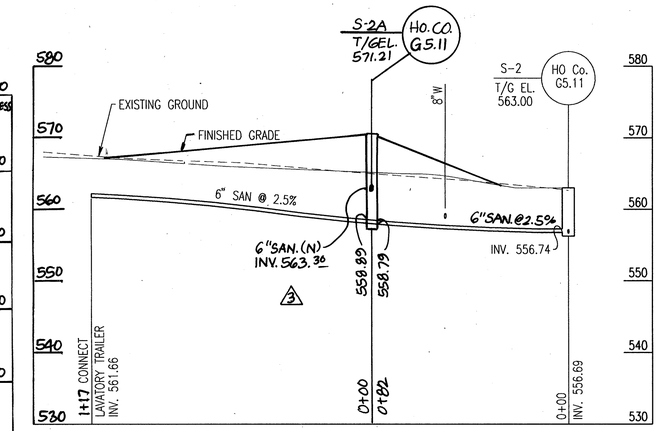

6" SANITARY FROM LAVATORY TRAILER TO MH-2

SCALE: 1" = 30' HORIZ
1" = 10' VERT

NOTES:
- ⊠ HOLD DOWN STRAP CLIP
- ▶◀ HOLD DOWN STRAP LOCATION
- ■ TOP MOUNTED LIFT LUG
- ◠ SIDE MOUNTED LIFT LUG

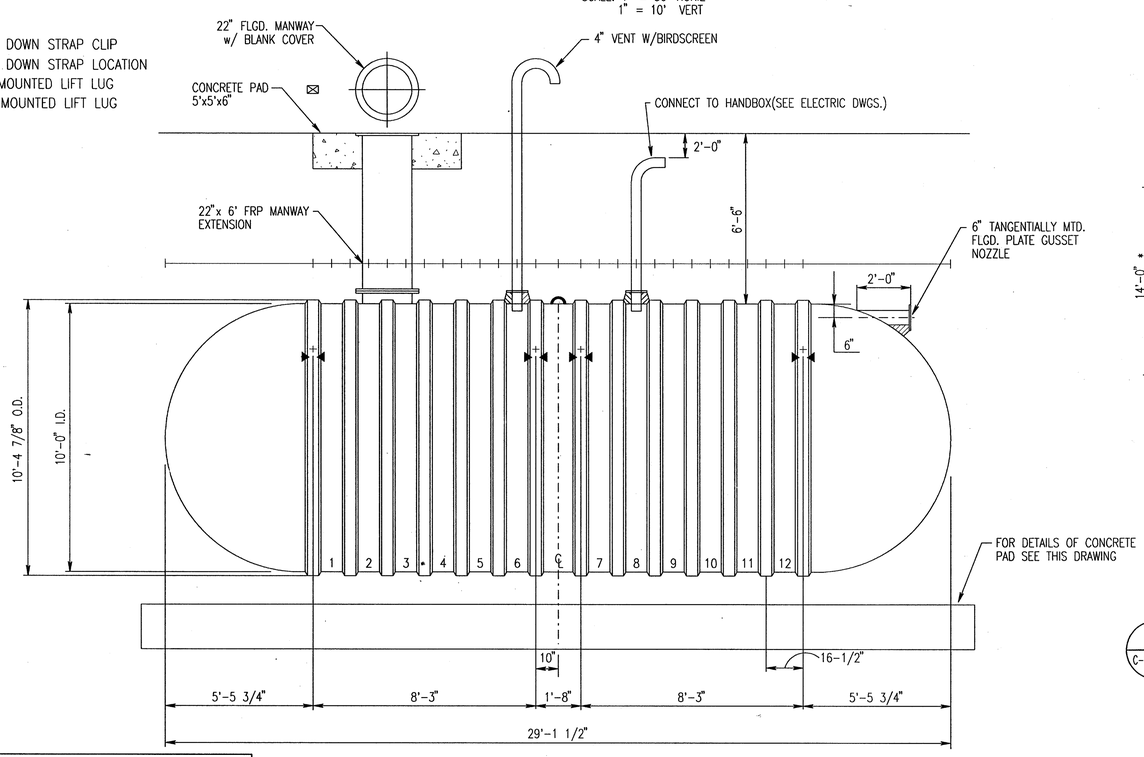

HOLDING TANK (B / C-18 C-18)

NO SCALE

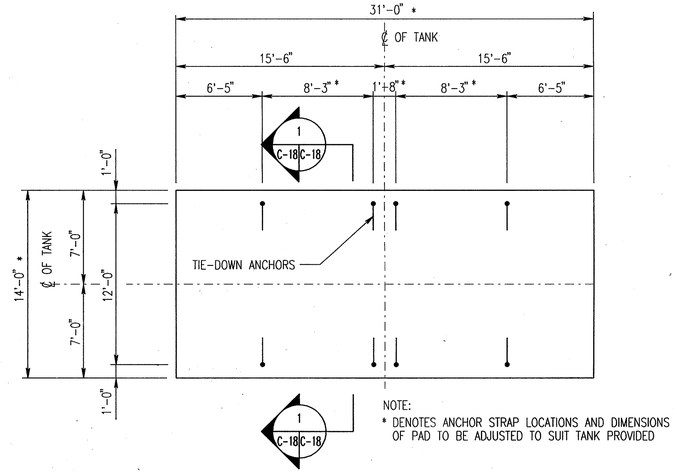

NOTE:
* DENOTES ANCHOR STRAP LOCATIONS AND DIMENSIONS OF PAD TO BE ADJUSTED TO SUIT TANK PROVIDED

PLAN OF FRP TANK HOLD-DOWN PAD

SCALE: 3/16" = 1'=0"

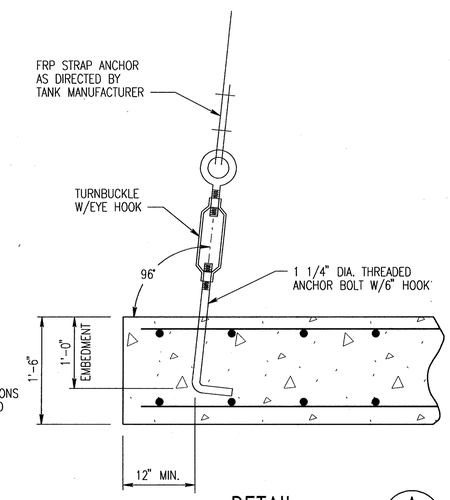

DETAIL (A / C-18 C-18)

SCALE: 1" = 1'=0"

NOTES:
1. PEA GRAVEL SHALL BE CLEAN AND SIZED TO CONFORMED THE TANK MANUFACTURERS RECOMMENDATIONS.
2. AS SOON AS FRP STRAP ANCHORS ARE INSTALLED, THE GRAVEL SHALL BE FILLED UP TO 3 FT. FROM THE TOP OF TANK OR HIGHER

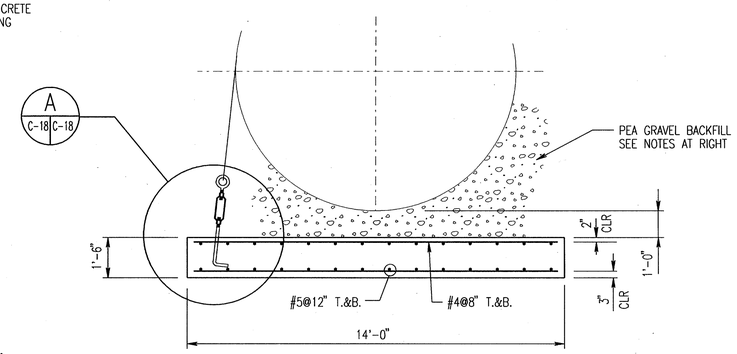

SECTION (1 / C-18 C-18)

SCALE: 3/8" = 1'=0"

APPROVED: FOR PUBLIC WATER AND PRIVATE SEWERAGE SYSTEMS, HOWARD COUNTY HEALTH DEPARTMENT
COUNTY HEALTH OFFICER — DATE 3-5-03

APPROVED: HOWARD COUNTY DEPARTMENT OF PLANNING AND ZONING
DIRECTOR — DATE 3/14/03
CHIEF, DEVELOPMENT ENGINEERING DIVISION — DATE 3/14/03
CHIEF, DIVISION OF LAND DEVELOPMENT — DATE 3/17/03

DEPARTMENT OF PUBLIC WORKS
HOWARD COUNTY, MARYLAND
CHIEF, BUREAU OF UTILITIES — DATE

For Revision 3 by Site Resources only

PREPARED BY :
WR&A
Whitman, Requardt and Associates, LLP.
801 South Caroline Street.
Baltimore, Maryland. 21231
410-235-3450

DES: C.D.	SR.I	3	REVISED THE ADMIN./CLASS ROOM BLDG W/WALKWAY AND PARKING AREA W/ 3 HANDICAPPED SPACES — 7/13/05
DRN: C.K.			
CHK: A.O.			
DATE: 12/16/2002	BY	NO.	REVISION — DATE

PROFILES - SANITARY SEWER AND DETAILS

600' SCALE MAP NO. 16 BLOCK NO. 2 / 8

PUBLIC SAFETY TRAINING CENTER
AT ALPHA RIDGE LANDFILL
CAPITAL PROJECT NO. C-0182
HOWARD COUNTY, MARYLAND

GRAPHIC SCALE
30 20 10 0 30 60
SCALE: 1" = 30'

C-18

SCALE AS SHOWN

SHEET 20 OF 39

SDP-03-36

M:\13490\pstcc18.dgn
Thu Feb 20 15:40:06 2003

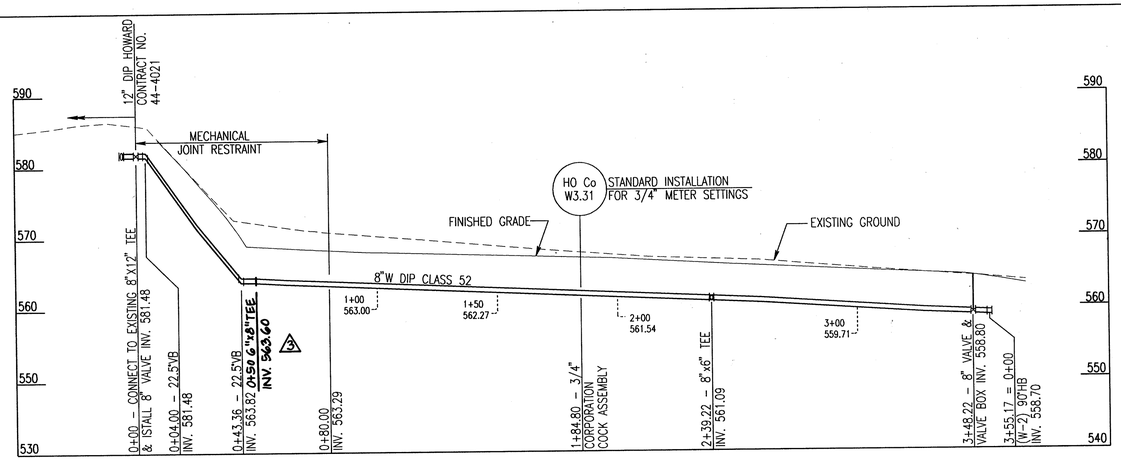

PROFILE 8" WATER MAIN (W-1)

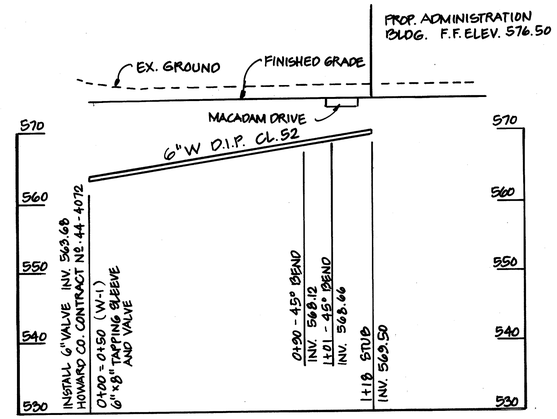

PROFILE 6" WATER MAIN (W-10) 3

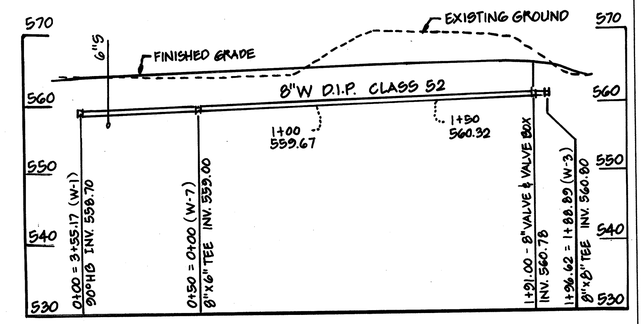

PROFILE 8" WATER MAIN (W-2)

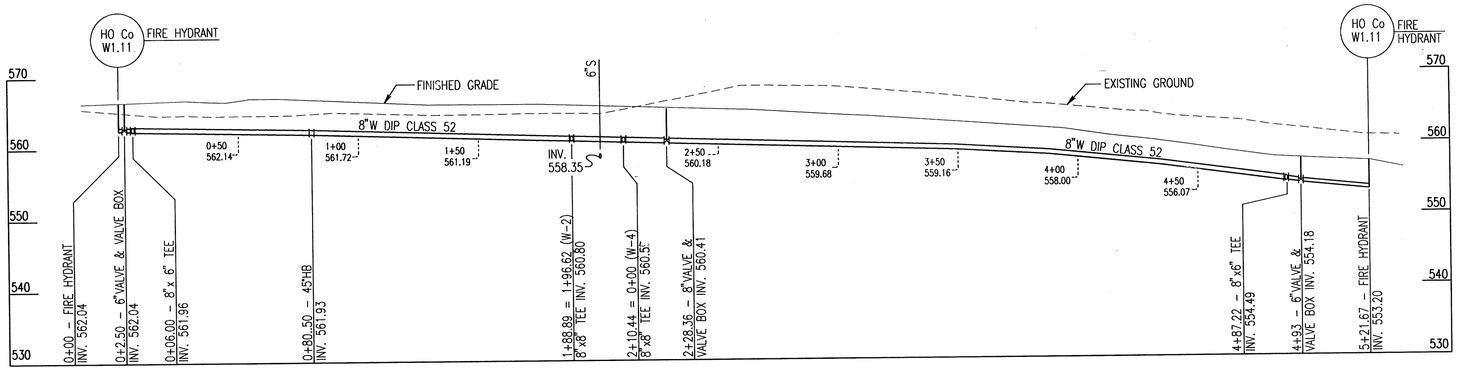

PROFILE 8" WATER MAIN (W-3)

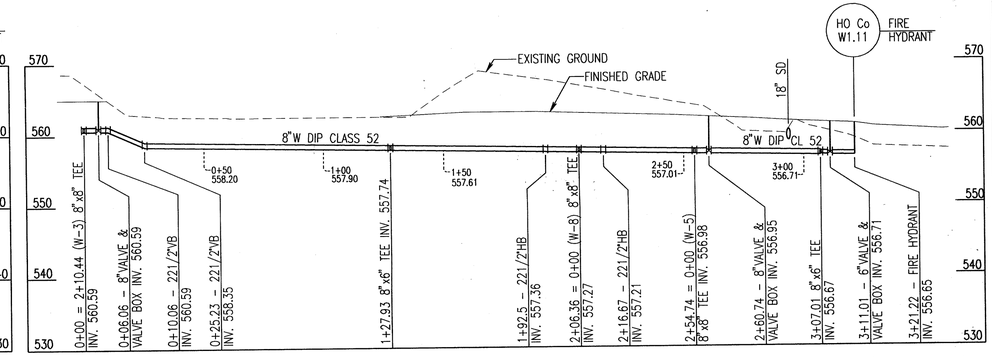

PROFILE 8" WATER MAIN (W-4)

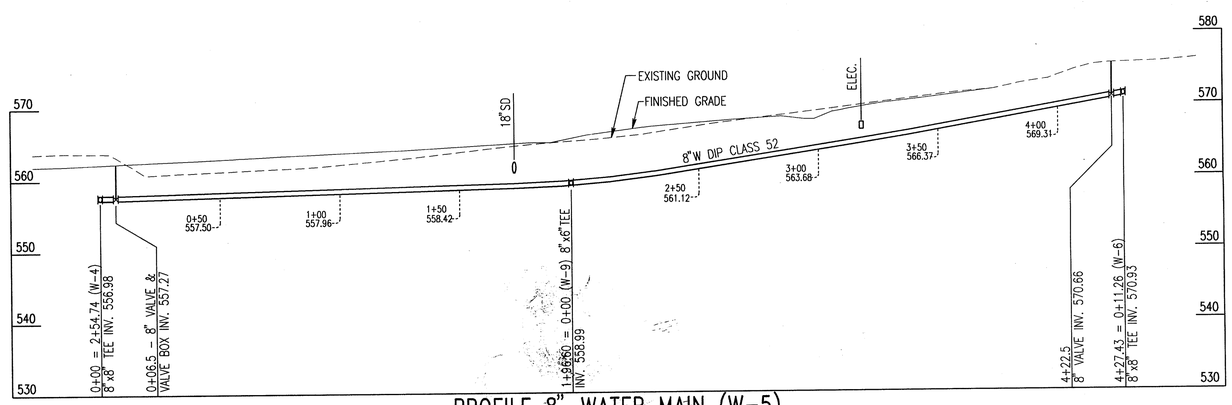

PROFILE 8" WATER MAIN (W-5)

For Revision 3 by Site Resources only.

GRAPHIC SCALE

SCALE: 1" = 30'

SCALE: 1" = 10'

C-16

APPROVED: FOR PUBLIC WATER AND PRIVATE SEWERAGE SYSTEMS, HOWARD COUNTY HEALTH DEPARTMENT

COUNTY HEALTH OFFICER — DATE 3-5-03

APPROVED: HOWARD COUNTY DEPARTMENT OF PLANNING AND ZONING

DIRECTOR — DATE 3/14/03

CHIEF, DEVELOPMENT ENGINEERING DIVISION — DATE 3/14/03

CHIEF, DIVISION OF LAND DEVELOPMENT — DATE 3/17/03

DEPARTMENT OF PUBLIC WORKS
HOWARD COUNTY, MARYLAND

CHIEF, BUREAU OF UTILITIES — DATE

PREPARED BY :

WR&A

Whitman, Requardt and Associates, LLP.
801 South Caroline Street.
Baltimore, Maryland. 21231
410-235-3450

STATE OF MARYLAND — PROFESSIONAL ENGINEER

DES: C.D.
DRN: C.K.
CHK: A.O.
DATE: 12/16/2002

BY	NO.	REVISION	DATE
SRI	3	REVISED THE ADMIN./CLASS ROOM BLDG. W/WALKWAY AND PARKING AREA W/3 HANDICAPPED SPACES REVISED PROFILE W-1	7/13/15

PROFILES - WATER MAINS

600' SCALE MAP NO. 16 BLOCK NO. 2 / 8

PUBLIC SAFETY TRAINING CENTER
AT ALPHA RIDGE LANDFILL
CAPITAL PROJECT NO. C-0182
HOWARD COUNTY, MARYLAND

SCALE AS SHOWN

SHEET 18 OF 39

SDP-03-36

M:\0430\profile.dgn
Thu Feb 20 15:39:24 2003