SITE DEVELOPMENT PLAN
VILLAGE CREST
PART OF PARCEL D-1
PHASE I, APT. BLDGS. A-F, 91 AGE RESTRICTED ADULT HOUSING UNITS
HOWARD COUNTY, MARYLAND

GENERAL NOTES

1. ALL CONSTRUCTION SHALL BE IN ACCORDANCE WITH THE LATEST STANDARDS AND SPECIFICATIONS OF HOWARD COUNTY PLUS MSHA STANDARDS AND SPECIFICATIONS, IF APPLICABLE.
2. THE CONTRACTOR SHALL NOTIFY "MISS UTILITY" AT 1-800-257-7777 AT LEAST 48 HOURS PRIOR TO ANY EXCAVATION WORK.
3. THE CONTRACTOR IS TO NOTIFY THE FOLLOWING UTILITIES OR AGENCIES AT LEAST FIVE DAYS BEFORE STARTING WORK ON THESE DRAWING.
   - MISS UTILITY: 1-800-257-7777
   - HOWARD COUNTY BUREAU OF UTILITIES: 314-2366
   - AT&T CABLE LOCATION DIVISION: 393-3553
   - B.G.&E. CO. CONTRACTOR SERVICES: 850-4620
   - B.G.&E. CO. UNDERGROUND DAMAGE CONTROL: 787-4620
   - STATE HIGHWAY ADMINISTRATION: 531-5533
4. PROJECT BACKGROUND:
   LOCATION : ELLICOTT CITY, MARYLAND; TAX MAP 25, PARCEL D-1
   ZONING : POR
   SUBDIVISION : VILLAGE CREST – PART OF PARCEL D-1,
   PARCELS C-1, D-1 AND E-1
   A RESUBDIVISION OF WORTHINGTON FIELDS
   NON BUILDABLE PARCEL A-3 AND SUBDIVISION OF P/O PARCEL 98
   SECTION/AREA : N/A
   LIMIT OF DISTURBANCE, AREA :793042 SF OR 18.2 AC.
   P-00-07,S-99-18,S-00-05,F-01-60, P-01-20, F-02-47,F-02-112, F-04-077
5. FOREST STAND DELINEATION PLAN PREPARED BY EXPLORATION RESEARCH, INC. DATED JANUARY, 2000. THE FOREST CONSERVATION EASEMENTS HAVE BEEN ESTABLISHED PER F-02-47, PARCELS C-1, D-1 AND E-1. A RESUBDIVISION OF WORTHINGTON FIELDS NON BUILDABLE PARCEL A-3 AND SUBDIVISION OF P/O PARCEL 98. TO FULFILL THE REQUIREMENTS OF SECTION 16.1200 OF THE HOWARD COUNTY FOREST CONSERVATION ACT. NO CLEARING, GRADING, OR CONSTRUCTION IS PERMITTED WITHIN THE FOREST CONSERVATION EASEMENT. FOREST MANAGEMENT PRACTICES AS DESCRIBED IN THE DEED OF FOREST CONSERVATION EASEMENT ARE PERMITTED.
   FOREST CONSERVATION REQUIREMENTS:
   AREA OF RETENTION: 3.47 AC.
   AREA OF REFORESTATION REQUIRED: 16.45 AC.
   AREA OF REFORESTATION SHOWN: 11.49 AC.
   A FEE-IN-LIEU OF THE REMAINING 4.96 AC.
6. THE CONTRACTOR SHALL NOTIFY THE DEPARTMENT OF PUBLIC WORKS/BUREAU OF ENGINEERING/ CONSTRUCTION INSPECTION DIVISION AT (410) 314-1880 AT LEAST FIVE (5) WORKING DAYS PRIOR TO START OF WORK.
7. ANY DAMAGE TO PUBLIC RIGHT-OF-WAYS, PAVING, OR EXISTING UTILITIES WILL BE CORRECTED AT THE CONTRACTOR'S EXPENSE.
8. EXISTING UTILITIES LOCATED FROM ROAD CONSTRUCTION PLANS, FIELD SURVEYS, PUBLIC WATER AND AND SEWER EXTENSION PLANS AND AVAILABLE RECORD DRAWINGS. APPROXIMATE LOCATION OF EXISTING UTILITIES ARE SHOWN FOR THE CONTRACTORS INFORMATION. CONTRACTOR SHALL LOCATE EXISTING UTILITIES WELL IN ADVANCE OF CONSTRUCTION ACTIVITIES AND TAKE ALL NECESSARY PRECAUTIONS TO PROTECT THE EXISTING UTILITIES AND TO MAINTAIN UNINTERRUPTED SERVICE. ANY DAMAGE INCURRED DUE TO CONTRACTOR'S OPERATION SHALL BE REPAIRED IMMEDIATELY AT THE CONTRACTOR'S EXPENSE.
9. ALL INLETS SHALL BE CONSTRUCTED IN ACCORDANCE WITH HOWARD COUNTY STANDARDS.
10. ALL PIPE ELEVATIONS SHOWN ARE INVERT ELEVATIONS
11. THE LOCATION OF WATER METER IS IN THE CENTER OF THE BUILDING FOR BOTH HOUSE TYPE. THE WATER METER SHALL BE PRIVATE.
12. ALL REINFORCED CONCRETE FOR STORM DRAIN STRUCTURES SHALL HAVE A MINIMUM OF 28 DAYS STRENGTH OF 3,500 P.S.I.
13. TRAFFIC CONTROL DEVICES, MARKINGS AND SIGNING SHALL BE IN ACCORDANCE WITH THE LATEST EDITION OF THE MANUAL ON UNIFORM TRAFFIC CONTROL DEVICES (MUTCD). ALL STREET AND REGULATORY SIGNS SHALL BE IN PLACE PRIOR TO THE PLACEMENT OF ANY ASPHALT.
14. SOIL COMPACTION SPECIFICATIONS, REQUIREMENTS, METHODS AND MATERIALS ARE TO BE IN ACCORDANCE WITH THE RECOMMENDATIONS OF THE PROJECT GEOTECHNICAL ENGINEER. GEOTECHNICAL ENGINEER TO CONFIRM ACCEPTABILITY OF PROPOSED PAVING SECTION, BASED ON SOIL TEST PRIOR TO CONSTRUCTION.
15. ALL STORM DRAIN PIPE BEDDING SHALL BE CLASS 'C' .
16. THE PROJECT BOUNDRY IS BASED ON A BOUNDRY SURVEY PERFORMED BY FISHER COLLINS & CARTER, INC. DATED DEPTEMBER 21, 1998.
17. THE TOPOGRAPHY SHOWN HEREON IS BASED ON AERIAL PHOTOGRAMETIC SURVEY PERFORMED BY WINGS AERIAL MAPPING COMPANY DATED MARCH, 1995.
18. A NOISE STUDY IS NOT REQUIRED FOR THIS PROJECT.
19. ALL PAVING PER DETAILS.
20. CONTRACTOR RESPONSIBLE TO CONSTRUCT ALL HANDICAP PARKING AND HANDICAP ACCESS IN ACCORDANCE WITH CURRENT ADA REQUIREMENTS.
21. ALL ELEVATIONS ARE TO FLOWLINE/BOTTOM OF CURB UNLESS OTHERWISE NOTED.
22. ALL DIMENSIONS ARE TO FACE OF CURB UNLESS OTHERWISE NOTED.
23. PUBLIC WATER AND SEWER AVAILABLE THOUGH CONTRACT NO.:14-3855-D.
24. ALL OUTDOOR SITE LIGHTING TO CONFORM TO SECTION 134 OF THE HOWARD COUNTY ZONING REGULATIONS.
25. ALL BUILDING TO HAVE INTERIOR WATER METER SETTINGS.
26. THIS PLAN HAS BEEN PREPARED IN ACCORDANCE WITH THE PROVISIONS OF SECTION 16.124 OF THE HOWARD COUNTY CODE AND THE LANDSCAPE MANUAL. FINANCIAL SURETY FOR THE REQUIRED LANDSCAPING HAS BEEN POSTED AS A PART OF THE DPW DEVELOPER'S AGREEMENT IN THE AMOUNT OF $55,110.00
27. STORMWATER MANAGEMENT (Cpv, Wqv) HAS BEEN PROVIDED UNDER F-02-47. (REv) FOR VILLAGE CREST DRIVE THIS DEVELOPMENT AND THE IMPROVEMENT TO COLLEGE AVE IS PROVIDED BY TWO DRY WELL FACILITIES.
28. AS A RESULT OF THE PRELIMINARY PLAN FOR THIS SUBDIVISION, P-01-20, BEING SUBMITTED TO THE COUNTY FOR REVIEW PRIOR TO 11/15/01, IT IS SUBJECT TO COMPLIANCE WITH THE FOURTH EDITION OF THE SUBDIVISION AND LAND DEVELOPMENT REGULATIONS, IN ADDITION, BECAUSE THE PRELIMINARY PLAN FOR THIS SUBDIVISION IS SUBJECT TO COMPLIANCE WITH THE ZONING REGULATIONS ADOPTED ON 10/18/93 AND AMENDED ON 07/12/01.

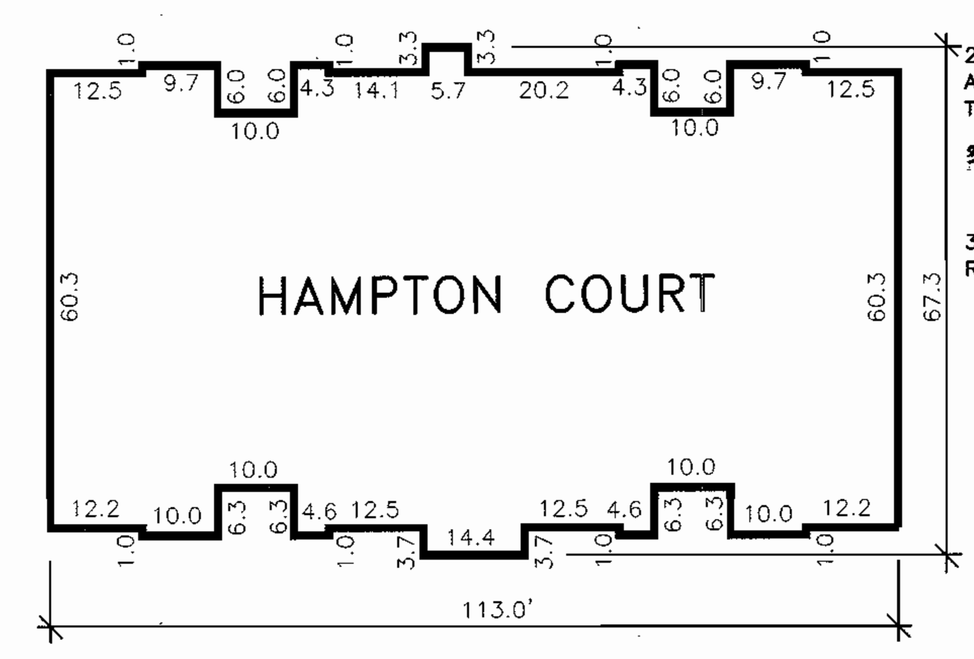

29. THIS SITE PLAN IS VALID FOR TWO YEARS FROM DATE OF SIGNATURE APPROVAL. A NEW SITE DEVELOPMENT PLAN OR WAIVER TO REACTIVATE THIS SITE DEVELOPMENT PLAN MAY BE REQUIRED FOR REMAINING PHASES.
30. ~~THE ARTICLES OF INCORPORATION FOR ESTABLISHMENT OF THE VILLAGE CREST RESIDENTIAL LAND CONDOMINIUM AND THE TAYLOR LAND CONDOMINIUM WILL BE RECORDED.~~
31. REFERENCE AGE RESTRICTED COVENANTS AND DOCUMENTS RECORDED L. 7916 F. 335

ADDRESS CHART						
PARCEL NO.	STREET ADRESS					
P/O PARCEL D-1	~~VILLAGE CREST DRIVE~~					
SUBDIVISION NAME VILLAGE CREST		SECTION/AREA N/A		PARCEL NUMBER P/O PARCEL D-1		
PLAT NO.	BLOCK NO.	ZONE	TAX/ZONE	ELECT. DIST.	CENSUS TR.	
~~16104-16109~~ 16421-16422	20	POR	25	2ND	6027.00	
WATER CODE G-01			SEWER CODE 1253100			

ADDRESS CHART		
BUILDING		STREET ADRESS
A	8120	HICKORY HIGH COURT
B	8100	HICKORY HIGH COURT
C	8125	HICKORY HIGH COURT
D	8105	HICKORY HIGH COURT
E	8155	CYPRUS CEDAR LANE
F	8145	CYPRUS CEDAR LANE
G	8135	CYPRUS CEDAR LANE
H	8125	YELLOW PINE DRIVE
I	8115	YELLOW PINE DRIVE
J	8280	STONE CROP DRIVE
K	8270	STONE CROP DRIVE
L	8260	STONE CROP DRIVE
M	8265	STONE CROP DRIVE
N	8255	STONE CROP DRIVE
O	8245	STONE CROP DRIVE
P	8235	STONE CROP DRIVE
Q	8225	STONE CROP DRIVE
R	8215	STONE CROP DRIVE

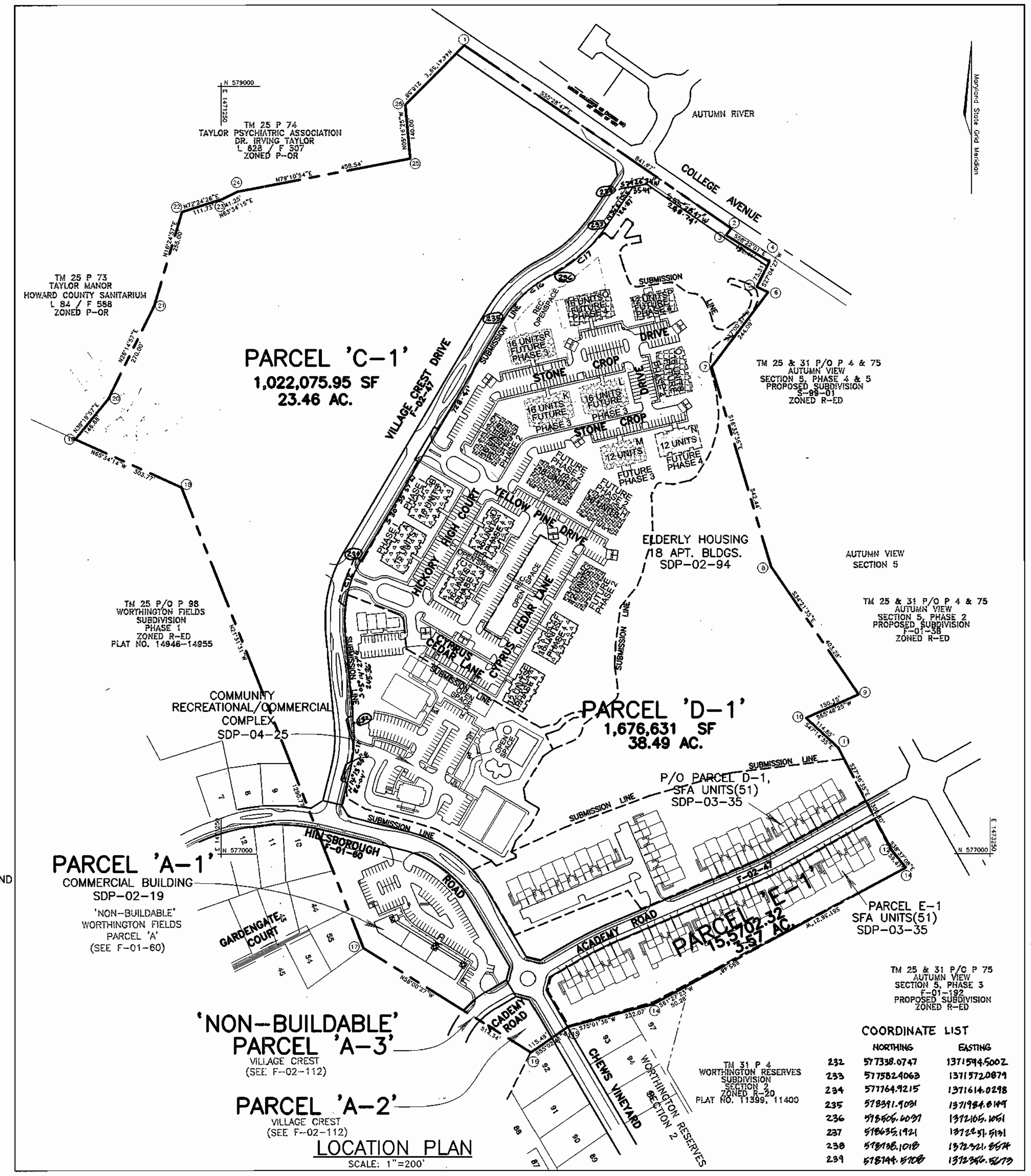

COORDINATE LIST

	NORTHING	EASTING
232	577338.0747	1371594.5002
233	577582.4063	1371572.0879
234	577764.9215	1371614.0298
235	578391.9031	1371984.8149
236	578506.6097	1372105.1051
237	578635.1921	1372251.5131
238	578738.1018	1372321.8574
239	578744.5708	1372356.5679

LOCATION PLAN
SCALE: 1"=200'

SHEET INDEX

SHEET NO.	DESCRIPTION
1 of 16	COVER SHEET
2 of 16	SITE AND UTILITY PLAN I
3 of 16	SITE AND UTILITY PLAN II
4 of 16	GRADING AND SEDIMENT CONTROL PLAN I
5 of 16	GRADING AND SEDIMENT CONTROL PLAN II
6 of 16	SITE DETAILS
7 of 16	SEDIMENT AND EROSION CONTROL DETAILS
8 of 16	PROFILES
9 of 16	PROFILES
10 of 16	PROFILES
11 of 16	PROFILES
12 of 16	PROFILES
13 of 16	LANDSCAPE PLAN & DETAILS I
14 of 16	LANDSCAPE PLAN & DETAILS II
15 of 16	OVERALL PLAN
16 of 16	STORM DRAIN DRAINAGE AREA MAP

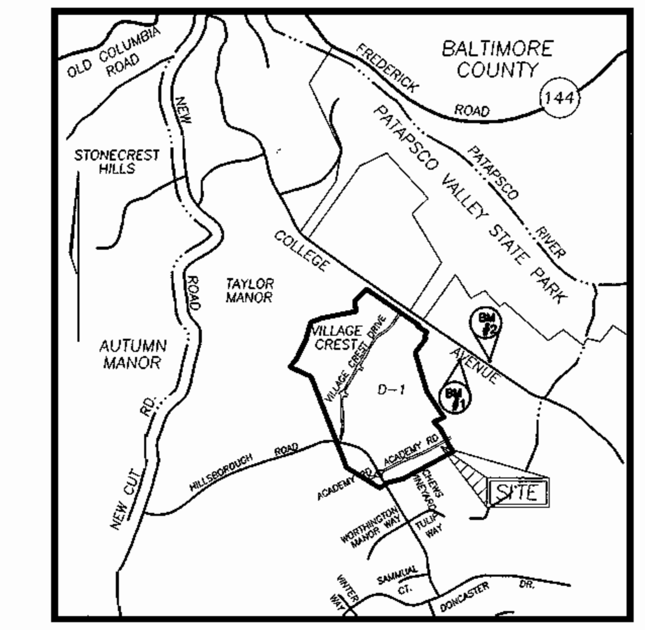

VICINITY MAP
SCALE: 1"=2000'

BENCHMARKS

BENCHMARK NO. 1: COUNTY CONTROL #3044005R
3/4" REBAR 0.8' BELOW SURFACE
N. 578233.92, E. 1473142.33
ELEV. = 374.389

BENCHMARK NO. 2: COUNTY CONTROL #3044004R
3/4" REBAR 0.6' BELOW SURFACE
N. 578128.03, E. 1473460.71
ELEV. =362.575

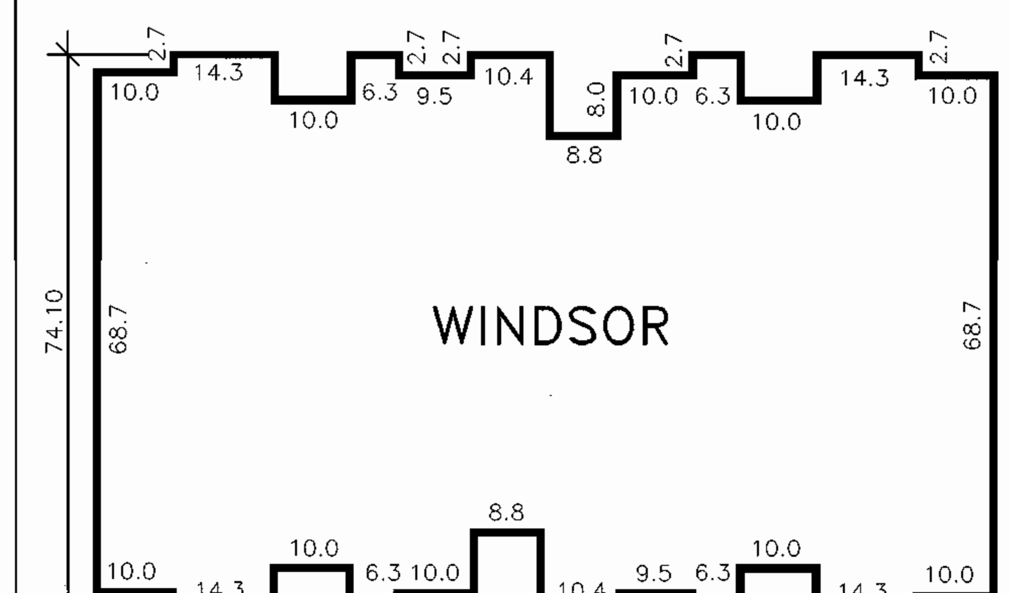

SITE ANALYSIS

THIS PLAN IS FOR PHASE 1, BLDGS. A, B,C,D,E & F, 91 UNITS AND THE TOTAL SITE INFRASTRUCTURE ONLY

TOTAL AREA OF PARCEL D-1: 1,676,631 SF. (38.49 AC.)
AREA OF LIMIT OF DISTURBANCE: 742327.13 SF. (17.04 AC.)
AREA OF SUBMISSION: 720918 SF. (16.55 AC.)

PRESENT ZONING: P.O.R.

PROPOSED USE: HOUSING FOR ELDERLY (AGE RESTRICTED ADULT HOUSING)

PROPOSED USE:
TOTAL NUMBER OF UNITS ALLOWED SHOWN AND
TOTAL NUMBER OF UNITS PROVIDED: 91 UNITS APPROVED ON THIS PLAN FOR PHASE 1, AND 176 PHASED TENTATIVE HOUSING UNIT ALLOCATIONS HAVE BEEN GRANTED PER THIS PLAN. SEE THE PHASING CHART ON THIS SHEET FOR THE PHASING OF THE REMAINING PROPOSED 176 UNITS.

PARKING :
HOUSING FOR ELDERLY
1.0 SPACES PER A DWELLING UNIT
267 DWELLING UNITS= 267 SPACES REQ.
298 SPACES PROVIDED
119 SPACES PROVIDED FOR SDP-04-25
417 SPACES PROVIDED

HC. ACCESSIBLE SPACES
MIN.2% OF TOTAL SPACES REQ.= 9 SPACES
18 SPACES PROVIDED
3 SPACES PROVIDED FOR SDP-04-25
21 SPACES PROVIDED

TOTAL PARKING SPACES PROVIDED: 438 SPACES PROVIDED

BUILDING FOOTPRINTS
WINDSOR: 8098 SF X 13 = 105274 SF
OVERHANG: 379.32 SF
ROOF EAVES: 403.32 SF.
BUILDING COVERAGE: 106057 SF
HAMPTON COURT : 6669 SF X 5 = 33345 SF
OVERHANG: 318.59 SF
ROOF EAVES: 346.28 SF.
BUILDING COVERAGE: 34010 SF
TOTAL BUILDING COVERAGE: 140067 SF
SIDEWALK: 30686 SF
DUMPSTER: 6604 SF.
PAVING: 177088 SF.
IMPERVIOUS AREA: 352996 SF (8.10 AC.)

BUILDINGS TO BE CONSTRUCTED IN PHASES			
SYMBOL	PHASING	BLDGS.	#'S OF UNITS
	PHASE 1 (YEAR 2005)	A,B,C,D,E,F	91
	PHASE 2 (YEAR 2006)	G,H,I,J	60
	PHASE 3 (YEAR 2007)	M,L,K,R	60
	PHASE 4 (YEAR 2008)	N,O,P,Q	56

NOTE: ALL UTILITIES, ROADS, INFRASTRUCTURE TO BE CONSTRUCTED INITIALLY. ONLY CONSTRUCTION TO REMAIN FOR FUTURE PHASES ARE THE BUILDINGS.

CURVE DATA TABLE

CURVE	ARC	RADIUS	TANGENT	DELTA	CHORD
C11	127.46'	375.00'	64.32'	19°27'53"	S08°29'29"W 126.78'
C12	190.45'	300.91'	98.56'	36°22'24"	N12°56'31"E 187.27'
C16	167.70'	300.00'	86.10'	32°01'40"	S46°36'47"W 165.52'
C17	197.31'	400.00'	100.70'	28°15'42"	N48°29'46"E 195.31'

APPROVED: HOWARD COUNTY DEPARTMENT OF PLANNING AND ZONING

CHIEF, DEVELOPMENT ENGINEERING DIVISION — DATE 11/4/03
CHIEF, DIVISION OF LAND DEVELOPMENT — DATE 2/19/04
DIRECTOR — DATE 2/21/04

RECREATIONAL OPEN SPACE

REQUIRED RECREATIONAL OPEN SPACE: 175 SF/UNIT(SDP-02-94)
267 UNITS(THIS PLAN): 46725 SF. (1.07 AC.)

REQUIRED RECREATIONAL OPEN SPACE: 400 SF/UNIT(SDP-03-35)
51 UNITS: 20400 SF. (0.468 AC.)

TOTAL RECREATIONAL OPEN SPACE REQ.: 67125 SF. (1.54 AC.)

PROVIDED RECREATIONAL OPEN SPACE (SDP-04-25)-FENCED POOL: 17744.99 SF.
TENNIS COURT(SDP-04-25):16615.20 SF.
COMMUNITY RECREATION BUILDING(SDP-04-25):2611.00 SF.

PER COMMUNITY RECREATIONAL/
/COMMERCIAL COMPLEX (SDP-04-25):36971.19 SF(0.85 AC.)
ELDERLY HOUSING, 267 UNITS,(SDP-02-94):35140.62 SF(0.81 AC.)
TOTAL RECREATIONAL OPEN SPACE PROVIDED.: 72111.81 SF. (1.66 AC.)

OWNER :
TAYLOR FAMILY LIMITED PARTNERSHIP A
C/O LAND DESIGN & DEVELOPMENT, INC.
8000 MAIN STREET
ELLICOTT CITY, MD 21043
ATTN: MR. DONALD R. REUWER
PHONE: (410) 480-9105

DEVELOPER
LAND DESIGN & DEVELOPMENT, INC.
8000 MAIN STREET
ELLICOTT CITY, MD 21043
ATTN: MR. DONALD R. REUWER
PHONE: (410) 480-9105

SITE DEVELOPMENT PLAN
COVER SHEET
VILLAGE CREST
PART OF PARCEL D-1
PHASE 1, APT. BLDGS. A-F,
91 AGE RESTRICTED ADULT HOUSING UNITS
TAX MAP #25 BLOCK 20 — PARCEL P/O 98
2ND ELECTION DISTRICT — HOWARD COUNTY, MARYLAND

FREDERICK WARD ASSOCIATES, INC.
ARCHITECTS | ENGINEERS | PLANNERS | SURVEYORS
7125 RIVERWOOD DRIVE
COLUMBIA, MARYLAND 21046-2354
410-720-6900
410-720-6226 fax
www.frederickward.com

STATE OF MARYLAND — ROBERT HARRIS VOGEL — No. 16193 — PROFESSIONAL ENGINEER
ROBERT H. VOGEL, PE NO. 16193

DESIGN BY: RJ
DRAWN BY: RJ
CHECKED BY: RHV
DATE: SEPT. 2003
SCALE: AS SHOWN
W.O. NO.: 2018121.00

SHEET 1 OF 16

SDP-02-94

M:\PROJECTS\2018121\ENGR\dwg\Sdp-APT\01COVER.DWG Fri Oct 17 13:09:05 2003 ROMA

SITE DEVELOPMENT PLAN
VILLAGE CREST
PART OF PARCEL D-1
PHASE I APT. BLDGS. A TO R, 268 AGE RESTRICTED ADULT HOUSING UNITS
PHASE II, PHASE III & PHASE IV
HOWARD COUNTY, MARYLAND

GENERAL NOTES

1. ALL CONSTRUCTION SHALL BE IN ACCORDANCE WITH THE LATEST STANDARDS AND SPECIFICATIONS OF HOWARD COUNTY PLUS MSHA STANDARDS AND SPECIFICATIONS, IF APPLICABLE.
2. THE CONTRACTOR SHALL NOTIFY "MISS UTILITY" AT 1-800-257-7777 AT LEAST 48 HOURS PRIOR TO ANY EXCAVATION WORK.
3. THE CONTRACTOR IS TO NOTIFY THE FOLLOWING UTILITIES OR AGENCIES AT LEAST FIVE DAYS BEFORE STARTING WORK ON THESE DRAWING.

MISS UTILITY:	1-800-257-7777
HOWARD COUNTY BUREAU OF UTILITIES:	314-2366
AT&T CABLE LOCATION DIVISION:	393-3553
B.G.&E. CO. CONTRACTOR SERVICES:	850-4620
B.G.&E. CO. UNDERGROUND DAMAGE CONTROL:	787-4620
STATE HIGHWAY ADMINISTRATION:	531-5533

4. PROJECT BACKGROUND:
   LOCATION : ELLICOTT CITY, MARYLAND; TAX MAP 25, PARCEL D-1
   ZONING : POR
   SUBDIVISION : VILLAGE CREST - PART OF PARCEL D-1, PARCELS C-1, D-1 AND E-1
   A RESUBDIVISION OF WORTHINGTON FIELDS
   NON BUILDABLE PARCEL A-3 AND SUBDIVISION OF P/O PARCEL 98
   SECTION/AREA : N/A
   LIMIT OF DISTURBANCE, AREA :793042 SF OR 18.2 AC.
   P-00-07,S-99-18,S-00-05,F-01-60, P-01-20, F-02-47,F-02-112, F-04-077
5. FOREST STAND DELINEATION PLAN PREPARED BY EXPLORATION RESEARCH, INC. DATED JANUARY, 2000. THE FOREST CONSERVATION EASEMENTS HAVE BEEN ESTABLISHED PER F-02-47, PARCELS C-1, D-1 AND E-1. A RESUBDIVISION OF WORTHINGTON FIELDS NON BUILDABLE PARCEL A-3 AND SUBDIVISION OF P/O PARCEL 98. TO FULFILL THE REQUIREMENTS OF SECTION 16.1200 OF THE HOWARD COUNTY FOREST CONSERVATION ACT. NO CLEARING, GRADING, OR CONSTRUCTION IS PERMITTED WITHIN THE FOREST CONSERVATION EASEMENT. FOREST MANAGEMENT PRACTICES AS DESCRIBED IN THE DEED OF FOREST CONSERVATION EASEMENT ARE PERMITTED.
   FOREST CONSERVATION REQUIREMENTS:
   AREA OF RETENTION: 2.93 AC.
   AREA OF REFORESTATION REQUIRED: 16.45 AC.
   AREA OF REFORESTATION SHOWN: 12.03 AC.
   A FEE-IN-LIEU OF THE REMAINING 5.50 AC.
6. THE CONTRACTOR SHALL NOTIFY THE DEPARTMENT OF PUBLIC WORKS/BUREAU OF ENGINEERING/ CONSTRUCTION INSPECTION DIVISION AT (410) 314-1880 AT LEAST FIVE (5) WORKING DAYS PRIOR TO START OF WORK.
7. ANY DAMAGE TO PUBLIC RIGHT-OF-WAYS, PAVING, OR EXISTING UTILITIES WILL BE CORRECTED AT THE CONTRACTOR'S EXPENSE.
8. EXISTING UTILITIES LOCATED FROM ROAD CONSTRUCTION PLANS, FIELD SURVEYS, PUBLIC WATER AND AND SEWER EXTENSION PLANS AND AVAILABLE RECORD DRAWINGS. APPROXIMATE LOCATION OF EXISTING UTILITIES ARE SHOWN FOR THE CONTRACTORS INFORMATION. CONTRACTOR SHALL LOCATE EXISTING UTILITIES WELL IN ADVANCE OF CONSTRUCTION ACTIVITIES AND TAKE ALL NECESSARY PRECAUTIONS TO PROTECT THE EXISTING UTILITIES AND TO MAINTAIN UNINTERRUPTED SERVICE. ANY DAMAGE INCURRED DUE TO CONTRACTOR'S OPERATION SHALL BE REPAIRED IMMEDIATELY AT THE CONTRACTOR'S EXPENSE.
9. ALL INLETS SHALL BE CONSTRUCTED IN ACCORDANCE WITH HOWARD COUNTY STANDARDS.
10. ALL PIPE ELEVATIONS SHOWN ARE INVERT ELEVATIONS
11. THE LOCATION OF WATER METER IS IN THE CENTER OF THE BUILDING FOR BOTH HOUSE TYPE. THE WATER METER SHALL BE PRIVATE.
12. ALL REINFORCED CONCRETE FOR STORM DRAIN STRUCTURES SHALL HAVE A MINIMUM OF 28 DAYS STRENGTH OF 3,500 P.S.I.
13. TRAFFIC CONTROL DEVICES, MARKINGS AND SIGNING SHALL BE IN ACCORDANCE WITH THE LATEST EDITION OF THE MANUAL ON UNIFORM TRAFFIC CONTROL DEVICES (MUTCD). ALL STREET AND REGULATORY SIGNS SHALL BE IN PLACE PRIOR TO THE PLACEMENT OF ANY ASPHALT.
14. SOIL COMPACTION SPECIFICATIONS, REQUIREMENTS, METHODS AND MATERIALS ARE TO BE IN ACCORDANCE WITH THE RECOMMENDATIONS OF THE PROJECT GEOTECHNICAL ENGINEER. GEOTECHNICAL ENGINEER TO CONFIRM ACCEPTABILITY OF PROPOSED PAVING SECTION, BASED ON SOIL TEST PRIOR TO CONSTRUCTION.
15. ALL STORM DRAIN PIPE BEDDING SHALL BE CLASS 'C' .
16. THE PROJECT BOUNDRY IS BASED ON A BOUNDRY SURVEY PERFORMED BY FISHER COLLINS & CARTER, INC. DATED DEPTEMBER 21, 1998.
17. THE TOPOGRAPHY SHOWN HEREON IS BASED ON AERIAL PHOTOGRAMETIC SURVEY PERFORMED BY WINGS AERIAL MAPPING COMPANY DATED MARCH, 1995.
18. A NOISE STUDY IS NOT REQUIRED FOR THIS PROJECT.
19. ALL PAVING PER DETAILS.
20. CONTRACTOR RESPONSIBLE TO CONSTRUCT ALL HANDICAP PARKING AND HANDICAP ACCESS IN ACCORDANCE WITH CURRENT ADA REQUIREMENTS.
21. ALL ELEVATIONS ARE TO FLOWLINE/BOTTOM OF CURB UNLESS OTHERWISE NOTED.
22. ALL DIMENSIONS ARE TO FACE OF CURB UNLESS OTHERWISE NOTED.
23. PUBLIC WATER AND SEWER AVAILABLE THOUGH CONTRACT NO.:14-3855-D. AND 44-3855-D
24. ALL OUTDOOR SITE LIGHTING TO CONFORM TO SECTION 134 OF THE HOWARD COUNTY ZONING REGULATIONS
25. ALL BUILDING TO HAVE INTERIOR WATER METER SETTINGS.
26. THIS PLAN HAS BEEN PREPARED IN ACCORDANCE WITH THE PROVISIONS OF SECTION 16.124 OF THE HOWARD COUNTY CODE AND THE LANDSCAPE MANUAL. FINANCIAL SURETY FOR THE REQUIRED LANDSCAPING HAS BEEN POSTED AS A PART OF THE DPW DEVELOPER'S AGREEMENT IN THE AMOUNT OF $55,110.00
27. STORMWATER MANAGEMENT (Cpv, Wqv) HAS BEEN PROVIDED UNDER F-02-47. (REv) FOR VILLAGE CREST DRIVE THIS DEVELOPMENT AND THE IMPROVEMENT TO COLLEGE AVE IS PROVIDED BY TWO DRY WELL FACILITIES.
28. AS A RESULT OF THE PRELIMINARY PLAN FOR THIS SUBDIVISION, P-01-20, BEING SUBMITTED TO THE COUNTY FOR REVIEW PRIOR TO 11/15/01, IT IS SUBJECT TO COMPLIANCE WITH THE FOURTH EDITION OF THE SUBDIVISION AND LAND DEVELOPMENT REGULATIONS, IN ADDITION, BECAUSE THE PRELIMINARY PLAN FOR THIS SUBDIVISION IS SUBJECT TO COMPLIANCE WITH THE ZONING REGULATIONS ADOPTED ON 10/18/93 AND AMENDED ON 07/12/01.

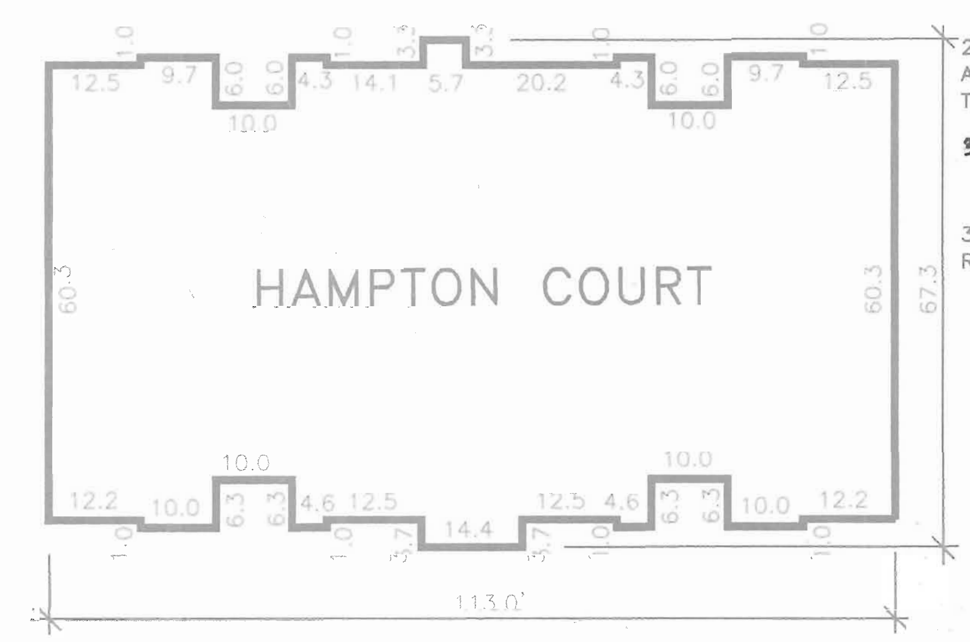

29. THIS SITE PLAN IS VALID FOR TWO YEARS FROM DATE OF SIGNATURE APPROVAL. A NEW SITE DEVELOPMENT PLAN OR WAIVER TO REACTIVATE THIS SITE DEVELOPMENT PLAN MAY BE REQUIRED FOR REMAINING PHASES.
30. THE ARTICLES OF INCORPORATION FOR ESTABLISHMENT OF THE VILLAGE CREST RESIDENTIAL LAND CONDOMINIUM AND THE TAYLOR LAND CONDOMINIUM WILL BE RECORDED.
31. REFERENCE AGE RESTRICTED COVENANTS AND DOCUMENTS RECORDED L. 7916 F. 335

ADDRESS CHART					
PARCEL NO.	STREET ADRESS				
P/O PARCEL D-1	~~VILLAGE CREST DRIVE~~				
SUBDIVISION NAME: VILLAGE CREST		SECTION/AREA: N/A		PARCEL NUMBER: P/O PARCEL D-1	
PLAT NO.	BLOCK NO.	ZONE	TAX/ZONE	ELECT. DIST.	CENSUS TR.
~~16104-16109~~ 16421-16422	20	POR	25	2ND	6027.00
WATER CODE G-01			SEWER CODE 1253100		

BUILDING	STREET ADRESS
A	8120 HICKORY HIGH COURT
B	8100 HICKORY HIGH COURT
C	8125 HICKORY HIGH COURT
D	8105 HICKORY HIGH COURT
E	8155 CYPRUS CEDAR LANE
F	8145 CYPRUS CEDAR LANE
G	8135 CYPRUS CEDAR LANE
H	8125 YELLOW PINE DRIVE
I	8115 YELLOW PINE DRIVE
J	8280 STONE CROP DRIVE
K	8270 STONE CROP DRIVE
L	8260 STONE CROP DRIVE
M	8265 STONE CROP DRIVE
N	8255 STONE CROP DRIVE
O	8245 STONE CROP DRIVE
P	8235 STONE CROP DRIVE
Q	8225 STONE CROP DRIVE
R	8215 STONE CROP DRIVE

THE PLAN IS SUBJECT TO WP-04-109 APPROVAL TO WAIVE SECTION 16.144 (1)(i) OF THE FOURTH EDITION OF THE SUBDIVISION AND LAND DEVELOPMENT REGULATION WHICH VOIDS AND CONSIDERS WITHDRAWAL OF THE SUBMISSION OF THE PRELIMINARY PLAN WHICH MISSES A DEADLINE EXCEPT WHERE DELAY IS CAUSED BY GOVERNMENT ACTION.

SDP-02-94 IS DESIGNED TO BE A SINGLE SDP WITH FOUR PHASES, EACH PHASE HAS A MILESTONE FOR ITS SUBMISSION AS A REDLINE REVISIONS TO THE INITIAL SDP OR AS A NEW SDP SUBMISSION.

PHASE	NO TENTATIVE ALLOCATIONS	ALLOCATION YEAR	SDP MILESTONE DATE
PHASE 1	92	2005	SDP-02-94 OR ORIGINAL SUBMISSION
PHASE 2	60	2006	BETWEEN 07-01-03 & 01-01-04
PHASE 3	60	2007	BETWEEN 07-01-04 & 01-01-05
PHASE 4	56	2008	BETWEEN 07-01-05 & 01-01-06.

LOCATION PLAN
SCALE: 1"=200'

COORDINATE LIST

	NORTHING	EASTING
232	577338.0747	1371594.5002
233	577582.4063	1371572.0879
234	577164.9215	1371614.0298
235	578391.9031	1371981.8149
236	578505.6037	1372105.1051
237	578635.1921	1372251.5131
238	578738.1018	1372321.8574
239	578194.5708	1372356.5673

RECREATIONAL OPEN SPACE

REQUIRED RECREATIONAL OPEN SPACE: 175 SF/UNIT(SDP-02-94)
268 UNITS(THIS PLAN): 46900 SF. (1.076 AC.)

REQUIRED RECREATIONAL OPEN SPACE: 400 SF/UNIT(SDP-03-35)
51 UNITS: 20400 SF. (0.468 AC.)

TOTAL RECREATIONAL OPEN SPACE REQ.: 67125 SF. (1.544 AC.)

PROVIDED RECREATIONAL OPEN SPACE (SDP-04-25)-FENCED POOL: 17744.99 SF.
TENNIS COURT(SDP-04-25):16615.20 SF.
COMMUNITY RECREATION BUILDING(SDP-04-25):2611.00 SF.

PER COMMUNITY RECREATIONAL/
/COMMERCIAL COMPLEX (SDP-04-25):36971.19 SF(0.85 AC.)
ELDERLY HOUSING, 268 UNITS,(SDP-02-94):35140.62 SF(0.81 AC.)
TOTAL RECREATIONAL OPEN SPACE PROVIDED.: 72111.81 SF. (1.66 AC.)

SHEET INDEX

SHEET NO.	DESCRIPTION
1 of 16	COVER SHEET
2 of 16	SITE AND UTILITY PLAN I
3 of 16	SITE AND UTILITY PLAN II
4 of 16	GRADING AND SEDIMENT CONTROL PLAN I
5 of 16	GRADING AND SEDIMENT CONTROL PLAN II
6 of 16	SITE DETAILS
7 of 16	SEDIMENT AND EROSION CONTROL DETAILS
8 of 16	PROFILES
9 of 16	PROFILES
10 of 16	PROFILES
11 of 16	PROFILES
12 of 16	PROFILES
13 of 16	LANDSCAPE PLAN & DETAILS I
14 of 16	LANDSCAPE PLAN & DETAILS II
15 of 16	OVERALL PLAN
16 of 16	STORM DRAIN DRAINAGE AREA MAP

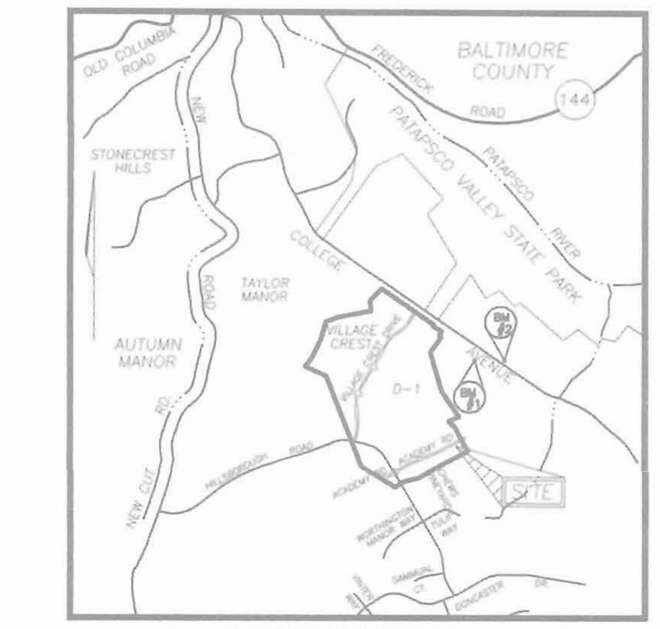

VICINITY MAP
SCALE: 1"=2000'

BENCHMARKS

BENCHMARK NO. 1: COUNTY CONTROL #3044005R
3/4" REBAR 0.8' BELOW SURFACE
N. 578233.92, E. 1473142.33
ELEV. = 374.389

BENCHMARK NO. 2: COUNTY CONTROL #3044004R
3/4" REBAR 0.6' BELOW SURFACE
N. 578128.03, E. 1473460.71
ELEV. =362.575

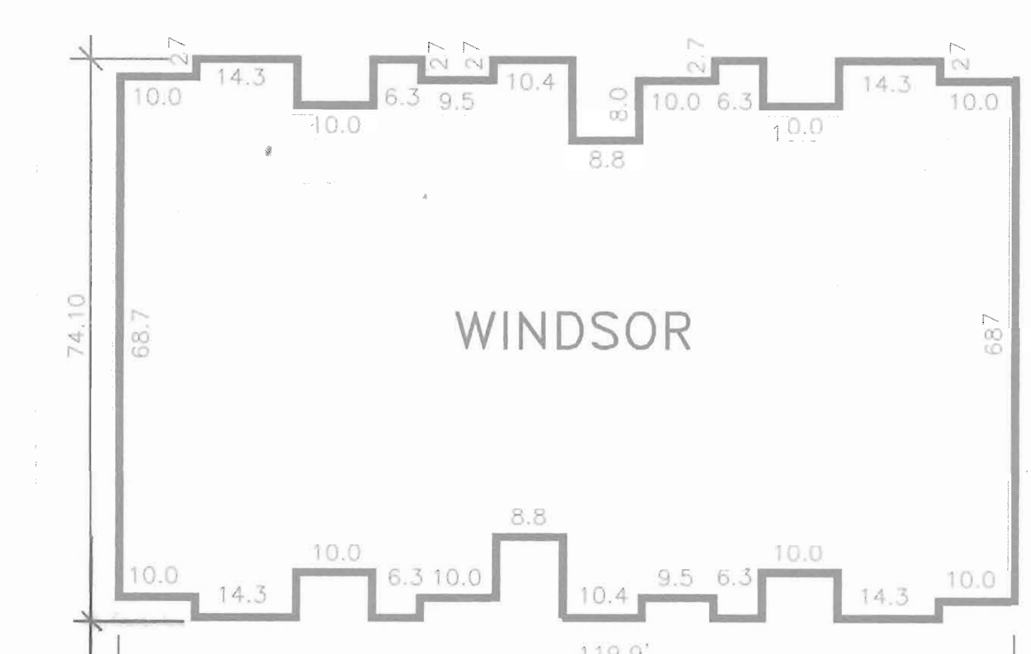

SITE ANALYSIS

THIS PLAN IS FOR PHASE 1, 2, 3, & 4, 268 UNITS AND THE TOTAL SITE INFRASTRUCTURE.

TOTAL AREA OF PARCEL D-1: 1,676,631 SF. (38.49 AC.)
AREA OF LIMIT OF DISTURBANCE: 742327.13 SF. (17.04 AC.)
AREA OF SUBMISSION: 720918 SF. (16.55 AC.)

PRESENT ZONING: P.O.R.

PROPOSED USE: HOUSING FOR ELDERLY (AGE RESTRICTED ADULT HOUSING)

PROPOSED USE:
TOTAL NUMBER OF UNITS ALLOWED SHOWN AND TOTAL NUMBER OF UNITS PROVIDED: 268 UNITS APPROVED ON THIS PLAN FOR PHASES 1,2,3 & 4 PHASED TENTATIVE HOUSING UNIT ALLOCATIONS HAVE BEEN GRANTED PER THIS PLAN. SEE THE PHASING CHART ON THIS SHEET.

PARKING :
HOUSING FOR ELDERLY
1.0 SPACES PER A DWELLING UNIT
268 DWELLING UNITS= 268 SPACES REQ.
PARKING SPACES PROVIDED ON THE SDP-02-94 SUBMISSION 298 SPACES PROVIDED
AREA FOR RECREATION COMPLEX 117 SPACES PROVIDED FOR SDP-04-25
415 SPACES PROVIDED

HC. ACCESSIBLE SPACES
MIN.2% OF TOTAL SPACES REQ.= 9 SPACES
18 SPACES PROVIDED
3 SPACES PROVIDED FOR SDP-04-25
21 SPACES PROVIDED

TOTAL PARKING SPACES PROVIDED: 436 SPACES PROVIDED

BUILDING FOOTPRINTS
WINDSOR: 8098 SF X 13 = 105274 SF
OVERHANG: 379.32 SF
ROOF EAVES: 403.32 SF.
BUILDING COVERAGE: 106057 SF
HAMPTON COURT : 6669 SF X 5 = 33345 SF
OVERHANG: 318.59 SF
ROOF EAVES: 346.28 SF.
BUILDING COVERAGE: 34010 SF
TOTAL BUILDING COVERAGE: 140067 SF
SIDEWALK: 30686 SF
DUMPSTER: 6604 SF.
PAVING: 177088 SF.
IMPERVIOUS AREA: 352996 SF (8.10 AC.)

BUILDINGS TO BE CONSTRUCTED IN PHASES			
SYMBOL	PHASING	BLDGS.	#'S OF UNITS
	PHASE 1 (YEAR 2005)	A,B,C,D,E,F	92
	PHASE 2 (YEAR 2006)	G,H,I,J	60
	PHASE 3 (YEAR 2007)	M,L,K,R	60
	PHASE 4 (YEAR 2008)	N,O,P,Q	56

NOTE: ALL UTILITIES. ROADS, INFRASTRUCTURE TO BE CONSTRUCTED INITIALLY. ONLY CONSTRUCTION TO REMAIN FOR FUTURE PHASES ARE THE BUILDINGS.

CURVE DATA TABLE

CURVE	ARC	RADIUS	TANGENT	DELTA	CHORD	
C11	127.46'	375.00'	64.32'	19°27'53"	S 08 29 29"W	126.78
C12	190.45'	300.00'	98.56'	36°22'24"	N 12 56 31"E	187.27'
C16	167.70'	300.00	86.10'	32°01'40"	S 46 36'47"W	165.52'
C17	197.31'	400.00'	100.70'	28 15'42"	N 48 29'46"E	195.31'

NO.	REVISION	DATE
3	REFLECTING CHANGES DONE PER SDP-04-25 RESITED/REDESIGNED THE SENIOR CTR.	10.06.05
2	EXCHANGE UNIT CONFIG. BETWEEN BLDG 'A' AND BLDG 'F', ADD PHASE 3, GRADING AROUND BLDGS AND ADDED SWC TO MH 112	11.30.04
1	ADDED PHASE 2, GRADING CHANGE AROUND BLDG.	

APPROVED: HOWARD COUNTY DEPARTMENT OF PLANNING AND ZONING

CHIEF, DEVELOPMENT ENGINEERING DIVISION — DATE 11/4/03
CHIEF, DIVISION OF LAND DEVELOPMENT — DATE 2/19/04
DIRECTOR — DATE 2/20/04

OWNER :
TAYLOR FAMILY LIMITED PARTNERSHIP
C/O LAND DESIGN & DEVELOPMENT, INC.
8000 MAIN STREET
ELLICOTT CITY, MD 21043
ATTN: MR. DONALD R. REUWER
PHONE: (410) 480-9105

DEVELOPER
LAND DESIGN & DEVELOPMENT, INC.
8000 MAIN STREET
ELLICOTT CITY, MD 21043
ATTN: MR. DONALD R. REUWER
PHONE: (410) 480-9105

SITE DEVELOPMENT PLAN
COVER SHEET
VILLAGE CREST
PART OF PARCEL D-1
PHASE 1,2,3 & 4, APT. BLDGS. A-TO R
268 AGE RESTRICTED ADULT HOUSING UNITS
TAX MAP #25 BLOCK 20 — PARCEL P/O 98
2ND ELECTION DISTRICT — HOWARD COUNTY, MARYLAND

FWA
FREDERICK WARD ASSOCIATES, INC.
ARCHITECTS | ENGINEERS | PLANNERS | SURVEYORS
7125 RIVERWOOD DRIVE
COLUMBIA, MARYLAND 21046-2354
410-720-6900
410-720-6226 fax
www.frederickward.com

STATE OF MARYLAND — ROBERT HARRIS VOGEL — No. 16193 — PROFESSIONAL ENGINEER
ROBERT H. VOGEL, PE NO. 16193

DESIGN BY:	RJ
DRAWN BY:	RJ
CHECKED BY:	RHV
DATE:	SEPT. 2003
SCALE:	AS SHOWN
W.O. NO.:	2018121.00

SHEET 1 OF 16

SDP-02-94

M:\PROJECTS\2018121\ENGR\dwg\Sdp-APT\01COVER.DWG Fri Oct 17 13:09:05 2003 ROMA

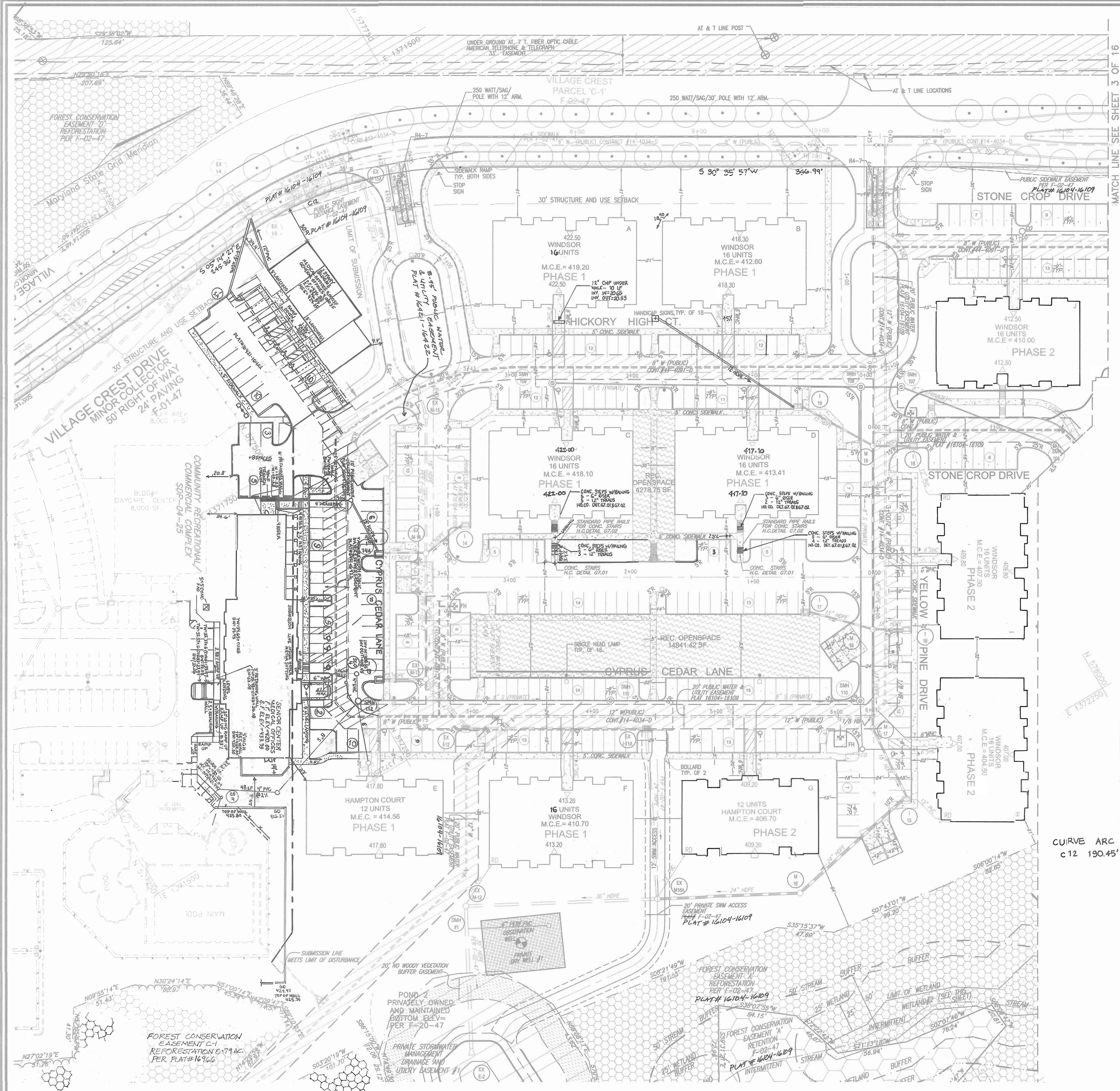

WETLAND LINE TABLE

LINE	LENGTH	BEARING
W1	S19°23'46"W	75.53
W2	S26°20'33"W	33.55
W3	S33°12'48"W	39.15
W4	S43°18'29"W	35.33
W5	S22°32'57"W	36.99
W6	S36°28'36"W	49.06
W7	S26°47'10"W	31.43
W8	S44°53'32"W	31.66
W9	S26°02'23"W	34.68
W10	S07°54'34"E	38.71
W11	S11°35'41"W	52.37
W12	S63°49'26"W	10.35
W13	N61°19'04"W	7.07
W14	N05°01'39"E	37.49
W15	N20°23'44"W	25.01
W16	N19°07'16"E	56.76
W17	N33°10'27"E	36.35
W18	N12°24'54"W	39.01
W19	N34°50'45"E	83.19
W20	N13°37'37"W	33.32
W21	S58°37'47"E	44.53
W22	N21°54'45"E	41.53
W23	N59°49'32"E	31.33
W24	N48°03'31"E	34.49
W25	N16°10'02"E	40.02
W26	N24°32'00"W	23.50
W27	N17°07'59"E	36.90
W28	N78°45'13"E	10.16
W29	S16°33'36"E	30.21
W30	S60°12'02"E	8.88
W31	S03°34'33"E	32.87
W32	S69°43'33"W	11.00
W33	N00°46'49"E	41.03
W34	N18°08'41"E	13.07
W35	S57°10'03"E	31.49
W36	N81°20'00"W	30.88
W76	N19°08'10"W	6.44
W77	N76°15'50"E	37.76
W78	S45°12'38"E	8.01
W79	S59°05'06"W	16.98
W80	S88°28'33"W	25.69

307	578062.5315	1372586.6973
308	577557.3224	1372365.6449
309	578595.6480	1372539.5613

LEGEND

- WETLAND BUFFER
- STREAM BUFFER
- WETLAND
- 100YR FLOODPLAIN
- FOREST CONSERVATION REFORESTATION EASEMENT
- FOREST RETENTION EASEMENT
- RECREATIONAL OPEN SPACE
- PRIVATE SWM ACCESS EASEMENT

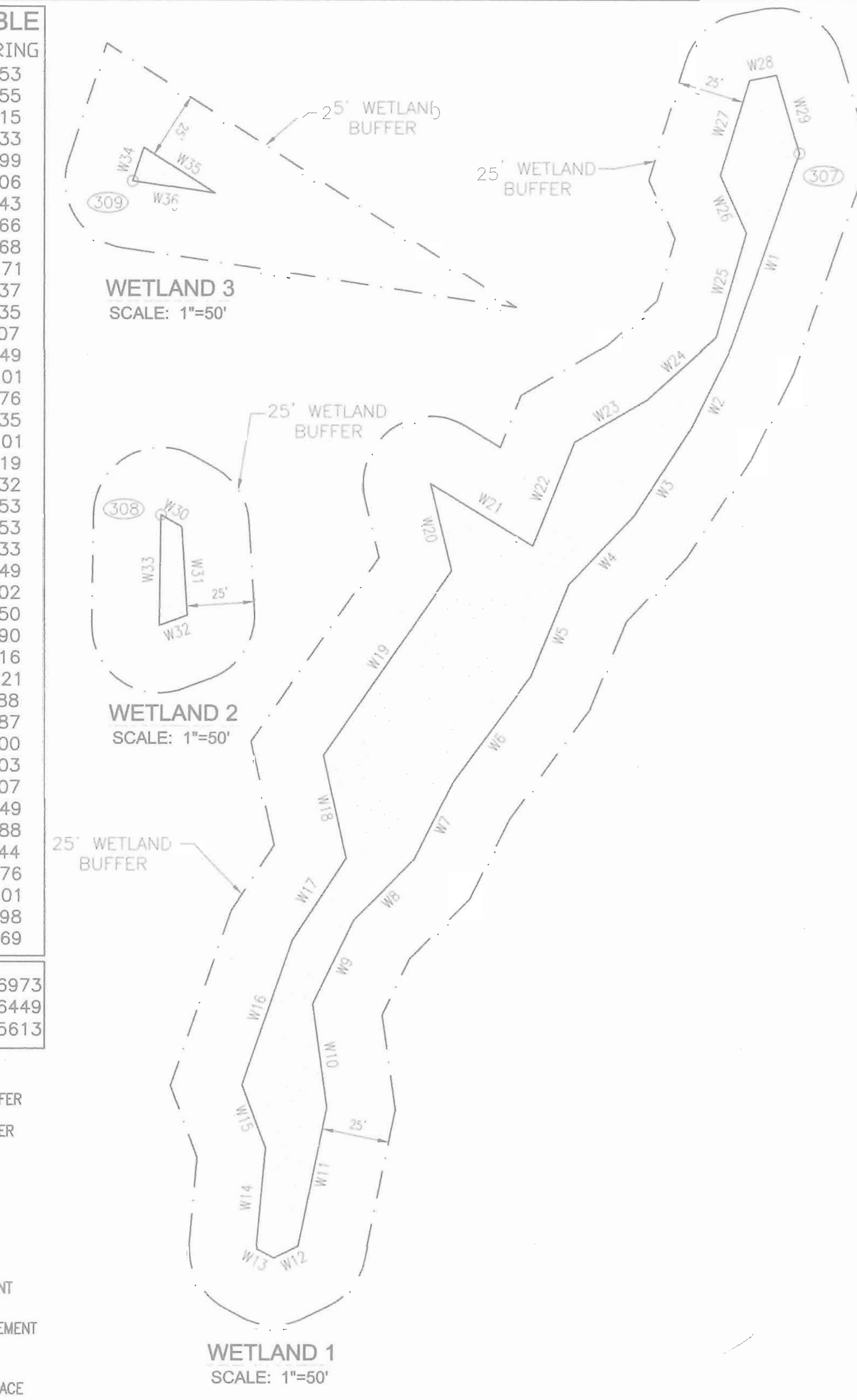

NO	REVISION	DATE
3	REFLECTING CHANGES DONE PER SDP.04.25 RESITED/REDESIGNED THE SENIOR CENTER	1/10/2005
2	EXCHANGE UNIT CONFIG. BETWEEN BLG. 'A' AND BLDG 'F' ADDED PHASE 3 GRADING CHANGE AROUND BLDGS. ADDED SHC TO MH112 ADDED PHASE 2 GRADING CHANGE AROUND BLDG	DATE

CURVE DATA TABLE

CURVE	ARC	RADIUS	TANGENT	DELTA	CHORD
C12	190.45'	300.01'	98.56	36°22'24"	N12°54'31"E 187.27'

PLAN
SCALE: 1" = 40'

APPROVED: HOWARD COUNTY DEPARTMENT OF PLANNING AND ZONING

CHIEF, DEVELOPMENT ENGINEERING DIVISION — DATE 11/4/03

CHIEF, DIVISION OF LAND DEVELOPMENT — DATE 2/19/04

DIRECTOR — DATE 2/21/04

OWNER:
TAYLOR FAMILY LIMITED PARTNERSHIP A
C/O LAND DESIGN & DEVELOPMENT, INC.
8000 MAIN STREET
ELLICOTT CITY, MD 21043
ATTN: MR. DONALD R. REUWER
PHONE: (410) 480-9105

DEVELOPER
LAND DESIGN & DEVELOPMENT, INC.
8000 MAIN STREET
ELLICOTT CITY, MD 21043
ATTN: MR. DONALD R. REUWER
PHONE: (410) 480-9105

SITE DEVELOPMENT PLAN

VILLAGE CREST
PART OF PARCEL D-1
PHASE 1,2,3 & 4 APT. BLDGS. A TO R
268 AGE RESTRICTED ADULT HOUSING UNITS
TAX MAP #25 BLOCK 20 — PARCEL P/O 98
2ND ELECTION DISTRICT — HOWARD COUNTY, MARYLAND

FREDERICK WARD ASSOCIATES, INC.
ARCHITECTS | ENGINEERS | PLANNERS | SURVEYORS
7125 RIVERWOOD DRIVE
COLUMBIA, MARYLAND 21046-2354
410-720-6900
410-720-6226 fax
www.frederickward.com

STATE OF MARYLAND — ROBERT HARRIS VOGEL — No. 16193 — PROFESSIONAL ENGINEER

DESIGN BY:	RJ
DRAWN BY:	RJ
CHECKED BY:	RHV
DATE:	SEPT. 2003
SCALE:	1"=40'
W.O. NO.:	2018121.00

2 SHEET OF 16

SDP-02-94

M:\PROJECTS\2018121\ENGR\dwg\Sdp-APT\02SPLAN.dwg Fri Oct 17 13:10:08 2003 ROMA

MATCH LINE SEE SHEET 3 OF 17

E 1371750 N 578250

UNDER GROUND AT. & T. FIBER OPTIC CABLE AMERICAN TELEPHONE & TELEGRAPH 30' EASEMENT

VILLAGE CREST PARCEL 'C-1' F-02-47

AT & T LINE LOCATIONS

FOREST CONSERVATION EASEMENT 'H' REFORESTATION PER F-02-47 PLAT# 16104-16109

VILLAGE CREST DRIVE
MINOR COLLECTOR
50' RIGHT OF WAY
24' PAVING
F-01-47

30' STRUCTURE AND USE SETBACK

N 30° 35' 57" E 361.42'

PUBLIC SIDEWALK EASEMENT PER F-20-47 PLAT# 16104-16109

10' PUBLIC WATER MAINTENANCE EASEMENT PLAT# 16104-16109

30' PUBLIC SEWER, WATER & UTILITY EASEMENT, PREVIOUSLY RECORDED PLAT# 16104-16109.

10' PUBLIC SEWER, WATER & UTILITY EASEMENT PLAT# 16421-16422

REC. OPENSPACE 16020.45 SF

STONE CROP DRIVE

WINDSOR 16 UNITS M.C.E.=385.50 PHASE 3

WINDSOR 16 UNITS M.C.E.=384.50 PHASE 4

HAMPTON COURT 12 UNITS M.C.E.=386.50 PHASE 3

HAMPTON COURT 12 UNITS M.C.E.=380.10 PHASE 4

PRIVATE GROUNDWATER WELL 6" PERF. PVC DRY WELL #2

FOREST CONSERVATION EASEMENT 'A' REFORESTATION PER F-02-47 PLAT# 16104-16109

POND 2
ROCKET POND
HAZARD CLASS
PRIVATELY OWNED
AND MAINTAINED
PER F-20-47

PRIVATE STORMWATER MANAGEMENT DRAINAGE AND UTILITY EASEMENT #2 PER F-02-47 PLAT# 16104-16109

15' NO WOODY BUFFER

30' LANDSCAPE BUFFER

EX. COLLEGE AVENUE
MINOR COLLECTOR (SCENIC RD)
60' RIGHT OF WAY

30' HALF SECTION RIGHT OF WAY DEDICATION, COLLEGE AVENUE. PER F-20-47

PROPOSED 12' WIDE AUXILIARY LANE PER F-20-47

LAND DEDICATED TO HOWARD COUNTY FOR THE PURPOSES OF A PUBLIC ROAD PER F-20-47 PLAT# 16104-16109

PUBLIC TREE MAINTENANCE EASEMENT PLAT# 16104-16109

AUTUMN RIVER SUBDIVISION ZONED R-ED F-00-131 S-98-18

MARYLAND STATE GRID MERIDIAN

AUTUMN VIEW SECTION 5 S-99-01 PROPOSED SUBDIVISION ZONED R-ED

PUBLIC 100 YR FLOODPLAIN DRAINAGE AND UTILITY EASEMENT SCALE: 1"=40'

PLAN
SCALE: 1"=40'

LEGEND

- WETLAND BUFFER
- STREAM BUFFER
- WETLAND
- 100YR FLOODPLAIN
- FOREST CONSERVATION REFORESTATION EASEMENT
- FOREST RETENTION EASEMENT
- RECREATIONAL OPENSPACE
- RECREATIONAL OPENSPACE TOWNHOUSES (PARCEL E-1)

LINE TABLE

F1	N16°33'36"W	83.30
F2	S19°11'56"W	60.54
F3	S13°22'38"W	32.95
F4	S23°43'10"W	54.90
F5	S36°56'32"W	124.14
F6	N88°24'02"E	16.30
F7	S67°08'15"E	35.32
F8	S79°15'45"E	14.28
F9	N26°02'30"E	193.03
F10	N14°37'39"E	1.40
312	N 578041.5263	E 1372592.9432

CURVE DATA TABLE

CURVE	ARC	RADIUS	TANGENT	DELTA	CHORD
C16	167.70'	300.00'	86.10'	32°00'40"	S 48°36'41"W 165.52'
C17	197.31'	400.00'	100.70'	28°15'42"	N 48°20'41"E 195.33'

OWNER:
TAYLOR FAMILY LIMITED PARTNERSHIP
C/O LAND DESIGN & DEVELOPMENT, INC
8000 MAIN STREET
ELLICOTT CITY, MD 21043
ATTN: MR. DONALD R. REUWER
PHONE: (410) 480-9105

DEVELOPER
LAND DESIGN & DEVELOPMENT, INC.
8000 MAIN STREET
ELLICOTT CITY, MD 21043
ATTN: MR. DONALD R. REUWER
PHONE: (410) 480-9105

APPROVED: HOWARD COUNTY DEPARTMENT OF PLANNING AND ZONING

CHIEF, DEVELOPMENT ENGINEERING DIVISION — DATE 11/4/03

CHIEF, DIVISION OF LAND DEVELOPMENT — DATE 2/19/04

DIRECTOR — DATE 2/20/04

SITE DEVELOPMENT PLAN

VILLAGE CREST
PART OF PARCEL D-1
PHASE 1,2,3 & 4, APT. BLDGS. A TO R
268 AGE RESTRICTED ADULT HOUSING UNITS
TAX MAP #25 BLOCK 20 — PARCEL P/O 98
2ND ELECTION DISTRICT — HOWARD COUNTY, MARYLAND

FREDERICK WARD ASSOCIATES, INC.
ARCHITECTS | ENGINEERS | PLANNERS | SURVEYORS
7125 RIVERWOOD DRIVE
COLUMBIA, MARYLAND 21046-2354
410-720-6900
410-720-8226 fax
www.frederickward.com

STATE OF MARYLAND — RICHARD HARRIS ROSENBERG — No. 16122 — PROFESSIONAL ENGINEER

DESIGN BY:	RJ
DRAWN BY:	RJ
CHECKED BY:	RHV
DATE:	SEPT. 2003
SCALE:	1"=40'
W.O. NO.:	2018121.00

SHEET 3 OF 16

SDP-02-94

M:\PROJECTS\2018121\ENGR\dwg\Sdp-APT\D3SPLAN.dwg Fri Sep 19 16:42:56 2003 E4

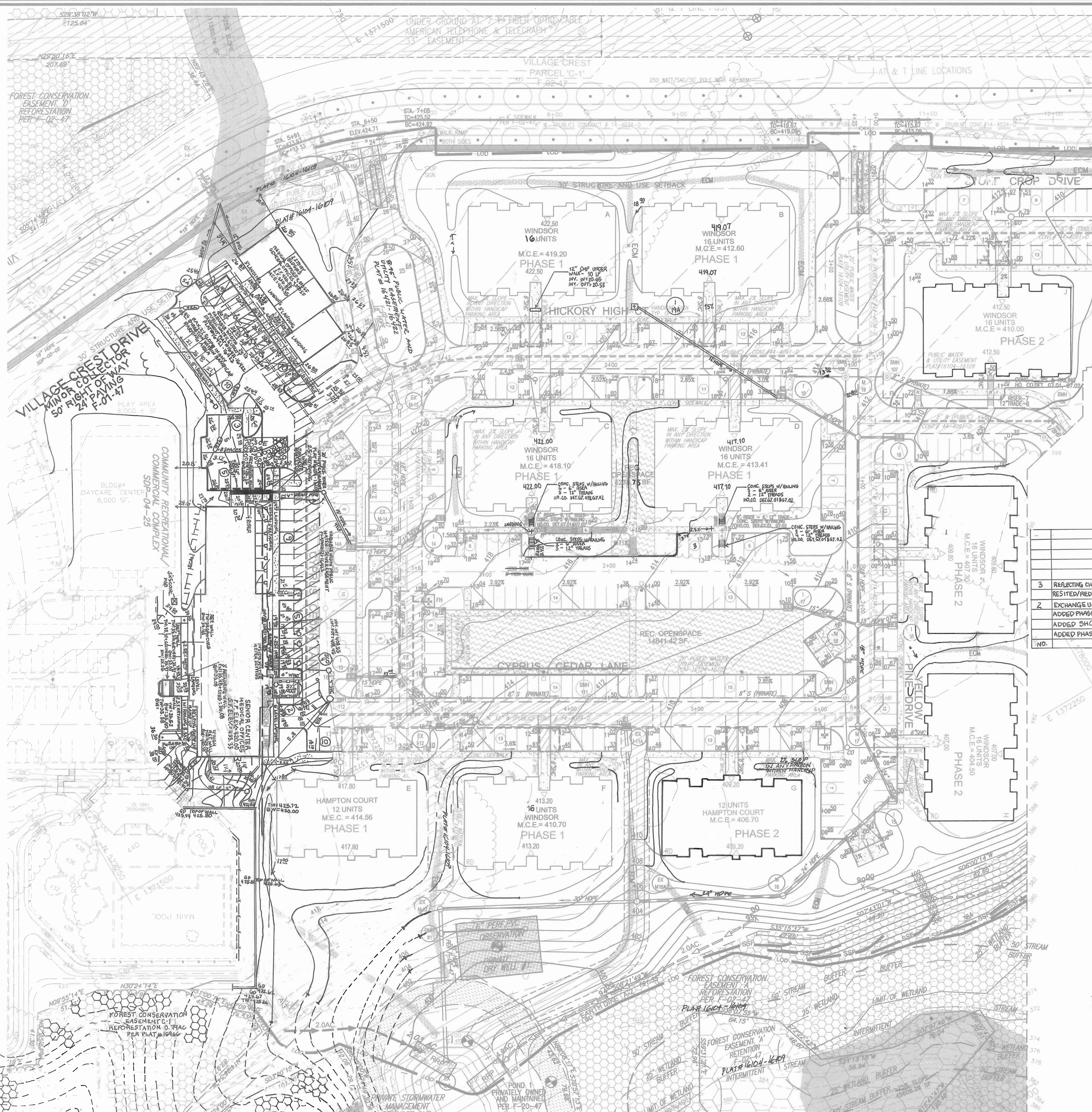

LEGEND

WETLAND BUFFER
STREAM BUFFER
WETLAND
100YR FLOODPLAIN
FOREST CONSERVATION REFORESTATION EASEMENT
FOREST RETENTION EASEMENT
RECREATIONAL OPENSPACE
RECREATIONAL OPENSPACE TOWNHOUSES (PARCEL-E-1)
PRIVATE SWM ACCESS EASEMENT

EXISTING CONTOUR — 382
PROPOSED CONTOUR — 82
SPOT ELEVATION +82.53
DIRECTION OF FLOW
TREE PROTECTION FENCE
EXISTING TREES TO REMAIN
PARKING LAMP — Overhead
STABILIZED CONSTRUCTION ENTRANCE — SCE
SILT FENCE — SF
SUPER SILT FENCE — SSF
EARTH DIKE
LIMIT OF DISTURBANCE — LOD
EROSION CONTROL MATTING — ECM

ALL EARTH DIKES ARE TO BE PLACED IN WORKING ORDER AT THE END OF EACH WORKING DAY.

ALL REAR ROOF LEADERS FROM BUILDING F, G, H, I, M , N, AND O SHALL TIE INTO THE STORM DRAIN SYSTEM AND SHALL NOT BE DISCHARGE OVER LAND.

REVIEWED FOR HOWARD SCD AND MEETS TECHNICAL REQUIREMENTS

Jim Meyers 10-29-03
USDA-NATURAL RESOURCES CONSERVATION SERVICE DATE

THIS DEVELOPMENT PLAN IS APPROVED FOR SOIL EROSION AND SEDIMENT CONTROL BY THE HOWARD SOIL CONSERVATION DISTRICT

John R. Robertson 10-29-03
HOWARD SCD DATE

3	REFLECTING CHANGES DONE PER SDP.04-25	
	RESITED/REDESIGNED THE SENIOR CENTER	1/10/2005
2	EXCHANGE UNIT CONFIG. BETWEEN BLDG. 'A' & 'F'	
	ADDED PHASE 3 GRADING CHANGE AROUND BLDG'S	
	ADDED SHC TO MH 112	
	ADDED PHASE 2 GRADING CHANGE AROUND BLDG	
NO.	REVISION	DATE

DEVELOPER'S CERTIFICATE

"I/WE CERTIFY THAT ALL DEVELOPMENT AND CONSTRUCTION WILL BE DONE ACCORDING TO THIS PLAN FOR SEDIMENT AND EROSION CONTROL, AND THAT ALL RESPONSIBLE PERSONNEL INVOLVED IN THE CONSTRUCTION PROJECT WILL HAVE A CERTIFICATE OF ATTENDANCE AT A DEPARTMENT OF THE ENVIRONMENT APPROVED TRAINING PROGRAM FOR THE CONTROL OF SEDIMENT AND EROSION BEFORE BEGINNING THE PROJECT. I ALSO AUTHORIZE PERIODIC ON-SITE INSPECTION BY THE HOWARD SOIL CONSERVATION DISTRICT.

SIGNATURE OF DEVELOPER 10/17/03 DATE
DONALD REUWER

ENGINEERS CERTIFICATE

"I CERTIFY THAT THIS PLAN FOR SEDIMENT AND EROSION CONTROL REPRESENTS A PRACTICAL AND WORKABLE PLAN BASED ON MY PERSONAL KNOWLEDGE OF THE SITE CONDITIONS AND THAT IT WAS PREPARED IN ACCORDANCE WITH THE REQUIREMENTS OF THE HOWARD SOIL CONSERVATION DISTRICT.

SIGNATURE OF ENGINEER 10/17/03 DATE
ROBERT H. VOGEL

APPROVED: HOWARD COUNTY DEPARTMENT OF PLANNING AND ZONING

CHIEF, DEVELOPMENT ENGINEERING DIVISION 11/4/03 DATE
CHIEF, DIVISION OF LAND DEVELOPMENT 2/19/04 DATE
DIRECTOR 2/20/04 DATE

PLAN
SCALE: 1"=40'

OWNER :
TAYLOR FAMILY LIMITED PARTNERSHIP A
C/O LAND DESIGN & DEVELOPMENT, INC.
8000 MAIN STREET
ELLICOTT CITY, MD 21043
ATTN: MR. DONALD R. REUWER
PHONE: (410) 480-9105

DEVELOPER
LAND DESIGN & DEVELOPMENT, INC.
8000 MAIN STREET
ELLICOTT CITY, MD 21043
ATTN: MR. DONALD R. REUWER
PHONE: (410) 480-9105

SITE DEVELOPMENT PLAN
GRADING AND SEDIMENT CONTROL PLAN
VILLAGE CREST
PART OF PARCEL D-1
PHASE 1,2,3,&4 APT. BLDGS. A TO R
268 AGE RESTRICTED ADULT HOUSING UNITS
TAX MAP #25 BLOCK 20 PARCEL P/O 98
2ND ELECTION DISTRICT HOWARD COUNTY, MARYLAND

FREDERICK WARD ASSOCIATES, INC.
ARCHITECTS | ENGINEERS | PLANNERS | SURVEYORS
7125 RIVERWOOD DRIVE
COLUMBIA, MARYLAND 21046-2354
410-720-6900
410-720-6226 fax
www.frederickward.com

STATE OF MARYLAND — ROBERT HARRIS VOGEL — No. 16193 — PROFESSIONAL ENGINEER
ROBERT H. VOGEL, PE NO. 16193

DESIGN BY: RJ
DRAWN BY: RJ
CHECKED BY: RHV
DATE: SEPT. 2003
SCALE: AS SHOWN
W.O. NO.: 2018121.00

SHEET 4 OF 16

SDP-02-94

M:\PROJECTS\2018121\ENGR\dwg\Sdp-APT\10GSPLAN.dwg Fri Oct 17 13:31:54 2003 ROMA

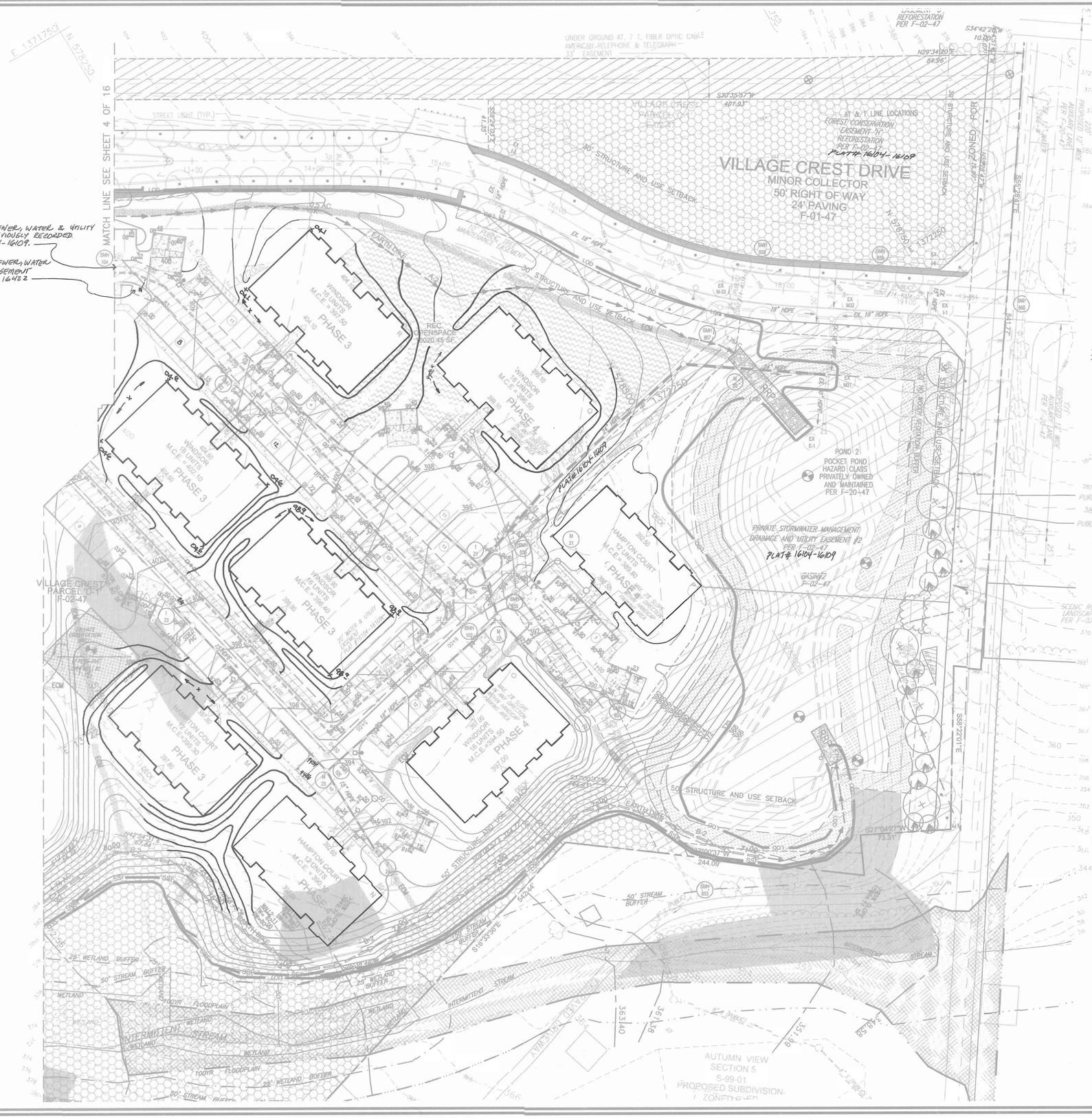

LEGEND

- EXISTING CONTOUR — 382
- PROPOSED CONTOUR — 382
- SPOT ELEVATION — 382.53
- DIRECTION OF FLOW
- TREE PROTECTION FENCE
- EXISTING TREES TO REMAIN
- PARKING LIGHT
- STABILIZED CONSTRUCTION ENTRANCE — SCE
- SILT FENCE — SF
- SUPER SILT FENCE — SSF
- EARTH DIKE
- LIMIT OF DISTURBANCE — LOD
- WETLAND BUFFER
- STREAM BUFFER
- WETLAND
- 100YR FLOODPLAIN
- FOREST CONSERVATION REFORESTATION EASEMENT
- FOREST RETENTION EASEMENT

REVIEWED FOR HOWARD SCD AND MEETS TECHNICAL REQUIREMENTS

Jim Myers — 10-29-03
USDA–NATURAL RESOURCES CONSERVATION SERVICE — DATE

THIS DEVELOPMENT PLAN IS APPROVED FOR SOIL EROSION AND SEDIMENT CONTROL BY THE HOWARD SOIL CONSERVATION DISTRICT

John R Robertson — 10-29-03
HOWARD SCD — DATE

DEVELOPER'S CERTIFICATE

"I/WE CERTIFY THAT ALL DEVELOPMENT AND CONSTRUCTION WILL BE DONE ACCORDING TO THIS PLAN FOR SEDIMENT AND EROSION CONTROL, AND THAT ALL RESPONSIBLE PERSONNEL INVOLVED IN THE CONSTRUCTION PROJECT WILL HAVE A CERTIFICATE OF ATTENDANCE AT A DEPARTMENT OF THE ENVIRONMENT APPROVED TRAINING PROGRAM FOR THE CONTROL OF SEDIMENT AND EROSION BEFORE BEGINNING THE PROJECT. I ALSO AUTHORIZE PERIODIC ON-SITE INSPECTION BY THE HOWARD SOIL CONSERVATION DISTRICT."

SIGNATURE OF DEVELOPER DONALD REUWER — 10/17/03 DATE

ENGINEERS CERTIFICATE

"I CERTIFY THAT THIS PLAN FOR SEDIMENT AND EROSION CONTROL REPRESENTS A PRACTICAL AND WORKABLE PLAN BASED ON MY PERSONAL KNOWLEDGE OF THE SITE CONDITIONS AND THAT IT WAS PREPARED IN ACCORDANCE WITH THE REQUIREMENTS OF THE HOWARD SOIL CONSERVATION DISTRICT.

Robert H. Vogel — 10/17/03
SIGNATURE OF ENGINEER ROBERT H. VOGEL — DATE

APPROVED: HOWARD COUNTY DEPARTMENT OF PLANNING AND ZONING

CHIEF, DEVELOPMENT ENGINEERING DIVISION — 1/4/03 DATE
CHIEF, DIVISION OF LAND DEVELOPMENT — 2/19/04 DATE
DIRECTOR — 2/20/04 DATE

SITE DEVELOPMENT PLAN
GRADING AND SEDIMENT CONTROL PLAN II
VILLAGE CREST
PART OF PARCEL D-1

PHASE 1,2,3&4, APT. BLDGS. A TO R
268 AGE RESTRICTED ADULT HOUSING UNITS

TAX MAP #25 BLOCK 20 — PARCEL P/O 98
2ND ELECTION DISTRICT — HOWARD COUNTY, MARYLAND

OWNER :
TAYLOR FAMILY LIMITED PARTNERSHIP A
C/O LAND DESIGN & DEVELOPMENT, INC.
8000 MAIN STREET
ELLICOTT CITY, MD 21043
ATTN: MR. DONALD R. REUWER
PHONE: (410) 480-9105

DEVELOPER
LAND DESIGN & DEVELOPMENT, INC.
8000 MAIN STREET
ELLICOTT CITY, MD 21043
ATTN: MR. DONALD R. REUWER
PHONE: (410) 480-9105

FREDERICK WARD ASSOCIATES. INC.
ARCHITECTS | ENGINEERS | PLANNERS | SURVEYORS
7125 RIVERWOOD DRIVE
COLUMBIA, MARYLAND 21046-2354
410-720-6900
410-720-6226 fax
www.frederickward.com

STATE OF MARYLAND — ROBERT HARRIS VOGEL — No. 16123 — PROFESSIONAL ENGINEER
Robert H. Vogel

DESIGN BY:	RJ
DRAWN BY:	RJ
CHECKED BY:	RHV
DATE:	SEPT. 2003
SCALE:	AS SHOWN
W.O. NO.:	2018121.00

SHEET 5 OF 16

SDP-02-94

M:\PROJECTS\2018121\CIVIL\dwg\Sdp_APTY1150PLAN.dwg Tue Oct 07 08:38:13 2003 E4

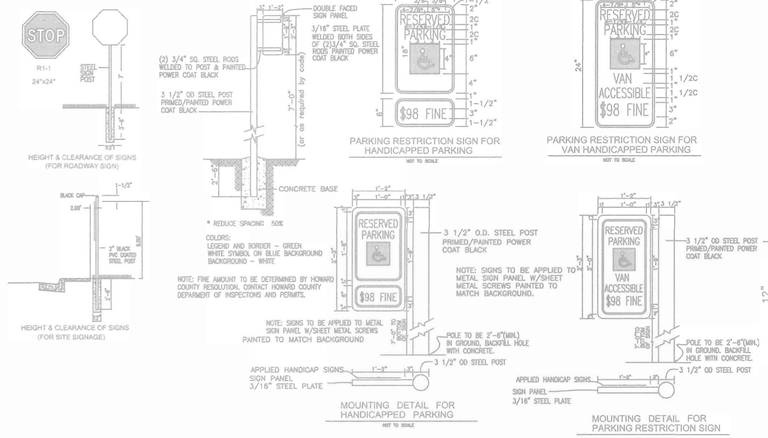

SIGNAGE DETAIL

NOT TO SCALE

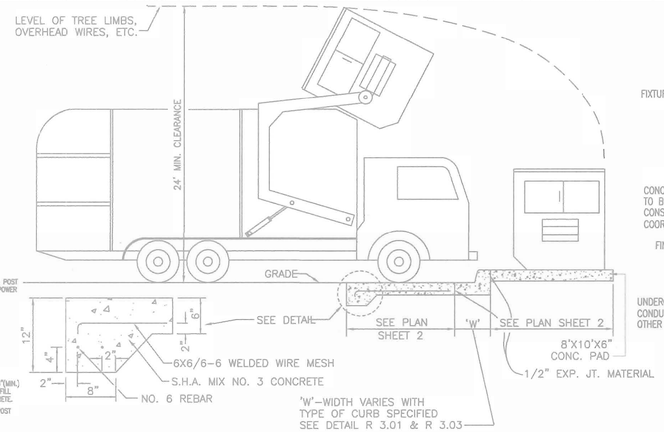

SOLID WASTE SERVICE PAD

HOWARD COUNTY STD. R 11.01
NOT TO SCALE
FOR DUMPSTER ENCLOSURE DETAIL SEE ARCHITECTURAL PLANS

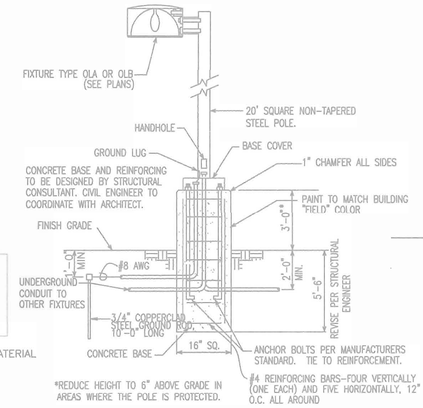

LIGHTING STANDARD

SCALE: NTS

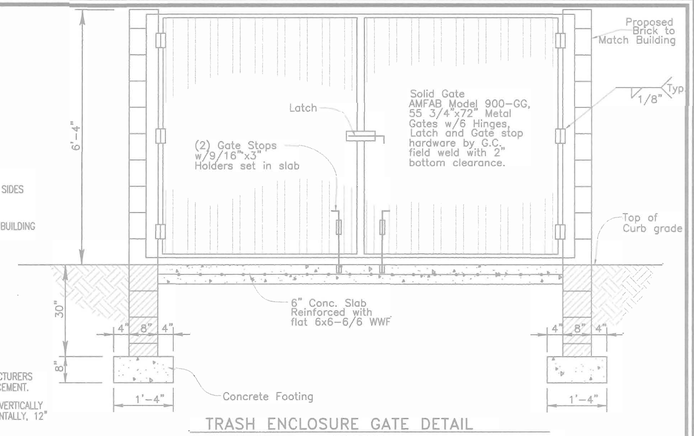

TRASH ENCLOSURE GATE DETAIL

NO SCALE

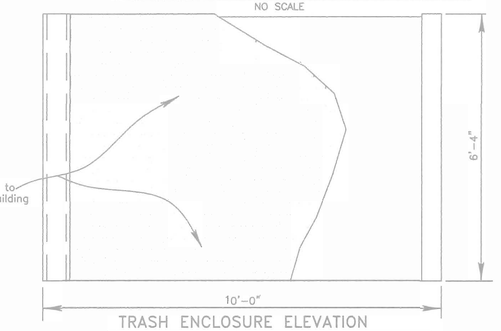

TRASH ENCLOSURE ELEVATION

NOT TO SCALE

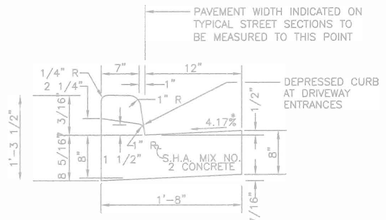

NOTE : DEPRESSED CURB IN HANDICAP ACCESSABLE AREAS SHALL HAVE A 0.0417'(1/2") RISE FROM PAVING TO TOP OF CURB.

STANDARD COMBINATION CURB AND GUTTER

HOWARD COUNTY STANDARD R-3.01
NOT TO SCALE

* GUTTER PAN AT THE MEDIAN EDGE OF INTERMEDIATE ARTERIAL OR THE HIGH SIDE OF SUPERELEVATED SECTIONS SHALL BE SLOPED AT THE SAME RATE AND IN THE SAME DIRECTION AS THE PAVEMENT. MATCH PAVEMENT CROSS SLOPE WHEN CURB IS LOCATED ON THE LOW SIDE OF SUPERELEVATED SECTION AND THE RATE OF SUPERELEVATION IS GREATER THAN 3% FOR MODIFIED CURB AND GUTTER.

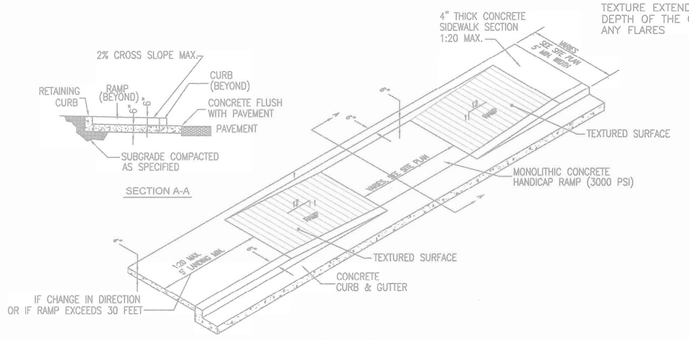

SIDEWALK HANDICAP RAMP DETAIL

NOT TO SCALE

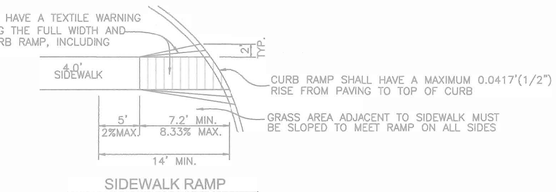

SIDEWALK RAMP

NOT TO SCALE

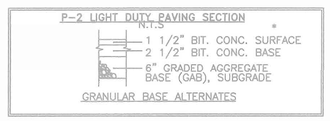

PAVMENT SECTIONS

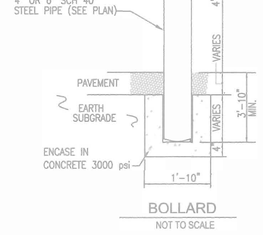

BOLLARD

NOT TO SCALE

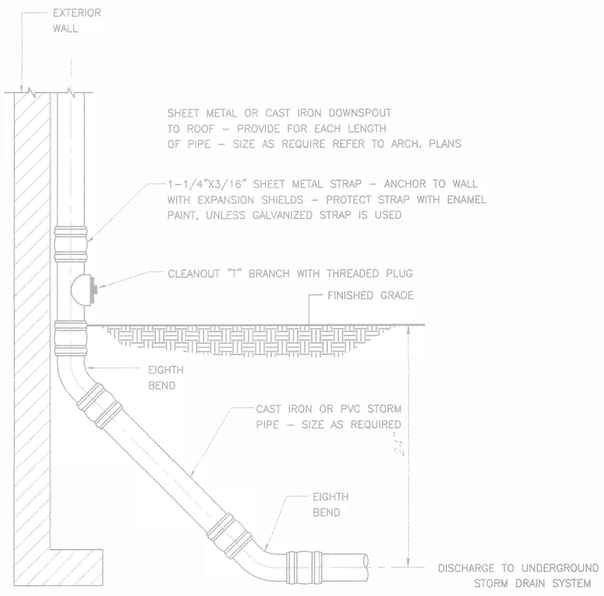

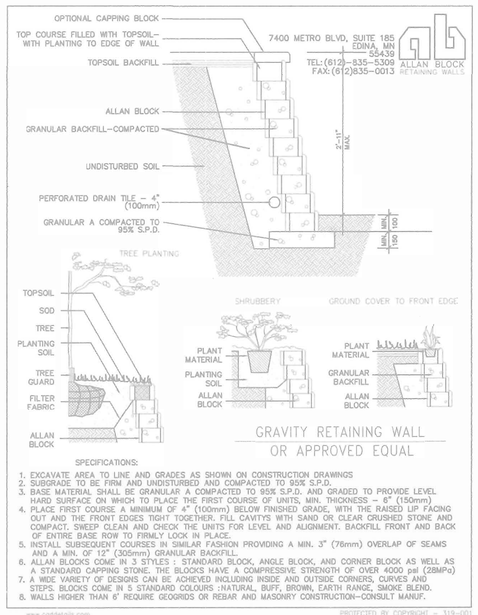

GRAVITY RETAINING WALL OR APPROVED EQUAL

SPECIFICATIONS:

1. EXCAVATE AREA TO LINE AND GRADES AS SHOWN ON CONSTRUCTION DRAWINGS
2. SUBGRADE TO BE FIRM AND UNDISTURBED AND COMPACTED TO 95% S.P.D.
3. BASE MATERIAL SHALL BE GRANULAR A COMPACTED TO 95% S.P.D. AND GRADED TO PROVIDE LEVEL HARD SURFACE ON WHICH TO PLACE THE FIRST COURSE OF UNITS, MIN. THICKNESS – 6" (150mm)
4. PLACE FIRST COURSE A MINIMUM OF 4" (100mm) BELOW FINISHED GRADE, WITH THE RAISED LIP FACING OUT AND THE FRONT EDGES TIGHT TOGETHER. FILL CAVITYS WITH SAND OR CLEAR CRUSHED STONE AND COMPACT. SWEEP CLEAN AND CHECK THE UNITS FOR LEVEL AND ALIGNMENT. BACKFILL FRONT AND BACK OF ENTIRE BASE ROW TO FIRMLY LOCK IN PLACE.
5. INSTALL SUBSEQUENT COURSES IN SIMILAR FASHION PROVIDING A MIN. 3" (76mm) OVERLAP OF SEAMS AND A MIN. OF 12" (305mm) GRANULAR BACKFILL.
6. ALLAN BLOCKS COME IN 3 STYLES : STANDARD BLOCK, ANGLE BLOCK, AND CORNER BLOCK AS WELL AS A STANDARD CAPPING STONE. THE BLOCKS HAVE A COMPRESSIVE STRENGTH OF OVER 4000 psi (28MPa)
7. A WIDE VARIETY OF DESIGNS CAN BE ACHIEVED INCLUDING INSIDE AND OUTSIDE CORNERS, CURVES AND STEPS. BLOCKS COME IN 5 STANDARD COLOURS :NATURAL, BUFF, BROWN, EARTH RANGE, SMOKE BLEND.
8. WALLS HIGHER THAN 6' REQUIRE GEOGRIDS OR REBAR AND MASONRY CONSTRUCTION–CONSULT MANUF.

www.caddetails.com PROTECTED BY COPYRIGHT – 319-001

CONCRETE SIDEWALK
HOWARD COUNTY STANDARD DETAIL R3.05

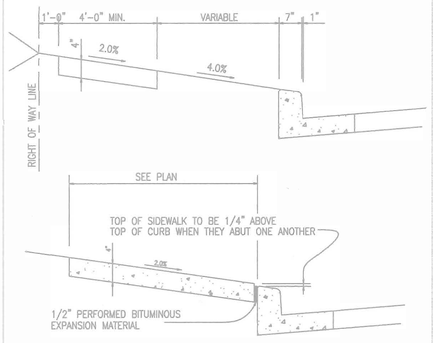

CONSTRUCTION SPECIFICATIONS

1. SIDEWALK TO BE SCRIBED IN 5'-0" MAXIMUM SQUARES.
2. EXPANSION JOINTS ACROSS THE SIDEWALK NOT TO BE MORE THAN 15' APART.
3. 1/2" PREFORMED BITUMINOUS EXPANSION MATERIAL IN EXPANSION JOINTS TO BE KEPT 1/4" BELOW SURFACE OF SIDEWALK.
4. CONCRETE TO BE MIX NUMBER 2.
5. WHERE SIDEWALK ABUTS CURB, SIDEWALK SHALL BE 1/4" ABOVE CURB WITH 1/2" PREFORMED BITUMINOUS EXPANSION MATERIAL BETWEEN SIDEWALK AND CURB.
6. ON LONGITUDINAL SIDEWALK GRADES OF 5% OR GREATER, A CONCRETE HEADER, 6' THICK AND 6" DEEP BELOW THE NORMAL 4" SIDEWALK THICKNESS SHALL CONSTRUCTED FOR THE FULL WIDTH OF THE SIDEWALK AT INTERVALS\ OF 48 FEET. THE HEADERS SHALL BE PLACED AT EXPANSION JOINT LOCATIONS AND SHALL BE MONOLITHIC WITH THE CURB.
7. SIDEWALK WIDTH ADJACENT TO CURB SHALL BE 5'-0" MINIMUM EXCEPT SIDEWALK ADJACENT TO CURB IN CUL-DE-SAC BULBS MAY BE 4.0' WIDE.
8. SIDEWALK LOCATED 2' OR MORE FROM CURB MAY BE 4'-0" IN WIDTH WITH A 5'X5' PAVED SECTION PLACED 200' APART.

OWNER :

TAYLOR FAMILY LIMITED PARTNERSHIP A
C/O LAND DESIGN & DEVELOPMENT, INC.
8000 MAIN STREET
ELLICOTT CITY, MD 21043
ATTN: MR. DONALD R. REUWER
PHONE: (410) 480-9105

DEVELOPER

LAND DESIGN & DEVELOPMENT, INC.
8000 MAIN STREET
ELLICOTT CITY, MD 21043
ATTN: MR. DONALD R. REUWER
PHONE: (410) 480-9105

APPROVED: HOWARD COUNTY DEPARTMENT OF PLANNING AND ZONING

CHIEF, DEVELOPMENT ENGINEERING DIVISION	DATE 11/4/03
CHIEF, DIVISION OF LAND DEVELOPMENT	DATE 2/19/04
DIRECTOR	DATE 4/21/04

SITE DEVELOPMENT PLAN
SITE DETAILS
VILLAGE CREST
PART OF PARCEL D-1

PHASE 1,2,3 & 4 APT. BLDGS. A TO R
268 AGE RESTRICTED ADULT HOUSING UNITS

TAX MAP #25 BLOCK 20 PARCEL P/O 98
2ND ELECTION DISTRICT HOWARD COUNTY, MARYLAND

FREDERICK WARD ASSOCIATES, INC.
ARCHITECTS | ENGINEERS | PLANNERS | SURVEYORS
7125 RIVERWOOD DRIVE
COLUMBIA, MARYLAND 21046-2354
410-720-8900
410-720-8226 fax
www.frederickward.com

STATE OF MARYLAND ROBERT H. VOGEL No. 16193 PROFESSIONAL ENGINEER
ROBERT H. VOGEL, PE No. 16193

DESIGN BY:	RJ
DRAWN BY:	RJ
CHECKED BY:	RHV
DATE:	SEPT. 2003
SCALE:	AS SHOWN
W.O. NO.:	2018121.00

SHEET 6 OF 16

SDP-02-94

K:\PROJECTS\2018121\ENGR\dwg\Sdp-APT\04SDE1A1L.dwg Fri Sep 19 16:44:50 2003 E4

DETAIL 24 - STABILIZED CONSTRUCTION ENTRANCE

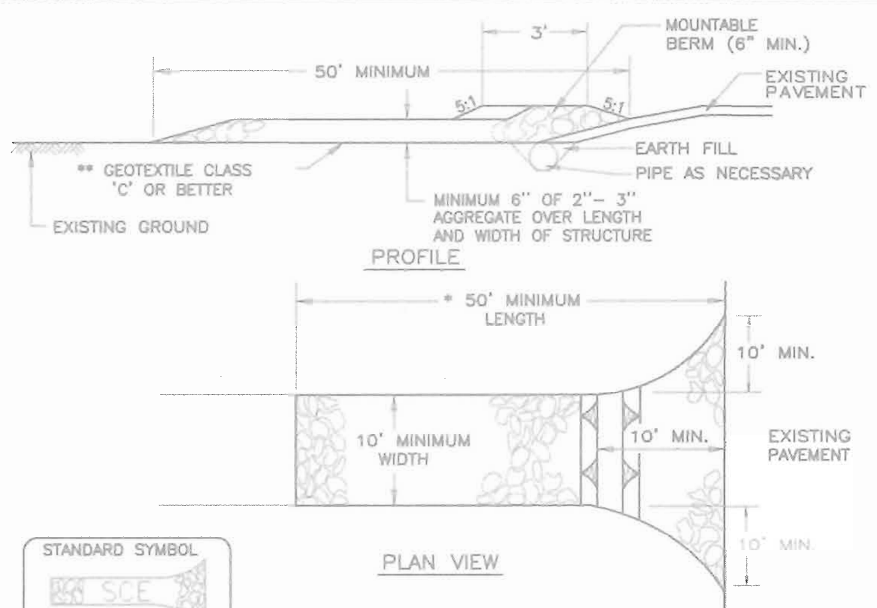

Construction Specification

1. Length – minimum of 50' (* 30' for a single residence lot).
2. Width – 10' minimum, should be flared at the existing road to provide a turning radius.
3. Geotextile fabric (filter cloth) shall be placed over the existing ground prior to placing stone. ** The plan approval authority may not require single family residences to use geotextile.
4. Stone – crushed aggregate (2" to 3") or reclaimed or recycled concrete equivalent shall be placed at least 6" deep over the length and width of the entrance.
5. Surface Water – all surface water flowing to or diverted toward construction entrances shall be piped through the entrance, maintaining positive drainage. Pipe installed through the stabilized construction entrance shall be protected with a mountable berm with 5:1 slopes and a minimum of 6" of stone over the pipe. Pipe has to be sized according to the drainage. When the SCE is located at a high spot and has no drainage to convey, a pipe will not be necessary. Pipe should be sized according to the amount of runoff to be conveyed. A 6" minimum will be required.
6. Location – A stabilized construction entrance shall be located at every point where construction traffic enters or leaves a construction site. Vehicles leaving the site must travel over the entire length of the stabilized construction entrance.

U.S. DEPARTMENT OF AGRICULTURE SOIL CONSERVATION SERVICE	PAGE F – 17 – 3	MARYLAND DEPARTMENT OF ENVIRONMENT WATER MANAGEMENT ADMINISTRATION

DETAIL 33 - SUPER SILT FENCE

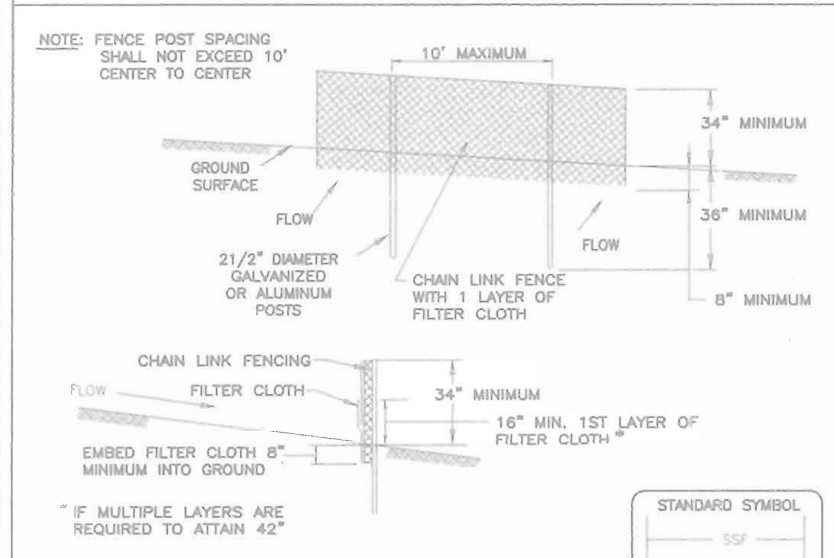

Construction Specifications

1. Fencing shall be 42" in height and constructed in accordance with the latest Maryland State Highway Details for Chain Link Fencing. The specification for a 6' fence shall be used, substituting 42" fabric and 6' length posts.

2. Chain link fence shall be fastened securely to the fence posts with wire ties. The lower tension wire, brace and truss rods, drive anchors and post caps are not required except on the ends of the fence.

3. Filter cloth shall be fastened securely to the chain link fence with ties spaced every 24" at the top and mid section.

4. Filter cloth shall be embedded a minimum of 8" into the ground.

5. When two sections of filter cloth adjoin each other, they shall be overlapped by 6" and folded.

6. Maintenance shall be performed as needed and silt buildups removed when "bulges" develop in the silt fence, or when silt reaches 50% of fence height

7. Filter cloth shall be fastened securely to each fence post with wire ties or staples at top and mid section and shall meet the following requirements for Geotextile Class F:

Tensile Strength	50 lbs/in (min.)	Test: MSMT 509
Tensile Modulus	20 lbs/in (min.)	Test: MSMT 509
Flow Rate	0.3 gal/ft²/minute (max.)	Test: MSMT 322
Filtering Efficiency	75% (min.)	Test: MSMT 322

U.S. DEPARTMENT OF AGRICULTURE SOIL CONSERVATION SERVICE	PAGE H – 26 – 3	MARYLAND DEPARTMENT OF ENVIRONMENT WATER MANAGEMENT ADMINISTRATION

DETAIL 1 - EARTH DIKE

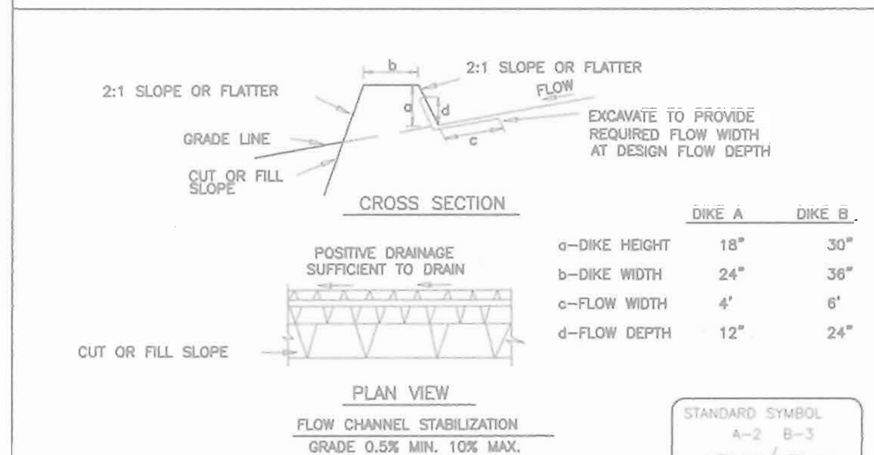

	DIKE A	DIKE B
a–DIKE HEIGHT	18"	30"
b–DIKE WIDTH	24"	36"
c–FLOW WIDTH	4'	6'
d–FLOW DEPTH	12"	24"

1. Seed and cover with straw mulch.
2. Seed and cover with Erosion Control Matting or line with sod.
3. 4" – 7" stone or recycled concrete equivalent pressed into the soil 7" minimum

Construction Specifications

1. All temporary earth dikes shall have uninterrupted positive grade to an outlet. Spot elevations may be necessary for grades less than 1%.
2. Runoff diverted from a disturbed area shall be conveyed to a sediment trapping device.
3. Runoff diverted from an undisturbed area shall outlet directly into an undisturbed, stabilized area at a non-erosive velocity.
4. All trees, brush, stumps, obstructions, and other objectional material shall be removed and disposed of so as not to interfere with the proper functioning of the dike.
5. The dike shall be excavated or shaped to line, grade and cross section as required to meet the criteria specified herein and be free of bank projections or other irregularities which will impede normal flow.
6. Fill shall be compacted by earth moving equipment.
7. All earth removed and not needed for construction shall be placed so that it will not interfere with the functioning of the dike.
8. Inspection and maintenance must be provided periodically and after each rain event.

U.S. DEPARTMENT OF AGRICULTURE SOIL CONSERVATION SERVICE	PAGE A – 1 – 6	MARYLAND DEPARTMENT OF ENVIRONMENT WATER MANAGEMENT ADMINISTRATION

DETAIL 22 - SILT FENCE

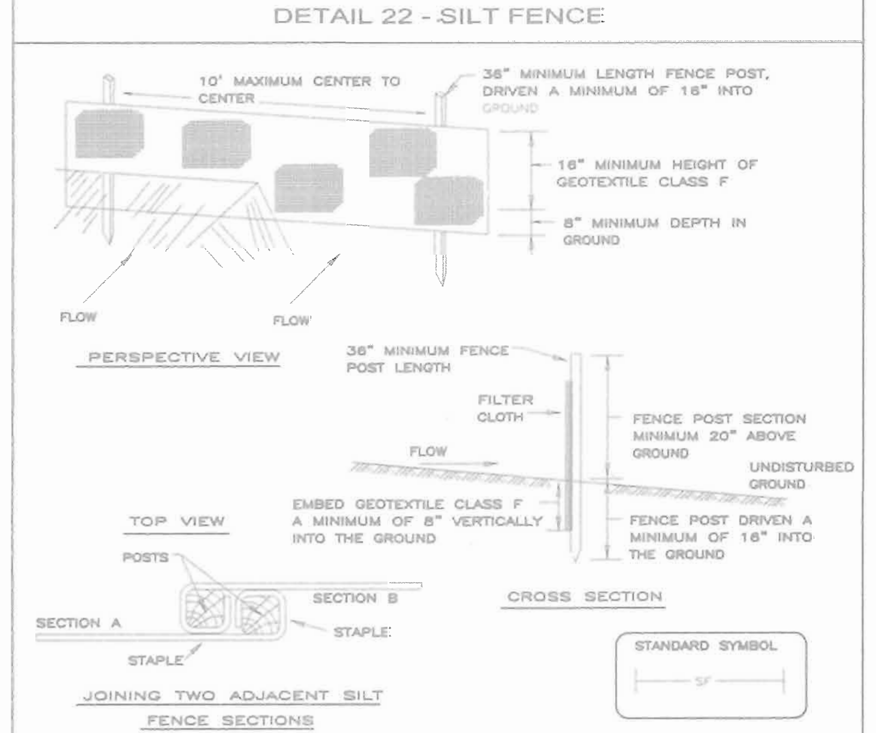

Construction Specifications

1. Fence posts shall be a minimum of 36" long driven 16" minimum into the ground. Wood posts shall be 11/2" x 11/2" square (minimum) cut, or 13/4" diameter (minimum) round and shall be of sound quality hardwood. Steel posts will be standard T or U section weighting not less than 1.00 pond per linear foot.

2. Geotextile shall be fastened securely to each fence post with wire ties or staples at top and midsection and shall meet the following requirements for Geotextile Class F:

Tensile Strength	50 lbs/in (min.)	Test: MSMT 509
Tensile Modulus	20 lbs/in (min.)	Test: MSMT 509
Flow Rate	0.3 gal ft² / minute (max.)	Test: MSMT 322
Filtering Efficiency	75% (min.)	Test: MSMT 322

3. Where ends of geotextile fabric come together, they shall be overlapped, folded and stapled to prevent sediment bypass.

4. Silt Fence shall be inspected after each rainfall event and maintained when bulges occur or when sediment accumulation reached 50% of the fabric height.

U.S. DEPARTMENT OF AGRICULTURE SOIL CONSERVATION SERVICE	PAGE E – 15 – 3	MARYLAND DEPARTMENT OF ENVIRONMENT WATER MANAGEMENT ADMINISTRATION

DETAIL 5 - RIP-RAP INFLOW PROTECTION

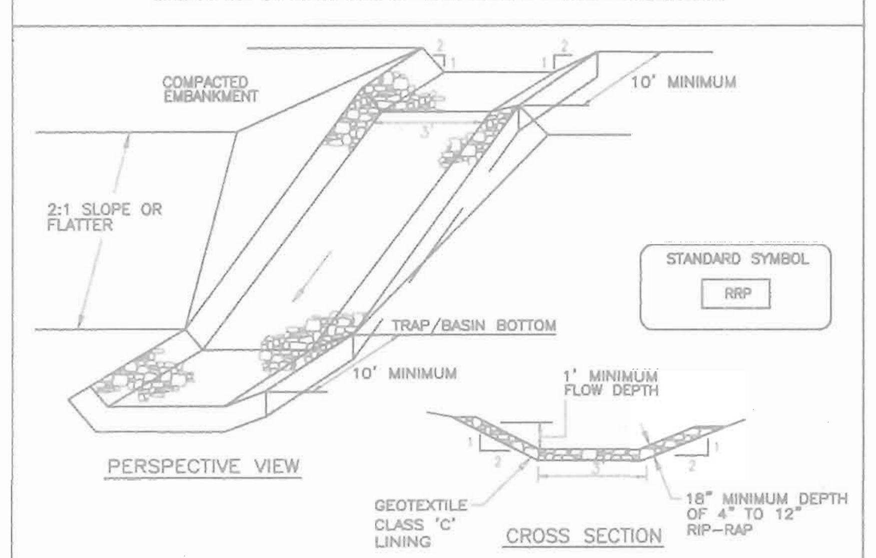

Construction Specifications

1. Rip-rap lined inflow channels shall be 1' in depth, have a trapezoidal cross section with 2:1 or flatter side slopes and 3' (min.) bottom width. The channel shall be lined with 4" to 12" rip- rap to a depth of 18".

2. Filter cloth shall be installed under all rip-rap. Filter cloth shall be Geotextile Class C.

3. Entrance and exit sections shall be installed as shown on the detail section.

4. Rip-rap used for the lining may be recycled for permanent outlet protection if the basin is to be converted to a stormwater management facility.

5. Gabion Inflow Protection may be used in lieu of Rip-rap Inflow Protection.

6. Rip-rap should blend into existing ground.

7. Rip-rap Inflow Protection shall be used where the slope is between 4:1 and 10:1, for slopes flatter than 10:1 use Earth Dike or Temporary Swale lining criteria.

U.S. DEPARTMENT OF AGRICULTURE SOIL CONSERVATION SERVICE	PAGE B – 6 – 2	MARYLAND DEPARTMENT OF ENVIRONMENT WATER MANAGEMENT ADMINISTRATION

TEMPORARY SEEDING NOTES

SEEDBED PREPARATION: Loosen upper three inches of soil by racking, discing or other acceptable means before seeding, if not if not previously loosened.

SOIL AMENDMENTS: Apply 600 lbs. per acre 10–10–10 fertilizer (14 lbs./1000 sq.ft).

SEEDING: For periods March 1 thru April 30 and from August 15 thru November 15, seed with 2 1/2 bushel per acre of annual rye (3.2 lbs./1000 sq.ft.) For the period May 1 thru August 14, seed with 3 lbs. per acre of weeping lovegrass (.07 lbs./1000 sq.ft.). For the period November 1 thru February 28, protect site by applying 2 tons per acre of well anchored straw mulch and seed as soon as possible in the spring, or use sod.

MULCHING: Apply 1 1/2 to 2 tons per acre (70 to 90 lbs./1000 sq.ft.) of unrotted small grain straw immediately after seeding. Anchor mulch immediately after application using mulch anchoring tool or 218 gallons per acre (5 gal/1000 sq.ft.) of emulsified asphalt on flat areas. On slopes 8 feet or higher, use 348 gallons per acre (8 gal/1000 sq.ft.) for anchoring.

REFER TO THE 1994 MARYLAND STANDARDS AND SPECIFICATIONS FOR SOIL EROSION AND SEDIMENT CONTROL FOR RATE AND METHODS NOT COVERED.

PERMANENT SEEDING NOTES

APPLY TO GRADED OR CLEARED AREAS NOT SUBJECT TO IMMEDIATE FURTHER DISTURBANCE WHERE A PERMANENT LONG-LIVED VEGETATIVE COVER IS NEEDED.

SEEDBED PREPARATION: Loosen upper three inches of soil by raking, discing or other acceptable means before seeding, if not previously loosened.

SOIL AMENDMENTS: In lieu of soil test recommendations, use one of the following schedules:

1) Preferred–Apply 2 tons per acre dolomitic limestone (92 lbs/ 100 sq.ft.) and 600 lbs per acre 10–10–10 fertilizer (14 lbs./ 1000 sq.ft.) before seeding. Harrow or disc into upper three inches of soil. At the time of seeding, apply 400 lbs. per acre 30–0–0 ureaform fertilizer (9 lbs/1000 sq.ft.)

2) Acceptable–Apply 2 tons per acre dolomatic limestone (92 lbs/ 1000 sq.ft.) and apply 1000 lbs. per acre 10–10–10– fertilizer (23 lbs./1000 sq.ft.) before seeding. Harrow or disc into upper three inches of soil.

SEEDING: For the periods March 1 thru April 30, and August 1 thru October 15, seed with 60 lbs. per acre (1.4 lbs/1000 sq.ft.) of Kentucky 31 Tall Fescue. For the period May 1 thru July 31, seed with 60 lbs. Kentucky 31 Tall Fescue per acre and 2 lbs. per acre (.05 lbs./1000 sq.ft.) of weeping lovegrass. During the period of October 16 thru February 28, protect site by: Option (1) 2 tons per acre well anchored straw mulch and seed as soon as possible in the spring. Option (2) Use sod. Option (3) Seed with 60 lbs/acre Kentucky 31 Tall Fescue and mulch with 2 tons/acre well anchored straw.

MULCHING: Apply 1 1/2 to 2 tons per acre (70 to 90 lbs/1000 sq. ft.) of unrotted small grain straw immediately after seeding. Anchor mulch immediately after application using mulch anchoring tool or 218 gallons per acre (5 gal/1000 sq.ft.) of emulsified asphalt on flat areas. On slopes 8 feet or higher, use 348 gallons per acre (8 gal/1000 sq.ft.) for anchoring.

MAINTENANCE: Inspect all seeded areas and make needed repairs, replacements and reseedings.

21.0 STANDARDS AND SPECIFICATIONS FOT TOP SOIL

Definition

Placement of topsoil over a prepared subsoil prior to establishment of permanent vegetation.

Purpose

To provide a suitable soil medium for vegetable growth. Soils of concern have low moisture content, low nutrient levels, low pH, materials toxic to plants, and/or unacceptable soil gradation.

Conditions Where Practice Applies

I. This practice is limited to areas having 2:1 or flatter slopes where:

a. The texture of the exposed subsoil/parent material is not adequate to produce vegetative growth.

b. The soil material is so shallow that the rooting zone is not deep enough to support plants or furnish continuing supplies of moisture and plant nutrients.

c. The original soil to be vegetated contains material toxic to plant growth.

d. The soil is so acidic that treatment with limestone is not feasible.

II. For the purpose of these Standards and Specifications, areas having slopes steeper than 2:1 require special consideration and design for adequate stabilization. Areas having slopes steeper than 2:1 shall have the appropriate stabilization shown on the plans.

Construction and Material Specifications

I. Topsoil salvaged from the existing site may be used provided that it meets the standards as set forth in these specifications. Typically, the depth of topsoil to be salvaged for a given soil type can be found in the representative soil profile section in the Soil Survey published by USDA–SCS in cooperation with Maryland Agricultural Experimental Station.

II. Topsoil Specifications – Soil to be used as topsoil must meet the following:

i. Topsoil shall be a loam, sandy loam, clay loam, silt loam, sandy clay loam, loamy sand. Other soils may be used if recommended by an agronomist or a soil scientist and approved by the appropriate approval authority. Regardless, topsoil shall not be a mixture of contrasting textured subsoils and shall contain less than 5% by volume of cinders, stones, slag, coarse fragments, gravel, sticks, roots, trash, or other materials larger that 1 and 1/2" in diameter.

ii. Topsoil must be free of plants or plant parts such as Bermuda grass, quackgrass, Johnsongrass, nutsedge, poison ivy, thistle, or others as specified.

iii. Where the subsoil is either highly acidic or composed of heavy clays, ground limestone shall be spread at the rate of 4–8 tons/acre (200–400 pounds per 1,000 square feet) prior to the placement of topsoil. Lime shall be distributed uniformly over designated areas and worked into the soil in conjunction with tillage operations as described in the following procedures.

II. For sites having disturbed areas under 5 acres:

i. Place topsoil (if required) and apply soil amendments as specified in 20.0 Vegetative Stabilization – Section I – Vegetative Stabilization Methods and Materials.

iii. For sites having disturbed areas over 5 acres:
i. On soil meeting topsoil specifications, obtain test results dictating fertilizer and lime amendments required to bring the soil into compliance with the following:
a. pH for topsoil shall be between 6.0 and 7.5. If the tested soil demonstrates a pH of less than 6.0, sufficient lime shall be prescribed to raise the pH to 6.5 or higher.
b. Organic content of topsoil shall be not less than 1.5 percent by weight.
c. Topsoil having soluble salt content greater than 500 parts per million shall not be used.
d. No sod or seed shall be placed on soil soil which has been treated with soil sterilants or chemicals used for weed control until sufficient time has elapsed (14 days min.) to permit dissipation of phyto-toxic materials.

NOTE: Topsoil substitutes or amendments, as recommended by a qualified agronomist or soil scientist and approved by the appropriate approval authority, may be used in lieu of natural topsoil.

ii. Place topsoil (if required) and apply soil amendments specified in 20.0 Vegetative Stabilization–Section I–Vegetative Stabilization Methods and Materials.

V. Topsoil Application

i. When topsoiling, maintain needed erosion and sediment control practices such as diversions, Grade Stabilization Structures, Earth Dikes, Slope Silt Fence and Sediment Traps and Basins.

ii. Grades on the areas to be topsoiled, which have been previously established, shall be maintained, albeit 4" – 8" higher in elevation.

iii. Topsoil shall be uniformly distributed in a 4" – 8" layer and lightly compacted to a minimum thickness of 4". Spreading shall be performed in such a manner that sodding or seeding can proceed with a minimum of additional soil preparation and tillage. Any irregularities in the surface resulting from topsoiling or other operations shall be corrected in order to prevent the formation of depressions or water pockets.

iv. Topsoil shall not be place while the topsoil or subsoil is in a frozen or muddy condition, when the subsoil is excessively wet or in a condition that may otherwise be detrimental to proper grading and seedbed preparation.

30.0 DUST CONTROL

Definition

Controlling dust blowing and movement on construction sites and roads.

Purpose

To prevent blowing and movement of dust from exposed soil surfaces, reduce on and off-site damage health hazards, and improve traffic safety.

Conditions Where Practice Applies

This practice is applicable to areas subject to dust blowing and movement. Where on and off-site damage is likely without treatment.

Specifications

Temporary Methods

1. Mulches – See standards for vegetative stabilization with mulches only. Mulch should be crimped or tacked to prevent blowing.
2. Vegetative Cover – See standards for temporary vegetative cover.
3. Tillage – To roughen surface and bring clods to the surface. This is an emergency measure which should be used before soil blowing starts. Begin plowing on windward side of site. Chisel-type plows spaced about 12" apart, spring-toothed harrows, and similar plows are examples of equipment which may produce the desired effect.
4. Irrigation – This is generally done as an emergency treatment. Site is sprinkled with water until the surface is moist. Repeat as needed. At no time should the site be irrigated to the point that runoff begins to flow.
5. Barriers – Solid board fences, silt fences, snow fences, burlap fences, straw bales, and similar material can be used to control air currents and soil blowing. Barriers placed at right angles to prevailing currents at intervals of about 10 times their height are effective in controlling soil blowing.
6. Calcium Chloride – Apply at rates that will keep surface moist. May need retreatment.

Permanent Methods

1. Permanent vegetation – See standards for permanent vegetative cover, and permanent stabilization with sod. Existing trees or large shrubs may afford valuable protection if left in place.
2. Topsoiling – Covering with less erosive soil materials. See standards for Topsoiling.
3. Stone – Cover surface with crushed stone or coarse gravel.

References

1. Agricultural Handbook 346. Wind Erosion Forces in the United States and Their Use in Predicting Soil Loss.
2. Agricultural Information Bulletin 354. How to Control Wind Erosion, USDA–ARS.

SEDIMENT CONTROL NOTES

1. A minimum of 48 hours notice must be given to the Howard County Department of Inspection, License and Permits Sediment Control Division prior to the start of any construction (313–1855).

2. All vegetation and structural practices are to be installed according to the provisions of this plan and are to be in conformance with the 1994 MARYLAND STANDARDS AND SPECIFICATIONS FOR SOIL EROSION AND SEDIMENT CONTROL. and revisions thereto.

3. Following initial soil disturbance or redisturbance, permanent or temporary stabilization shall be completed within: (a) 7 calendar days for all perimeter sediment control structures, dikes, perimeter slopes, and all slopes greater than 3:1, (b) 14 days as to all other disturbed or graded areas on the project site.

4. All sediment traps/basins shown must be fenced and warning signs posted around their perimeter in accordance with Vol. 1, Chapter 7, HOWARD COUNTY DESIGN MANUAL, Storm Drainage.

5. All disturbed areas must be stabilized within the time period specified above in accordance with the 1994 MARYLAND STANDARDS AND SPECIFICATIONS FOR SOIL EROSION AND SEDIMENT CONTROL for permanent seeding, sod, temporary seeding, and mulching (Sec. G). Temporary stabilization with mulch alone shall be done when recommended seeding dates do not allow for proper germination and establishment of grasses.

6. All sediment control structures are to remain in place and are to be maintained in operative condition until permission for their removal has been obtained from the Howard County Sediment Control Inspector.

7. Site Analysis :

Total Area	(TOTAL AREA: 73.84 AC) AREA OF SUBMISSION 18.2 AC
Area Disturbed	18.2 AC
Area to be roofed or paved	6.14 AC
Area to be vegetatively stabilized	12.06 AC
Total Cut	24080 CY
Total Fill	24080 CY
Offsite waste/borrow area location	*

8. Any sediment control practice which is disturbed by grading activity for placement of utilities must be repaired on the same day of disturbance.

9. Additional sediment controls must be provided, if deemed necessary by the Howard County Sediment Control Inspector.

10. On all sites with disturbed areas in excess of 2 acres, approval of the inspection agency shall be requested upon completion of installation of perimeter erosion and sediment controls, but before proceeding with any other earth disturbance or grading. Other building or grading inspection approvals may not be authorized until this initial approval by the inspection agency is made.

11. Trenches for the construction of utilities is limited to three pipe lengths or that which shall be back-filled and stabilized within one working day, whichever is shorter.

* To be determined by contractor, with pre-approval of the Sediment Control Inspector with an approved and active grading permit

SEQUENCE OF CONSTRUCTION

1. OBTAIN ALL REQUIRED PERMITS FROM HOWARD COUNTY.
2. NOTIFY HOWARD COUNTY BUREAU OF INSPECTIONS AND PERMITS AT (410) 313–1880 AT LEAST 24 HOURS BEFORE STARTING ANY WORK.
3. INSTALL STABILIZED CONSTRUCTION ENTRANCE. SUPER SILT FENCE..........3 DAYS
4. SEDIMENT BASIN#1* & BASIN#2* IN USE, INSTALL EARTH DIKES..............4 DAYS
5. CONSTRUCT WATER AND SEWER AND REMAINING STORMDRAIN SYSTEM........1 WEEK
6. BEGIN BUILDING CONSTRUCTION....................................8 MONTHS
7. AS BUILDING CONSTRUCTION CONTINUES FINE GRADE SITE................4 DAYS
8. INSTALL CURB & GUTTER AND SIDEWALKS. BEGIN PAVING................2 WEEKS
9. CONSTRUCT DRY WELLS 1 AND 2 AND BLOCK CONNECTION TO DIVERSION MANHOLES..4 DAYS
10. WITH BUILDING, PAVING, AND CURB & GUTTER, COMPLETE STABILIZE SITE....3 DAYS
11. WITH SITE STABILIZED REMOVE BLOCKING FROM DIVERSION MANHOLES......2 DAYS
12. INSTALL LANDSCAPING...1 WEEK
13. WITH PERMISSION OF THE INSPECTOR, FLUSH STORM DRAIN SYSTEM AND REMOVE ALL SEDIMENT CONTROLS FROM THE SITE. STABILIZE ALL DISTURBED AREAS IMMEDIATELY.

*BASINS TO REMAIN FOR DEVELOPMENT OF PARCELS D–1 AND E–1 (F–02–47). CONTRACTOR TO MAINTAIN BASINS DURNING CONSTRUCTION.

NOTE:

ALL EARTH DIKES ARE TO BE PLACES IN WORKING ORDER AT THE END OF EACH WORKINGDAY.

DURING GRADING AND AFTER EACH RAINFALL, CONTRACTOR WILL INSPECT AND PROVIDE NECESSARY MAINTENANCE TO THE SEDIMENT CONTROL MEASURES ON THIS PLAN.

FOLLOWING INITIAL SOIL DISTURBANCES OR REDISTURBANCE PERMANENT OR TEMPORARY STABILIZATION SHALL BE COMPLETED WITHIN:
A. 7 CALENDAR DAYS FOR ALL PERIMETER SEDIMENT CONTROL STURCTURES, DIKES, SWALES, AND ALL SLOPES GREATER THAN 3:1.
B. 14 CALENDAR DAYS FOR ALL OTHER DISTURBED AREAS.

APPROVED: HOWARD COUNTY DEPARTMENT OF PLANNING AND ZONING

[signature] CHIEF, DEVELOPMENT ENGINEERING DIVISION	11/4/03 DATE
[signature] CHIEF, DIVISION OF LAND DEVELOPMENT	2/19/04 DATE
[signature] DIRECTOR	2/20/04 DATE

ENGINEERS CERTIFICATE

"I CERTIFY THAT THIS PLAN FOR SEDIMENT AND EROSION CONTROL REPRESENTS A PRACTICAL AND WORKABLE PLAN BASED ON MY PERSONAL KNOWLEDGE OF THE SITE CONDITIONS AND THAT IT WAS PREPARED IN ACCORDANCE WITH THE REQUIREMENTS OF THE HOWARD SOIL CONSERVATION DISTRICT.

[signature] 9/18/03
SIGNATURE OF ENGINEER — DATE
ROBERT H. VOGEL

DEVELOPER'S CERTIFICATE

"I/WE CERTIFY THAT ALL DEVELOPMENT AND CONSTRUCTION WILL BE DONE ACCORDING TO THIS PLAN FOR SEDIMENT AND EROSION CONTROL, AND THAT ALL RESPONSIBLE PERSONNEL INVOLVED IN THE CONSTRUCTION PROJECT WILL HAVE A CERTIFICATE OF ATTENDANCE AT A DEPARTMENT OF THE ENVIRONMENT APPROVED TRAINING PROGRAM FOR THE CONTROL OF SEDIMENT AND EROSION BEFORE BEGINNING THE PROJECT. I ALSO AUTHORIZE PERIODIC ON-SITE INSPECTION BY THE HOWARD SOIL CONSERVATION DISTRICT.

[signature] 9/19/03
SIGNATURE OF DEVELOPER — DATE
DONALD REUWER

REVIEWED FOR HOWARD SCD AND MEETS TECHNICAL REQUIREMENTS

[signature: Jim Meyer] 10-29-03
USDA–NATURAL RESOURCES CONSERVATION SERVICE — DATE

THIS DEVELOPMENT PLAN IS APPROVED FOR SOIL EROSION AND SEDIMENT CONTROL BY THE HOWARD SOIL CONSERVATION DISTRICT

[signature: John R Robertson] 10-29-03
HOWARD SCD — DATE

OWNER :
TAYLOR FAMILY LIMITED PARTNERSHIP A
C/O LAND DESIGN & DEVELOPMENT, INC.
8000 MAIN STREET
ELLICOTT CITY, MD 21043
ATTN: MR. DONALD R. REUWER
PHONE: (410) 480-9105

DEVELOPER
LAND DESIGN & DEVELOPMENT, INC.
8000 MAIN STREET
ELLICOTT CITY, MD 21043
ATTN: MR. DONALD R. REUWER
PHONE: (410) 480-9105

SITE DEVELOPMENT PLAN
SEDIMENT AND EROSION CONTROL DETAILS
VILLAGE CREST
PART OF PARCEL D-1
PHASE 1,2,3&4, APT. BLDGS. A TO R
268 AGE RESTRICTED ADULT HOUSING UNITS

TAX MAP #25 BLOCK 20 — PARCEL P/O 98
2ND ELECTION DISTRICT — HOWARD COUNTY, MARYLAND

FREDERICK WARD ASSOCIATES, INC.
ARCHITECTS | ENGINEERS | PLANNERS | SURVEYORS
7125 RIVERWOOD DRIVE
COLUMBIA, MARYLAND 21046–2354
410–720–6900
410–720–6226 fax
www.frederickward.com

STATE OF MARYLAND — ROBERT HARRIS VOGEL — No. 10198 — PROFESSIONAL ENGINEER

DESIGN BY:	RJ
DRAWN BY:	RJ
CHECKED BY:	RHV
DATE:	SEPT. 2003
SCALE:	AS SHOWN
W.O. NO.:	2018121.00

SHEET 7 OF 16

SDP-02-94

M:\PROJECTS\2018121\ENGR\dwg\Sdp-APT\12SEDET.dwg Sun Sep 21 12:07:10 2003 E4

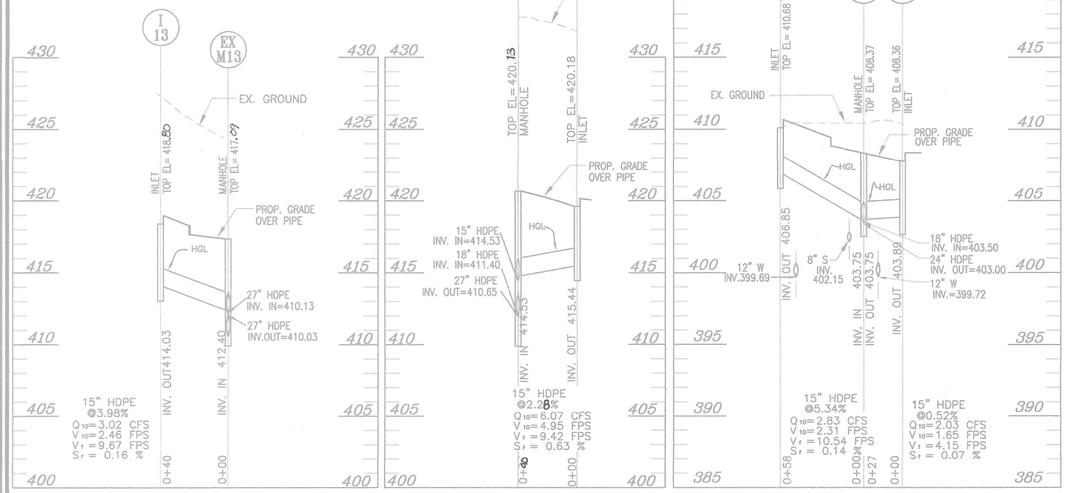

STORM DRAIN PROFILE

SCALE: 1"= 50' HORZ.
1"= 5' VERT.

STORM DRAIN PROFILE

SCALE: 1"= 50' HORZ.
1"= 5' VERT.

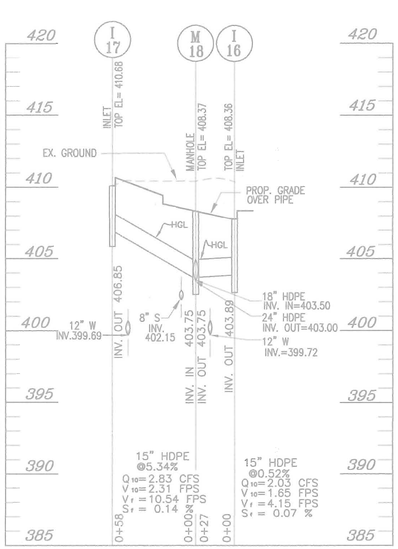

STORM DRAIN PROFILE

SCALE: 1"= 50' HORZ.
1"= 5' VERT.

PIPE SCHEDULE		
SIZE	TYPE	LENGTH
15"	HDPE	773 LF
18"	HDPE	337 LF
24"	HDPE	963 LF
30"	HDPE	114 LF

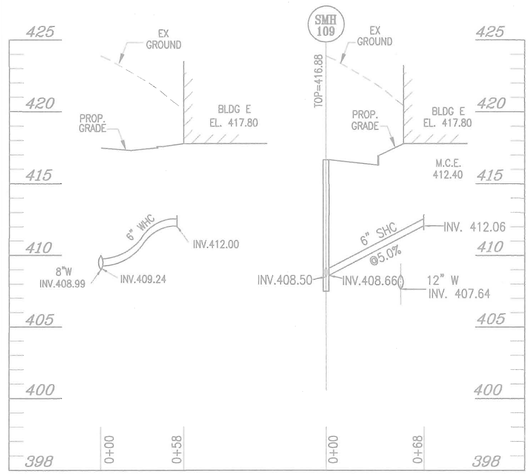

WHC PROFILE UNIT E

SCALE: 1"= 50' HORZ.
1"= 5' VERT.

SHC PROFILE UNIT E

SCALE: 1"= 50' HORZ.
1"= 5' VERT.

STRUCTURE SCHEDULE						
NO.	TYPE	LOCATION	TOP ELEV.	INV. IN	INV. OUT	REMARKS
EX. I-12	DOUBLE TYPE 'S' COMBINATION INLET	CL CYPRUS CEDAR LN STA. 2+99 , 11.93' RT.				
EX. I-11A	DOUBLE TYPE 'S' COMBINATION INLET	CL CYPRUS CEDAR LN STA. 4+45 , 11.93' RT.	415.43	–	406.52	SD 4.34
I-13	DOUBLE TYPE 'S' COMBINATION INLET	CL OF PARKING LOT AISLE(SOUTHERN), STA. 2+88,26.62' RT.	418.13	–	414.03	SD 4.34
I-14	DOUBLE TYPE 'S' COMBINATION INLET	CL OF PARKING LOT AISLE, STA. 2+88 , 26.62' RT.	420.18	–	415.44	SD 4.34
I-14A	DOUBLE TYPE 'S' COMBINATION INLET	CL OF PARKING LOT AISLE, STA.1+84 , 26.62' RT.	421.94	–	416.53	SD 4.34
EX M-12	PRECAST MANHOLE	N 577460.23, E 1372137.59	410.25	395.57	395.07	G 5.12
M-16A	PRECAST MANHOLE	N 577598.50, E 1372212.44				
M-16	PRECAST MANHOLE	N 577701.37, E 1372268.22	405.33	397.94	397.84	G 5.12
M-17	PRECAST MANHOLE	CL CYPRUS CEDAR LN STA. 6+30, 10.42' RT.	406.96	401.24 24"HDPE 401.14 24"HDPE	401.55	G 5.12
I-15	DOUBLE TYPE 'S' COMBINATION INLET	CL YELLOW PINE DR. STA. 3+56.90, 26.57' LT.	405.88	–	399.75	SD 4.34
M-18	PRECAST MANHOLE	CL YELLOW PINE DR. STA.2+15.27, 0.92' LT.	408.37	403.75 15"HDPE 403.75 15"HDPE 403.50 18"HDPE	403.00	G 5.12
I-16	DOUBLE TYPE 'S' COMBINATION INLET	CL YELLOW PINE DR. STA.2+16.90, 26.57' LT.	408.36	–	403.89	SD 4.34
I-17	DOUBLE TYPE 'S' COMBINATION INLET	CL MIDDLE PARKING LOT AILE. STA.2+2.39, 56.84' RT.	410.68	–	406.85	SD 4.34
M-19	PRECAST MANHOLE	CL YELLOW PINE DR. STA.0+10.84, 0.95' RT.	411.64	406.05 15"HDPE 406.05 15"HDPE	405.80	G 5.12
I-18	DOUBLE TYPE 'S' COMBINATION INLET	CL STONE CROP DRIVE STA. 0+32, 12' LT.	411.04	–	406.22	SD 4.34
I-19	DOUBLE TYPE 'S' COMBINATION INLET	CL HICKORY HIGH CT. STA. 0+62.71, 30' RT.	415.23	–	410.48	SD 4.34
EX M-31	PRECAST MANHOLE	PER F-02-47	378.00	371.79 18"HDPE 371.29 24"HDPE	367.79	G 5.12
M-20	PRECAST MANHOLE	N 578547.97 E 1372240.17	391.40	377.78	375.01	G 5.12
M-21	PRECAST MANHOLE	N 578395.82 E 1372271.48	396.00	382.56	382.46	G 5.12
M-22	PRECAST MANHOLE	N 578313.61 E 1372341.06	393.81	387.33 15"HDPE 384.26 18"HDPE 384.51 18"HDPE	383.76	G 5.12
I-21	DOUBLE TYPE 'S' COMBINATION INLET	CL STONE CROP DRIVE STA. 5+59, 30' LT.	394.85	389.72	389.47	SD 4.34
I-22	DOUBLE TYPE 'S' COMBINATION INLET	CL STONE CROP DRIVE STA. 3+53.81, 12' LT.	403.18	–	398.43	SD 4.34
I-20	DOUBLE TYPE 'S' COMBINATION INLET	CL STONE CROP DRIVE (AISLE @BLDG P) 1+15.96, 30'RT.	390.13	–	385.33	SD 4.34
M-23	PRECAST MANHOLE	CL STONE CROP DRIVE (AISLE @BLDG N) STA. 0+10, 13.05' RT.	393.70	388.64 15"HDPE 388.39 18"HDPE	381.63	G 5.12
I-24	DOUBLE TYPE 'S' COMBINATION INLET	CL STONE CROP DRIVE(AISLE@BLDG N) STA. 0+85.56, 30' RT.	391.52	–	389.06	SD 4.34
I-23	DOUBLE TYPE 'S' COMBINATION INLET	CL STONE CROP DRIVE STA. 2+90.26, 13.83' RT.	400.44	–	394.90	SD 4.34

1. TOP ELEVATION ARE TO THE CENTER OF THE STRUCTURE AT TOP OF CURB FOR DOUBLE 'S' COMB. INLETS, CENTER TOP OF GRATE FOR DOUBLE TYPE 'S' INLET AND TOP OF MANHOLE COVER FOR PRECAST MANHOLES.
2. SEE ARCHITECTURAL PLANS FOR ROOF DRAIN DETAILS

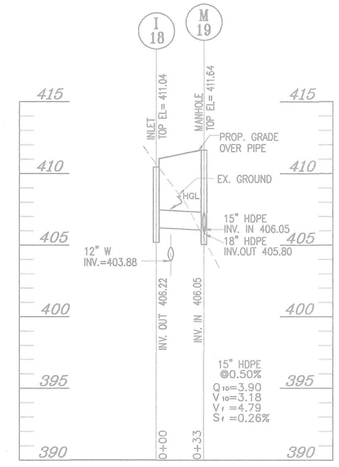

STORM DRAIN PROFILE

SCALE: 1"= 50' HORZ.
1"= 5' VERT.

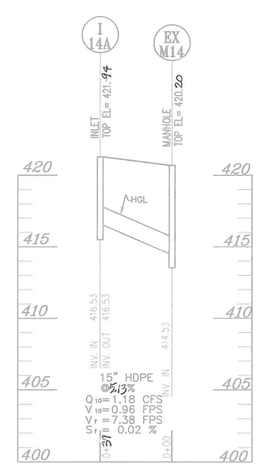

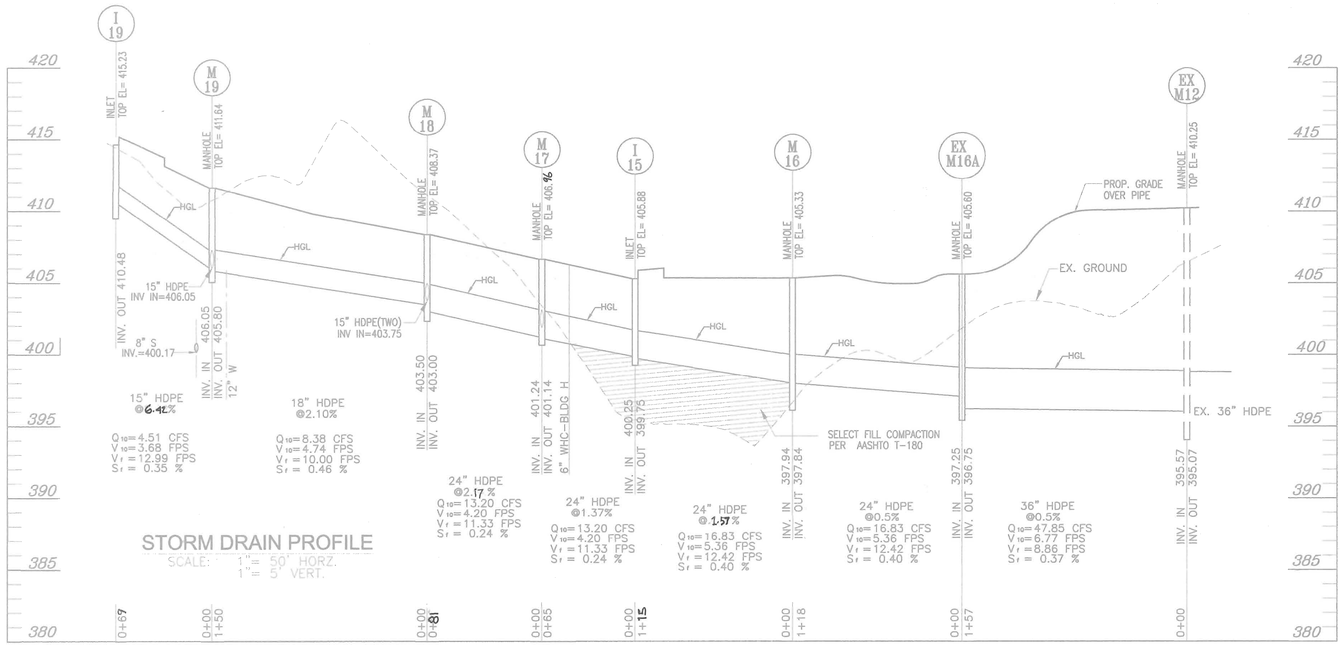

STORM DRAIN PROFILE

SCALE: 1"= 50' HORZ.
1"= 5' VERT.

APPROVED: HOWARD COUNTY DEPARTMENT OF PLANNING AND ZONING

CHIEF, DEVELOPMENT ENGINEERING DIVISION — DATE 11/4/03

CHIEF, DIVISION OF LAND DEVELOPMENT — DATE 2/19/04

DIRECTOR — DATE 2/25/04

SITE DEVELOPMENT PLAN
PROFILES
VILLAGE CREST
PART OF PARCEL D-1

PHASE 1,2,3,& 4 , APT. BLDGS. A TO R
268 AGE RESTRICTED ADULT HOUSING UNITS

TAX MAP #25 BLOCK 20 — PARCEL P/O 98
2ND ELECTION DISTRICT — HOWARD COUNTY, MARYLAND

OWNER :

TAYLOR FAMILY LIMITED PARTNERSHIP A
C/O LAND DESIGN & DEVELOPMENT, INC.
8000 MAIN STREET
ELLICOTT CITY, MD 21043
ATTN: MR. DONALD R. REUWER
PHONE: (410) 480-9105

DEVELOPER

LAND DESIGN & DEVELOPMENT, INC.
8000 MAIN STREET
ELLICOTT CITY, MD 21043
ATTN: MR. DONALD R. REUWER
PHONE: (410) 480-9105

FREDERICK WARD ASSOCIATES, INC.
ARCHITECTS | ENGINEERS | PLANNERS | SURVEYORS
7125 RIVERWOOD DRIVE
COLUMBIA, MARYLAND 21046-2354
410-720-6900
410-720-6226 fax
www.frederickward.com

STATE OF MARYLAND — ROBERT H. VOGEL — No. 16193 — PROFESSIONAL ENGINEER

ROBERT H. VOGEL, P.E. NO. 16193

DESIGN BY:	RJJ/CO
DRAWN BY:	RJJ/CO
CHECKED BY:	RHV
DATE:	SEPT. 2003
SCALE:	AS SHOWN
W.O. NO.:	2018121.00

SHEET 8 OF 16

SDP-02-94

M:\PROJECTS\2018121\ENGR\Dwg\Sdp APT\VSPROF.dwg Tue Sep 30 09:29:53 2003 E4

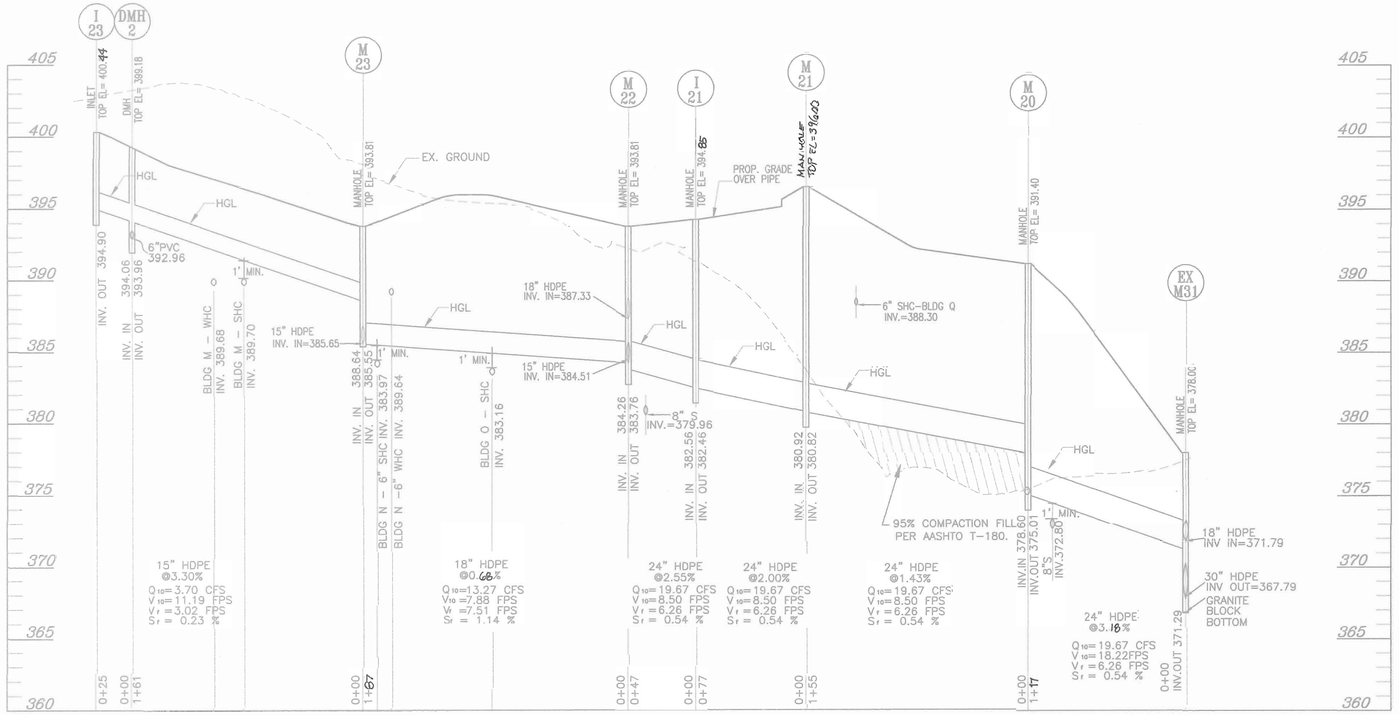

STORM DRAIN PROFILE
SCALE: 1"= 50' HORZ. 1"= 5' VERT.

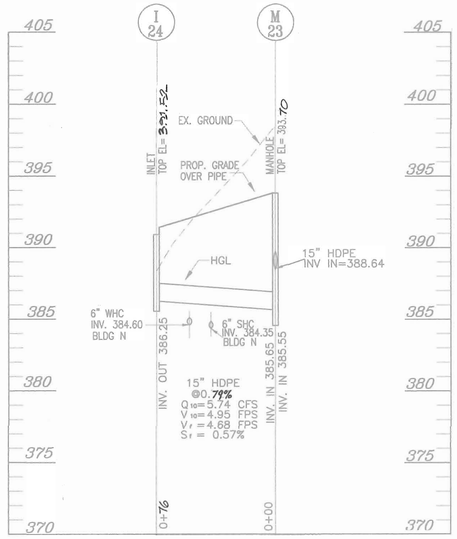

STORM DRAIN PROFILE
SCALE: 1"= 50' HORZ. 1"= 5' VERT.

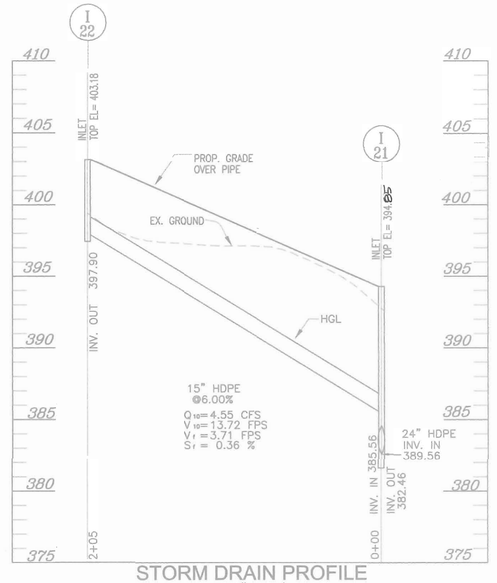

STORM DRAIN PROFILE
SCALE: 1"= 50' HORZ. 1"= 5' VERT.

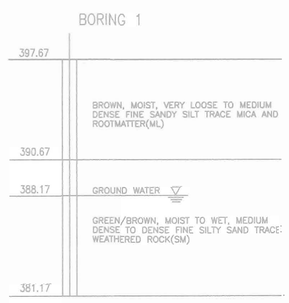

BORING # 1
NTS

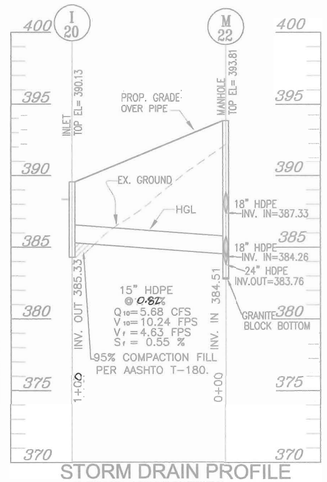

STORM DRAIN PROFILE
SCALE: 1"= 50' HORZ. 1"= 5' VERT.

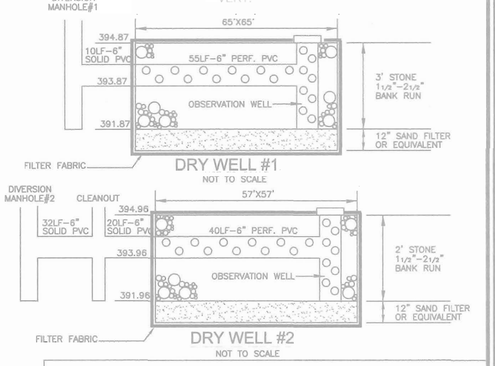

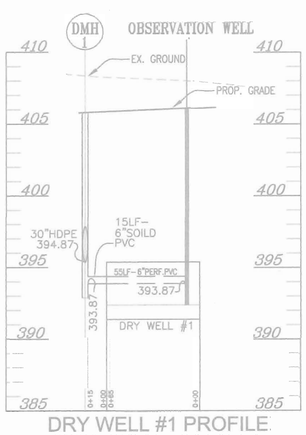

DRY WELL #1 PROFILE
SCALE: 1"= 50' HORZ. 1"= 5' VERT.

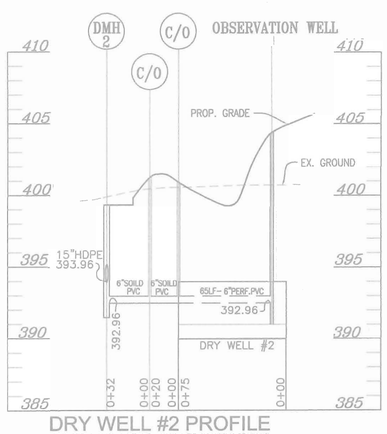

DRY WELL #2 PROFILE
SCALE: 1"= 50' HORZ. 1"= 5' VERT.

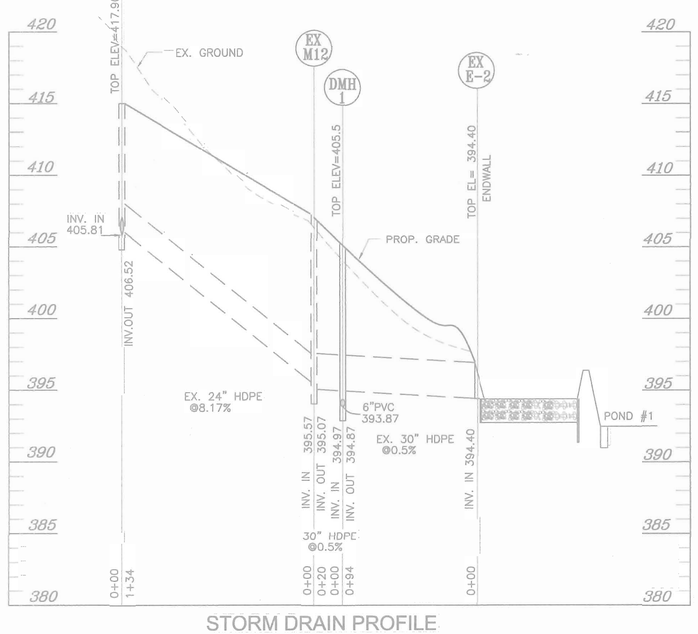

STORM DRAIN PROFILE
SCALE: 1"= 50' HORZ. 1"= 5' VERT.

APPROVED: HOWARD COUNTY DEPARTMENT OF PLANNING AND ZONING

CHIEF, DEVELOPMENT ENGINEERING DIVISION — DATE 4/4/03

CHIEF, DIVISION OF LAND DEVELOPMENT — DATE 2/19/04

DIRECTOR — DATE 2/4/04

SITE DEVELOPMENT PLAN
PROFILES
VILLAGE CREST
PART OF PARCEL D-1

PHASE 1,2,3,& 4, APT. BLDGS. A TOR 268 AGE RESTRICTED ADULT HOUSING UNITS

TAX MAP #25 BLOCK 20 — PARCEL P/O 98
2ND ELECTION DISTRICT — HOWARD COUNTY, MARYLAND

OWNER :
TAYLOR FAMILY LIMITED PARTNERSHIP A
C/O LAND DESIGN & DEVELOPMENT, INC.
8000 MAIN STREET
ELLICOTT CITY, MD 21043
ATTN: MR. DONALD R. REUWER
PHONE: (410) 480-9105

DEVELOPER
LAND DESIGN & DEVELOPMENT, INC.
8000 MAIN STREET
ELLICOTT CITY, MD 21043
ATTN: MR. DONALD R. REUWER
PHONE: (410) 480-9105

FREDERICK WARD ASSOCIATES. INC.
ARCHITECTS | ENGINEERS | PLANNERS | SURVEYORS
7125 RIVERWOOD DRIVE
COLUMBIA, MARYLAND 21046–2354
410–720–6900
410–720–6226 fax
www.frederickward.com

STATE OF MARYLAND — ROBERT H. VOGEL — No. 16193 — PROFESSIONAL ENGINEER

ROBERT H. VOGEL, PE NO. 16193

DESIGN BY:	JJCO
DRAWN BY:	JJCO
CHECKED BY:	RHV
DATE:	SEPT. 2003
SCALE:	AS SHOWN
W.O. NO.:	2016121.00

SHEET 9 OF 16

SDP-02-94

M:\PROJECTS\2016121\ENGR\dwg\Sdp-APT\DEPDR.dwg Tue Sep 30 09:21:21 2003 E4

MANHOLE LOCATION CHART

MANHOLE NO.	TYPE	LOCATION	TOP ELEVATION
EX. 856	STD. PRECAST MH HO. CO. STD. DET. G5.12	CL STONE CROP. DR. STA. 6+98, 0.62' LT. (BY F-02-47)	
EX. 855	STD. PRECAST MH HO. CO. STD. DET. G5.12	CL STONE CROP DR @ BLDG P STA. 0+10.42, 3.46' RT. (F-02-47)	
SMH 102	STD. PRECAST MH HO. CO. STD. DET. G5.12	CL STONE CROP DR. STA. 6+16.15, ON CENTERLINE.	394.65
SMH 103	STD. PRECAST MH HO. CO. STD. DET. G5.12	CL STONE CROP DR. STA. 3+15.13, 12.62' RT.	404.22
SMH 104	STD. PRECAST MH HO. CO. STD. DET. G5.12	CL STONE CROP DR. STA. 1+76.14, 8.00' LT.	408.76
SMH 105	STD. PRECAST MH HO. CO. STD. DET. G5.12	CL STONE CROP DR. STA. 4+66.51, 3.00' RT.	394.33
SMH 106	STD. PRECAST MH HO. CO. STD. DET. G5.12	CL STONE CROP DRIVE STA. 1+52, 2.81' RT.	406.54
SMH 107	STD. PRECAST MH HO. CO. STD. DET. G5.12	CL YELLOW PINE CT. STA. 0+12.51, 22.15' LT.	412.60
SMH 108	STD. PRECAST MH HO. CO. STD. DET. G5.12	CL YELLOW PINE CT. STA. 0+12.51, 10.96' RT.	413.12
SMH 109	STD. PRECAST MH HO. CO. STD. DET. G5.12	CL HICKORY HIGH CT. STA. 2+64, 8.00' LT.	420.97
SMH 110	STD. PRECAST MH HO. CO. STD. DET. G5.12	CL CYPRUS CEDAR LN. STA. 6+19.92, 12.00' LT.	407.82
SMH 111	STD. PRECAST MH HO. CO. STD. DET. G5.12	CL CYPRUS CEDAR LN. STA. 4+14.94, 12.13' LT.	412.00
SMH 112	STD. PRECAST MH HO. CO. STD. DET. G5.12	CL PARKING AISLE (SOUTHERN) STA. 3+8.39, 4.34' LT.	418.04

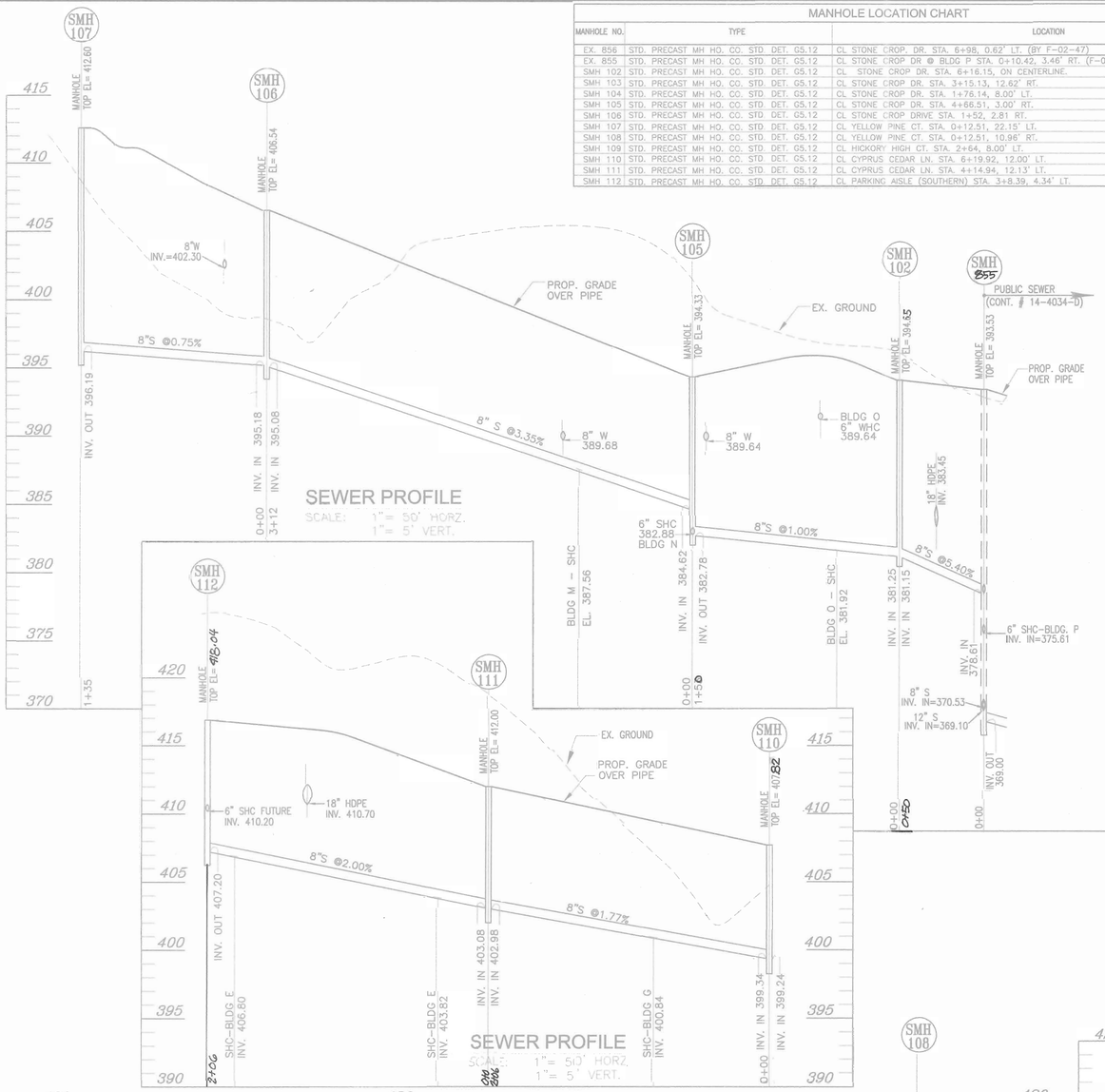

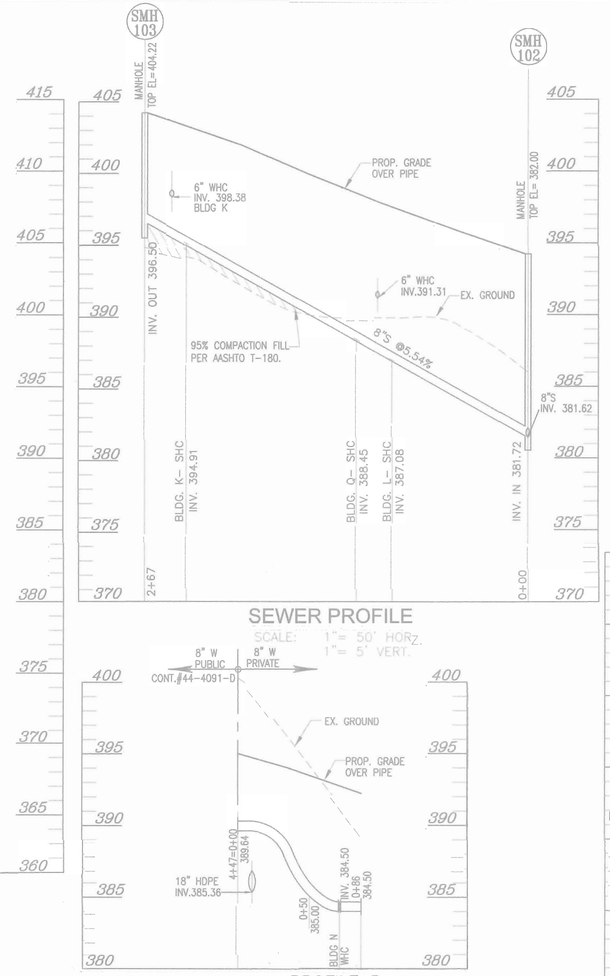

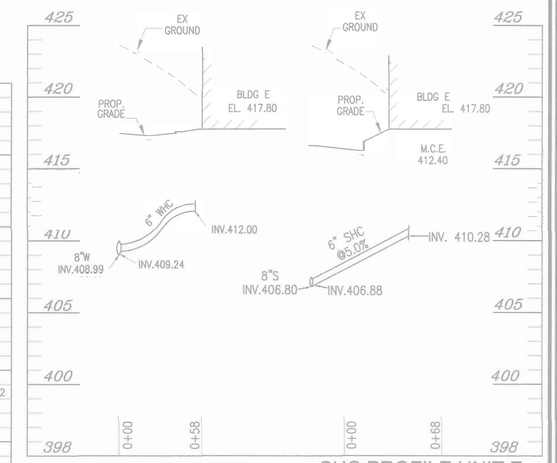

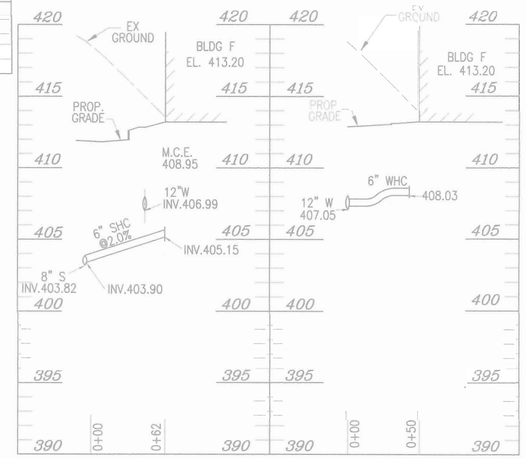

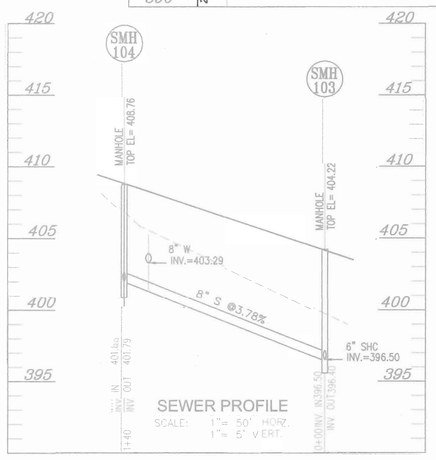

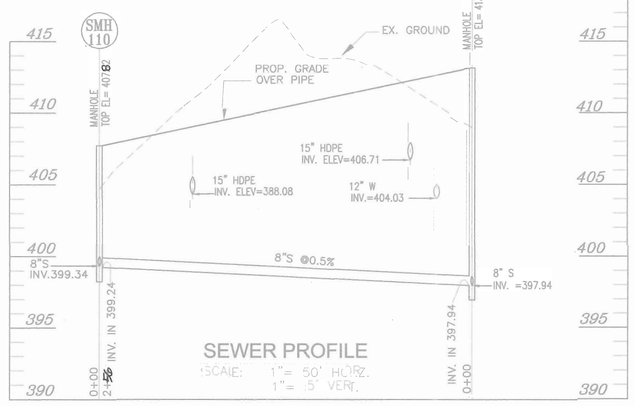

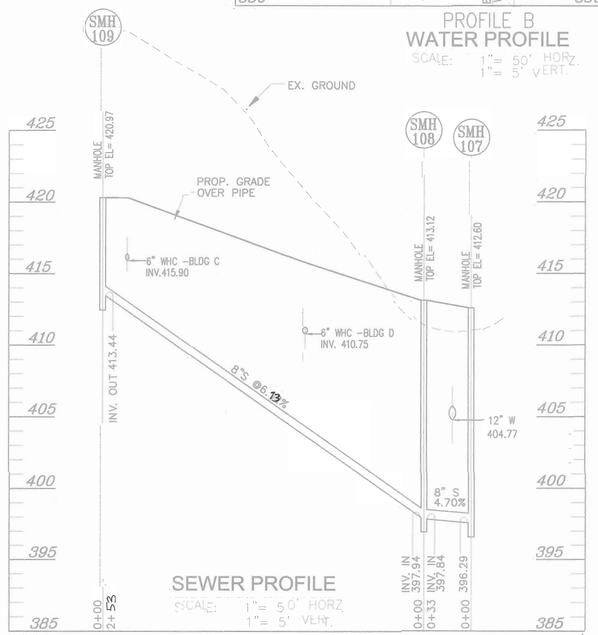

APPROVED: HOWARD COUNTY DEPARTMENT OF PLANNING AND ZONING

CHIEF, DEVELOPMENT ENGINEERING DIVISION — DATE 11/4/03

CHIEF, DIVISION OF LAND DEVELOPMENT — DATE 2/19/04

DIRECTOR — DATE 2/20/04

SITE DEVELOPMENT PLAN
PROFILES
VILLAGE CREST
PART OF PARCEL D-1
PHASE 1,2,3 & 4 APT. BLDGS. A TO R
268 AGE RESTRICTED ADULT HOUSING UNITS

TAX MAP #25 BLOCK 20 — PARCEL P/O 98
2ND ELECTION DISTRICT — HOWARD COUNTY, MARYLAND

OWNER:
TAYLOR FAMILY LIMITED PARTNERSHIP A C/O LAND DESIGN & DEVELOPMENT. INC.
8000 MAIN STREET
ELLICOTT CITY, MD 21043
ATTN: MR. DONALD R. REUWER
PHONE: (410) 480-9105

DEVELOPER
LAND DESIGN & DEVELOPMENT, INC.
8000 MAIN STREET
ELLICOTT CITY, MD 21043
ATTN: MR. DONALD R. REUWER
PHONE: (410) 480-9105

FREDERICK WARD ASSOCIATES, INC.
ARCHITECTS | ENGINEERS | PLANNERS | SURVEYORS
7125 RIVERWOOD DRIVE
COLUMBIA, MARYLAND 21046-2354
410-720-6900
410-720-6226 fax
www.frederickward.com

STATE OF MARYLAND — ROBERT BAKER VOGEL — No. 16193 — PROFESSIONAL ENGINEER
ROBERT B. VOGEL, PE. NO. 16193

DESIGN BY:	RJ
DRAWN BY:	RJ
CHECKED BY:	RHV
DATE:	SEPT. 2003
SCALE:	AS SHOWN
W.O. NO.:	2018121.00

SHEET 10 OF 16

SDP-02-94

* \\HOJO\PROJECTS\2018121\ENGR\dwg\Site-APT\D7PROF.dwg Fri Sep 19 16:50:28 2003 E4

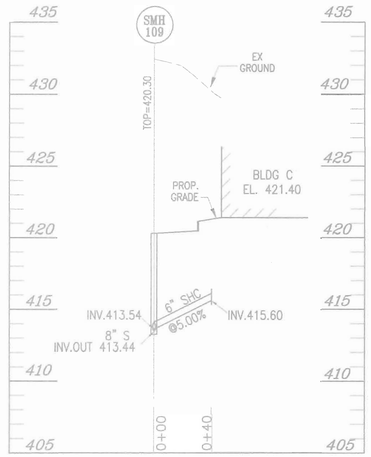

SHC PROFILE UNIT C

SCALE: 1"= 50' HORZ. 1"= 5' VERT.

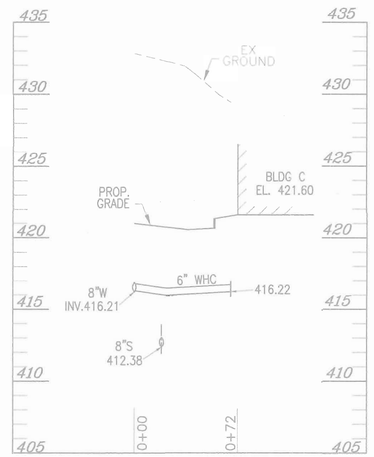

WHC PROFILE UNIT C

SCALE: 1"= 50' HORZ. 1"= 5' VERT.

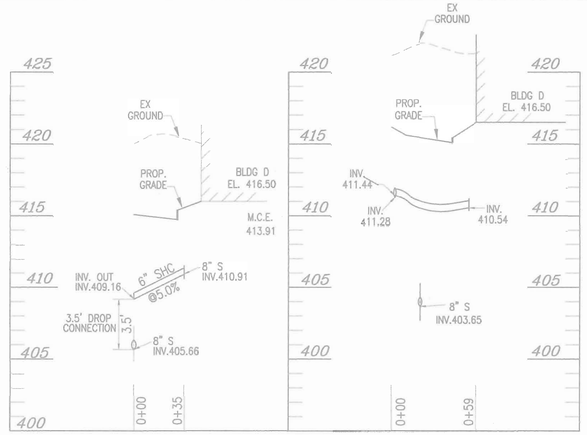

SHC PROFILE UNIT D

SCALE: 1"= 50' HORZ. 1"= 5' VERT.

WHC PROFILE UNIT D

SCALE: 1"= 50' HORZ. 1"= 5' VERT.

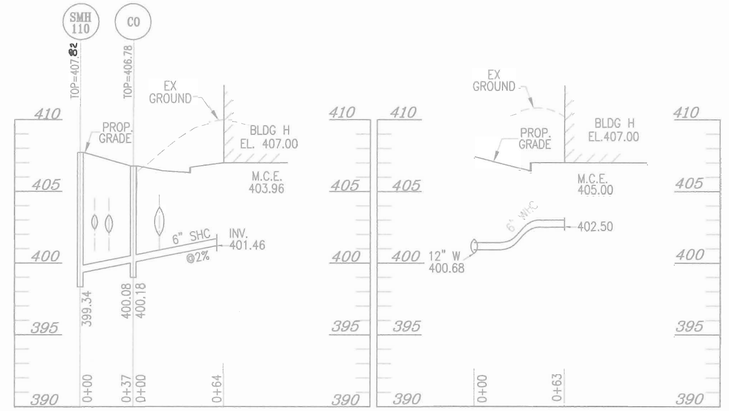

SHC PROFILE UNIT H

SCALE: 1"= 50' HORZ. 1"= 5' VERT.

WHC PROFILE UNIT H

SCALE: 1"= 50' HORZ. 1"= 5' VERT.

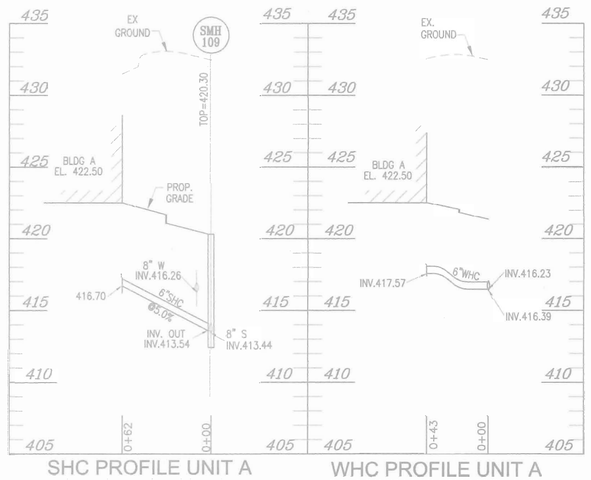

SHC PROFILE UNIT A

SCALE: 1"= 50' HORZ. 1"= 5' VERT.

WHC PROFILE UNIT A

:SCALE: 1"= 50' HORZ. 1"= 5' VERT.

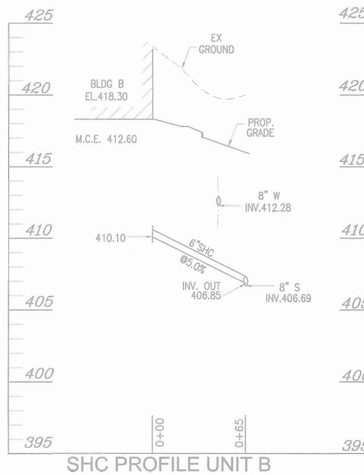

SHC PROFILE UNIT B

:SCALE: 1"= 50' HORZ. 1"= 5' VERT.

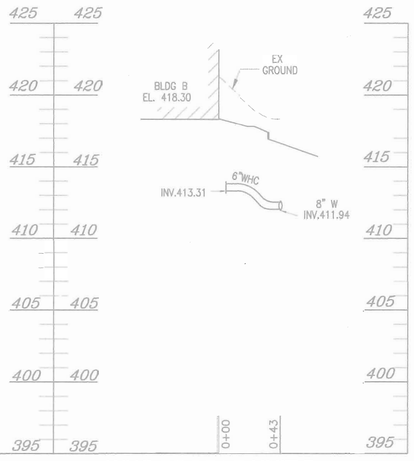

WHC PROFILE UNIT B

SCALE: 1"= 50' HORZ. 1"= 5' VERT.

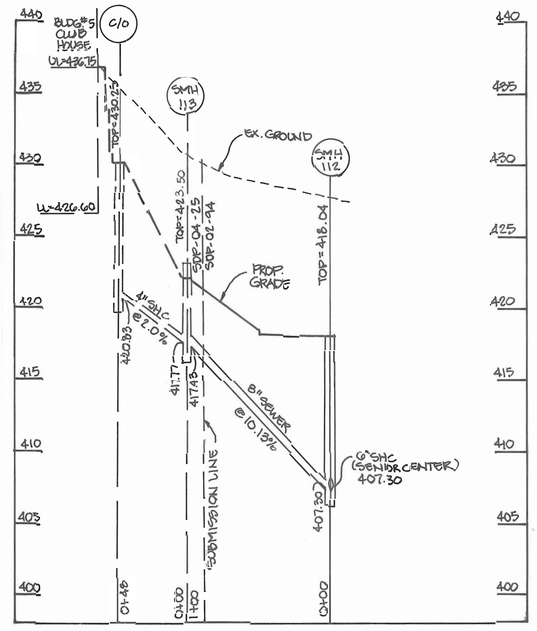

SEWER PROFILE

SCALE: 1"= 50' HORZ. 1"= 5' VERT.

OWNER:

TAYLOR FAMILY LIMITED PARTNERSHIP A
C/O LAND DESIGN & DEVELOPMENT, INC.
8000 MAIN STREET
ELLICOTT CITY, MD 21043
ATTN: MR. DONALD R. REUWER
PHONE: (410) 480-9105

DEVELOPER

LAND DESIGN & DEVELOPMENT, INC
8000 MAIN STREET
ELLICOTT CITY, MD 21043
ATTN: MR. DONALD R. REUWER
PHONE: (410) 480-9105

APPROVED: HOWARD COUNTY DEPARTMENT OF PLANNING AND ZONING

CHIEF, DEVELOPMENT ENGINEERING DIVISION	DATE 11/4/03
CHIEF, DIVISION OF LAND DEVELOPMENT	DATE 2/19/04
DIRECTOR	DATE 4/20/04

SITE DEVELOPMENT PLAN
PROFILES
VILLAGE CREST
PART OF PARCEL D-1

PHASE 1,2,3,& 4 , APT. BLDGS. A TO R
268 AGE RESTRICTED ADULT HOUSING UNITS

TAX MAP #25 BLOCK 20 — PARCEL P/O 98
2ND ELECTION DISTRICT — HOWARD COUNTY, MARYLAND

FREDERICK WARD ASSOCIATES, INC.
ARCHITECTS | ENGINEERS | PLANNERS | SURVEYORS
7125 RIVERWOOD DRIVE
COLUMBIA, MARYLAND 21046-2354
410-720-6900
410-720-6226 fax
www.frederickward.com

STATE OF MARYLAND — ROBERT JAMES SCHAEFER — No. 10122 — PROFESSIONAL ENGINEER

DESIGN BY:	RJ
DRAWN BY:	RJ
CHECKED BY:	RHV
DATE:	SEPT. 2003
SCALE:	AS SHOWN
W.O. NO.:	2018121.00

SHEET 11 OF 16

SDP-02-94

N:\PROJECTS\2018121\ENGR\dwg\Sdp-APT\GBPROF.dwg Fri Sep 19 16:51:24 2003 E4

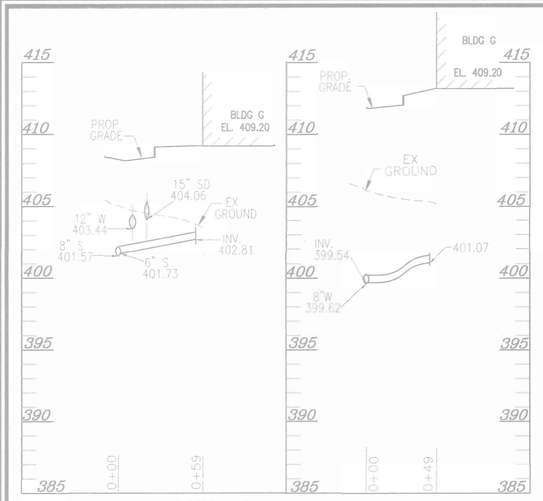

SHC PROFILE UNIT G

SCALE: 1"= 50' HORZ. 1"= 5' VERT.

WHC PROFILE UNIT G

SCALE: 1"= 50' HORZ. 1"= 5' VERT.

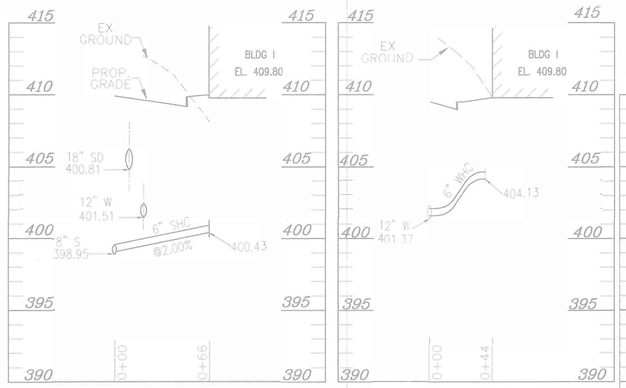

SHC PROFILE UNIT I

SCALE: 1"= 50' HORZ. 1"= 5' VERT.

WHC PROFILE UNIT I

SCALE: 1"= 50' HORZ. 1"= 5' VERT.

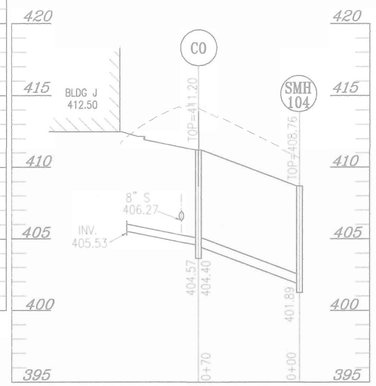

SHC PROFILE UNIT J

SCALE: 1"= 50' HORZ. 1"= 5' VERT.

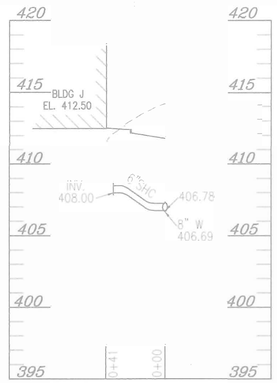

WHC PROFILE UNIT J

SCALE: 1"= 50' HORZ. 1"= 5' VERT.

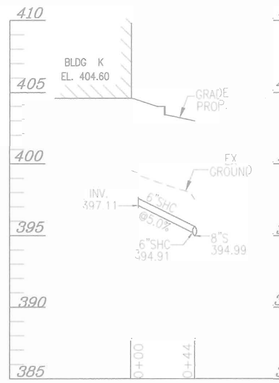

SHC PROFILE UNIT K

SCALE: 1"= 50' HORZ. 1"= 5' VERT.

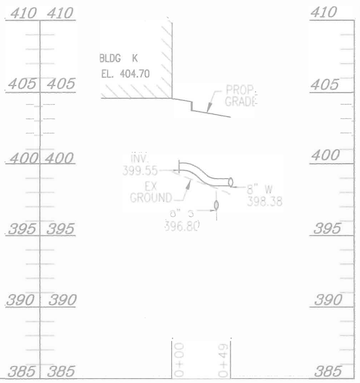

WHC PROFILE UNIT K

SCALE: 1"= 50' HORZ. 1"= 5' VERT.

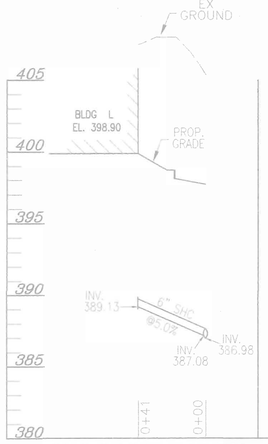

SHC PROFILE UNIT L

SCALE: 1"= 50' HORZ. 1"= 5' VERT.

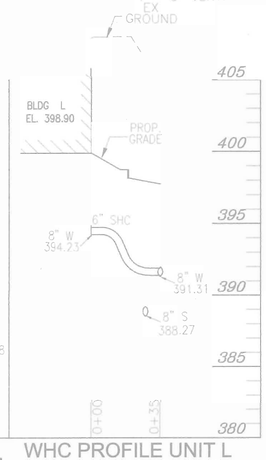

WHC PROFILE UNIT L

SCALE: 1"= 50' HORZ. 1"= 5' VERT.

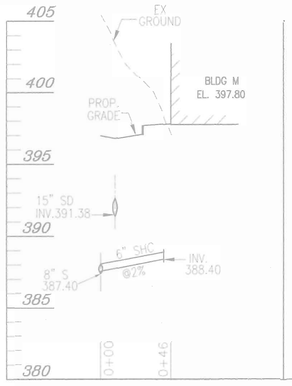

SHC PROFILE UNIT M

SCALE: 1"= 50' HORZ. 1"= 5' VERT.

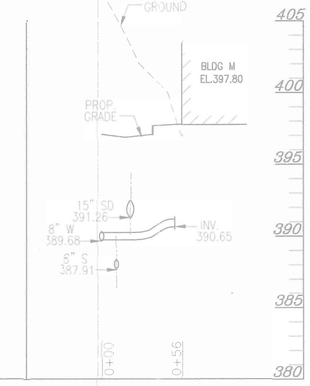

WHC PROFILE UNIT M

SCALE: 1"= 50' HORZ. 1"= 5' VERT.

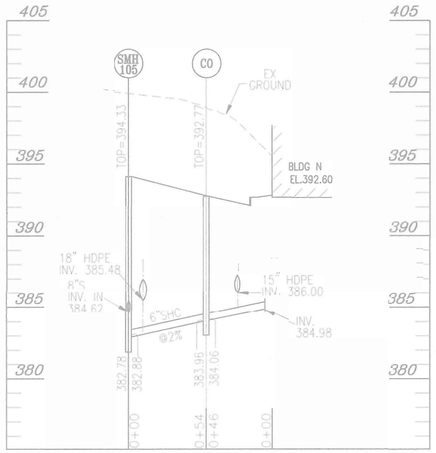

SHC PROFILE UNIT N

SCALE: 1"= 50' HORZ. 1"= 5' VERT.

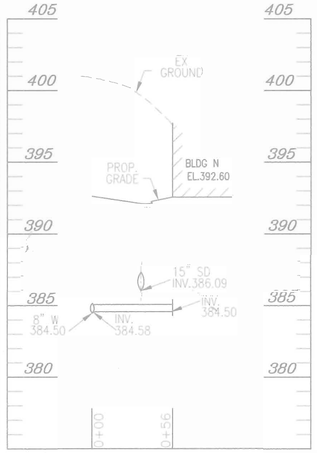

WHC PROFILE UNIT N

SCALE: 1"= 50' HORZ. 1"= 5' VERT.

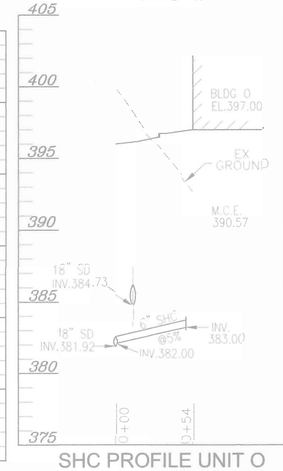

SHC PROFILE UNIT O

SCALE: 1"= 50' HORZ. 1"= 5' VERT.

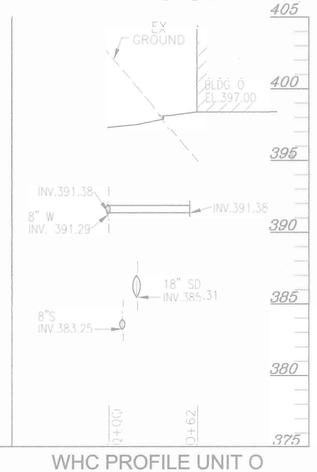

WHC PROFILE UNIT O

SCALE: 1"= 50' HORZ. 1"= 5' VERT.

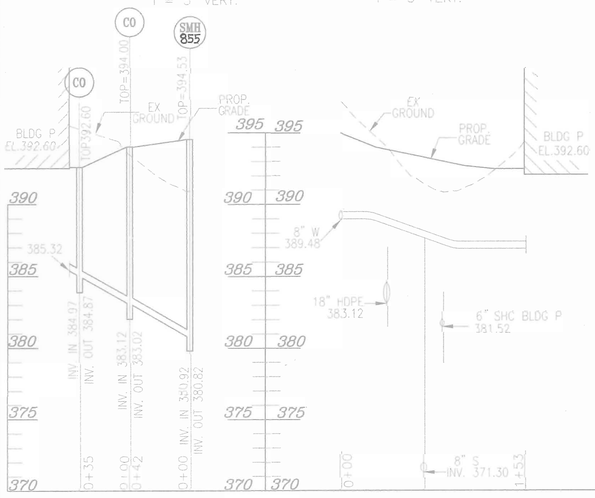

SHC PROFILE UNIT P

SCALE: 1"= 50' HORZ. 1"= 5' VERT.

WHC PROFILE UNIT P

SCALE: 1"= 50' HORZ. 1"= 5' VERT.

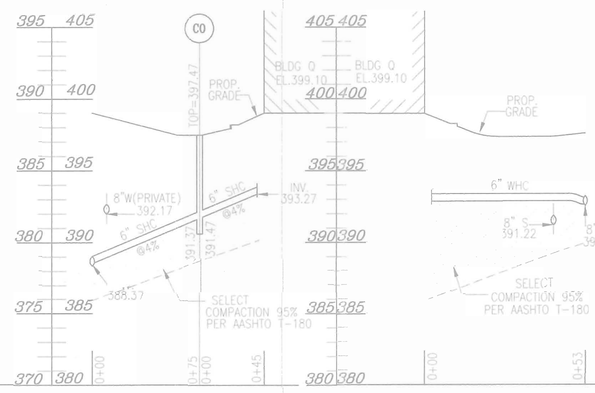

SHC PROFILE UNIT Q

SCALE: 1"= 50' HORZ. 1"= 5' VERT.

WHC PROFILE UNIT Q

SCALE: 1"= 50' HORZ. 1"= 5' VERT.

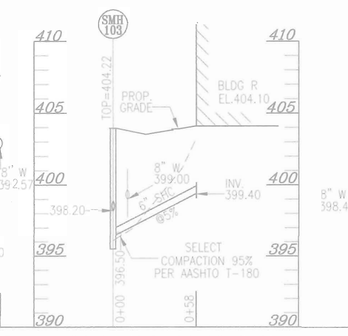

SHC PROFILE UNIT R

SCALE: 1"= 50' HORZ. 1"= 5' VERT.

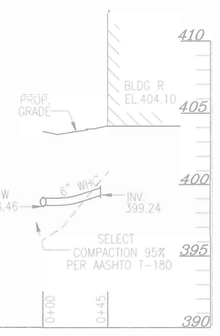

OWNER :

TAYLOR FAMILY LIMITED PARTNERSHIP A C/O LAND DESIGN & DEVELOPMENT, INC.
8000 MAIN STREET
ELLICOTT CITY, MD 21043
ATTN: MR. DONALD R. REUWER
PHONE: (410) 480-9105

DEVELOPER

LAND DESIGN & DEVELOPMENT, INC.
8000 MAIN STREET
ELLICOTT CITY, MD 21043
ATTN: MR. DONALD R. REUWER
PHONE: (410) 480-9105

APPROVED: HOWARD COUNTY DEPARTMENT OF PLANNING AND ZONING

CHIEF, DEVELOPMENT ENGINEERING DIVISION — DATE 11/4/03

CHIEF, DIVISION OF LAND DEVELOPMENT — DATE 2/19/04

DIRECTOR — DATE 2/24/04

SITE DEVELOPMENT PLAN PROFILES

VILLAGE CREST
PART OF PARCEL D-1
PHASE 1,2,3,&4 , APT. BLDGS. A TOR
268 AGE RESTRICTED ADULT HOUSING UNITS
TAX MAP #25 BLOCK 20 — PARCEL P/O 98
2ND ELECTION DISTRICT — HOWARD COUNTY, MARYLAND

FREDERICK WARD ASSOCIATES, INC.
ARCHITECTS | ENGINEERS | PLANNERS | SURVEYORS
7125 RIVERWOOD DRIVE
COLUMBIA, MARYLAND 21046-2354
410-720-8900
410-720-6226 fax
www.frederickward.com

STATE OF MARYLAND — ROBERT JAMES HAGEMEYER — No. 16175 — PROFESSIONAL ENGINEER

DESIGN BY:	RJ
DRAWN BY:	RJ
CHECKED BY:	RHV
DATE:	SEPT. 2003
SCALE:	AS SHOWN
W.O. NO.:	2018121.00

SHEET 12 OF 16

SDP-02-94

M:\Hello\ECTS\2018121\ENGR\dwg\Sdp-APT\05PROF.dwg Fri Sep 19 16:52:00 2003 E4

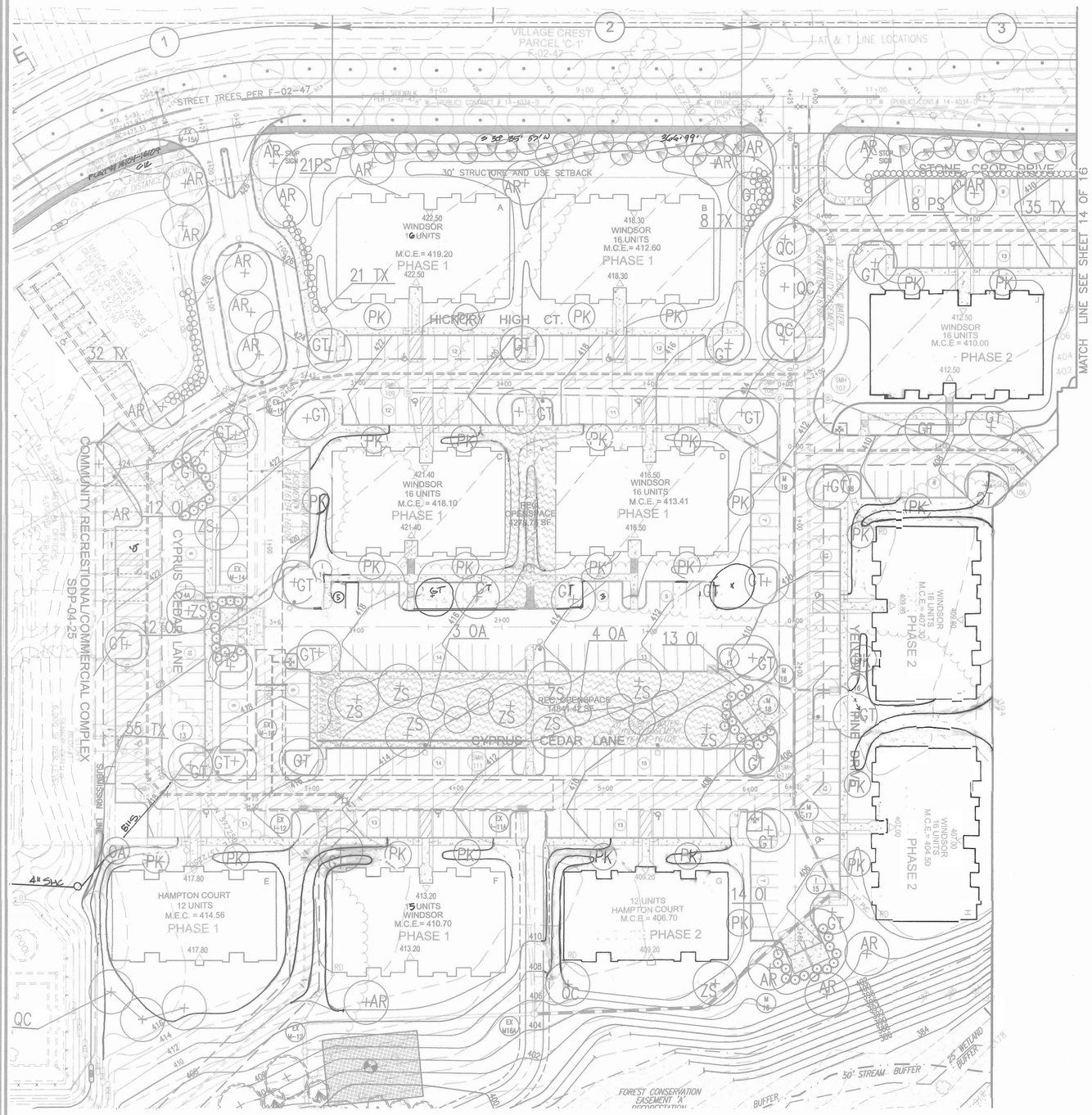

PLAN
SCALE: 1"=50'

LEGEND

Existing Contour 382
Proposed Contour 382
Spot Elevation +82.53
Direction of Flow
existing Trees to Remain
Light Poles — Overhead
Shade Trees
Shade Trees LANDSCAPING FOR POND, PER F-02-47
Evergreen Trees
Shrubs/Hedge
Flowering Trees
Perimeter Landscape Edge
EVERGREEN TREE LANDSCAPING FOR POND, PER F-02-47

SCHEDULE C RESIDENTIAL DEVELOPMENT INTERNAL LANDSCAPING	
NUMBER OF DWELLING UNITS	267
NUMBER OF TREES REQUIRED (1:3 DU APTS)	89
NUMBER OF TREES PROVIDED SHADE TREES OTHER TREES (2:1 SUBSTITUTION)	 45 88

SCHEDULE B PARKING LOT INTERNAL LANDSCAPING	
NUMBER OF PARKING SPACES	~~438~~
NUMBER OF ISLANDS REQUIRED	~~44~~
NUMBER ISLANDS PROVIDED @ 200 SF/ISLAND	~~44~~
NUMBER OF TREES REQUIRED	~~44~~
NUMBER OF TREES PROVIDED SHADE TREES OTHER TREES (2:1 SUBSTITUTION)	 ~~44~~ –

1. ALL PLANT MATERIALS SHALL BE FULL AND HEAVY, BE WELL FORMED AND SYMMETRICAL, CONFORM TO THE MOST CURRENT AAN SPECIFICATIONS AND BE INSTALLED IN ACCORDANCE WITH LCAMW PLANTING SPECIFICATIONS.
2. CONTRACTOR SHALL VERIFY LOCATION OF ALL UNDERGROUND UTILITIES PRIOR TO DIGGING.
3. FINAL LOCATION OF PLANT MATERIAL MAY NEED TO VARY TO MEET FINAL FIELD CONDITIONS. TREES SHALL NOT BE PLANTED IN THE BOTTOM OF DRAINAGE SWALES.
4. CONTRACTOR SHALL VERIFY PLANT QUANTITIES PRIOR TO BIDDING. IF PLAN DIFFERS FROM LANDSCAPE SCHEDULE, THE PLAN SHALL GOVERN.
5. AN ADDITIONAL 3 SHADE TREES AND 4 EVERGREEN TREES ARE REQUIRED ON THE SDP ADJACENT TO BUILDING P TO AID IN BUFFERING THE BUILDING FROM THE SCENIC ROAD. THE TYPE B BUFFER FOR THE ADJACENT SWM FACILITY IS PROVIDED ON THE FINAL PLAN.
6. EXISTING PERIMETER LANDSCAPING SHOWN BONDED PER F-02-47.

SCHEDULE A PERIMETER LANDSCAPE EDGE						
CATEGORY		ADJACENT TO ROADWAYS				
PERIMETER/FRONTAGE DESIGNATION LANDSCAPE TYPE	1 E	2 B	3 E	4 D	5 E	6 B
LINEAR FEET OF ROADWAY FRONTAGE/PERIMETER	210	280	260	30	45	400
CREDIT FOR EXISTING VEGETATION (YES, NO, LINEAR FEET DESCRIBE BELOW IF NEEDED)	No	No	No	No	No	No
CREDIT FOR WALL, FENCE OR BERM (YES, NO, LINEAR FEET DESCRIBE BELOW IF NEEDED)	No	No	No	No	No	No
NUMBER OF PLANTS REQUIRED SHADE TREES EVERGREEN TREES SHRUBS	 1:40 5 – 1:04 53	 1:50 6 1:40 7 –	 1:40 7 – 1:04 65	 1:60 1 1:10 3 –	 1:40 1 – 1:04 11	 1:50 8 1:40 10 –
NUMBER OF PLANTS PROVIDED SHADE TREES EVERGREEN TREES OTHER TREES (2:1 SUBSTITUTION) SHRUBS (10:1 SUBSTITUTION) DESCRIBE PLANT SUBSTITUTION CREDITS BELOW IF NEEDED)	 5 – – 53	 3 21 – –	 2 10 – 65	 1 – – 13	 1 – – 11	 8 10 – –

LANDSCAPE SCHEDULE				
KEY	QUAN.	BOTANICAL NAME	SIZE	REM.
AR	22	ACER RUBRUM 'OCTOBER GLORY' OCTOBER GLORY RED MAPLE	2 1/2"–3" Cal.	B & B
GT	47	GLEDITSIA TRI. INERMIS 'SHADEMASTER' SHADEMASTER THORNLESS HONEYLOCUST	2 1/2"–3" Cal.	B & B
OI	143	OSMANTHUS ILICIFOLIUS 'GULF TIDE' SWEET HOLLY	3' – 3 1/2' Ht.	B & B
OA	11	OXYDENDRUM ARBOREUM SOURWOOD	8' – 10' Ht.	B & B
PS	64	PINUS STROBUS EASTERN WHITE PINE	6 – 8' Ht.	B & B
PK	36	PRUNUS SERRULATA 'KWANZAN' KWANZAN CHERRY	1 1/2"–2" Cal.	B & B
QC	13	QUERCUS COCCINEA SCARLET OAK	2 1/2"–3" Cal.	B & B
TX	39	TAXUS X MEDIA 'DENSIFORMIS' DENSIFORMIS YEW	30"– 36" Ht.	B & B
ZS	16	ZELKOVA SERRATA 'VILLAGE GREEN' VILLAGE GREEN ZELKOVA	2 1/2"–3" Cal.	B & B

GENERAL NOTES

1. This plan has been prepared in accordance with the provisions of Section 16.124 of the Howard County Code and the Landscape Manual.
2. Financial Surety for the required landscaping has been posted as a part of the DPW Developer's Agreement in the amount of $55,110.00
3. Light poles to be Kim Lighting standard Entablature, 25' black steel round poles, flush mount. 250 watt metal Halide.
4. See Sediment & Erosion Control Detail Sheet for planting details

DEVELOPER'S BUILDER'S CERTIFICATE

I/WE CERTIFY THAT THE LANDSCAPING SHOWN ON THIS PLAN WILL BE DONE ACCORDING TO THE PLAN, SECTION 16.124 OF THE HOWARD COUNTY CODE AND THE HOWARD COUNTY LANDSCAPE MANUAL. I/WE FURTHER CERTIFY THAT UPON COMPLETION, A CERTIFICATION OF LANDSCAPE INSTALLATION, ACCOMPANIED BY AN EXECUTED ONE(1) YEAR GUARANTEE OF PLANT MATERIALS, WILL BE SUBMITTED TO THE DEPARTMENT OF PLANNING AND ZONING.

SIGNATURE OF DEVELOPER DONALD REUWER — DATE 10/17/03

OWNER:
TAYLOR FAMILY LIMITED PARTNERSHIP A
C/O LAND DESIGN & DEVELOPMENT, INC.
8000 MAIN STREET
ELLICOTT CITY, MD 21043
ATTN: MR. DONALD R. REUWER
PHONE: (410) 480-9105

DEVELOPER
LAND DESIGN & DEVELOPMENT, INC.
8000 MAIN STREET
ELLICOTT CITY, MD 21043
ATTN: MR. DONALD R. REUWER
PHONE: (410) 480-9105

APPROVED: HOWARD COUNTY DEPARTMENT OF PLANNING AND ZONING

CHIEF, DEVELOPMENT ENGINEERING DIVISION — DATE 11/4/03
CHIEF, DIVISION OF LAND DEVELOPMENT — DATE 2/19/04
DIRECTOR — DATE 2/25/04

SITE DEVELOPMENT PLAN
LANDSCAPE PLAN
VILLAGE CREST
PART OF PARCEL D-1

PHASE 1, 2, 3, & 4 , APT. BLDGS. A TO R
268 AGE RESTRICTED ADULT HOUSING UNITS
TAX MAP #25 BLOCK 20 — PARCEL P/O 98
2ND ELECTION DISTRICT — HOWARD COUNTY, MARYLAND

FREDERICK WARD ASSOCIATES, INC.
ARCHITECTS | ENGINEERS | PLANNERS | SURVEYORS
7125 RIVERWOOD DRIVE
COLUMBIA, MARYLAND 21046–2354
410–720–6900
410–720–6226 fax
www.frederickward.com

STATE OF MARYLAND — ROBERT NORRIS VOGEL — No. 16193 — PROFESSIONAL ENGINEER
ROBERT N. VOGEL, PE NO. 16193

DESIGN BY:	MHM
DRAWN BY:	RJ
CHECKED BY:	MHM
DATE:	SEPT. 2003
SCALE:	1"=50'
W.O. NO.:	2018121.00

SHEET 13 OF 16

SDP-02-94

J:\PROJECTS\2018121\ENGR\Dwg\Sdp-APT\13LNPLAN.dwg Fri Oct 17 13:33:48 2003 RIMA

PLAN
SCALE: 1"=50'

LEGEND

Existing Contour — 382
Proposed Contour — 382
Spot Elevation — +82.53
Direction of Flow
Existing Trees to Remain
Light Poles — Overhead
Shade Trees
Shade Trees LANDSCAPING FOR POND2 PER F-02-47
Shade Trees LANDSCAPING FOR TYPE B BUFFER FOR SCENIC ROAD PER F-02-47
Evergreen Trees
Shrubs/Hedge
Flowering Trees
Perimeter Landscape Edge — 2
EVERGREEN TREE LANDSCAPING FOR POND2 PER F-02-47
EVERGREEN TREE LANDSCAPING FOR TYPE B BUFFER FOR SCENIC ROAD PER F-02-47

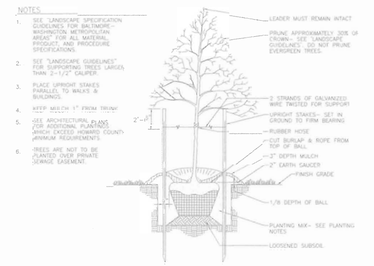

TREE PLANTING AND STAKING
DECIDUOUS TREES UP TO 2-1/2" CALIPER — NOT TO SCALE

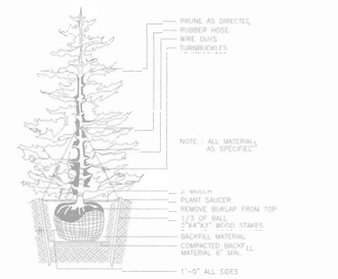

TYPICAL EVERGREEN TREE PLANTING DETAIL
NOT TO SCALE

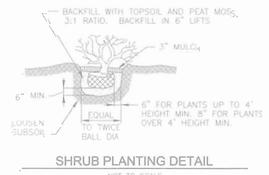

SHRUB PLANTING DETAIL
NOT TO SCALE

APPROVED: HOWARD COUNTY DEPARTMENT OF PLANNING AND ZONING

CHIEF, DEVELOPMENT ENGINEERING DIVISION — DATE 11/4/03
CHIEF, DIVISION OF LAND DEVELOPMENT — DATE 2/9/04
DIRECTOR — DATE 2/10/04

SITE DEVELOPMENT PLAN
LANDSCAPE PLAN
VILLAGE CREST
PART OF PARCEL D-1
PHASE 1,2,3,&4, APT. BLDGS. A TO R
268 AGE RESTRICTED ADULT HOUSING UNITS
TAX MAP #25 BLOCK 20 — PARCEL P/O 98
2ND ELECTION DISTRICT — HOWARD COUNTY, MARYLAND

OWNER:
TAYLOR FAMILY LIMITED PARTNERSHIP A
C/O LAND DESIGN & DEVELOPMENT, INC
8000 MAIN STREET
ELLICOTT CITY, MD 21043
ATTN: MR. DONALD R. REUWER
PHONE: (410) 480-9105

DEVELOPER
LAND DESIGN & DEVELOPMENT, INC.
8000 MAIN STREET
ELLICOTT CITY, MD 21043
ATTN: MR. DONALD R. REUWER
PHONE: (410) 480-9105

7125 RIVERWOOD DRIVE
COLUMBIA, MARYLAND 21046-2354
410-720-6900
410-720-6226 fax
FREDERICK WARD ASSOCIATES, INC.
ARCHITECTS | ENGINEERS | PLANNERS | SURVEYORS
www.frederickward.com

STATE OF MARYLAND — ROBERT HAINES WARD — No. 10193 — PROFESSIONAL ENGINEER

DESIGN BY:	MHM
DRAWN BY:	RJ
CHECKED BY:	MHM
DATE:	SEPT. 2003
SCALE:	AS SHOWN
W.O. NO.:	2018121.00

SHEET 14 OF 16

SDP-02-94

M:\PROJECTS\2018121\ENGR\dwg\SDP-APFI\18WPLAN.dwg Sun Sep 21 11:29:33 2003 E4

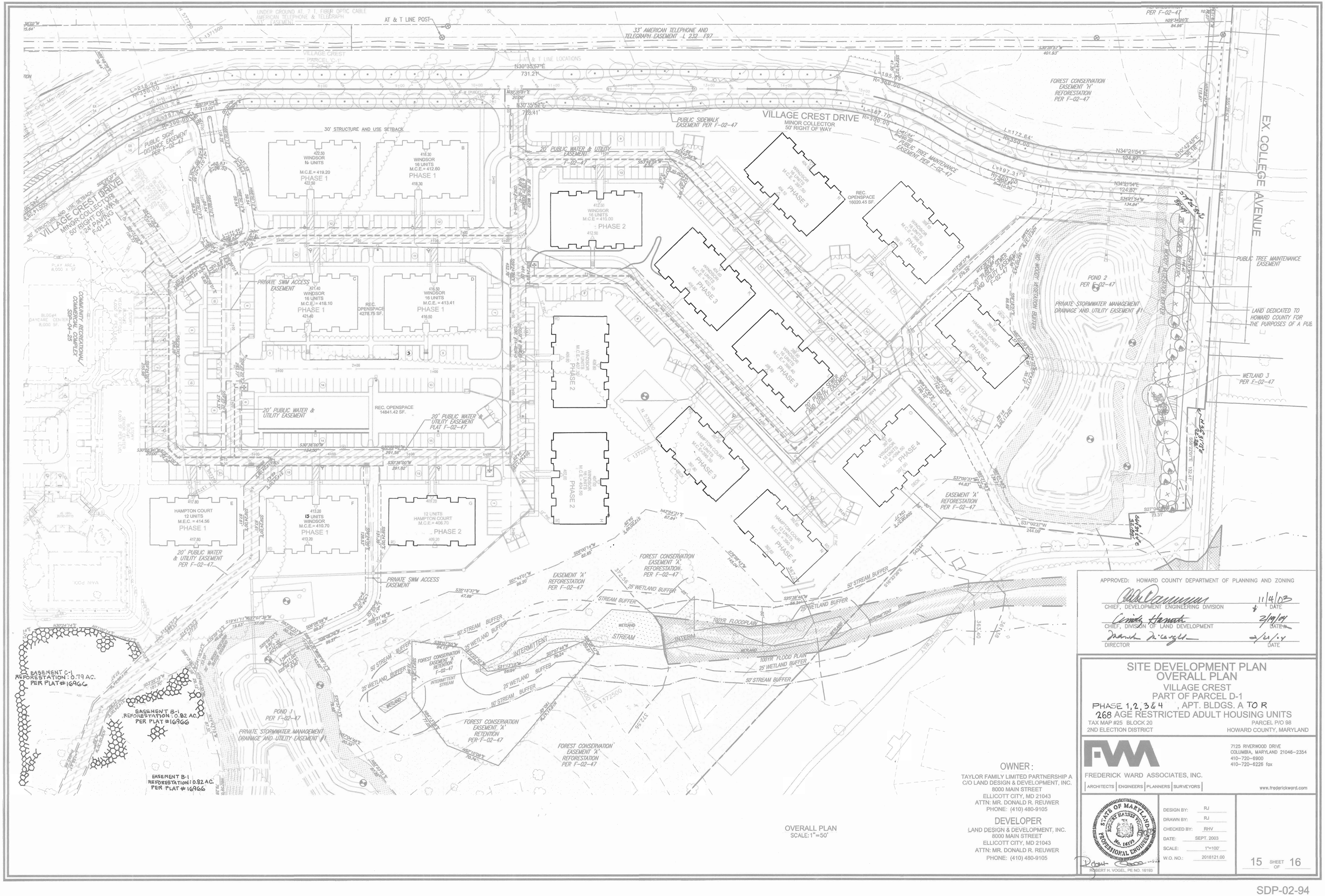

OWNER:
TAYLOR FAMILY LIMITED PARTNERSHIP A
C/O LAND DESIGN & DEVELOPMENT, INC.
8000 MAIN STREET
ELLICOTT CITY, MD 21043
ATTN: MR. DONALD R. REUWER
PHONE: (410) 480-9105

DEVELOPER
LAND DESIGN & DEVELOPMENT, INC.
8000 MAIN STREET
ELLICOTT CITY, MD 21043
ATTN: MR. DONALD R. REUWER
PHONE: (410) 480-9105

APPROVED: HOWARD COUNTY DEPARTMENT OF PLANNING AND ZONING

CHIEF, DEVELOPMENT ENGINEERING DIVISION — DATE 11/4/03

CHIEF, DIVISION OF LAND DEVELOPMENT — DATE 2/9/04

DIRECTOR — DATE 2/12/04

SITE DEVELOPMENT PLAN
OVERALL PLAN
VILLAGE CREST
PART OF PARCEL D-1

PHASE 1,2,3 & 4 , APT. BLDGS. A TO R
268 AGE RESTRICTED ADULT HOUSING UNITS

TAX MAP #25 BLOCK 20 — PARCEL P/O 98
2ND ELECTION DISTRICT — HOWARD COUNTY, MARYLAND

FREDERICK WARD ASSOCIATES, INC.
ARCHITECTS | ENGINEERS | PLANNERS | SURVEYORS
7125 RIVERWOOD DRIVE
COLUMBIA, MARYLAND 21046-2354
410-720-6900
410-720-6226 fax
www.frederickward.com

STATE OF MARYLAND — ROBERT HARRIS VOGEL — No. 16193 — PROFESSIONAL ENGINEER
ROBERT H. VOGEL, PE NO. 16193

DESIGN BY:	RJ
DRAWN BY:	RJ
CHECKED BY:	RHV
DATE:	SEPT. 2003
SCALE:	1"=100'
W.O. NO.:	2018121.00

SHEET 15 OF 16

SDP-02-94

M:\PROJECTS\2018121\ENGR\dwg\SDP-APT\15OVALL.dwg Fri Oct 17 13:35:16 2003 RDMA

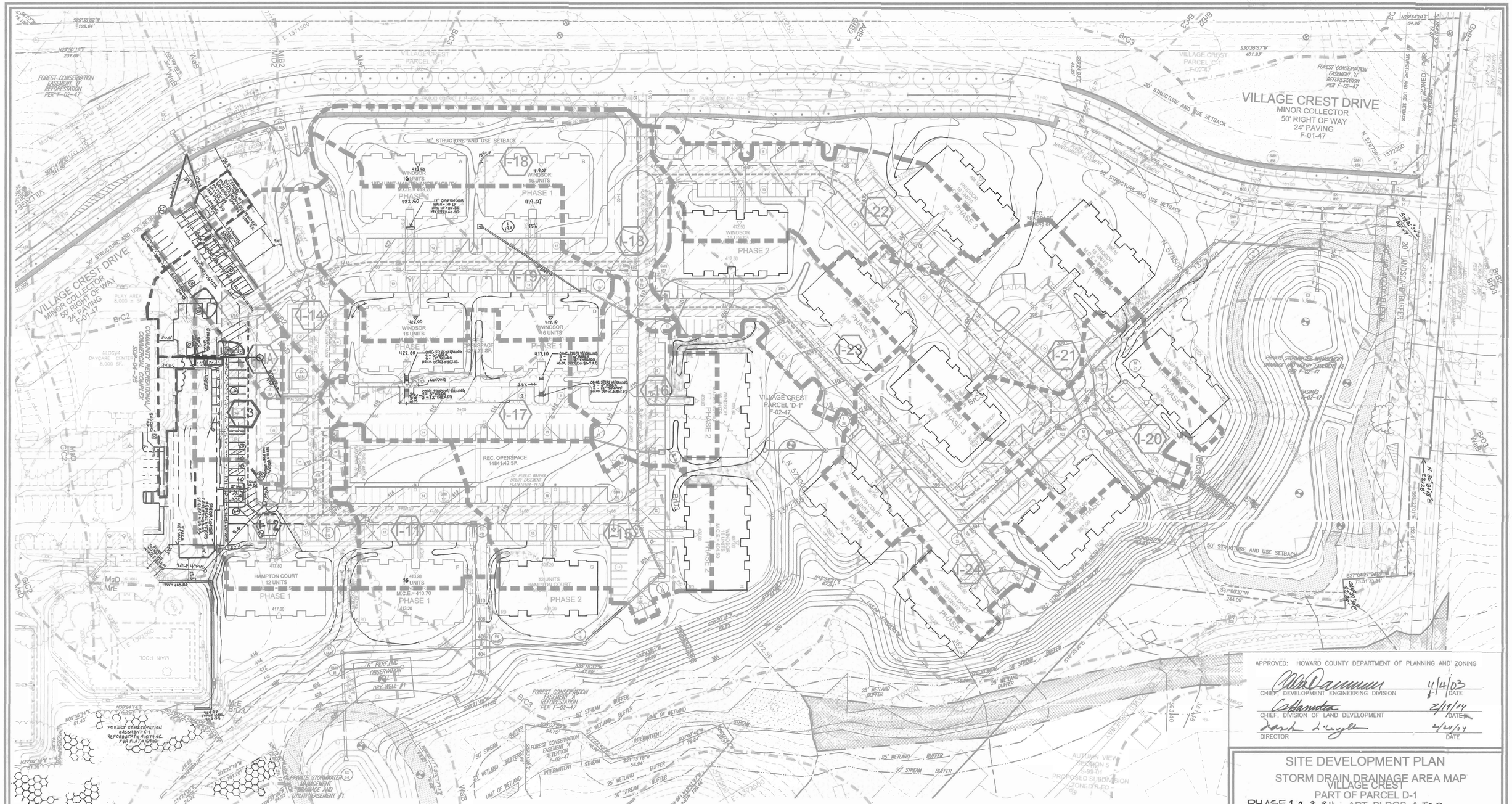

DRAINAGE AREA TABULATIONS

No.	Area	C	% Imp.	Soil Types	Zone
I-11	0.55 AC.	0.51	60	C	POR
I-12	0.75 AC.	0.38	47	C	POR
I-13	0.79 AC.	0.42	29	C	POR
I-14	1.59 AC.	0.60	35	B AND C	POR
I-14A	0.38 AC.	0.60	35	B AND C	POR
I-15	0.95 AC.	0.62	60	C	POR
I-16	0.53 AC.	0.69	64	C	POR
I-17	0.74 AC.	0.67	76	B AND C	POR
I-18	1.02 AC.	0.69	64	C	POR
I-19	1.18 AC.	0.64	72	B AND C	POR
I-20	0.76 AC.	0.71	75	C	POR
I-21	0.91 AC.	0.75	75	C	POR
I-22	0.89 AC.	0.75	69	B AND C	POR
I-23	0.70 AC.	0.75	84	C	POR
I-24	0.97 AC.	0.75	79	C	POR
I-15A	0.15AC.	0.60	35	B AND C	POR

LEGEND

Existing Contour 382'
Proposed Contour 82
Existing Trees to Remain
FOREST CONSERVATION EASEMENT
DRAINAGE DIVIDE

PLAN

SCALE: 1"=50'

NO.	REVISION	DATE
3	REFLECTING CHANGES DONE PER SDP-04-25	
	RESKETCHED/REDESIGNED THE SENIOR CENTER	1/10/2005
2	EXCHANGE UNIT CONFIG. BETWEEN BLG. 'A' AND BLDG. 'P'	
	ADDED PHASE 3 GRADING CHANGE AROUND BLDGS.,	
	ADDED SHO TO HHIZ.	
1	ADDED PHASE 2 GRADING CHANGE AROUND BLDG.	

APPROVED: HOWARD COUNTY DEPARTMENT OF PUBLIC WORKS.

CHIEF, BUREAU OF HIGHWAYS DATE

APPROVED: HOWARD COUNTY DEPARTMENT OF PLANNING AND ZONING

CHIEF, DEVELOPMENT ENGINEERING DIVISION 4/4/03 DATE

CHIEF, DIVISION OF LAND DEVELOPMENT 2/19/04 DATE

DIRECTOR 4/20/04 DATE

SITE DEVELOPMENT PLAN

STORM DRAIN DRAINAGE AREA MAP

VILLAGE CREST
PART OF PARCEL D-1
PHASE 1, 2, 3, & 4, APT. BLDGS. A-TO R
268 AGE RESTRICTED ADULT HOUSING UNITS
TAX MAP #25 BLOCK 20 PARCEL P/O 98
2ND ELECTION DISTRICT HOWARD COUNTY, MARYLAND

OWNER :
TAYLOR FAMILY LIMITED PARTNERSHIP A
C/O LAND DESIGN & DEVELOPMENT, INC.
8000 MAIN STREET
ELLICOTT CITY, MD 21043
ATTN: MR. DONALD R. REUWER
PHONE: (410) 480-9105

DEVELOPER
LAND DESIGN & DEVELOPMENT, INC.
8000 MAIN STREET
ELLICOTT CITY, MD 21043
ATTN: MR. DONALD R. REUWER
PHONE: (410) 480-9105

FREDERICK WARD ASSOCIATES, INC.
ARCHITECTS | ENGINEERS | PLANNERS | SURVEYORS
7125 RIVERWOOD DRIVE
COLUMBIA, MARYLAND 21046-2354
410-720-6900
410-720-6226 fax
www.frederickward.com

STATE OF MARYLAND — ROBERT HARRIS VOGEL — No. 16193 — PROFESSIONAL ENGINEER
ROBERT H. VOGEL, PE NO. 16193

DESIGN BY:	RJ
DRAWN BY:	RJ
CHECKED BY:	RHV
DATE:	SEPT. 2003
SCALE:	AS SHOWN
W.O. NO.:	2018121.00

16 SHEET OF 16

SDP-02-94

N:\PROJECTS\2018121\ENGR\dwg\Sdp-APTV1.DGN Jwg Fri Oct 17 13:37:16 2003 RJMA

WETLAND LINE TABLE

LINE	LENGTH	BEARING
W1	S19°23'46"W	75.53
W2	S26°20'33"W	33.55
W3	S33°12'48"W	39.15
W4	S43°18'29"W	35.33
W5	S22°32'57"W	36.99
W6	S36°28'36"W	49.06
W7	S26°47'10"W	31.43
W8	S44°53'32"W	31.66
W9	S26°02'23"W	34.68
W10	S07°54'34"E	38.71
W11	S11°35'41"W	52.37
W12	S63°49'26"W	10.35
W13	N61°19'04"W	7.07
W14	N05°01'39"E	37.49
W15	N20°23'44"W	25.01
W16	N19°07'16"E	56.76
W17	N33°10'27"E	36.35
W18	N12°24'54"W	39.01
W19	N34°50'45"E	83.19
W20	N13°37'37"W	33.32
W21	S58°37'47"E	44.53
W22	N21°54'45"E	41.53
W23	N59°49'32"E	31.33
W24	N48°03'31"E	34.49
W25	N16°10'02"E	40.02
W26	N24°32'00"W	23.50
W27	N17°07'59"E	36.90
W28	N78°45'13"E	10.16
W29	S16°33'36"E	30.21
W30	S60°12'02"E	8.88
W31	S03°34'33"E	32.87
W32	S69°43'33"W	11.00
W33	N00°46'49"E	41.03
W34	N18°08'41"E	13.07
W35	S57°10'03"E	31.49
W36	N81°20'00"W	30.88
W76	N19°08'10"W	6.44
W77	N76°15'50"E	37.76
W78	S45°12'38"E	8.01
W79	S59°05'06"W	16.98
W80	S88°28'33"W	25.69

307	578062.5315	1372586.6973
308	577557.3224	1372365.6449
309	578595.6480	1372539.5613

LEGEND

- WETLAND BUFFER
- STREAM BUFFER
- WETLAND
- 100YR FLOODPLAIN
- FOREST CONSERVATION REFORESTATION EASEMENT
- FOREST RETENTION EASEMENT
- RECREATIONAL OPEN SPACE
- PRIVATE SWM ACCESS EASEMENT

WETLAND 3
SCALE: 1"=50'

WETLAND 2
SCALE: 1"=50'

WETLAND 1
SCALE: 1"=50'

PLAN
SCALE: 1"=40'

CURVE DATA TABLE

CURVE	ARC	RADIUS	TANGENT	DELTA	CHORD
C12	190.45'	300.01'	98.56'	36°22'24"	N12°56'31"E 187.27'

APPROVED: HOWARD COUNTY DEPARTMENT OF PLANNING AND ZONING

CHIEF, DEVELOPMENT ENGINEERING DIVISION	DATE 11/4/03
CHIEF, DIVISION OF LAND DEVELOPMENT	DATE 2/9/04
DIRECTOR	DATE 2/20/04

SITE DEVELOPMENT PLAN

VILLAGE CREST
PART OF PARCEL D-1
PHASE 1, APT. BLDGS. A-F,
91 AGE RESTRICTED ADULT HOUSING UNITS

TAX MAP #25 BLOCK 20 — PARCEL P/O 98
2ND ELECTION DISTRICT — HOWARD COUNTY, MARYLAND

OWNER:
TAYLOR FAMILY LIMITED PARTNERSHIP A
C/O LAND DESIGN & DEVELOPMENT, INC.
8000 MAIN STREET
ELLICOTT CITY, MD 21043
ATTN: MR. DONALD R. REUWER
PHONE: (410) 480-9105

DEVELOPER
LAND DESIGN & DEVELOPMENT, INC.
8000 MAIN STREET
ELLICOTT CITY, MD 21043
ATTN: MR. DONALD R. REUWER
PHONE: (410) 480-9105

FREDERICK WARD ASSOCIATES, INC.
ARCHITECTS | ENGINEERS | PLANNERS | SURVEYORS
7125 RIVERWOOD DRIVE
COLUMBIA, MARYLAND 21046-2354
410-720-6900
410-720-6226 fax
www.frederickward.com

STATE OF MARYLAND — RICHARD H. VOGEL — No. 16179 — PROFESSIONAL ENGINEER

DESIGN BY:	RJ
DRAWN BY:	RJ
CHECKED BY:	RHV
DATE:	SEPT. 2003
SCALE:	1"=40'
W.O. NO.:	2018121.00

SHEET 2 OF 16

SDP-02-94

M:\PROJECTS\2018121\ENGR\dwg\Sdp-APT\D2SPLAN.dwg Fri Oct 17 13:10:08 2003 RDMA

E 1371750 N 578250

MATCH LINE SEE SHEET 3 OF 17

VILLAGE CREST
PARCEL 'C-1'
F-02-47

VILLAGE CREST
PARCEL 'D-1'
F-02-47

UNDER GROUND AT. 7 T. FIBER OPTIC CABLE
AMERICAN TELEPHONE & TELEGRAPH
33' EASEMENT

AT & T LINE LOCATIONS

FOREST CONSERVATION EASEMENT 'H' REFORESTATION PER F-02-47 PLAT# 16104-16109

VILLAGE CREST DRIVE
MINOR COLLECTOR
50' RIGHT OF WAY
24' PAVING
F-01-47

30' STRUCTURE AND USE SETBACK

PUBLIC SIDEWALK EASEMENT PER F-20-47 PLAT# 16104-16109

10' PUBLIC TREE MAINTENANCE EASEMENT PLAT# 16104-16109

20' PUBLIC SEWER, WATER & UTILITY EASEMENT, PREVIOUSLY RECORDED PLAT# 16104-16109.
10' PUBLIC SEWER, WATER & UTILITY EASEMENT PLAT# 16421-16422

FUTURE PHASE 3
WINDSOR
M.C.E. = 397.50
16 UNITS

FUTURE PHASE 4
WINDSOR
M.C.E. = 396.90
16 UNITS

FUTURE PHASE 3
WINDSOR
M.C.E. = 402.10
16 UNITS

FUTURE PHASE 3
HAMPTON COURT
M.C.E. = 393.30
12 UNITS

FUTURE PHASE 4
WINDSOR
M.C.E. = 396.40
16 UNITS

FUTURE PHASE 4
HAMPTON COURT
M.C.E. = 390.10
12 UNITS

FUTURE PHASE 4
WINDSOR
16 UNITS
M.C.E. = 394.50

FUTURE PHASE 4
HAMPTON COURT
12 UNITS
M.C.E. = 389.80

REC. OPENSPACE
16020.15 SF

STONE CROP DRIVE

POND 2
POCKET POND
HAZARD CLASS
PRIVATELY OWNED
AND MAINTAINED
PER F-20-47

PRIVATE STORMWATER MANAGEMENT DRAINAGE AND UTILITY EASEMENT #2 PER F-02-47 PLAT# 16104-16109

PRIVATE USE ONLY WELL
6" SOLID PVC CLEANOUT
6" SOLID PVC DOWNSPOUT

EX. COLLEGE AVENUE
MINOR COLLECTOR OR (SCENIC RD)
60' RIGHT OF WAY

30' HALF SECTION RIGHT OF WAY DEDICATION, COLLEGE AVENUE. PER F-20-47

ZONED: POR

MARYLAND STATE GRID MERIDIAN

AUTUMN RIVER
SUBDIVISION
ZONED R-ED
F-00-131
S-98-16

PROPOSED 12' WIDE AUXILIARY LANE PER F-20-47

LAND DEDICATED TO HOWARD COUNTY FOR THE PURPOSES OF A PUBLIC ROAD PER F-02-47 PLAT# 16104-16109

PUBLIC TREE MAINTENANCE EASEMENT PLAT# 16104-16109

30' LANDSCAPE BUFFER

5' NO WOODY BUFFER

50' STRUCTURE AND USE SETBACK

FOREST CONSERVATION EASEMENT 'A' REFORESTATION PER F-02-47 PLAT# 16104-16109

25' WETLAND BUFFER
50' STREAM BUFFER
WETLAND
INTERMITTENT STREAM
100YR FLOODPLAIN
PUBLIC 100YR FLOODPLAIN DRAINAGE AND UTILITY EASEMENT SEE DETAIL THIS SHEET

AUTUMN VIEW
SECTION 5
S-99-01
PROPOSED SUBDIVISION
ZONED R-ED

EX. TAYLOR DRIVEWAY

LEGEND

- WETLAND BUFFER
- STREAM BUFFER
- WETLAND
- 100YR FLOODPLAIN
- FOREST CONSERVATION REFORESTATION EASEMENT
- FOREST RETENTION EASEMENT
- RECREATIONAL OPENSPACE
- RECREATIONAL OPENSPACE TOWNHOUSES (PARCEL E-1)

LINE TABLE

F1	N16°33'36"W	83.30
F2	S19°11'56"W	60.54
F3	S13°22'38"W	32.95
F4	S23°43'10"W	54.90
F5	S36°56'32"W	124.14
F6	N88°24'02"E	16.30
F7	S67°08'15"E	35.32
F8	S79°15'45"E	14.28
F9	N26°02'30"E	193.03
F10	N14°37'39"E	1.40
312	N 578041.5263	E 1372592.9432

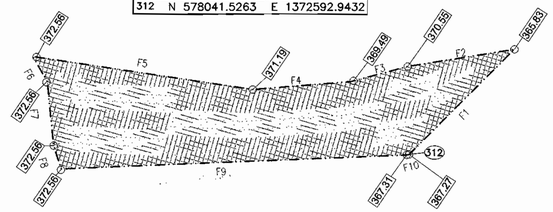

PUBLIC 100 YR FLOODPLAIN
DRAINAGE AND UTILITY EASEMENT
SCALE: 1"=40'

PLAN
SCALE: 1"=40'

CURVE DATA TABLE

CURVE	ARC	RADIUS	TANGENT	DELTA	CHORD
C16	167.70'	800.00'	84.10'	12°00'40"	S 48°54'47"W 165.52'
C17	147.31'	400.00'	100.72'	20°15'42"	N 48°24'42"E 175.91'

APPROVED: HOWARD COUNTY DEPARTMENT OF PLANNING AND ZONING

CHIEF, DEVELOPMENT ENGINEERING DIVISION — DATE 11/4/03
CHIEF, DIVISION OF LAND DEVELOPMENT — DATE 2/19/04
DIRECTOR — DATE 2/24/04

SITE DEVELOPMENT PLAN

VILLAGE CREST
PART OF PARCEL D-1
PHASE 1, APT. BLDGS. A-F,
91 AGE RESTRICTED ADULT HOUSING UNITS

TAX MAP #25 BLOCK 20 — PARCEL P/O 98
2ND ELECTION DISTRICT — HOWARD COUNTY, MARYLAND

FREDERICK WARD ASSOCIATES, INC.
ARCHITECTS | ENGINEERS | PLANNERS | SURVEYORS |
7125 RIVERWOOD DRIVE
COLUMBIA, MARYLAND 21046-2354
410-720-6900
410-720-6226 fax
www.frederickward.com

STATE OF MARYLAND — ROBERT HARRIS YOUNG — No. 16193 — PROFESSIONAL ENGINEER

DESIGN BY:	RJ
DRAWN BY:	RJ
CHECKED BY:	RHY
DATE:	SEPT. 2003
SCALE:	1"=40'
W.O. NO.:	2018121.00

SHEET 3 OF 16

OWNER :
TAYLOR FAMILY LIMITED PARTNERSHIP A
C/O LAND DESIGN & DEVELOPMENT, INC.
8000 MAIN STREET
ELLICOTT CITY, MD 21043
ATTN: MR. DONALD R. REUWER
PHONE: (410) 480-9105

DEVELOPER
LAND DESIGN & DEVELOPMENT, INC.
8000 MAIN STREET
ELLICOTT CITY, MD 21043
ATTN: MR. DONALD R. REUWER
PHONE: (410) 480-9105

SDP-02-94

M:\PROJECTS\2018121\ENGR\dwg\Sdp-APT\03SPLAN.dwg Fri Sep 19 16:42:58 2003 E4

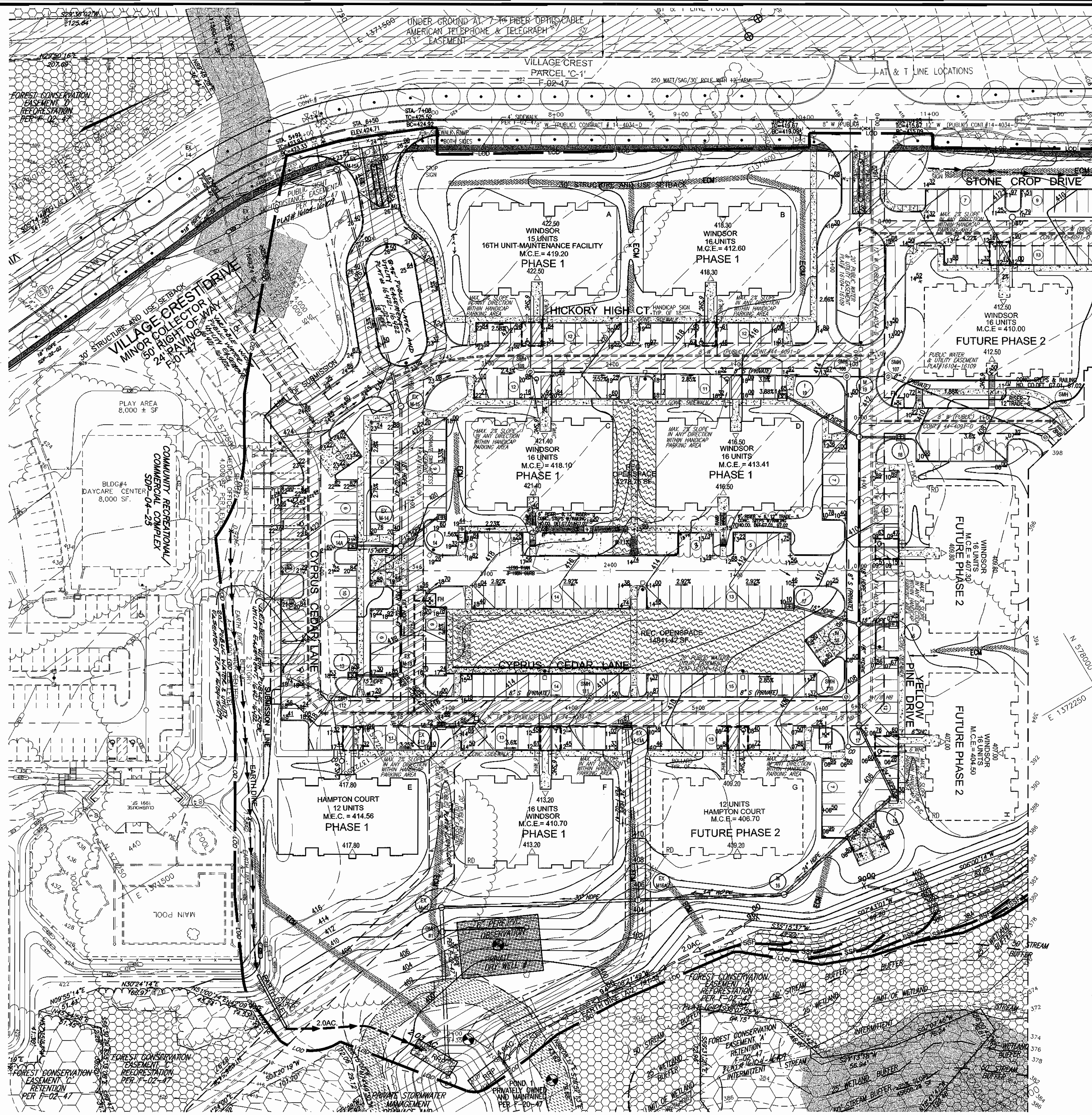

LEGEND

WETLAND BUFFER	
STREAM BUFFER	
WETLAND	
100YR FLOODPLAIN	
FOREST CONSERVATION REFORESTATION EASEMENT	
FOREST RETENTION EASEMENT	
RECREATIONAL OPENSPACE	
RECREATIONAL OPENSPACE TOWNHOUSES (PARCEL-E-1)	
PRIVATE SWM ACCESS EASEMENT	

EXISTING CONTOUR	382
PROPOSED CONTOUR	82
SPOT ELEVATION	+82 53
DIRECTION OF FLOW	
TREE PROTECTION FENCE	
EXISTING TREES TO REMAIN	
PARKING LAMP	Overhead
STABILIZED CONSTRUCTION ENTRANCE	SCE
SILT FENCE	SF
SUPER SILT FENCE	SSF
EARTH DIKE	
LIMIT OF DISTURBANCE	LOD
EROSION CONTROL MATTING	ECM

ALL EARTH DIKES ARE TO BE PLACED IN WORKING ORDER AT THE END OF EACH WORKING DAY.

ALL REAR ROOF LEADERS FROM BUILDING F, G, H, I, M , N, AND O SHALL TIE INTO THE STORM DRAIN SYSTEM AND SHALL NOT BE DISCHARGE OVER LAND.

REVIEWED FOR HOWARD SCD AND MEETS TECHNICAL REQUIREMENTS

[signature] 10-29-03
USDA-NATURAL RESOURCES CONSERVATION SERVICE — DATE

THIS DEVELOPMENT PLAN IS APPROVED FOR SOIL EROSION AND SEDIMENT CONTROL BY THE HOWARD SOIL CONSERVATION DISTRICT

[signature] 10-29-03
HOWARD SCD — DATE

DEVELOPER'S CERTIFICATE

"I/WE CERTIFY THAT ALL DEVELOPMENT AND CONSTRUCTION WILL BE DONE ACCORDING TO THIS PLAN FOR SEDIMENT AND EROSION CONTROL, AND THAT ALL RESPONSIBLE PERSONNEL INVOLVED IN THE CONSTRUCTION PROJECT WILL HAVE A CERTIFICATE OF ATTENDANCE AT A DEPARTMENT OF THE ENVIRONMENT APPROVED TRAINING PROGRAM FOR THE CONTROL OF SEDIMENT AND EROSION BEFORE BEGINNING THE PROJECT. I ALSO AUTHORIZE PERIODIC ON-SITE INSPECTION BY THE HOWARD SOIL CONSERVATION DISTRICT.

[signature] 10/17/03
SIGNATURE OF DEVELOPER — DATE
DONALD REUWER

ENGINEERS CERTIFICATE

"I CERTIFY THAT THIS PLAN FOR SEDIMENT AND EROSION CONTROL REPRESENTS A PRACTICAL AND WORKABLE PLAN BASED ON MY PERSONAL KNOWLEDGE OF THE SITE CONDITIONS AND THAT IT WAS PREPARED IN ACCORDANCE WITH THE REQUIREMENTS OF THE HOWARD SOIL CONSERVATION DISTRICT.

[signature] 10/17/03
SIGNATURE OF ENGINEER — DATE
ROBERT H. VOGEL

APPROVED: HOWARD COUNTY DEPARTMENT OF PLANNING AND ZONING

[signature] 11/4/03
CHIEF, DEVELOPMENT ENGINEERING DIVISION — DATE

[signature] 2/19/04
CHIEF, DIVISION OF LAND DEVELOPMENT — DATE

[signature] 2/20/04
DIRECTOR — DATE

PLAN
SCALE: 1"=40'

OWNER :

TAYLOR FAMILY LIMITED PARTNERSHIP A
C/O LAND DESIGN & DEVELOPMENT, INC.
8000 MAIN STREET
ELLICOTT CITY, MD 21043
ATTN: MR. DONALD R. REUWER
PHONE: (410) 480-9105

DEVELOPER

LAND DESIGN & DEVELOPMENT, INC.
8000 MAIN STREET
ELLICOTT CITY, MD 21043
ATTN: MR. DONALD R. REUWER
PHONE: (410) 480-9105

SITE DEVELOPMENT PLAN
GRADING AND SEDIMENT CONTROL PLAN
VILLAGE CREST
PART OF PARCEL D-1
PHASE 1, APT. BLDGS. A-F,
91 AGE RESTRICTED ADULT HOUSING UNITS

TAX MAP #25 BLOCK 20 — PARCEL P/O 98
2ND ELECTION DISTRICT — HOWARD COUNTY, MARYLAND

FWA
FREDERICK WARD ASSOCIATES, INC.
ARCHITECTS | ENGINEERS | PLANNERS | SURVEYORS
7125 RIVERWOOD DRIVE
COLUMBIA, MARYLAND 21046-2354
410-720-6900
410-720-6226 fax
www.frederickward.com

STATE OF MARYLAND — ROBERT HARRIS VOGEL — No. 16193 — PROFESSIONAL ENGINEER
ROBERT H. VOGEL, PE NO. 16193

DESIGN BY:	RJ
DRAWN BY:	RJ
CHECKED BY:	RHV
DATE:	SEPT. 2003
SCALE:	AS SHOWN
W.O. NO.:	2018121.00

SDP-02-94

M:\PROJECTS\2018121\ENGR\dwg\Sdp-APT\10GSPLAN.dwg Fri Oct 17 13:31:54 2003 ROMA

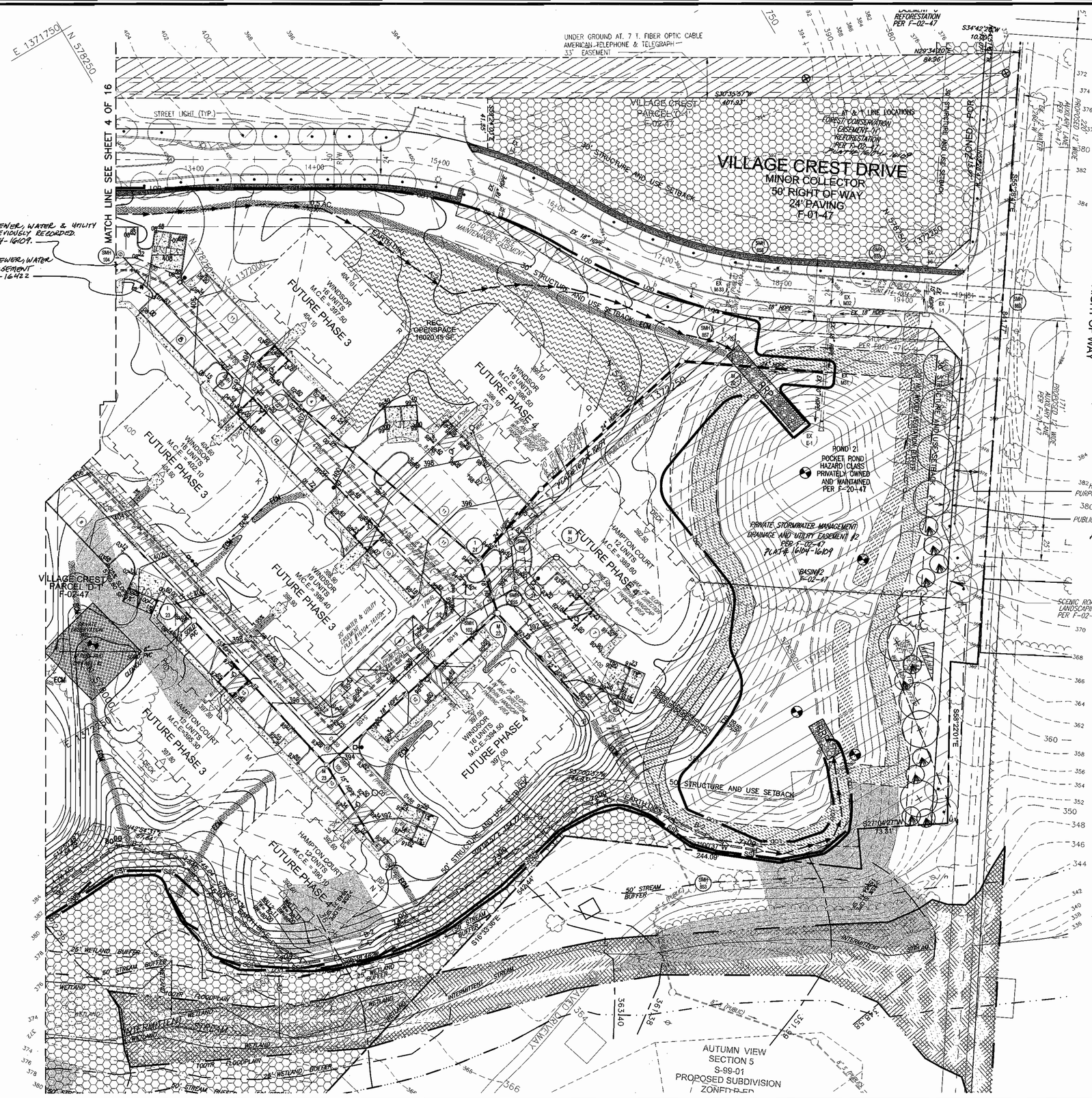

LEGEND

- EXISTING CONTOUR — 382
- PROPOSED CONTOUR — 382
- SPOT ELEVATION — +382.53
- DIRECTION OF FLOW
- TREE PROTECTION FENCE
- EXISTING TREES TO REMAIN
- PARKING LIGHT
- STABILIZED CONSTRUCTION ENTRANCE — SCE
- SILT FENCE — SF — SF
- SUPER SILT FENCE — SSF — SSF
- EARTH DIKE
- LIMIT OF DISTURBANCE — LOD
- WETLAND BUFFER
- STREAM BUFFER
- WETLAND
- 100YR FLOODPLAIN
- FOREST CONSERVATION REFORESTATION EASEMENT
- FOREST RETENTION EASEMENT

ALL EARTH DIKES ARE TO BE PLACED IN WORKING ORDER AT THE END OF EACH WORKING DAY

ALL REAR ROOF LEADERS FROM BUILDING F, G, H, I, M , N, AND O SHALL TIE INTO THE STORM DRAIN SYSTEM AND SHALL NOT BE DISCHARGE OVER LAND.

PLAN
SCALE: 1"=40'

REVIEWED FOR HOWARD SCD AND MEETS TECHNICAL REQUIREMENTS

Jim Myers — 10-29-03
USDA–NATURAL RESOURCES CONSERVATION SERVICE — DATE

THIS DEVELOPMENT PLAN IS APPROVED FOR SOIL EROSION AND SEDIMENT CONTROL BY THE HOWARD SOIL CONSERVATION DISTRICT

John K Robertson — 10-29-03
HOWARD SCD — DATE

DEVELOPER'S CERTIFICATE

"I/WE CERTIFY THAT ALL DEVELOPMENT AND CONSTRUCTION WILL BE DONE ACCORDING TO THIS PLAN FOR SEDIMENT AND EROSION CONTROL, AND THAT ALL RESPONSIBLE PERSONNEL INVOLVED IN THE CONSTRUCTION PROJECT WILL HAVE A CERTIFICATE OF ATTENDANCE AT A DEPARTMENT OF THE ENVIRONMENT APPROVED TRAINING PROGRAM FOR THE CONTROL OF SEDIMENT AND EROSION BEFORE BEGINNING THE PROJECT. I ALSO AUTHORIZE PERIODIC ON-SITE INSPECTION BY THE HOWARD SOIL CONSERVATION DISTRICT."

SIGNATURE OF DEVELOPER DONALD REUWER — 10/17/03 DATE

ENGINEERS CERTIFICATE

"I CERTIFY THAT THIS PLAN FOR SEDIMENT AND EROSION CONTROL REPRESENTS A PRACTICAL AND WORKABLE PLAN BASED ON MY PERSONAL KNOWLEDGE OF THE SITE CONDITIONS AND THAT IT WAS PREPARED IN ACCORDANCE WITH THE REQUIREMENTS OF THE HOWARD SOIL CONSERVATION DISTRICT.

SIGNATURE OF ENGINEER ROBERT H. VOGEL — 10/17/03 DATE

APPROVED: HOWARD COUNTY DEPARTMENT OF PLANNING AND ZONING

CHIEF, DEVELOPMENT ENGINEERING DIVISION — 1/6/03 DATE
CHIEF, DIVISION OF LAND DEVELOPMENT — 2/19/04 DATE
DIRECTOR — 2/20/04 DATE

SITE DEVELOPMENT PLAN
GRADING AND SEDIMENT CONTROL PLAN II
VILLAGE CREST
PART OF PARCEL D-1
PHASE 1, APT. BLDGS. A-F,
91 AGE RESTRICTED ADULT HOUSING UNITS

TAX MAP #25 BLOCK 20 — PARCEL P/O 98
2ND ELECTION DISTRICT — HOWARD COUNTY, MARYLAND

OWNER :
TAYLOR FAMILY LIMITED PARTNERSHIP A
C/O LAND DESIGN & DEVELOPMENT, INC.
8000 MAIN STREET
ELLICOTT CITY, MD 21043
ATTN: MR. DONALD R. REUWER
PHONE: (410) 480-9105

DEVELOPER
LAND DESIGN & DEVELOPMENT, INC.
8000 MAIN STREET
ELLICOTT CITY, MD 21043
ATTN: MR. DONALD R. REUWER
PHONE: (410) 480-9105

FREDERICK WARD ASSOCIATES, INC.
ARCHITECTS | ENGINEERS | PLANNERS | SURVEYORS
7125 RIVERWOOD DRIVE
COLUMBIA, MARYLAND 21046–2354
410–720–6900
410–720–6226 fax
www.frederickward.com

STATE OF MARYLAND — ROBERT HARRIS VOGEL — No. 16193 — PROFESSIONAL ENGINEER
ROBERT H. VOGEL, P.E. NO. 16193

DESIGN BY:	RJ
DRAWN BY:	RJ
CHECKED BY:	RHV
DATE:	SEPT. 2003
SCALE:	AS SHOWN
W.O. NO.:	2018121.00

SHEET 5 OF 16

SDP-02-94

M:\PROJECTS\2018121\ENGR\dwg\Sdp-AP1\116SPLAN.dwg Tue Oct 07 08:38:13 2003 E4

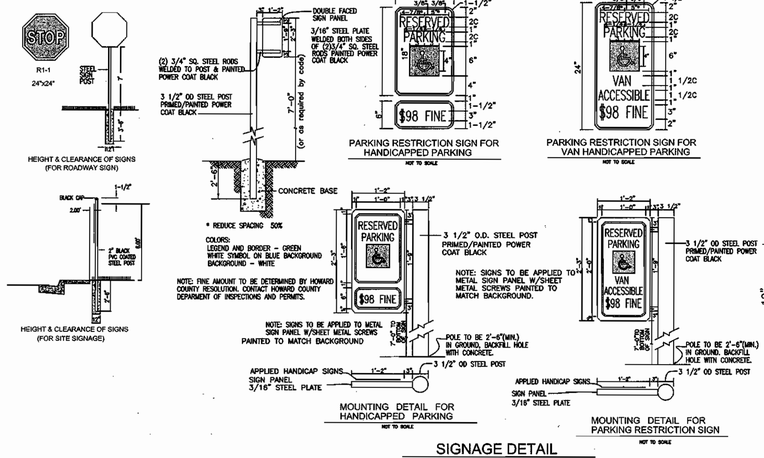

SIGNAGE DETAIL
NOT TO SCALE

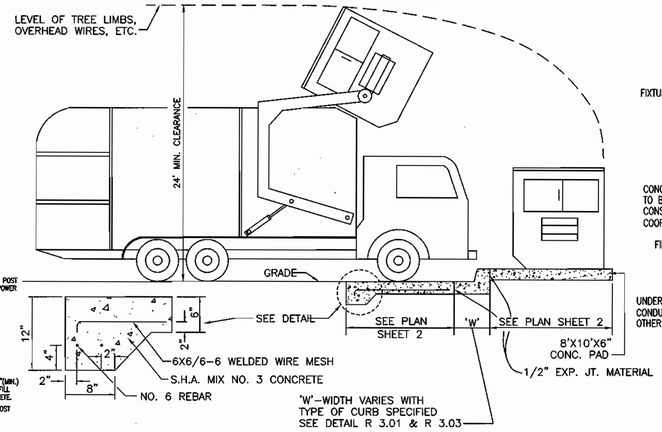

SOLID WASTE SERVICE PAD
HOWARD COUNTY STD. R 11.01
NOT TO SCALE
FOR DUMPSTER ENCLOSURE DETAIL SEE ARCHITECTURAL PLANS

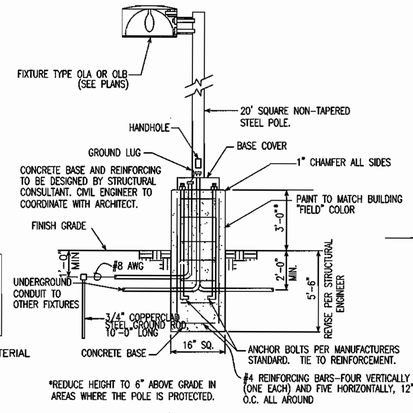

LIGHTING STANDARD
SCALE: NTS

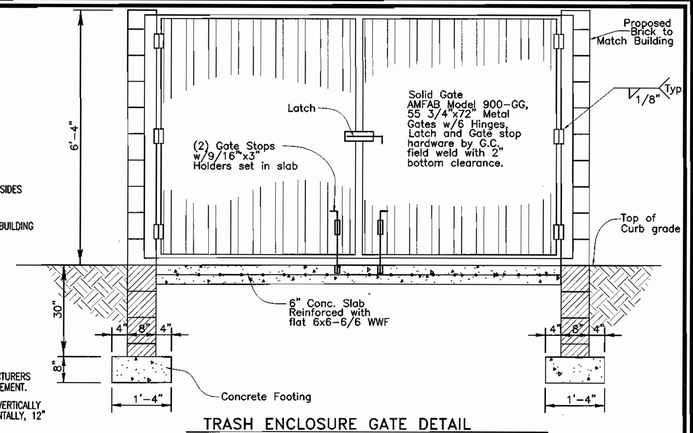

TRASH ENCLOSURE GATE DETAIL
NO SCALE

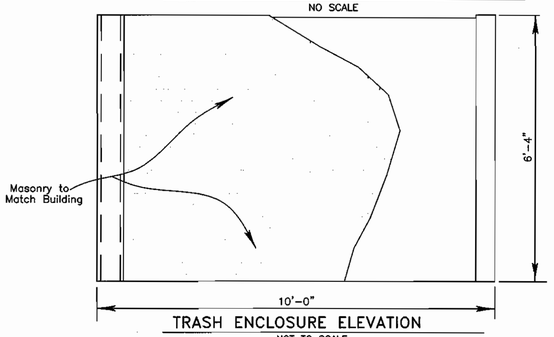

TRASH ENCLOSURE ELEVATION
NOT TO SCALE

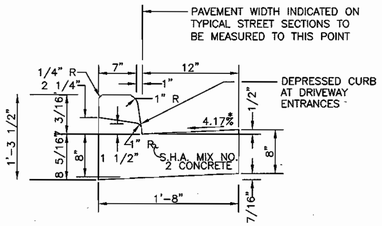

NOTE : DEPRESSED CURB IN HANDICAP ACCESSABLE AREAS SHALL HAVE A 0.0417'(1/2") RISE FROM PAVING TO TOP OF CURB.

STANDARD COMBINATION CURB AND GUTTER
HOWARD COUNTY STANDARD R-3.01
NOT TO SCALE

* GUTTER PAN AT THE MEDIAN EDGE OF INTERMEDIATE ARTERIAL OR THE HIGH SIDE OF SUPERELEVATED SECTIONS SHALL BE SLOPED AT THE SAME RATE AND IN THE SAME DIRECTION AS THE PAVEMENT. MATCH PAVEMENT CROSS SLOPE WHEN CURB IS LOCATED ON THE LOW SIDE OF SUPERELEVATED SECTION AND THE RATE OF SUPERELEVATION IS GREATER THAN 3% FOR MODIFIED CURB AND GUTTER.

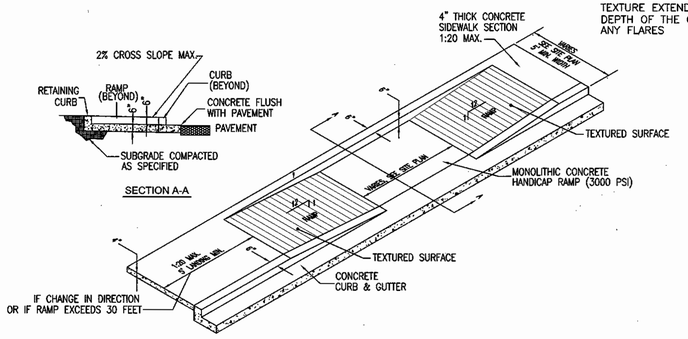

SIDEWALK HANDICAP RAMP DETAIL
NOT TO SCALE

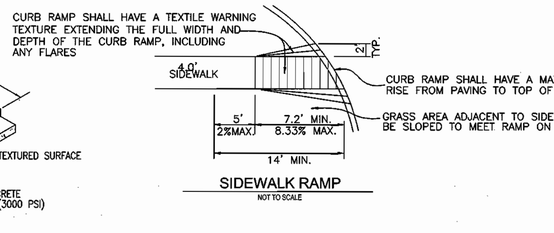

SIDEWALK RAMP
NOT TO SCALE

P-2 LIGHT DUTY PAVING SECTION N.T.S.
- 1 1/2" BIT. CONC. SURFACE
- 2 1/2" BIT. CONC. BASE
- 6" GRADED AGGREGATE BASE (GAB), SUBGRADE

GRANULAR BASE ALTERNATES

PAVMENT SECTIONS

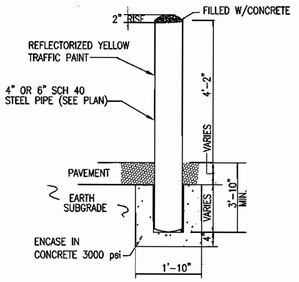

BOLLARD
NOT TO SCALE

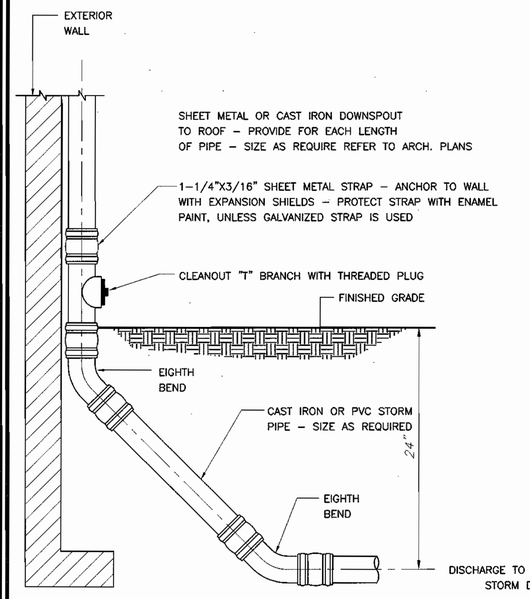

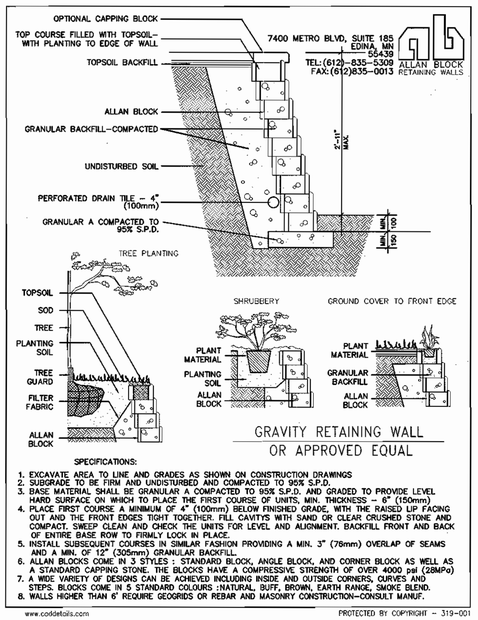

GRAVITY RETAINING WALL OR APPROVED EQUAL

SPECIFICATIONS:
1. EXCAVATE AREA TO LINE AND GRADES AS SHOWN ON CONSTRUCTION DRAWINGS
2. SUBGRADE TO BE FIRM AND UNDISTURBED AND COMPACTED TO 95% S.P.D.
3. BASE MATERIAL SHALL BE GRANULAR A COMPACTED TO 95% S.P.D. AND GRADED TO PROVIDE LEVEL HARD SURFACE ON WHICH TO PLACE THE FIRST COURSE OF UNITS. MIN. THICKNESS - 6" (150mm)
4. PLACE FIRST COURSE A MINIMUM OF 4" (100mm) BELOW FINISHED GRADE, WITH THE RAISED LIP FACING OUT AND THE FRONT EDGES TIGHT TOGETHER. FILL CAVITYS WITH SAND OR CLEAR CRUSHED STONE AND COMPACT. SWEEP CLEAN AND CHECK THE UNITS FOR LEVEL AND ALIGNMENT. BACKFILL FRONT AND BACK OF ENTIRE BASE ROW TO FIRMLY LOCK IN PLACE.
5. INSTALL SUBSEQUENT COURSES IN SIMILAR FASHION PROVIDING A MIN. 3" (76mm) OVERLAP OF SEAMS AND A MIN. OF 12" (305mm) GRANULAR BACKFILL.
6. ALLAN BLOCKS COME IN 3 STYLES : STANDARD BLOCK, ANGLE BLOCK, AND CORNER BLOCK AS WELL AS A STANDARD CAPPING STONE. THE BLOCKS HAVE A COMPRESSIVE STRENGTH OF OVER 4000 psi (28MPa)
7. A WIDE VARIETY OF DESIGNS CAN BE ACHIEVED INCLUDING INSIDE AND OUTSIDE CORNERS, CURVES AND STEPS. BLOCKS COME IN 5 STANDARD COLOURS :NATURAL, BUFF, BROWN, EARTH RANGE, SMOKE BLEND.
8. WALLS HIGHER THAN 6' REQUIRE GEOGRIDS OR REBAR AND MASONRY CONSTRUCTION-CONSULT MANUF.

www.coddetails.com
PROTECTED BY COPYRIGHT - 319-001

CONCRETE SIDEWALK
HOWARD COUNTY STANDARD DETAIL R3.05

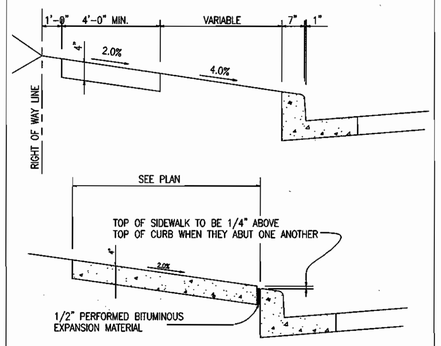

CONSTRUCTION SPECIFICATIONS

1. SIDEWALK TO BE SCRIBED IN 5'-0" MAXIMUM SQUARES.
2. EXPANSION JOINTS ACROSS THE SIDEWALK NOT TO BE MORE THAN 15' APART.
3. 1/2" PREFORMED BITUMINOUS EXPANSION MATERIAL IN EXPANSION JOINTS TO BE KEPT 1/4" BELOW SURFACE OF SIDEWALK.
4. CONCRETE TO BE MIX NUMBER 2.
5. WHERE SIDEWALK ABUTS CURB, SIDEWALK SHALL BE 1/4" ABOVE CURB WITH 1/2" PREFORMED BITUMINOUS EXPANSION MATERIAL BETWEEN SIDEWALK AND CURB.
6. ON LONGITUDINAL SIDEWALK GRADES OF 5% OR GREATER, A CONCRETE HEADER, 6" THICK AND 6" DEEP BELOW THE NORMAL 4" SIDEWALK THICKNESS SHALL CONSTRUCTED FOR THE FULL WIDTH OF THE SIDEWALK AT INTERVALS\ OF 48 FEET. THE HEADERS SHALL BE PLACED AT EXPANSION JOINT LOCATIONS AND SHALL BE MONOLITHIC WITH THE CURB.
7. SIDEWALK WIDTH ADJACENT TO CURB SHALL BE 5'-0" MINIMUM EXCEPT SIDEWALK ADJACENT TO CURB IN CUL-DE-SAC BULBS MAY BE 4.0' WIDE.
8. SIDEWALK LOCATED 2' OR MORE FROM CURB MAY BE 4'-0" IN WIDTH WITH A 5'X5' PAVED SECTION PLACED 200' APART.

APPROVED: HOWARD COUNTY DEPARTMENT OF PLANNING AND ZONING

CHIEF, DEVELOPMENT ENGINEERING DIVISION	DATE 1/4/05
CHIEF, DIVISION OF LAND DEVELOPMENT	DATE 2/9/07
DIRECTOR	DATE 2/9/07

SITE DEVELOPMENT PLAN
SITE DETAILS
VILLAGE CREST
PART OF PARCEL D-1
PHASE 1, APT. BLDGS. A-F,
91 AGE RESTRICTED ADULT HOUSING UNITS

TAX MAP #25 BLOCK 20 — PARCEL P/O 98
2ND ELECTION DISTRICT — HOWARD COUNTY, MARYLAND

OWNER :
TAYLOR FAMILY LIMITED PARTNERSHIP A
C/O LAND DESIGN & DEVELOPMENT, INC.
8000 MAIN STREET
ELLICOTT CITY, MD 21043
ATTN: MR. DONALD R. REUWER
PHONE: (410) 480-9105

DEVELOPER
LAND DESIGN & DEVELOPMENT, INC.
8000 MAIN STREET
ELLICOTT CITY, MD 21043
ATTN: MR. DONALD R. REUWER
PHONE: (410) 480-9105

FREDERICK WARD ASSOCIATES, INC.
ARCHITECTS | ENGINEERS | PLANNERS | SURVEYORS
7125 RIVERWOOD DRIVE
COLUMBIA, MARYLAND 21046-2354
410-720-6900
410-720-6226 fax
www.frederickward.com

STATE OF MARYLAND — ROBERT HARRIS VOGEL — No. 16193 — PROFESSIONAL ENGINEER
ROBERT H. VOGEL PE No. 16193

DESIGN BY:	RJ
DRAWN BY:	RJ
CHECKED BY:	RHV
DATE:	SEPT. 2003
SCALE:	AS SHOWN
W.O. NO.:	2018121.00

SHEET 6 OF 16

SDP-02-94

M:\PROJECTS\2018121\ENGR\dwg\Sdp-APT\04SDETAIL.dwg Fri Sep 19 16:44:50 2003 E4

DETAIL 24 - STABILIZED CONSTRUCTION ENTRANCE

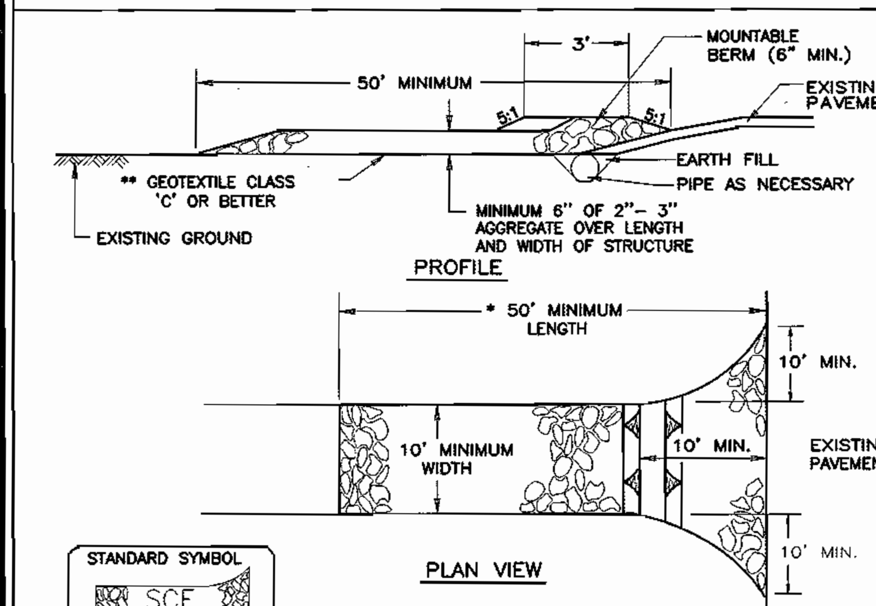

Construction Specification

1. Length – minimum of 50' (* 30' for a single residence lot).
2. Width – 10' minimum, should be flared at the existing road to provide a turning radius.
3. Geotextile fabric (filter cloth) shall be placed over the existing ground prior to placing stone. ** The plan approval authority may not require single family residences to use geotextile.
4. Stone – crushed aggregate (2" to 3") or reclaimed or recycled concrete equivalent shall be placed at least 6" deep over the length and width of the entrance.
5. Surface Water – all surface water flowing to or diverted toward construction entrances shall be piped through the entrance, maintaining positive drainage. Pipe installed through the stabilized construction entrance shall be protected with a mountable berm with 5:1 slopes and a minimum of 6" of stone over the pipe. Pipe has to be sized according to the drainage. When the SCE is located at a high spot and has no drainage to convey, a pipe will not be necessary. Pipe should be sized according to the amount of runoff to be conveyed. A 6" minimum will be required.
6. Location – A stabilized construction entrance shall be located at every point where construction traffic enters or leaves a construction site. Vehicles leaving the site must travel over the entire length of the stabilized construction entrance.

U.S. DEPARTMENT OF AGRICULTURE SOIL CONSERVATION SERVICE	PAGE F - 17 - 3	MARYLAND DEPARTMENT OF ENVIRONMENT WATER MANAGEMENT ADMINISTRATION

DETAIL 33 - SUPER SILT FENCE

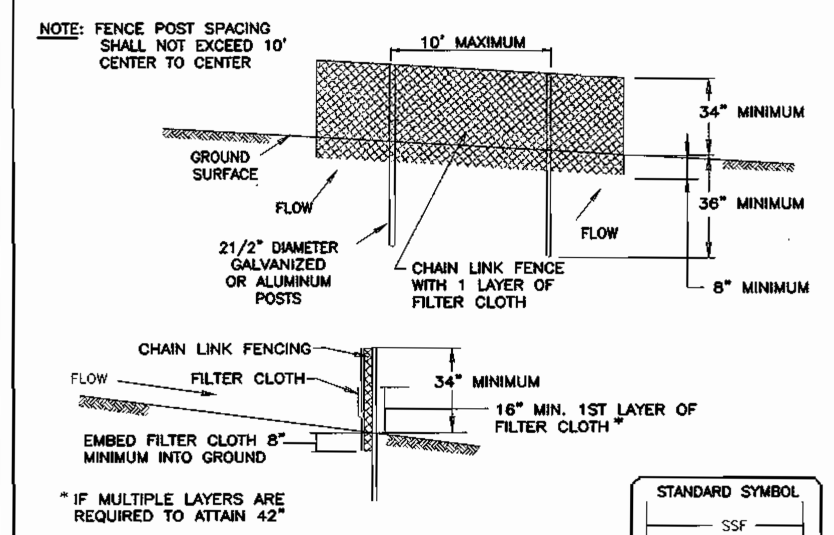

Construction Specifications

1. Fencing shall be 42" in height and constructed in accordance with the latest Maryland State Highway Details for Chain Link Fencing. The specification for a 6' fence shall be used, substituting 42" fabric and 6' length posts.

2. Chain link fence shall be fastened securely to the fence posts with wire ties. The lower tension wire, brace and truss rods, drive anchors and post caps are not required except on the ends of the fence.

3. Filter cloth shall be fastened securely to the chain link fence with ties spaced every 24" at the top and mid section.

4. Filter cloth shall be embedded a minimum of 8" into the ground.

5. When two sections of filter cloth adjoin each other, they shall be overlapped by 6" and folded.

6. Maintenance shall be performed as needed and silt buildups removed when "bulges" develop in the silt fence, or when silt reaches 50% of fence height

7. Filter cloth shall be fastened securely to each fence post with wire ties or staples at top and mid section and shall meet the following requirements for Geotextile Class F:

Tensile Strength	50 lbs/in (min.)	Test: MSMT 509
Tensile Modulus	20 lbs/in (min.)	Test: MSMT 509
Flow Rate	0.3 gal/ft²/minute (max.)	Test: MSMT 322
Filtering Efficiency	75% (min.)	Test: MSMT 322

U.S. DEPARTMENT OF AGRICULTURE SOIL CONSERVATION SERVICE	PAGE H - 26 - 3	MARYLAND DEPARTMENT OF ENVIRONMENT WATER MANAGEMENT ADMINISTRATION

DETAIL 1 - EARTH DIKE

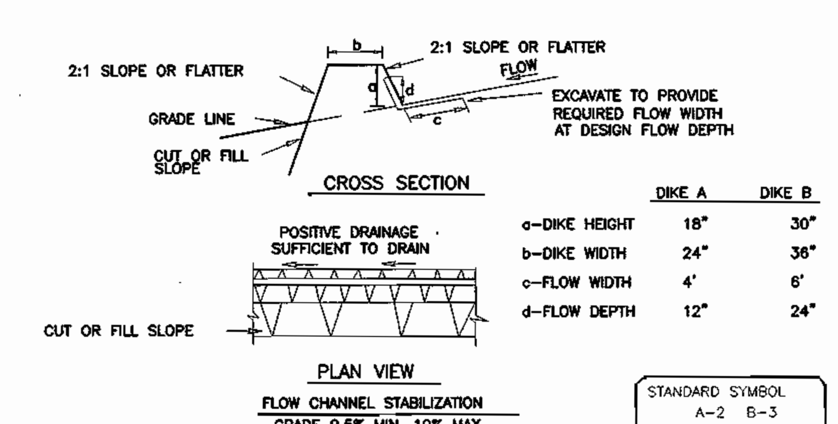

	DIKE A	DIKE B
a–DIKE HEIGHT	18"	30"
b–DIKE WIDTH	24"	36"
c–FLOW WIDTH	4'	6'
d–FLOW DEPTH	12"	24"

1. Seed and cover with straw mulch.
2. Seed and cover with Erosion Control Matting or line with sod.
3. 4" – 7" stone or recycled concrete equivalent pressed into the soil 7" minimum

Construction Specifications

1. All temporary earth dikes shall have uninterrupted positive grade to an outlet. Spot elevations may be necessary for grades less than 1%.
2. Runoff diverted from a disturbed area shall be conveyed to a sediment trapping device.
3. Runoff diverted from an undisturbed area shall outlet directly into an undisturbed, stabilized area at a non-erosive velocity.
4. All trees, brush, stumps, obstructions, and other objectional material shall be removed and disposed of so as not to interfere with the proper functioning of the dike.
5. The dike shall be excavated or shaped to line, grade and cross section as required to meet the criteria specified herein and be free of bank projections or other irregularities which will impede normal flow.
6. Fill shall be compacted by earth moving equipment.
7. All earth removed and not needed for construction shall be placed so that it will not interfere with the functioning of the dike.
8. Inspection and maintenance must be provided periodically and after each rain event.

U.S. DEPARTMENT OF AGRICULTURE SOIL CONSERVATION SERVICE	PAGE A - 1 - 6	MARYLAND DEPARTMENT OF ENVIRONMENT WATER MANAGEMENT ADMINISTRATION

21.0 STANDARDS AND SPECIFICATIONS FOT TOP SOIL

Definition

Placement of topsoil over a prepared subsoil prior to establishment of permanent vegetation.

Purpose

To provide a suitable soil medium for vegetable growth. Soils of concern have low moisture content, low nutrient levels, low pH, materials toxic to plants, and/or unacceptable soil gradation.

Conditions Where Practice Applies

I. This practice is limited to areas having 2:1 or flatter slopes where:

a. The texture of the exposed subsoil/parent material is not adequate to produce vegetative growth.

b. The soil material is so shallow that the rooting zone is not deep enough to support plants or furnish continuing supplies of moisture and plant nutrients.

c. The original soil to be vegetated contains material toxic to plant growth.

d. The soil is so acidic that treatment with limestone is not feasible.

II. For the purpose of these Standards and Specifications, areas having slopes steeper than 2:1 require special consideration and design for adequate stabilization. Areas having slopes steeper than 2:1 shall have the appropriate stabilization shown on the plans.

Construction and Material Specifications

I. Topsoil salvaged from the existing site may be used provided that it meets the standards as set forth in these specifications. Typically, the depth of topsoil to be salvaged for a given soil type can be found in the representative soil profile section in the Soil Survey published by USDA-SCS in cooperation with Maryland Agricultural Experimental Station.

II. Topsoil Specifications – Soil to be used as topsoil must meet the following:

i. Topsoil shall be a loam, sandy loam, clay loam, silt loam, sandy clay loam, loamy sand. Other soils may be used if recommended by an agronomist or a soil scientist and approved by the appropriate approval authority. Regardless, topsoil shall not be a mixture of contrasting textured subsoils and shall contain less than 5% by volume of cinders, stones, slag, coarse fragments, gravel, sticks, roots, trash, or other materials larger that 1 and 1/2" in diameter.

ii. Topsoil must be free of plants or plant parts such as Bermuda grass, quackgrass, Johnsongrass, nutsedge, poison ivy, thistle, or others as specified.

iii. Where the subsoil is either highly acidic or composed of heavy clays, ground limestone shall be spread at the rate of 4–8 tons/acre (200–400 pounds per 1,000 square feet) prior to the placement of topsoil. Lime shall be distributed uniformly over designated areas and worked into the soil in conjunction with tillage operations as described in the following procedures.

II. For sites having disturbed areas under 5 acres:

i. Place topsoil (if required) and apply soil amendments as specified in 20.0 Vegetative Stabilization – Section I – Vegetative Stabilization Methods and Materials.

iii. For sites having disturbed areas over 5 acres:
i. On soil meeting topsoil specifications, obtain test results dictating fertilizer and lime amendments required to bring the soil into compliance with the following:
a. pH for topsoil shall be between 6.0 and 7.5. If the tested soil demonstrates a pH of less than 6.0, sufficient lime shall be prescribed to raise the pH to 6.5 or higher.
b. Organic content of topsoil shall be not less than 1.5 percent by weight.
c. Topsoil having soluble salt content greater than 500 parts per million shall not be used.
d. No sod or seed shall be placed on soil soil which has been treated with soil sterilants or chemicals used for weed control until sufficient time has elapsed (14 days min.) to permit dissipation of phyto-toxic materials.

NOTE: Topsoil substitutes or amendments, as recommended by a qualified agronomist or soil scientist and approved by the appropriate approval authority, may be used in lieu of natural topsoil.

ii. Place topsoil (if required) and apply soil amendments specified in 20.0 Vegetative Stabilization–Section I–Vegetative Stabilization Methods and Materials.

V. Topsoil Application

i. When topsoiling, maintain needed erosion and sediment control practices such as diversions, Grade Stabilization Structures, Earth Dikes, Slope Silt Fence and Sediment Traps and Basins.

ii. Grades on the areas to be topsoiled, which have been previously established, shall be maintained, albeit 4" – 8" higher in elevation.

iii. Topsoil shall be uniformly distributed in a 4" – 8" layer and lightly compacted to a minimum thickness of 4". Spreading shall be performed in such a manner that sodding or seeding can proceed with a minimum of additional soil preparation and tillage. Any irregularities in the surface resulting from topsoiling or other operations shall be corrected in order to prevent the formation of depressions or water pockets.

iv. Topsoil shall not be place while the topsoil or subsoil is in a frozen or muddy condition, when the subsoil is excessively wet or in a condition that may otherwise be detrimental to proper grading and seedbed preparation.

SEDIMENT CONTROL NOTES

1. A minimum of 48 hours notice must be given to the Howard County Department of Inspection, License and Permits Sediment Control Division prior to the start of any construction (313–1855).
2. All vegetation and structural practices are to be installed according to the provisions of this plan and are to be in conformance with the 1994 MARYLAND STANDARDS AND SPECIFICATIONS FOR SOIL EROSION AND SEDIMENT CONTROL. and revisions thereto.
3. Following initial soil disturbance or redisturbance, permanent or temporary stabilization shall be completed within: (a) 7 calendar days for all perimeter sediment control structures, dikes, perimeter slopes, and all slopes greater than 3:1, (b) 14 days as to all other disturbed or graded areas on the project site.
4. All sediment traps/basins shown must be fenced and warning signs posted around their perimeter in accordance with Vol. 1, Chapter 7, HOWARD COUNTY DESIGN MANUAL, Storm Drainage.
5. All disturbed areas must be stabilized within the time period specified above in accordance with the 1994 MARYLAND STANDARDS AND SPECIFICATIONS FOR SOIL EROSION AND SEDIMENT CONTROL for permanent seeding, sod, temporary seeding, and mulching (Sec. G). Temporary stabilization with mulch alone shall be done when recommended seeding dates do not allow for proper germination and establishment of grasses.
6. All sediment control structures are to remain in place and are to be maintained in operative condition until permission for their removal has been obtained from the Howard County Sediment Control Inspector.
7. Site Analysis :

Total Area	(TOTAL AREA: 73.84 AC) AREA OF SUBMISSION 18.2 AC
Area Disturbed	18.2 AC
Area to be roofed or paved	6.14 AC
Area to be vegetatively stabilized	12.06AC
Total Cut	24080 CY
Total Fill	24080 CY
Offsite waste/borrow area location	*

8. Any sediment control practice which is disturbed by grading activity for placement of utilities must be repaired on the same day of disturbance.
9. Additional sediment controls must be provided, if deemed necessary by the Howard County Sediment Control Inspector.
10. On all sites with disturbed areas in excess of 2 acres, approval of the inspection agency shall be requested upon completion of installation of perimeter erosion and sediment controls, but before proceeding with any other earth disturbance or grading. Other building or grading inspection approvals may not be authorized until this initial approval by the inspection agency is made.
11. Trenches for the construction of utilities is limited to three pipe lengths or that which shall be back-filled and stabilized within one working day, whichever is shorter.

* To be determined by contractor, with pre-approval of the Sediment Control Inspector with an approved and active grading permit

SEQUENCE OF CONSTRUCTION

1. OBTAIN ALL REQUIRED PERMITS FROM HOWARD COUNTY.
2. NOTIFY HOWARD COUNTY BUREAU OF INSPECTIONS AND PERMITS AT (410) 313–1880 AT LEAST 24 HOURS BEFORE STARTING ANY WORK.
3. INSTALL STABILIZED CONSTRUCTION ENTRANCE, SUPER SILT FENCE..........3 DAYS
4. SEDIMENT BASIN#1* & BASIN#2* IN USE, INSTALL EARTH DIKES..............4 DAYS
5. CONSTRUCT WATER AND SEWER AND REMAINING STORMDRAIN SYSTEM........1 WEEK
6. BEGIN BUILDING CONSTRUCTION....................................8 MONTHS
7. AS BUILDING CONSTRUCTION CONTINUES FINE GRADE SITE................4 DAYS
8. INSTALL CURB & GUTTER AND SIDEWALKS. BEGIN PAVING................2 WEEKS
9. CONSTRUCT DRY WELLS 1 AND 2 AND BLOCK CONNECTION TO DIVERSION MANHOLES..4 DAYS
10. WITH BUILDING, PAVING, AND CURB & GUTTER, COMPLETE STABILIZE SITE....3 DAYS
11. WITH SITE STABILIZED REMOVE BLOCKING FROM DIVERSION MANHOLES......2 DAYS
12. INSTALL LANDSCAPING...1 WEEK
13. WITH PERMISSION OF THE INSPECTOR, FLUSH STORM DRAIN SYSTEM AND REMOVE ALL SEDIMENT CONTROLS FROM THE SITE. STABILIZE ALL DISTURBED AREAS IMMEDIATELY.

*BASINS TO REMAIN FOR DEVELOPMENT OF PARCELS D–1 AND E–1 (F–02–47). CONTRACTOR TO MAINTAIN BASINS DURNING CONSTRUCTION.

DETAIL 22 - SILT FENCE

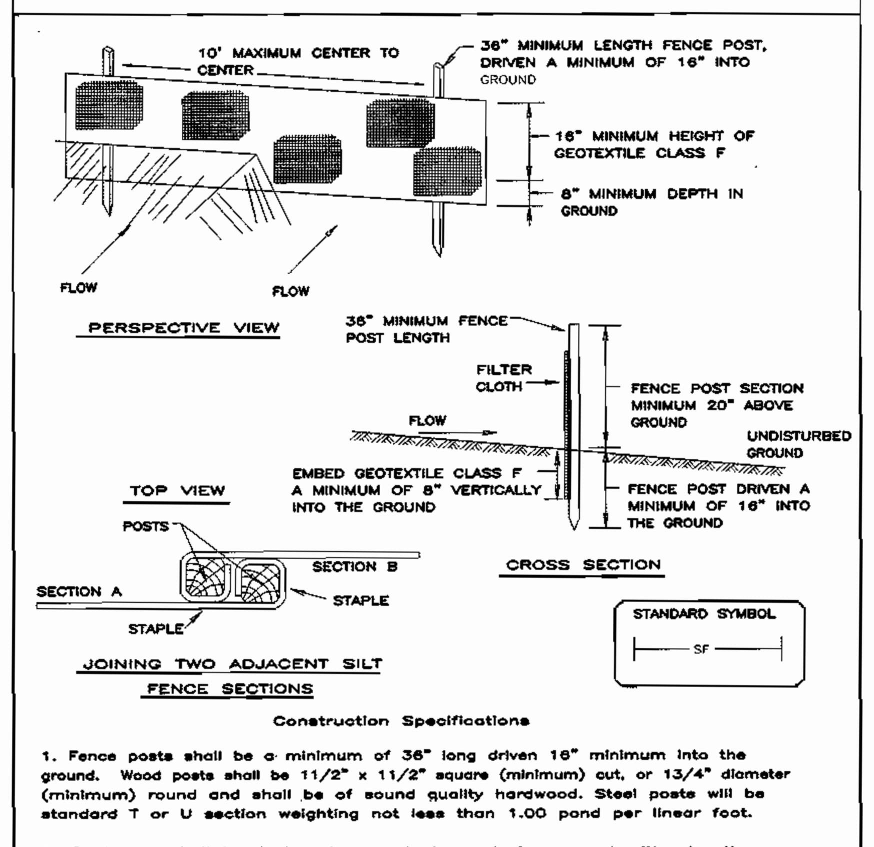

Construction Specifications

1. Fence posts shall be a minimum of 36" long driven 16" minimum into the ground. Wood posts shall be 11/2" x 11/2" square (minimum) cut, or 13/4" diameter (minimum) round and shall be of sound quality hardwood. Steel posts will be standard T or U section weighting not less than 1.00 pond per linear foot.

2. Geotextile shall be fastened securely to each fence post with wire ties or staples at top and midsection and shall meet the following requirements for Geotextile Class F:

Tensile Strength	50 lbs/in (min.)	Test: MSMT 509
Tensile Modulus	20 lbs/in (min.)	Test: MSMT 509
Flow Rate	0.3 gal ft² / minute (max.)	Test: MSMT 322
Filtering Efficiency	75% (min.)	Test: MSMT 322

3. Where ends of geotextile fabric come together, they shall be overlapped, folded and stapled to prevent sediment bypass.

4. Silt Fence shall be inspected after each rainfall event and maintained when bulges occur or when sediment accumulation reached 50% of the fabric height.

U.S. DEPARTMENT OF AGRICULTURE SOIL CONSERVATION SERVICE	PAGE E - 15 - 3	MARYLAND DEPARTMENT OF ENVIRONMENT WATER MANAGEMENT ADMINISTRATION

DETAIL 5 - RIP-RAP INFLOW PROTECTION

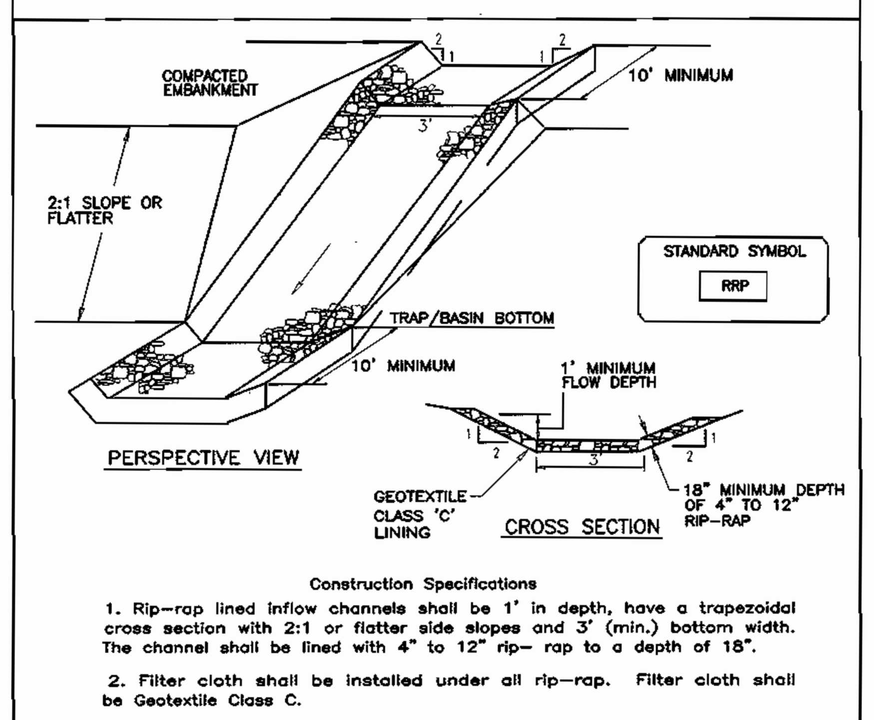

Construction Specifications

1. Rip-rap lined inflow channels shall be 1' in depth, have a trapezoidal cross section with 2:1 or flatter side slopes and 3' (min.) bottom width. The channel shall be lined with 4" to 12" rip- rap to a depth of 18".

2. Filter cloth shall be installed under all rip-rap. Filter cloth shall be Geotextile Class C.

3. Entrance and exit sections shall be installed as shown on the detail section.

4. Rip-rap used for the lining may be recycled for permanent outlet protection if the basin is to be converted to a stormwater management facility.

5. Gabion Inflow Protection may be used in lieu of Rip-rap Inflow Protection.

6. Rip-rap should blend into existing ground.

7. Rip-rap Inflow Protection shall be used where the slope is between 4:1 and 10:1, for slopes flatter than 10:1 use Earth Dike or Temporary Swale lining criteria.

U.S. DEPARTMENT OF AGRICULTURE SOIL CONSERVATION SERVICE	PAGE B - 6 - 2	MARYLAND DEPARTMENT OF ENVIRONMENT WATER MANAGEMENT ADMINISTRATION

TEMPORARY SEEDING NOTES

SEEDBED PREPARATION: Loosen upper three inches of soil by racking, discing or other acceptable means before seeding, if not if not previously loosened.

SOIL AMENDMENTS: Apply 600 lbs. per acre 10–10–10 fertilizer (14 lbs./1000 sq.ft).

SEEDING: For periods March 1 thru April 30 and from August 15 thru November 15, seed with 2 1/2 bushel per acre of annual rye (3.2 lbs./1000 sq.ft.) For the period May 1 thru August 14, seed with 3 lbs. per acre of weeping lovegrass (.07 lbs./1000 sq.ft.). For the period November 1 thru February 28, protect site by applying 2 tons per acre of well anchored straw mulch and seed as soon as possible in the spring, or use sod.

MULCHING: Apply 1 1/2 to 2 tons per acre (70 to 90 lbs./1000 sq.ft.) of unrotted small grain straw immediately after seeding. Anchor mulch immediately after application using mulch anchoring tool or 218 gallons per acre (5 gal/1000 sq.ft.) of emulsified asphalt on flat areas. On slopes 8 feet or higher, use 348 gallons per acre (8 gal/1000 sq.ft.) for anchoring.

REFER TO THE 1994 MARYLAND STANDARDS AND SPECIFICATIONS FOR SOIL EROSION AND SEDIMENT CONTROL FOR RATE AND METHODS NOT COVERED.

PERMANENT SEEDING NOTES

APPLY TO GRADED OR CLEARED AREAS NOT SUBJECT TO IMMEDIATE FURTHER DISTURBANCE WHERE A PERMANENT LONG–LIVED VEGETATIVE COVER IS NEEDED.

SEEDBED PREPARATION: Loosen upper three inches of soil by raking, discing or other acceptable means before seeding, if not previously loosened.

SOIL AMENDMENTS: In lieu of soil test recommendations, use one of the following schedules:

1) Preferred–Apply 2 tons per acre dolomitic limestone (92 lbs/100 sq.ft.) and 600 lbs per acre 10–10–10 fertilizer (14 lbs./1000 sq.ft.) before seeding. Harrow or disc into upper three inches of soil. At the time of seeding, apply 400 lbs. per acre 30–0–0 ureaform fertilizer (9 lbs/1000 sq.ft.)
2) Acceptable–Apply 2 tons per acre dolomatic limestone (92 lbs/1000 sq.ft.) and apply 1000 lbs. per acre 10–10–10– fertilizer (23 lbs./1000 sq.ft.) before seeding. Harrow or disc into upper three inches of soil.

SEEDING: For the periods March 1 thru April 30, and August 1 thru October 15, seed with 60 lbs. per acre (1.4 lbs/1000 sq.ft.) of Kentucky 31 Tall Fescue. For the period May 1 thru July 31, seed with 60 lbs. Kentucky 31 Tall Fescue per acre and 2 lbs. per acre (.05 lbs./1000 sq.ft.) of weeping lovegrass. During the period of October 16 thru February 28, protect site by: Option (1) 2 tons per acre well anchored straw mulch and seed as soon as possible in the spring. Option (2) Use sod. Option (3) Seed with 60 lbs/acre Kentucky 31 Tall Fescue and mulch with 2 tons/acre well anchored straw.

MULCHING: Apply 1 1/2 to 2 tons per acre (70 to 90 lbs/1000 sq. ft.) of unrotted small grain straw immediately after seeding. Anchor mulch immediately after application using mulch anchoring tool or 218 gallons per acre (5 gal/1000 sq.ft.) of emulsified asphalt on flat areas. On slopes 8 feet or higher, use 348 gallons per acre (8 gal/1000 sq.ft.) for anchoring.

MAINTENANCE: Inspect all seeded areas and make needed repairs, replacements and reseedings.

30.0 DUST CONTROL

Definition

Controlling dust blowing and movement on construction sites and roads.

Purpose

To prevent blowing and movement of dust from exposed soil surfaces, reduce on and off–site damage health hazards, and improve traffic safety.

Conditions Where Practice Applies

This practice is applicable to areas subject to dust blowing and movement Where on and off–site damage is likely without treatment.

Specifications

Temporary Methods

1. Mulches – See standards for vegetative stabilization with mulches only. Mulch should be crimped or tacked to prevent blowing.
2. Vegetative Cover – See standards for temporary vegetative cover.
3. Tillage – To roughen surface and bring clods to the surface. This is an emergency measure which should be used before soil blowing starts. Begin plowing on windward side of site. Chisel–type plows spaced about 12" apart, spring–toothed harrows, and similar plows are examples of equipment which may produce the desired effect.
4. Irrigation – This is generally done as an emergency treatment. Site is sprinkled with water until the surface is moist. Repeat as needed. At no time should the site be irrigated to the point that runoff begins to flow.
5. Barriers – Solid board fences, silt fences, snow fences, burlap fences, straw bales, and similar material can be used to control air currents and soil blowing. Barriers placed at right angles to prevailing currents at intervals of about 10 times their height are effective in controlling soil blowing.
6. Calcium Chloride – Apply at rates that will keep surface moist. May need retreatment.

Permanent Methods

1. Permanent vegetation – See standards for permanent vegetative cover, and permanent stabilization with sod. Existing trees or large shrubs may afford valuable protection if left in place.
2. Topsoiling – Covering with less erosive soil materials. See standards for Topsoiling.
3. Stone – Cover surface with crushed stone or coarse gravel.

References

1. Agricultural Handbook 346. Wind Erosion Forces in the United States and Their Use in Predicting Soil Loss.
2. Agricultural Information Bulletin 354. How to Control Wind Erosion, USDA–ARS.

NOTE:

ALL EARTH DIKES ARE TO BE PLACES IN WORKING ORDER AT THE END OF EACH WORKINGDAY.

DURING GRADING AND AFTER EACH RAINFALL, CONTRACTOR WILL INSPECT AND PROVIDE NECESSARY MAINTENANCE TO THE SEDIMENT CONTROL MEASURES ON THIS PLAN.

FOLLOWING INITIAL SOIL DISTURBANCES OR REDISTURBANCE PERMANENT OR TEMPORARY STABILIZATION SHALL BE COMPLETED WITHIN:
A. 7 CALENDAR DAYS FOR ALL PERIMETER SEDIMENT CONTROL STURCTURES, DIKES, SWALES, AND ALL SLOPES GREATER THAN 3:1.
B. 14 CALENDAR DAYS FOR ALL OTHER DISTURBED AREAS.

APPROVED: HOWARD COUNTY DEPARTMENT OF PLANNING AND ZONING

CHIEF, DEVELOPMENT ENGINEERING DIVISION — 11/4/03 DATE

CHIEF, DIVISION OF LAND DEVELOPMENT — 2/19/04 DATE

DIRECTOR — 2/20/04 DATE

ENGINEERS CERTIFICATE

"I CERTIFY THAT THIS PLAN FOR SEDIMENT AND EROSION CONTROL REPRESENTS A PRACTICAL AND WORKABLE PLAN BASED ON MY PERSONAL KNOWLEDGE OF THE SITE CONDITIONS AND THAT IT WAS PREPARED IN ACCORDANCE WITH THE REQUIREMENTS OF THE HOWARD SOIL CONSERVATION DISTRICT.

SIGNATURE OF ENGINEER — 9/18/03 DATE
ROBERT H. VOGEL

DEVELOPER'S CERTIFICATE

"I/WE CERTIFY THAT ALL DEVELOPMENT AND CONSTRUCTION WILL BE DONE ACCORDING TO THIS PLAN FOR SEDIMENT AND EROSION CONTROL, AND THAT ALL RESPONSIBLE PERSONNEL INVOLVED IN THE CONSTRUCTION PROJECT WILL HAVE A CERTIFICATE OF ATTENDANCE AT A DEPARTMENT OF THE ENVIRONMENT/APPROVED TRAINING PROGRAM FOR THE CONTROL OF SEDIMENT AND EROSION BEFORE BEGINNING THE PROJECT. I ALSO AUTHORIZE PERIODIC ON–SITE INSPECTION BY THE HOWARD SOIL CONSERVATION DISTRICT.

SIGNATURE OF DEVELOPER — 9/18/03 DATE
DONALD REUWER

REVIEWED FOR HOWARD SCD AND MEETS TECHNICAL REQUIREMENTS

USDA–NATURAL RESOURCES CONSERVATION SERVICE — 10-29-03 DATE

THIS DEVELOPMENT PLAN IS APPROVED FOR SOIL EROSION AND SEDIMENT CONTROL BY THE HOWARD SOIL CONSERVATION DISTRICT

HOWARD SCD — 10-29-03 DATE

OWNER :

TAYLOR FAMILY LIMITED PARTNERSHIP A
C/O LAND DESIGN & DEVELOPMENT, INC.
8000 MAIN STREET
ELLICOTT CITY, MD 21043
ATTN: MR. DONALD R. REUWER
PHONE: (410) 480-9105

DEVELOPER

LAND DESIGN & DEVELOPMENT, INC.
8000 MAIN STREET
ELLICOTT CITY, MD 21043
ATTN: MR. DONALD R. REUWER
PHONE: (410) 480-9105

SITE DEVELOPMENT PLAN
SEDIMENT AND EROSION CONTROL DETAILS
VILLAGE CREST
PART OF PARCEL D-1
PHASE 1, APT. BLDGS. A-F,
91 AGE RESTRICTED ADULT HOUSING UNITS

TAX MAP #25 BLOCK 20 — PARCEL P/O 98
2ND ELECTION DISTRICT — HOWARD COUNTY, MARYLAND

FWA
FREDERICK WARD ASSOCIATES, INC.
ARCHITECTS | ENGINEERS | PLANNERS | SURVEYORS
7125 RIVERWOOD DRIVE
COLUMBIA, MARYLAND 21046–2354
410–720–6900
410–720–6226 fax
www.frederickward.com

STATE OF MARYLAND — ROBERT HARRIS VOGEL — No. 16193 — PROFESSIONAL ENGINEER

DESIGN BY:	RJ
DRAWN BY:	RJ
CHECKED BY:	RHV
DATE:	SEPT. 2003
SCALE:	AS SHOWN
W.O. NO.:	2018121.00

SHEET 7 OF 16

SDP-02-94

N:\PROJECTS\2018121\ENGR\dwg\Sdp-APT\12SEDET.dwg Sun Sep 21 12:07:10 2003 E4

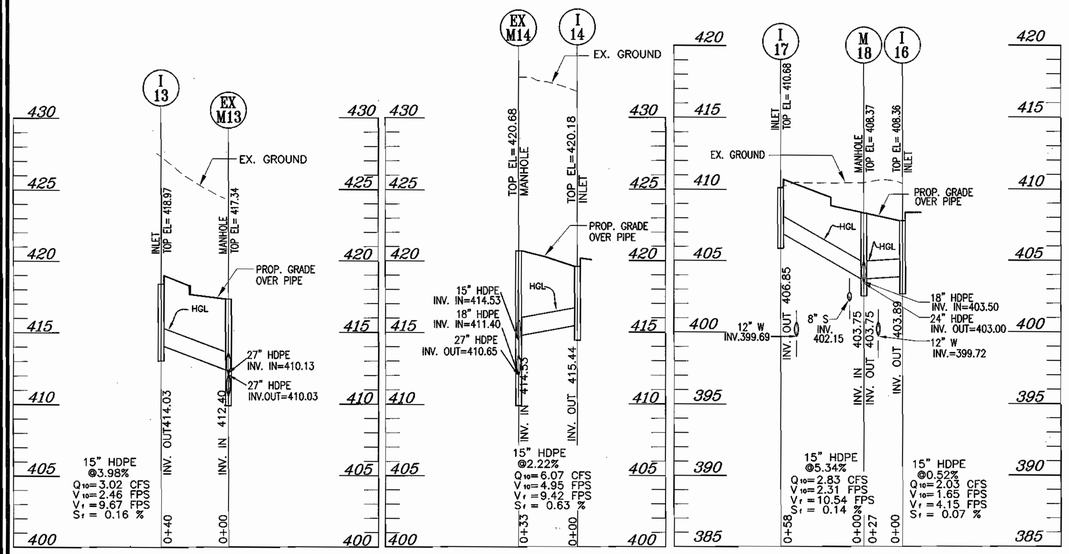

STORM DRAIN PROFILE

SCALE: 1"= 50' HORZ.
1"= 5' VERT.

STORM DRAIN PROFILE

SCALE: 1"= 50' HORZ.
1"= 5' VERT.

STORM DRAIN PROFILE

SCALE: 1"= 50' HORZ.
1"= 5' VERT.

PIPE SCHEDULE

SIZE	TYPE	LENGTH
15"	HDPE	782 LF
18"	HDPE	335 LF
24"	HDPE	957 LF
30"	HDPE	114 LF

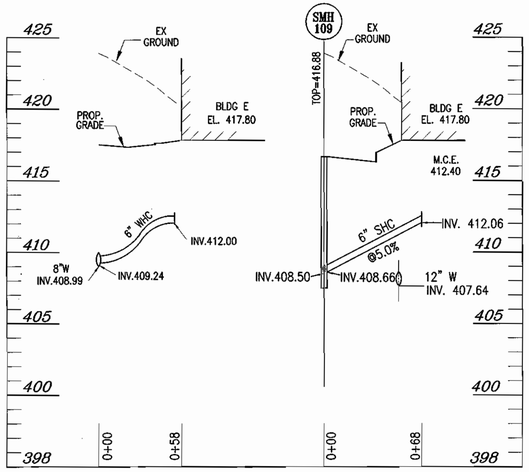

WHC PROFILE UNIT E

SCALE: 1"= 50' HORZ.
1"= 5' VERT.

SHC PROFILE UNIT E

SCALE: 1"= 50' HORZ.
1"= 5' VERT.

STRUCTURE SCHEDULE

NO.	TYPE	LOCATION	TOP ELEV.	INV. IN	INV. OUT	REMARKS
EX. I-12	DOUBLE TYPE 'S' COMBINATION INLET	CL CYPRUS CEDAR LN STA. 2+99 , 11.93' RT.				
EX. I-11A	DOUBLE TYPE 'S' COMBINATION INLET	CL CYPRUS CEDAR LN STA. 4+45 , 11.93' RT.	415.43	–	406.52	SD 4.34
I-13	DOUBLE TYPE 'S' COMBINATION INLET	CL OF PARKING LOT AISLE(SOUTHERN), STA. 2+88,26.62' RT.	411.39	–	406.06	SD 4.34
I-14	DOUBLE TYPE 'S' COMBINATION INLET	CL OF PARKING LOT AISLE, STA. 2+88 , 26.62' RT.	420.18	–	415.44	SD 4.34
I-14A	DOUBLE TYPE 'S' COMBINATION INLET	CL OF PARKING LOT AISLE, STA.1+84 , 26.62' RT.	421.26	–	416.53	SD 4.34
EX M-12	PRECAST MANHOLE	N 577460.23, E 1372137.59	410.25	395.57	395.07	G 5.12
M-16A	PRECAST MANHOLE	N 577598.50, E 1372212.44				
M-16	PRECAST MANHOLE	N 577701.37, E 1372268.22	405.33	397.94	397.84	G 5.12
M-17	PRECAST MANHOLE	CL CYPRUS CEDAR LN STA. 6+30, 10.42' RT.	406.65	401.24 24"HDPE 401.14 24"HDPE	401.55	G 5.12
I-15	DOUBLE TYPE 'S' COMBINATION INLET	CL YELLOW PINE DR. STA. 3+56.90, 26.57' LT.	405.88	–	399.75	SD 4.34
M-18	PRECAST MANHOLE	CL YELLOW PINE DR. STA.2+15.27, 0.92' LT.	408.37	403.75 15"HDPE 403.75 15"HDPE 403.50 18"HDPE	403.00	G 5.12
I-16	DOUBLE TYPE 'S' COMBINATION INLET	CL YELLOW PINE DR. STA.2+16.90, 26.57' LT.	408.36	–	403.89	SD 4.34
I-17	DOUBLE TYPE 'S' COMBINATION INLET	CL MIDDLE PARKING LOT AILE. STA.2+2.39, 56.84' RT.	410.68	–	406.85	SD 4.34
M-19	PRECAST MANHOLE	CL YELLOW PINE DR. STA.0+10.84, 0.95' RT.	411.64	406.05 15"HDPE 406.05 15"HDPE	405.80	G 5.12
I-18	DOUBLE TYPE 'S' COMBINATION INLET	CL STONE CROP DRIVE STA. 0+32, 12' LT.	411.04	–	406.22	SD 4.34
I-19	DOUBLE TYPE 'S' COMBINATION INLET	CL HICKORY HIGH CT. STA. 0+62.71, 30' RT.	415.23	–	410.48	SD 4.34
EX M-31	PRECAST MANHOLE	PER F-02-47	378.00	371.79 18"HDPE 371.29 24"HDPE	367.79	G 5.12
M-20	PRECAST MANHOLE	N 578547.97 E 1372240.17	391.19	377.78	375.01	G 5.12
M-21	PRECAST MANHOLE	N 578395.82 E 1372271.48	394.00	382.56	382.46	G 5.12
M-22	PRECAST MANHOLE	N 578313.61 E 1372341.06	393.81	387.33 15"HDPE 384.26 18"HDPE 384.51 18"HDPE	383.76	G 5.12
I-21	DOUBLE TYPE 'S' COMBINATION INLET	CL STONE CROP DRIVE STA. 5+59, 30' LT.	394.83	389.72	389.47	SD 4.34
I-22	DOUBLE TYPE 'S' COMBINATION INLET	CL STONE CROP DRIVE STA. 3+53.81, 12' LT.	403.18	–	398.43	SD 4.34
I-20	DOUBLE TYPE 'S' COMBINATION INLET	CL STONE CROP DRIVE (AISLE @BLDG P) 1+15.96, 30'RT.	390.13	–	385.33	SD 4.34
M-23	PRECAST MANHOLE	CL STONE CROP DRIVE (AISLE @BLDG N) STA. 0+10, 13.05' RT.	393.81	388.64 15"HDPE 388.39 18"HDPE	381.63	G 5.12
I-24	DOUBLE TYPE 'S' COMBINATION INLET	CL STONE CROP DRIVE(AISLE@BLDG N) STA. 0+85.56, 30' RT.	393.81	–	389.06	SD 4.34
I-23	DOUBLE TYPE 'S' COMBINATION INLET	CL STONE CROP DRIVE STA. 2+90.26, 13.83' RT.	400.92	–	394.90	SD 4.34

1. TOP ELEVATION ARE TO THE CENTER OF THE STRUCTURE AT TOP OF CURB FOR DOUBLE 'S' COMB. INLETS, CENTER TOP OF GRATE FOR DOUBLE TYPE 'S' INLET AND TOP OF MANHOLE COVER FOR PRECAST MANHOLES.
2. SEE ARCHITECTURAL PLANS FOR ROOF DRAIN DETAILS

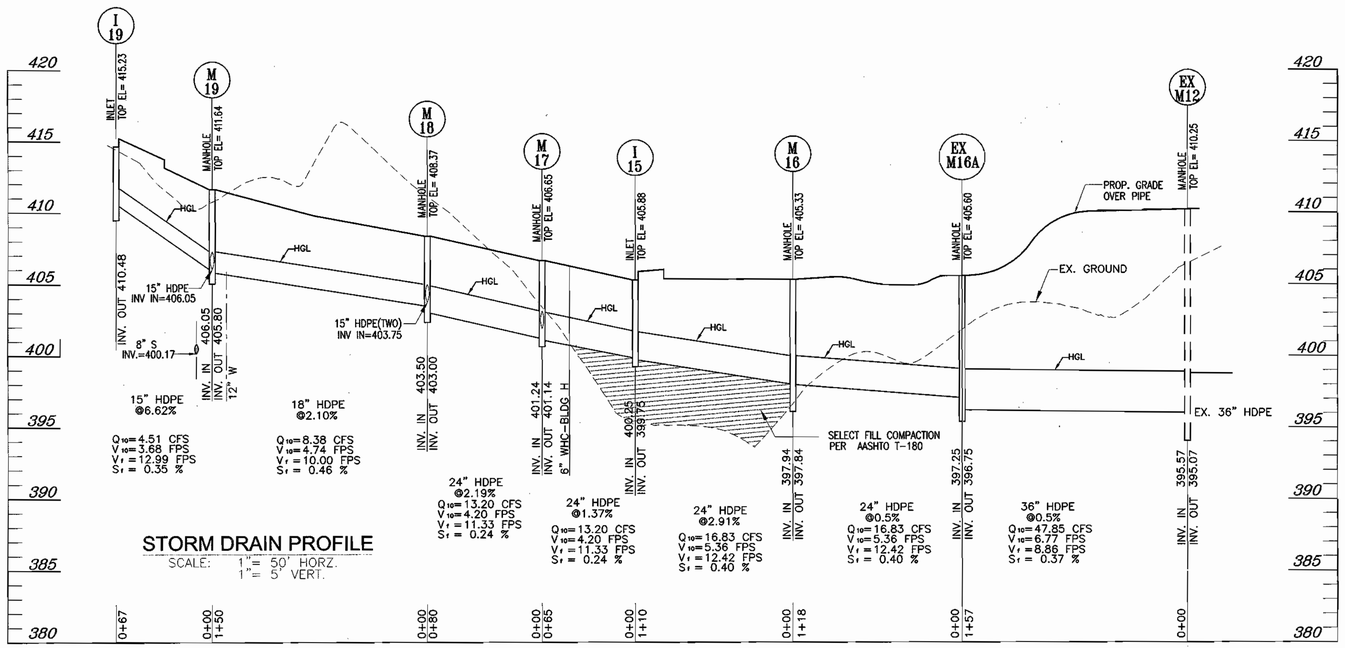

STORM DRAIN PROFILE

SCALE: 1"= 50' HORZ.
1"= 5' VERT.

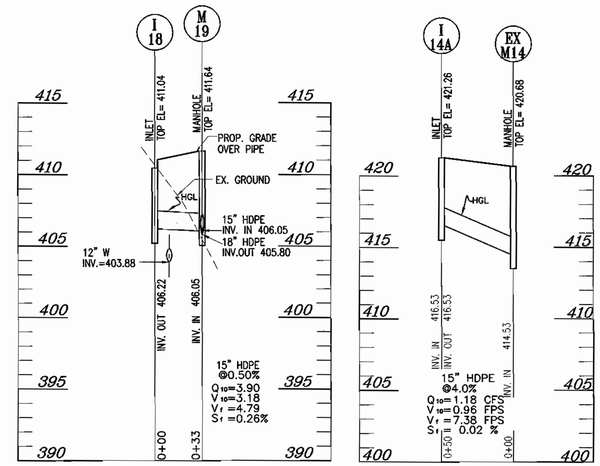

STORM DRAIN PROFILE

SCALE: 1"= 50' HORZ.
1"= 5' VERT.

APPROVED: HOWARD COUNTY DEPARTMENT OF PLANNING AND ZONING

CHIEF, DEVELOPMENT ENGINEERING DIVISION — DATE 11/4/03

CHIEF, DIVISION OF LAND DEVELOPMENT — DATE 2/19/04

DIRECTOR — DATE 2/20/04

SITE DEVELOPMENT PLAN
PROFILES
VILLAGE CREST
PART OF PARCEL D-1
PHASE 1, APT. BLDGS. A-F,
91 AGE RESTRICTED ADULT HOUSING UNITS

TAX MAP #25 BLOCK 20 — PARCEL P/O 98
2ND ELECTION DISTRICT — HOWARD COUNTY, MARYLAND

FREDERICK WARD ASSOCIATES, INC.
ARCHITECTS | ENGINEERS | PLANNERS | SURVEYORS
7125 RIVERWOOD DRIVE
COLUMBIA, MARYLAND 21046-2354
410-720-6900
410-720-6226 fax
www.frederickward.com

STATE OF MARYLAND — ROBERT MARTIN VOGEL — No. 16193 — PROFESSIONAL ENGINEER
ROBERT M. VOGEL, PE No. 16193

DESIGN BY: RJJ/CO
DRAWN BY: RJJ/CO
CHECKED BY: RHV
DATE: SEPT. 2003
SCALE: AS SHOWN
W.O. NO.: 2018121.00

SHEET 8 OF 16

OWNER:
TAYLOR FAMILY LIMITED PARTNERSHIP A
C/O LAND DESIGN & DEVELOPMENT, INC.
8000 MAIN STREET
ELLICOTT CITY, MD 21043
ATTN: MR. DONALD R. REUWER
PHONE: (410) 480-9105

DEVELOPER
LAND DESIGN & DEVELOPMENT, INC.
8000 MAIN STREET
ELLICOTT CITY, MD 21043
ATTN: MR. DONALD R. REUWER
PHONE: (410) 480-9105

SDP-02-94

N:\PROJECTS\2018121\ENGR\dwg\Sdp-APT\05PROF.dwg Tue Sep 30 09:28:53 2003 E4

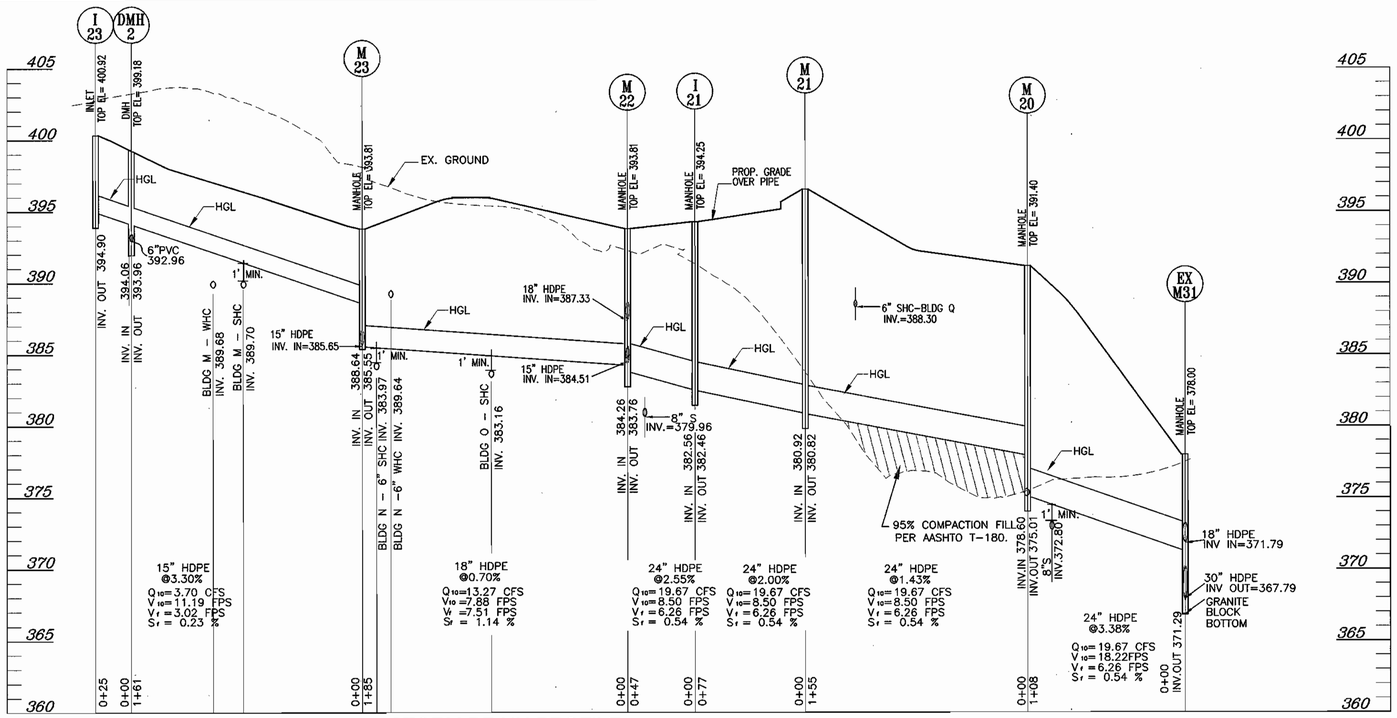

STORM DRAIN PROFILE

SCALE: 1"= 50' HORZ.
1"= 5' VERT.

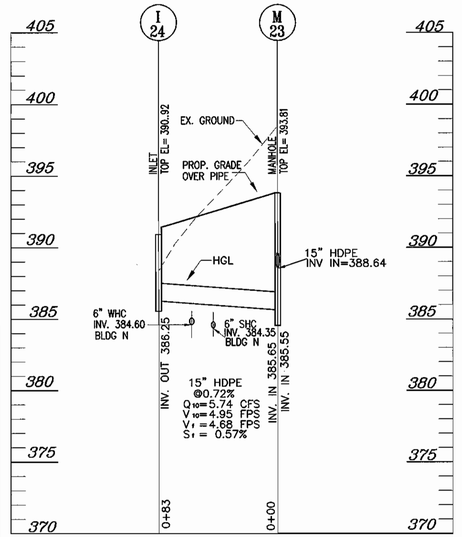

STORM DRAIN PROFILE

SCALE: 1"= 50' HORZ.
1"= 5' VERT.

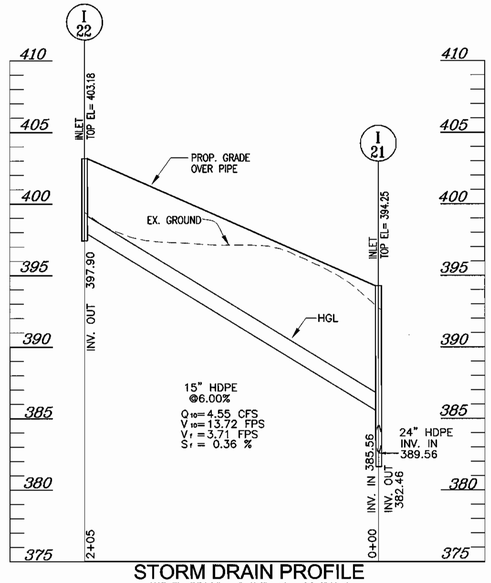

STORM DRAIN PROFILE

SCALE: 1"= 50' HORZ.
1"= 5' VERT.

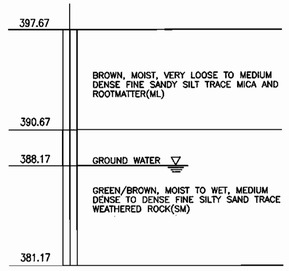

BORING # 1

NTS

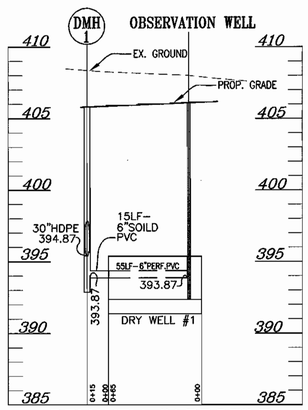

DRY WELL #1 PROFILE

SCALE: 1"= 50' HORZ.
1"= 5' VERT.

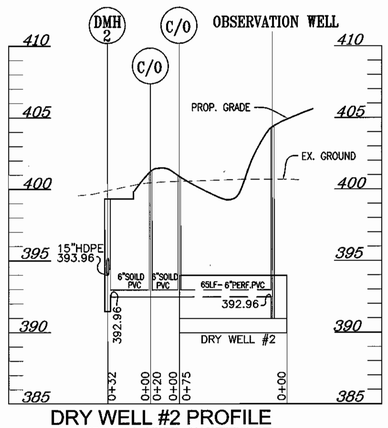

DRY WELL #2 PROFILE

SCALE: 1"= 50' HORZ.
1"= 5' VERT.

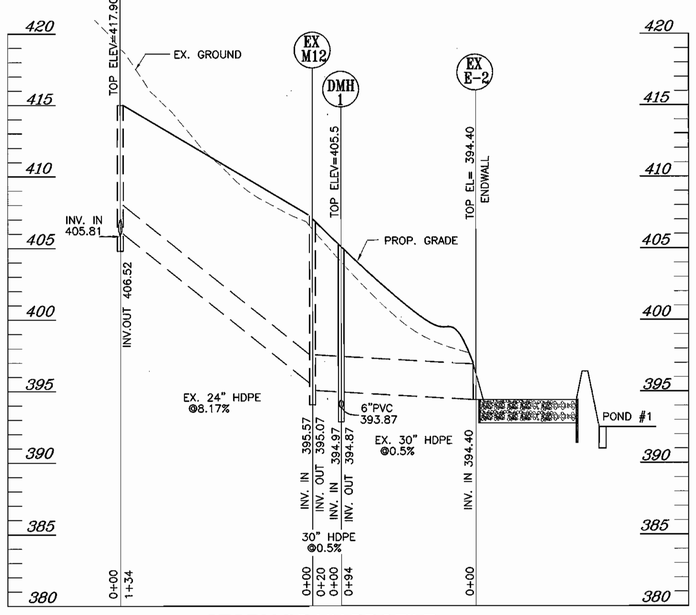

STORM DRAIN PROFILE

SCALE: 1"= 50' HORZ.
1"= 5' VERT.

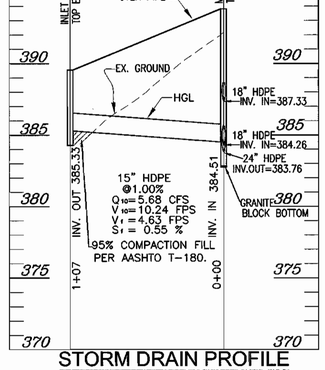

STORM DRAIN PROFILE

SCALE: 1"= 50' HORZ.
1"= 5' VERT.

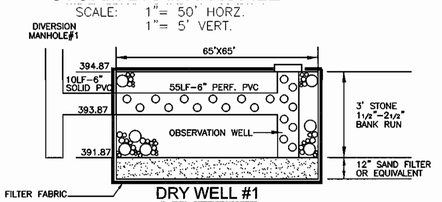

DRY WELL #1

NOT TO SCALE

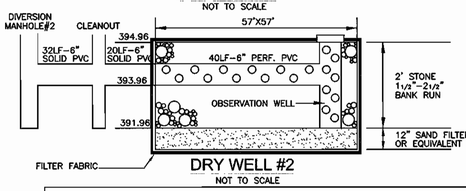

DRY WELL #2

NOT TO SCALE

APPROVED: HOWARD COUNTY DEPARTMENT OF PLANNING AND ZONING

CHIEF, DEVELOPMENT ENGINEERING DIVISION — DATE 4/4/03

CHIEF, DIVISION OF LAND DEVELOPMENT — DATE 2/19/04

DIRECTOR — DATE 2/24/04

SITE DEVELOPMENT PLAN PROFILES

VILLAGE CREST
PART OF PARCEL D-1
PHASE 1, APT. BLDGS. A-F,
91 AGE RESTRICTED ADULT HOUSING UNITS

TAX MAP #25 BLOCK 20 — PARCEL P/O 98
2ND ELECTION DISTRICT — HOWARD COUNTY, MARYLAND

7125 RIVERWOOD DRIVE
COLUMBIA, MARYLAND 21046-2354
410-720-6900
410-720-6226 fax

FREDERICK WARD ASSOCIATES, INC.
ARCHITECTS | ENGINEERS | PLANNERS | SURVEYORS
www.frederickward.com

STATE OF MARYLAND — ROBERT H. VOGEL — No. 16193 — PROFESSIONAL ENGINEER

ROBERT H. VOGEL, PE NO. 16193

DESIGN BY:	JCO
DRAWN BY:	JCO
CHECKED BY:	RHV
DATE:	SEPT. 2003
SCALE:	AS SHOWN
W.O. NO.:	2018121.00

SHEET 9 OF 16

OWNER :

TAYLOR FAMILY LIMITED PARTNERSHIP A
C/O LAND DESIGN & DEVELOPMENT, INC.
8000 MAIN STREET
ELLICOTT CITY, MD 21043
ATTN: MR. DONALD R. REUWER
PHONE: (410) 480-9105

DEVELOPER

LAND DESIGN & DEVELOPMENT, INC.
8000 MAIN STREET
ELLICOTT CITY, MD 21043
ATTN: MR. DONALD R. REUWER
PHONE: (410) 480-9105

SDP-02-94

M:\PROJECTS\2018121\ENGR\dwg\Sdp-APT\06PROF.dwg Tue Sep 30 09:21:21 2003 E4

MANHOLE LOCATION CHART

MANHOLE NO.	TYPE	LOCATION	TOP ELEVATION
EX. 856	STD. PRECAST MH HO. CO. STD. DET. G5.12	CL STONE CROP. DR. STA. 6+98, 0.62' LT. (BY F-02-47)	
EX. 855	STD. PRECAST MH HO. CO. STD. DET. G5.12	CL STONE CROP DR @ BLDG P STA. 0+10.42, 3.46' RT. (F-02-47)	
SMH 102	STD. PRECAST MH HO. CO. STD. DET. G5.12	CL STONE CROP DR. STA. 6+16.15, ON CENTERLINE.	394.60
SMH 103	STD. PRECAST MH HO. CO. STD. DET. G5.12	CL STONE CROP DR. STA. 3+15.13, 12.62' RT.	404.22
SMH 104	STD. PRECAST MH HO. CO. STD. DET. G5.12	CL STONE CROP DR. STA. 1+76.14, 8.00' LT.	408.76
SMH 105	STD. PRECAST MH HO. CO. STD. DET. G5.12	CL STONE CROP DR. STA. 4+66.51, 3.00' RT.	394.33
SMH 106	STD. PRECAST MH HO. CO. STD. DET. G5.12	CL STONE CROP DRIVE STA. 1+52, 2.81 RT.	406.54
SMH 107	STD. PRECAST MH HO. CO. STD. DET. G5.12	CL YELLOW PINE CT. STA. 0+12.51, 22.15' LT.	412.60
SMH 108	STD. PRECAST MH HO. CO. STD. DET. G5.12	CL YELLOW PINE CT. STA. 0+12.51, 10.96' RT.	413.12
SMH 109	STD. PRECAST MH HO. CO. STD. DET. G5.12	CL HICKORY HIGH CT. STA. 2+64, 8.00' LT.	420.97
SMH 110	STD. PRECAST MH HO. CO. STD. DET. G5.12	CL CYPRUS CEDAR LN. STA. 6+19.92, 12.00' LT.	407.72
SMH 111	STD. PRECAST MH HO. CO. STD. DET. G5.12	CL CYPRUS CEDAR LN. STA. 4+14.94, 12.13' LT.	412.00
SMH 112	STD. PRECAST MH HO. CO. STD. DET. G5.12	CL PARKING AISLE (SOUTHERN) STA. 3+8.39, 4.34' LT.	416.88

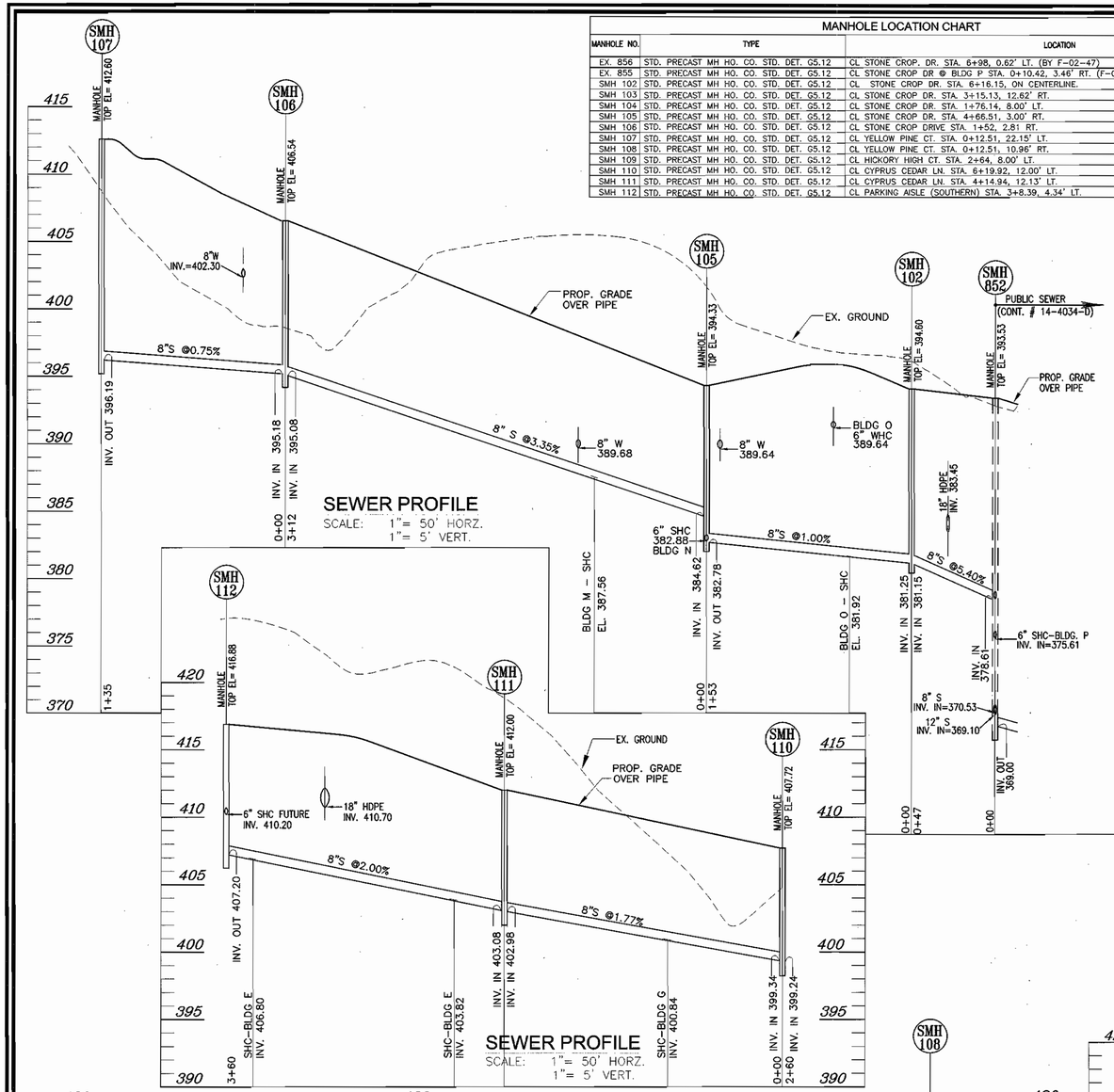

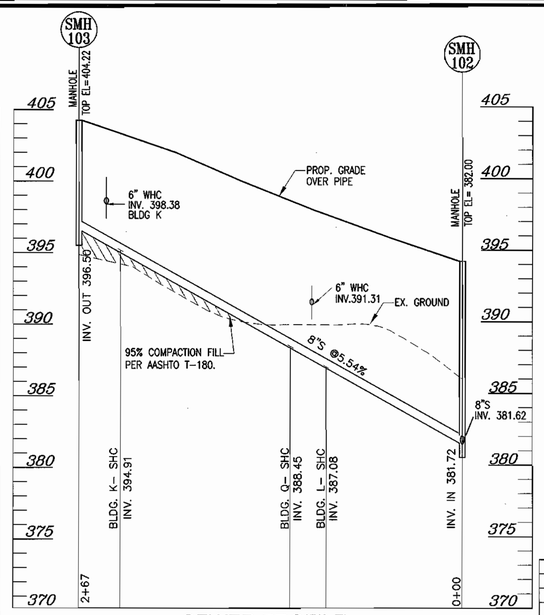

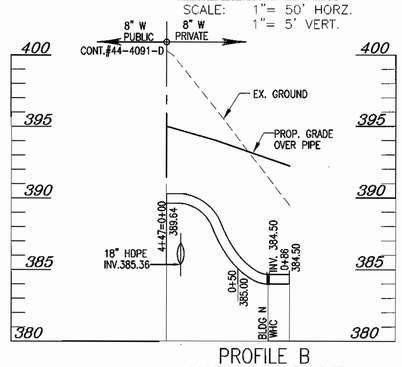

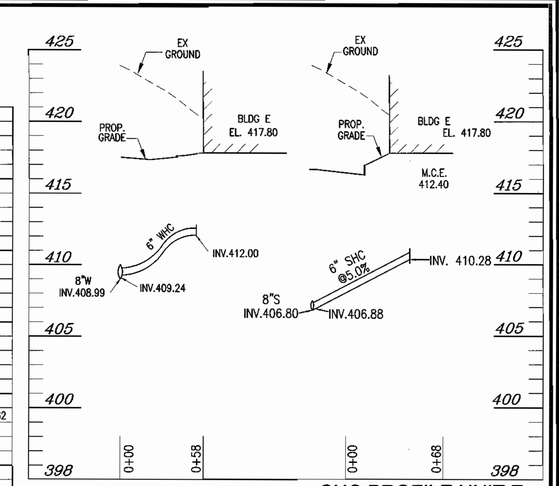

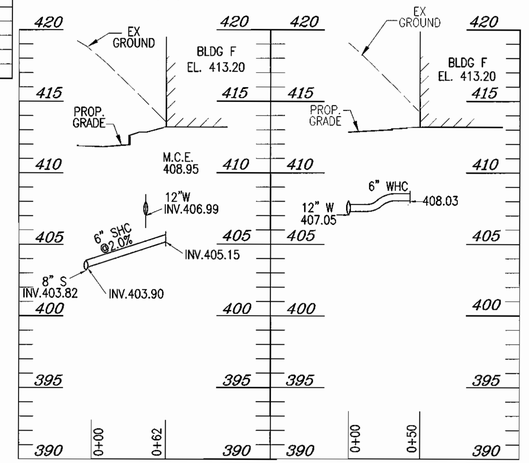

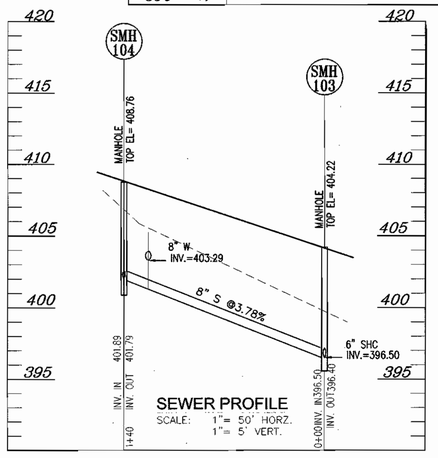

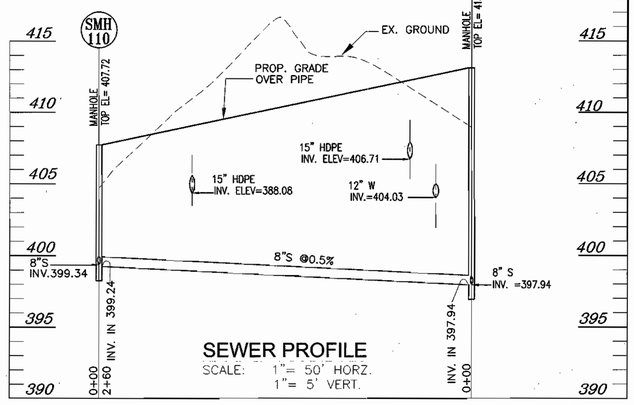

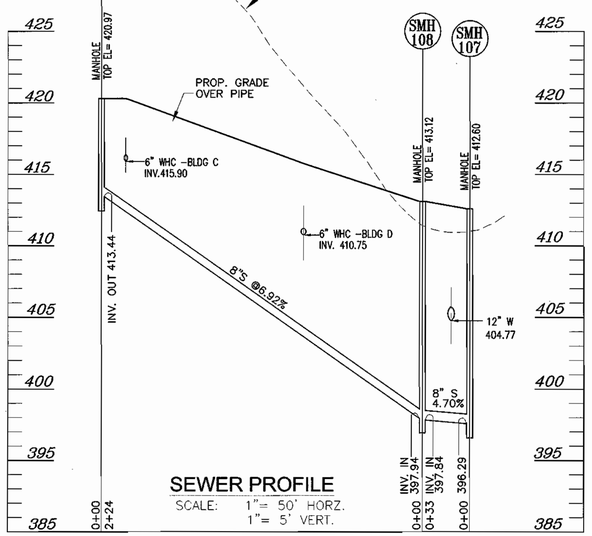

APPROVED: HOWARD COUNTY DEPARTMENT OF PLANNING AND ZONING

CHIEF, DEVELOPMENT ENGINEERING DIVISION — DATE 11/4/03

CHIEF, DIVISION OF LAND DEVELOPMENT — DATE 2/19/04

DIRECTOR — DATE 2/24/04

SITE DEVELOPMENT PLAN
PROFILES
VILLAGE CREST
PART OF PARCEL D-1
PHASE 1, APT. BLDGS. A-F,
91 AGE RESTRICTED ADULT HOUSING UNITS

TAX MAP #25 BLOCK 20 — PARCEL P/O 98
2ND ELECTION DISTRICT — HOWARD COUNTY, MARYLAND

OWNER :
TAYLOR FAMILY LIMITED PARTNERSHIP A
C/O LAND DESIGN & DEVELOPMENT, INC.
8000 MAIN STREET
ELLICOTT CITY, MD 21043
ATTN: MR. DONALD R. REUWER
PHONE: (410) 480-9105

DEVELOPER
LAND DESIGN & DEVELOPMENT, INC.
8000 MAIN STREET
ELLICOTT CITY, MD 21043
ATTN: MR. DONALD R. REUWER
PHONE: (410) 480-9105

FREDERICK WARD ASSOCIATES, INC.
ARCHITECTS | ENGINEERS | PLANNERS | SURVEYORS
7125 RIVERWOOD DRIVE
COLUMBIA, MARYLAND 21046-2354
410-720-6900
410-720-6226 fax
www.frederickward.com

STATE OF MARYLAND — ROBERT HAMPTON VOGEL — No. 16193 — PROFESSIONAL ENGINEER
ROBERT H. VOGEL, PE NO. 16193

DESIGN BY:	RJ
DRAWN BY:	RJ
CHECKED BY:	RHV
DATE:	SEPT. 2003
SCALE:	AS SHOWN
W.O. NO.:	2018121.00

SHEET 10 OF 16

SDP-02-94

K:\PROJECTS\2018121\ENGR\dwg\Sdp-MPT\07PROF.dwg Fri Sep 19 16:50:28 2003 E4

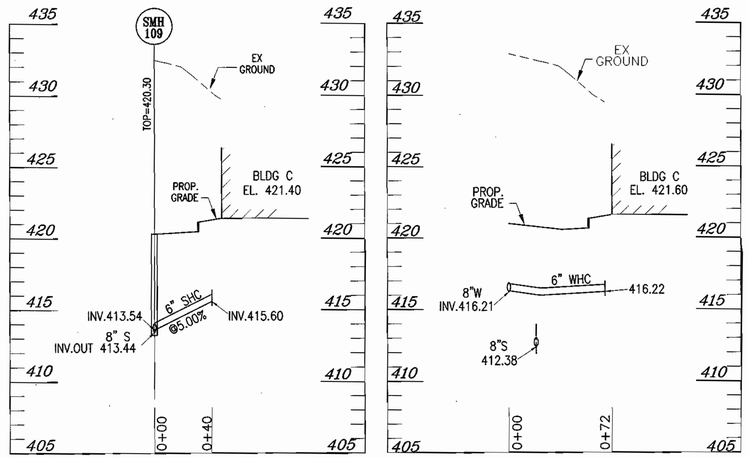

SHC PROFILE UNIT C

SCALE: 1"= 50' HORZ. 1"= 5' VERT.

WHC PROFILE UNIT C

SCALE: 1"= 50' HORZ. 1"= 5' VERT.

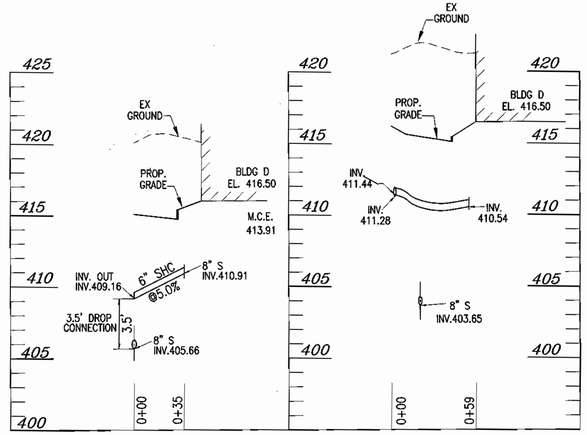

SHC PROFILE UNIT D

SCALE: 1"= 50' HORZ. 1"= 5' VERT.

WHC PROFILE UNIT D

SCALE: 1"= 50' HORZ. 1"= 5' VERT.

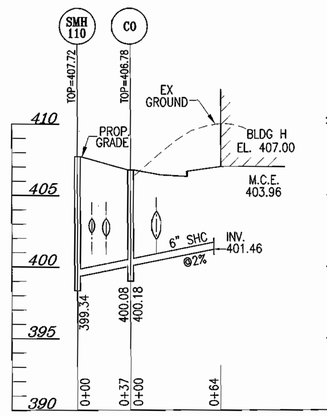

SHC PROFILE UNIT H

SCALE: 1"= 50' HORZ. 1"= 5' VERT.

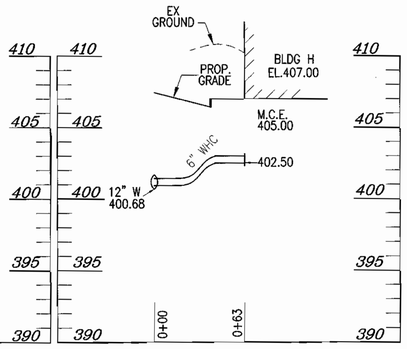

WHC PROFILE UNIT H

SCALE: 1"= 50' HORZ. 1"= 5' VERT.

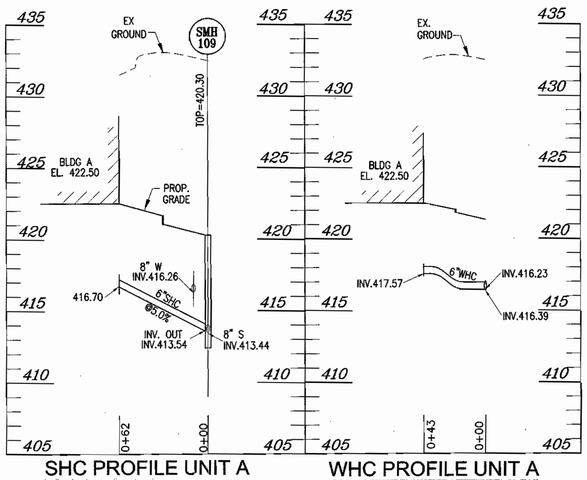

SHC PROFILE UNIT A

SCALE: 1"= 50' HORZ. 1"= 5' VERT.

WHC PROFILE UNIT A

SCALE: 1"= 50' HORZ. 1"= 5' VERT.

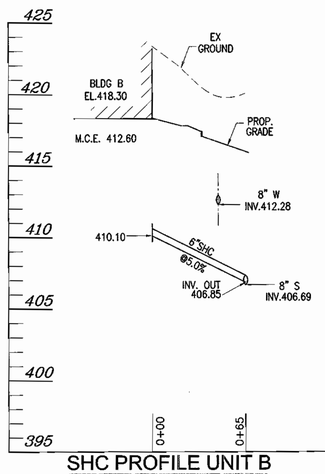

SHC PROFILE UNIT B

SCALE: 1"= 50' HORZ. 1"= 5' VERT.

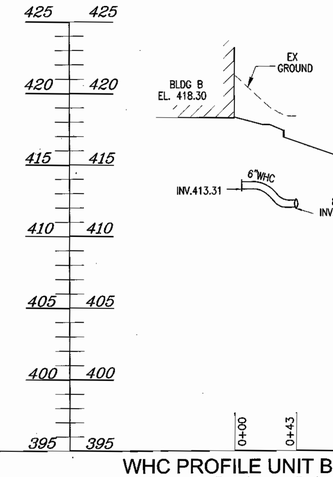

WHC PROFILE UNIT B

SCALE: 1"= 50' HORZ. 1"= 5' VERT.

APPROVED: HOWARD COUNTY DEPARTMENT OF PLANNING AND ZONING

CHIEF, DEVELOPMENT ENGINEERING DIVISION — DATE 1/14/03

CHIEF, DIVISION OF LAND DEVELOPMENT — DATE 2/19/14

DIRECTOR — DATE 2/20/14

SITE DEVELOPMENT PLAN
PROFILES
VILLAGE CREST
PART OF PARCEL D-1
PHASE 1, APT. BLDGS. A-F,
91 AGE RESTRICTED ADULT HOUSING UNITS

TAX MAP #25 BLOCK 20 — PARCEL P/O 98

2ND ELECTION DISTRICT — HOWARD COUNTY, MARYLAND

FREDERICK WARD ASSOCIATES, INC.

ARCHITECTS | ENGINEERS | PLANNERS | SURVEYORS

7125 RIVERWOOD DRIVE
COLUMBIA, MARYLAND 21046-2354
410-720-6900
410-720-6226 fax

www.frederickward.com

STATE OF MARYLAND — ROBERT HANNUM WARD — No. 16123 — PROFESSIONAL ENGINEER

DESIGN BY:	RJ
DRAWN BY:	RJ
CHECKED BY:	RHV
DATE:	SEPT. 2003
SCALE:	AS SHOWN
W.O. NO.:	2018121.00

SHEET 11 OF 16

OWNER:

TAYLOR FAMILY LIMITED PARTNERSHIP A
C/O LAND DESIGN & DEVELOPMENT, INC.
8000 MAIN STREET
ELLICOTT CITY, MD 21043
ATTN: MR. DONALD R. REUWER
PHONE: (410) 480-9105

DEVELOPER

LAND DESIGN & DEVELOPMENT, INC.
8000 MAIN STREET
ELLICOTT CITY, MD 21043
ATTN: MR. DONALD R. REUWER
PHONE: (410) 480-9105

M:\PROJECTS\2018121\ENGR\dwg\SDP-APTS\08PROF.dwg Fri Sep 19 16:51:24 2003 E4

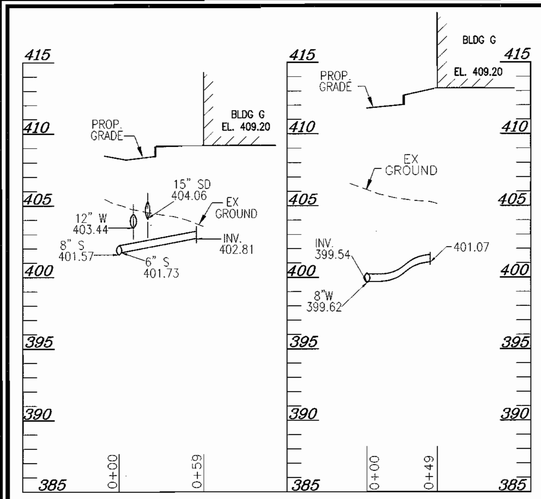

SHC PROFILE UNIT G

SCALE: 1"= 50' HORZ.
1"= 5' VERT.

WHC PROFILE UNIT G

SCALE: 1"= 50' HORZ.
1"= 5' VERT.

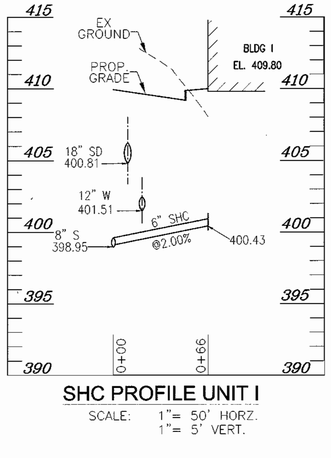

SHC PROFILE UNIT I

SCALE: 1"= 50' HORZ.
1"= 5' VERT.

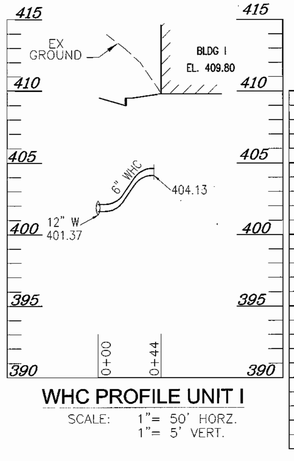

WHC PROFILE UNIT I

SCALE: 1"= 50' HORZ.
1"= 5' VERT.

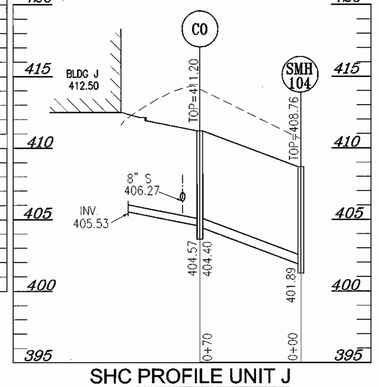

SHC PROFILE UNIT J

SCALE: 1"= 50' HORZ.
1"= 5' VERT.

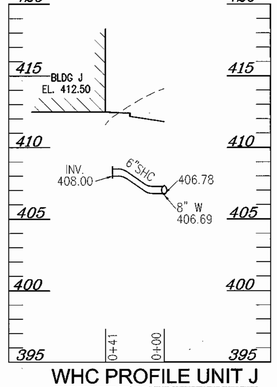

WHC PROFILE UNIT J

SCALE: 1"= 50' HORZ.
1"= 5' VERT.

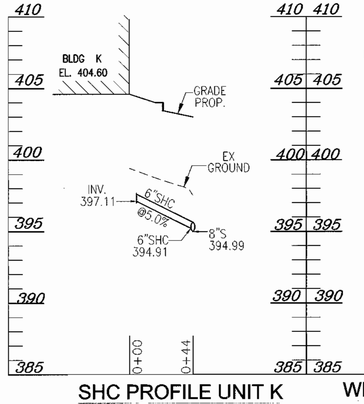

SHC PROFILE UNIT K

SCALE: 1"= 50' HORZ.
1"= 5' VERT.

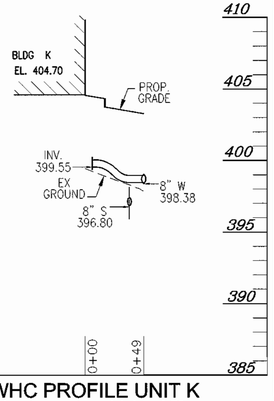

WHC PROFILE UNIT K

SCALE: 1"= 50' HORZ.
1"= 5' VERT.

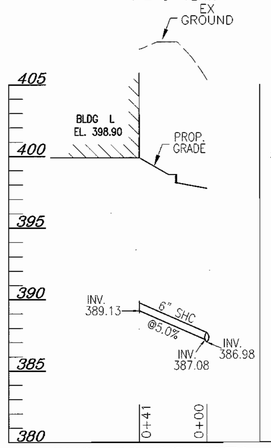

SHC PROFILE UNIT L

SCALE: 1"= 50' HORZ.
1"= 5' VERT.

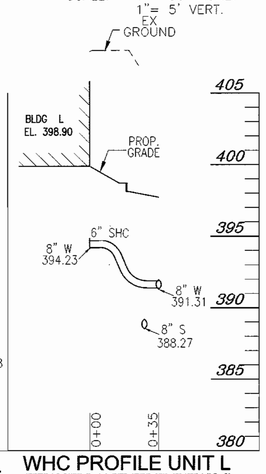

WHC PROFILE UNIT L

SCALE: 1"= 50' HORZ.
1"= 5' VERT.

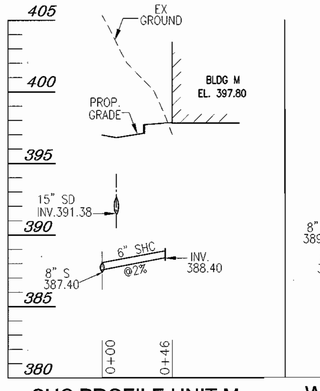

SHC PROFILE UNIT M

SCALE: 1"= 50' HORZ.
1"= 5' VERT.

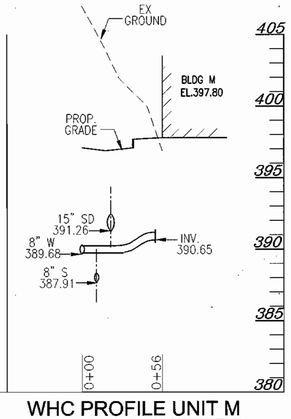

WHC PROFILE UNIT M

SCALE: 1"= 50' HORZ.
1"= 5' VERT.

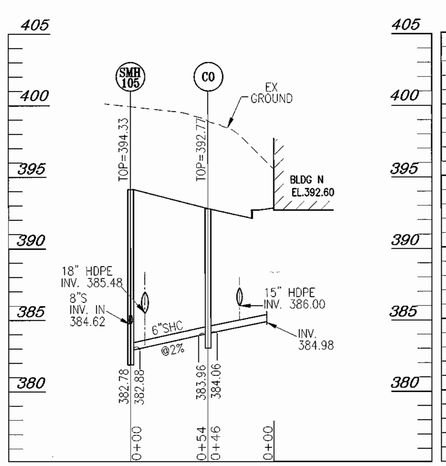

SHC PROFILE UNIT N

SCALE: 1"= 50' HORZ.
1"= 5' VERT.

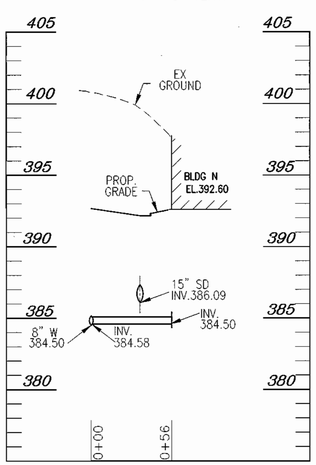

WHC PROFILE UNIT N

SCALE: 1"= 50' HORZ.
1"= 5' VERT.

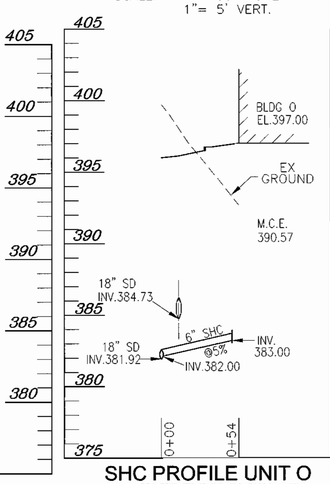

SHC PROFILE UNIT O

SCALE: 1"= 50' HORZ.
1"= 5' VERT.

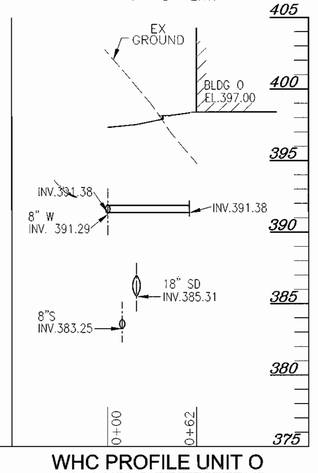

WHC PROFILE UNIT O

SCALE: 1"= 50' HORZ.
1"= 5' VERT.

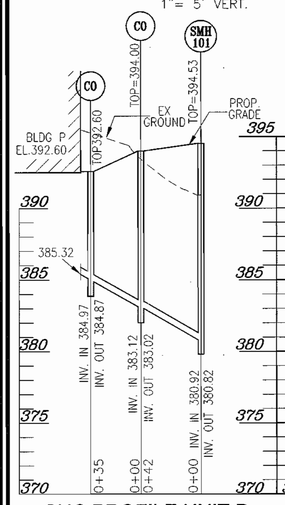

SHC PROFILE UNIT P

SCALE: 1"= 50' HORZ.
1"= 5' VERT.

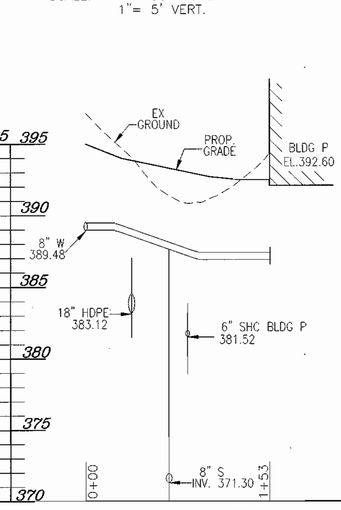

WHC PROFILE UNIT P

SCALE: 1"= 50' HORZ.
1"= 5' VERT.

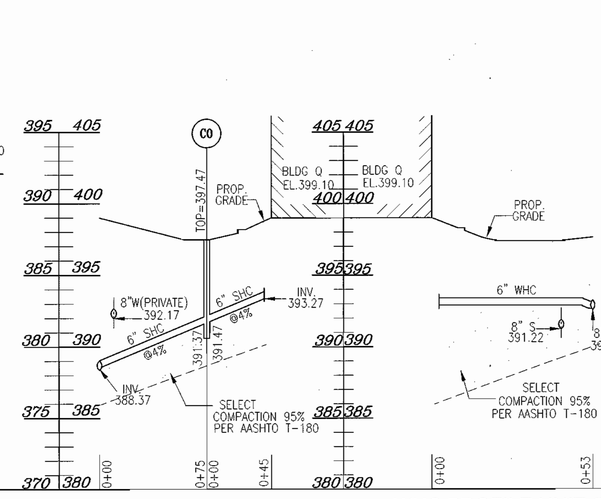

SHC PROFILE UNIT Q

SCALE: 1"= 50' HORZ.
1"= 5' VERT.

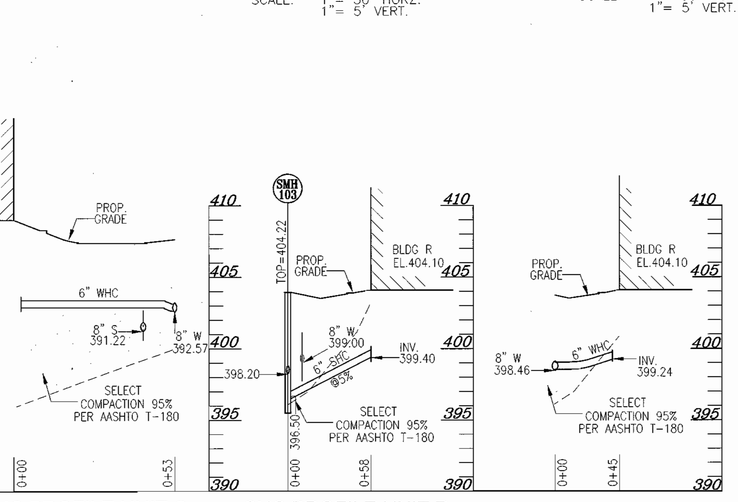

WHC PROFILE UNIT Q

SCALE: 1"= 50' HORZ.
1"= 5' VERT.

SHC PROFILE UNIT R

SCALE: 1"= 50' HORZ.
1"= 5' VERT.

WHC PROFILE UNIT R

SCALE: 1"= 50' HORZ.
1"= 5' VERT.

APPROVED: HOWARD COUNTY DEPARTMENT OF PLANNING AND ZONING

CHIEF, DEVELOPMENT ENGINEERING DIVISION — DATE 11/4/03

CHIEF, DIVISION OF LAND DEVELOPMENT — DATE 2/14/14

DIRECTOR — DATE 2/20/04

SITE DEVELOPMENT PLAN PROFILES

VILLAGE CREST
PART OF PARCEL D-1
PHASE 1, APT. BLDGS. A-F,
91 AGE RESTRICTED ADULT HOUSING UNITS

TAX MAP #25 BLOCK 20 — PARCEL P/O 98
2ND ELECTION DISTRICT — HOWARD COUNTY, MARYLAND

FREDERICK WARD ASSOCIATES, INC.
ARCHITECTS | ENGINEERS | PLANNERS | SURVEYORS
7125 RIVERWOOD DRIVE
COLUMBIA, MARYLAND 21046-2354
410-720-6900
410-720-6226 fax
www.frederickward.com

OWNER :

TAYLOR FAMILY LIMITED PARTNERSHIP A
C/O LAND DESIGN & DEVELOPMENT, INC.
8000 MAIN STREET
ELLICOTT CITY, MD 21043
ATTN: MR. DONALD R. REUWER
PHONE: (410) 480-9105

DEVELOPER

LAND DESIGN & DEVELOPMENT, INC.
8000 MAIN STREET
ELLICOTT CITY, MD 21043
ATTN: MR. DONALD R. REUWER
PHONE: (410) 480-9105

STATE OF MARYLAND — DONALD RAMON REUWER — No. 14132 — PROFESSIONAL ENGINEER

DESIGN BY:	RJ
DRAWN BY:	RJ
CHECKED BY:	RHV
DATE:	SEPT. 2003
SCALE:	AS SHOWN
W.O. NO.:	2018121.00

SHEET 12 OF 16

SDP-02-94

M:\PROJECTS\2018121\ENGR\dwg\Sdp-APT\09P06F.dwg Fri Sep 19 16:52:00 2003 E4

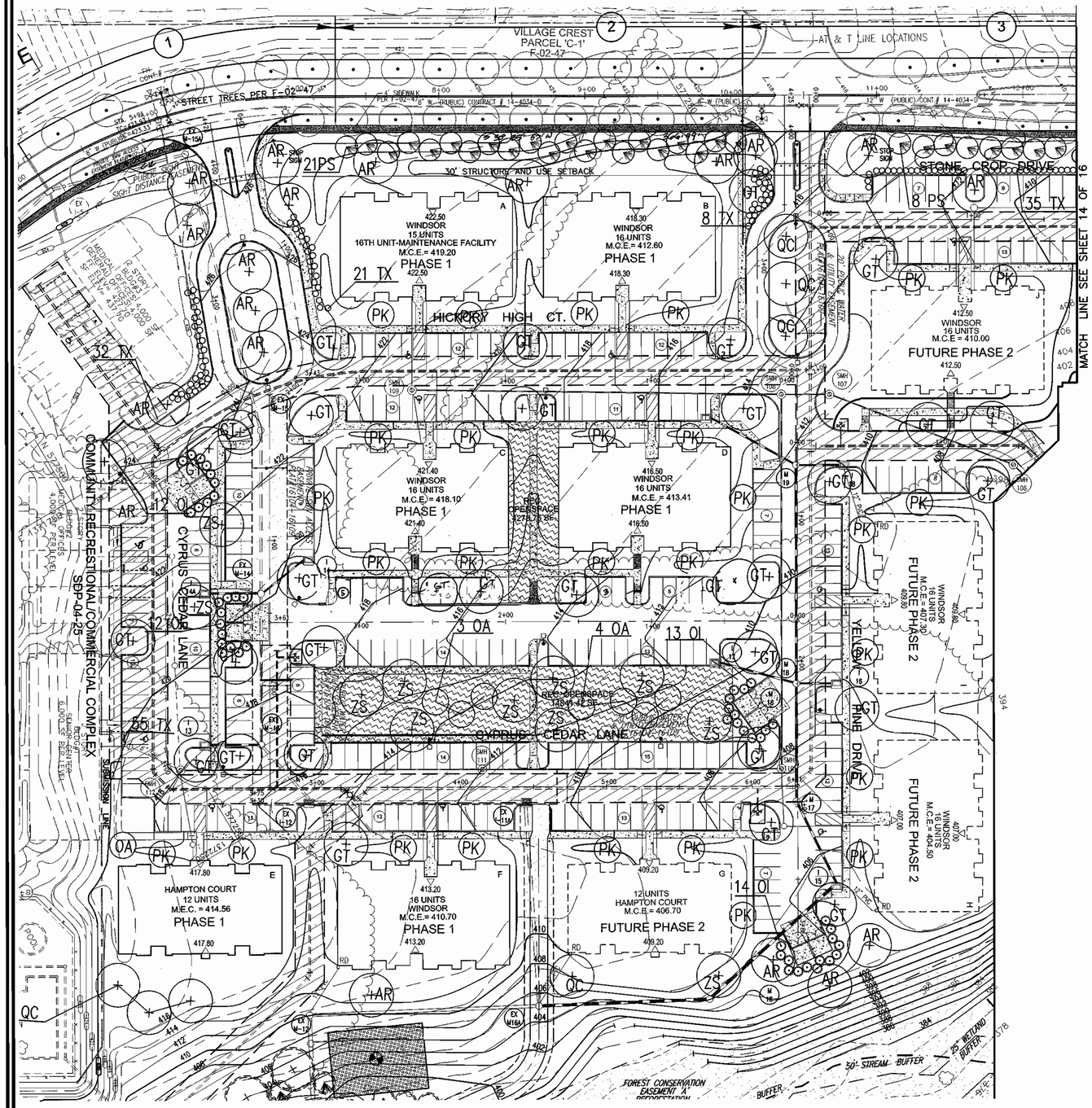

PLAN
SCALE: 1"=50'

LEGEND

Existing Contour — 382
Proposed Contour — 382
Spot Elevation — +82.53
Direction of Flow
Existing Trees to Remain
Light Poles — Overhead
Shade Trees
Shade Trees LANDSCAPING FOR POND1 PER F-02-47
Evergreen Trees
Shrubs/Hedge
Flowering Trees
Perimeter Landscape Edge — 2
EVERGREEN TREE LANDSCAPING FOR POND1 PER F-02-47

SCHEDULE C RESIDENTIAL DEVELOPMENT INTERNAL LANDSCAPING	
NUMBER OF DWELLING UNITS	267
NUMBER OF TREES REQUIRED (1:3 DU APTS)	89
NUMBER OF TREES PROVIDED SHADE TREES OTHER TREES (2:1 SUBSTITUTION)	 45 88

SCHEDULE B PARKING LOT INTERNAL LANDSCAPING	
NUMBER OF PARKING SPACES	~~438~~
NUMBER OF ISLANDS REQUIRED	~~44~~
NUMBER ISLANDS PROVIDED @ 200 SF/ISLAND	~~44~~
NUMBER OF TREES REQUIRED	~~44~~
NUMBER OF TREES PROVIDED SHADE TREES OTHER TREES (2:1 SUBSTITUTION)	 ~~44~~ –

1. ALL PLANT MATERIALS SHALL BE FULL AND HEAVY, BE WELL FORMED AND SYMMETRICAL, CONFORM TO THE MOST CURRENT AAN SPECIFICATIONS AND BE INSTALLED IN ACCORDANCE WITH LCAMW PLANTING SPECIFICATIONS.
2. CONTRACTOR SHALL VERIFY LOCATION OF ALL UNDERGROUND UTILITIES PRIOR TO DIGGING.
3. FINAL LOCATION OF PLANT MATERIAL MAY NEED TO VARY TO MEET FINAL FIELD CONDITIONS. TREES SHALL NOT BE PLANTED IN THE BOTTOM OF DRAINAGE SWALES.
4. CONTRACTOR SHALL VERIFY PLANT QUANTITIES PRIOR TO BIDDING. IF PLAN DIFFERS FROM LANDSCAPE SCHEDULE, THE PLAN SHALL GOVERN.
5. AN ADDITIONAL 3 SHADE TREES AND 4 EVERGREEN TREES ARE REQUIRED ON THE SDP ADJACENT TO BUILDING P TO AID IN BUFFERING THE BUILDING FROM THE SCENIC ROAD. THE TYPE B BUFFER FOR THE ADJACENT SWM FACILITY IS PROVIDED ON THE FINAL PLAN.
6. EXISTING PERIMETER LANDSCAPING SHOWN BONDED PER F-02-47.

SCHEDULE A PERIMETER LANDSCAPE EDGE						
CATEGORY	ADJACENT TO ROADWAYS					
PERIMETER/FRONTAGE DESIGNATION LANDSCAPE TYPE	1 E	2 B	3 E	4 D	5 E	6 B
LINEAR FEET OF ROADWAY FRONTAGE/PERIMETER	210	280	260	30	45	400
CREDIT FOR EXISTING VEGETATION (YES, NO, LINEAR FEET DESCRIBE BELOW IF NEEDED)	No	No	No	No	No	No
CREDIT FOR WALL, FENCE OR BERM (YES, NO, LINEAR FEET DESCRIBE BELOW IF NEEDED)	No	No	No	No	No	No
NUMBER OF PLANTS REQUIRED SHADE TREES EVERGREEN TREES SHRUBS	 1:40 5 1:04 53	 1:50 6 1:40 7 –	 1:40 7 – 1:04 65	 1:60 1 1:10 3 –	 1:40 1 – 1:04 11	 1:50 8 1:40 10 –
NUMBER OF PLANTS PROVIDED SHADE TREES EVERGREEN TREES OTHER TREES (2:1 SUBSTITUTION) SHRUBS (10:1 SUBSTITUTION) DESCRIBE PLANT SUBSTITUTION CREDITS BELOW IF NEEDED)	 5 – – 53	 3 21 – –	 2 10 – 65	 1 – – 13	 1 – – 11	 8 10 – –

LANDSCAPE SCHEDULE				
KEY	QUAN.	BOTANICAL NAME	SIZE	REM.
AR	22	ACER RUBRUM 'OCTOBER GLORY' OCTOBER GLORY RED MAPLE	2 1/2"–3" Cal.	B & B
GT	47	GLEDITSIA TRI. INERMIS 'SHADEMASTER' SHADEMASTER THORNLESS HONEYLOCUST	2 1/2"–3" Cal.	B & B
OI	143	OSMANTHUS ILICIFOLIUS 'GULF TIDE' SWEET HOLLY	3' – 3 1/2' Ht.	B & B
OA	11	OXYDENDRUM ARBOREUM SOURWOOD	8' – 10' Ht.	B & B
PS	64	PINUS STROBUS EASTERN WHITE PINE	6 – 8' Ht.	B & B
PK	36	PRUNUS SERRULATA 'KWANZAN' KWANZAN CHERRY	1 1/2"–2" Cal.	B & B
QC	13	QUERCUS COCCINEA SCARLET OAK	2 1/2"–3" Cal.	B & B
TX	39	TAXUS X MEDIA 'DENSIFORMIS' DENSIFORMIS YEW	30"– 36" Ht.	B & B
ZS	16	ZELKOVA SERRATA 'VILLAGE GREEN' VILLAGE GREEN ZELKOVA	2 1/2"–3" Cal.	B & B

APPROVED: HOWARD COUNTY DEPARTMENT OF PLANNING AND ZONING

CHIEF, DEVELOPMENT ENGINEERING DIVISION — DATE 11/4/03
CHIEF, DIVISION OF LAND DEVELOPMENT — DATE 2/9/04
DIRECTOR — DATE 2/10/04

GENERAL NOTES

1. This plan has been prepared in accordance with the provisions of Section 16.124 of the Howard County Code and the Landscape Manual.
2. Financial Surety for the required landscaping has been posted as a part of the DPW Developer's Agreement in the amount of $55,110.00
3. Light poles to be Kim Lighting standard Entablature, 25' black steel round poles, flush mount. 250 watt metal Halide.
4. See Sediment & Erosion Control Detail Sheet for planting details.

DEVELOPER'S BUILDER'S CERTIFICATE

I/WE CERTIFY THAT THE LANDSCAPING SHOWN ON THIS PLAN WILL BE DONE ACCORDING TO THE PLAN, SECTION 16.124 OF THE HOWARD COUNTY CODE AND THE HOWARD COUNTY LANDSCAPE MANUAL. I/WE FURTHER CERTIFY THAT UPON COMPLETION, A CERTIFICATION OF LANDSCAPE INSTALLATION, ACCOMPANIED BY AN EXECUTED ONE(1) YEAR GUARANTEE OF PLANT MATERIALS, WILL BE SUBMITTED TO THE DEPARTMENT OF PLANNING AND ZONING.

SIGNATURE OF DEVELOPER DONALD REUWER — DATE 10/17/03

OWNER:

TAYLOR FAMILY LIMITED PARTNERSHIP A
C/O LAND DESIGN & DEVELOPMENT, INC.
8000 MAIN STREET
ELLICOTT CITY, MD 21043
ATTN: MR. DONALD R. REUWER
PHONE: (410) 480-9105

DEVELOPER

LAND DESIGN & DEVELOPMENT, INC.
8000 MAIN STREET
ELLICOTT CITY, MD 21043
ATTN: MR. DONALD R. REUWER
PHONE: (410) 480-9105

SITE DEVELOPMENT PLAN
LANDSCAPE PLAN
VILLAGE CREST
PART OF PARCEL D-1
PHASE 1, APT. BLDGS. A-F,
91 AGE RESTRICTED ADULT HOUSING UNITS

TAX MAP #25 BLOCK 20 — PARCEL P/O 98
2ND ELECTION DISTRICT — HOWARD COUNTY, MARYLAND

FREDERICK WARD ASSOCIATES, INC.
ARCHITECTS | ENGINEERS | PLANNERS | SURVEYORS
7125 RIVERWOOD DRIVE
COLUMBIA, MARYLAND 21046–2354
410–720–6900
410–720–6226 fax
www.frederickward.com

STATE OF MARYLAND — ROBERT HARRIS VOGEL — No. 16193 — PROFESSIONAL ENGINEER
ROBERT H. VOGEL, PE NO. 16193

DESIGN BY: MHM
DRAWN BY: RJ
CHECKED BY: MHM
DATE: SEPT. 2003
SCALE: 1"=50'
W.O. NO.: 2018121.00

SHEET 13 OF 16

SDP-02-94

J:\PROJECTS\2018121\ENGR\dwg\Sdp-APT\13LNPLAN.dwg Fri Oct 17 13:33:48 2003 ROWA

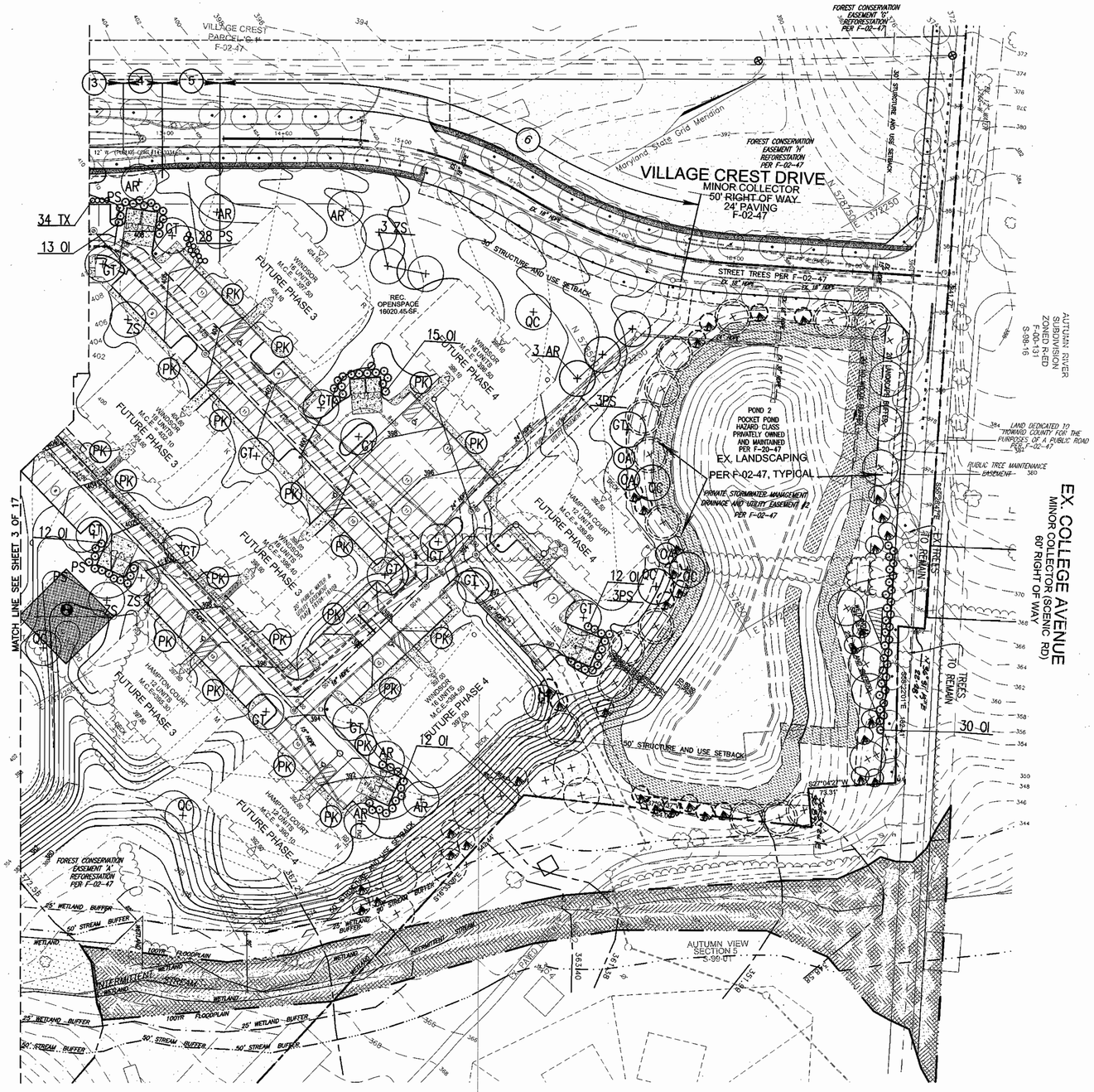

PLAN
SCALE: 1"=50'

LEGEND

- Existing Contour — 382
- Proposed Contour — 382
- Spot Elevation — +482.53
- Direction of Flow
- Existing Trees to Remain
- Light Poles — Overhead
- Shade Trees
- Shade Trees LANDSCAPING FOR POND2 PER F-02-47
- Shade Trees LANDSCAPING FOR TYPE B BUFFER FOR SCENIC ROAD PER F-02-47
- Evergreen Trees
- Shrubs/Hedge
- Flowering Trees
- Perimeter Landscape Edge — 2
- EVERGREEN TREE LANDSCAPING FOR POND2 PER F-02-47
- EVERGREEN TREE LANDSCAPING FOR TYPE B BUFFER FOR SCENIC ROAD PER F-02-47

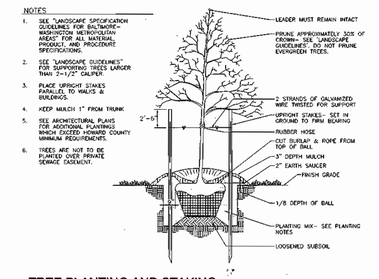

TREE PLANTING AND STAKING
DECIDUOUS TREES UP TO 2-1/2" CALIPER — NOT TO SCALE

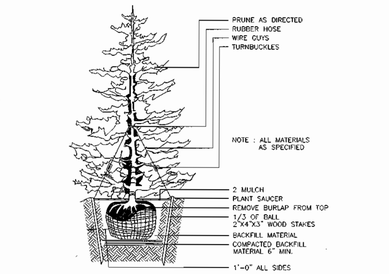

TYPICAL EVERGREEN TREE PLANTING DETAIL
NOT TO SCALE

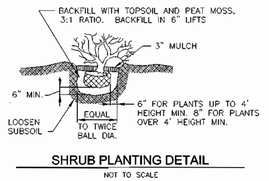

SHRUB PLANTING DETAIL
NOT TO SCALE

APPROVED: HOWARD COUNTY DEPARTMENT OF PLANNING AND ZONING

CHIEF, DEVELOPMENT ENGINEERING DIVISION — DATE 11/4/03

CHIEF, DIVISION OF LAND DEVELOPMENT — DATE 2/19/04

DIRECTOR — DATE 2/24/04

SITE DEVELOPMENT PLAN
LANDSCAPE PLAN
VILLAGE CREST
PART OF PARCEL D-1
PHASE 1, APT. BLDGS. A-F,
91 AGE RESTRICTED ADULT HOUSING UNITS

TAX MAP #25 BLOCK 20 — PARCEL P/O 98
2ND ELECTION DISTRICT — HOWARD COUNTY, MARYLAND

OWNER :
TAYLOR FAMILY LIMITED PARTNERSHIP A
C/O LAND DESIGN & DEVELOPMENT, INC.
8000 MAIN STREET
ELLICOTT CITY, MD 21043
ATTN: MR. DONALD R. REUWER
PHONE: (410) 480-9105

DEVELOPER
LAND DESIGN & DEVELOPMENT, INC.
8000 MAIN STREET
ELLICOTT CITY, MD 21043
ATTN: MR. DONALD R. REUWER
PHONE: (410) 480-9105

FREDERICK WARD ASSOCIATES, INC.
ARCHITECTS | ENGINEERS | PLANNERS | SURVEYORS
7125 RIVERWOOD DRIVE
COLUMBIA, MARYLAND 21046-2354
410-720-6900
410-720-6226 fax
www.frederickward.com

STATE OF MARYLAND — ROBERT HARRIS TUTTLE — No. 10953 — PROFESSIONAL ENGINEER — 9/19/03

DESIGN BY:	MHM
DRAWN BY:	RJ
CHECKED BY:	MHM
DATE:	SEPT. 2003
SCALE:	AS SHOWN
W.O. NO.:	2018121.00

SHEET 14 OF 16

SDP-02-94

M:\PROJECTS\2018121\ENGR\dwg\Sdp-APT\4LNPLAN.dwg Sun Sep 21 11:29:33 2003 E4

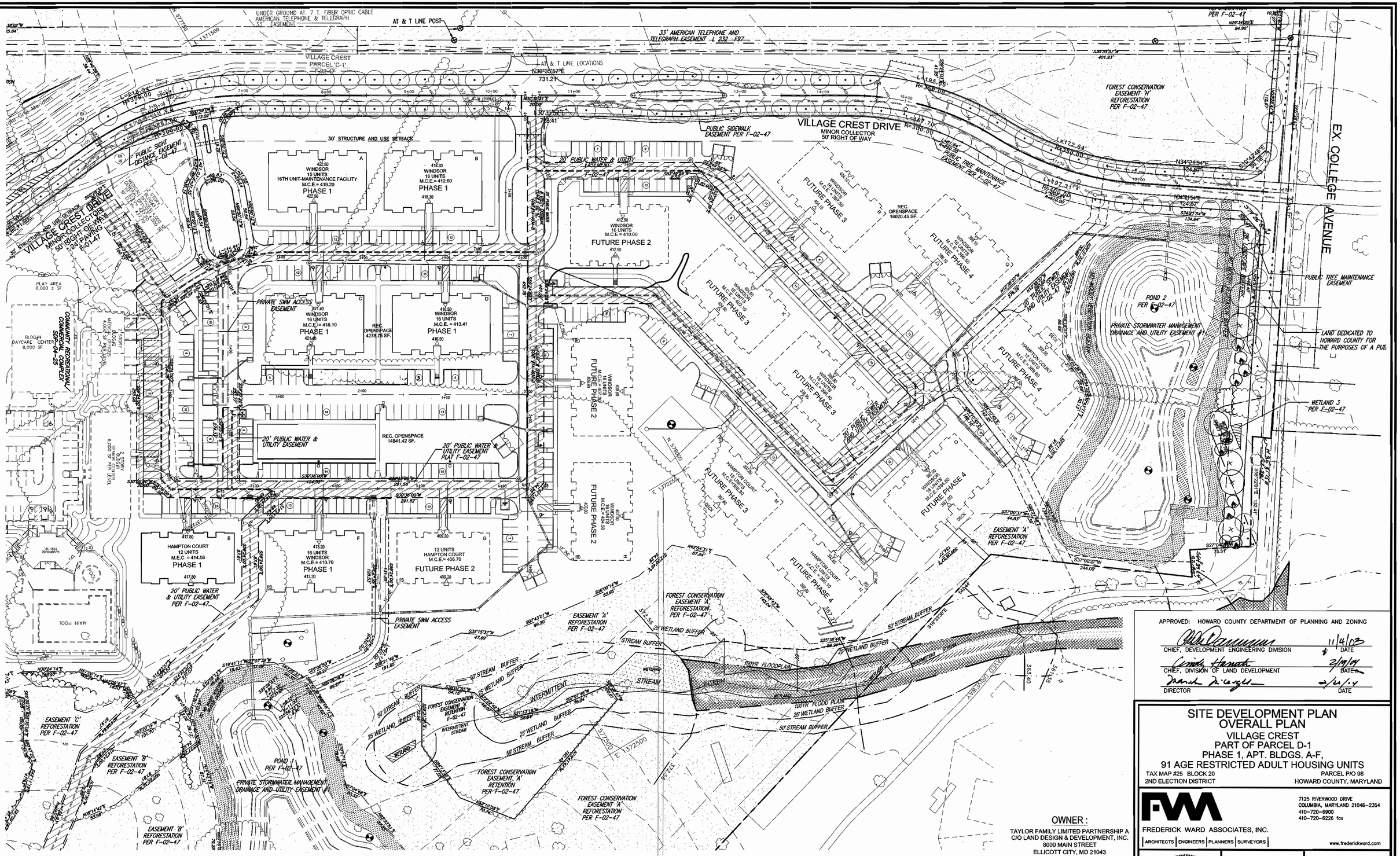

OVERALL PLAN
SCALE: 1" = 50'

APPROVED: HOWARD COUNTY DEPARTMENT OF PLANNING AND ZONING

CHIEF, DEVELOPMENT ENGINEERING DIVISION — DATE 11/4/03

CHIEF, DIVISION OF LAND DEVELOPMENT — DATE 2/19/04

DIRECTOR — DATE 2/25/04

SITE DEVELOPMENT PLAN
OVERALL PLAN
VILLAGE CREST
PART OF PARCEL D-1
PHASE 1, APT. BLDGS. A-F,
91 AGE RESTRICTED ADULT HOUSING UNITS

TAX MAP #25 BLOCK 20 — PARCEL P/O 98
2ND ELECTION DISTRICT — HOWARD COUNTY, MARYLAND

OWNER :
TAYLOR FAMILY LIMITED PARTNERSHIP A
C/O LAND DESIGN & DEVELOPMENT, INC.
8000 MAIN STREET
ELLICOTT CITY, MD 21043
ATTN: MR. DONALD R. REUWER
PHONE: (410) 480-9105

DEVELOPER
LAND DESIGN & DEVELOPMENT, INC.
8000 MAIN STREET
ELLICOTT CITY, MD 21043
ATTN: MR. DONALD R. REUWER
PHONE: (410) 480-9105

FREDERICK WARD ASSOCIATES, INC.
ARCHITECTS | ENGINEERS | PLANNERS | SURVEYORS
7125 RIVERWOOD DRIVE
COLUMBIA, MARYLAND 21046-2354
410-720-5900
410-720-6226 fax
www.frederickward.com

STATE OF MARYLAND — ROBERT HARRIS VOGEL — No. 16193 — PROFESSIONAL ENGINEER

ROBERT H. VOGEL, PE NO. 16193

DESIGN BY:	RJ
DRAWN BY:	RJ
CHECKED BY:	RHV
DATE:	SEPT. 2003
SCALE:	1"=100'
W.O. NO.:	2018121.00

SHEET 15 OF 16

SDP-02-94

M:\PROJECTS\2018121\ENGR\dwg\Sdp-APT\150WALL.dwg Fri Oct 17 13:35:18 2003 ROMA

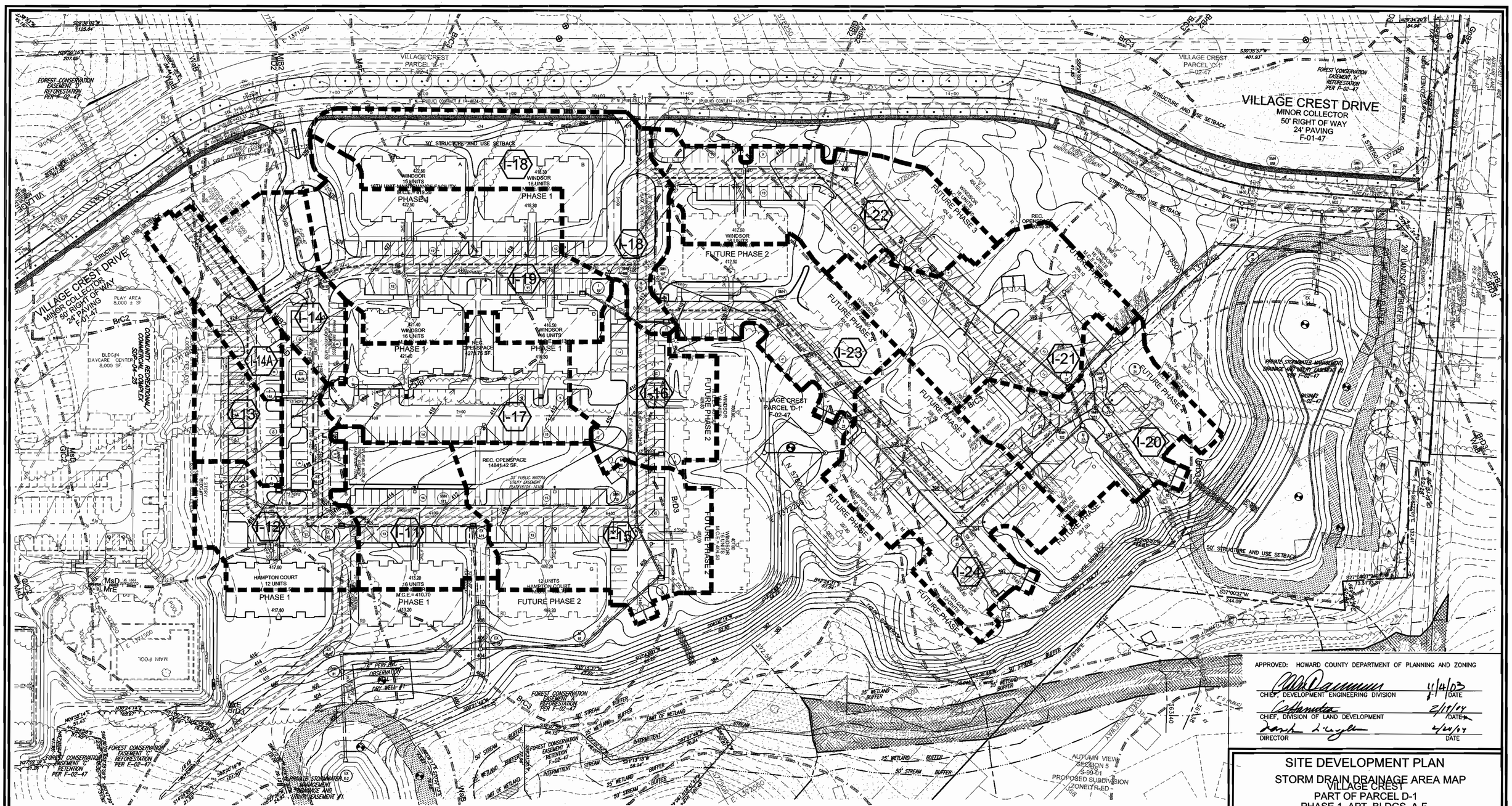
VILLAGE CREST DRIVE
MINOR COLLECTOR
50' RIGHT OF WAY
24' PAVING
F-01-47
VILLAGE CREST PARCEL 'C-1' F-02-47
VILLAGE CREST PARCEL 'D-1' F-02-47
I-11
I-12
I-13
I-14
I-14A
I-15
I-16
I-17
I-18
I-19
I-20
I-21
I-22
I-23
I-24
PHASE 1
FUTURE PHASE 2
FUTURE PHASE 3
REC. OPENSPACE 14841.42 SF.
REC. OPENSPACE 12770.75 SF.
PLAY AREA 8,000 ± SF
BLDG#4 DAYCARE CENTER 8,000 SF.
MAIN POOL
HAMPTON COURT 12 UNITS
WINDSOR 16 UNITS
WINDSOR 15 UNITS
WINDSOR 16 UNITS
WINDSOR 18 UNITS
12 UNITS HAMPTON COURT
HAMPTON COURT 16 UNITS
WINDSOR 15 UNITS
WINDSOR 16 UNITS
WINDSOR 18 UNITS
30' STRUCTURE AND USE SETBACK
50' STRUCTURE AND USE SETBACK
20' LANDSCAPE BUFFER
FOREST CONSERVATION EASEMENT 'A' RETENTION PER F-02-47
FOREST CONSERVATION EASEMENT 'B' REFORESTATION PER F-02-47
FOREST CONSERVATION EASEMENT 'C' RETENTION PER F-02-47
FOREST CONSERVATION EASEMENT 'D' REFORESTATION PER F-02-47
FOREST CONSERVATION EASEMENT 'H' REFORESTATION PER F-02-47
PRIVATE STORMWATER MANAGEMENT DRAINAGE AND UTILITY EASEMENT #2 PER F-02-47
PRIVATE STORMWATER MANAGEMENT DRAINAGE AND UTILITY EASEMENT #1
20' PUBLIC WATER UTILITY EASEMENT PLAT#14034-T&U
20' PUBLIC WATER UTILITY EASEMENT PLAT#14034-U
20' PUBLIC WATER UTILITY EASEMENT PLAT#14034-S
20' PUBLIC WATER UTILITY EASEMENT PLAT#14034-V
20' PUBLIC WATER UTILITY EASEMENT PLAT#14034-W
20' PUBLIC WATER UTILITY EASEMENT PLAT#14034-X
20' PUBLIC WATER UTILITY EASEMENT PLAT#14034-Y
20' PUBLIC WATER UTILITY EASEMENT PLAT#14034-Z
20' PUBLIC WATER UTILITY EASEMENT PLAT#14034-AA
20' PUBLIC WATER UTILITY EASEMENT PLAT#14034-BB
20' PUBLIC WATER UTILITY EASEMENT PLAT#14034-CC
20' PUBLIC WATER UTILITY EASEMENT PLAT#14034-DD
20' PUBLIC WATER UTILITY EASEMENT PLAT#14034-EE
20' PUBLIC WATER UTILITY EASEMENT PLAT#14034-FF
20' PUBLIC WATER UTILITY EASEMENT PLAT#14034-GG
20' PUBLIC WATER UTILITY EASEMENT PLAT#14034-HH
20' PUBLIC WATER UTILITY EASEMENT PLAT#14034-II
20' PUBLIC WATER UTILITY EASEMENT PLAT#14034-JJ
20' PUBLIC WATER UTILITY EASEMENT PLAT#14034-KK
20' PUBLIC WATER UTILITY EASEMENT PLAT#14034-LL
20' PUBLIC WATER UTILITY EASEMENT PLAT#14034-MM
20' PUBLIC WATER UTILITY EASEMENT PLAT#14034-NN
20' PUBLIC WATER UTILITY EASEMENT PLAT#14034-OO
20' PUBLIC WATER UTILITY EASEMENT PLAT#14034-PP
20' PUBLIC WATER UTILITY EASEMENT PLAT#14034-QQ
20' PUBLIC WATER UTILITY EASEMENT PLAT#14034-RR
20' PUBLIC WATER UTILITY EASEMENT PLAT#14034-SS
20' PUBLIC WATER UTILITY EASEMENT PLAT#14034-TT
20' PUBLIC WATER UTILITY EASEMENT PLAT#14034-UU
20' PUBLIC WATER UTILITY EASEMENT PLAT#14034-VV
20' PUBLIC WATER UTILITY EASEMENT PLAT#14034-WW
20' PUBLIC WATER UTILITY EASEMENT PLAT#14034-XX
20' PUBLIC WATER UTILITY EASEMENT PLAT#14034-YY
20' PUBLIC WATER UTILITY EASEMENT PLAT#14034-ZZ
20' PUBLIC WATER UTILITY EASEMENT PLAT#14034-AAA
20' PUBLIC WATER UTILITY EASEMENT PLAT#14034-BBB
20' PUBLIC WATER UTILITY EASEMENT PLAT#14034-CCC
20' PUBLIC WATER UTILITY EASEMENT PLAT#14034-DDD
20' PUBLIC WATER UTILITY EASEMENT PLAT#14034-EEE
20' PUBLIC WATER UTILITY EASEMENT PLAT#14034-FFF
20' PUBLIC WATER UTILITY EASEMENT PLAT#14034-GGG
20' PUBLIC WATER UTILITY EASEMENT PLAT#14034-HHH
20' PUBLIC WATER UTILITY EASEMENT PLAT#14034-III
20' PUBLIC WATER UTILITY EASEMENT PLAT#14034-JJJ
20' PUBLIC WATER UTILITY EASEMENT PLAT#14034-KKK
20' PUBLIC WATER UTILITY EASEMENT PLAT#14034-LLL
20' PUBLIC WATER UTILITY EASEMENT PLAT#14034-MMM
20' PUBLIC WATER UTILITY EASEMENT PLAT#14034-NNN
20' PUBLIC WATER UTILITY EASEMENT PLAT#14034-OOO
20' PUBLIC WATER UTILITY EASEMENT PLAT#14034-PPP
20' PUBLIC WATER UTILITY EASEMENT PLAT#14034-QQQ
20' PUBLIC WATER UTILITY EASEMENT PLAT#14034-RRR
20' PUBLIC WATER UTILITY EASEMENT PLAT#14034-SSS
20' PUBLIC WATER UTILITY EASEMENT PLAT#14034-TTT
20' PUBLIC WATER UTILITY EASEMENT PLAT#14034-UUU
20' PUBLIC WATER UTILITY EASEMENT PLAT#14034-VVV
20' PUBLIC WATER UTILITY EASEMENT PLAT#14034-WWW
20' PUBLIC WATER UTILITY EASEMENT PLAT#14034-XXX
20' PUBLIC WATER UTILITY EASEMENT PLAT#14034-YYY
20' PUBLIC WATER UTILITY EASEMENT PLAT#14034-ZZZ
20' PUBLIC WATER UTILITY EASEMENT PLAT#14034-AAAA
20' PUBLIC WATER UTILITY EASEMENT PLAT#14034-BBBB
20' PUBLIC WATER UTILITY EASEMENT PLAT#14034-CCCC
20' PUBLIC WATER UTILITY EASEMENT PLAT#14034-DDDD
20' PUBLIC WATER UTILITY EASEMENT PLAT#14034-EEEE
20' PUBLIC WATER UTILITY EASEMENT PLAT#14034-FFFF
20' PUBLIC WATER UTILITY EASEMENT PLAT#14034-GGGG
20' PUBLIC WATER UTILITY EASEMENT PLAT#14034-HHHH
20' PUBLIC WATER UTILITY EASEMENT PLAT#14034-IIII
20' PUBLIC WATER UTILITY EASEMENT PLAT#14034-JJJJ
20' PUBLIC WATER UTILITY EASEMENT PLAT#14034-KKKK
20' PUBLIC WATER UTILITY EASEMENT PLAT#14034-LLLL
20' PUBLIC WATER UTILITY EASEMENT PLAT#14034-MMMM
20' PUBLIC WATER UTILITY EASEMENT PLAT#14034-NNNN
20' PUBLIC WATER UTILITY EASEMENT PLAT#14034-OOOO
20' PUBLIC WATER UTILITY EASEMENT PLAT#14034-PPPP
20' PUBLIC WATER UTILITY EASEMENT PLAT#14034-QQQQ
20' PUBLIC WATER UTILITY EASEMENT PLAT#14034-RRRR
20' PUBLIC WATER UTILITY EASEMENT PLAT#14034-SSSS
20' PUBLIC WATER UTILITY EASEMENT PLAT#14034-TTTT
20' PUBLIC WATER UTILITY EASEMENT PLAT#14034-UUUU
20' PUBLIC WATER UTILITY EASEMENT PLAT#14034-VVVV
20' PUBLIC WATER UTILITY EASEMENT PLAT#14034-WWWW
20' PUBLIC WATER UTILITY EASEMENT PLAT#14034-XXXX
20' PUBLIC WATER UTILITY EASEMENT PLAT#14034-YYYY
20' PUBLIC WATER UTILITY EASEMENT PLAT#14034-ZZZZ
20' PUBLIC WATER UTILITY EASEMENT PLAT#14034-AAAAA
20' PUBLIC WATER UTILITY EASEMENT PLAT#14034-BBBBB
20' PUBLIC WATER UTILITY EASEMENT PLAT#14034-CCCCC
20' PUBLIC WATER UTILITY EASEMENT PLAT#14034-DDDDD
20' PUBLIC WATER UTILITY EASEMENT PLAT#14034-EEEEE
20' PUBLIC WATER UTILITY EASEMENT PLAT#14034-FFFFF
20' PUBLIC WATER UTILITY EASEMENT PLAT#14034-GGGGG
20' PUBLIC WATER UTILITY EASEMENT PLAT#14034-HHHHH
20' PUBLIC WATER UTILITY EASEMENT PLAT#14034-IIIII
20' PUBLIC WATER UTILITY EASEMENT PLAT#14034-JJJJJ
20' PUBLIC WATER UTILITY EASEMENT PLAT#14034-KKKKK
20' PUBLIC WATER UTILITY EASEMENT PLAT#14034-LLLLL
20' PUBLIC WATER UTILITY EASEMENT PLAT#14034-MMMMM
20' PUBLIC WATER UTILITY EASEMENT PLAT#14034-NNNNN
20' PUBLIC WATER UTILITY EASEMENT PLAT#14034-OOOOO
20' PUBLIC WATER UTILITY EASEMENT PLAT#14034-PPPPP
20' PUBLIC WATER UTILITY EASEMENT PLAT#14034-QQQQQ
20' PUBLIC WATER UTILITY EASEMENT PLAT#14034-RRRRR
20' PUBLIC WATER UTILITY EASEMENT PLAT#14034-SSSSS
20' PUBLIC WATER UTILITY EASEMENT PLAT#14034-TTTTT
20' PUBLIC WATER UTILITY EASEMENT PLAT#14034-UUUUU
20' PUBLIC WATER UTILITY EASEMENT PLAT#14034-VVVVV
20' PUBLIC WATER UTILITY EASEMENT PLAT#14034-WWWWW
20' PUBLIC WATER UTILITY EASEMENT PLAT#14034-XXXXX
20' PUBLIC WATER UTILITY EASEMENT PLAT#14034-YYYYY
20' PUBLIC WATER UTILITY EASEMENT PLAT#14034-ZZZZZ
20' PUBLIC WATER UTILITY EASEMENT PLAT#14034-AAAAAA
20' PUBLIC WATER UTILITY EASEMENT PLAT#14034-BBBBBB
20' PUBLIC WATER UTILITY EASEMENT PLAT#14034-CCCCCC
20' PUBLIC WATER UTILITY EASEMENT PLAT#14034-DDDDDD
20' PUBLIC WATER UTILITY EASEMENT PLAT#14034-EEEEEE
20' PUBLIC WATER UTILITY EASEMENT PLAT#14034-FFFFFF
20' PUBLIC WATER UTILITY EASEMENT PLAT#14034-GGGGGG
20' PUBLIC WATER UTILITY EASEMENT PLAT#14034-HHHHHH
20' PUBLIC WATER UTILITY EASEMENT PLAT#14034-IIIIII
20' PUBLIC WATER UTILITY EASEMENT PLAT#14034-JJJJJJ
20' PUBLIC WATER UTILITY EASEMENT PLAT#14034-KKKKKK
20' PUBLIC WATER UTILITY EASEMENT PLAT#14034-LLLLLL
20' PUBLIC WATER UTILITY EASEMENT PLAT#14034-MMMMMM
20' PUBLIC WATER UTILITY EASEMENT PLAT#14034-NNNNNN
20' PUBLIC WATER UTILITY EASEMENT PLAT#14034-OOOOOO
20' PUBLIC WATER UTILITY EASEMENT PLAT#14034-PPPPPP
20' PUBLIC WATER UTILITY EASEMENT PLAT#14034-QQQQQQ
20' PUBLIC WATER UTILITY EASEMENT PLAT#14034-RRRRRR
20' PUBLIC WATER UTILITY EASEMENT PLAT#14034-SSSSSS
20' PUBLIC WATER UTILITY EASEMENT PLAT#14034-TTTTTT
20' PUBLIC WATER UTILITY EASEMENT PLAT#14034-UUUUUU
20' PUBLIC WATER UTILITY EASEMENT PLAT#14034-VVVVVV
20' PUBLIC WATER UTILITY EASEMENT PLAT#14034-WWWWWW
20' PUBLIC WATER UTILITY EASEMENT PLAT#14034-XXXXXX
20' PUBLIC WATER UTILITY EASEMENT PLAT#14034-YYYYYY
20' PUBLIC WATER UTILITY EASEMENT PLAT#14034-ZZZZZZ
20' PUBLIC WATER UTILITY EASEMENT PLAT#14034-AAAAAAA
20' PUBLIC WATER UTILITY EASEMENT PLAT#14034-BBBBBBB
20' PUBLIC WATER UTILITY EASEMENT PLAT#14034-CCCCCCC
20' PUBLIC WATER UTILITY EASEMENT PLAT#14034-DDDDDDD
20' PUBLIC WATER UTILITY EASEMENT PLAT#14034-EEEEEEE
20' PUBLIC WATER UTILITY EASEMENT PLAT#14034-FFFFFFF
20' PUBLIC WATER UTILITY EASEMENT PLAT#14034-GGGGGGG
20' PUBLIC WATER UTILITY EASEMENT PLAT#14034-HHHHHHH
20' PUBLIC WATER UTILITY EASEMENT PLAT#14034-IIIIIII
20' PUBLIC WATER UTILITY EASEMENT PLAT#14034-JJJJJJJ
20' PUBLIC WATER UTILITY EASEMENT PLAT#14034-KKKKKKK
20' PUBLIC WATER UTILITY EASEMENT PLAT#14034-LLLLLLL
20' PUBLIC WATER UTILITY EASEMENT PLAT#14034-MMMMMMM
20' PUBLIC WATER UTILITY EASEMENT PLAT#14034-NNNNNNN
20' PUBLIC WATER UTILITY EASEMENT PLAT#14034-OOOOOOO
20' PUBLIC WATER UTILITY EASEMENT PLAT#14034-PPPPPPP
20' PUBLIC WATER UTILITY EASEMENT PLAT#14034-QQQQQQQ
20' PUBLIC WATER UTILITY EASEMENT PLAT#14034-RRRRRRR
20' PUBLIC WATER UTILITY EASEMENT PLAT#14034-SSSSSSS
20' PUBLIC WATER UTILITY EASEMENT PLAT#14034-TTTTTTT
20' PUBLIC WATER UTILITY EASEMENT PLAT#14034-UUUUUUU
20' PUBLIC WATER UTILITY EASEMENT PLAT#14034-VVVVVVV
20' PUBLIC WATER UTILITY EASEMENT PLAT#14034-WWWWWWW
20' PUBLIC WATER UTILITY EASEMENT PLAT#14034-XXXXXXX
20' PUBLIC WATER UTILITY EASEMENT PLAT#14034-YYYYYYY
20' PUBLIC WATER UTILITY EASEMENT PLAT#14034-ZZZZZZZ
20' PUBLIC WATER UTILITY EASEMENT PLAT#14034-AAAAAAAA
20' PUBLIC WATER UTILITY EASEMENT PLAT#14034-BBBBBBBB
20' PUBLIC WATER UTILITY EASEMENT PLAT#14034-CCCCCCCC
20' PUBLIC WATER UTILITY EASEMENT PLAT#14034-DDDDDDDD
20' PUBLIC WATER UTILITY EASEMENT PLAT#14034-EEEEEEEE
20' PUBLIC WATER UTILITY EASEMENT PLAT#14034-FFFFFFFF
20' PUBLIC WATER UTILITY EASEMENT PLAT#14034-GGGGGGGG
20' PUBLIC WATER UTILITY EASEMENT PLAT#14034-HHHHHHHH
20' PUBLIC WATER UTILITY EASEMENT PLAT#14034-IIIIIIII
20' PUBLIC WATER UTILITY EASEMENT PLAT#14034-JJJJJJJJ
20' PUBLIC WATER UTILITY EASEMENT PLAT#14034-KKKKKKKK
20' PUBLIC WATER UTILITY EASEMENT PLAT#14034-LLLLLLLL
20' PUBLIC WATER UTILITY EASEMENT PLAT#14034-MMMMMMMM
20' PUBLIC WATER UTILITY EASEMENT PLAT#14034-NNNNNNNN
20' PUBLIC WATER UTILITY EASEMENT PLAT#14034-OOOOOOOO
20' PUBLIC WATER UTILITY EASEMENT PLAT#14034-PPPPPPPP
20' PUBLIC WATER UTILITY EASEMENT PLAT#14034-QQQQQQQQ
20' PUBLIC WATER UTILITY EASEMENT PLAT#14034-RRRRRRRR
20' PUBLIC WATER UTILITY EASEMENT PLAT#14034-SSSSSSSS
20' PUBLIC WATER UTILITY EASEMENT PLAT#14034-TTTTTTTT
20' PUBLIC WATER UTILITY EASEMENT PLAT#14034-UUUUUUUU
20' PUBLIC WATER UTILITY EASEMENT PLAT#14034-VVVVVVVV
20' PUBLIC WATER UTILITY EASEMENT PLAT#14034-WWWWWWWW
20' PUBLIC WATER UTILITY EASEMENT PLAT#14034-XXXXXXXX
20' PUBLIC WATER UTILITY EASEMENT PLAT#14034-YYYYYYYY
20' PUBLIC WATER UTILITY EASEMENT PLAT#14034-ZZZZZZZZ
20' PUBLIC WATER UTILITY EASEMENT PLAT#14034-AAAAAAAAA
20' PUBLIC WATER UTILITY EASEMENT PLAT#14034-BBBBBBBBB
20' PUBLIC WATER UTILITY EASEMENT PLAT#14034-CCCCCCCCC
20' PUBLIC WATER UTILITY EASEMENT PLAT#14034-DDDDDDDDD
20' PUBLIC WATER UTILITY EASEMENT PLAT#14034-EEEEEEEEE
20' PUBLIC WATER UTILITY EASEMENT PLAT#14034-FFFFFFFFF
20' PUBLIC WATER UTILITY EASEMENT PLAT#14034-GGGGGGGGG
20' PUBLIC WATER UTILITY EASEMENT PLAT#14034-HHHHHHHHH
20' PUBLIC WATER UTILITY EASEMENT PLAT#14034-IIIIIIIII
20' PUBLIC WATER UTILITY EASEMENT PLAT#14034-JJJJJJJJJ
20' PUBLIC WATER UTILITY EASEMENT PLAT#14034-KKKKKKKKK
20' PUBLIC WATER UTILITY EASEMENT PLAT#14034-LLLLLLLLL
20' PUBLIC WATER UTILITY EASEMENT PLAT#14034-MMMMMMMMM
20' PUBLIC WATER UTILITY EASEMENT PLAT#14034-NNNNNNNNN
20' PUBLIC WATER UTILITY EASEMENT PLAT#14034-OOOOOOOOO
20' PUBLIC WATER UTILITY EASEMENT PLAT#14034-PPPPPPPPP
20' PUBLIC WATER UTILITY EASEMENT PLAT#14034-QQQQQQQQQ
20' PUBLIC WATER UTILITY EASEMENT PLAT#14034-RRRRRRRRR
20' PUBLIC WATER UTILITY EASEMENT PLAT#14034-SSSSSSSSS
20' PUBLIC WATER UTILITY EASEMENT PLAT#14034-TTTTTTTTT
20' PUBLIC WATER UTILITY EASEMENT PLAT#14034-UUUUUUUUU
20' PUBLIC WATER UTILITY EASEMENT PLAT#14034-VVVVVVVVV
20' PUBLIC WATER UTILITY EASEMENT PLAT#14034-WWWWWWWWW
20' PUBLIC WATER UTILITY EASEMENT PLAT#14034-XXXXXXXXX
20' PUBLIC WATER UTILITY EASEMENT PLAT#14034-YYYYYYYYY
20' PUBLIC WATER UTILITY EASEMENT PLAT#14034-ZZZZZZZZZ
20' PUBLIC WATER UTILITY EASEMENT PLAT#14034-AAAAAAAAAA
20' PUBLIC WATER UTILITY EASEMENT PLAT#14034-BBBBBBBBBB
20' PUBLIC WATER UTILITY EASEMENT PLAT#14034-CCCCCCCCCC
20' PUBLIC WATER UTILITY EASEMENT PLAT#14034-DDDDDDDDDD
20' PUBLIC WATER UTILITY EASEMENT PLAT#14034-EEEEEEEEEE
20' PUBLIC WATER UTILITY EASEMENT PLAT#14034-FFFFFFFFFF
20' PUBLIC WATER UTILITY EASEMENT PLAT#14034-GGGGGGGGGG
20' PUBLIC WATER UTILITY EASEMENT PLAT#14034-HHHHHHHHHH
20' PUBLIC WATER UTILITY EASEMENT PLAT#14034-IIIIIIIIII
20' PUBLIC WATER UTILITY EASEMENT PLAT#14034-JJJJJJJJJJ
20' PUBLIC WATER UTILITY EASEMENT PLAT#14034-KKKKKKKKKK
20' PUBLIC WATER UTILITY EASEMENT PLAT#14034-LLLLLLLLLL
20' PUBLIC WATER UTILITY EASEMENT PLAT#14034-MMMMMMMMMM
20' PUBLIC WATER UTILITY EASEMENT PLAT#14034-NNNNNNNNNN
20' PUBLIC WATER UTILITY EASEMENT PLAT#14034-OOOOOOOOOO
20' PUBLIC WATER UTILITY EASEMENT PLAT#14034-PPPPPPPPPP
20' PUBLIC WATER UTILITY EASEMENT PLAT#14034-QQQQQQQQQQ
20' PUBLIC WATER UTILITY EASEMENT PLAT#14034-RRRRRRRRRR
20' PUBLIC WATER UTILITY EASEMENT PLAT#14034-SSSSSSSSSS
20' PUBLIC WATER UTILITY EASEMENT PLAT#14034-TTTTTTTTTT
20' PUBLIC WATER UTILITY EASEMENT PLAT#14034-UUUUUUUUUU
20' PUBLIC WATER UTILITY EASEMENT PLAT#14034-VVVVVVVVVV
20' PUBLIC WATER UTILITY EASEMENT PLAT#14034-WWWWWWWWWW
20' PUBLIC WATER UTILITY EASEMENT PLAT#14034-XXXXXXXXXX
20' PUBLIC WATER UTILITY EASEMENT PLAT#14034-YYYYYYYYYY
20' PUBLIC WATER UTILITY EASEMENT PLAT#14034-ZZZZZZZZZZ
20' PUBLIC WATER UTILITY EASEMENT PLAT#14034-AAAAAAAAAAA
20' PUBLIC WATER UTILITY EASEMENT PLAT#14034-BBBBBBBBBBB
20' PUBLIC WATER UTILITY EASEMENT PLAT#14034-CCCCCCCCCCC
20' PUBLIC WATER UTILITY EASEMENT PLAT#14034-DDDDDDDDDDD
20' PUBLIC WATER UTILITY EASEMENT PLAT#14034-EEEEEEEEEEE
20' PUBLIC WATER UTILITY EASEMENT PLAT#14034-FFFFFFFFFFF
20' PUBLIC WATER UTILITY EASEMENT PLAT#14034-GGGGGGGGGGG
20' PUBLIC WATER UTILITY EASEMENT PLAT#14034-HHHHHHHHHHH
20' PUBLIC WATER UTILITY EASEMENT PLAT#14034-IIIIIIIIIII
20' PUBLIC WATER UTILITY EASEMENT PLAT#14034-JJJJJJJJJJJ
20' PUBLIC WATER UTILITY EASEMENT PLAT#14034-KKKKKKKKKKK
20' PUBLIC WATER UTILITY EASEMENT PLAT#14034-LLLLLLLLLLL
20' PUBLIC WATER UTILITY EASEMENT PLAT#14034-MMMMMMMMMMM
20' PUBLIC WATER UTILITY EASEMENT PLAT#14034-NNNNNNNNNNN
20' PUBLIC WATER UTILITY EASEMENT PLAT#14034-OOOOOOOOOOO
20' PUBLIC WATER UTILITY EASEMENT PLAT#14034-PPPPPPPPPPP
20' PUBLIC WATER UTILITY EASEMENT PLAT#14034-QQQQQQQQQQQ
20' PUBLIC WATER UTILITY EASEMENT PLAT#14034-RRRRRRRRRRR
20' PUBLIC WATER UTILITY EASEMENT PLAT#14034-SSSSSSSSSSS
20' PUBLIC WATER UTILITY EASEMENT PLAT#14034-TTTTTTTTTTT
20' PUBLIC WATER UTILITY EASEMENT PLAT#14034-UUUUUUUUUUU
20' PUBLIC WATER UTILITY EASEMENT PLAT#14034-VVVVVVVVVVV
20' PUBLIC WATER UTILITY EASEMENT PLAT#14034-WWWWWWWWWWW
20' PUBLIC WATER UTILITY EASEMENT PLAT#14034-XXXXXXXXXXX
20' PUBLIC WATER UTILITY EASEMENT PLAT#14034-YYYYYYYYYYY
20' PUBLIC WATER UTILITY EASEMENT PLAT#14034-ZZZZZZZZZZZ
20' PUBLIC WATER UTILITY EASEMENT PLAT#14034-AAAAAAAAAAAA
20' PUBLIC WATER UTILITY EASEMENT PLAT#14034-BBBBBBBBBBBB
20' PUBLIC WATER UTILITY EASEMENT PLAT#14034-CCCCCCCCCCCC
20' PUBLIC WATER UTILITY EASEMENT PLAT#14034-DDDDDDDDDDDD
20' PUBLIC WATER UTILITY EASEMENT PLAT#14034-EEEEEEEEEEEE
20' PUBLIC WATER UTILITY EASEMENT PLAT#14034-FFFFFFFFFFFF
20' PUBLIC WATER UTILITY EASEMENT PLAT#14034-GGGGGGGGGGGG
20' PUBLIC WATER UTILITY EASEMENT PLAT#14034-HHHHHHHHHHHH
20' PUBLIC WATER UTILITY EASEMENT PLAT#14034-IIIIIIIIIIII
20' PUBLIC WATER UTILITY EASEMENT PLAT#14034-JJJJJJJJJJJJ
20' PUBLIC WATER UTILITY EASEMENT PLAT#14034-KKKKKKKKKKKK
20' PUBLIC WATER UTILITY EASEMENT PLAT#14034-LLLLLLLLLLLL
20' PUBLIC WATER UTILITY EASEMENT PLAT#14034-MMMMMMMMMMMM
20' PUBLIC WATER UTILITY EASEMENT PLAT#14034-NNNNNNNNNNNN
20' PUBLIC WATER UTILITY EASEMENT PLAT#14034-OOOOOOOOOOOO
20' PUBLIC WATER UTILITY EASEMENT PLAT#14034-PPPPPPPPPPPP
20' PUBLIC WATER UTILITY EASEMENT PLAT#14034-QQQQQQQQQQQQ
20' PUBLIC WATER UTILITY EASEMENT PLAT#14034-RRRRRRRRRRRR
20' PUBLIC WATER UTILITY EASEMENT PLAT#14034-SSSSSSSSSSSS
20' PUBLIC WATER UTILITY EASEMENT PLAT#14034-TTTTTTTTTTTT
20' PUBLIC WATER UTILITY EASEMENT PLAT#14034-UUUUUUUUUUUU
20' PUBLIC WATER UTILITY EASEMENT PLAT#14034-VVVVVVVVVVVV
20' PUBLIC WATER UTILITY EASEMENT PLAT#14034-WWWWWWWWWWWW
20' PUBLIC WATER UTILITY EASEMENT PLAT#14034-XXXXXXXXXXXX
20' PUBLIC WATER UTILITY EASEMENT PLAT#14034-YYYYYYYYYYYY
20' PUBLIC WATER UTILITY EASEMENT PLAT#14034-ZZZZZZZZZZZZ
20' PUBLIC WATER UTILITY EASEMENT PLAT#14034-AAAAAAAAAAAAA
20' PUBLIC WATER UTILITY EASEMENT PLAT#14034-BBBBBBBBBBBBB
20' PUBLIC WATER UTILITY EASEMENT PLAT#14034-CCCCCCCCCCCCC
20' PUBLIC WATER UTILITY EASEMENT PLAT#14034-DDDDDDDDDDDDD
20' PUBLIC WATER UTILITY EASEMENT PLAT#14034-EEEEEEEEEEEEE
20' PUBLIC WATER UTILITY EASEMENT PLAT#14034-FFFFFFFFFFFFF
20' PUBLIC WATER UTILITY EASEMENT PLAT#14034-GGGGGGGGGGGGG
20' PUBLIC WATER UTILITY EASEMENT PLAT#14034-HHHHHHHHHHHHH
20' PUBLIC WATER UTILITY EASEMENT PLAT#14034-IIIIIIIIIIIII
20' PUBLIC WATER UTILITY EASEMENT PLAT#14034-JJJJJJJJJJJJJ
20' PUBLIC WATER UTILITY EASEMENT PLAT#14034-KKKKKKKKKKKKK
20' PUBLIC WATER UTILITY EASEMENT PLAT#14034-LLLLLLLLLLLLL
20' PUBLIC WATER UTILITY EASEMENT PLAT#14034-MMMMMMMMMMMMM
20' PUBLIC WATER UTILITY EASEMENT PLAT#14034-NNNNNNNNNNNNN
20' PUBLIC WATER UTILITY EASEMENT PLAT#14034-OOOOOOOOOOOOO
20' PUBLIC WATER UTILITY EASEMENT PLAT#14034-PPPPPPPPPPPPP
20' PUBLIC WATER UTILITY EASEMENT PLAT#14034-QQQQQQQQQQQQQ
20' PUBLIC WATER UTILITY EASEMENT PLAT#14034-RRRRRRRRRRRRR
20' PUBLIC WATER UTILITY EASEMENT PLAT#14034-SSSSSSSSSSSSS
20' PUBLIC WATER UTILITY EASEMENT PLAT#14034-TTTTTTTTTTTTT
20' PUBLIC WATER UTILITY EASEMENT PLAT#14034-UUUUUUUUUUUUU
20' PUBLIC WATER UTILITY EASEMENT PLAT#14034-VVVVVVVVVVVVV
20' PUBLIC WATER UTILITY EASEMENT PLAT#14034-WWWWWWWWWWWWW
20' PUBLIC WATER UTILITY EASEMENT PLAT#14034-XXXXXXXXXXXXX
20' PUBLIC WATER UTILITY EASEMENT PLAT#14034-YYYYYYYYYYYYY
20' PUBLIC WATER UTILITY EASEMENT PLAT#14034-ZZZZZZZZZZZZZ
20' PUBLIC WATER UTILITY EASEMENT PLAT#14034-AAAAAAAAAAAAAA
20' PUBLIC WATER UTILITY EASEMENT PLAT#14034-BBBBBBBBBBBBBB
20' PUBLIC WATER UTILITY EASEMENT PLAT#14034-CCCCCCCCCCCCCC
20' PUBLIC WATER UTILITY EASEMENT PLAT#14034-DDDDDDDDDDDDDD
20' PUBLIC WATER UTILITY EASEMENT PLAT#14034-EEEEEEEEEEEEEE
20' PUBLIC WATER UTILITY EASEMENT PLAT#14034-FFFFFFFFFFFFFF
20' PUBLIC WATER UTILITY EASEMENT PLAT#14034-GGGGGGGGGGGGGG
20' PUBLIC WATER UTILITY EASEMENT PLAT#14034-HHHHHHHHHHHHHH
20' PUBLIC WATER UTILITY EASEMENT PLAT#14034-IIIIIIIIIIIIII
20' PUBLIC WATER UTILITY EASEMENT PLAT#14034-JJJJJJJJJJJJJJ
20' PUBLIC WATER UTILITY EASEMENT PLAT#14034-KKKKKKKKKKKKKK
20' PUBLIC WATER UTILITY EASEMENT PLAT#14034-LLLLLLLLLLLLLL
20' PUBLIC WATER UTILITY EASEMENT PLAT#14034-MMMMMMMMMMMMMM
20' PUBLIC WATER UTILITY EASEMENT PLAT#14034-NNNNNNNNNNNNNN
20' PUBLIC WATER UTILITY EASEMENT PLAT#14034-OOOOOOOOOOOOOO
20' PUBLIC WATER UTILITY EASEMENT PLAT#14034-PPPPPPPPPPPPPP
20' PUBLIC WATER UTILITY EASEMENT PLAT#14034-QQQQQQQQQQQQQQ
20' PUBLIC WATER UTILITY EASEMENT PLAT#14034-RRRRRRRRRRRRRR
20' PUBLIC WATER UTILITY EASEMENT PLAT#14034-SSSSSSSSSSSSSS
20' PUBLIC WATER UTILITY EASEMENT PLAT#14034-TTTTTTTTTTTTTT
20' PUBLIC WATER UTILITY EASEMENT PLAT#14034-UUUUUUUUUUUUUU
20' PUBLIC WATER UTILITY EASEMENT PLAT#14034-VVVVVVVVVVVVVV
20' PUBLIC WATER UTILITY EASEMENT PLAT#14034-WWWWWWWWWWWWWW
20' PUBLIC WATER UTILITY EASEMENT PLAT#14034-XXXXXXXXXXXXXX
20' PUBLIC WATER UTILITY EASEMENT PLAT#14034-YYYYYYYYYYYYYY
20' PUBLIC WATER UTILITY EASEMENT PLAT#14034-ZZZZZZZZZZZZZZ
20' PUBLIC WATER UTILITY EASEMENT PLAT#14034-AAAAAAAAAAAAAAA
20' PUBLIC WATER UTILITY EASEMENT PLAT#14034-BBBBBBBBBBBBBBB
20' PUBLIC WATER UTILITY EASEMENT PLAT#14034-CCCCCCCCCCCCCCC
20' PUBLIC WATER UTILITY EASEMENT PLAT#14034-DDDDDDDDDDDDDDD
20' PUBLIC WATER UTILITY EASEMENT PLAT#14034-EEEEEEEEEEEEEEE
20' PUBLIC WATER UTILITY EASEMENT PLAT#14034-FFFFFFFFFFFFFFF
20' PUBLIC WATER UTILITY EASEMENT PLAT#14034-GGGGGGGGGGGGGGG
20' PUBLIC WATER UTILITY EASEMENT PLAT#14034-HHHHHHHHHHHHHHH
20' PUBLIC WATER UTILITY EASEMENT PLAT#14034-IIIIIIIIIIIIIII
20' PUBLIC WATER UTILITY EASEMENT PLAT#14034-JJJJJJJJJJJJJJJ
20' PUBLIC WATER UTILITY EASEMENT PLAT#14034-KKKKKKKKKKKKKKK
20' PUBLIC WATER UTILITY EASEMENT PLAT#14034-LLLLLLLLLLLLLLL
20' PUBLIC WATER UTILITY EASEMENT PLAT#14034-MMMMMMMMMMMMMMM
20' PUBLIC WATER UTILITY EASEMENT PLAT#14034-NNNNNNNNNNNNNNN
20' PUBLIC WATER UTILITY EASEMENT PLAT#14034-OOOOOOOOOOOOOOO
20' PUBLIC WATER UTILITY EASEMENT PLAT#14034-PPPPPPPPPPPPPPP
20' PUBLIC WATER UTILITY EASEMENT PLAT#14034-QQQQQQQQQQQQQQQ
20' PUBLIC WATER UTILITY EASEMENT PLAT#14034-RRRRRRRRRRRRRRR
20' PUBLIC WATER UTILITY EASEMENT PLAT#14034-SSSSSSSSSSSSSSS
20' PUBLIC WATER UTILITY EASEMENT PLAT#14034-TTTTTTTTTTTTTTT
20' PUBLIC WATER UTILITY EASEMENT PLAT#14034-UUUUUUUUUUUUUUU
20' PUBLIC WATER UTILITY EASEMENT PLAT#14034-VVVVVVVVVVVVVVV
20' PUBLIC WATER UTILITY EASEMENT PLAT#14034-WWWWWWWWWWWWWWW
20' PUBLIC WATER UTILITY EASEMENT PLAT#14034-XXXXXXXXXXXXXXX
20' PUBLIC WATER UTILITY EASEMENT PLAT#14034-YYYYYYYYYYYYYYY
20' PUBLIC WATER UTILITY EASEMENT PLAT#14034-ZZZZZZZZZZZZZZZ
20' PUBLIC WATER UTILITY EASEMENT PLAT#14034-AAAAAAAAAAAAAAAA
20' PUBLIC WATER UTILITY EASEMENT PLAT#14034-BBBBBBBBBBBBBBBB
20' PUBLIC WATER UTILITY EASEMENT PLAT#14034-CCCCCCCCCCCCCCCC
20' PUBLIC WATER UTILITY EASEMENT PLAT#14034-DDDDDDDDDDDDDDDD
20' PUBLIC WATER UTILITY EASEMENT PLAT#14034-EEEEEEEEEEEEEEEE
20' PUBLIC WATER UTILITY EASEMENT PLAT#14034-FFFFFFFFFFFFFFFF
20' PUBLIC WATER UTILITY EASEMENT PLAT#14034-GGGGGGGGGGGGGGGG
20' PUBLIC WATER UTILITY EASEMENT PLAT#14034-HHHHHHHHHHHHHHHH
20' PUBLIC WATER UTILITY EASEMENT PLAT#14034-IIIIIIIIIIIIIIII
20' PUBLIC WATER UTILITY EASEMENT PLAT#14034-JJJJJJJJJJJJJJJJ
20' PUBLIC WATER UTILITY EASEMENT PLAT#14

SITE DEVELOPMENT PLAN
VILLAGE CREST
PART OF PARCEL D-1
PHASE I APT. BLDGS. A-J,151 AGE RESTRICTED ADULT HOUSING UNITS
& PHASE II
HOWARD COUNTY, MARYLAND

GENERAL NOTES

1. ALL CONSTRUCTION SHALL BE IN ACCORDANCE WITH THE LATEST STANDARDS AND SPECIFICATIONS OF HOWARD COUNTY PLUS MSHA STANDARDS AND SPECIFICATIONS, IF APPLICABLE.
2. THE CONTRACTOR SHALL NOTIFY "MISS UTILITY" AT 1-800-257-7777 AT LEAST 48 HOURS PRIOR TO ANY EXCAVATION WORK.
3. THE CONTRACTOR IS TO NOTIFY THE FOLLOWING UTILITIES OR AGENCIES AT LEAST FIVE DAYS BEFORE STARTING WORK ON THESE DRAWING.

MISS UTILITY:	1-800-257-7777
HOWARD COUNTY BUREAU OF UTILITIES:	314-2366
AT&T CABLE LOCATION DIVISION:	393-3553
B.G.&E. CO. CONTRACTOR SERVICES:	850-4620
B.G.&E. CO. UNDERGROUND DAMAGE CONTROL:	787-4620
STATE HIGHWAY ADMINISTRATION:	531-5533

4. PROJECT BACKGROUND:
   LOCATION : ELLICOTT CITY, MARYLAND; TAX MAP 25, PARCEL D-1
   ZONING : POR
   SUBDIVISION : VILLAGE CREST – PART OF PARCEL D-1,
   PARCELS C-1, D-1 AND E-1
   A RESUBDIVISION OF WORTHINGTON FIELDS
   NON BUILDABLE PARCEL A-3 AND SUBDIVISION OF P/O PARCEL 98
   SECTION/AREA : N/A
   LIMIT OF DISTURBANCE, AREA :793042 SF OR 18.2 AC.
   P-00-07,S-99-18,S-00-05,F-01-60, P-01-20, F-02-47,F-02-112, F-04-077
5. FOREST STAND DELINEATION PLAN PREPARED BY EXPLORATION RESEARCH, INC. DATED JANUARY, 2000. THE FOREST CONSERVATION EASEMENTS HAVE BEEN ESTABLISHED PER F-02-47, PARCELS C-1, D-1 AND E-1. A RESUBDIVISION OF WORTHINGTON FIELDS NON BUILDABLE PARCEL A-3 AND SUBDIVISION OF P/O PARCEL 98. TO FULFILL THE REQUIREMENTS OF SECTION 16.1200 OF THE HOWARD COUNTY FOREST CONSERVATION ACT. NO CLEARING, GRADING, OR CONSTRUCTION IS PERMITTED WITHIN THE FOREST CONSERVATION EASEMENT. FOREST MANAGEMENT PRACTICES AS DESCRIBED IN THE DEED OF FOREST CONSERVATION EASEMENT ARE PERMITTED.
   FOREST CONSERVATION REQUIREMENTS:
   AREA OF RETENTION: 2.93AC.
   AREA OF REFORESTATION REQUIRED: 16.45 AC.
   AREA OF REFORESTATION SHOWN: 12.03 AC.
   A FEE-IN-LIEU OF THE REMAINING 5.50 AC.
6. THE CONTRACTOR SHALL NOTIFY THE DEPARTMENT OF PUBLIC WORKS/BUREAU OF ENGINEERING/ CONSTRUCTION INSPECTION DIVISION AT (410) 314-1880 AT LEAST FIVE (5) WORKING DAYS PRIOR TO START OF WORK.
7. ANY DAMAGE TO PUBLIC RIGHT-OF-WAYS, PAVING, OR EXISTING UTILITIES WILL BE CORRECTED AT THE CONTRACTOR'S EXPENSE.
8. EXISTING UTILITIES LOCATED FROM ROAD CONSTRUCTION PLANS, FIELD SURVEYS, PUBLIC WATER AND AND SEWER EXTENSION PLANS AND AVAILABLE RECORD DRAWINGS. APPROXIMATE LOCATION OF EXISTING UTILITIES ARE SHOWN FOR THE CONTRACTORS INFORMATION. CONTRACTOR SHALL LOCATE EXISTING UTILITIES WELL IN ADVANCE OF CONSTRUCTION ACTIVITIES AND TAKE ALL NECESSARY PRECAUTIONS TO PROTECT THE EXISTING UTILITIES AND TO MAINTAIN UNINTERRUPTED SERVICE. ANY DAMAGE INCURRED DUE TO CONTRACTOR'S OPERATION SHALL BE REPAIRED IMMEDIATELY AT THE CONTRACTOR'S EXPENSE.
9. ALL INLETS SHALL BE CONSTRUCTED IN ACCORDANCE WITH HOWARD COUNTY STANDARDS.
10. ALL PIPE ELEVATIONS SHOWN ARE INVERT ELEVATIONS
11. THE LOCATION OF WATER METER IS IN THE CENTER OF THE BUILDING FOR BOTH HOUSE TYPE. THE WATER METER SHALL BE PRIVATE.
12. ALL REINFORCED CONCRETE FOR STORM DRAIN STRUCTURES SHALL HAVE A MINIMUM OF 28 DAYS STRENGTH OF 3,500 P.S.I.
13. TRAFFIC CONTROL DEVICES, MARKINGS AND SIGNING SHALL BE IN ACCORDANCE WITH THE LATEST EDITION OF THE MANUAL ON UNIFORM TRAFFIC CONTROL DEVICES (MUTCD). ALL STREET AND REGULATORY SIGNS SHALL BE IN PLACE PRIOR TO THE PLACEMENT OF ANY ASPHALT.
14. SOIL COMPACTION SPECIFICATIONS, REQUIREMENTS, METHODS AND MATERIALS ARE TO BE IN ACCORDANCE WITH THE RECOMMENDATIONS OF THE PROJECT GEOTECHNICAL ENGINEER. GEOTECHNICAL ENGINEER TO CONFIRM ACCEPTABILITY OF PROPOSED PAVING SECTION, BASED ON SOIL TEST PRIOR TO CONSTRUCTION.
15. ALL STORM DRAIN PIPE BEDDING SHALL BE CLASS 'C' .
16. THE PROJECT BOUNDRY IS BASED ON A BOUNDRY SURVEY PERFORMED BY FISHER COLLINS & CARTER, INC. DATED DEPTEMBER 21, 1998.
17. THE TOPOGRAPHY SHOWN HEREON IS BASED ON AERIAL PHOTOGRAMETIC SURVEY PERFORMED BY WINGS AERIAL MAPPING COMPANY DATED MARCH, 1995.
18. A NOISE STUDY IS NOT REQUIRED FOR THIS PROJECT.
19. ALL PAVING PER DETAILS.
20. CONTRACTOR RESPONSIBLE TO CONSTRUCT ALL HANDICAP PARKING AND HANDICAP ACCESS IN ACCORDANCE WITH CURRENT ADA REQUIREMENTS.
21. ALL ELEVATIONS ARE TO FLOWLINE/BOTTOM OF CURB UNLESS OTHERWISE NOTED.
22. ALL DIMENSIONS ARE TO FACE OF CURB UNLESS OTHERWISE NOTED.
23. PUBLIC WATER AND SEWER AVAILABLE THOUGH CONTRACT NO.:14-3855-D. AND 44-3855-D
24. ALL OUTDOOR SITE LIGHTING TO CONFORM TO SECTION 134 OF THE HOWARD COUNTY ZONING REGULATIONS.
25. ALL BUILDING TO HAVE INTERIOR WATER METER SETTINGS.
26. THIS PLAN HAS BEEN PREPARED IN ACCORDANCE WITH THE PROVISIONS OF SECTION 16.124 OF THE HOWARD COUNTY CODE AND THE LANDSCAPE MANUAL. FINANCIAL SURETY FOR THE REQUIRED LANDSCAPING HAS BEEN POSTED AS A PART OF THE DPW DEVELOPER'S AGREEMENT IN THE AMOUNT OF $55,110.00
27. STORMWATER MANAGEMENT (Cpv, Wqv) HAS BEEN PROVIDED UNDER F-02-47. (REv) FOR VILLAGE CREST DRIVE THIS DEVELOPMENT AND THE IMPROVEMENT TO COLLEGE AVE IS PROVIDED BY TWO DRY WELL FACILITIES.
28. AS A RESULT OF THE PRELIMINARY PLAN FOR THIS SUBDIVISION, P-01-20, BEING SUBMITTED TO THE COUNTY FOR REVIEW PRIOR TO 11/15/01, IT IS SUBJECT TO COMPLIANCE WITH THE FOURTH EDITION OF THE SUBDIVISION AND LAND DEVELOPMENT REGULATIONS, IN ADDITION, BECAUSE THE PRELIMINARY PLAN FOR THIS SUBDIVISION IS SUBJECT TO COMPLIANCE WITH THE ZONING REGULATIONS ADOPTED ON 10/18/93 AND AMENDED ON 07/12/01.

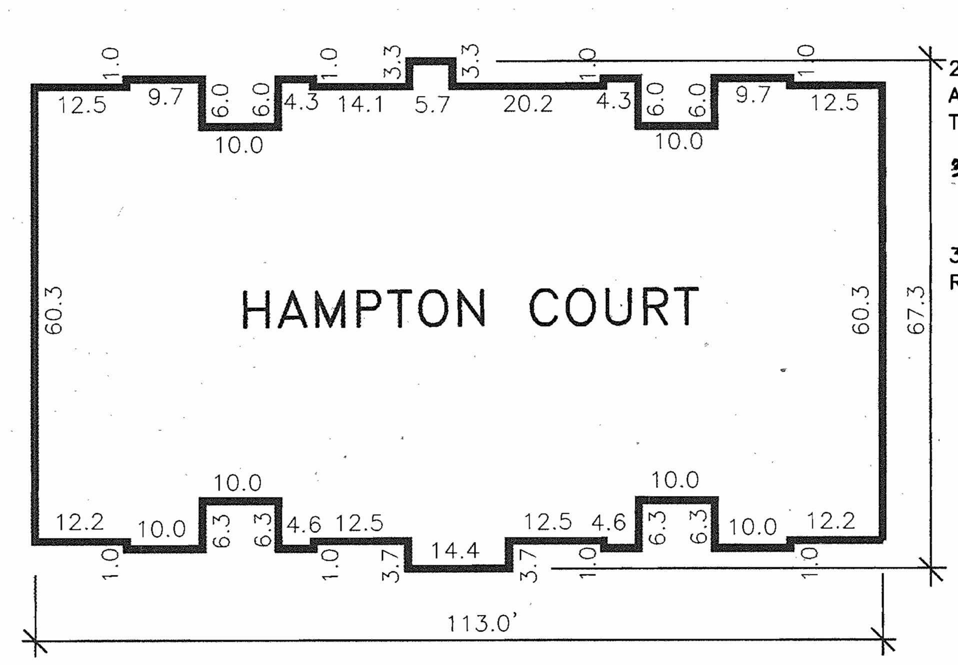

THE PLAN IS SUBJECT TO WP-04-109 APPROVAL TO WAIVE SECTION 16.144 (1)(i) OF THE FOURTH EDITION OF THE SUBDIVISION AND LAND DEVELOPMENT REGULATION WHICH VOIDS AND CONSIDERS WITHDRAWAL OF THE SUBMISSION OF THE PRELIMINARY PLAN WHICH MISSES A DEADLINE EXCEPT WHERE DELAY IS CAUSED BY GOVERNMENT ACTION.

SDP-02-94 IS DESIGNED TO BE A SINGLE SDP WITH FOUR PHASES, EACH PHASE HAS A MILESTONE FOR ITS SUBMISSION AS A REDLINE REVISIONS TO THE INITIAL SDP OR AS A NEW SDP SUBMISSION.

PHASE	NO TENTATIVE ALLOCATIONS	ALLOCATION YEAR	SDP MILESTONE DATE
PHASE 1	91	2005	SDP-02-94 OR ORIGINAL SUBMISSION
PHASE 2	60	2006	BETWEEN 07-01-03 & 01-01-04
PHASE 3	60	2007	BETWEEN 07-01-04 & 01-01-05.
PHASE 4	56	2008	BETWEEN 07-01-05 & 01-01-06.

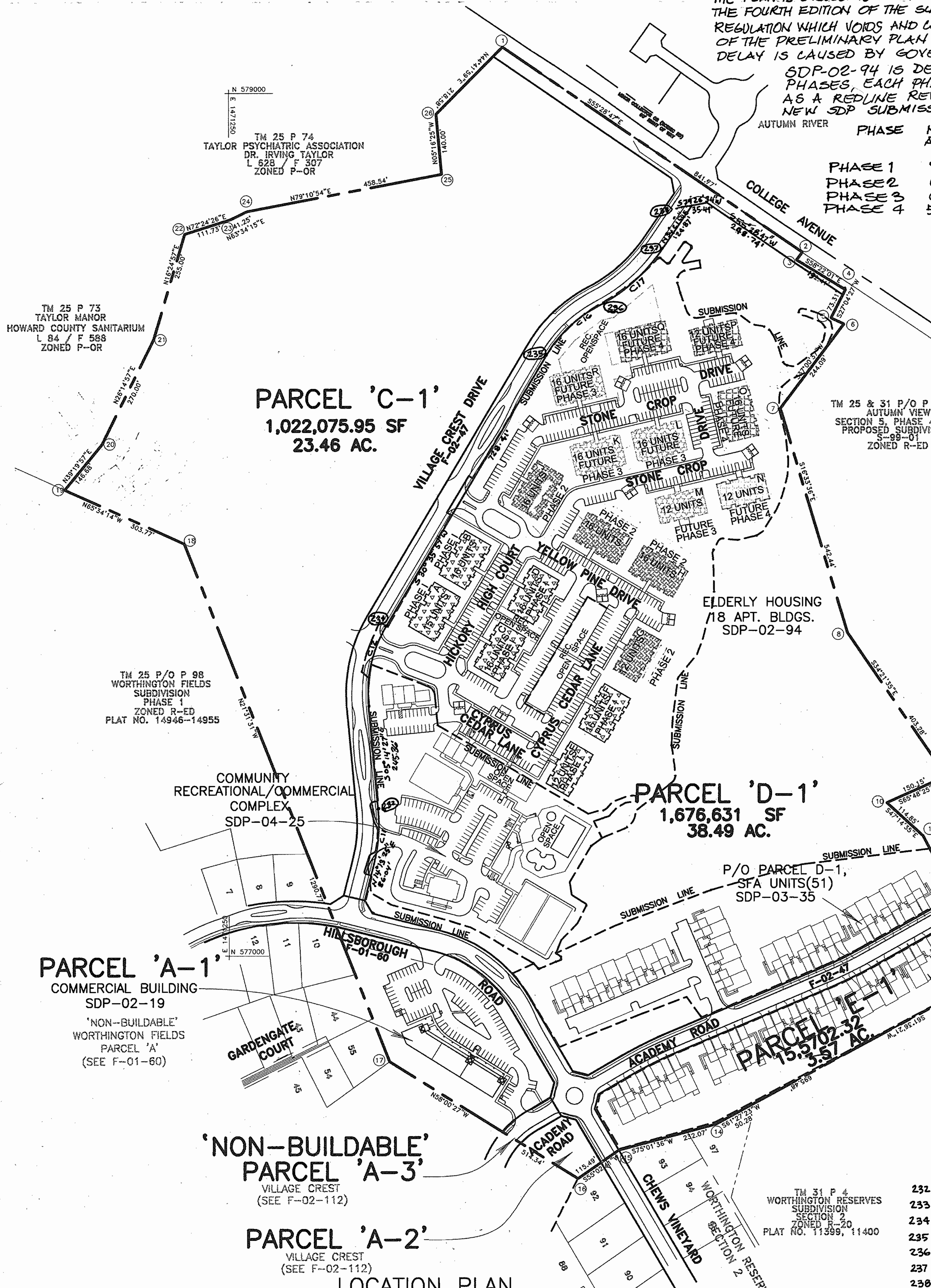

LOCATION PLAN
SCALE: 1"=200'

COORDINATE LIST

	NORTHING	EASTING
232	577338.0747	1371594.5002
233	577582.4063	1371572.0879
234	577764.9215	1371614.0298
235	578391.9031	1371984.8149
236	578505.6097	1372165.1051
237	578635.1921	1372251.5131
238	578738.1018	1372321.8574
239	578794.5708	1372356.5673

29. THIS SITE PLAN IS VALID FOR TWO YEARS FROM DATE OF SIGNATURE APPROVAL. A NEW SITE DEVELOPMENT PLAN OR WAIVER TO REACTIVATE THIS SITE DEVELOPMENT PLAN MAY BE REQUIRED FOR REMAINING PHASES.
30. THE ARTICLES OF INCORPORATION FOR ESTABLISHMENT OF THE VILLAGE CREST RESIDENTIAL VACANT CONDOMINIUM AND THE TAYLOR LAND CONDOMINIUM WILL BE RECORDED.
31. REFERENCE AGE RESTRICTED COVENANTS AND DOCUMENTS RECORDED L. 7916 F. 335 .

ADDRESS CHART						
PARCEL NO.	STREET ADRESS					
P/O PARCEL D-1	~~VILLAGE CREST DRIVE~~					
SUBDIVISION NAME VILLAGE CREST			SECTION/AREA N/A		PARCEL NUMBER P/O PARCEL D-1	
PLAT NO.	BLOCK NO.	ZONE	TAX/ZONE	ELECT. DIST.	CENSUS TR.	
~~16104-16109~~ 16421-16422	20	POR	25	2ND	6027.00	
WATER CODE G-01			SEWER CODE 1253100			

ADDRESS CHART		
BUILDING	STREET ADRESS	
A	8120	HICKORY HIGH COURT
B	8100	HICKORY HIGH COURT
C	8125	HICKORY HIGH COURT
D	8105	HICKORY HIGH COURT
E	8155	CYPRUS CEDAR LANE
F	8145	CYPRUS CEDAR LANE
G	8135	CYPRUS CEDAR LANE
H	8125	YELLOW PINE DRIVE
I	8115	YELLOW PINE DRIVE
J	8280	STONE CROP DRIVE
K	8270	STONE CROP DRIVE
L	8260	STONE CROP DRIVE
M	8265	STONE CROP DRIVE
N	8255	STONE CROP DRIVE
O	8245	STONE CROP DRIVE
P	8235	STONE CROP DRIVE
Q	8225	STONE CROP DRIVE
R	8215	STONE CROP DRIVE

RECREATIONAL OPEN SPACE

REQUIRED RECREATIONAL OPEN SPACE: 175 SF/UNIT(SDP-02-94)
267 UNITS(THIS PLAN): 46725 SF. (1.07 AC.)

REQUIRED RECREATIONAL OPEN SPACE: 400 SF/UNIT(SDP-03-35)
51 UNITS: 20400 SF. (0.468 AC.)

TOTAL RECREATIONAL OPEN SPACE REQ.: 67125 SF. (1.54 AC.)

PROVIDED RECREATIONAL OPEN SPACE (SDP-04-25)-FENCED POOL: 17744.99 SF.
TENNIS COURT(SDP-04-25):16615.20 SF.
COMMUNITY RECREATION BUILDING(SDP-04-25):2611.00 SF.

PER COMMUNITY RECREATIONAL/
/COMMERCIAL COMPLEX (SDP-04-25):36971.19 SF(0.85 AC.)
ELDERLY HOUSING, 267 UNITS,(SDP-02-94):35140.62 SF(0.81 AC.)
TOTAL RECREATIONAL OPEN SPACE PROVIDED.: 72111.81 SF. (1.66 AC.)

SHEET INDEX

SHEET NO.	DESCRIPTION
1 of 16	COVER SHEET
2 of 16	SITE AND UTILITY PLAN I
3 of 16	SITE AND UTILITY PLAN II
4 of 16	GRADING AND SEDIMENT CONTROL PLAN I
5 of 16	GRADING AND SEDIMENT CONTROL PLAN II
6 of 16	SITE DETAILS
7 of 16	SEDIMENT AND EROSION CONTROL DETAILS
8 of 16	PROFILES
9 of 16	PROFILES
10 of 16	PROFILES
11 of 16	PROFILES
12 of 16	PROFILES
13 of 16	LANDSCAPE PLAN & DETAILS I
14 of 16	LANDSCAPE PLAN & DETAILS II
15 of 16	OVERALL PLAN
16 of 16	STORM DRAIN DRAINAGE AREA MAP

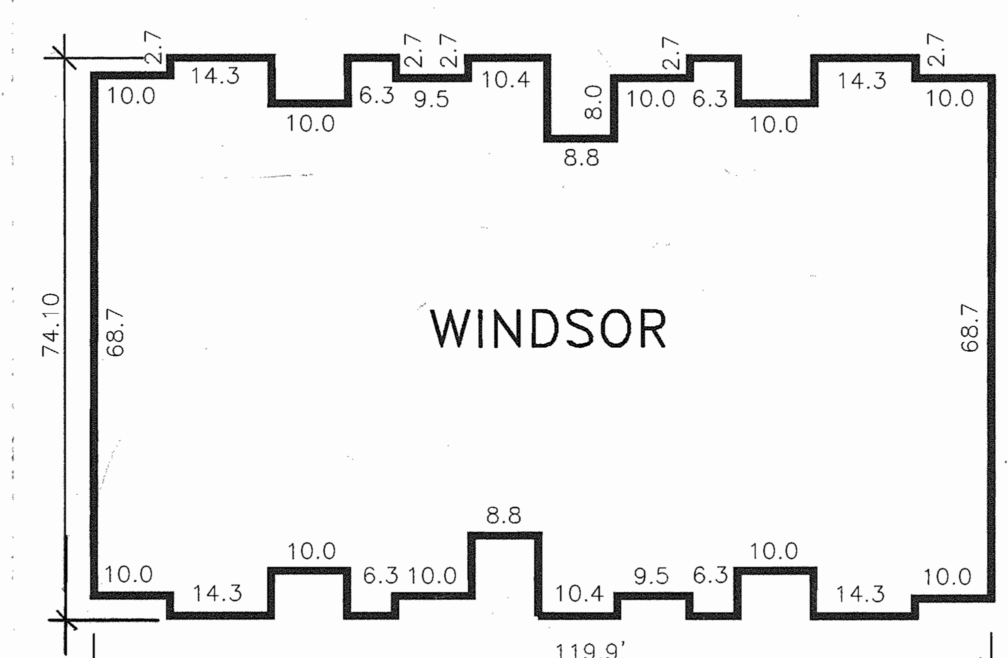

BUILDINGS TO BE CONSTRUCTED IN PHASES

SYMBOL	PHASING	BLDGS.	#'S OF UNITS
	PHASE 1 (YEAR 2005)	A,B,C,D,E,F	91
	PHASE 2 (YEAR 2006)	G,H,I,J	60
	PHASE 3 (YEAR 2007)	M,L,K,R	60
	PHASE 4 (YEAR 2008)	N,O,P,Q	56

NOTE: ALL UTILITIES, ROADS, INFRASTRUCTURE TO BE CONSTRUCTED INITIALLY. ONLY CONSTRUCTION TO REMAIN FOR FUTURE PHASES ARE THE BUILDINGS.

CURVE DATA TABLE

CURVE	ARC	RADIUS	TANGENT	DELTA	CHORD	
C11	127.46'	375.00'	64.32'	19°27'53"	S68°29'29"W	126.78'
C12	190.45'	300.00'	98.56'	36°22'24"	N12°56'31"E	187.27'
C16	167.70'	300.00'	86.10'	32°01'40"	S46°36'47"W	165.52'
C17	197.31'	400.00'	100.70'	28°15'42"	N48°29'46"E	195.31'

NO.	REVISION	DATE
1	ADDED PHASE 2, GRADING CHANGE AROUND BLDG.	

OWNER :

TAYLOR FAMILY LIMITED PARTNERSHIP A
C/O LAND DESIGN & DEVELOPMENT, INC.
8000 MAIN STREET
ELLICOTT CITY, MD 21043
ATTN: MR. DONALD R. REUWER
PHONE: (410) 480-9105

DEVELOPER

LAND DESIGN & DEVELOPMENT, INC.
8000 MAIN STREET
ELLICOTT CITY, MD 21043
ATTN: MR. DONALD R. REUWER
PHONE: (410) 480-9105

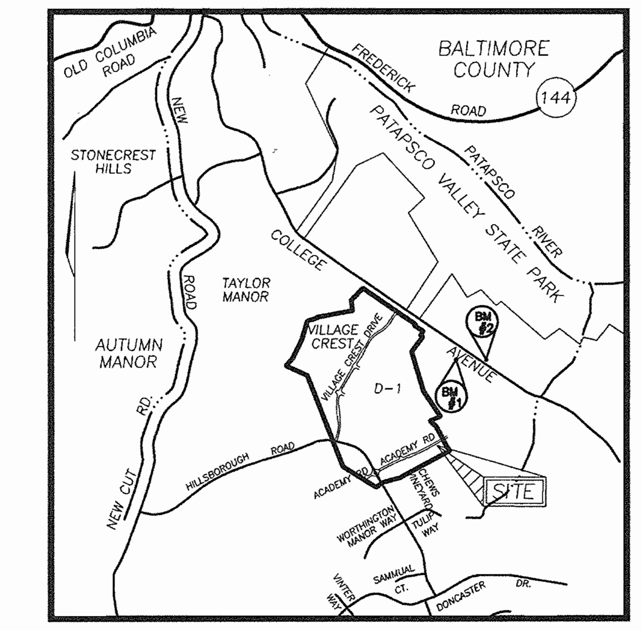

VICINITY MAP
SCALE: 1"=2000'

BENCHMARKS

BENCHMARK NO. 1: COUNTY CONTROL #3044005R
3/4" REBAR 0.8' BELOW SURFACE
N. 578233.92, E. 1473142.33
ELEV. = 374.389

BENCHMARK NO. 2: COUNTY CONTROL #3044004R
3/4" REBAR 0.6' BELOW SURFACE
N. 578128.03, E. 1473460.71
ELEV. =362.575

SITE ANALYSIS

THIS PLAN IS FOR PHASE 1, BLDGS. A, B,C,D,E & F, 91 UNITS AND THE TOTAL SITE INFRASTRUCTURE ONLY

TOTAL AREA OF PARCEL D-1: 1,676,631 SF. (38.49 AC.)
AREA OF LIMIT OF DISTURBANCE: 742327.13 SF. (17.04 AC.)
AREA OF SUBMISSION: 720918 SF. (16.55 AC.)

PRESENT ZONING: P.O.R.

PROPOSED USE: HOUSING FOR ELDERLY
(AGE RESTRICTED ADULT HOUSING)

PROPOSED USE:
TOTAL NUMBER OF UNITS ALLOWED SHOWN AND TOTAL NUMBER OF UNITS PROVIDED: 151 UNITS APPROVED ON THIS PLAN FOR PHASE 1, AND 116 PHASED TENTATIVE HOUSING UNIT ALLOCATIONS HAVE BEEN GRANTED PER THIS PLAN. SEE THE PHASING CHART ON THIS SHEET FOR THE PHASING OF THE REMAINING PROPOSED 116 UNITS.

PARKING :
HOUSING FOR ELDERLY
1.0 SPACES PER A DWELLING UNIT
267 DWELLING UNITS= 267 SPACES REQ.
298 SPACES PROVIDED
119 SPACES PROVIDED FOR SDP-04-25
417 SPACES PROVIDED

HC. ACCESSIBLE SPACES
MIN.2% OF TOTAL SPACES REQ.= 9 SPACES
18 SPACES PROVIDED
3 SPACES PROVIDED FOR SDP-04-25
21 SPACES PROVIDED

TOTAL PARKING SPACES PROVIDED: 438 SPACES PROVIDED

BUILDING FOOTPRINTS
WINDSOR: 8098 SF X 13 = 105274 SF
OVERHANG: 379.32 SF
ROOF EAVES: 403.32 SF.
BUILDING COVERAGE: 106057 SF
HAMPTON COURT : 6669 SF X 5 = 33345 SF
OVERHANG: 318.59 SF
ROOF EAVES: 346.28 SF.
BUILDING COVERAGE: 34010 SF

TOTAL BUILDING COVERAGE:		140067 SF
	SIDEWALK:	30686 SF
	DUMPSTER:	6604 SF.
	PAVING:	177088 SF.
	IMPERVIOUS AREA:	352996 SF (8.10 AC.)

APPROVED: HOWARD COUNTY DEPARTMENT OF PLANNING AND ZONING

[signature] 11/4/03
CHIEF, DEVELOPMENT ENGINEERING DIVISION DATE

[signature] 2/19/04
CHIEF, DIVISION OF LAND DEVELOPMENT DATE

[signature] 2/20/04
DIRECTOR DATE

SITE DEVELOPMENT PLAN
COVER SHEET
VILLAGE CREST
PART OF PARCEL D-1
PHASE 1 & 2, APT. BLDGS. A-J
AGE RESTRICTED ADULT HOUSING UNITS
TAX MAP #25 BLOCK 20 — PARCEL P/O 98
2ND ELECTION DISTRICT — HOWARD COUNTY, MARYLAND

FWA
FREDERICK WARD ASSOCIATES, INC.
ARCHITECTS | ENGINEERS | PLANNERS | SURVEYORS
7125 RIVERWOOD DRIVE
COLUMBIA, MARYLAND 21046-2354
410-720-6900
410-720-6226 fax
www.frederickward.com

STATE OF MARYLAND — ROBERT HARRIS VOGEL — No. 16193 — PROFESSIONAL ENGINEER — 10/17/03
ROBERT H. VOGEL, PE NO. 16193

DESIGN BY:	RJ
DRAWN BY:	RJ
CHECKED BY:	RHV
DATE:	SEPT. 2003
SCALE:	AS SHOWN
W.O. NO.:	2018121.00

1 SHEET OF 16

SDP-02-94

M:\PROJECTS\2018121\ENGR\dwg\Sdp-APT\01COVER.DWG Fri Oct 17 13:09:05 2003 ROMA

MATCH LINE SEE SHEET 3 OF 16

WETLAND LINE TABLE

LINE	LENGTH	BEARING
W1	S19°23'46"W	75.53
W2	S26°20'33"W	33.55
W3	S33°12'48"W	39.15
W4	S43°18'29"W	35.33
W5	S22°32'57"W	36.99
W6	S36°28'36"W	49.06
W7	S26°47'10"W	31.43
W8	S44°53'32"W	31.66
W9	S26°02'23"W	34.68
W10	S07°54'34"E	38.71
W11	S11°35'41"W	52.37
W12	S63°49'26"W	10.35
W13	N61°19'04"W	7.07
W14	N05°01'39"E	37.49
W15	N20°23'44"W	25.01
W16	N19°07'16"E	56.76
W17	N33°10'27"E	36.35
W18	N12°24'54"W	39.01
W19	N34°50'45"E	83.19
W20	N13°37'37"W	33.32
W21	S58°37'47"E	44.53
W22	N21°54'45"E	41.53
W23	N59°49'32"E	31.33
W24	N48°03'31"E	34.49
W25	N16°10'02"E	40.02
W26	N24°32'00"W	23.50
W27	N17°07'59"E	36.90
W28	N78°45'13"E	10.16
W29	S16°33'36"E	30.21
W30	S60°12'02"E	8.88
W31	S03°34'33"E	32.87
W32	S69°43'33"W	11.00
W33	N00°46'49"E	41.03
W34	N18°08'41"E	13.07
W35	S57°10'03"E	31.49
W36	N81°20'00"W	30.88
W76	N19°08'10"W	6.44
W77	N76°15'50"E	37.76
W78	S45°12'38"E	8.01
W79	S59°05'06"W	16.98
W80	S88°28'33"W	25.69

307	578062.5315	1372586.6973
308	577557.3224	1372365.6449
309	578595.6480	1372539.5613

LEGEND

- WETLAND BUFFER
- STREAM BUFFER
- WETLAND
- 100YR FLOODPLAIN
- FOREST CONSERVATION REFORESTATION EASEMENT
- FOREST RETENTION EASEMENT
- RECREATIONAL OPEN SPACE
- PRIVATE SWM ACCESS EASEMENT

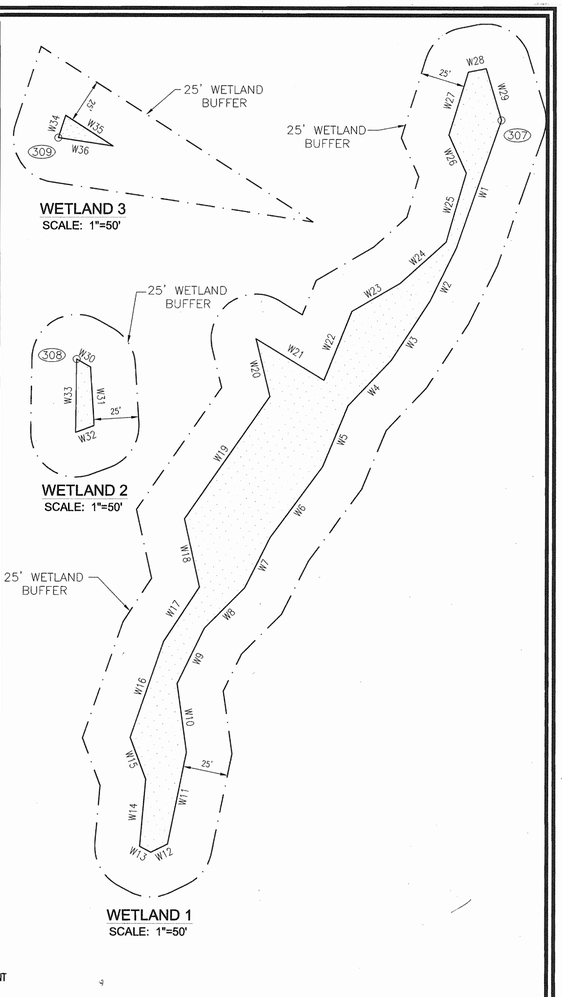

PLAN

SCALE: 1" = 40'

CURVE DATA TABLE

CURVE	ARC	RADIUS	TANGENT	DELTA	CHORD
C12	190.45'	300.01'	98.56	36°22'24"	N12°56'31"E 187.27'

APPROVED: HOWARD COUNTY DEPARTMENT OF PLANNING AND ZONING

CHIEF, DEVELOPMENT ENGINEERING DIVISION — DATE 11/4/03

CHIEF, DIVISION OF LAND DEVELOPMENT — DATE 2/9/04

DIRECTOR — DATE 2/2/04

SITE DEVELOPMENT PLAN

VILLAGE CREST
PART OF PARCEL D-1
PHASE 1 & 2 APT. BLDGS. A-J,
151 AGE RESTRICTED ADULT HOUSING UNITS
TAX MAP #25 BLOCK 20 PARCEL P/O 98
2ND ELECTION DISTRICT HOWARD COUNTY, MARYLAND

FREDERICK WARD ASSOCIATES, INC.
ARCHITECTS | ENGINEERS | PLANNERS | SURVEYORS
7125 RIVERWOOD DRIVE
COLUMBIA, MARYLAND 21046-2354
410-720-6900
410-720-6226 fax
www.frederickward.com

OWNER :
TAYLOR FAMILY LIMITED PARTNERSHIP A
C/O LAND DESIGN & DEVELOPMENT, INC.
8000 MAIN STREET
ELLICOTT CITY, MD 21043
ATTN: MR. DONALD R. REUWER
PHONE: (410) 480-9105

DEVELOPER
LAND DESIGN & DEVELOPMENT, INC.
8000 MAIN STREET
ELLICOTT CITY, MD 21043
ATTN: MR. DONALD R. REUWER
PHONE: (410) 480-9105

STATE OF MARYLAND — ROBERT H. VOGEL — No. 16139 — PROFESSIONAL ENGINEER

DESIGN BY:	RJ
DRAWN BY:	RJ
CHECKED BY:	RHV
DATE:	SEPT. 2003
SCALE:	1"=40'
W.O. NO.:	2018121.00

SHEET 2 OF 16

SDP-02-94

M:\PROJECTS\2018121\ENGR\dwg\Sdp-APT\02SPLAN.dwg Fri Oct 17 13:10:08 2003 RDMA

E 1371750 N 578250

MATCH LINE SEE SHEET 3 OF 17

UNDER GROUND AT. 7 T. FIBER OPTIC CABLE AMERICAN TELEPHONE & TELEGRAPH 33' EASEMENT

VILLAGE CREST PARCEL 'C-1' F-02-47

AT & T LINE LOCATIONS

FOREST CONSERVATION EASEMENT 'A' REFORESTATION PER F-02-47 PLAT# 16104-16109

VILLAGE CREST DRIVE
MINOR COLLECTOR
50' RIGHT OF WAY
24' PAVING
F-01-47

30' STRUCTURE AND USE SETBACK

PUBLIC SIDEWALK EASEMENT PER F-20-47 PLAT# 16104-16109

10' PUBLIC TREE MAINTENANCE EASEMENT PLAT# 16104-16109

20' PUBLIC SEWER, WATER & UTILITY EASEMENT, PREVIOUSLY RECORDED PLAT# 16104-16109.

10' PUBLIC SEWER, WATER & UTILITY EASEMENT PLAT# 16421-16422

REC. OPENSPACE 16020.45 SF

FUTURE PHASE 3 — WINDSOR 15 UNITS M.C.E.=397.50

FUTURE PHASE 4 — WINDSOR 15 UNITS M.C.E.=398.50

FUTURE PHASE 3 — WINDSOR 15 UNITS M.C.E.=403.10

FUTURE PHASE 3 — WINDSOR 15 UNITS M.C.E.=399.40

FUTURE PHASE 4 — HAMPTON COURT 12 UNITS M.C.E.=392.50

FUTURE PHASE 3 — HAMPTON COURT 12 UNITS M.C.E.=396.30

FUTURE PHASE 4 — HAMPTON COURT 12 UNITS M.C.E.=396.10

FUTURE PHASE 4 — WINDSOR 15 UNITS M.C.E.=394.50

STONE CROP DRIVE

POND 2
POCKET POND
HAZARD CLASS
PRIVATELY OWNED AND MAINTAINED PER F-20-47

PRIVATE STORMWATER MANAGEMENT DRAINAGE AND UTILITY EASEMENT #2 PER F-02-47 PLAT# 16104-16109

30' LANDSCAPE BUFFER

15' NO WOODY BUFFER

50' STRUCTURE AND USE SETBACK

EX. COLLEGE AVENUE
MINOR COLLECTOR OR (SCENIC RD)
60' RIGHT OF WAY

30' HALF SECTION RIGHT OF WAY DEDICATION, COLLEGE AVENUE. PER F-20-47

PROPOSED 12" WIDE AUXILIARY LANE PER F-20-47

EX. 12" WATER

AUTUMN RIVER SUBDIVISION ZONED R-ED F-00-131 S-98-16

LAND DEDICATED TO HOWARD COUNTY FOR THE PURPOSES OF A PUBLIC ROAD PER F-02-47 PLAT# 16104-16109

PUBLIC TREE MAINTENANCE EASEMENT PLAT# 16104-16109

MARYLAND STATE GRID MERIDIAN

VILLAGE CREST PARCEL 'D-1' F-02-47

PRIVATE OBSERVATION WELL 6" PERF. PVC DRY WELL 37'

6" SOLID PVC CLEANOUT

FOREST CONSERVATION EASEMENT 'A' REFORESTATION PER F-02-47 PLAT# 16104-16109

25' WETLAND BUFFER — 50' STREAM BUFFER — WETLAND — INTERMITTENT STREAM — 100YR FLOODPLAIN

PUBLIC 100YR FLOODPLAIN DRAINAGE AND UTILITY EASEMENT SEE DETAIL THIS SHEET

50' STRUCTURE AND USE SETBACK

AUTUMN VIEW SECTION 5 S-99-01 PROPOSED SUBDIVISION ZONED R-ED

EX. SAVAGE ROAD

LEGEND

- WETLAND BUFFER
- STREAM BUFFER
- WETLAND
- 100YR FLOODPLAIN
- FOREST CONSERVATION REFORESTATION EASEMENT
- FOREST RETENTION EASEMENT
- RECREATIONAL OPENSPACE
- RECREATIONAL OPENSPACE TOWNHOUSES (PARCEL E-1)

LINE TABLE

F1	N16°33'36"W	83.30
F2	S19°11'56"W	60.54
F3	S13°22'38"W	32.95
F4	S23°43'10"W	54.90
F5	S36°56'32"W	124.14
F6	N88°24'02"E	16.30
F7	S67°08'15"E	35.32
F8	S79°15'45"E	14.28
F9	N26°02'30"E	193.03
F10	N14°37'39"E	1.40
312	N 578041.5263	E 1372592.9432

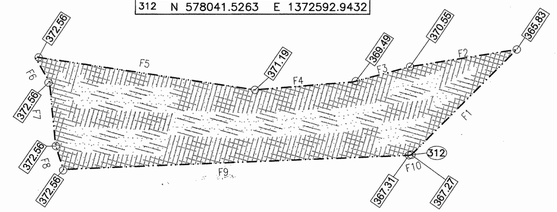

PUBLIC 100 YR FLOODPLAIN
DRAINAGE AND UTILITY EASEMENT
SCALE: 1"=40'

PLAN
SCALE: 1"=40'

CURVE DATA TABLE

CURVE	ARC	RADIUS	TANGENT	DELTA	CHORD
C16	167.70'	900.00'	84.10'	10°40'40"	S 42°54'47"W 167.42'
C17	197.31'	400.00'	100.70'	28°15'42"	N 48°24'40"E 195.31'

APPROVED: HOWARD COUNTY DEPARTMENT OF PLANNING AND ZONING

CHIEF, DEVELOPMENT ENGINEERING DIVISION	4/4/03 DATE
CHIEF, DIVISION OF LAND DEVELOPMENT	2/19/04 DATE
DIRECTOR	2/24/04 DATE

SITE DEVELOPMENT PLAN

VILLAGE CREST
PART OF PARCEL D-1
PHASE 1 & 2 , APT. BLDGS. A-J,
151 AGE RESTRICTED ADULT HOUSING UNITS
TAX MAP #25 BLOCK 20 — PARCEL P/O 98
2ND ELECTION DISTRICT — HOWARD COUNTY, MARYLAND

OWNER :
TAYLOR FAMILY LIMITED PARTNERSHIP A
C/O LAND DESIGN & DEVELOPMENT, INC.
8000 MAIN STREET
ELLICOTT CITY, MD 21043
ATTN: MR. DONALD R. REUWER
PHONE: (410) 480-9105

DEVELOPER
LAND DESIGN & DEVELOPMENT, INC.
8000 MAIN STREET
ELLICOTT CITY, MD 21043
ATTN: MR. DONALD R. REUWER
PHONE: (410) 480-9105

FREDERICK WARD ASSOCIATES, INC.
ARCHITECTS | ENGINEERS | PLANNERS | SURVEYORS
7125 RIVERWOOD DRIVE
COLUMBIA, MARYLAND 21046-2354
410-720-6900
410-720-6226 fax
www.frederickward.com

STATE OF MARYLAND — ROBERT JAMES JOHNSON — No. 16911 — PROFESSIONAL ENGINEER

DESIGN BY:	RJ
DRAWN BY:	RJ
CHECKED BY:	RHV
DATE:	SEPT. 2003
SCALE:	1"=40'
W.O. NO.:	2018121.00

SHEET 3 OF 16

SDP-02-94

M:\PROJECTS\2018121\ENGR\dwg\Sdp-APT\03SPLAN.dwg Fri Sep 19 16:42:58 2003 E4

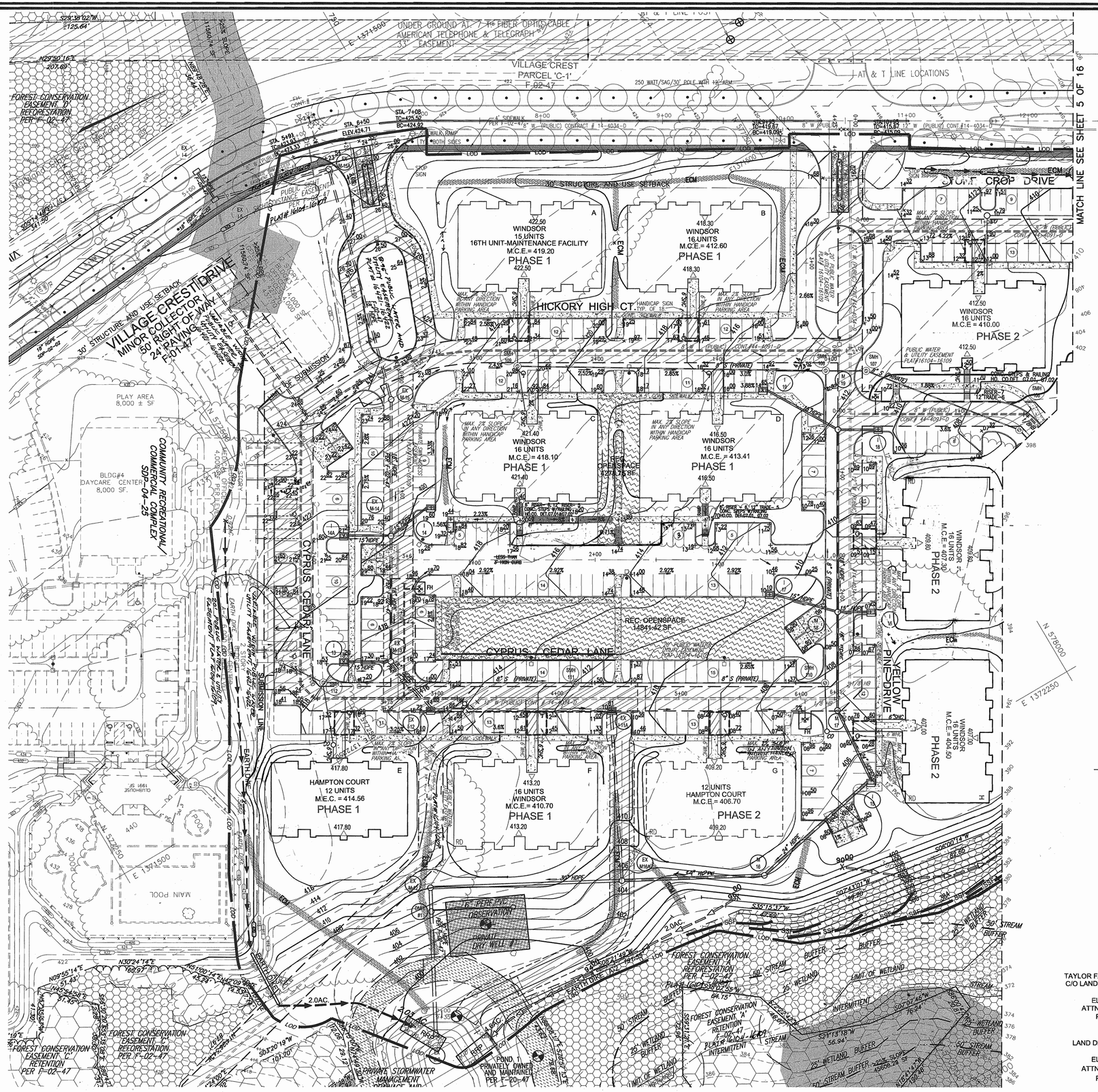

LEGEND

- WETLAND BUFFER
- STREAM BUFFER
- WETLAND
- 100YR FLOODPLAIN
- FOREST CONSERVATION REFORESTATION EASEMENT
- FOREST RETENTION EASEMENT
- RECREATIONAL OPENSPACE
- RECREATIONAL OPENSPACE TOWNHOUSES (PARCEL-E-1)
- PRIVATE SWM ACCESS EASEMENT
- EXISTING CONTOUR
- PROPOSED CONTOUR
- SPOT ELEVATION
- DIRECTION OF FLOW
- TREE PROTECTION FENCE
- EXISTING TREES TO REMAIN
- PARKING LAMP
- STABILIZED CONSTRUCTION ENTRANCE
- SILT FENCE
- SUPER SILT FENCE
- EARTH DIKE
- LIMIT OF DISTURBANCE
- EROSION CONTROL MATTING

ALL EARTH DIKES ARE TO BE PLACED IN WORKING ORDER AT THE END OF EACH WORKING DAY.

ALL REAR ROOF LEADERS FROM BUILDING F, G, H, I, M , N, AND O SHALL TIE INTO THE STORM DRAIN SYSTEM AND SHALL NOT BE DISCHARGE OVER LAND.

PLAN
SCALE: 1"=40'

REVIEWED FOR HOWARD SCD AND MEETS TECHNICAL REQUIREMENTS

Jim Myers 10-29-03
USDA–NATURAL RESOURCES CONSERVATION SERVICE DATE

THIS DEVELOPMENT PLAN IS APPROVED FOR SOIL EROSION AND SEDIMENT CONTROL BY THE HOWARD SOIL CONSERVATION DISTRICT

John R Robertson 10-29-03
HOWARD SCD DATE

DEVELOPER'S CERTIFICATE

"I/WE CERTIFY THAT ALL DEVELOPMENT AND CONSTRUCTION WILL BE DONE ACCORDING TO THIS PLAN FOR SEDIMENT AND EROSION CONTROL, AND THAT ALL RESPONSIBLE PERSONNEL INVOLVED IN THE CONSTRUCTION PROJECT WILL HAVE A CERTIFICATE OF ATTENDANCE AT A DEPARTMENT OF THE ENVIRONMENT APPROVED TRAINING PROGRAM FOR THE CONTROL OF SEDIMENT AND EROSION BEFORE BEGINNING THE PROJECT. I ALSO AUTHORIZE PERIODIC ON-SITE INSPECTION BY THE HOWARD SOIL CONSERVATION DISTRICT.

SIGNATURE OF DEVELOPER 10/17/03 DATE
DONALD REUWER

ENGINEERS CERTIFICATE

"I CERTIFY THAT THIS PLAN FOR SEDIMENT AND EROSION CONTROL REPRESENTS A PRACTICAL AND WORKABLE PLAN BASED ON MY PERSONAL KNOWLEDGE OF THE SITE CONDITIONS AND THAT IT WAS PREPARED IN ACCORDANCE WITH THE REQUIREMENTS OF THE HOWARD SOIL CONSERVATION DISTRICT.

SIGNATURE OF ENGINEER 10/17/03 DATE
ROBERT H. VOGEL

APPROVED: HOWARD COUNTY DEPARTMENT OF PLANNING AND ZONING

CHIEF, DEVELOPMENT ENGINEERING DIVISION 11/4/03 DATE

CHIEF, DIVISION OF LAND DEVELOPMENT 2/2/04 DATE

DIRECTOR 2/20/04 DATE

SITE DEVELOPMENT PLAN
GRADING AND SEDIMENT CONTROL PLAN
VILLAGE CREST
PART OF PARCEL D-1
PHASE 1 & 2 , APT. BLDGS. A-J,
151 AGE RESTRICTED ADULT HOUSING UNITS

TAX MAP #25 BLOCK 20 PARCEL P/O 98
2ND ELECTION DISTRICT HOWARD COUNTY, MARYLAND

OWNER :
TAYLOR FAMILY LIMITED PARTNERSHIP A
C/O LAND DESIGN & DEVELOPMENT, INC.
8000 MAIN STREET
ELLICOTT CITY, MD 21043
ATTN: MR. DONALD R. REUWER
PHONE: (410) 480-9105

DEVELOPER
LAND DESIGN & DEVELOPMENT, INC.
8000 MAIN STREET
ELLICOTT CITY, MD 21043
ATTN: MR. DONALD R. REUWER
PHONE: (410) 480-9105

FREDERICK WARD ASSOCIATES, INC.
ARCHITECTS | ENGINEERS | PLANNERS | SURVEYORS
7125 RIVERWOOD DRIVE
COLUMBIA, MARYLAND 21046–2354
410–720–6900
410–720–6226 fax
www.frederickward.com

STATE OF MARYLAND — ROBERT HARRIS VOGEL — No. 16193 — PROFESSIONAL ENGINEER
ROBERT H. VOGEL, PE NO. 16193

DESIGN BY:	RJ
DRAWN BY:	RJ
CHECKED BY:	RHV
DATE:	SEPT. 2003
SCALE:	AS SHOWN
W.O. NO.:	2018121.00

SHEET 4 OF 16

SDP-02-94

M:\PROJECTS\2018121\ENGR\dwg\Sdp-APT\16DSPLAN.dwg Fri Oct 17 13:31:54 2003 RDWA

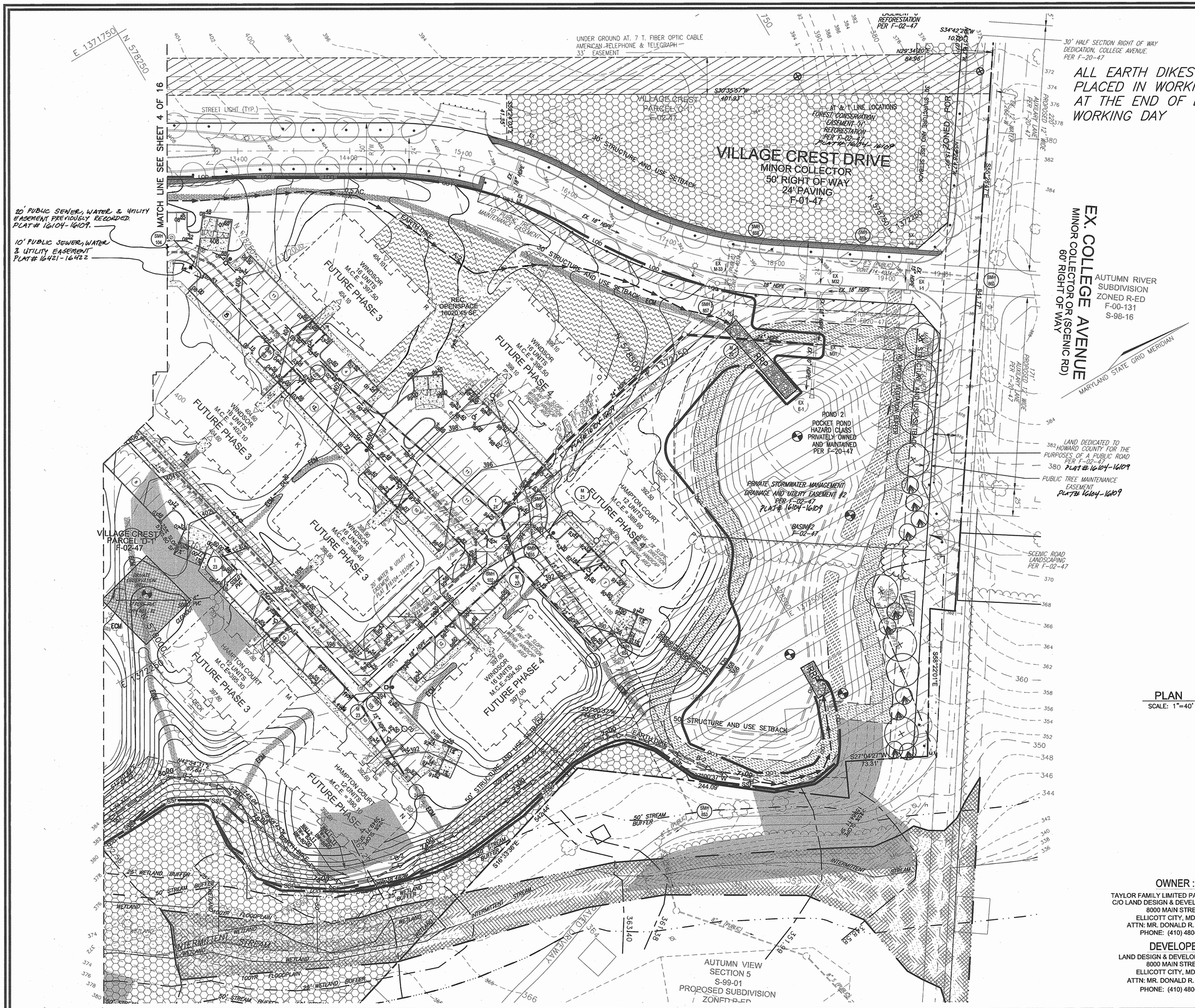

LEGEND

- EXISTING CONTOUR — 382
- PROPOSED CONTOUR — (382)
- SPOT ELEVATION — +82.53
- DIRECTION OF FLOW
- TREE PROTECTION FENCE
- EXISTING TREES TO REMAIN
- PARKING LIGHT
- STABILIZED CONSTRUCTION ENTRANCE — SCE
- SILT FENCE — SF — SF
- SUPER SILT FENCE — SSF — SSF
- EARTH DIKE
- LIMIT OF DISTURBANCE — LOD
- WETLAND BUFFER
- STREAM BUFFER
- WETLAND
- 100YR FLOODPLAIN
- FOREST CONSERVATION REFORESTATION EASEMENT
- FOREST RETENTION EASEMENT

ALL REAR ROOF LEADERS FROM BUILDING F, G, H, I, M, N, AND O SHALL TIE INTO THE STORM DRAIN SYSTEM AND SHALL NOT BE DISCHARGE OVER LAND.

REVIEWED FOR HOWARD SCD AND MEETS TECHNICAL REQUIREMENTS

Jim Myers 10-29-03
USDA—NATURAL RESOURCES CONSERVATION SERVICE DATE

THIS DEVELOPMENT PLAN IS APPROVED FOR SOIL EROSION AND SEDIMENT CONTROL BY THE HOWARD SOIL CONSERVATION DISTRICT

John R Robertson 10-29-03
HOWARD SCD DATE

DEVELOPER'S CERTIFICATE

"I/WE CERTIFY THAT ALL DEVELOPMENT AND CONSTRUCTION WILL BE DONE ACCORDING TO THIS PLAN FOR SEDIMENT AND EROSION CONTROL, AND THAT ALL RESPONSIBLE PERSONNEL INVOLVED IN THE CONSTRUCTION PROJECT WILL HAVE A CERTIFICATE OF ATTENDANCE AT A DEPARTMENT OF THE ENVIRONMENT APPROVED TRAINING PROGRAM FOR THE CONTROL OF SEDIMENT AND EROSION BEFORE BEGINNING THE PROJECT. I ALSO AUTHORIZE PERIODIC ON-SITE INSPECTION BY THE HOWARD SOIL CONSERVATION DISTRICT."

SIGNATURE OF DEVELOPER DONALD REUWER — 10/17/03 DATE

ENGINEERS CERTIFICATE

"I CERTIFY THAT THIS PLAN FOR SEDIMENT AND EROSION CONTROL REPRESENTS A PRACTICAL AND WORKABLE PLAN BASED ON MY PERSONAL KNOWLEDGE OF THE SITE CONDITIONS AND THAT IT WAS PREPARED IN ACCORDANCE WITH THE REQUIREMENTS OF THE HOWARD SOIL CONSERVATION DISTRICT.

Robert Vogel 10/17/03
SIGNATURE OF ENGINEER DATE
ROBERT H. VOGEL

APPROVED: HOWARD COUNTY DEPARTMENT OF PLANNING AND ZONING

CHIEF, DEVELOPMENT ENGINEERING DIVISION — 4/4/03 DATE
CHIEF, DIVISION OF LAND DEVELOPMENT — 2/19/04 DATE
DIRECTOR — 2/20/04 DATE

SITE DEVELOPMENT PLAN
GRADING AND SEDIMENT CONTROL PLAN II
VILLAGE CREST
PART OF PARCEL D-1

PHASE 1 & 2 , APT. BLDGS. A-J
151 AGE RESTRICTED ADULT HOUSING UNITS

TAX MAP #25 BLOCK 20 — PARCEL P/O 98
2ND ELECTION DISTRICT — HOWARD COUNTY, MARYLAND

OWNER :
TAYLOR FAMILY LIMITED PARTNERSHIP A
C/O LAND DESIGN & DEVELOPMENT, INC.
8000 MAIN STREET
ELLICOTT CITY, MD 21043
ATTN: MR. DONALD R. REUWER
PHONE: (410) 480-9105

DEVELOPER
LAND DESIGN & DEVELOPMENT, INC.
8000 MAIN STREET
ELLICOTT CITY, MD 21043
ATTN: MR. DONALD R. REUWER
PHONE: (410) 480-9105

FREDERICK WARD ASSOCIATES, INC.
ARCHITECTS | ENGINEERS | PLANNERS | SURVEYORS
7125 RIVERWOOD DRIVE
COLUMBIA, MARYLAND 21046-2354
410-720-6900
410-720-6226 fax
www.frederickward.com

STATE OF MARYLAND — ROBERT HARRIS VOGEL — No. 16193 — PROFESSIONAL ENGINEER — 10/17/03
ROBERT H. VOGEL, P.E. NO. 16193

DESIGN BY:	RJ
DRAWN BY:	RJ
CHECKED BY:	RHV
DATE:	SEPT. 2003
SCALE:	AS SHOWN
W.O. NO.:	2018121.00

SHEET 5 OF 16

SDP-02-94

M:\PROJECTS\2018121\ENGR\dwg\Sdp-APT\116SPLAN.dwg Tue Oct 07 08:38:13 2003 E4

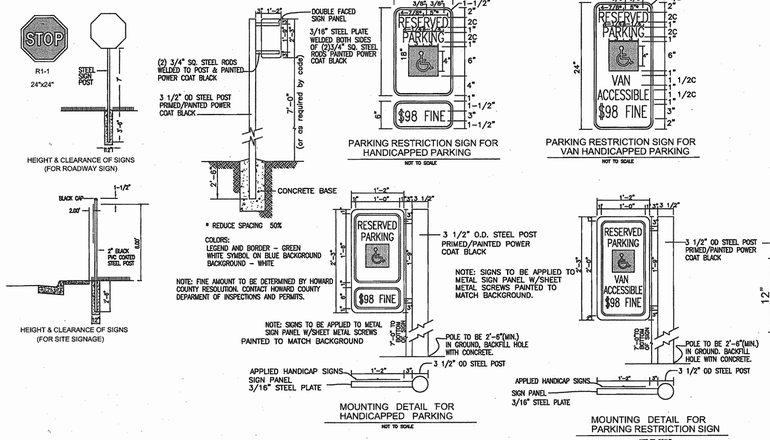

SIGNAGE DETAIL

NOT TO SCALE

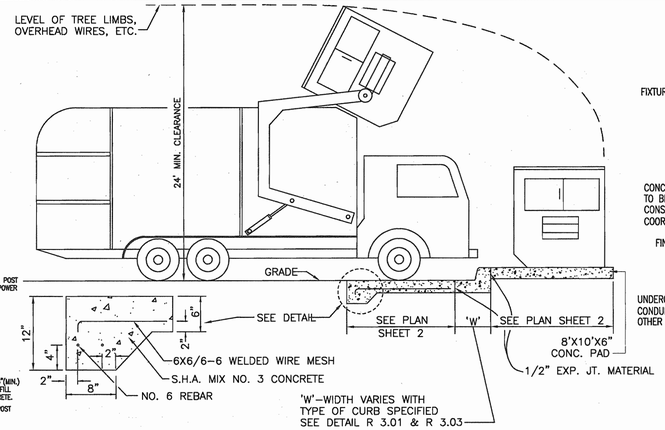

SOLID WASTE SERVICE PAD

HOWARD COUNTY STD. R 11.01
NOT TO SCALE
FOR DUMPSTER ENCLOSURE DETAIL SEE ARCHITECTURAL PLANS

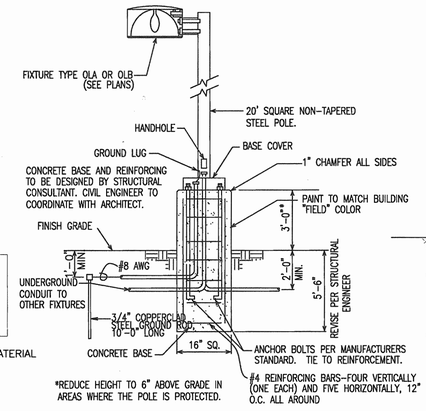

LIGHTING STANDARD

SCALE: NTS

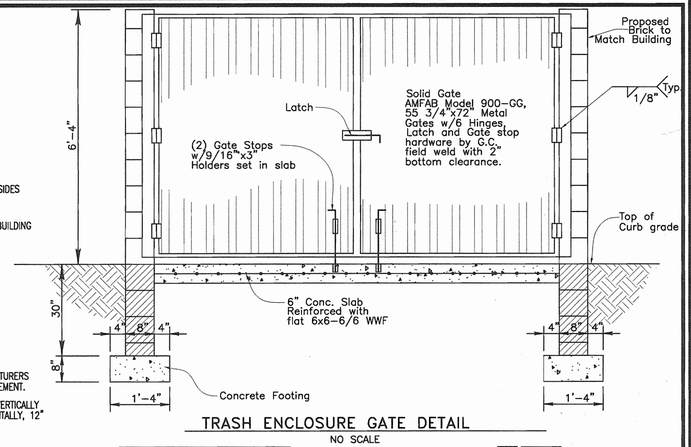

TRASH ENCLOSURE GATE DETAIL

NO SCALE

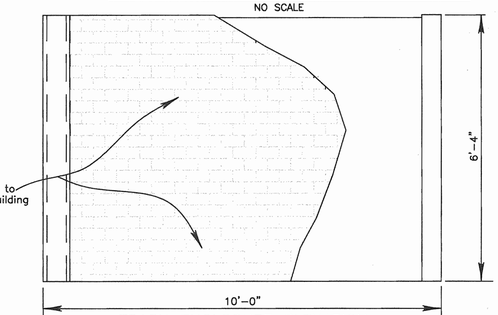

TRASH ENCLOSURE ELEVATION

NOT TO SCALE

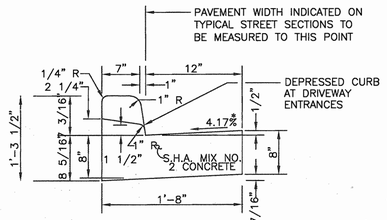

NOTE : DEPRESSED CURB IN HANDICAP ACCESSABLE AREAS SHALL HAVE A 0.0417'(1/2") RISE FROM PAVING TO TOP OF CURB.

STANDARD COMBINATION CURB AND GUTTER

HOWARD COUNTY STANDARD R-3.01
NOT TO SCALE

* GUTTER PAN AT THE MEDIAN EDGE OF INTERMEDIATE ARTERIAL OR THE HIGH SIDE OF SUPERELEVATED SECTIONS SHALL BE SLOPED AT THE SAME RATE AND IN THE SAME DIRECTION AS THE PAVEMENT. MATCH PAVEMENT CROSS SLOPE WHEN CURB IS LOCATED ON THE LOW SIDE OF SUPERELEVATED SECTION AND THE RATE OF SUPERELEVATION IS GREATER THAN 3% FOR MODIFIED CURB AND GUTTER.

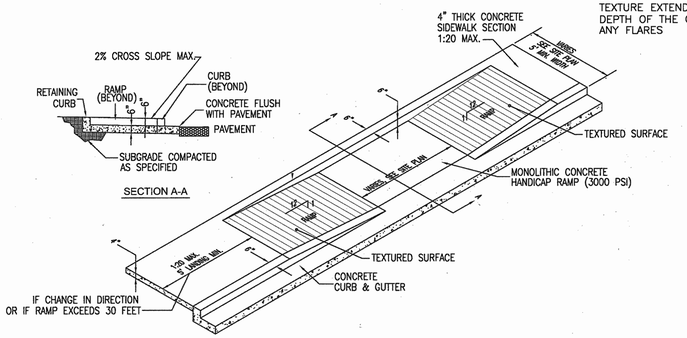

SIDEWALK HANDICAP RAMP DETAIL

NOT TO SCALE

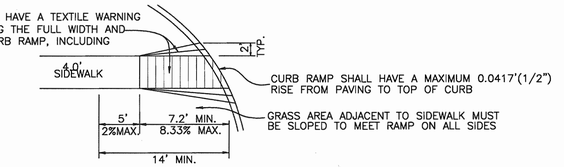

SIDEWALK RAMP

NOT TO SCALE

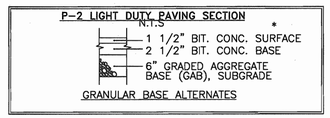

PAVMENT SECTIONS

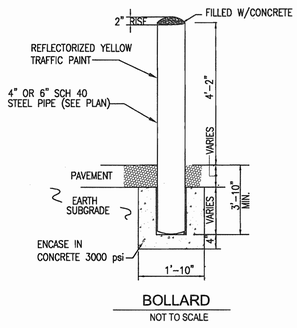

BOLLARD

NOT TO SCALE

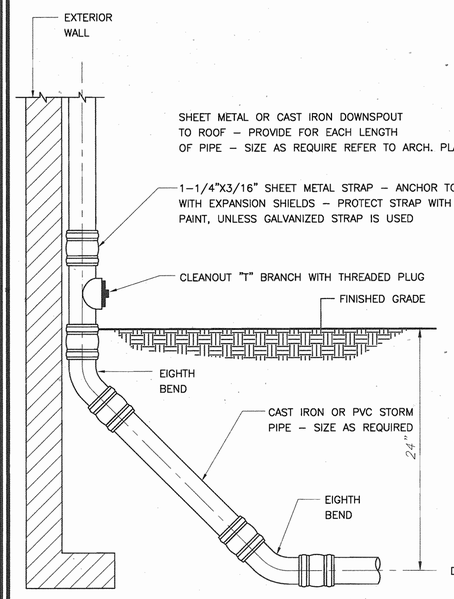

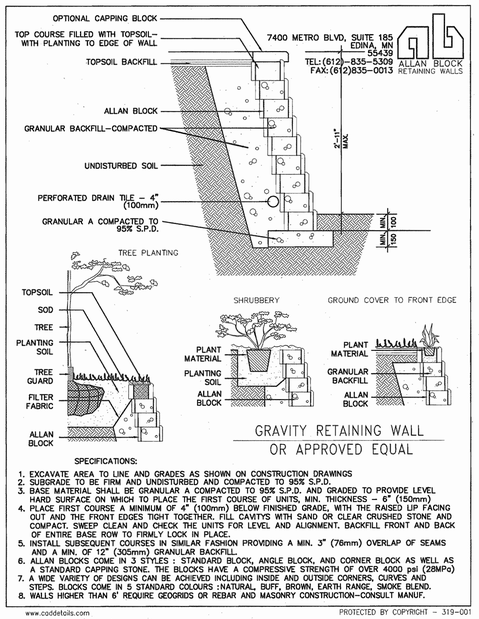

GRAVITY RETAINING WALL OR APPROVED EQUAL

SPECIFICATIONS:

1. EXCAVATE AREA TO LINE AND GRADES AS SHOWN ON CONSTRUCTION DRAWINGS
2. SUBGRADE TO BE FIRM AND UNDISTURBED AND COMPACTED TO 95% S.P.D.
3. BASE MATERIAL SHALL BE GRANULAR A COMPACTED TO 95% S.P.D. AND GRADED TO PROVIDE LEVEL HARD SURFACE ON WHICH TO PLACE THE FIRST COURSE OF UNITS, MIN. THICKNESS = 6" (150mm)
4. PLACE FIRST COURSE A MINIMUM OF 4" (100mm) BELOW FINISHED GRADE, WITH THE RAISED LIP FACING OUT AND THE FRONT EDGES TIGHT TOGETHER. FILL CAVITYS WITH SAND OR CLEAR CRUSHED STONE AND COMPACT. SWEEP CLEAN AND CHECK THE UNITS FOR LEVEL AND ALIGNMENT. BACKFILL FRONT AND BACK OF ENTIRE BASE ROW TO FIRMLY LOCK IN PLACE.
5. INSTALL SUBSEQUENT COURSES IN SIMILAR FASHION PROVIDING A MIN. 3" (76mm) OVERLAP OF SEAMS AND A MIN. OF 12" (305mm) GRANULAR BACKFILL.
6. ALLAN BLOCKS COME IN 3 STYLES : STANDARD BLOCK, ANGLE BLOCK, AND CORNER BLOCK AS WELL AS A STANDARD CAPPING STONE. THE BLOCKS HAVE A COMPRESSIVE STRENGTH OF OVER 4000 psi (28MPa)
7. A WIDE VARIETY OF DESIGNS CAN BE ACHIEVED INCLUDING INSIDE AND OUTSIDE CORNERS, CURVES AND STEPS. BLOCKS COME IN 5 STANDARD COLOURS :NATURAL, BUFF, BROWN, EARTH RANGE, SMOKE BLEND.
8. WALLS HIGHER THAN 6' REQUIRE GEOGRIDS OR REBAR AND MASONRY CONSTRUCTION-CONSULT MANUF.

www.coddetails.com

PROTECTED BY COPYRIGHT - 319-001

CONCRETE SIDEWALK

HOWARD COUNTY STANDARD DETAIL R3.05

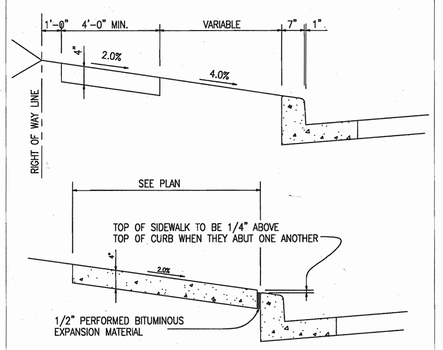

CONSTRUCTION SPECIFICATIONS

1. SIDEWALK TO BE SCRIBED IN 5'-0" MAXIMUM SQUARES.
2. EXPANSION JOINTS ACROSS THE SIDEWALK NOT TO BE MORE THAN 15' APART.
3. 1/2" PREFORMED BITUMINOUS EXPANSION MATERIAL IN EXPANSION JOINTS TO BE KEPT 1/4" BELOW SURFACE OF SIDEWALK.
4. CONCRETE TO BE MIX NUMBER 2.
5. WHERE SIDEWALK ABUTS CURB, SIDEWALK SHALL BE 1/4" ABOVE CURB WITH 1/2" PREFORMED BITUMINOUS EXPANSION MATERIAL BETWEEN SIDEWALK AND CURB.
6. ON LONGITUDINAL SIDEWALK GRADES OF 5% OR GREATER, A CONCRETE HEADER, 6" THICK AND 6" DEEP BELOW THE NORMAL 4" SIDEWALK THICKNESS SHALL CONSTRUCTED FOR THE FULL WIDTH OF THE SIDEWALK AT INTERVALS\ OF 48 FEET. THE HEADERS SHALL BE PLACED AT EXPANSION JOINT LOCATIONS AND SHALL BE MONOLITHIC WITH THE CURB.
7. SIDEWALK WIDTH ADJACENT TO CURB SHALL BE 5'-0" MINIMUM EXCEPT SIDEWALK ADJACENT TO CURB IN CUL-DE-SAC BULBS MAY BE 4.0' WIDE.
8. SIDEWALK LOCATED 2' OR MORE FROM CURB MAY BE 4'-0" IN WIDTH WITH A 5'X5' PAVED SECTION PLACED 200' APART.

APPROVED: HOWARD COUNTY DEPARTMENT OF PLANNING AND ZONING

CHIEF, DEVELOPMENT ENGINEERING DIVISION	1/4/03 DATE
CHIEF, DIVISION OF LAND DEVELOPMENT	2/19/04 DATE
DIRECTOR	2/25/04 DATE

SITE DEVELOPMENT PLAN
SITE DETAILS
VILLAGE CREST
PART OF PARCEL D-1

PHASE 1&2 , APT. BLDGS. A-J,
151 AGE RESTRICTED ADULT HOUSING UNITS

TAX MAP #25 BLOCK 20 — PARCEL P/O 98
2ND ELECTION DISTRICT — HOWARD COUNTY, MARYLAND

OWNER :
TAYLOR FAMILY LIMITED PARTNERSHIP A
C/O LAND DESIGN & DEVELOPMENT, INC.
8000 MAIN STREET
ELLICOTT CITY, MD 21043
ATTN: MR. DONALD R. REUWER
PHONE: (410) 480-9105

DEVELOPER
LAND DESIGN & DEVELOPMENT, INC.
8000 MAIN STREET
ELLICOTT CITY, MD 21043
ATTN: MR. DONALD R. REUWER
PHONE: (410) 480-9105

FREDERICK WARD ASSOCIATES, INC.
ARCHITECTS | ENGINEERS | PLANNERS | SURVEYORS
7125 RIVERWOOD DRIVE
COLUMBIA, MARYLAND 21046-2354
410-720-6900
410-720-6226 fax
www.frederickward.com

STATE OF MARYLAND — ROBERT HARRIS VOGEL — No. 16193 — PROFESSIONAL ENGINEER
ROBERT H. VOGEL, PE No.16193

DESIGN BY:	RJ
DRAWN BY:	RJ
CHECKED BY:	RHV
DATE:	SEPT. 2003
SCALE:	AS SHOWN
W.O. NO.:	2018121.00

SHEET 6 OF 16

SDP-02-94

K:\PROJECTS\2018121\ENGR\dwg\SdP-4PT1\04SDETAIL.dwg Fri Sep 19 16:44:50 2003 E4

DETAIL 24 - STABILIZED CONSTRUCTION ENTRANCE

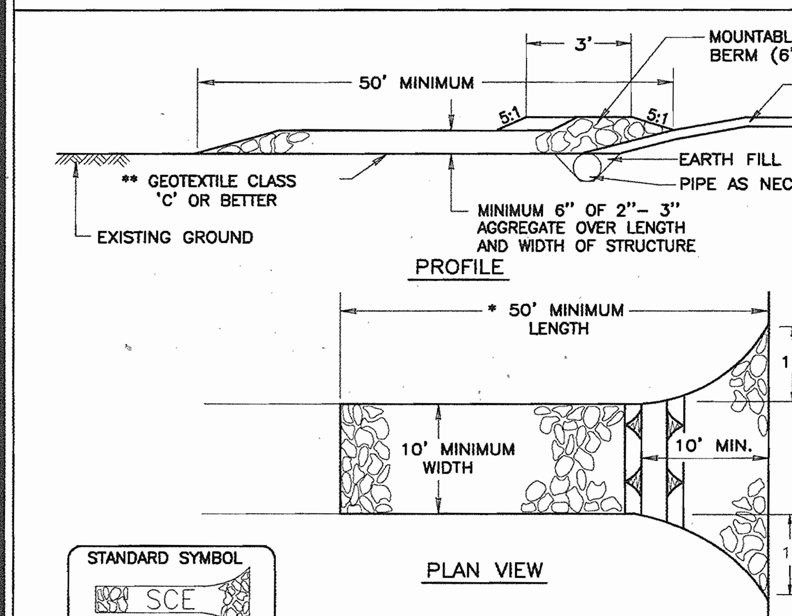

Construction Specification

1. Length – minimum of 50' (* 30' for a single residence lot).
2. Width – 10' minimum, should be flared at the existing road to provide a turning radius.
3. Geotextile fabric (filter cloth) shall be placed over the existing ground prior to placing stone. ** The plan approval authority may not require single family residences to use geotextile.
4. Stone – crushed aggregate (2" to 3") or reclaimed/or recycled concrete equivalent shall be placed at least 6" deep over the length and width of the entrance.
5. Surface Water – all surface water flowing to or diverted toward construction entrances shall be piped through the entrance, maintaining positive drainage. Pipe installed through the stabilized construction entrance shall be protected with a mountable berm with 5:1 slopes and a minimum of 6" of stone over the pipe. Pipe has to be sized according to the drainage. When the SCE is located at a high spot and has no drainage to convey, a pipe will not be necessary. Pipe should be sized according to the amount of runoff to be conveyed. A 6" minimum will be required.
6. Location – A stabilized construction entrance shall be located at every point where construction traffic enters or leaves a construction site. Vehicles leaving the site must travel over the entire length of the stabilized construction entrance.

U.S. DEPARTMENT OF AGRICULTURE SOIL CONSERVATION SERVICE	PAGE F - 17 - 3	MARYLAND DEPARTMENT OF ENVIRONMENT WATER MANAGEMENT ADMINISTRATION

DETAIL 33 - SUPER SILT FENCE

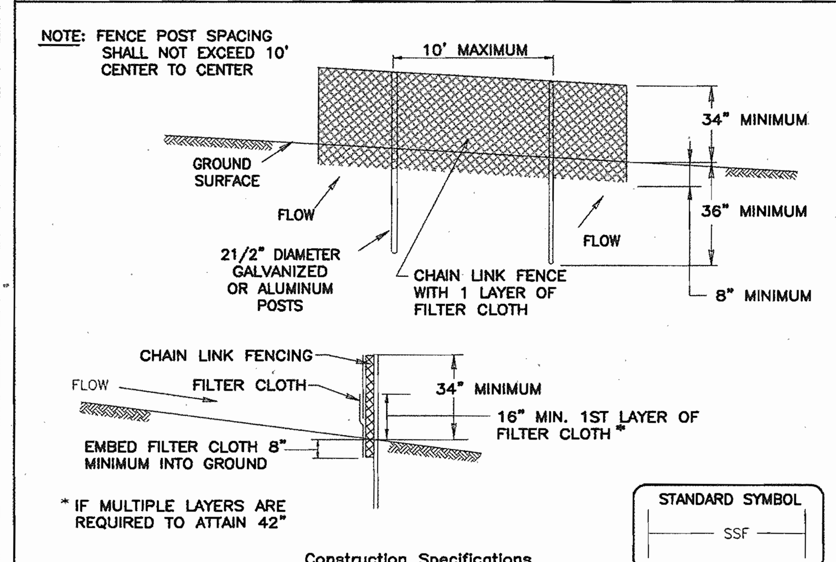

Construction Specifications

1. Fencing shall be 42" in height and constructed in accordance with the latest Maryland State Highway Details for Chain Link Fencing. The specification for a 6' fence shall be used, substituting 42" fabric and 6' length posts.
2. Chain link fence shall be fastened securely to the fence posts with wire ties. The lower tension wire, brace and truss rods, drive anchors and post caps are not required except on the ends of the fence.
3. Filter cloth shall be fastened securely to the chain link fence with ties spaced every 24" at the top and mid section.
4. Filter cloth shall be embedded a minimum of 8" into the ground.
5. When two sections of filter cloth adjoin each other, they shall be overlapped by 6" and folded.
6. Maintenance shall be performed as needed and silt buildups removed when "bulges" develop in the silt fence, or when silt reaches 50% of fence height
7. Filter cloth shall be fastened securely to each fence post with wire ties or staples at top and mid section and shall meet the following requirements for Geotextile Class F:

Tensile Strength	50 lbs/in (min.)	Test: MSMT 509
Tensile Modulus	20 lbs/in (min.)	Test: MSMT 509
Flow Rate	0.3 gal/ft²/minute (max.)	Test: MSMT 322
Filtering Efficiency	75% (min.)	Test: MSMT 322

U.S. DEPARTMENT OF AGRICULTURE SOIL CONSERVATION SERVICE	PAGE H - 26 - 3	MARYLAND DEPARTMENT OF ENVIRONMENT WATER MANAGEMENT ADMINISTRATION

DETAIL 1 - EARTH DIKE

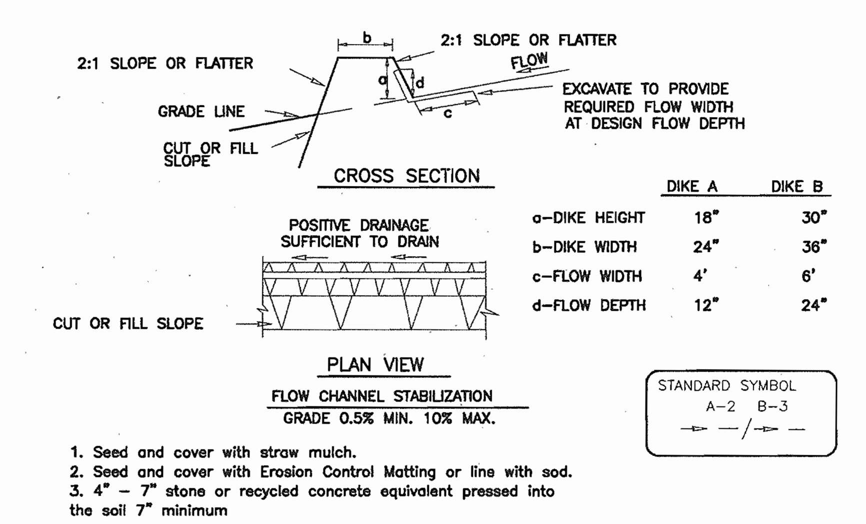

	DIKE A	DIKE B
a–DIKE HEIGHT	18"	30"
b–DIKE WIDTH	24"	36"
c–FLOW WIDTH	4'	6'
d–FLOW DEPTH	12"	24"

1. Seed and cover with straw mulch.
2. Seed and cover with Erosion Control Matting or line with sod.
3. 4" – 7" stone or recycled concrete equivalent pressed into the soil 7" minimum

Construction Specifications

1. All temporary earth dikes shall have uninterrupted positive grade to an outlet. Spot elevations may be necessary for grades less than 1%.
2. Runoff diverted from a disturbed area shall be conveyed to a sediment trapping device.
3. Runoff diverted from an undisturbed area shall outlet directly into an undisturbed, stabilized area at a non–erosive velocity.
4. All trees, brush, stumps, obstructions, and other objectional material shall be removed and disposed of so as not to interfere with the proper functioning of the dike.
5. The dike shall be excavated or shaped to line, grade and cross section as required to meet the criteria specified herein and be free of bank projections or other irregularities which will impede normal flow.
6. Fill shall be compacted by earth moving equipment.
7. All earth removed and not needed for construction shall be placed so that it will not interfere with the functioning of the dike.
8. Inspection and maintenance must be provided periodically and after each rain event.

U.S. DEPARTMENT OF AGRICULTURE SOIL CONSERVATION SERVICE	PAGE A - 1 - 6	MARYLAND DEPARTMENT OF ENVIRONMENT WATER MANAGEMENT ADMINISTRATION

DETAIL 22 - SILT FENCE

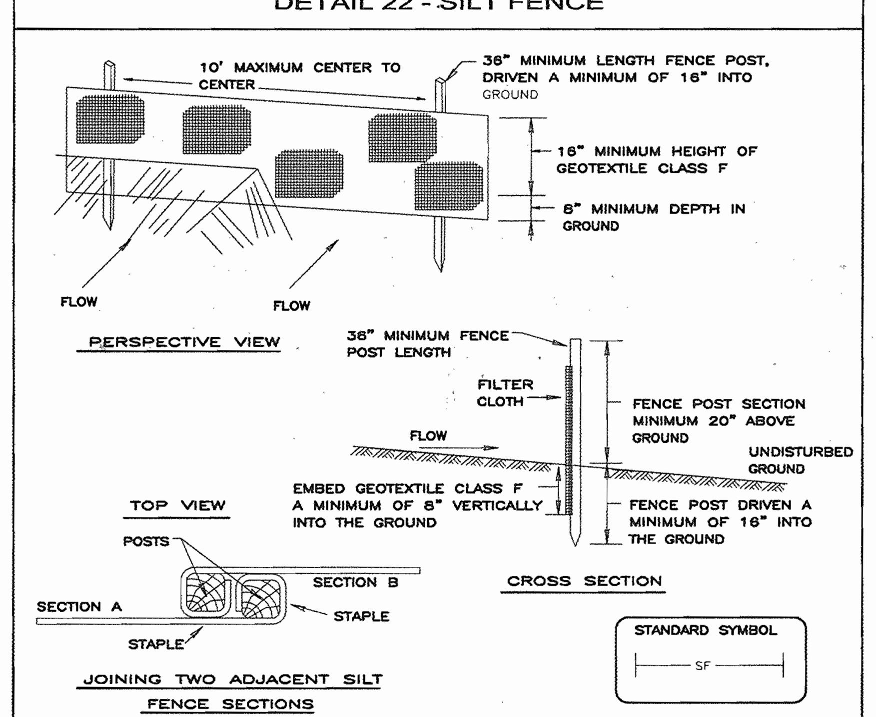

Construction Specifications

1. Fence posts shall be a minimum of 36" long driven 16" minimum into the ground. Wood posts shall be 11/2" x 11/2" square (minimum) cut, or 13/4" diameter (minimum) round and shall be of sound quality hardwood. Steel posts will be standard T or U section weighting not less than 1.00 pond per linear foot.
2. Geotextile shall be fastened securely to each fence post with wire ties or staples at top and midsection and shall meet the following requirements for Geotextile Class F:

Tensile Strength	50 lbs/in (min.)	Test: MSMT 509
Tensile Modulus	20 lbs/in (min.)	Test: MSMT 509
Flow Rate	0.3 gal ft² / minute (max.)	Test: MSMT 322
Filtering Efficiency	75% (min.)	Test: MSMT 322

3. Where ends of geotextile fabric come together, they shall be overlapped, folded and stapled to prevent sediment bypass.
4. Silt Fence shall be inspected after each rainfall event and maintained when bulges occur or when sediment accumulation reached 50% of the fabric height.

U.S. DEPARTMENT OF AGRICULTURE SOIL CONSERVATION SERVICE	PAGE E - 15 - 3	MARYLAND DEPARTMENT OF ENVIRONMENT WATER MANAGEMENT ADMINISTRATION

DETAIL 5 - RIP-RAP INFLOW PROTECTION

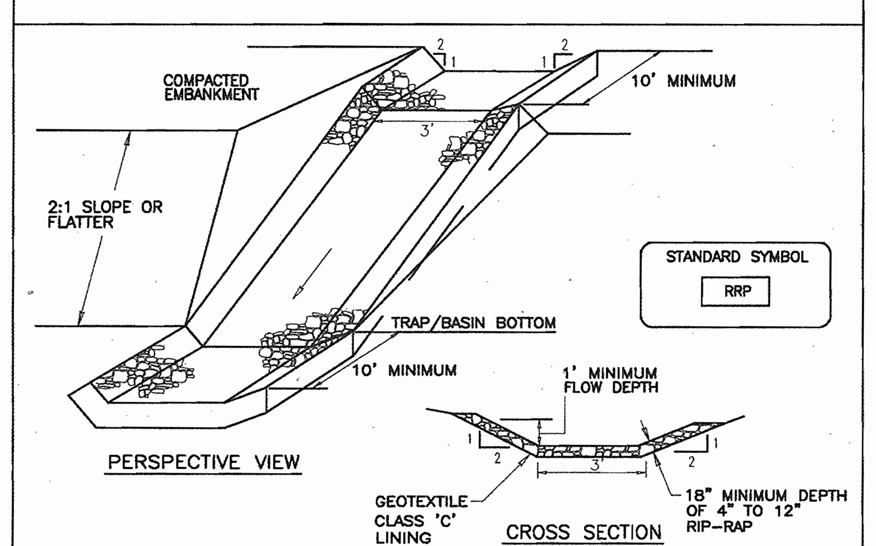

Construction Specifications

1. Rip–rap lined inflow channels shall be 1' in depth, have a trapezoidal cross section with 2:1 or flatter side slopes and 3' (min.) bottom width. The channel shall be lined with 4" to 12" rip– rap to a depth of 18".
2. Filter cloth shall be installed under all rip–rap. Filter cloth shall be Geotextile Class C.
3. Entrance and exit sections shall be installed as shown on the detail section.
4. Rip–rap used for the lining may be recycled for permanent outlet protection if the basin is to be converted to a stormwater management facility.
5. Gabion Inflow Protection may be used in lieu of Rip–rap Inflow Protection.
6. Rip–rap should blend into existing ground.
7. Rip–rap Inflow Protection shall be used where the slope is between 4:1 and 10:1, for slopes flatter than 10:1 use Earth Dike or Temporary Swale lining criteria.

U.S. DEPARTMENT OF AGRICULTURE SOIL CONSERVATION SERVICE	PAGE B - 6 - 2	MARYLAND DEPARTMENT OF ENVIRONMENT WATER MANAGEMENT ADMINISTRATION

TEMPORARY SEEDING NOTES

SEEDBED PREPARATION: Loosen upper three inches of soil by racking, discing or other acceptable means before seeding, if not if not previously loosened.

SOIL AMENDMENTS: Apply 600 lbs. per acre 10–10–10 fertilizer (14 lbs./1000 sq.ft).

SEEDING: For periods March 1 thru April 30 and from August 15 thru November 15, seed with 2 1/2 bushel per acre of annual rye (3.2 lbs./1000 sq.ft.) For the period May 1 thru August 14, seed with 3 lbs. per acre of weeping lovegrass (.07 lbs./1000 sq.ft.). For the period November 1 thru February 28, protect site by applying 2 tons per acre of well anchored straw mulch and seed as soon as possible in the spring, or use sod.

MULCHING: Apply 1 1/2 to 2 tons per acre (70 to 90 lbs./1000 sq.ft.) of unrotted small grain straw immediately after seeding. Anchor mulch immediately after application using mulch anchoring tool or 218 gallons per acre (5 gal/1000 sq.ft.) of emulsified asphalt on flat areas. On slopes 8 feet or higher, use 348 gallons per acre (8 gal/1000 sq.ft.) for anchoring.

REFER TO THE 1994 MARYLAND STANDARDS AND SPECIFICATIONS FOR SOIL EROSION AND SEDIMENT CONTROL FOR RATE AND METHODS NOT COVERED.

PERMANENT SEEDING NOTES

APPLY TO GRADED OR CLEARED AREAS NOT SUBJECT TO IMMEDIATE FURTHER DISTURBANCE WHERE A PERMANENT LONG–LIVED VEGETATIVE COVER IS NEEDED.

SEEDBED PREPARATION: Loosen upper three inches of soil by raking, discing or other acceptable means before seeding, if not previously loosened.

SOIL AMENDMENTS: In lieu of soil test recommendations, use one of the following schedules:

1) Preferred–Apply 2 tons per acre dolomitic limestone (92 lbs/100 sq.ft.) and 600 lbs per acre 10–10–10 fertilizer (14 lbs./1000 sq.ft.) before seeding. Harrow or disc into upper three inches of soil. At the time of seeding, apply 400 lbs. per acre 30–0–0 ureaform fertilizer (9 lbs/1000 sq.ft.)
2) Acceptable–Apply 2 tons per acre dolomatic limestone (92 lbs/1000 sq.ft.) and apply 1000 lbs. per acre 10–10–10– fertilizer (23 lbs./1000 sq.ft.) before seeding. Harrow or disc into upper three inches of soil.

SEEDING: For the periods March 1 thru April 30, and August 1 thru October 15, seed with 60 lbs. per acre (1.4 lbs/1000 sq.ft.) of Kentucky 31 Tall Fescue. For the period May 1 thru July 31, seed with 60 lbs. Kentucky 31 Tall Fescue per acre and 2 lbs. per acre (.05 lbs./1000 sq.ft.) of weeping lovegrass. During the period of October 16 thru February 28, protect site by: Option (1) 2 tons per acre well anchored straw mulch and seed as soon as possible in the spring. Option (2) Use sod. Option (3) Seed with 60 lbs/acre Kentucky 31 Tall Fescue and mulch with 2 tons/acre well anchored straw.

MULCHING: Apply 1 1/2 to 2 tons per acre (70 to 90 lbs/1000 sq. ft.) of unrotted small grain straw immediately after seeding. Anchor mulch immediately after application using mulch anchoring tool or 218 gallons per acre (5 gal/1000 sq.ft.) of emulsified asphalt on flat areas. On slopes 8 feet or higher, use 348 gallons per acre (8 gal/1000 sq.ft.) for anchoring.

MAINTENANCE: Inspect all seeded areas and make needed repairs, replacements and reseedings.

21.0 STANDARDS AND SPECIFICATIONS FOT TOP SOIL

Definition

Placement of topsoil over a prepared subsoil prior to establishment of permanent vegetation.

Purpose

To provide a suitable soil medium for vegetable growth. Soils of concern have low moisture content, low nutrient levels, low pH, materials toxic to plants, and/or unacceptable soil gradation.

Conditions Where Practice Applies

I. This practice is limited to areas having 2:1 or flatter slopes where:

a. The texture of the exposed subsoil/parent material is not adequate to produce vegetative growth.

b. The soil material is so shallow that the rooting zone is not deep enough to support plants or furnish continuing supplies of moisture and plant nutrients.

c. The original soil to be vegetated contains material toxic to plant growth.

d. The soil is so acidic that treatment with limestone is not feasible.

II. For the purpose of these Standards and Specifications, areas having slopes steeper than 2:1 require special consideration and design for adequate stabilization. Areas having slopes steeper than 2:1 shall have the appropriate stabilization shown on the plans.

Construction and Material Specifications

I. Topsoil salvaged from the existing site may be used provided that it meets the standards as set forth in these specifications. Typically, the depth of topsoil to be salvaged for a given soil type can be found in the representative soil profile section in the Soil Survey published by USDA–SCS in cooperation with Maryland Agricultural Experimental Station.

II. Topsoil Specifications – Soil to be used as topsoil must meet the following:

i. Topsoil shall be a loam, sandy loam, clay loam, silt loam, sandy clay loam, loamy sand. Other soils may be used if recommended by an agronomist or a soil scientist and approved by the appropriate approval authority. Regardless, topsoil shall not be a mixture of contrasting textured subsoils and shall contain less than 5% by volume of cinders, stones, slag, coarse fragments, gravel, sticks, roots, trash, or other materials larger that 1 and 1/2" in diameter.

ii. Topsoil must be free of plants or plant parts such as Bermuda grass, quackgrass, Johnsongrass, nutsedge, poison ivy, thistle, or others as specified.

iii. Where the subsoil is either highly acidic or composed of heavy clays, ground limestone shall be spread at the rate of 4–8 tons/acre (200–400 pounds per 1,000 square feet) prior to the placement of topsoil. Lime shall be distributed uniformly over designated areas and worked into the soil in conjunction with tillage operations as described in the following procedures.

II. For sites having disturbed areas under 5 acres:

i. Place topsoil (if required) and apply soil amendments as specified in 20.0 Vegetative Stabilization – Section I – Vegetative Stabilization Methods and Materials.

iii. For sites having disturbed areas over 5 acres:
i. On soil meeting topsoil specifications, obtain test results dictating fertilizer and lime amendments required to bring the soil into compliance with the following:
a. pH for topsoil shall be between 6.0 and 7.5. If the tested soil demonstrates a pH of less than 6.0, sufficient lime shall be prescribed to raise the pH to 6.5 or higher.
b. Organic content of topsoil shall be not less than 1.5 percent by weight.
c. Topsoil having soluble salt content greater than 500 parts per million shall not be used.
d. No sod or seed shall be placed on soil soil which has been treated with soil sterilants or chemicals used for weed control until sufficient time has elapsed (14 days min.) to permit dissipation of phyto–toxic materials.

NOTE: Topsoil substitutes or amendments, as recommended by a qualified agronomist or soil scientist and approved by the appropriate approval authority, may be used in lieu of natural topsoil.

ii. Place topsoil (if required) and apply soil amendments specified in 20.0 Vegetative Stabilization–Section I–Vegetative Stabilization Methods and Materials.

V. Topsoil Application

i. When topsoiling, maintain needed erosion and sediment control practices such as diversions, Grade Stabilization Structures, Earth Dikes, Slope Silt Fence and Sediment Traps and Basins.

ii. Grades on the areas to be topsoiled, which have been previously established, shall be maintained, albeit 4" – 8" higher in elevation.

iii. Topsoil shall be uniformly distributed in a 4" – 8" layer and lightly compacted to a minimum thickness of 4". Spreading shall be performed in such a manner that sodding or seeding can proceed with a minimum of additional soil preparation and tillage. Any irregularities in the surface resulting from topsoiling or other operations shall be corrected in order to prevent the formation of depressions or water pockets.

iv. Topsoil shall not be place while the topsoil or subsoil is in a frozen or muddy condition, when the subsoil is excessively wet or in a condition that may otherwise be detrimental to proper grading and seedbed preparation.

30.0 DUST CONTROL

Definition

Controlling dust blowing and movement on construction sites and roads.

Purpose

To prevent blowing and movement of dust from exposed soil surfaces, reduce on and off–site damage health hazards, and improve traffic safety.

Conditions Where Practice Applies

This practice is applicable to areas subject to dust blowing and movement Where on and off–site damage is likely without treatment.

Specifications

Temporary Methods

1. Mulches – See standards for vegetative stabilization with mulches only. Mulch should be crimped or tacked to prevent blowing.
2. Vegetative Cover – See standards for temporary vegetative cover.
3. Tillage – To roughen surface and bring clods to the surface. This is an emergency measure which should be used before soil blowing starts. Begin plowing on windward side of site. Chisel–type plows spaced about 12" apart, spring–toothed harrows, and similar plows are examples of equipment which may produce the desired effect.
4. Irrigation – This is generally done as an emergency treatment. Site is sprinkled with water until the surface is moist. Repeat as needed. At no time should the site be irrigated to the point that runoff begins to flow.
5. Barriers – Solid board fences, silt fences, snow fences, burlap fences, straw bales, and similar material can be used to control air currents and soil blowing. Barriers placed at right angles to prevailing currents at intervals of about 10 times their height are effective in controlling soil blowing.
6. Calcium Chloride – Apply at rates that will keep surface moist. May need retreatment.

Permanent Methods

1. Permanent vegetation – See standards for permanent vegetative cover, and permanent stabilization with sod. Existing trees or large shrubs may afford valuable protection if left in place.
2. Topsoiling – Covering with less erosive soil materials. See standards for Topsoiling.
3. Stone – Cover surface with crushed stone or coarse gravel.

References

1. Agricultural Handbook 346. Wind Erosion Forces in the United States and Their Use in Predicting Soil Loss.
2. Agricultural Information Bulletin 354. How to Control Wind Erosion, USDA–ARS.

SEDIMENT CONTROL NOTES

1. A minimum of 48 hours notice must be given to the Howard County Department of Inspection, License and Permits Sediment Control Division prior to the start of any construction (313–1855).
2. All vegetation and structural practices are to be installed according to the provisions of this plan and are to be in conformance with the 1994 MARYLAND STANDARDS AND SPECIFICATIONS FOR SOIL EROSION AND SEDIMENT CONTROL. and revisions thereto.
3. Following initial soil disturbance or redisturbance, permanent or temporary stabilization shall be completed within: (a) 7 calendar days for all perimeter sediment control structures, dikes, perimeter slopes, and all slopes greater than 3:1, (b) 14 days as to all other disturbed or graded areas on the project site.
4. All sediment traps/basins shown must be fenced and warning signs posted around their perimeter in accordance with Vol. 1, Chapter 7, HOWARD COUNTY DESIGN MANUAL, Storm Drainage.
5. All disturbed areas must be stabilized within the time period specified above in accordance with the 1994 MARYLAND STANDARDS AND SPECIFICATIONS FOR SOIL EROSION AND SEDIMENT CONTROL for permanent seeding, sod, temporary seeding, and mulching (Sec. G). Temporary stabilization with mulch alone shall be done when recommended seeding dates do not allow for proper germination and establishment of grasses.
6. All sediment control structures are to remain in place and are to be maintained in operative condition until permission for their removal has been obtained from the Howard County Sediment Control Inspector.
7. Site Analysis :

Total Area	(TOTAL AREA: 73.84 AC) AREA OF SUBMISSION 18.2 AC
Area Disturbed	18.2 AC
Area to be roofed or paved	6.14 AC
Area to be vegetatively stabilized	12.06 AC
Total Cut	24080 CY
Total Fill	24080 CY
Offsite waste/borrow area location	*

8. Any sediment control practice which is disturbed by grading activity for placement of utilities must be repaired on the same day of disturbance.
9. Additional sediment controls must be provided, if deemed necessary by the Howard County Sediment Control Inspector.
10. On all sites with disturbed areas in excess of 2 acres, approval of the inspection agency shall be requested upon completion of installation of perimeter erosion and sediment controls, but before proceeding with any other earth disturbance or grading. Other building or grading inspection approvals may not be authorized until this initial approval by the inspection agency is made.
11. Trenches for the construction of utilities is limited to three pipe lengths or that which shall be back–filled and stabilized within one working day, whichever is shorter.

* To be determined by contractor, with pre–approval of the Sediment Control Inspector with an approved and active grading permit

SEQUENCE OF CONSTRUCTION

1. OBTAIN ALL REQUIRED PERMITS FROM HOWARD COUNTY.
2. NOTIFY HOWARD COUNTY BUREAU OF INSPECTIONS AND PERMITS AT (410) 313–1880 AT LEAST 24 HOURS BEFORE STARTING ANY WORK.
3. INSTALL STABILIZED CONSTRUCTION ENTRANCE, SUPER SILT FENCE..........3 DAYS
4. SEDIMENT BASIN#1* & BASIN#2* IN USE, INSTALL EARTH DIKES..............4 DAYS
5. CONSTRUCT WATER AND SEWER AND REMAINING STORMDRAIN SYSTEM........1 WEEK
6. BEGIN BUILDING CONSTRUCTION....................................8 MONTHS
7. AS BUILDING CONSTRUCTION CONTINUES FINE GRADE SITE................4 DAYS
8. INSTALL CURB & GUTTER AND SIDEWALKS. BEGIN PAVING................2 WEEKS
9. CONSTRUCT DRY WELLS 1 AND 2 AND BLOCK CONNECTION TO DIVERSION MANHOLES...4 DAYS
10. WITH BUILDING, PAVING, AND CURB & GUTTER, COMPLETE STABILIZE SITE....3 DAYS
11. WITH SITE STABILIZED REMOVE BLOCKING FROM DIVERSION MANHOLES......2 DAYS
12. INSTALL LANDSCAPING..1 WEEK
13. WITH PERMISSION OF THE INSPECTOR, FLUSH STORM DRAIN SYSTEM AND REMOVE ALL SEDIMENT CONTROLS FROM THE SITE. STABILIZE ALL DISTURBED AREAS IMMEDIATELY.

*BASINS TO REMAIN FOR DEVELOPMENT OF PARCELS D–1 AND E–1 (F–02–47). CONTRACTOR TO MAINTAIN BASINS DURNING CONSTRUCTION.

NOTE:

ALL EARTH DIKES ARE TO BE PLACES IN WORKING ORDER AT THE END OF EACH WORKINGDAY.

DURING GRADING AND AFTER EACH RAINFALL, CONTRACTOR WILL INSPECT AND PROVIDE NECESSARY MAINTENANCE TO THE SEDIMENT CONTROL MEASURES ON THIS PLAN.

FOLLOWING INITIAL SOIL DISTURBANCES OR REDISTURBANCE PERMANENT OR TEMPORARY STABILIZATION SHALL BE COMPLETED WITHIN:
A. 7 CALENDAR DAYS FOR ALL PERIMETER SEDIMENT CONTROL STURCTURES, DIKES, SWALES, AND ALL SLOPES GREATER THAN 3:1.
B. 14 CALENDAR DAYS FOR ALL OTHER DISTURBED AREAS.

APPROVED: HOWARD COUNTY DEPARTMENT OF PLANNING AND ZONING

CHIEF, DEVELOPMENT ENGINEERING DIVISION	11/4/03 DATE
CHIEF, DIVISION OF LAND DEVELOPMENT	2/19/04 DATE
DIRECTOR	2/20/04 DATE

ENGINEERS CERTIFICATE

"I CERTIFY THAT THIS PLAN FOR SEDIMENT AND EROSION CONTROL REPRESENTS A PRACTICAL AND WORKABLE PLAN BASED ON MY PERSONAL KNOWLEDGE OF THE SITE CONDITIONS AND THAT IT WAS PREPARED IN ACCORDANCE WITH THE REQUIREMENTS OF THE HOWARD SOIL CONSERVATION DISTRICT.

SIGNATURE OF ENGINEER 9/18/03 DATE
ROBERT H. VOGEL

DEVELOPER'S CERTIFICATE

"I/WE CERTIFY THAT ALL DEVELOPMENT AND CONSTRUCTION WILL BE DONE ACCORDING TO THIS PLAN FOR SEDIMENT AND EROSION CONTROL, AND THAT ALL RESPONSIBLE PERSONNEL INVOLVED IN THE CONSTRUCTION PROJECT WILL HAVE A CERTIFICATE OF ATTENDANCE AT A DEPARTMENT OF THE ENVIRONMENT APPROVED TRAINING PROGRAM FOR THE CONTROL OF SEDIMENT AND EROSION BEFORE BEGINNING THE PROJECT. I ALSO AUTHORIZE PERIODIC ON–SITE INSPECTION BY THE HOWARD SOIL CONSERVATION DISTRICT.

SIGNATURE OF DEVELOPER 9/13/03 DATE
DONALD REUWER

REVIEWED FOR HOWARD SCD AND MEETS TECHNICAL REQUIREMENTS

USDA–NATURAL RESOURCES CONSERVATION SERVICE 10-29-03 DATE

THIS DEVELOPMENT PLAN IS APPROVED FOR SOIL EROSION AND SEDIMENT CONTROL BY THE HOWARD SOIL CONSERVATION DISTRICT

HOWARD SCD 10-29-03 DATE

OWNER :
TAYLOR FAMILY LIMITED PARTNERSHIP A
C/O LAND DESIGN & DEVELOPMENT, INC.
8000 MAIN STREET
ELLICOTT CITY, MD 21043
ATTN: MR. DONALD R. REUWER
PHONE: (410) 480-9105

DEVELOPER
LAND DESIGN & DEVELOPMENT, INC.
8000 MAIN STREET
ELLICOTT CITY, MD 21043
ATTN: MR. DONALD R. REUWER
PHONE: (410) 480-9105

SITE DEVELOPMENT PLAN
SEDIMENT AND EROSION CONTROL DETAILS
VILLAGE CREST
PART OF PARCEL D-1
PHASE 1 & 2, APT. BLDGS. A-J,
151 AGE RESTRICTED ADULT HOUSING UNITS

TAX MAP #25 BLOCK 20 — PARCEL P/O 98
2ND ELECTION DISTRICT — HOWARD COUNTY, MARYLAND

FREDERICK WARD ASSOCIATES, INC.
ARCHITECTS | ENGINEERS | PLANNERS | SURVEYORS
7125 RIVERWOOD DRIVE
COLUMBIA, MARYLAND 21046–2354
410–720–6900
410–720–6226 fax
www.frederickward.com

STATE OF MARYLAND ROBERT HARRIS VOGEL No. 16193 PROFESSIONAL ENGINEER

DESIGN BY:	RJ
DRAWN BY:	RJ
CHECKED BY:	RHV
DATE:	SEPT. 2003
SCALE:	AS SHOWN
W.O. NO.:	2018121.00

SHEET 7 OF 16

SDP-02-94

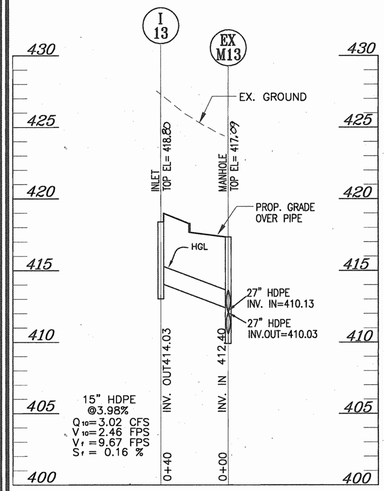

STORM DRAIN PROFILE

SCALE: 1"= 50' HORZ.
1"= 5' VERT.

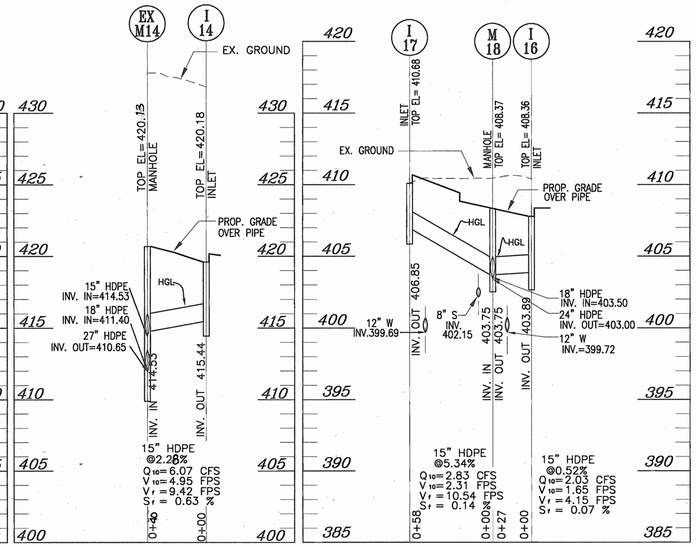

STORM DRAIN PROFILE

SCALE: 1"= 50' HORZ.
1"= 5' VERT.

STORM DRAIN PROFILE

SCALE: 1"= 50' HORZ.
1"= 5' VERT.

PIPE SCHEDULE		
SIZE	TYPE	LENGTH
15"	HDPE	773 LF
18"	HDPE	337 LF
24"	HDPE	963 LF
30"	HDPE	114 LF

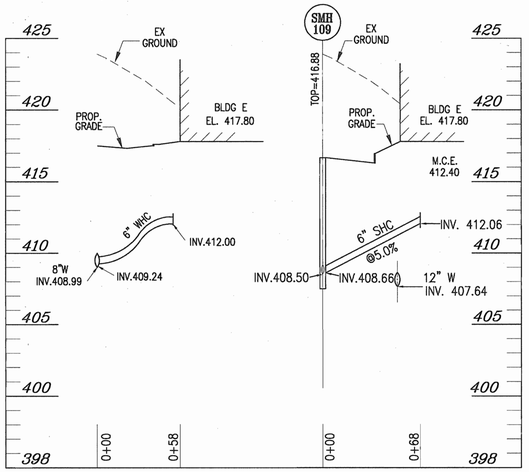

WHC PROFILE UNIT E

SCALE: 1"= 50' HORZ.
1"= 5' VERT.

SHC PROFILE UNIT E

SCALE: 1"= 50' HORZ.
1"= 5' VERT.

STRUCTURE SCHEDULE						
NO.	TYPE	LOCATION	TOP ELEV.	INV. IN	INV. OUT	REMARKS
EX. I-12	DOUBLE TYPE 'S' COMBINATION INLET	CL CYPRUS CEDAR LN STA. 2+99 , 11.93' RT.				
EX. I-11A	DOUBLE TYPE 'S' COMBINATION INLET	CL CYPRUS CEDAR LN STA. 4+45 , 11.93' RT.	415.43	–	406.52	SD 4.34
I-13	DOUBLE TYPE 'S' COMBINATION INLET	CL OF PARKING LOT AISLE(SOUTHERN), STA. 2+88,26.62' RT.	418.13	–	44.03	SD 4.34
I-14	DOUBLE TYPE 'S' COMBINATION INLET	CL OF PARKING LOT AISLE, STA. 2+88 , 26.62' RT.	420.18	–	415.44	SD 4.34
I-14A	DOUBLE TYPE 'S' COMBINATION INLET	CL OF PARKING LOT AISLE, STA.1+84 , 26.62' RT.	421.44	–	416.53	SD 4.34
EX M-12	PRECAST MANHOLE	N 577460.23, E 1372137.59	410.25	395.57	395.07	G 5.12
M-16A	PRECAST MANHOLE	N 577598.50, E 1372212.44				
M-16	PRECAST MANHOLE	N 577701.37, E 1372268.22	405.33	397.94	397.84	G 5.12
M-17	PRECAST MANHOLE	CL CYPRUS CEDAR LN STA. 6+30, 10.42' RT.	406.46	401.24 24"HDPE 401.14 24"HDPE	401.55	G 5.12
I-15	DOUBLE TYPE 'S' COMBINATION INLET	CL YELLOW PINE DR. STA. 3+56.90, 26.57' LT.	405.88	–	399.75	SD 4.34
M-18	PRECAST MANHOLE	CL YELLOW PINE DR. STA.2+15.27, 0.92' LT.	408.37	403.75 15"HDPE 403.75 15"HDPE 403.50 18"HDPE	403.00	G 5.12
I-16	DOUBLE TYPE 'S' COMBINATION INLET	CL YELLOW PINE DR. STA.2+16.90, 26.57' LT.	408.36	–	403.89	SD 4.34
I-17	DOUBLE TYPE 'S' COMBINATION INLET	CL MIDDLE PARKING LOT AILE. STA.2+2.39, 56.84' RT.	410.68	–	406.85	SD 4.34
M-19	PRECAST MANHOLE	CL YELLOW PINE DR. STA.0+10.84, 0.95' RT.	411.64	406.05 15"HDPE 406.05 15"HDPE	405.80	G 5.12
I-18	DOUBLE TYPE 'S' COMBINATION INLET	CL STONE CROP DRIVE STA. 0+32, 12' LT.	411.04	–	406.22	SD 4.34
I-19	DOUBLE TYPE 'S' COMBINATION INLET	CL HICKORY HIGH CT. STA. 0+62.71, 30' RT.	415.23	–	410.48	SD 4.34
EX M-31	PRECAST MANHOLE	PER F-02-47	378.00	371.79 18"HDPE 371.29 24"HDPE	367.79	G 5.12
M-20	PRECAST MANHOLE	N 578547.97 E 1372240.17	391.40	377.78	375.01	G 5.12
M-21	PRECAST MANHOLE	N 578395.82 E 1372271.48	396.00	382.56	382.46	G 5.12
M-22	PRECAST MANHOLE	N 578313.61 E 1372341.06	393.81	387.33 15"HDPE 384.26 18"HDPE 384.51 18"HDPE	383.76	G 5.12
I-21	DOUBLE TYPE 'S' COMBINATION INLET	CL STONE CROP DRIVE STA. 5+59, 30' LT.	394.85	389.72	389.47	SD 4.34
I-22	DOUBLE TYPE 'S' COMBINATION INLET	CL STONE CROP DRIVE STA. 3+53.81, 12' LT.	403.18	–	398.43	SD 4.34
I-20	DOUBLE TYPE 'S' COMBINATION INLET	CL STONE CROP DRIVE (AISLE @BLDG P) 1+15.96, 30'RT.	390.13	–	385.33	SD 4.34
M-23	PRECAST MANHOLE	CL STONE CROP DRIVE (AISLE @BLDG N) STA. 0+10, 13.05' RT.	393.70	388.64 15"HDPE 388.39 18"HDPE	381.63	G 5.12
I-24	DOUBLE TYPE 'S' COMBINATION INLET	CL STONE CROP DRIVE(AISLE@BLDG N) STA. 0+85.56, 30' RT.	391.52	–	389.06	SD 4.34
I-23	DOUBLE TYPE 'S' COMBINATION INLET	CL STONE CROP DRIVE STA. 2+90.26, 13.83' RT.	400.44	–	394.90	SD 4.34

1. TOP ELEVATION ARE TO THE CENTER OF THE STRUCTURE AT TOP OF CURB FOR DOUBLE 'S' COMB. INLETS, CENTER TOP OF GRATE FOR DOUBLE TYPE 'S' INLET AND TOP OF MANHOLE COVER FOR PRECAST MANHOLES.
2. SEE ARCHITECTURAL PLANS FOR ROOF DRAIN DETAILS

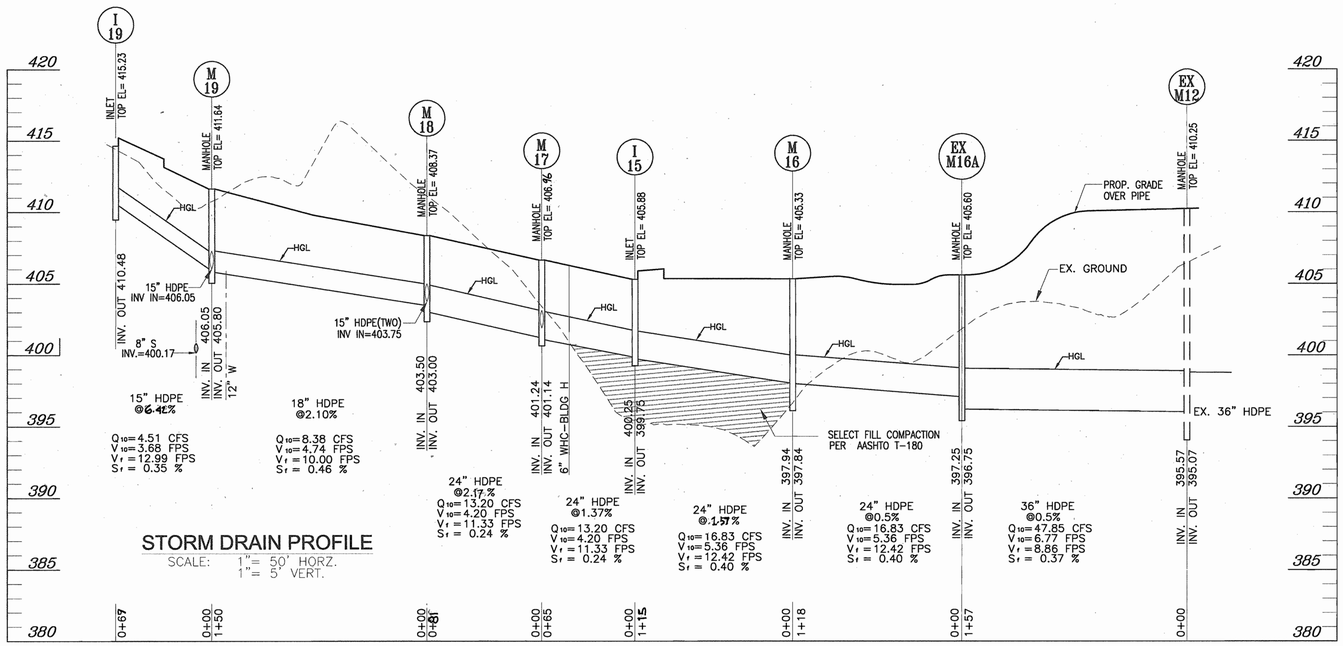

STORM DRAIN PROFILE

SCALE: 1"= 50' HORZ.
1"= 5' VERT.

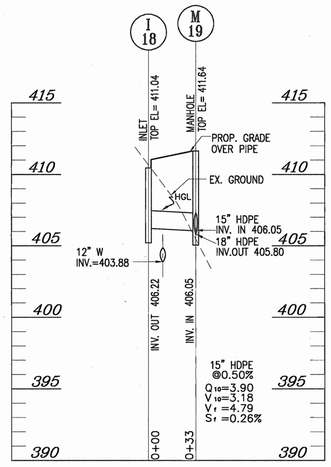

STORM DRAIN PROFILE

SCALE: 1"= 50' HORZ.
1"= 5' VERT.

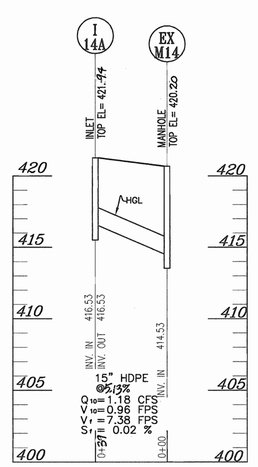

APPROVED: HOWARD COUNTY DEPARTMENT OF PLANNING AND ZONING

CHIEF, DEVELOPMENT ENGINEERING DIVISION — DATE 11/4/03

CHIEF, DIVISION OF LAND DEVELOPMENT — DATE 2/19/04

DIRECTOR — DATE 2/20/04

SITE DEVELOPMENT PLAN
PROFILES
VILLAGE CREST
PART OF PARCEL D-1
PHASE 1 & 2 , APT. BLDGS. A-J
151 AGE RESTRICTED ADULT HOUSING UNITS

TAX MAP #25 BLOCK 20 — PARCEL P/O 98
2ND ELECTION DISTRICT — HOWARD COUNTY, MARYLAND

FREDERICK WARD ASSOCIATES, INC.
ARCHITECTS | ENGINEERS | PLANNERS | SURVEYORS
7125 RIVERWOOD DRIVE
COLUMBIA, MARYLAND 21046-2354
410-720-6900
410-720-6226 fax
www.frederickward.com

STATE OF MARYLAND — ROBERT HARRIS VOGEL — No. 16193 — PROFESSIONAL ENGINEER
ROBERT H. VOGEL, PE NO. 16193

DESIGN BY:	RJ/JCO
DRAWN BY:	RJ/JCO
CHECKED BY:	RHV
DATE:	SEPT. 2003
SCALE:	AS SHOWN
W.O. NO.:	2018121.00

SHEET 8 OF 16

OWNER :
TAYLOR FAMILY LIMITED PARTNERSHIP A
C/O LAND DESIGN & DEVELOPMENT, INC.
8000 MAIN STREET
ELLICOTT CITY, MD 21043
ATTN: MR. DONALD R. REUWER
PHONE: (410) 480-9105

DEVELOPER
LAND DESIGN & DEVELOPMENT, INC.
8000 MAIN STREET
ELLICOTT CITY, MD 21043
ATTN: MR. DONALD R. REUWER
PHONE: (410) 480-9105

SDP-02-94

N:\PROJECTS\2018121\E\NGR\dwg\Sdp-AP1\05PROF.dwg Tue Sep 30 09:29:53 2003 E4

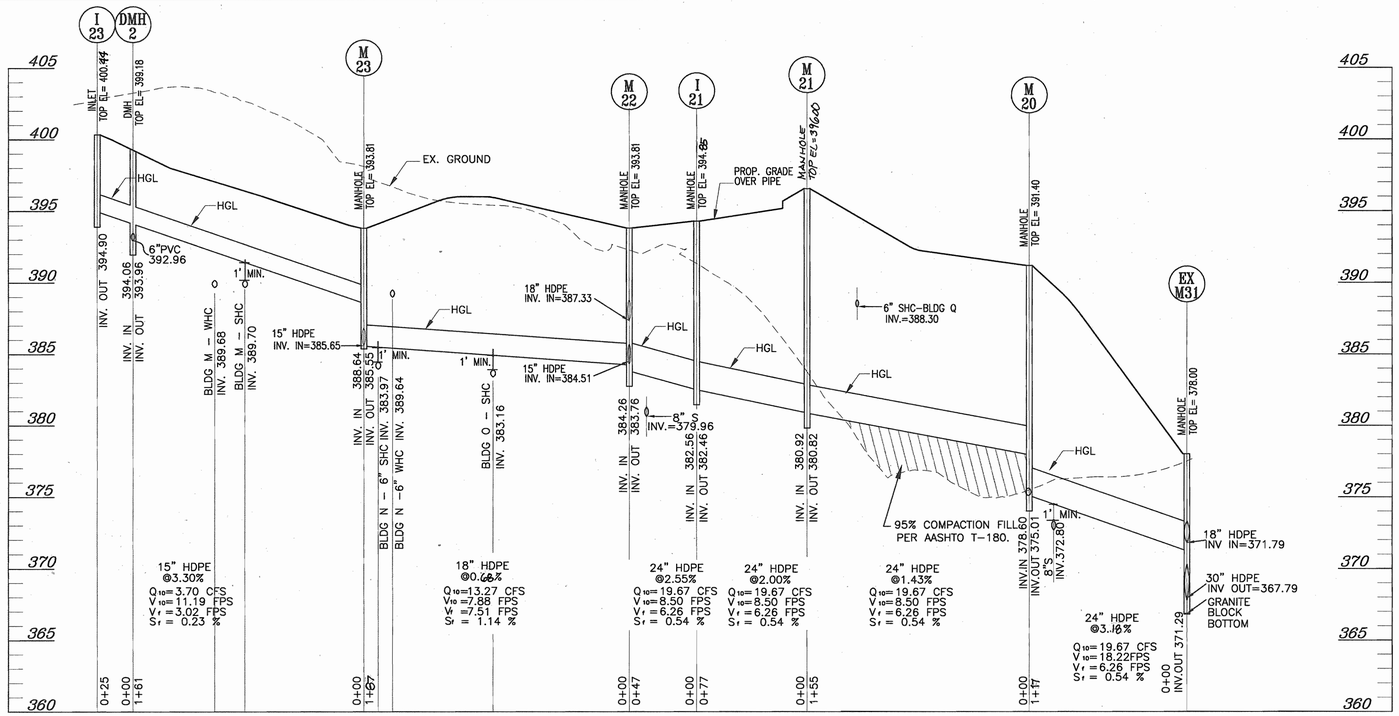

STORM DRAIN PROFILE

SCALE: 1"= 50' HORZ.
1"= 5' VERT.

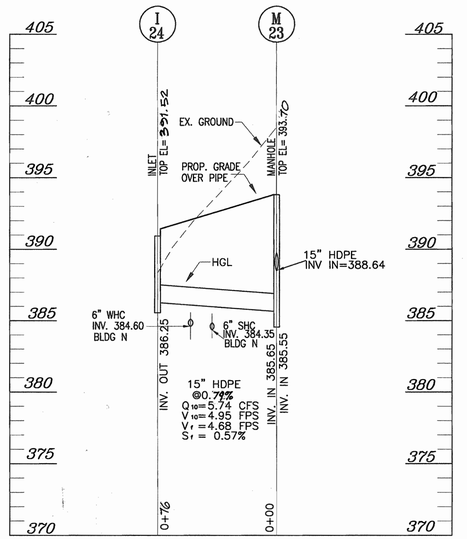

STORM DRAIN PROFILE

SCALE: 1"= 50' HORZ.
1"= 5' VERT.

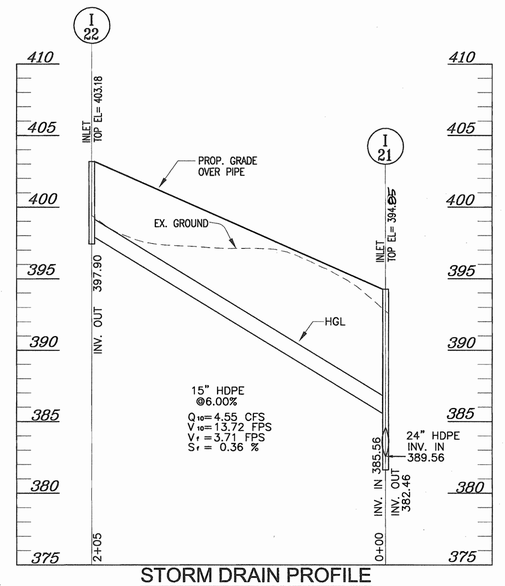

STORM DRAIN PROFILE

SCALE: 1"= 50' HORZ.
1"= 5' VERT.

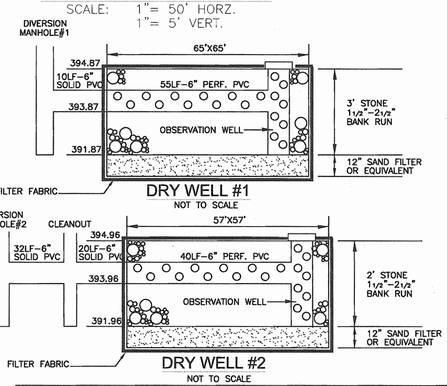

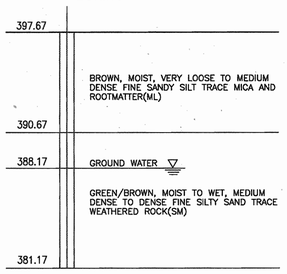

BORING # 1

NTS

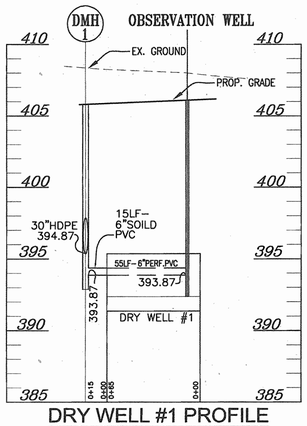

DRY WELL #1 PROFILE

SCALE: 1"= 50' HORZ.
1"= 5' VERT.

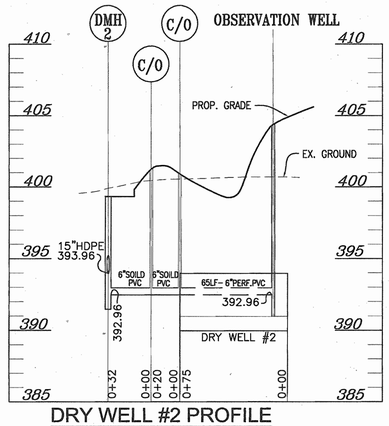

DRY WELL #2 PROFILE

SCALE: 1"= 50' HORZ.
1"= 5' VERT.

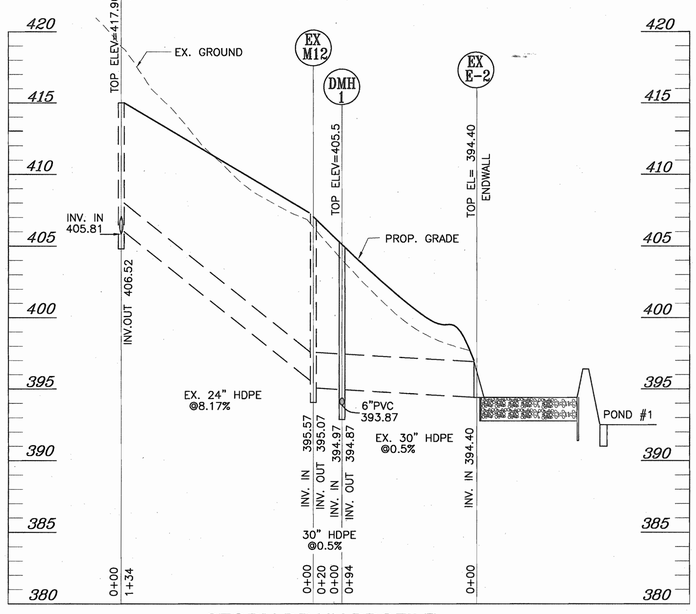

STORM DRAIN PROFILE

SCALE: 1"= 50' HORZ.
1"= 5' VERT.

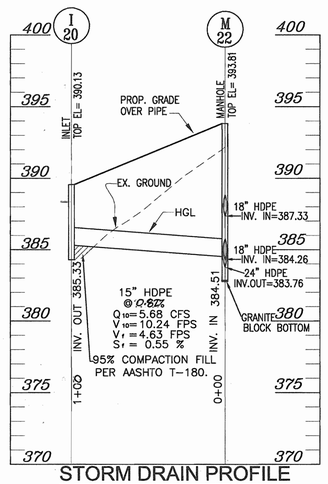

STORM DRAIN PROFILE

SCALE: 1"= 50' HORZ.
1"= 5' VERT.

OWNER :

TAYLOR FAMILY LIMITED PARTNERSHIP A
C/O LAND DESIGN & DEVELOPMENT, INC.
8000 MAIN STREET
ELLICOTT CITY, MD 21043
ATTN: MR. DONALD R. REUWER
PHONE: (410) 480-9105

DEVELOPER

LAND DESIGN & DEVELOPMENT, INC.
8000 MAIN STREET
ELLICOTT CITY, MD 21043
ATTN: MR. DONALD R. REUWER
PHONE: (410) 480-9105

APPROVED: HOWARD COUNTY DEPARTMENT OF PLANNING AND ZONING

CHIEF, DEVELOPMENT ENGINEERING DIVISION — DATE 4/4/03

CHIEF, DIVISION OF LAND DEVELOPMENT — DATE 2/19/04

DIRECTOR — DATE 2/4/04

SITE DEVELOPMENT PLAN
PROFILES
VILLAGE CREST
PART OF PARCEL D-1
PHASE 1&2 , APT. BLDGS. A-J,
151 AGE RESTRICTED ADULT HOUSING UNITS

TAX MAP #25 BLOCK 20 — PARCEL P/O 98
2ND ELECTION DISTRICT — HOWARD COUNTY, MARYLAND

FREDERICK WARD ASSOCIATES, INC.
ARCHITECTS | ENGINEERS | PLANNERS | SURVEYORS
7125 RIVERWOOD DRIVE
COLUMBIA, MARYLAND 21046-2354
410-720-6900
410-720-6226 fax
www.frederickward.com

STATE OF MARYLAND — ROBERT H. VOGEL — No. 16193 — PROFESSIONAL ENGINEER

ROBERT H. VOGEL, PE NO. 16193

DESIGN BY:	JJCO
DRAWN BY:	JJCO
CHECKED BY:	RHV
DATE:	SEPT. 2003
SCALE:	AS SHOWN
W.O. NO.:	2018121.00

SHEET 9 OF 16

SDP-02-94

M:\PROJECTS\2018121\ENGR\dwg\Sdp-4PTL06PROF.dwg Tue Sep 30 09:21:21 2003 E4

MANHOLE LOCATION CHART

MANHOLE NO.	TYPE	LOCATION	TOP ELEVATION
EX. 856	STD. PRECAST MH HO. CO. STD. DET. G5.12	CL STONE CROP. DR. STA. 6+98, 0.62' LT. (BY F-02-47)	
EX. 855	STD. PRECAST MH HO. CO. STD. DET. G5.12	CL STONE CROP DR @ BLDG P STA. 0+10.42, 3.46' RT. (F-02-47)	
SMH 102	STD. PRECAST MH HO. CO. STD. DET. G5.12	CL STONE CROP DR. STA. 6+16.15, ON CENTERLINE.	394.65
SMH 103	STD. PRECAST MH HO. CO. STD. DET. G5.12	CL STONE CROP DR. STA. 3+15.13, 12.62' RT.	404.22
SMH 104	STD. PRECAST MH HO. CO. STD. DET. G5.12	CL STONE CROP DR. STA. 1+76.14, 8.00' LT.	408.76
SMH 105	STD. PRECAST MH HO. CO. STD. DET. G5.12	CL STONE CROP DR. STA. 4+66.51, 3.00' RT.	394.33
SMH 106	STD. PRECAST MH HO. CO. STD. DET. G5.12	CL STONE CROP DRIVE STA. 1+52, 2.81 RT.	406.54
SMH 107	STD. PRECAST MH HO. CO. STD. DET. G5.12	CL YELLOW PINE CT. STA. 0+12.51, 22.15' LT.	412.60
SMH 108	STD. PRECAST MH HO. CO. STD. DET. G5.12	CL YELLOW PINE CT. STA. 0+12.51, 10.96' RT.	413.12
SMH 109	STD. PRECAST MH HO. CO. STD. DET. G5.12	CL HICKORY HIGH CT. STA. 2+64, 8.00' LT.	420.97
SMH 110	STD. PRECAST MH HO. CO. STD. DET. G5.12	CL CYPRUS CEDAR LN. STA. 6+19.92, 12.00' LT.	407.82
SMH 111	STD. PRECAST MH HO. CO. STD. DET. G5.12	CL CYPRUS CEDAR LN. STA. 4+14.94, 12.13' LT.	412.00
SMH 112	STD. PRECAST MH HO. CO. STD. DET. G5.12	CL PARKING AISLE (SOUTHERN) STA. 3+8.39, 4.34' LT.	418.04

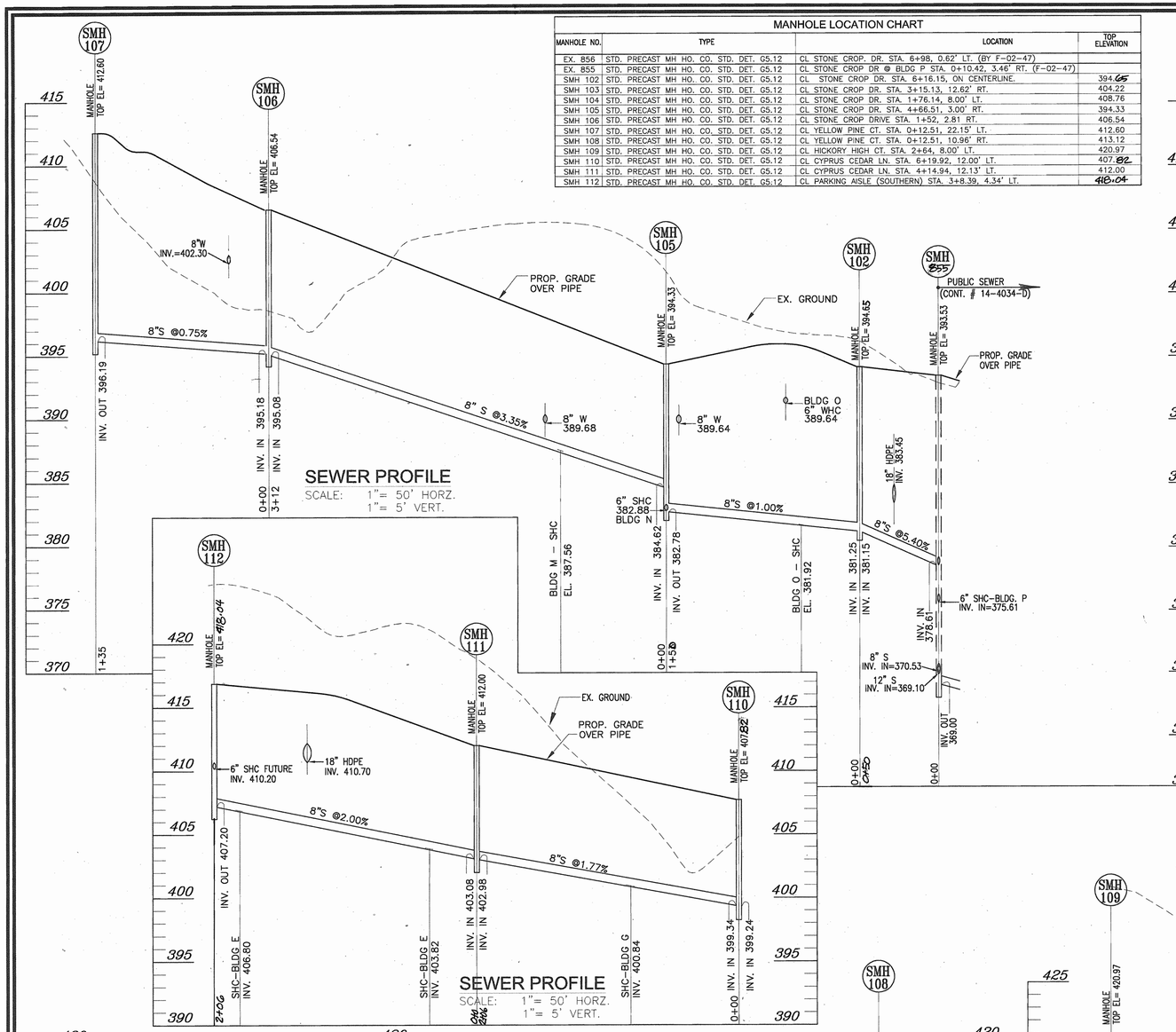

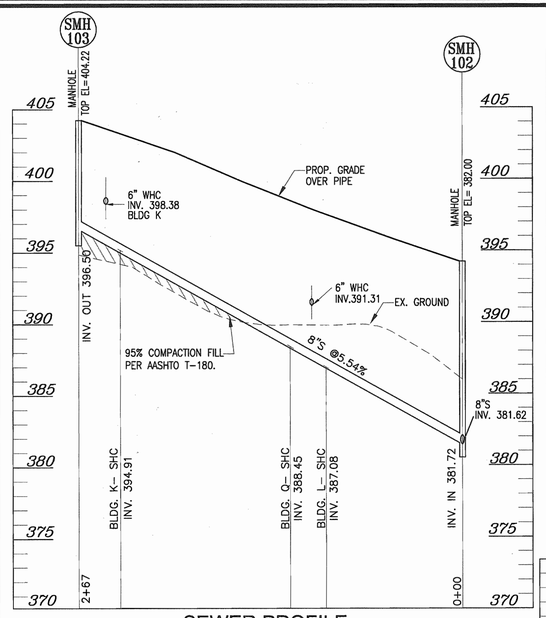

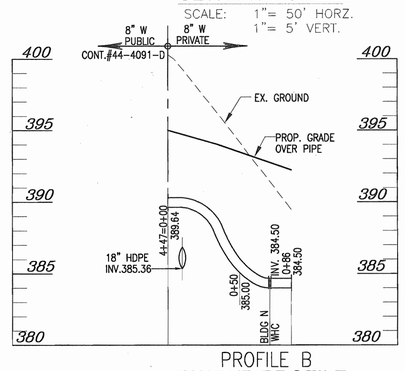

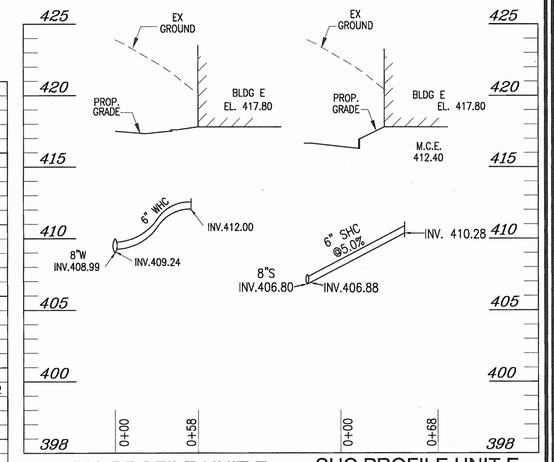

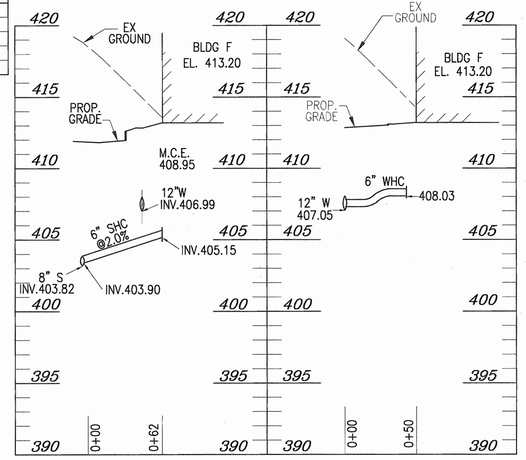

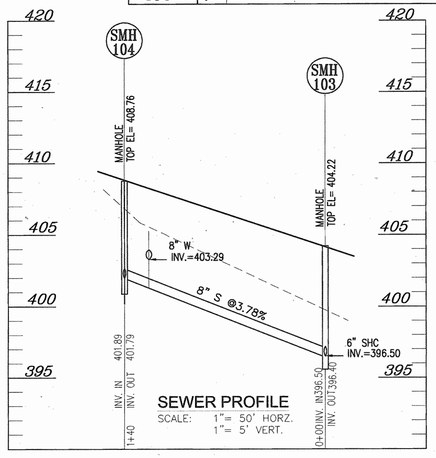

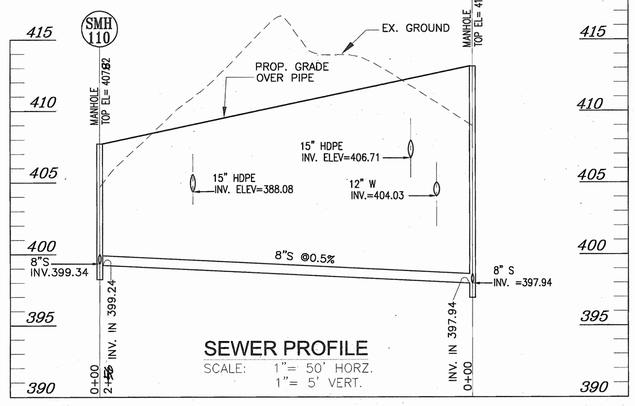

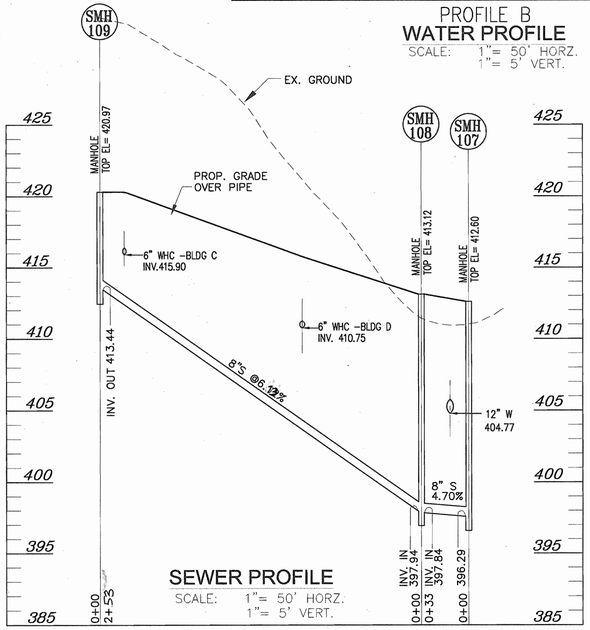

APPROVED: HOWARD COUNTY DEPARTMENT OF PLANNING AND ZONING

CHIEF, DEVELOPMENT ENGINEERING DIVISION — DATE 11/4/03

CHIEF, DIVISION OF LAND DEVELOPMENT — DATE 2/19/04

DIRECTOR — DATE 2/20/04

SITE DEVELOPMENT PLAN
PROFILES
VILLAGE CREST
PART OF PARCEL D-1
PHASE 1 & 2, APT. BLDGS. A-J
151 AGE RESTRICTED ADULT HOUSING UNITS

TAX MAP #25 BLOCK 20 — PARCEL P/O 98

2ND ELECTION DISTRICT — HOWARD COUNTY, MARYLAND

OWNER :

TAYLOR FAMILY LIMITED PARTNERSHIP A
C/O LAND DESIGN & DEVELOPMENT, INC.
8000 MAIN STREET
ELLICOTT CITY, MD 21043
ATTN: MR. DONALD R. REUWER
PHONE: (410) 480-9105

DEVELOPER

LAND DESIGN & DEVELOPMENT, INC.
8000 MAIN STREET
ELLICOTT CITY, MD 21043
ATTN: MR. DONALD R. REUWER
PHONE: (410) 480-9105

7125 RIVERWOOD DRIVE
COLUMBIA, MARYLAND 21046–2354
410–720–6900
410–720–6226 fax

FREDERICK WARD ASSOCIATES, INC.
ARCHITECTS | ENGINEERS | PLANNERS | SURVEYORS
www.frederickward.com

STATE OF MARYLAND — ROBERT HARRIS VOGEL — No. 16193 — PROFESSIONAL ENGINEER

ROBERT H. VOGEL, PE NO. 16193

DESIGN BY:	RJ
DRAWN BY:	RJ
CHECKED BY:	RHV
DATE:	SEPT. 2003
SCALE:	AS SHOWN
W.O. NO.:	2018121.00

SHEET 10 OF 16

SDP-02-94

M:\PROJECTS\2018121\ENGR\dwg\Sdp-APTVDTPROF.dwg Fri Sep 19 16:50:28 2003 E4

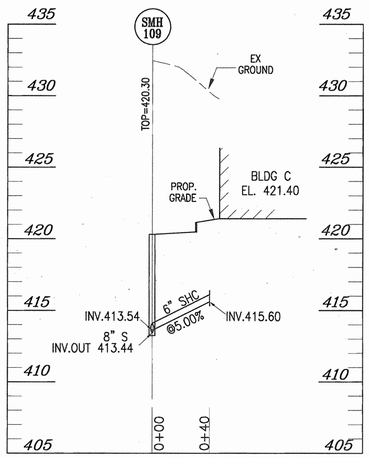

SHC PROFILE UNIT C

SCALE: 1"= 50' HORZ.
1"= 5' VERT.

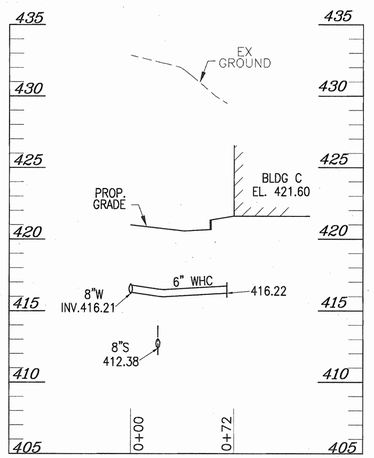

WHC PROFILE UNIT C

SCALE: 1"= 50' HORZ.
1"= 5' VERT.

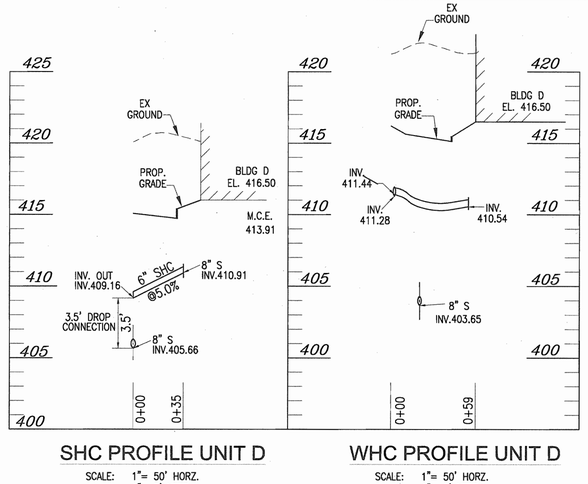

SHC PROFILE UNIT D

SCALE: 1"= 50' HORZ.
1"= 5' VERT.

WHC PROFILE UNIT D

SCALE: 1"= 50' HORZ.
1"= 5' VERT.

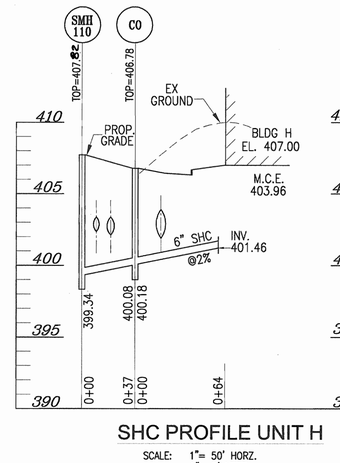

SHC PROFILE UNIT H

SCALE: 1"= 50' HORZ.
1"= 5' VERT.

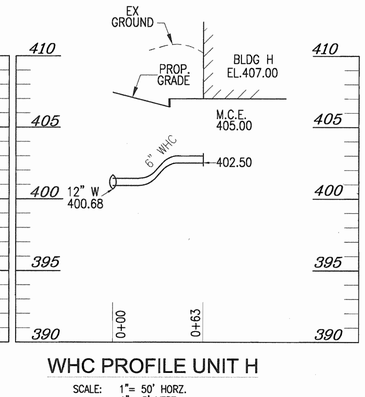

WHC PROFILE UNIT H

SCALE: 1"= 50' HORZ.
1"= 5' VERT.

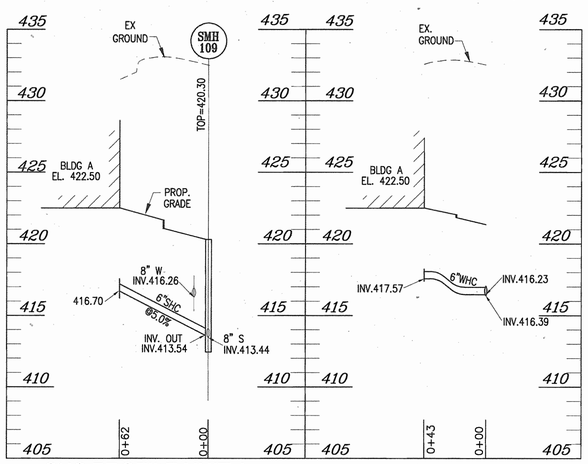

SHC PROFILE UNIT A

SCALE: 1"= 50' HORZ.
1"= 5' VERT.

WHC PROFILE UNIT A

SCALE: 1"= 50' HORZ.
1"= 5' VERT.

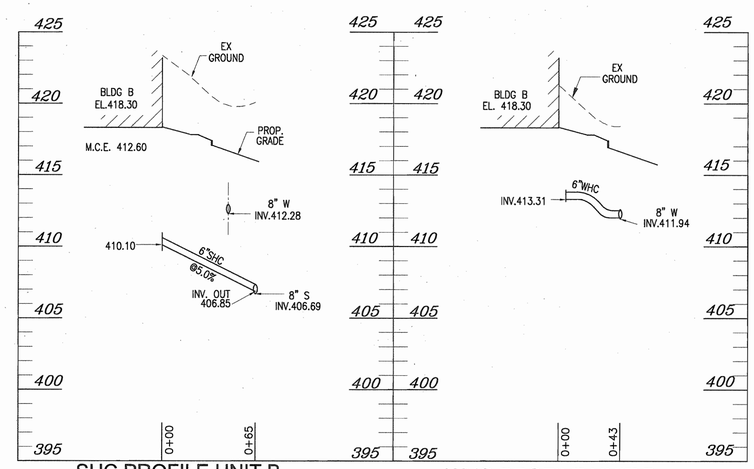

SHC PROFILE UNIT B

SCALE: 1"= 50' HORZ.
1"= 5' VERT.

WHC PROFILE UNIT B

SCALE: 1"= 50' HORZ.
1"= 5' VERT.

APPROVED: HOWARD COUNTY DEPARTMENT OF PLANNING AND ZONING

CHIEF, DEVELOPMENT ENGINEERING DIVISION — DATE 11/4/03

CHIEF, DIVISION OF LAND DEVELOPMENT — DATE 2/19/04

DIRECTOR — DATE 2/23/04

SITE DEVELOPMENT PLAN
PROFILES
VILLAGE CREST
PART OF PARCEL D-1
PHASE 1 & 2 , APT. BLDGS. A-J,
151 AGE RESTRICTED ADULT HOUSING UNITS

TAX MAP #25 BLOCK 20 — PARCEL P/O 98
2ND ELECTION DISTRICT — HOWARD COUNTY, MARYLAND

OWNER :

TAYLOR FAMILY LIMITED PARTNERSHIP A
C/O LAND DESIGN & DEVELOPMENT, INC.
8000 MAIN STREET
ELLICOTT CITY, MD 21043
ATTN: MR. DONALD R. REUWER
PHONE: (410) 480-9105

DEVELOPER

LAND DESIGN & DEVELOPMENT, INC.
8000 MAIN STREET
ELLICOTT CITY, MD 21043
ATTN: MR. DONALD R. REUWER
PHONE: (410) 480-9105

FREDERICK WARD ASSOCIATES, INC.
ARCHITECTS | ENGINEERS | PLANNERS | SURVEYORS
7125 RIVERWOOD DRIVE
COLUMBIA, MARYLAND 21046-2354
410-720-6900
410-720-6226 fax
www.frederickward.com

STATE OF MARYLAND — ROBERT JAMES JUSTICE — No. 14192 — PROFESSIONAL ENGINEER

DESIGN BY:	RJ
DRAWN BY:	RJ
CHECKED BY:	RHV
DATE:	SEPT. 2003
SCALE:	AS SHOWN
W.O. NO.:	2018121.00

SHEET 11 OF 16

SDP-02-94

M:\PROJECTS\2018121\ENGR\dwg\Sdp-APT\08PROF.dwg Fri Sep 19 16:51:24 2003 E4

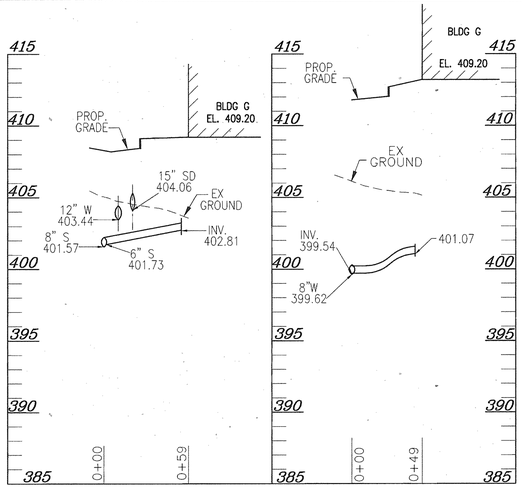

SHC PROFILE UNIT G

SCALE: 1"= 50' HORZ.
1"= 5' VERT.

WHC PROFILE UNIT G

SCALE: 1"= 50' HORZ.
1"= 5' VERT.

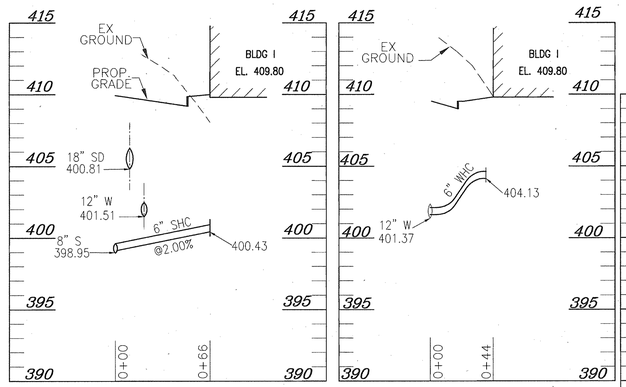

SHC PROFILE UNIT I

SCALE: 1"= 50' HORZ.
1"= 5' VERT.

WHC PROFILE UNIT I

SCALE: 1"= 50' HORZ.
1"= 5' VERT.

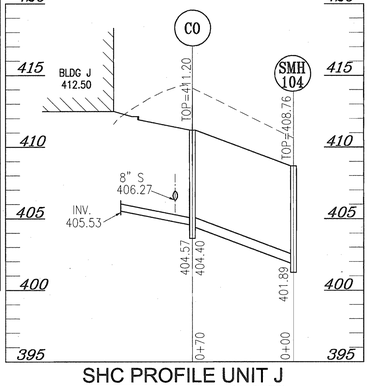

SHC PROFILE UNIT J

SCALE: 1"= 50' HORZ.
1"= 5' VERT.

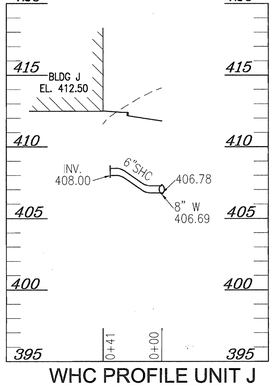

WHC PROFILE UNIT J

SCALE: 1"= 50' HORZ.
1"= 5' VERT.

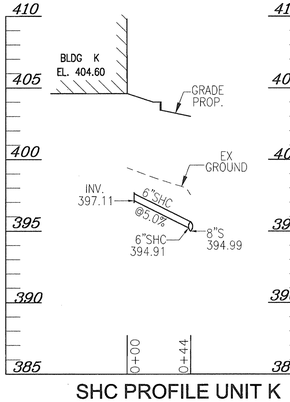

SHC PROFILE UNIT K

SCALE: 1"= 50' HORZ.
1"= 5' VERT.

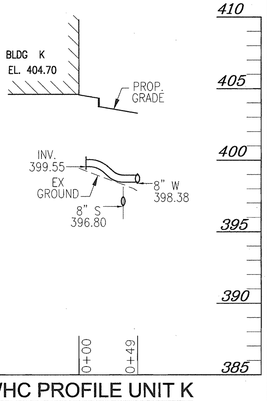

WHC PROFILE UNIT K

SCALE: 1"= 50' HORZ.
1"= 5' VERT.

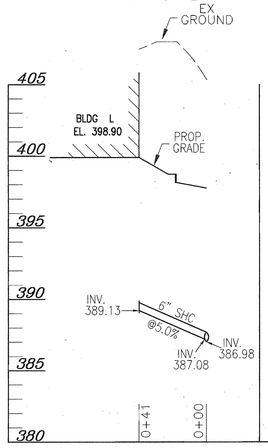

SHC PROFILE UNIT L

SCALE: 1"= 50' HORZ.
1"= 5' VERT.

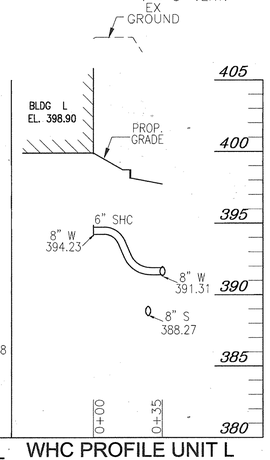

WHC PROFILE UNIT L

SCALE: 1"= 50' HORZ.
1"= 5' VERT.

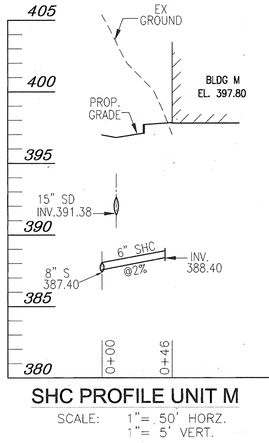

SHC PROFILE UNIT M

SCALE: 1"= 50' HORZ.
1"= 5' VERT.

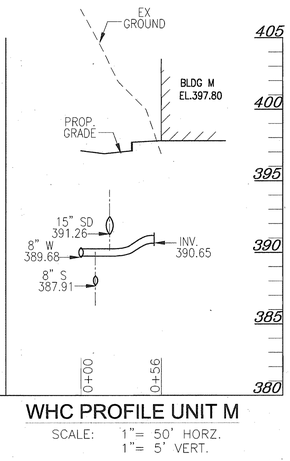

WHC PROFILE UNIT M

SCALE: 1"= 50' HORZ.
1"= 5' VERT.

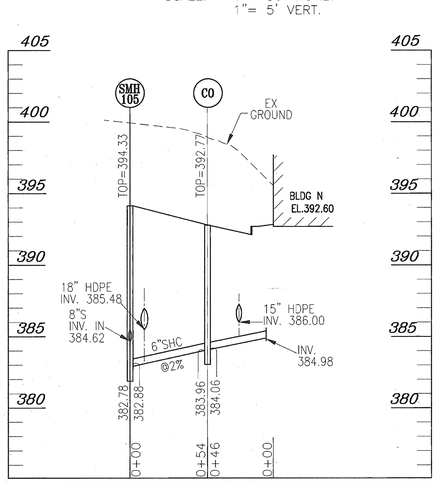

SHC PROFILE UNIT N

SCALE: 1"= 50' HORZ.
1"= 5' VERT.

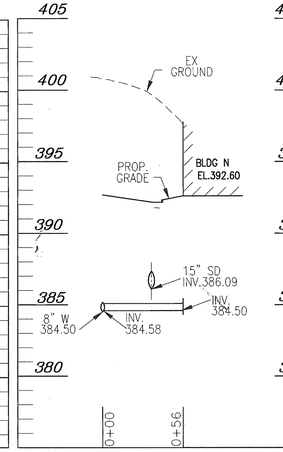

WHC PROFILE UNIT N

SCALE: 1"= 50' HORZ.
1"= 5' VERT.

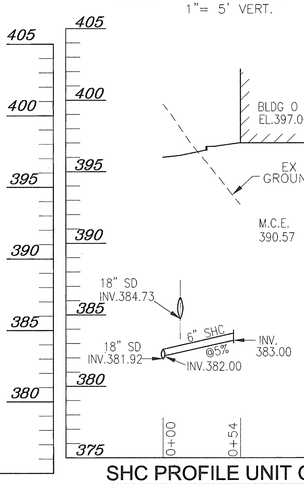

SHC PROFILE UNIT O

SCALE: 1"= 50' HORZ.
1"= 5' VERT.

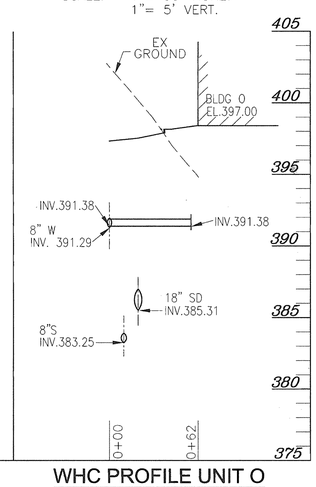

WHC PROFILE UNIT O

SCALE: 1"= 50' HORZ.
1"= 5' VERT.

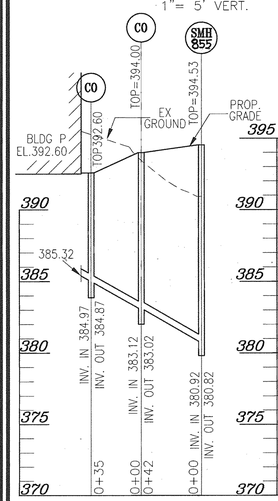

SHC PROFILE UNIT P

SCALE: 1"= 50' HORZ.
1"= 5' VERT.

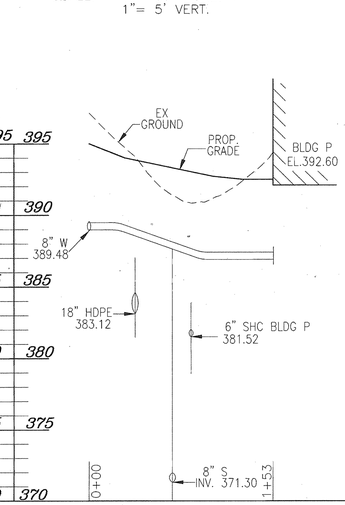

WHC PROFILE UNIT P

SCALE: 1"= 50' HORZ.
1"= 5' VERT.

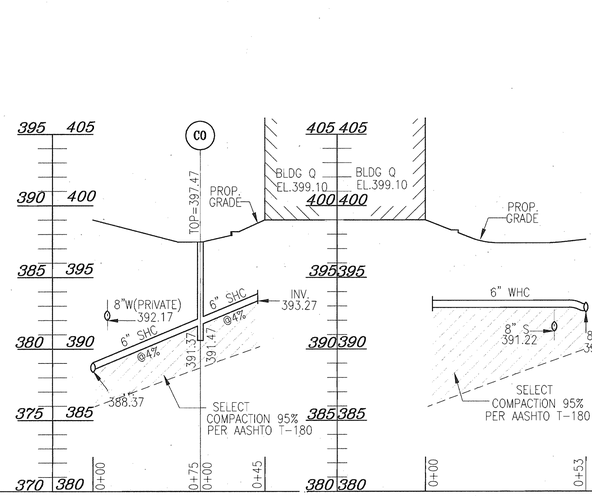

SHC PROFILE UNIT Q

SCALE: 1"= 50' HORZ.
1"= 5' VERT.

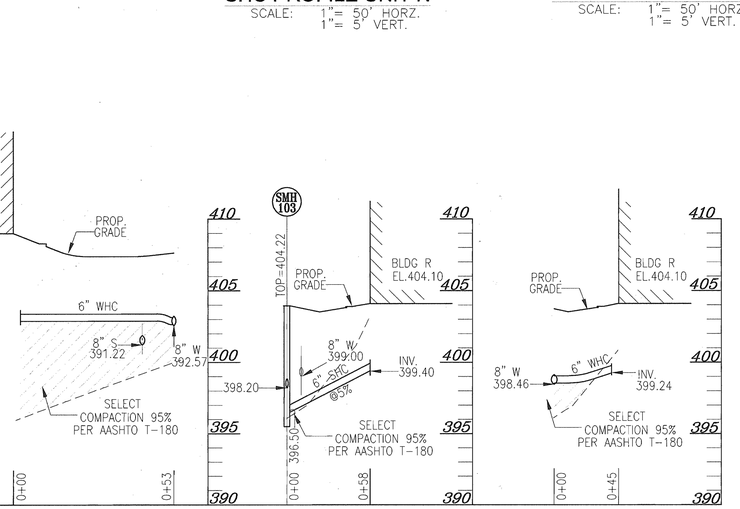

WHC PROFILE UNIT Q

SCALE: 1"= 50' HORZ.
1"= 5' VERT.

SHC PROFILE UNIT R

SCALE: 1"= 50' HORZ.
1"= 5' VERT.

WHC PROFILE UNIT R

SCALE: 1"= 50' HORZ.
1"= 5' VERT.

APPROVED: HOWARD COUNTY DEPARTMENT OF PLANNING AND ZONING

CHIEF, DEVELOPMENT ENGINEERING DIVISION — DATE 11/4/03

CHIEF, DIVISION OF LAND DEVELOPMENT — DATE 2/19/14

DIRECTOR — DATE 2/20/14

SITE DEVELOPMENT PLAN
PROFILES
VILLAGE CREST
PART OF PARCEL D-1

PHASE 1 & 2 ., APT. BLDGS. A-J,
151 AGE RESTRICTED ADULT HOUSING UNITS

TAX MAP #25 BLOCK 20 — PARCEL P/O 98
2ND ELECTION DISTRICT — HOWARD COUNTY, MARYLAND

OWNER :
TAYLOR FAMILY LIMITED PARTNERSHIP A
C/O LAND DESIGN & DEVELOPMENT, INC.
8000 MAIN STREET
ELLICOTT CITY, MD 21043
ATTN: MR. DONALD R. REUWER
PHONE: (410) 480-9105

DEVELOPER
LAND DESIGN & DEVELOPMENT, INC.
8000 MAIN STREET
ELLICOTT CITY, MD 21043
ATTN: MR. DONALD R. REUWER
PHONE: (410) 480-9105

7125 RIVERWOOD DRIVE
COLUMBIA, MARYLAND 21046-2354
410-720-6900
410-720-6226 fax

FREDERICK WARD ASSOCIATES, INC.
ARCHITECTS | ENGINEERS | PLANNERS | SURVEYORS
www.frederickward.com

STATE OF MARYLAND — ROBERT HARRIS WOOD — No. 14179 — PROFESSIONAL ENGINEER

DESIGN BY:	RJ
DRAWN BY:	RJ
CHECKED BY:	RHV
DATE:	SEPT. 2003
SCALE:	AS SHOWN
W.O. NO.:	2018121.00

SHEET 12 OF 16

SDP-02-94

M:\PROJECTS\2018121\ENGR\dwg\Sdp-APT\VGPROF.dwg Fri Sep 19 16:52:00 2003 E4

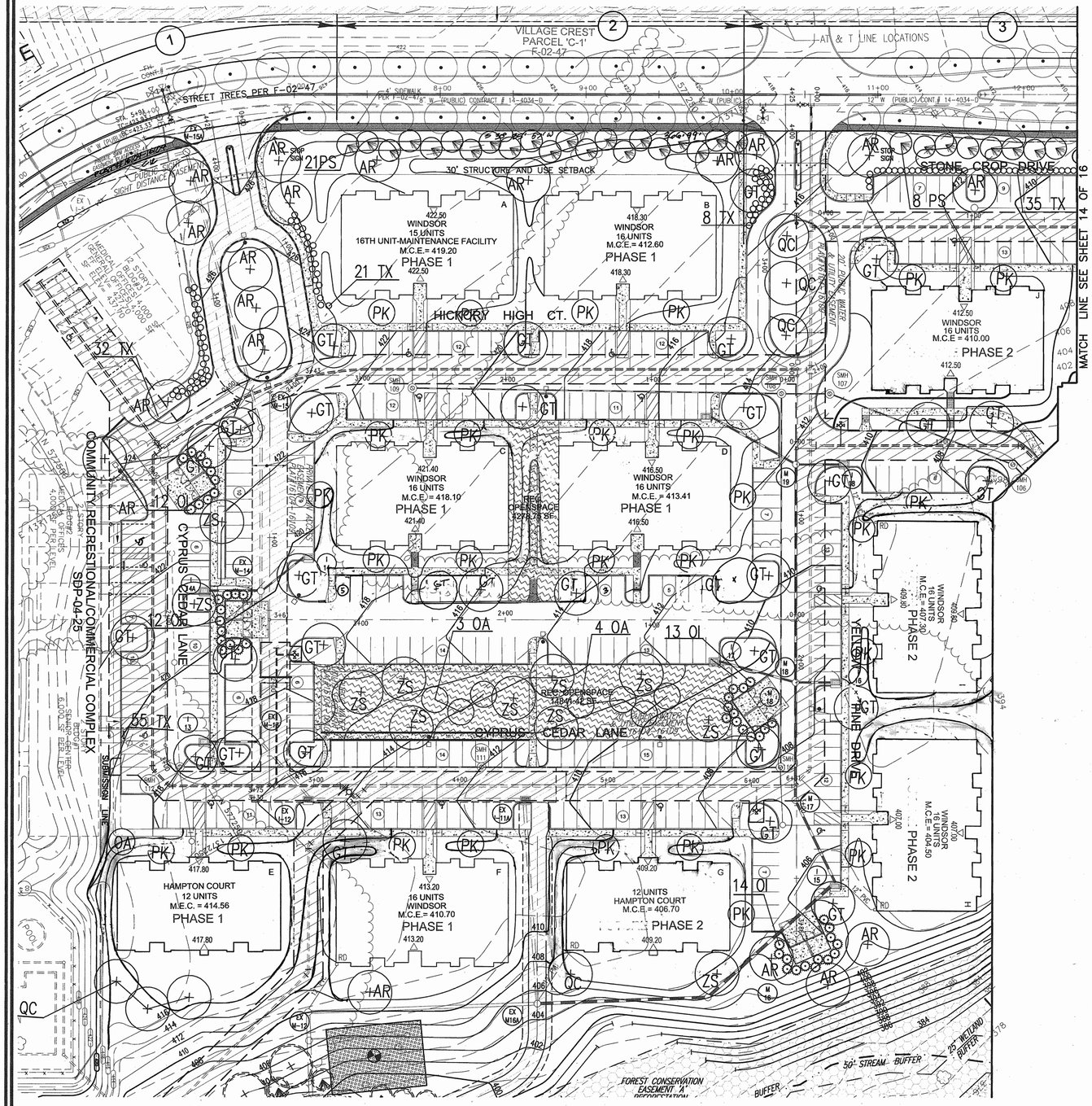

LEGEND

Existing Contour — 382
Proposed Contour — 382
Spot Elevation — +82.53
Direction of Flow
Existing Trees to Remain
Light Poles — Overhead
Shade Trees
Shade Trees LANDSCAPING FOR POND1 PER F-02-47
Evergreen Trees
Shrubs/Hedge
Flowering Trees
Perimeter Landscape Edge — 2
EVERGREEN TREE LANDSCAPING FOR POND1 PER F-02-47

SCHEDULE C RESIDENTIAL DEVELOPMENT INTERNAL LANDSCAPING	
NUMBER OF DWELLING UNITS	267
NUMBER OF TREES REQUIRED (1:3 DU APTS)	89
NUMBER OF TREES PROVIDED SHADE TREES OTHER TREES (2:1 SUBSTITUTION)	 45 88

SCHEDULE B PARKING LOT INTERNAL LANDSCAPING	
NUMBER OF PARKING SPACES	~~438~~
NUMBER OF ISLANDS REQUIRED	~~44~~
NUMBER ISLANDS PROVIDED @ 200 SF/ISLAND	~~44~~
NUMBER OF TREES REQUIRED	~~44~~
NUMBER OF TREES PROVIDED SHADE TREES OTHER TREES (2:1 SUBSTITUTION)	 ~~44~~ –

1. ALL PLANT MATERIALS SHALL BE FULL AND HEAVY, BE WELL FORMED AND SYMMETRICAL, CONFORM TO THE MOST CURRENT AAN SPECIFICATIONS AND BE INSTALLED IN ACCORDANCE WITH LCAMV PLANTING SPECIFICATIONS.
2. CONTRACTOR SHALL VERIFY LOCATION OF ALL UNDERGROUND UTILITIES PRIOR TO DIGGING.
3. FINAL LOCATION OF PLANT MATERIAL MAY NEED TO VARY TO MEET FINAL FIELD CONDITIONS. TREES SHALL NOT BE PLANTED IN THE BOTTOM OF DRAINAGE SWALES.
4. CONTRACTOR SHALL VERIFY PLANT QUANTITIES PRIOR TO BIDDING. IF PLAN DIFFERS FROM LANDSCAPE SCHEDULE, THE PLAN SHALL GOVERN.
5. AN ADDITIONAL 3 SHADE TREES AND 4 EVERGREEN TREES ARE REQUIRED ON THE SDP ADJACENT TO BUILDING P TO AID IN BUFFERING THE BUILDING FROM THE SCENIC ROAD. THE TYPE B BUFFER FOR THE ADJACENT SWM FACILITY IS PROVIDED ON THE FINAL PLAN.
6. EXISTING PERIMETER LANDSCAPING SHOWN BONDED PER F-02-47.

SCHEDULE A PERIMETER LANDSCAPE EDGE						
CATEGORY		ADJACENT TO ROADWAYS				
PERIMETER/FRONTAGE DESIGNATION	1 E	2 B	3 E	4 D	5 E	6 B
LINEAR FEET OF ROADWAY FRONTAGE/PERIMETER	210	280	260	30	45	400
CREDIT FOR EXISTING VEGETATION (YES, NO, LINEAR FEET DESCRIBE BELOW IF NEEDED)	No	No	No	No	No	No
CREDIT FOR WALL, FENCE OR BERM (YES, NO, LINEAR FEET DESCRIBE BELOW IF NEEDED)	No	No	No	No	No	No
NUMBER OF PLANTS REQUIRED SHADE TREES EVERGREEN TREES SHRUBS	 1:40 5 – 1:04 53	 1:50 6 1:40 7 –	 1:40 7 – 1:04 65	 1:60 1 1:10 3 –	 1:40 1 – 1:04 11	 1:50 8 1:40 10 –
NUMBER OF PLANTS PROVIDED SHADE TREES EVERGREEN TREES OTHER TREES (2:1 SUBSTITUTION) SHRUBS (10:1 SUBSTITUTION) DESCRIBE PLANT SUBSTITUTION CREDITS BELOW IF NEEDED)	 5 – – 53	 3 21 – –	 2 10 – 65	 1 – – 13	 1 – – 11	 8 10 – –

LANDSCAPE SCHEDULE				
KEY	QUAN.	BOTANICAL NAME	SIZE	REM.
AR	22	ACER RUBRUM 'OCTOBER GLORY' OCTOBER GLORY RED MAPLE	2 1/2"–3" Cal.	B & B
GT	47	GLEDITSIA TRI. INERMIS 'SHADEMASTER' SHADEMASTER THORNLESS HONEYLOCUST	2 1/2"–3" Cal.	B & B
OI	143	OSMANTHUS ILICIFOLIUS 'GULF TIDE' SWEET HOLLY	3' – 3 1/2' Ht.	B & B
OA	11	OXYDENDRUM ARBOREUM SOURWOOD	8' – 10' Ht.	B & B
PS	64	PINUS STROBUS EASTERN WHITE PINE	6 – 8' Ht.	B & B
PK	36	PRUNUS SERRULATA 'KWANZAN' KWANZAN CHERRY	1 1/2"–2" Cal.	B & B
QC	13	QUERCUS COCCINEA SCARLET OAK	2 1/2"–3" Cal.	B & B
TX	39	TAXUS X MEDIA 'DENSIFORMIS' DENSIFORMIS YEW	30"– 36" Ht.	B & B
ZS	16	ZELKOVA SERRATA 'VILLAGE GREEN' VILLAGE GREEN ZELKOVA	2 1/2"–3" Cal.	B & B

APPROVED: HOWARD COUNTY DEPARTMENT OF PLANNING AND ZONING

CHIEF, DEVELOPMENT ENGINEERING DIVISION — DATE 11/4/03
CHIEF, DIVISION OF LAND DEVELOPMENT — DATE 2/17/04
DIRECTOR — DATE 2/19/04

GENERAL NOTES

1. This plan has been prepared in accordance with the provisions of Section 16.124 of the Howard County Code and the Landscape Manual.
2. Financial Surety for the required landscaping has been posted as a part of the DPW Developer's Agreement in the amount of $55,110.00
3. Light poles to be Kim Lighting standard Entablature, 25' black steel round poles, flush mount. 250 watt metal Halide.
4. See Sediment & Erosion Control Detail Sheet for planting details.

DEVELOPER'S BUILDER'S CERTIFICATE

I/WE CERTIFY THAT THE LANDSCAPING SHOWN ON THIS PLAN WILL BE DONE ACCORDING TO THE PLAN, SECTION 16.124 OF THE HOWARD COUNTY CODE AND THE HOWARD COUNTY LANDSCAPE MANUAL. I/WE FURTHER CERTIFY THAT UPON COMPLETION, A CERTIFICATION OF LANDSCAPE INSTALLATION, ACCOMPANIED BY AN EXECUTED ONE(1) YEAR GUARANTEE OF PLANT MATERIALS, WILL BE SUBMITTED TO THE DEPARTMENT OF PLANNING AND ZONING.

SIGNATURE OF DEVELOPER DONALD R. REUWER — DATE 10/17/03

OWNER :

TAYLOR FAMILY LIMITED PARTNERSHIP A
C/O LAND DESIGN & DEVELOPMENT, INC.
8000 MAIN STREET
ELLICOTT CITY, MD 21043
ATTN: MR. DONALD R. REUWER
PHONE: (410) 480-9105

DEVELOPER

LAND DESIGN & DEVELOPMENT, INC.
8000 MAIN STREET
ELLICOTT CITY, MD 21043
ATTN: MR. DONALD R. REUWER
PHONE: (410) 480-9105

SITE DEVELOPMENT PLAN
LANDSCAPE PLAN
VILLAGE CREST
PART OF PARCEL D-1
PHASE 1 & 2, APT. BLDGS. A-J,
AGE RESTRICTED ADULT HOUSING UNITS

TAX MAP #25 BLOCK 20 — PARCEL P/O 98
2ND ELECTION DISTRICT — HOWARD COUNTY, MARYLAND

FREDERICK WARD ASSOCIATES, INC.
ARCHITECTS | ENGINEERS | PLANNERS | SURVEYORS
7125 RIVERWOOD DRIVE
COLUMBIA, MARYLAND 21046–2354
410–720–6900
410–720–6226 fax
www.frederickward.com

STATE OF MARYLAND — ROBERT HAINES VOGEL — No. 16193 — PROFESSIONAL ENGINEER
ROBERT H. VOGEL, PE NO. 16193

DESIGN BY: MHM
DRAWN BY: RJ
CHECKED BY: MHM
DATE: SEPT. 2003
SCALE: 1"=50'
W.O. NO.: 2018121.00

SHEET 13 OF 16

SDP-02-94

J:\PROJECTS\2018121\ENGR\dwg\Sdp-APT\13LNPLAN.dwg Fri Oct 17 13:33:48 2003 RDMA

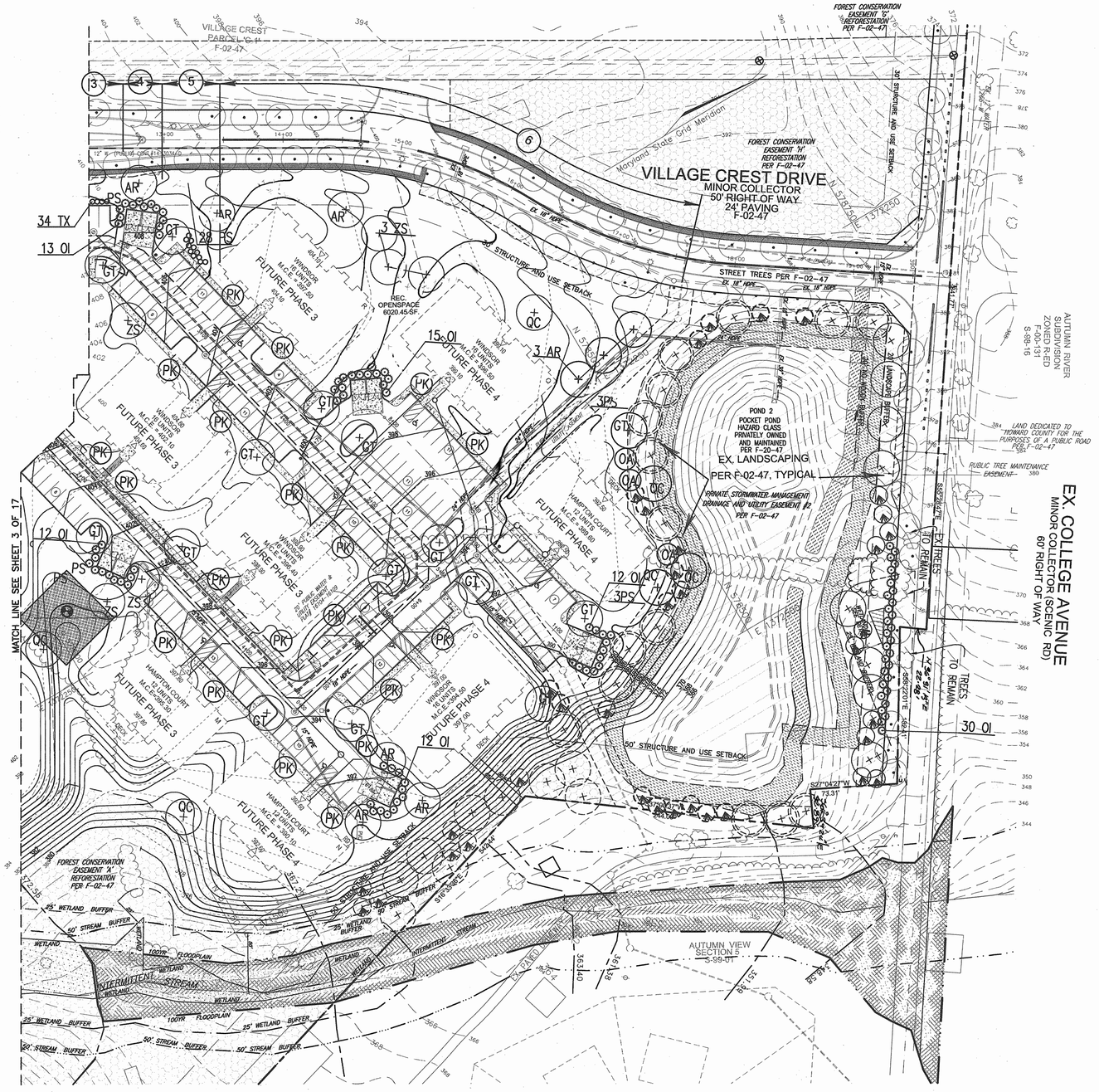

PLAN
SCALE: 1"=50'

LEGEND

- Existing Contour — 382
- Proposed Contour — 382
- Spot Elevation — +82.53
- Direction of Flow
- Existing Trees to Remain
- Light Poles — Overhead
- Shade Trees
- Shade Trees LANDSCAPING FOR POND2 PER F-02-47
- Shade Trees LANDSCAPING FOR TYPE B BUFFER FOR SCENIC ROAD PER F-02-47
- Evergreen Trees
- Shrubs/Hedge
- Flowering Trees
- Perimeter Landscape Edge — 2
- EVERGREEN TREE LANDSCAPING FOR POND2 PER F-02-47
- EVERGREEN TREE LANDSCAPING FOR TYPE B BUFFER FOR SCENIC ROAD PER F-02-47

NOTES
1. SEE "LANDSCAPE SPECIFICATION GUIDELINES FOR BALTIMORE-WASHINGTON METROPOLITAN AREAS" FOR ALL MATERIAL, PRODUCT, AND PROCEDURE SPECIFICATIONS.
2. SEE "LANDSCAPE GUIDELINES" FOR SUPPORTING TREES LARGER THAN 2-1/2" CALIPER.
3. PLACE UPRIGHT STAKES PARALLEL TO WALKS & BUILDINGS.
4. KEEP MULCH 1" FROM TRUNK
5. SEE ARCHITECTURAL PLANS FOR ALL RETAINING WALLS WHICH EXCEED HOWARD COUNTY MINIMUM REQUIREMENTS.
6. TREES ARE NOT TO BE PLANTED OVER PRIVATE SEWAGE EASEMENT.

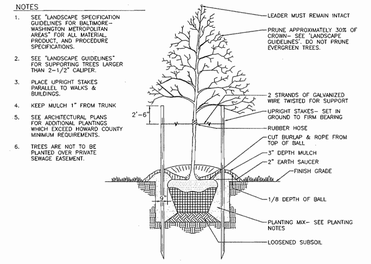

TREE PLANTING AND STAKING
DECIDUOUS TREES UP TO 2–1/2" CALIPER — NOT TO SCALE

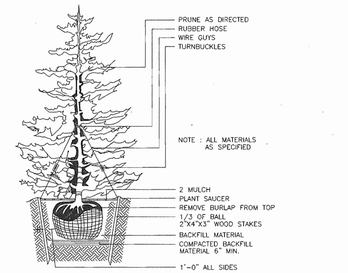

TYPICAL EVERGREEN TREE PLANTING DETAIL
NOT TO SCALE

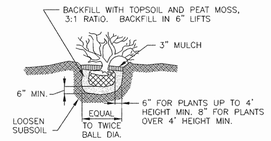

SHRUB PLANTING DETAIL
NOT TO SCALE

APPROVED: HOWARD COUNTY DEPARTMENT OF PLANNING AND ZONING

CHIEF, DEVELOPMENT ENGINEERING DIVISION	DATE 11/4/03
CHIEF, DIVISION OF LAND DEVELOPMENT	DATE 2/19/04
DIRECTOR	DATE 2/20/04

SITE DEVELOPMENT PLAN
LANDSCAPE PLAN
VILLAGE CREST
PART OF PARCEL D-1
PHASE 1 & 2 , APT. BLDGS. A-J,
151 AGE RESTRICTED ADULT HOUSING UNITS
TAX MAP #25 BLOCK 20 — PARCEL P/O 98
2ND ELECTION DISTRICT — HOWARD COUNTY, MARYLAND

OWNER :
TAYLOR FAMILY LIMITED PARTNERSHIP A
C/O LAND DESIGN & DEVELOPMENT, INC.
8000 MAIN STREET
ELLICOTT CITY, MD 21043
ATTN: MR. DONALD R. REUWER
PHONE: (410) 480-9105

DEVELOPER
LAND DESIGN & DEVELOPMENT, INC.
8000 MAIN STREET
ELLICOTT CITY, MD 21043
ATTN: MR. DONALD R. REUWER
PHONE: (410) 480-9105

FREDERICK WARD ASSOCIATES, INC.
ARCHITECTS | ENGINEERS | PLANNERS | SURVEYORS
7125 RIVERWOOD DRIVE
COLUMBIA, MARYLAND 21046–2354
410–720–6900
410–720–6226 fax
www.frederickward.com

STATE OF MARYLAND — ROBERT MARK HUTH — No. 19193 — PROFESSIONAL ENGINEER — 9/12/03

DESIGN BY:	MHM
DRAWN BY:	RJ
CHECKED BY:	MHM
DATE:	SEPT. 2003
SCALE:	AS SHOWN
W.O. NO.:	2018121.00

SHEET 14 OF 16

SDP-02-94

K:\PROJECTS\2018121\ENGR\dwg\Sdp-APT\14LNPLAN.dwg Sun Sep 21 11:29:33 2003 E4

VILLAGE CREST DRIVE
MINOR COLLECTOR
50' RIGHT OF WAY

EX. COLLEGE AVENUE

30' STRUCTURE AND USE SETBACK

20' PUBLIC WATER & UTILITY EASEMENT PLAT F-02-47

PUBLIC SIDEWALK EASEMENT PER F-02-47

PUBLIC TREE MAINTENANCE EASEMENT PER F-02-47

PUBLIC TREE MAINTENANCE EASEMENT

LAND DEDICATED TO HOWARD COUNTY FOR THE PURPOSES OF A PUE

WETLAND 3 PER F-02-47

33' AMERICAN TELEPHONE AND TELEGRAPH EASEMENT - L 232 - F97

UNDER GROUND AT. & T. FIBER OPTIC CABLE AMERICAN TELEPHONE & TELEGRAPH 33' EASEMENT

AT & T LINE POST

AT & T LINE LOCATIONS
N30°35'57"E 731.21'
N30°35'57"E 709.41'

VILLAGE CREST PARCEL 'C-1' F-02-47

FOREST CONSERVATION EASEMENT 'A' REFORESTATION PER F-02-47

PHASE 1
- 422.50 WINDSOR 15 UNITS 16TH UNIT-MAINTENANCE FACILITY M.C.E.= 419.20
- 418.30 WINDSOR 16 UNITS M.C.E.= 412.60
- 421.40 WINDSOR 16 UNITS M.C.E.= 418.10
- 416.50 WINDSOR 16 UNITS M.C.E.= 413.41
- 417.80 HAMPTON COURT 12 UNITS M.E.C. = 414.56
- 413.20 16 UNITS WINDSOR M.C.E.= 410.70
- 409.20 12 UNITS HAMPTON COURT M.C.E.= 406.70

PHASE 2
- 412.50 WINDSOR 16 UNITS M.C.E.= 410.00
- 409.80 WINDSOR 16 UNITS M.C.E.= 407.30
- 407.00 WINDSOR 16 UNITS M.C.E.= 404.50

FUTURE PHASE 3
- 404.10 WINDSOR 16 UNITS M.C.E.= 401.50
- 399.10 WINDSOR 16 UNITS M.C.E.= 396.50
- 399.30 WINDSOR 16 UNITS M.C.E.= 396.50
- 399.80 WINDSOR 16 UNITS M.C.E.= 397.40
- 399.30 HAMPTON COURT 12 UNITS M.C.E.= 396.10

FUTURE PHASE 4
- 399.30 HAMPTON COURT 12 UNITS M.C.E.= 396.60
- 399.30 WINDSOR 16 UNITS M.C.E.= 396.50
- 399.30 HAMPTON COURT 12 UNITS M.C.E.= 396.60

REC. OPENSPACE 4276.75 SF.
REC. OPENSPACE 14841.42 SF.
REC. OPENSPACE 16020.45 SF.

PRIVATE SWM ACCESS EASEMENT

20' PUBLIC WATER & UTILITY EASEMENT

20' PUBLIC WATER & UTILITY EASEMENT PLAT F-02-47

20' PUBLIC SIGHT DISTANCE EASEMENT PER F-02-47

20' PUBLIC SEWER AND UTILITY EASEMENT

30' TRANSMISSION LINE AND UTILITY EASEMENT F-02-47

PLAY AREA 8,000 ± SF

BLDG#4 DAYCARE CENTER 8,000 SF.

COMMUNITY RECREATIONAL COMPLEX SDP-04-28

2 STORY BLDGS. #2 & #3 4,000 SF PER LEVEL

2 STORY BLDG. #1 SENIOR CENTER 6,000 SF PER LEVEL

CLUBHOUSE 1991 SF

POOL

MAIN POOL

POND 1 PER F-02-47

POND 2 PER F-02-47

PRIVATE STORMWATER MANAGEMENT DRAINAGE AND UTILITY EASEMENT #1

EASEMENT 'A' REFORESTATION PER F-02-47

EASEMENT 'B' REFORESTATION PER F-02-47

EASEMENT 'C' REFORESTATION PER F-02-47

FOREST CONSERVATION EASEMENT 'A' RETENTION PER F-02-47

50' STREAM BUFFER
25' WETLAND BUFFER
100YR FLOODPLAIN
STREAM
WETLAND
INTERMITTENT STREAM

OVERALL PLAN
SCALE: 1"=50'

APPROVED: HOWARD COUNTY DEPARTMENT OF PLANNING AND ZONING

CHIEF, DEVELOPMENT ENGINEERING DIVISION — DATE 11/4/03

CHIEF, DIVISION OF LAND DEVELOPMENT — DATE 2/19/04

DIRECTOR — DATE 2/25/04

SITE DEVELOPMENT PLAN
OVERALL PLAN
VILLAGE CREST
PART OF PARCEL D-1

PHASE 1&2 APT. BLDGS. A-J,
151 AGE RESTRICTED ADULT HOUSING UNITS

TAX MAP #25 BLOCK 20 — PARCEL P/O 98
2ND ELECTION DISTRICT — HOWARD COUNTY, MARYLAND

OWNER:
TAYLOR FAMILY LIMITED PARTNERSHIP A
C/O LAND DESIGN & DEVELOPMENT, INC.
8000 MAIN STREET
ELLICOTT CITY, MD 21043
ATTN: MR. DONALD R. REUWER
PHONE: (410) 480-9105

DEVELOPER
LAND DESIGN & DEVELOPMENT, INC.
8000 MAIN STREET
ELLICOTT CITY, MD 21043
ATTN: MR. DONALD R. REUWER
PHONE: (410) 480-9105

FREDERICK WARD ASSOCIATES, INC.
ARCHITECTS | ENGINEERS | PLANNERS | SURVEYORS
7125 RIVERWOOD DRIVE
COLUMBIA, MARYLAND 21046-2354
410-720-6900
410-720-6226 fax
www.frederickward.com

STATE OF MARYLAND — ROBERT HARRIS VOGEL — No. 16193 — PROFESSIONAL ENGINEER

ROBERT H. VOGEL, PE NO. 16193

DESIGN BY:	RJ
DRAWN BY:	RJ
CHECKED BY:	RHV
DATE:	SEPT. 2003
SCALE:	1"=100'
W.O. NO.:	2018121.00

SHEET 15 OF 16

SDP-02-94

M:\PROJECTS\2018121\ENGR\dwg\Sdp-APTV150VALL.dwg Fri Oct 17 13:35:18 2003 RDWA

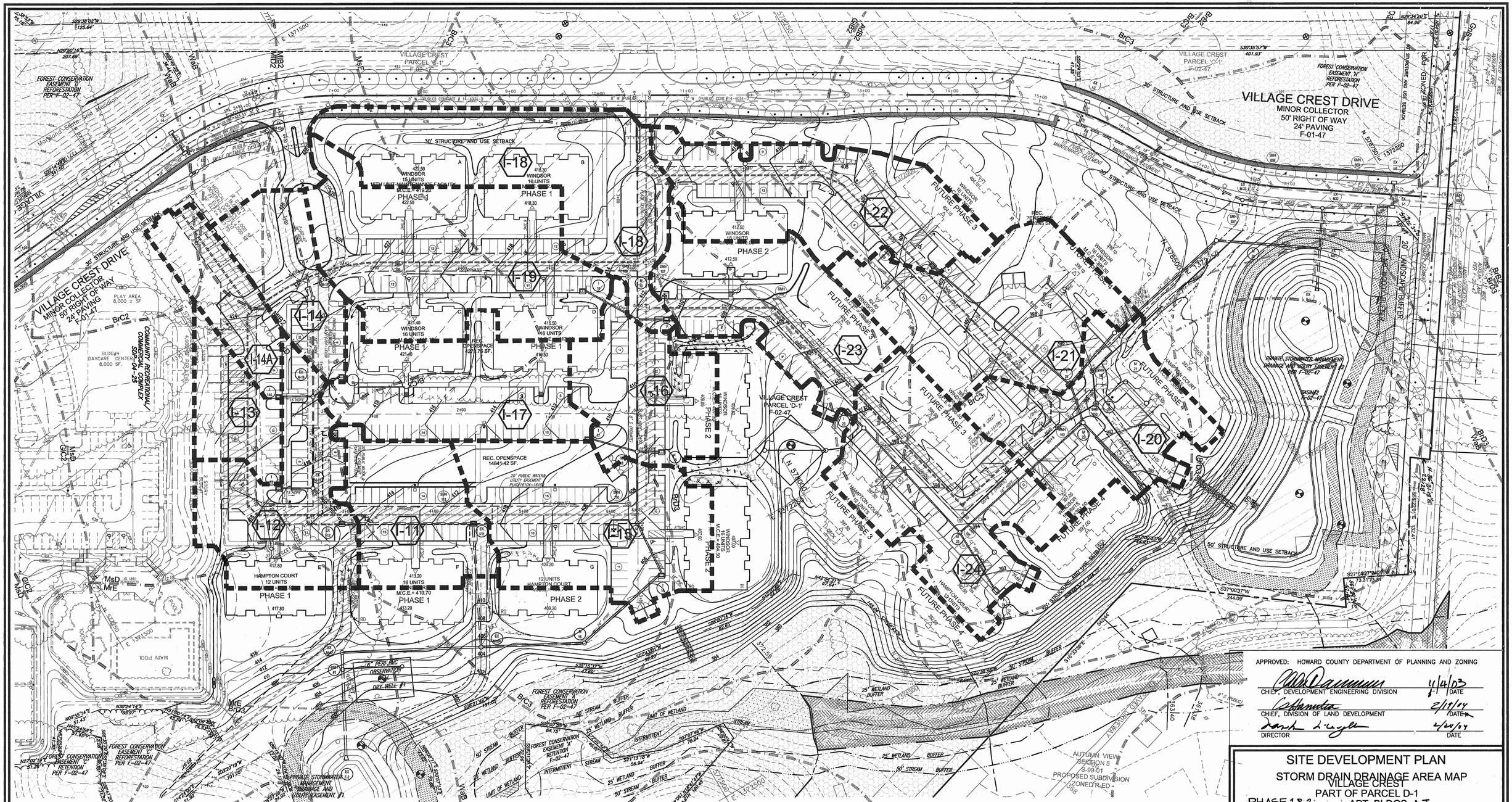

DRAINAGE AREA TABULATIONS

No.	Area	'C'	% Imp.	Soil Types	Zone
I-11	0.55 AC.	0.51	60	C	POR
I-12	0.86 AC.	0.38	47	C	POR
I-13	0.79 AC.	0.42	29	C	POR
I-14	1.59 AC.	0.60	35	B AND C	POR
I-14A	0.31 AC.	0.60	35	B AND C	POR
I-15	0.95 AC.	0.62	60	C	POR
I-16	0.53 AC.	0.69	64	C	POR
I-17	0.74 AC.	0.67	76	B AND C	POR
I-18	1.02 AC.	0.69	64	C	POR
I-19	1.18 AC.	0.64	72	B AND C	POR
I-20	0.76 AC.	0.71	75	C	POR
I-21	0.91 AC.	0.75	75	C	POR
I-22	0.89 AC.	0.75	69	B AND C	POR
I-23	0.70 AC.	0.75	84	C	POR
I-24	0.97 AC.	0.75	79	C	POR

LEGEND

Existing Contour ——382——
Proposed Contour ——82——

Existing Trees to Remain

FOREST CONSERVATION EASEMENT

DRAINAGE DIVIDE

PLAN
SCALE: 1"=50'

APPROVED: HOWARD COUNTY DEPARTMENT OF PUBLIC WORKS.

CHIEF, BUREAU OF HIGHWAYS DATE

APPROVED: HOWARD COUNTY DEPARTMENT OF PLANNING AND ZONING

CHIEF, DEVELOPMENT ENGINEERING DIVISION — DATE 4/4/03

CHIEF, DIVISION OF LAND DEVELOPMENT — DATE 2/19/04

DIRECTOR — DATE 4/20/04

SITE DEVELOPMENT PLAN

STORM DRAIN DRAINAGE AREA MAP

VILLAGE CREST
PART OF PARCEL D-1
PHASE 1 & 2, APT. BLDGS. A-J,
151 AGE RESTRICTED ADULT HOUSING UNITS
TAX MAP #25 BLOCK 20 — PARCEL P/O 98
2ND ELECTION DISTRICT — HOWARD COUNTY, MARYLAND

OWNER :
TAYLOR FAMILY LIMITED PARTNERSHIP A
C/O LAND DESIGN & DEVELOPMENT, INC.
8000 MAIN STREET
ELLICOTT CITY, MD 21043
ATTN: MR. DONALD R. REUWER
PHONE: (410) 480-9105

DEVELOPER
LAND DESIGN & DEVELOPMENT, INC.
8000 MAIN STREET
ELLICOTT CITY, MD 21043
ATTN: MR. DONALD R. REUWER
PHONE: (410) 480-9105

FREDERICK WARD ASSOCIATES, INC.
ARCHITECTS | ENGINEERS | PLANNERS | SURVEYORS
7125 RIVERWOOD DRIVE
COLUMBIA, MARYLAND 21046-2354
410-720-6900
410-720-6226 fax
www.frederickward.com

STATE OF MARYLAND — ROBERT HARRIS VOGEL — No. 16193 — PROFESSIONAL ENGINEER
ROBERT H. VOGEL, PE NO. 16193

DESIGN BY:	RJ
DRAWN BY:	RJ
CHECKED BY:	RHV
DATE:	SEPT. 2003
SCALE:	AS SHOWN
W.O. NO.:	2018121.00

SHEET 16 OF 16

SDP-02-94

M:\PROJECTS\2018121\ENGR\dwg\Sdp-APT\17DAM.dwg Fri Oct 17 13:37:16 2003 ROMA

SITE DEVELOPMENT PLAN

VILLAGE CREST

PART OF PARCEL D-1

PHASE I APT. BLDGS. A-M&K, 211 AGE RESTRICTED ADULT HOUSING UNITS
PHASE II, PHASE III

HOWARD COUNTY, MARYLAND

GENERAL NOTES

1. ALL CONSTRUCTION SHALL BE IN ACCORDANCE WITH THE LATEST STANDARDS AND SPECIFICATIONS OF HOWARD COUNTY PLUS MSHA STANDARDS AND SPECIFICATIONS, IF APPLICABLE.
2. THE CONTRACTOR SHALL NOTIFY "MISS UTILITY" AT 1-800-257-7777 AT LEAST 48 HOURS PRIOR TO ANY EXCAVATION WORK.
3. THE CONTRACTOR IS TO NOTIFY THE FOLLOWING UTILITIES OR AGENCIES AT LEAST FIVE DAYS BEFORE STARTING WORK ON THESE DRAWING.

MISS UTILITY:	1-800-257-7777
HOWARD COUNTY BUREAU OF UTILITIES:	314-2366
AT&T CABLE LOCATION DIVISION:	393-3553
B.G.&E. CO. CONTRACTOR SERVICES:	850-4620
B.G.&E. CO. UNDERGROUND DAMAGE CONTROL:	787-4620
STATE HIGHWAY ADMINISTRATION:	531-5533

4. PROJECT BACKGROUND:
   LOCATION : ELLICOTT CITY, MARYLAND; TAX MAP 25, PARCEL D-1
   ZONING : POR
   SUBDIVISION : VILLAGE CREST – PART OF PARCEL D-1,
   PARCELS C-1, D-1 AND E-1
   A RESUBDIVISION OF WORTHINGTON FIELDS
   NON BUILDABLE PARCEL A-3 AND SUBDIVISION OF P/O PARCEL 98
   SECTION/AREA : N/A
   LIMIT OF DISTURBANCE, AREA :793042 SF OR 18.2 AC.
   P-00-07,S-99-18,S-00-05,F-01-60, P-01-20, F-02-47,F-02-112, F-04-077
5. FOREST STAND DELINEATION PLAN PREPARED BY EXPLORATION RESEARCH, INC. DATED JANUARY, 2000. THE FOREST CONSERVATION EASEMENTS HAVE BEEN ESTABLISHED PER F-02-47, PARCELS C-1, D-1 AND E-1. A RESUBDIVISION OF WORTHINGTON FIELDS NON BUILDABLE PARCEL A-3 AND SUBDIVISION OF P/O PARCEL 98. TO FULFILL THE REQUIREMENTS OF SECTION 16.1200 OF THE HOWARD COUNTY FOREST CONSERVATION ACT. NO CLEARING, GRADING, OR CONSTRUCTION IS PERMITTED WITHIN THE FOREST CONSERVATION EASEMENT. FOREST MANAGEMENT PRACTICES AS DESCRIBED IN THE DEED OF FOREST CONSERVATION EASEMENT ARE PERMITTED.
   FOREST CONSERVATION REQUIREMENTS:
   AREA OF RETENTION: 2.93 AC.
   AREA OF REFORESTATION REQUIRED: 16.45 AC.
   AREA OF REFORESTATION SHOWN: 12.03 AC.
   A FEE-IN-LIEU OF THE REMAINING 5.50 AC.
6. THE CONTRACTOR SHALL NOTIFY THE DEPARTMENT OF PUBLIC WORKS/BUREAU OF ENGINEERING/ CONSTRUCTION INSPECTION DIVISION AT (410) 314-1880 AT LEAST FIVE (5) WORKING DAYS PRIOR TO START OF WORK.
7. ANY DAMAGE TO PUBLIC RIGHT-OF-WAYS, PAVING, OR EXISTING UTILITIES WILL BE CORRECTED AT THE CONTRACTOR'S EXPENSE.
8. EXISTING UTILITIES LOCATED FROM ROAD CONSTRUCTION PLANS, FIELD SURVEYS, PUBLIC WATER AND AND SEWER EXTENSION PLANS AND AVAILABLE RECORD DRAWINGS. APPROXIMATE LOCATION OF EXISTING UTILITIES ARE SHOWN FOR THE CONTRACTORS INFORMATION. CONTRACTOR SHALL LOCATE EXISTING UTILITIES WELL IN ADVANCE OF CONSTRUCTION ACTIVITIES AND TAKE ALL NECESSARY PRECAUTIONS TO PROTECT THE EXISTING UTILITIES AND TO MAINTAIN UNINTERRUPTED SERVICE. ANY DAMAGE INCURRED DUE TO CONTRACTOR'S OPERATION SHALL BE REPAIRED IMMEDIATELY AT THE CONTRACTOR'S EXPENSE.
9. ALL INLETS SHALL BE CONSTRUCTED IN ACCORDANCE WITH HOWARD COUNTY STANDARDS.
10. ALL PIPE ELEVATIONS SHOWN ARE INVERT ELEVATIONS
11. THE LOCATION OF WATER METER IS IN THE CENTER OF THE BUILDING FOR BOTH HOUSE TYPE. THE WATER METER SHALL BE PRIVATE.
12. ALL REINFORCED CONCRETE FOR STORM DRAIN STRUCTURES SHALL HAVE A MINIMUM OF 28 DAYS STRENGTH OF 3,500 P.S.I.
13. TRAFFIC CONTROL DEVICES, MARKINGS AND SIGNING SHALL BE IN ACCORDANCE WITH THE LATEST EDITION OF THE MANUAL ON UNIFORM TRAFFIC CONTROL DEVICES (MUTCD). ALL STREET AND REGULATORY SIGNS SHALL BE IN PLACE PRIOR TO THE PLACEMENT OF ANY ASPHALT.
14. SOIL COMPACTION SPECIFICATIONS, REQUIREMENTS, METHODS AND MATERIALS ARE TO BE IN ACCORDANCE WITH THE RECOMMENDATIONS OF THE PROJECT GEOTECHNICAL ENGINEER. GEOTECHNICAL ENGINEER TO CONFIRM ACCEPTABILITY OF PROPOSED PAVING SECTION, BASED ON SOIL TEST PRIOR TO CONSTRUCTION.
15. ALL STORM DRAIN PIPE BEDDING SHALL BE CLASS 'C'.
16. THE PROJECT BOUNDRY IS BASED ON A BOUNDRY SURVEY PERFORMED BY FISHER COLLINS & CARTER, INC DATED DEPTEMBER 21, 1998.
17. THE TOPOGRAPHY SHOWN HEREON IS BASED ON AERIAL PHOTOGRAMETIC SURVEY PERFORMED BY WINGS AERIAL MAPPING COMPANY DATED MARCH, 1995
18. A NOISE STUDY IS NOT REQUIRED FOR THIS PROJECT.
19. ALL PAVING PER DETAILS.
20. CONTRACTOR RESPONSIBLE TO CONSTRUCT ALL HANDICAP PARKING AND HANDICAP ACCESS IN ACCORDANCE WITH CURRENT ADA REQUIREMENTS.
21. ALL ELEVATIONS ARE TO FLOWLINE/BOTTOM OF CURB UNLESS OTHERWISE NOTED.
22. ALL DIMENSIONS ARE TO FACE OF CURB UNLESS OTHERWISE NOTED.
23. PUBLIC WATER AND SEWER AVAILABLE THOUGH CONTRACT NO.:14-3855-D AND 44-3855-D
24. ALL OUTDOOR SITE LIGHTING TO CONFORM TO SECTION 134 OF THE HOWARD COUNTY ZONING REGULATIONS.
25. ALL BUILDING TO HAVE INTERIOR WATER METER SETTINGS.
26. THIS PLAN HAS BEEN PREPARED IN ACCORDANCE WITH THE PROVISIONS OF SECTION 16.124 OF THE HOWARD COUNTY CODE AND THE LANDSCAPE MANUAL. FINANCIAL SURETY FOR THE REQUIRED LANDSCAPING HAS BEEN POSTED AS A PART OF THE DPW DEVELOPER'S AGREEMENT IN THE AMOUNT OF $55,110.00
27. STORMWATER MANAGEMENT (Cpv, Wqv) HAS BEEN PROVIDED UNDER F-02-47. (REv) FOR VILLAGE CREST DRIVE THIS DEVELOPMENT AND THE IMPROVEMENT TO COLLEGE AVE IS PROVIDED BY TWO DRY WELL FACILITIES.
28. AS A RESULT OF THE PRELIMINARY PLAN FOR THIS SUBDIVISION, P-01-20, BEING SUBMITTED TO THE COUNTY FOR REVIEW PRIOR TO 11/15/01, IT IS SUBJECT TO COMPLIANCE WITH THE FOURTH EDITION OF THE SUBDIVISION AND LAND DEVELOPMENT REGULATIONS, IN ADDITION, BECAUSE THE PRELIMINARY PLAN FOR THIS SUBDIVISION IS SUBJECT TO COMPLIANCE WITH THE ZONING REGULATIONS ADOPTED ON 10/18/93 AND AMENDED ON 07/12/01.

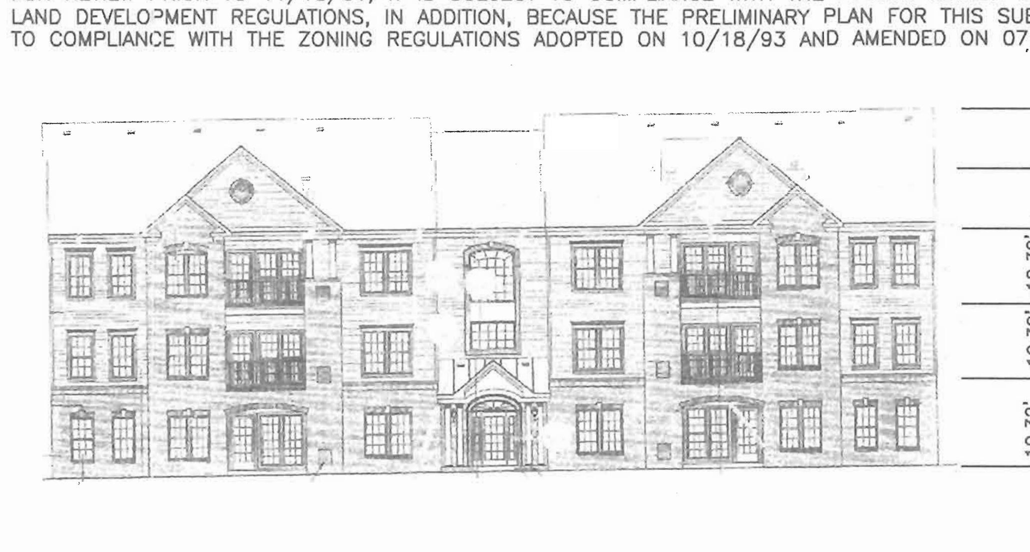

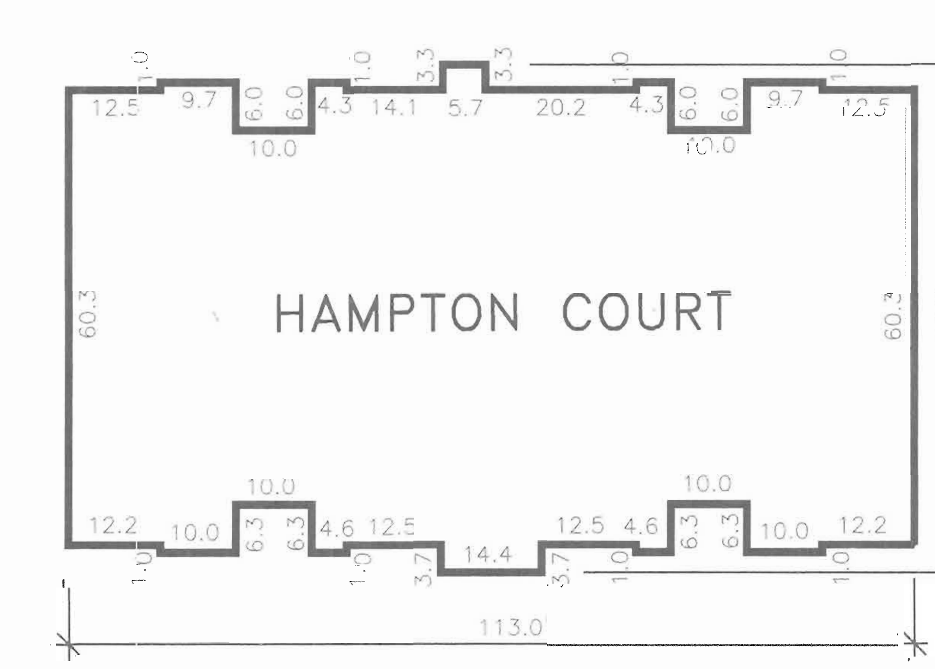

29. THIS SITE PLAN IS VALID FOR TWO YEARS FROM DATE OF SIGNATURE APPROVAL. A NEW SITE DEVELOPMENT PLAN OR WAIVER TO REACTIVATE THIS SITE DEVELOPMENT PLAN MAY BE REQUIRED FOR REMAINING PHASES.
30. THE ARTICLES OF INCORPORATION FOR ESTABLISHMENT OF THE VILLAGE CREST RESIDENTIAL VANED CONDOMINIUM AND THE TAYLOR LAND CONDOMINIUM WILL BE RECORDED.
31. REFERENCE AGE RESTRICTED COVENANTS AND DOCUMENTS RECORDED L. 7916 F. 335

ADDRESS CHART	
PARCEL NO.	STREET ADRESS
P/O PARCEL D-1	~~VILLAGE CREST DRIVE~~

SUBDIVISION NAME			SECTION/AREA		PARCEL NUMBER
VILLAGE CREST			N/A		P/O PARCEL D-1
PLAT NO.	BLOCK NO.	ZONE	TAX/ZONE	ELECT. DIST.	CENSUS TR.
~~16104-16109~~ 16421-16422	20	POR	25	2ND	6027.00
WATER CODE G-01			SEWER CODE 1253100		

THE PLAN IS SUBJECT TO WP-04-109 APPROVAL TO WAIVE SECTION 16.144 (1)(i) OF THE FOURTH EDITION OF THE SUBDIVISION AND LAND DEVELOPMENT REGULATION WHICH VOIDS AND CONSIDERS WITHDRAWAL OF THE SUBMISSION OF THE PRELIMINARY PLAN WHICH MISSES A DEADLINE EXCEPT WHERE DELAY IS CAUSED BY GOVERNMENT ACTION.

SDP-02-94 IS DESIGNED TO BE A SINGLE SDP WITH FOUR PHASES, EACH PHASE HAS A MILESTONE FOR ITS SUBMISSION AS A REDLINE REVISIONS TO THE INITIAL SDP OR AS A NEW SDP SUBMISSION.

PHASE	NO TENTATIVE ALLOCATIONS	ALLOCATION YEAR	SDP MILESTONE DATE
PHASE 1	91	2005	SDP-02-94 OR ORIGINAL SUBMISSION
PHASE 2	60	2006	BETWEEN 07-01-03 & 01-01-04
PHASE 3	60	2007	BETWEEN 07-01-04 & 01-01-05.
PHASE 4	56	2008	BETWEEN 07-01-05 & 01-01-06.

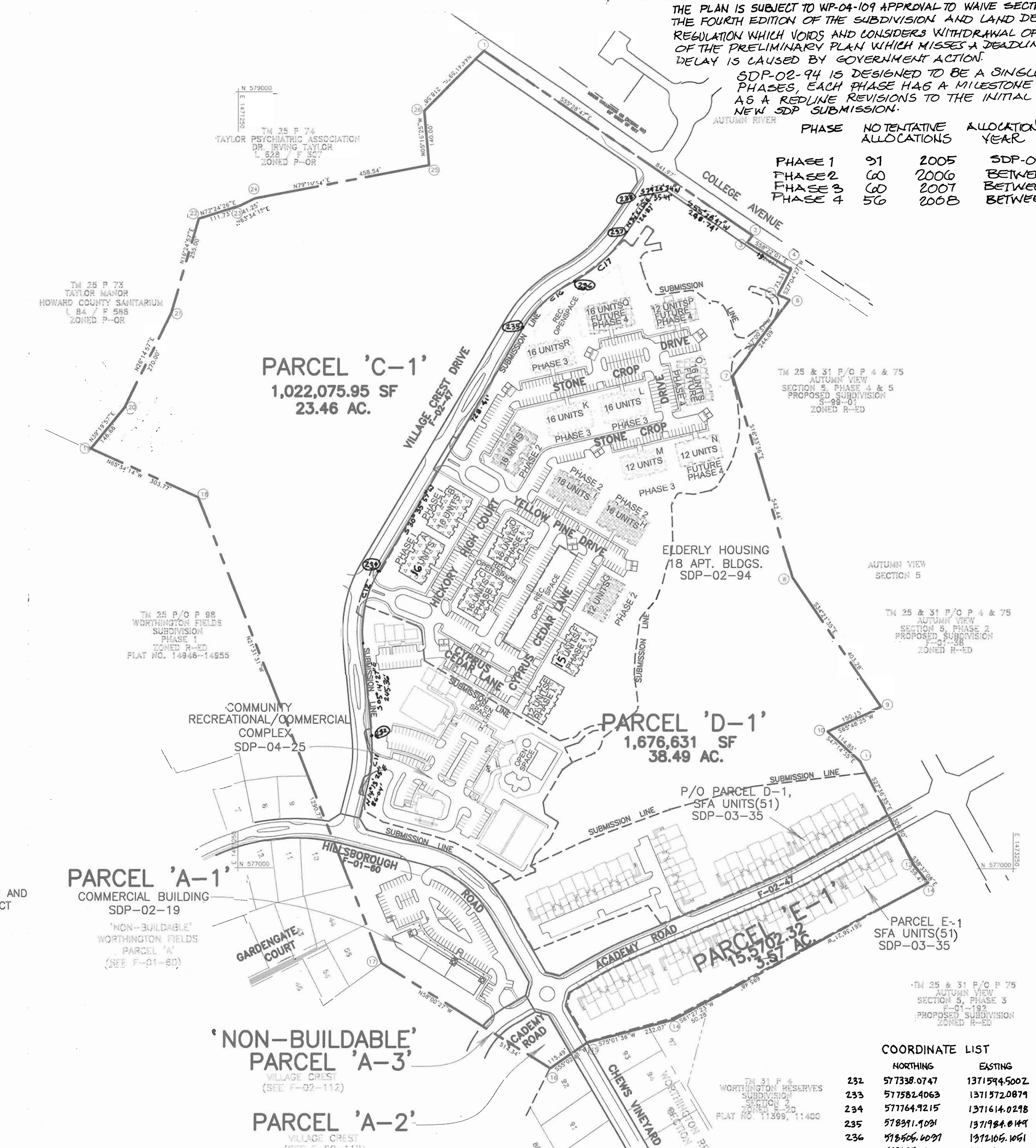

LOCATION PLAN
SCALE: 1"=200'

ADDRESS CHART		
BUILDING		STREET ADRESS
A	8120	HICKORY HIGH COURT
B	8100	HICKORY HIGH COURT
C	8125	HICKORY HIGH COURT
D	8105	HICKORY HIGH COURT
E	8155	CYPRUS CEDAR LANE
F	8145	CYPRUS CEDAR LANE
G	8135	CYPRUS CEDAR LANE
H	8125	YELLOW PINE DRIVE
I	8115	YELLOW PINE DRIVE
J	8280	STONE CROP DRIVE
K	8270	STONE CROP DRIVE
L	8260	STONE CROP DRIVE
M	8265	STONE CROP DRIVE
N	8255	STONE CROP DRIVE
O	8245	STONE CROP DRIVE
P	8235	STONE CROP DRIVE
Q	8225	STONE CROP DRIVE
R	8215	STONE CROP DRIVE

COORDINATE LIST

	NORTHING	EASTING
232	577338.0747	1371594.5002
233	577582.4063	1371572.0879
234	577764.9215	1371614.0298
235	578391.9031	1371984.8149
236	578505.6037	1372105.1051
237	578635.1921	1372251.5131
238	578738.1018	1372321.8574
239	578794.5708	1372356.5673

SHEET INDEX

SHEET NO.	DESCRIPTION
1 of 16	COVER SHEET
2 of 16	SITE AND UTILITY PLAN I
3 of 16	SITE AND UTILITY PLAN II
4 of 16	GRADING AND SEDIMENT CONTROL PLAN I
5 of 16	GRADING AND SEDIMENT CONTROL PLAN II
6 of 16	SITE DETAILS
7 of 16	SEDIMENT AND EROSION CONTROL DETAILS
8 of 16	PROFILES
9 of 16	PROFILES
10 of 16	PROFILES
11 of 16	PROFILES
12 of 16	PROFILES
13 of 16	LANDSCAPE PLAN & DETAILS I
14 of 16	LANDSCAPE PLAN & DETAILS II
15 of 16	OVERALL PLAN
16 of 16	STORM DRAIN DRAINAGE AREA MAP

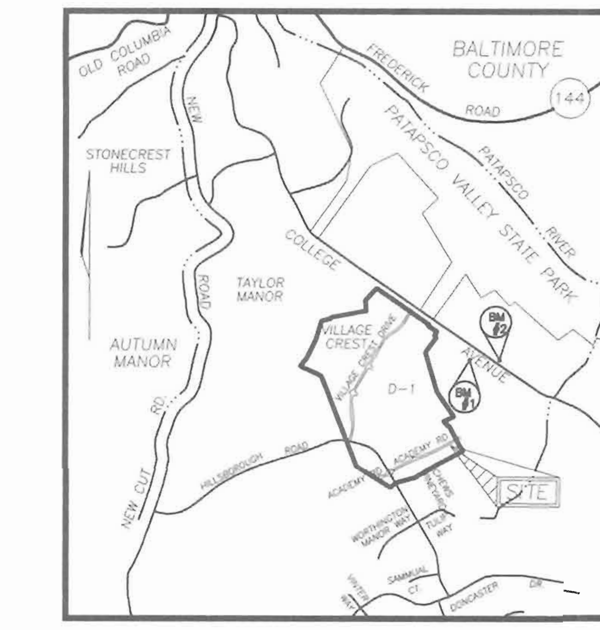

VICINITY MAP
SCALE: 1"=2000'

BENCHMARKS

BENCHMARK NO. 1: COUNTY CONTROL #3044005R
3/4" REBAR 0.8' BELOW SURFACE
N. 578233.92, E. 1473142.33
ELEV. = 374.389

BENCHMARK NO. 2: COUNTY CONTROL #3044004R
3/4" REBAR 0.6' BELOW SURFACE
N. 578128.03, E. 1473460.71
ELEV. =362.575

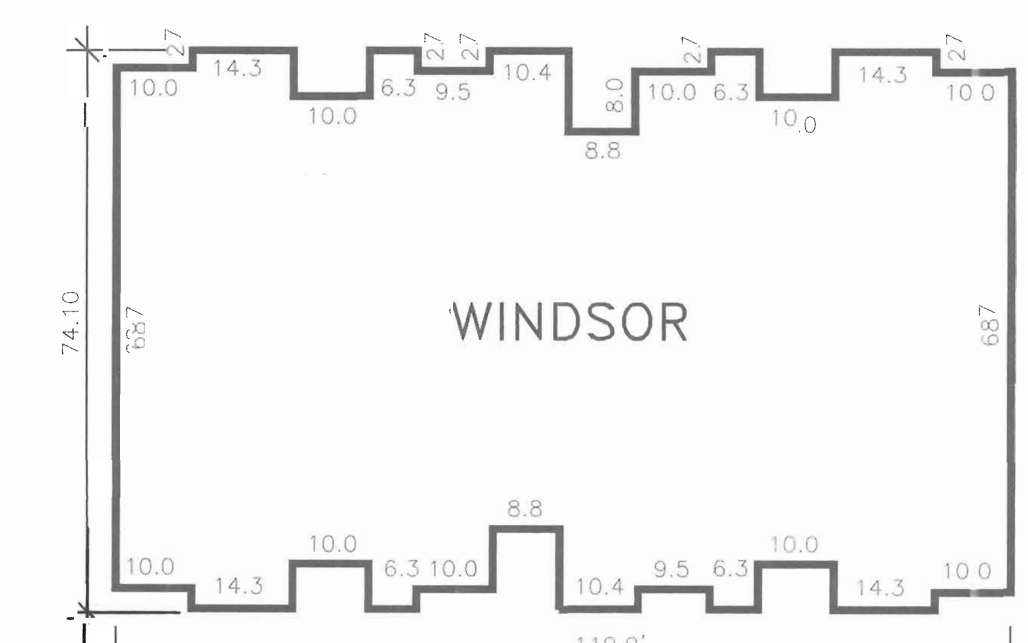

SITE ANALYSIS

THIS PLAN IS FOR PHASE 1, BLDGS. A, B,C,D,E & F, 91 UNITS AND THE TOTAL SITE INFRASTRUCTURE ONLY

TOTAL AREA OF PARCEL D-1: 1,676,631 SF. (38.49 AC.)
AREA OF LIMIT OF DISTURBANCE: 742327.13 SF. (17.04 AC.)
AREA OF SUBMISSION: 720918 SF. (16.55 AC.)

PRESENT ZONING: P.O.R

PROPOSED USE: HOUSING FOR ELDERLY (AGE RESTRICTED ADULT HOUSING)

PROPOSED USE:
TOTAL NUMBER OF UNITS ALLOWED SHOWN AND
TOTAL NUMBER OF UNITS PROVIDED: 211 UNITS APPROVED ON THIS PLAN FOR PHASE 1,2,3 AND 56 PHASED TENTATIVE HOUSING UNIT ALLOCATIONS HAVE BEEN GRANTED PER THIS PLAN. SEE THE PHASING CHART ON THIS SHEET FOR THE PHASING OF THE REMAINING PROPOSED 56 UNITS.

PARKING :
HOUSING FOR ELDERLY
1.0 SPACES PER A DWELLING UNIT
267 DWELLING UNITS= 267 SPACES REQ
298 SPACES PROVIDED
119 SPACES PROVIDED FOR SDP-04-25
417 SPACES PROVIDED

HC. ACCESSIBLE SPACES
MIN.2% OF TOTAL SPACES REQ.= 9 SPACES
18 SPACES PROVIDED
3 SPACES PROVIDED FOR SDP-04-25
21 SPACES PROVIDED

TOTAL PARKING SPACES PROVIDED: 438 SPACES PROVIDED

BUILDING FOOTPRINTS
WINDSOR: 8098 SF X 13 = 105274 SF
OVERHANG: 379.32 SF
ROOF EAVES: 403.32 SF.
BUILDING COVERAGE: 106057 SF
HAMPTON COURT : 6669 SF X 5 = 33345 SF
OVERHANG: 318.59 SF
ROOF EAVES: 346.28 SF
BUILDING COVERAGE: 34010 SF
TOTAL BUILDING COVERAGE: 140067 SF
SIDEWALK: 30686 SF
DUMPSTER: 6604 SF.
PAVING: 177088 SF
IMPERVIOUS AREA: 352996 SF (8.10 AC.)

BUILDINGS TO BE CONSTRUCTED IN PHASES			
SYMBOL	PHASING	BLDGS.	#'S OF UNITS
	PHASE 1 (YEAR 2005)	A,B,C,D,E,F	91
	PHASE 2 (YEAR 2006)	G,H,I,J	60
	PHASE 3 (YEAR 2007)	M,L,K,R	60
	PHASE 4 (YEAR 2008)	N,O,P,Q	56

NOTE: ALL UTILITIES, ROADS, INFRASTRUCTURE TO BE CONSTRUCTED INITIALLY. ONLY CONSTRUCTION TO REMAIN FOR FUTURE PHASES ARE THE BUILDINGS.

CURVE DATA TABLE

CURVE	ARC	RADIUS	TANGENT	DELTA	CHORD	
C11	127.46'	375.00'	64.32'	19°27'53"	S08 29'29"W	126.78'
C12	190.45'	300.91'	98.56'	36°22'24"	N12°56'31"E	187.27'
C16	167.70'	300.00'	86.10'	32°01'40"	S46 36'47"W	165.52'
C17	197.31'	400.00'	100.70'	28 15'42"	N48 29'46"E	195.31'

RECREATIONAL OPEN SPACE

REQUIRED RECREATIONAL OPEN SPACE: 175 SF/UNIT(SDP-02-94)
267 UNITS(THIS PLAN): 46725 SF. (1.07 AC.)

REQUIRED RECREATIONAL OPEN SPACE: 400 SF/UNIT(SDP-03-35)
51 UNITS: 20400 SF. (0.468 AC.)

TOTAL RECREATIONAL OPEN SPACE REQ.: 67125 SF. (1.54 AC.)

PROVIDED RECREATIONAL OPEN SPACE (SDP-04-25)-FENCED POOL: 17744.99 SF.
TENNIS COURT(SDP-04-25):16615.20 SF.
COMMUNITY RECREATION BUILDING(SDP-04-25):2611.00 SF

PER COMMUNITY RECREATIONAL/
/COMMERCIAL COMPLEX (SDP-04-25):36971.19 SF(0.85 AC.)
ELDERLY HOUSING, 267 UNITS,(SDP-02-94):35140.62 SF(0.81 AC.)
TOTAL RECREATIONAL OPEN SPACE PROVIDED.: 72111.81 SF. (1.66 AC.)

NO.	REVISION	DATE
2	EXCHANGE UNIT CONFIG. BETWEEN BLDG 'A' AND BLDG 'F'; ADD PHASE 3, GRADING AROUND BLDGS AND ADDED SWC TO MH 112	11.30.04
1	ADDED PHASE 2, GRADING CHANGE AROUND BLDG.	

OWNER :
TAYLOR FAMILY LIMITED PARTNERSHIP A
C/O LAND DESIGN & DEVELOPMENT, INC.
8000 MAIN STREET
ELLICOTT CITY, MD 21043
ATTN: MR. DONALD R. REUWER
PHONE: (410) 480-9105

DEVELOPER
LAND DESIGN & DEVELOPMENT, INC.
8000 MAIN STREET
ELLICOTT CITY, MD 21043
ATTN: MR. DONALD R. REUWER
PHONE: (410) 480-9105

APPROVED: HOWARD COUNTY DEPARTMENT OF PLANNING AND ZONING

CHIEF, DEVELOPMENT ENGINEERING DIVISION	11/4/03 DATE
CHIEF, DIVISION OF LAND DEVELOPMENT	2/12/04 DATE
DIRECTOR	2/24/04 DATE

SITE DEVELOPMENT PLAN
COVER SHEET
VILLAGE CREST
PART OF PARCEL D-1
PHASE 1,2,3 , APT. BLDGS. A-M&R
211 AGE RESTRICTED ADULT HOUSING UNITS
TAX MAP #25 BLOCK 20 — PARCEL P/O 98
2ND ELECTION DISTRICT — HOWARD COUNTY, MARYLAND

FREDERICK WARD ASSOCIATES, INC.
ARCHITECTS | ENGINEERS | PLANNERS | SURVEYORS
7125 RIVERWOOD DRIVE
COLUMBIA, MARYLAND 21046-2354
410-720-6900
410-720-6226 fax
www.frederickward.com

STATE OF MARYLAND — ROBERT H. VOGEL — PROFESSIONAL ENGINEER No. 16193
ROBERT H. VOGEL, PE NO. 16193

DESIGN BY:	RJ
DRAWN BY:	RJ
CHECKED BY:	RHV
DATE:	SEPT. 2003
SCALE:	AS SHOWN
W.O. NO.:	2018121.00

1 SHEET OF 16

SDP-02-94

M:\PROJECTS\2018121\ENGR\dwg\Sdp-APT\01COVER.DWG Fri Oct 17 13:09:05 2003 ROMA

MATCH LINE SEE SHEET 3 OF 16

WETLAND LINE TABLE

LINE	LENGTH	BEARING
W1	S19°23'46"W	75.53
W2	S26°20'33"W	33.55
W3	S33°12'48"W	39.15
W4	S43°18'29"W	35.33
W5	S22°32'57"W	36.99
W6	S36°28'36"W	49.06
W7	S26°47'10"W	31.43
W8	S44°53'32"W	31.66
W9	S26°02'23"W	34.68
W10	S07°54'34"E	38.71
W11	S11°35'41"W	52.37
W12	S63°49'26"W	10.35
W13	N61°19'04"W	7.07
W14	N05°01'39"E	37.49
W15	N20°23'44"W	25.01
W16	N19°07'16"E	56.76
W17	N33°10'27"E	36.35
W18	N12°24'54"W	39.01
W19	N34°50'45"E	83.19
W20	N13°37'37"W	33.32
W21	S58°37'47"E	44.53
W22	N21°54'45"E	41.53
W23	N59°49'32"E	31.33
W24	N48°03'31"E	34.49
W25	N16°10'02"E	40.02
W26	N24°32'00"W	23.50
W27	N17°07'59"E	36.90
W28	N78°45'13"E	10.16
W29	S16°33'36"E	30.21
W30	S60°12'02"E	8.88
W31	S03°34'33"E	32.87
W32	S69°43'33"W	11.00
W33	N00°46'49"E	41.03
W34	N18°08'41"E	13.07
W35	S57°10'03"E	31.49
W36	N81°20'00"W	30.88
W76	N19°08'10"W	6.44
W77	N76°15'50"E	37.76
W78	S45°12'38"E	8.01
W79	S59°05'06"W	16.98
W80	S88°28'33"W	25.69

307	578062.5315	1372586.6973
308	577557.3224	1372365.6449
309	578595.6480	1372539.5613

LEGEND

- WETLAND BUFFER
- STREAM BUFFER
- WETLAND
- 100YR FLOODPLAIN
- FOREST CONSERVATION REFORESTATION EASEMENT
- FOREST RETENTION EASEMENT
- RECREATIONAL OPEN SPACE
- PRIVATE SWM ACCESS EASEMENT

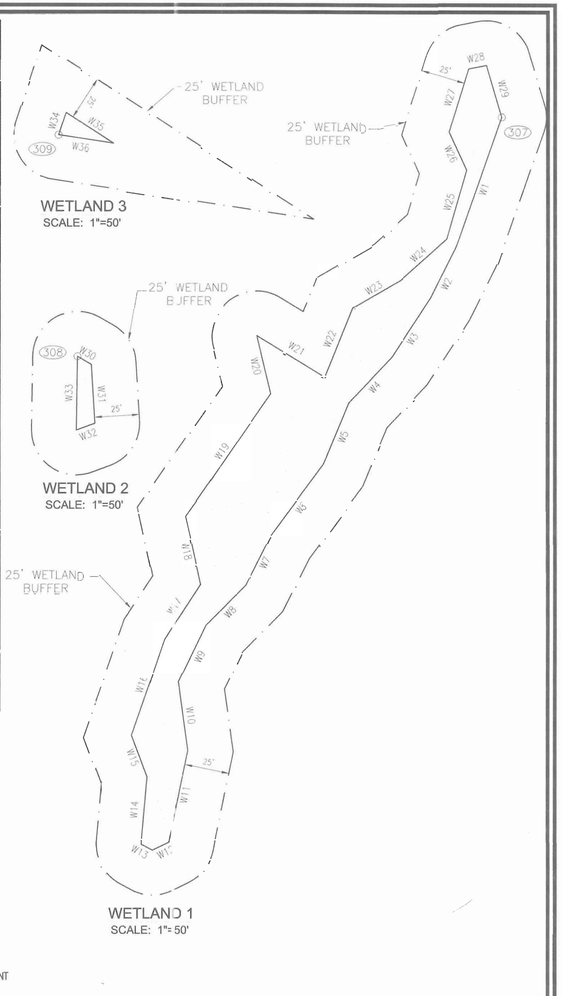

PLAN
SCALE: 1"=40'

CURVE DATA TABLE

CURVE	ARC	RADIUS	TANGENT	DELTA	CHORD
C12	190.45'	300.01'	98.56'	36°22'24"	N12°56'31"E 187.27'

OWNER:

TAYLOR FAMILY LIMITED PARTNERSHIP A
C/O LAND DESIGN & DEVELOPMENT, INC.
8000 MAIN STREET
ELLICOTT CITY, MD 21043
ATTN: MR. DONALD R. REUWER
PHONE: (410) 480-9105

DEVELOPER

LAND DESIGN & DEVELOPMENT, INC.
8000 MAIN STREET
ELLICOTT CITY, MD 21043
ATTN: MR. DONALD R. REUWER
PHONE: (410) 480-9105

APPROVED: HOWARD COUNTY DEPARTMENT OF PLANNING AND ZONING

CHIEF, DEVELOPMENT ENGINEERING DIVISION	DATE 11/4/03
CHIEF, DIVISION OF LAND DEVELOPMENT	DATE 2/19/04
DIRECTOR	DATE 2/24/04

SITE DEVELOPMENT PLAN

VILLAGE CREST
PART OF PARCEL D-1
PHASE 1,2,3 APT. BLDGS. A-M&R
211 AGE RESTRICTED ADULT HOUSING UNITS
TAX MAP #25 BLOCK 20 PARCEL P/O 98
2ND ELECTION DISTRICT HOWARD COUNTY, MARYLAND

FREDERICK WARD ASSOCIATES, INC.
ARCHITECTS | ENGINEERS | PLANNERS | SURVEYORS
7125 RIVERWOOD DRIVE
COLUMBIA, MARYLAND 21046-2354
410-720-6900
410-720-6226 fax
www.frederickward.com

STATE OF MARYLAND — ROBERT H. VOGEL — No. 16112 — PROFESSIONAL ENGINEER

DESIGN BY:	RJ
DRAWN BY:	RJ
CHECKED BY:	RHV
DATE:	SEPT. 2003
SCALE:	1"=40'
W.O. NO.:	2018121.00

SHEET 2 OF 16

SDP-02-94

M:\PROJECTS\2018121\ENGR\dwg\Sdp-APT\02SPLAN.dwg Fri Oct 17 13:10:06 2003 ROMA

E 1371750 N 578250

MATCH LINE SEE SHEET 3 OF 17

UNDER GROUND AT. & T. FIBER OPTIC CABLE AMERICAN TELEPHONE & TELEGRAPH 33' EASEMENT

VILLAGE CREST PARCEL 'C-1' F-02-47

AT & T LINE LOCATIONS

FOREST CONSERVATION EASEMENT 'H' REFORESTATION PER F-02-47 PLAT# 16104-16129

VILLAGE CREST DRIVE
MINOR COLLECTOR
50' RIGHT OF WAY
24' PAVING
F-01-47

30' STRUCTURE AND USE SETBACK

PUBLIC SIDEWALK EASEMENT PER F-20-47 PLAT # 16104-16109

10' PUBLIC TREE MAINTENANCE EASEMENT PLAT# 16104-16109

20' PUBLIC SEWER, WATER & UTILITY EASEMENT, PREVIOUSLY RECORDED PLAT# 16104-16109.

10' PUBLIC SEWER, WATER & UTILITY EASEMENT PLAT# 16421-16422

REC. OPENSPACE 16020.45 SF.

WINDSOR 16 UNITS M.C.E.-385.50 PHASE 3

WINDSOR 16 UNITS M.C.E.-384.50 FUTURE PHASE 4

HAMPTON COURT 12 UNITS M.C.E.-386.50 PHASE 3

HAMPTON COURT 12 UNITS M.C.E.-390.10 FUTURE PHASE 4

STONE CROP DRIVE

PRIVATE OBSERVATION WELL #1
6" PERF. PVC DRY WELL #2

FOREST CONSERVATION EASEMENT 'A' REFORESTATION PER F-02-47 PLAT # 16104-16109

50' STREAM BUFFER
25' WETLAND BUFFER
WETLAND
INTERMITTENT STREAM
100YR FLOODPLAIN
PUBLIC 100YR DRAINAGE AND UTILITY EASEMENT SEE DETAIL THIS SHEET

POND 2
POCKET POND
HAZARD CLASS
PRIVATELY OWNED AND MAINTAINED
PER F-20-47

PRIVATE STORMWATER MANAGEMENT DRAINAGE AND UTILITY EASEMENT #2 PER F-02-47 PLAT# 16104-16109

15' NO WOODY BUFFER

30' LANDSCAPE BUFFER

EX. COLLEGE AVENUE
MINOR COLLECTOR OR (SCENIC RD)
60' RIGHT OF WAY

50' HALF SECTION RIGHT OF WAY DEDICATION, COLLEGE AVENUE. PER F-20-47

PROPOSED 12' WIDE AUXILIARY LANE PER F-20-47

LAND DEDICATED TO HOWARD COUNTY FOR THE PURPOSES OF A PUBLIC ROAD PER PLAT # 16104-16109

PUBLIC TREE MAINTENANCE EASEMENT PLAT# 16104-16109

MARYLAND STATE GRID MERIDIAN

AUTUMN RIVER SUBDIVISION ZONED R-ED F-99-131 S-98-16

AUTUMN CREST SECTION 5 S-99-01 PROPOSED SUBDIVISION ZONED R-ED

LEGEND

- WETLAND BUFFER
- STREAM BUFFER
- WETLAND
- 100YR FLOODPLAIN
- FOREST CONSERVATION REFORESTATION EASEMENT
- FOREST RETENTION EASEMENT
- RECREATIONAL OPENSPACE
- RECREATIONAL OPENSPACE TOWNHOUSES (PARCEL E-1)

LINE TABLE

F1	N16°33'36"W	83.30
F2	S19°11'56"W	60.54
F3	S13°22'38"W	32.95
F4	S23°43'10"W	54.90
F5	S36°56'32"W	124.14
F6	N88°24'02"E	16.30
F7	S67°08'18"E	35.32
F8	S79°15'45"E	14.28
F9	N26°02'30"E	193.03
F10	N14°37'36"E	1.40
312	N 57804.5263	E 1372592.9432

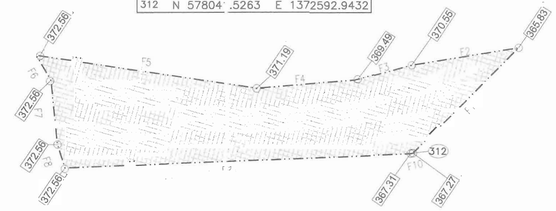

PUBLIC 100 YR FLOODPLAIN DRAINAGE AND UTILITY EASEMENT
SCALE: 1"=40'

PLAN
SCALE: 1"=40'

CURVE DATA TABLE

CURVE	ARC	RADIUS	TANGENT	DELTA	CHORD
C16	167.70'	300.00'	86.10'	32°01'40"	S 48°36'47"W 165.52'
C17	197.31'	400.00'	100.70'	28°15'42"	N 48°24'42"E 195.31'

APPROVED: HOWARD COUNTY DEPARTMENT OF PLANNING AND ZONING

CHIEF, DEVELOPMENT ENGINEERING DIVISION — DATE 11/4/05

CHIEF, DIVISION OF LAND DEVELOPMENT — DATE 2/10/04

DIRECTOR — DATE 2/10/04

SITE DEVELOPMENT PLAN

VILLAGE CREST
PART OF PARCEL D-1
PHASE 1,2,3 , APT. BLDGS. A- M & R
211 AGE RESTRICTED ADULT HOUSING UNITS
TAX MAP #25 BLOCK 20 — PARCEL P/O 98
2ND ELECTION DISTRICT — HOWARD COUNTY, MARYLAND

OWNER :
TAYLOR FAMILY LIMITED PARTNERSHIP A
C/O LAND DESIGN & DEVELOPMENT, INC.
8000 MAIN STREET
ELLICOTT CITY, MD 21043
ATTN: MR. DONALD R. REUWER
PHONE: (410) 480-9105

DEVELOPER
LAND DESIGN & DEVELOPMENT, INC.
8000 MAIN STREET
ELLICOTT CITY, MD 21043
ATTN: MR. DONALD R. REUWER
PHONE: (410) 480-9105

FREDERICK WARD ASSOCIATES, INC.
ARCHITECTS | ENGINEERS | PLANNERS | SURVEYORS
7125 RIVERWOOD DRIVE
COLUMBIA, MARYLAND 21046-2354
410-720-6900
410-720-6226 fax
www.frederickward.com

STATE OF MARYLAND — DONALD RAMON REUWER — No. 16192 — PROFESSIONAL ENGINEER

DESIGN BY:	RJ
DRAWN BY:	RJ
CHECKED BY:	RHV
DATE:	SEPT. 2003
SCALE:	1"=40'
W.O. NO.:	2018121.00

SHEET 3 OF 16

SDP-02-94

M:\PROJECTS\2018121\ENGR\dwg\Sdp APT\03SPLAN.dgn Fri Sep 19 16:42:58 2003 E4

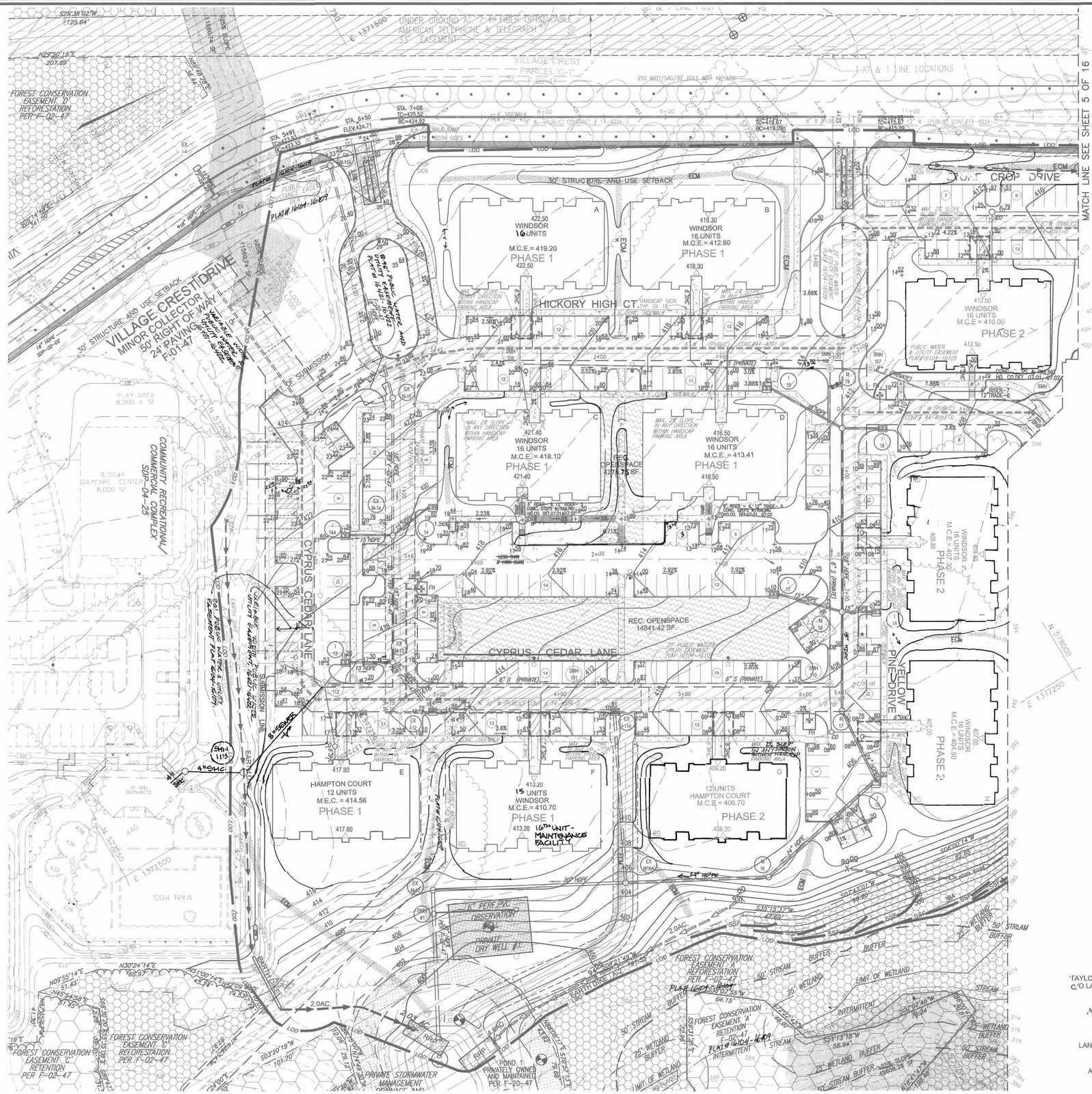

LEGEND

- WETLAND BUFFER
- STREAM BUFFER
- WETLAND
- 100YR FLOODPLAIN
- FOREST CONSERVATION REFORESTATION EASEMENT
- FOREST RETENTION EASEMENT
- RECREATIONAL OPENSPACE
- RECREATIONAL OPENSPACE TOWNHOUSES (PARCEL I-1)
- PRIVATE SWM ACCESS EASEMENT
- EXISTING CONTOUR
- PROPOSED CONTOUR
- SPOT ELEVATION
- DIRECTION OF FLOW
- TREE PROTECTION FENCE
- EXISTING TREES TO REMAIN
- PARKING LAMP
- STABILIZED CONSTRUCTION ENTRANCE
- SILT FENCE
- SUPER SILT FENCE
- EARTH DIKE
- LIMIT OF DISTURBANCE
- EROSION CONTROL MATTING

ALL EARTH DIKES ARE TO BE PLACED IN WORKING ORDER AT THE END OF EACH WORKING DAY.

ALL REAR ROOF LEADERS FROM BUILDING F, G, H, I, M, N, AND O SHALL TIE INTO THE STORM DRAIN SYSTEM AND SHALL NOT BE DISCHARGE OVER LAND.

REVIEWED FOR HOWARD SCD AND MEETS TECHNICAL REQUIREMENTS

Jim Myers — 10-29-03
USDA–NATURAL RESOURCES CONSERVATION SERVICE — DATE

THIS DEVELOPMENT PLAN IS APPROVED FOR SOIL EROSION AND SEDIMENT CONTROL BY THE HOWARD SOIL CONSERVATION DISTRICT

John R Robertson — 10-29-03
HOWARD SCD — DATE

DEVELOPER'S CERTIFICATE

"I/WE CERTIFY THAT ALL DEVELOPMENT AND CONSTRUCTION WILL BE DONE ACCORDING TO THIS PLAN FOR SEDIMENT AND EROSION CONTROL, AND THAT ALL RESPONSIBLE PERSONNEL INVOLVED IN THE CONSTRUCTION PROJECT WILL HAVE A CERTIFICATE OF ATTENDANCE AT A DEPARTMENT OF THE ENVIRONMENT APPROVED TRAINING PROGRAM FOR THE CONTROL OF SEDIMENT AND EROSION BEFORE BEGINNING THE PROJECT. I ALSO AUTHORIZE PERIODIC ON-SITE INSPECTION BY THE HOWARD SOIL CONSERVATION DISTRICT."

SIGNATURE OF DEVELOPER — 10/17/03 DATE
DONALD REUWER

ENGINEERS CERTIFICATE

"I CERTIFY THAT THIS PLAN FOR SEDIMENT AND EROSION CONTROL REPRESENTS A PRACTICAL AND WORKABLE PLAN BASED ON MY PERSONAL KNOWLEDGE OF THE SITE CONDITIONS AND THAT IT WAS PREPARED IN ACCORDANCE WITH THE REQUIREMENTS OF THE HOWARD SOIL CONSERVATION DISTRICT.

SIGNATURE OF ENGINEER — 10/17/03 DATE
ROBERT H. VOGEL

APPROVED: HOWARD COUNTY DEPARTMENT OF PLANNING AND ZONING

CHIEF, DEVELOPMENT ENGINEERING DIVISION — 11/4/03 DATE
CHIEF, DIVISION OF LAND DEVELOPMENT — 2/19/04 DATE
DIRECTOR — 2/20/04 DATE

OWNER:
TAYLOR FAMILY LIMITED PARTNERSHIP A
C/O LAND DESIGN & DEVELOPMENT, INC.
8000 MAIN STREET
ELLICOTT CITY, MD 21043
ATTN: MR. DONALD R. REUWER
PHONE: (410) 480-9105

DEVELOPER
LAND DESIGN & DEVELOPMENT, INC
8000 MAIN STREET
ELLICOTT CITY, MD 21043
ATTN: MR. DONALD R. REUWER
PHONE: (410) 480-9105

SITE DEVELOPMENT PLAN
GRADING AND SEDIMENT CONTROL PLAN
VILLAGE CREST
PART OF PARCEL D-1

PHASE 1,2,3 , APT. BLDGS. A-M & R
211 AGE RESTRICTED ADULT HOUSING UNITS

TAX MAP #25 BLOCK 20 — PARCEL P/O 98
2ND ELECTION DISTRICT — HOWARD COUNTY, MARYLAND

FREDERICK WARD ASSOCIATES, INC.
ARCHITECTS | ENGINEERS | PLANNERS | SURVEYORS
7125 RIVERWOOD DRIVE
COLUMBIA, MARYLAND 21046-2354
410-720-6900
410-720-6226 fax
www.frederickward.com

STATE OF MARYLAND — ROBERT H. VOGEL — No. 16193 — PROFESSIONAL ENGINEER

DESIGN BY:	RJ
DRAWN BY:	RJ
CHECKED BY:	RHV
DATE:	SEPT. 2003
SCALE:	AS SHOWN
W.O. NO.:	2018121.00

SHEET 4 OF 16

SDP-02-94

M:\PROJECTS\2018121\ENGR\dwg\Sdp-APT\100SPLAN.dwg Fri Oct 17 13:31:54 2003 RMA

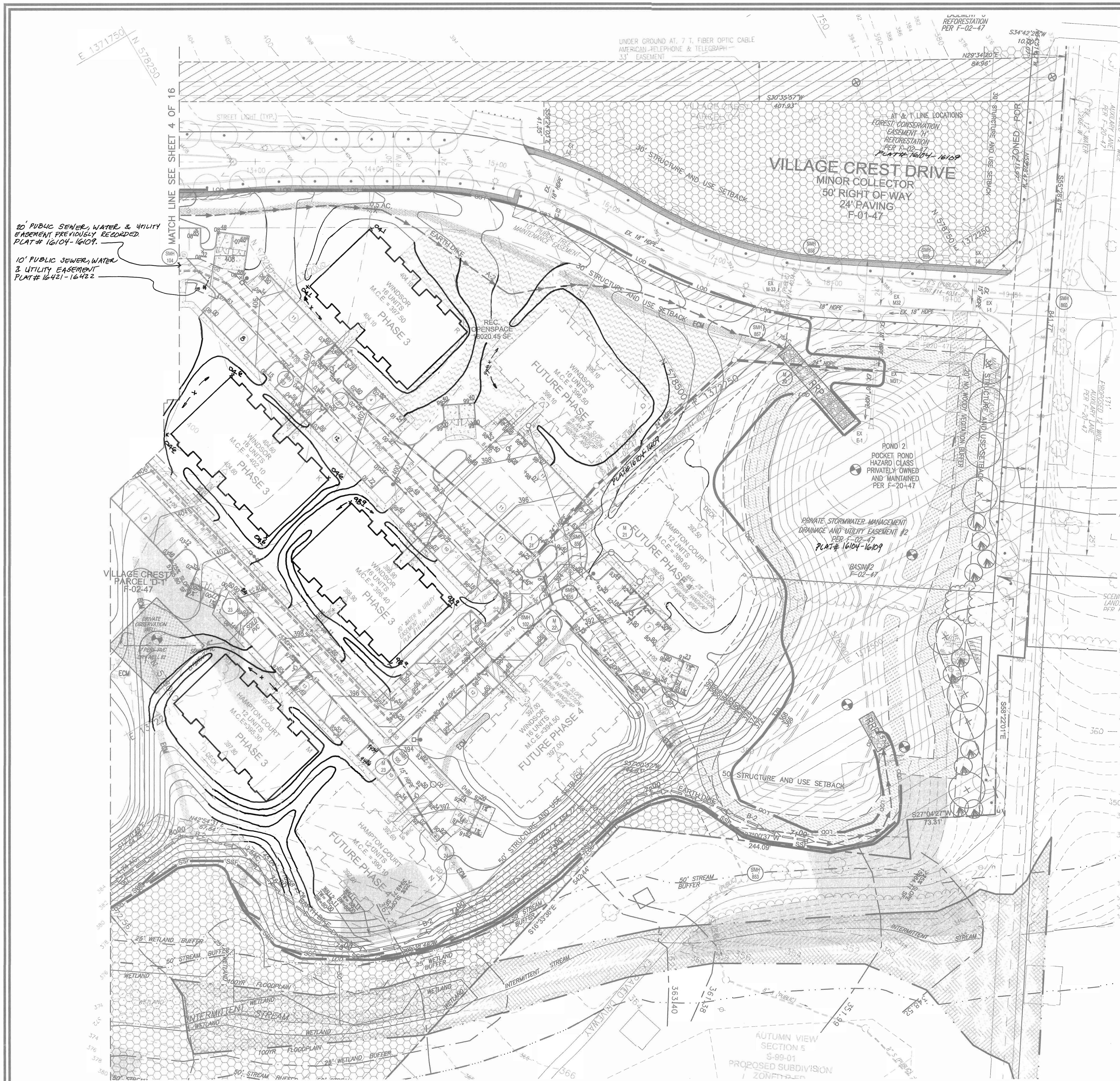

ALL EARTH DIKES ARE TO BE PLACED IN WORKING ORDER AT THE END OF EACH WORKING DAY

ALL REAR ROOF LEADERS FROM BUILDING F, G, H, I, M , N, AND O SHALL TIE INTO THE STORM DRAIN SYSTEM AND SHALL NOT BE DISCHARGE OVER LAND.

LEGEND

- EXISTING CONTOUR — 382
- PROPOSED CONTOUR — 82
- SPOT ELEVATION — +82.53
- DIRECTION OF FLOW
- TREE PROTECTION FENCE
- EXISTING TREES TO REMAIN
- PARKING LIGHT
- STABILIZED CONSTRUCTION ENTRANCE — SCE
- SILT FENCE — SF
- SUPER SILT FENCE — SSF
- EARTH DIKE
- LIMIT OF DISTURBANCE — LOD
- WETLAND BUFFER
- STREAM BUFFER
- WETLAND
- 100YR FLOODPLAIN
- FOREST CONSERVATION REFORESTATION EASEMENT
- FOREST RETENTION EASEMENT

PLAN
SCALE: 1"=40'

REVIEWED FOR HOWARD SCD AND MEETS TECHNICAL REQUIREMENTS

Jim Myers — 10-29-03
USDA-NATURAL RESOURCES CONSERVATION SERVICE — DATE

THIS DEVELOPMENT PLAN IS APPROVED FOR SOIL EROSION AND SEDIMENT CONTROL BY THE HOWARD SOIL CONSERVATION DISTRICT

John R Robertson — 10-29-03
HOWARD SCD — DATE

DEVELOPER'S CERTIFICATE

"I/WE CERTIFY THAT ALL DEVELOPMENT AND CONSTRUCTION WILL BE DONE ACCORDING TO THIS PLAN FOR SEDIMENT AND EROSION CONTROL, AND THAT ALL RESPONSIBLE PERSONNEL INVOLVED IN THE CONSTRUCTION PROJECT WILL HAVE A CERTIFICATE OF ATTENDANCE AT A DEPARTMENT OF THE ENVIRONMENT APPROVED TRAINING PROGRAM FOR THE CONTROL OF SEDIMENT AND EROSION BEFORE BEGINNING THE PROJECT. I ALSO AUTHORIZE PERIODIC ON-SITE INSPECTION BY THE HOWARD SOIL CONSERVATION DISTRICT.

10/17/03
SIGNATURE OF DEVELOPER — DATE
DONALD REUWER

ENGINEERS CERTIFICATE

"I CERTIFY THAT THIS PLAN FOR SEDIMENT AND EROSION CONTROL REPRESENTS A PRACTICAL AND WORKABLE PLAN BASED ON MY PERSONAL KNOWLEDGE OF THE SITE CONDITIONS AND THAT IT WAS PREPARED IN ACCORDANCE WITH THE REQUIREMENTS OF THE HOWARD SOIL CONSERVATION DISTRICT.

Robert Vogel — 10/17/03
SIGNATURE OF ENGINEER — DATE
ROBERT H. VOGEL

APPROVED: HOWARD COUNTY DEPARTMENT OF PLANNING AND ZONING

CHIEF, DEVELOPMENT ENGINEERING DIVISION — 1/4/03 DATE
CHIEF, DIVISION OF LAND DEVELOPMENT — 2/19/04 DATE
DIRECTOR — 2/20/04 DATE

SITE DEVELOPMENT PLAN
GRADING AND SEDIMENT CONTROL PLAN II
VILLAGE CREST
PART OF PARCEL D-1
PHASE 1,2,3 , APT. BLDGS. A- M & R
211 AGE RESTRICTED ADULT HOUSING UNITS
TAX MAP #25 BLOCK 20 — PARCEL P/O 98
2ND ELECTION DISTRICT — HOWARD COUNTY, MARYLAND

FWA
FREDERICK WARD ASSOCIATES, INC.
ARCHITECTS | ENGINEERS | PLANNERS | SURVEYORS
7125 RIVERWOOD DRIVE
COLUMBIA, MARYLAND 21046-2354
410-720-6900
410-720-6226 fax
www.frederickward.com

OWNER :
TAYLOR FAMILY LIMITED PARTNERSHIP A
C/O LAND DESIGN & DEVELOPMENT, INC.
8000 MAIN STREET
ELLICOTT CITY, MD 21043
ATTN: MR. DONALD R. REUWER
PHONE: (410) 480-9105

DEVELOPER
LAND DESIGN & DEVELOPMENT, INC.
8000 MAIN STREET
ELLICOTT CITY, MD 21043
ATTN: MR. DONALD R. REUWER
PHONE: (410) 480-9105

STATE OF MARYLAND — ROBERT HARRIS VOGEL — No. 16193 — PROFESSIONAL ENGINEER
ROBERT H. VOGEL, PE NO. 16193

DESIGN BY:	RJ
DRAWN BY:	RJ
CHECKED BY:	RHV
DATE:	SEPT. 2003
SCALE:	AS SHOWN
W.O. NO.:	2018121.00

5 SHEET OF 16

SDP-02-94

M:\PROJECTS\2018121\ENGR\dwg\Sdp-APT\11GSPLAN.dwg Tue Oct 07 08:38:13 2003 E4

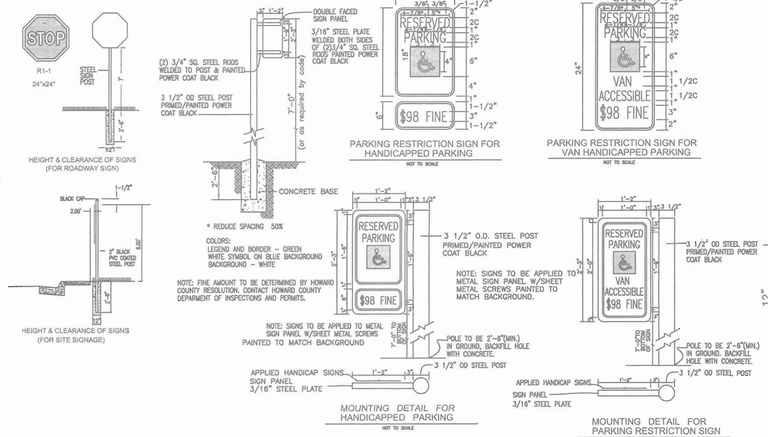

SIGNAGE DETAIL

NOT TO SCALE

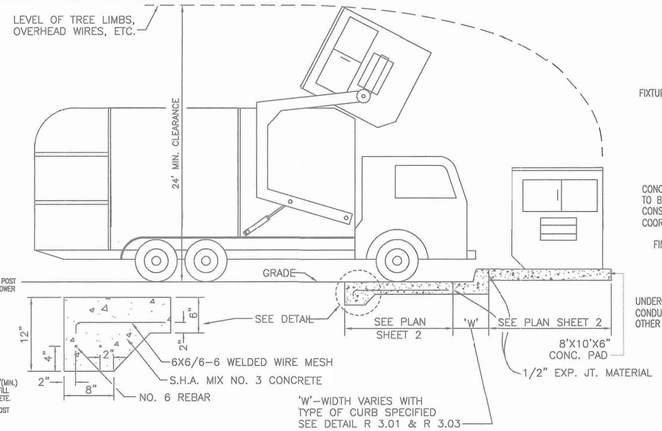

SOLID WASTE SERVICE PAD

HOWARD COUNTY STD. R 11.01
NOT TO SCALE
FOR DUMPSTER ENCLOSURE DETAIL SEE ARCHITECTURAL PLANS

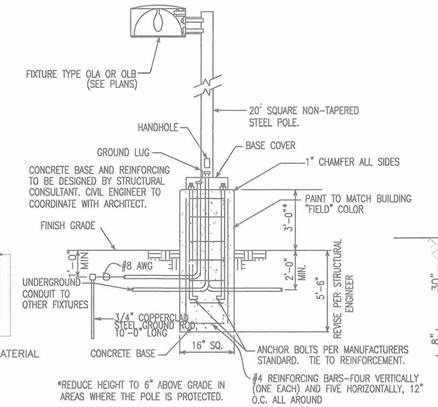

LIGHTING STANDARD

SCALE: NTS

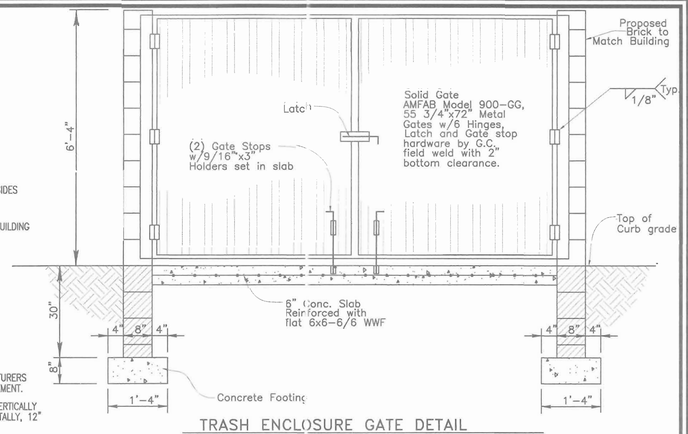

TRASH ENCLOSURE GATE DETAIL

NO SCALE

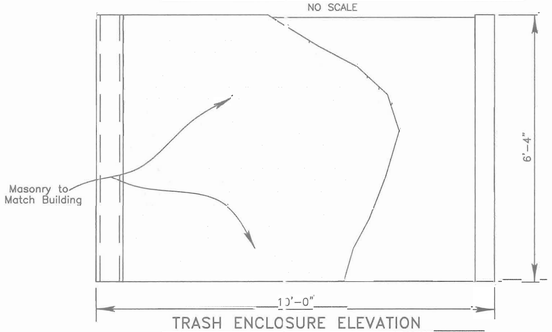

TRASH ENCLOSURE ELEVATION

NOT TO SCALE

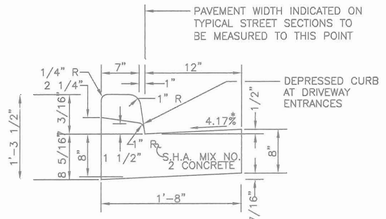

NOTE : DEPRESSED CURB IN HANDICAP ACCESSABLE AREAS SHALL HAVE A 0.0417'(1/2") RISE FROM PAVING TO TOP OF CURB.

STANDARD COMBINATION CURB AND GUTTER

HOWARD COUNTY STANDARD R-3.01
NOT TO SCALE

* GUTTER PAN AT THE MEDIAN EDGE OF INTERMEDIATE ARTERIAL OR THE HIGH SIDE OF SUPERELEVATED SECTIONS SHALL BE SLOPED AT THE SAME RATE AND IN THE SAME DIRECTION AS THE PAVEMENT. MATCH PAVEMENT CROSS SLOPE WHEN CURB IS LOCATED ON THE LOW SIDE OF SUPERELEVATED SECTION AND THE RATE OF SUPERELEVATION IS GREATER THAN 3% FOR MODIFIED CURB AND GUTTER.

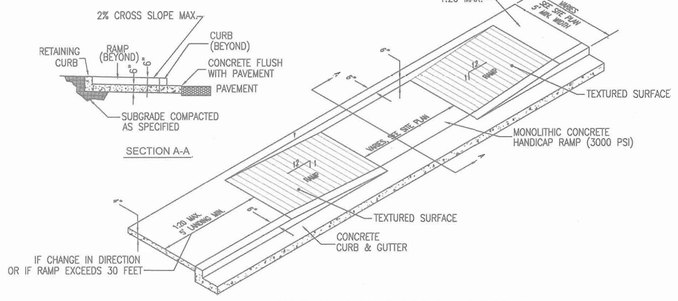

SIDEWALK HANDICAP RAMP DETAIL

NOT TO SCALE

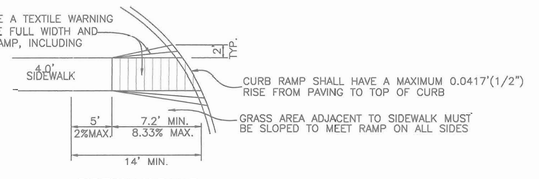

SIDEWALK RAMP

NOT TO SCALE

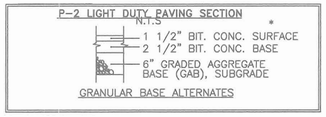

PAVMENT SECTIONS

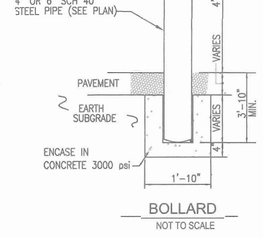

BOLLARD

NOT TO SCALE

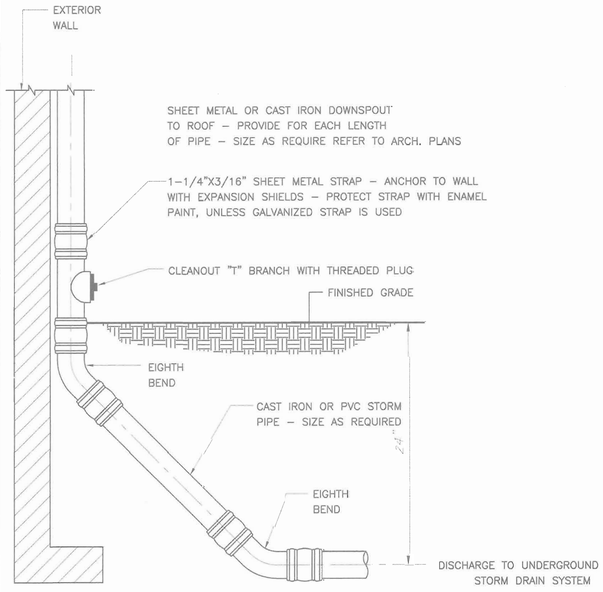

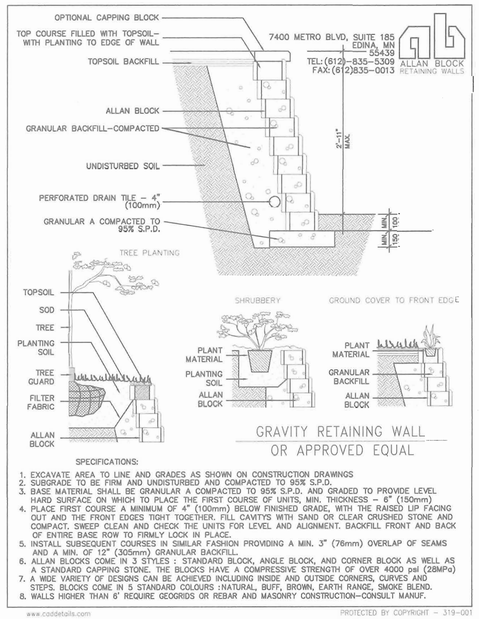

GRAVITY RETAINING WALL OR APPROVED EQUAL

SPECIFICATIONS:

1. EXCAVATE AREA TO LINE AND GRADES AS SHOWN ON CONSTRUCTION DRAWINGS
2. SUBGRADE TO BE FIRM AND UNDISTURBED AND COMPACTED TO 95% S.P.D.
3. BASE MATERIAL SHALL BE GRANULAR A COMPACTED TO 95% S.P.D. AND GRADED TO PROVIDE LEVEL HARD SURFACE ON WHICH TO PLACE THE FIRST COURSE OF UNITS, MIN. THICKNESS - 6" (150mm)
4. PLACE FIRST COURSE A MINIMUM OF 4" (100mm) BELOW FINISHED GRADE, WITH THE RAISED LIP FACING OUT AND THE FRONT EDGES TIGHT TOGETHER. FILL CAVITYS WITH SAND OR CLEAR CRUSHED STONE AND COMPACT. SWEEP CLEAN AND CHECK THE UNITS FOR LEVEL AND ALIGNMENT. BACKFILL FRONT AND BACK OF ENTIRE BASE ROW TO FIRMLY LOCK IN PLACE.
5. INSTALL SUBSEQUENT COURSES IN SIMILAR FASHION PROVIDING A MIN. 3" (76mm) OVERLAP OF SEAMS AND A MIN. OF 12" (305mm) GRANULAR BACKFILL.
6. ALLAN BLOCKS COME IN 3 STYLES : STANDARD BLOCK, ANGLE BLOCK, AND CORNER BLOCK AS WELL AS A STANDARD CAPPING STONE. THE BLOCKS HAVE A COMPRESSIVE STRENGTH OF OVER 4000 psi (28MPa)
7. A WIDE VARIETY OF DESIGNS CAN BE ACHIEVED INCLUDING INSIDE AND OUTSIDE CORNERS, CURVES AND STEPS. BLOCKS COME IN 5 STANDARD COLOURS :NATURAL, BUFF, BROWN, EARTH RANGE, SMOKE BLEND.
8. WALLS HIGHER THAN 6' REQUIRE GEOGRIDS OR REBAR AND MASONRY CONSTRUCTION-CONSULT MANUF.

www.caddetails.com
PROTECTED BY COPYRIGHT - 319-001

CONCRETE SIDEWALK

HOWARD COUNTY STANDARD DETAIL R3.05

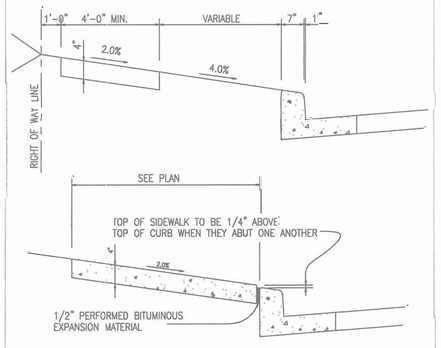

CONSTRUCTION SPECIFICATIONS

1. SIDEWALK TO BE SCRIBED IN 5'-0" MAXIMUM SQUARES.
2. EXPANSION JOINTS ACROSS THE SIDEWALK NOT TO BE MORE THAN 15' APART.
3. 1/2" PREFORMED BITUMINOUS EXPANSION MATERIAL IN EXPANSION JOINTS TO BE KEPT 1/4" BELOW SURFACE OF SIDEWALK.
4. CONCRETE TO BE MIX NUMBER 2.
5. WHERE SIDEWALK ABUTS CURB, SIDEWALK SHALL BE 1/4" ABOVE CURB WITH 1/2" PREFORMED BITUMINOUS EXPANSION MATERIAL BETWEEN SIDEWALK AND CURB.
6. ON LONGITUDINAL SIDEWALK GRADES OF 5% OR GREATER, A CONCRETE HEADER, 6' THICK AND 6" DEEP BELOW THE NORMAL 4" SIDEWALK THICKNESS SHALL CONSTRUCTED FOR THE FULL WIDTH OF THE SIDEWALK AT INTERVALS\ OF 48 FEET. THE HEADERS SHALL BE PLACED AT EXPANSION JOINT LOCATIONS AND SHALL BE MONOLITHIC WITH THE CURB.
7. SIDEWALK WIDTH ADJACENT TO CURB SHALL BE 5'-0" MINIMUM EXCEPT SIDEWALK ADJACENT TO CURB IN CUL-DE-SAC BULBS MAY BE 4.0' WIDE.
8. SIDEWALK LOCATED 2' OR MORE FROM CURB MAY BE 4'-0" IN WIDTH WITH A 5'X5' PAVED SECTION PLACED 200' APART.

OWNER :

TAYLOR FAMILY LIMITED PARTNERSHIP A
C/O LAND DESIGN & DEVELOPMENT, INC.
8000 MAIN STREET
ELLICOTT CITY, MD 21043
ATTN: MR. DONALD R. REUWER
PHONE: (410) 480-9105

DEVELOPER

LAND DESIGN & DEVELOPMENT, INC.
8000 MAIN STREET
ELLICOTT CITY, MD 21043
ATTN: MR. DONALD R. REUWER
PHONE: (410) 480-9105

APPROVED: HOWARD COUNTY DEPARTMENT OF PLANNING AND ZONING

CHIEF, DEVELOPMENT ENGINEERING DIVISION	11/4/03 DATE
CHIEF, DIVISION OF LAND DEVELOPMENT	2/19/04 DATE
DIRECTOR	4/21/04 DATE

SITE DEVELOPMENT PLAN
SITE DETAILS
VILLAGE CREST
PART OF PARCEL D-1

PHASE 1,2,3 , APT. BLDGS. A-M&R
211 AGE RESTRICTED ADULT HOUSING UNITS

TAX MAP #25 BLOCK 20 — PARCEL P/O 98
2ND ELECTION DISTRICT — HOWARD COUNTY, MARYLAND

FREDERICK WARD ASSOCIATES, INC.
ARCHITECTS | ENGINEERS | PLANNERS | SURVEYORS
7125 RIVERWOOD DRIVE
COLUMBIA, MARYLAND 21046-2354
410-720-6900
410-720-6226 fax
www.frederickward.com

STATE OF MARYLAND — ROBERT H. KOGEL — No. 16193 — PROFESSIONAL ENGINEER
ROBERT H. KOGEL, PE No. 16193

DESIGN BY:	RJ
DRAWN BY:	RJ
CHECKED BY:	RHV
DATE:	SEPT. 2003
SCALE:	AS SHOWN
W.O. NO.:	2018121.00

SHEET 6 OF 16

SDP-02-94

K:\PROJECTS\2018121\ENGR\dwg\Sdp-APT\045SE1A1L.dwg Fri Sep 19 16:44:50 2003 E4

DETAIL 24 - STABILIZED CONSTRUCTION ENTRANCE

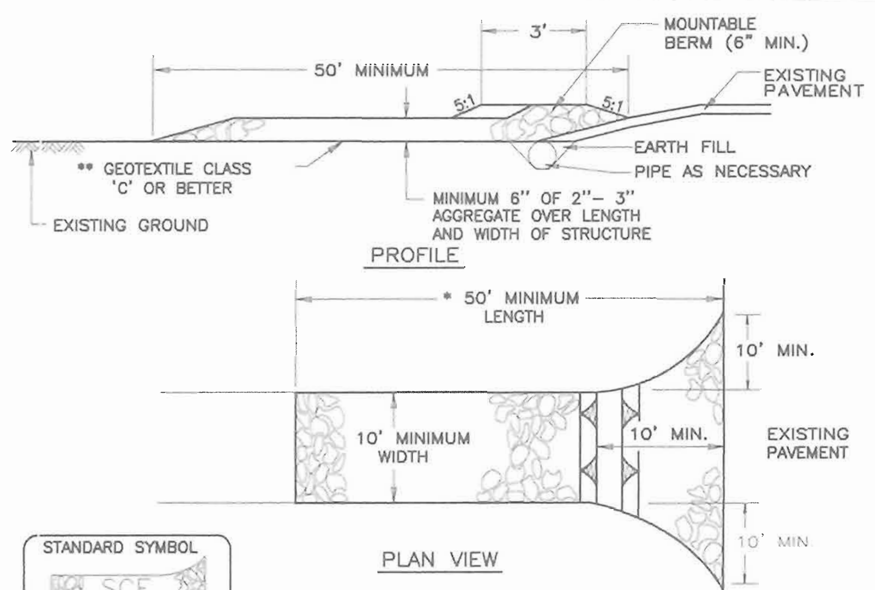

Construction Specification

1. Length – minimum of 50' (* 30' for a single residence lot). turning radius.
2. Width – 10' minimum, should be flared at the existing road to provide a
3. Geotextile fabric (filter cloth) shall be placed over the existing ground prior to placing stone. ** The plan approval authority may not require single family residences to use geotextile.
4. Stone – crushed aggregate (2" to 3") or reclaimed/or recycled concrete equivalent shall be placed at least 6" deep over the length and width of the entrance.
5. Surface Water – all surface water flowing to or diverted toward construction entrances shall be piped through the entrance, maintaining positive drainage. Pipe installed through the stabilized construction entrance shall be protected with a mountable berm with 5:1 slopes and a minimum of 6" of stone over the pipe. Pipe has to be sized according to the drainage. When the SCE is located at a high spot and has no drainage to convey, a pipe will not be necessary. Pipe should be sized according to the amount of runoff to be conveyed. A 6" minimum will be required.
6. Location – A stabilized construction entrance shall be located at every point where construction traffic enters or leaves a construction site. Vehicles struction entrance. leaving the site must travel over the entire length of the stabilized con–

U.S. DEPARTMENT OF AGRICULTURE SOIL CONSERVATION SERVICE	PAGE F - 17 - 3	MARYLAND DEPARTMENT OF ENVIRONMENT WATER MANAGEMENT ADMINISTRATION

DETAIL 33 - SUPER SILT FENCE

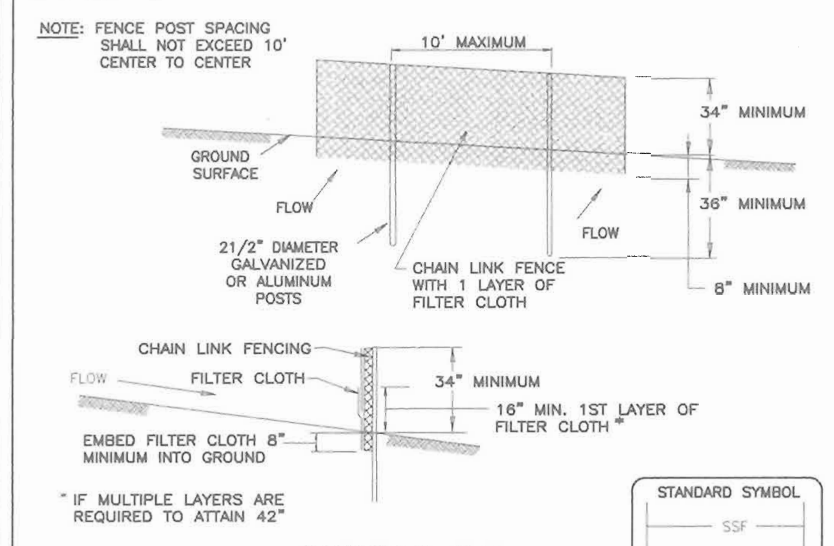

Construction Specifications

1. Fencing shall be 42" in height and constructed in accordance with the latest Maryland State Highway Details for Chain Link Fencing. The specification for a 6' fence shall be used, substituting 42" fabric and 6' length posts.

2. Chain link fence shall be fastened securely to the fence posts with wire ties. The lower tension wire, brace and truss rods, drive anchors and post caps are not required except on the ends of the fence.

3. Filter cloth shall be fastened securely to the chain link fence with ties spaced every 24" at the top and mid section.

4. Filter cloth shall be embedded a minimum of 8" into the ground.

5. When two sections of filter cloth adjoin each other, they shall be overlapped by 6" and folded.

6. Maintenance shall be performed as needed and silt buildups removed when "bulges" develop in the silt fence, or when silt reaches 50% of fence height

7. Filter cloth shall be fastened securely to each fence post with wire ties or staples at top and mid section and shall meet the following requirements for Geotextile Class F:

Tensile Strength	50 lbs/in (min.)	Test: MSMT 509
Tensile Modulus	20 lbs/in (min.)	Test: MSMT 509
Flow Rate	0.3 gal/ft²/minute (max.)	Test: MSMT 322
Filtering Efficiency	75% (min.)	Test: MSMT 322

U.S. DEPARTMENT OF AGRICULTURE SOIL CONSERVATION SERVICE	PAGE H - 26 - 3	MARYLAND DEPARTMENT OF ENVIRONMENT WATER MANAGEMENT ADMINISTRATION

DETAIL 1 - EARTH DIKE

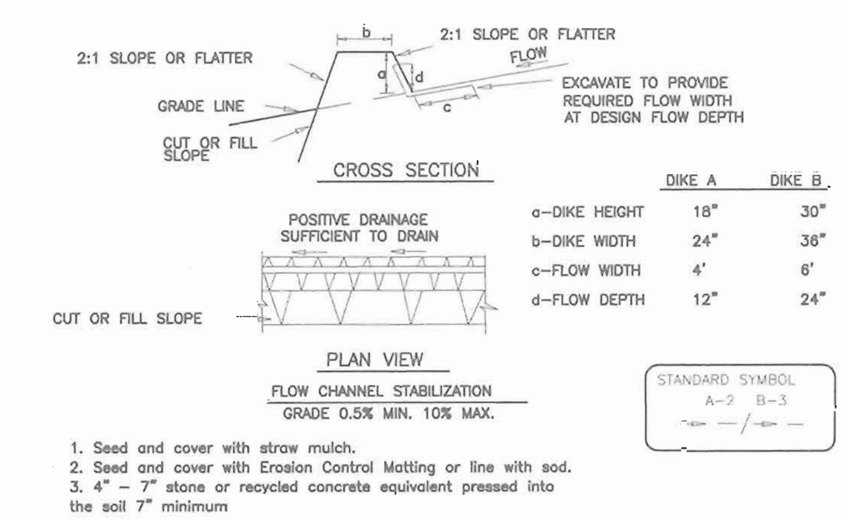

	DIKE A	DIKE B
a–DIKE HEIGHT	18"	30"
b–DIKE WIDTH	24"	36"
c–FLOW WIDTH	4'	6'
d–FLOW DEPTH	12"	24"

1. Seed and cover with straw mulch.
2. Seed and cover with Erosion Control Matting or line with sod.
3. 4" – 7" stone or recycled concrete equivalent pressed into the soil 7" minimum

Construction Specifications

1. All temporary earth dikes shall have uninterrupted positive grade to an outlet. Spot elevations may be necessary for grades less than 1%.

2. Runoff diverted from a disturbed area shall be conveyed to a sediment trapping device.

3. Runoff diverted from an undisturbed area shall outlet directly into an undisturbed, stabilized area at a non-erosive velocity.

4. All trees, brush, stumps, obstructions, and other objectional material shall be removed and disposed of so as not to interfere with the proper functioning of the dike.

5. The dike shall be excavated or shaped to line, grade and cross section as required to meet the criteria specified herein and be free of bank projections or other irregularities which will impede normal flow.

6. Fill shall be compacted by earth moving equipment.

7. All earth removed and not needed for construction shall be placed so that it will not interfere with the functioning of the dike.

8. Inspection and maintenance must be provided periodically and after each rain event.

U.S. DEPARTMENT OF AGRICULTURE SOIL CONSERVATION SERVICE	PAGE A - 1 - 6	MARYLAND DEPARTMENT OF ENVIRONMENT WATER MANAGEMENT ADMINISTRATION

DETAIL 22 - SILT FENCE

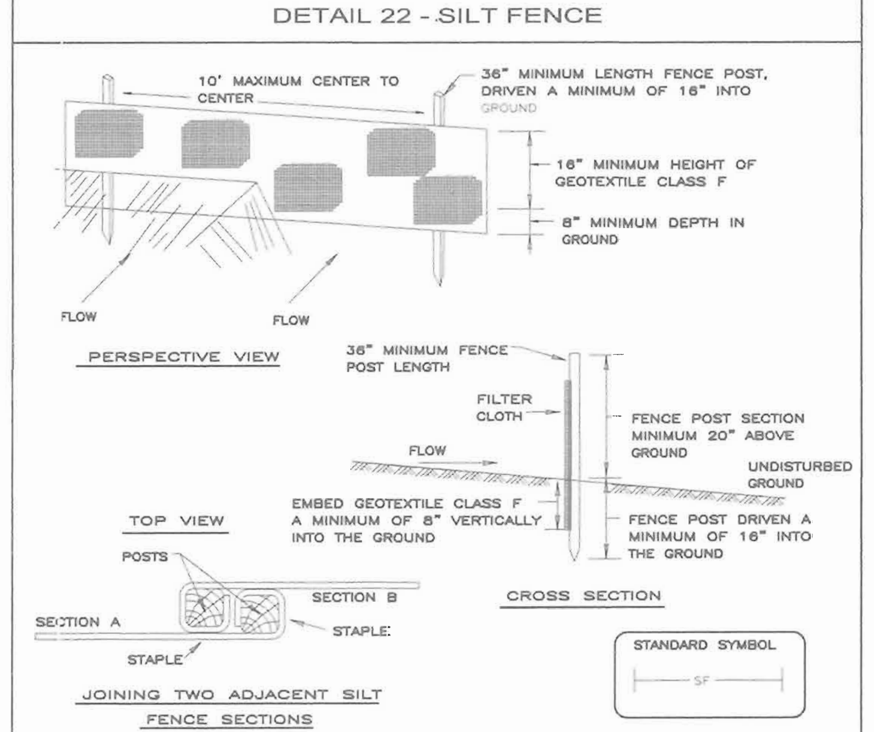

Construction Specifications

1. Fence posts shall be a minimum of 36" long driven 16" minimum into the ground. Wood posts shall be 11/2" x 11/2" square (minimum) cut, or 13/4" diameter (minimum) round and shall be of sound quality hardwood. Steel posts will be standard T or U section weighting not less than 1.00 pond per linear foot.

2. Geotextile shall be fastened securely to each fence post with wire ties or staples at top and midsection and shall meet the following requirements for Geotextile Class F:

Tensile Strength	50 lbs/in (min.)	Test: MSMT 509
Tensile Modulus	20 lbs/in (min.)	Test: MSMT 509
Flow Rate	0.3 gal ft² / minute (max.)	Test: MSMT 322
Filtering Efficiency	75% (min.)	Test: MSMT 322

3. Where ends of geotextile fabric come together, they shall be overlapped, folded and stapled to prevent sediment bypass.

4. Silt Fence shall be inspected after each rainfall event and maintained when bulges occur or when sediment accumulation reached 50% of the fabric height.

U.S. DEPARTMENT OF AGRICULTURE SOIL CONSERVATION SERVICE	PAGE E - 15 - 3	MARYLAND DEPARTMENT OF ENVIRONMENT WATER MANAGEMENT ADMINISTRATION

DETAIL 5 - RIP-RAP INFLOW PROTECTION

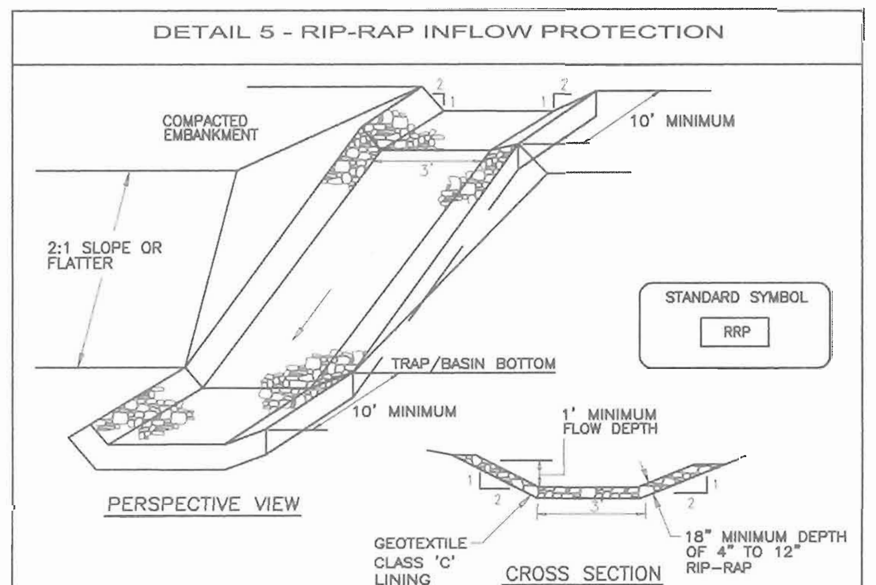

Construction Specifications

1. Rip–rap lined inflow channels shall be 1' in depth, have a trapezoidal cross section with 2:1 or flatter side slopes and 3' (min.) bottom width. The channel shall be lined with 4" to 12" rip– rap to a depth of 18".

2. Filter cloth shall be installed under all rip–rap. Filter cloth shall be Geotextile Class C.

3. Entrance and exit sections shall be installed as shown on the detail section.

4. Rip–rap used for the lining may be recycled for permanent outlet protection if the basin is to be converted to a stormwater management facility.

5. Gabion Inflow Protection may be used in lieu of Rip–rap Inflow Protection.

6. Rip–rap should blend into existing ground.

7. Rip–rap Inflow Protection shall be used where the slope is between 4:1 and 10:1, for slopes flatter than 10:1 use Earth Dike or Temporary Swale lining criteria.

U.S. DEPARTMENT OF AGRICULTURE SOIL CONSERVATION SERVICE	PAGE B - 6 - 2	MARYLAND DEPARTMENT OF ENVIRONMENT WATER MANAGEMENT ADMINISTRATION

TEMPORARY SEEDING NOTES

SEEDBED PREPARATION: Loosen upper three inches of soil by racking, discing or other acceptable means before seeding, if not if not previously loosened.

SOIL AMENDMENTS: Apply 600 lbs. per acre 10–10–10 fertilizer (14 lbs./1000 sq.ft).

SEEDING: For periods March 1 thru April 30 and from August 15 thru November 15, seed with 2 1/2 bushel per acre of annual rye (3.2 lbs./1000 sq.ft.) For the period May 1 thru August 14, seed with 3 lbs. per acre of weeping lovegrass (.07 lbs./1000 sq.ft.). For the period November 1 thru February 28, protect site by applying 2 tons per acre of well anchored straw mulch and seed as soon as possible in the spring, or use sod.

MULCHING: Apply 1 1/2 to 2 tons per acre (70 to 90 lbs./1000 sq.ft.) of unrotted small grain straw immediately after seeding. Anchor mulch immediately after application using mulch anchoring tool or 218 gallons per acre (5 gal/1000 sq.ft.) of emulsified asphalt on flat areas. On slopes 8 feet or higher. use 348 gallons per acre (8 gal/1000 sq.ft.) for anchoring.

REFER TO THE 1994 MARYLAND STANDARDS AND SPECIFICATIONS FOR SOIL EROSION AND SEDIMENT CONTROL FOR RATE AND METHODS NOT COVERED.

PERMANENT SEEDING NOTES

APPLY TO GRADED OR CLEARED AREAS NOT SUBJECT TO IMMEDIATE FURTHER DISTURBANCE WHERE A PERMANENT LONG–LIVED VEGETATIVE COVER IS NEEDED.

SEEDBED PREPARATION: Loosen upper three inches of soil by raking, discing or other acceptable means before seeding, if not previously loosened.

SOIL AMENDMENTS: In lieu of soil test recommendations, use one of the following schedules:

1) Preferred–Apply 2 tons per acre dolomitic limestone (92 lbs/ 100 sq.ft.) and 600 lbs per acre 10–10–10 fertilizer (14 lbs./ 1000 sq.ft.) before seeding. Harrow or disc into upper three inches of soil. At the time of seeding, apply 400 lbs. per acre 30–0–0 ureaform fertilizer (9 lbs/1000 sq.ft.)
2) Acceptable–Apply 2 tons per acre dolomatic limestone (92 lbs/ 1000 sq.ft.) and apply 1000 lbs. per acre 10–10–10– fertilizer (23 lbs./1000 sq.ft.) before seeding. Harrow or disc into upper three inches of soil.

SEEDING: For the periods March 1 thru April 30, and August 1 thru October 15, seed with 60 lbs. per acre (1.4 lbs/1000 sq.ft.) of Kentucky 31 Tall Fescue. For the period May 1 thru July 31, seed with 60 lbs. Kentucky 31 Tall Fescue per acre and 2 lbs. per acre (.05 lbs./1000 sq.ft.) of weeping lovegrass. During the period of October 16 thru February 28, protect site by: Option (1) 2 tons per acre well anchored straw mulch and seed as soon as possible in the spring. Option (2) Use sod. Option (3) Seed with 60 lbs/acre Kentucky 31 Tall Fescue and mulch with 2 tons/acre well anchored straw.

MULCHING: Apply 1 1/2 to 2 tons per acre (70 to 90 lbs/1000 sq. ft.) of unrotted small grain straw immediately after seeding. Anchor mulch immediately after application using mulch anchoring tool or 218 gallons per acre (5 gal/1000 sq.ft.) of emulsified asphalt on flat areas. On slopes 8 feet or higher, use 348 gallons per acre (8 gal/1000 sq.ft.) for anchoring.

MAINTENANCE: Inspect all seeded areas and make needed repairs, replacements and reseedings.

21.0 STANDARDS AND SPECIFICATIONS FOT TOP SOIL

Definition

Placement of topsoil over a prepared subsoil prior to establishment of permanent vegetation.

Purpose

To provide a suitable soil medium for vegetable growth. Soils of concern have low moisture content, low nutrient levels, low pH, materials toxic to plants, and/or unacceptable soil gradation.

Conditions Where Practice Applies

I. This practice is limited to areas having 2:1 or flatter slopes where:

a. The texture of the exposed subsoil/parent material is not adequate to produce vegetative growth.

b. The soil material is so shallow that the rooting zone is not deep enough to support plants or furnish continuing supplies of moisture and plant nutrients.

c. The original soil to be vegetated contains material toxic to plant growth.

d. The soil is so acidic that treatment with limestone is not feasible.

II. For the purpose of these Standards and Specifications, areas having slopes steeper than 2:1 require special consideration and design for adequate stabilization. Areas having slopes steeper than 2:1 shall have the appropriate stabilization shown on the plans.

Construction and Material Specifications

I. Topsoil salvaged from the existing site may be used provided that it meets the standards as set forth in these specifications. Typically, the depth of topsoil to be salvaged for a given soil type can be found in the representative soil profile section in the Soil Survey published by USDA–SCS in cooperation with Maryland Agricultural Experimental Station.

II. Topsoil Specifications – Soil to be used as topsoil must meet the following:

i. Topsoil shall be a loam, sandy loam, clay loam, silt loam, sandy clay loam, loamy sand. Other soils may be used if recommended by an agronomist or a soil scientist and approved by the appropriate approval authority. Regardless, topsoil shall not be a mixture of contrasting textured subsoils and shall contain less than 5% by volume of cinders, stones, slag, coarse fragments, gravel, sticks, roots, trash, or other materials larger that 1 and 1/2" in diameter.

ii. Topsoil must be free of plants or plant parts such as Bermuda grass, quackgrass, Johnsongrass, nutsedge, poison ivy, thistle, or others as specified.

iii. Where the subsoil is either highly acidic or composed of heavy clays, ground limestone shall be spread at the rate of 4–8 tons/acre (200–400 pounds per 1,000 square feet) prior to the placement of topsoil. Lime shall be distributed uniformly over designated areas and worked into the soil in conjunction with tillage operations as described in the following procedures.

II. For sites having disturbed areas under 5 acres:

i. Place topsoil (if required) and apply soil amendments as specified in 20.0 Vegetative Stabilization – Section I – Vegetative Stabilization Methods and Materials.

iii. For sites having disturbed areas over 5 acres:
i. On soil meeting topsoil specifications, obtain test results dictating fertilizer and lime amendments required to bring the soil into compliance with the following:
a. pH for topsoil shall be between 6.0 and 7.5. If the tested soil demonstrates a pH of less than 6.0, sufficient lime shall be prescribed to raise the pH to 6.5 or higher.
b. Organic content of topsoil shall be not less than 1.5 percent by weight.
c. Topsoil having soluble salt content greater than 500 parts per million shall not be used.
d. No sod or seed shall be placed on soil soil which has been treated with soil sterilants or chemicals used for weed control until sufficient time has elapsed (14 days min.) to permit dissipation of phyto–toxic materials.

NOTE: Topsoil substitutes or amendments, as recommended by a qualified agronomist or soil scientist and approved by the appropriate approval authority, may be used in lieu of natural topsoil.

ii. Place topsoil (if required) and apply soil amendments specified in 20.0 Vegetative Stabilization–Section I–Vegetative Stabilization Methods and Materials.

V. Topsoil Application

i. When topsoiling, maintain needed erosion and sediment control practices such as diversions, Grade Stabilization Structures, Earth Dikes, Slope Silt Fence and Sediment Traps and Basins.

ii. Grades on the areas to be topsoiled, which have been previously established, shall be maintained, albeit 4" – 8" higher in elevation.

iii. Topsoil shall be uniformly distributed in a 4" – 8" layer and lightly compacted to a minimum thickness of 4". Spreading shall be performed in such a manner that sodding or seeding can proceed with a minimum of additional soil preparation and tillage. Any irregularities in the surface resulting from topsoiling or other operations shall be corrected in order to prevent the formation of depressions or water pockets.

iv. Topsoil shall not be place while the topsoil or subsoil is in a frozen or muddy condition, when the subsoil is excessively wet or in a condition that may otherwise be detrimental to proper grading and seedbed preparation.

30.0 DUST CONTROL

Definition

Controlling dust blowing and movement on construction sites and roads.

Purpose

To prevent blowing and movement of dust from exposed soil surfaces, reduce on and off–site damage health hazards, and improve traffic safety.

Conditions Where Practice Applies

This practice is applicable to areas subject to dust blowing and movement Where on and off–site damage is likely without treatment.

Specifications

Temporary Methods

1. Mulches – See standards for vegetative stabilization with mulches only. Mulch should be crimped or tacked to prevent blowing.
2. Vegetative Cover – See standards for temporary vegetative cover.
3. Tillage – To roughen surface and bring clods to the surface. This is an emergency measure which should be used before soil blowing starts. Begin plowing on windward side of site. Chisel–type plows spaced about 12" apart, spring–toothed harrows, and similar plows are examples of equipment which may produce the desired effect.
4. Irrigation – This is generally done as an emergency treatment. Site is sprinkled with water until the surface is moist. Repeat as needed. At no time should the site be irrigated to the point that runoff begins to flow.
5. Barriers – Solid board fences, silt fences, snow fences, burlap fences, straw bales, and similar material can be used to control air currents and soil blowing. Barriers placed at right angles to prevailing currents at intervals of about 10 times their height are effective in controlling soil blowing.
6. Calcium Chloride – Apply at rates that will keep surface moist. May need retreatment.

Permanent Methods

1. Permanent vegetation – See standards for permanent vegetative cover, and permanent stabilization with sod. Existing trees or large shrubs may afford valuable protection if left in place.
2. Topsoiling – Covering with less erosive soil materials. See standards for Topsoiling.
3. Stone – Cover surface with crushed stone or coarse gravel.

References

1. Agricultural Handbook 346. Wind Erosion Forces in the United States and Their Use in Predicting Soil Loss.
2. Agricultural Information Bulletin 354. How to Control Wind Erosion, USDA–ARS.

SEDIMENT CONTROL NOTES

1. A minimum of 48 hours notice must be given to the Howard County Department of Inspection, License and Permits Sediment Control Division prior to the start of any construction (313–1855).
2. All vegetation and structural practices are to be installed according to the provisions of this plan and are to be in conformance with the 1994 MARYLAND STANDARDS AND SPECIFICATIONS FOR SOIL EROSION AND SEDIMENT CONTROL. and revisions thereto.
3. Following initial soil disturbance or redisturbance, permanent or temporary stabilization shall be completed within: (a) 7 calendar days for all perimeter sediment control structures, dikes, perimeter slopes, and all slopes greater than 3:1, (b) 14 days as to all other disturbed or graded areas on the project site.
4. All sediment traps/basins shown must be fenced and warning signs posted around their perimeter in accordance with Vol. 1, Chapter 7, HOWARD COUNTY DESIGN MANUAL, Storm Drainage.
5. All disturbed areas must be stabilized within the time period specified above in accordance with the 1994 MARYLAND STANDARDS AND SPECIFICATIONS FOR SOIL EROSION AND SEDIMENT CONTROL for permanent seeding, sod, temporary seeding, and mulching (Sec. G). Temporary stabilization with mulch alone shall be done when recommended seeding dates do not allow for proper germination and establishment of grasses.
6. All sediment control structures are to remain in place and are to be maintained in operative condition until permission for their removal has been obtained from the Howard County Sediment Control Inspector.
7. Site Analysis :

Total Area	(TOTAL AREA: 73.84 AC) AREA OF SUBMISSION 18.2 AC
Area Disturbed	18.2 AC
Area to be roofed or paved	6.14 AC
Area to be vegetatively stabilized	12.06 AC
Total Cut	24080 CY
Total Fill	24080 CY
Offsite waste/borrow area location	*

8. Any sediment control practice which is disturbed by grading activity for placement of utilities must be repaired on the same day of disturbance.
9. Additional sediment controls must be provided, if deemed necessary by the Howard County Sediment Control Inspector.
10. On all sites with disturbed areas in excess of 2 acres, approval of the inspection agency shall be requested upon completion of installation of perimeter erosion and sediment controls, but before proceeding with any other earth disturbance or grading. Other building or grading inspection approvals may not be authorized until this initial approval by the inspection agency is made.
11. Trenches for the construction of utilities is limited to three pipe lengths or that which shall be back–filled and stabilized within one working day, whichever is shorter.

* To be determined by contractor, with pre–approval of the Sediment Control Inspector with an approved and active grading permit

SEQUENCE OF CONSTRUCTION

1. OBTAIN ALL REQUIRED PERMITS FROM HOWARD COUNTY.
2. NOTIFY HOWARD COUNTY BUREAU OF INSPECTIONS AND PERMITS AT (410) 313–1880 AT LEAST 24 HOURS BEFORE STARTING ANY WORK.
3. INSTALL STABILIZED CONSTRUCTION ENTRANCE, SUPER SILT FENCE..........3 DAYS
4. SEDIMENT BASIN#1* & BASIN#2 IN USE, INSTALL EARTH DIKES..............4 DAYS
5. CONSTRUCT WATER AND SEWER AND REMAINING STORMDRAIN SYSTEM........1 WEEK
6. BEGIN BUILDING CONSTRUCTION.......................................8 MONTHS
7. AS BUILDING CONSTRUCTION CONTINUES FINE GRADE SITE................4 DAYS
8. INSTALL CURB & GUTTER AND SIDEWALKS. BEGIN PAVING................2 WEEKS
9. CONSTRUCT DRY WELLS 1 AND 2 AND BLOCK CONNECTION TO DIVERSION MANHOLES..4 DAYS
10. WITH BUILDING, PAVING, AND CURB & GUTTER, COMPLETE STABILIZE SITE....3 DAYS
11. WITH SITE STABILIZED REMOVE BLOCKING FROM DIVERSION MANHOLES.......2 DAYS
12. INSTALL LANDSCAPING..1 WEEK
13. WITH PERMISSION OF THE INSPECTOR, FLUSH STORM DRAIN SYSTEM AND REMOVE ALL SEDIMENT CONTROLS FROM THE SITE. STABILIZE ALL DISTURBED AREAS IMMEDIATELY.

*BASINS TO REMAIN FOR DEVELOPMENT OF PARCELS D–1 AND E–1 (F–02–47). CONTRACTOR TO MAINTAIN BASINS DURNING CONSTRUCTION.

NOTE:

ALL EARTH DIKES ARE TO BE PLACES IN WORKING ORDER AT THE END OF EACH WORKINGDAY.

DURING GRADING AND AFTER EACH RAINFALL, CONTRACTOR WILL INSPECT AND PROVIDE NECESSARY MAINTENANCE TO THE SEDIMENT CONTROL MEASURES ON THIS PLAN.

FOLLOWING INITIAL SOIL DISTURBANCES OR REDISTURBANCE PERMANENT OR TEMPORARY STABILIZATION SHALL BE COMPLETED WITHIN:
A. 7 CALENDAR DAYS FOR ALL PERIMETER SEDIMENT CONTROL STURCTURES, DIKES, SWALES, AND ALL SLOPES GREATER THAN 3:1.
B. 14 CALENDAR DAYS FOR ALL OTHER DISTURBED AREAS.

APPROVED: HOWARD COUNTY DEPARTMENT OF PLANNING AND ZONING

CHIEF, DEVELOPMENT ENGINEERING DIVISION	11/4/03 DATE
CHIEF, DIVISION OF LAND DEVELOPMENT	2/19/04 DATE
DIRECTOR	2/20/04 DATE

ENGINEERS CERTIFICATE

"I CERTIFY THAT THIS PLAN FOR SEDIMENT AND EROSION CONTROL REPRESENTS A PRACTICAL AND WORKABLE PLAN BASED ON MY PERSONAL KNOWLEDGE OF THE SITE CONDITIONS AND THAT IT WAS PREPARED IN ACCORDANCE WITH THE REQUIREMENTS OF THE HOWARD SOIL CONSERVATION DISTRICT.

SIGNATURE OF ENGINEER — 9/18/03 DATE
ROBERT H. VOGEL.

DEVELOPER'S CERTIFICATE

"I/WE CERTIFY THAT ALL DEVELOPMENT AND CONSTRUCTION WILL BE DONE ACCORDING TO THIS PLAN FOR SEDIMENT AND EROSION CONTROL, AND THAT ALL RESPONSIBLE PERSONNEL INVOLVED IN THE CONSTRUCTION PROJECT WILL HAVE A CERTIFICATE OF ATTENDANCE AT A DEPARTMENT OF THE ENVIRONMENT APPROVED TRAINING PROGRAM FOR THE CONTROL OF SEDIMENT AND EROSION BEFORE BEGINNING THE PROJECT. I ALSO AUTHORIZE PERIODIC ON–SITE INSPECTION BY THE HOWARD SOIL CONSERVATION DISTRICT.

SIGNATURE OF DEVELOPER — 9/19/03 DATE
DONALD REUWER

REVIEWED FOR HOWARD SCD AND MEETS TECHNICAL REQUIREMENTS.

USDA–NATURAL RESOURCES CONSERVATION SERVICE — 10-29-03 DATE

THIS DEVELOPMENT PLAN IS APPROVED FOR SOIL EROSION AND SEDIMENT CONTROL BY THE HOWARD SOIL CONSERVATION DISTRICT

HOWARD SCD — 10-29-03 DATE

OWNER :

TAYLOR FAMILY LIMITED PARTNERSHIP A.
C/O LAND DESIGN & DEVELOPMENT, INC.
8000 MAIN STREET
ELLICOTT CITY, MD 21043
ATTN: MR. DONALD R. REUWER
PHONE: (410) 480-9105

DEVELOPER

LAND DESIGN & DEVELOPMENT, INC.
8000 MAIN STREET
ELLICOTT CITY, MD 21043
ATTN: MR. DONALD R. REUWER
PHONE: (410) 480-9105

SITE DEVELOPMENT PLAN
SEDIMENT AND EROSION CONTROL DETAILS
VILLAGE CREST
PART OF PARCEL D-1
PHASE 1, 2, 3 , APT. BLDGS. A-M & K
211 AGE RESTRICTED ADULT HOUSING UNITS

TAX MAP #25 BLOCK 20 — PARCEL P/O 98
2ND ELECTION DISTRICT — HOWARD COUNTY, MARYLAND

FREDERICK WARD ASSOCIATES, INC.
ARCHITECTS | ENGINEERS | PLANNERS | SURVEYORS
7125 RIVERWOOD DRIVE
COLUMBIA, MARYLAND 21046–2354
410–720–6900
410–720–6226 fax
www.frederickward.com

DESIGN BY:	RJ
DRAWN BY:	RJ
CHECKED BY:	RHV
DATE:	SEPT. 2003
SCALE:	AS SHOWN
W.O. NO.:	2018121.00

SHEET 7 OF 16

SDP-02-94

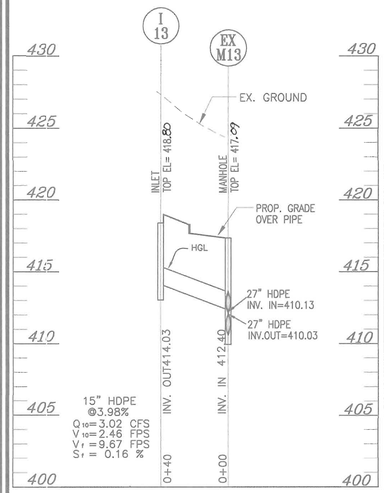

STORM DRAIN PROFILE

SCALE: 1"= 50' HORZ.
1"= 5' VERT.

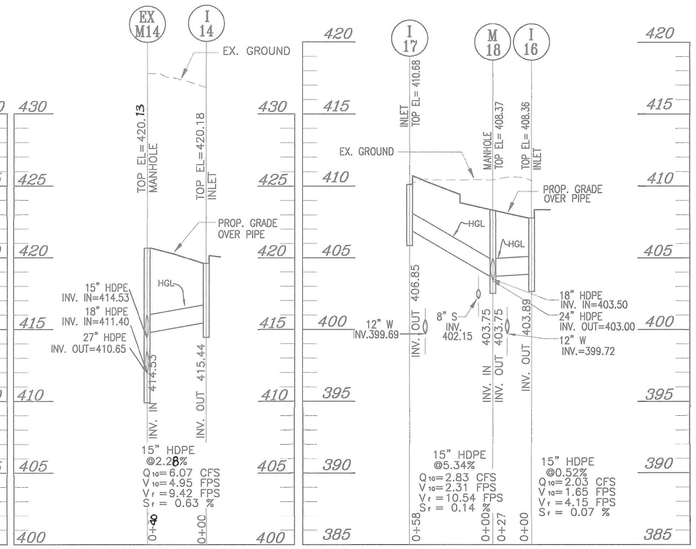

STORM DRAIN PROFILE

SCALE: 1"= 50' HORZ.
1"= 5' VERT.

STORM DRAIN PROFILE

SCALE: 1"= 50' HORZ.
1"= 5' VERT.

PIPE SCHEDULE		
SIZE	TYPE	LENGTH
15"	HDPE	773 LF
18"	HDPE	337 LF
24"	HDPE	963 LF
30"	HDPE	114 LF

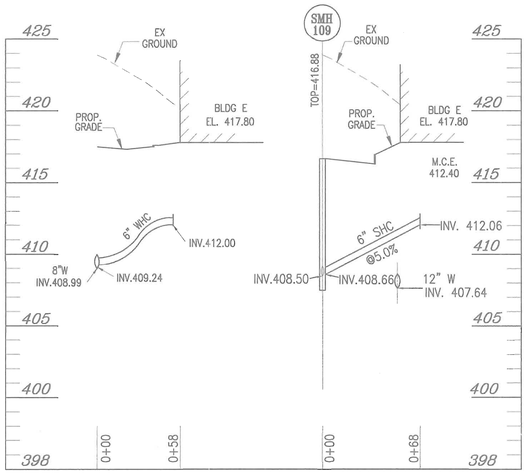

WHC PROFILE UNIT E

SCALE: 1"= 50' HORZ.
1"= 5' VERT.

SHC PROFILE UNIT E

SCALE: 1"= 50' HORZ.
1"= 5' VERT.

STRUCTURE SCHEDULE						
NO.	TYPE	LOCATION	TOP ELEV.	INV. IN	INV. OUT	REMARKS
EX. I-12	DOUBLE TYPE 'S' COMBINATION INLET	CL CYPRUS CEDAR LN STA. 2+99 , 11.93' RT.				
EX. I-11A	DOUBLE TYPE 'S' COMBINATION INLET	CL CYPRUS CEDAR LN STA. 4+45 , 11.93' RT.	415.43	–	406.52	SD 4.34
I-13	DOUBLE TYPE 'S' COMBINATION INLET	CL OF PARKING LOT AISLE(SOUTHBN), STA. 2+88,26.62' RT.	418.13	–	414.03	SD 4.34
I-14	DOUBLE TYPE 'S' COMBINATION INLET	CL OF PARKING LOT AISLE, STA. 2+88 , 26.62' RT.	420.18	–	415.44	SD 4.34
I-14A	DOUBLE TYPE 'S' COMBINATION INLET	CL OF PARKING LOT AISLE, STA.1+84 , 26.62' RT.	421.94	–	416.53	SD 4.34
EX M-12	PRECAST MANHOLE	N 577460.23, E 1372137.59	410.25	395.57	395.07	G 5.12
M-16A	PRECAST MANHOLE	N 577598.50, E 1372212.44				
M-16	PRECAST MANHOLE	N 577701.37, E 1372268.22	405.33	397.94	397.84	G 5.12
M-17	PRECAST MANHOLE	CL CYPRUS CEDAR LN STA. 6+30, 10.42' RT.	406.96	401.24 24"HDPE 401.14 24"HDPE	401.55	G 5.12
I-15	DOUBLE TYPE 'S' COMBINATION INLET	CL YELLOW PINE DR. STA. 3+56.90, 26.57' LT.	405.88	–	399.75	SD 4.34
M-18	PRECAST MANHOLE	CL YELLOW PINE DR. STA.2+15.27, 0.92' LT.	408.37	403.75 15"HDPE 403.75 15"HDPE 403.50 18"HDPE	403.00	G 5.12
I-16	DOUBLE TYPE 'S' COMBINATION INLET	CL YELLOW PINE DR. STA.2+16.90, 26.57' LT.	408.36	–	403.89	SD 4.34
I-17	DOUBLE TYPE 'S' COMBINATION INLET	CL MIDDLE PARKING LOT AILE. STA 2+2.39, 56.84' RT.	410.68	–	406.85	SD 4.34
M-19	PRECAST MANHOLE	CL YELLOW PINE DR. STA.0+10.84 0.95' RT.	411.64	406.05 15"HDPE 406.05 15"HDPE	405.80	G 5.12
I-18	DOUBLE TYPE 'S' COMBINATION INLET	CL STONE CROP DRIVE STA. 0+32 12' LT.	411.04	–	406.22	SD 4.34
I-19	DOUBLE TYPE 'S' COMBINATION INLET	CL HICKORY HIGH CT. STA. 0+62.71, 30' RT.	415.23	–	410.48	SD 4.34
EX M-31	PRECAST MANHOLE	PER F-02-47	378.00	371.79 18"HDPE 371.29 24"HDPE	367.79	G 5.12
M-20	PRECAST MANHOLE	N 578547.97 E 1372240.17	391.40	377.78	375.01	G 5.12
M-21	PRECAST MANHOLE	N 578395.82 E 1372271.48	396.00	382.56	382.46	G 5.12
M-22	PRECAST MANHOLE	N 578313.61 E 1372341.06	393.21	387.33 15"HDPE 384.28 18"HDPE 384.51 18"HDPE	383.76	G 5.12
I-21	DOUBLE TYPE 'S' COMBINATION INLET	CL STONE CROP DRIVE STA. 5+59 30' LT.	394.85	389.72	389.47	SD 4.34
I-22	DOUBLE TYPE 'S' COMBINATION INLET	CL STONE CROP DRIVE STA. 3+53.81, 12' LT.	403.18	–	398.43	SD 4.34
I-20	DOUBLE TYPE 'S' COMBINATION INLET	CL STONE CROP DRIVE (AISLE @BLDG P) 1+15.96, 30'RT.	390.13	–	385.33	SD 4.34
M-23	PRECAST MANHOLE	CL STONE CROP DRIVE (AISLE @BLDG N) STA. 0+10, 13.05' RT.	393.70	388.64 15"HDPE 388.39 18"HDPE	381.63	G 5.12
I-24	DOUBLE TYPE 'S' COMBINATION INLET	CL STONE CROP DRIVE(AISLE@BLDG N) STA. 0+85.56, 30' RT.	391.52	–	389.06	SD 4.34
I-23	DOUBLE TYPE 'S' COMBINATION INLET	CL STONE CROP DRIVE STA. 2+90.26, 13.83' RT.	400.44	–	394.90	SD 4.34

1. TOP ELEVATION ARE TO THE CENTER OF THE STRUCTURE AT TOP OF CURB FOR DOUBLE 'S' COMB. INLETS, CENTER TOP OF GRATE FOR DOUBLE TYPE 'S' INLET AND TOP OF MANHOLE COVER FOR PRECAST MANHOLES.
2. SEE ARCHITECTURAL PLANS FOR ROOF DRAIN DETAILS

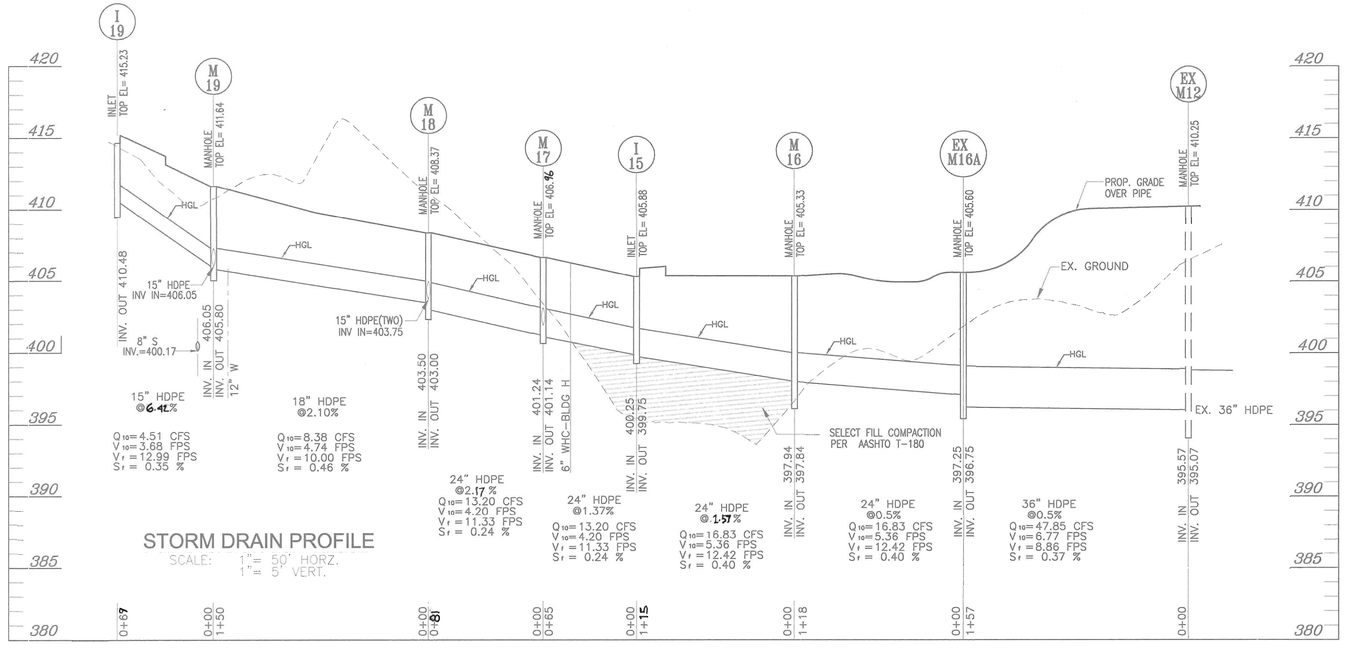

STORM DRAIN PROFILE

SCALE: 1"= 50' HORZ.
1"= 5' VERT.

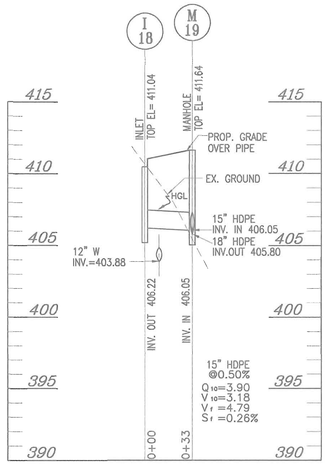

STORM DRAIN PROFILE

SCALE: 1"= 50' HORZ.
1"= 5' VERT.

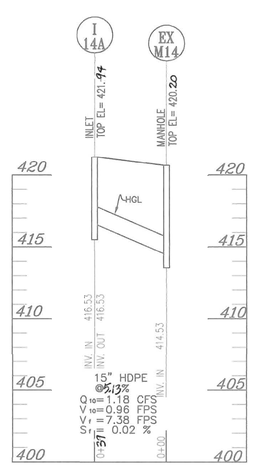

OWNER :

TAYLOR FAMILY LIMITED PARTNERSHIP A
C/O LAND DESIGN & DEVELOPMENT, INC.
8000 MAIN STREET
ELLICOTT CITY, MD 21043
ATTN: MR. DONALD R. REUWER
PHONE: (410) 480-9105

DEVELOPER

LAND DESIGN & DEVELOPMENT, INC.
8000 MAIN STREET
ELLICOTT CITY, MD 21043
ATTN: MR. DONALD R. REUWER
PHONE: (410) 480-9105

APPROVED: HOWARD COUNTY DEPARTMENT OF PLANNING AND ZONING

CHIEF, DEVELOPMENT ENGINEERING DIVISION — DATE 11/4/03

CHIEF, DIVISION OF LAND DEVELOPMENT — DATE 2/18/04

DIRECTOR — DATE 2/20/04

SITE DEVELOPMENT PLAN
PROFILES
VILLAGE CREST
PART OF PARCEL D-1

PHASE 1,2,3 , APT. BLDGS. A-M&R
211 AGE RESTRICTED ADULT HOUSING UNITS

TAX MAP #25 BLOCK 20 — PARCEL P/O 98
2ND ELECTION DISTRICT — HOWARD COUNTY, MARYLAND

FREDERICK WARD ASSOCIATES, INC.
ARCHITECTS | ENGINEERS | PLANNERS | SURVEYORS
7125 RIVERWOOD DRIVE
COLUMBIA, MARYLAND 21046-2354
410-720-6900
410-720-6226 fax
www.frederickward.com

STATE OF MARYLAND — ROBERT HARRIS YOSELL — No. 16193 — PROFESSIONAL ENGINEER
ROBERT H. YOSELL, PE NO. 16193

DESIGN BY:	RJ/JCO
DRAWN BY:	RJ/JCO
CHECKED BY:	RHY
DATE:	SEPT. 2003
SCALE:	AS SHOWN
W.O. NO.:	2018121.00

SHEET 8 OF 16

SDP-02-94

K:\PROJECTS\2018121\ENGR\dwg\Sdp APT\05ROF.dwg Tue Sep 30 09:29:53 2003 E4

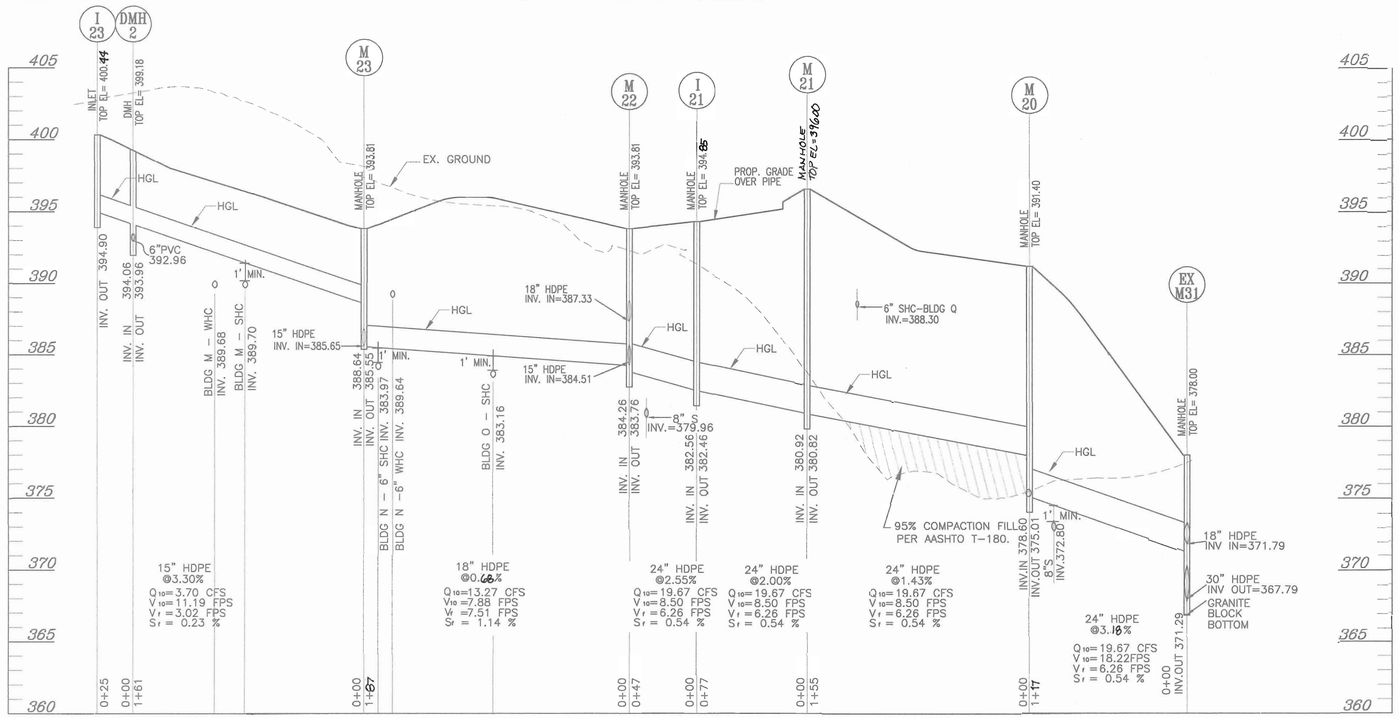

STORM DRAIN PROFILE

SCALE: 1"= 50' HORZ. 1"= 5' VERT.

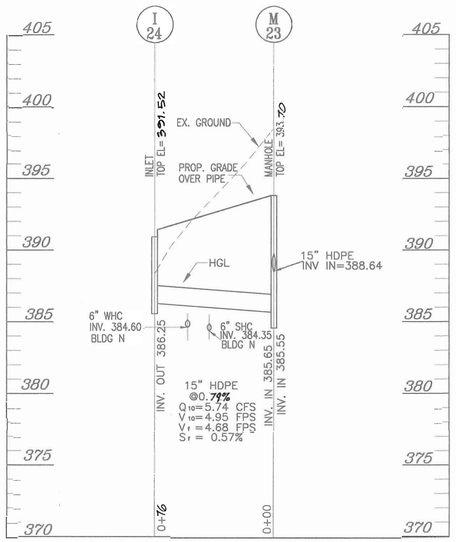

STORM DRAIN PROFILE

SCALE: 1"= 50' HORZ. 1"= 5' VERT.

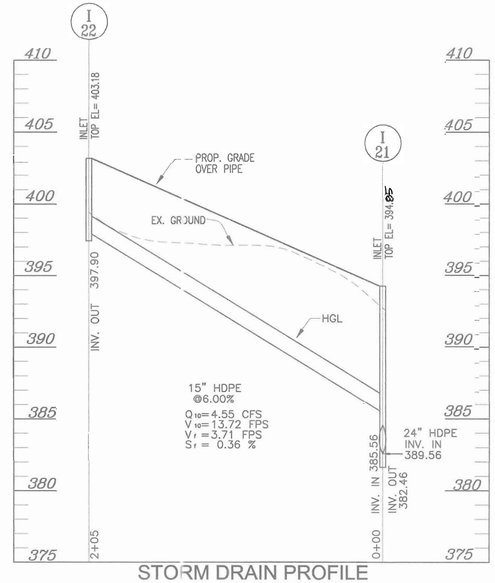

STORM DRAIN PROFILE

SCALE: 1"= 50' HORZ. 1"= 5' VERT.

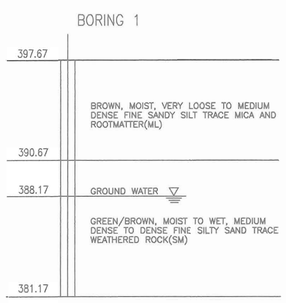

BORING # 1

NTS

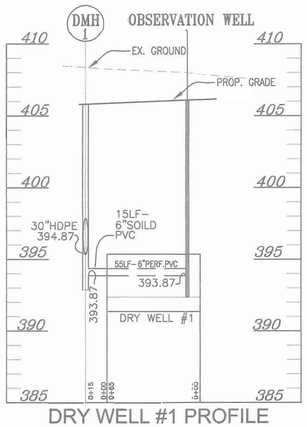

DRY WELL #1 PROFILE

SCALE: 1"= 50' HORZ. 1"= 5' VERT.

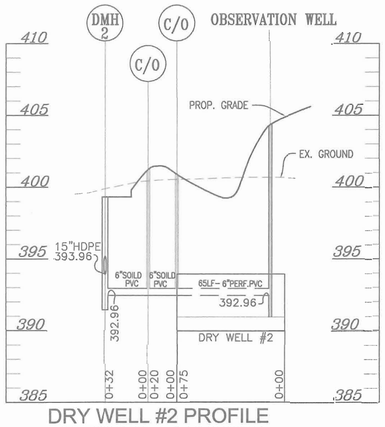

DRY WELL #2 PROFILE

SCALE: 1"= 50' HORZ. 1"= 5' VERT.

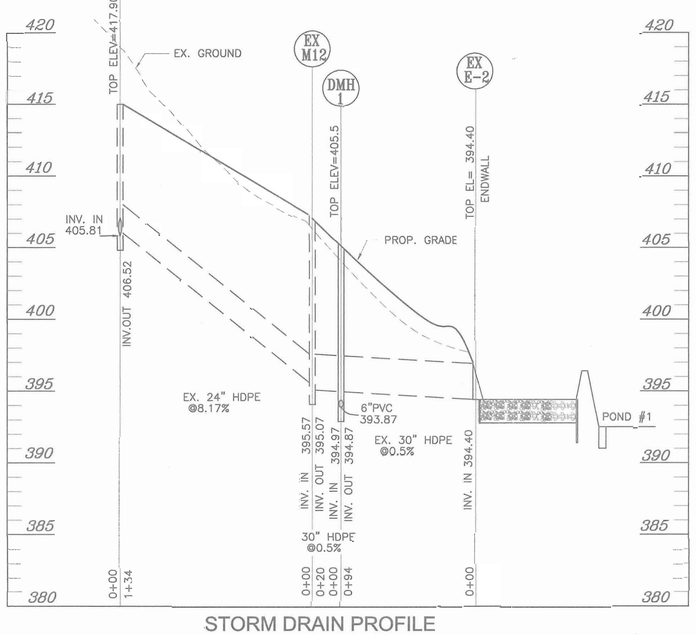

STORM DRAIN PROFILE

SCALE: 1"= 50' HORZ. 1"= 5' VERT.

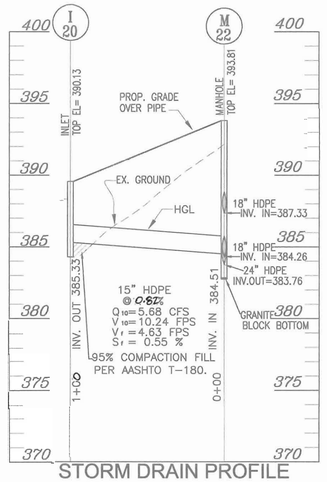

STORM DRAIN PROFILE

SCALE: 1"= 50' HORZ. 1"= 5' VERT.

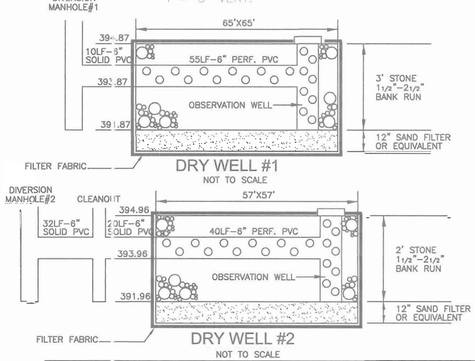

DRY WELL #1

NOT TO SCALE

DRY WELL #2

NOT TO SCALE

APPROVED: HOWARD COUNTY DEPARTMENT OF PLANNING AND ZONING

CHIEF, DEVELOPMENT ENGINEERING DIVISION — DATE 4/4/03

CHIEF, DIVISION OF LAND DEVELOPMENT — DATE 3/19/04

DIRECTOR — DATE 3/21/04

SITE DEVELOPMENT PLAN
PROFILES
VILLAGE CREST
PART OF PARCEL D-1
PHASE 1,2,3 , APT. BLDGS. A-4&B
211 AGE RESTRICTED ADULT HOUSING UNITS

TAX MAP #25 BLOCK 20 — PARCEL P/O 98

2ND ELECTION DISTRICT — HOWARD COUNTY, MARYLAND

FREDERICK WARD ASSOCIATES, INC.
ARCHITECTS | ENGINEERS | PLANNERS | SURVEYORS
7125 RIVERWOOD DRIVE
COLUMBIA, MARYLAND 21046–2354
410–720–6900
410–720–6226 fax
www.frederickward.com

OWNER:

TAYLOR FAMILY LIMITED PARTNERSHIP A C/O LAND DESIGN & DEVELOPMENT, INC.
8000 MAIN STREET
ELLICOTT CITY, MD 21043
ATTN: MR. DONALD R. REUWER
PHONE: (410) 480-9105

DEVELOPER

LAND DESIGN & DEVELOPMENT, INC.
8000 MAIN STREET
ELLICOTT CITY, MD 21043
ATTN: MR. DONALD R. REUWER
PHONE: (410) 480-9105

STATE OF MARYLAND — ROBERT V. VOLK — No. 16193 — PROFESSIONAL ENGINEER

ROBERT V. VOLK, PE NO. 16193

DESIGN BY:	JCO
DRAWN BY:	JCO
CHECKED BY:	RHV
DATE:	SEPT. 2003
SCALE:	AS SHOWN
W.O. NO.:	2018121.00

SHEET 9 OF 16

SDP-02-94

M:\PROJECTS\2018121\ENGR\dwg\Sdp-APT\06PROF.dwg Tue Sep 30 09:21:21 2003 E4

MANHOLE LOCATION CHART

MANHOLE NO.	TYPE	LOCATION	TOP ELEVATION
EX. 856	STD. PRECAST MH HO. CO. STD. DET. G5.12	CL STONE CROP. DR. STA. 6+98, 0.62' LT. (BY F-02-47)	
EX. 855	STD. PRECAST MH HO. CO. STD. DET. G5.12	CL STONE CROP DR @ BLDG P STA. 0+10.42, 3.46' RT. (F-02-47)	
SMH 102	STD. PRECAST MH HO. CO. STD. DET. G5.12	CL STONE CROP DR. STA. 6+16.15, ON CENTERLINE.	394.65
SMH 103	STD. PRECAST MH HO. CO. STD. DET. G5.12	CL STONE CROP DR. STA. 3+15.13, 12.62' RT.	404.22
SMH 104	STD. PRECAST MH HO. CO. STD. DET. G5.12	CL STONE CROP DR. STA. 1+76.14, 8.00' LT.	408.76
SMH 105	STD. PRECAST MH HO. CO. STD. DET. G5.12	CL STONE CROP DR. STA. 4+66.51, 3.00' RT.	394.33
SMH 106	STD. PRECAST MH HO. CO. STD. DET. G5.12	CL STONE CROP DRIVE STA. 1+52, 2.81' RT.	406.54
SMH 107	STD. PRECAST MH HO. CO. STD. DET. G5.12	CL YELLOW PINE CT. STA. 0+12.51, 22.15' LT.	412.60
SMH 108	STD. PRECAST MH HO. CO. STD. DET. G5.12	CL YELLOW PINE CT. STA. 0+12.51, 10.96' RT.	413.12
SMH 109	STD. PRECAST MH HO. CO. STD. DET. G5.12	CL HICKORY HIGH CT. STA. 2+64, 8.00' LT.	420.97
SMH 110	STD. PRECAST MH HO. CO. STD. DET. G5.12	CL CYPRUS CEDAR LN. STA. 6+19.92, 12.00' LT.	407.82
SMH 111	STD. PRECAST MH HO. CO. STD. DET. G5.12	CL CYPRUS CEDAR LN. STA. 4+14.94, 12.13' LT.	412.00
SMH 112	STD. PRECAST MH HO. CO. STD. DET. G5.12	CL PARKING AISLE (SOUTHERN) STA. 3+8.39, 4.34' LT.	418.04

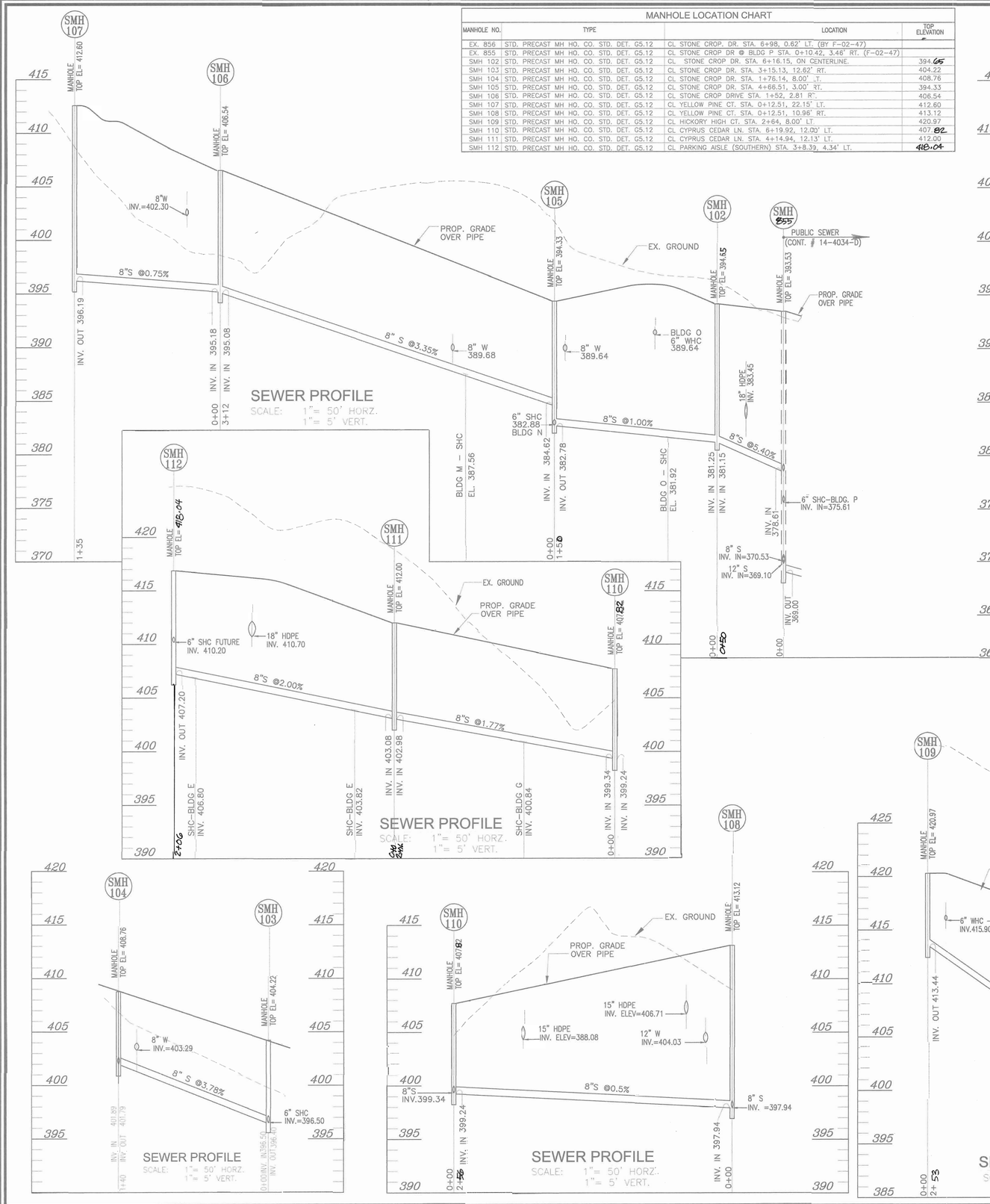

APPROVED: HOWARD COUNTY DEPARTMENT OF PLANNING AND ZONING

CHIEF, DEVELOPMENT ENGINEERING DIVISION — DATE 11/4/03

CHIEF, DIVISION OF LAND DEVELOPMENT — DATE 2/19/04

DIRECTOR — DATE 2/20/04

SITE DEVELOPMENT PLAN
PROFILES
VILLAGE CREST
PART OF PARCEL D-1

PHASE 1,2,3 , APT. BLDGS. A-M&R

211 AGE RESTRICTED ADULT HOUSING UNITS

TAX MAP #25 BLOCK 20 — PARCEL P/O 98

2ND ELECTION DISTRICT — HOWARD COUNTY, MARYLAND

FREDERICK WARD ASSOCIATES, INC.
ARCHITECTS | ENGINEERS | PLANNERS | SURVEYORS
7125 RIVERWOOD DRIVE
COLUMBIA, MARYLAND 21046–2354
410–720–6900
410–720–6226 fax
www.frederickward.com

STATE OF MARYLAND — ROBERT H. VOGEL — No. 16193 — PROFESSIONAL ENGINEER

ROBERT H. VOGEL, PE. No. 16193

DESIGN BY:	RJ
DRAWN BY:	RJ
CHECKED BY:	RHV
DATE:	SEPT. 2003
SCALE:	AS SHOWN
W.O. NO.:	2018121.00

SHEET 10 OF 16

OWNER :

TAYLOR FAMILY LIMITED PARTNERSHIP A
C/O LAND DESIGN & DEVELOPMENT, INC.
8000 MAIN STREET
ELLICOTT CITY, MD 21043
ATTN: MR. DONALD R. REUWER
PHONE: (410) 480-9105

DEVELOPER

LAND DESIGN & DEVELOPMENT, INC.
8000 MAIN STREET
ELLICOTT CITY, MD 21043
ATTN: MR. DONALD R. REUWER
PHONE: (410) 480-9105

SDP-02-94

M:\PROJECTS\2018121\ENGR\dwg\Sdp-APT\VP#08.dwg Fri Sep 19 16:50:28 2003 E4

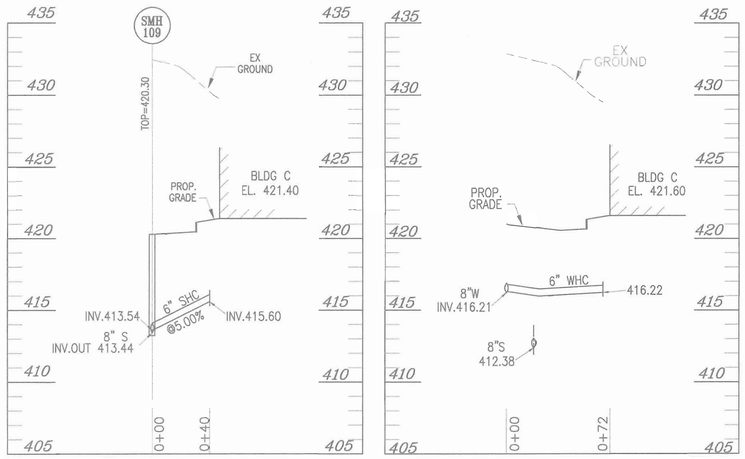

SHC PROFILE UNIT C

SCALE: 1"= 50' HORZ.
1"= 5' VERT.

WHC PROFILE UNIT C

SCALE: 1"= 50' HORZ.
1"= 5' VERT.

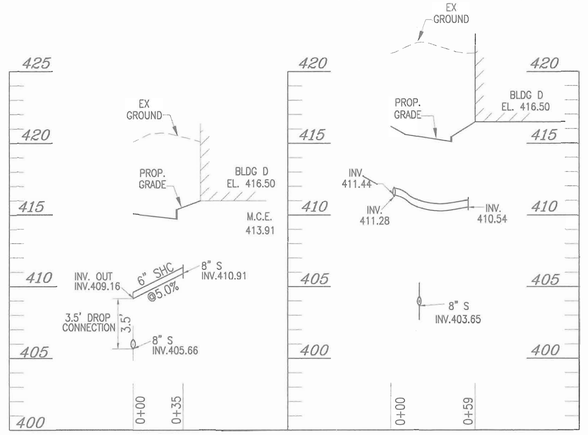

SHC PROFILE UNIT D

SCALE: 1"= 50' HORZ.
1"= 5' VERT.

WHC PROFILE UNIT D

SCALE: 1"= 50' HORZ.
1"= 5' VERT.

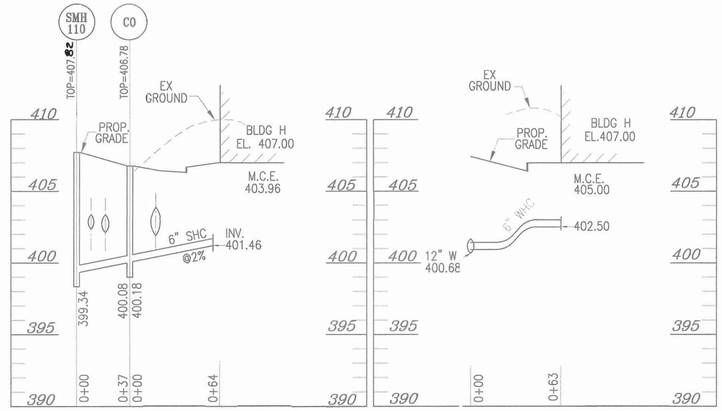

SHC PROFILE UNIT H

SCALE: 1"= 50' HORZ.
1"= 5' VERT.

WHC PROFILE UNIT H

SCALE: 1"= 50' HORZ.
1"= 5' VERT.

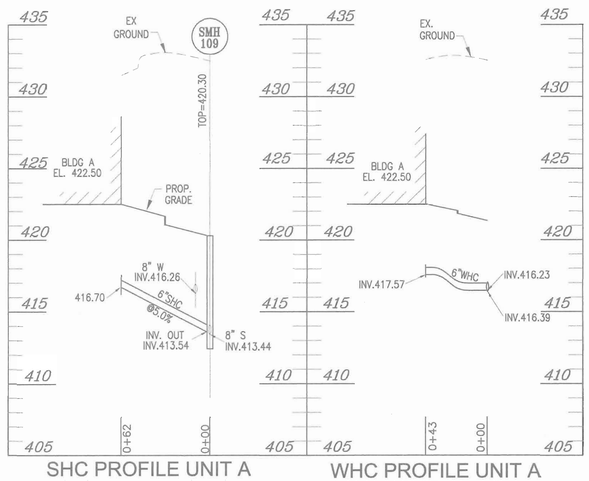

SHC PROFILE UNIT A

SCALE: 1"= 50' HORZ.
1"= 5' VERT.

WHC PROFILE UNIT A

SCALE: 1"= 50' HORZ.
1"= 5' VERT.

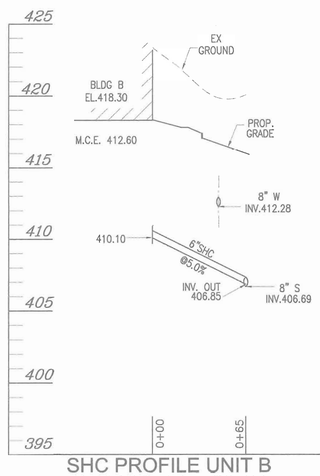

SHC PROFILE UNIT B

SCALE: 1"= 50' HORZ.
1"= 5' VERT.

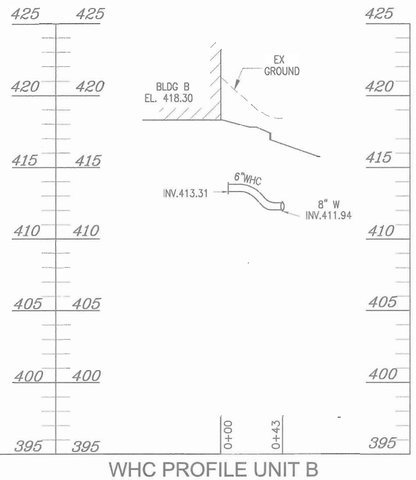

WHC PROFILE UNIT B

SCALE: 1"= 50' HORZ.
1"= 5' VERT.

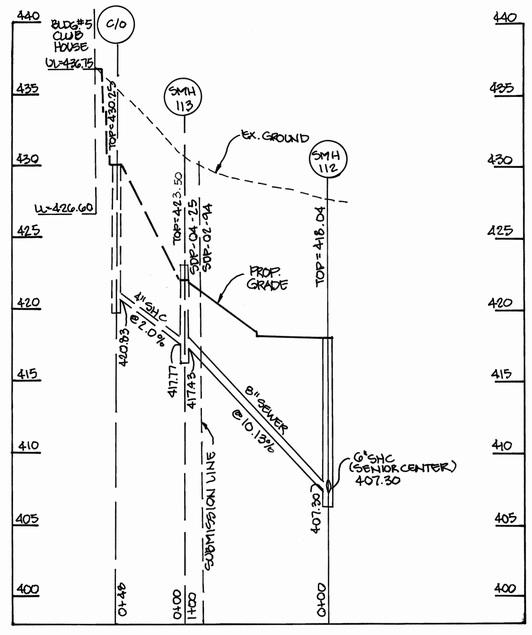

SEWER PROFILE

SCALE: 1"=50' HORZ.
1"=5' VERT.

APPROVED: HOWARD COUNTY DEPARTMENT OF PLANNING AND ZONING

CHIEF, DEVELOPMENT ENGINEERING DIVISION — DATE 11/4/03

CHIEF, DIVISION OF LAND DEVELOPMENT — DATE 2/19/04

DIRECTOR — DATE 4/5/04

SITE DEVELOPMENT PLAN PROFILES

VILLAGE CREST
PART OF PARCEL D-1
PHASE 1,2,3 , APT. BLDGS. A-M,R
211 AGE RESTRICTED ADULT HOUSING UNITS
TAX MAP #25 BLOCK 20 — PARCEL P/O 98
2ND ELECTION DISTRICT — HOWARD COUNTY, MARYLAND

OWNER :
TAYLOR FAMILY LIMITED PARTNERSHIP A
C/O LAND DESIGN & DEVELOPMENT, INC.
8000 MAIN STREET
ELLICOTT CITY, MD 21043
ATTN: MR. DONALD R. REUWER
PHONE: (410) 480-9105

DEVELOPER
LAND DESIGN & DEVELOPMENT, INC.
8000 MAIN STREET
ELLICOTT CITY, MD 21043
ATTN: MR. DONALD R. REUWER
PHONE: (410) 480-9105

FREDERICK WARD ASSOCIATES, INC.
ARCHITECTS | ENGINEERS | PLANNERS | SURVEYORS
7125 RIVERWOOD DRIVE
COLUMBIA, MARYLAND 21046-2354
410-720-6900
410-720-6226 fax
www.frederickward.com

STATE OF MARYLAND — ROBERT JOHN SCHAEFER — No. 14193 — PROFESSIONAL ENGINEER — 9/16/03

DESIGN BY:	RJ
DRAWN BY:	RJ
CHECKED BY:	RHV
DATE:	SEPT. 2003
SCALE:	AS SHOWN
W.O. NO.:	2018121.00

SHEET 11 OF 16

SDP-02-94

M:\PROJECTS\2018121\ENGR\dwg\Sdp-APT\08PROF.dwg Fri Sep 19 16:51:24 2003 E4

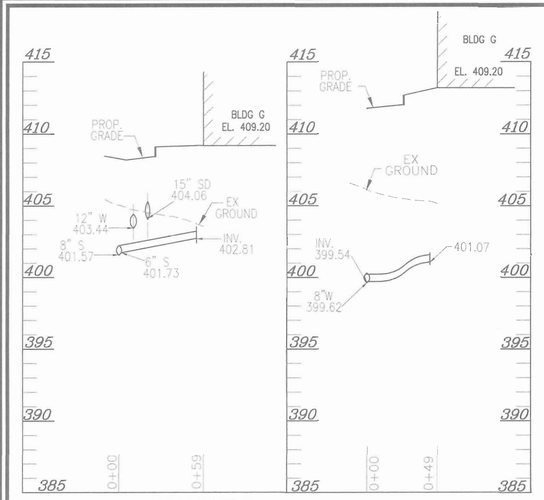

SHC PROFILE UNIT G

SCALE: 1"= 50' HORZ. 1"= 5' VERT.

WHC PROFILE UNIT G

SCALE: 1"= 50' HORZ. 1"= 5' VERT.

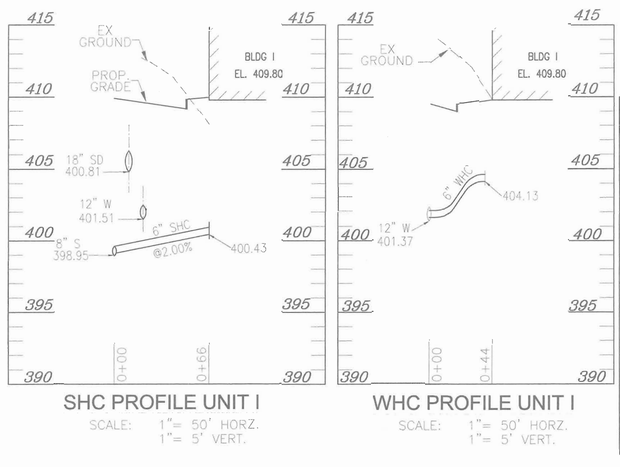

SHC PROFILE UNIT I

SCALE: 1"= 50' HORZ. 1"= 5' VERT.

WHC PROFILE UNIT I

SCALE: 1"= 50' HORZ. 1"= 5' VERT.

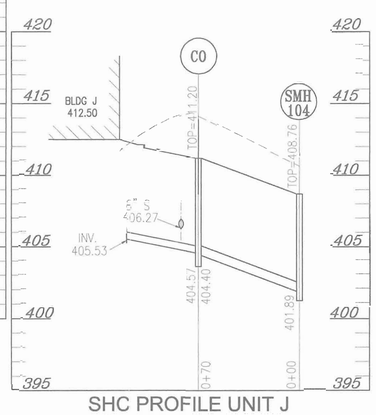

SHC PROFILE UNIT J

SCALE: 1"= 50' HORZ. 1"= 5' VERT.

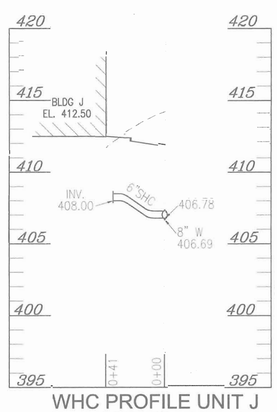

WHC PROFILE UNIT J

SCALE: 1"= 50' HORZ. 1"= 5' VERT.

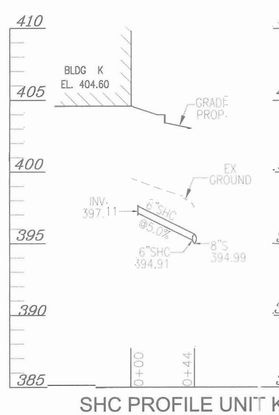

SHC PROFILE UNIT K

SCALE: 1"= 50' HORZ. 1"= 5' VERT.

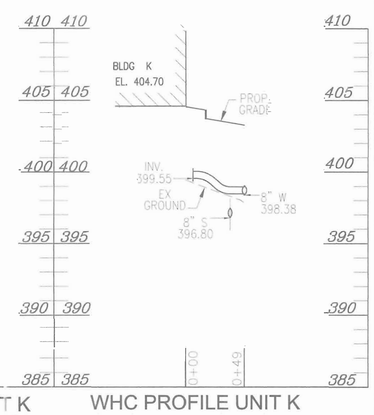

WHC PROFILE UNIT K

SCALE: 1"= 50' HORZ. 1"= 5' VERT.

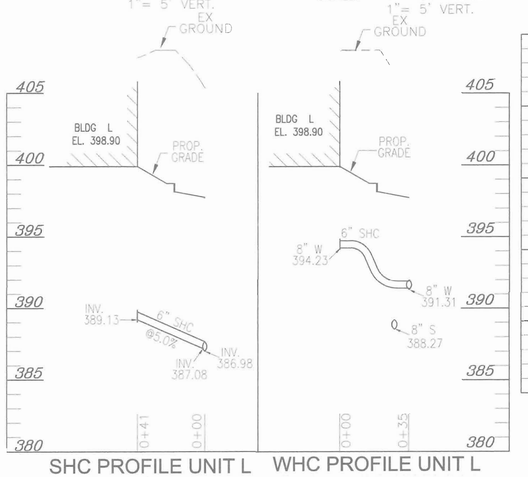

SHC PROFILE UNIT L

SCALE: 1"= 50' HORZ. 1"= 5' VERT.

WHC PROFILE UNIT L

SCALE: 1"= 50' HORZ. 1"= 5' VERT.

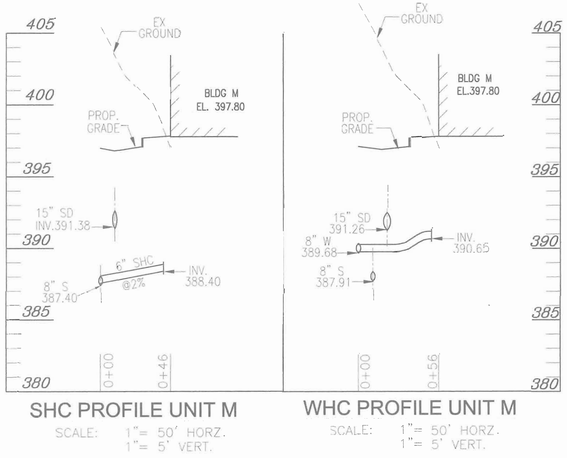

SHC PROFILE UNIT M

SCALE: 1"= 50' HORZ. 1"= 5' VERT.

WHC PROFILE UNIT M

SCALE: 1"= 50' HORZ. 1"= 5' VERT.

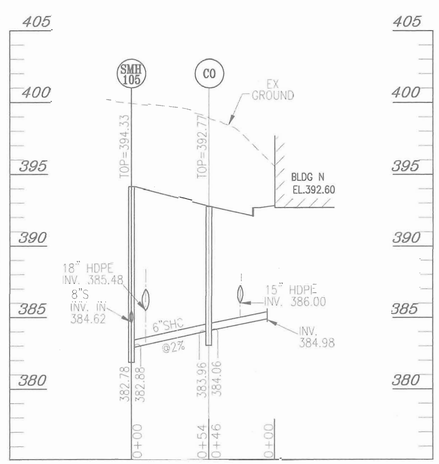

SHC PROFILE UNIT N

SCALE: 1"= 50' HORZ. 1"= 5' VERT.

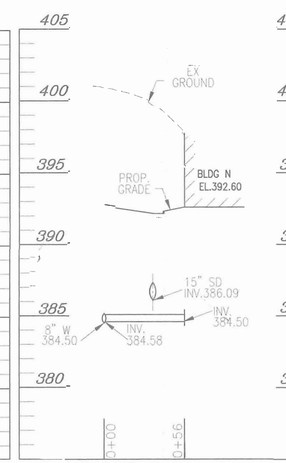

WHC PROFILE UNIT N

SCALE: 1"= 50' HORZ. 1"= 5' VERT.

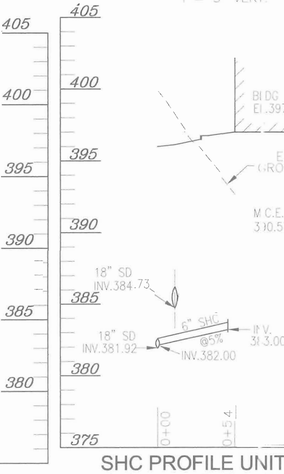

SHC PROFILE UNIT O

SCALE: 1"= 50' HORZ. 1"= 5' VERT.

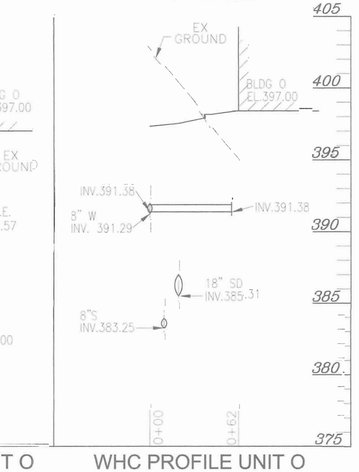

WHC PROFILE UNIT O

SCALE: 1"= 50' HORZ. 1"= 5' VERT.

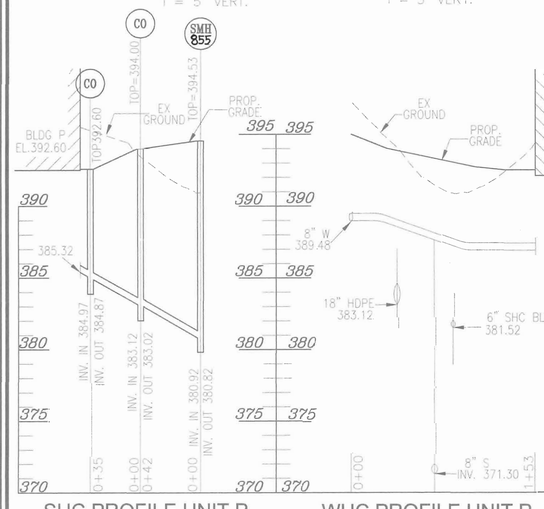

SHC PROFILE UNIT P

SCALE: 1"= 50' HORZ. 1"= 5' VERT.

WHC PROFILE UNIT P

SCALE: 1"= 50' HORZ. 1"= 5' VERT.

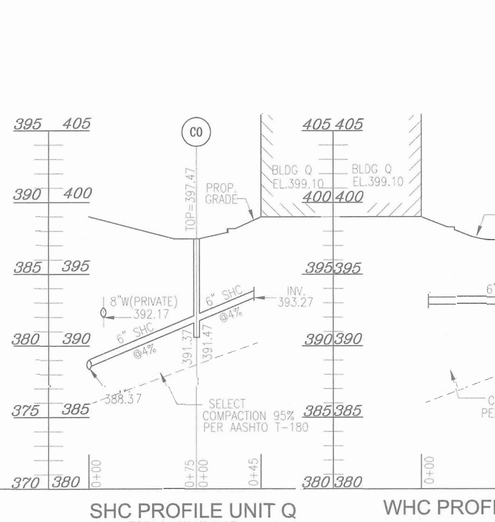

SHC PROFILE UNIT Q

SCALE: 1"= 50' HORZ. 1"= 5' VERT.

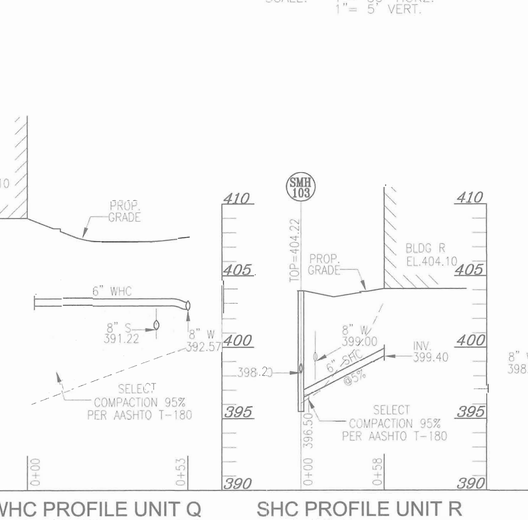

WHC PROFILE UNIT Q

SCALE: 1"= 50' HORZ. 1"= 5' VERT.

SHC PROFILE UNIT R

SCALE: 1"= 50' HORZ. 1"= 5' VERT.

OWNER :

TAYLOR FAMILY LIMITED PARTNERSHIP A
C/O LAND DESIGN & DEVELOPMENT, INC.
8000 MAIN STREET
ELLICOTT CITY, MD 21043
ATTN: MR. DONALD R. REUWER
PHONE: (410) 480-9105

DEVELOPER

LAND DESIGN & DEVELOPMENT, INC.
8000 MAIN STREET
ELLICOTT CITY, MD 21043
ATTN: MR. DONALD R. REUWER
PHONE: (410) 480-9105

APPROVED: HOWARD COUNTY DEPARTMENT OF PLANNING AND ZONING

CHIEF, DEVELOPMENT ENGINEERING DIVISION — DATE 11/4/03

CHIEF, DIVISION OF LAND DEVELOPMENT — DATE 2/10/04

DIRECTOR — DATE 2/20/04

SITE DEVELOPMENT PLAN
PROFILES
VILLAGE CREST
PART OF PARCEL D-1
PHASE 1,2,3 , APT. BLDGS. A-M&R
211 AGE RESTRICTED ADULT HOUSING UNITS
TAX MAP #25 BLOCK 20 — PARCEL P/O 98
2ND ELECTION DISTRICT — HOWARD COUNTY, MARYLAND

FREDERICK WARD ASSOCIATES, INC.
ARCHITECTS | ENGINEERS | PLANNERS | SURVEYORS
7125 RIVERWOOD DRIVE
COLUMBIA, MARYLAND 21046-2354
410-720-6900
410-720-6226 fax
www.frederickward.com

STATE OF MARYLAND — ROBERT J. JAMES — No. 14135 — PROFESSIONAL ENGINEER

DESIGN BY:	RJ
DRAWN BY:	RJ
CHECKED BY:	RHV
DATE:	SEPT. 2003
SCALE:	AS SHOWN
W.O. NO.:	2018121.00

SHEET 12 OF 16

SDP-02-94

N:\PROJECTS\2018121\ENGR\dwg\Sdp-AP1\094PGP.dwg Fri Sep 19 16:52:00 2003 E4

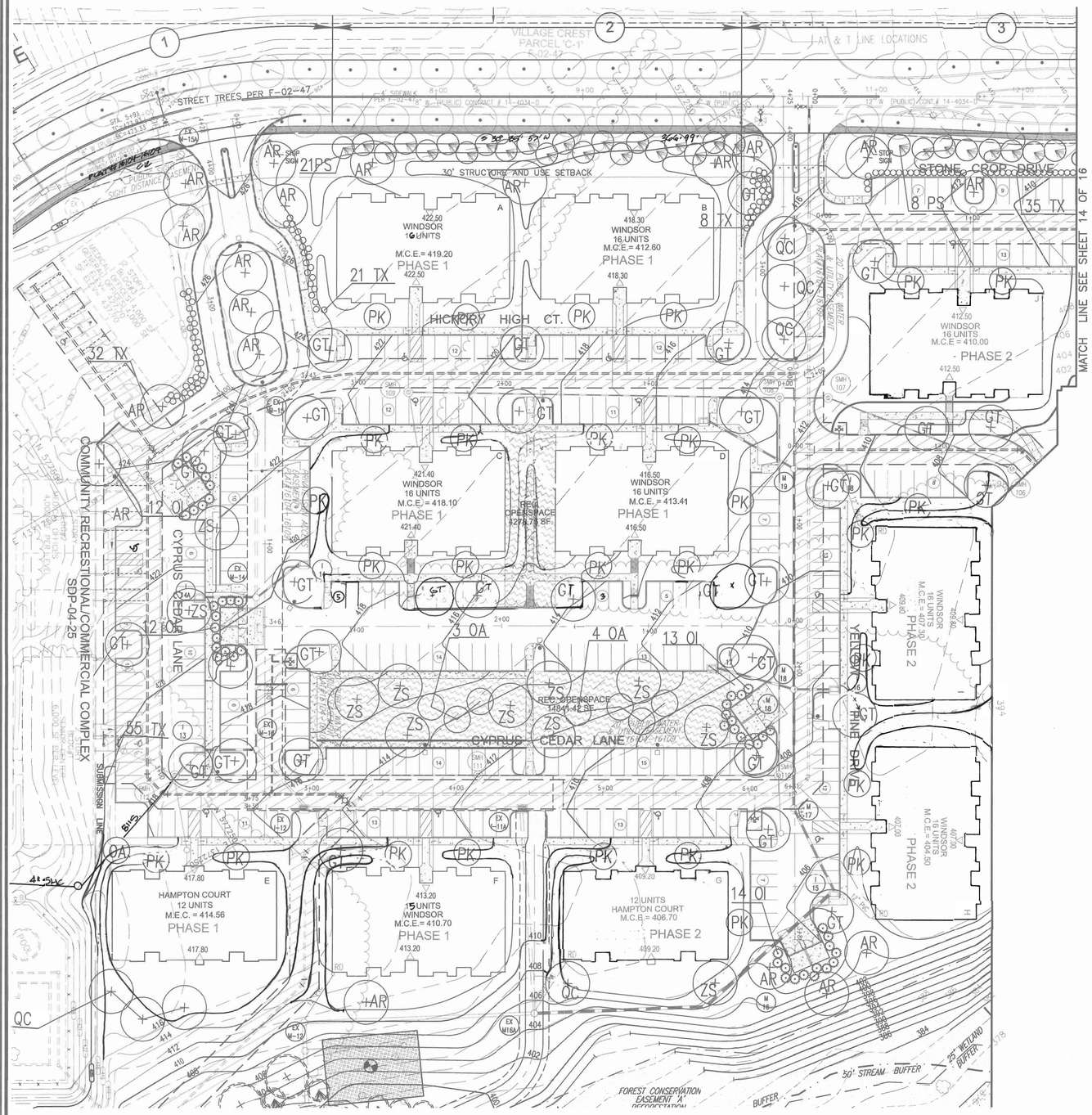

PLAN
SCALE: 1"=50'

LEGEND

Existing Contour 382
Proposed Contour 382
Spot Elevation +82.53
Direction of Flow
Existing Trees to Remain
Light Poles — Overhead
Shade Trees
Shade Trees LANDSCAPING FOR POND1 PER F-02-47
Evergreen Trees
Shrubs/Hedge
Flowering Trees
Perimeter Landscape Edge 2
EVERGREEN TREE LANDSCAPING FOR POND1 PER F-02-47

SCHEDULE C RESIDENTIAL DEVELOPMENT INTERNAL LANDSCAPING	
NUMBER OF DWELLING UNITS	267
NUMBER OF TREES REQUIRED (1:3 DU APTS)	89
NUMBER OF TREES PROVIDED SHADE TREES OTHER TREES (2:1 SUBSTITUTION)	 45 88

SCHEDULE B PARKING LOT INTERNAL LANDSCAPING	
NUMBER OF PARKING SPACES	438
NUMBER OF ISLANDS REQUIRED	44
NUMBER ISLANDS PROVIDED @ 200 SF/ISLAND	44
NUMBER OF TREES REQUIRED	44
NUMBER OF TREES PROVIDED SHADE TREES OTHER TREES (2:1 SUBSTITUTION)	 44 –

1. ALL PLANT MATERIALS SHALL BE FULL AND HEAVY, BE WELL FORMED AND SYMMETRICAL, CONFORM TO THE MOST CURRENT AAN SPECIFICATIONS AND BE INSTALLED IN ACCORDANCE WITH LCAMW PLANTING SPECIFICATIONS.
2. CONTRACTOR SHALL VERIFY LOCATION OF ALL UNDERGROUND UTILITIES PRIOR TO DIGGING.
3. FINAL LOCATION OF PLANT MATERIAL MAY NEED TO VARY TO MEET FINAL FIELD CONDITIONS. TREES SHALL NOT BE PLANTED IN THE BOTTOM OF DRAINAGE SWALES.
4. CONTRACTOR SHALL VERIFY PLANT QUANTITIES PRIOR TO BIDDING. IF PLAN DIFFERS FROM LANDSCAPE SCHEDULE, THE PLAN SHALL GOVERN.
5. AN ADDITIONAL 3 SHADE TREES AND 4 EVERGREEN TREES ARE REQUIRED ON THE SDP ADJACENT TO BUILDING P TO AID IN BUFFERING THE BUILDING FROM THE SCENIC ROAD. THE TYPE B BUFFER FOR THE ADJACENT SWM FACILITY IS PROVIDED ON THE FINAL PLAN.
6. EXISTING PERIMETER LANDSCAPING SHOWN BONDED PER F-02-47.

SCHEDULE A PERIMETER LANDSCAPE EDGE						
CATEGORY	ADJACENT TO ROADWAYS					
PERIMETER/FRONTAGE DESIGNATION LANDSCAPE TYPE	1 E	2 B	3 E	4 D	5 E	6 B
LINEAR FEET OF ROADWAY FRONTAGE/PERIMETER	210	280	260	30	45	400
CREDIT FOR EXISTING VEGETATION (YES, NO, LINEAR FEET DESCRIBE BELOW IF NEEDED)	No	No	No	No	No	No
CREDIT FOR WALL, FENCE OR BERM (YES, NO, LINEAR FEET DESCRIBE BELOW IF NEEDED)	No	No	No	No	No	No
NUMBER OF PLANTS REQUIRED SHADE TREES EVERGREEN TREES SHRUBS	1:40 5 – 1:04 53	1:50 6 1:40 7 –	1:40 7 – 1:04 65	1:60 1 1:10 3 –	1:40 1 – 1:04 11	1:50 8 1:40 10 –
NUMBER OF PLANTS PROVIDED SHADE TREES EVERGREEN TREES OTHER TREES (2:1 SUBSTITUTION) SHRUBS (10:1 SUBSTITUTION) DESCRIBE PLANT SUBSTITUTION CREDITS BELOW IF NEEDED)	5 – – 53	3 21 – –	2 10 – 65	1 – – 13	1 – – 11	8 10 – –

LANDSCAPE SCHEDULE				
KEY	QUAN.	BOTANICAL NAME	SIZE	REM.
AR	22	ACER RUBRUM 'OCTOBER GLORY' OCTOBER GLORY RED MAPLE	2 1/2"–3" Cal.	B & B
GT	47	GLEDITSIA TRI. INERMIS 'SHADEMASTER' SHADEMASTER THORNLESS HONEYLOCUST	2 1/2"–3" Cal.	B & B
OI	143	OSMANTHUS ILICIFOLIUS 'GULF TIDE' SWEET HOLLY	3' – 3 1/2' Ht.	B & B
OA	11	OXYDENDRUM ARBOREUM SOURWOOD	8' – 10' Ht.	B & B
PS	64	PINUS STROBUS EASTERN WHITE PINE	6 – 8' Ht.	B & B
PK	36	PRUNUS SERRULATA 'KWANZAN' KWANZAN CHERRY	1 1/2"–2" Cal.	B & B
QC	13	QUERCUS COCCINEA SCARLET OAK	2 1/2"–3" Cal.	B & B
TX	39	TAXUS X MEDIA 'DENSIFORMIS' DENSIFORMIS YEW	30"– 36" Ht.	B & B
ZS	16	ZELKOVA SERRATA 'VILLAGE GREEN' VILLAGE GREEN ZELKOVA	2 1/2"–3" Cal.	B & B

GENERAL NOTES

1. This plan has been prepared in accordance with the provisions of Section 16.124 of the Howard County Code and the Landscape Manual
2. Financial Surety for the required landscaping has been posted as a part of the DPW Developer's Agreement in the amount of $55,110.00
3. Light poles to be Kim Lighting standard Entablature, 25' black steel round poles, flush mount. 250 watt metal Halide.
4. See Sediment & Erosion Control Detail Sheet for planting details.

DEVELOPER'S BUILDER'S CERTIFICATE

I/WE CERTIFY THAT THE LANDSCAPING SHOWN ON THIS PLAN WILL BE DONE ACCORDING TO THE PLAN, SECTION 16.124 OF THE HOWARD COUNTY CODE AND THE HOWARD COUNTY LANDSCAPE MANUAL. I/WE FURTHER CERTIFY THAT UPON COMPLETION, A CERTIFICATION OF LANDSCAPE INSTALLATION, ACCOMPANIED BY AN EXECUTED ONE(1) YEAR GUARANTEE OF PLANT MATERIALS, WILL BE SUBMITTED TO THE DEPARTMENT OF PLANNING AND ZONING.

SIGNATURE OF DEVELOPER DONALD REUWER — DATE 10/17/03

OWNER:
TAYLOR FAMILY LIMITED PARTNERSHIP A
C/O LAND DESIGN & DEVELOPMENT, INC.
8000 MAIN STREET
ELLICOTT CITY, MD 21043
ATTN: MR. DONALD R. REUWER
PHONE: (410) 480-9105

DEVELOPER
LAND DESIGN & DEVELOPMENT, INC.
8000 MAIN STREET
ELLICOTT CITY, MD 21043
ATTN: MR. DONALD R. REUWER
PHONE: (410) 480-9105

APPROVED: HOWARD COUNTY DEPARTMENT OF PLANNING AND ZONING

CHIEF, DEVELOPMENT ENGINEERING DIVISION — DATE 11/4/03
CHIEF, DIVISION OF LAND DEVELOPMENT — DATE 2/19/04
DIRECTOR — DATE 4/27/04

SITE DEVELOPMENT PLAN
LANDSCAPE PLAN
VILLAGE CREST
PART OF PARCEL D-1

PHASE 1,2,3 , APT. BLDGS. A-M&R
211 AGE RESTRICTED ADULT HOUSING UNITS
TAX MAP #25 BLOCK 20 — PARCEL P/O 98
2ND ELECTION DISTRICT — HOWARD COUNTY, MARYLAND

FREDERICK WARD ASSOCIATES, INC.
ARCHITECTS | ENGINEERS | PLANNERS | SURVEYORS
7125 RIVERWOOD DRIVE
COLUMBIA, MARYLAND 21046–2354
410–720–6900
410–720–6226 fax
www.frederickward.com

STATE OF MARYLAND — ROBERT H. VOGEL — No. 16193 — PROFESSIONAL ENGINEER

DESIGN BY: MHM
DRAWN BY: RJ
CHECKED BY: MHM
DATE: SEPT. 2003
SCALE: 1"=50'
W.O. NO.: 2018121.00

SHEET 13 OF 16

SDP-02-94

C:\CIS\2018121\ENGR\dwg\Sdp-APT\TabNPLAN.dwg Fri Oct 17 13:33:48 2003 RDMA

PLAN
SCALE: 1"=50'

LEGEND

- Existing Contour — 382
- Proposed Contour — 382
- Spot Elevation — 482.53
- Direction of Flow
- Existing Trees to Remain
- Light Poles — Overhead
- Shade Trees
- Shade Trees LANDSCAPING FOR POND2 PER F-02-47
- Shade Trees LANDSCAPING FOR TYPE B BUFFER FOR SCENIC ROAD PER F-02-47
- Evergreen Trees
- Shrubs/Hedge
- Flowering Trees
- Perimeter Landscape Edge — 2
- EVERGREEN TREE LANDSCAPING FOR POND2 PER F-02-47
- EVERGREEN TREE LANDSCAPING FOR TYPE B BUFFER FOR SCENIC ROAD PER F-02-47

NOTES:
1. SEE "LANDSCAPE SPECIFICATION GUIDELINES FOR BALTIMORE-WASHINGTON METROPOLITAN AREA" FOR ADDITIONAL MATERIAL, PRODUCT, AND PROCEDURE SPECIFICATIONS.
2. SEE "LANDSCAPE GUIDELINES" FOR SUPPORTING TREES LARGER THAN 2-1/2" CALIPER.
3. PLACE UPRIGHT STAKES PARALLEL TO WALKS & BUILDINGS.
4. KEEP MULCH 1" FROM TRUNK.
5. SEE ARCHITECTURAL PLANS FOR ADDITIONAL PLANTINGS WHICH EXCEED HOWARD COUNTY MINIMUM REQUIREMENTS.
6. TREES ARE NOT TO BE PLANTED OVER PRIVATE SEWAGE EASEMENT.

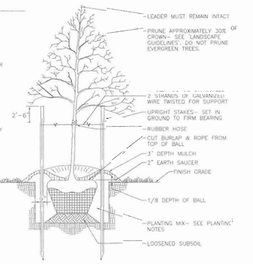

TREE PLANTING AND STAKING
DECIDUOUS TREES UP TO 2-1/2" CALIPER — NOT TO SCALE

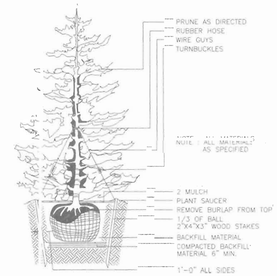

TYPICAL EVERGREEN TREE PLANTING DETAIL
NOT TO SCALE

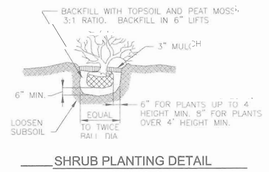

SHRUB PLANTING DETAIL
NOT TO SCALE

APPROVED: HOWARD COUNTY DEPARTMENT OF PLANNING AND ZONING

CHIEF, DEVELOPMENT ENGINEERING DIVISION — DATE 11/4/03
CHIEF, DIVISION OF LAND DEVELOPMENT — DATE 11/10/03
DIRECTOR — DATE 11/10/03

OWNER :
TAYLOR FAMILY LIMITED PARTNERSHIP A
C/O LAND DESIGN & DEVELOPMENT, INC.
8000 MAIN STREET
ELLICOTT CITY, MD 21043
ATTN: MR. DONALD R. REUWER
PHONE: (410) 480-9105

DEVELOPER
LAND DESIGN & DEVELOPMENT, INC.
8000 MAIN STREET
ELLICOTT CITY, MD 21043
ATTN: MR. DONALD R. REUWER
PHONE: (410) 480-9105

SITE DEVELOPMENT PLAN
LANDSCAPE PLAN
VILLAGE CREST
PART OF PARCEL D-1

PHASE 1,2,3 , APT. BLDGS. A-M&R
211 AGE RESTRICTED ADULT HOUSING UNITS

TAX MAP #25 BLOCK 20 — PARCEL P/O 98
2ND ELECTION DISTRICT — HOWARD COUNTY, MARYLAND

FREDERICK WARD ASSOCIATES, INC.
ARCHITECTS | ENGINEERS | PLANNERS | SURVEYORS
7125 RIVERWOOD DRIVE
COLUMBIA, MARYLAND 21046-2354
410-720-6900
410-720-6226 fax
www.frederickward.com

STATE OF MARYLAND — No. 19251 — PROFESSIONAL ENGINEER

DESIGN BY:	MHM
DRAWN BY:	RJ
CHECKED BY:	MHM
DATE:	SEPT. 2003
SCALE:	AS SHOWN
W.O. NO.:	2018121.00

SHEET 14 OF 16

SDP-02-94

M:\PROJECTS\2018121\ENGR\dwg\Sdp APT\14LNPLAN.dwg Sun Sep 21 11:29:33 2003 E4

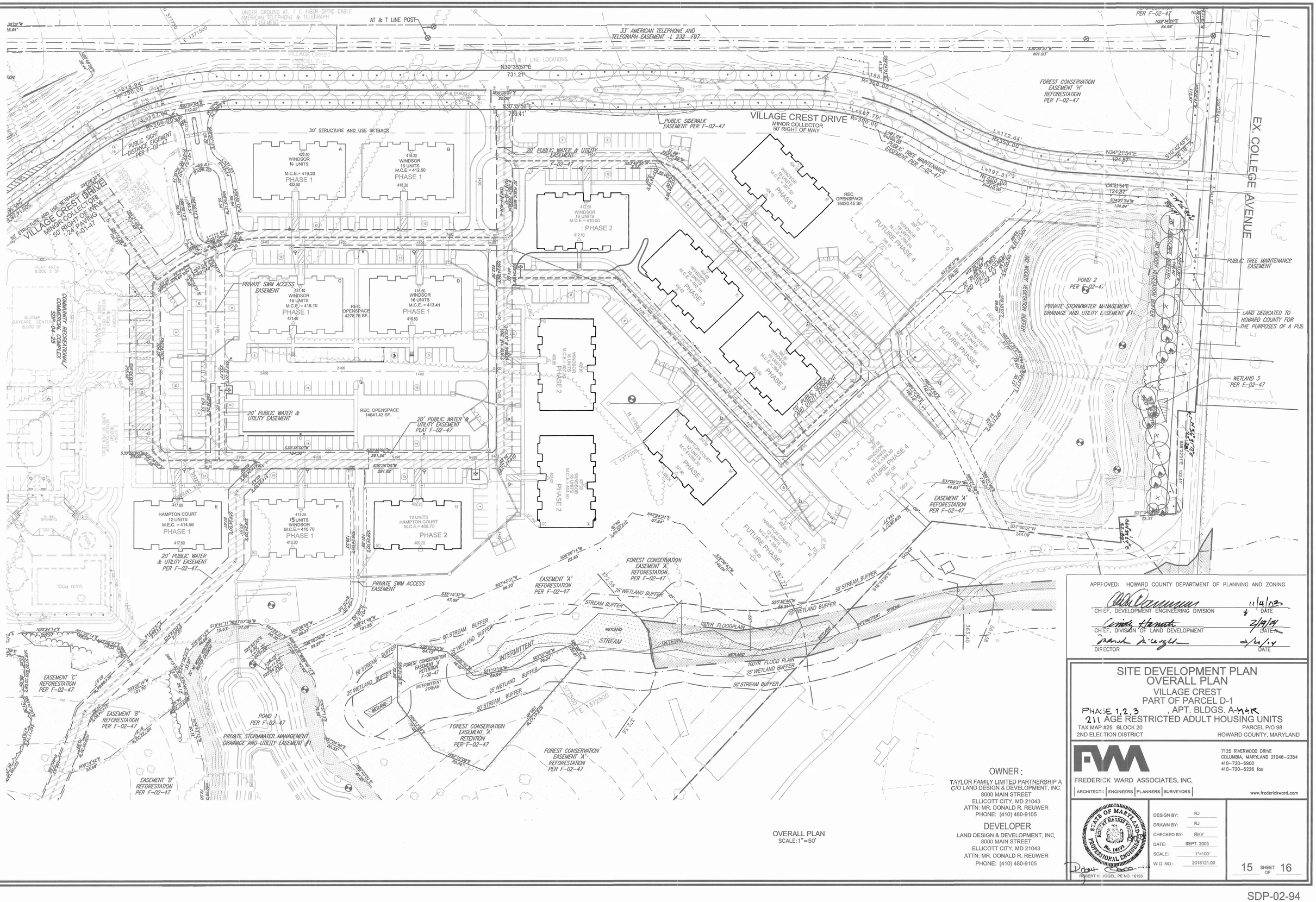

OVERALL PLAN
SCALE: 1"=50'

OWNER :
TAYLOR FAMILY LIMITED PARTNERSHIP A
C/O LAND DESIGN & DEVELOPMENT, INC.
8000 MAIN STREET
ELLICOTT CITY, MD 21043
ATTN: MR. DONALD R. REUWER
PHONE: (410) 480-9105

DEVELOPER
LAND DESIGN & DEVELOPMENT, INC.
8000 MAIN STREET
ELLICOTT CITY, MD 21043
ATTN: MR. DONALD R. REUWER
PHONE: (410) 480-9105

APPROVED: HOWARD COUNTY DEPARTMENT OF PLANNING AND ZONING

CHIEF, DEVELOPMENT ENGINEERING DIVISION — DATE 11/4/03

CHIEF, DIVISION OF LAND DEVELOPMENT — DATE 2/9/04

DIRECTOR — DATE 2/9/04

SITE DEVELOPMENT PLAN
OVERALL PLAN
VILLAGE CREST
PART OF PARCEL D-1

PHASE 1,2,3 , APT. BLDGS. A-4&B
211 AGE RESTRICTED ADULT HOUSING UNITS

TAX MAP #25 BLOCK 20 — PARCEL P/O 98
2ND ELECTION DISTRICT — HOWARD COUNTY, MARYLAND

FREDERICK WARD ASSOCIATES, INC.
ARCHITECTS | ENGINEERS | PLANNERS | SURVEYORS
7125 RIVERWOOD DRIVE
COLUMBIA, MARYLAND 21046-2354
410-720-6900
410-720-8226 fax
www.frederickward.com

STATE OF MARYLAND — ROBERT HARRIS VOGEL — No. 16193 — PROFESSIONAL ENGINEER
ROBERT H. VOGEL, PE NO. 16193

DESIGN BY:	RJ
DRAWN BY:	RJ
CHECKED BY:	RHV
DATE:	SEPT. 2003
SCALE:	1"=100'
W.O. NO.:	2018121.00

SHEET 15 OF 16

SDP-02-94

M:\PROJECTS\2018121\ENGR\dwg\Sdp-APT\15OVALL.dwg Fri Oct 17 13:35:18 2003 HOWA

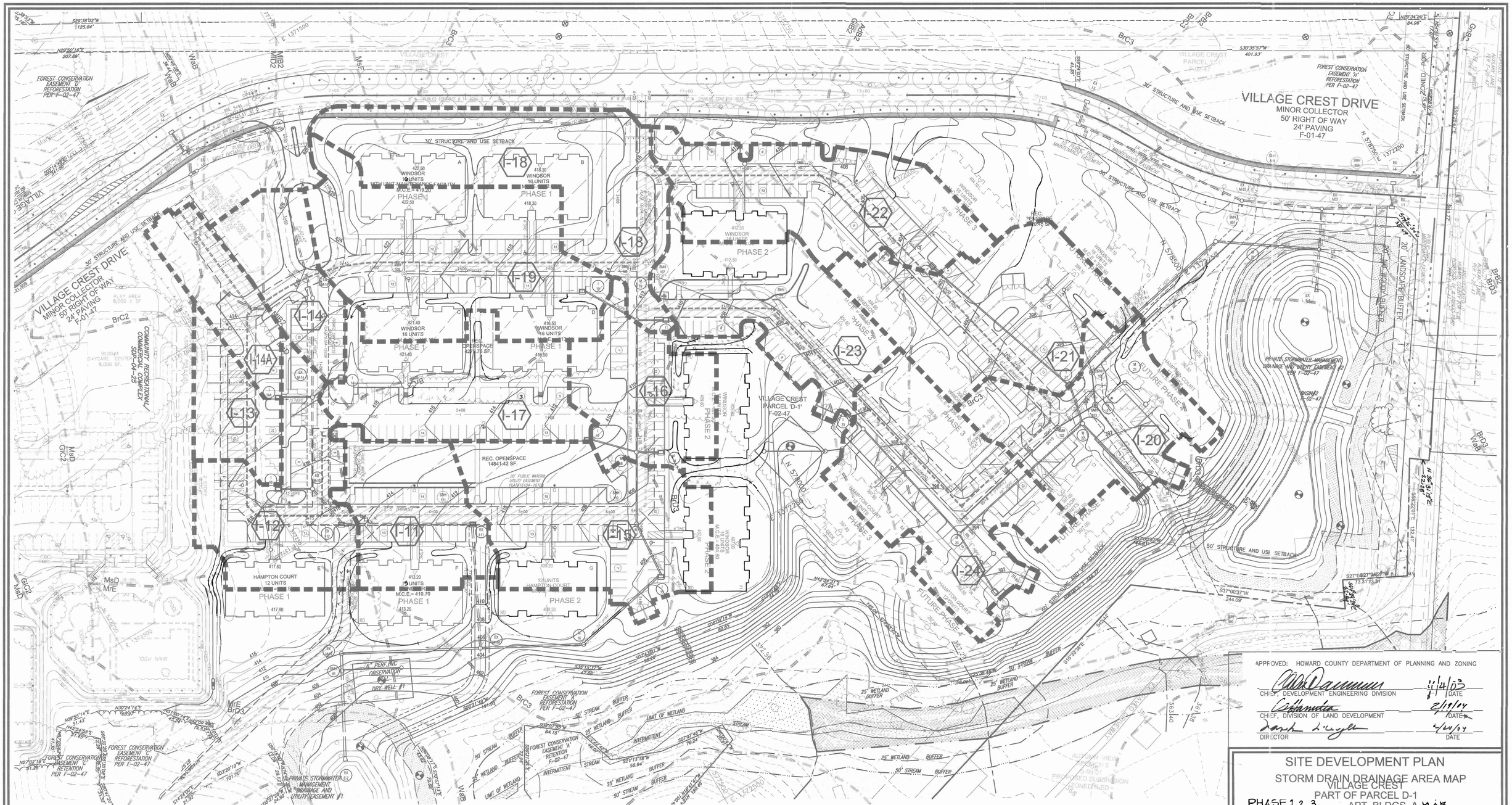

DRAINAGE AREA TABULATIONS

No.	Area	'C'	% Imp.	Soil Types	Zone
I-11	0.55 AC.	0.51	60	C	POR
I-12	0.86 AC.	0.38	47	C	POR
I-13	0.79 AC.	0.42	29	C	POR
I-14	1.59 AC.	0.60	35	B AND C	POR
I-14A	0.31 AC.	0.60	35	B AND C	POR
I-15	0.95 AC.	0.62	60	C	POR
I-16	0.53 AC.	0.69	64	C	POR
I-17	0.74 AC.	0.67	76	B AND C	POR
I-18	1.02 AC.	0.69	64	C	POR
I-19	1.18 AC.	0.64	72	B AND C	POR
I-20	0.76 AC.	0.71	75	C	POR
I-21	0.91 AC.	0.75	75	C	POR
I-22	0.89 AC.	0.75	69	B AND C	POR
I-23	0.70 AC.	0.75	84	C	POR
I-24	0.97 AC.	0.75	79	C	POR

LEGEND

Existing Contour ——582——
Proposed Contour ——582——
Existing Trees to Remain
FOREST CONSERVATION EASEMENT
DRAINAGE DIVIDE

PLAN
SCALE: 1"=50'

APPROVED: HOWARD COUNTY DEPARTMENT OF PUBLIC WORKS

CHIEF, BUREAU OF HIGHWAYS DATE

OWNER :
TAYLOR FAMILY LIMITED PARTNERSHIP A
C/O LAND DESIGN & DEVELOPMENT, INC.
8000 MAIN STREET
ELLICOTT CITY, MD 21043
ATTN: MR. DONALD R. REUWER
PHONE: (410) 480-9105

DEVELOPER
LAND DESIGN & DEVELOPMENT, INC.
8000 MAIN STREET
ELLICOTT CITY, MD 21043
ATTN: MR. DONALD R. REUWER
PHONE: (410) 480-9105

APPROVED: HOWARD COUNTY DEPARTMENT OF PLANNING AND ZONING

CHIEF, DEVELOPMENT ENGINEERING DIVISION — DATE 5/14/03
CHIEF, DIVISION OF LAND DEVELOPMENT — DATE 2/19/04
DIRECTOR — DATE 4/29/04

SITE DEVELOPMENT PLAN
STORM DRAIN DRAINAGE AREA MAP
VILLAGE CREST
PART OF PARCEL D-1
PHASE 1, 2, 3 , APT. BLDGS. A-M & R
211 AGE RESTRICTED ADULT HOUSING UNITS
TAX MAP #25 BLOCK 20 PARCEL P/O 98
2ND ELECTION DISTRICT HOWARD COUNTY, MARYLAND

FREDERICK WARD ASSOCIATES, INC.
ARCHITECTS | ENGINEERS | PLANNERS | SURVEYORS
7125 RIVERWOOD DRIVE
COLUMBIA, MARYLAND 21046-2354
410-720-6900
410-720-6226 fax
www.frederickward.com

STATE OF MARYLAND — ROBERT HARRIS WELLS — No. 14193 — PROFESSIONAL ENGINEER
ROBERT H. WELLS, PE NO. 14193

DESIGN BY:	RJ
DRAWN BY:	RJ
CHECKED BY:	RHW
DATE:	SEPT. 2003
SCALE:	AS SHOWN
W.O. NO.:	2018121.00

SHEET 16 OF 16

SDP-02-94

K:\PROJECTS\2018121\ENGR\dwg\Sdp-APT\17DAM.dwg Fri Oct 17 13:37:16 2003 RHWA

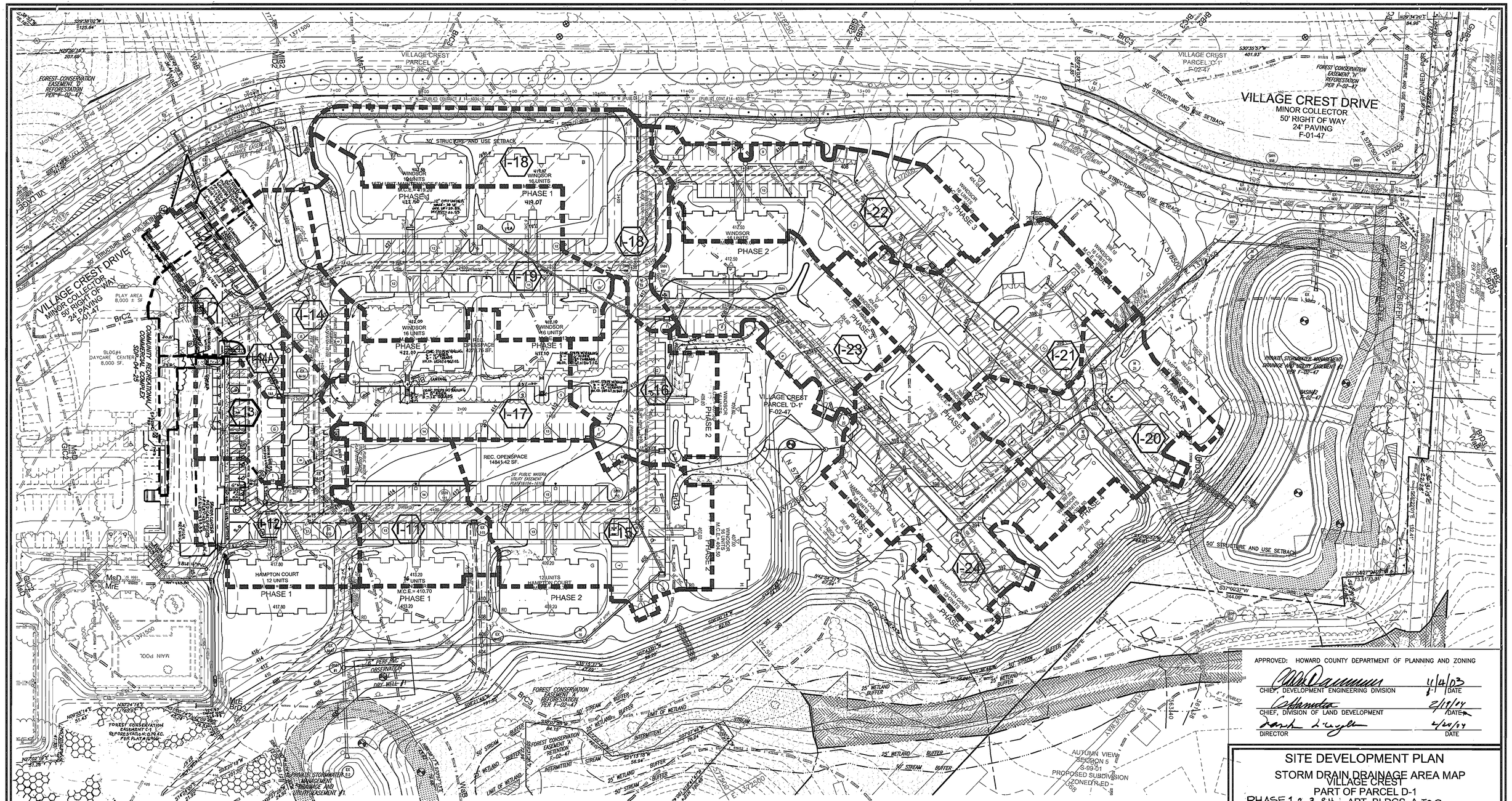

DRAINAGE AREA TABULATIONS

No.	Area	'C'	% Imp.	Soil Types	Zone
I-11	0.55 AC.	0.51	60	C	POR
I-12	0.75 AC.	0.38	47	C	POR
I-13	0.79 AC.	0.42	29	C	POR
I-14	1.59 AC.	0.60	35	B AND C	POR
I-14A	0.38 AC.	0.60	35	B AND C	POR
I-15	0.95 AC.	0.62	60	C	POR
I-16	0.53 AC.	0.69	64	C	POR
I-17	0.74 AC.	0.67	76	B AND C	POR
I-18	1.02 AC.	0.69	64	C	POR
I-19	1.18 AC.	0.64	72	B AND C	POR
I-20	0.76 AC.	0.71	75	C	POR
I-21	0.91 AC.	0.75	75	C	POR
I-22	0.89 AC.	0.75	69	B AND C	POR
I-23	0.70 AC.	0.75	84	C	POR
I-24	0.97 AC.	0.75	79	C	POR
I-15A	0.13AC.	0.60	35	B AND C	POR

LEGEND

Existing Contour 382
Proposed Contour 82
Existing Trees to Remain
FOREST CONSERVATION EASEMENT
DRAINAGE DIVIDE

PLAN

SCALE: 1"=50'

NO.	REVISION	DATE
4	REVISE WHC AND SHC LABELS BUILDING G	6-27-07
3	REFLECTING CHANGES DONE PER SDP-04-25	
	RESITED/REDESIGNED THE SENIOR CENTER	1/10/2005
2	EXCHANGE UNIT CONFIG. BETWEEN BLG. 'A' AND BLDG. 'F'	
	ADDED PHASE 3 GRADING CHANGE AROUND BLDGS.,	
	ADDED SHD TO MH112.	
1	ADDED PHASE 2 GRADING CHANGE AROUND BLDG.	

APPROVED: HOWARD COUNTY DEPARTMENT OF PUBLIC WORKS.

CHIEF, BUREAU OF HIGHWAYS DATE

APPROVED: HOWARD COUNTY DEPARTMENT OF PLANNING AND ZONING

CHIEF, DEVELOPMENT ENGINEERING DIVISION — DATE 4/4/03

CHIEF, DIVISION OF LAND DEVELOPMENT — DATE 2/19/04

DIRECTOR — DATE 4/20/04

OWNER :

TAYLOR FAMILY LIMITED PARTNERSHIP A
C/O LAND DESIGN & DEVELOPMENT, INC.
8000 MAIN STREET
ELLICOTT CITY, MD 21043
ATTN: MR. DONALD R. REUWER
PHONE: (410) 480-9105

DEVELOPER

LAND DESIGN & DEVELOPMENT, INC.
8000 MAIN STREET
ELLICOTT CITY, MD 21043
ATTN: MR. DONALD R. REUWER
PHONE: (410) 480-9105

SITE DEVELOPMENT PLAN

STORM DRAIN DRAINAGE AREA MAP
VILLAGE CREST
PART OF PARCEL D-1

PHASE 1, 2, 3, & 4, APT. BLDGS. A-TO R
268 AGE RESTRICTED ADULT HOUSING UNITS

TAX MAP #25 BLOCK 20 — PARCEL P/O 98
2ND ELECTION DISTRICT — HOWARD COUNTY, MARYLAND

FREDERICK WARD ASSOCIATES, INC.
ARCHITECTS | ENGINEERS | PLANNERS | SURVEYORS |
7125 RIVERWOOD DRIVE
COLUMBIA, MARYLAND 21046-2354
410-720-6900
410-720-6226 fax
www.frederickward.com

STATE OF MARYLAND — ROBERT HARRIS VOGEL — No. 16193 — PROFESSIONAL ENGINEER
ROBERT H. VOGEL, PE NO. 16193

DESIGN BY:	RJ
DRAWN BY:	RJ
CHECKED BY:	RHV
DATE:	SEPT. 2003
SCALE:	AS SHOWN
W.O. NO.:	2018121.00

SHEET 16 OF 16

SDP-02-94

M:\PROJECTS\2018121\ENGR\dwg\SDP-APT\17DAM.dwg Fri Oct 17 13:37:16 2003 ROMA

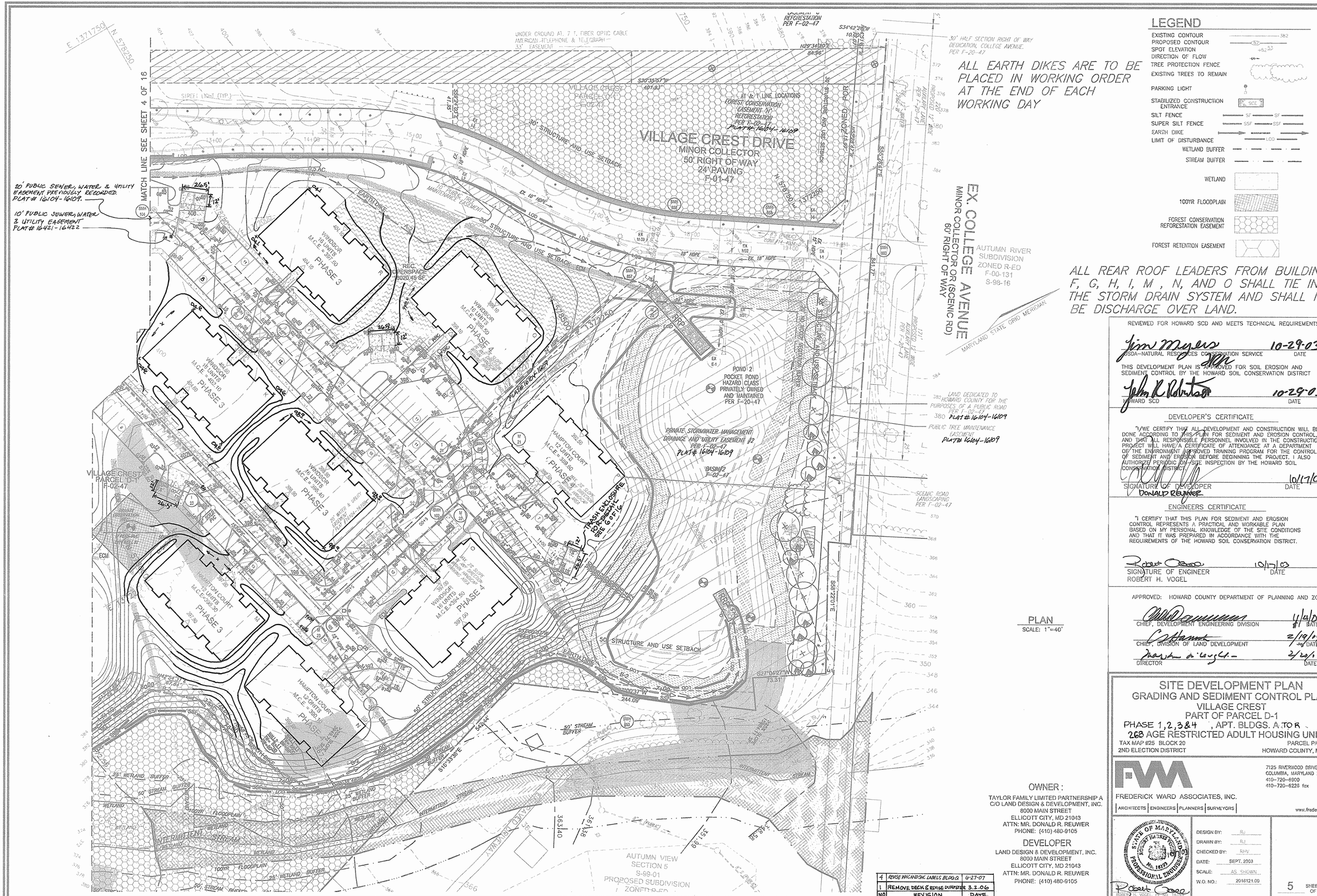

PLAN
SCALE: 1"=40'

LEGEND

- EXISTING CONTOUR — 382
- PROPOSED CONTOUR — 382
- SPOT ELEVATION — +382.53
- DIRECTION OF FLOW
- TREE PROTECTION FENCE
- EXISTING TREES TO REMAIN
- PARKING LIGHT
- STABILIZED CONSTRUCTION ENTRANCE — SCE
- SILT FENCE — SF
- SUPER SILT FENCE — SSF
- EARTH DIKE
- LIMIT OF DISTURBANCE — LOD
- WETLAND BUFFER
- STREAM BUFFER
- WETLAND
- 100YR FLOODPLAIN
- FOREST CONSERVATION REFORESTATION EASEMENT
- FOREST RETENTION EASEMENT

REVIEWED FOR HOWARD SCD AND MEETS TECHNICAL REQUIREMENTS

Jim Myers — 10-29-03
USDA–NATURAL RESOURCES CONSERVATION SERVICE — DATE

THIS DEVELOPMENT PLAN IS APPROVED FOR SOIL EROSION AND SEDIMENT CONTROL BY THE HOWARD SOIL CONSERVATION DISTRICT

John R. Robertson — 10-29-03
HOWARD SCD — DATE

DEVELOPER'S CERTIFICATE

"I/WE CERTIFY THAT ALL DEVELOPMENT AND CONSTRUCTION WILL BE DONE ACCORDING TO THIS PLAN FOR SEDIMENT AND EROSION CONTROL, AND THAT ALL RESPONSIBLE PERSONNEL INVOLVED IN THE CONSTRUCTION PROJECT WILL HAVE A CERTIFICATE OF ATTENDANCE AT A DEPARTMENT OF THE ENVIRONMENT APPROVED TRAINING PROGRAM FOR THE CONTROL OF SEDIMENT AND EROSION BEFORE BEGINNING THE PROJECT. I ALSO AUTHORIZE PERIODIC ON-SITE INSPECTION BY THE HOWARD SOIL CONSERVATION DISTRICT."

SIGNATURE OF DEVELOPER — 10/17/03 DATE
DONALD REUWER

ENGINEERS CERTIFICATE

"I CERTIFY THAT THIS PLAN FOR SEDIMENT AND EROSION CONTROL REPRESENTS A PRACTICAL AND WORKABLE PLAN BASED ON MY PERSONAL KNOWLEDGE OF THE SITE CONDITIONS AND THAT IT WAS PREPARED IN ACCORDANCE WITH THE REQUIREMENTS OF THE HOWARD SOIL CONSERVATION DISTRICT.

Robert Vogel — 10/17/03
SIGNATURE OF ENGINEER — DATE
ROBERT H. VOGEL

APPROVED: HOWARD COUNTY DEPARTMENT OF PLANNING AND ZONING

CHIEF, DEVELOPMENT ENGINEERING DIVISION — 4/1/03 DATE
CHIEF, DIVISION OF LAND DEVELOPMENT — 2/19/04 DATE
DIRECTOR — 2/20/04 DATE

NO	REVISION	DATE
4	REVISE W&S AND SWM LABELS BLDGS G	6-27-07
1	REMOVE DECK & REVISE DUMPSTER 3.2.06	

OWNER :
TAYLOR FAMILY LIMITED PARTNERSHIP A
C/O LAND DESIGN & DEVELOPMENT, INC.
8000 MAIN STREET
ELLICOTT CITY, MD 21043
ATTN: MR. DONALD R. REUWER
PHONE: (410) 480-9105

DEVELOPER
LAND DESIGN & DEVELOPMENT, INC.
8000 MAIN STREET
ELLICOTT CITY, MD 21043
ATTN: MR. DONALD R. REUWER
PHONE: (410) 480-9105

SITE DEVELOPMENT PLAN
GRADING AND SEDIMENT CONTROL PLAN II
VILLAGE CREST
PART OF PARCEL D-1
PHASE 1, 2, 3 & 4 , APT. BLDGS. A TO R
268 AGE RESTRICTED ADULT HOUSING UNITS
TAX MAP #25 BLOCK 20 — PARCEL P/O 95
2ND ELECTION DISTRICT — HOWARD COUNTY, MARYLAND

FREDERICK WARD ASSOCIATES, INC.
ARCHITECTS | ENGINEERS | PLANNERS | SURVEYORS
7125 RIVERWOOD DRIVE
COLUMBIA, MARYLAND 21046-2354
410-720-6900
410-720-6226 fax
www.frederickward.com

STATE OF MARYLAND — ROBERT HARRIS VOGEL — No. 10175 — PROFESSIONAL ENGINEER
Robert Vogel 10/17/03
ROBERT H. VOGEL, P.E. DATE

DESIGN BY:	RJ
DRAWN BY:	RJ
CHECKED BY:	RHV
DATE:	SEPT. 2003
SCALE:	AS SHOWN
W.O. NO.:	2016121.00

5 SHEET OF 16

SDP-02-94

M:\PROJECTS\2016121\ENGR\dwg\Sdp-APT1115SPLAN.dwg Tue Oct 07 06:36:13 2003 E4

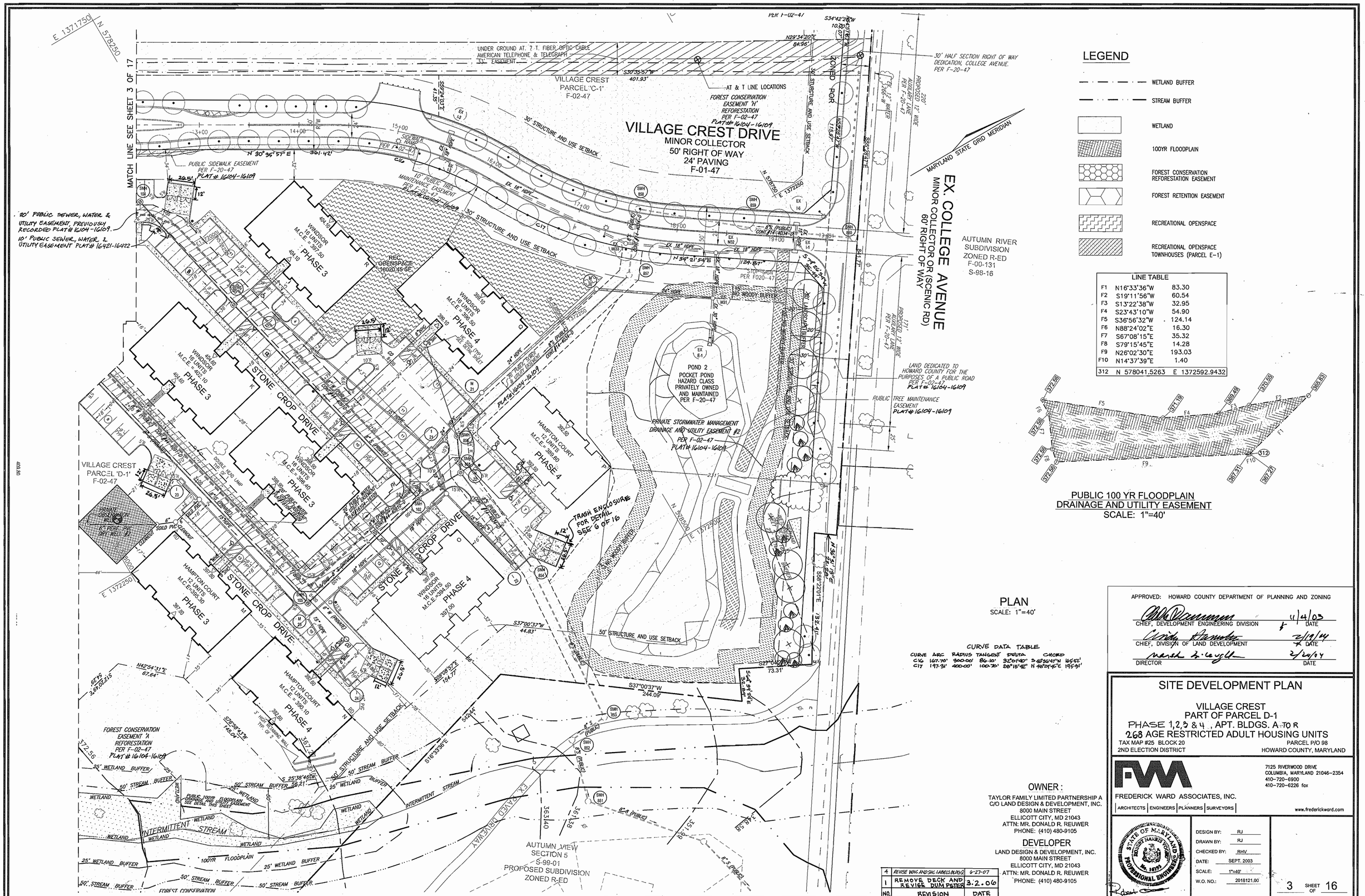
E 1371750 N 578250
MATCH LINE SEE SHEET 3 OF 17
VILLAGE CREST PARCEL 'C-1' F-02-47
VILLAGE CREST PARCEL 'D-1' F-02-47
UNDER GROUND AT. T. FIBER OPTIC CABLE AMERICAN TELEPHONE & TELEGRAPH 33' EASEMENT
AT & T LINE LOCATIONS
FOREST CONSERVATION EASEMENT 'A' REFORESTATION PER F-02-47 PLAT# 16104-16109
VILLAGE CREST DRIVE
MINOR COLLECTOR
50' RIGHT OF WAY
24' PAVING
F-01-47
30' STRUCTURE AND USE SETBACK
10' PUBLIC TREE MAINTENANCE EASEMENT PER F-02-47 PLAT# 16104-16109
PUBLIC SIDEWALK EASEMENT PER F-20-47 PLAT# 16104-16109
20' PUBLIC SEWER, WATER & UTILITY EASEMENT, PREVIOUSLY RECORDED PLAT# 16104-16109.
10' PUBLIC SEWER, WATER, & UTILITY EASEMENT PLAT# 16421-16422
REC. OPENSPACE 16020.45 SF
PHASE 3
PHASE 4
STONE CROP DRIVE
POND 2 POCKET POND HAZARD CLASS PRIVATELY OWNED AND MAINTENED PER F-20-47
PRIVATE STORMWATER MANAGEMENT DRAINAGE AND UTILITY EASEMENT #2 PER F-02-47 PLAT# 16104-16109
LAND DEDICATED TO HOWARD COUNTY FOR THE PURPOSES OF A PUBLIC ROAD PER F-02-47 PLAT# 16104-16109
PUBLIC TREE MAINTENANCE EASEMENT PLAT# 16104-16109
30' HALF SECTION RIGHT OF WAY DEDICATION, COLLEGE AVENUE. PER F-20-47
EX. COLLEGE AVENUE
MINOR COLLECTOR OR (SCENIC RD)
60' RIGHT OF WAY
AUTUMN RIVER SUBDIVISION ZONED R-ED F-00-131 S-98-16
MARYLAND STATE GRID MERIDIAN
TRASH ENCLOSURE FOR DETAIL SEE 6 OF 16
FOREST CONSERVATION EASEMENT 'A' REFORESTATION PER F-02-47 PLAT# 16104-16109
50' STRUCTURE AND USE SETBACK
50' STREAM BUFFER
25' WETLAND BUFFER
WETLAND
INTERMITTENT STREAM
100YR FLOODPLAIN
PUBLIC 100YR FLOODPLAIN DRAINAGE AND UTILITY EASEMENT SEE DETAIL THIS SHEET
EX. PAVED DRIVEWAY
AUTUMN VIEW SECTION 5 S-99-01 PROPOSED SUBDIVISION ZONED R-ED
NO WOODY BUFFER
LANDSCAPE BUFFER
STOP SIGN PER F020-47
PLAN
SCALE: 1"=40'
CURVE DATA TABLE
C16 197.31' 400.00' 100.70' 28°15'42" N 48°54'42"E 195.21'
C17 197.31' 400.00' 100.70' 28°15'42" N 48°54'42"E 195.21'
LEGEND
WETLAND BUFFER
STREAM BUFFER
WETLAND
100YR FLOODPLAIN
FOREST CONSERVATION REFORESTATION EASEMENT
FOREST RETENTION EASEMENT
RECREATIONAL OPENSPACE
RECREATIONAL OPENSPACE TOWNHOUSES (PARCEL E-1)
LINE TABLE
F1 N16°33'36"W 83.30
F2 S19°11'56"W 60.54
F3 S13°22'38"W 32.95
F4 S23°43'10"W 54.90
F5 S36°56'32"W 124.14
F6 N88°24'02"E 16.30
F7 S67°08'15"E 35.32
F8 S79°15'45"E 14.28
F9 N26°02'30"E 193.03
F10 N14°37'39"E 1.40
312 N 578041.5263 E 1372592.9432
PUBLIC 100 YR FLOODPLAIN DRAINAGE AND UTILITY EASEMENT
SCALE: 1"=40'
OWNER :
TAYLOR FAMILY LIMITED PARTNERSHIP A
C/O LAND DESIGN & DEVELOPMENT, INC.
8000 MAIN STREET
ELLICOTT CITY, MD 21043
ATTN: MR. DONALD R. REUWER
PHONE: (410) 480-9105
DEVELOPER
LAND DESIGN & DEVELOPMENT, INC.
8000 MAIN STREET
ELLICOTT CITY, MD 21043
ATTN: MR. DONALD R. REUWER
PHONE: (410) 480-9105
4 REVISE WHC AND SHC LABELS BLDG'S 6-27-07
1 REMOVE DECK AND REVISE DUMPSTER 3.2.06
NO. REVISION DATE
APPROVED: HOWARD COUNTY DEPARTMENT OF PLANNING AND ZONING
CHIEF, DEVELOPMENT ENGINEERING DIVISION 11/4/03 DATE
CHIEF, DIVISION OF LAND DEVELOPMENT 2/19/04 DATE
DIRECTOR 2/24/04 DATE
SITE DEVELOPMENT PLAN
VILLAGE CREST
PART OF PARCEL D-1
PHASE 1,2,3 & 4 , APT. BLDGS. A TO R
268 AGE RESTRICTED ADULT HOUSING UNITS
TAX MAP #25 BLOCK 20 PARCEL P/O 98
2ND ELECTION DISTRICT HOWARD COUNTY, MARYLAND
FREDERICK WARD ASSOCIATES, INC.
7125 RIVERWOOD DRIVE
COLUMBIA, MARYLAND 21046-2354
410-720-6900
410-720-6226 fax
ARCHITECTS | ENGINEERS | PLANNERS | SURVEYORS
www.frederickward.com
STATE OF MARYLAND ROBERT JAMES HOSEY No. 16199 PROFESSIONAL ENGINEER
DESIGN BY: RJ
DRAWN BY: RJ
CHECKED BY: RHV
DATE: SEPT. 2003
SCALE: 1"=40'
W.O. NO.: 2018121.00
SHEET 3 OF 16
SDP-02-94
M:\PROJECTS\2018121\ENGR\dwg\Sdp-APT\03SPLAN.dwg Fri Sep 19 16:42:58 2003 E4
4.0A.80

NO.	REVISION	DATE
1	REMOVE DECK & REVISE DUMPSTER	3.7.06

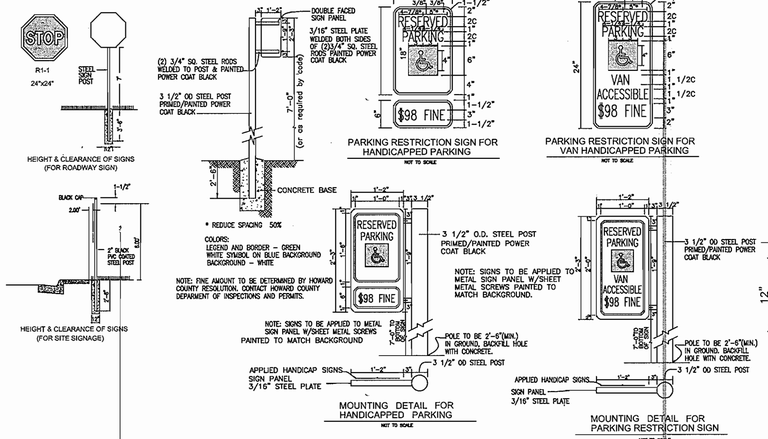

SIGNAGE DETAIL
NOT TO SCALE

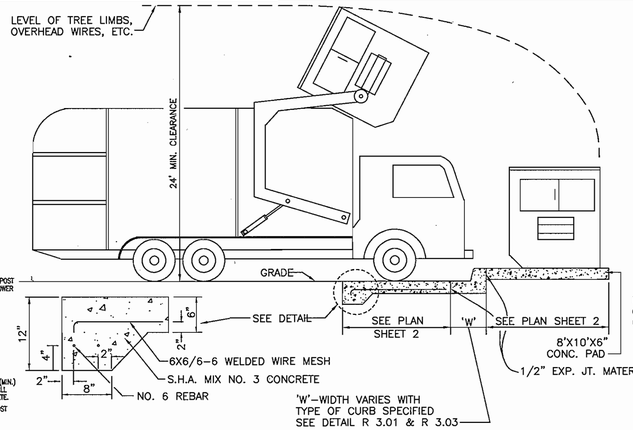

SOLID WASTE SERVICE PAD
HOWARD COUNTY STD. R 11.01
NOT TO SCALE
FOR DUMPSTER ENCLOSURE DETAIL SEE ARCHITECTURAL PLANS

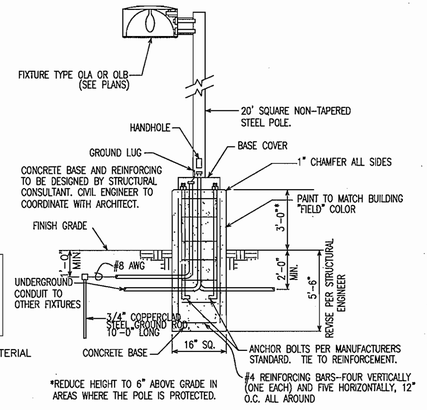

LIGHTING STANDARD
SCALE: NTS

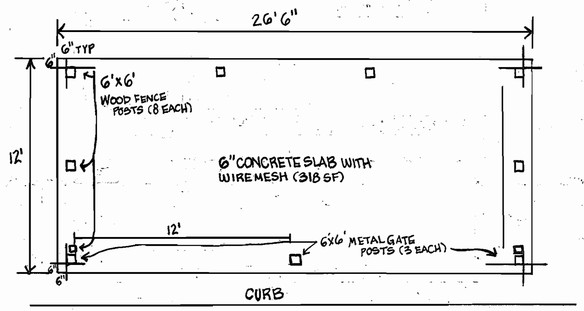

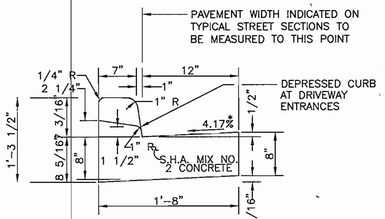

NOTE : DEPRESSED CURB IN HANDICAP ACCESSABLE AREAS SHALL HAVE A 0.0417'(1/2") RISE FROM PAVING TO TOP OF CURB.

STANDARD COMBINATION CURB AND GUTTER
HOWARD COUNTY STANDARD R-3.01
NOT TO SCALE

* GUTTER PAN AT THE MEDIAN EDGE OF INTERMEDIATE ARTERIAL OR THE HIGH SIDE OF SUPERELEVATED SECTIONS SHALL BE SLOPED AT THE SAME RATE AND IN THE SAME DIRECTION AS THE PAVEMENT. MATCH PAVEMENT CROSS SLOPE WHEN CURB IS LOCATED ON THE LOW SIDE OF SUPERELEVATED SECTION AND THE RATE OF SUPERELEVATION IS GREATER THAN 3% FOR MODIFIED CURB AND GUTTER.

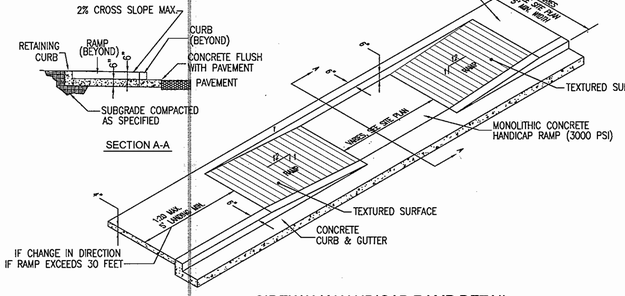

SIDEWALK HANDICAP RAMP DETAIL
NOT TO SCALE

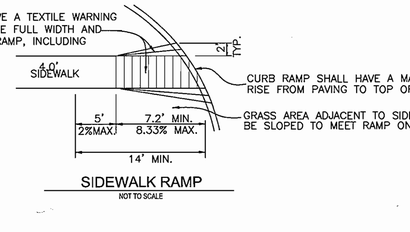

SIDEWALK RAMP
NOT TO SCALE

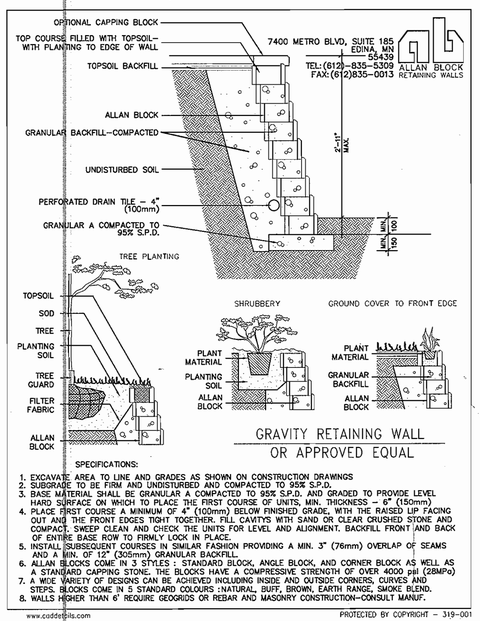

GRAVITY RETAINING WALL OR APPROVED EQUAL

SPECIFICATIONS:
1. EXCAVATE AREA TO LINE AND GRADES AS SHOWN ON CONSTRUCTION DRAWINGS
2. SUBGRADE TO BE FIRM AND UNDISTURBED AND COMPACTED TO 95% S.P.D.
3. BASE MATERIAL SHALL BE GRANULAR A COMPACTED TO 95% S.P.D. AND GRADED TO PROVIDE LEVEL HARD SURFACE ON WHICH TO PLACE THE FIRST COURSE OF UNITS, MIN. THICKNESS – 6" (150mm)
4. PLACE FIRST COURSE A MINIMUM OF 4" (100mm) BELOW FINISHED GRADE, WITH THE RAISED LIP FACING OUT AND THE FRONT EDGES TIGHT TOGETHER. FILL CAVITYS WITH SAND OR CLEAR CRUSHED STONE AND COMPACT. SWEEP CLEAN AND CHECK THE UNITS FOR LEVEL AND ALIGNMENT. BACKFILL FRONT AND BACK OF ENTIRE BASE ROW TO FIRMLY LOCK IN PLACE.
5. INSTALL SUBSEQUENT COURSES IN SIMILAR FASHION PROVIDING A MIN. 3" (76mm) OVERLAP OF SEAMS AND A MIN. OF 12" (305mm) GRANULAR BACKFILL.
6. ALLAN BLOCKS COME IN 3 STYLES : STANDARD BLOCK, ANGLE BLOCK, AND CORNER BLOCK AS WELL AS A STANDARD CAPPING STONE. THE BLOCKS HAVE A COMPRESSIVE STRENGTH OF OVER 4000 psi (28MPa)
7. A WIDE VARIETY OF DESIGNS CAN BE ACHIEVED INCLUDING INSIDE AND OUTSIDE CORNERS, CURVES AND STEPS. BLOCKS COME IN 5 STANDARD COLOURS :NATURAL, BUFF, BROWN, EARTH RANGE, SMOKE BLEND.
8. WALLS HIGHER THAN 6' REQUIRE GEOGRIDS OR REBAR AND MASONRY CONSTRUCTION–CONSULT MANUF.

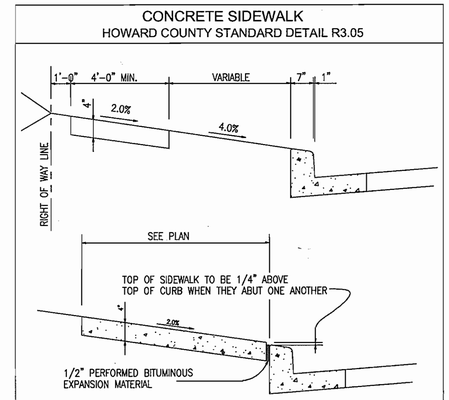

PAVMENT SECTIONS

CONSTRUCTION SPECIFICATIONS

1. SIDEWALK TO BE SCRIBED IN 5'-0" MAXIMUM SQUARES.
2. EXPANSION JOINTS ACROSS THE SIDEWALK NOT TO BE MORE THAN 15' APART.
3. 1/2" PREFORMED BITUMINOUS EXPANSION MATERIAL IN EXPANSION JOINTS TO BE KEPT 1/4" BELOW SURFACE OF SIDEWALK.
4. CONCRETE TO BE MIX NUMBER 2.
5. WHERE SIDEWALK ABUTS CURB, SIDEWALK SHALL BE 1/4" ABOVE CURB WITH 1/2" PREFORMED BITUMINOUS EXPANSION MATERIAL BETWEEN SIDEWALK AND CURB.
6. ON LONGITUDINAL SIDEWALK GRADES OF 5% OR GREATER, A CONCRETE HEADER, 6' THICK AND 6" DEEP BELOW THE NORMAL 4" SIDEWALK THICKNESS SHALL CONSTRUCTED FOR THE FULL WIDTH OF THE SIDEWALK AT INTERVALS\ OF 48 FEET. THE HEADERS SHALL BE PLACED AT EXPANSION JOINT LOCATIONS AND SHALL BE MONOLITHIC WITH THE CURB.
7. SIDEWALK WIDTH ADJACENT TO CURB SHALL BE 5'-0" MINIMUM EXCEPT SIDEWALK ADJACENT TO CURB IN CUL-DE-SAC BULBS MAY BE 4.0' WIDE.
8. SIDEWALK LOCATED 2' OR MORE FROM CURB MAY BE 4'-0" IN WIDTH WITH A 5'XS' PAVED SECTION PLACED 200' APART.

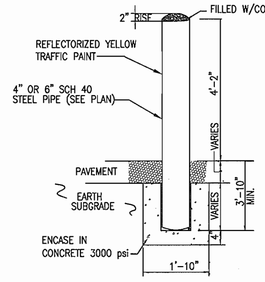

BOLLARD
NOT TO SCALE

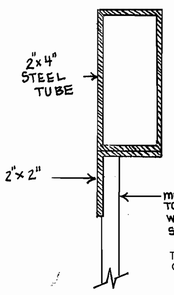

* FOR ADDITIONAL DETAILS, SEE SHEET 13 OF 16

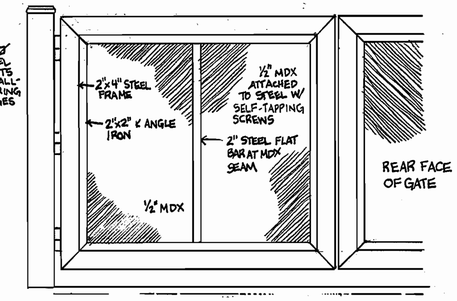

APPROVED: HOWARD COUNTY DEPARTMENT OF PLANNING AND ZONING

CHIEF, DEVELOPMENT ENGINEERING DIVISION	1/4/05 DATE
CHIEF, DIVISION OF LAND DEVELOPMENT	3/9/04 DATE
DIRECTOR	2/25/04 DATE

SITE DEVELOPMENT PLAN
SITE DETAILS
VILLAGE CREST
PART OF PARCEL D-1
PHASE 1,2,3 & 4 APT. BLDGS. A TOR
268 AGE RESTRICTED ADULT HOUSING UNITS

TAX MAP #25 BLOCK 20 — PARCEL P/O 98
2ND ELECTION DISTRICT — HOWARD COUNTY, MARYLAND

FREDERICK WARD ASSOCIATES, INC.
ARCHITECTS | ENGINEERS | PLANNERS | SURVEYORS
7125 RIVERWOOD DRIVE
COLUMBIA, MARYLAND 21046-2354
410-720-6900
410-720-6226 fax
www.frederickward.com

OWNER :
TAYLOR FAMILY LIMITED PARTNERSHIP A
C/O LAND DESIGN & DEVELOPMENT, INC.
8000 MAIN STREET
ELLICOTT CITY, MD 21043
ATTN: MR. DONALD R. REUWER
PHONE: (410) 480-9105

DEVELOPER
LAND DESIGN & DEVELOPMENT, INC.
8000 MAIN STREET
ELLICOTT CITY, MD 21043
ATTN: MR. DONALD R. REUWER
PHONE: (410) 480-9105

STATE OF MARYLAND — ROBERT HARRIS VOGEL — No. 16193 — PROFESSIONAL ENGINEER
ROBERT H. VOGEL, PE No.16193

DESIGN BY:	RJ
DRAWN BY:	RJ
CHECKED BY:	RHV
DATE:	SEPT. 2003
SCALE:	AS SHOWN
W.O. NO.:	2018121.00

SHEET 6 OF 16

SDP-02-94

M:\PROJECTS\2018121\ENGR\dwg\Sdp-APT\04SDETAIL.dwg Fri Sep 19 16:44:50 2003 Ed