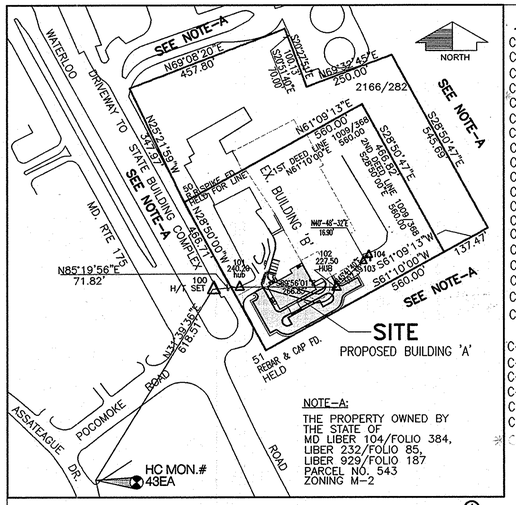

INDEX OF SHEETS

C-1 GEOMETRIC LAYOUT
C-2 SITE AND GRADING PLAN
C-3 TYPICAL ROADWAY SECTIONS
C-4 ROADWAY PROFILES
C-5 SEQUENCE OF CONSTRUCTION – I
C-6 SEQUENCE OF CONSTRUCTION – II
C-7 UTILITY PLAN
C-8 UTILITY PROFILES – I
C-9 UTILITY PROFILES – II
C-10 STORMWATER MANAGEMENT PLAN
C-11 STORMWATER MANAGEMENT DETAILS – I
C-12 STORMWATER MANAGEMENT DETAILS – II
C-13 STORMWATER MANAGEMENT DETAILS – III
C-14 STORMWATER MANAGEMENT DETAILS – IV
C-15 STORMWATER MANAGEMENT DETAILS – V
C-16 LANDSCAPING PLAN
C-17 SITE DETAILS
C-18 EROSION AND SEDIMENT CONTROL PLAN
C-19 EROSION AND SEDIMENT CONTROL NOTES AND DETAILS
C-20 DRAINAGE AREA
C-21 PAVEMENT ELEVATIONS
C-22 FOREST STAND DELINEATION
C-23 FOREST CONSERVATION PLAN
C-24 FOREST CONSERVATION PLAN DETAILS
C-25 STANDARD PLATES

BASE LINE COORDINATES

NO	NORTHING	EASTING
1	547196.0481	1374031.5005
2	547132.6480	1374066.2603
3	547040.0403	1374117.0335
4	547020.5301	1374127.7301
5	547010.5283	1374162.0097
6	547073.1698	1374276.2647
7	547107.4494	1374286.2665
8	547126.9595	1374275.5699
9	547175.2477	1374249.0954
10	547137.8787	1374333.4477
11	547107.5541	1374022.6477
12	547129.2962	1374061.1249
13	547157.6469	1374083.5912
14	547223.6097	1374102.8290
15	547110.9568	1374284.3435

BASELINE STATION AND OFFSET

NO	BASELINE	STA.	OFFSET	NO	BASELINE	STA.	OFFSET
1	B	1+32.48	12.00' RT.	20	A	2+39.83	12.00' LT.
2	B	1+32.48	32.67' RT.	21	A	2+46.58	12.00' LT.
3	B	+95.81	12.00' RT.	22	A	2+39.83	12.00' RT.
4	B	+90.17	6.35' RT.	23	A	2+46.58	32.00' LT.
5	B	+85.56	32.67'RT.	24	C	3+45.58	15.50' RT.
6	B	+83.16	3.45' RT.	25	A	3+45.58	12.00' LT.
7	A	+75.75	14.95' LT.	26	C	3+70.13	9.00' RT.
8	A	+82.84	12.00' LT.	27	A	3+70.13	12.00' LT.
9	A	+90.42	22.67' LT.	28	A	3+70.13	12.00' RT.
10	B	+28.12	14.75' RT.	29	A	3+95.30	12.00' RT.
11	A	1+07.73	22.00' RT.	30	D	0+26.97	12.00' RT.
12	A	1+07.73	32.00' RT.	31	D	0+26.76	23.00' LT.
13	A	1+56.92	12.00' LT.	32	D	0+56.00	12.00' RT.
14	A	1+63.42	22.66' LT.	33	D	0+56.00	23.00 LT.
15	C	2+38.58	9.00' LT.	34	A	4+48.31	12.00' RT.
16	C	2+39.83	9.00' RT.	35	C	3+70.38	9.00' LT.
17	A	2+03.06	32.17' RT.	36	A	4+59.27	12.00' RT.
18	A	2+04.22	15.71' RT.	37	A	4+56.92	12.00' LT.
19	A	2+07.17	12.00' RT.	38	C	1+38.17	14.50' LT.
				39	B	0+75.45	24.60'LT
				40	B	0+45.37	15.02'LT

GEODETIC SURVEY CONTROL

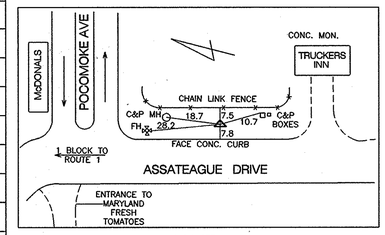

43HB

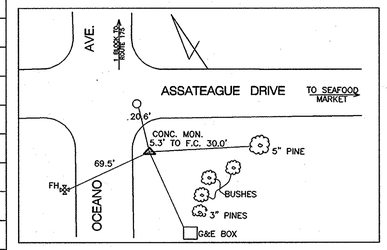

43EA

NOTES:
FOR COORDINATES AND ELEVATIONS SEE TRAVERS LINE COORDINATES TABLE

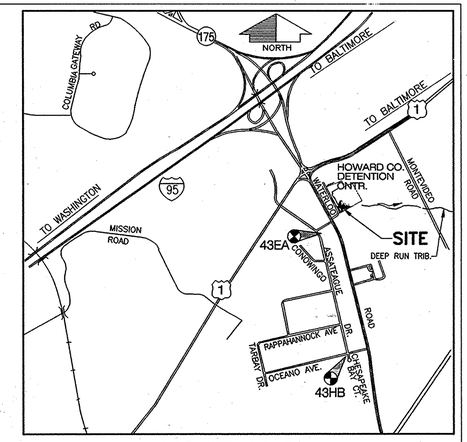

VICINITY MAP

SCALE: 1"=2000'

SITE ANALYSIS

TOTAL AREA OF SITE	= 6.00 ACRES
LIMIT OF DISTURBED AREA	= 1.8 ACRES
PRESENT ZONING DESIGNATION	= M-2
PROPOSED USES FOR SITE AND STRUCTURES	= CENTRAL BOOKING FACILITY
MAXIMUM NUMBER OF EMPLOYEES	= 15
NO OF PARKING SPACES REQUIRED	= 25 BY HOWARD COUNTY DPW
NO OF PARKING SPACES	= 25
BUILDING AREA	= 9940 SF.(ADDITION) 40,940 SF(TOTAL)
FOREST AREA IMPACTED	= 28,315 SQ. FT.
BUILDING COVERAGE OF SITE	0.90 ACRES AND 16% GROSS AREA

APPLICABLE DPZ FILE REFERENCE; SDP-78-108, SDP-80-123, SDP-90-117, AND SDP-91-107, WP-02-114

PROJECT ADDRESS CHART		OWNER	
LOT/PARCEL #	STREET ADDRESS		PHONE NO.
660	7311 WATERLOO ROAD JESSUP, MD 20794	Howard County Government 3430 COURTHOUSE DRIVE ELLICOTT CITY, MD 21043	410-313-4401

LOCATION MAP

SCALE: 1"=200'

TRAVERSE LINE COORDINATES

NO	NORTHING	EASTING	ELEVATION
43HB	543166.7760	1374425.0200	252.306
43EA	546594.0000	1373621.7450	242.876
100	547120.4624	1373946.3862	—
101	547126.3070	1374018.0680	240.20
102	547125.9978	1374284.9147	227.50
103	547201.0065	1374361.7639	—
104	547214.6624	1374373.5551	—

FOR COMPLETE POND DETAIL SEE SHEET C-10

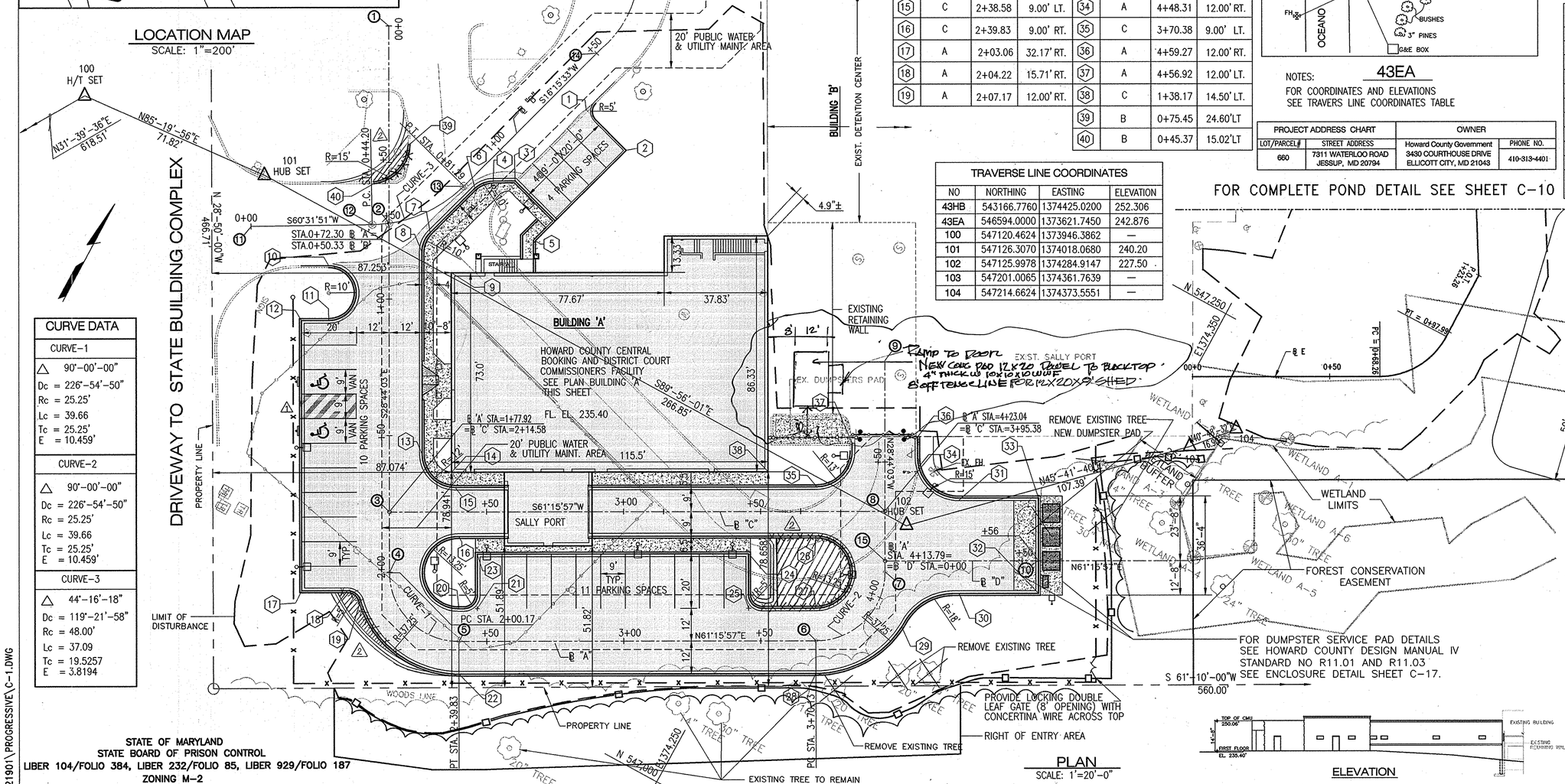

CURVE DATA

CURVE-1	
△	90°-00'-00"
Dc	226°-54'-50"
Rc	25.25'
Lc	39.66
Tc	25.25'
E	10.459'

CURVE-2	
△	90°-00'-00"
Dc	226°-54'-50"
Rc	25.25'
Lc	39.66
Tc	25.25'
E	10.459'

CURVE-3	
△	44°-16'-18"
Dc	119°-21'-58"
Rc	48.00'
Lc	37.09
Tc	19.5257
E	3.8194

PLAN

SCALE: 1'=20'-0"

ELEVATION

NOTES:

1. FOR GENERAL NOTES SEE SHEET NO.C-2
2. FOR PARKING LOT SIGN DETAILS SEE SHEET C-25
3. FOR DIMENSIONS OF EXIST. DETENTION CENTER, SEE SHEET NO. C-2
4. MODULAR BUILDING TO BE REMOVED BY OTHERS
5. FOR LEGEND SEE SHEET NO.C-2
6. FOR BASELINE "E" INFORMATION SEE SHEET C-10.

THE SUBJECT PROPERTY IS ZONED M-2 PER THE 10-18-93 COMPREHENSIVE ZONING PLAN

Approved : Department of Planning and Zoning

Director (Acting) — Date 3/18/03

Chief, Division of Land Development — Date 3/14/03

Chief, Development Engineering Division — Date 3/13/03

SUBDIVISION NAME	SECTION/AREA	PARCEL NO.
HOWARD COUNTY DETENTION CENTER	N/A	660

LIBER/FOLIO	BLOCK NO	ZONING	TAX MAP	GRID NO.	HOWARD CO. ELEC. DIST.	CENSUS TR.
2116/282 1009/368 15840/15841	9,10 AND 15	M-2	43	9	NO-1	6012.02

WATER CODE	SEWER CODE
B01	2221000

PROPOSED IMPROVEMENTS

BUILDING ADDITION, SEE SITE ANALYSIS CHART FOR APPLICABLE DPZ FILE REFERENCE DPZ FILE REF. FOR CURRENT PROJECT SDP-02-20

STATE OF MARYLAND
STATE BOARD OF PRISON CONTROL
LIBER 104/FOLIO 384, LIBER 232/FOLIO 85, LIBER 929/FOLIO 187
ZONING M-2

ati INC. Architects Engineers and Construction Consultants
8950 Route 108 Suite 218
Columbia Maryland 21045 (410)995-4067Fax(410)992-1837

SEAL: STATE OF MARYLAND — RICHARD LECOUR SCOTT — PROFESSIONAL ENGINEER

DCI DANIEL CONSULTANTS, INC.
CONSULTING ENGINEERING AND PLANNING
8950 Rt. 108 E., Suite 229 Columbia, MD. 21045
Phone: 410-995-0090 Fax: 410-992-7038

REVISIONS		
NO.	DATE	DESCRIPTION
1	3/12/03	ADDENDUM NO. 1
2	9/16/05	REDLINE REVISION

GEOMETRIC LAYOUT

HOWARD COUNTY CENTRAL BOOKING & DISTRICT COURT COMMISSIONERS FACILITY
HOWARD COUNTY, MARYLAND

DATE : FEBRUARY 21, 2003

CAPITAL PROJECT NO. ☐ PI - 4916

C-1

SET SHEET 1 OF 25

SDP-02-20

H:/PROJECTS\CIVIL\0121901\PROGRESSIVE\C-1.DWG

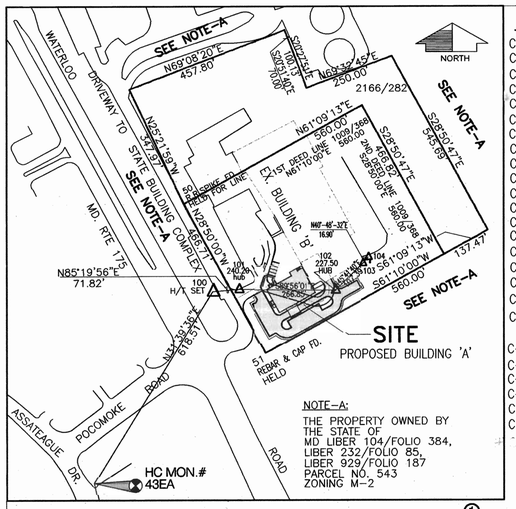

LOCATION MAP

SCALE: 1"=200'

INDEX OF SHEETS

C-1 GEOMETRIC LAYOUT
C-2 SITE AND GRADING PLAN
C-3 TYPICAL ROADWAY SECTIONS
C-4 ROADWAY PROFILES
C-5 SEQUENCE OF CONSTRUCTION – I
C-6 SEQUENCE OF CONSTRUCTION – II
C-7 UTILITY PLAN
C-8 UTILITY PROFILES – I
C-9 UTILITY PROFILES – II
C-10 STORMWATER MANAGEMENT PLAN
C-11 STORMWATER MANAGEMENT DETAILS – I
C-12 STORMWATER MANAGEMENT DETAILS – II
C-13 STORMWATER MANAGEMENT DETAILS – III
C-14 STORMWATER MANAGEMENT DETAILS – IV
C-15 STORMWATER MANAGEMENT DETAILS – V
C-16 LANDSCAPING PLAN
C-17 SITE DETAILS
C-18 EROSION AND SEDIMENT CONTROL PLAN
C-19 EROSION AND SEDIMENT CONTROL NOTES AND DETAILS
C-20 DRAINAGE AREA
C-21 PAVEMENT ELEVATIONS
C-22 FOREST STAND DELINEATION
C-23 FOREST CONSERVATION PLAN
C-24 FOREST CONSERVATION PLAN DETAILS
C-25 STANDARD PLATES

BASE LINE COORDINATES

NO	NORTHING	EASTING
1	547196.0481	1374031.5005
2	547132.6480	1374066.2603
3	547040.0403	1374117.0335
4	547020.5301	1374127.7301
5	547010.5283	1374162.0097
6	547073.1698	1374276.2647
7	547107.4494	1374286.2665
8	547126.9595	1374275.5699
9	547175.2477	1374249.0954
10	547137.8787	1374333.4477
11	547107.5541	1374022.6477
12	547129.2962	1374061.1249
13	547157.6469	1374083.5912
14	547223.6097	1374102.8290
15	547110.9568	1374284.3435

BASELINE STATION AND OFFSET

NO	BASELINE	STA.	OFFSET	NO	BASELINE	STA.	OFFSET
1	B	1+32.48	12.00' RT.	20	A	2+39.83	12.00' LT.
2	B	1+32.48	32.67' RT.	21	A	2+46.58	12.00' LT.
3	B	+95.81	12.00' RT.	22	A	2+39.83	12.00' RT.
4	B	+90.17	6.35' RT.	23	A	2+46.58	32.00' LT.
5	B	+85.56	32.67' RT.	24	C	3+45.58	15.50' RT.
6	B	+83.16	3.45' RT.	25	A	3+45.58	12.00' LT.
7	A	+75.75	14.95' LT.	26	C	3+70.13	9.00' RT.
8	A	+82.84	12.00' LT.	27	A	3+70.13	12.00' LT.
9	A	+90.42	22.67' LT.	28	A	3+70.13	12.00' RT.
10	B	+28.12	14.75' RT.	29	A	3+95.30	12.00' RT.
11	A	1+07.73	22.00' RT.	30	D	0+26.97	12.00' RT.
12	A	1+07.73	32.00' RT.	31	D	0+26.76	23.00' LT.
13	A	1+56.92	12.00' LT.	32	D	0+56.00	12.00' RT.
14	A	1+63.42	22.66' LT.	33	D	0+56.00	23.00 LT.
15	C	2+38.58	9.00' LT.	34	A	4+48.31	12.00' RT.
16	C	2+39.83	9.00' RT.	35	C	3+70.38	9.00' LT.
17	A	2+03.06	32.17' RT.	36	A	4+59.27	12.00' RT.
18	A	2+04.22	15.71' RT.	37	A	4+56.92	12.00' LT.
19	A	2+07.17	12.00' RT.	38	C	1+38.17	14.50' LT.
				39	B	0+75.45	24.60'LT
				40	B	0+45.37	15.02'LT

GEODETIC SURVEY CONTROL

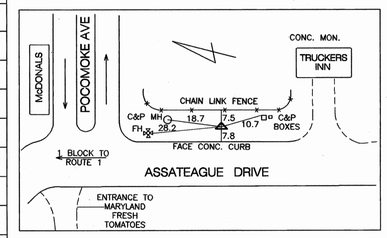

43HB

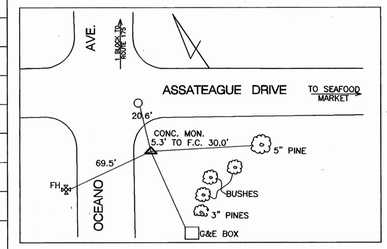

43EA

NOTES:
FOR COORDINATES AND ELEVATIONS
SEE TRAVERS LINE COORDINATES TABLE

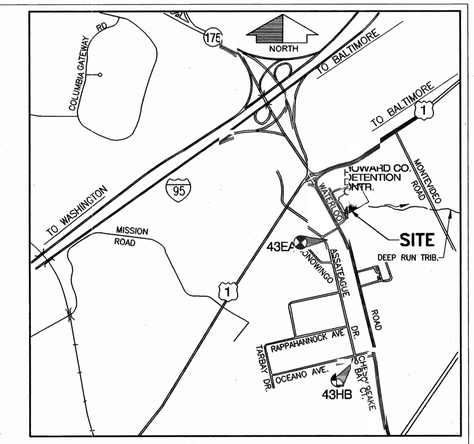

VICINITY MAP

SCALE: 1"=2000'

SITE ANALYSIS

TOTAL AREA OF SITE	=	6.00 ACRES
LIMIT OF DISTURBED AREA	=	1.8 ACRES
PRESENT ZONING DESIGNATION	=	M-2
PROPOSED USES FOR SITE AND STRUCTURES	=	CENTRAL BOOKING FACILITY
MAXIMUM NUMBER OF EMPLOYEES	=	15
NO OF PARKING SPACES REQUIRED	=	25 BY HOWARD COUNTY DPW
NO OF PARKING SPACES	=	25
BUILDING AREA	=	9940 SF.(ADDITION) 40,940 SF(TOTAL)
FOREST AREA IMPACTED	=	28,315 SQ. FT.
BUILDING COVERAGE OF SITE 0.90 ACRES AND 16% GROSS AREA		

APPLICABLE DPZ FILE REFERENCE; SDP-78-108, SDP-80-123, SDP-90-117, AND SDP-91-107, WP-02-114

PROJECT ADDRESS CHART		OWNER	
LOT/PARCEL #	STREET ADDRESS		PHONE NO.
660	7311 WATERLOO ROAD JESSUP, MD 20794	Howard County Government 3430 COURTHOUSE DRIVE ELLICOTT CITY, MD 21043	410-313-4401

TRAVERSE LINE COORDINATES

NO	NORTHING	EASTING	ELEVATION
43HB	543166.7760	1374425.0200	252.306
43EA	546594.0000	1373621.7450	242.876
100	547120.4624	1373946.3862	—
101	547126.3070	1374018.0680	240.20
102	547125.9978	1374284.9147	227.50
103	547201.0065	1374361.7639	—
104	547214.6624	1374373.5551	—

FOR COMPLETE POND DETAIL SEE SHEET C-10

CURVE DATA

CURVE-1
Δ = 90°-00'-00"
Dc = 226°-54'-50"
Rc = 25.25'
Lc = 39.66
Tc = 25.25'
E = 10.459'

CURVE-2
Δ = 90°-00'-00"
Dc = 226°-54'-50"
Rc = 25.25'
Lc = 39.66
Tc = 25.25'
E = 10.459'

CURVE-3
Δ = 44°-16'-18"
Dc = 119°-21'-58"
Rc = 48.00'
Lc = 37.09
Tc = 19.5257
E = 3.8194

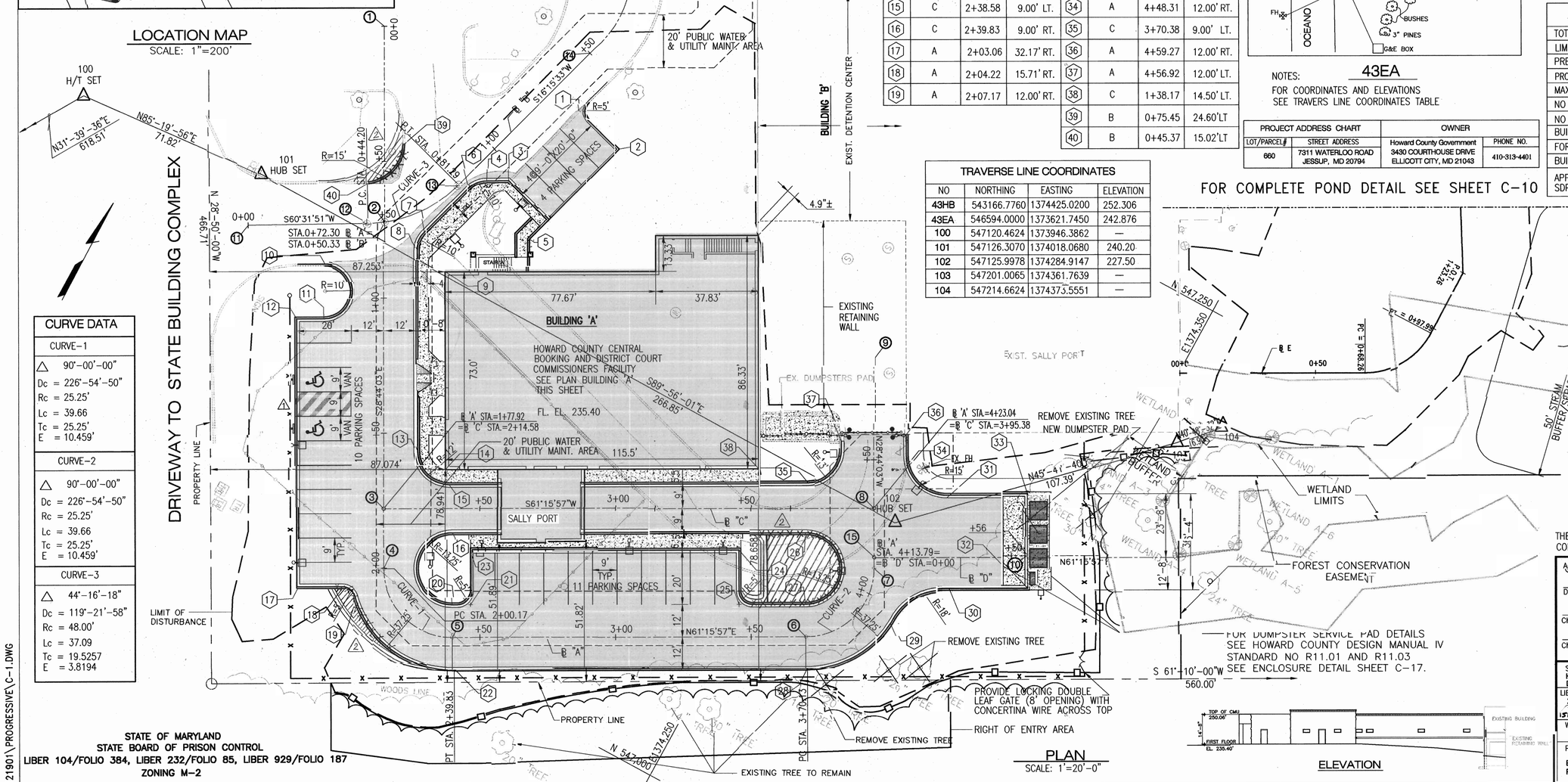

PLAN

SCALE: 1'=20'-0"

ELEVATION

NOTES:

1. FOR GENERAL NOTES SEE SHEET NO.C-2
2. FOR PARKING LOT SIGN DETAILS SEE SHEET C-25
3. FOR DIMENSIONS OF EXIST. DETENTION CENTER, SEE SHEET NO. C-2
4. MODULAR BUILDING TO BE REMOVED BY OTHERS
5. FOR LEGEND SEE SHEET NO.C-2
6. FOR BASELINE "E" INFORMATION SEE SHEET C-10.

THE SUBJECT PROPERTY IS ZONED M-2 PER THE 10-18-93 COMPREHENSIVE ZONING PLAN

Approved : Department of Planning and Zoning

Director (Acting) — Date 3/10/03

Chief, Development Engineering Bureau — Date 3/14/03

Chief, Development Engineering Bureau — Date 3/12/03

SUBDIVISION NAME	SECTION/AREA	PARCEL NO.
HOWARD COUNTY DETENTION CENTER	N/A	660

LIBER/FOLIO	BLOCK NO	ZONING	TAX MAP	GRID NO.	HOWARD CO. ELEC. DIST.	CENSUS TR.
2116/282 1009/368 15840,15841	9,10 AND 15	M-2	43	9	NO-1	6012.02

WATER CODE	SEWER CODE
B01	2221000

PROPOSED IMPROVEMENTS

BUILDING ADDITION, SEE SITE ANALYSIS CHART FOR APPLICABLE DPZ FILE REFERENCE DPZ FILE REF. FOR CURRENT PROJECT SDP-02-20

STATE OF MARYLAND
STATE BOARD OF PRISON CONTROL
LIBER 104/FOLIO 384, LIBER 232/FOLIO 85, LIBER 929/FOLIO 187
ZONING M-2

ati INC. Architects Engineers and Construction Consultants
8950 Route 108 Suite 218
Columbia Maryland 21045 (410)995-4067Fax(410)992-1837

SEAL: STATE OF MARYLAND — RICHARD J. ROJAS — No. 15224 — PROFESSIONAL ENGINEER

DCI DANIEL CONSULTANTS, INC.
CONSULTING ENGINEERING AND PLANNING
8950 Rt. 108 E., Suite 229 Columbia, MD. 21045
Phone: 410-995-0090 Fax: 410-992-7038

REVISIONS

NO.	DATE	DESCRIPTION
1	3/12/03	ADDENDUM NO. 1
2	9/15/05	REDLINE REVISION

GEOMETRIC LAYOUT

HOWARD COUNTY CENTRAL BOOKING & DISTRICT COURT COMMISSIONERS FACILITY
HOWARD COUNTY, MARYLAND

DATE : FEBRUARY 21, 2003

CAPITAL PROJECT NO. P - 4916

C-1

SET SHEET 1 OF 25

SDP-02-20

H:/PROJECTS\CIVIL\0121901\PROGRESSIVE\C-1.DWG

LEGEND:

- EX. EDGE OF BRUSH/TREES
- EX. FENCE
- PROPOSED CURB AND GUTTER(SEE DETAIL SHEET C-3)
- PROPOSED P-3 PAVEMENT(SEE H.C. STD. R-2.01, SEE SHEET C-25)
- PROPOSED SIDEWALK(SEE H.C. STD. R-3.05, SEE SHEET C-25)
- (223.92) BOTTOM OF CURB AND SPOT ELEVATION
- 1 INDICATES SOIL BORING TAKEN FOR BOOKING FACILITY SHOWN ON SDP 91-107 DATED 5-6-91
- NEW FENCE
- TREE
- EXTERIOR POLE MOUNTED LIGHT FIXTURE
- EXTERIOR WALL PACK FIXTURE
- BLAZE ORANGE PLASTIC MESH TREE PROTECTION FENCE

GENERAL NOTES

1. ALL CONSTRUCTION SHALL BE IN ACCORDANCE WITH THE LATEST STANDARDS AND SPECIFICATIONS OF HOWARD COUNTY PLUS MSHA STANDARDS AND SPECIFICATIONS IF APPLICABLE.
2. TRAFFIC CONTROL DEVICES, MARKINGS AND SIGNINGS SHALL BE IN ACCORDANCE WITH THE LATEST EDITION OF THE MANUAL OF UNIFORM TRAFFIC CONTROL DEVICES (MUTCD). ALL STREET AND REGULATORY SIGNS SHALL BE IN PLACE PRIOR TO THE PLACEMENT OF ANY ASPHALT.
3. ALL PLAN DIMENSIONS ARE TO FACE OF CURB UNLESS OTHERWISE NOTED.
4. THE EXISTING TOPOGRAPHY IS TAKEN FROM (FIELD RUN) SURVEY WITH 1 FOOT CONTOUR INTERVALS PREPARED BY PROGRESSIVE ENGINEERING CONSULTANTS, INC DATED JULY 2000.
5. THE COORDINATES SHOWN HEREON ARE BASED UPON THE HOWARD COUNTY GEODETIC CONTROL WHICH IS BASED UPON THE MARYLAND STATE PLANE COORDINATE SYSTEM. HOWARD COUNTY MONUMENT NOS. 43EA AND 43HB WERE USED FOR THIS PROJECT.
6. WATER IS PUBLIC PROJECT NO. C-5-0123 AND 44-4077.
7. SEWER IS PUBLIC PROJECT NO. C-5-0123.
8. EXISTING UTILITIES ARE BASED ON RECORD PLANS.
9. THERE IS NO FLOODPLAIN ON THIS SITE. (DANIEL CONSULTANTS 4/12/02)
10. NO TRAFFIC STUDY IS REQUIRED FOR THIS PROJECT.
11. THE CONTRACTOR SHALL NOTIFY "MISS UTILITY" AT (1-800-257-7777) AT LEAST 48 HOURS PRIOR TO ANY EXCAVATION WORK.
12. ANY DAMAGE BY THE CONTRACTOR WITHIN THE COUNTY'S RIGHT-OF-WAY SHALL BE CORRECTED AT CONTRACTOR'S EXPENSE
13. CONTRACTOR WILL CHECK SEWER HOUSE CONNECTION ELEVATION AT PROPERTY LINE PRIOR TO CONSTRUCTION.
14. NO POSTER IS REQUIRED FOR PUBLIC NOTICE
15. FOR PEC TRAVERSE POINT LOCATIONS SEE SHEET NO. C-1
16. ALL TREES WITHIN THE LIMIT OF DISTURBANCE TO BE REMOVED.
17. SINCE THE PLAT WAS SUBMITTED FOR THE COUNTY REVIEW/APPROVAL PRIOR TO NOVEMBER 15, 2001, IT IS SUBJECT TO COMPLIANCE WITH THE REQUIREMENTS/RESTRICTIONS OF THE FOURTH EDITION OF THE COUNTY'S SUBDIVISION AND LAND DEVELOPMENT REGULATIONS.
18. NO CLEARING, GRADING OR CONSTRUCTION IS PERMITTED WITHIN THE WETLANDS, STREAM(S) OR OTHER BUFFERS AND FOREST CONSERVATION EASEMENT AREA, EXCEPT AS REQUIRED TO CONSTRUCT THE STORMWATER MANAGEMENT POND RETROFIT AS PER WP-02-114.
19. THE FOREST CONSERVATION OBLIGATION INCURRED BY THIS SITE DEVELOPMENT PLAN (2.11 ACRES) HAS BEEN MEET BY THE RECORDATION OF 2.11 ACRES OF FOREST CONSERVATION EASEMENTS.
20. THE APRIL 2002 WETLAND DELINATION WAS DONE BY STRAUGHAN ENVIROMENTAL SERVICES.
21. AS OF THE PLANNING DIRECTOR APPROVED A WAIVER (WP-02-114) TO SECTION 16.116(a)(1) AND (2) (GRADING, REMOVAL OF VEGETATIVE COVER AND TREES, PAVING AND NEW STRUCTURES SHALL NOT BE PERMITTED WITHIN 25 FEET OF A WETLAND IN ANY ZONING DISTRICT, AND GRADING, REMOVAL OF VEGETATIVE COVER AND TREES, PAVING AND NEW STRUCTURES SHALL NOT BE PERMITTED WITHIN 50 FEET OF A PERENNIAL STREAMBANK.)

APPROVAL WAS SUBJECT TO THE FOLLOWING CONDITIONS:

a. ALL GRADING, CLEARING OR CONSTRUCTION DISTURBANCES WITHIN THE WETLANDS, WETLAND BUFFER AND STREAM BUFFER SHALL BE KEPT TO A MINIMUM NECESSARY TO RETROFIT THE EXISTING SWM FACILITY. THIS WAIVER APPROVAL APPLIES ONLY TO THE GRADING SHOWN ON THE PLAN EXHIBIT DATED JANUARY 25, 2002.
b. ALL GRADED AREAS MUST BE RESTABILIZED AND REVEGETATED.
c. HOLD THE L.O.D. TO EXPAND NO FURTHER THAN THE EXISTING OUTSIDE TOE-OF-DAM.
d. LIMIT EMBANKMENT SLOPES TO 3:1, BOTH SIDES, PER HOWARD SCD CRITERIA, I.E. DO NOT EXPAND TOE INTO WETLAND OR STREAM BUFFER.

22. EXTERIOR LIGHTING WILL BE IN CONFORMANCE WITH SECTION 134 OF THE HOWARD COUNTY ZONING REGULATIONS.

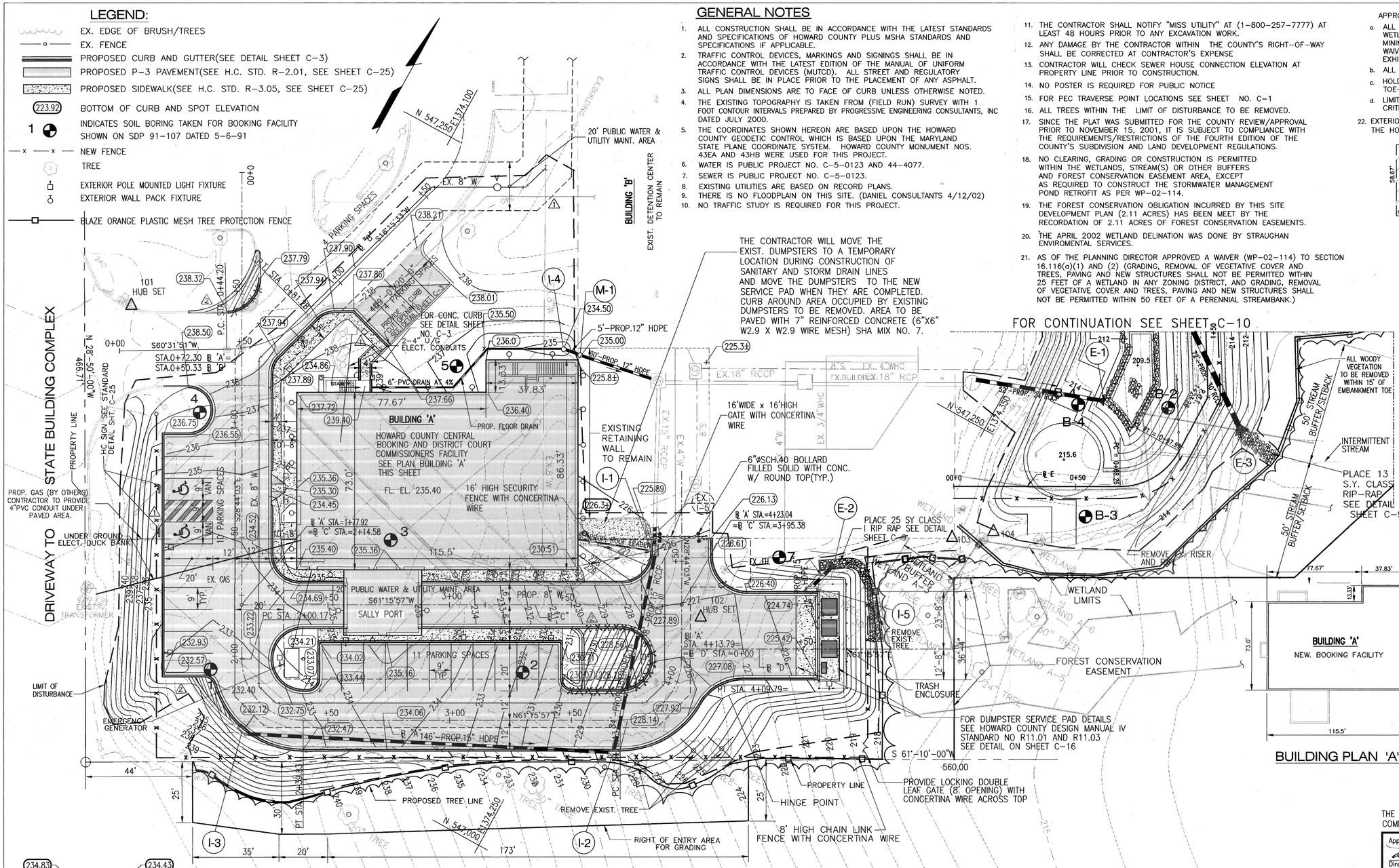

SITE PLAN
SCALE 1"=20'

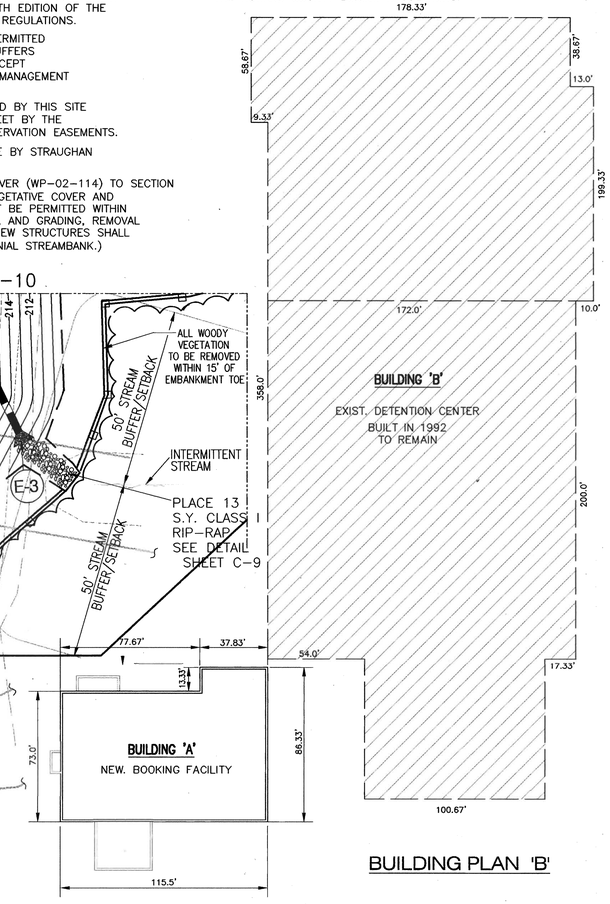

BUILDING PLAN 'B'

BUILDING PLAN 'A'

HOWARD COUNTY CENTRAL BOOKING AND DISTRICT COURT COMMISSIONERS FACILITY

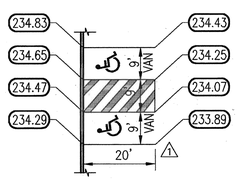

CORNER ELEVATIONS
HANDICAPPED PARKING
SCALE 1"=20'

NOTES:

1. FOR CURB & GUTTER DETAILS SEE SHEET NO. C-3
2. FOR PAVEMENT AND CURB ELEVATIONS SEE SHEET NO. C-21
3. FOR SIDEWALK DETAILS SEE H.C. STD. NO. R-3.05, SEE SHEET C-25
4. USE TYPE "A" SIDEWALK RAMP H.C. STD. R4.01, SEE SHEET C-25

THE SUBJECT PROPERTY IS ZONED M-2 PER THE 10-18-93 COMPREHENSIVE ZONING PLAN

Approved : Department of Planning and Zoning

Director — Date 3/10/03

Chief, Division of Land Development — Date 3/14/03

Chief, Development Engineering Division — Date 3/13/03

SUBDIVISION NAME	SECTION/AREA	PARCEL NO.
HOWARD COUNTY DETENTION CENTER	N/A	660

LIBER/FOLIO	BLOCK NO	ZONING	TAX MAP	GRID NO.	HOWARD CO. ELEC. DIST.	CENSUS TR.
2116/282 1009/368 5840, 15841	9, 10 AND15	M-2	43	9	NO-1	6012.02

WATER CODE	SEWER CODE
B01	2221000

PROPOSED IMPROVEMENTS
BUILDING ADDITION, SEE SITE ANALYSIS CHART FOR APPLICABLE DPZ FILE REFERENCE DPZ FILE REF. FOR CURRENT PROJECT SDP-02-20

BBI ati INC. Architects Engineers and Construction Consultants
8950 Route 108 Suite 218
Columbia Maryland 21045 (410)995-4067Fax(410)992-1837

DCI DANIEL CONSULTANTS, INC.
CONSULTING ENGINEERING AND PLANNING
8950 Rt. 108 E., Suite 229 Columbia, MD. 21045
Phone: 410-995-0090 Fax: 410-992-7038

REVISIONS

NO.	DATE	DESCRIPTION
1	3/12/03	ADDENDUM NO. 1
2	9/15/05	REDLINE REVISION

SITE AND GRADING PLAN

HOWARD COUNTY CENTRAL BOOKING & DISTRICT COURT COMMISSIONERS FACILITY
HOWARD COUNTY, MARYLAND

DATE : FEBRUARY 21, 2003

CAPITAL PROJECT NO. P - 4916

C-2

SET SHEET 2 OF 25

SDP-02-20

H:\PROJECTS\CIVIL\0121901\PROGRESIVE\C-2.DWG

STRUCTURE SCHEDULE

STRUCT. NO.	TYPE	STD. NO.	LOCATION	TOP ELEV.	INVERT IN	INVERT OUT	REMARK
I-4	YARD INLET	SD.4.14	NORTH CORNER OF BLDG.	234.50	—	224.05	DRAIN AT EL.=229.86
I-3	A-5 INLET	SD.4.40	STA. 2+23.47 @ A	232.72	–	227.70	WIDTH = 2'-6" LENGTH = 5'-0" (INSIDE DIMENSIONS)
I-2	A-5 INLET	SD.4.40	STA. 3+67 @ A	228.74	224.50	224.25	WIDTH = 2'-6" LENGTH = 5'-0" (INSIDE DIMENSIONS)
I-1	SINGLE WR INLET	SD.4.38	STA. 4+54 @ A	225.89	221.10	220.68	6" ROOF LEADER AT INVERT EL. 223.1
I-5	A-5 INLET	SD.4.40	STA. 0+56 @ D	225.34	–	222.34	WIDTH = 2'-6" LENGTH = 5'-0" (INSIDE DIMENSIONS)
E-2	END SECTION	HDPE	STA. 0+62 @ D	—	–	222.84	PROVIDE RIP RAP AT OUTLET
E-1	END SECTION	SD.5.52	STA. 0+60 @ E	—	–	210.00	PROVIDE RIP RAP AT OUTLET
EX I-5							TO BE REMOVED
M-1	SHALLOW MANHOLE	G5.05	STA. 3+53 @ C	235.8±	224.0	222.3	
M-3 NOTE:	MANHOLE	G5.05	STA 3+89 @ E	224.0	222.1±	216.48	2

1. FOR DIMENSIONS OF HOWARD COUNTY CENTRAL BOOKING AND DISTRICT COURT COMMISSIONERS FACILITY, SEE PLAN 'A' THIS SHEET.
2. FOR DIMENSIONS OF EXIST. DETENTION CENTER, SEE SHEET C-2
3. MODULAR BUILDING TO BE REMOVED BY OTHERS.

STRUCTURE SCHEDULE

STRUCT. NO.	TYPE	STD. NO.	LOCATION	TOP ELEV.	INVERT IN	INVERT OUT
E-3	END SECTION	SD.5.52	STA. 1+17 @ E	—	—	209.00
S-1	RISER	DETAIL SHEET C-15	STA. 1+69 @ E	SEE DET.C-15	—	209.5
SM-1	SHALLOW MANHOLE	G5.05	STA. 3+55 @ C	226.8	224.0	223.4
E-4	END SECTION	SD.5.52	STA. 2+80 @ E	—	—	209.5
E-5	END SECTION	SD.5.52	STA. 3+37 @ E	—	—	216.2
M-2	MANHOLE	G5.12	STA. 3+13 @ E	221.5	~~216.0~~ 215.0	210.0
E-6	END SECTION	SD.5.52	STA. 3+78 @ E	—	—	216.3
E-7	UNDERDRAIN OUTLET	RB.01	STA. 0+38 @ D	—	—	222.0

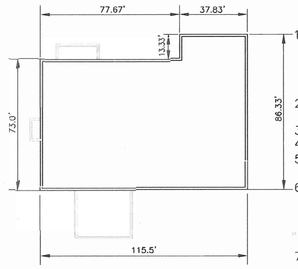

HOWARD COUNTY CENTRAL BOOKING AND DISTRICT COUTY COMMISSIONERS FACILITY

PLAN 'A'
NOT TO SCALE

PIPE SCHEDULE

PIPE	LENGTH IN FT.
24" RCCP CLASS III	~~70~~ 100
15" HDPE	243
15" RCCP CLASS III	8
~~12" HDPE~~ 8" PVC	35
30" RCCP	72
8" PERF PVC	170
6" PVC	75

GENERAL NOTES

1. APPROXIMATE LOCATIONS OF EXISTING WATER LINES ARE SHOWN. THE CONTRACTOR SHALL TAKE ALL NECESSARY PRECAUTIONS TO PROTECT EXISTING MAINS AND SERVICES AND MAINTAIN UNINTERRUPTED SUPPLY. ANY DAMAGE INCURRED SHALL BE REPAIRED IMMEDIATELY TO THE SATISFACTION OF THE ENGINEER AT THE CONTRACTOR'S EXPENSE.
2. ALL HORIZONTAL CONTROLS ARE BASED ON MARYLAND STATE COORDINATES.
3. ALL VERTICAL CONTROLS ARE BASED ON U.S.G.S. DATUM.
4. ALL PIPE ELEVATIONS ARE INVERT ELEVATIONS.
5. CLEAR ALL UTILITIES BY A MINIMUM OF 6". CLEAR ALL POLES BY 2'-0" MINIMUM.
6. FOR DETAILS NOT SHOWN ON THE DRAWINGS, AND FOR MATERIALS AND CONSTRUCTION METHODS, USE HOWARD COUNTY DESIGN MANUAL, VOLUME IV, STANDARD SPECIFICATIONS AND DETAILS FOR CONSTRUCTION (1991 AMENDMENTS) THE CONTRACTOR SHALL HAVE A COPY OF VOLUME IV ON THE JOB SITE.
7. EXISTING UTILITIES SHALL BE VERIFIED BY THE CONTRACTOR TO HIS OWN SATISFACTION. ANY DAMAGE TO EXISTING FACILITIES DUE TO THE CONTRACTOR'S NEGLIGENCE SHALL BE REPAIRED AT THE CONTRACTOR'S EXPENSE.
8. CONTRACTOR SHALL NOTIFY THE FOLLOWING UTILITIES OR AGENCIES AT LEAST FIVE WORKING DAYS BEFORE STARTING WORK SHOWN ON THESE PLANS:
   STATE HIGHWAY ADMINISTRATION – 531-5533
   BALTIMORE GAS & ELECTRIC CO. – CONTRACTOR SERVICES – 850-4620
   BALTIMORE GAS & ELECTRIC CO. – UNDER GROUND DAMAGE CONTROL – 787-9068
   MISS UTILITY – 1-800-257-7777
   BUREAU OF UTILITIES, HOWARD COUNTY DEPARTMENT OF PUBLIC WORKS – 313-4900
9. TREES AND SHRUBS ARE TO BE PROTECTED FROM DAMAGE TO MAXIMUM EXTENT USING TREE PROTECTION FENCE.
10. CONTRACTOR SHALL REMOVE TREES, STUMPS AND ROOTS ALONG THE LINE OF EXCAVATION. PAYMENT FOR SUCH REMOVAL SHALL BE INCLUDED CONTRACT LUMP SUM PRICE.
11. SANITARY SEWER GRAVITY PIPE SHALL BE PVC. PVC PIPE SHALL BE MANUFACTURED IN ACCORDANCE WITH ASTM DESIGNATION 3034 (SDR-35) JOINTS FOR PIPE AND FITTINGS SHALL BE THE INTEGRAL BELL GASKETED JOINT DESIGN. JOINTS SHALL CONFORM TO ASTM D3212. THIS FITTING SHALL BE MADE FROM PVC COMPONENTS IN ACCORDANCE WITH ASTM D1784. THE GASKET SHALL CONFORM TO ASTM F477.
12. T.B. DENOTES TEST BORING.
13. WATER MAINS AND WATER HOUSE CONNECTION LINES MUST BE PLACED AS TO HAVE ONE (1) FOOT SEPARATION FROM THE SEWER MAIN OR SEWER HOUSE CONNECTION AS THEY PASS ABOUT IT.
14. DUCTILE IRON WATER MAIN OR OFFSETS OF EXISTING MAINS SHALL CONFORM TO AWWA C150 AND C151. CLASS OF PIPE SHALL BE SPECIAL CLASS 52 FOR DIP IN ACCORDANCE WITH AWWA C150 TABLE 50.15. THE MINIMUM ACCEPTABLE PRESSURE RATING SHALL BE 250 PSI, IF COMPACT FITTINGS ARE USED THEN THE MINIMUM ACCEPTABLE PRESSURE RATING SHALL BE 350 PSI. INSTALLATION SHALL BE IN ACCORDANCE WITH AWWA C600. JOINTS: USE PUSH-ON OR MECHANICAL JOINTS CONFORMING WITH ALL APPLICABLE PROVISIONS OF AWWA C111. OR RESTRAINED JOINTS AS SHOWN WHERE FLANGED FITTINGS ARE REQUIRED FOR CONNECTIONS, VERIFY AND COORDINATE BOLT HOLE DRILLING WITH MANUFACTURER.
15. TOPS OF ALL WATER MAINS TO HAVE A MINIMUM OF 3-1/2' COVER UNLESS OTHERWISE NOTED.
16. VALVES ADJACENT TO TEES SHALL BE STRAPPED TO TEES.
17. ALL FITTINGS SHALL BE BUTTRESSED OR ANCHORED WITH CONCRETE IN ACCORDANCE WITH THE STANDARD DETAILS UNLESS OTHERWISE PROVIDED FOR ON THE DRAWINGS.
18. THE CONTRACTOR SHALL NOT OPERATE ANY WATER MAIN VALVES ON THE EXISTING WATER SYSTEM.
19. THE CONTRACTOR SHALL NOTIFY THE BUREAU OF HIGHWAYS, HOWARD COUNTY, (410) 313-2450 AT LEAST FIVE WORKING DAYS BEFORE ANY OPEN CUT OF ANY COUNTY ROAD OR BORING OPERATION IN COUNTY ROADS FOR LAYING WATER/SEWER MAINS OR HOUSE CONNECTIONS. THE APPROVAL OF THESE DRAWINGS WILL CONSTITUTE COMPLIANCE WITH DPW REQUIREMENTS PER SECTION 18.114(a) OF THE HOWARD COUNTY CODE.
20. PARKING LOT: USE MINIMUM WIRE #10AWG FOR LIGHT CIRCUITS. USE PVC CONDUIT1-1/4" DIRECT BURIED 30" BELOW FINISHED GRADE.
21. EXTERIOR LIGHTING POLES SHALL BE SQUARE STRAIGHT STEEL 6"x6", 7 GAUGE, 30' HEIGHT, AND SET 2' BEHIND THE CURB. SEE DETAIL SHEET C-25
22. ALL POLE LIGHTS SHALL BE TYPE "H".
23. FOR PROPOSED LANDSCAPING, SEE SHEET C-16.
24. THE CONTRACTOR IS ALERTED THAT IN THE AREA OF THE STORMWATER MANAGEMENT THERE IS EXISTING SECURITY MONITORING EQUIPMENT THAT MUST BE RELOCATED AS DIRECTED BY THE ENGINEER.

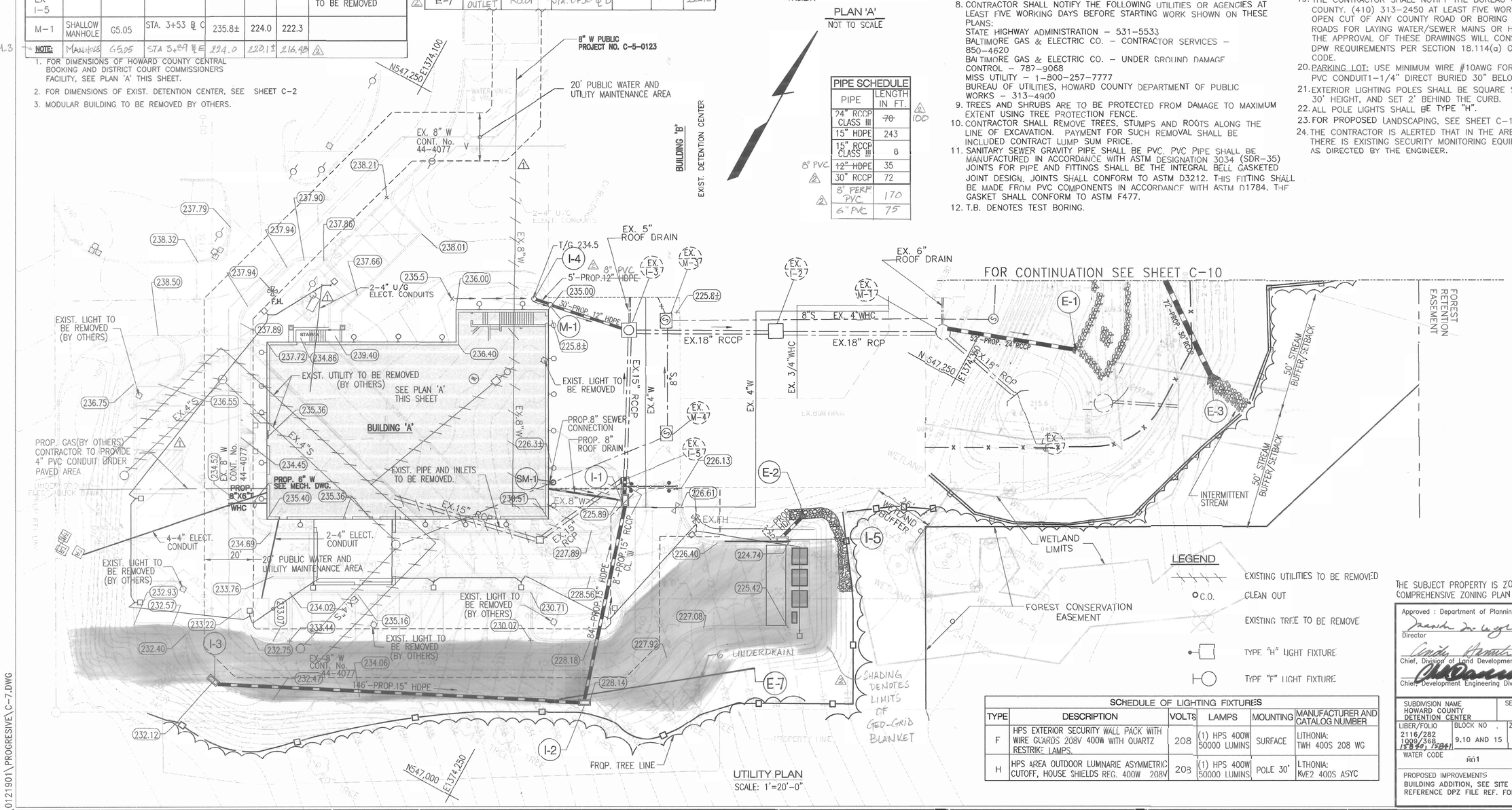

UTILITY PLAN
SCALE: 1'=20'-0"

LEGEND

- EXISTING UTILITIES TO BE REMOVED
- C.O. CLEAN OUT
- EXISTING TREE TO BE REMOVE
- TYPE "H" LIGHT FIXTURE
- TYPE "F" LIGHT FIXTURE

SCHEDULE OF LIGHTING FIXTURES

TYPE	DESCRIPTION	VOLTS	LAMPS	MOUNTING	MANUFACTURER AND CATALOG NUMBER
F	HPS EXTERIOR SECURITY WALL PACK WITH WIRE GUARDS 208V 400W WITH QUARTZ RESTRIKE LAMPS.	208	(1) HPS 400W 50000 LUMINS	SURFACE	LITHONIA: TWH 400S 208 WG
H	HPS AREA OUTDOOR LUMINARIE ASYMMETRIC CUTOFF, HOUSE SHIELDS REG. 400W 208V	208	(1) HPS 400W 50000 LUMINS	POLE 30'	LITHONIA: KWE2 400S ASYC

THE SUBJECT PROPERTY IS ZONED M-2 PER THE 10-18-93 COMPREHENSIVE ZONING PLAN

Approved : Department of Planning and Zoning

Director — Date 3/18/03

Chief, Division of Land Development — Date 3/18/03

Chief, Development Engineering Division — Date 3/18/03

SUBDIVISION NAME	SECTION/AREA	PARCEL NO.
HOWARD COUNTY DETENTION CENTER	N/A	660

LIBER/FOLIO	BLOCK NO.	ZONING	TAX MAP	GRID NO.	HOWARD CO. ELEC. DIST.	CENSUS TR.
2116/282 1009/368 (5840, 5841)	9.10 AND 15	M-2	43	9	NO-1	6012.02

WATER CODE	SEWER CODE
R01	2221000

PROPOSED IMPROVEMENTS
BUILDING ADDITION, SEE SITE ANALYSIS CHART FOR APPLICABLE DPZ FILE REFERENCE DPZ FILE REF. FOR CURRENT PROJECT SDP-02-20

BBL ati INC. Architects Engineers and Construction Consultants
8950 Route 108 Suite 218
Columbia Maryland 21045 (410)995-4067Fax(410)992-1837

SEAL: STATE OF MARYLAND — RICHARD LEGOUR SCOTT — PROFESSIONAL ENGINEER

DCI DANIEL CONSULTANTS, INC.
CONSULTING ENGINEERING AND PLANNING
8950 Rt. 108 E., Suite 229 Columbia, MD. 21045
Phone: 410-995-0090 Fax: 410-992-7038

REVISIONS

NO.	DATE	DESCRIPTION
1	3/12/03	ADDENDUM NO. 1
2	9/15/05	REDLINE REVISION

UTILITY PLAN

HOWARD COUNTY CENTRAL BOOKING & DISTRICT COURT COMMISSIONERS FACILITY
HOWARD COUNTY, MARYLAND

DATE : FEBRUARY 21, 2003

CAPITAL PROJECT NO. P - 4916

C-7

SET SHEET 7 OF 25

SDP-02-20

H:\PROJECTS\CIVIL\01121901\PROGRESIVE\C-7.DWG

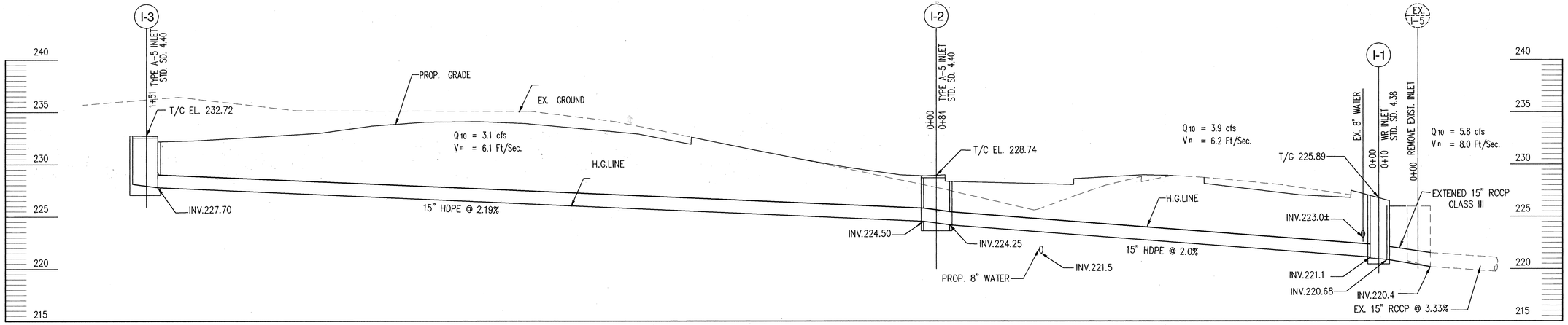

PROFILE - PROP. STORM DRAIN

SCALE: HORZ=1"=10'
VERT:=1"=5'

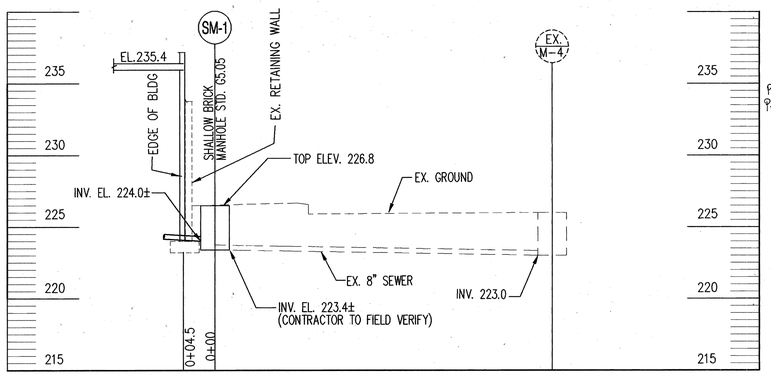

PROFILE - PROP. SANITARY SEWER

SCALE: HORZ=1"=10'
VERT:=1"=5'

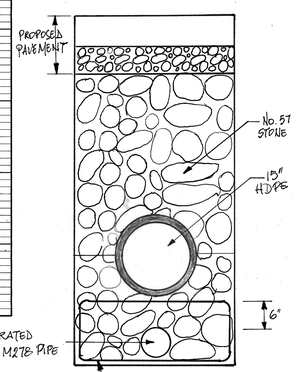

NOTE:
THIS TRENCH DETAIL IS APPLICABLE UPSTREAM OF INLET I-2

△2 SECTION A-A
NOT TO SCALE

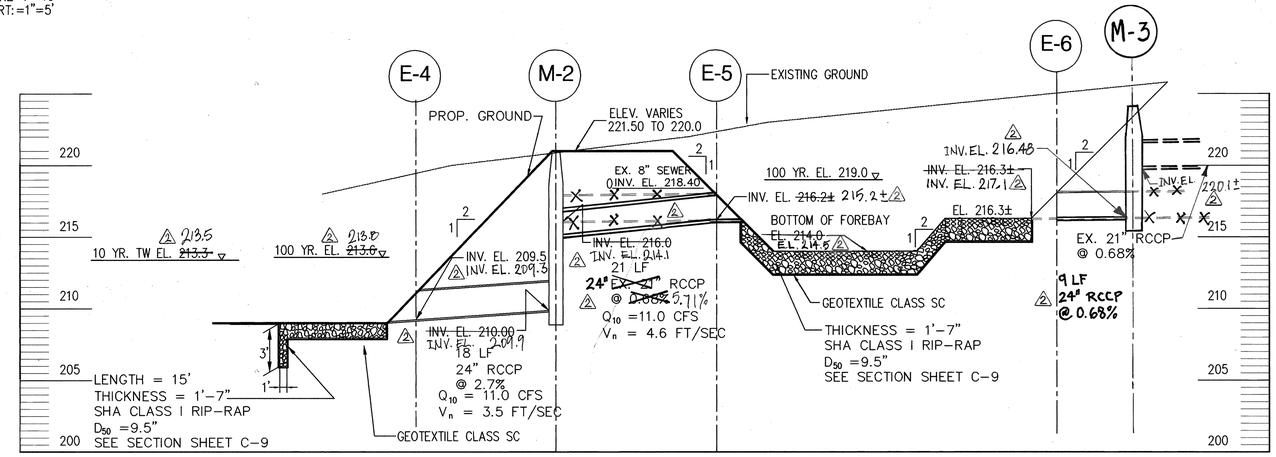

PROFILE PROPOSED STORM DRAIN

SCALE: 1" = 10' HORIZ.
1" = 5' VERT.

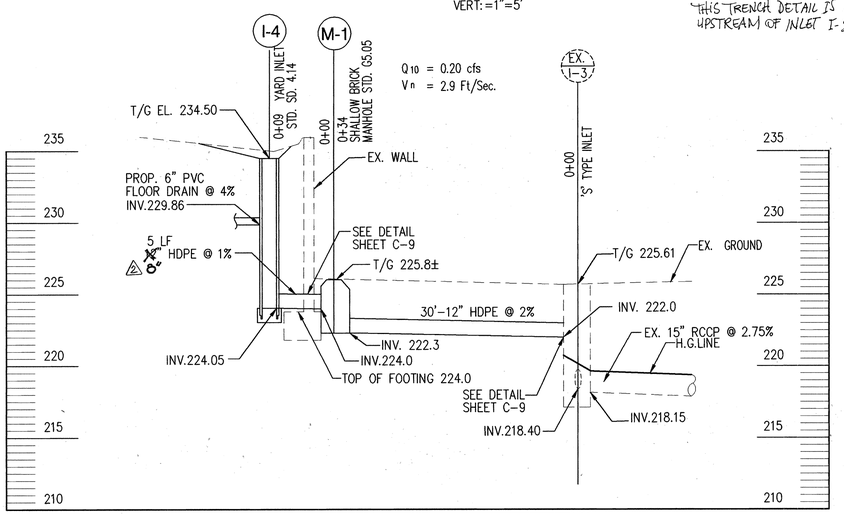

PROFILE - PROP. STORM DRAIN

SCALE: HORZ=1"=10'
VERT:=1"=5'

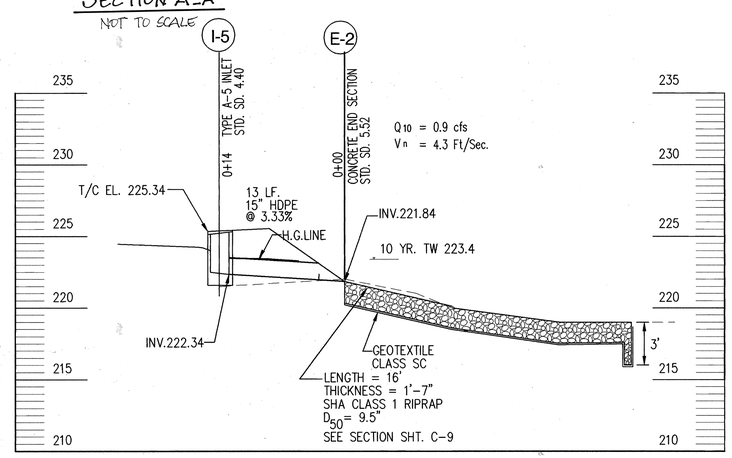

PROFILE - PROP. STORM DRAIN

SCALE: HORZ=1"=10'
VERT:=1"=5'

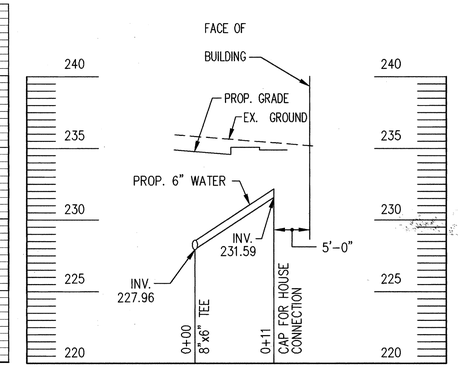

PROFILE - PROP. 6" WHC

SCALE:HORS=1"=10'
VERT:=1"=5'

*SEE GENERAL NOTES 11 ON SHEET C-7 FOR MATERIAL TYPES

THE SUBJECT PROPERTY IS ZONED M-2 PER THE 10-18-93 COMPREHENSIVE ZONING PLAN

Approved : Department of Planning and Zoning

Director	Date 3/10/03
Chief, Division of Land Development	Date 3/14/03
Chief, Development Engineering Division	Date 3/5/03

SUBDIVISION NAME			SECTION/AREA			PARCEL NO.
HOWARD COUNTY DETENTION CENTER			N/A			660
LIBER/FOLIO 2116/282 1009/368 15840, 15841	BLOCK NO 9,10 AND 15	ZONING M-2	TAX MAP 43	GRID NO. 9	HOWARD CO. ELEC. DIST. NO-1	CENSUS TR. 6012.02
WATER CODE B01			SEWER CODE 2221000			

PROPOSED IMPROVEMENTS
BUILDING ADDITION, SEE SITE ANALYSIS CHART FOR APPLICABLE DPZ FILE REFERENCE DPZ FILE REF. FOR CURRENT PROJECT SDP-02-20

Architects Engineers and Construction Consultants
8950 Route 108 Suite 218
Columbia Maryland 21045 (410)995-4067Fax(410)992-1837

DCI DANIEL CONSULTANTS, INC.
CONSULTING ENGINEERING AND PLANNING
8950 Rt. 108 E., Suite 229 Columbia, MD. 21045
Phone: 410-995-0090 Fax: 410-992-7038

SEAL: STATE OF MARYLAND — PROFESSIONAL ENGINEER

REVISIONS

NO.	DATE	DESCRIPTION
△2	9/15/05	REDLINE REVISION

UTILITY PROFILES I
HOWARD COUNTY CENTRAL BOOKING & DISTRICT COURT COMMISSIONERS FACILITY
HOWARD COUNTY, MARYLAND
DATE : FEBRUARY 21, 2003

CAPITAL PROJECT NO. P - 4916

C-8

SET SHEET 8 OF 25

SDP-02-20

H:\PROJECTS\CIVIL\012901\PROGRESIVE\C-8.DWG

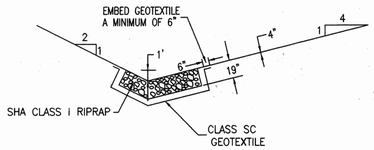

DITCH SECTION BELOW E-2

N.T.S

CONSTRUCTION SPECIFICATIONS

1. THE SUBGRADE FOR THE FILTER, RIPRAP SHALL BE PREPARED TO THE REQUIRED LINES AND GRADES. ANY FILL REQUIRED IN THE SUBGRADE SHALL BE COMPACTED TO A DENSITY OF APPROXIMATELY THAT OF THE SURROUNDING UNDISTURBED MATERIAL.
2. THE ROCK OR GRAVEL SHALL CONFORM TO THE SPECIFIED GRADING LIMITS WHEN INSTALLED RESPECTIVELY IN THE RIPRAP OR FILTER.
3. GEOTEXTILE SHALL BE PROTECTED FROM PUNCHING, CUTTING, OR TEARING. ANY DAMAGE OTHER THAN AN OCCASIONAL SMALL HOLE SHALL BE REPAIRED BY PLACING ANOTHER PIECE OF GEOTEXTILE OVER THE DAMAGED PART OR BY COMPLETELY REPLACING THE GEOTEXTILE. ALL OVERLAPS WHETHER FOR REPAIRS OR FOR JOINING TWO PIECES OF GEOTEXTILE SHALL BE A MINIMUM OF ONE FOOT.
4. STONE FOR THE RIPRAP OUTLETS MAYBE PLACED BY EQUIPTMENT. THEY SHALL BE CONSTRUCTED TO THE FULL COURSE THICKNESS IN ONE OPERATION AND IN SUCH A MANNER AS TO AVOID DISPLACEMENT OF UNDERLYING MATERIALS. THE STONE FOR RIPRAP OUTLETS SHALL BE DELIVERED AND PLACED IN A MANNER THAT WILL ENSURE THAT IT IS REASONABLY HOMOGENOUS WITH THE SMALLER STONE AND SPALLS FILLING THE VOIDS BETWEEN THE LARGER STONES. RIP-RAP SHALL BE PLACED IN A MANNER TO PREVENT DAMAGE TO THE FILTER BLANKET OR GEOTEXTILE. HAND PLACEMENT WILL BE REQUIRED TO THE EXTENT NECESSARY TO PREVENT DAMAGE TO THE PERMANENT WORKS.
5. THE STONE SHALL BE PLACED SO THAT IT BLENDS IN WITH THE EXISTING GROUND.

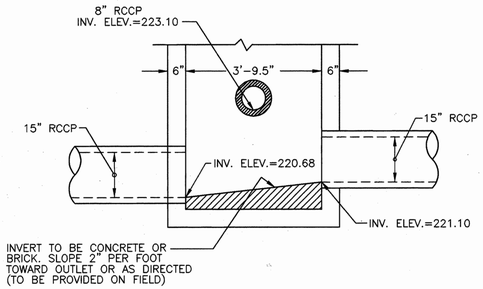

WR-INLET MODIFICATION DETAILS

SCALE : 1/2" = 1'-0"

NOTE:

FOR ALL OTHER DETAILS, SEE HOWARD COUNTY STANDARD No. SD 4.38

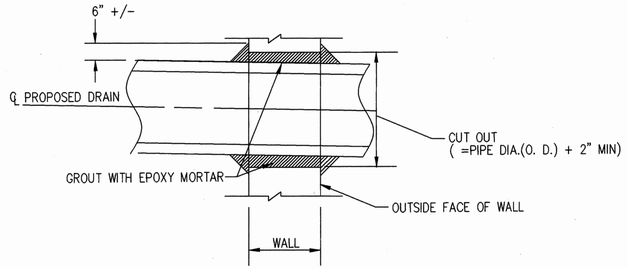

CUT IN THRU WALL

SCALE: 1/2" = 1' - 0"

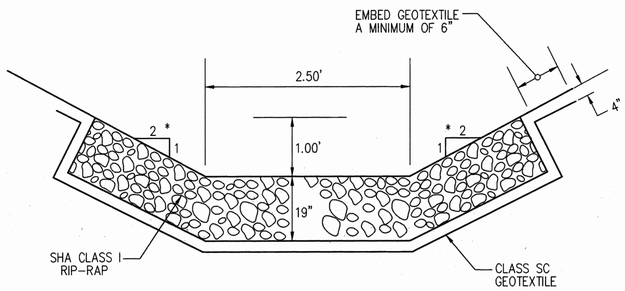

SECTION BELOW E-3

(NOT TO SCALE)

* VARY SIDESLOPE TO MEET EXISTING GROUND AT DOWNSTREAM END OF APRON.

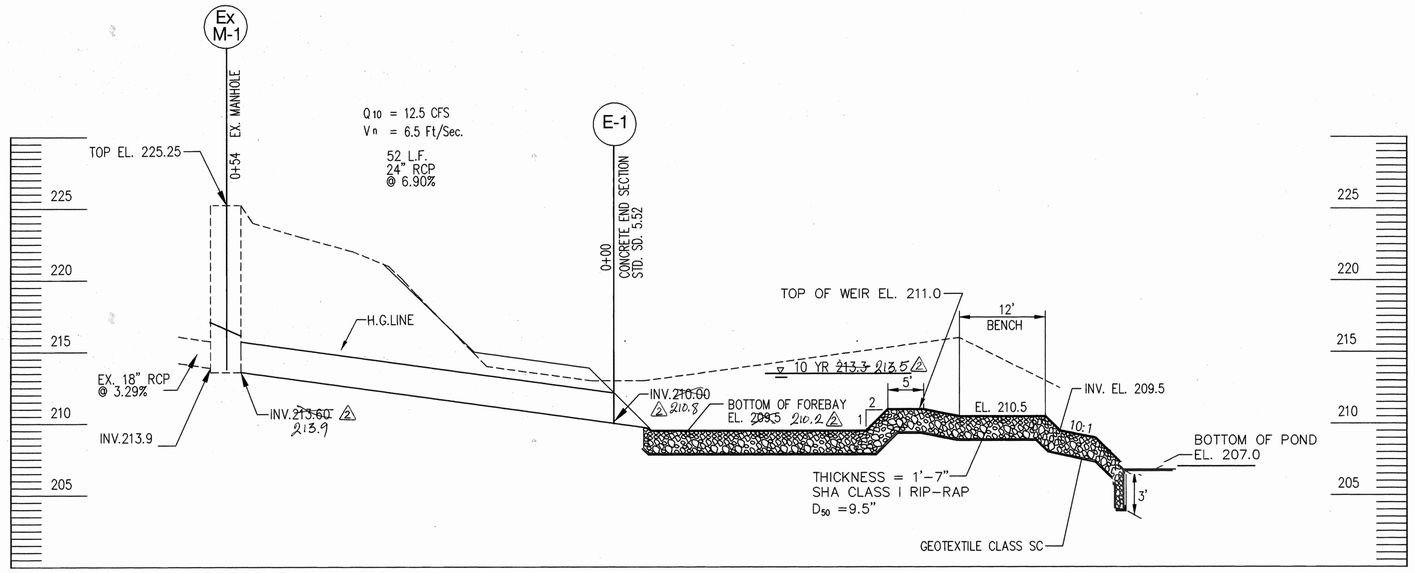

PROFILE - PROP. STORM DRAIN

SCALE: HORIZ. 1"=10'
VERT. 1"=5'

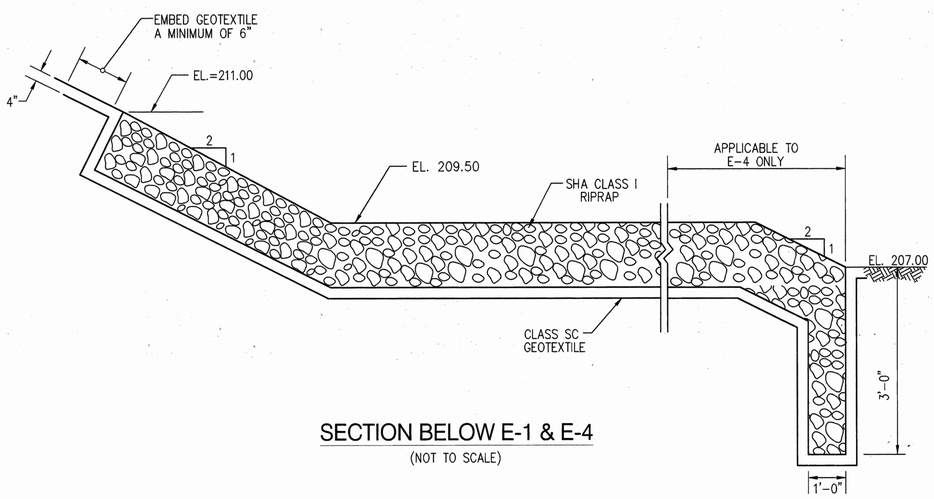

SECTION BELOW E-1 & E-4

(NOT TO SCALE)

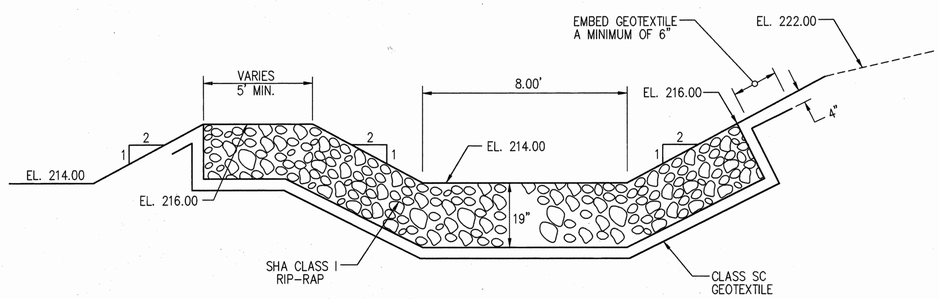

SECTION THRU OVERFLOW WEIR SEPARATING FOREBAY AND INFILTRATION BASIN

(NOT TO SCALE)

THE SUBJECT PROPERTY IS ZONED M-2 PER THE 10-18-93 COMPREHENSIVE ZONING PLAN

Approved : Department of Planning and Zoning

Director — Date 3/10/03

Chief, Division of Land Development — Date 3/17/03

Chief, Development Engineering Division — Date 3/5/03

SUBDIVISION NAME	SECTION/AREA	PARCEL NO.
HOWARD COUNTY DETENTION CENTER	N/A	660

LIBER/FOLIO	BLOCK NO	ZONING	TAX MAP	GRID NO.	HOWARD CO. ELEC. DIST.	CENSUS TR.
2116/282 1009/368 1784, 1786	9,10 AND 15	M-2	43	9	NO-1	6012.02

WATER CODE	SEWER CODE
B01	2221000

PROPOSED IMPROVEMENTS
BUILDING ADDITION, SEE SITE ANALYSIS CHART FOR APPLICABLE DPZ FILE REFERENCE DPZ FILE REF. FOR CURRENT PROJECT SDP-02-20

BBL ati INC. Architects Engineers and Construction Consultants
8950 Route 108 Suite 218
Columbia Maryland 21045 (410)995-4067Fax(410)992-1837

SEAL OF MARYLAND — RICHARD LECOUR SCOTT — No. 19324 — PROFESSIONAL ENGINEER

DCI DANIEL CONSULTANTS, INC.
CONSULTING ENGINEERING AND PLANNING
8950 Rt. 108 E., Suite 229 Columbia, MD. 21045
Phone: 410-995-0090 Fax: 410-992-7038

REVISIONS

NO.	DATE	DESCRIPTION
2	9/15/05	REDLINE REVISION

UTILITY PROFILES II

HOWARD COUNTY CENTRAL BOOKING & DISTRICT COURT COMMISSIONERS FACILITY
HOWARD COUNTY, MARYLAND

DATE : FEBRUARY 21, 2003

CAPITAL PROJECT NO. P - 4916

C-9

SET SHEET 9 OF 25

SDP-02-20

H:\PROJECTS\CIVIL\0121901\PROGRESSIVE\C-9.DWG

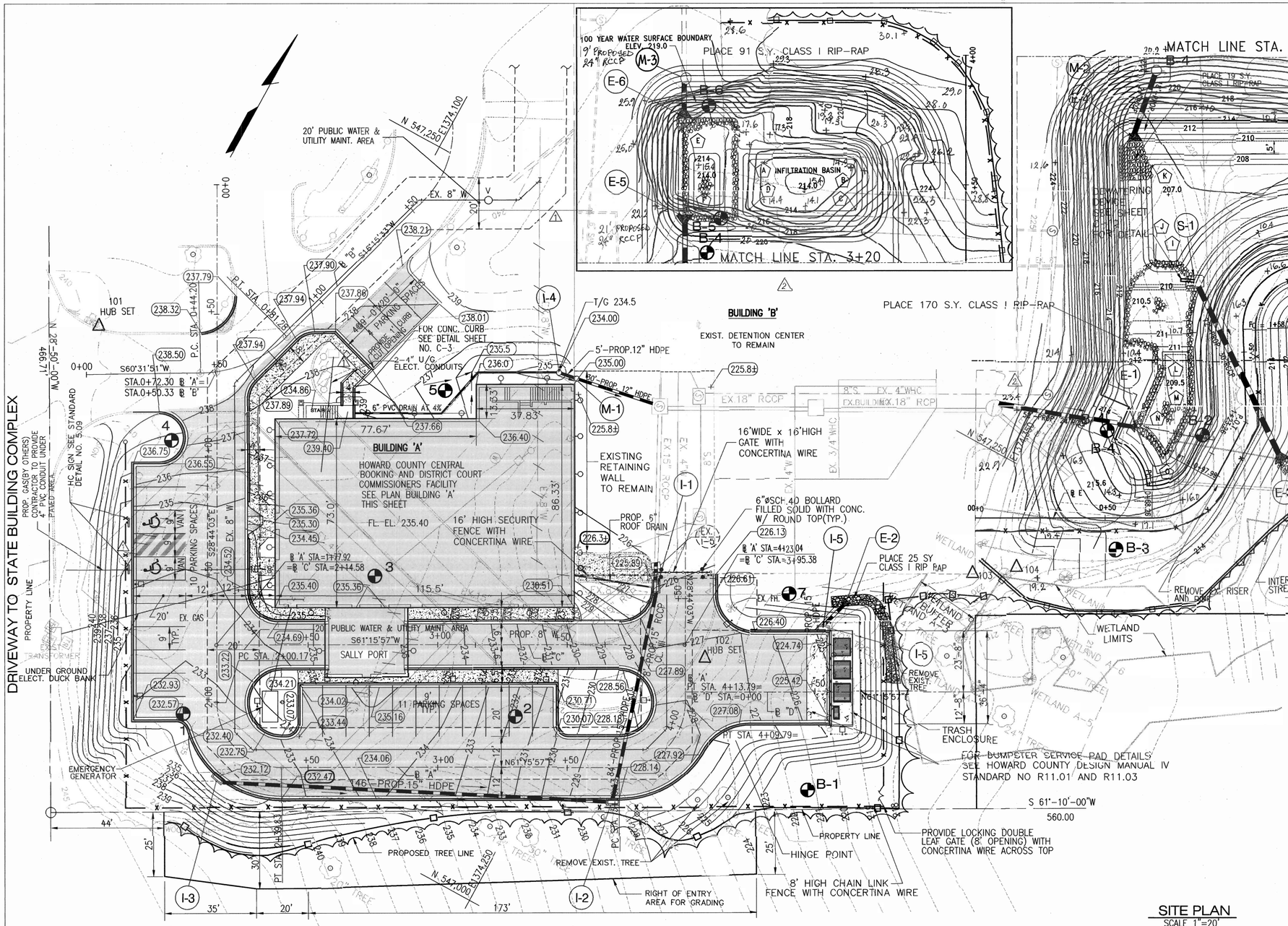

SITE PLAN
SCALE 1"=20'

COORDINATES TABLES FOR SWM POND No. 1

STATION	COORDINATES NORTHING	COORDINATES EASTING	STATION	COORDINATES NORTHING	COORDINATES EASTING
P.O.B. STA. 0+00.00	547223.9897	1374350.4079	D	547443.9000	1374338.0412
P.C. STA. 0+68.26	547256.8046	1374410.2608	E	547450.3142	1374310.5754
P.T. STA. 0+97.99	547281.2432	1374424.5384	F	547433.8043	1374319.6271
STA. 1+23.26	547306.5108	1374424.2398	G	547415.4018	1374417.4647
P.C. STA. 1+58.78	547337.0787	1374406.1424	H	547410.2808	1374420.2723
P.T. STA. 1+98.08	547371.0433	1374415.4464	I	547347.9954	1374371.0373
P.C. STA. 2+27.76	547385.3122	1374441.4723	J	547344.3874	1374363.5382
P.T. STA. 2+60.74	547413.8219	1374449.7906	K	547375.6812	1374345.0653
STA. 4+00	547535.9308	1374382.8432	L	547314.0805	1374384.3136
A	547460.4099	1374328.9895	M	547307.6707	1374388.1085
B	547480.0380	1374364.7903	N	547286.3687	1374390.2087
C	547463.5282	1374373.8420	O	547281.6666	1374402.0366

THE SUBJECT PROPERTY IS ZONED M-2 PER THE 10-18-93 COMPREHENSIVE ZONING PLAN

DEVELOPER'S/LANDOWNER'S CERTIFICATION

I/We certify that all development and/or construction will be done according to these plans, and that any responsible personnel involved in the construction project will have a Certificate of Attendance at a Department of the Environment Approved Training Program for the Control of Sediment and Erosion before beginning the project. I shall engage a Registered Professional Engineer to supervise pond construction and provide the Howard Soil Conservation District with an "as-built" plan of the pond within 30 day of completion. I also authorize periodic on-site inspections by the Howard Soil Conservation District.

Michael A. Gravanielle — Signature — Date 3/12/03
Michael A. Gravanielle — Print Name — MD. License No.

"AS-BUILT" CERTIFICATION

"I Hereby certify that the facility shown on this plan was constructed as shown on the "As-Built" plans and meets the approved plans and specifications. I also certify that construction was inspected in accordance with the requirements of Howard County.

Signature — Date
Print Name — MD. License No.

CONSULTANT'S HAZARD CLASS CERTIFICATION

"I Certify that this pond meets all the requirements for hazard Class A. (Requirements as stated in the soil conservation service—Maryland standards and specifications for pond, code 378, November 1992) All necessary investigations and computations have been performed to verify this finding."

Signature — Date 3/12/03
Richard Sobbott — Print Name — 15222 MD. License No.

ENGINEER'S CERTIFICATION

"I certify that these plans for pond construction, erosion and sediment control represent a practical and workable plans based on my personal knowledge of the site conditions. This plans was prepared in accordance with the requirements of the Howard Soil Conservation District. I have notified the developer that he/she must engage a Registered Professional Engineer to supervise pond construction and provide the Howard Soil Conservation District with an "as-built" plan of the pond within 30 days of completion."

Signature — Date 3/12/03
Richard Sobbott — Print Name — 15222 MD. License No.

These plans have been reviewed for the Howard Soil Conservation District and meet the technical requirements for small pond construction, soil erosion and sediment control.

U.S.D.A. Natural Resources Conservation Service — Date 3/17/03

These plans for small pond construction, soil erosion and sediment control meet the requirements of the Howard Soil Conservation District.

Howard Soil Conservation District — Date 3/13/03

Approved : Department of Planning and Zoning

Director — Date 3/14/03
Chief, Division of Land Development — Date 3/14/03
Chief, Development Engineering Division — Date 3/14/03

SUBDIVISION NAME	SECTION/AREA	PARCEL NO.
HOWARD COUNTY DETENTION CENTER	N/A	660

LIBER/FOLIO	BLOCK NO	ZONING	TAX MAP	GRID NO.	HOWARD CO. ELEC. DIST.	CENSUS TR.
2116/282 1009/368 15846,15847	9, 10 AND15	M-2	43	9	NO-1	6012.02

WATER CODE B01 — SEWER CODE 2221000

PROPOSED IMPROVEMENTS
BUILDING ADDITION, SEE SITE ANALYSIS CHART FOR APPLICABLE DPZ FILE
REFERENCE DPZ FILE REF. FOR CURRENT PROJECT SDP-02-20

BBL atl INC. Architects Engineers and Construction Consultants
8950 Route 108 Suite 218
Columbia Maryland 21045 (410)995-4067Fax(410)992-1837

DCL DANIEL CONSULTANTS, INC.
CONSULTING ENGINEERING AND PLANNING
8950 Rt. 108 E., Suite 229 Columbia, MD. 21045
Phone: 410-995-0090 Fax: 410-992-7038

REVISIONS

NO.	DATE	DESCRIPTION
1	3/12/03	ADDENDUM NO. 1
2	9/15/05	REDLINE REVISION

STORMWATER MANAGEMENT PLAN

HOWARD COUNTY CENTRAL BOOKING & DISTRICT COURT COMMISSIONERS FACILITY
HOWARD COUNTY, MARYLAND

DATE : FEBRUARY 21, 2003

CAPITAL PROJECT NO. P - 4916

C-10

SET SHEET 10 OF 25

SDP-02-20

H:\PROJECTS\CIVIL\01219O1\PROGRESIVE\NEWC-10.DWG

BORINGS

Tidewater — Boring Log (Page 1 of 1, each log)

Common to all logs: PROJECT: Howard County Detention Center, Stormwater Management Facility — Location: See Plan — PROJECT No.: 02-004 — HAMMER: 140 Lbs — HAMMER DROP: 30 In. — SPOON O.D.: 2 In. — FOREMAN: S. Smith

LEGEND: DS DRIVEN SPOON; ST SHELBY TUBE; PS PISTON SAMPLE; RC ROCK CORE; HSA HOLLOW STEM AUGER; DC DRIVEN CASING; MD MUD DRILLING

BORING No.: B-1 — ELEV: 221± — BORING METHOD: Hand Auger — DATE START: 1/15/02 — FINISH: 1/15/02 — ROCK CORE DIA.: — DRILL RIG: N/A

ELEV.	DESCRIPTION	DEPTH	No.	NOTES
221.0	Brown moist fine Sandy SILT, trace Clay (ML, Silt Loam)		S-1	
219.0	Red-Gray moist Silty CLAY, trace Sand (CL, Silty Clay Loam)	2.0	S-2, S-3, S-4, S-5	Used Hand Auger
208.0	Bottom of Boring at 13.0 feet	13.0		

GROUND WATER: WATER ON RODS: NONE; AT COMPLETION: DRY; AT __ Hours WATER: ; CAVED: ; CAVED:

BORING No.: B-2 — ELEV: 217± — BORING METHOD: Hand Auger — DATE START: 1/15/02 — FINISH: 1/15/02 — DRILL RIG: N/A

ELEV.	DESCRIPTION	DEPTH	No.	NOTES
217.0	Brown moist Silty fine to medium SAND, little Clay and Gravel (SM-SC, Sandy Loam)		S-1	
215.0	Brown moist Silty fine to medium SAND (SM, Loamy Sand)	2.0	S-2	Used Hand Auger
212.5	Gray-Brown moist Silty CLAY, little Sand (CL, Clay Loam)	4.5	S-3	
207.0	Bottom of Boring at 10.0 feet	10.0		

GROUND WATER: WATER ON RODS: NONE; AT COMPLETION: DRY; CAVED: ; CAVED:

BORING No.: B-3 — ELEV: 217± — BORING METHOD: Hand Auger — DATE START: 1/15/02 — FINISH: 1/15/02 — DRILL RIG: N/A

ELEV.	DESCRIPTION	DEPTH	No.	NOTES
217.0	Brown Silty fine to medium SAND (SM, Sandy Loam)		S-1	
216.0	Red-Brown moist Silty CLAY, little Sand (CL, Clay Loam)	1.0	S-2	
214.0	Gray-Brown moist Silty/Clayey SAND (SM-SC) (Loamy Sand/Sandy Clay Loam)	3.0	S-3, S-4	Used Hand Auger
212.0	Brown wet Silty fine to medium SAND, trace Clay (SM-SC, Sandy Loam)	5.0	S-5	
207.0	Bottom of Boring at 10.0 feet	10.0		

GROUND WATER: WATER ON RODS: 5.0 feet; AT COMPLETION: 5.0 feet; CAVED: ; CAVED:

BORING No.: B-4 — ELEV: 213± — BORING METHOD: Hand Auger — DATE START: 1/15/02 — FINISH: 1/15/02 — DRILL RIG: N/A

ELEV.	DESCRIPTION	DEPTH	No.	NOTES
213.0	Gray wet Silty CLAY, little Sand (CL, Silty Clay Loam)		S-1, S-2, S-3	Used Hand Auger
205.0	Bottom of Boring at 8.0 feet	8.0		

GROUND WATER: WATER ON RODS: 5.0 feet; AT COMPLETION: 5.0 feet; CAVED: ; CAVED:

BORING No.: B-4A — ELEV: 222± — BORING METHOD: GeoProbe — DATE START: 2/5/02 — FINISH: 2/5/02 — DRILL RIG: GeoProbe

ELEV	DESCRIPTION	DEPTH	Blows / 6 in	NOTES
222.0	Brown mosit fine Sandy SILT (ML, Silt Loam)		Continuous GeoProbe Sampling	5" Topsoil
222.0	Tan-Orange moist to wet Silty fine-medium SAND (SM, Sandy Loam)	2.0		Encountered Groundwater @ 8'
211.5	Gray moist Clayey SILT, little fine Sand (ML, Silty Clay Loam)	10.5		
210.0	Orange-Brown wet Silty fine-medium SAND (SM, Loamy Sand)	12.0		
207.5	Gray moist Clayey SILT, with sand lenses (ML, Silty Clay Loam)	14.5		
206.0	Bottom of Boring at 16.0 feet	16.0		

GROUND WATER: WATER ON RODS: 8.0 feet; AT COMPLETION: ; CAVED: ; CAVED:

BORING No.: B-5 — ELEV: 224± — BORING METHOD: GeoProbe — DATE START: 2/5/02 — FINISH: 2/5/02 — DRILL RIG: GeoProbe

ELEV	DESCRIPTION	DEPTH	Blows / 6 in	NOTES
224.0	Tan moist fine Sandy SILT (ML, Silt Loam)		Continuous GeoProbe Sampling	0" Topsoil
222.0	Tan-Maroon moist fine Sandy SILT, some Sand lenses (ML, Silt Loam)	2.0		No Groundwater Encountered
215.0	Red-Gray moist Silty CLAY (CL, Clay Loam)	9.0		
212.0	Bottom of Boring at 12.0 feet	12.0		

GROUND WATER: WATER ON RODS: NONE; CAVED: ; CAVED:

BORING No.: B-6 — ELEV: 226± — BORING METHOD: GeoProbe — DATE START: 2/5/01 — FINISH: 2/5/01 — DRILL RIG: GeoProbe

ELEV	DESCRIPTION	DEPTH	Blows / 6 in	NOTES
226.0	Brown moist Silty fine-medium SAND (SM, Sandy Loam)		Continuous Geoprobe Sampling	5" Topsoil
224.0	Brown-Maroon moist fine Sandy SILT, some Sand lenses (ML, Silt Loam)	2.0		No Groundwater Encountered
218.0	Brown moist Silty CLAY, trace Sand (CL, Clay Loam)	8.0		
214.0	Bottom of Boring at 12.0 feet	12.0		

GROUND WATER: WATER ON RODS: NONE; CAVED: ; CAVED:

CONCLUSION FROM APRIL 29, 2002 GEOTECHNICAL REPORT BY TIDEWATER INC.

1. THE CLAYEY SOILS ENCOUNTERED AT THE BOTTOM OF THE POND (BORING B-4) ARE NOT SUITABLE FOR INFILTRATION. IT IS THEREFORE NOT FEASIBLE TO USE INFILTRATION PRACTICES TO PROVIDE FOR THE WATER QUALITY VOLUME.
2. THE RECHARGE VOLUME AND WATER QUALITY VOLUME SHOULD BE PROVIDED FOR USING SEPARATE FACILITIES BECAUSE OF THE LOW INFILTRATION RATES.
3. THE HIGH WATER TABLE AT BORING B-4 WOULD INDICATE A WET POND IS FEASIBLE AT THAT LOCATION TO PROVIDE THE WATER QUALITY VOLUME.
4. THE SOILS BELOW THE BOTTOM OF THE PROPOSED POND CONSIST OF VERY FIRM SANDY SILT (BORING B-5) AND HARD SILTY CLAY (BORING B-6). THE SOILS HAVE USDA CLASSIFICATIONS OF SILT LOAM AND CLAY LOAM WHICH ARE UNSUITABLE FOR INFILTRATION. THE PUBLISHED INFILTRATION RATES FOR THESE SOILS ARE 0.27 AND 0.09 INCHES PER HOUR RESPECTIVELY.

STORMWATER MANAGEMENT SUMMERY

CHANNEL PROTECTION VOLUME

DRAINAGE AREA	5.5 Ac
INFLOW CENTROID AT TIME	13.5 Hr
OUTFLOW CENTROID AT TIME	~~33.6~~ 31.9 Hr (Δ2)
TIME LAG	~~20.6~~ 18.4 Hr (Greater than 18Hr.) (Δ2)
BMP	EXTENDED DETENTION POCKET POND (1 1/2" DIA. ORIFICE INV. ~~209.5~~) 210.0 (Δ2)

OVERBANK FLOOD PROTECTION VOLUME

PRE-CONST. DRAINAGE AREA	9.5 Ac.
PRE-CONST. RCN	69
PRE-CONST. Tc	.33 Hr
PRE-CONST. DISCHARGE (1 yr.)	3.7 cfs
POST-CONST.	
SUB-AREA 1 DRAINAGE AREA	4.13 Ac.
SUB-AREA 1 RCN	67
SUB-AREA 1 Tc	.27 Hr
SUB-AREA 2 DRAINAGE AREA	3.12 Ac.
SUB-AREA 2 RCN	90
SUB-AREA 2 Tc	.21 Hr.
SUB-AREA 3 DRAINAGE AREA	2.42 Ac.
SUB-AREA 3 RCN	91
SUB-AREA 3 Tc	.245 Hr.
POST-CONST. DISCHARGE (1 yr.)	~~3.1 cfs~~ ** 2.4CFS (Δ2)
BMP	EXTENDED DETENTION POCKET POND

** AS PER COMMENTS FROM PHIL THOMPSON DATED 8/26/02 IT IS ONLY NECESSARY TO MANAGE THE 1 YEAR EVENT.

EXTREME FLOOD PROTECTION VOLUME

DRAINAGE AREA	5.5 Ac
BMP	EXTENDED DETENTION POCKET POND (PASS 100 Yr. EVENT WITH 2 FT. OF FREEBOARD

WATER QUALITY VOLUME

SITE AREA:	4.84 Ac.
PERCENT IMPERVIOUS	72 %
WQV	10453 cfs ***
BMP	EXTENDED DETENTION POCKET POND

*** DEDUCT REV FROM WQV SINCE INFILTRATION BASIN PROVIDED UPSTREAM. SPLIT THIS VOLUME BETWEEN WET AND DRY VOLUME AS PER COMMENTS FROM PHIL THOMPSONON 8/26/02 THE DRY VOLUME DRAINS OUT IN 36 HOURS (>24 HOURS)

RECHARGE VOLUME

SITE AREA:	4.84 Ac.
PERCENT IMPERVIOUS	72 %
SOIL WEIGHTED RECHARGE FACTOR	0.15
REV	1845 cfs
BMP	INFILTRATION BASIN

CONSTRUCTION CHECKLIST SWM POND NO. 1

POND ITEM	DESIGN ELEVATION (SETTLED)	CONSTRUCTION ELEVATION	DESIGN SLOPE	CONSTRUCTION SLOPE	DESIGN LENGTH	CONSTRUCTION LENGTH	DESIGN WIDTH	CONSTRUCTION WIDTH	DESIGN DIAMETER	CONSTRUCTION DIAMETER
EMBANKMENT	~~215.6~~ 215.8		3:1/3:1		300		12'-0"		30"	

GEOTECHNICAL CERTIFICATION RECEIVED FOR EMBANKMENT (Δ2)	YES	NO
CUTOFF TRENCH, IMPERVIOUS CORE, WEIR WALL, BARREL, ETC. CONSTRUCTION AND MATERIALS ?	YES	NO
POND GRADED TO SUBSTANTIALLY MATCH DESIGN GRADES AND VOLUME	YES	NO
TRASHRACKS AND ORIFICE ELBOWS IN PLACE ?	YES	NO

SWM POND NO. 1 DESIGN SUMMARY

DESIGN STORM	FACILITY INFLOW (CFS)	FACILITY DISCHARGE (CFS)	WATER SURFACE ELEVATION (FT)	STORAGE VOLUME C. F. REQUIRED	STORAGE VOLUME C. F. PROVIDED
CPV	11.0	(Δ2) ~~2.6~~ 2.0	(Δ2) 212.8	—	17765
2 YEAR	14.5	(Δ2) ~~10.1~~ 5.7	(Δ2) ~~212.9~~ 213.05	—	—
10 YEAR	25.6	(Δ2) ~~24.0~~ 22.7	(Δ2) ~~213.3~~ 213.50	—	—
100 YEAR	37.6	(Δ2) ~~34.6~~ 33.8	(Δ2) ~~213.6~~ 213.8	—	—
100 YEAR CLOGGED	37.6	(Δ2) ~~34.3~~ 33.8	~~213.6~~ 215.8	—	—
WQV			(Δ2) 210 ~~209.5~~ WET; (Δ2) 211.1 ~~210.95~~ DRY	5227 WET; 5227 DRY	~~5291~~ WET 6913 (Δ2); ~~5130~~ DRY 5227 (Δ2)
REV			(Δ2) 217 ~~216.0~~	1845	~~2460~~ 2049 (Δ2)

PROJECT INFORMATION

PROJECT NAME: HOWARD COUNTY BOOKING COURT FACILITY
SCD FILE NO: SDP - 02 - 20
POND NO:

(TO NEAREST 1000 FT)
EAST 1374350
NORTH 547250
COUNTY HOWARD
ADC MAP/GRID _____/_____

OWNER INFORMATION

NAME: HOWARD COUNTY GOVERNMENT
ADDRESS: 3430 COURTHOUSE DRIVE
CITY: ELLICOTT CITY
STATE: MD. ZIP: 21043

TYPE OF POND: o EXCAVATED o EMBANKMENT o BOTH

DRAINAGE AREA: 5.5 ACRES
SURFACE AREA: 0.5 ACRES
NORMAL DEPTH: 4.0 FEET
DESIGN STORM FREQUENCY: 100 YEARS
STORAGE AT DESIGN HIGH WATER (DHW): 0.54 AC-FT

EMBANKMENT (CHECK ALL THAT APPLY)
o STORMWATER MGMT. - WET; o STORMWATER MGMT. - DRY; o INFILTRATION/WATER QUALITY; o WATER SUPPLY/IRRIGATION; o SAND & GRAVEL WASH POND; o SEDIMENT CONTROL; o LIVESTOCK; o FLOOD CONTROL; o RECREATION; o BORROW MATERIAL; o WETLAND MITIGATION; o WILDLIFE/FISH; o FIRE CONTROL; o OTHER (SPECIFY): ________

EMBANKMENT
TOP ELEVATION: ~~215.6~~ FT. 215.8 (Δ2) — MAX FILL HEIGHT: 5.8 ~~5.6~~ FT. (Δ2)
NORMAL POOL ELEVATION: ~~209.5~~ FT. 210.0 (Δ2) — TOP WIDTH: 12 FT.
DHW WATER ELEVATION: ~~213.6~~ FT. 213.8 (Δ2) — SIDE SLOPES: U.S. 3 :1; D.S. 3 :1

WILL EMBANKMENT SERVE AS A PUBLIC ROADWAY? o YES x NO

PRINCIPAL SPILLWAY
BARREL SIZE: 30 INCHES — DESIGN CAPACITY AT DHW: ~~34.3~~ 37.6 (Δ2) CFS
o BCCMP o ALUM o PVC o CAST-IN-PLACE BOX CULVERT
o WEIR o CHANNEL x OTHER: RCCP

EMERGENCY SPILLWAY — DESIGN CAPACITY AT DHW: N/A CFS
VELOCITY: ______ FT/SEC — BOTTOM WIDTH: ______ FT
CREST ELEV: ______ FT — SIDE SLOPES: ______ :1
SPILLWAY PROTECTION: o GRASS x RIPRAP o GABIONS o OTHER ______

DISTANCE BELOW POND TO — PROPERTY LINE: 210 FT; PUBLIC ROAD: 1210 FT *

SOIL CONSERVATION DISTRICT (NAME): ______________________
DISTRICT MANAGER SIGNATURE: ______________________ DATE: __________
(The following line to be completed and form re-submitted after As-Built certification has been accepted by the District)
DATE AS-BUILT ACCEPTED: ______________ ______________________
DISTRICT REPRESENTATIVE SIGNATURE

* ALL DEVELOPMENT PROHIBITED WITHIN THIS REACH BY EASEMENT

DESIGN SUMMARY POND NO. 1

WATER SHED :	DEEP RUN
STORAGE HEIGHT	4.1 FT.
100 YEAR STORAGE	0.56 ACRE FEET
DRAINAGE AREA	5.5 ACRE
NORMAL SURFACE AREA	0.2 ACRE
SPILLWAY CAPACITY	34.3 CFS (100 YEAR)
STORAGE HEIGHT PRODUCT :	2.3 ACRE FEET^2
STRUCTURE CLASSIFICATION :	"A" (BECAUSE STORAGE HEIGHT PRODUCT IS LESS THAN 3000) DEVELOPMENT IS PROHIBITED 1210' DOWSTREAM OF DAM BY FOREST CONSERVATION AND FLOOD PLAIN EASEMENTS DURING NON-STORM CONDITIONS. NO WATER WILL BE IMPOUNDED AGAINST THE EMBANKMENT.
FREEBOARD REQUIRED :	2.0' NO EMERGENCY SPILLWAY
FREEBOARD PROVIDED :	2.0
STRUCTURE TYPE :	EXCAVATED AND EMBANKMENT POCKET POND

ENGINEER'S CERTIFICATE

"I Certify that this plan for erosion and sediment control represents a practical and workable plan based on my personal knowledge of the site conditions and that it was prepared in accordance with requirements of the Howard Soil Conservation District."

Richard Sobbott — 2/25/03
Signature of Engineer (Print name below signature) — Date

DEVELOPER'S CERTIFICATE

"I/We Certify that all development and construction will be done according to this plan and that any responsible personal involved in the construction project will have a certificate of Attendance at the Department of the Environment Approved Training Program for the Control of sediment and Erosion before beginning the project. I also authorize periodic on-site inspection by Howard Soil Conservation District"

Michael A. Guvanniello — 2/25/03
Signature of Developer (Print name below signature) — Date

Reviewed for HOWARD SCD and meet Technical Requirements. — 3/4/03
U.S.D.A. - Natural Resources Conservation Service — Date

The development plan is approved for soil erosion and sediment control by the HOWARD SOIL CONSERVATION DISTRICT
Howard SCD — 3/4/03 — Date

THE SUBJECT PROPERTY IS ZONED M-2 PER THE 10-18-93 COMPREHENSIVE ZONING PLAN

Approved : Department of Planning and Zoning
Director — 3/18/03 Date
Chief, Division of Land Development — 3/14/03 Date
Chief, Development Engineering Division — [illegible] Date

SUBDIVISION NAME	SECTION/AREA	PARCEL NO.
HOWARD COUNTY DETENTION CENTER	N/A	660

LIBER/FOLIO	BLOCK NO	ZONING	TAX MAP	GRID NO.	HOWARD CO. ELEC. DIST.	CENSUS TR.
2116/282 1009/368 15840, 15841	9, 10 AND15	M-2	43	9	NO-1	6012.02

WATER CODE: B01 — SEWER CODE: 2221000

PROPOSED IMPROVEMENTS
BUILDING ADDITION, SEE SITE ANALYSIS CHART FOR APPLICABLE DPZ FILE REFERENCE DPZ FILE REF. FOR CURRENT PROJECT SDP-02-20

ati INC. Architects Engineers and Construction Consultants
Architects and Construction Consultants
8950 Route 108 Suite 218
Columbia Maryland 21045 (410)995-4067Fax(410)992-1837

SEAL: STATE OF MARYLAND — RICHARD LECOUR SOBBOTT — NO. 15222 — REGISTERED PROFESSIONAL ENGINEER

DCI DANIEL CONSULTANTS, INC.
CONSULTING ENGINEERING AND PLANNING
8950 Rt. 108 E., Suite 229 Columbia, MD. 21045
Phone: 410-995-0090 Fax: 410-992-7038

REVISIONS

NO.	DATE	DESCRIPTION
2	9/15/05	REDLINE REVISION

STORMWATER MANAGEMENT PLAN DETAILS - I
HOWARD COUNTY CENTRAL BOOKING & DISTRICT COURT COMMISSIONERS FACILITY
HOWARD COUNTY, MARYLAND
DATE : FEBRUARY 21, 2003

CAPITAL PROJECT NO. P - 4916
C-11
SET SHEET 11 OF 25

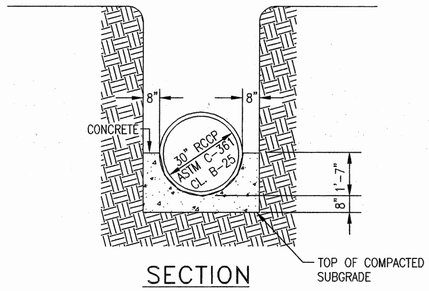

SECTION

NOTE: POUR CONCRETE AGAINST UNDISTURBED EARTH. REMOVE SHEETING BEFORE POURING CONCRETE. ALL CONCRETE SHALL BE 3000 PSI.

SCS TR-46 A-2 CONCRETE CRADLE

NOT TO SCALE

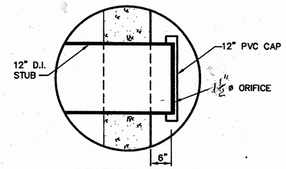

ORIFICE PLATE

PERFORATED PIPE SHALL BE BONDED TO ORIFICE SECTION AND HAVE REMOVABLE CAP PLACED ONTO OPPOSITE END FOR CLEAN OUT.

PERFORATED PIPE SHALL BE SECURELY COVERED ON ALL SIDES WITH 12" MINIMUM #2 STONE. SEE DETAIL 2 THIS SHEET

CONSTRUCTION OPERATIONS SHALL BE CARRIED OUT IN SUCH A MANNER THAT EROSION AND WATER POLLUTION ARE MINIMIZED.

SET PERFORATED PIPE AT INVERTS SPECIFIED ON STORM WATER MANAGEMENT PLANS PRINCIPAL SPILLWAY PROFILE.

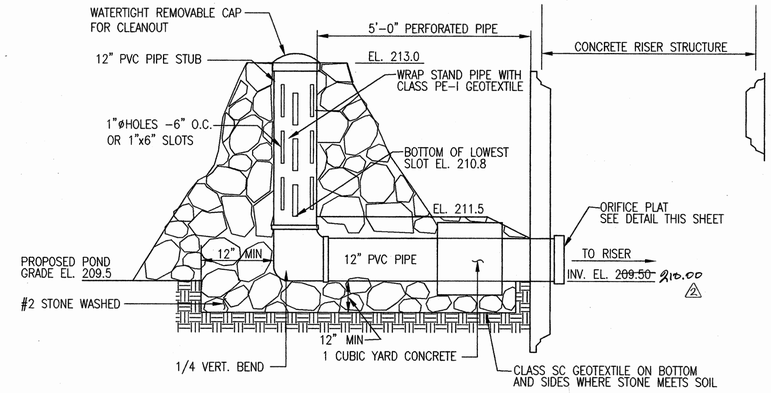

INTERNALLY CONTROLLED ORIFICE

NOT TO SCALE

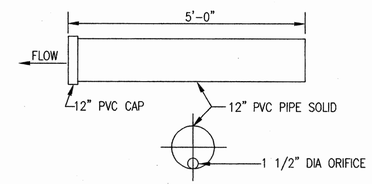

ORIFICE SECTION

NOT TO SCALE

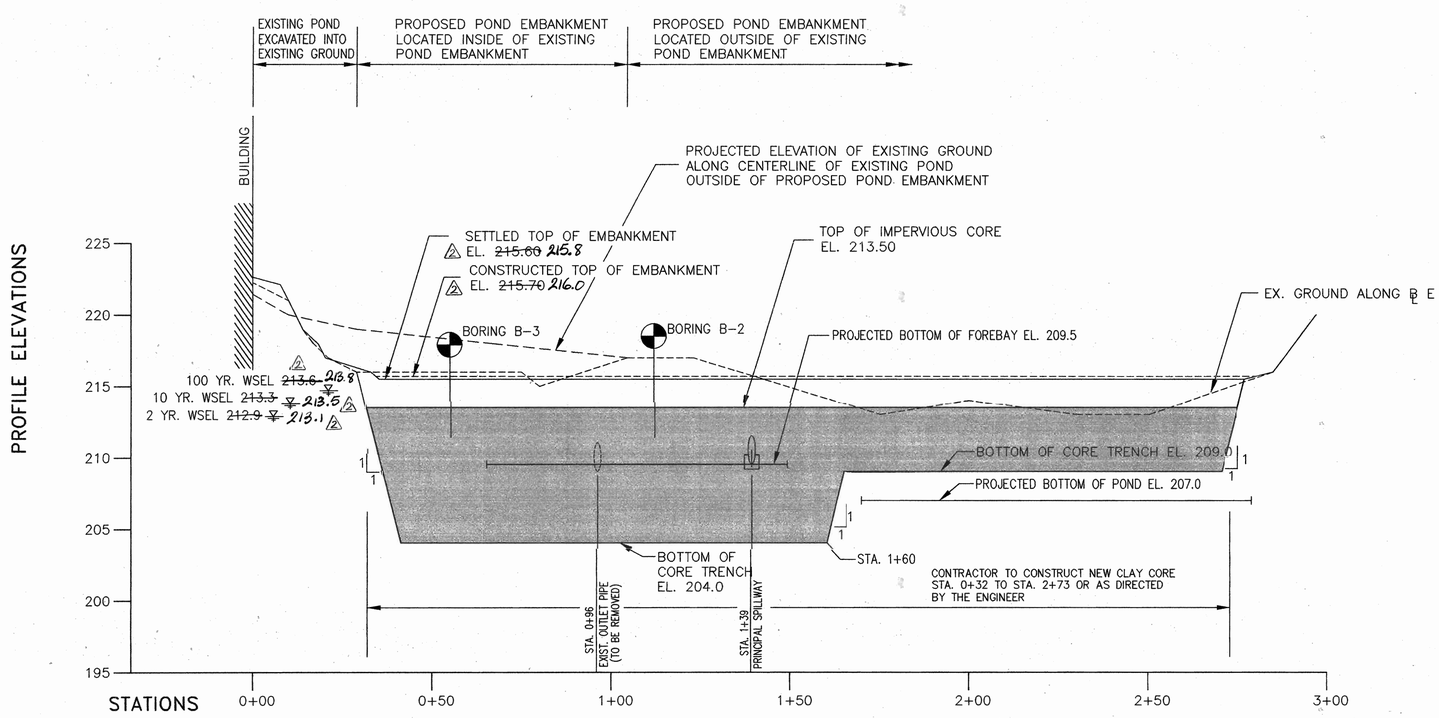

EMBANKMENT PROFILE

SCALE: 1" = 20' HORIZ.
1" = 5' VERT.

DEVELOPER'S/LANDOWNER'S CERTIFICATION

I/We certify that all development and/or construction will be done according to these plans, and that any responsible personnel involved in the construction project will have a Certificate of Attendance at a Department of the Environment Approved Training Program for the Control of Sediment and Erosion before beginning the project. I shall engage a Registered Professional Engineer to supervise pond construction and provide the Howard Soil Conservation District with an "as-built" plan of the pond within 30 day of completion. I also authorize periodic on-site inspections by the Howard Soil Conservation District.

Michael A. Giovannietto — Signature — Date 2/25/03
Michael A. Giovannietto — Print Name — MD. License No.

"AS-BUILT" CERTIFICATION

"I Hereby certify that the facility shown on this plan was constructed as shown on the "As-Built" plans and meets the approved plans and specifications. I also certify that construction was inspected in accordance with the requirements of Howard County.

Signature — Date
Print Name — MD. License No.

ENGINEER'S CERTIFICATE

"I Certify that this plan for erosion and sediment control represents a practical and workable plan based on my personal knowledge of the site conditions and that it was prepared in accordance with requirements of the Howard Soil Conservation District."

Richard Schott — Signature of Engineer (Print name below signature) — Date 2/25/03

DEVELOPER'S CERTIFICATE

"I/We Certify that all development and construction will be done according to this plan and that any responsible personal involved in the construction project will have a certificate of Attendance at the Department of the Environment Approved Training Program for the Control of sediment and Erosion before beginning the project. I also authorize periodic on-site inspection by Howard Soil Conservation District"

Michael A. Giovannietto — Signature of Developer (Print name below signature) — Date 2/25/03

Reviewed for HOWARD SCD and meet Technical Requirements.

U.S.D.A. – Natural Resources Conservation Service — Date 3/4/03

The development plan is approved for soil erosion and sediment control by the HOWARD SOIL CONSERVATION DISTRICT

Howard SCD — Date 3/4/03

THE SUBJECT PROPERTY IS ZONED M-2 PER THE 10-18-93 COMPREHENSIVE ZONING PLAN

Approved : Department of Planning and Zoning

Director — Date 3/10/03
Chief, Division of Land Development — Date 3/10/03
Chief, Development Engineering Division — Date 3/5/03

SUBDIVISION NAME	SECTION/AREA	PARCEL NO.
HOWARD COUNTY DETENTION CENTER	N/A	660

LIBER/FOLIO	BLOCK NO	ZONING	TAX MAP	GRID NO.	HOWARD CO. ELEC. DIST.	CENSUS TR.
2116/282 1009/368 15882, 15841	9, 10 AND15	M-2	43	9	NO-1	6012.02

WATER CODE	SEWER CODE
B01	2221000

PROPOSED IMPROVEMENTS
BUILDING ADDITION, SEE SITE ANALYSIS CHART FOR APPLICABLE DPZ FILE REFERENCE DPZ FILE REF. FOR CURRENT PROJECT SDP-02-20

Architects Engineers and Construction Consultants
Architects and Construction Consultants
8950 Route 108 Suite 218
Columbia Maryland 21045 (410)995-4067Fax(410)992-1837

SEAL — STATE OF MARYLAND — RICHARD LEGOUD — PROFESSIONAL ENGINEER

DCI — DANIEL CONSULTANTS, INC.
CONSULTING ENGINEERING AND PLANNING
8950 Rt. 108 E., Suite 229 Columbia, MD. 21045
Phone: 410-995-0090 Fax: 410-992-7038

REVISIONS

NO.	DATE	DESCRIPTION
2	9/15/05	REDLINE REVISION

STORMWATER MANAGEMENT PLAN DETAILS - I
HOWARD COUNTY CENTRAL BOOKING & DISTRICT COURT COMMISSIONERS FACILITY
HOWARD COUNTY, MARYLAND
DATE : FEBRUARY 21, 2003

CAPITAL PROJECT NO. P - 4916

C-12

SET SHEET 12 OF 25

SDP-02-20

H:\PROJECTS\CIVIL\0121901\PROGRESIVE\C-11b.DWG

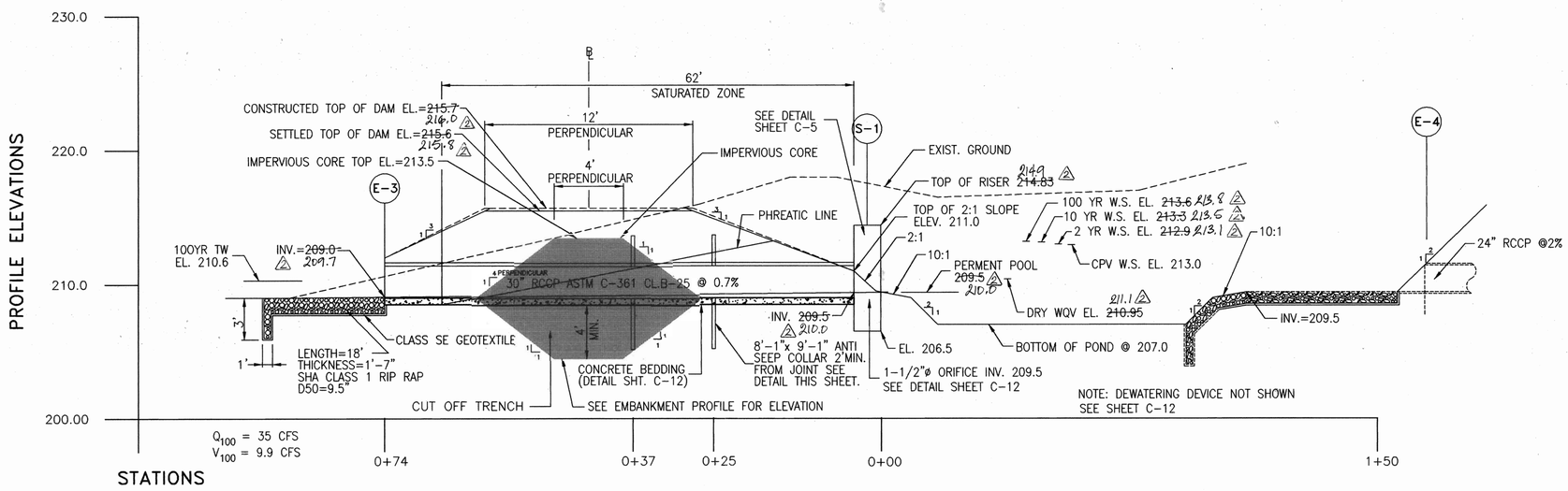

PRINCIPAL SPILLWAY

SCALE: 1" = 10' HORIZ.
1" = 5' VERT.

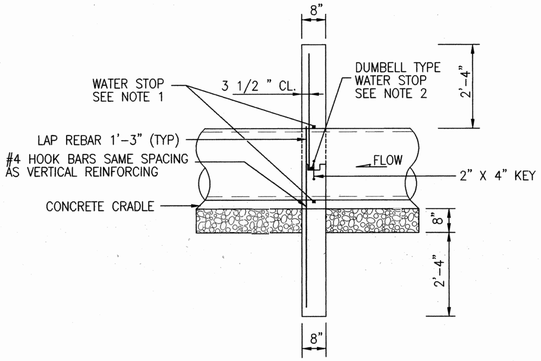

SECTION A-A

SCALE: 1/2 "=1'-0"

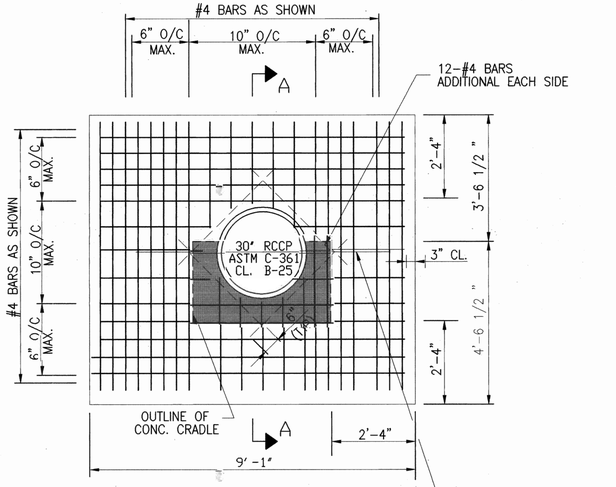

ELEVATION

SCALE: 1/2 "=1'-0"

NOTES:

1. WATER STOP AROUND PIPE SHALL BE VOLCLAY TYPE Rx AS MANUFACTURED BY AMERICAN COLLOID CO. OR APPROVED EQUIVALENT.
2. DUMB BELL TYPE WATER STOP IN CONSTRUCTION JOINT SHALL BE 6" VINYL; MODEL D6-316 BY VINYLEX OR APPROVED EQUIVALENT.
3. ALL CONCRETE SHALL BE MSHA MIX NO. 3 (3500 PSI).
4. ALL SURFACES BETWEEN THE PIPE AND ANTI-SEEP COLLAR, EXCEPT BETWEEN THE PIPE AND THE CRADLE SHALL BE SEALED WITH AN ASPHALT JOINT FILLER MATERIAL TO PREVENT SEEPAGE.

ENGINEER'S CERTIFICATE

"I Certify that this plan for erosion and sediment control represents a practical and workable plan based on my personal knowledge of the site conditions and that it was prepared in accordance with requirements of the Howard Soil Conservation District."

Signature of Engineer (Print name below signature) — Date 2/25/03

DEVELOPER'S CERTIFICATE

"I/We Certify that all development and construction will be done according to this plan and that any responsible personal involved in the construction project will have a certificate of Attendance at the Department of the Environment Approved Training Program for the Control of sediment and Erosion before beginning the project. I also authorize periodic on-site inspection by Howard Soil Conservation District"

Michael A. Giovanniello

Signature of Developer (Print name below signature) — Date 2/25/03

Reviewed for HOWARD SCD and meet Technical Requirements.

U.S.D.A. - Natural Resources Conservation Service — Date 3/4/03

The development plan is approved for soil erosion and sediment control by the HOWARD SOIL CONSERVATION DISTRICT

Howard SCD — Date 3/4/03

THE SUBJECT PROPERTY IS ZONED M-2 PER THE 10-18-93 COMPREHENSIVE ZONING PLAN

Approved : Department of Planning and Zoning

Director — Date 3/18/03

Chief, Division of Land Development — Date 3/18/03

Chief, Development Engineering Division — Date 3/19/03

DEVELOPER'S/LANDOWNER'S CERTIFICATION

I/We certify that all development and/or construction will be done according to these plans, and that any responsible personnel involved in the construction project will have a Certificate of Attendance at a Department of the Environment Approved Training Program for the Control of Sediment and Erosion before beginning the project. I shall engage a Registered Professional Engineer to supervise pond construction and provide the Howard Soil Conservation District with an "as-built" plan of the pond within 30 day of completion. I also authorize periodic on-site inspections by the Howard Soil Conservation District.

Signature — Date 2/25/03

Print Name Michael A. Giovanniello — MD. License No.

"AS-BUILT" CERTIFICATION

"I Hereby certify that the facility shown on this plan was constructed as shown on the "As-Built" plans and meets the approved plans and specifications. I also certify that construction was inspected in accordance with the requirements of Howard County.

Signature — Date

Print Name — MD. License No.

SUBDIVISION NAME	SECTION/AREA	PARCEL NO.
HOWARD COUNTY DETENTION CENTER	N/A	660

LIBER/FOLIO	BLOCK NO	ZONING	TAX MAP	GRID NO.	HOWARD CO. ELEC. DIST.	CENSUS TR.
2116/282 1009/368	9, 10 AND15	M-2	43	9	NO-1	6012.02

WATER CODE: B01 — SEWER CODE: 2221000

PROPOSED IMPROVEMENTS
BUILDING ADDITION, SEE SITE ANALYSIS CHART FOR APPLICABLE DPZ FILE REFERENCE DPZ FILE REF. FOR CURRENT PROJECT SDP-02-20

ati INC. Architects Engineers and Construction Consultants
8950 Route 108 Suite 218
Columbia Maryland 21045 (410)995-4067Fax(410)992-1837

DCI DANIEL CONSULTANTS, INC.
CONSULTING ENGINEERING AND PLANNING
8950 Rt. 108 E., Suite 229 Columbia, MD. 21045
Phone: 410-995-0090 Fax: 410-992-7038

REVISIONS

NO.	DATE	DESCRIPTION
2	9/15/05	REDLINE REVISION

STORMWATER MANAGEMENT DETAILS-III

HOWARD COUNTY CENTRAL BOOKING & DISTRICT COURT COMMISSIONERS FACILITY
HOWARD COUNTY, MARYLAND

DATE : FEBRUARY 21, 2003

CAPITAL PROJECT NO. P - 4916

C-13

SET SHEET 13 OF 25

SDP-02-20

H:\PROJECTS\CIVIL\0121901\PROGRESIVE\C-13.DWG

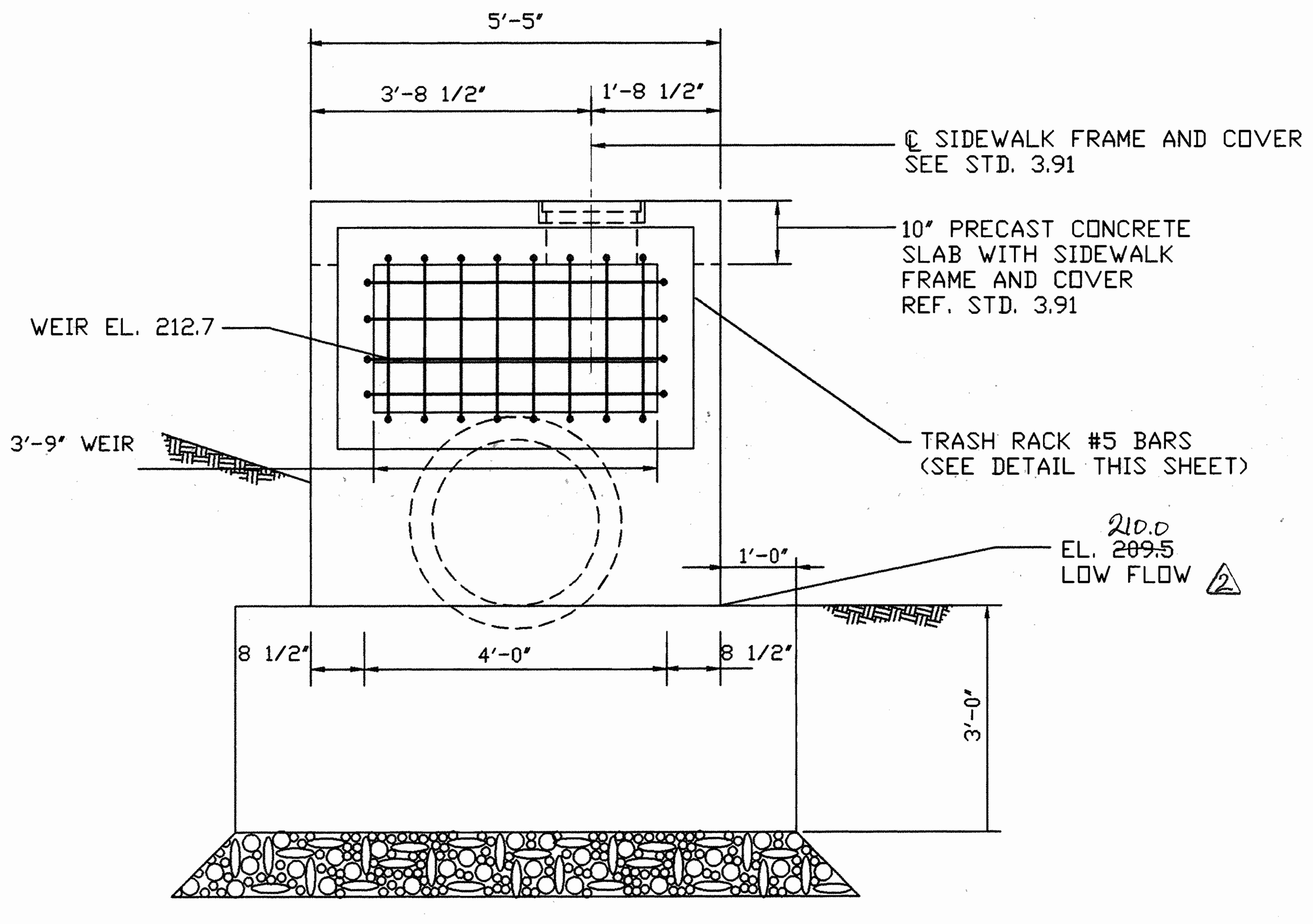

SECTION A–A

SCALE: 1/2" = 1'-0"

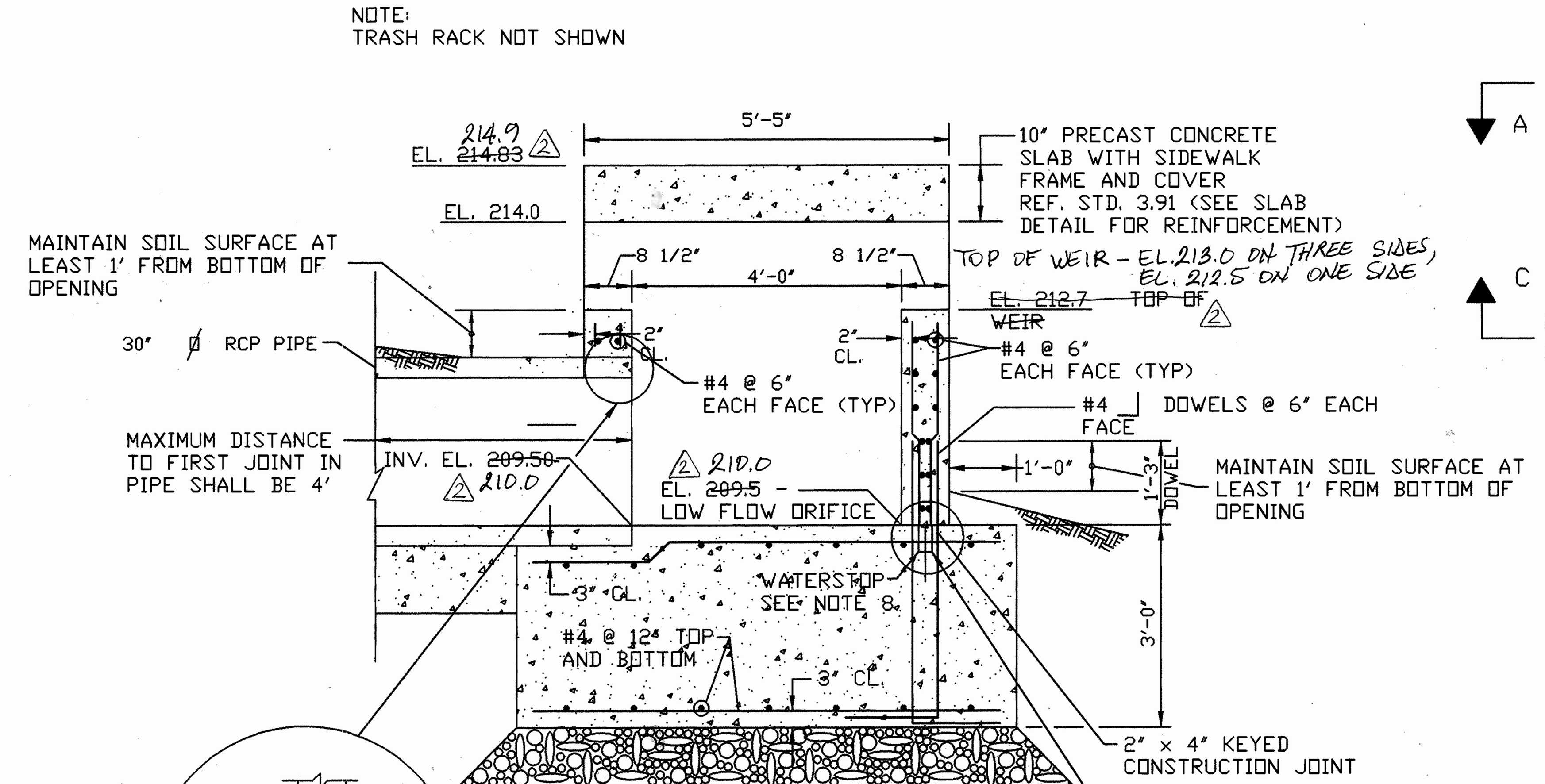

SECTION B–B

SCALE: 1/2" = 1'-0"

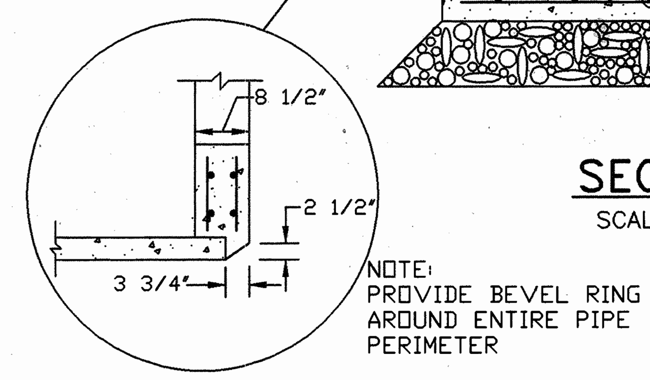

BEVEL RING DETAIL

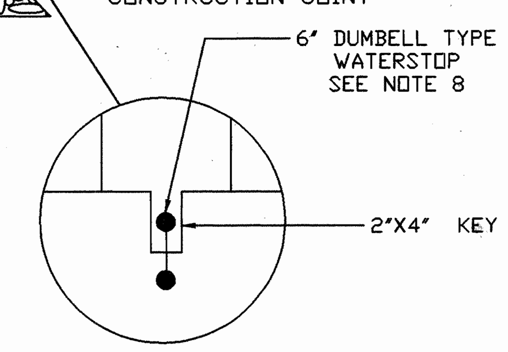

JOINT DETAIL

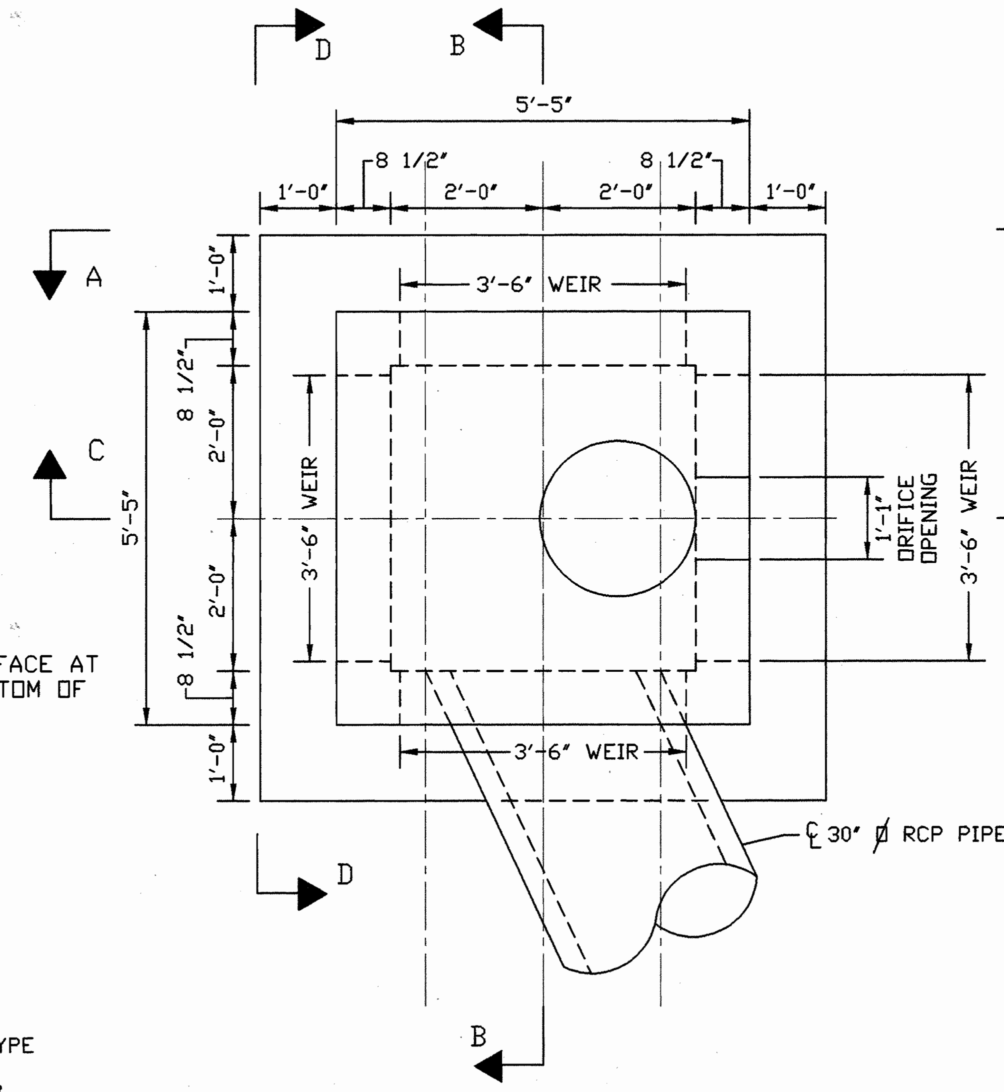

PLAN VIEW

SCALE: 1/2" = 1'-0"

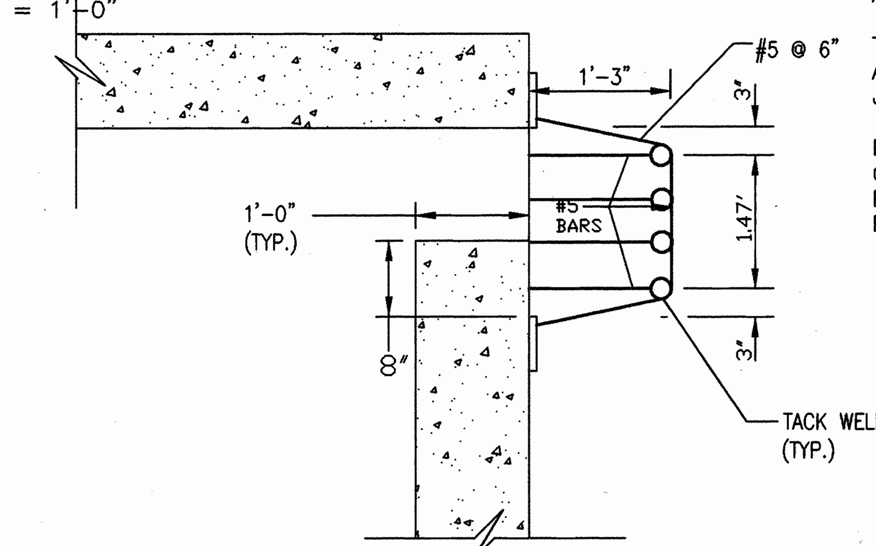

WEIR TRASH RACK SIDE ELEVATION VIEW

SCALE: 3/4" = 1'-0"

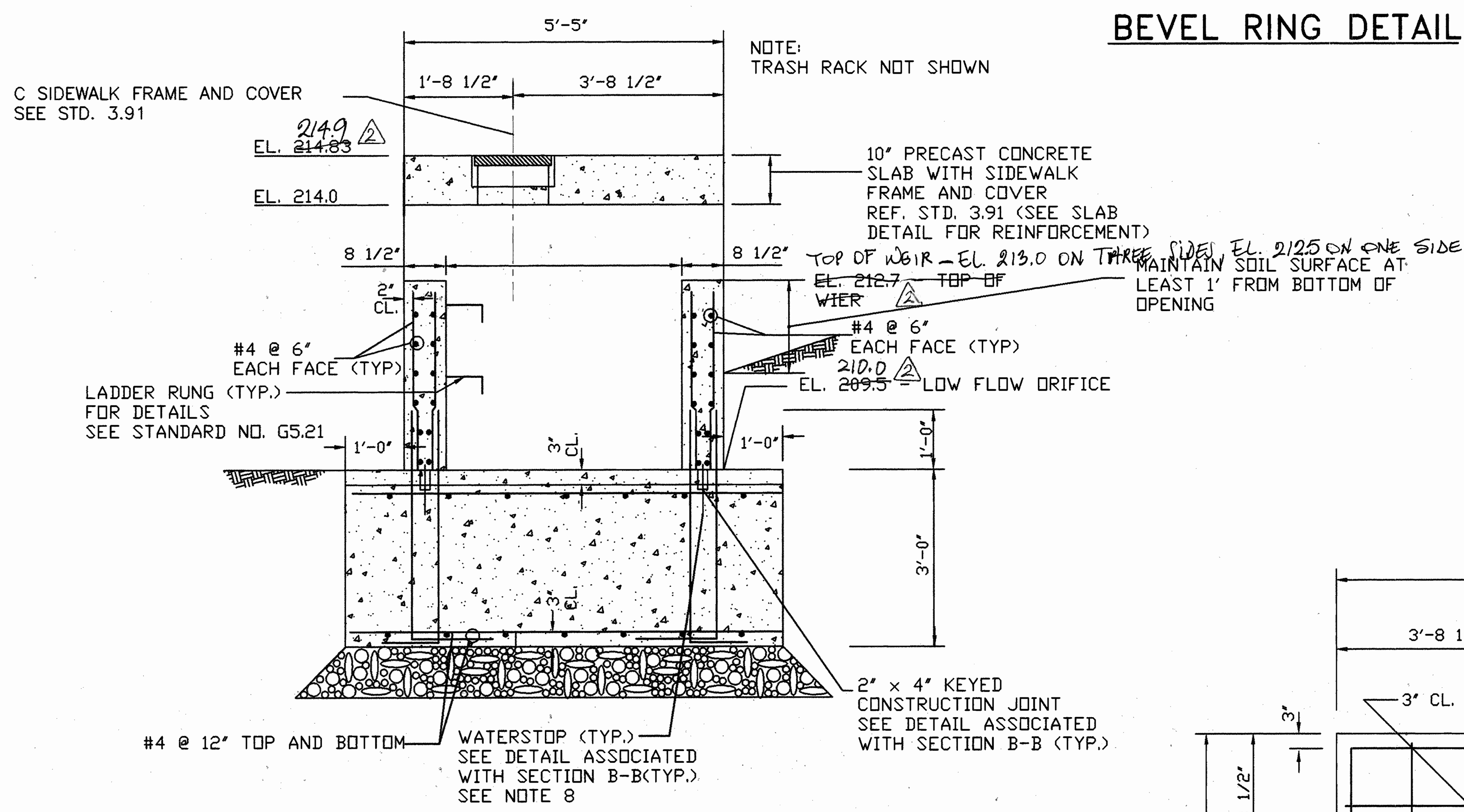

SECTION C–C

SCALE: 1/2" = 1'-0"

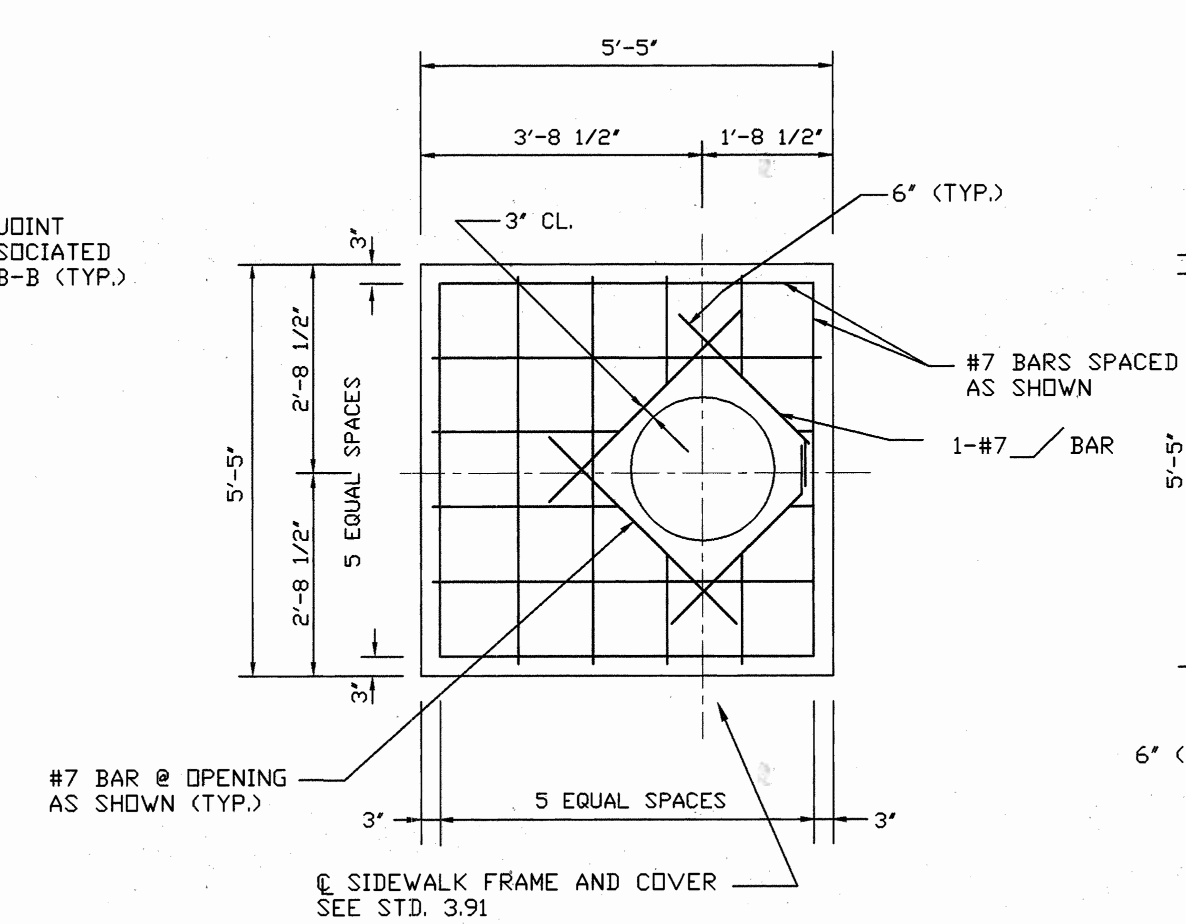

TOP REINFORCING

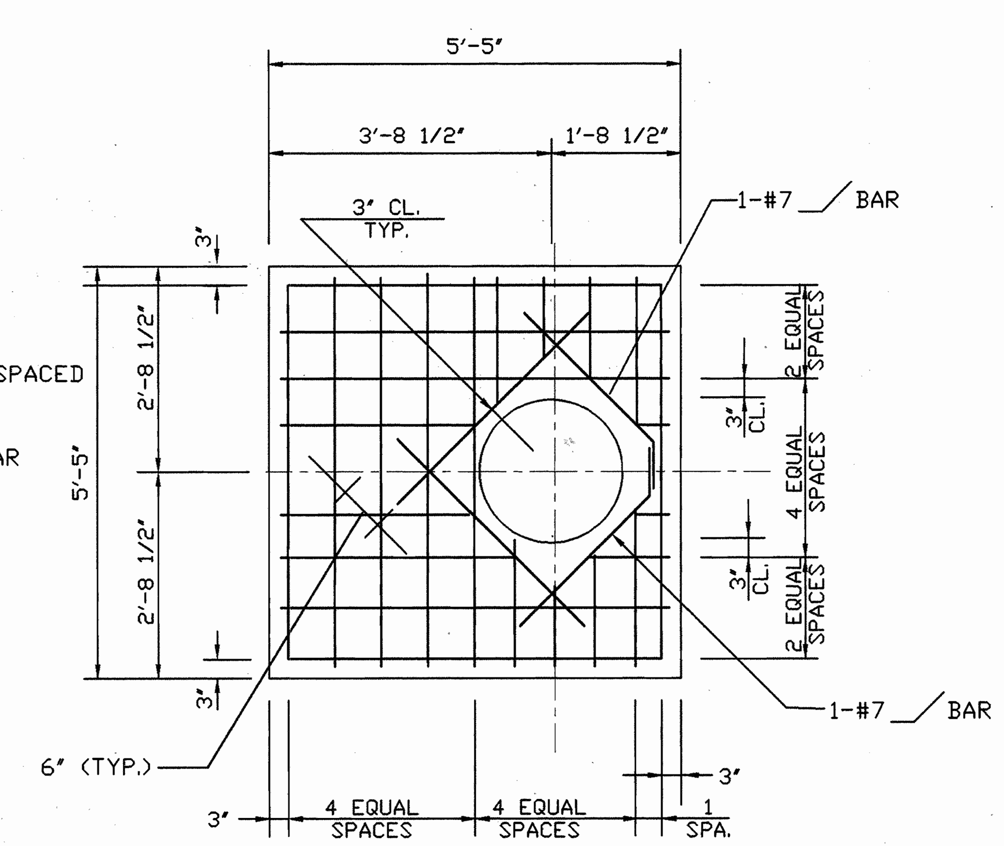

BOTTOM REINFORCING

PRECAST CONCRETE SLAB

SCALE: 1/2" = 1'-0"

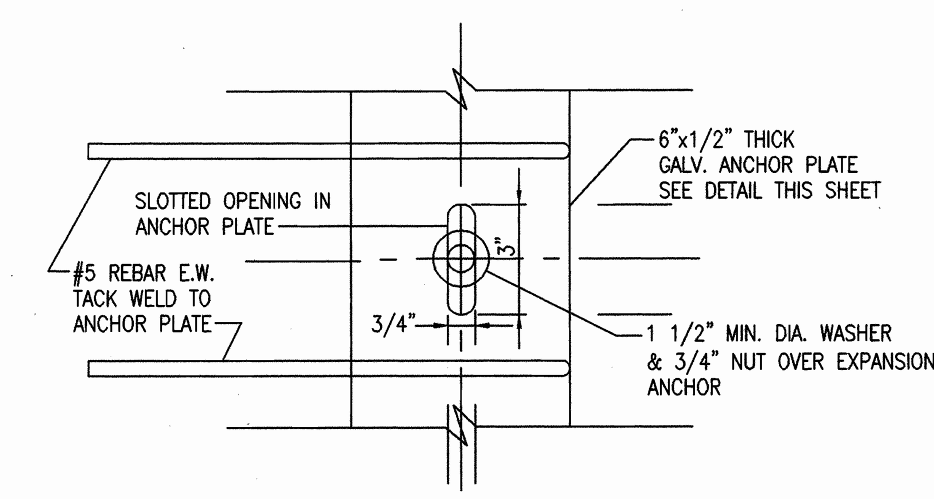

ANCHOR PLATE DETAIL

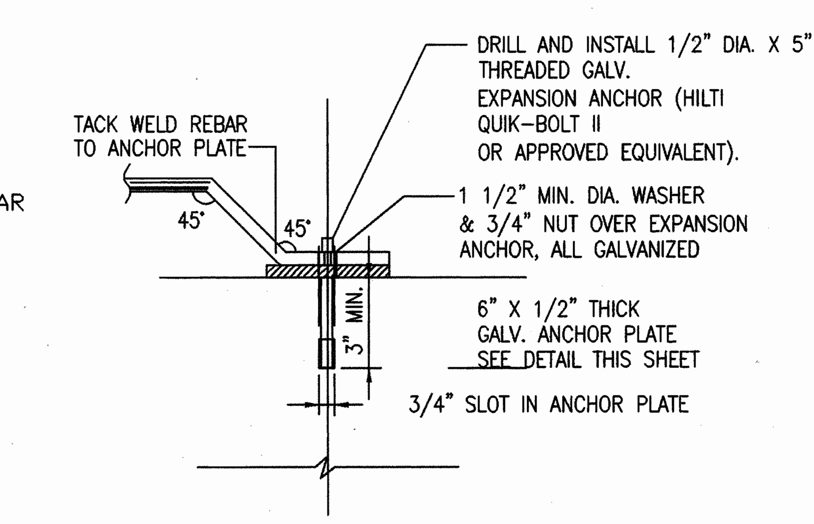

TRASH RACK CONNECTION

OUTLET STRUCTURE NOTES

1. THE STRUCTURE DETAILED IS CAST IN PLACE CONSTRUCTION IF THE CONTRACTOR ELECTS TO USE A PRECAST STRUCTURE, THE CONTRACTOR MUST MEET THE REQUIREMENTS OF THE "PRECAST CONCRETE RISER NOTE", BELOW
2. CONCRETE TO BE MIX NO. 3 (4500 PSI.)
3. ALL EXPOSED CORNERS OF CONCRETE STRUCTURE SHALL BE CHAMFERED WITH 3/4" X 3/4" MILLED CHAMFER STRIPS.
4. REINFORCING: REINFORCING STEEL SHALL CONFORM TO ASTM A615, GRADE 60
5. MINIMUM COVER FOR REBARS SHALL BE 2" IN WALLS AND 3" IN BOTTOM UNLESS OTHERWISE NOTED.
6. PIPE OPENINGS TO BE PROVIDED AS REQUIRED, FOR SIZE, LOCATION AND INVERT ELEVATIONS SPECIFIED
7. LADDER RUNGS SHALL BE IN ACCORDANCE WITH STANDARD MD.–383.91, AND MD.–383.92 OR AS DIRECTED BY THE ENGINEER. PROVIDE LADDER RUNGS ON BOTH THE INSIDE AND OUTSIDE OF THE STRUCTURE.
8. PROVIDE WATERTIGHT SEAL AROUND PIPES AT ALL OPENINGS WATERSTOP SHALL BE VOLCLAY WATERSTOP – RX AS MADE BY AMERICAN COLLOID CO. OR APPROVED EQUIVALENT.

   PROVIDE WATERTIGHT SEAL AT ALL JOINTS. WATERSTOP SHALL BE DUMB BELL TYPE WATERSTOP 6" VINYLE; MODEL D6–316 MADE BY VINYLEX OR APPROVED EQUIVALENT.
9. TRASH RACK SHALL BE GALVANIZED AFTER FABRICATION AND PAINTED WITH TWO COATS OF BATTLESHIP GREY PAINT.

PRECAST CONCRETE RISER NOTE

SHOP DRAWINGS FOR PRE–CAST CONCRETE RISERS WITH SUPPORTING STRUCTURE COMPUTATIONS (SIGNED AND SEALED BY A MARYLAND REGISTERED PROFESSIONAL ENGINEER) MEETING ASTM REQUIRMENTS FOR PRE–CAST STRUCTURES MUST BE SUBMITTED TO THE ENGINEER, AND THE APPROVING AGENCY FOR APPROVAL PRIOR TO FABRICATION.

THE SHOP DRAWINGS SHALL INCLUDE METHODS, MATERIALS, AND DETAILING OF WATER–TIGHT SEALS AT ALL CONSTRUCTION JOINTS AND AROUND ALL PIPES.

IF ANY STRUCTURE DIMENSIONS VARY FROM WHAT WAS ORIGINALLY REVIEWED/APPROVED, THEN THE HYDRAULICS, FLOTATION AND STRUCTURAL INTEGRITY SHALL BE RE–ANALYZED AND SUBMITTED FOR APPROVAL.

ENGINEER'S CERTIFICATE

"I Certify that this plan for erosion and sediment control represents a practical and workable plan based on my personal knowledge of the site conditions and that it was prepared in accordance with requirements of the Howard Soil Conservation District."

Signature of Engineer (Print name below signature) — Date 2/25/03

DEVELOPER'S CERTIFICATE

"I/We Certify that all development and construction will be done according to this plan and that any responsible personal involved in the construction project will have a certificate of Attendance at the Department of the Environment Approved Training Program for the Control of sediment and Erosion before beginning the project. I also authorize periodic on-site inspection by Howard Soil Conservation District"

Michael A. Giovanniello

Signature of Developer (Print name below signature) — Date 2/25/03

Reviewed for HOWARD SCD and meet Technical Requirements. — Date 3/4/03

U.S.D.A. – Natural Resources Conservation Service

The development plan is approved for soil erosion and sediment control by the HOWARD SOIL CONSERVATION DISTRICT

Howard SCD — Date 3/4/03

THE SUBJECT PROPERTY IS ZONED M-2 PER THE 10-18-93 COMPREHENSIVE ZONING PLAN

Approved : Department of Planning and Zoning

Director — Date 3/18/03

Chief, Division of Land Development — Date 3/14/03

Chief, Development Engineering Division — Date 3/5/03

SUBDIVISION NAME HOWARD COUNTY DETENTION CENTER		SECTION/AREA N/A				PARCEL NO. 660
LIBER/FOLIO 2166/282 1009/368 15840,15841	BLOCK NO 9,10 AND 15	ZONING M-2	TAX MAP 43	GRID NO. 9	HOWARD CO. ELEC. DIST. NO-1	CENSUS TR. 6012.02
WATER CODE B01			SEWER CODE 2221000			
PROPOSED IMPROVEMENTS BUILDING ADDITION, SEE SITE ANALYSIS CHART FOR APPLICABLE DPZ FILE REFERENCE DPZ FILE REF. FOR CURRENT PROJECT SDP-02-20						

DEVELOPER'S/LANDOWNER'S CERTIFICATION

I/We certify that all development and/or construction will be done according to these plans, and that any responsible personnel involved in the construction project will have a Certificate of Attendance at a Department of the Environment Approved Training Program for the Control of Sediment and Erosion before beginning the project. I shall engage a Registered Professional Engineer to supervise pond construction and provide the Howard Soil Conservation District with an "as-built" plan of the pond within 30 day of completion. I also authorize periodic on-site inspections by the Howard Soil Conservation District.

Signature — Date 2/25/03

Print Name: Michael A. Giovanniello — MD. License No.

"AS-BUILT" CERTIFICATION

"I Hereby certify that the facility shown on this plan was constructed as shown on the "As-Built" plans and meets the approved plans and specifications. I also certify that construction was inspected in accordance with the requirements of Howard County.

Signature — Date

Print Name — MD. License No.

ati INC. Architects Engineers and Construction Consultants
8950 Route 108 Suite 218
Columbia Maryland 21045 (410)995-4067Fax(410)992-1837

SEAL: STATE OF MARYLAND — RICHARD LECOUR SOBBOTT — NO. 15222 — REGISTERED PROFESSIONAL ENGINEER

DCI DANIEL CONSULTANTS, INC.
CONSULTING ENGINEERING AND PLANNING
8950 Rt. 108 E., Suite 229 Columbia, MD. 21045
Phone: 410-995-0090 Fax: 410-992-7038

REVISIONS

NO.	DATE	DESCRIPTION
2	9/15/05	REDLINE REVISION

STORMWATER MANAGEMENT DETAILS V

HOWARD COUNTY CENTRAL BOOKING & DISTRICT COURT COMMISSIONERS FACILITY

HOWARD COUNTY, MARYLAND

DATE : FEBRUARY 21, 2003

CAPITAL PROJECT NO. P – 4916

C-15

SET SHEET 15 OF 25

SDP-02-20

H:/PROJECTS\CIVIL\0121901\PROGRESSIVE\C-12.DWG

LEGEND:

- EX. EDGE OF BRUSH/TREES
- EX. FENCE
- PROPOSED CURB AND GUTTER(SEE DETAIL SHEET C-3)
- PROPOSED P-3 PAVEMENT(SEE H.C. STD. R-2.01)
- PROPOSED SIDEWALK(SEE H.C. STD. R-3.05)
- (223.92) BOTTOM OF CURB AND SPOT ELEVATION
- 1 INDICATES SOIL BORING TAKEN FOR BOOKING FACILITY SHOWN ON SDP 91-107 DATED 5-6-91
- NEW FENCE
- TREE
- EXTERIOR POLE MOUNTED LIGHT FIXTURE
- EXTERIOR WALL PACK FIXTURE
- BLAZE ORANGE PLASTIC MESH TREE PROTECTION FENCE

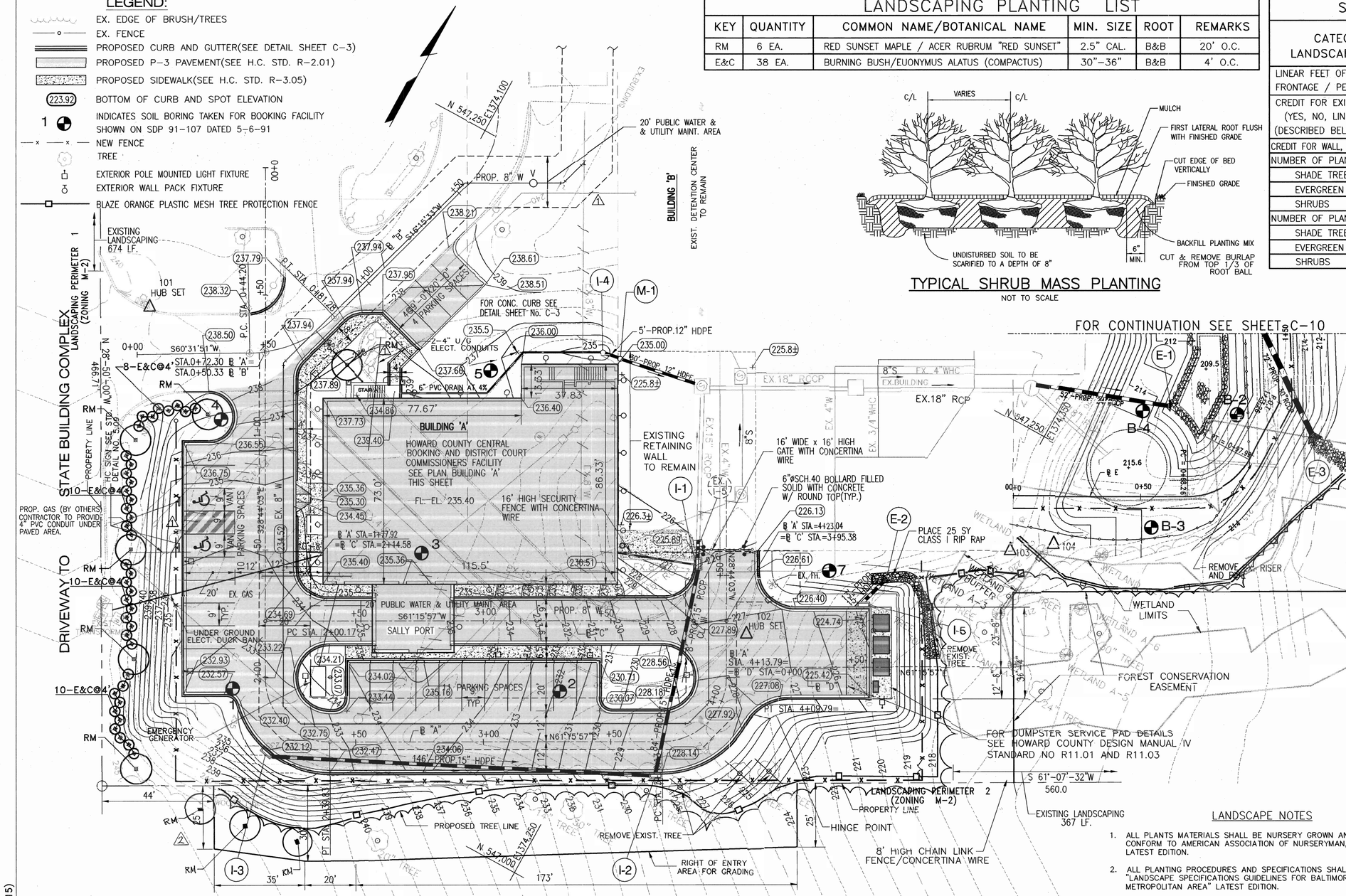

LANDSCAPING PLANTING LIST

KEY	QUANTITY	COMMON NAME/BOTANICAL NAME	MIN. SIZE	ROOT	REMARKS
RM	6 EA.	RED SUNSET MAPLE / ACER RUBRUM "RED SUNSET"	2.5" CAL.	B&B	20' O.C.
E&C	38 EA.	BURNING BUSH/EUONYMUS ALATUS (COMPACTUS)	30"-36"	B&B	4' O.C.

TYPICAL SHRUB MASS PLANTING

NOT TO SCALE

SCHEDULE "A" - PERIMETER LANDSCAPE EDGE

CATEGORY LANDSCAPE TYPE	ADJACENT TO ROADWAYS PERIMETER 1 TYPE "E"	ADJACENT TO PROPERTY PERIMETER 2 TYPE "A" (PROPERTY LINE)
LINEAR FEET OF ROADWAY FRONTAGE / PERIMETER	814	697
CREDIT FOR EXIST. VEGETATION (YES, NO, LINEAR FOOT) (DESCRIBED BELOW IF NEEDED)	YES (674 LF) (NET 140 LF)	YES (697 LF)
CREDIT FOR WALL, FENCE OR BERM	NO	NO
NUMBER OF PLANTS REQUIRED		
SHADE TREES	4	0
EVERGREEN TREES	0	0
SHRUBS	35	0
NUMBER OF PLANTS PROVIDED		
SHADE TREES	4	0
EVERGREEN TREES	0	0
SHRUBS	38	0

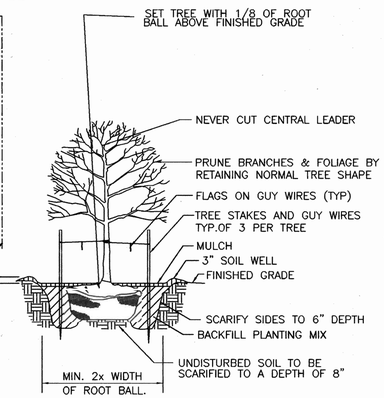

NOTES:

1. CUT AND REMOVE BURLAP FROM TOP 1/3 OF ROOT BALL.
2. REMOVE ALL NON-BIODEGRADABLE CONTAINERS & SCARIFY ROOT BALL.

TREE PLANTING DETAIL

NOT TO SCALE

SCHEDULE "B" - PARKING LOT INTERNAL LANDSCAPING

NUMBER OF PARKING SPACES	25
NUMBER OF TREES REQUIRED(LANDSCAPE ISLANDS)	2
NUMBER OF TREES PROVIDED(LANDSCAPE ISLANDS) SHADE TREES	2

THE SUBJECT PROPERTY IS ZONED M-2 PER THE 10-18-93 COMPREHENSIVE ZONING PLAN

LANDSCAPE NOTES

1. ALL PLANTS MATERIALS SHALL BE NURSERY GROWN AND SHALL CONFORM TO AMERICAN ASSOCIATION OF NURSERYMAN, INC. STANDARD, LATEST EDITION.
2. ALL PLANTING PROCEDURES AND SPECIFICATIONS SHALL CONFORM TO "LANDSCAPE SPECIFICATIONS GUIDELINES FOR BALTIMORE WASHINGTON METROPOLITAN AREA" LATEST EDITION.
3. THE CONTRACTOR SHALL CONTACT "MISS UTILITY" FOR UNDERGROUND UTILITY LOCATIONS AT LEAST 72 HOURS PRIOR TO THE COMPLETION DATE.
4. ALL PLANTS SHALL BE GUARANTEED BY THE CONTRACTOR FOR ONE YEAR FOLLOWING THE INSTALLATION COMPLETION DATE.
5. AT THE TIME OF INSTALLMENT, ALL SHRUBS AND OTHER PLANTING HEREWITH LISTED AND APPROVED FOR THIS SITE, SHALL BE OF THE PROPER HEIGHT REQUIREMENTS IN ACCORDANCE WITH THE HOWARD COUNTY LANDSCAPE MANUAL. IN ADDITION, NO SUBSTITUTIONS OR RELOCATION OF REQUIRED PLANTINGS MAY BE MADE WITHOUT PRIOR REVIEW AND APPROVAL FROM THE DEPARTMENT OF PLANNING AND ZONING. ANY DEVIATION FROM THIS APPROVED LANDSCAPE PLAN MAY RESULT IN DENIAL OR DELAY IN THE RELEASE OF LANDSCAPE SURETY UNTIL SUCH TIME AS ALL REQUIRED MATERIALS ARE PLANTED AND/OR REVISIONS ARE MADE TO APPLICABLE PLANS AND CERTIFICATES."

DEVELOPER'S/BUILDER'S CERTIFICATE

I/WE CERTIFY THAT THE LANDSCAPE PLANTING SHOWN ON THIS PLAN WILL BE DONE IN ACCORDANCE WITH SECTION 16.124 OF THE HOWARD COUNTY CODE AND THE HOWARD COUNTY LANDSCAPE MANUAL. I/WE FURTHER CERTIFY THAT UPON COMPLETION, A CERTIFICATE OF LANDSCAPE INSTALLATION ACCOMPANIED BY AN EXECUTED ONE YEAR GUARANTEE OF PLANT MATERIALS WILL BE SUBMITTED TO THE DEPARTMENT OF PLANNING AND ZONING.

Michael A. Giovanniello — 3/12/03

NAME Michael A. Giovanniello — DATE

SITE PLAN

SCALE 1"=20'

Approved : Department of Planning and Zoning

Director — Date 3/14/03

Chief, Division of Land Development — Date 3/14/03

Chief, Development Engineering Division — Date 3/14/03

SUBDIVISION NAME	SECTION/AREA	PARCEL NO.
HOWARD COUNTY DETENTION CENTER	N/A	660

LIBER/FOLIO	BLOCK NO	ZONING	TAX MAP	GRID NO.	HOWARD CO. ELEC. DIST.	CENSUS TR
2116/282 1009/368	9, 10 AND15	M-2	43	9	NO-1	6012.02

WATER CODE B01 — SEWER CODE 2221000

PROPOSED IMPROVEMENTS
BUILDING ADDITION, SEE SITE ANALYSIS IS CHART FOR APPLICABLE DPZ FILE REFERENCE DPZ FILE REF. FOR CURRENT PROJECT SDP-02-20

ati INC. Architects Engineers and Construction Consultants
8950 Route 108 Suite 218
Columbia Maryland 21045 (410)995-4067Fax(410)992-1837

DCI DANIEL CONSULTANTS, INC.
CONSULTING ENGINEERING AND PLANNING
8950 Rt. 108 E., Suite 229 Columbia, MD. 21045
Phone: 410-995-0090 Fax: 410-992-7038

REVISIONS

NO.	DATE	DESCRIPTION
1	3/12/03	ADDENDUM NO. 1
2	9/15/05	REDLINE REVISION

LANDSCAPING PLAN

HOWARD COUNTY CENTRAL BOOKING & DISTRICT COURT COMMISSIONERS FACILITY
HOWARD COUNTY, MARYLAND

DATE : FEBRUARY 21, 2003

CAPITAL PROJECT NO. P - 4916

C-16

SET SHEET 16 OF 25

SDP-02-20

H:\PROJECTS\CIVIL\01219001\PROGRESIVE\C-16.DWG (C-15)

PAVEMENT AND CURB & GUTTER ELEVATIONS FROM BASELINE "A"

16' Left Back of Sidewalk	X-Slope	12' Left Top of Curb	12' Left Bottom of Curb	11' Left Edge of Gutter	X-Slope	Base Line Station	Profile Grade Elevation	X-Slope %	12' Rt. Flow Line or Ed of Gutter	X-Slope	32' Right Bottom of Curb	32' Right Top of Curb	5' to Hinge Pt. @4%	Bottom Of Curb Point #
		238.49	237.89	237.94	-2.94	82.84	238.26							8
238.20	2.00	238.12	237.52	237.57	-2.940	87.5	237.89	2.940	238.24					
238.04	2.00	237.96	237.36	237.40	-2.649	90	237.69	2.649	238.01					
237.52	2.00	237.44	236.84	236.88	-1.778	97.5	237.08	1.778	237.29					
237.35	2.00	237.27	236.67	236.72	-1.487	100	236.88	1.487	237.06					
236.85	2.00	236.77	236.17	236.22	-0.589	107.73	236.28	0.589	236.35	2.00	236.75	237.35	237.55	11 & 12
236.67	2.00	236.59	235.99	236.03	-0.325	110	236.07	0.325	236.11	2.00	236.51	237.11	237.31	
236.00	2.00	235.92	235.32	235.36	0.838	120	235.27	-1.625	235.08	2.00	235.48	236.08	236.28	
235.66	2.00	235.58	234.98	235.03	1.419	125	234.87	-3.250	234.48	2.00	234.88	235.48	235.68	
235.46	2.00	235.38	234.78	234.82	2.000	130	234.60	-2.500	234.30	2.00	234.70	235.30	235.50	
235.42	2.00	235.34	234.74	234.78	2.174	131.5	234.54	-2.235	234.26	2.00	234.66	235.06	235.26	
235.31	2.00	235.23	234.63	234.67	3.162	140	234.32	-1.471	234.16	2.00	234.30	235.90	236.10	
235.20	2.00	235.12	234.52	234.56	4.325	150	234.08	-1.101	233.96	2.00	234.36	234.96	235.16	
235.11	2.00	235.03	234.43	234.47	5.129	156.92	233.91	-2.000	233.67	2.00	234.07	234.67	234.87	13.00
				Edge of		160	233.83	-2.000	233.59	2.00	233.99	234.59	234.79	
				Pav't		170	233.58	-2.000	233.34	2.00	233.74	234.34	234.54	
				Lt. 12'		175	233.46	-2.000	233.22	2.00	233.62	234.22	234.42	
				233.78	3.273	177.92	233.39	-2.000	233.15	2.00	233.55	234.15	234.35	
				233.73	3.267	180	233.34	-2.000	233. 0	2.00	233.50	234.10	234.30	
				233.48	3.236	190	233.09	-2.000	232.85	2.00	233.25	233.85	234.05	
				233.22	3.205	200	232.84	-2.000	232.60	2.00	233.00	233.60	233.80	
				233.22	3.205	200.17	232.84	-2.000	232.60	2.00	233.00	233.60	233.80	
						203.06	232.77	-2.000	232.53	2.00	232.93	233.53	233.73	17.00
						204.22	232.74	-2.000	232.50	2.00	232.57*	233.17		18.00
				233.09	3.189	205.33	232.71	-2.000	11' to EG		12' to BC	12' to TC	17' to HP	
						207.17	232.66	-2.000	232.44		232.40	233.00	233.20	19.00
				232.97	3.175	210	232.59	-2.000	232.37		232.33	232.93	233.13	
				232.77	3.144	220	232.39	-2.000	232.17		232.13	232.73	232.93	
				232.76	3.129	225	232.38	-2.000	232.16		232.12	232.72	232.92	
				232.80	3.114	230	232.43	-2.000	232.21		232.17	232.77	232.97	
		32' Left		233.10	3.084	239.83	232.73	-2.000	232.51		232.47	233.07	233.19*	20 & 22
		Top		233.10	3.083	240	232.73	-2.000	232.51		232.47	233.07	233.19*	
		of Curb		233.44	3.063	246.58	233.07	-2.000	232.85		232.81	233.41	233.53*	
234.78	2.00	234.65		233.44	3.063	246.58	233.07	-2.000	232.85		232.81	233.41	233.53*	21 & 23
234.98	2.00	234.85		233.64	3.031	250	233.28	-2.000	233.06		233.02	233.62	233.74*	
235.29	2.00	235.16		233.92	3.219	254.3	233.53	-2.000	233.31		233.27	233.87	233.99*	
235.52	2.00	235.39		234.21	2.906	260	233.86	-2.000	233.64		233.60	234.20	234.32*	
235.89	2.00	235.76		234.58	2.906	269.3	234.23	-2.000	234.01		233.97	234.57	234.69*	
235.89	2.00	235.76		234.59	2.875	270	234.24	-2.000	234.02		233.98	234.58	234.7*	
235.89	2.00	235.76		234.61	2.750	275	234.28	-2.000	234.06		234.02	234.62	234.74*	
235.89	2.00	235.76		234.57	2.969	280	234.21	-2.000	233.99		233.95	234.55	234.67*	
235.89	2.00	235.76		234.52	3.219	283.5	234.13	-2.000	233.91		233.87	234.47	234.59*	
235.63	2.00	235.50		234.33	2.875	290	233.98	-2.000	233.76		233.72	234.32	234.44*	
235.29	2.00	235.16		234.02	2.719	298.5	233.69	-2.000	233.47		233.43	234.03	234.15*	
235.24	2.00	235.11		233.95	2.781	300	233.62	-2.000	233.40		233.36	233.96	234.08*	
234.69	2.00	234.56		233.36	3.000	310	233.00	-2.000	232.78		232.74	233.34	233.46*	
233.85	2.00	233.72		232.50	3.125	320	232.12	-2.000	231.90		231.86	232.46	232.58*	
234.44	2.00	234.31		233.05	3.313	325	232.65	-2.000	231.43		231.31	231.91	232.11*	
232.91	2.00	232.78		231.55	3.156	330	231.17	-2.000	230.95		230.91	231.51	231.63*	
231.97	2.00	231.84		230.60	3.188	340	230.22	-2.000	230.00		229.96	230.56	230.68*	
231.44	2.00	231.31		230.07	3.219	345.58	229.68	-2.000	229.46		229.42	230.02	230.14*	24 & 25
				229.65	2.999	350	229.29	-2.000	229.07		229.03	229.63	229.75*	
				228.96	2.503	360	228.66	-2.000	228.44		228.40	229.00	229.12*	
				228.62	2.006	370	228.40	-2.000	228.18		228.14	228.74	228.94	
				228.62	2.000	370.13	228.40	-2.000	228.18		228.14	228.74	228.94	27 & 28
				228.56	1.685	375	228.36	-2.000	228.14		228.10	228.70	228.90	
				228.48	1.362	380	228.32	-2.000	228.10		228.06	228.66	228.86	
				228.32	0.716	390	228.23	-2.000	228.01		227.97	228.57	228.77	
						395.3	228.19	-2.000	227.97		227.92	228.52	228.72	29
				228.23	0.358	395.54	228.19	-2.000	12' to EP					
				228.16	0.070	400	228.15	-2.000	227.91					
				227.95	-0.562	PT409.78	228.02	-2.000	227.78					
				227.95	-0.576	410	228.02	-1.960	227.78					
						413.79	227.92	-1.170	227.78					
				227.57	-1.222	420	227.72	-0.164	227.70					
				227.42	-1.419	423.04	227.59	0.383	227.64					
				227.31	-1.545	425	227.50	0.735	227.59					
				227.05	-1.868	430	227.27	1.633	227.47					
				226.94	-2.000	432.04	227.18	2.000	227.42					
				226.61	-1.821	439.79	226.83	1.852	227.05					
				226.60	-1.816	440	226.82	1.848	227.04			227.64	227.84	
				226.25	-1.692	448.31	226.45	1.692	226.65	226.66				34
				226.18	-1.585	450	226.37	1.657	226.57			227.17	227.37	
				225.89	-1.425	456.92	226.06	1.525						37
				225.79	-1.370	459.27	225.95	1.480	226.13			226.73	226.93	36

* HINGE POINT IS 3 FT FROM FACE OF CURB.

CAPITAL PROJECT NO. P-4916 PAVEMENT ELEVATIONS, BASELINE "C"

9' Left Top of Curb	9' Left Bottom of Curb	8' Left Edge of Gutter	X-Slope	Station	Profile Grade Elevation	X-Slope	8' Right Edge of Gutter	9' Right Bottom of Curb	9' Right Top of Curb	Bottom Of Curb Point #
~~235.29~~	234.69		3.11	238.58	234.41	3.110				15
~~235.29~~	234.69		2.56	239.83	234.46	2.560	234.25	234.21	~~234.41~~ 81	16
~~235.29~~	234.69		2.00	240.00	234.47	2.000	234.31	234.27	~~234.47~~ 87	
~~235.29~~	234.69		0.44	244.30	234.65	0.440	234.61	234.57	~~234.17~~ 235.17	
~~235.36~~	234.75		0.00	246.58	234.75	0.000	234.75	234.71	235.31	
~~235.46~~	234.89		0.00	250.00	234.89	0.000	234.89	234.85	235.45	
~~235.30~~	235.30		0.00	259.49	235.30	0.000	235.30	~~235.50~~ 26	~~235.30~~ 96	
			SALLY PORT FOR ELEVATION							
			SEE ARCHITECTURAL DRAWING							
				SHEET						
~~235.20~~	235.20		0.00	287.16	235.20	0.000	235.20	235.20	235.20	
~~235.29~~	235.10		0.00	289.40	235.10	0.000	235.10	235.10	235.70	
~~235.29~~	235.07		0.00	290.00	235.07	0.000	235.07	235.07	235.67	
~~235.29~~	234.72	234.72	0.00	298.50	234.72	0.000	234.72	234.72	235.32	
~~235.18~~	234.58	234.62	(0.08)	300.00	234.63	0.076	~~234.66~~ 64	~~234.66~~ 64	235.26 64	
~~234.55~~	233.95	233.99	(0.58)	310.00	234.04	0.580	234.09	234.09	234.69	
~~233.63~~	233.03	233.07	(1.08)	320.00	233.16	1.084	233.25	233.26	233.86 56	
~~333.12~~	332.52	332.56	(1.34)	325.00	332.67	1.336	332.78	332.79	333.39	
~~232.61~~	232.01	232.05	(1.59)	330.00	232.18	1.588	232.31	232.32	232.92	
~~231.59~~	230.99	231.03	(2.09)	340.00	231.20	2.092	231.37	231.39	231.97 9	
~~231.02~~	230.42	230.46	(2.37)	345.58	230.65	2.373	230.84	230.86	231.46	
~~230.57~~	229.97	230.01	(2.60)	350.00	230.22	2.596	230.43	230.45	231.05	
~~230.30~~	229.70	229.74	(2.73)	352.58	229.96	2.726	230.18	230.21	230.81	
~~229.54~~	228.94	228.98	(3.10)	360.00	229.23	3.100	229.48	229.51	230.11	
~~228.52~~	227.92	227.96	(3.60)	370.00	228.25	3.604	228.54	228.57	229.17	
~~228.51~~	227.91	227.95	(3.61)	370.13	228.24	3.610	228.53	228.56	229.16	26
~~228.49~~	227.89	227.93	(3.62)	370.38	228.22					35
		227.45	(3.86)	375.00	227.76					
		226.94	(4.11)	380.00	227.27					
		~~226.61~~ 227.00	(4.28)	383.38	~~226.95~~ 227.35					

PAVEMENT AND CURB & GUTTER ELEVATIONS FROM BASELINE "D"

Hinge Point Lt 5'@ 4%	23' Left Top of Curb	23' Left Bottom of Curb	22' Left Edge of Gutter	X-Slope	Base Line Station	Profile Grade Elevation	X-Slope	12' Right Bottom of Curb	12' Right Top of Curb	Hinge Point Lt 5'@ 4%	Bottom Of Curb Point #
					22	227.18	2	227.12	227.72	227.92	
					26.76	226.89	2	227.13	227.73	227.93	***31***
227.21	227.21	***226.41***	226.45	-2	26.97	226.89	2	***227.13***	227.73	227.93	***30***
226.42	226.22	225.62	225.66	-2	40	226.10	2	226.34	226.94	227.14	
225.82	225.62	225.02	225.06	-2	50	225.50	2	225.74	226.34	226.54	
				-2	56	225.14	2	225.38	225.98	226.18	***33 & 32***

file:Elev BL D for plan.wb3 Revised: 10/6/2001 for Dumpster

THE SUBJECT PROPERTY IS ZONED M-2 PER THE 10-18-93 COMPREHENSIVE ZONING PLAN

Approved : Department of Planning and Zoning

Director Date 3/10/03

Chief, Division of Land Development Date 3/14/03

Chief, Development Engineering Division Date 3/10/03

SUBDIVISION NAME HOWARD COUNTY DETENTION CENTER		SECTION/AREA N/A				PARCEL NO. 660
LIBER/FOLIO 2116/282 1009/368 15840, 15841	BLOCK NO 9,10 AND 15	ZONING M-2	TAX MAP 43	GRID NO. 9	HOWARD CO. ELEC. DIST. NO-1	CENSUS TR. 6012.02
WATER CODE B01			SEWER CODE 2221000			

PROPOSED IMPROVEMENTS
BUILDING ADDITION, SEE SITE ANALYSIS CHART FOR APPLICABLE DPZ FILE REFERENCE DPZ FILE REF. FOR CURRENT PROJECT SDP-02-20

ati INC Architects Engineers and Construction Consultants
8950 Route 108 Suite 218
Columbia Maryland 21045 (410)995-4067Fax(410)992-1837

SEAL: STATE OF MARYLAND RICHARD LECOUR SOBBOTT PROFESSIONAL ENGINEER

DCI DANIEL CONSULTANTS, INC.
CONSULTING ENGINEERING AND PLANNING
8950 Rt. 108 E., Suite 229 Columbia, MD. 21045
Phone: 410-995-0090 Fax: 410-992-7038

REVISIONS

NO.	DATE	DESCRIPTION
1	3/12/03	ADDENDUM NO. 1
2	9/15/05	REDLINE REVISION

PAVEMENT ELEVATIONS

HOWARD COUNTY CENTRAL BOOKING & DISTRICT COURT COMMISSIONERS FACILITY

HOWARD COUNTY, MARYLAND

DATE : FEBRUARY 21, 2003

CAPITAL PROJECT NO P - 4916

C-21

SET SHEET 21 OF 25

SDP-02-20

H:\PROJECTS\CIVIL\0121901\PROGRESIVE\C-21.DWG (C-20)

LEGEND:

- EX. EDGE OF BRUSH/TREES
- EX. FENCE
- PROPOSED CURB AND GUTTER(SEE DETAIL SHEET C-3)
- PROPOSED P-3 PAVEMENT(SEE H.C. STD. R-2.01, SEE SHEET C-25)
- PROPOSED SIDEWALK(SEE H.C. STD. R-3.05, SEE SHEET C-25)
- (223.92) BOTTOM OF CURB AND SPOT ELEVATION
- 1 INDICATES SOIL BORING TAKEN FOR BOOKING FACILITY SHOWN ON SDP 91-107 DATED 5-6-91
- NEW FENCE
- TREE
- EXTERIOR POLE MOUNTED LIGHT FIXTURE
- EXTERIOR WALL PACK FIXTURE
- BLAZE ORANGE PLASTIC MESH TREE PROTECTION FENCE

GENERAL NOTES

1. ALL CONSTRUCTION SHALL BE IN ACCORDANCE WITH THE LATEST STANDARDS AND SPECIFICATIONS OF HOWARD COUNTY PLUS MSHA STANDARDS AND SPECIFICATIONS IF APPLICABLE.
2. TRAFFIC CONTROL DEVICES, MARKINGS AND SIGNINGS SHALL BE IN ACCORDANCE WITH THE LATEST EDITION OF THE MANUAL OF UNIFORM TRAFFIC CONTROL DEVICES (MUTCD). ALL STREET AND REGULATORY SIGNS SHALL BE IN PLACE PRIOR TO THE PLACEMENT OF ANY ASPHALT.
3. ALL PLAN DIMENSIONS ARE TO FACE OF CURB UNLESS OTHERWISE NOTED.
4. THE EXISTING TOPOGRAPHY IS TAKEN FROM (FIELD RUN) SURVEY WITH 1 FOOT CONTOUR INTERVALS PREPARED BY PROGRESSIVE ENGINEERING CONSULTANTS, INC DATED JULY 2000.
5. THE COORDINATES SHOWN HEREON ARE BASED UPON THE HOWARD COUNTY GEODETIC CONTROL WHICH IS BASED UPON THE MARYLAND STATE PLANE COORDINATE SYSTEM. HOWARD COUNTY MONUMENT NOS. 43EA AND 43HB WERE USED FOR THIS PROJECT.
6. WATER IS PUBLIC PROJECT NO. C-5-0123 AND 44-4077.
7. SEWER IS PUBLIC PROJECT NO. C-5-0123.
8. EXISTING UTILITIES ARE BASED ON RECORD PLANS.
9. THERE IS NO FLOODPLAIN ON THIS SITE. (DANIEL CONSULTANTS 4/12/02)
10. NO TRAFFIC STUDY IS REQUIRED FOR THIS PROJECT.
11. THE CONTRACTOR SHALL NOTIFY "MISS UTILITY" AT (1-800-257-7777) AT LEAST 48 HOURS PRIOR TO ANY EXCAVATION WORK.
12. ANY DAMAGE BY THE CONTRACTOR WITHIN THE COUNTY'S RIGHT-OF-WAY SHALL BE CORRECTED AT CONTRACTOR'S EXPENSE
13. CONTRACTOR WILL CHECK SEWER HOUSE CONNECTION ELEVATION AT PROPERTY LINE PRIOR TO CONSTRUCTION.
14. NO POSTER IS REQUIRED FOR PUBLIC NOTICE
15. FOR PEC TRAVERSE POINT LOCATIONS SEE SHEET NO. C-1
16. ALL TREES WITHIN THE LIMIT OF DISTURBANCE TO BE REMOVED.
17. SINCE THE PLAT WAS SUBMITTED FOR THE COUNTY REVIEW/APPROVAL PRIOR TO NOVEMBER 15, 2001, IT IS SUBJECT TO COMPLIANCE WITH THE REQUIREMENTS/RESTRICTIONS OF THE FOURTH EDITION OF THE COUNTY'S SUBDIVISION AND LAND DEVELOPMENT REGULATIONS.
18. NO CLEARING, GRADING OR CONSTRUCTION IS PERMITTED WITHIN THE WETLANDS, STREAM(S) OR OTHER BUFFERS AND FOREST CONSERVATION EASEMENT AREA, EXCEPT AS REQUIRED TO CONSTRUCT THE STORMWATER MANAGEMENT POND RETROFIT AS PER WP-02-114.
19. THE FOREST CONSERVATION OBLIGATION INCURRED BY THIS SITE DEVELOPMENT PLAN (2.11 ACRES) HAS BEEN MEET BY THE RECORDATION OF 2.11 ACRES OF FOREST CONSERVATION EASEMENTS.
20. THE APRIL 2002 WETLAND DELINATION WAS DONE BY STRAUGHAN ENVIROMENTAL SERVICES.
21. AS OF THE PLANNING DIRECTOR APPROVED A WAIVER (WP-02-114) TO SECTION 16.116(a)(1) AND (2) (GRADING, REMOVAL OF VEGETATIVE COVER AND TREES, PAVING AND NEW STRUCTURES SHALL NOT BE PERMITTED WITHIN 25 FEET OF A WETLAND IN ANY ZONING DISTRICT, AND GRADING, REMOVAL OF VEGETATIVE COVER AND TREES, PAVING AND NEW STRUCTURES SHALL NOT BE PERMITTED WITHIN 50 FEET OF A PERENNIAL STREAMBANK.)

APPROVAL WAS SUBJECT TO THE FOLLOWING CONDITIONS:

a. ALL GRADING, CLEARING OR CONSTRUCTION DISTURBANCES WITHIN THE WETLANDS, WETLAND BUFFER AND STREAM BUFFER SHALL BE KEPT TO A MINIMUM NECESSARY TO RETROFIT THE EXISTING SWM FACILITY. THIS WAIVER APPROVAL APPLIES ONLY TO THE GRADING SHOWN ON THE PLAN EXHIBIT DATED JANUARY 25, 2002.
b. ALL GRADED AREAS MUST BE RESTABILIZED AND REVEGETATED.
c. HOLD THE L.O.D. TO EXPAND NO FURTHER THAN THE EXISTING OUTSIDE TOE-OF-DAM.
d. LIMIT EMBANKMENT SLOPES TO 3:1, BOTH SIDES, PER HOWARD SCD CRITERIA, I.E. DO NOT EXPAND TOE INTO WETLAND OR STREAM BUFFER.

22. EXTERIOR LIGHTING WILL BE IN CONFORMANCE WITH SECTION 134 OF THE HOWARD COUNTY ZONING REGULATIONS.

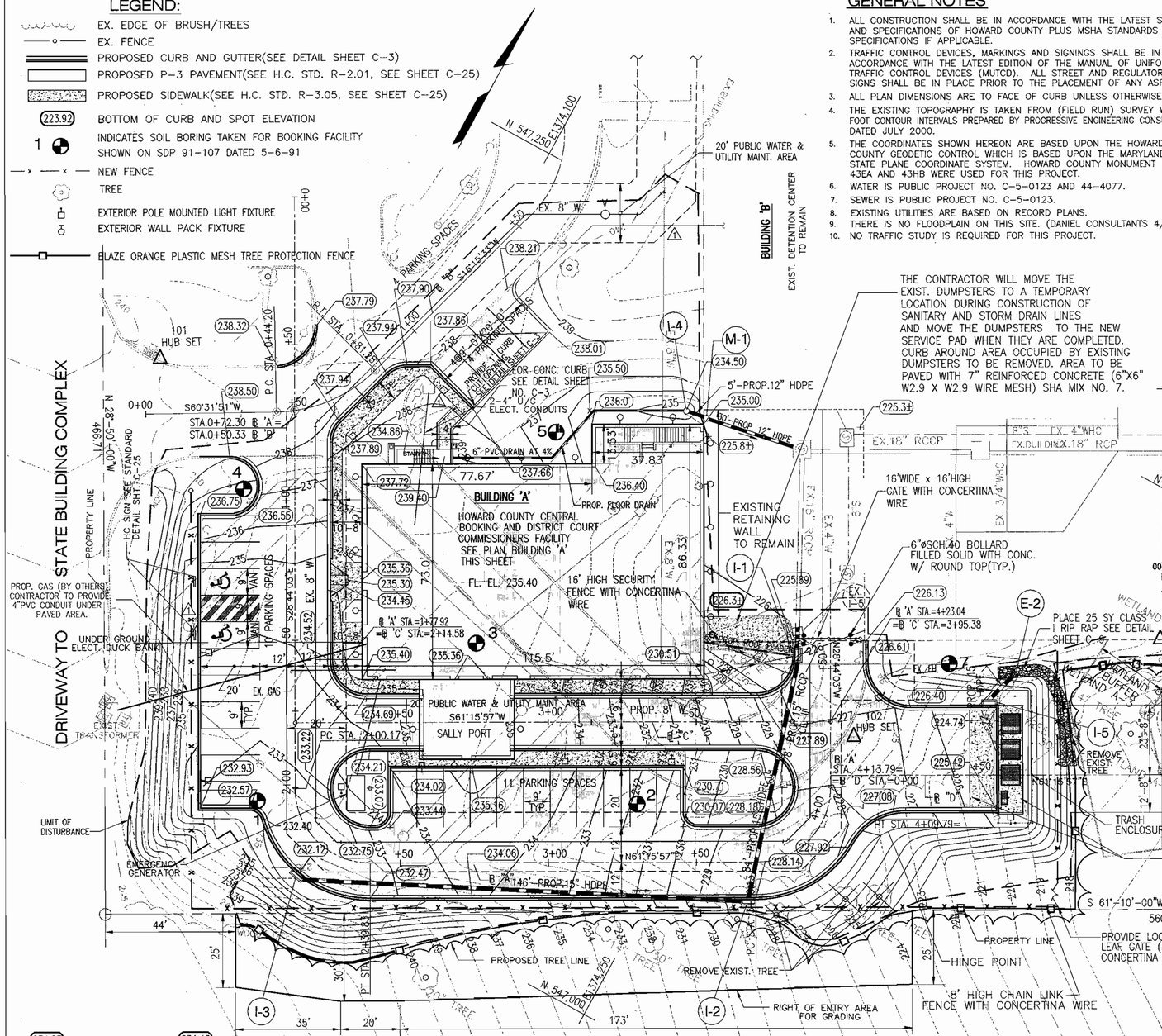

SITE PLAN
SCALE 1"=20'

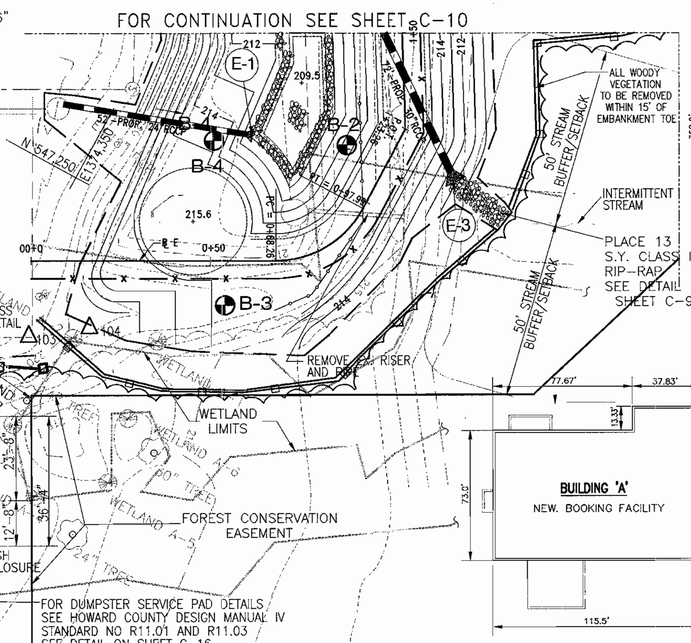

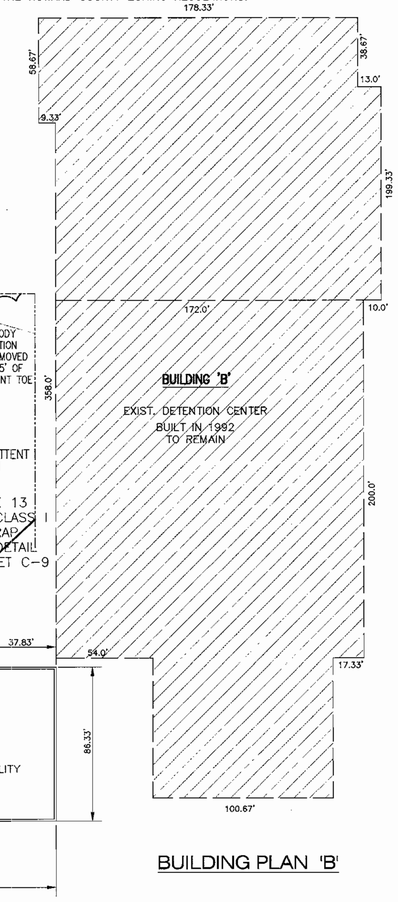

BUILDING PLAN 'B'

BUILDING PLAN 'A'

HOWARD COUNTY CENTRAL BOOKING AND DISTRICT COURT COMMISSIONERS FACILITY

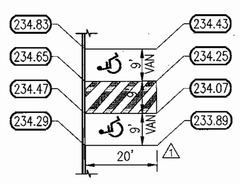

CORNER ELEVATIONS
HANDICAPPED PARKING
SCALE 1"=20'

NOTES:

1. FOR CURB & GUTTER DETAILS SEE SHEET NO. C-3
2. FOR PAVEMENT AND CURB ELEVATIONS SEE SHEET NO. C-21
3. FOR SIDEWALK DETAILS SEE H.C. STD. NO. R-3.05, SEE SHEET C-25
4. USE TYPE "A" SIDEWALK RAMP H.C. STD. R4.01, SEE SHEET C-25

THE SUBJECT PROPERTY IS ZONED M-2 PER THE 10-18-93 COMPREHENSIVE ZONING PLAN

Approved : Department of Planning and Zoning

Director — Date 3/10/03

Chief, Division of Land Development — Date 3/14/03

Chief, Development Engineering Division — Date 3/13/03

SUBDIVISION NAME	SECTION/AREA	PARCEL NO.
HOWARD COUNTY DETENTION CENTER	N/A	660

LIBER/FOLIO	BLOCK NO	ZONING	TAX MAP	GRID NO.	HOWARD CO. ELEC. DIST.	CENSUS TR.
2116/282 1009/368 [illegible]	9, 10 AND15	M-2	43	9	NO-1	6012.02

WATER CODE	SEWER CODE
B01	2221000

PROPOSED IMPROVEMENTS
BUILDING ADDITION, SEE SITE ANALYSIS CHART FOR APPLICABLE DPZ FILE REFERENCE DPZ FILE REF. FOR CURRENT PROJECT SDP-02-20

ati INC. Architects Engineers and Construction Consultants
8950 Route 108 Suite 218
Columbia Maryland 21045 (410)995-4067Fax(410)992-1837

DCI DANIEL CONSULTANTS, INC.
CONSULTING ENGINEERING AND PLANNING
8950 Rt. 108 E., Suite 229 Columbia, MD. 21045
Phone: 410-995-0090 Fax: 410-992-7038

SEAL: STATE OF MARYLAND — RICHARD SCOTT SCHOTT — No. 17191 — PROFESSIONAL ENGINEER

REVISIONS

NO.	DATE	DESCRIPTION
1	3/12/03	ADDENDUM NO. 1

SITE AND GRADING PLAN
HOWARD COUNTY CENTRAL BOOKING & DISTRICT COURT COMMISSIONERS FACILITY
HOWARD COUNTY, MARYLAND
DATE : FEBRUARY 21, 2003

CAPITAL PROJECT NO. P - 4916

C-2

SET SHEET 2 OF 25

SDP-02-20

H:\PROJECTS\CIVIL\0121901\PROGRESIVE\C-2.DWG

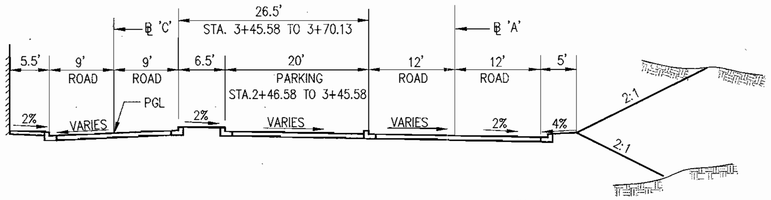

STA. 2+88.5 TO 3+70.38 STA. 2+83.58 TO STA. 3+70.13

TYPICAL SECTION

SCALE: 1"=10'

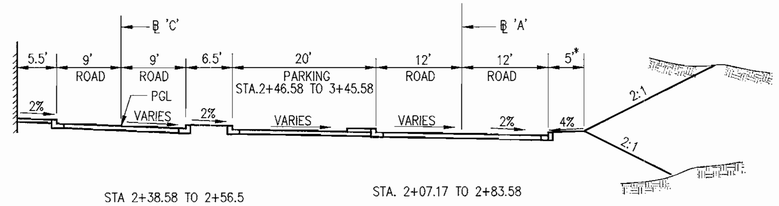

STA 2+38.58 TO 2+56.5 STA. 2+07.17 TO 2+83.58

TYPICAL SECTION

SCALE: 1"=10'

* FROM ℄ 'A' STA 2+39.83 TO STA 3+70 CURB BACKING WIDTH TO BE REDUCED TO 3'.

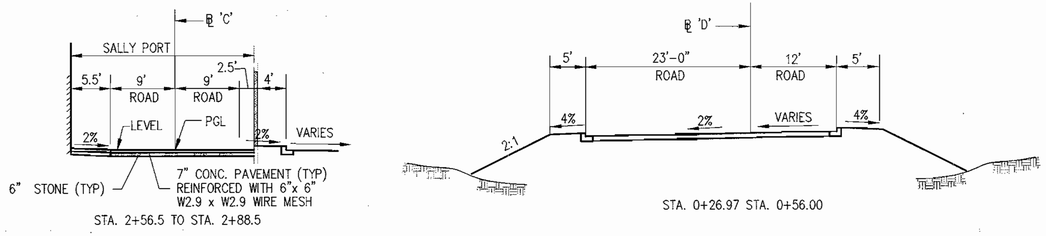

STA. 2+56.5 TO STA. 2+88.5 STA. 0+26.97 STA. 0+56.00

TYPICAL SECTION

SCALE: 1"=10'

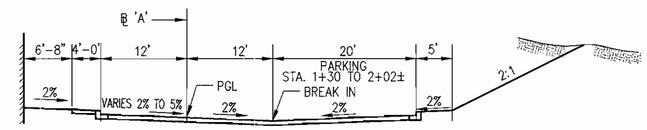

STA. 1+30 TO 1+56.92

TYPICAL SECTION

SCALE: 1"=10'

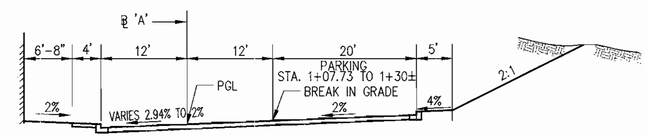

STA. 0+87.50 TO 1+30

TYPICAL SECTION

SCALE: 1"=10'

NOTE:

1. ALL PAVEMENT SECTIONS P-3 HOWARD CO. STD. R-2.01 GRADULAR BASE ALTERNATE, ONLY (SHEET C-25) △1
2. FOR PAVEMENT AND CURB ELEVATIONS SEE SHEET NO. C-12
3. PLACE 2" TOP SOIL WITH SEED & MULCH ON ALL EXPOSED GRADED AREAS
4. FOR HANDICAP SIGN SEE STD. DETAIL ON SHEET C-25
5. FOR SIDEWALK DETAILS SEE H.C. STANDARD R-3.05 (SHEET C-25)
6. USE TYPE A SIDEWALK RAMP HOWARD CO. STD. R-4.01 (SHEET C-25)

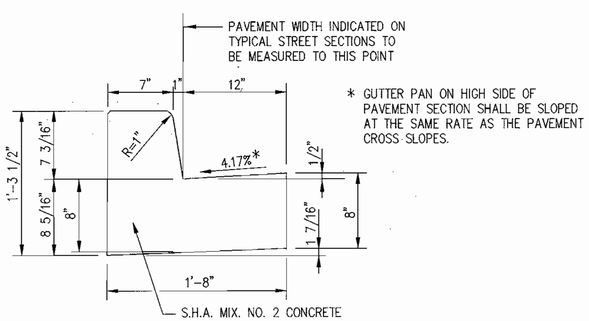

* GUTTER PAN ON HIGH SIDE OF PAVEMENT SECTION SHALL BE SLOPED AT THE SAME RATE AS THE PAVEMENT CROSS SLOPES.

STANDARD 7" COMBINATION CURB AND GUTTER

SCALE: N.T.S

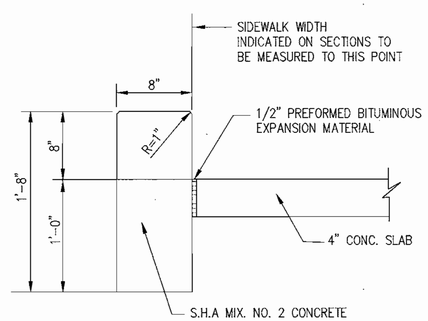

CURB DETAIL

SCALE: N.T.S

CURB OPENING DETAIL

NOT TO SCALE

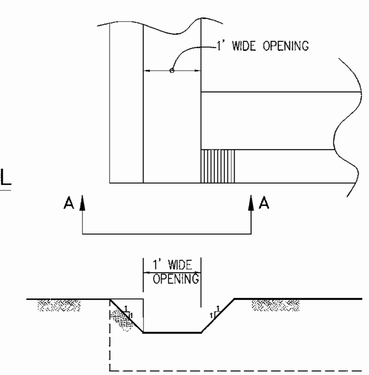

SECTION A-A

THE SUBJECT PROPERTY IS ZONED M-2 PER THE 10-18-93 COMPREHENSIVE ZONING PLAN

Approved : Department of Planning and Zoning

Director — Date 3/18/03

Chief, Division of Land Development — Date 3/18/03

Chief, Development Engineering Division — Date 3/13/03

SUBDIVISION NAME	SECTION/AREA	PARCEL NO.
HOWARD COUNTY DETENTION CENTER	N/A	650

LIBER/FOLIO	BLOCK NO	ZONING	TAX MAP	GRID NO.	HOWARD CO. ELEC. DIST.	CENSUS TR.
2116/282 1009/368 15846, 15841	9,10 AND 15	M-2	43	9	NO-1	6012.02

WATER CODE	SEWER CODE
B01	2221000

PROPOSED IMPROVEMENTS
BUILDING ADDITION, SEE SITE ANALYSIS CHART FOR APPLICABLE DPZ FILE REFERENCE DPZ FILE REF. FOR CURRENT PROJECT SDP-02-20

ati INC. Architects Engineers and Construction Consultants
8950 Route 108 Suite 218
Columbia Maryland 21045 (410)995-4067Fax(410)992-1837

DCI DANIEL CONSULTANTS, INC.
CONSULTING ENGINEERING AND PLANNING
8950 Rt. 108 E., Suite 229 Columbia, MD. 21045
Phone: 410-995-0090 Fax: 410-992-7038

REVISIONS

NO.	DATE	DESCRIPTION
△1	3/12/03	ADDENDUM NO. 1

TYPICAL SECTIONS

HOWARD COUNTY CENTRAL BOOKING & DISTRICT COURT COMMISSIONERS FACILITY
HOWARD COUNTY, MARYLAND

DATE : FEBRUARY 21, 2003

CAPITAL PROJECT NO. P - 4916

C-3

SET SHEET 3 OF 25

SDP-02-20

H:\PROJECTS\CIVIL\0121901\PROGRESIVE\C-3.DWG

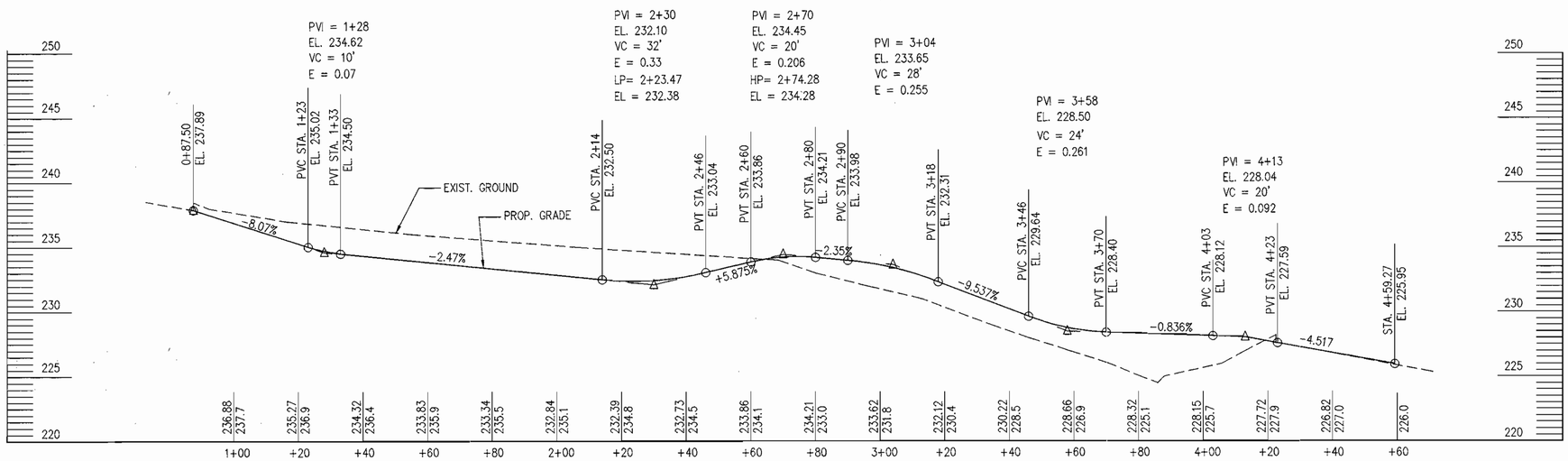

PROFILE ROAD 'A'

SCALE: HORS=1"=20'
VERT:=1"=5'

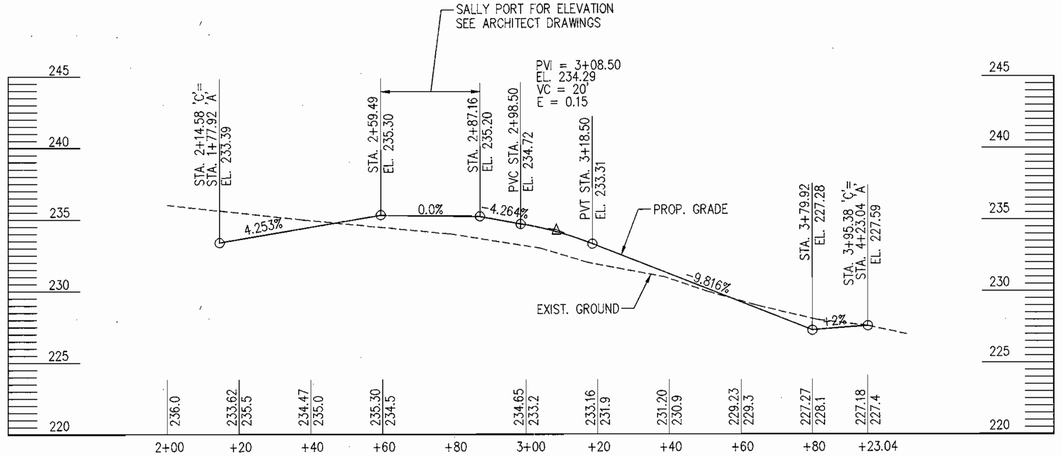

PROFILE ROAD 'C'

SCALE: HORS=1"=20'
VERT:=1"=5'

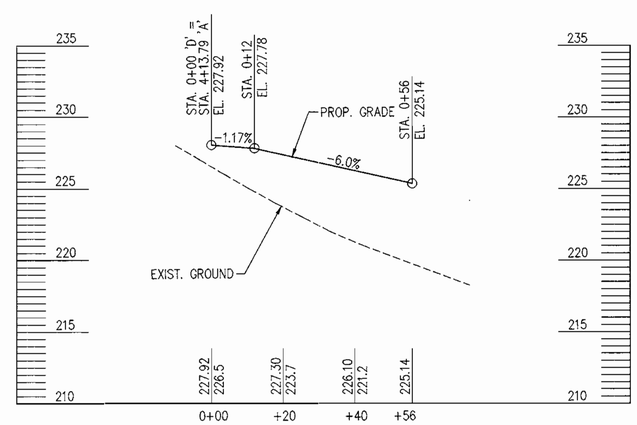

PROFILE ROAD 'D'

SCALE: HORS=1"=20'
VERT:=1"=5'

THE SUBJECT PROPERTY IS ZONED M-2 PER THE 10-18-93 COMPREHENSIVE ZONING PLAN

Approved : Department of Planning and Zoning

Director — Date 3/18/03

Chief, Division of Land Development — Date 3/14/03

Chief, Development Engineering Division — Date 3/5/03

SUBDIVISION NAME	SECTION/AREA	PARCEL NO.
HOWARD COUNTY DETENTION CENTER	N/A	660

LIBER/FOLIO	BLOCK NO	ZONING	TAX MAP	GRID NO.	HOWARD CO. ELEC. DIST.	CENSUS TR.
2116/282 1009/368 10846,1584	9,10 AND 15	M-2	43	9	NO-1	6012.02

WATER CODE	SEWER CODE
B01	2221000

PROPOSED IMPROVEMENTS
BUILDING ADDITION, SEE SITE ANALYSIS CHART FOR APPLICABLE DPZ FILE REFERENCE DPZ FILE REF. FOR CURRENT PROJECT SDP-02-20

Architects Engineers and Construction Consultants
8950 Route 108 Suite 218
Columbia Maryland 21045 (410)995-4067Fax(410)992-1837

STATE OF MARYLAND — DANIEL COURT JOHNSON — No. 15278 — REGISTERED PROFESSIONAL ENGINEER

DCI DANIEL CONSULTANTS, INC.
CONSULTING ENGINEERING AND PLANNING
8950 Rt. 108 E., Suite 229 Columbia, MD. 21045
Phone: 410-995-0090 Fax: 410-992-7038

REVISIONS

NO.	DATE	DESCRIPTION

ROADWAY PROFILES

HOWARD COUNTY CENTRAL BOOKING & DISTRICT COURT COMMISSIONERS FACILITY
HOWARD COUNTY, MARYLAND

DATE : FEBRUARY 21, 2003

CAPITAL PROJECT NO. P - 4916

C-4

SET SHEET 4 OF 25

SDP-02-20

H:\PROJECTS\CIVIL\0121901\PROGRESIVE\C-4.DWG

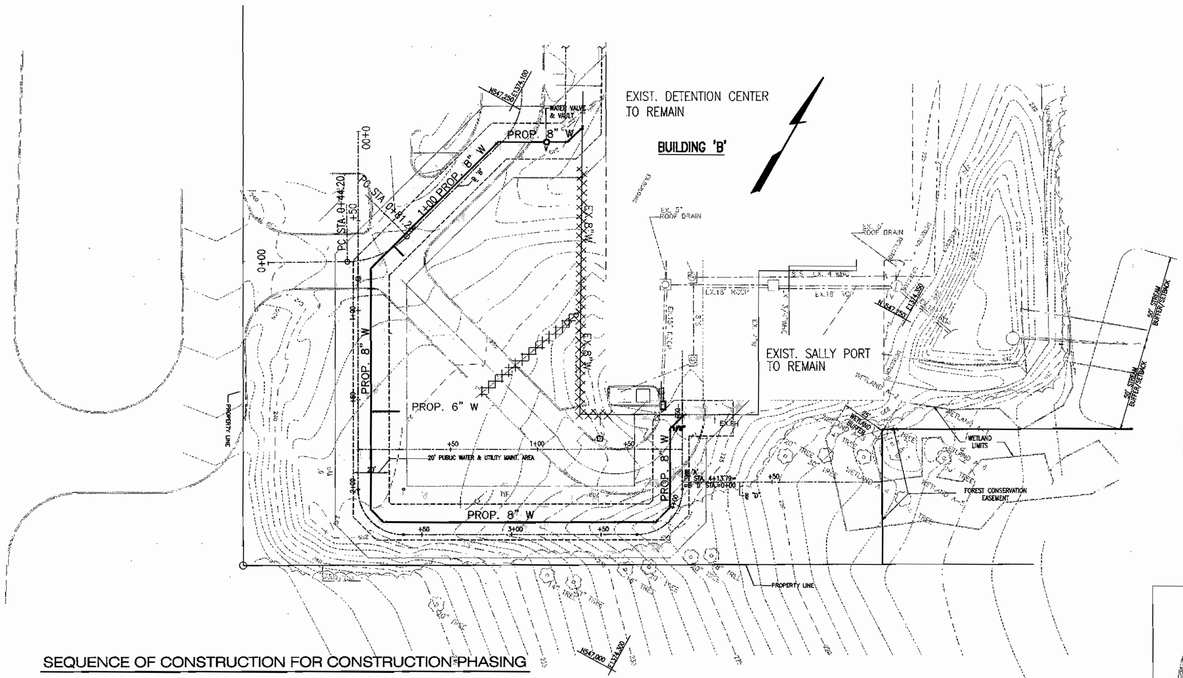

PHASE - 1

SCALE: 1'=40'-0"

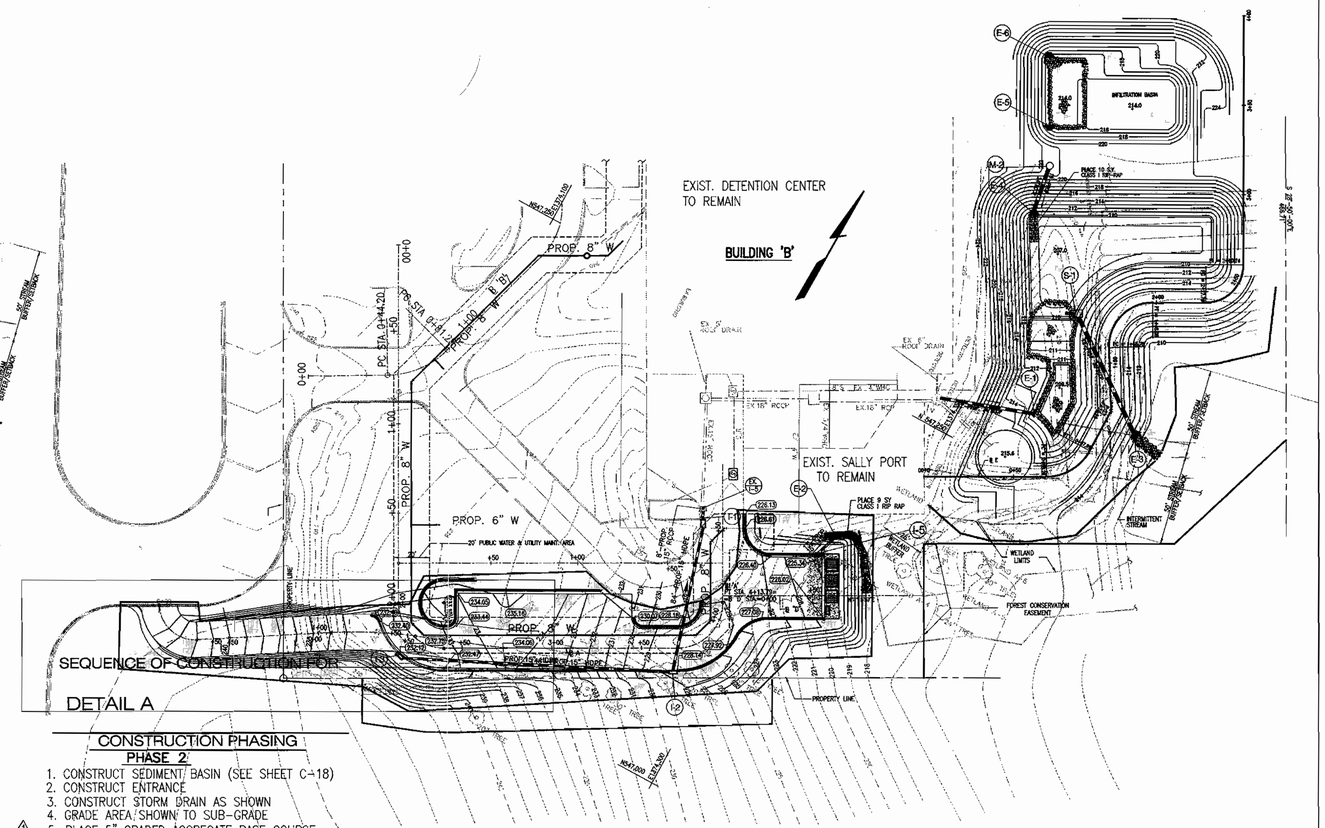

PHASE - 2

SCALE: 1'=40'-0"

SEQUENCE OF CONSTRUCTION FOR CONSTRUCTION PHASING

PHASE 1

1. INSTALL NEW 8" WATER LINE
2. CONNECT THE NEW WATER LINE TO THE EXISTING WATER LINE
3. REMOVE EXISTING 8" WATER LINE BEYOND THE CONNECTION

NOTE:
FIRE HYDRANT AT ℄ A STA. 0+67 LT IS TO BE INSTALLED IN PHASE 4.

CONSTRUCTION PHASING

PHASE 2

1. CONSTRUCT SEDIMENT BASIN (SEE SHEET C-18)
2. CONSTRUCT ENTRANCE
3. CONSTRUCT STORM DRAIN AS SHOWN
4. GRADE AREA SHOWN TO SUB-GRADE
5. PLACE 5" GRADED AGGREGATE BASE COURSE
6. CONSTRUCT CURB AND GUTTER
7. PLACE 5" BITUMINOUS CONCRETE BASE
8. SWITCH ACCESS FOR EXISTING BUILDING

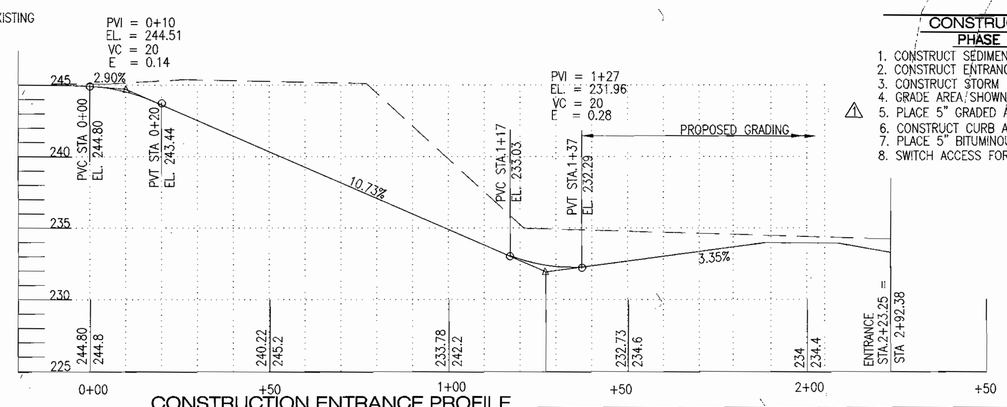

CONSTRUCTION ENTRANCE PROFILE

SCALE: HOR. 1'=20'-0"
VERT.1'=5'-0"

BASE LINE COORDINATES		
NO	NORTHING	EASTING
5	547010.5282	1374162.0097
16	546955.0569	1374011.2565
17	546964.9194	1374028.7379
18	546948.1216	1374039.2606
19	546987.7280	1374102.4854
20	547008.9615	1374144.8370
21	547021.9489	1374178.3371
22	547035.8329	1374208.1617

LEGEND

EXISTING UTILITIES AND MODULAR BLDG. TO BE REMOVED

SEQUENCE OF CONSTRUCTION AREA

NOTE:
1. ACCESS TO EXISTING BUILDING MUST BE MAINTAINED DURING CONSTRUCTION
2. CONTRACTOR TO PROVIDE TEMPORARY LIGHTING FROM THE TIME THE EXISTING LIGHTS ARE REMOVED UNTIL THE PROPOSED LIGHTS BROUGHT ON LINE.
3. FOR EROSION AND SEDIMENT CONTROL SEQUENCE OF CONSTRUCTION SEE SHEET C-18.
4. TEMPORARY PAVING SECTION P3 (GRANDULAR BASE ALT. ONLY). HOWARD CO. STD. R-2.01 (SHEET C-25)

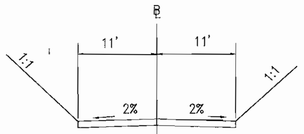

TEMPORARY ENTRANCE TYPICAL

N.T.S.

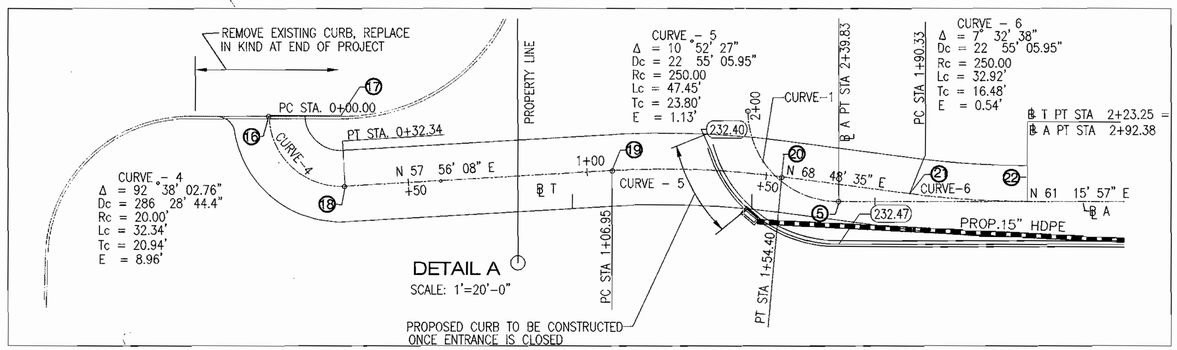

DETAIL A

SCALE: 1'=20'-0"

THE SUBJECT PROPERTY IS ZONED M-2 PER THE 10-18-93 COMPREHENSIVE ZONING PLAN

Approved : Department of Planning and Zoning

Director — Date 3/24/03

Chief, Division of Land Development — Date 3/14/03

Chief, Development Engineering Division — Date 3/13/03

SUBDIVISION NAME	SECTION/AREA	PARCEL NO.
HOWARD COUNTY DETENTION CENTER	N/A	660

LIBER/FOLIO	BLOCK NO	ZONING	TAX MAP	GRID NO.	HOWARD CO. ELEC. DIST.	CENSUS TR.
2116/282 1009/368 15840,15841	9,10 AND 15	M-2	43	9	NO-1	6012.02

WATER CODE	SEWER CODE
B01	2221000

PROPOSED IMPROVEMENTS
BUILDING ADDITION, SEE SITE ANALYSIS CHART FOR APPLICABLE DPZ FILE REFERENCE DPZ FILE REF. FOR CURRENT PROJECT SDP-02-20

HBA ati INC. Architects Engineers and Construction Consultants
8950 Route 108 Suite 218
Columbia Maryland 21045 (410)995-4067Fax(410)992-1837

STATE OF MARYLAND — SEAL OF PROFESSIONAL ENGINEER

DCI DANIEL CONSULTANTS, INC.
CONSULTING ENGINEERING AND PLANNING
8950 Rt. 108 E., Suite 229 Columbia, MD. 21045
Phone: 410-995-0090 Fax: 410-992-7038

REVISIONS		
NO.	DATE	DESCRIPTION
1	03/12/03	ADDENDUM NO. 1

SEQUENCE OF CONSTRUCTION - 1

HOWARD COUNTY CENTRAL BOOKING &
DISTRICT COURT COMMISSIONERS FACILITY
HOWARD COUNTY, MARYLAND

DATE : FEBRUARY 21, 2003

CAPITAL PROJECT NO. P - 4916

C-5

SET SHEET 5 OF 25

SDP-02-20

H:\PROJECTS\CIVIL\0121901\PROGRESIVE\C-5.DWG

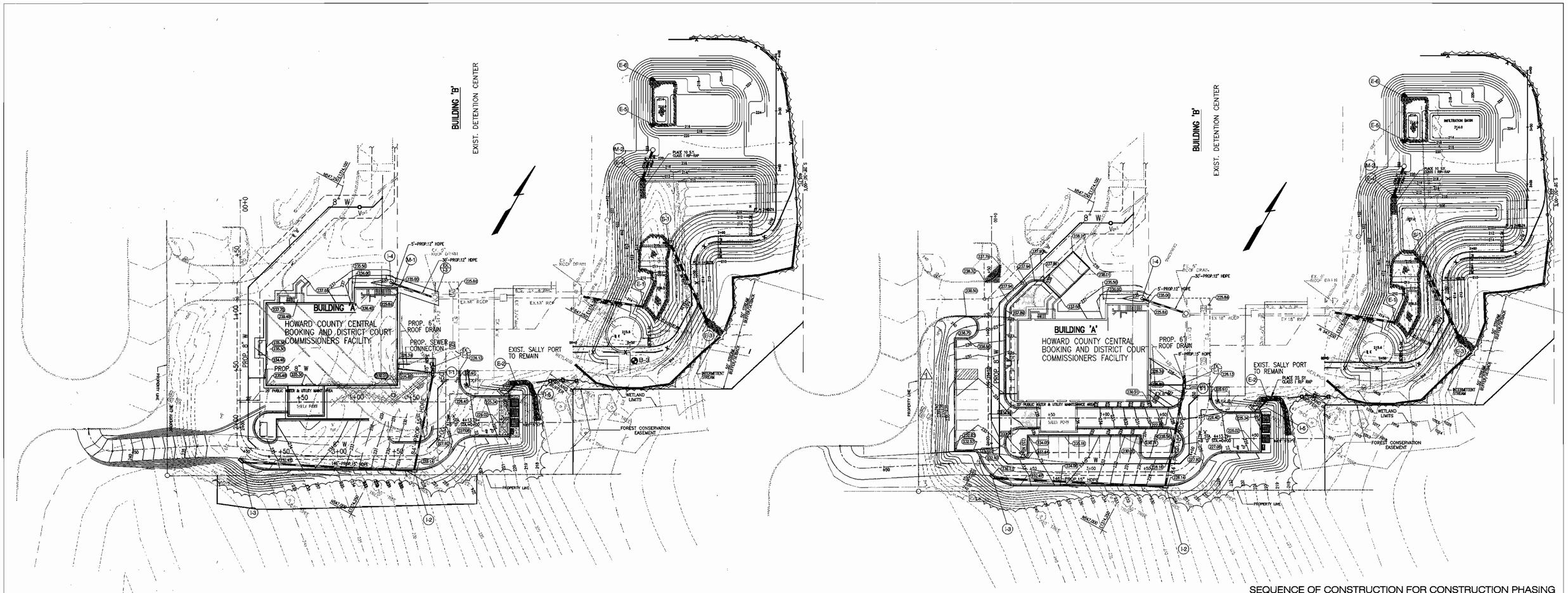

PHASE - 3
SCALE: 1'=40'-0"

PHASE - 4
SCALE: 1'=40'-0"

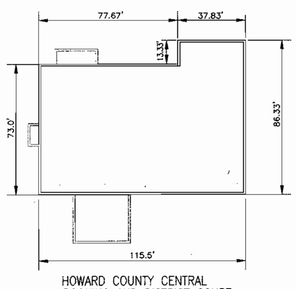

HOWARD COUNTY CENTRAL BOOKING AND DISTRICT COURT COMMISSIONERS FACILITY

PLAN BUILDING 'A'

SEQUENCE OF CONSTRUCTION FOR CONSTRUCTION PHASING

PHASE 3

1. REMOVE ALL REMAINING UTILITIES AND STORM DRAIN NOT REMOVED UNDER PHASE 1. CLOSE OPENING IN I-1 FOR EXISTING 15" RCCP.
2. PREPARE SOIL FOR FOUNDATION FOR NEW BUILDING.
3. CONSTRUCT INLET I-4
4. FINISH BUILDING CONSTRUCTION.
5. MAKE WATER AND SEWER CONNECTION TO NEW BLDG.

LEGEND

SEQUENCE OF CONSTRUCTION AREA

EXISTING UTILITIES TO BE REMOVED

NOTE:

1. ACCESS TO EXISTING BUILDING MUST BE MAINTAINED DURING CONSTRUCTION
2. CONTRACTOR TO PROVIDE TEMPORARY LIGHTING FROM THE TIME THE EXISTING LIGHTS ARE REMOVED UNTIL THE PROPOSED LIGHTS BROUGHT ON LINE.
3. FOR EROSION AND SEDIMENT CONTROL SEQUENCE OF CONSTRUCTION SEE SHEET C-18.

SEQUENCE OF CONSTRUCTION FOR CONSTRUCTION PHASING

PHASE 4:

1. GRADE AREA SHOWN TO SUB-GRADE
2. PLACE 6" GRADED AGGREGATE BASE COURSE
3. CONSTRUCT CURB AND GUTTER
4. PLACE 5" BITUMINOUS CONCRETE BASE
5. CONSTRUCT SIDEWALKS AS SHOWN ON THE PLANS
6. PLACE 1 1/2" BITUMINOUS CONCRETE SURFACE ON ALL NEW ROAD AND PARKING SURFACES
7. REMOVE ENTRANCE
8. REMOVE BAFFLES AND SEDIMENT BASIN DRAW DOWN DEVICE AND INFILTRATION BASIN, AND FINAL POND GRADING

THE SUBJECT PROPERTY IS ZONED M-2 PER THE 10-18-93 COMPREHENSIVE ZONING PLAN

Approved : Department of Planning and Zoning

Director — Date 3/18/03

Chief, Division of Land Development — Date 3/14/03

Chief, Development Engineering Division — Date 3/18/03

SUBDIVISION NAME	SECTION/AREA	PARCEL NO.
HOWARD COUNTY DETENTION CENTER	N/A	660

LIBER/FOLIO	BLOCK NO	ZONING	TAX MAP	GRID NO.	HOWARD CO. ELEC. DIST.	CENSUS TR.
2116/282 1009/368 15840, 15841	9,10 AND 15	M-2	43	9	NO-1	6012.02

WATER CODE	SEWER CODE
B01	2221000

PROPOSED IMPROVEMENTS
BUILDING ADDITION, SEE SITE ANALYSIS CHART FOR APPLICABLE DPZ FILE REFERENCE DPZ FILE REF. FOR CURRENT PROJECT SDP-02-20

ati INC. Architects Engineers and Construction Consultants
8950 Route 108 Suite 218
Columbia Maryland 21045 (410)995-4067Fax(410)992-1837

SEAL: STATE OF MARYLAND — RICHARD LECOUR SOBROTT — NO. 16225 — REGISTERED PROFESSIONAL ENGINEER

DCL DANIEL CONSULTANTS, INC.
CONSULTING ENGINEERING AND PLANNING
8950 Rt. 108 E., Suite 229 Columbia, MD. 21045
Phone: 410-995-0090 Fax: 410-992-7038

REVISIONS

NO.	DATE	DESCRIPTION
1	3/12/03	ADDENDUM NO. 1

SEQUENCE OF CONSTRUCTION - II

HOWARD COUNTY CENTRAL BOOKING & DISTRICT COURT COMMISSIONERS FACILITY
HOWARD COUNTY, MARYLAND

DATE : FEBRUARY 21, 2003

CAPITAL PROJECT NO. P - 4916

C-6

SET SHEET 6 OF 25

SDP-02-20

H:\PROJECTS\CIVIL\0121901\PROGRESIVE\C-6.DWG

STRUCTURE SCHEDULE

STRUCT. NO.	TYPE	STD. NO.	LOCATION	TOP ELEV.	INVERT IN	INVERT OUT	REMARK
I-4	YARD INLET	SD.4.14	NORTH CORNER OF BLDG.	234.50	—	224.05	DRAIN AT EL.=229.86
I-3	A-5 INLET	SD.4.40	STA. 2+23.47 ℄ A	232.72	–	227.70	WIDTH = 2'-6" LENGTH = 5'-0" (INSIDE DIMENSIONS)
I-2	A-5 INLET	SD.4.40	STA. 3+67 ℄ A	228.74	224.50	224.25	WIDTH = 2'-6" LENGTH = 5'-0" (INSIDE DIMENSIONS)
I-1	SINGLE WR INLET	SD.4.38	STA. 4+54 ℄ A	225.89	221.10	220.68	6" ROOF LEADER AT INVERT EL. 223.1
I-5	A-5 INLET	SD.4.40	STA. 0+56 ℄ D	225.34	–	222.34	WIDTH = 2'-6" LENGTH = 5'-0" (INSIDE DIMENSIONS)
E-2	END SECTION	HDPE	STA. 0+62 ℄ D	—	–	222.84	PROVIDE RIP RAP AT OUTLET
E-1	END SECTION	SD.5.52	STA. 0+60 ℄ E	—	–	210.00	PROVIDE RIP RAP AT OUTLET
EX I-5							TO BE REMOVED
M-1	SHALLOW MANHOLE	G5.05	STA. 3+53 ℄ C	235.8±	224.0	222.3	

STRUCTURE SCHEDULE

STRUCT. NO.	TYPE	STD. NO.	LOCATION	TOP ELEV.	INVERT IN	INVERT OUT
E-3	END SECTION	SD.5.52	STA. 1+17 ℄ E	—	—	209.00
S-1	RISER	DETAIL SHEET C-15	STA. 1+69 ℄ E	SEE DET.C-15	—	209.5
SM-1	SHALLOW MANHOLE	G5.05	STA. 3+55 ℄ C	226.8	224.0	223.4
E-4	END SECTION	SD.5.52	STA. 2+80 ℄ E	—	—	209.5
E-5	END SECTION	SD.5.52	STA. 3+37 ℄ E	—	—	216.2
M-2	MANHOLE	G5.12	STA. 3+13 ℄ E	221.5	216.0	210.0
E-6	END SECTION	SD.5.52	STA. 3+78 ℄ E	—	—	216.3

NOTE:

1. FOR DIMENSIONS OF HOWARD COUNTY CENTRAL BOOKING AND DISTRICT COURT COMMISSIONERS FACILITY, SEE PLAN 'A' THIS SHEET.
2. FOR DIMENSIONS OF EXIST. DETENTION CENTER, SEE SHEET C-2
3. MODULAR BUILDING TO BE REMOVED BY OTHERS.

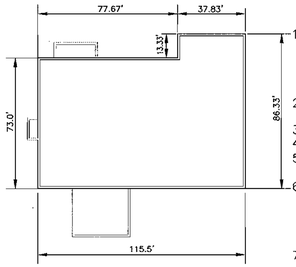

HOWARD COUNTY CENTRAL BOOKING AND DISTRICT COUTY COMMISSIONERS FACILITY

PLAN 'A'

NOT TO SCALE

PIPE SCHEDULE	
PIPE	LENGTH IN FT.
24" RCCP CLASS III	70
15" HDPE	243
15" RCCP CLASS III	8
12" HDPE	35
30" RCCP	72

GENERAL NOTES

1. APPROXIMATE LOCATIONS OF EXISTING WATER LINES ARE SHOWN. THE CONTRACTOR SHALL TAKE ALL NECESSARY PRECAUTIONS TO PROTECT EXISTING MAINS AND SERVICES AND MAINTAIN UNINTERRUPTED SUPPLY. ANY DAMAGE INCURRED SHALL BE REPAIRED IMMEDIATELY TO THE SATISFACTION OF THE ENGINEER AT THE CONTRACTOR'S EXPENSE.
2. ALL HORIZONTAL CONTROLS ARE BASED ON MARYLAND STATE COORDINATES.
3. ALL VERTICAL CONTROLS ARE BASED ON U.S.G.S. DATUM.
4. ALL PIPE ELEVATIONS ARE INVERT ELEVATIONS.
5. CLEAR ALL UTILITIES BY A MINIMUM OF 6". CLEAR ALL POLES BY 2'-0" MINIMUM.
6. FOR DETAILS NOT SHOWN ON THE DRAWINGS, AND FOR MATERIALS AND CONSTRUCTION METHODS, USE HOWARD COUNTY DESIGN MANUAL, VOLUME IV, STANDARD SPECIFICATIONS AND DETAILS FOR CONSTRUCTION (1991 AMENDMENTS) THE CONTRACTOR SHALL HAVE A COPY OF VOLUME IV ON THE JOB SITE.
7. EXISTING UTILITIES SHALL BE VERIFIED BY THE CONTRACTOR TO HIS OWN SATISFACTION. ANY DAMAGE TO EXISTING FACILITIES DUE TO THE CONTRACTOR'S NEGLIGENCE SHALL BE REPAIRED AT THE CONTRACTOR'S EXPENSE.
8. CONTRACTOR SHALL NOTIFY THE FOLLOWING UTILITIES OR AGENCIES AT LEAST FIVE WORKING DAYS BEFORE STARTING WORK SHOWN ON THESE PLANS:
   STATE HIGHWAY ADMINISTRATION – 531-5533
   BALTIMORE GAS & ELECTRIC CO. – CONTRACTOR SERVICES – 850-4620
   BALTIMORE GAS & ELECTRIC CO. – UNDER GROUND DAMAGE CONTROL – 787-9068
   MISS UTILITY – 1-800-257-7777
   BUREAU OF UTILITIES, HOWARD COUNTY DEPARTMENT OF PUBLIC WORKS – 313-4900
9. TREES AND SHRUBS ARE TO BE PROTECTED FROM DAMAGE TO MAXIMUM EXTENT USING TREE PROTECTION FENCE.
10. CONTRACTOR SHALL REMOVE TREES, STUMPS AND ROOTS ALONG THE LINE OF EXCAVATION. PAYMENT FOR SUCH REMOVAL SHALL BE INCLUDED CONTRACT LUMP SUM PRICE.
11. SANITARY SEWER GRAVITY PIPE SHALL BE PVC. PVC PIPE SHALL BE MANUFACTURED IN ACCORDANCE WITH ASTM DESIGNATION 3034 (SDR-35) JOINTS FOR PIPE AND FITTINGS SHALL BE THE INTEGRAL BELL GASKETED JOINT DESIGN. JOINTS SHALL CONFORM TO ASTM D3212. THIS FITTING SHALL BE MADE FROM PVC COMPONENTS IN ACCORDANCE WITH ASTM D1784. THE GASKET SHALL CONFORM TO ASTM F477.
12. T.B. DENOTES TEST BORING.
13. WATER MAINS AND WATER HOUSE CONNECTION LINES MUST BE PLACED AS TO HAVE ONE (1) FOOT SEPARATION FROM THE SEWER MAIN OR SEWER HOUSE CONNECTION AS THEY PASS ABOUT IT.
14. DUCTILE IRON WATER MAIN OR OFFSETS OF EXISTING MAINS SHALL CONFORM TO AWWA C150 AND C151. CLASS OF PIPE SHALL BE SPECIAL CLASS 52 FOR DIP IN ACCORDANCE WITH AWWA C150 TABLE 50.15. THE MINIMUM ACCEPTABLE PRESSURE RATING SHALL BE 250 PSI, IF COMPACT FITTINGS ARE USED THEN THE MINIMUM ACCEPTABLE PRESSURE RATING SHALL BE 350 PSI. INSTALLATION SHALL BE IN ACCORDANCE WITH AWWA C600. JOINTS: USE PUSH-ON OR MECHANICAL JOINTS CONFORMING WITH ALL APPLICABLE PROVISIONS OF AWWA C111. OR RESTRAINED JOINTS AS SHOWN WHERE FLANGED FITTINGS ARE REQUIRED FOR CONNECTIONS. VERIFY AND COORDINATE BOLT HOLE DRILLING WITH MANUFACTURER.
15. TOPS OF ALL WATER MAINS TO HAVE A MINIMUM OF 3-1/2' COVER UNLESS OTHERWISE NOTED.
16. VALVES ADJACENT TO TEES SHALL BE STRAPPED TO TEES.
17. ALL FITTINGS SHALL BE BUTTRESSED OR ANCHORED WITH CONCRETE IN ACCORDANCE WITH THE STANDARD DETAILS UNLESS OTHERWISE PROVIDED FOR ON THE DRAWINGS.
18. THE CONTRACTOR SHALL NOT OPERATE ANY WATER MAIN VALVES ON THE EXISTING WATER SYSTEM.
19. THE CONTRACTOR SHALL NOTIFY THE BUREAU OF HIGHWAYS, HOWARD COUNTY. (410) 313-2450 AT LEAST FIVE WORKING DAYS BEFORE ANY OPEN CUT OF ANY COUNTY ROAD OR BORING OPERATION IN COUNTY ROADS FOR LAYING WATER/SEWER MAINS OR HOUSE CONNECTIONS. THE APPROVAL OF THESE DRAWINGS WILL CONSTITUTE COMPLIANCE WITH DPW REQUIREMENTS PER SECTION 18.114(a) OF THE HOWARD COUNTY CODE.
20. PARKING LOT: USE MINIMUM WIRE #10AWG FOR LIGHT CIRCUITS. USE PVC CONDUIT1-1/4" DIRECT BURIED 30" BELOW FINISHED GRADE.
21. EXTERIOR LIGHTING POLES SHALL BE SQUARE STRAIGHT STEEL 6"x6", 7 GAUGE, 30' HEIGHT, AND SET 2' BEHIND THE CURB. SEE DETAIL SHEET C-25
22. ALL POLE LIGHTS SHALL BE TYPE "H".
23. FOR PROPOSED LANDSCAPING, SEE SHEET C-16.
24. THE CONTRACTOR IS ALERTED THAT IN THE AREA OF THE STORMWATER MANAGEMENT THERE IS EXISTING SECURITY MONITORING EQUIPMENT THAT MUST BE RELOCATED AS DIRECTED BY THE ENGINEER.

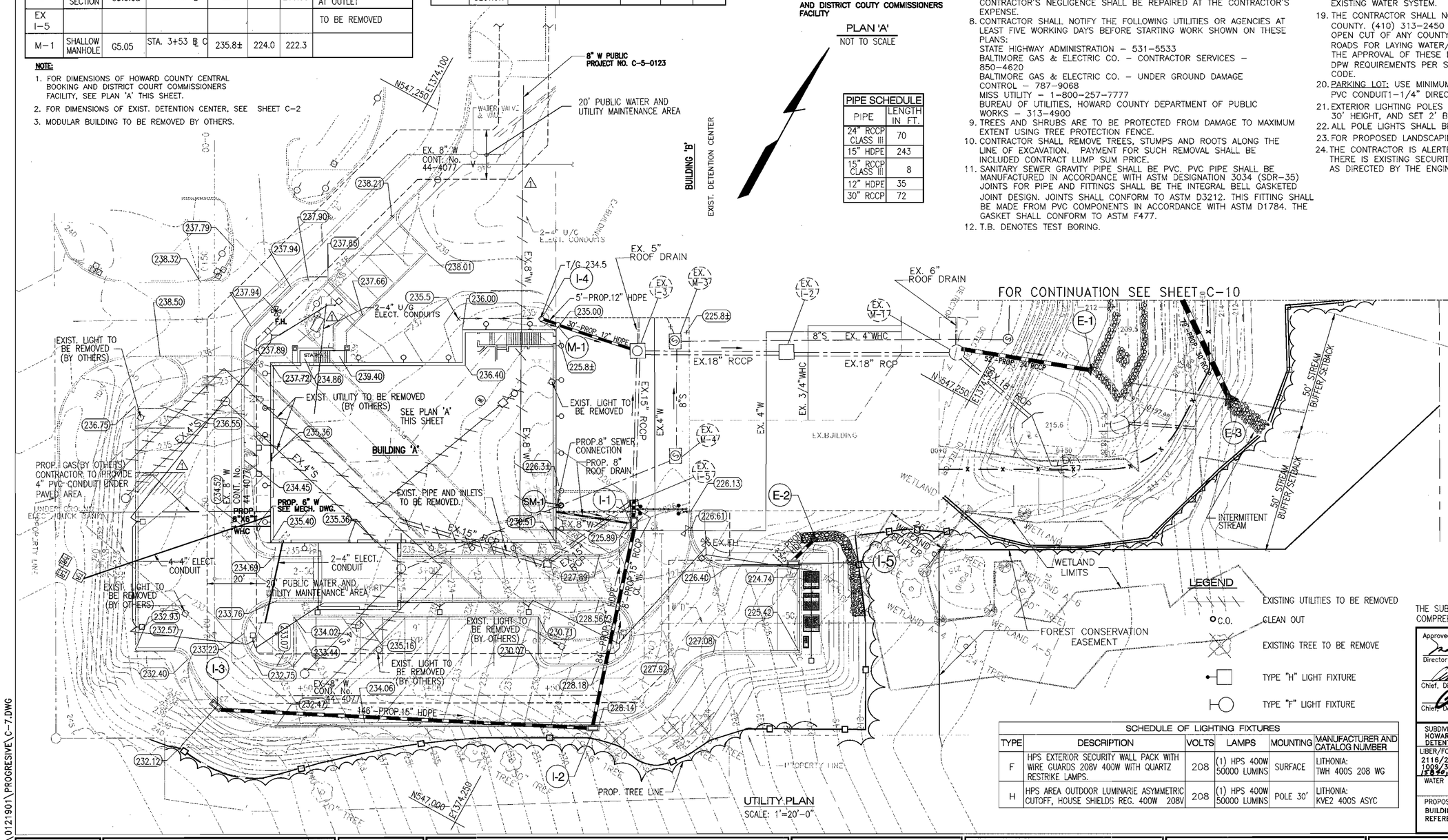

UTILITY PLAN

SCALE: 1'=20'-0"

LEGEND

- EXISTING UTILITIES TO BE REMOVED
- C.O. CLEAN OUT
- EXISTING TREE TO BE REMOVE
- TYPE "H" LIGHT FIXTURE
- TYPE "F" LIGHT FIXTURE

THE SUBJECT PROPERTY IS ZONED M-2 PER THE 10-18-93 COMPREHENSIVE ZONING PLAN

Approved : Department of Planning and Zoning

Director — Date 3/12/03

Chief, Division of Land Development — Date 3/12/03

Chief, Development Engineering Division — Date 3/12/03

SUBDIVISION NAME	SECTION/AREA	PARCEL NO.
HOWARD COUNTY DETENTION CENTER	N/A	660

LIBER/FOLIO	BLOCK NO	ZONING	TAX MAP	GRID NO.	HOWARD CO. ELEC. DIST.	CENSUS TR.
2116/282 1009/368 15849, 15841	9,10 AND 15	M-2	43	9	NO-1	6012.02

WATER CODE	SEWER CODE
B01	2221000

PROPOSED IMPROVEMENTS

BUILDING ADDITION, SEE SITE ANALYSIS CHART FOR APPLICABLE DPZ FILE REFERENCE DPZ FILE REF. FOR CURRENT PROJECT SDP-02-20

SCHEDULE OF LIGHTING FIXTURES

TYPE	DESCRIPTION	VOLTS	LAMPS	MOUNTING	MANUFACTURER AND CATALOG NUMBER
F	HPS EXTERIOR SECURITY WALL PACK WITH WIRE GUARDS 208V 400W WITH QUARTZ RESTRIKE LAMPS.	208	(1) HPS 400W 50000 LUMINS	SURFACE	LITHONIA: TWH 400S 208 WG
H	HPS AREA OUTDOOR LUMINARIE ASYMMETRIC CUTOFF, HOUSE SHIELDS REG. 400W 208V	208	(1) HPS 400W 50000 LUMINS	POLE 30'	LITHONIA: KVE2 400S ASYC

BBB ati INC. Architects Engineers and Construction Consultants
8950 Route 108 Suite 218
Columbia Maryland 21045 (410)995-4067Fax(410)992-1837

SEAL: STATE OF MARYLAND — RICHARD LESOUR ROBINSON — REGISTERED PROFESSIONAL ENGINEER

DCI DANIEL CONSULTANTS, INC.
CONSULTING ENGINEERING AND PLANNING
8950 Rt. 108 E., Suite 229 Columbia, MD. 21045
Phone: 410-995-0090 Fax: 410-992-7038

REVISIONS

NO.	DATE	DESCRIPTION
1	3/12/03	ADDENDUM NO. 1

UTILITY PLAN

HOWARD COUNTY CENTRAL BOOKING & DISTRICT COURT COMMISSIONERS FACILITY

HOWARD COUNTY, MARYLAND

DATE : FEBRUARY 21, 2003

CAPITAL PROJECT NO. P - 4916

C-7

SET SHEET 7 OF 25

SDP-02-20

H:\PROJECTS\CIVIL\012190T\PROGRESIVE\C-7.DWG

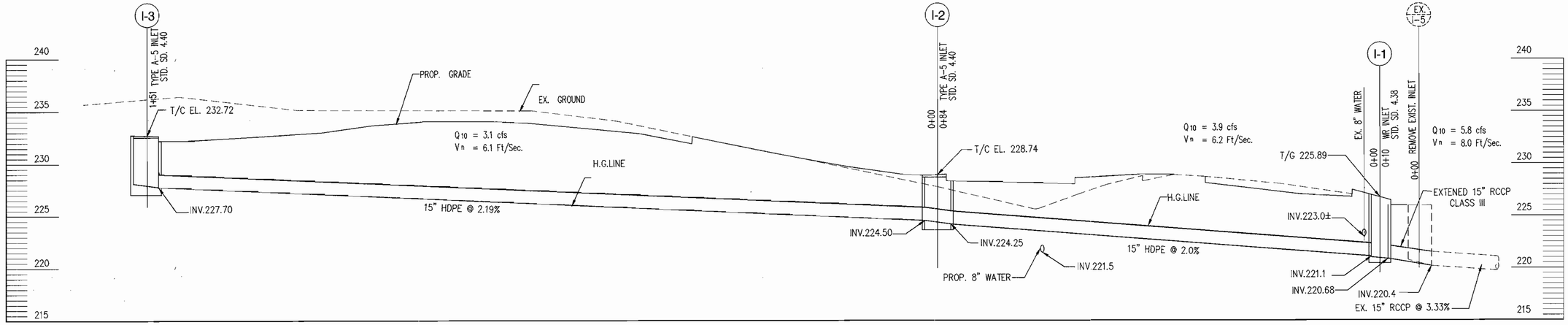

PROFILE - PROP. STORM DRAIN

SCALE: HORZ=1"=10'
VERT:=1"=5'

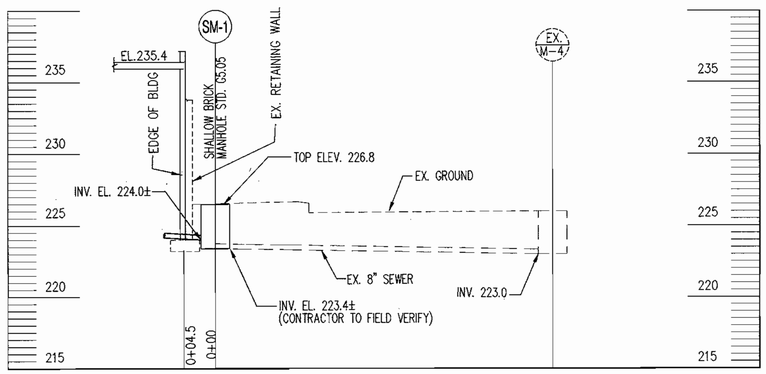

PROFILE - PROP. SANITARY SEWER

SCALE: HORZ=1"=10'
VERT:=1"=5'

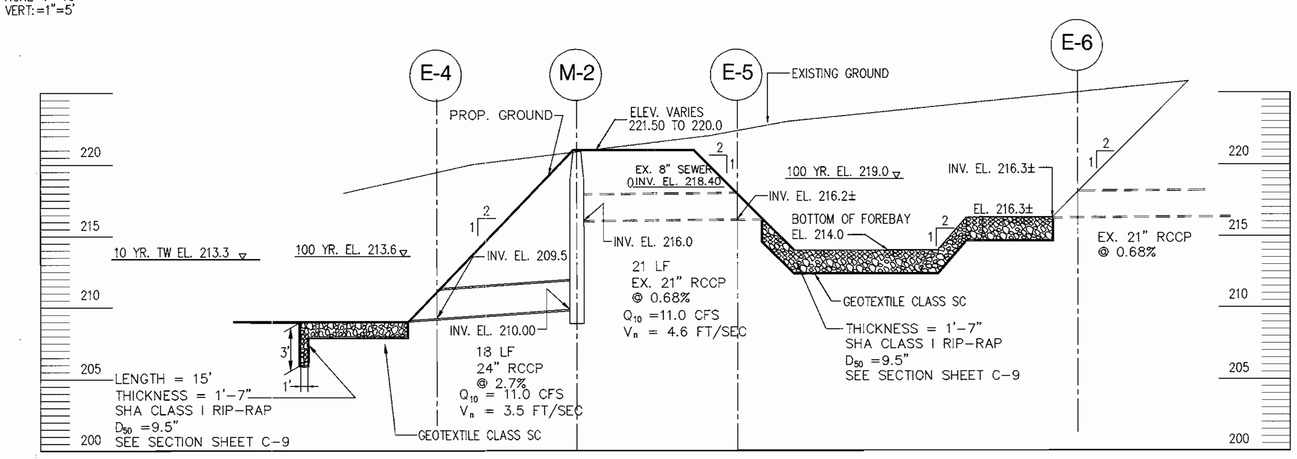

PROFILE PROPOSED STORM DRAIN

SCALE: 1" = 10' HORIZ.
1" = 5' VERT.

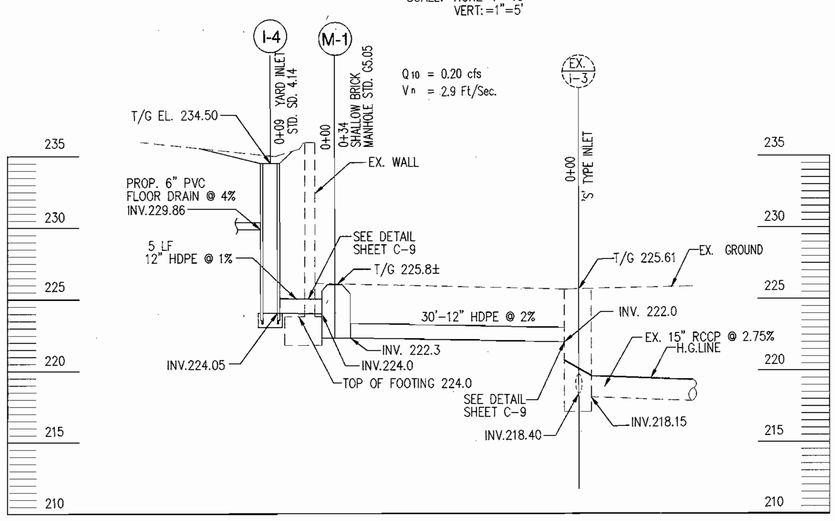

PROFILE - PROP. STORM DRAIN

SCALE: HORZ=1"=10'
VERT:=1"=5'

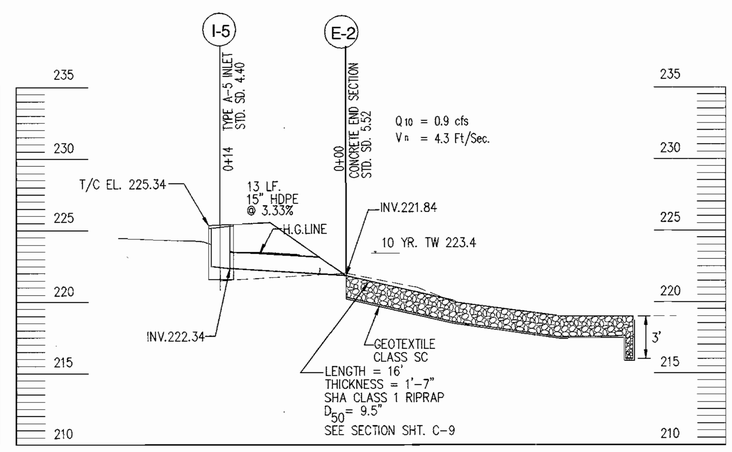

PROFILE - PROP. STORM DRAIN

SCALE: HORZ=1"=10'
VERT:=1"=5'

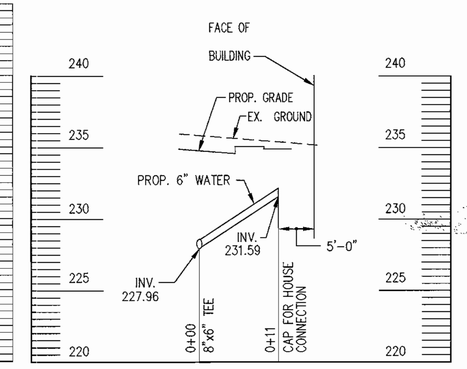

PROFILE - PROP. 6" WHC

SCALE:HORS=1"=10'
VERT:=1"=5'

*SEE GENERAL NOTES 11 ON SHEET C-7 FOR MATERIAL TYPES

THE SUBJECT PROPERTY IS ZONED M-2 PER THE 10-18-93 COMPREHENSIVE ZONING PLAN

Approved : Department of Planning and Zoning

Director	Date 3/10/03
Chief, Division of Land Development	Date 3/14/03
Chief, Development Engineering Division	Date 3/5/03

SUBDIVISION NAME		SECTION/AREA			PARCEL NO.
HOWARD COUNTY DETENTION CENTER		N/A			660
LIBER/FOLIO	BLOCK NO	ZONING	TAX MAP	GRID NO.	HOWARD CO. ELEC. DIST.	CENSUS TR.
2116/282 1009/368 15846, 15841	9,10 AND 15	M-2	43	9	N0-1	6012.02
WATER CODE	B01			SEWER CODE	2221000

PROPOSED IMPROVEMENTS
BUILDING ADDITION, SEE SITE ANALYSIS CHART FOR APPLICABLE DPZ FILE REFERENCE DPZ FILE REF. FOR CURRENT PROJECT SDP-02-20

HBH Architects Engineers and Construction Consultants INC.
8950 Route 108 Suite 218
Columbia Maryland 21045 (410)995-4067Fax(410)992-1837

DCI DANIEL CONSULTANTS, INC.
CONSULTING ENGINEERING AND PLANNING
8950 Rt. 108 E., Suite 229 Columbia, MD. 21045
Phone: 410-995-0090 Fax: 410-992-7038

SEAL: STATE OF MARYLAND PROFESSIONAL ENGINEER

REVISIONS

NO.	DATE	DESCRIPTION

UTILITY PROFILES I

HOWARD COUNTY CENTRAL BOOKING & DISTRICT COURT COMMISSIONERS FACILITY
HOWARD COUNTY, MARYLAND

DATE : FEBRUARY 21, 2003

CAPITAL PROJECT NO. P - 4916

C-8

SET SHEET 8 OF 25

SDP-02-20

H:\PROJECTS\CIVIL\0121901\PROGRESIVE\C-8.DWG

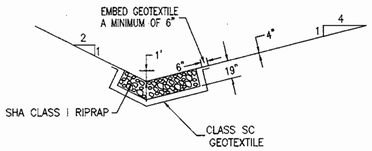

DITCH SECTION BELOW E-2

N.T.S

CONSTRUCTION SPECIFICATIONS

1. THE SUBGRADE FOR THE FILTER, RIPRAP SHALL BE PREPARED TO THE REQUIRED LINES AND GRADES. ANY FILL REQUIRED IN THE SUBGRADE SHALL BE COMPACTED TO A DENSITY OF APPROXIMATELY THAT OF THE SURROUNDING UNDISTURBED MATERIAL.
2. THE ROCK OR GRAVEL SHALL CONFORM TO THE SPECIFIED GRADING LIMITS WHEN INSTALLED RESPECTIVELY IN THE RIPRAP OR FILTER.
3. GEOTEXTILE SHALL BE PROTECTED FROM PUNCHING, CUTTING, OR TEARING. ANY DAMAGE OTHER THAN AN OCCASIONAL SMALL HOLE SHALL BE REPAIRED BY PLACING ANOTHER PIECE OF GEOTEXTILE OVER THE DAMAGED PART OR BY COMPLETELY REPLACING THE GEOTEXTILE. ALL OVERLAPS WHETHER FOR REPAIRS OR FOR JOINING TWO PIECES OF GEOTEXTILE SHALL BE A MINIMUM OF ONE FOOT.
4. STONE FOR THE RIPRAP OUTLETS MAYBE PLACED BY EQUIPTMENT. THEY SHALL BE CONSTRUCTED TO THE FULL COURSE THICKNESS IN ONE OPERATION AND IN SUCH A MANNER AS TO AVOID DISPLACEMENT OF UNDERLYING MATERIALS. THE STONE FOR RIPRAP OUTLETS SHALL BE DELIVERED AND PLACED IN A MANNER THAT WILL ENSURE THAT IT IS REASONABLY HOMOGENOUS WITH THE SMALLER STONE AND SPALLS FILLING THE VOIDS BETWEEN THE LARGER STONES. RIP-RAP SHALL BE PLACED IN A MANNER TO PREVENT DAMAGE TO THE FILTER BLANKET OR GEOTEXTILE. HAND PLACEMENT WILL BE REQUIRED TO THE EXTENT NECESSARY TO PREVENT DAMAGE TO THE PERMANENT WORKS.
5. THE STONE SHALL BE PLACED SO THAT IT BLENDS IN WITH THE EXISTING GROUND.

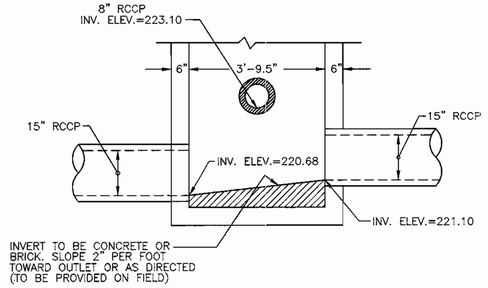

WR-INLET MODIFICATION DETAILS

SCALE : 1/2" = 1'-0"

NOTE:

FOR ALL OTHER DETAILS, SEE
HOWARD COUNTY STANDARD No. SD 4.38

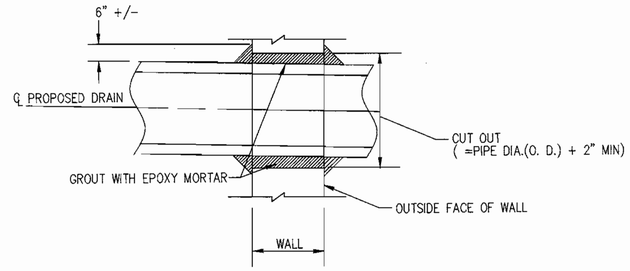

CUT IN THRU WALL

SCALE: 1/2" = 1' - 0"

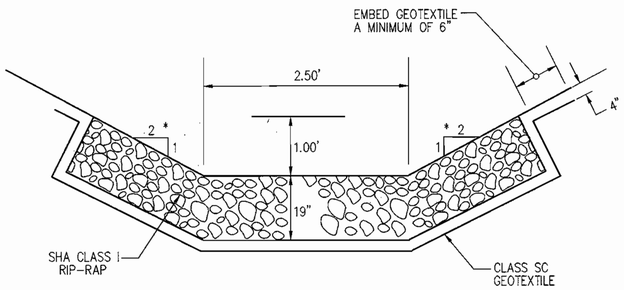

SECTION BELOW E-3

(NOT TO SCALE)

* VARY SIDESLOPE TO MEET EXISTING GROUND AT DOWNSTREAM END OF APRON.

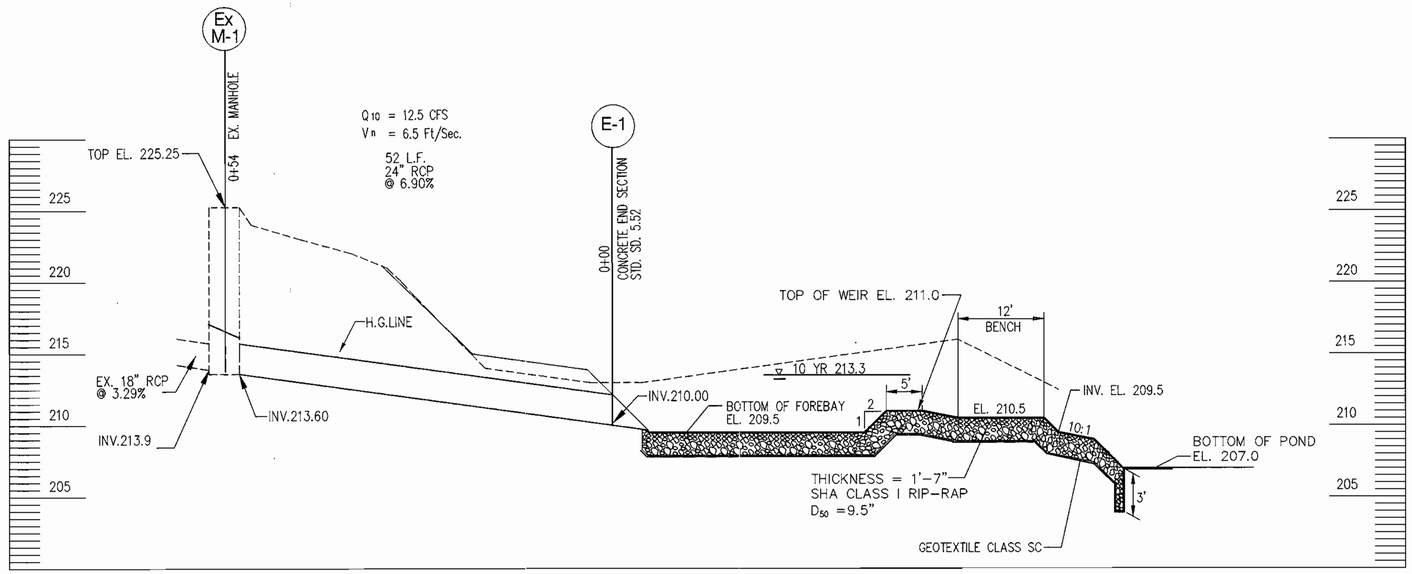

PROFILE - PROP. STORM DRAIN

SCALE: HORIZ. 1"=10'
VERT. 1"=5'

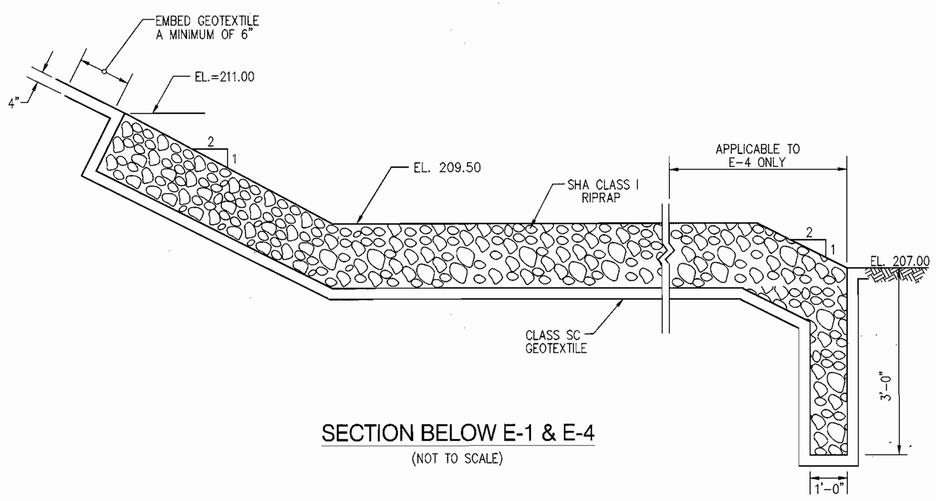

SECTION BELOW E-1 & E-4

(NOT TO SCALE)

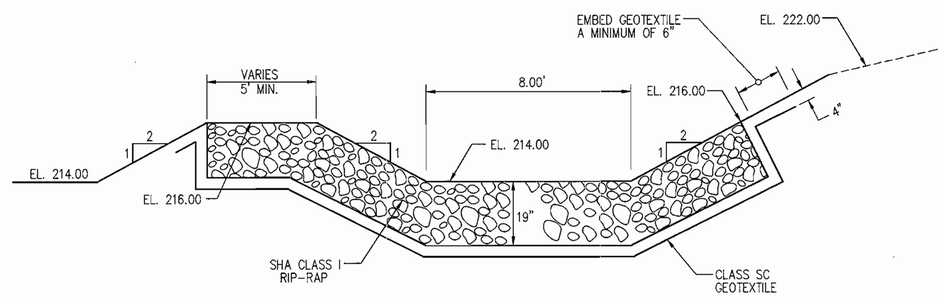

SECTION THRU OVERFLOW WEIR SEPARATING FOREBAY AND INFILTRATION BASIN

(NOT TO SCALE)

THE SUBJECT PROPERTY IS ZONED M-2 PER THE 10-18-93 COMPREHENSIVE ZONING PLAN

Approved : Department of Planning and Zoning

Director — Date 3/10/03

Chief, Division of Land Development — Date 3/11/03

Chief, Development Engineering Division — Date 3/5/03

SUBDIVISION NAME	SECTION/AREA	PARCEL NO.
HOWARD COUNTY DETENTION CENTER	N/A	660

LIBER/FOLIO	BLOCK NO	ZONING	TAX MAP	GRID NO.	HOWARD CO. ELEC. DIST.	CENSUS TR.
2116/282 1009/368 15844/544	9,10 AND 15	M-2	43	9	NO-1	6012.02

WATER CODE	SEWER CODE
B01	2221000

PROPOSED IMPROVEMENTS
BUILDING ADDITION, SEE SITE ANALYSIS CHART FOR APPLICABLE DPZ FILE REFERENCE DPZ FILE REF. FOR CURRENT PROJECT SDP-02-20

BBL ati INC. Architects Engineers and Construction Consultants
8950 Route 108 Suite 218
Columbia Maryland 21045 (410)995-4067Fax(410)992-1837

SEAL OF MARYLAND — PROFESSIONAL ENGINEER

DCI DANIEL CONSULTANTS, INC.
CONSULTING ENGINEERING AND PLANNING
8950 Rt. 108 E., Suite 229 Columbia, MD. 21045
Phone: 410-995-0090 Fax: 410-992-7038

REVISIONS

NO.	DATE	DESCRIPTION

UTILITY PROFILES II

HOWARD COUNTY CENTRAL BOOKING & DISTRICT COURT COMMISSIONERS FACILITY
HOWARD COUNTY, MARYLAND

DATE : FEBRUARY 21, 2003

CAPITAL PROJECT NO. P - 4916

C-9

SET SHEET 9 OF 25

SDP-02-20

H:\PROJECTS\CIVIL\0121901\PROGRESSIVE\C-9.DWG

SITE PLAN

SCALE 1"=20'

COORDINATES TABLES FOR SWM POND No. 1

STATION	COORDINATES		STATION	COORDINATES	
	NORTHING	EASTING		NORTHING	EASTING
P.O.B. STA. 0+00.00	547223.9897	1374350.4079	D	547443.9000	1374338.0412
P.C. STA. 0+68.26	547256.8046	1374410.2608	E	547450.3142	1374310.5754
P.T. STA. 0+97.99	547281.2432	1374424.5384	F	547433.8043	1374319.6271
STA. 1+23.26	547306.5108	1374424.2398	G	547415.4018	1374417.4647
P.C. STA. 1+58.78	547337.0787	1374406.1424	H	547410.2808	1374420.2723
P.T. STA. 1+98.08	547371.0433	1374415.4464	I	547347.9954	1374371.0373
P.C. STA. 2+27.76	547385.3122	1374441.4723	J	547344.3874	1374363.5382
P.T. STA. 2+60.74	547413.8219	1374449.7906	K	547375.6812	1374345.0653
STA. 4+00	547535.9308	1374382.8432	L	547314.0805	1374384.3136
A	547460.4099	1374328.9895	M	547307.6707	1374388.1085
B	547480.0380	1374364.7903	N	547286.3687	1374390.2087
C	547463.5282	1374373.8420	O	547281.6666	1374402.0366

THE SUBJECT PROPERTY IS ZONED M-2 PER THE 10-18-93 COMPREHENSIVE ZONING PLAN

DEVELOPER'S/LANDOWNER'S CERTIFICATION

I/We certify that all development and/or construction will be done according to these plans, and that any responsible personnel involved in the construction project will have a Certificate of Attendance at a Department of the Environment Approved Training Program for the Control of Sediment and Erosion before beginning the project. I shall engage a Registered Professional Engineer to supervise pond construction and provide the Howard Soil Conservation District with an "as-built" plan of the pond within 30 day of completion. I also authorize periodic on-site inspections by the Howard Soil Conservation District.

Signature: Michael A. Giovanniello Date: 3/12/03
Print Name: Michael A. Giovanniello MD. License No.

"AS-BUILT" CERTIFICATION

"I Hereby certify that the facility shown on this plan was constructed as shown on the "As-Built" plans and meets the approved plans and specifications. I also certify that construction was inspected in accordance with the requirements of Howard County.

Signature Date
Print Name MD. License No.

CONSULTANT'S HAZARD CLASS CERTIFICATION

"I Certify that this pond meets all the requirements for hazard Class A. (Requirements as stated in the soil conservation service-Maryland standards and specifications for pond, code 378, November 1992) All necessary investigations and computations have been performed to verify this finding."

Signature Date: 3/12/03
Print Name: Richard Sobbott MD. License No.: 15222

ENGINEER'S CERTIFICATION

"I certify that these plans for pond construction, erosion and sediment control represent a practical and workable plans based on my personal knowledge of the site conditions. This plans was prepared in accordance with the requirements of the Howard Soil Conservation District. I have notified the developer that he/she must engage a Registered Professional Engineer to supervise pond construction and provide the Howard Soil Conservation District with an "as-built" plan of the pond within 30 days of completion."

Signature Date: 3/12/03
Print Name: Richard Sobbott MD. License No.: 15222

These plans have been reviewed for the Howard Soil Conservation District and meet the technical requirements for small pond construction, soil erosion and sediment control.

U.S.D.A. - Natural Resources Conservation Service Date: 3/13/03

These plans for small pond construction, soil erosion and sediment control meet the requirements of the Howard Soil Conservation District.

Howard Soil Conservation District Date: 3/13/03

Approved : Department of Planning and Zoning

Director Date: 3/18/03
Chief, Division of Land Development Date: 3/14/03
Chief, Development Engineering Division Date: 3/13/03

SUBDIVISION NAME		SECTION/AREA			PARCEL NO.	
HOWARD COUNTY DETENTION CENTER		N/A			660	
LIBER/FOLIO	BLOCK NO	ZONING	TAX MAP	GRID NO.	HOWARD CO. ELEC. DIST.	CENSUS TR.
2116/282 1009/368 15840,15841	9, 10 AND15	M-2	43	9	NO-1	6012.02
WATER CODE B01			SEWER CODE 2221000			

PROPOSED IMPROVEMENTS
BUILDING ADDITION, SEE SITE ANALYSIS CHART FOR APPLICABLE DPZ FILE REFERENCE DPZ FILE REF. FOR CURRENT PROJECT SDP-02-20

ati INC. Architects Engineers and Construction Consultants
8950 Route 108 Suite 218
Columbia Maryland 21045 (410)995-4067Fax(410)992-1837

SEAL: STATE OF MARYLAND RICHARD LECOUR SOBBOTT NO. 15222 PROFESSIONAL ENGINEER

DCI DANIEL CONSULTANTS, INC.
CONSULTING ENGINEERING AND PLANNING
8950 Rt. 108 E., Suite 229 Columbia, MD. 21045
Phone: 410-995-0090 Fax: 410-992-7038

REVISIONS

NO.	DATE	DESCRIPTION
1	3/12/03	ADDENDUM NO. 1

STORMWATER MANAGEMENT PLAN

HOWARD COUNTY CENTRAL BOOKING & DISTRICT COURT COMMISSIONERS FACILITY
HOWARD COUNTY, MARYLAND

DATE : FEBRUARY 21, 2003

CAPITAL PROJECT NO. P - 4916

C-10

SET SHEET 10 OF 25

SDP-02-20

H:\PROJECTS\CIVIL\0121901\PROGRESIVE\NEWC-10.DWG

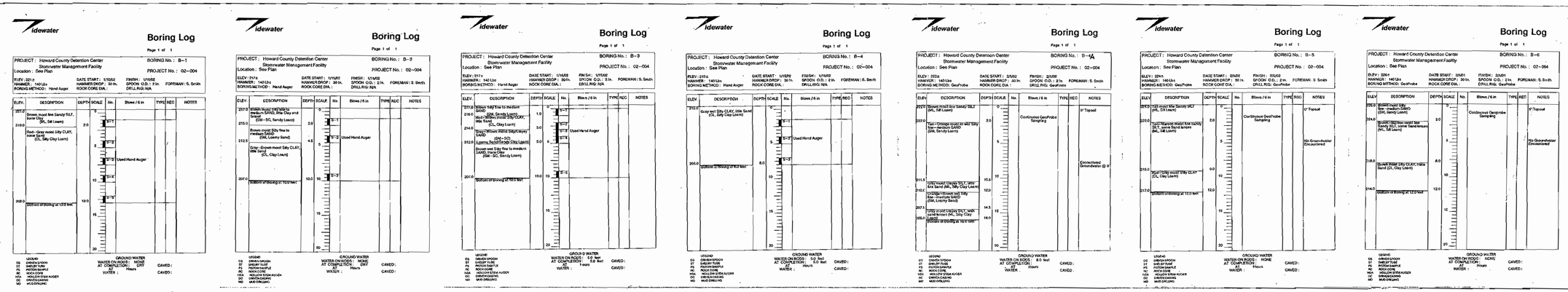

BORINGS

CONCLUSION FROM APRIL 29, 2002 GEOTECHNICAL REPORT BY TIDEWATER INC.

1. THE CLAYEY SOILS ENCOUNTERED AT THE BOTTOM OF THE POND (BORING B-4) ARE NOT SUITABLE FOR INFILTRATION. IT IS THEREFORE NOT FEASIBLE TO USE INFILTRATION PRACTICES TO PROVIDE FOR THE WATER QUALITY VOLUME.
2. THE RECHARGE VOLUME AND WATER QUALITY VOLUME SHOULD BE PROVIDED FOR USING SEPARATE FACILITIES BECAUSE OF THE LOW INFILTRATION RATES.
3. THE HIGH WATER TABLE AT BORING B-4 WOULD INDICATE A WET POND IS FEASIBLE AT THAT LOCATION TO PROVIDE THE WATER QUALITY VOLUME.
4. THE SOILS BELOW THE BOTTOM OF THE PROPOSED POND CONSIST OF VERY FIRM SANDY SILT (BORING B-5) AND HARD SILTY CLAY (BORING B-6). THE SOILS HAVE USDA CLASSIFICATIONS OF SILT LOAM AND CLAY LOAM WHICH ARE UNSUITABLE FOR INFILTRATION. THE PUBLISHED INFILTRATION RATES FOR THESE SOILS ARE 0.27 AND 0.09 INCHES PER HOUR RESPECTIVELY.

STORMWATER MANAGEMENT SUMMERY

CHANNEL PROTECTION VOLUME

DRAINAGE AREA	5.5 Ac
INFLOW CENTROID AT TME	13.5 Hr
OUTFLOW CENTROID AT TIME	33.0 Hr
TIME LAG	20.0 Hr (Greater than 18Hr.)
BMP	EXTENDED DETENTION POCKET POND (1 1/2" DIA. ORIFICE INV. 209.5)

OVERBANK FLOOD PROTECTION VOLUME

PRE-CONST. DRAINAGE AREA	9.5 Ac.
PRE-CONST. RCN	69
PRE-CONST. Tc	.33 Hr
PRE-CONST. DISCHARGE (1 yr.)	3.7 cfs
POST-CONST.	
SUB-AREA 1 DRAINAGE AREA	4.13 Ac.
SUB-AREA 1 RCN	67
SUB-AREA 1 Tc	.27 Hr
SUB-AREA 2 DRAINAGE AREA	3.12 Ac.
SUB-AREA 2 RCN	90
SUB-AREA 2 Tc	.21 Hr.
SUB-AREA 3 DRAINAGE AREA	2.42 Ac.
SUB-AREA 3 RCN	91
SUB-AREA 3 Tc	.245 Hr.
POST-CONST. DISCHARGE (1 yr.)	3.1 cfs **
BMP	EXTENDED DETENTION POCKET POND

** AS PER COMMENTS FROM PHIL THOMPSON DATED 8/26/02 IT IS ONLY NECESSARY TO MANAGE THE 1 YEAR EVENT.

EXTREME FLOOD PROTECTION VOLUME

DRAINAGE AREA	5.5 Ac
BMP	EXTENDED DETENTION POCKET POND (PASS 100 Yr. EVENT WITH 2 FT. OF FREEBOARD

WATER QUALITY VOLUME

SITE AREA:	4.84 Ac.
PERCENT IMPERVIOUS	72 %
WQV	10453 cfs ***
BMP	EXTENDED DETENTION POCKET POND

*** DEDUCT REV FROM WQV SINCE INFILTRATION BASIN PROVIDED UPSTREAM. SPLIT THIS VOLUME BETWEEN WET AND DRY VOLUME AS PER COMMENTS FROM PHIL THOMPSONON 8/26/02 THE DRY VOLUME DRAINS OUT IN 36 HOURS (>24 HOURS)

RECHARGE VOLUME

SITE AREA:	4.84 Ac.
PERCENT IMPERVIOUS	72 %
SOIL WEIGHTED RECHARGE FACTOR	0.15
REV	1845 cfs
BMP	INFILTRATION BASIN

CONSTRUCTION CHECKLIST SWM POND NO. 1

POND ITEM	DESIGN ELEVATION (SETTLED)	CONSTRUCTION ELEVATION	DESIGN SLOPE	CONSTRUCTION SLOPE	DESIGN LENGTH	CONSTRUCTION LENGTH	DESIGN WIDTH	CONSTRUCTION WIDTH	DESIGN DIAMETER	CONSTRUCTION DIAMETER
EMBANKMENT	215.6		3:1/3:1		300		12'-0"		30"	

GEOTECHNICAL CERTIFICATION RECEIVED FOR EMBANKMENT	YES	NO
CUTOFF TRENCH, IMPERVIOUS CORE, WEIR WALL, BARREL, ETC. CONSTRUCTION AND MATERIALS ?	YES	NO
POND GRADED TO SUBSTANTIALLY MATCH DESIGN GRADES AND VOLUME	YES	NO
TRASHRACKS AND ORIFICE ELBOWS IN PLACE ?	YES	NO

SWM POND NO. 1 DESIGN SUMMARY

DESIGN STORM	FACILITY INFLOW (CFS)	FACILITY DISCHARGE (CFS)	WATER SURFACE ELEVATION (FT)	STORAGE VOLUME C. F. REQUIRED	STORAGE VOLUME C. F. PROVIDED
CPV	11.0	2.6	212.8	—	17765
2 YEAR	14.5	10.1	212.9	—	—
10 YEAR	25.6	24.0	213.3	—	—
100 YEAR	37.6	34.3	213.6	—	—
100 YEAR CLOGGED	37.6	34.3	213.6	—	—
WQV			209.5 WET 210.95 DRY	5227 WET 5227 DRY	5291 WET 5330 DRY
REV			216.0	1845	2460

PROJECT INFORMATION

PROJECT NAME: HOWARD COUNTY BOOKING COURT FACILITY
SCD FILE NO: SDP - 02 - 20
POND NO:

(TO NEAREST 1000 FT)
EAST 1374350
NORTH 547250
COUNTY HOWARD
ADC MAP/GRID ___/___

OWNER INFORMATION

NAME: HOWARD COUNTY GOVERNMENT
ADDRESS: 3430 COURTHOUSE DRIVE
CITY: ELLICOTT CITY
STATE: MD. ZIP: 21043

TYPE OF POND: o EXCAVATED o EMBANKMENT o BOTH

DRAINAGE AREA: 5.5 ACRES
SURFACE AREA: 0.5 ACRES
NORMAL DEPTH: 4.0 FEET
DESIGN STORM FREQUENCY: 100 YEARS
STORAGE AT DESIGN HIGH WATER (DHW): 0.54 AC-FT

EMBANKMENT (CHECK ALL THAT APPLY)

o STORMWATER MGMT. - WET
o STORMWATER MGMT. - DRY
o INFILTRATION/WATER QUALITY
o WATER SUPPLY/IRRIGATION
o SAND & GRAVEL WASH POND
o SEDIMENT CONTROL
o LIVESTOCK
o FLOOD CONTROL
o RECREATION
o BORROW MATERIAL
o WETLAND MITIGATION
o WILDLIFE/FISH
o FIRE CONTROL
o OTHER (SPECIFY): _____

EMBANKMENT
TOP ELEVATION: 215.6 FT.
NORMAL POOL ELEVATION: 209.5 FT.
DHW WATER ELEVATION: 213.6 FT.
MAX FILL HEIGHT: 5.6 FT.
TOP WIDTH: 12 FT.
SIDE SLOPES: U.S. 3 :1
D.S. 3 :1

WILL EMBANKMENT SERVE AS A PUBLIC ROADWAY? o YES ☒ NO

PRINCIPAL SPILLWAY
BARREL SIZE: 30 INCHES DESIGN CAPACITY AT DHW: 34.3 CFS
o BCCMP o ALUM o PVC o CAST-IN-PLACE BOX CULVERT
o WEIR o CHANNEL ☒ OTHER: RCCP

EMERGENCY SPILLWAY DESIGN CAPACITY AT DHW: N/A CFS
VELOCITY: _____ FT/SEC BOTTOM WIDTH: _____ FT
CREST ELEV: _____ FT SIDE SLOPES: _____ :1
SPILLWAY PROTECTION: o GRASS ☒ RIPRAP o GABIONS o OTHER _____

DISTANCE BELOW POND TO
PROPERTY LINE: 210 FT
PUBLIC ROAD: 1210 FT *

SOIL CONSERVATION DISTRICT (NAME): _____
DISTRICT MANAGER SIGNATURE: _____ DATE: _____
(The following line to be completed and form re-submitted after As-Built certification has been accepted by the District)
DATE AS-BUILT ACCEPTED: _____
DISTRICT REPRESENTATIVE SIGNATURE

* ALL DEVELOPMENT PROHIBITED WITHIN THIS REACH BY EASEMENT

ENGINEER'S CERTIFICATE

"I Certify that this plan for erosion and sediment control represents a practical and workable plan based on my personal knowledge of the site conditions and that it was prepared in accordance with requirements of the Howard Soil Conservation District."

Richard Sabatt — 2/25/03
Signature of Engineer (Print name below signature) — Date

DEVELOPER'S CERTIFICATE

"I/We Certify that all development and construction will be done according to this plan and that any responsible personal involved in the construction project will have a certificate of Attendance at the Department of the Environment Approved Training Program for the Control of sediment and Erosion before beginning the project. I also authorize periodic on-site inspection by Howard Soil Conservation District"

Michael A. Guevremelle — 2/25/03
Signature of Developer (Print name below signature) — Date

Reviewed for HOWARD SCD and meet Technical Requirements.
U.S.D.A. - Natural Resources Conservation Service — 3/4/03 Date

The development plan is approved for soil erosion and sediment control by the HOWARD SOIL CONSERVATION DISTRICT
Howard SCD — 3/4/03 Date

THE SUBJECT PROPERTY IS ZONED M-2 PER THE 10-18-93 COMPREHENSIVE ZONING PLAN

Approved : Department of Planning and Zoning
Director — 3/10/03 Date
Chief, Division of Land Development — 3/14/03 Date
Chief, Development Engineering Division — 3/5/03 Date

SUBDIVISION NAME	SECTION/AREA	PARCEL NO.
HOWARD COUNTY DETENTION CENTER	N/A	660

LIBER/FOLIO	BLOCK NO	ZONING	TAX MAP	GRID NO.	HOWARD CO. ELEC. DIST.	CENSUS TR.
2116/282 1009/368 15840, 15841	9, 10 AND15	M-2	43	9	NO-1	6012.02

WATER CODE B01 SEWER CODE 2221000

PROPOSED IMPROVEMENTS
BUILDING ADDITION, SEE SITE ANALYSIS CHART FOR APPLICABLE DPZ FILE REFERENCE DPZ FILE REF. FOR CURRENT PROJECT SDP-02-20

HBA ati INC. Architects Engineers and Construction Consultants
Architects and Construction Consultants
8950 Route 108 Suite 218
Columbia Maryland 21045 (410)995-4067 Fax(410)992-1837

SEAL: STATE OF MARYLAND — RICHARD LECOUR SABATT — REGISTERED PROFESSIONAL ENGINEER

DCI DANIEL CONSULTANTS, INC.
CONSULTING ENGINEERING AND PLANNING
8950 Rt. 108 E., Suite 229 Columbia, MD. 21045
Phone: 410-995-0090 Fax: 410-992-7038

REVISIONS

NO.	DATE	DESCRIPTION

STORMWATER MANAGEMENT PLAN DETAILS - I
HOWARD COUNTY CENTRAL BOOKING & DISTRICT COURT COMMISSIONERS FACILITY
HOWARD COUNTY, MARYLAND
DATE : FEBRUARY 21, 2003

CAPITAL PROJECT NO. P - 4916

C-11

SET SHEET 11 OF 25

SDP-02-20

H:\PROJECTS\CIVIL\01219 01\PROGRESIVE\C-11.DWG

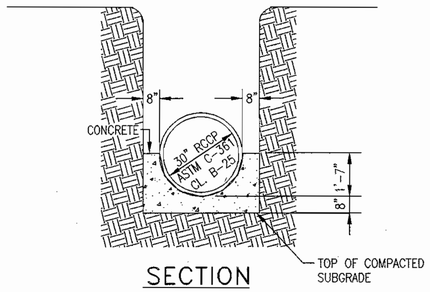

SECTION

NOTE: POUR CONCRETE AGAINST UNDISTURBED EARTH. REMOVE SHEETING BEFORE POURING CONCRETE. ALL CONCRETE SHALL BE 3000 PSI.

SCS TR-46 A-2 CONCRETE CRADLE

NOT TO SCALE

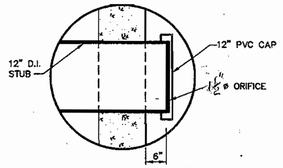

ORIFICE PLATE

PERFORATED PIPE SHALL BE BONDED TO ORIFICE SECTION AND HAVE REMOVABLE CAP PLACED ONTO OPPOSITE END FOR CLEAN OUT.

PERFORATED PIPE SHALL BE SECURELY COVERED ON ALL SIDES WITH 12" MINIMUM #2 STONE. SEE DETAIL 2 THIS SHEET

CONSTRUCTION OPERATIONS SHALL BE CARRIED OUT IN SUCH A MANNER THAT EROSION AND WATER POLLUTION ARE MINIMIZED.

SET PERFORATED PIPE AT INVERTS SPECIFIED ON STORM WATER MANAGEMENT PLANS PRINCIPAL SPILLWAY PROFILE.

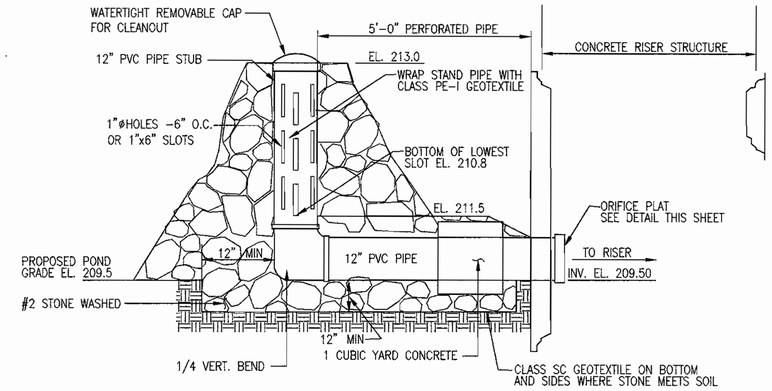

INTERNALLY CONTROLLED ORIFICE

NOT TO SCALE

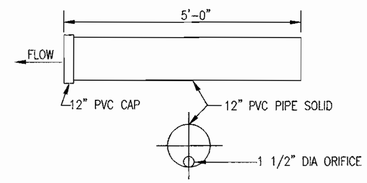

ORIFICE SECTION

NOT TO SCALE

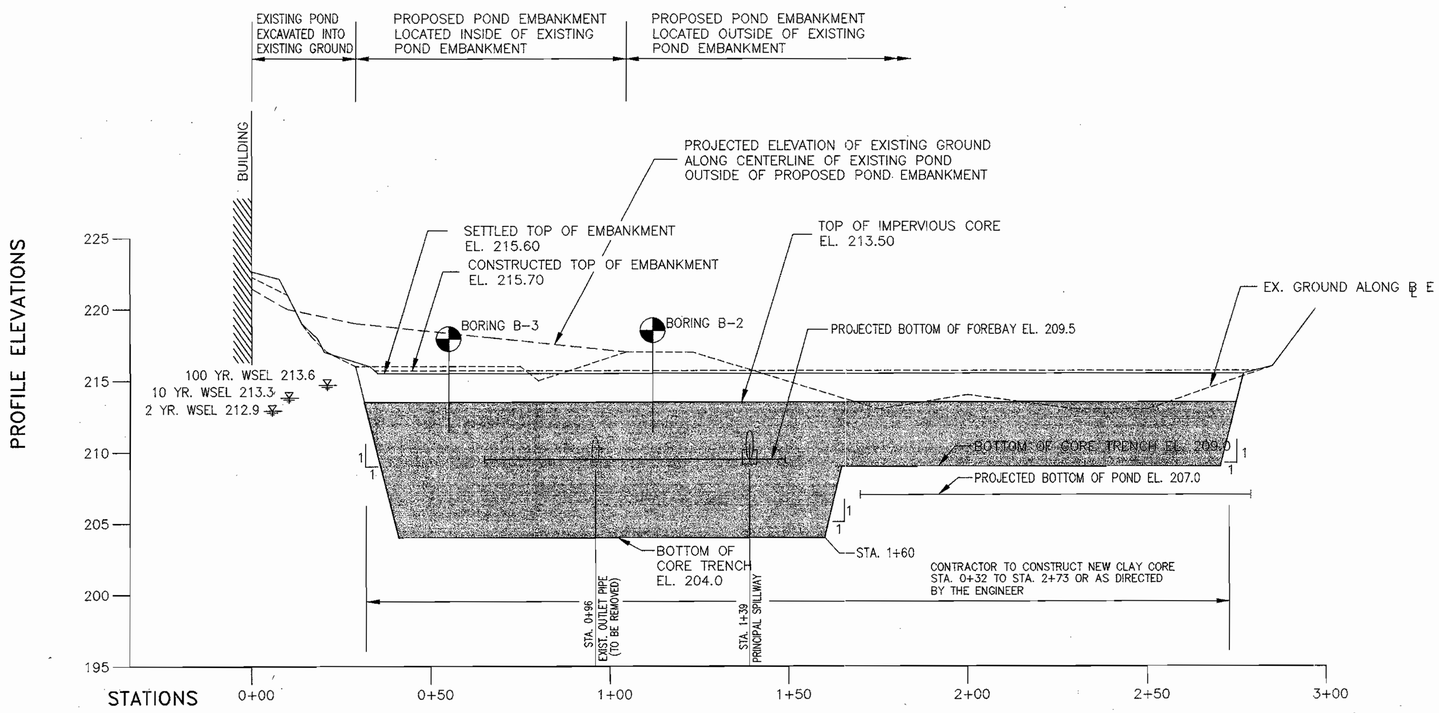

EMBANKMENT PROFILE

SCALE: 1" = 20' HORIZ.
1" = 5' VERT.

DEVELOPER'S/LANDOWNER'S CERTIFICATION

I/We certify that all development and/or construction will be done according to these plans, and that any responsible personnel involved in the construction project will have a Certificate of Attendance at a Department of the Environment Approved Training Program for the Control of Sediment and Erosion before beginning the project. I shall engage a Registered Professional Engineer to supervise pond construction and provide the Howard Soil Conservation District with an "as-built" plan of the pond within 30 day of completion. I also authorize periodic on-site inspections by the Howard Soil Conservation District.

Michael A. Giovannietto — Signature — Date 2/25/03
Michael A. Giovannietto — Print Name — MD. License No.

"AS-BUILT" CERTIFICATION

"I Hereby certify that the facility shown on this plan was constructed as shown on the "As-Built" plans and meets the approved plans and specifications. I also certify that construction was inspected in accordance with the requirements of Howard County.

Signature — Date
Print Name — MD. License No.

ENGINEER'S CERTIFICATE

"I Certify that this plan for erosion and sediment control represents a practical and workable plan based on my personal knowledge of the site conditions and that it was prepared in accordance with requirements of the Howard Soil Conservation District."

Richard Sobott — Signature of Engineer (Print name below signature) — Date 2/25/03

DEVELOPER'S CERTIFICATE

"I/We Certify that all development and construction will be done according to this plan and that any responsible personal involved in the construction project will have a certificate of Attendance at the Department of the Environment Approved Training Program for the Control of sediment and Erosion before beginning the project. I also authorize periodic on-site inspection by Howard Soil Conservation District"

Michael A. Giovannietto — Signature of Developer (Print name below signature) — Date 2/25/03

Reviewed for HOWARD SCD and meet Technical Requirements.

U.S.D.A. – Natural Resources Conservation Service — Date 3/4/03

The development plan is approved for soil erosion and sediment control by the HOWARD SOIL CONSERVATION DISTRICT

Howard SCD — Date 3/4/03

THE SUBJECT PROPERTY IS ZONED M-2 PER THE 10-18-93 COMPREHENSIVE ZONING PLAN

Approved : Department of Planning and Zoning

Director — Date 3/18/03
Chief, Division of Land Development — Date 3/14/03
Chief, Development Engineering Division — Date 3/5/03

SUBDIVISION NAME	SECTION/AREA	PARCEL NO.
HOWARD COUNTY DETENTION CENTER	N/A	660

LIBER/FOLIO	BLOCK NO	ZONING	TAX MAP	GRID NO.	HOWARD CO. ELEC. DIST.	CENSUS TR.
2116/282 1009/368 15849, 15841	9, 10 AND15	M-2	43	9	NO-1	6012.02

WATER CODE	SEWER CODE
B01	2221000

PROPOSED IMPROVEMENTS
BUILDING ADDITION, SEE SITE ANALYSIS CHART FOR APPLICABLE DPZ FILE REFERENCE DPZ FILE REF. FOR CURRENT PROJECT SDP-02-20

ati INC. Architects Engineers and Construction Consultants
Architects and Construction Consultants
8950 Route 108 Suite 218
Columbia Maryland 21045 (410)995-4067Fax(410)992-1837

SEAL — STATE OF MARYLAND — MICHAEL LEGOURT COBOTT — No. 11261 — REGISTERED PROFESSIONAL ENGINEER

DCI DANIEL CONSULTANTS, INC.
CONSULTING ENGINEERING AND PLANNING
8950 Rt. 108 E., Suite 229 Columbia, MD. 21045
Phone: 410-995-0090 Fax: 410-992-7038

REVISIONS

NO.	DATE	DESCRIPTION

STORMWATER MANAGEMENT PLAN DETAILS - I

HOWARD COUNTY CENTRAL BOOKING & DISTRICT COURT COMMISSIONERS FACILITY
HOWARD COUNTY, MARYLAND

DATE : FEBRUARY 21, 2003

CAPITAL PROJECT NO. ☐ P - 4916

C-12

SET SHEET 12 OF 25

SDP-02-20

H:\PROJECTS\CIVIL\0121901\PROGRESIVE\C-11b.DWG

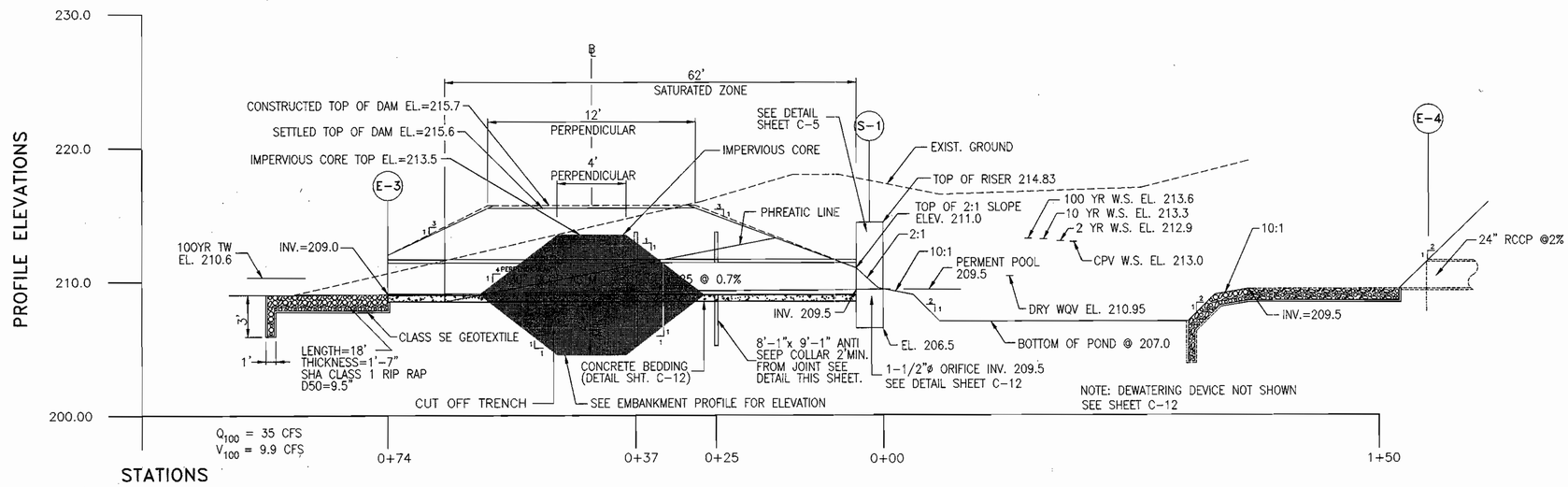

PRINCIPAL SPILLWAY

SCALE: 1" = 10' HORIZ.
1" = 5' VERT.

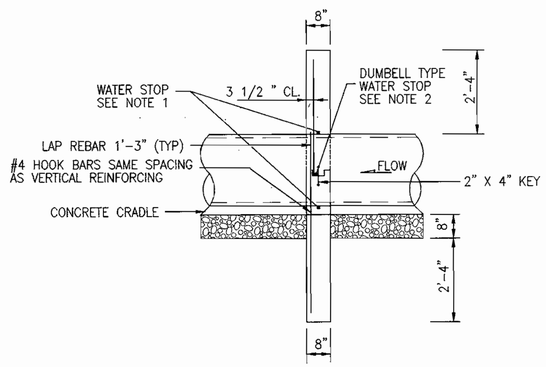

SECTION A-A

SCALE: 1/2 "=1'-0"

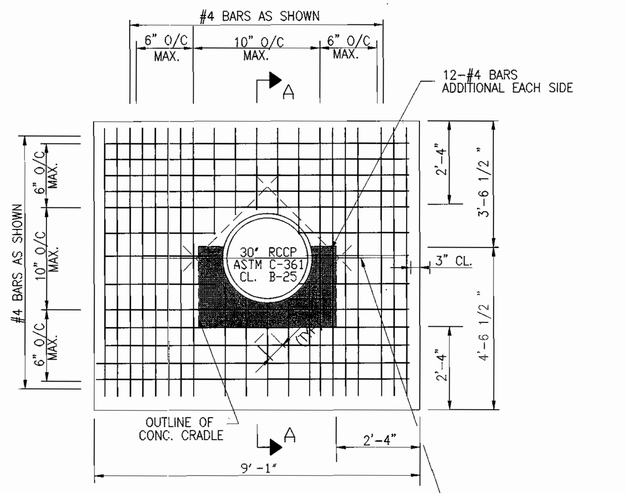

ELEVATION

SCALE: 1/2 "=1'-0"

NOTES:

1. WATER STOP AROUND PIPE SHALL BE VOLCLAY TYPE Rx AS MANUFACTURED BY AMERICAN COLLOID CO. OR APPROVED EQUIVALENT.
2. DUMB BELL TYPE WATER STOP IN CONSTRUCTION JOINT SHALL BE 6" VINYL; MODEL D6-316 BY VINYLEX OR APPROVED EQUIVALENT.
3. ALL CONCRETE SHALL BE MSHA MIX NO. 3 (3500 PSI).
4. ALL SURFACES BETWEEN THE PIPE AND ANTI-SEEP COLLAR, EXCEPT BETWEEN THE PIPE AND THE CRADLE SHALL BE SEALED WITH AN ASPHALT JOINT FILLER MATERIAL TO PREVENT SEEPAGE.

ENGINEER'S CERTIFICATE

"I Certify that this plan for erosion and sediment control represents a practical and workable plan based on my personal knowledge of the site conditions and that it was prepared in accordance with requirements of the Howard Soil Conservation District."

Signature of Engineer (Print name below signature) — Date 2/25/03

DEVELOPER'S CERTIFICATE

"I/We Certify that all development and construction will be done according to this plan and that any responsible personal involved in the construction project will have a certificate of Attendance at the Department of the Environment Approved Training Program for the Control of sediment and Erosion before beginning the project. I also authorize periodic on-site inspection by Howard Soil Conservation District"

Michael A. Giovanniello

Signature of Developer (Print name below signature) — Date 2/25/03

Reviewed for HOWARD SCD and meet Technical Requirements.

U.S.D.A. – Natural Resources Conservation Service — Date 3/4/03

The development plan is approved for soil erosion and sediment control by the HOWARD SOIL CONSERVATION DISTRICT

Howard SCD — Date 3/4/03

THE SUBJECT PROPERTY IS ZONED M-2 PER THE 10-18-93 COMPREHENSIVE ZONING PLAN

Approved : Department of Planning and Zoning

Director — Date 3/14/03

Chief, Division of Land Development — Date 3/14/03

Chief, Development Engineering Division — Date 3/14/03

DEVELOPER'S/LANDOWNER'S CERTIFICATION

I/We certify that all development and/or construction will be done according to these plans, and that any responsible personnel involved in the construction project will have a Certificate of Attendance at a Department of the Environment Approved Training Program for the Control of Sediment and Erosion before beginning the project. I shall engage a Registered Professional Engineer to supervise pond construction and provide the Howard Soil Conservation District with an "as-built" plan of the pond within 30 day of completion. I also authorize periodic on-site inspections by the Howard Soil Conservation District.

Signature — Date 2/25/03

Michael A. Giovanniello — Print Name — MD. License No.

"AS-BUILT" CERTIFICATION

"I Hereby certify that the facility shown on this plan was constructed as shown on the "As-Built" plans and meets the approved plans and specifications. I also certify that construction was inspected in accordance with the requirements of Howard County.

Signature — Date

Print Name — MD. License No.

SUBDIVISION NAME	SECTION/AREA	PARCEL NO.
HOWARD COUNTY DETENTION CENTER	N/A	660

LIBER/FOLIO	BLOCK NO	ZONING	TAX MAP	GRID NO.	HOWARD CO. ELEC. DIST.	CENSUS TR.
2116/282 1009/368 15746/15841	9, 10 AND15	M-2	43	9	NO-1	6012.02

WATER CODE	SEWER CODE
B01	2221000

PROPOSED IMPROVEMENTS
BUILDING ADDITION, SEE SITE ANALYSIS CHART FOR APPLICABLE DPZ FILE REFERENCE DPZ FILE REF. FOR CURRENT PROJECT SDP-02-20

ati INC. Architects Engineers and Construction Consultants
8950 Route 108 Suite 218
Columbia Maryland 21045 (410)995-4067Fax(410)992-1837

DCI DANIEL CONSULTANTS, INC.
CONSULTING ENGINEERING AND PLANNING
8950 Rt. 108 E., Suite 229 Columbia, MD. 21045
Phone: 410-995-0090 Fax: 410-992-7038

REVISIONS

NO.	DATE	DESCRIPTION

STORMWATER MANAGEMENT DETAILS-III

HOWARD COUNTY CENTRAL BOOKING & DISTRICT COURT COMMISSIONERS FACILITY
HOWARD COUNTY, MARYLAND

DATE : FEBRUARY 21, 2003

CAPITAL PROJECT NO. ☐ P - 4916

C-13

SET SHEET 13 OF 25

SDP-02-20

H:\PROJECTS\CIVIL\0121901\PROGRESIVE\C-13.DWG

POND CONSTRUCTION SPECIFICATIONS

THESE SPECIFICATIONS ARE APPROPRIATE TO ALL PONDS WITHIN THE SCOPE OF THE STANDARD FOR PRACTICE MD-378. ALL REFERENCES TO ASTM AND AASHTO SPECIFICATIONS APPLY TO THE MOST RECENT VERSION.

SITE PREPARATION

AREAS DESIGNATED FOR BORROW AREAS, EMBANKMENT, AND STRUCTURAL WORKS SHALL BE CLEARED, GRUBBED AND STRIPPED OF TOPSOIL. ALL TREES, VEGETATION, ROOTS AND OTHER OBJECTIONABLE MATERIAL SHALL BE REMOVED. CHANNEL BANKS AND SHARP BREAKS SHALL BE BE SLOPED TO NO STEEPER THAN 1:1. ALL TREES SHALL BE CLEARED AND GRUBBED WITHIN 15 FEET OF THE TOE OF THE EMBANKMENT.

AREAS TO BE COVERED BY THE RESERVOIR WILL BE CLEARED OF ALL TREES, BRUSH, LOGS, FENCES, RUBBISH AND OTHER OBJECTIONABLE MATERIAL UNLESS OTHERWISE DESIGNATED ON THE PLANS. TREES, BRUSH, AND STUMPS SHALL BE CUT APPROXIMATELY LEVEL WITH THE GROUND SURFACE. FOR DRY STORMWATER MANAGEMENT PONDS, A MINIMUM OF A 25-FOOT RADIUS AROUND THE INLET STRUCTURE SHALL BE CLEARED.

ALL CLEARED AND GRUBBED MATERIAL SHALL BE DISPOSED OF OUTSIDE AND BELOW THE LIMITS OF THE DAM AND RESERVOIR AS DIRECTED BY THE OWNER OR HIS REPRESENTATIVE. WHEN SPECIFIED, A SUFFICIENT QUANTITY OF TOPSOIL WILL BE STOCKPILED IN A SUITABLE LOCATION FOR USE ON THE EMBANKMENT AND OTHER DESIGNATED AREAS.

EARTH FILL

MATERIAL – THE FILL MATERIAL SHALL BE TAKEN FROM APPROVED DESIGNATED BORROW AREAS. IT SHALL BE FREE OF ROOTS, STUMPS, WOOD, RUBBISH, STONES GREATER THAN 6", FROZEN OR OTHER OBJECTIONABLE MATERIALS. FILL MATERIAL FOR THE CENTER OF THE EMBANKMENT, AND CUT OFF TRENCH SHALL CONFORM TO UNIFIED SOIL CLASSIFICATION GC, SC, CH, OR CL AND MUST HAVE AT LEAST 30 % PASSING THE #200 SIEVE. CONSIDERATION MAY BE GIVEN TO THE USE OF OTHER MATERIALS IN THE EMBANKMENT IF DESIGNED BY A GEOTECHNICAL ENGINEER. SUCH SPECIAL DESIGNS MUST HAVE CONSTRUCTION SUPERVISED BY A GEOTECHNICAL ENGINEER.

MATERIALS USED IN THE OUTER SHELL OF THE EMBANKMENT MUST HAVE THE CAPABILITY TO SUPPORT VEGETATION OF THE QUALITY REQUIRED TO PREVENT EROSION OF THE EMBANKMENT.

PLACEMENT– AREAS ON WHICH FILL IS TO BE PLACED SHALL BE SCARIFIED PRIOR TO PLACEMENT OF FILL. FILL MATERIALS SHALL BE PLACED IN MAXIMUM 8 INCH THICK (BEFORE COMPACTION) LAYERS WHICH ARE TO BE CONTINUOUS OVER THE ENTIRE LENGTH OF THE FILL. THE MOST PERMEABLE BORROW MATERIAL SHALL BE PLACED IN THE DOWNSTREAM PORTIONS OF THE EMBANKMENT. THE PRINCIPAL SPILLWAY MUST BE INSTALLED CONCURRENTLY WITH FILL PLACEMENT AND NOT EXCAVATED INTO THE EMBANKMENT.

COMPACTION – THE MOVEMENT OF THE HAULING AND SPREADING EQUIPMENT OVER THE FILL SHALL BE CONTROLLED SO THAT THE ENTIRE SURFACE OF EACH LIFT SHALL BE TRAVERSED BY NOT LESS THAN ONE TREAD TRACK OF HEAVY EQUIPMENT OR COMPACTION SHALL BE ACHIEVEED BY A MINIMUM OF FOUR COMPLETE PASSES OF A SHEEPSFOOT, RUBBER TIRE OR VIBRATORY ROLLER. FILL MATERIAL SHALL CONTAIN SUFFICIENT MOISTURE SUCH THAT THE REQUIRED DEGREE OF COMPACTION WILL BE OBTAINED WITH THE EQUIPMENT USED. THE FILL MATERIAL SHALL CONTAIN SUFFICIENT MOISTURE SO THAT IF FORMED INTO A BALL IT WILL NOT CRUMBLE, YET NOT BE SO WET THAT WATER CANBE SQUEEZED OUT.

WHEN REQUIRED BY THE REVIEWING AGENCY THE MINIMUM REQUIRED DENSITY SHALL NOT BE LESS THAN 95 % OF MAXIMUM DRY DENSITY WITH A MOISTURE CONTENT WITHIN ± 2 % OF THE OPTIMUM. EACH LAYER OF FILL SHALL BE COMPACTED AS NECESSARY TO OBTAIN THAT DENSITY, AND IS TO BE CERTIFIED BY THE ENGINEER AT THE TIME OF CONSTRUCTION. ALL COMPACTION IS TO BE DETERMINED BY AASHTO METHOD T-99 (STANDARD PROCTOR).

CUT – OFF TRTENCH – THE CUTOFF TRENCH SHALL BE EXCAVATED INTO IMPERVIOUS MATERIAL ALONG OR PARALLEL TO THE CENTERLINE OF THE EMBANKMENT AS SHOWN ON THE PLANS. THE BOTTOM WIDTH OF THE TRENCH SHALL BE GOVERNED BY THE EQUIPMENT USED FOR EXCAVATION, WITH THE MINIMUM WIDTH BEING FOUR FEET. THE DEPTH SHALL BE AT LEAST FOUR FEET BELOW EXISTING GRADE OR AS SHOWN ON THE PLANS. THE SIDE SLOPES OF THE TRENCH SHALL BE 1 TO 1 OR FLATTER. THE BACKFILL SHALL BE COMPACTED WITH CONSTRUCTION EQUIPMENT, ROLLERS, OR HAND TAMPERS TO ASSURE MAXIMUM AND MINIMUM PERMEABILITY.

EMBANKMENT CORE – THE CORE SHALL BE PARALLEL TO THE CENTERLINE OF THE EMBANKMENT AS SHOWN ON THE PLANS. THE TOP WIDTH OF THE CORE SHALL BE A MINIMUM OF FOUR FEET. THE HEIGHT SHALLEXTEND UP TO AT LEAST THE 10 YEAR WATER ELEVATION OR AS SHOWN ON THE PLANS. THE SIDE SLOPES SHALL BE 1 TO 1 OR FLATTER. THE CORE SHALL BE COMPACTED WITH CONSTRUCTION EQUIPMENT, ROLLERS, OR HAND TAMPERS TO ASSURE MAXIMUM DENSITY AND MINIMUM PERMEABILITY. IN ADDITION, THE CORE SHALL BE PLACED CONCURRENTLY WITH THE OUTER SHELL OF THE EMBANKMENT.

STRUCTURE BACKFILL– BACKFILL ADJACENT TO PIPES OR STRUCTURES SHALL BE OF THE TYPE AND QUALITY CONFORMING TO THAT SPECIFIED FOR THE ADJOINING FILL MATERIAL. THE FILL SHALL BE PLACED IN HORIZONTAL LAYERS NOT TO EXCEED FOUR INCHES IN THICKNESS AND COMPACTED BY HAND TAMPERS OR OTHER MANUALLY DIRECTED COMPACTION EQUIPMENT. THE MATERIAL NEEDS TO FILL COMPLETELY ALL SPACES UNDER AND ADJACENT TO THE PIPE. AT NO TIME DURING THE BACKFILLING OPERATION SHALL DRIVEN EQUIPMENT BE ALLOWED TO OPERATE CLOSER THAN FOUR FEET, MEASURED HORIZONTALLY, TO ANY PART OF A STRUCTURE. UNDER NO CIRCUMSTANCES SHALL EQUIPMENT BE DRIVEN OVER ANY PART OF A CONCRETE STRUCTURE OR PIPE, UNLESS THERE IS A COMPACTED FILL F 24" OR GREATER OVER THE STRUCTURE OR PIPE.

STRUCTURE BACKFILL MAY BE FLOWABLE FILL MEETING THE REQUIREMENTS OF MARYLAND DEPARTMENT OF TRANSPORTATION, STATE HIGHWAY ADMINISTRATION STANDARD SPECIFICATIONS FOR CONSTRUCTION MATERIALS, SECTION 313 AS MODIFIED. THE MIXTURE SHALL HAVE A 100-200 PSI; 28 DAY UNCONFINED COMPRESSIVE STRENGTH. THE FLOWABLE FILL SHALL HAVE A MINIMUM PH OF 4.0 AND A MINIMUM RESISTIVITY OF 2,000 OHM-CM. MATERIAL SHALL BE PLACED SUCH THAT A MINIMUM OF 6" (MEASURED PERPENDICULAR TO THE OUTSIDE OF THE PIPE) OF FLOWABLE FILL SHALL BE UNDER (BEDDING), OVER AND ON THE SIDES OF THE PIPE. IT ONLY NEEDS TO EXTEND UP TO THE SPRING LINE FOR RIGID CONDUITS. AVERAGE SLUMP OF THE FILL SHALL BE 7" TO ASSURE FLOWABILITY OF THE MATERIAL. ADEQUATE MEASURES SHALL BE TAKEN (SAND BAGS, ETC.) TO PREVEN FLOATING THE PIPE. WHEN USING FLOWABLE FILL, ALL METAL PIPE SHALL BE BITUMINOUS COATED. ANY ADJOINING SOIL FILL SHALL BE PLACED IN HORIZONTAL LAYERS NOT TO EXCEED FOUR INCHES IN THICKNESS AND COMPACTED BY HAND TAMPERS OR OTHER MANUALLY DIRECTED COMPACTION EQUIPMENT. THE MATERIAL SHALL COMPLETELY FILL ALL VOIDS ADJACENT TO THE FLOWABLE FILL ZONE. AT NO TIME DURING THE BACKFILLING OPERATION SHALL DRIVEN EQUIPMENT BE ALLOWED TO OPERATE CLOSER THAN FOUR FEET, MEASURED HORIZONTALLY, TO ANY PART OF A STRUCTURE. UNDER NO CIRCUMSTANCES SHALL EQUIPMENT BE DRIVEN OVER ANY PART OF A STRUCTURE OR PIPE UNLESS THERE IS A COMPACTED FILL OF 24" OR GREATER OVER THE STRUCTURE OR PIPE. BACKFILL MATERIAL OUTSIDE THE STRUCTURAL BACKFILL (FLOWABLE FILL) ZONE SHALL BE OF THE TYPE AND QUALITY CONFORMING TO THAT SPECIFIED FOR THE CORE OF THE EMBANKMENT OR OTHER EMBANKMENT MATERIALS.

PIPE CONDUITS–ALL PIPES SHALL BE CIRCULAR IN CROSS SECTION.

CORRUGATED METAL PIPE – ALL OF THE FOLLOWING CRITERIA SHALL APPLY FOR CORRUGATED METAL PIPE:

1. MATERIALS – (ALUMINUM COATED STEEL PIPE) – THIS PIPE AND ITS APPURTENANCES SHALL CONFORM TO TE REQUIREMENTS OF AASHTO SPECIFICATION M-274 WITH WATERTIGHT COUPLING BANDS OR FLANGES. ALUMINUM COATED STEEL PIPE, WHEN USED WITH FLOWABLE FILL OR WHEN SOIL AND/OR WATER CONDITIONS WARRANT THE NEED FOR INCREASED DURABLILTY, SHALL BE FULLY BITUMINOUS COATED PER REQUIREMENTS OF AASHTO SPECIFICATION M-190 TYPE A. ANY ALUMINUM COATING DAMAGED OR OTHERWISE REMOVED SHALL BE REPLACED WITH COLD APPLIED BITUMINOUS COATING COMPOUND. ALUMINUM SURFACES THAT ARE TO BE IN CONTACT WITH CONCRETE SHALL BE PAINTED WITH ONE COAT OF ZINE CHROMATE PRIMER OR TWO COATS OF ASPHALT.

2. MATERIALS – (ALUMINUM PIPE) – THIS PIPE AND ITS APPURTENANCES SHALL CONFORM TO TE REQUIREMENTS OF AASHTO SPECIFICATION M-196 OR M-211 WITH WATERTIGHT COUPLING BANDS OR FLANGES. ALUMINUM PIPE, WHEN USED WITH FLOWABLE FILL OR WHEN SOIL AND/OR WATER CONDITIONS WARRANT FOR INCREASED DURABLILTY, SHALL BE FULLY BITUMINOUS COATED PER REQUIREMENTS OF AASHTO SPECIFICATION M-190 TYPE A. ALUMINUM SURFACES THAT ARE TO BE IN CONTACT WITH CONCRETE SHALL BE PAINTED WITH ONE COAT OF ZINE CHROMATE PRIMER OR TWO COATS OF ASPHALT. HOT DIP GALVANIZED BOLTS MAY BE USED FOR CONNECTIONS. THE PH OF THE SURROUNDING SOILS SHALL BE BETWEEN 4 AND 9.

2. COUPLING BANDS, ANTI-SEEP COLLARS, END SECTIONS, ETC., MUST BE COMPOSED OF THE SAME MATERIAL AND COATINGS AS THE PIPE. METALS MUST BE INSULATED FROM DISSIMILAR MATERIALS WITH USE OF RUBBER OR PLASTIC INSULATING MATERIALS AT LEAST 24 MILS IN THICKNESS.

3. CONNECTIONS – ALL CONNECTIONS WITH PIPES MUST BE COMPLETELY WATERTIGHT. THE DRAIN PIPE OR BARREL CONNECTION TO THE RISER SHALL BE WELDED ALL AROUND WHEN THE PIPE AND RISER ARE METAL. ANTI-SEEP COLLARS SHALL BE CONNECTED TO THE PIPE IN SUCH A MANNER AS TO BE COMPLETELY WATERTIGHT. DIMPLE BANDS ARE NOT CONSIDERED TO BE WATERTIGHT.

ALL CONNECTIONS SHALL USE A RUBBER OR NEOPRENE GASKET WHEN JOINING PIPE SECTIONS. THE END OF EACH PIPE SHALL BE RE-ROLLED AN ADEQUATE NUMBER OF CORRUGATIONS TO ACCOMMODATE THE BANDWIDTH. THE FOLLWING TYPE CONNECTIONS ARE ACCEPTABLE FOR PIPES LESS THAN 24 INCHES IN DIAMETER: FLANGES ON BOTH ENDS OF THE PIPE WITH A CIRCULAR 3/8-INCH CLOSED CELL NEOPRENE GASKET, PRE-PUNCHED TO THE FLANGE BOLT CIRCLE, SANDWICHED BETWEEN ADJACENT FLANGES; A 12-INCH WIDE STANDARD LAP TYPE BAND WITH 12-INCH WIDE BY 3/8-INCH THICK CLOSED CIRCULAR NEOPRENE GASKET; AND A 12-INCH WIDE HUGGER TYPE BAND O-RING GASKETS HAVING A MINIMUM DIAMETER OF ½-INCH GREATER THAN THE CORRUGATION DEPTH. PIPES 24 INCHES IN DIAMETER AND LARGER SHALL BE CONNECTED BY A 24 INCH LONG ANNULAR CORRUGATED BAND USING A MINIMUM OF 4 (FOUR) RODS AND LUGS, 2 ON EACH CONNECTING PIPE END. A 24-INCH WIDE BY 3/8-INCH THICK CLOSED CELL CIRCULAR NEOPRENE GASKET WILL BE INSTALLED WITH 12 INCHES ON THE END OF EACH PIPE. FLANGED JOINTS WITH 3/8-INCH CLOSED CELL GASKETS THE FULL WIDTH OF THE FLANGE IS ALSO ACCEPTABLE.

HELICALLY CORRUGATED PIPE SHALL HAVE EITHER CONTINUOUSLY WELDED SEAMS OR HAVE LOCK SEAMS WITH INTERNAL CAULKING OR A NEOPRENE BEAD.

4. BEDDING – THE PIPE SHALL BE FIRMLY AND UNIFORMLY BEDDED THROUGHOUT ITS ENTIRE LENGTH. WHERE ROCK OR SOFT, SPONGY OR OTHER UNSTABLE SOIL IS ENCOUNTERED, ALL SUCH MATERIAL SHALL BE REMOVED AND REPLACED WITH SUITABLE EARTH COMPACTED TO PROVIDE ADEQUATE SUPPORT.

5. BACKFILLING SHALL CONFORM TO "STRUCTURE BACKFILL".

6. OTHER DETAILS (ANTI-SEEP COLLARS, VALVES, ETC.) SHALL BE AS SHOWN ON THE DRAWINGS.

REINFORCED CONCRETE PIPE – ALL OF THE FOLLOWING CRITERIA SHALL APPLY FOR REINFORCED CONCRETE PIPE:

1. MATERIALS – REINFORCED CONCRETE PIPE SHALL HAVE BELL AND SPIGOT JOINTS WITH RUBBER GASKETS AND SHALL EQUAL OR EXCEED ASTM C-361.

2. BEDDING – REINFORCED CONCRETE PIPE CONDUITS SHALL BE LAID IN A CONCRETE BEDDING / CRADLE FOR THEIR ENTIRE LENGTH. THIS BEDDING / CRADLE SHALL CONSIST OF HIGH SLUMP CONCRETE PLACED UNDER THE PIPE AND UP THE SIDES OF THE PIPE AT LEAST 50 % OF ITS OUTSIDE DIAMETER WITH A MINIMUM THICKNESS OF 6 INCHES. WHERE A CONCRETE CRADLE IS NOT NEEDED FOR STRUCTURAL REASONS, FLOWABLE FILL MAY BE USED AS DESCRIBED IN THE "STRUCTURE BACKFILL" SECTION OF THIS STANDARD. GRAVEL BEDDING IS NOT PERMITTED.
3. LAYING PIPE – BELL AND SPIGOT PIPE SHALL BE PLACED WITH THE BELL END UPSTREAM. JOINTS SHALL BE MADE IN ACCORDANCE WITH RECOMMENDATIONS OF THE MANUFACTURER OF THE MATERIAL. AFTER THE JOINTS ARE SEALED FOR THE ENTIRE LINE, THE BEDDING SHALL BE PLACED SO THAT ALL SPACES UNDER THE PIPE ARE FILLED. CARE SHALL BE EXERCISED TO PREVENT ANY DEVIATION FROM THE ORIGINAL LINE AND GRADE OF THE PIPE. THE FIRST JOINT MUST BE LOCATED WITHIN 4 FEET FROM THE RISER.

4. BACKFILLING SHALL CONFORM TO "STRUCTURE BACKFILL".

5. OTHER DETAILS (ANTI-SEEP COLLARS, VALVES, ETC.) SHALL BE SHOWN ON THE DRAWINGS.

PLASTIC PIPE – THE FOLLOWING CRITERIA SHALL APPLY FOR PLASTIC PIPE:

1. MATERIALS – PVC PIPE SHALL BE PVC-1120 OR PVC-1220 CONFORMING TO ASTM D-1785 OR ASTM D-2241. CORRUGATED HIGH DENSITY POLYETHYLENE (HDPE) PIPE, COUPLINGS AND FITTINGS SHALL CONFORM TO THE FOLLOWING: 4"-10" PIPE SHALL MEET THE REQUIREMENTS OF AASHTO M252 TYPE S, AND 12" – 24" PIPE SHALL MEET THE REQUIREMENTS OF AASHTO M294 TYPE S.

2. JOINTS AND CONNECTIONS TO ANTI-SEEP COLLARS SHALL BE COMPLETELY WATERTIGHT.

3. BEDDING – THE PIPE SHALL BE FIRMLY AND UNIFORMLY BEDDED THROUGHOUT ITS ENTIRE LENGTH. WHERE ROCK OR SOFT, SPONGY OR OTHER UNSTABLE SOIL IS ENCOUNTERED, ALL SUCH MATERIAL SHALL BE REMOVED AND REPLACED WITH SUITABLE EARTH COMPACTED TO PROVIDE ADEQUATE SUPPORT.

4. BACKFILLING SHALL CONFORM TO "STRUCTURE BACKFILL".

5. OTHER DETAILS (ANTI-SEEP COLLARS, VALVES, ETC.) SHALL BE AS SHOWN ON THE DRAWINGS.

DRAINAGE DIAPHRAGMS WHEN A DRAINAGE DIAPHRAGM IS USED, A REGISTERED PROFESSIONAL ENGINEER WILL SUPERVISE THE DESIGN AND CONSTRUCTION INSPECTION.

CONCRETE

CONCRETE SHALL MEET THE REQUIREMENTS OF MARYLAND DEPARTMENT OF TRANSPORTATION, STATE HIGHWAY ADMINISTRATION STANDARD SPECIFIACTIONS FOR CONSTRUCTION AND MATERIALS, SECTION 414, MIX NO. 3.

ROCK RIPRAP

ROCK RIPRAP SHALL MEET THE REQUIREMENTS OF MARYLAND DEPARTMENT OF TRANSPORTATION, STATE HIGHWAY ADMINISTRATION STANDARD SPECIFIACTIONS FOR CONSTRUCTION AND MATERIALS, SECTION 311.

GEOTEXTILE SHALL BE PLACED UNDER ALL RIPRAP AND SHALL MEET THE REQUIREMENTS OF MARYLAND DEPARTMENT OF TRANSPORTATION, STATE HIGHWAY ADMINISTRATION STANDARD SPECIFIACTIONS FOR CONSTRUCTION AND MATERIALS, SECTION 921.09, CLASS C.

CARE OF WATER DURING CONSTRUCTION

ALL WORK ON PERMANENT STRUCTURES SHALL BE CARRIED OUT IN AREAS FREE FROM WATER. THE CONTRACTOR SHALL CONSTRUCT AND MAINTAIN ALL TEMPORARY DIKES, LEVEES, COFFERDAMS, DRAINAGE CHANNELS, AND STREAM DIVERSIONS NECESSARY TO PROTECT THE AREAS TO BE OCCUPIED BY THE PERMANENT WORKS. THE CONTRACTOR SHALL ALSO FURNISH, INSTALL, OPERATE, AND MAINTAIN ALL NECESSARY PUMPING AND OTHER EQUIPMENT REQUIRED FOR THE REMOVAL OF WATER FROM VARIOUS PARTS OF THE WORK AND FOR MAINTAINING THE EXCAVATIONS, FOUNDATION, AND OTHER PARTS OF THE WORK FREE FROM WATER AS REQUIRED OR DIRECTED BY THE ENGINEER FOR CONSTRUCTING EACH PART OF THE WORK. AFTER HAVING SERVED THEIR PURPOSE, ALL TEMPORARY PROTECTIVE WORKS SHALL BE REMOVED OR LEVELED AND GRADED TO THE EXTENT REQUIRED TO PREVENT OBSTRUCTION IN ANY DEGREE WHATSOEVER OF THE FLOW OF WATER TO THE SPILLWAY OR OUTLET WORKS AND SO NOT TO INTERFERE IN ANY WAY WITH THE OPERATION OR MAINTENANCE OF THE STRUCTURE. STREAM DIVERSIONS SHALL BE MAINTAINED UNTIL THE FULL FLOW CAN BE PASSED THROUGH THE PERMANENT WORKS. THE REMOVAL OF WATER FROM THE REQUIRED EXCAVATION AND THE FOUNDATION SHALL BE ACCOMPLISHED IN A MANNER AND TO THE EXTENT THAT WILL MAINTAIN STABILITY OF THE EXCAVATED SLOPES AND BOTTOM REQURED EXCAVATIONS AND WILL ALLOW SATISFACTORY PERFORMANCE OF ALL CONSTRUCTION OPERATIONS. DURING THE PLACING AND COMPACTING OF MATERIAL IN REQUIRED EXCAVATIONS, THE WATER LEVEL AT THE LOCATIONS BEING REFILLED SHALL BE MAINTAINED BELOW THE BOTTOM OF THE EXCAVATION AT SUCH LOCATIONS WHICH MAY REQUIRE DRAINING THE WATER SUMPS FROM WHICH THE WATER SHALL BE PUMPED.

STABILIZATION

ALL BORROW AREAS SHALL BE GRADED TO PROVIDE PROPER DRAINAGE AND LEFT IN A SIGHTLY CONDITION. ALL EXPOSED SURFACES OF THE EMBANKMENT, SPILLWAY, SPOIL AND BORROW AREAS, AND BERMS SHALL BE STABILIZED BY SEEDING, LIMING, FERTILIZING AND MULCHING IN ACCORDANCE WITH THE NATURAL RESOURCES CONSERVATION SERVICE STANDARDS AND SPECIFICATIONS FOR CRITICAL AREA PLANTING (MD-342) OR AS SHOWN ON THE ACCOMPANYING DRAWINGS.

EROSION AND SEDIMENT CONTROL

CONSTRUCTION OPERATIONS WILL BE CARRIED OUT IN SUCH A MANNER THAT EROSION WILL BE CONTROLLED AND WATER AND AIR POLLUTION MINIMIZED. STATE AND LOCAL LAWS CONCERNING POLLUTION ABATEMENT WILL BE FOLLOWED. CONSTRUCTION PLANS SHALL DETAIL EROSION AND SEDIMENT CONTROL MEASURES.

CONCLUSIONS FROM APRIL 29, 2002 GEOTECHNICAL REPORT BYBTIDEWATER ENVIRONMENTAL ENGINEERING:

1. THE SOILS IN THE PROPOSED INFILTRATION AREA (BORING B-1) CONSISTS OF SILTY CLAY WHICH ARE NOT SUITABLE FOR INFILTRATION. AN INFILTRATION TRENCH CANNOT BE BUILT AT THIS LOCATION TO PROVIDE THE WATER QUALITY VOLUME.

2. IT DOES NOT APPEAR THAT THE EXISTING DIKE WAS CONSTRUCTED IN ACCORDANCE WITH THE USDA CODE 378 DESIGN STANDARDS. THESE STANDARDS REQUIRE THAT THE DIKE HAVE AN IMPERVIOUS CORE AND CUTOFF TRENCH WITH MINIMUM DEPTH OF 4 FEET. THE CORE AND CUTOFF TRENCH ARE TO BE CONSTRUCTED WITH FILL HAVING A UNIFIED SOIL CLASSIFICATION OF GC, SC, CH OR CL WITH AT LEAST 30% FINES FOR THE GC AND SC SOILS. SOILS WITH THESE CLASSIFICATIONS SHOULD THEREFORE HAVE BEEN ENCOUNTERED TO A DEPTH OF ABOUT 8 FEET. INSTEAD, SILTY SAND SOILS WITH SM CLASSIFICATION WERE ENCOUNTERED IN BORINGS B-2 AND B-3.

3. THE CLAEY SOILS ENCOUNTERED AT THE BOTTOM OF THE POND (BORING B-4) ARE NOT SUITABLE FOR INFILTRATION. IT IS THEREFORE NOT FEASIBLE TO USE INFILTRATION PRACTICES TO PROVIDE FOR THE WATER QUALITY VOLUME.

4. THE RECHARGE VOLUME AND WATER QUALITY VOLUME SHOULD BE PROVIDED FOR USING SEPARATE FACILITIES BECAUSE OF THE LOW INFILTRATION RATES.

5. THE HIGH WATER TABLE AT BORING B-4 WOULD INDICATE A WET POND IS FEASIBLE AT THAT LOCATION TO PROVIDE THE WATER QUALITY VOLUME.

INFILTRATION BASINS NOTES AND SPECIFICATIONS

AN INFILTRATION BASIN MAY NOT RECEIVE RUN-OFF UNTIL ENTIRE CONTRIBUTING DRAINAGE AREA TO THE BASIN HAS RECEIVED FINAL STABILIZATION.

1. THE SEQUENCE OF VARIOUS PHASES OF BASIC CONSTRUCTION SHALL BE COORDINATED WITH THE OVERALL PROJECT CONSTRUCTION SCHEDULE. SEE SHEETS C-5 AND C-6 THE PARTIALLY EXCAVATED BASIN, HOWEVER, CANNOT SERVE AS A SEDIMENTATION BASIN.

2. INITIAL BASIN EXCAVATION SHALL BE CARRIED TO WITHIN 2 FEET OF THE FINAL ELEVATION OF THE BASIN FLOOR. FINAL EXCAVATION TO THE FINISHED GRADE SHALL DEFERRED UNTIL ALL DISTURBED AREAS ON THE WATERSHED HAVE BEEN STABILIZED OR PROTECTED. THE FINAL PHASE EXCAVATION SHALL REMOVE ALL ACCUMULATED SEDIMENT. RELATIVELY LIGHT TRACKED EQUIPMENT IS RECOMMENDED FOR THIS OPERATION TO AVOID COMPACTING OF THE BASIN FLOOR.

3. PROVIDE 4' OF TOPSOIL ON ALL DISTURBED AREAS. PLANT ALL SLOPES STEEPER THAN 4:1 WITH CROWN VETCH SEED BOTTOM OF BASIN WITH MIX NO. 10 GRASSES AS GIVEN ON SHEET C-18.

OPERATION AND MAINTENANCE

AN OPERATION AND MAINTENANCE PLAN IN ACCORDANCE WITH LOCAL OR STATE REGULATIONS WILL BE PREPARED FOR ALL PONDS. AS A MINIMUM, THE DAM INSPECTION CHECKLIST LOCATED IN APPENDIX A OF THE MD-378 SPECIFICATIONS SHALL BE INCLUDED AS PART OF THE OPERATION AND MAINTENANCE PLAN AND PERFORMED AT LEAST ANNUALLY. WRITTEN RECORDS OF MAINTENANCE AND MAJOR REPAIRS NEEDS TO BE RETAINED IN A FILE. THE ISSUANCE OF A MAINTENANCE AND REPAIR REPAIR PERMIT FOR ANY REPAIRS OR MAINTENANCE THAT INVOLVES THE MODIFICATION OF THE DAM FROM ITS ORGINAL DESIGN AND SPECIFICATIONS IS REQUIRED. A PERMIT IS ALSO REQUIRED FOR ANY REPAIRS OR RECONSTRUCTION THAT INVOLVE A SUBSTANTIAL PORTION OF THE STRUCTURE. ALL INDICATED REPAIRS ARE TO BE MADE AS SOON AS PRACTICAL.

OPERATION AND MAINTENANCE SCHEDULE FOR PRIVATELY OWNED AND MAINTAINED STORMWATER PONDS (P-1 THROUGH P-5)

ROUTINE MAINTENANCE:

A. FACILITY SHALL BE INSPECTED ANNUALLY AND AFTER MAJOR STORM. INSPECTION SHALL BE PERFORMED DURING WET WEATHER TO DETERMINE IF THE POND IS FUNCTIONING PROPERLY.

B. TOP AND SIDE SLOPES OF THE EMBANKMENT SHALL BE MOWED A MINIMUM OF TWO(2) TIMES PER YEAR, ONCE IN JUNE AND ONCE IN SEPTEMBER. OTHER SIDE SLOPES AND MAINTENANCE ACCESS SHALL BE MOWED AS NEEDED.

C. DEBRIS AND LITTER SHALL BE REMOVED DURING REGULAR MOWING OPERATIONS AND AS NEEDED.

D. VISIBLE SIGNS OF EROSION IN THE POND AS WELL AS THE RIPRAP OR GABION OUTLET AREA SHALL BE REPAIRED AS SOON AS IT IS NOTICED.

NON-ROUTINE MAINTENANCE:

A. STRUCTURAL COMPONENT OF THE POND SUCH AS THE DAM, THE RISER, AND THE PIPES SHALL BE REPAIRED UPON THE DETECTION OF ANY DAMAGED. THE COMPONENT SHALL BE INSPECTED DURING ROUTINE MAINTENANCE OPERATIONS.

B. SEDIMENT SHALL BE REMOVED FROM THE POND, AND FOREBAY, NO LATER THAN WHEN THE CAPACITY OF THE POND. OR FOREBAY, IS HALF FULL OF SEDIMENT, OR, WHEN DEEMED NECESSARY FOR AESTHETIC REASONS, UPON APPROVAL FROM THE DEPARTMENT OF PUBLIC WORKS.

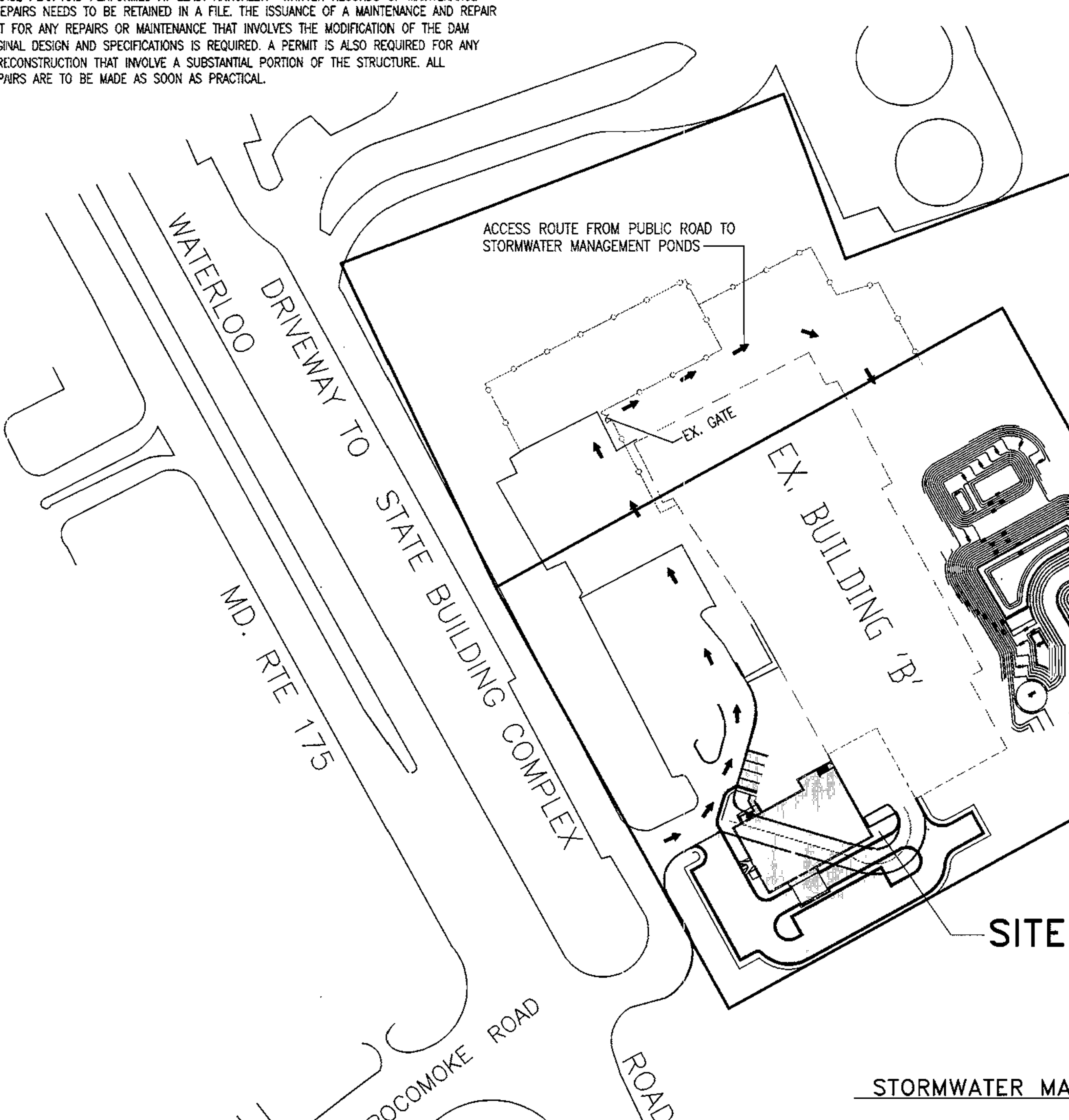

STORMWATER MANAGEMENT POND ACCESS ROUTE
SCALE: 1"=100'

TABLE 2
INFILTRATION BASIN
OPERATION/MAINTENANCE CHECKLIST

PROJECT NAME:______________________ INSPECTOR:______________
PROJECT NUMBER:____________________ INSPECTION DATE:__________

	MAINTENANCE FREQUENCY
1. DEBRIS CLEANOUT	
________BASIN BOTTOM	(WHEN MOWED AND AS NEEDED)
________INLET	
________OUTLET	
________EMERGENCY SPILLWAY	
2. SEDIMENT TRAPS	(CLEAN WHEN 50% OF DEPTH IS DEPLETED)
3. VEGETATION	
________MOWING	(TWICE/YEAR OR AS DESIRED)
________FERTILIZE	(ONCE/YEAR OR AS NEEDED)
________WEED REMOVAL	(ONCE/YEAR OR AS NEEDED)
________EROSION	(AS NEEDED)
4. DEWATERING	
________TILLING	(ONCE/YEAR OR AS NEEDED)
5. SEDIMENT CLEANOUT	(ONCE/YEAR IF TILLED;OTHERWISE ONCE/5 YEARS)
6. INLETS	
________REPAIR	(ONCE/10-15 YEARS)
________EROSION	(AS NEEDED)
7. OUTLET/SPILLWAY	
________REPAIR	(ONCE/10-15 YEARS)
________CHANNEL	(ONCE/10-15 YEARS)
________EROSION	(AS NEEDED)
________TRASH RACK/HINGES	(AS LEAST ONCE/YEAR)
8. STRUCTURAL REPAIRS	(ONCE/10-15 YEARS)
________EMBANKMENT	
________SIDE SLOPES	
9. FENCES/ACCESS REPAIRS	(ONCE/2 YEARS)
10. MOSQUITO CONTROL	(TWICE/ YEAR)

ENGINEER'S CERTIFICATE

"I Certify that this plan for erosion and sediment control represents a practical and workable plan based on my personal knowledge of the site conditions and that it was prepared in accordance with requirements of the Howard Soil Conservation District."

[signature] 2/25/03
Signature of Engineer (Print name below signature) Date
Richard Sobbott

DEVELOPER'S CERTIFICATE

"I/We Certify that all development and construction will be done according to this plan and that any responsible personal involved in the construction project will have a certificate of Attendance at the Department of the Environment Approved Training Program for the Control of sediment and Erosion before beginning the project. I also authorize periodic on-site inspection by Howard Soil Conservation District"

Michael A. Giovanniello [signature] 2/25/03
Michael A. Giovanniello
Signature of Developer (Print name below signature) Date

Reviewed for HOWARD SCD and meet Technical Requirements.
[signature] 3/4/03
U.S.D.A. – Natural Resources Conservation Service Date

The development plan is approved for soil erosion and sediment control by the HOWARD SOIL CONSERVATION DISTRICT
[signature] 3/4/03
Howard SCD Date

THE SUBJECT PROPERTY IS ZONED M-2 PER THE 10-18-93 COMPREHENSIVE ZONING PLAN

Approved : Department of Planning and Zoning
[signature] 3/10/03
Director Date
[signature] 3/4/03
Chief, Division of Land Development Date
[signature] 3/5/03
Chief, Development Engineering Division Date

SUBDIVISION NAME		SECTION/AREA				PARCEL NO.
HOWARD COUNTY DETENTION CENTER		N/A				660
LIBER/FOLIO	BLOCK NO	ZONING	TAX MAP	GRID NO.	HOWARD CO. ELEC. DIST.	CENSUS TR.
2116/282 1009/368 15840,15841	9,10 AND 15	M-2	43	9	NO-1	6012.02
WATER CODE	B01		SEWER CODE			2221000

PROPOSED IMPROVEMENTS
BUILDING ADDITION, SEE SITE ANALYSIS CHART FOR APPLICABLE DPZ FILE REFERENCE DPZ FILE REF. FOR CURRENT PROJECT SDP-02-20

ati INC. Architects Engineers and Construction Consultants
8950 Route 108 Suite 218
Columbia Maryland 21045 (410)995-4067Fax(410)992-1837

SEAL: STATE OF MARYLAND RICHARD LECOUR SOBBOTT PROFESSIONAL ENGINEER 15222

DCI DANIEL CONSULTANTS, INC.
CONSULTING ENGINEERING AND PLANNING
8950 Rt. 108 E., Suite 229 Columbia, MD. 21045
Phone: 410-995-0090 Fax: 410-992-7038

REVISIONS		
NO.	DATE	DESCRIPTION

STORMWATER MANAGEMENT DETAILS - IV
HOWARD COUNTY CENTRAL BOOKING & DISTRICT COURT COMMISSIONERS FACILITY
HOWARD COUNTY, MARYLAND
DATE : FEBRUARY 21, 2003

CAPITAL PROJECT NO. ☐ P – 4916
C-14
SET SHEET 14 OF 25

SDP-02-20

H:\PROHECTS\CIVIL\0121901\PROGRESSIVE\C-14.DWG

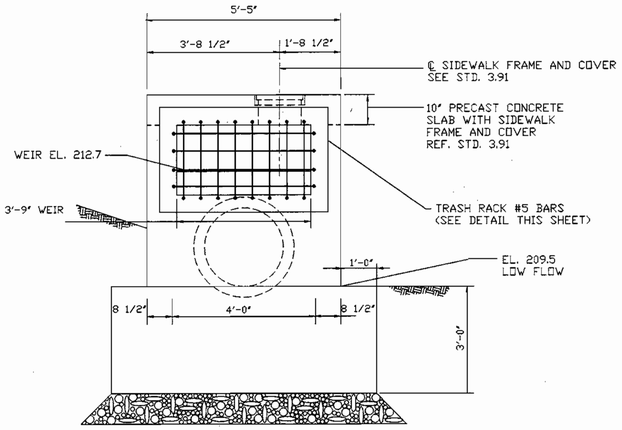

SECTION A–A

SCALE: 1/2" = 1'-0"

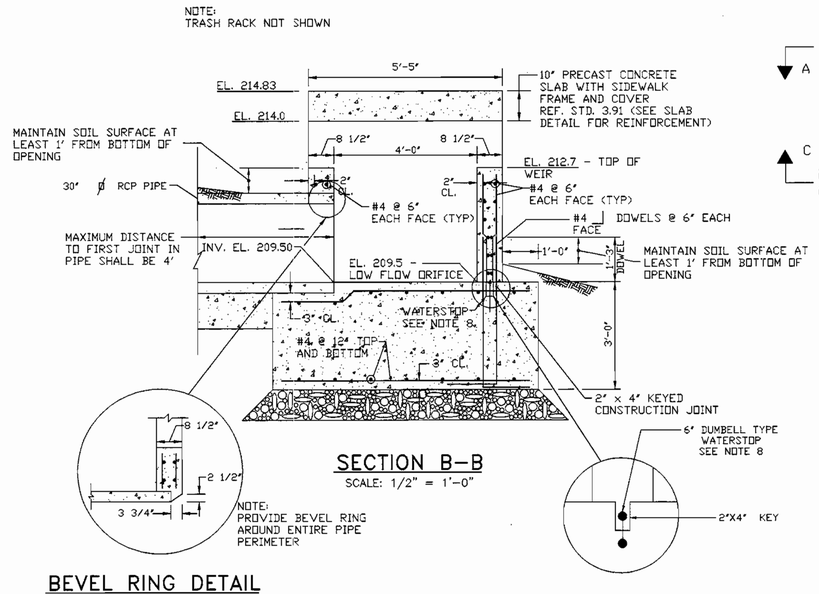

SECTION B–B

SCALE: 1/2" = 1'-0"

BEVEL RING DETAIL

JOINT DETAIL

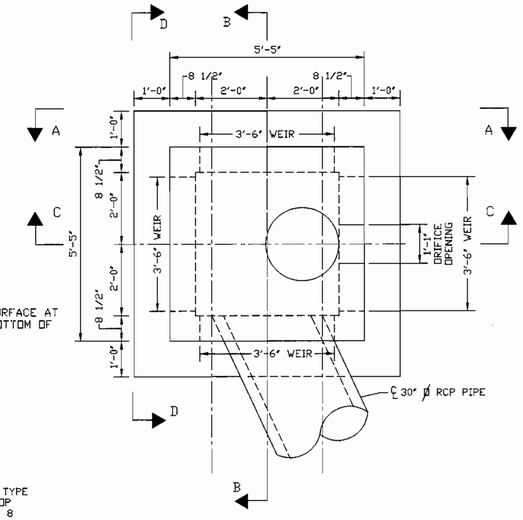

PLAN VIEW

SCALE: 1/2" = 1'-0"

OUTLET STRUCTURE NOTES

1. THE STRUCTURE DETAILED IS CAST IN PLACE CONSTRUCTION IF THE CONTRACTOR ELECTS TO USE A PRECAST STRUCTURE, THE CONTRACTOR MUST MEET THE REQUIREMENTS OF THE "PRECAST CONCRETE RISER NOTE", BELOW
2. CONCRETE TO BE MIX NO. 3 (4500 PSI.)
3. ALL EXPOSED CORNERS OF CONCRETE STRUCTURE SHALL BE CHAMFERED WITH 3/4" X 3/4" MILLED CHAMFER STRIPS.
4. REINFORCING:
   REINFORCING STEEL SHALL CONFORM TO ASTM A615, GRADE 60
5. MINIMUM COVER FOR REBARS SHALL BE 2" IN WALLS AND 3" IN BOTTOM UNLESS OTHERWISE NOTED.
6. PIPE OPENINGS TO BE PROVIDED AS REQUIRED, FOR SIZE, LOCATION AND INVERT ELEVATIONS SPECIFIED
7. LADDER RUNGS SHALL BE IN ACCORDANCE WITH STANDARD MD.–383.91, AND MD.–383.92 OR AS DIRECTED BY THE ENGINEER. PROVIDE LADDER RUNGS ON BOTH THE INSIDE AND OUTSIDE OF THE STRUCTURE.
8. PROVIDE WATERTIGHT SEAL AROUND PIPES AT ALL OPENINGS WATERSTOP SHALL BE VOLCLAY WATERSTOP – RX AS MADE BY AMERICAN COLLOID CO. OR APPROVED EQUIVALENT.

   PROVIDE WATERTIGHT SEAL AT ALL JOINTS. WATERSTOP SHALL BE DUMB BELL TYPE WATERSTOP 6" VINYLE; MODEL D6–316 MADE BY VINYLEX OR APPROVED EQUIVALENT.
9. TRASH RACK SHALL BE GALVANIZED AFTER FABRICATION AND PAINTED WITH TWO COATS OF BATTLESHIP GREY PAINT.

PRECAST CONCRETE RISER NOTE

SHOP DRAWINGS FOR PRE–CAST CONCRETE RISERS WITH SUPPORTING STRUCTURE COMPUTATIONS (SIGNED AND SEALED BY A MARYLAND REGISTERED PROFESSIONAL ENGINEER) MEETING ASTM REQUIRMENTS FOR PRE–CAST STRUCTURES MUST BE SUBMITTED TO THE ENGINEER, AND THE APPROVING AGENCY FOR APPROVAL PRIOR TO FABRICATION.

THE SHOP DRAWINGS SHALL INCLUDE METHODS, MATERIALS, AND DETAILING OF WATER–TIGHT SEALS AT ALL CONSTRUCTION JOINTS AND AROUND ALL PIPES.

IF ANY STRUCTURE DIMENSIONS VARY FROM WHAT WAS ORIGINALLY REVIEWED/APPROVED, THEN THE HYDRAULICS, FLOTATION AND STRUCTURAL INTEGRITY SHALL BE RE–ANALYZED AND SUBMITTED FOR APPROVAL.

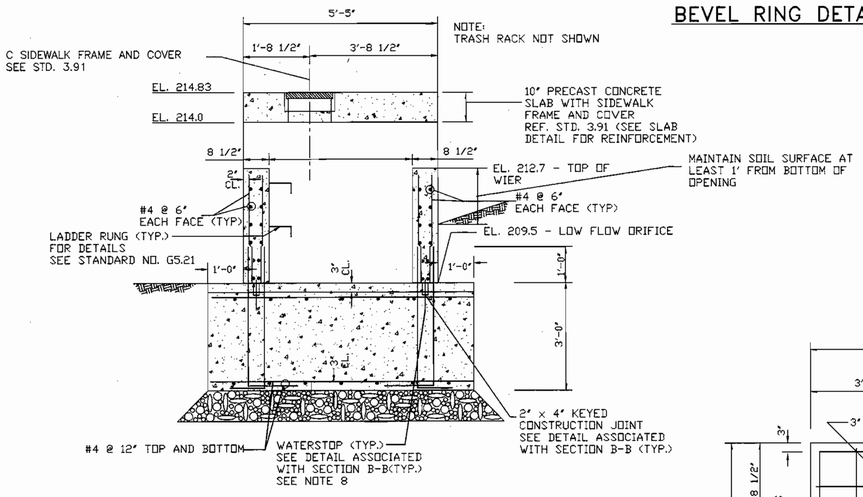

SECTION C–C

SCALE: 1/2" = 1'-0"

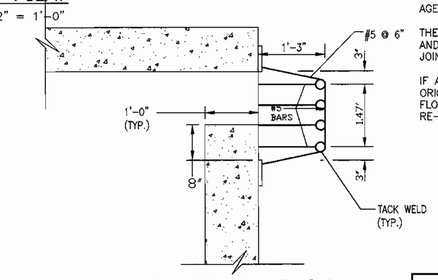

WEIR TRASH RACK SIDE ELEVATION VIEW

SCALE: 3/4" = 1'-0"

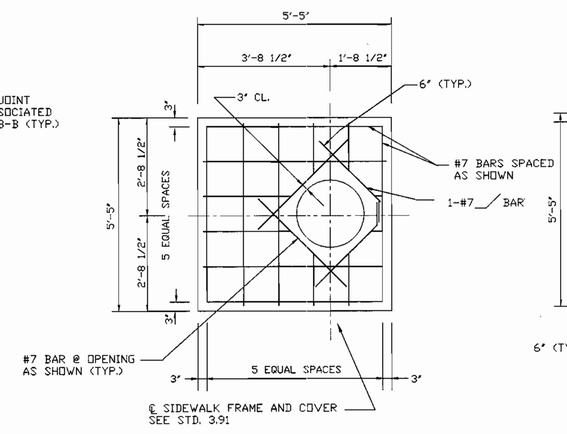

TOP REINFORCING

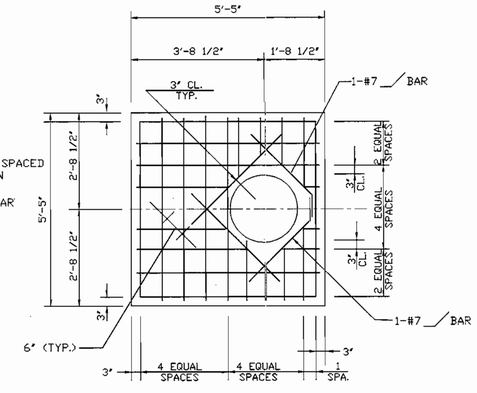

BOTTOM REINFORCING

PRECAST CONCRETE SLAB

SCALE: 1/2" = 1'-0"

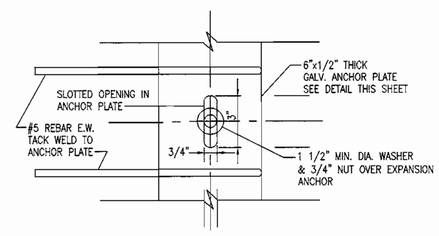

ANCHOR PLATE DETAIL

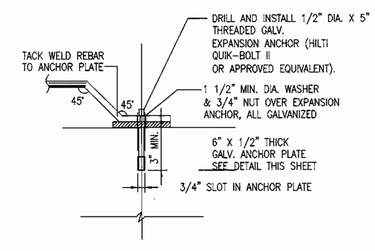

TRASH RACK CONNECTION

ENGINEER'S CERTIFICATE

"I Certify that this plan for erosion and sediment control represents a practical and workable plan based on my personal knowledge of the site conditions and that it was prepared in accordance with requirements of the Howard Soil Conservation District."

Signature of Engineer (Print name below signature) — Date: 2/25/03

DEVELOPER'S CERTIFICATE

"I/We Certify that all development and construction will be done according to this plan and that any responsible personal involved in the construction project will have a certificate of Attendance at the Department of the Environment Approved Training Program for the Control of sediment and Erosion before beginning the project. I also authorize periodic on-site inspection by Howard Soil Conservation District."

MICHAEL A. GIOVANNIELLO — Signature of Developer (Print name below signature) — Date: 2/25/03

Reviewed for HOWARD SCD and meet Technical Requirements. — Date: 3/4/03

U.S.D.A. – Natural Resources Conservation Service

The development plan is approved for soil erosion and sediment control by the HOWARD SOIL CONSERVATION DISTRICT — Date: 3/4/03

Howard SCD

THE SUBJECT PROPERTY IS ZONED M-2 PER THE 10-18-93 COMPREHENSIVE ZONING PLAN

Approved : Department of Planning and Zoning

Director — Date: 3/10/03

Chief, Division of Land Development — Date: 3/14/03

Chief, Development Engineering Division — Date: 3/5/03

SUBDIVISION NAME				SECTION/AREA		PARCEL NO.
HOWARD COUNTY DETENTION CENTER				N/A		660
LIBER/FOLIO	BLOCK NO	ZONING	TAX MAP	GRID NO.	HOWARD CO. ELEC. DIST.	CENSUS TR.
2166/282 1009/368 (5846, 5847)	9,10 AND 15	M-2	43	9	NO-1	6012.02
WATER CODE	B01			SEWER CODE		2221000

PROPOSED IMPROVEMENTS

BUILDING ADDITION, SEE SITE ANALYSIS CHART FOR APPLICABLE DPZ FILE REFERENCE DPZ FILE REF. FOR CURRENT PROJECT SDP–02–20

DEVELOPER'S/LANDOWNER'S CERTIFICATION

I/We certify that all development and/or construction will be done according to these plans, and that any responsible personnel involved in the construction project will have a Certificate of Attendance at a Department of the Environment Approved Training Program for the Control of Sediment and Erosion before beginning the project. I shall engage a Registered Professional Engineer to supervise pond construction and provide the Howard Soil Conservation District with an "as-built" plan of the pond within 30 day of completion. I also authorize periodic on-site inspections by the Howard Soil Conservation District.

Michael A. Giovanniello — Signature — Date: 2/25/03

Michael A. Giovanniello — Print Name — MD. License No.

"AS-BUILT" CERTIFICATION

"I Hereby certify that the facility shown on this plan was constructed as shown on the "As-Built" plans and meets the approved plans and specifications. I also certify that construction was inspected in accordance with the requirements of Howard County.

Signature — Date

Print Name — MD. License No.

ati INC. Architects Engineers and Construction Consultants
8950 Route 108 Suite 218
Columbia Maryland 21045 (410)995-4067Fax(410)992-1837

DCL DANIEL CONSULTANTS, INC.
CONSULTING ENGINEERING AND PLANNING
8950 Rt. 108 E., Suite 229 Columbia, MD. 21045
Phone: 410-995-0090 Fax: 410-992-7038

REVISIONS

NO.	DATE	DESCRIPTION

STORMWATER MANAGEMENT DETAILS V

HOWARD COUNTY CENTRAL BOOKING & DISTRICT COURT COMMISSIONERS FACILITY

HOWARD COUNTY, MARYLAND

DATE : FEBRUARY 21, 2003

CAPITAL PROJECT NO. P – 4916

C-15

SET SHEET 15 OF 25

SDP–02–20

H:/PROJECTS\CIVIL\0121901\PROGRESSIVE\C-12.DWG

LEGEND:

- EX. EDGE OF BRUSH/TREES
- EX. FENCE
- PROPOSED CURB AND GUTTER(SEE DETAIL SHEET C-3)
- PROPOSED P-3 PAVEMENT(SEE H.C. STD. R-2.01)
- PROPOSED SIDEWALK(SEE H.C. STD. R-3.05)
- (223.92) BOTTOM OF CURB AND SPOT ELEVATION
- 1 INDICATES SOIL BORING TAKEN FOR BOOKING FACILITY SHOWN ON SDP 91-107 DATED 5-6-91
- NEW FENCE
- TREE
- EXTERIOR POLE MOUNTED LIGHT FIXTURE
- EXTERIOR WALL PACK FIXTURE
- BLAZE ORANGE PLASTIC MESH TREE PROTECTION FENCE

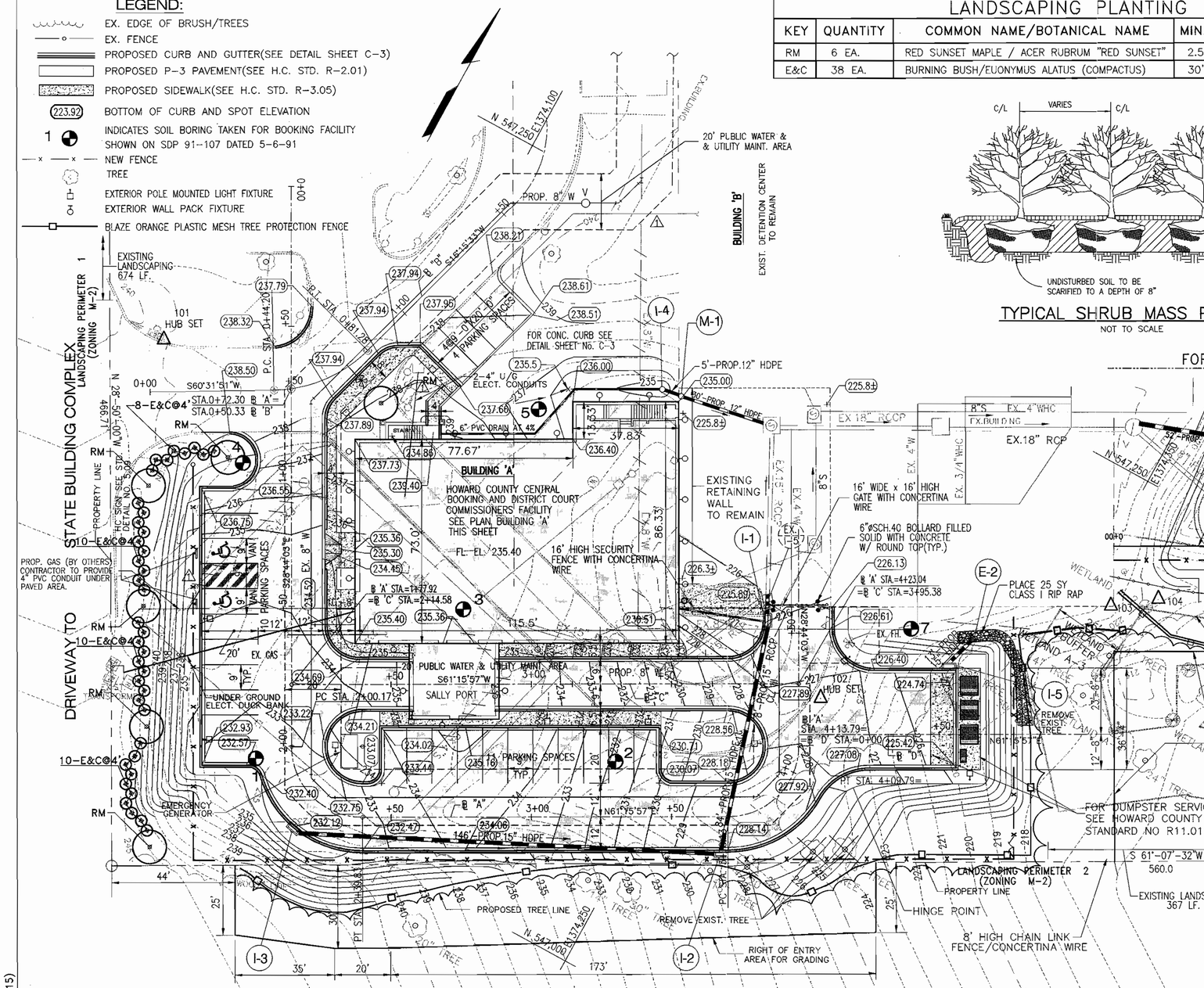

SITE PLAN

SCALE 1"=20'

LANDSCAPING PLANTING LIST

KEY	QUANTITY	COMMON NAME/BOTANICAL NAME	MIN. SIZE	ROOT	REMARKS
RM	6 EA.	RED SUNSET MAPLE / ACER RUBRUM "RED SUNSET"	2.5" CAL.	B&B	20' O.C.
E&C	38 EA.	BURNING BUSH/EUONYMUS ALATUS (COMPACTUS)	30"-36"	B&B	4' O.C.

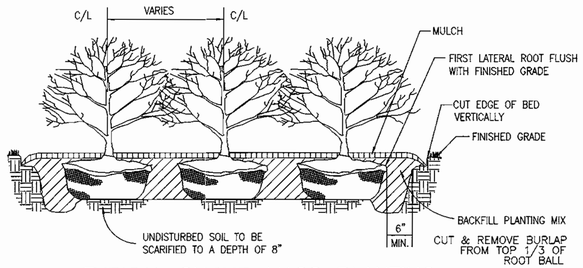

TYPICAL SHRUB MASS PLANTING

NOT TO SCALE

SCHEDULE "A" - PERIMETER LANDSCAPE EDGE

CATEGORY LANDSCAPE TYPE	ADJACENT TO ROADWAYS PERIMETER 1 TYPE "E"	ADJACENT TO PROPERTY PERIMETER 2 TYPE "A" (PROPERTY LINE)
LINEAR FEET OF ROADWAY FRONTAGE / PERIMETER	814	697
CREDIT FOR EXIST. VEGETATION (YES, NO, LINEAR FOOT) (DESCRIBED BELOW IF NEEDED)	YES (674 LF) (NET 140 LF)	YES (697 LF)
CREDIT FOR WALL, FENCE OR BERM	NO	NO
NUMBER OF PLANTS REQUIRED		
SHADE TREES	4	0
EVERGREEN TREES	0	0
SHRUBS	35	0
NUMBER OF PLANTS PROVIDED		
SHADE TREES	4	0
EVERGREEN TREES	0	0
SHRUBS	38	0

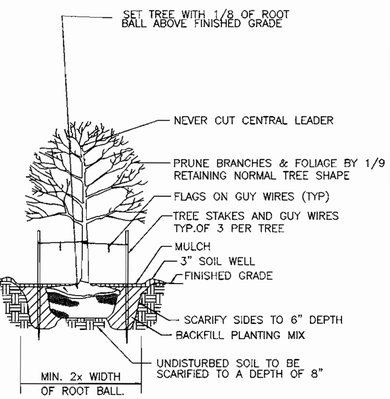

NOTES:

1. CUT AND REMOVE BURLAP FROM TOP 1/3 OF ROOT BALL.
2. REMOVE ALL NON-BIODEGRADABLE CONTAINERS & SCARIFY ROOT BALL.

TREE PLANTING DETAIL

NOT TO SCALE

SCHEDULE "B" - PARKING LOT INTERNAL LANDSCAPING

NUMBER OF PARKING SPACES	25
NUMBER OF TREES REQUIRED(LANDSCAPE ISLANDS)	2
NUMBER OF TREES PROVIDED(LANDSCAPE ISLANDS) SHADE TREES	2

THE SUBJECT PROPERTY IS ZONED M-2 PER THE 10-18-93 COMPREHENSIVE ZONING PLAN

LANDSCAPE NOTES

1. ALL PLANTS MATERIALS SHALL BE NURSERY GROWN AND SHALL CONFORM TO AMERICAN ASSOCIATION OF NURSERYMAN, INC. STANDARD, LATEST EDITION.
2. ALL PLANTING PROCEDURES AND SPECIFICATIONS SHALL CONFORM TO "LANDSCAPE SPECIFICATIONS GUIDELINES FOR BALTIMORE WASHINGTON METROPOLITAN AREA" LATEST EDITION.
3. THE CONTRACTOR SHALL CONTACT "MISS UTILITY" FOR UNDERGROUND UTILITY LOCATIONS AT LEAST 72 HOURS PRIOR TO THE COMPLETION DATE.
4. ALL PLANTS SHALL BE GUARANTEED BY THE CONTRACTOR FOR ONE YEAR FOLLOWING THE INSTALLATION COMPLETION DATE.
5. AT THE TIME OF INSTALLMENT, ALL SHRUBS AND OTHER PLANTING HEREWITH LISTED AND APPROVED FOR THIS SITE, SHALL BE OF THE PROPER HEIGHT REQUIREMENTS IN ACCORDANCE WITH THE HOWARD COUNTY LANDSCAPE MANUAL. IN ADDITION, NO SUBSTITUTIONS OR RELOCATION OF REQUIRED PLANTINGS MAY BE MADE WITHOUT PRIOR REVIEW AND APPROVAL FROM THE DEPARTMENT OF PLANNING AND ZONING. ANY DEVIATION FROM THIS APPROVED LANDSCAPE PLAN MAY RESULT IN DENIAL OR DELAY IN THE RELEASE OF LANDSCAPE SURETY UNTIL SUCH TIME AS ALL REQUIRED MATERIALS ARE PLANTED AND/OR REVISIONS ARE MADE TO APPLICABLE PLANS AND CERTIFICATES."

DEVELOPER'S/BUILDER'S CERTIFICATE

I/WE CERTIFY THAT THE LANDSCAPE PLANTING SHOWN ON THIS PLAN WILL BE DONE IN ACCORDANCE WITH SECTION 16.124 OF THE HOWARD COUNTY CODE AND THE HOWARD COUNTY LANDSCAPE MANUAL. I/WE FURTHER CERTIFY THAT UPON COMPLETION, A CERTIFICATE OF LANDSCAPE INSTALLATION ACCOMPANIED BY AN EXECUTED ONE YEAR GUARANTEE OF PLANT MATERIALS WILL BE SUBMITTED TO THE DEPARTMENT OF PLANNING AND ZONING.

NAME Michael A. Giovanniello — DATE 3/12/03

Approved : Department of Planning and Zoning

Director — Date 3/14/03

Chief, Division of Land Development — Date 3/14/03

Chief, Development Engineering Division — Date 3/13/03

SUBDIVISION NAME	SECTION/AREA	PARCEL NO.
HOWARD COUNTY DETENTION CENTER	N/A	660

LIBER/FOLIO	BLOCK NO	ZONING	TAX MAP	GRID NO.	HOWARD CO. ELEC. DIST.	CENSUS TR.
2116/282 1009/368	9, 10 AND15	M-2	43	9	NO-1	6012.02

WATER CODE	SEWER CODE
B01	2221000

PROPOSED IMPROVEMENTS
BUILDING ADDITION, SEE SITE ANALYSIS IS CHART FOR APPLICABLE DPZ FILE REFERENCE DPZ FILE REF. FOR CURRENT PROJECT SDP-02-20

ati INC. Architects Engineers and Construction Consultants
8950 Route 108 Suite 218
Columbia Maryland 21045 (410)995-4067Fax(410)992-1837

DCI DANIEL CONSULTANTS, INC.
CONSULTING ENGINEERING AND PLANNING
8950 Rt. 108 E., Suite 229 Columbia, MD. 21045
Phone: 410-995-0090 Fax: 410-992-7038

REVISIONS

NO.	DATE	DESCRIPTION
1	3/12/03	ADDENDUM NO. 1

LANDSCAPING PLAN

HOWARD COUNTY CENTRAL BOOKING & DISTRICT COURT COMMISSIONERS FACILITY
HOWARD COUNTY, MARYLAND

DATE : FEBRUARY 21, 2003

CAPITAL PROJECT NO. P - 4916

C-16

SET SHEET 16 OF 25

SDP-02-20

H:\PROJECTS\CIVIL\012190I\PROGRESIVE\C-16.DWG (C-15)

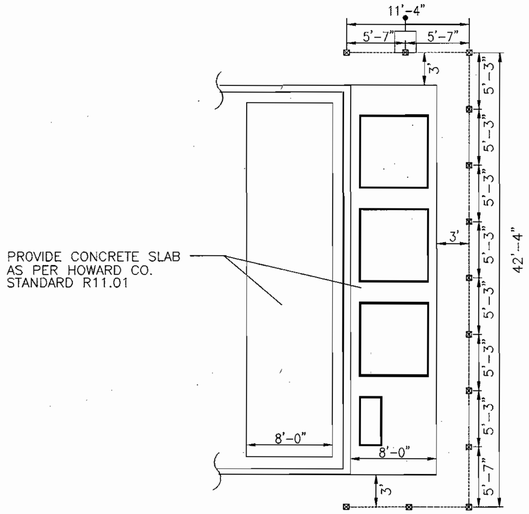

TRASH ENCLOSURE DETAIL (PLAN)

1" = 30'

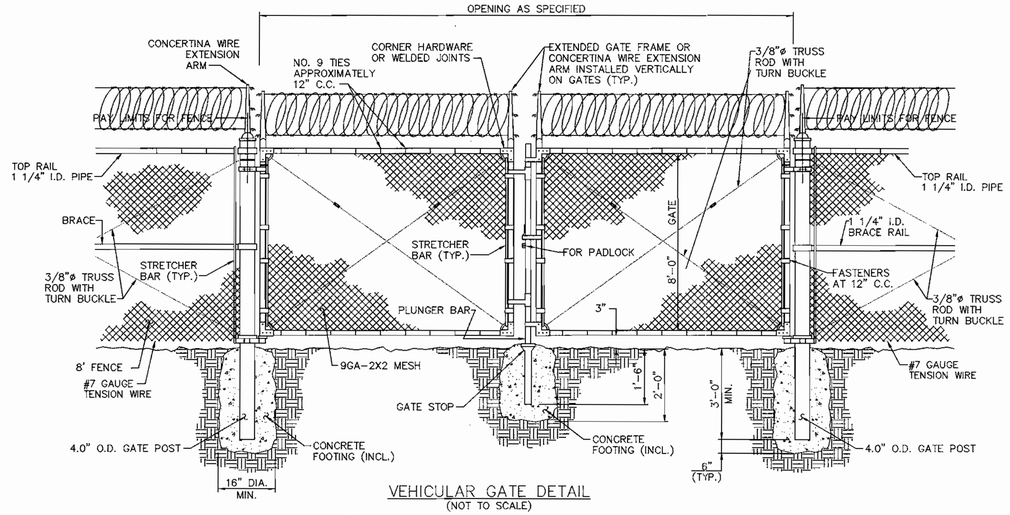

VEHICULAR GATE DETAIL

(NOT TO SCALE)

NOTE:
GATE FRAME SHALL BE 1.90" SCHED. 40 PIPE PROVIDE FORKED TYPE LATCH W/ PAD LOCKED & CONCERTINA WIRE FENCE TOP.

PAINT IS TO BE APPLIED IN ACCORDANCE WITH THE MANUFACTURER'S RECOMMENDATIONS. (TWO (2) COATS REQUIRED) SYMBOLS AND BACKGROUND PER ADA REQUIREMENTS.

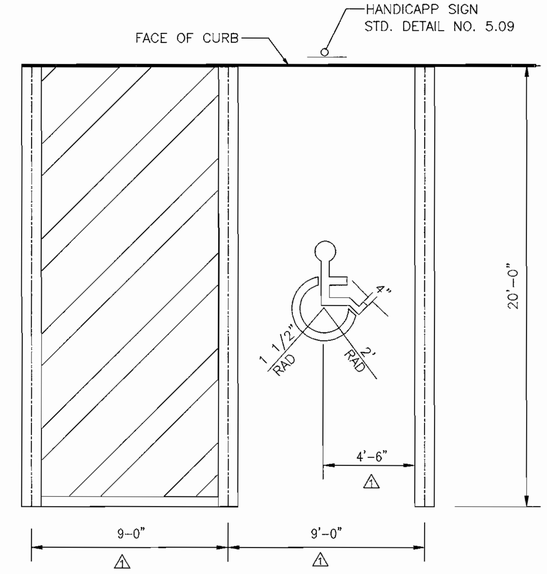

HANDICAPPED PARKING

DETAIL 9

NOT TO SCALE

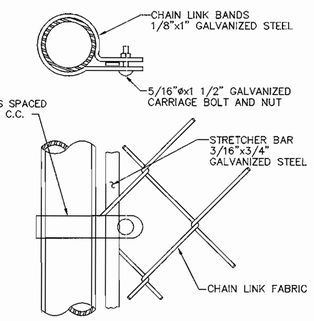

STRETCHER BAR ATTACHMENT

TERMINAL, END, AND CORNER POST CONNECTION

(NOT TO SCALE)

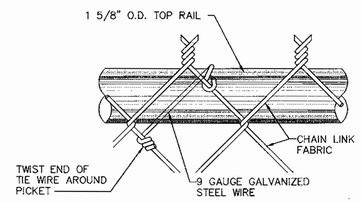

ATTACHMENT OF FABRIC TO TOP OF RAIL

(NOT TO SCALE)

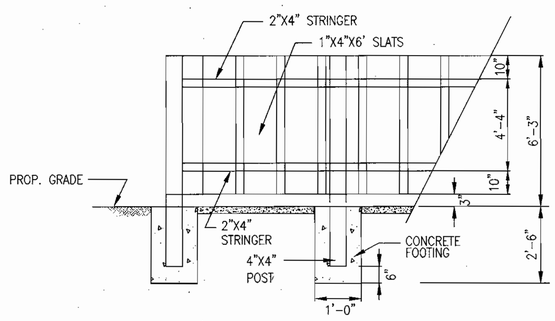

PARTIAL ELEVATION

TRASH ENCLOSURE DETAIL

DETAIL 4

NOT TO SCALE

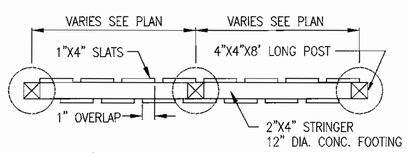

NOTE: ALL WOOD FOR FENCE CONSTRUCTION SHALL BE PRESSURE TREATED LUMBER (CCA 0.4)

PLAN

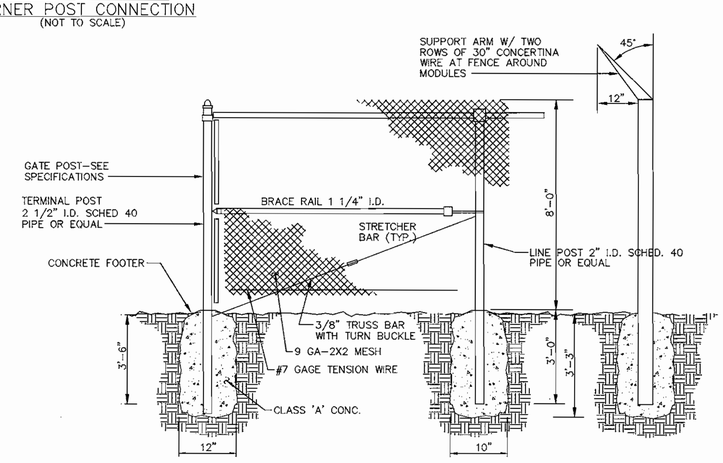

CHAIN LINK FENCE DETAIL

(NOT TO SCALE)

THE SUBJECT PROPERTY IS ZONED M-2 PER THE 10-18-93 COMPREHENSIVE ZONING PLAN

Approved : Department of Planning and Zoning

Director — Date 3/14/03

Chief, Division of Land Development — Date 3/14/03

Chief, Development Engineering Division — Date 3/13/03

SUBDIVISION NAME	SECTION/AREA	PARCEL NO.
HOWARD COUNTY DETENTION CENTER	N/A	660

LIBER/FOLIO	BLOCK NO	ZONING	TAX MAP	GRID NO.	HOWARD CO. ELEC. DIST.	CENSUS TR.
2116/282 1009/368 15846,15861	9,10 AND 15	M-2	43	9	NO-1	6012.02

WATER CODE	SEWER CODE
B01	2221000

PROPOSED IMPROVEMENTS
BUILDING ADDITION, SEE SITE ANALYSIS CHART FOR APPLICABLE DPZ FILE REFERENCE DPZ FILE REF. FOR CURRENT PROJECT SDP-02-20

BB ati INC. Architects Engineers and Construction Consultants
8950 Route 108 Suite 218
Columbia Maryland 21045 (410)995-4067Fax(410)992-1837

STATE OF MARYLAND — HOWARD SCOTT BOUCOUR — No. 15,873 — PROFESSIONAL ENGINEER

DCI DANIEL CONSULTANTS, INC.
CONSULTING ENGINEERING AND PLANNING
8950 Rt. 108 E., Suite 229 Columbia, MD. 21045
Phone: 410-995-0090 Fax: 410-992-7038

REVISIONS

NO.	DATE	DESCRIPTION
1	3/12/03	ADDENDUM NO. 1

SITE DETAILS

HOWARD COUNTY CENTRAL BOOKING & DISTRICT COURT COMMISSIONERS FACILITY
HOWARD COUNTY, MARYLAND

DATE : FEBRUARY 21, 2003

CAPITAL PROJECT NO. ☐ P - 4916

C-17

SET SHEET 17 OF 25

SDP-02-20

H:\PROJECTS\CIVIL\012901\PROGRESSIVE\C-17.DWG (C-16)

LEGEND:

	EX. WOODS LINE	SSF	SUPER SILT FENCE
376	EX. CONTOUR LINE		LIMIT OF DISTURBANCE
386	PROP.CONTOUR LINE	RSP	REMOVABLE PUMPING STATION
	CURB LINE	CIP	CURB INLET PROTECTION
	CENTER LINE	AGIP	AT-GRADE INLET PROTECTION
	EX. FENCE		
SF	SILT FENCE	SCE	STABILIZED CONST. ENTRANCE

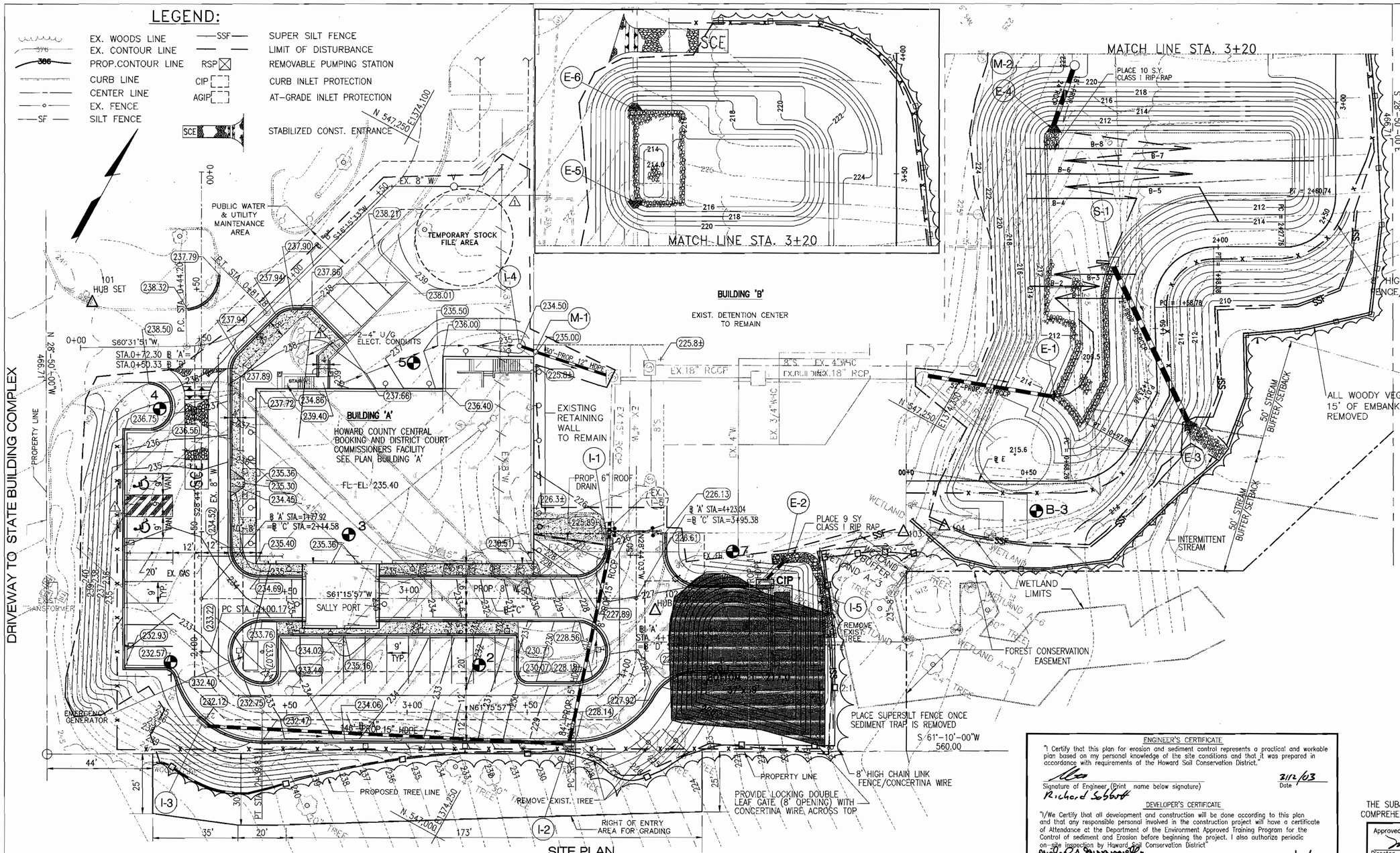

SITE PLAN
SCALE 1"=20'

CONTRACTOR NOTE:

1. EROSION AND SEDIMENT CONTROL WILL BE STRICTLY ENFORCED
2. FOR CONSTRUCTION PHASING SEQUENCE, SEE SHEET C-5 & C-6

STORAGE CAPACITY

ELEV.(FT)	AREA(SF)	INCREMENTAL VOL.(CF)	CUMMULATIVE VOL.(CF)
209.5	4260		
210.0	4780	2260	2260
211.0	5775	5278	7538
211.5	6333	3027	10565
212.0	6890	3306	13871
212.9	8100	6746	20617

WET STORAGE 209.5 TO 211.5
DRY STORAGE 211.5 TO 212.9

THE WEIR OPENING INVERT SHALL BE TEMPORARLY RAISED TO ELEVATION 212.9

BAFFLE LENGHTS

	31
B-2	29'
B-3	34'
B-4	46'
B-5	73'
B-6	69'
B-7	104'
B-8	69'

STONE OUTLET TRAP ST. 11 NO. 1

DRAINAGE AREA	1.60 ACRES
STORAGE REQUIRED	5760 CU. FT.
EXISTING OUTLET ELEVATION	218.80
TRAP BOTTOM ELEVATION	217.00
TRAP BOTTOM DIMENSIONS	37' x 39'
STORAGE PROVIDED	5800 CU. FT.
WEIR CREST(DRY STORAGE) ELEV.	218.80
OUTLET(WET STORAGE)ELEVATION	218.10
CLEANOUT ELEVATION	217.50
EMBANKMENT HEIGHT	0.00
SIDE SLOPE	2 : 1
WEIR LENGTH	8'
WET STORAGE ZONE	217-218.1
DRY STORAGE ZONE	218.1-218.8

SEDIMENT BASIN No.1

DRAINAGE AREA	5.60 ACRES
STORAGE REQUIRED	20160 CU. FT.
EXISTING OUTLET ELEVATION	209.50
TRAP BOTTOM ELEVATION	209.5
TRAP BOTTOM DIMENSIONS	4085
STORAGE PROVIDED	20617 CU. FT.
WEIR CREST(DRY STORAGE) ELEV.	212.9
OUTLET(WET STORAGE)ELEVATION	211.5
CLEANOUT ELEVATION	210.5
EMBANKMENT HEIGHT	7.50
SIDE SLOPE	3:1/2:1
WET STORAGE ZONE	209.5-211.5
DRY STORAGE ZONE	211.5-212.9
EXISTING "Q2"	14.5 CFS
PROPOSED "Q2"	10.0 CFS

THE SUBJECT PROPERTY IS ZONED M-2 PER THE 10-18-93 COMPREHENSIVE ZONING PLAN

E&S SEQUENCE OF OPERATION

E&S SEQUENCE OF OPERATION	ESTIMATED TIME*
1. OBTAIN GRADING AND MDE PERMITS. INSTALL SCE IN THE BUILDING AND PARKING LOT ADDITION AREAS AS SHOWN ON THE PLAN.	1/2 DAY
2. INSTALL TREE PROTECTION FENCE AND SIGNS(75'O.C.) AT THE LIMIT OF TREE REMOVAL IN THE BASIN AND PARKING LOT ADDITION AREAS. COORDINATE WITH FOREST CONSERVATION PLAN.	1-1/2 DAY
3. INSTALL PERIMETER SEDIMENT CONTROLS AND SEDIMENT BASIN IN THE POND AND SEDIMENT TRAP IN PARKING LOT ADDITION AREAS AS SHOWN ON THE PLAN.	2 DAYS
4. INSTALL STABILIZED CONTRUCTION ENTRANCE IN THE SEDIMENT BASIN AREA AS SHOWN ON THE PLAN.	1/2 DAY
5. AFTER ALL BASIN/POND MATERIALS ARE ON SITE AND INSPECTOR PROVIDES PERMISSION TO PROCEED, REMOVE EXISTING RISER STRUCTURE.	1 DAY
6. UPON THE START OF A 5-DAY CLEAR(NON-PRECIPITATION) WEATHER FORECAST FROM THE NATIONAL WEATHER SERVICE AND PERMISSION OF THE INSPECTOR, GRADE BASIN AND INSTALL OUTLET STRUCTURE, SEDIMENT BASIN DRAW DOWN DEVICE AND STORMDRAIN PIPE. STABILIZE DISTURBED AREAS WITH PERMANENT VEGETATION AS SOON AS POSSIBLE.	1 MONTH
7. COMPLETE PHASE 2 THRU PHASE 4 WORK AS DESCRIBED ON SHEETS C-5 & C-6. STABILIZED DISTURBED AREAS WITH STABILIZED DISTURBED AREAS WITH VEGETATION OR GRAVEL BASE COURSE AS SOON AS POSSIBLE.	9 MONTHS
8. CONSTRUCT FINAL POND GRADING AND INFILTRATION BASIN WITH APPROVAL OF E & S INPECTOR, REMOVE ALL REMAINING SEDIMENT CONTROL DEVICES.	1 WEEK
9. RESTABILIZED ALL AREAS OF REDISTURBANCE.	1 WEEK
10. PROVIDE POND AS BUILT TO HOWARD CO. SCD AND CID	1 WEEK

* ESTIMATED TIME NOT TO BE USED FOR ANY PROJECT SCHEDULING PURPOSES.

ENGINEER'S CERTIFICATE

"I Certify that this plan for erosion and sediment control represents a practical and workable plan based on my personal knowledge of the site conditions and that it was prepared in accordance with requirements of the Howard Soil Conservation District."

Signature of Engineer (Print name below signature) — Date 3/12/03
Richard Sabbott

DEVELOPER'S CERTIFICATE

"I/We Certify that all development and construction will be done according to this plan and that any responsible personal involved in the construction project will have a certificate of Attendance at the Department of the Environment Approved Training Program for the Control of sediment and Erosion before beginning the project. I also authorize periodic on-site inspection by Howard Soil Conservation District"

Michael A. Giovannetti — Date 3/12/03
Signature of Developer (Print name below signature)

Reviewed for HOWARD SCD and meets Technical Requirements.

U.S.D.A. - Natural Resources Conservation Service — Date 3/13/03

The development plan is approved for soil erosion and sediment control by the HOWARD SOIL CONSERVATION DISTRICT

Howard SCD — Date 3/13/03

SUBDIVISION NAME	SECTION/AREA	PARCEL NO.
HOWARD COUNTY DETENTION CENTER	N/A	660

LIBER/FOLIO	BLOCK NO	ZONING	TAX MAP	GRID NO.	HOWARD CO. ELEC. DIST.	CENSUS TR.
2116/282 1009/388 (SDP-90-124)	9, 10 AND15	M-2	43	9	NO-1	6012.02

WATER CODE B01 — SEWER CODE 2221000

PROPOSED IMPROVEMENTS
BUILDING ADDITION, SEE SITE ANALYSIS CHART FOR APPLICABLE DPZ FILE REFERENCE DPZ FILE REF. FOR CURRENT PROJECT SDP-02-20

Approved : Department of Planning and Zoning

Director — Date 3/14/03

Chief, Division of Land Development — Date 3/14/03

Chief, Development Engineering Division — Date 3/13/03

Architects Engineers and Construction Consultants
8950 Route 108 Suite 218
Columbia Maryland 21045 (410)995-4067Fax(410)992-1837

DCI DANIEL CONSULTANTS, INC.
CONSULTING ENGINEERING AND PLANNING
8950 Rt. 108 E., Suite 229 Columbia, MD. 21045
Phone: 410-995-0090 Fax: 410-992-7038

REVISIONS		
NO.	DATE	DESCRIPTION
1	3/12/03	ADDENDUM NO. 1

EROSION AND SEDIMENT CONTROL PLAN

HOWARD COUNTY CENTRAL BOOKING & DISTRICT COURT COMMISSIONERS FACILITY
HOWARD COUNTY, MARYLAND

DATE : FEBRUARY 21, 2003

CAPITAL PROJECT NO. P - 4916

C-18

SET SHEET 18 OF 25

SDP-02-20

H:\PROJECTS\CIVIL\0121901\PROGRESIVE\C-17.DWG

HEAVY DUTY STABILIZED CONSTRUCTION ENTRANCE – not to scale

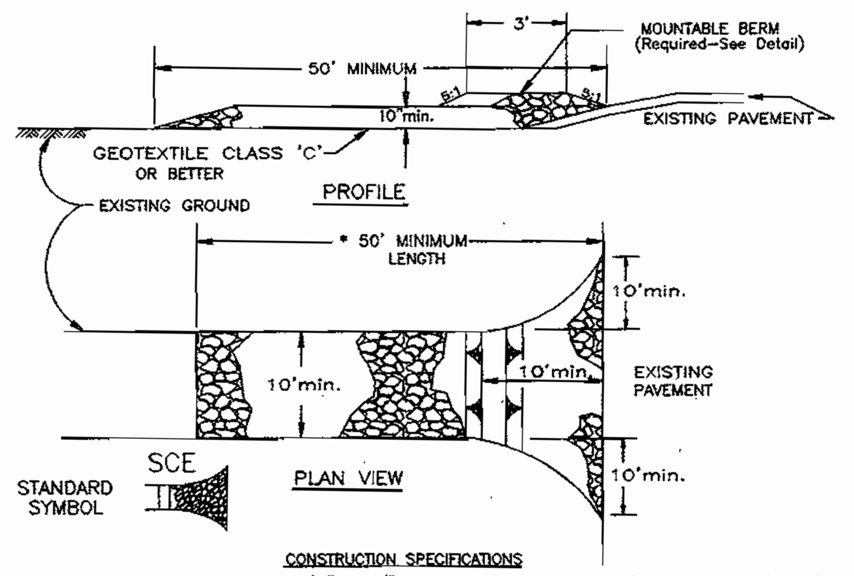

CONSTRUCTION SPECIFICATIONS

1. Stone — crushed aggregate (2" to 3") or reclaimed or recycled concrete equivalent.
2. Length — As required, but not less than 50 feet (except on single residence lot where a 30 foot minimum length will apply.)
3. Thickness — not less than ten (10) inches.
4. Width — Ten (10) foot minimum, but not less than the full width at points where ingress and engress occurs.
5. Geotextile fabric class 'C' or better shall be placed over the existing ground prior to placing of stone. Geotextile fabric will not be required on a single family resident lot.
6. A mountable berm with 5:1 slopes is required for all surface water flowing or diverted towards construction entrance.
7. Maintenance — The entrance shall be maintained in a condition which will prevent tracking or flowing of sediment onto public right–of–way. This may require periodic top dressing with additional stone as conditions demand and repair and/or cleanout of any measures used to trap sediment. All sediment spilled, dropped, washed or tracked onto public right–of–way must be removed immediately.
8. Washing — Wheels must be cleaned to remove sediment prior to entrance onto public right–of–way. When washing is required, it shall be done on an area stabilized with stone and which drains into an approved sediment trapping device.
9. Periodic Inspection and needed maintenance shall be provided after each rain.

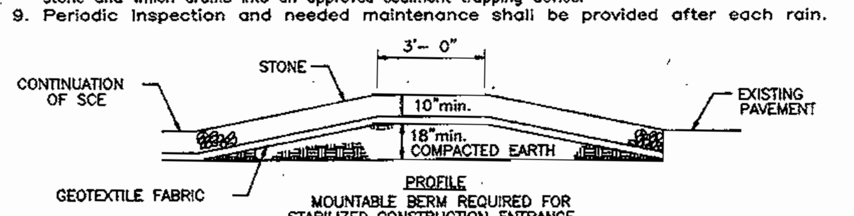

PROFILE
MOUNTABLE BERM REQUIRED FOR STABILIZED CONSTRUCTION ENTRANCE
(NOT TO SCALE)

DETAIL 22 – SILT FENCE

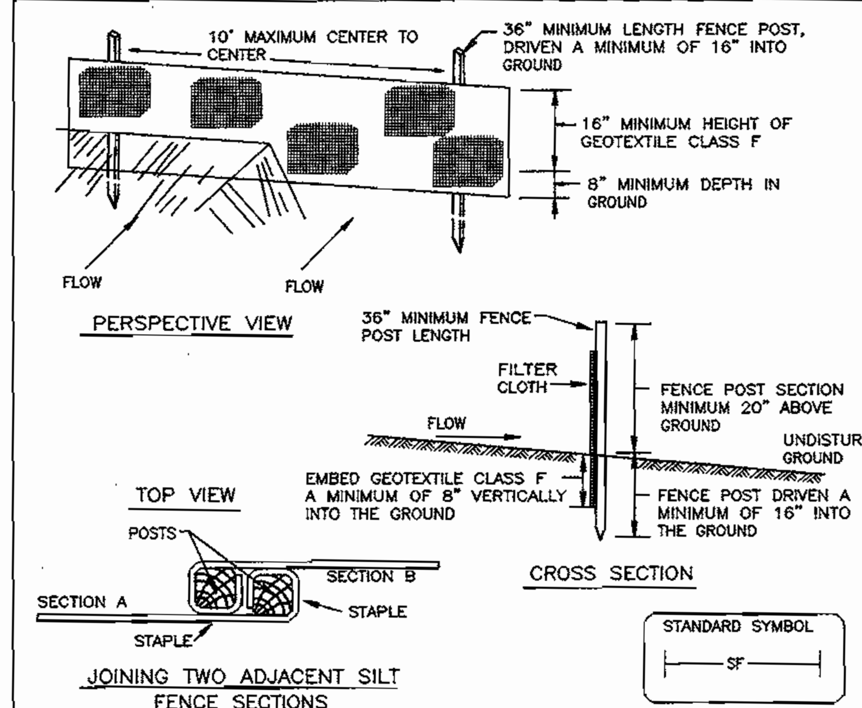

Construction Specifications

1. Fence posts shall be a minimum of 36" long driven 16" minimum into the ground. Wood posts shall be 11/2" x 11/2" square (minimum) cut, or 13/4" diameter (minimum) round and shall be of sound quality hardwood. Steel posts will be standard T or U section weighting not less than 1.00 pond per linear foot.

2. Geotextile shall be fastened securely to each fence post with wire ties or staples at top and mid–section and shall meet the following requirements for Geotextile Class F:

Tensile Strength	50 lbs/in (min.)	Test: MSMT 509
Tensile Modulus	20 lbs/in (min.)	Test: MSMT 509
Flow Rate	0.3 gal ft² / minute (max.)	Test: MSMT 322
Filtering Efficiency	75% (min.)	Test: MSMT 322

3. Where ends of geotextile fabric come together, they shall be overlapped, folded and stapled to prevent sediment bypass.

4. Silt Fence shall be inspected after each rainfall event and maintained when bulges occur or when sediment accumulation reached 50% of the fabric height.

DETAIL 33 – SUPER SILT FENCE

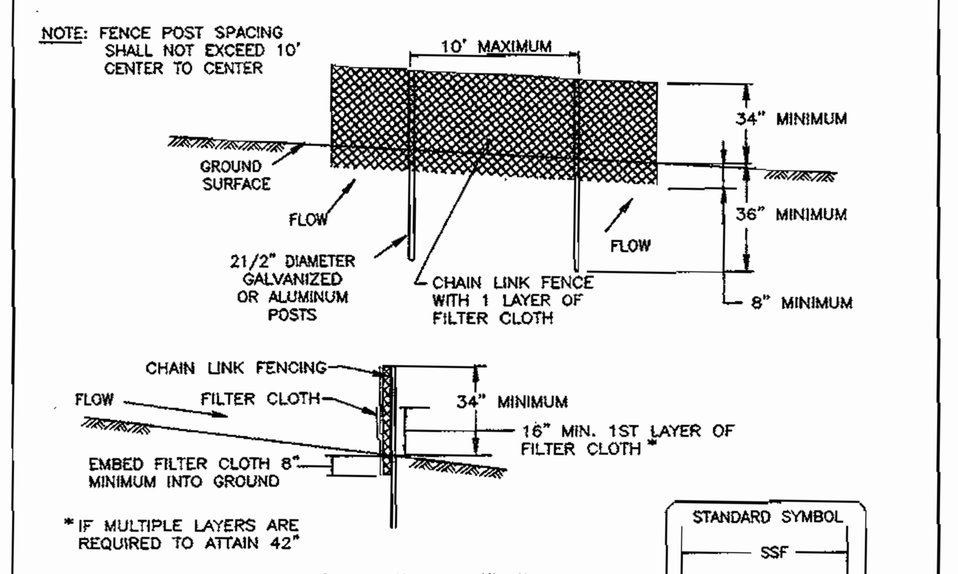

Construction Specifications

1. Fencing shall be 42" in height and constructed in accordance with the latest Maryland State Highway Details for Chain Link Fencing. The specification for a 6' fence shall be used, substituting 42" fabric and 6' length posts.

2. Chain link fence shall be fastened securely to the fence posts with wire ties. The lower tension wire, brace and truss rods, drive anchors and post caps are not required except on the ends of the fence.

3. Filter cloth shall be fastened securely to the chain link fence with ties spaced every 24" at the top and mid section.

4. Filter cloth shall be embedded a minimum of 8" into the ground.

5. When two sections of filter cloth adjoin each other, they shall be overlapped by 6" and folded.

6. Maintenance shall be performed as needed and silt buildups removed when "bulges" develop in the silt fence, or when silt reaches 50% of fence height

7. Filter cloth shall be fastened securely to each fence post with wire ties or staples at top and mid section and shall meet the following requirements for Geotextile Class F:

Tensile Strength	50 lbs/in (min.)	Test: MSMT 509
Tensile Modulus	20 lbs/in (min.)	Test: MSMT 509
Flow Rate	0.3 gal/ft²/minute (max.)	Test: MSMT 322
Filtering Efficiency	75% (min.)	Test: MSMT 322

1 SEDIMENT BASIN DRAW DOWN DEVICE

NOT TO SCALE

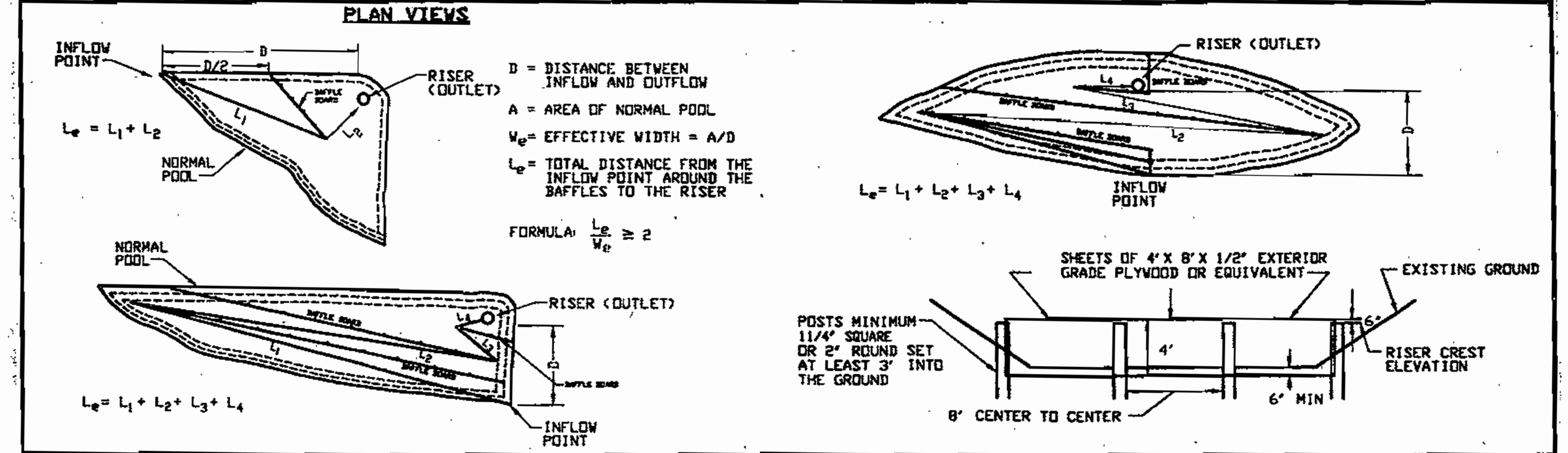

2 SEDIMENT BASIN BAFFLES

NOT TO SCALE

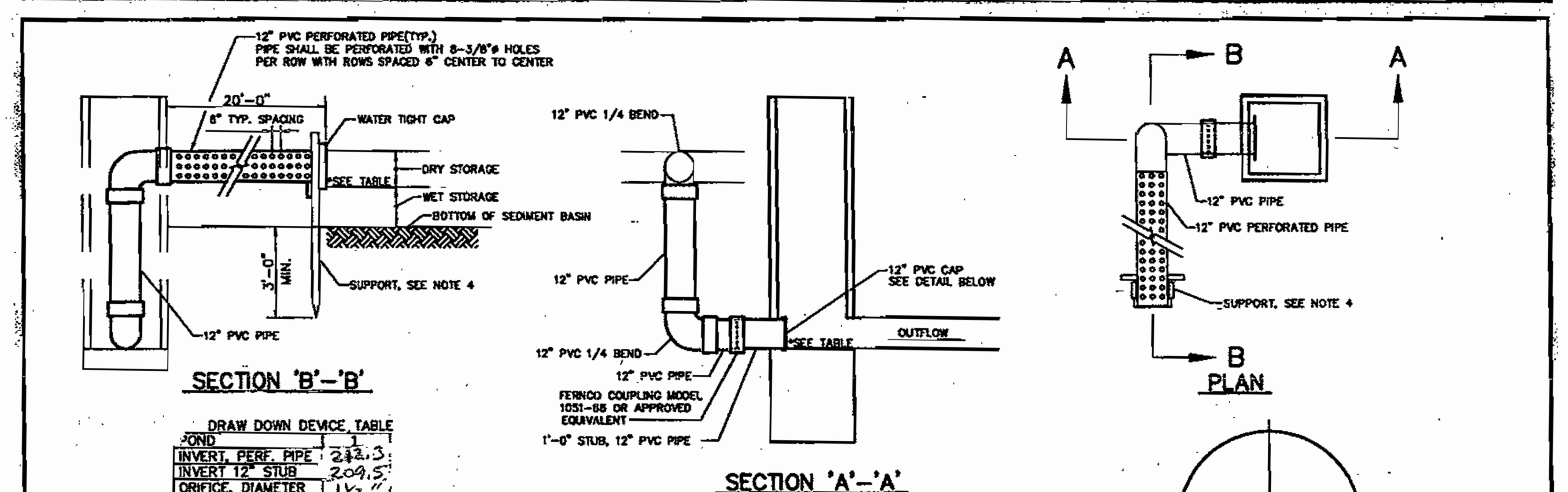

DRAW DOWN DEVICE TABLE	
POND	1
INVERT, PERF. PIPE	212.3
INVERT 12" STUB	209.5
ORIFICE, DIAMETER	1½"

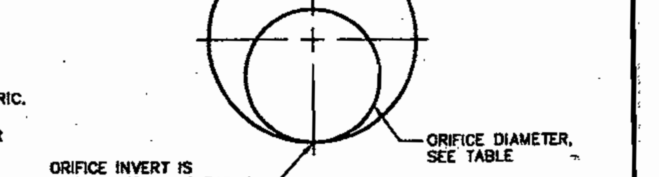

NOTE :
1. PERFORATIONS IN THE DRAW–DOWN DEVICE MAY NOT EXTEND INTO THE WET STORAGE.
2. PIPE AND FITTINGS SHALL BE 12" PVC ASTM D–1785, SCH 80 OR D–2241, SDR–26, UNLESS OTHERWISE NOTED.
3. THE PERFORATED PORTION OF THE DRAW–DOWN DEVICE SHALL BE WRAPPED WITH 1/2" HARDWARE CLOTH AND GEOTEXTILE FABRIC. THE GEOTEXTILE FABRIC SHALL MEET THE SPECIFICATIONS FOR GEOTEXTILE CLASS E.
4. PROVIDE SUPPORT OF THE DRAW–DOWN DEVICE BY STAKING BOTH SIDES OF THE DRAW–DOWN DEVICE WITH 1" STEEL ANGLE, OR 2"x 2" SQUARE OR 2" ROUND WOODEN POSTS SET 3' MINIMUM INTO THE GROUND, THEN JOINING THEM TO THE DEVICE BY WRAPPING WITH 12 GAGE MINIMUM WIRE.

1 SEDIMENT BASIN DRAW DOWN DEVICE

NOT TO SCALE

DETAIL 9 – STONE OUTLET SEDIMENT TRAP – ST II

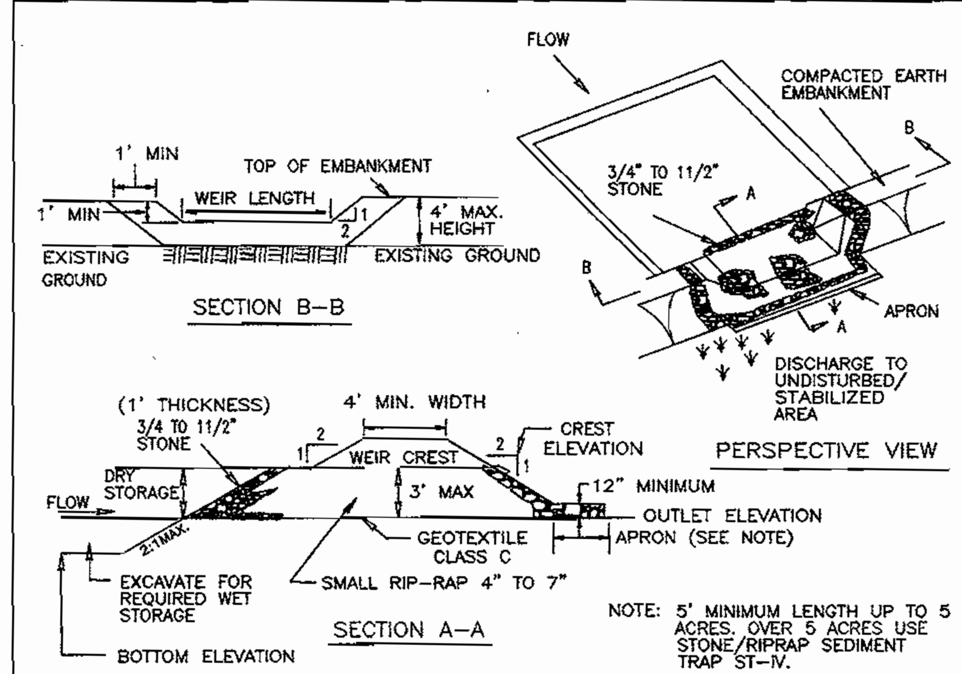

Construction Specifications

1. Area under embankment shall be cleared, grubbed and stripped of any vegetation and root mat. The pool area shall be cleared.

2. The fill material for the embankment shall be free of roots and other woody vegetation as well as over–sized stones, rocks, organic material or other objectionable material. The embankment shall be compacted by traversing with equipment while it is being constructed.

3. All cut and fill slopes shall be 2:1 or flatter.

4. The stone used in the outlet shall be small rip–rap 4" to 7" in size with a 1' thick layer of 3/4" to 11/2" washed aggregate placed on the upstream face of the outlet. Stone facing shall be as necessary to prevent clogging. Geotextile Class C may be substituted for the stone facing by placing it on the inside face of the stone outlet.

5. Sediment shall be removed and trap restored to its original dimensions when the sediment has accumulated to one half of the wet storage depth of the trap. Removed sediment shall be deposited in a suitable area and in such a manner that it will not erode.

TOPSOILING SPECIFICATIONS

SECTION 1 – SITE PREPARATION (SHERE TOPSOIL IS TO BE ADDED)

A. WHEN TOPSOILING, MAINTAIN NEEDED EROSION AND SEDIMENT CONTROL PRACTICES SUCH AS DIVERSIONS, GRADE STABILIZATION STRUCTURES, BERMS, DIKES, WATERWAYS AND SEDIMENT BASINS.

B. GRADING: GRADES ON THE AREAS TO BE TOPSOILED WHICH HAVE BEEN PROVIOUSLY ESTABLISHED SHALL BE MAINTAINED.

C. LIMING: WHERE THE SUBSOIL IS EITHER HIGHLY ACID OR COMPOSED OF HEAVY CLAYS, GROUND LIMESTONE SHALL BE SPREAD AT THE RATE OF 4–8 TONS/ACRE (200–400 POUNDS PER 1,000 SQUARE FEET). LIME SHALL BE DISTRIBUTED UNIFORMLY OVER DESIGNATED AREAS AND WORKED INTO THE SOIL IN CONJUNCTION WITH TILLAGE POERATIONS AS DESCRIBED IN THE FOLLOWING PROCEDURES.

D. TULLING: AFTER THE AREAS TO BE TOPSOILED HAVE BEEN BROUGHT TO GRADE, AND IMMEDIATELY PRIOR TO DUMPING AND SPREADING THE TOPSOIL, THE SUBGRADE SHALL BE LOOSENED BY DISCING OR BY SCARIFYING TO A DEPTH OF AT LEAST 3 INCHES TO PERMIT BONDING OF THE TOPSOIL TO THE SUBSOIL. PACK BY PASSING A BULLDOZER UP AND DOWN OVER THE ENTIRE SURFACE AREA OF THE SLOPE TO CREATE HORIZONTAL EROSION CHECK SLOTS TO PREVENT TOPSOIL FROM SLIDING DOWN THE SLOPE.

SECTION II – TOPSOIL MATERIAL AND APPLICATIN

NOTE: TOPSOIL SALVAGED FROM THE EXISTING SITE MAY OFTEN BE USED BUT IT SHOULD MEET THE SAME STANDARDS AS SET FORTH IN THESE SPECIFICATIONS. THE DEPTH OF TOPSOIL TO BE SALVAGED SHALL BE NO MORE THAN THE DEPTH DESCRIBED AS A REPRESENTATIVE PROFILE FOR THAT PARTICULAR SOIL TYPE AS DESCRIBED IN THE SOIL SURVEY PUBLISHED BY USDA–SCS IN COOPERATION WITH MARYLAND AGRICULTURAL EXPERIMENTAL STATION.

A. MATERIALS: TOPSOIL SHALL BE A LOAM, SANDY LOAM, CLAY LOAM, SILT LOAM, SANDY CLAY LOAM, LOAMY SAND OR OTHER SOIL AS APPROVED BY AN AGRONOMIST OR SOIL SCIENTIST. IT SHALL NOT HAVE A MIXTURE OF CONTRASTING TEXTURED SUBSOIL AND CONTAIN NO MORE THAN 5% BY VOLUME OF CINDERS, DTONES, SLAG, COARSE FRAGMENT, GRAVEL, STICKS, ROOTS, TRASH OR OTHER EXTRANEOUS MATERIALS LARGER THAN 1–1/2" IN DIAMETER. TOPSOIL MUST BE FREE OF PLANTS OR PLANT PARTS OF BERMUDA GRASS, QUACKGRASS, JOHNSON GRASS, NUTSEDGE, POISON IVY, THISTLES, OR OTHERS AS SPECIFIED. ALL TOPSOIL SHALL BE TESTED BY A RECOGNIZED LABORATORY FOR ORGANIC MATTER CONTENT, PH AND SOLUBLE SALTS. A PH OF 6.0 TO 7.5 AND AN ORGANIC CONTENT OF NOT LESS THAN 1.5% BY WEIGHT IS REQUIRED. IF PH VALUE IS LESS THAN 6.0, LIME SHALL BE APPLIED AND INCORPORATED WITH THE TPSOIL TO ADJUST THE PH TO 6.5 OR HIGHER. TOPSOIL CONTAINING SOLUBLE SALTS GREATER THAN 500 PARTS PERMILLION SHALL NOT BE USED.

NO SOD OR SEED SHALL BE PLACED ON SOIL WHICH AS BEEN TREATED WITH SOIL STERILANTS OR CHEMICALS USED FOR WEED CONTROL UNTIL SUFFICIENT TIME HAS ELAPSED TO PERMIT DISSIPATION OF TOXIC MATERIALS.

NOTE: TOPSOIL SUBSTITUTES OR AMENDMENTS AS APPROVED BY A QUALIFIED AGRONOMIST OR SOIL SCIENTIST MAY BE USED INLIEU OF NATURAL TOPSOIL.

B. GRADING: THE TOPSOIL SHALL BE UNIFIRMLY DISTRIBUTED AND COMPACTED TO A MINIMUM OF FOUR (4) INCHES. SPREADING SHALL BE PERFORMED IN SUCH A MANNER THAT SODDING OR SEEDING CAN PROCEED WITH A MINIMUM OF ADDITIONAL SOIL PERPARATION AND TILLAGE. ANY IRREGULARITIES IN THE SURFACE RESULTING FROM TOPSOILING OR OTHER OPERATIONS SHALL BE CORRECTED IN ORDER TO PREVENT THE FORMATION OF DEPRESSIONS OR WATER POCKETS. TOPSOIL SHALL NOT BE PLACED WHILE IN A FROZEN OR MUDDY SUBGRADE IS EXCESSIVELY WET, OR IN A CONDITION THAT MAY OTHERWOSE BE DETRIMENTAL TO PROPER GRADING AND SEEDBED PREPARATION.

ALTERNATIVE FOR PERMANENT SEEDING

AS AN OPTION TO APPLYING THE FULL AMOUNTS OF LIME AND COMMERCIAL FERTILIZER, APPLY COMPOSTED SLUDGE AS SPECIFIED BELOW, A POTASSIUM FERTILIZER AT THE RATE OF 4 POUNDS PER 1,000 SQUARE FOOT AND 1/3 THE NORMAL LIME APPLICATION RATE.

COMPOSED SLUDGE MATERIAL

COMPOSTED SLUDGE FOR USE AS A SOIL AMENDMENT OR CONDITIONER SHALL CONFORM TO THE FOLLOWING REQUIREMENTS:

1. BE SUPPLIED BY OR ORIGINATE FROM A PERSON OR PERSONS THAT ARE PERMITTED (AT THE TIME OF ACQUISITION OF THE COMPOST) BY THE MARYLAND DEPARTMENT OF HEALTH AND MENTAL HYGIENE UNDER REGULATION 10.17.10.

2. SHALL CONTAIN AT LEAST 1% NITROGEN, 1.5% PHOSPHORUS AND .2% POTASSIUM AND HAVE A PH OF 7.0 AND 8.0.

IF COMPOST DOES NOT MEET THESE REQUIREMENTS, THE APPROPRIATE CONSTITUENTS MUST BE ADDED SO THAT THE REQUIREMENTS ARE MET PRIOR TO USE OF THE COMPOST.

3. BE APPLIED AT A RATE OF 2,000 POUNDS PER 1,000 SQUARE FEET.

REFERENCES

1. GUIDELINE SPECIFICATIONS, SOIL PREPARATION AND SODDING. MD–VA, PUB. #1. COOPERATIVE EXTENSION SERVICE, UNIVERSITY OF MARYLAND AND VIRGINIA POLYTECHNIC INSTITUTES. REVISED 1973.

GENERAL NOTES

A. THE DEVELOPER IS RESPONSIBLE FOR THE ACQUISITION OF ALL REQUIRED EASEMENT, RIGHT AND/OR RIGHTS–OF–WAY PURSUANT TO THE DISCHARGE FROM THE SEDIMENT AND EROSION CONTROL PRACTICES, STORMWATER MANAGEMENT PRACTICES AND THE DISCHARGE OF STORMWATER ONTO OR ACROSS AND GRADING OR OTHER WORK TO BE PERFORMED ON ADJACENT OR DOWNSTREAM PROPERTIES AFFECTED BY THIS PLAN.

B. FOLLOWING INITIAL SOIL DISTURBANCE OR REDISTURBANCE, PERMANENT OR TEMPORAR STABILIZATION SHALL BE COMPLETED WITHIN: A) SEVEN CALENDAR DAYS AS TO THE SURFACE OF ALL PERIMETER CONTROLS, DIKES, SWALES, DITECHES, PERIMETER SLOPES, AND ALL SLOPES GREATER THAN THREE HORIZONTAL TO ONE VERTICAL (3:1) AND B) FOURTEEN DAYS FOR ALL OTHER DISTURBED OR GRADED AREAS ON THE PROJECTS SITE. THE IN–PLACE SEDIMENT CONTROL MEASURES WILL BE MAINTAINED ON A CONTINUING BASIS UNTIL THE SITE IS PERMANENTLY STABILIZED AND ALL PERMIT REQUIREMENTS ARE MET.

C. ON ALL SITES WITH DISTURBED AREAL IN EXCESS OF TWO ACRES, APPROVAL OF THE INSPECTION AGENCY IS REQUESTED UPON COMPLETION OF INSTALLATION OF PERMETER EROSION AND SEDIMENT CONTROLS BEFORE PROCEEDING WITH ANY OTHER EARTH DISTURBANCE OR GRADING. OTHER BUILDING OR GRADING INSPECTION APROVALS WILL NOT BE AUTHORIZED UNTIL THIS INITIAL APPROVAL BY THE INSPECTION AGENCY IS MADE.

D. APPROVAL SHALL BE REQUE3TED UON FINAL STABILIZATION OF ALL SITES WITH DISTURBED AREAS IN EXCESS OF TWO ACRES BEFORE REMOVAL OF CONTROLS.

E. DISTURBED SURFACE AREA: 9.40 AC.
VOLUME OF SPOIL MATERIAL:
VOLUME OF BORROW MATERIAL:
F. LIST PREDOMINANT SOIL TYPES AND GENERAL DESCRIPTION PER P.G.S.C.D. SOIL SURVEY: ADELPHIA, STREWSBURY FINE SANDY LOAM, AND COLLINGTON FINE SANDY LOAM.

HOWARD SOIL CONSERVATION DISTRICT

STANDARD SEDIMENT CONTROL NOTES

1. A minimum of 48 hours notice must be given to the Howard County Department of Inspections, Licenses and Permits, Sediment Control Division prior to the start of any construction (313–1855).
2. All vegetative and structural practices are to be installed according to the provisions to this plan and are to be in conformance with the 1994 MARYLAND STANDARDS AND SPECIFICATIONS FOR SOIL EROSION AND SEDIMENT CONTROL and revisions thereto.
3. Following initial soil disturbance or re–disturbance, permanent or temporary stabilization shall be completed within: a) 7 calendar days for all perimeter sediment control structures, dikes, perimeter slopes and all slopes steeper than 3:1, b) 14 days as to all other disturbed or graded areas on the project site.
4. All sediment traps/basins shown must be fenced and warning signs posted around their perimeter in accordance with Vol 1, Chapter 7 of the HOWARD COUNTY DESIGN MANUAL, Storm Drainage.
5. All disturbed areas must be stabilized within the time period specified above in accordance with the 1994 MARYLAND STANDARDS AND SPECIFICATIONS FOR SOIL EROSION AND SEDIMENT CONTROL for permanent seeding, sod, temporary seeding, and mulching (Sec.G). Temporary stabilization with mulch alone shall only be done when recommended seeding dates do not allow for proper germination and establishment of grasses.
6. All sediment control structures are to remain in place and are to be maintained in operative condition until permission for their removal has been obtained from the Howard County Sediment Control Inspector.
7. Site Analysis:

Total Area of Site	= 6.00 Acres
Area Disturbed	= 1.8 Acres
Area to be roofed or paved	= 0.66 Acres
Area to be vegetatively stabilized	= 0.22 Acres
Total Cut	= 1521 CY.
Total Fill	= 992 CY.
Offsite waste/borrow area location	= A SITE WITH AN ACTIVE GRADING PERMIT

8. Any sediment control practice which is disturbed by grading activity for placement of utilities must be repaired on the same day of disturbance.
9. Additional sediment control must be provided, if deemed necessary by the Howard County Sediment Control Inspector.
10. On all sites with disturbed areas in excess of 2 acres, approval of the inspection agency shall be requested upon completion of installation of perimeter erosion and sediment controls, but before proceeding with any other earth disturbance or grading. Other building or grading inspecting approvals may not be authorized until this initial approval by the inspecting agency is made.
11. Trenches for the construction of utilities is limited to three pipe lengths or that which shall be back–filled and stabilized within one working day, whichever is shorter.

PERMANENT SEEDING NOTES

Apply to graded or cleared areas not subject to immediate further disturbance where a permanent long–lived vegetative cover is needed.

Seedbed Preparation: Loosen upper three inches of soil by raking, disking or other acceptable means before seeding, if not previously loosened.

Soil Amendments: In lieu of soil test recommendations, use one of the following schedules:
1. Preferred – Apply 2 tons/acre dolomitic limestone (92lbs/1000 sq. ft.) and 600 lbs/acre 10–10–10 fertilizer (14 lbs/1000 sq.ft.) before seeding. Harrow or disk into upper three inches of soil. At time of seeding, apply 400 lbs/acre 30–0–0 ureaform fertilizer (9 lobs/1000 sq.ft.)
2. Acceptable – Apply 2 tons/ acre dolomitic limestone (92 lbs/1000 sq.ft.) and 1000 lbs/acre 10–10–10 fertilizer (23 lbs/1000 sq. ft) before seeding. Harrow or disk into upper three inches of soil.

Seeding – For the periods March 1 – April 30, and August 1 – October 15, seed with 60 lbs/acre (1.4 lbs/1000 sq. ft.) of Kentucky 31 Tall Fescue. For the period May 1 – July 31, seed with 60 lbs Kentucky 31 Tall Fescue per acre and 2 lbs/acre (.05 lbs/1000 sq. ft.) of weeping lovegrass. During the period of October 16 – February 28, protect site by: Option 1 – Two tons per acre of well anchored straw mulch and seed as soon as possible in the spring. Option 2 – Use sod. Option 3 – Seed with 60 lobs/acre Kentucky 30 Tall Fescue and mulch with 2 tons/acre well anchored straw.

Mulching – Apply 1-1/2 to 2 tons per acre (70 to 90 lbs/1000 sq. ft.) of unrotted small grain straw immediately after seeding. Anchor mulch immediately after application using mulch anchoring tool or 218 gallons per acre (5 gal/1000 sq. ft.) of emulsified asphalt on flat areas. On slope 8 feet or higher, use 348 gallons per acre (8 gal/1000 sq. ft.) for anchoring.

Maintenance – Inspect all seeding areas and make needed repairs, replacements and reseedings.

TEMPORARY SEEDING NOTES

Apply to graded or cleared areas likely to be re–disturbed where a short–term vegetative cover is needed.

Seedbed preparation: – Loosen upper three inches of soil by raking, disking or other acceptable means before seeding, if not previously loosened.

Soil Amendments: – Apply 600 lbs/acre 10–10–10 fertilizer (14lbs/1000 sq. ft.)

Seeding: – For periods March 1 – April 30 and from August 15 – October 15, seed with 2–1/2 bushel per acre of annual rye (3.2 lbs/1000 sq.ft.). For the period May 1 – August 14, seed with 3 lbs/acre of weeping lovegrass (.07 lbs/1000 sq. ft.). For the period November 16 – February 18, protect site by applying 2 tons/acre of well–anchored straw mulch and seed as soon as possible in the spring, or use sod.

Mulching: – Apply 1–1/2 to 2 tons/acre (70 to 90 lbs/1000 sq.ft.) of unrotted weed–free, small grain straw immediately after seeding. Anchor mulch immediately after application using mulch anchoring tool or 218 gal. per acre (5 gal/1000 sq. ft.) of emulsified asphalt on flat areas. On slope 8 ft. or higher, use 348 gal. per acre (8 gal/1000 sq. ft.) for anchoring.

Refer to the 1994 MARYLAND STANDARDS AND SPECIFICATIONS FOR SOIL EROSION AND SEDIMENT CONTROL additional rates and methods not covered.

THE SUBJECT PROPERTY IS ZONED M-2 PER THE 10-18-93 COMPREHENSIVE ZONING PLAN

PERMANENT SEEDING SUMMARY

No.	Species	Applic. Rate	Seeding Dates	Seeding Depths	Fertilizer Rate (10–20–20) N	P205	K20	Lime Rate
MIX 10*	TALL FESCUE (80%) HARD FESCUE (20%)	120 LB/AC 30 LB/AC	3/1–5/15 8/15–11/15	1"	90 lb/ac (2.0 lb/ 1000 sf)	175 lb/ac (4.0 lb/ 1000 sf)	175 lb/ac (4.0 lb/ 1000 sf)	2 tons/ac (100 lb/ 1000 sf)
MIX 7	TALL FESCUE (83%) WEEPING LOVEGRASS PLUS SERECIA (2%) LESPEDEZA (15%)	110 LB/AC 3 LB/AC 20 LB/AC	5/16–8/14	1"				

Seed Mixture (For Hardiness Zone 7A) (From Table 25)

* TO BE USED BOTTOM OF INFILTRATION BASIN ONLY USE MIX NO. 7 IN ALL OTHER LOCATIONS.

TEMPORARY SEEDING SUMMARY

No.	Species	Application Rate(lb/ac)	Seeding Dates	Seeding Depths	Fertilizer Rate (10–10–10)	Lime Rate
No.	RYE PLUS FOXTAIL MILLET	150	2/1–4/30 5/1–8/14 8/15–11/30	1"	90 lb/ac (2.0 lb/ 1000 sf)	2 tons/ac (100 lb/ 1000 sf)

Seed Mixture (For Hardiness Zone 7A) (From Table 26)

Reviewed for HOWARD SCD and meet Technical Requirements.
U.S.D.A. – Natural Resources Conservation Service — 3/4/03 Date

The development plan is approved for soil erosion and sediment control by the HOWARD SOIL CONSERVATION DISTRICT
Howard SCD — 3/4/03 Date

ENGINEER'S CERTIFICATE

"I Certify that this plan for erosion and sediment control represents a practical and workable plan based on my personal knowledge of the site conditions and that it was prepared in accordance with requirements of the Howard Soil Conservation District."

Richard Sobbott
Signature of Engineer (Print name below signature) — 2/25/03 Date

DEVELOPER'S CERTIFICATE

"I/We Certify that all development and construction will be done according to this plan and that any responsible personal involved in the construction project will have a certificate of Attendance at the Department of the Environment Approved Training Program for the Control of sediment and Erosion before beginning the project. I also authorize periodic on–site inspection by Howard Soil Conservation District"

Michael A. Giovanniello
Signature of Developer (Print name below signature) — 2/25/03 Date

Approved : Department of Planning and Zoning
Director — 3/14/03 Date
Chief, Division of Land Development — 3/14/03 Date
Chief, Development Engineering Division — 3/5/03 Date

SUBDIVISION NAME		SECTION/AREA			PARCEL NO.	
HOWARD COUNTY DETENTION CENTER		N/A			660	
LIBER/FOLIO	BLOCK NO	ZONING	TAX MAP	GRID NO.	HOWARD CO. ELEC. DIST.	CENSUS TR.
2116/282 1009/368 15940, 15941	9,10 AND 15	M–2	43	9	NO–1	6012.02
WATER CODE	B01		SEWER CODE			2221000

PROPOSED IMPROVEMENTS
BUILDING ADDITION, SEE SITE ANALYSIS CHART FOR APPLICABLE DPZ FILE REFERENCE DPZ FILE REF. FOR CURRENT PROJECT SDP–02–20

ati INC. Architects Engineers and Construction Consultants
8950 Route 108 Suite 218
Columbia Maryland 21045 (410)995-4067Fax(410)992-1837

STATE OF MARYLAND — RICHARD LECOUR SOBBOTT — NO. 15222 REGISTERED PROFESSIONAL ENGINEER

DCI DANIEL CONSULTANTS, INC.
CONSULTING ENGINEERING AND PLANNING
8950 Rt. 108 E., Suite 229 Columbia, MD. 21045
Phone: 410-995-0090 Fax: 410-992-7038

REVISIONS		
NO.	DATE	DESCRIPTION

EROSION AND SEDIMENT CONTROL NOTES AND DETAILS
HOWARD COUNTY CENTRAL BOOKING & DISTRICT COURT COMMISSIONERS FACILITY
HOWARD COUNTY, MARYLAND
DATE : FEBRUARY 21, 2003

CAPITAL PROJECT NO. P – 4916
C-19
SET SHEET 19 OF 25

SDP–02–20

H:\PROJECTS\CIVIL\PROGRESSIVE\0121901\C-18.DWG

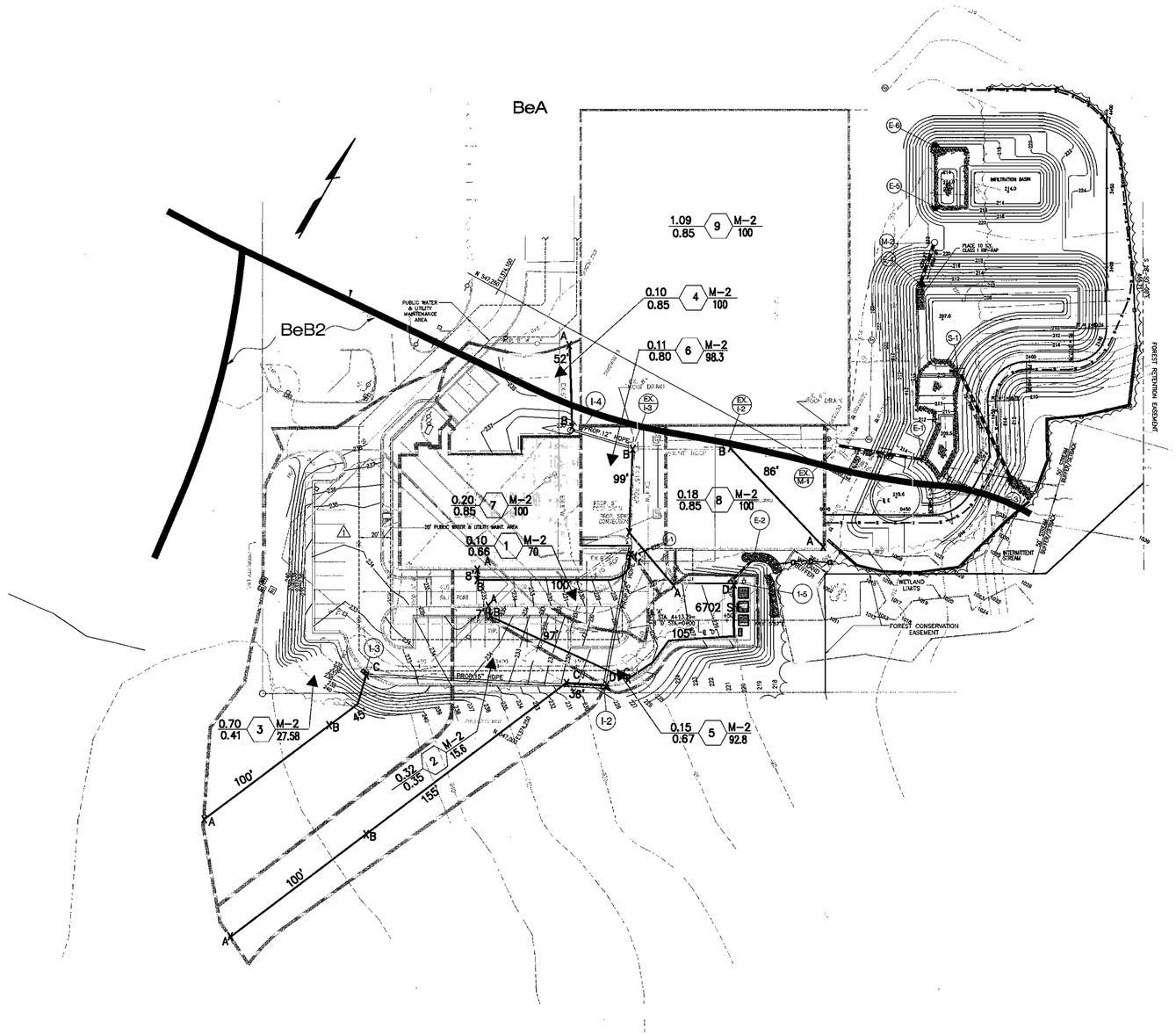

LEGEND

AREA (IN ACRES) / C FACTOR — SUB AREA NO. — ZONING / % IMPERVIOUS

100' — TIME OF CONCENTRATION PATH

POST DEVELOPMENT PLAN

SCALE: 1'=40'-0"

THE SUBJECT PROPERTY IS ZONED M-2 PER THE 10-18-93 COMPREHENSIVE ZONING PLAN

Approved : Department of Planning and Zoning

Director — Date 3/10/03

Chief, Division of Land Development — Date 3/14/03

Chief, Development Engineering Division — Date 3/13/03

SUBDIVISION NAME	SECTION/AREA	PARCEL NO.
HOWARD COUNTY DETENTION CENTER	N/A	660

LIBER/FOLIO	BLOCK NO	ZONING	TAX MAP	GRID NO.	HOWARD CO. ELEC. DIST.	CENSUS TR.
2116/282 1009/368 15840, 15841	9,10 AND 15	M-2	43	9	NO-1	6012.02

WATER CODE	SEWER CODE
B01	2221000

PROPOSED IMPROVEMENTS
BUILDING ADDITION, SEE SITE ANALYSIS CHART FOR APPLICABLE DPZ FILE REFERENCE DPZ FILE REF. FOR CURRENT PROJECT SDP-02-20

ati INC. Architects Engineers and Construction Consultants
8950 Route 108 Suite 218
Columbia Maryland 21045 (410)995-4067Fax(410)992-1837

DCI DANIEL CONSULTANTS, INC.
CONSULTING ENGINEERING AND PLANNING
8950 Rt. 108 E., Suite 229 Columbia, MD. 21045
Phone: 410-995-0090 Fax: 410-992-7038

REVISIONS

NO.	DATE	DESCRIPTION
1	3/12/03	ADDENDUM NO. 1

DRAINAGE AREA

HOWARD COUNTY CENTRAL BOOKING & DISTRICT COURT COMMISSIONERS FACILITY
HOWARD COUNTY, MARYLAND

DATE : FEBRUARY 21, 2003

CAPITAL PROJECT NO. P - 4916

C-20

SET SHEET 20 OF 25

SDP-02-20

H:\PROJECTS\CIVIL\0121901\PROGRESIVE\C-20.DWG (C-19)

PAVEMENT AND CURB & GUTTER ELEVATIONS FROM BASELINE "A"

16' Left Back of Sidewalk	X-Slope	12' Left Top of Curb	12' Left Bottom of Curb	11' Left Edge of Gutter	X-Slope	Base Line Station	Profile Grade Elevation	X-Slope %	12' Rt. Flow Line or Ed of Gutter	X-Slope	32' Right Bottom of Curb	32' Right Top of Curb	5' to Hinge Pt. @4%	Bottom Of Curb Point #
		238.49	237.89	237.94	-2.94	82.84	238.26							8
238.20	2.00	238.12	237.52	237.57	-2.940	87.5	237.89	2.940	238.24					
238.04	2.00	237.96	237.36	237.40	-2.649	90	237.69	2.649	238.01					
237.52	2.00	237.44	236.84	236.88	-1.778	97.5	237.08	1.778	237.29					
237.35	2.00	237.27	236.67	236.72	-1.487	100	236.88	1.487	237.06					
236.85	2.00	236.77	236.17	236.22	-0.589	107.73	236.28	0.589	236.35	2.00	236.75	237.35	237.55	11 & 12
236.67	2.00	236.59	235.99	236.03	-0.325	110	236.07	0.325	236.11	2.00	236.51	237.11	237.31	
236.00	2.00	235.92	235.32	235.36	0.838	120	235.27	-1.625	235.08	2.00	235.48	236.08	236.28	
235.66	2.00	235.58	234.98	235.03	1.419	125	234.87	-3.250	234.48	2.00	234.88	235.48	235.68	
235.46	2.00	235.38	234.78	234.82	2.000	130	234.60	-2.600	234.30	2.00	234.70	235.30	235.50	
235.42	2.00	235.34	234.74	234.78	2.174	131.5	234.54	-2.235	234.26	2.00	234.66	235.06	235.26	
235.31	2.00	235.23	234.63	234.67	3.162	140	234.32	-1.471	234.16	2.00	234.30	235.90	236.10	
235.20	2.00	235.12	234.52	234.56	4.325	150	234.08	-1.101	233.96	2.00	234.36	234.96	235.16	
235.11	2.00	235.03	234.43	234.47	5.129	156.92	233.91	-2.000	233.67	2.00	234.07	234.67	234.87	13.00
				Edge of		160	233.83	-2.000	233.59	2.00	233.99	234.59	234.79	
				Pav't		170	233.58	-2.000	233.34	2.00	233.74	234.34	234.54	
				Lt. 12'		175	233.46	-2.000	233.22	2.00	233.62	234.22	234.42	
				233.78	3.273	177.92	233.39	-2.000	233.15	2.00	233.55	234.15	234.35	
				233.73	3.267	180	233.34	-2.000	233. 0	2.00	233.50	234.10	234.30	
				233.48	3.236	190	233.09	-2.000	232.85	2.00	233.25	233.85	234.05	
				233.22	3.205	200	232.84	-2.000	232.60	2.00	233.00	233.60	233.80	
				233.22	3.205	200.17	232.84	-2.000	232.60	2.00	233.00	233.60	233.80	
						203.06	232.77	-2.000	232.53	2.00	232.93	233.53	233.73	17.00
						204.22	232.74	-2.000	232.50	2.00	232.57*	233.17		18.00
				233.09	3.189	205.33	232.71	-2.000	11' to EG		12' to BC	12' to TC	17' to HP	
						207.17	232.66	-2.000	232.44		232.40	233.00	233.20	19.00
				232.97	3.175	210	232.59	-2.000	232.37		232.33	232.93	233.13	
				232.77	3.144	220	232.39	-2.000	232.17		232.13	232.73	232.93	
				232.76	3.129	225	232.38	-2.000	232.16		232.12	232.72	232.92	
				232.80	3.114	230	232.43	-2.000	232.21		232.17	232.77	232.97	
		32' Left		233.10	3.084	239.83	232.73	-2.000	232.51		232.47	233.07	233.19*	20 & 22
		Top		233.10	3.083	240	232.73	-2.000	232.51		232.47	233.07	233.19*	
		of Curb		233.44	3.063	246.58	233.07	-2.000	232.85		232.81	233.41	233.53*	
234.78	2.00	234.65		233.44	3.063	246.58	233.07	-2.000	232.85		232.81	233.41	233.53*	21 & 23
234.98	2.00	234.85		233.64	3.031	250	233.28	-2.000	233.06		233.02	233.62	233.74*	
235.29	2.00	235.16		233.92	3.219	254.3	233.53	-2.000	233.31		233.27	233.87	233.99*	
235.52	2.00	235.39		234.21	2.906	260	233.86	-2.000	233.64		233.60	234.20	234.32*	
235.89	2.00	235.76		234.58	2.906	269.3	234.23	-2.000	234.01		233.97	234.57	234.69*	
235.89	2.00	235.76		234.59	2.875	270	234.24	-2.000	234.02		233.98	234.58	234.7*	
235.89	2.00	235.76		234.61	2.750	275	234.28	-2.000	234.06		234.02	234.62	234.74*	
235.89	2.00	235.76		234.57	2.969	280	234.21	-2.000	233.99		233.95	234.55	234.67*	
235.89	2.00	235.76		234.52	3.219	283.5	234.13	-2.000	233.91		233.87	234.47	234.59*	
235.63	2.00	235.50		234.33	2.875	290	233.98	-2.000	233.76		233.72	234.32	234.44*	
235.29	2.00	235.16		234.02	2.719	298.5	233.69	-2.000	233.47		233.43	234.03	234.15*	
235.24	2.00	235.11		233.95	2.781	300	233.62	-2.000	233.40		233.36	233.96	234.08*	
234.69	2.00	234.56		233.36	3.000	310	233.00	-2.000	232.78		232.74	233.34	233.46*	
233.85	2.00	233.72		232.50	3.125	320	232.12	-2.000	231.90		231.86	232.46	232.58*	
234.44	2.00	234.31		233.05	3.313	325	232.65	-2.000	231.43		231.31	231.91	232.11*	
232.91	2.00	232.78		231.55	3.156	330	231.17	-2.000	230.95		230.91	231.51	231.63*	
231.97	2.00	231.84		230.60	3.188	340	230.22	-2.000	230.00		229.96	230.56	230.68*	
231.44	2.00	231.31		230.07	3.219	345.58	229.68	-2.000	229.46		229.42	230.02	230.14*	24 & 25
				229.65	2.999	350	229.29	-2.000	229.07		229.03	229.63	229.75*	
				228.96	2.503	360	228.66	-2.000	228.44		228.40	229.00	229.12*	
				228.62	2.006	370	228.40	-2.000	228.18		228.14	228.74	228.94	
				228.62	2.000	370.13	228.40	-2.000	228.18		228.14	228.74	228.94	27 & 28
				228.56	1.685	375	228.36	-2.000	228.14		228.10	228.70	228.90	
				228.48	1.362	380	228.32	-2.000	228.10		228.06	228.66	228.86	
				228.32	0.716	390	228.23	-2.000	228.01		227.97	228.57	228.77	
						395.3	228.19	-2.000	227.97		227.92	228.52	228.72	29
				228.23	0.358	395.54	228.19	-2.000	12' to EP					
				228.16	0.070	400	228.15	-2.000	227.91					
				227.95	-0.562	PT409.78	228.02	-2.000	227.78					
				227.95	-0.576	410	228.02	-1.960	227.78					
						413.79	227.92	-1.170	227.78					
				227.57	-1.222	420	227.72	-0.164	227.70					
				227.42	-1.419	423.04	227.59	0.383	227.64					
				227.31	-1.545	425	227.50	0.735	227.59					
				227.05	-1.868	430	227.27	1.633	227.47					
				226.94	-2.000	432.04	227.18	2.000	227.42					
				226.61	-1.821	439.79	226.83	1.852	227.05					
				226.60	-1.816	440	226.82	1.848	227.04			227.64	227.84	
				226.25	-1.692	448.31	226.45	1.692	226.65	226.66				34
				226.18	-1.585	450	226.37	1.657	226.57			227.17	227.37	
				225.89	-1.425	456.92	226.06	1.525						37
				225.79	-1.370	459.27	225.95	1.480	226.13			226.73	226.93	36

* HINGE POINT IS 3 FT FROM FACE OF CURB.

CAPITAL PROJECT NO. P-4916 PAVEMENT ELEVATIONS, BASELINE "C"

9' Left Top of Curb	9' Left Bottom of Curb	8' Left Edge of Gutter	X-Slope	Station	Profile Grade Elevation	X-Slope	8' Right Edge of Gutter	9' Right Bottom of Curb	9' Right Top of Curb	Bottom Of Curb Point #
235.29	234.69		3.11	238.58	234.41	3.110				15
235.29	234.69		2.56	239.83	234.46	2.560	234.25	234.21	234.41	16
235.29	234.69		2.00	240.00	234.47	2.000	234.31	234.27	234.47	
235.29	234.69		0.44	244.30	234.65	0.440	234.61	234.57	234.17	
235.35	234.75		0.00	246.58	234.75	0.000	234.75	234.71	235.31	
235.49	234.89		0.00	250.00	234.89	0.000	234.89	234.85	235.45	
235.30	235.30		0.00	259.49	235.30	0.000	235.30	235.50	235.30	
			SALLY PORT FOR ELEVATION							
			SEE ARCHITECTURAL DRAWING							
				SHEET						
235.20	235.20		0.00	287.16	235.20	0.000	235.20	235.20	235.20	
235.29	235.10		0.00	289.40	235.10	0.000	235.10	235.10	235.70	
235.29	235.07		0.00	290.00	235.07	0.000	235.07	235.07	235.67	
235.29	234.72	234.72	0.00	298.50	234.72	0.000	234.72	234.72	235.32	
235.18	234.58	234.62	(0.08)	300.00	234.63	0.076	234.66	234.66	235.26	
234.55	233.95	233.99	(0.58)	310.00	234.04	0.580	234.09	234.09	234.69	
233.63	233.03	233.07	(1.08)	320.00	233.16	1.084	233.25	233.26	233.85	
333.12	332.52	332.56	(1.34)	325.00	332.67	1.336	332.78	332.79	333.39	
232.61	232.01	232.05	(1.59)	330.00	232.18	1.588	232.31	232.32	232.92	
231.59	230.99	231.03	(2.09)	340.00	231.20	2.092	231.37	231.39	231.97	
231.02	230.42	230.46	(2.37)	345.58	230.65	2.373	230.84	230.86	231.46	
230.57	229.97	230.01	(2.60)	350.00	230.22	2.596	230.43	230.45	231.05	
230.30	229.70	229.74	(2.73)	352.58	229.96	2.726	230.18	230.21	230.81	
229.54	228.94	228.98	(3.10)	360.00	229.23	3.100	229.48	229.51	230.11	
228.52	227.92	227.96	(3.60)	370.00	228.25	3.604	228.54	228.57	229.17	
228.51	227.91	227.95	(3.61)	370.13	228.24	3.610	228.53	228.56	229.16	26
228.49	227.89	227.93	(3.62)	370.38	228.22					35
		227.45	(3.86)	375.00	227.76					
		226.94	(4.11)	380.00	227.27					
		226.61	(4.28)	383.38	226.95					

PAVEMENT AND CURB & GUTTER ELEVATIONS FROM BASELINE "D"

Hinge Point Lt 5'@ 4%	23' Left Top of Curb	23' Left Bottom of Curb	22' Left Edge of Gutter	X-Slope	Base Line Station	Profile Grade Elevation	X-Slope	12' Right Bottom of Curb	12' Right Top of Curb	Hinge Point Lt 5'@ 4%	Bottom Of Curb Point #
					22	227.18	2	227.12	227.72	227.92	
					26.76	226.89	2	227.13	227.73	227.93	***31***
227.21	227.21	***226.41***	226.45	-2	26.97	226.89	2	***227.13***	227.73	227.93	***30***
226.42	226.22	225.62	225.66	-2	40	226.10	2	226.34	226.94	227.14	
225.82	225.62	225.02	225.06	-2	50	225.50	2	225.74	226.34	226.54	
				-2	56	225.14	2	225.38	225.98	226.18	***33 & 32***

file:Elev BL D for plan.wb3 Revised: 10/6/2001 for Dumpster

THE SUBJECT PROPERTY IS ZONED M-2 PER THE 10-18-93 COMPREHENSIVE ZONING PLAN

Approved : Department of Planning and Zoning

Director — Date 3/20/03

Chief, Division of Land Development — Date 3/14/03

Chief, Development Engineering Division — Date 3/13/03

SUBDIVISION NAME	SECTION/AREA				PARCEL NO.	
HOWARD COUNTY DETENTION CENTER	N/A				660	
LIBER/FOLIO 2116/282 1009/368 15840, 15841	BLOCK NO 9,10 AND 15	ZONING M-2	TAX MAP 43	GRID NO. 9	HOWARD CO. ELEC. DIST. NO-1	CENSUS TR. 6012.02
WATER CODE B01			SEWER CODE 2221000			

PROPOSED IMPROVEMENTS
BUILDING ADDITION, SEE SITE ANALYSIS CHART FOR APPLICABLE DPZ FILE REFERENCE DPZ FILE REF. FOR CURRENT PROJECT SDP-02-20

ati INC. Architects Engineers and Construction Consultants
8950 Route 108 Suite 218
Columbia Maryland 21045 (410)995-4067Fax(410)992-1837

SEAL: STATE OF MARYLAND RICHARD LECOUR SOBBOTT PROFESSIONAL ENGINEER

DCI DANIEL CONSULTANTS, INC.
CONSULTING ENGINEERING AND PLANNING
8950 Rt. 108 E., Suite 229 Columbia, MD. 21045
Phone: 410-995-0090 Fax: 410-992-7038

REVISIONS

NO.	DATE	DESCRIPTION
1	3/12/03	ADDENDUM NO. 1

PAVEMENT ELEVATIONS
HOWARD COUNTY CENTRAL BOOKING & DISTRICT COURT COMMISSIONERS FACILITY
HOWARD COUNTY, MARYLAND
DATE : FEBRUARY 21, 2003

CAPITAL PROJECT NO. P - 4916

C-21

SET SHEET 21 OF 25

SDP-02-20

H:\PROJECTS\CIVIL\0121901\PROGRESIVE\C-21.DWG (C-20)

PLAN LEGEND

- BeB2 — SOIL TYPE AND LIMIT
- STEEP SLOPE 25 % AND GREATER
- STEEP SLOPE 15 % TO 25 %
- EXISTING TREE LINE
- FOREST STAND LIMIT AND DESCRIPTION
- WETLAND LIMIT INCLUDING 25' BUFFER
- INTERMITTENT STREAM

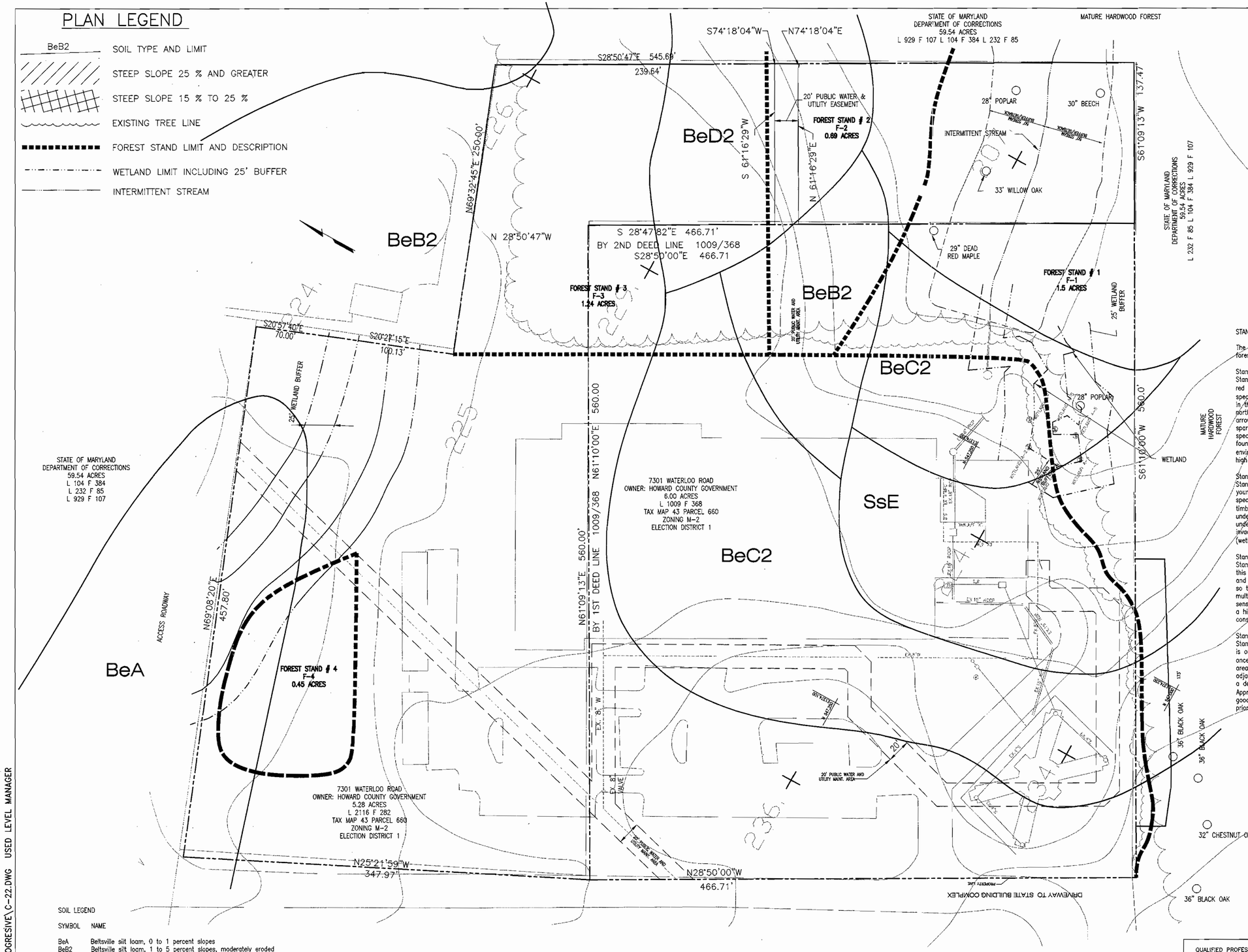

SITE PLAN
SCALE 1"=40'

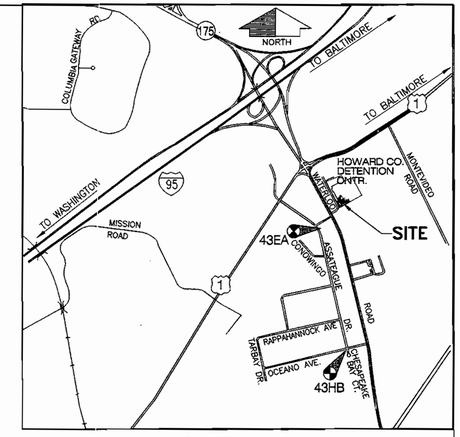

VICINITY MAP
SCALE: 1"=2000'

STAND NARRATIVE

The site consists of about 3.9 acres of woodlands on a 11.28 acre site. 2.18 acres of this forest will be protected by a forest retention easement as shown on this plan.

Stand F1 (0.86 Ac on 1009/71 and 0.64 Ac on 2116/282)
Stand F1 is a mature mixed hardwood forest. The dominant species is tulip poplar but there are also a significant number of red maple and chestnut oak. The size class is medium to large saw timber averaging 18" dbh. The stand contains two specimen trees (a 30" Beech and 33" Willow Oak) and three additional trees, which are newly 30" in diameter. The stocking is in the optimum range for tree growth. This stand is contiguous with mature hardwoods stands of the same description to northeast and southeast of the site the understory is typical of mature mixed stream valley forests with a large percentage of arrow wood viburnum and spice bush in lowland environments and serviceberry in the upper areas. The ground cover is fairly sparce because of the dense canopy. Cinnamon fern is found in large numbers closer to the wetland areas the only invasive species noted were widely scattered areas of Japanese Honeysuckle closer to the woods edge. Few signs of distress were found. A large dead oak was also found possibly killed by gypsy moth larva. Approximately 85% of the stand covers environmentally sensitive areas (wetlands and wetland buffers). This together with its inherent high quality makes this stand a high preservation priority.

Stand F2 (0.22 Ac on 1009/371 and 0.48 Ac on 2116/282)
Stand F2 is a mixed hardwood forest containing a large percentage of red maple. This forest stand appears to be much younger than the trees in forest stand F-1. A 1968 aerial photograph shows this area was once open field. The only other species within the stand in great numbers is some widely scattered tulip poplar. The size class is small to medium saw timber averaging 9" dbh. The stand contains no specimen trees or unusual species. Because of the dense canopy the understory and ground cover is relatively sparce and composed mainly of tree regeneration and some Smilax species the understory becomes more dense closer to the northwest edge of the Japanese Honeysuckle and multiflora rose are beginning to invade. Few signs of distress were found. Approximately 20 percent of the stand covers environmentally sensitive areas (wetland buffer, steep slopes). This together with the developing hardwood forest make this stand a high preservation priority.

Stand F3 (0.40 Ac on 1009/371 and 0.84 Ac on 2116/282)
Stand F3 is a mix of trees typical of middle succession growth on abandoned farm fields. A 1968 aerial photograph shows this area was once open field. Red mulberry is the dominant species. These trees are being displaced by taller red maples and chestnut oaks which are now widely scattered over approximately 60% of the stand. The canopy is not completely closed so the understory is much denser than in forest stands F-1 and F-2. The understory and ground cover species include multiflora rose poison ivy, Japenese honey suckle and herbaevous plants such as goldenrod and ragweed. No environmentally sensitive areas are covered by the stand. Because the stand is on well-drained upland soils the stand could in time become a high quality mixed forest habitat contiguous with stand F-2. At this time however its preservation priority would be considered moderate.

Stand F4 (0.45 Ac all on 2116/282)
Stand F4 is a mix of trees typical of middle succession growth an abandoned farm fields in low land environments. The stand is on flat land that appears to be poorly drained adjacent to a wetland area. A 1968 aerial photograph shows this area was once open field. Sweet birch is the dominant species and averages 7" dbh. Other species are also typical of moist lowland areas and include persimmon, red maple and a few sweet gum. The stand is isolated from all other stands on site and on adjacent parcels by buildings and roadways. The understory is mainly tree regeneration; the ground cover is almost exclusively a dense growth of poison ivy. Along the woods edge there is some Japenese Honeysuckle. Few signs of distress were found. Approximately 25% of the stand covers environmentally sensitive areas (wetland and wetland buffer) although the stand has good potential to evolve into a quality lowland hardwood forest because of its small size and isolated location its preservation priority would be considered low.

THE SUBJECT PROPERTY IS ZONED M-2 PER THE 10-18-93 COMPREHENSIVE ZONING PLAN

Approved : Department of Planning and Zoning

Director — Date 3/10/03

Chief, Division of Land Development — Date 3/14/03

Chief, Development Engineering Division — Date 3/5/03

SUBDIVISION NAME	SECTION/AREA	PARCEL NO.
HOWARD COUNTY DETENTION CENTER	N/A	660

LIBER/FOLIO	BLOCK NO	ZONING	TAX MAP	GRID NO.	HOWARD CO. ELEC. DIST.	CENSUS TR.
2116/282 1009/368	9, 10 AND15	M-2	43	9	NO-1	6012.02

WATER CODE	SEWER CODE
B01	2221000

PROPOSED IMPROVEMENTS
BUILDING ADDITION, SEE SITE ANALYSIS CHART FOR APPLICABLE DPZ FILE REFERENCE DPZ FILE REF. FOR CURRENT PROJECT SDP-02-20

QUALIFIED PROFESSIONAL PER THE MARYLAND FOREST CONSERVATION ACT
DATE 2/25/03

SOIL LEGEND

SYMBOL	NAME
BeA	Beltsville silt loam, 0 to 1 percent slopes
BeB2	Beltsville silt loam, 1 to 5 percent slopes, moderately eroded
BeC2	Beltsville silt loam, 5 to 10 percent slopes, moderately eroded
BeD2	Beltsville silt loam, 10 to 15 percent slopes, moderately eroded
L1	Leonardtown silt loam
SsE	Sassafras soils, 15 to 40 percent slopes

ati INC. Architects Engineers and Construction Consultants
8950 Route 108 Suite 218
Columbia Maryland 21045 (410)995-4067 Fax(410)992-1837

SEAL: STATE OF MARYLAND — RICHARD E. SCHMITT — No. 19324 — PROFESSIONAL ENGINEER

DCI DANIEL CONSULTANTS, INC.
CONSULTING ENGINEERING AND PLANNING
8950 Rt. 108 E., Suite 229 Columbia, MD. 21045
Phone: 410-995-0090 Fax: 410-992-7038

REVISIONS

NO.	DATE	DESCRIPTION

FOREST STAND DELINATION

HOWARD COUNTY CENTRAL BOOKING & DISTRICT COURT COMMISSIONERS FACILITY
HOWARD COUNTY, MARYLAND

DATE : FEBRUARY 21, 2003

CAPITAL PROJECT NO. P - 4916

C-22

SET SHEET 22 OF 25

SDP-02-20

H:\PROJECTS\CIVIL\0121901\PROGRESIVE\C-22.DWG USED LEVEL MANAGER

PLAN LEGEND

- BeB2 — SOIL TYPE AND LIMIT
- STEEP SLOPE 25 % AND GREATER
- STEEP SLOPE 15 % TO 25 %
- EXISTING TREE LINE
- FOREST STAND LIMIT AND DESCRIPTION
- WETLAND LIMIT INCLUDING 25' BUFFER
- INTERMITTENT STREAM
- LIMIT OF DISTURBANCE
- FOREST RETENTION EASEMENT(ON SITE)
- FOREST RETENTION EASEMENT(OFF SITE)
- FOREST RETENTION SIGNAGE
- TREE PROTECTIVE FENCE

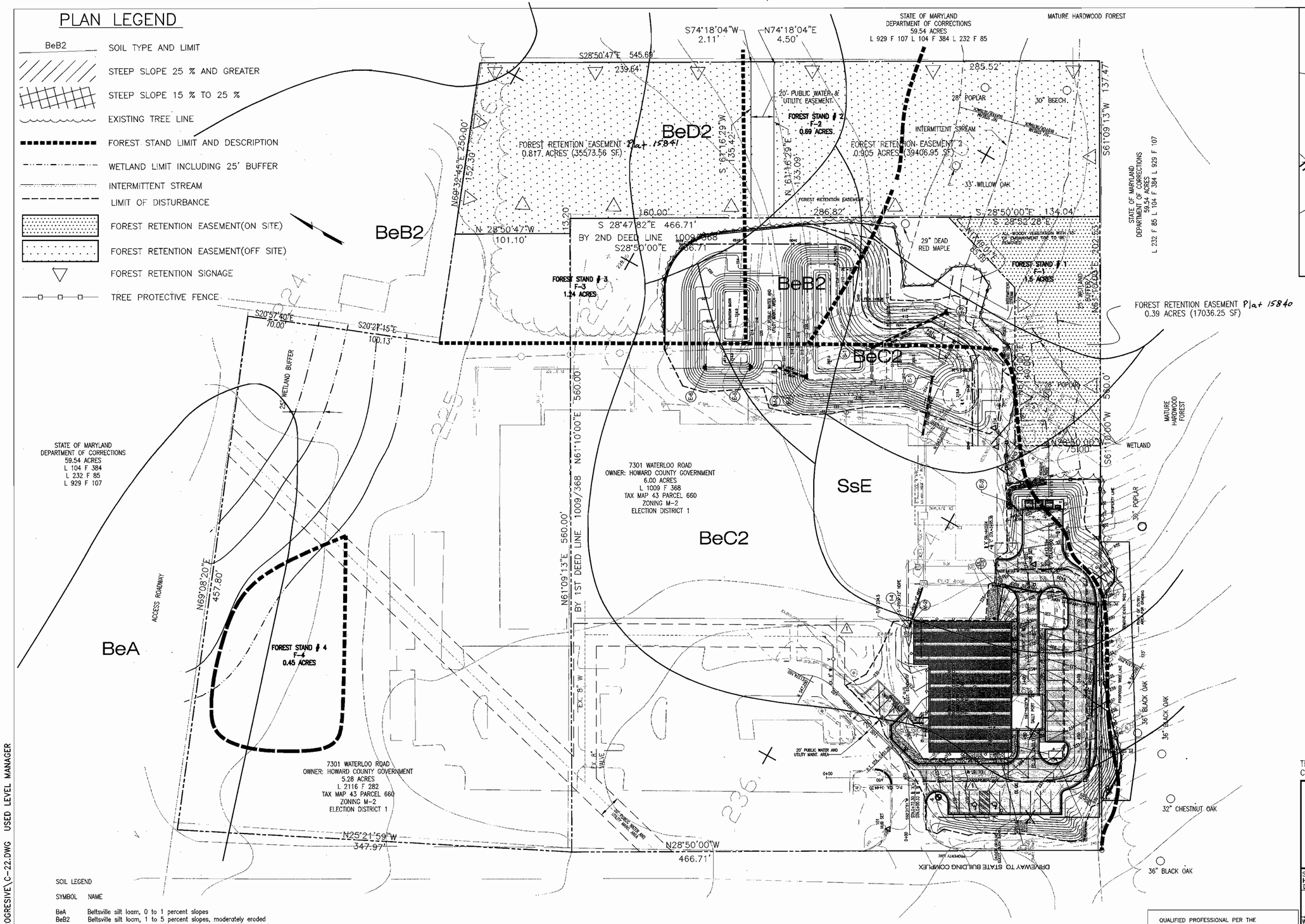

SITE PLAN
SCALE 1"=40'

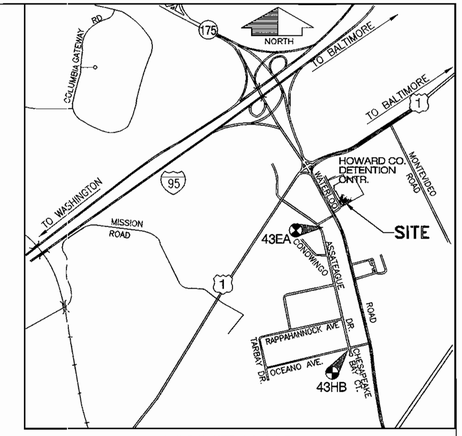

VICINITY MAP
SCALE: 1"=2000'

THE SUBJECT PROPERTY IS ZONED M-2 PER THE 10-18-93 COMPREHENSIVE ZONING PLAN

Approved : Department of Planning and Zoning

Director — Date 3/10/03

Chief, Division of Land Development — Date 3/10/03

Chief, Development Engineering Division — Date 3/10/03

SUBDIVISION NAME	SECTION/AREA	PARCEL NO.
HOWARD COUNTY DETENTION CENTER	N/A	660

LIBER/FOLIO	BLOCK NO	ZONING	TAX MAP	GRID NO.	HOWARD CO. ELEC. DIST.	CENSUS TR.
2116/282 1009/368 15840, 15841	9, 10 AND15	M-2	43	9	NO-1	6012.02

WATER CODE	SEWER CODE
B01	2221000

PROPOSED IMPROVEMENTS
BUILDING ADDITION, SEE SITE ANALYSIS CHART FOR APPLICABLE DPZ FILE REFERENCE DPZ FILE REF. FOR CURRENT PROJECT SDP-02-20

QUALIFIED PROFESSIONAL PER THE MARYLAND FOREST CONSERVATION ACT

Richard Sabbott 3/12/03
DATE

SOIL LEGEND

SYMBOL	NAME
BeA	Beltsville silt loam, 0 to 1 percent slopes
BeB2	Beltsville silt loam, 1 to 5 percent slopes, moderately eroded
BeC2	Beltsville silt loam, 5 to 10 percent slopes, moderately eroded
BeD2	Beltsville silt loam, 10 to 15 percent slopes, moderately eroded
L1	Leonardtown silt loam
SsE	Sassafras soils, 15 to 40 percent slopes

H:\PROJECTS\CIVIL\0121901\PROGRESIVE\C-22.DWG USED LEVEL MANAGER

ati INC. Architects Engineers and Construction Consultants
8950 Route 108 Suite 218
Columbia Maryland 21045 (410)995-4067Fax(410)992-1837

SEAL

DCI DANIEL CONSULTANTS, INC.
CONSULTING ENGINEERING AND PLANNING
8950 Rt. 108 E., Suite 229 Columbia, MD. 21045
Phone: 410-995-0090 Fax: 410-992-7038

REVISIONS

NO.	DATE	DESCRIPTION
1	3/12/03	ADDENDUM NO 1

FOREST CONSERVATION PLAN

HOWARD COUNTY CENTRAL BOOKING & DISTRICT COURT COMMISSIONERS FACILITY
HOWARD COUNTY, MARYLAND

DATE : FEBRUARY 21, 2003

CAPITAL PROJECT NO. P - 4916

C-23

SET SHEET 23 OF 25

SDP-02-20

FOREST CONSERVATION WORK SHEET

I. BASIC SITE DATA

	ACRES (1/10 ACRE)
GROSS SITE AREA	6.00
AREA WITHIN 100 YEAR FLOOD PLAIN	0.00
AREA WITHIN AGRICULTURAL USE OR PRESERVATION PARCEL (IF APPLICABLE)	0.00
NET TRACK AREA	6.00
LAND USE CATEGORY (R-RLD, R-RMD, R-S, C/10, I, R-20)	1

II. INFORMATION FOR CALCULATIONS

A.	NET TRACT	6.00
B.	REFORESTATION THRESHOLD (20% X A)	1.20
C.	AFFORESTATION MINIMUM (15% X A)	0.90
D.	EXISTING FOREST ON NET TRACK AREA	1.48
E.	FOREST AREAS TO BE CLEARED	1.09*
F.	FOREST AREAS TO BE RETAINED	0.39

* ONLY 0.65 AC REMOVED AS PART OF THIS PROJECT.

III. DETERMINING REQUIREMENTS: AFFORESTATION OR REFORESTATION

1. REFORESTATION

   IF EXISTING FOREST AREAS EQUAL OR EXCEED THE AFFORESTATION MINIMUM (IF D EQUALS OR IS MORE THAN C), AND CLEARING OF FOREST AREAS IS PROPOSED REFORESTATION REQUIREMENTS MAY APPLY.

   GO TO SECTION IV

   IF EXISTING FORESTS EXCEED THE AFFORESTATION MINIMUM (IF D EQUALS OR IS MORE THAN C) AND NO CLEARING OF EXISTING FOREST RESOURCES IS PROPOSED, NO REFORESTATION IS REQUIRED. NO FURTHER CALCULATIONS ARE NEEDED.

2. AFFORESTATION

   IF EXISTING FOREST AREA ARE LESS THAN THE AFFORESTATION MINIMUM (IF D IS LESS THAN C). AFFORESTATION REQUIREMENTS APPLY.

   GO TO SECTION V

IV. REFORESTATION CALCULATIONS

A.	NET TRACT AREA	6.00
B.	REFORESTATION THRESHOLD (20% X A)	1.20
C.	AFFORESTATION MINIMUM (15% X A)	0.90
D.	EXISTING FOREST ON NET TRACK AREA	1.48
E.	FOREST AREAS TO BE CLEARED	1.09
F.	FOREST AREAS TO BE RETAINED	0.39
G.	FOREST AREAS CLEARED ABOVE REFORESTATION THRESHOLD (D – F, IF F EQUALS OR IS GREATER THAN B, ALTERNATIVE 1) (D – B, IF F IS LESS THAN B ALTERNATIVE 2)	0.28
H.	FOREST AREAS CLEARED BELOW REFORESTATION THRESHOLD (B – F, IF APPLICABLE)	0.81
I.	FOREST AREAS RETAINED ABOVE REFORESTATION THRESHOLD (F – B, RETENTION CREDIT, IF APPLICABLE)	N.A.

SELECT THE ALTERNATIVE THAT APPLIES:

1. CLEARING ABOVE THE THRESHOLD ONLY:
   IF FOREST AREAS TO BE RETAINED EQUAL OR ARE GREATER THAN THE REFORESTATION THRESHOLD (IF F EQUALS OR IS GREATER THAN B), THE FOLLOWING CALCULATIONS APPLY:

REFORESTATION FOR CLEARING ABOVE THRESHOLD G X 1/4	0.00
CREDIT FOR FOREST AREAS RETAINED ABOVE THRESHOLD I = RETENTION CREDIT	0.00
TOTAL REFORESTATION REQUIRED (G X 1/4) – I	0.00

   IF THE TOTAL REFORESTATION REQUIREMENT IS EQUAL TO OR LESS THAN 0, NO REFORESTATION IS REQUIRED.

2. CLEARING BELOW THE THRESHOLD:
   IF FOREST AREAS TO BE RETAINED ARE LESS THAN THE REFORESTATION THRESHOLD (IF F IS LESS THAN B), THE FOLLOWING CALCULATIONS APPLY:

REFORESTATION FOR CLEARING ABOVE THRESHOLD G X 1/4	0.10
REFORESTATION FOR CLEARING BELOW THRESHOLD H X 2	1.62
TOTAL REFORESTATION REQUIRED (G X 1/4) + (H X 2)	1.72

SINCE CLEARING OCCURS BELOW THE THRESHOLD, NO FOREST RETENTION CREDIT IS POSSIBLE.

CONSTRUCTION PERIOD PRACTICES

TRAFFIC IS TO BE EXCLUDED FROM THE RETENTION AREAS WHICH WILL BE FENCED AND POSTED PRIOR TO CONSTRUCTION. EVERY EFFORT WILL BE MADE TO AVOID DISTURBANCE OF THE PRIMARY ROOT ZONE OF TREES IN THE RETENTION AREA. THIS MEANS, GENERALLY, THAT THE ROOT ZONE WILL NOT BE DISTURBED WITHIN THE DRIP LINE OF THE TREES IN THE RETENTION AREA. FOR TREES WHICH ARE TO BE RETAINED OUTSIDE THE RETENTION AREA THE SAME CARE APPLIES. ADDITIONALLY, THESE TREES WILL BE PROTECTED FROM COMPACTING BY CONSTRUCTION EQUIPMENT, STORAGE OF CONSTRUCTION MATERIALS, AND FROM FILLING OVER THEIR ROOT ZONES WITHIN THE DRIP LINE. PARKING OF EQUIPMENT AND STORAGE OF MATERIALS WILL BE DIRECTED AWAY FROM RETENTION AREAS, STREAMS, AND OTHER TREES WHICH ARE TO BE RETAINED.

POST CONSTRUCTION PRACTICES

RETENTION AREA FENCING IS TO BE RETAINED FOR THE REQUIRED PERIOD. TREES ON THE MARGINS OF THE RETENTION AREAS WILL BE CHECKED FOR SIGNS OF DECLINE CAUSED BY CONSTRUCTION DISTURBANCE, AND TREATED APPROPRIATELY. ANY EROSION PROBLEMS WILL BE CORRECTED, PARTICULARLY THOSE THAT IMPACT THE RETENTION AREAS. THE NEW HOMEOWNERS WILL RECEIVE BRIEF INSTRUCTION ABOUT THE IMPORTANCE OF THE RETENTION AREAS AND THEIR OWN RIGHTS AND RESPONSIBILITIES WITH RESPECT TO THOSE AREAS ON THEIR PROPERTY. IN GENERAL THE CONSTRUCTION PERIOD PROHIBITIONS WILL APPLY, THE NEW OWNERS WILL BE INSTRUCTED TO MINIMIZE USE OF HERBICIDES AND INSECTICIDES ADJACENT TO RETENTION AREAS AND THEY WILL BE ENCOURAGED TO FEATURE NATIVE SPECIES IN ANY PLANTING DONE ON THE NEW LOTS.

PROVIDE SIGNS EVERY 50' TO 100'

Blaze Orange Plastic Mesh

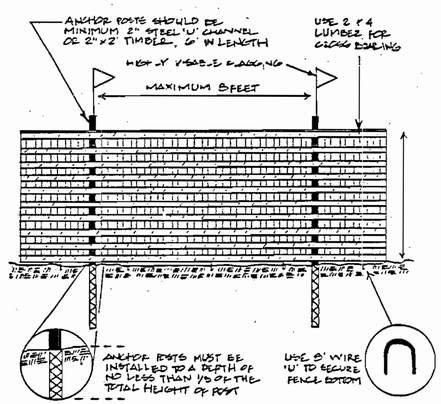

Notes
1. Forest protection device only.
2. Retention Area will be set as part of the review process.
3. Boundaries of Retention Area should be staked and flagged prior to installing device
4. Root damage should be avoided.
5. Protective signage may also be used.
6. Device should be maintained throughout construction.

Source: Prince George's County, Maryland Woodland Conservation Manual

Signage

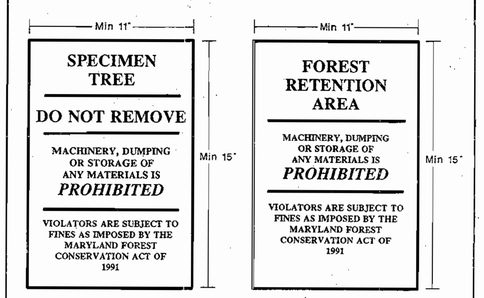

THE SUBJECT PROPERTY IS ZONED M-2 PER THE 10-18-93 COMPREHENSIVE ZONING PLAN

Approved : Department of Planning and Zoning

Director — Date 3/10/03

Chief, Division of Land Development — Date 3/14/03

Chief, Development Engineering Division — Date 3/14/03

SUBDIVISION NAME	SECTION/AREA	PARCEL NO.
HOWARD COUNTY DETENTION CENTER	N/A	660

LIBER/FOLIO	BLOCK NO	ZONING	TAX MAP	GRID NO.	HOWARD CO. ELEC. DIST.	CENSUS TR.
2116/282 1009/368 ~~1844/184~~	9, 10 AND15	M-2	43	9	NO-1	6012.02

WATER CODE	SEWER CODE
B01	2221000

PROPOSED IMPROVEMENTS
BUILDING ADDITION, SEE SITE ANALYSIS CHART FOR APPLICABLE DPZ FILE REFERENCE DPZ FILE REF. FOR CURRENT PROJECT SDP-02-20

BH ati INC. Architects Engineers and Construction Consultants
8950 Route 108 Suite 218
Columbia Maryland 21045 (410)995-4067Fax(410)992-1837

SEAL: STATE OF MARYLAND — RICHARD LECOUR SCHOTT — No. 11026 — PROFESSIONAL ENGINEER

DCI DANIEL CONSULTANTS, INC.
CONSULTING ENGINEERING AND PLANNING
8950 Rt. 108 E., Suite 229 Columbia, MD. 21045
Phone: 410-995-0090 Fax: 410-992-7038

REVISIONS

NO.	DATE	DESCRIPTION

FOREST CONSERVATION PLAN DETAILS

HOWARD COUNTY CENTRAL BOOKING & DISTRICT COURT COMMISSIONERS FACILITY
HOWARD COUNTY, MARYLAND

DATE : FEBRUARY 21, 2003

CAPITAL PROJECT NO. ☐ P – 4916

C-24

SET SHEET 24 OF 25

SDP-02-20

H:\PROJECTS\CIVIL\0122101\C-23A.DWG

NOTES:

A. RIGHT OF WAY LINE TRUNCATION TO BE SET 25' FROM P.I. ALONG EACH OF THE INTERSECTING LINES AS SET FORTH IN SECTION 16-113, PAR. F3 OF SUBDIVISION REGULATIONS. MINIMUM DISTANCE BETWEEN BACK OF SIDEWALK AND RIGHT OF WAY LINE TO BE 1 FOOT.

B. TYPE A RAMP TO BE USED FOR ALL NEW CONSTRUCTION WHERE APPLICABLE UNLESS OTHERWISE DIRECTED BY D.P.W.

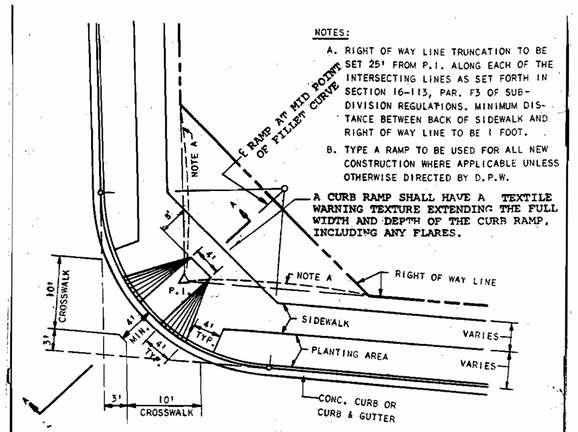

PLAN

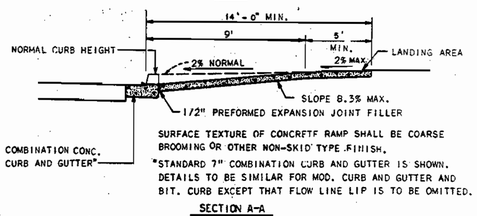

SURFACE TEXTURE OF CONCRETE RAMP SHALL BE COARSE BROOMING OR OTHER NON-SKID TYPE FINISH.

*STANDARD 7" COMBINATION CURB AND GUTTER IS SHOWN. DETAILS TO BE SIMILAR FOR MOD. CURB AND GUTTER AND BIT. CURB EXCEPT THAT FLOW LINE LIP IS TO BE OMITTED.

SECTION A-A

REV. MAR. 1986

HOWARD COUNTY, MARYLAND DEPARTMENT OF PUBLIC WORKS Approved Chief-Bureau of Engineering 1-12-81	SIDEWALK RAMP TYPE A	DRAWN BY W.T. BAI CHECK J.L.R. NO SCALE R-4.01

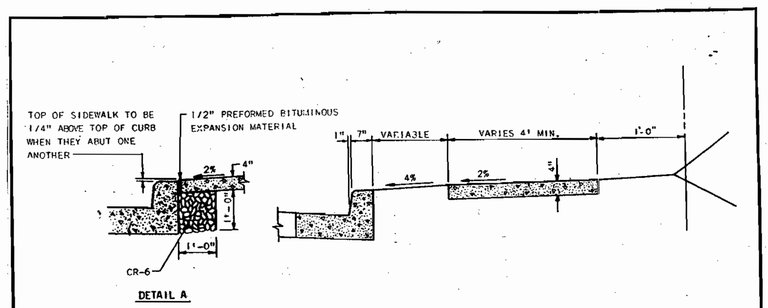

DETAIL A

NOTES:

1. SIDEWALK TO BE SCRIBED IN 5' MAXIMUM SQUARES.
2. EXPANSION JOINTS ACROSS THE SIDEWALK NOT TO BE MORE THAN 15' APART.
3. 1/2" PREFORMED BITUMINOUS EXPANSION MATERIAL IN EXPANSION JOINTS TO BE KEPT 1/4" BELOW SURFACE OF SIDEWALK.
4. CONCRETE TO BE MIX NO.2.
5. WHEN SIDEWALK ABUTS CURB, WALK SHALL BE 1/4" ABOVE CURB WITH 1/2" PREFORMED BITUMINOUS EXPANSION MATERIAL BETWEEN SIDEWALK AND CURB AND RESTING ON A COMPACTED CRUSHED STONE BASE. SEE DETAIL A THIS SHEET.
6. ON LONGITUDINAL SIDEWALK GRADES OF 5% OR GREATER, A CONCRETE HEADER, 6" THICK AND 6" DEEP BELOW THE NORMAL 4" SIDEWALK THICKNESS SHALL BE CONSTRUCTED FOR THE FULL WIDTH OF THE SIDEWALK AT INTERVALS OF 48 FEET. THE HEADERS SHALL BE PLACED AT EXPANSION JOINT LOCATIONS AND SHALL BE MONOLITHIC WITH THE SIDEWALK.

REV. JAN. 1989
REV. JAN. 1993

HOWARD COUNTY, MARYLAND DEPARTMENT OF PUBLIC WORKS Approved Chief-Bur. of Engr. 1-12-81 Date	CONCRETE SIDEWALK	DRAWN BY W.T. BALLARD CHECKED BY J.L.R. NO SCALE R-3.01

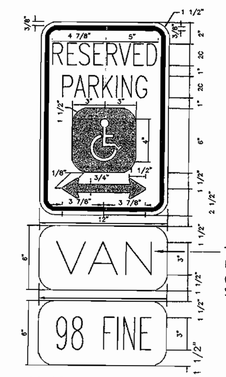

THIS SIGN TO BE USED IN FRONT OF ONE HANDI-CAP SPACE ONLY

COLORS:
LEGEND AND BORDER - GREEN
WHITE SYMBOL ON BLUE BACKGROUND
BACKGROUND - WHITE

NOTE: PROVIDE SIGNS AS INDICATED ON SITE PLAN

ELEVATION

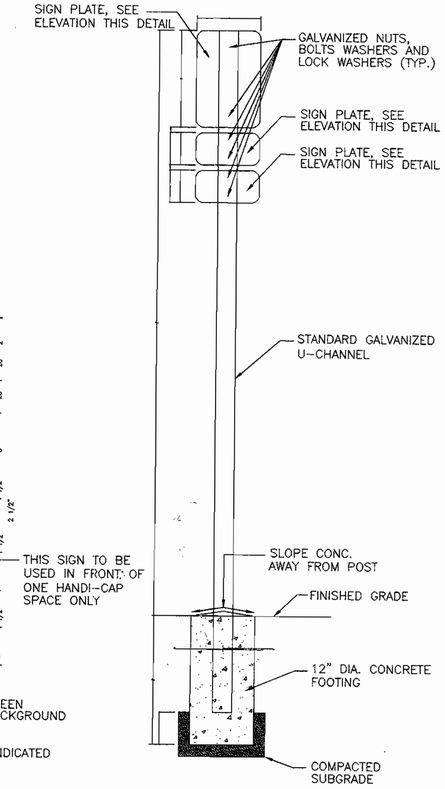

SECTION

HANDICAPPED SIGN AND POST
DETAIL 8
NOT TO SCALE

SECTION NUMBER	ROAD AND STREET CLASSIFICATION	PAVEMENT MATERIALS: FULL DEPTH BIT. CONC. ALTERNATE	PAVEMENT MATERIALS: GRANULAR BASE ALTERNATES
P-1	PARKING BAYS APARTMENTS AND COMMERCIAL-INDUSTRIAL ZONES WITH NO HEAVY TRUCKS TRAVELWAYS FOR APARTMENTS AND COMERCIAL INDUSTRIAL ZONES WITH NO HEAVY TRUCK	1" BIT. CONC. SURFACE 4" BIT. CONC. BASE	1" BIT. CONC. SURFACE 2" BIT. CONC. BASE 4" GRADED AGGREGATE BASE (GAB)
P-2	RESIDENTIAL ZONES LOCAL, CUL-DE-SAC STS. ALLEYS AND PRIVATE ROADS SERVING INDIVIDUAL LOTS TRAVELWAYS APARTMENTS AND COMMERCIAL-INDUSTRIAL ZONES WITH NO MORE THAN 10 HEAVY TRUCKS PER DAY*	1 1/2" BIT. CONC. SURFACE 5" BIT. CONC. BASE	1 1/2" BIT. CONC. SURFACE 2 1/2" BIT. CONC. BASE 6" GRADED AGGREGATE BASE (GAB)
P-3	RESIDENTIAL ZONES MINOR AND MAJOR COLLECTORS COMMERCIAL-INDUSTRIAL ZONES LOCAL AND CUL-DE-SAC STREETS ALLEYS TRAVELWAYS APARTMENTS AND COMMERCIAL-INDUSTRIAL ZONES WITH MORE THAN 10 HEAVY TRUCKS PER DAY*	1 1/2" BIT. CONC. SURFACE 1 1/2" BIT. CONC. BASE 5" BIT. CONC. BASE	1 1/2" BIT. CONC. SURFACE 4 1/2" BIT. CONC. BASE 5" GRADED AGGREGATE BASE (GAB)
P-4	COMMERCIAL-INDUSTRIAL ZONES MINOR COLLECTOR	1 1/2" BIT. CONC. SURFACE 3 1/2" BIT. CONC. BASE 5" BIT. CONC. BASE	1 1/2" BIT. CONC. SURFACE 1 1/2" BIT. CONC. BASE 5" BIT. CONC. BASE 4" GRADED AGGREGATE BASE (GAB)

* TRAVELWAYS ARE DEFINED AS THE ROADWAYS LEADING TO THE PARKING BAYS.

* HEAVY TRUCKS ARE DEFINED AS THOSE WITH 6 WHEEL OR MORE INCLUDING GARBAGE TRUCKS.

REV. OCT. 1990 REV. JAN. 1989 REV. JAN. 1993

HOWARD COUNTY, MARYLAND DEPARTMENT OF PUBLIC WORKS Approved Chief-Bur. of Engr. 1-12-81 Date	PAVING SECTIONS P-1 THROUGH P-4	DRAWN BY W.T. BALLARD CHECKED BY J.L.R. NO SCALE R-2.01

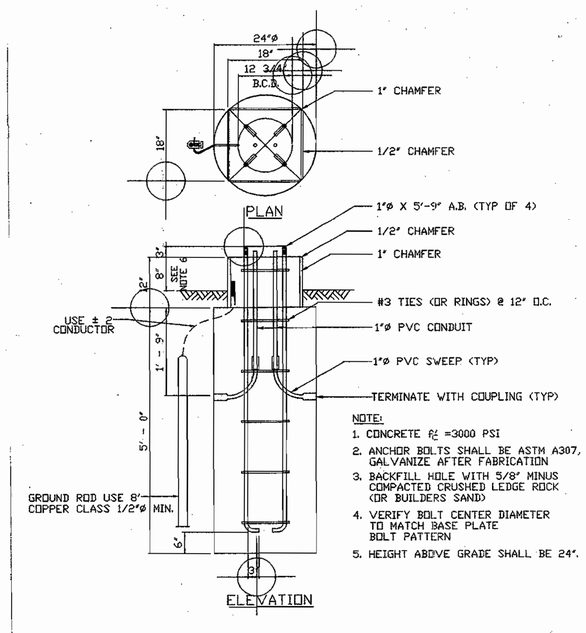

NOTE:

1. CONCRETE f'c =3000 PSI
2. ANCHOR BOLTS SHALL BE ASTM A307, GALVANIZE AFTER FABRICATION
3. BACKFILL HOLE WITH 5/8" MINUS COMPACTED CRUSHED LEDGE ROCK (OR BUILDERS SAND)
4. VERIFY BOLT CENTER DIAMETER TO MATCH BASE PLATE BOLT PATTERN
5. HEIGHT ABOVE GRADE SHALL BE 24".

POLE BASE DETAIL

SCALE: NONE

THE SUBJECT PROPERTY IS ZONED M-2 PER THE 10-18-93 COMPREHENSIVE ZONING PLAN

Approved : Department of Planning and Zoning

Director — Date 3/10/03

Chief, Division of Land Development — Date 2/14/03

Chief, Development Engineering Division — Date 3/5/03

SUBDIVISION NAME		SECTION/AREA			PARCEL NO.
HOWARD COUNTY DETENTION CENTER		N/A			660
LIBER/FOLIO	BLOCK NO	ZONING	TAX MAP	GRID NO.	HOWARD CO. ELEC. DIST.	CENSUS TR.
2116/282 1009/368 15390/184	9, 10 AND15	M-2	43	9	NO-1	6012.02
WATER CODE: B01			SEWER CODE 2221000			

PROPOSED IMPROVEMENTS
BUILDING ADDITION, SEE SITE ANALYSIS CHART FOR APPLICABLE DPZ FILE REFERENCE DPZ FILE REF. FOR CURRENT PROJECT SDP-02-20

ati INC. Architects Engineers and Construction Consultants
8950 Route 108 Suite 218
Columbia Maryland 21045 (410)995-4067Fax(410)992-1837

STATE OF MARYLAND — RICHARD LECOUR SCHOTT — REG. NO. 12788 — PROFESSIONAL ENGINEER

DCI DANIEL CONSULTANTS, INC.
CONSULTING ENGINEERING AND PLANNING
8950 Rt. 108 E., Suite 229 Columbia, MD. 21045
Phone: 410-995-0090 Fax: 410-992-7038

REVISIONS

NO.	DATE	DESCRIPTION

HOWARD COUNTY STANDARD PLATES

HOWARD COUNTY CENTRAL BOOKING & DISTRICT COURT COMMISSIONERS FACILITY
HOWARD COUNTY, MARYLAND

DATE : FEBRUARY 21, 2003

CAPITAL PROJECT NO. P - 4916

C-25

SET SHEET 25 OF 25

SDP-02-20

H:\PROJECTS\CIVIL\0121901\PROGRESIVE\C-24.DWG