LEGEND	
Symbol	Description
	Existing Contour 2' Interval
	Existing Contour 10' Interval
	Proposed Contour 2' Interval
	Proposed Contour 10' Interval
+ 624	Spot Elevation
-SF- SF-	Silt Fence
FF	First Floor Elevation
BE	Basement Elevation
WO	Proposed Walkout
	Earth Dike
-X- X-	Tree Protection
	Existing Tree Line
L.O.D.	Limit Of Disturbance
	Existing Street Tree
M.C.E.	Min. Cellar Elevation

Address Chart					
Lot No.	Street Address		Lot No.	Street Address	
39	6049	Toomey Lane	1	6005	Toomey Lane
40	6053	Toomey Lane	2	6009	Toomey Lane
41	6057	Toomey Lane	3	6013	Toomey Lane
42	6056	Toomey Lane	4	6017	Toomey Lane
20	6052	Toomey Lane	5	6021	Toomey Lane
21	6048	Toomey Lane	6	6025	Toomey Lane
22	6044	Toomey Lane	32	6029	Toomey Lane
23	6040	Toomey Lane	33	6033	Toomey Lane
25	6036	Toomey Lane	34	6037	Toomey Lane
26	6032	Toomey Lane	35	5905	Fairlee Road
27	6028	Toomey Lane	36	5904	Fairlee Road
28	6024	Toomey Lane	37	6041	Toomey Lane
29	6020	Toomey Lane	38	6045	Toomey Lane

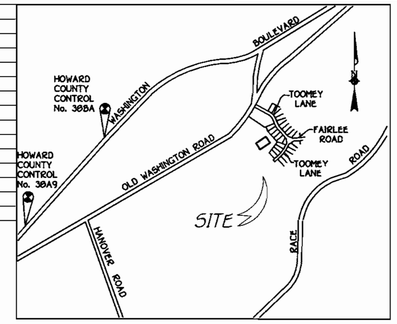

VICINITY MAP
SCALE 1" = 2000'

GENERAL NOTES
1. The contractor shall notify the Construction Inspection Division at (410) 313-1880 at least five working days prior to start of work.
2. The contractor shall notify Miss Utility at 1-800-257-7777 at least 48 hours prior to any excavation work.
3. This project is subject to Howard County files: S 98-14 ,P 99-14 and F 00-115.
4. Boundary survey was performed by Fisher, Collins and Carter Inc. on or about November 1997.
5. Topography was taken from the road drawings F 00-115.
6. Horizontal and vertical control datum is based on Howard County Geodetic Control Stations:
   Monument 38A9 N 561056.38 E 1389634.1
   Monument 38BA N 562553.32 E 139096.79
7. This plan is for house sitting and lot grading only . Improvements shown within the rights of ways of this S.D.P. are not to be used for the construction. See the approved road construction drawings (F 00-115) and approved water and sewer plans (Cont. 14-3882-D).
8. Contractor to check sewer house connection elevation at easement prior to construction.
9. Storm water management obligations are fulfilled under F 00-115.
10. Site Analysis
   A. Total area of project: 6.09 AC.
   B. Area of plan submission: 6.09 AC.
   C. Limit of disturbed area: 6.09 AC.
   D. Present zoning R-12 per the 10/18/93 Comprehensive Zoning Plan
   E. Proposed use of site: Single Family Detached Dwelling Units.
   F. Open space requirements are provided per F 00-115.
11. Forest conservation obligation has been met under F 00-115.
12. Contractor to use Howard County Standard Detail R 6.01 Residential Driveway Entrance.

GENERAL NOTES (CON'T)
13. PLAN SUBJECT TO WP-02-92, REQUESTING TO WAIVE SECTION 16.156(K) TO REACTIVATE SDP-01-109 AND GRANT A 180 DAY EXTENSION TO RESUBMIT THE PLAN ORIGINALS FOR SIGNATURES. APPROVAL THE WAIVER WAS APPROVED ON NOVEMBER 8, 2001 SUBJECT TO THE FOLLOWING CONDITION: 1) THE PLAN ORIGINALS MUST BE RESUBMITTED FOR SIGNATURE APPROVAL WITHIN 180 DAYS FROM THE DATE OF THE APPROVAL LETTER (BY MAY 7, 2002).

Note
Porches and decks may project not more than ten foot into any required front or rear setback areas. Bay windows, andways and chimneys not more than sixteen feet in width may project not more than four feet into any required setback area (per Section 128 of the Zoning Regulations).

Sheet Index	
Sheet No.	Sheet Description
Sheet 1 of 5	Plan View, Sediment and Erosion Control Plan
Sheet 2 of 5	Plan View, Sediment and Erosion Control Plan
Sheet 3 of 5	Notes and Details
Sheet 4 of 5	Soil Erosion and Sediment Control Plan
Sheet 5 of 5	Soil Erosion and Sediment Control Plan

FISHER, COLLINS & CARTER, INC.
CIVIL ENGINEERING CONSULTANTS & LAND SURVEYORS
CENTENNIAL SQUARE OFFICE PARK - 10272 BALTIMORE NATIONAL PIKE
ELLICOTT CITY, MARYLAND 21042
(410) 461 - 2855

STATE OF MARYLAND — EARL D. COLLINS — No. 7168 — REGISTERED PROFESSIONAL ENGINEER

REVISION	
DATE	DESCRIPTION

ENGINEER'S CERTIFICATE
"I certify that this plan for erosion and sediment control represents a practical and workable plan based on my personal knowledge of the site conditions and that it was prepared in accordance with the requirements of the Howard Soil Conservation District."

EARL D. COLLINS — 6.26.01 Date

DEVELOPER'S CERTIFICATE
"I/We certify that all development and construction will be done according to this plan, for sediment and erosion control and that any responsible personnel involved in the construction project will have a Certificate of Attendance at a Department of the Environment Approved Training Program for the Control of Sediment and Erosion before beginning the project. I also authorize periodic on-site inspection by the Howard Soil Conservation District."

CINDY HUNTZBARRY — 3.2.01 Date

Reviewed for HOWARD SCD and meets Technical Requirements.

U.S.D.A.-Natural Resources Conservation Service — Date

This development plan is approved for soil erosion and sediment control by the HOWARD SOIL CONSERVATION DISTRICT.

Howard SCD — 11/21/01 Date

OWNER
PATRIOT HOMES
5485 HARPERS FARM ROAD
SUITE 200
COLUMBIA, MARYLAND
21044

APPROVED: HOWARD COUNTY DEPARTMENT OF PLANNING & ZONING

Chief, Division of Land Development — 12/4/01 Date

Chief, Development Engineering Division — 12/3/01 Date

Director - Department of Planning and Zoning — 12/5/01 Date

PROJECT	SECTION/AREA	LOT NO.
WESLEY WOODS	ONE	1-6, 20-23, 25-29, 32-42

PLAT	BLOCK NO.	ZONE	TAX/ZONE	ELEC. DIST.	CENSUS TR.
14926 - 14929	4	R-12	38	FIRST	6012.01

WATER CODE	SEWER CODE
A01	2022700

SITE DEVELOPMENT PLAN

WESLEY WOODS
SECTION ONE
LOTS 1-6, 20-23, 25-29, 32-42
FIRST ELECTION DISTRICT HOWARD COUNTY MARYLAND
TAX MAP No. 38 PARCEL No. 162 GRID No.4
SCALE 1" =30' JUNE, 2001

SHEET 1 OF 5

F-02-21

SDP 01-109

W:\Drawings\961113 Toomey\961500 Wesley Woods - Patriot Homes\961500 Site Development Plan 1.dwg, 3/20/2001 01:33:38 PM

LEGEND

Symbol	Description
- - - - - -	Existing Contour 2' Interval
—— ——	Existing Contour 10' Interval
———	Proposed Contour 2' Interval
———	Proposed Contour 10' Interval
+ 624	Spot Elevation
—SF—SF—	Silt Fence
FF	First Floor Elevation
BE	Basement Elevation
WO	Proposed Walkout
⇨⇨⇨	Earth Dike
—X —X —	Tree Protection
⌒⌒⌒	Existing Tree Line
L.O.D.	Limit Of Disturbance
(x)	Existing Street Tree
M.C.E.	Min. Cellar Elevation

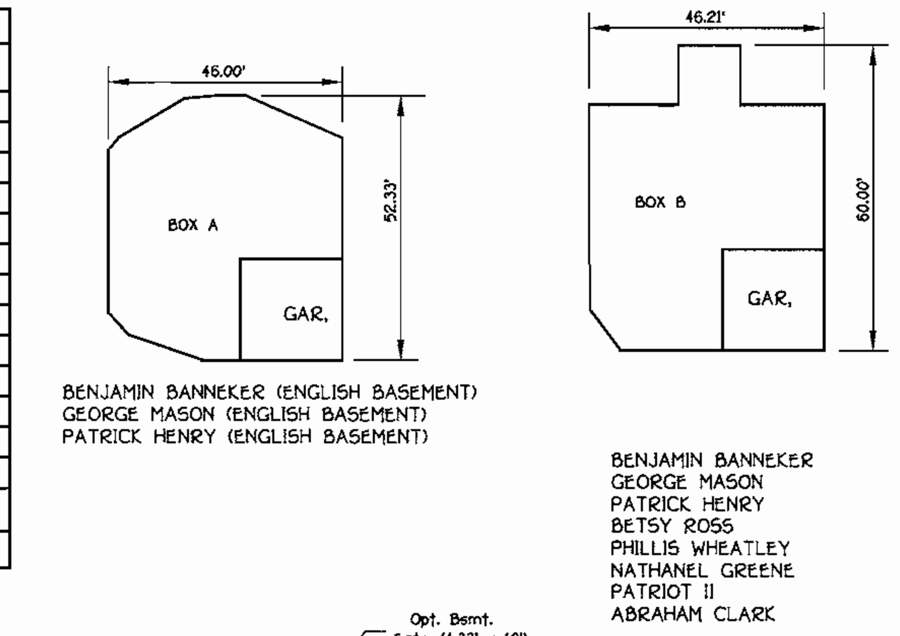

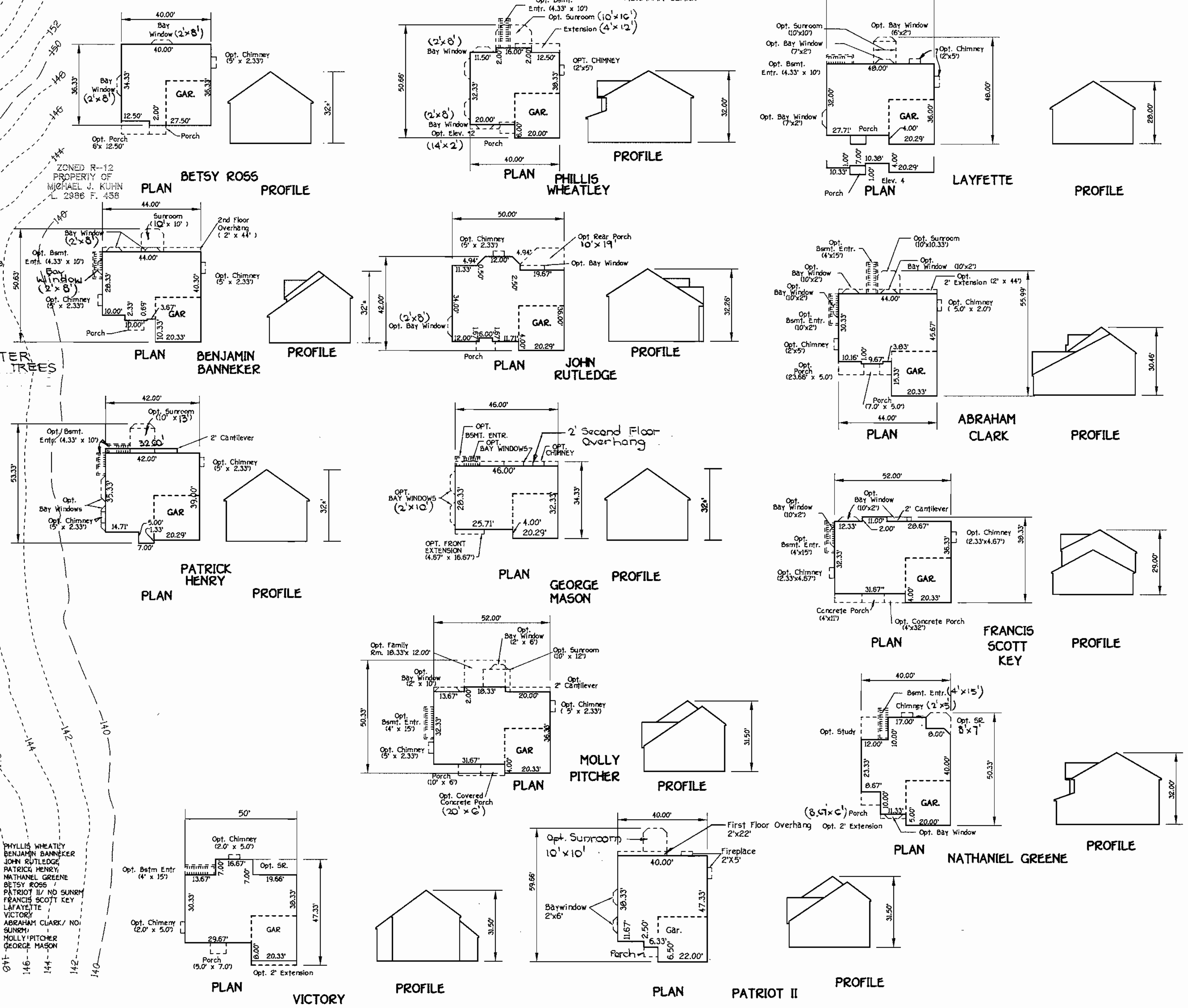

FISHER, COLLINS & CARTER, INC.
CIVIL ENGINEERING CONSULTANTS & LAND SURVEYORS
CENTENNIAL SQUARE OFFICE PARK - 10272 BALTIMORE NATIONAL PIKE
ELLICOTT CITY, MARYLAND 21042
(410) 461 - 2855

STATE OF MARYLAND — EARL D. COLLINS — REGISTERED PROFESSIONAL ENGINEER

REVISION

DATE	DESCRIPTION

ENGINEER'S CERTIFICATE

"I certify that this plan for erosion and sediment control represents a practical and workable plan based on my personal knowledge of the site conditions and that it was prepared in accordance with the requirements of the Howard Soil Conservation District."

EARL D. COLLINS 06·26·01

DEVELOPER'S CERTIFICATE

"I/We certify that all development and construction will be done according to this plan, for sediment and erosion control and that any responsible personnel involved in the construction project will have a Certificate of Attendance at a Department of the Environment Approved Training Program for the Control of Sediment and Erosion before beginning the project. I also authorize periodic on-site inspection by the Howard Soil Conservation District."

CINDY HUNTZBARRY 03·2·01

Reviewed for HOWARD SCD and meets Technical Requirements.

U.S.D.A.-Natural Resources Conservation Service — Date

This development plan is approved for soil erosion and sediment control by the HOWARD SOIL CONSERVATION DISTRICT.

Howard SCD — Date 11/21/01

OWNER
PATRIOT HOMES
5485 HARPERS FARM ROAD
SUITE 200
COLUMBIA MD.
21044

APPROVED: HOWARD COUNTY DEPARTMENT OF PLANNING & ZONING

Chief, Division of Land Development — Date 12/4/01

Chief, Development Engineering Division — Date 12/3/01

Director - Department of Planning and Zoning — Date 12/5/01

PROJECT	SECTION/AREA	LOT NO.
WESLEY WOODS	ONE	1-6, 20-23, 25-29, 32-42

PLAT	BLOCK NO.	ZONE	TAX/ZONE	ELEC. DIST.	CENSUS TR.
14926-14929	4	R.-12	38	FIRST	6012.01

WATER CODE	SEWER CODE
A01	2022700

SITE DEVELOPMENT PLAN

WESLEY WOODS

SECTION ONE
LOTS 1-6, 20-23, 25-29, 32-42

FIRST ELECTION DISTRICT HOWARD COUNTY, MARYLAND
TAX MAP No. 38 PARCEL No. 162 GRID No. 4
SCALE 1" = 30' JUNE, 2001
SHEET 2 OF 5

F-02-21

SDP 01-109

W:\Drawings 6\61113 Toomey\61502 Wesley Woods - Patriot Homes\61502 Site Development Plan 2.dwg, 06/21/01 02:14:58 PM

SILT FENCE

NOT TO SCALE

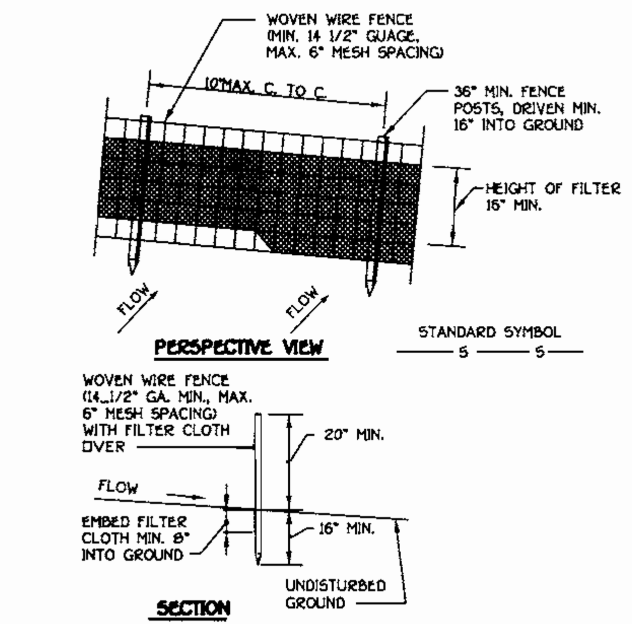

CONSTRUCTION NOTES FOR FABRICATED SILT FENCE

1. WOVEN WIRE FENCE TO BE FASTENED SECURELY TO FENCE POSTS WITH WIRE TIES OF STAPLES.
2. FILTER CLOTH TO BE FASTENED SECURELY TO WOVEN WIRE FENCE WITH TIES SPACED EVERY 24" AT TOP AND MID SECTION.
3. WHEN TWO SECTIONS OF FILTER CLOTH ADJOIN EACH OTHER THEY SHALL BE OVERLAPPED BY SIX INCHES AND FOLDED.
4. MAINTENANCE SHALL BE PERFORMED AS NEEDED AND MATERIAL REMOVED WHEN "BULGES" DEVELOP IN THE SILT FENCE.

POSTS: STEEL EITHER T OR U TYPE OR 2" HARDWOOD
FENCE: WOVEN WIRE, 14. GA. 6" MAX. MESH OPENING
FILTER CLOTH: FILTER X, MIRAFI 100X, STABILINKA T14 ON OR APPROVED EQUAL
PREFABRICATED UNIT: GEOFAB, ENVIROFENCE, OR APPROVED EQUAL.

STABILIZED CONSTRUCTION ENTRANCE

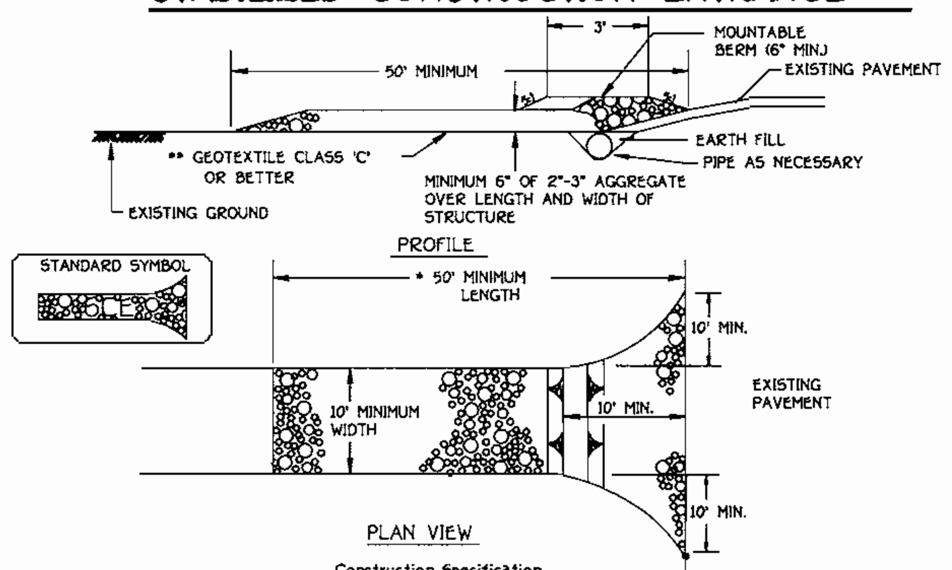

Construction Specification

1. Length - minimum of 50' (*30' for single residence lot).
2. Width - 10' minimum, should be flared at the existing road to provide a turning radius.
3. Geotextile fabric (filter cloth) shall be placed over the existing ground prior to placing stone. **The plan approval authority may not require single family residences to use geotextile.
4. Stone - crushed aggregate (2" to 3") or reclaimed or recycled concrete equivalent shall be placed at least 6" deep over the length and width of the entrance.
5. Surface Water - all surface water flowing to or diverted toward construction entrances shall be piped through the entrance, maintaining positive drainage. Pipe installed through the stabilized construction entrance shall be protected with a mountable berm with 5:1 slopes and a minimum of 6" of stone over the pipe. Pipe has to be sized according to the drainage. When the SCE is located at a high spot and has no drainage to convey a pipe will not be necessary. Pipe should be sized according to the amount of runoff to be conveyed. A 6" minimum will be required.
6. Location - A stabilized construction entrance shall be located at every point where construction traffic enters or leaves a construction site. Vehicles leaving the site must travel over the entire length of the stabilized construction entrance.

SEDIMENT CONTROL NOTES

1) A MINIMUM OF 48 HOURS NOTICE MUST BE GIVEN TO THE HOWARD COUNTY DEPARTMENT OF INSPECTIONS, LISCENSES AND PERMITS, SEDIMENT CONTROL DIVISION PRIOR TO THE START OF ANY CONSTRUCTION (313-1855).
2) ALL VEGETATIVE AND STRUCTURAL PRACTICES ARE TO BE INSTALLED ACCORDING TO THE PROVISIONS OF THIS PLAN AND ARE TO BE IN CONFORMANCE WITH THE MOST CURRENT MARYLAND STANDARDS AND SPECIFICATIONS FOR SOIL EROSION AND SEDIMENT CONTROL AND REVISIONS THERETO.
3) FOLLOWING INITIAL SOIL DISTURBANCE OR RE-DISTURBANCE, PERMANENT OR TEMPORARY STABILIZATION SHALL BE COMPLETED WITHIN: a) 7 CALENDAR DAYS FOR ALL PERIMETER SEDIMENT CONTROL STRUCTURES, DIKES, PERIMETER SLOPES AND ALL SLOPES STEEPER THAN 3:1, b) 14 DAYS AS TO ALL OTHER DISTURBED OR GRADED AREAS ON THE PROJECT SITE.
4) ALL SEDIMENT TRAPS/BASINS SHOWN MUST BE FENCED AND WARNING SIGNS POSTED AROUND THEIR PERIMETER IN ACCORDANCE WITH VOL. 1, CHAPTER 12, OF THE HOWARD COUNTY DESIGN MANUAL, STORM DRAINAGE.
5) ALL DISTURBED AREAS MUST BE STABILIZED WITHIN THE TIME PERIOD SPECIFIED ABOVE IN ACCORDANCE WITH THE 1994 MARYLAND STANDARDS AND SPECIFICATIONS FOR SOIL EROSION AND SEDIMENT CONTROL FOR PERMANENT SEEDING (SEC. 51), SOD (SEC. 54), TEMPORARY SEEDING (SEC. 50), AND MULCHING (SEC. 52). TEMPORARY STABILIZATION WITH MULCH ALONE CAN ONLY BE DONE WHEN RECOMMENDED SEEDING DATES DO NOT ALLOW FOR PROPER GERMINATION AND ESTABLISHMENT OF GRASSES.
6) ALL SEDIMENT CONTROL STRUCTURES ARE TO REMAIN IN PLACE AND ARE TO BE MAINTAINED IN OPERATIVE CONDITION UNTIL PERMISSION FOR THEIR REMOVAL HAS BEEN OBTAINED FROM THE HOWARD COUNTY SEDIMENT CONTROL INSPECTOR.
7) SITE ANALYSIS:

TOTAL AREA OF SITE	6.09	ACRES
AREA DISTURBED	6.09	ACRES
AREA TO BE ROOFED OR PAVED	1.71	ACRES
AREA TO BE VEGETATIVELY STABILIZED	4.38	ACRES
TOTAL CUT	7000	CU.YDS.
TOTAL FILL	7000	CU.YDS.
OFFSITE WASTE/BORROW AREA LOCATION		CU.YDS.

8) ANY SEDIMENT CONTROL PRACTICE WHICH IS DISTURBED BY GRADING ACTIVITY FOR PLACEMENT OF UTILITIES MUST BE REPAIRED ON THE SAME DAY OF DISTURBANCE.
9) ADDITIONAL SEDIMENT CONTROLS MUST BE PROVIDED, IF DEEMED NECESSARY BY THE HOWARD COUNTY SEDIMENT CONTROL INSPECTOR.
10) ON ALL SITES WITH DISTURBED AREAS IN EXCESS OF 2 ACRES, APPROVAL OF THE INSPECTION AGENCY SHALL BE REQUESTED UPON COMPLETION OF INSTALLATION OF PERIMETER EROSION AND SEDIMENT CONTROLS, BUT BEFORE PROCEEDING WITH ANY OTHER EARTH DISTURBANCE OR GRADING. OTHER BUILDING OR GRADING INSPECTION APPROVALS MAY NOT BE AUTHORIZED UNTIL THIS INITIAL APPROVAL BY THE INSPECTION AGENCY IS MADE.
11) TRENCHES FOR THE CONSTRUCTION OF UTILITIES IS LIMITED TO THREE PIPE LENGHTS OR THAT WHICH SHALL BE BACK-FILLED AND STABILIZED WITHIN ONE WORKING DAY, WHICHEVER IS SHORTER.

EARTH DIKE

NOT TO SCALE

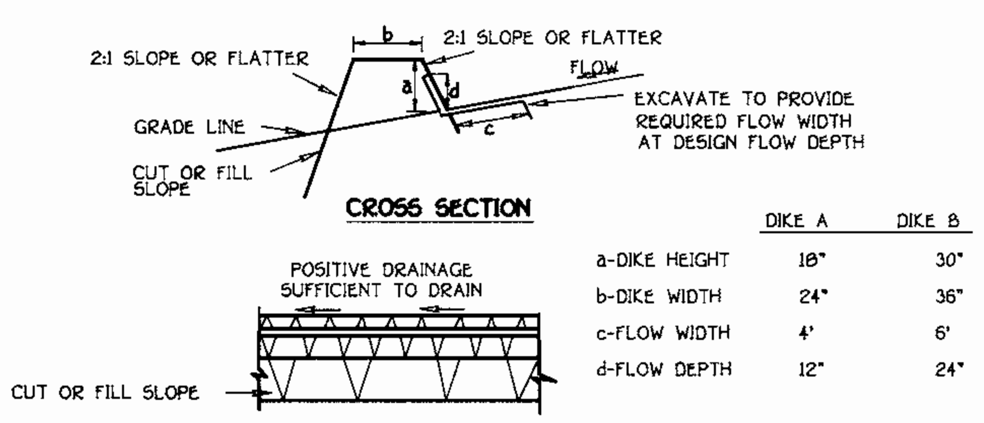

FLOW CHANNEL STABILIZATION

GRADE 0.5% MIN. 10% MAX.

	DIKE A	DIKE B
a-DIKE HEIGHT	18"	30"
b-DIKE WIDTH	24"	36"
c-FLOW WIDTH	4'	6'
d-FLOW DEPTH	12"	24"

STANDARD SYMBOL
A-2 B-3

1. Seed and cover with straw mulch.
2. Seed and cover with Erosion Control Matting or line with sod.
3. 4" - 7" stone or recycled concrete equivalent pressed into the soil 7" minimum

Construction Specifications

1. All temporary earth dikes shall have uninterrupted positive grade to an outlet. Spot elevations may be necessary for grades less than 1%.
2. Runoff diverted from a disturbed area shall be conveyed to a sediment trapping device.
3. Runoff diverted from an undisturbed area shall outlet directly into an undisturbed, stabilized area at a non-erosive velocity.
4. All trees, brush, stumps, obstructions, and other objectionable material shall be removed and disposed of so as not to interfere with the proper functioning of the dike.
5. The dike shall be excavated or shaped to line, grade and cross section as required to meet the criteria specified herein and be free of bank projections or other irregularities which will impede normal flow.
6. Fill shall be compacted by earth moving equipment.
7. All earth removed and not needed for construction shall be placed so that it will not interfere with the functioning of the dike.
8. Inspection and maintenance must be provided periodically and after each rain event.

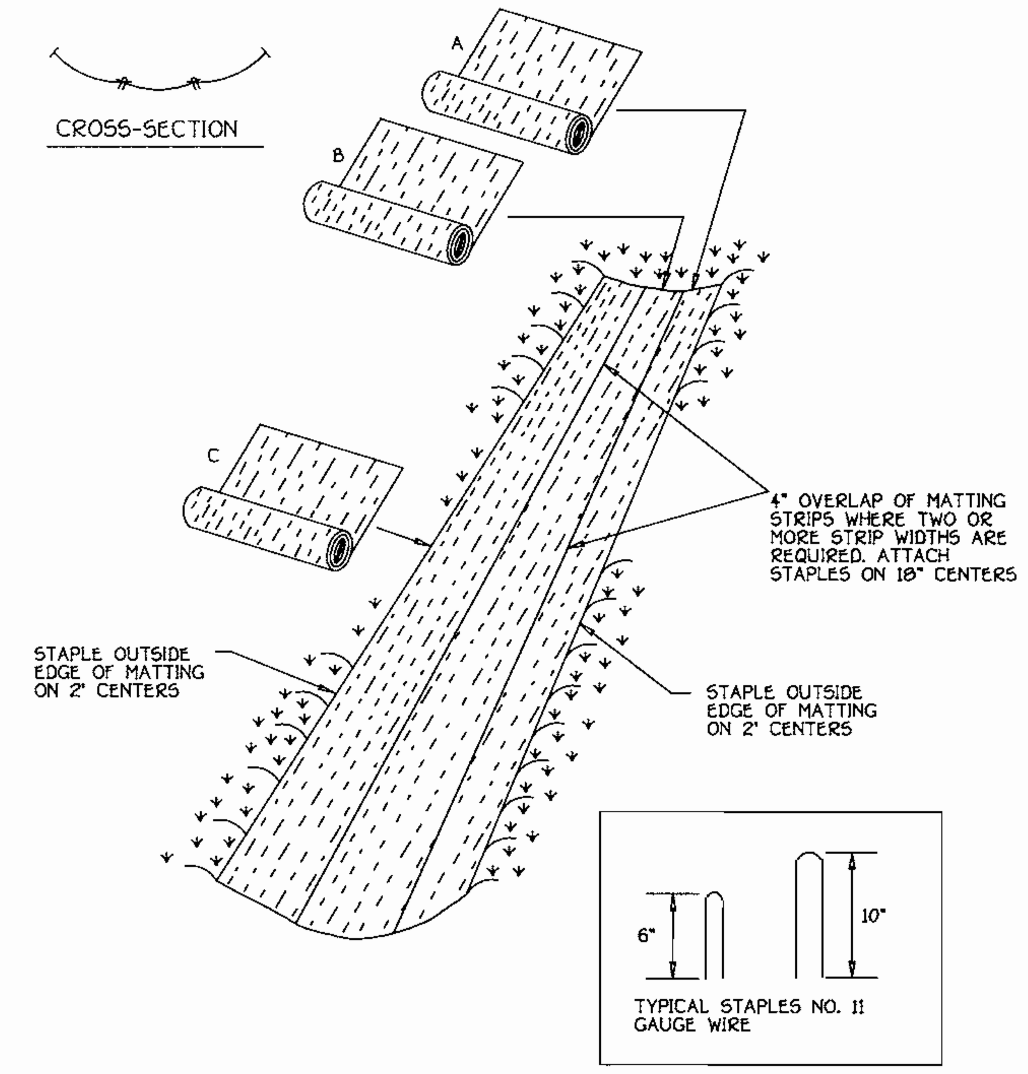

Construction Specifications

1. Key-in the matting by placing the top ends of the matting in a narrow trench, 6" in depth. Backfill the trench and tamp firmly to conform to the channel cross-section. Secure with a row of staples about 4" down slope from the trench. Spacing between staples is 6".
2. Staple the 4" overlap in the channel center using an 18" spacing between staples.
3. Before stapling the outer edges of the matting, make sure the matting is smooth and in firm contact with the soil.
4. Staples shall be placed 2' apart with 4 rows for each strip, 2 outer rows, and 2 alternating rows down the center.
5. Where one roll of matting ends and another begins, the end of the top strip shall overlap the upper end of the lower strip by 4", shiplap fashion. Reinforce the overlap with a double row of staples spaced 6" apart in a staggered pattern on either side.
6. The discharge end of the matting liner should be similarly secured with 2 double rows of staples.

Note: If flow will enter from the edge of the matting then the area effected by the flow must be keyed-in.

EROSION CONTROL MATTING

NOT TO SCALE

STANDARDS AND SPECIFICATIONS FOR VEGETATIVE STABILIZATION

DEFINITION

Using vegetation as cover for barren soil to protect it from forces that cause erosion.

PURPOSE

Vegetative stabilization specifications are used to promote the establishment of vegetation on exposed soil. When soil is stabilized with vegetation, the soil is less likely to erode and more likely to allow infiltration of rainfall, thereby reducing sediment loads and run-off to downstream areas, and improving wildlife habitat and visual resources.

CONDITIONS WHERE PRACTICE APPLIES

This practice shall be used on denuded areas as specified on the plans and may be used on highly erodible or critically eroding areas. This specification is divided into Temporary Seeding, to quickly establish vegetative cover for short duration (up to one year), and Permanent Seeding, for long term vegetative cover. Examples of applicable areas for Temporary Seeding are temporary Soil Stockpiles, cleared areas being left idle between construction phases, earth dikes, etc. and for Permanent Seeding are lawns, dams, cut and fill slopes and other areas at final grade, former stockpile and staging areas, etc.

EFFECTS ON WATER QUALITY AND QUANTITY

Planting vegetation in disturbed areas will have an effect on the water budget, especially on volumes and rates of runoff, infiltration evaporation, transpiration, percolation, and groundwater recharge. Vegetation, over time, will increase organic matter content and improve the water holding capacity of the soil and subsequent plant growth.

Vegetation will help reduce the movement of sediment, nutrients, and other chemicals carried by runoff to receiving waters. Plants will also help protect groundwater supplies by assimilating those substances present within the root zone.

Sediment control devices must remain in place during grading, seedbed preparation, seeding, mulching and vegetative establishment to prevent large quantities of sediment and associated chemicals and nutrients from washing into surface waters.

SECTION 1 - VEGETATIVE STABILIZATION METHODS AND MATERIALS

A. Site Preparation
   i. Install erosion and sediment control structures (either temporary or permanent) such as diversions, grade stabilization structures, berms, waterways, or sediment control basins.
   ii. Perform all grading operations at right angles to the slope. Final grading and shaping is not usually necessary for temporary seeding.
   iii. Schedule required soil tests to determine soil amendment composition and application rates for sites having disturbed area over 5 acres.
B. Soil Amendments (Fertilizer and Lime Specifications)
   i. Soil tests must be performed to determine the exact ratios and application rates for both lime and fertilizer on sites having disturbed areas over 5 acres. Soil analysis may be performed by the University of Maryland or a recognized commercial laboratory. Soil samples taken for engineering purposes may also be used for chemical analyses.
   ii. Fertilizers shall be uniform in composition, free flowing and suitable for accurate application by approved equipment. Manure may be substituted for fertilizer with prior approval from the appropriate approval authority. Fertilizers shall all be delivered to the site fully labeled according to the applicable state fertilizer laws and shall bear the name, trade name or trademark and warrantee of the producer.
   iii. Lime materials shall be ground limestone (hydrated or burnt lime may be substituted) which contains at least 50% total oxides (calcium oxide plus magnesium oxide). Limestone shall be ground to such fineness that at least 50% will pass through a #100 mesh sieve and 98-100% will pass through a #20 mesh sieve.
   iv. Incorporate lime and fertilizer into the top 3-5" of soil by disking or other suitable means.
C. Seedbed Preparation
   i. Temporary Seeding
      a. Seedbed preparation shall consist of loosening soil to a depth of 3" to 5" by means of suitable agricultural or construction equipment, such as disc harrows or chisel plows or rippers mounted on construction equipment. After the soil is loosened it should not be rolled or dragged smooth, but left in the roughened condition. Sloped areas (greater than 3:1) should be tracked leaving the surface in an irregular condition with ridges running parallel to the contour of the slope.
      b. Apply fertilizer and lime as prescribed on the plans.
      c. In corporate lime and fertilizer into the top 3-5" of soil by disking or other suitable means.
   ii. Permanent Seeding
      a. Minimum soil conditions required for permanent vegetative establishment:
         1. Soil pH shall be between 6.0 and 7.0.
         2. Soluble salts shall be less than 500 parts per million (ppm).
         3. The soil shall contain less than 40% clay, but enough fine grained material (>30% silt plus clay) to provide the capacity to hold a moderate amount of moisture. An exception is if lovegrass or serecia lespedezas is to be planted, then a sandy soil (<30% silt plus clay) would be acceptable.
         4. Soil shall contain 1.5% minimum organic matter by weight.
         5. Soil must contain sufficient pore space to permit adequate root penetration.
         6. If these conditions cannot be met by soils on site, adding topsoil is required in accordance with Section 21 Standard and Specification for Topsoil.
      b. Areas previously graded in conformance with the drawings shall be maintained in a true and even grade, then scarified or otherwise loosened to a depth of 3-5" to permit bonding of the topsoil to the surface area and to create horizontal erosion check slots to prevent topsoil to the surface area and to create horizontal erosion check slots to prevent topsoil from sliding down a slope.
      c. Apply soil amendments as per soil test or as included on the plans.
      d. Mix soil amendments into the top 3-5" of topsoil by disking or other suitable means. Lawn areas should be raked to smooth the surface, remove large objects like stones and branches, and ready the area for seed and application. Where site conditions will not permit normal seedbed preparation, loosen surface soil by dragging with a heavy chain or other equipment to roughen the surface. Steep slopes (steeper than 3:1) should be tracked by a dozer leaving the soil in an irregular condition with ridges running parallel to the contour of the slope. The top 1-3" of soil should be loose and friable. Seedbed loosening may not be necessary on newly disturbed areas.
D. Seed Specifications
   i. All seed must meet the requirements of the Maryland State Seed Law. All seed shall be subject to re-testing by a recognized seed laboratory. All seed used shall have been tested within the 6 months immediately preceding the date of sowing such material on this job.
   Note: Seed tags shall be made available to the inspector to verify type and rate of seed used.
   ii. Inoculant - The inoculant for treating legume seed in the seed mixtures shall be a pure culture of nitrogen-fixing bacteria prepared specifically for the species. Inoculants shall not be used later than the date indicated on the container. Add fresh inoculant as directed on package. Use four times the recommended rate when hydroseeding. Note: It is very important to keep inoculant as cool as possible until used. Temperatures above 75°-80° F. can weaken bacteria and make the inoculant less effective.
E. Methods of Seeding
   i. Hydroseeding: Apply seed uniformly with hydroseeder (slurry includes seed and fertilizer), broadcast or drop seeded, or a cultipacker seeder.
      a. If fertilizer is being applied at the time of seeding, the application rates amounts will not exceed the following: nitrogen: maximum of 100 lbs. per acre total of soluble nitrogen: P205 (phosphorous): 200 lbs/ac; K20 (potassium): 200 lbs/ac.
      b. Lime - use only ground agricultural limestone, (Up to 3 tons per acre may be applied by hydroseeding). Normally, not more than 2 tons are applied by hydroseeding at any one time. Do not use burnt or hydrated lime when hydroseeding.
      c. Seed and fertilizer shall be mixed on site and seeding shall be done immediately and without interruption.
   ii. Dry Seeding: This includes use of conventional drop or broadcast spreaders.
      a. Seed spread dry shall be incorporated into the subsoil at the rates prescribed on the Temporary or Permanent Seeding Summaries or Tables 265 or 26. The seeded area shall then be rolled with a weighted roller to provide good seed to soil contact.
      b. Where practical, seed should be applied in two directions perpendicular to each other. Apply half the seeding rate in each direction.
   iii. Drill or Cultipacker Seeding: Mechanized seeders that apply and cover seed with soil.
      a. Cultipacking seeders are required to bury the seed in such a fashion as to provide at least 1/4 inch of soil covering. Seedbed must be firm after planting.
      b. Where practical, seed should be applied in two directions perpendicular to each other. Apply half the seeding rate in each direction.
F. Mulch Specifications (In order of preference)
   i. Straw shall consist of thoroughly threshed wheat, rye or oat straw, reasonable bright in color, and shall not be musty, moldy, caked, decayed, or excessively dusty and shall be free of noxious weed seeds as specified in the Maryland Seed Law.
   ii. Wood Cellulose Fiber Mulch (WCFM)
      a. WCFM shall consist of specially prepared wood cellulose processed into a uniform fibrous physical state.
      b. WCFM shall be dyed green or contain a green dye in the package that will provide an appropriate color to facilitate visual inspection of the uniformly spread slurry.
      c. WCFM, including dye, shall contain no germination or growth inhibiting factors.
      d. WCFM materials shall be manufactured and processed in such a manner that the wood cellulose fiber mulch will remain in uniform suspension in water under agitation and will blend with seed, fertilizer and other additives to form a homogeneous slurry. The mulch material shall form a blotter-like ground cover, on application, having moisture absorption and percolation properties and shall cover and hold grass seed in contact with the soil without inhibiting the growth of the grass seedlings.
      e. WCFM material shall contain no elements or compounds at concentration levels that will be phytol-toxic.
      f. WCFM must conform to the following physical requirements: fiber length to approximately 10 mm., diameter approximately 1 mm., pH range of 4.0 to 8.5, ash content of 1.6% maximum and water holding capacity of 90% minimum.
   Note: Only sterile straw mulch should be used in areas where one species of grass is desired.
G. Mulching Seeded Areas - Mulch shall be applied to all seeded areas immediately after seeding.
   i. If grading is completed outside of the seeding season, mulch along shall be applied as prescribed in this section and maintained until the seeding season returns and seeding can be performed in accordance with these specifications.
   ii. When straw mulch is used, it shall be spread over all seeded areas at the rate of 2 tons/acre. Mulch shall be applied to a uniform loose depth of between 1" and 2". Mulch applied shall achieve a uniform distribution and depth so that the soil surface is not exposed. If a mulch anchoring tool is to be used, the rate should be increased to 2.5 tons/acre.
   iii. Wood cellulose fiber used as a mulch shall be applied at a net dry weight of 1,500 lbs. per acre. The wood cellulose fiber shall be mixed with water, and the mixture shall contain a maximum of 50 lbs. of wood cellulose fiber per 100 gallons of water.
H. Securing Straw Mulch (Mulch Anchoring): Mulch anchoring shall be performed immediately following mulch application to minimize loss by wind or water. This may be done by one of the following methods (listed by preference), depending upon size of area and erosion hazard:
   i. A mulch anchoring tool is a tractor drawn implement designed to punch and anchor mulch into the soil surface a minimum of two (2) inches. This practice is most effective on large areas, but is limited to flatter slopes where equipment can operate safely. If used on sloping land, this practice should be used on the contour if possible.
   ii. Wood cellulose fiber may be used for anchoring straw. The fiber binder shall be applied at a net dry weight of 750 pounds/acre. The wood cellulose fiber shall be mixed with water and the mixture shall contain a maximum of 50 pounds of wood cellulose fiber per 100 gallons of water.
   iii. Application of liquid binders should be heavier at the edges where wind catches mulch, such as in valleys and crest of banks. The remainder of area should be appear uniform after binder application. Synthetic binders - such as Acrylic DLR (Agro-Tack), DCA-70 Petroset, Terra Tax II, Terra Tack AR or other approved equal may be used at rates recommended by the manufacturer to anchor mulch.
   iv. Lightweight plastic netting may be stapled over the mulch according to manufacturer's recommendations. Netting is usually available in rolls 4' to 15' feet wide and 300 to 3,000 feet long.

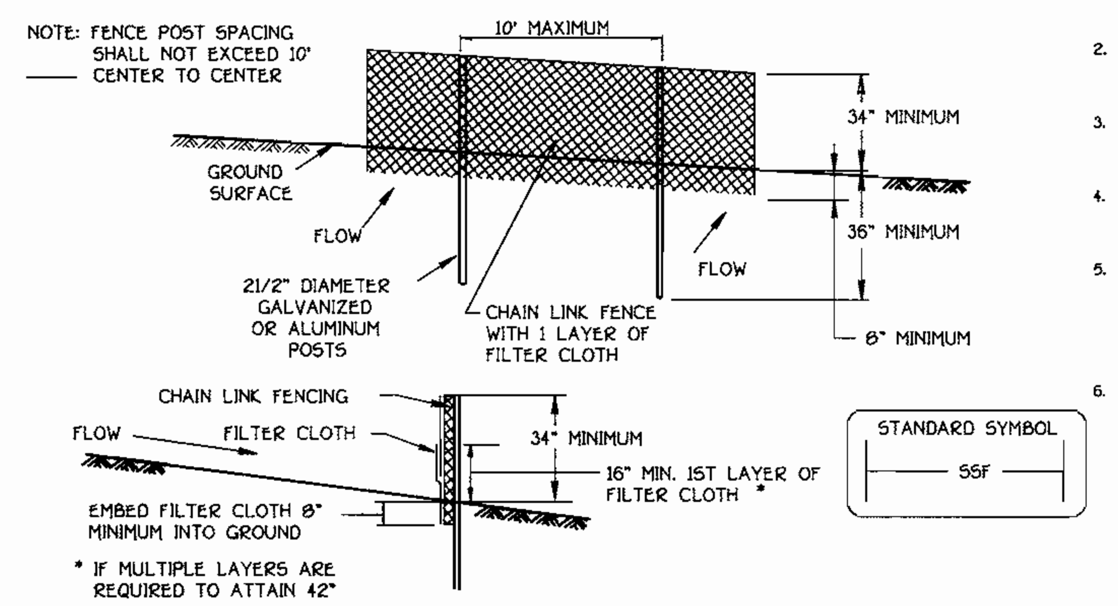

STANDARD SYMBOL
SSF

Construction Specifications

1. Fencing shall be 42" in height and constructed in accordance with the latest Maryland State Highway Details for Chain Link Fencing. The specification for a 6' fence shall be used, substituting 42" fabric and 6' length posts.
2. Chain link fence shall be fastened securely to the fence posts with wire ties. The lower tension wire, brace and truss rods, drive anchors and post caps are not required except on the ends of the fence.
3. Filter cloth shall be fastened securely to the chain link fence with ties spaced every 24" at the top and mid section.
4. Filter cloth shall be embedded a minimum of 8" into the ground.
5. When two sections of filter cloth adjoin each other, they shall be overlapped by 6" and folded.
6. Maintenance shall be performed as needed and silt buildups removed when "bulges" develop in the silt fence, or when silt reaches 50% of fence height
7. Filter cloth shall be fastened securely to each fence post with wire ties or staples at top and mid section and shall meet the following requirements for Geotextile Class F:

Tensile Strength	50 lbs/in (min.)	Test: MSMT 509
Tensile Modulus	20 lbs/in (min.)	Test: MSMT 509
Flow Rate	0.3 gal/ft /minute (max.) 2	Test: MSMT 322
Filtering Efficiency	75% (min.)	Test: MSMT 322

SUPER SILT FENCE

NOT TO SCALE

PERMANENT SEEDING NOTES

ALL DISTURBED AREAS SHALL BE STABILIZED AS FOLLOWS:

SEEDBED PREPARATION:
LOOSEN UPPER THREE INCHES OF SOIL BY RAKING, DISCING OR OTHER ACCEPTABLE MEANS BEFORE SEEDING.

SOIL AMENDMENTS:
APPLY TWO TONS PER ACRE DOLOMITIC LIMESTONE (92 LBS/1,000 SQ.FT.) AND 600 LBS. PER ACRE 0-20-20 FERTILIZER (14 LBS./1,000 SQ.FT.) BEFORE SEEDING HARROW OR DISC. INTO UPPER THREE INCHES OF SOIL. AT TIME OF SEEDING, APPLY 400 LBS. PER ACRE 38-0-0 UREAFORM FERTILIZER (9 LBS./1,000 SQ.FT.) AND 500 LBS. PER ACRE (11.5 LBS./1,000 SQ.FT.) OF 10-20-20 FERTILIZER.

SEEDING:
FOR THE PERIODS MARCH 1 THROUGH APRIL 30, AND AUGUST 1 THROUGH OCTOBER 15, SEED WITH 100 LBS. PER ACRE (2.3 LBS./1,000 SQ.FT.) OF KENTUCKY 31 TALL FESCUE, FOR THE PERIOD MAY 1 THROUGH JULY 31, SEED WITH 60 LBS/ACRE (1.4 LBS./1,000 SQ.FT.) KENTUCKY 31 TALL FESCUE AND 2 LBS. PER ACRE (0.05 LBS./1,000 SQ.FT.) OF WEEPING LOVEGRASS. DURING THE PERIOD OF OCTOBER 16 THROUGH FEBRUARY 28. PROJECT SITE BY: OPTION (1) - TWO TONS PER ACRE OF WELL ANCHORED STRAW MULCH AND SEED AS SOON AS POSSIBLE IN THE SPRING: OPTION (2) - USE SOD: OPTION (3) - SEED WITH 100 LBS./ACRE KENTUCKY 31 TALL FESCUE AND MULCH WITH TWO TONS/ACRE WELL ANCHORED STRAW. ALL SLOPES SHOULD BE HYDROSEEDED.

MULCHING:
APPLY 1 TO 2 TONS PER ACRE (10 TO 90 LBS./1,000 SQ.FT.) OF UNROTTED SMALL GRAIN STRAW IMMEDIATELY AFTER SEEDING. ANCHOR MULCH IMMEDIATELY AFTER APPLICATION USING 200 GALLONS PER ACRE (5 GAL./1,000 SQ.FT.) OF EMULSIFIED ASPHALT ON FLAT ACRES. ON SLOPES 8 FEET OR HIGHER USE 348 GALLONS PER ACRE (8 GAL./1,000 SQ.FT.) FOR ANCHORING.

MAINTENANCE:
INSPECT ALL SEEDED AREAS AND MAKE NEEDED REPAIRS, REPLACEMENTS AND RESEEDINGS.

* FOR PUBLIC PONDS SUBSTITUTE CHEMUNG CROWNVETCH AT 15 LBS./ACRE AND KENTUCKY 31 TALL FESCUE AT 40 LBS/ACRE AS THE SEEDING REQUIRMENT. OPTIMUM SEEDING DATE FOR THIS MIXTURE IS MARCH 1 TO APRIL 30.

TEMPORARY SEEDING NOTES

APPLY TO GRADED OR CLEARED AREAS LIKELY TO BE REDISTURBED WHERE A SHORT-TERM VEGETATIVE COVER IS NEEDED.

SEEDBED PREPARATION:
LOOSEN UPPER THREE INCHES OF SOIL BY RAKING, DISCING OR OTHER ACCEPTABLE MEANS BEFORE SEEDING, IF NOT PREVIOUSLY LOOSENED.

SOIL AMENDMENTS:
APPLY 600 LBS. PER ACRE 10-10-10 FERTILIZER (14 LBS./1,000 SQ.FT.)

SEEDING:
FOR THE PERIODS MARCH 1 THROUGH APRIL 30, AND AUGUST 15 THROUGH NOVEMBER 15, SEED WITH 1 BUSHEL PER ACRE OF ANNUAL RYE (3.2 LBS./ACRE OF WEEPING LOVEGRASS (.07 LBS./1,000 SQ.FT. FOR THE PERIOD NOVEMBER 16 THRU FEBRUARY 28, PROTECT SITE BY APPLYING 2 TONS PER ACRE OF WELL ANCHORED STRAW MULCH AND SEED AS SOON AS POSSIBLE IN THE SPRING, OR USE SOD.

MULCHING:
APPLY 1 TO 2 TONS PER ACRE (70 TO 90 LBS./1,000 SQ.FT.) OF UNROTTED SMALL GRAIN STRAW IMMEDIATELY AFTER SEEDING. ANCHORING TOOL OR 218 GALLONS PER ACRE (5 GAL.1,000 SQ.FT.) OF EMULSIFIED ASPHALT ON FLAT ACRES ON SLOPES 8 FEET OR HIGHER, USE 348 GALLONS PER ACRE (8 GAL./1,000 SQ.FT.) FOR ANCHORING.

REFER TO THE 1988 MARYLAND STANDARDS AND SPECIFICATION FOR SOIL EROSION AND SEDIMENT CONTROL FOR RATE AND METHODS NOT COVERED.

FISHER, COLLINS & CARTER, INC.
CIVIL ENGINEERING CONSULTANTS & LAND SURVEYORS
CENTENNIAL SQUARE OFFICE PARK - 10272 BALTIMORE NATIONAL PIKE
ELLICOTT CITY, MARYLAND 21042
(410) 461 - 2855

STATE OF MARYLAND — EARL D. COLLINS — REGISTERED PROFESSIONAL ENGINEER

REVISION	
DATE	DESCRIPTION

ENGINEER'S CERTIFICATE

"I certify that this plan for erosion and sediment control represents a practical and workable plan based on my personal knowledge of the site conditions and that it was prepared in accordance with the requirements of the Howard Soil Conservation District."

EARL D. COLLINS — 06·25·01 Date

DEVELOPER'S CERTIFICATE

"I/We certify that all development and construction will be done according to this plan, and that any responsible personnel involved in the construction project will have a Certificate of Attendance at a Department of the Environment Approved Training Program for the Control of Sediment and Erosion before beginning the project. I also authorize periodic on-site inspection by the Howard Soil Conservation District."

CINDY HUNTZBARRY — 03·2·01 Date

Reviewed for HOWARD SCD and meets Technical Requirements.
U.S.D.A.-Natural Resources Conservation Service — 11/21/01 Date

This development plan is approved for soil erosion and sediment control by the HOWARD SOIL CONSERVATION DISTRICT.
Howard SCD — 11/21/01 Date

OWNER
PATRIOT HOMES
5485 HARPERS FARM ROAD
SUITE 200
COLUMBIA, MARYLAND
21044

APPROVED: HOWARD COUNTY DEPARTMENT OF PLANNING & ZONING
Chief, Division of Land Development — 12/4/01 Date
Chief, Development Engineering Division — 12/3/01 Date
12/5/01

PROJECT			SECTION/AREA		LOT NO.
WESLEY WOODS			----		1-6, 20- 23 ,25-29 32- 42
PLAT	BLOCK NO.	ZONE	TAX/ZONE	ELEC. DIST.	CENSUS TR.
14926-14929	4	R.S.C.	38	FIRST	6012.01
WATER CODE			SEWER CODE		
A01			2022700		

NOTES AND DETAILS

WESLEY WOODS
SECTION ONE
LOTS 1-6, 20 -23 AND 25-29
32-42
FIRST ELECTION DISTRICT HOWARD COUNTY MARYLAND
TAX MAP No. 38 PARCEL No. 162 GRID No.4
SCALE 1" =30' JUNE, 2001

SHEET 3 OF 5

F-02-21

SDP 01-109

W:\Drawings 6\61113Toc

LEGEND

Symbol	Description
	Existing Contour 2' Interval
	Existing Contour 10' Interval
	Proposed Contour 2' Interval
	Proposed Contour 10' Interval
• 624	Spot Elevation
-SF- SF-	Silt Fence
FF	First Floor Elevation
BE	Basement Elevation
WO	Proposed Walkout
	Earth Dike
-X-X-	Tree Protection
	Existing Tree Line
L.O.D.	Limit Of Disturbance
(S)	Existing Street Tree
M.C.E.	Min. Cellar Elevation

Address Chart

Lot No.	Street Address	Lot No.	Street Address
39	Toomey Lane	1	6005 Toomey Lane
40	Toomey Lane	2	6009 Toomey Lane
41	Toomey Lane	3	6013 Toomey Lane
42	Toomey Lane	4	6017 Toomey Lane
20	6052 Toomey Lane	5	6021 Toomey Lane
21	6048 Toomey Lane	6	6025 Toomey Lane
22	6044 Toomey Lane	32	6029 Toomey Lane
23	6040 Toomey Lane	33	6033 Toomey Lane
25	6036 Toomey Lane	34	6037 Toomey Lane
26	6032 Toomey Lane	35	5905 Fairlee Road
27	6028 Toomey Lane	36	5904 Fairlee Road
28	6024 Toomey Lane	37	Toomey Lane
29	6020 Toomey Lane	38	Toomey Lane

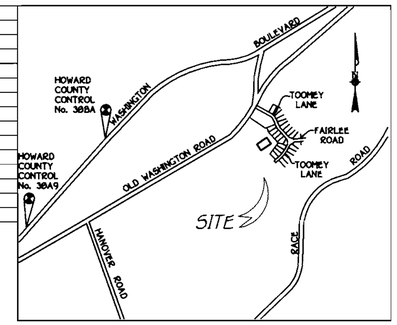

VICINITY MAP
SCALE 1" = 2000'

GENERAL NOTES
1. The contractor shall notify the Construction Inspection Division at (410) 313-1880 at least five working days prior to start of work.
2. The contractor shall notify Miss Utility at 1-800-257-7777 at least 48 hours prior to any excavation work.
3. This project is subject to Howard County files: S 98-14 ,P 99-14 and F 00-115.
4. Boundary survey was performed by Fisher, Collins and Carter Inc. on or about November 1997.
5. Topography was taken from the road drawings F 00-115.
6. Horizontal and vertical control datum is based on Howard County Geodetic Control Stations:
   Monument 38A9 N 560156.38 E 1389634.1
   Monument 38BA N 562553.32 E 139096.79
7. This plan is for house sitting and lot grading only . Improvements shown within the rights of ways of this S.D.P. are not to be used for the construction. See the approved road construction drawings (F 00-115) and approved water and sewer plans (Cont. 14-3882-D).
8. Contractor to check sewer house connection elevation at easement prior to construction.
9. Storm water management obligations are fulfilled under F 00-115.
10. Site Analysis
   A. Total area of project: 6.09 AC.
   B. Area of plan submission: 6.09 AC.
   C. Limit of disturbed area: 6.09 AC.
   D. Present zoning R-12 per the 10/18/93 Comprehensive Zoning Plan
   E. Proposed use of site: Single Family Detached Dwelling Units.
   F. Open space requirements are provided per F 00-115.
11. Forest conservation obligation has been met under F 00-115.
12. Contractor to use Howard County Standard Detail R 6.01 Residential Driveway Entrance.

* THE STORMWATER MANAGEMENT FACILITY WILL BE UTILIZED FOR SEDIMENT CONTROL FOR THIS PLAN

Note
Porches and decks may project not more than ten foot into any required front or rear setback areas. Bay windows, areaways and chimneys not more than sixteen feet in width may project not more than four feet into any required setback area (per Section 128 of the Zoning Regulations).

Sheet Index

Sheet No.	Sheet Description
Sheet 1 of 5	Plan View, Sediment and Erosion Control Plan
Sheet 2 of 5	Plan View, Sediment and Erosion Control Plan
Sheet 3 of 5	Notes and Details
Sheet 4 of 5	Soil Erosion and Sediment Control Plan
Sheet 5 of 5	Soil Erosion and Sediment Control Plan

FISHER, COLLINS & CARTER, INC.
CIVIL ENGINEERING CONSULTANTS & LAND SURVEYORS
CENTENNIAL SQUARE OFFICE PARK - 10272 BALTIMORE NATIONAL PIKE
ELLICOTT CITY, MARYLAND 21042
(410) 461 - 2855

STATE OF MARYLAND — EARL D. COLLINS — No. 4868 — PROFESSIONAL ENGINEER

REVISION	
DATE	DESCRIPTION

ENGINEER'S CERTIFICATE

"I certify that this plan for erosion and sediment control represents a practical and workable plan based on my personal knowledge of the site conditions and that it was prepared in accordance with the requirements of the Howard Soil Conservation District."

EARL D. COLLINS — 06.25.01 Date

DEVELOPER'S CERTIFICATE

"I/We certify that all development and construction will be done according to this plan, for sediment and erosion control and that any responsible personnel involved in the construction project will have a Certificate of Attendance at a Department of the Environment Approved Training Program for the Control of Sediment and Erosion before beginning the project. I also authorize periodic on-site inspection by the Howard Soil Conservation District."

CINDY HOUTZBARRY — 9.2.01 Date

Reviewed for HOWARD SCD and meets Technical Requirements.

Jim Myers — 11/21/01 Date
U.S.D.A.-Natural Resources Conservation Service

This development plan is approved for soil erosion and sediment control by the HOWARD SOIL CONSERVATION DISTRICT.

John Robertson — 11/21/01 Date
Howard SCD

OWNER

PATRIOT HOMES
5485 HARPERS FARM ROAD
SUITE 200
COLUMBIA, MARYLAND
21044

APPROVED: HOWARD COUNTY DEPARTMENT OF PLANNING & ZONING

Chief, Division of Land Development — 12/4/01 Date

Chief, Development Engineering Division — 12/5/01 Date

Director - Department of Planning and Zoning — 12/5/01 Date

PROJECT	SECTION/AREA	LOT NO.
WESLEY WOODS	ONE	1-6, 20-23, 25-29, 32-42

PLAT	BLOCK NO.	ZONE	TAX/ZONE	ELEC. DIST.	CENSUS TR.
14926-14929	4	R-12	38	FIRST	6012.01

WATER CODE	SEWER CODE
A01	2022700

SEDIMENT AND EROSION CONTROL PLAN

WESLEY WOODS

SECTION ONE
LOTS 1-6, 20-23, 25-29, 32-42
FIRST ELECTION DISTRICT HOWARD COUNTY MARYLAND
TAX MAP No. 38 PARCEL No. 162 GRID No.4
SCALE 1" =50'
JUNE, 2001

SHEET 4 OF 5
F-02-21

SDP 01-109

W:\Drawings\95\113 Toomey\95102 Wesley Woods - Patriot Homes\95102 Site Development Plan 1.dwg, 06/01/01 03:13:36 PM

LEGEND	
Symbol	Description
- - - - - - -	Existing Contour 2' Interval
— — —	Existing Contour 10' Interval
————	Proposed Contour 2' Interval
————	Proposed Contour 10' Interval
+ 624	Spot Elevation
-SF—SF-	Silt Fence
FF	First Floor Elevation
BE	Basement Elevation
W.O.	Proposed Walkout
➡➡➡	Earth Dike
-X —X -	Tree Protection
⌒⌒⌒⌒	Existing Tree Line
L.O.D.	Limit Of Disturbance
⚘	Existing Street Tree
M.C.E.	Min. Cellar Elevation

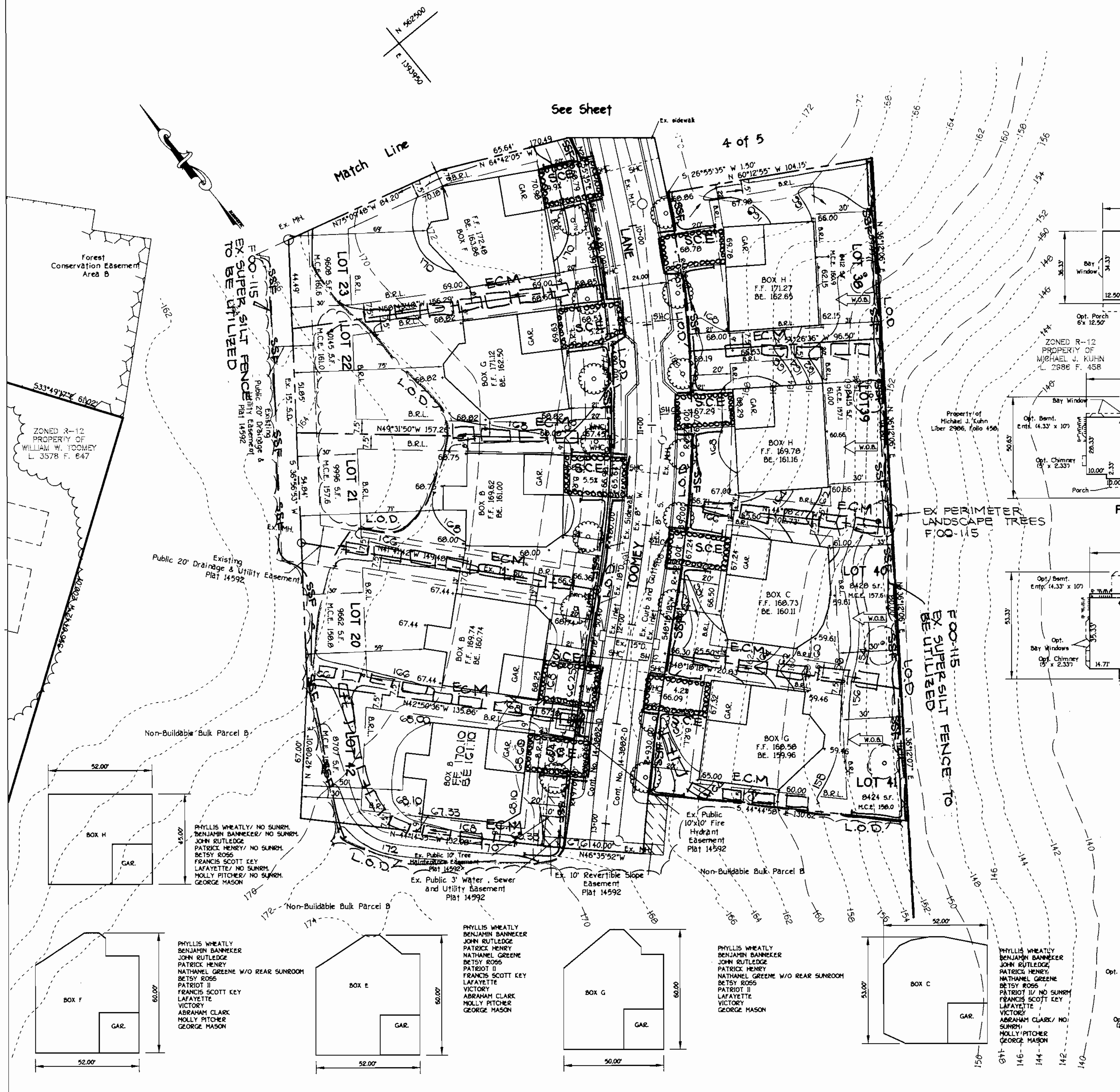

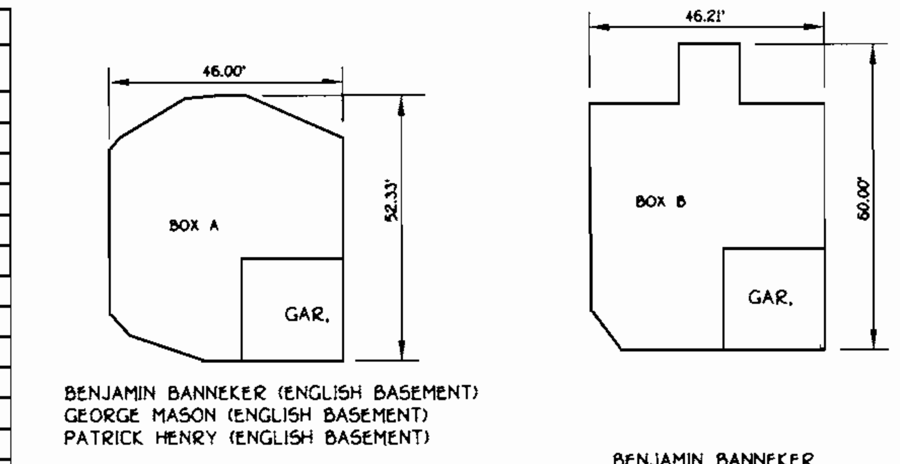

BENJAMIN BANNEKER
GEORGE MASON
PATRICK HENRY
BETSY ROSS
PHILLIS WHEATLEY
NATHANEL GREENE
PATRIOT II
ABRAHAM CLARK

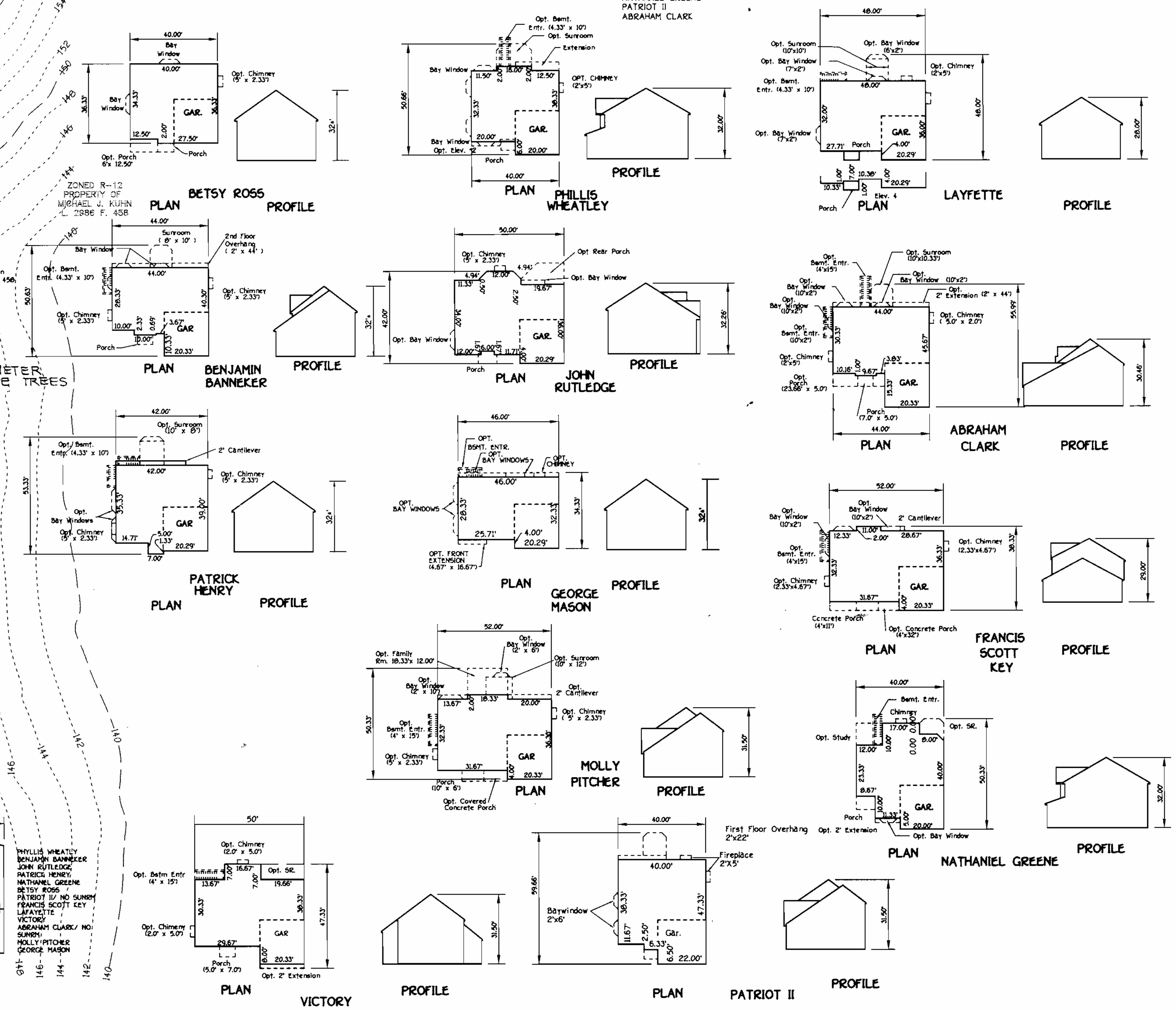

FISHER, COLLINS & CARTER, INC.
CIVIL ENGINEERING CONSULTANTS & LAND SURVEYORS
CENTENNIAL SQUARE OFFICE PARK - 10272 BALTIMORE NATIONAL PIKE
ELLICOTT CITY, MARYLAND 21042
(410) 461 - 2855

STATE OF MARYLAND — EARL D. COLLINS — NO. 9753 — REGISTERED PROFESSIONAL ENGINEER

REVISION	
DATE	DESCRIPTION

ENGINEER'S CERTIFICATE

"I certify that this plan for erosion and sediment control represents a practical and workable plan based on my personal knowledge of the site conditions and that it was prepared in accordance with the requirements of the Howard Soil Conservation District."

EARL D. COLLINS — 06·25·01

DEVELOPER'S CERTIFICATE

"I/We certify that all development and construction will be done according to this plan, for sediment and erosion control and that any responsible personnel involved in the construction project will have a Certificate of Attendance at a Department of the Environment Approved Training Program for the Control of Sediment and Erosion before beginning the project. I also authorize periodic on-site inspection by the Howard Soil Conservation District."

CINDY HUNTZBARRY — 3·2·01

Reviewed for HOWARD SCD and meets Technical Requirements.

U.S.D.A.-Natural Resources Conservation Service — Date 11/21/01

This development plan is approved for soil erosion and sediment control by the HOWARD SOIL CONSERVATION DISTRICT.

Howard SCD — Date 11/21/01

OWNER
PATRIOT HOMES
5485 HARPERS FARM ROAD
SUITE 200
COLUMBIA MD.
21044

APPROVED: HOWARD COUNTY DEPARTMENT OF PLANNING & ZONING

Chief, Division of Land Development — Date 12/4/01

Chief, Development Engineering Division — Date 12/3/01

Director - Department of Planning and Zoning — Date 12/5/01

PROJECT		SECTION/AREA	LOT NO.		
WESLEY WOODS		ONE	1-6, 20-23, 25-29, 32-42		
PLAT	BLOCK NO.	ZONE	TAX/ZONE	ELEC. DIST.	CENSUS TR.
14926-14929	4	R.-12	38	FIRST	6012.01
WATER CODE		SEWER CODE			
A01		2022700			

SEDIMENT AND EROSION CONTROL PLAN

WESLEY WOODS
SECTION ONE
LOTS 1-6, 20-23, 25-29, 32-42

FIRST ELECTION DISTRICT HOWARD COUNTY, MARYLAND
TAX MAP No. 38 PARCEL No. 162 GRID No. 4
SCALE 1" = 30' JUNE, 2001
SHEET 5 OF 5

F-02-21

SDP 01-109

W:\Drawings 6\61113 Toomey\61502 Wesley Woods - Patriot Homes\61502 Site Development Plan 2.dwg 06/21/01 02 14:58 PM

LEGEND	
Symbol	Description
-------	Existing Contour 2' Interval
———	Existing Contour 10' Interval
-------	Proposed Contour 2' Interval
———	Proposed Contour 10' Interval
+ 624	Spot Elevation
-SF-SF-	Silt Fence
FF	First Floor Elevation
BE	Basement Elevation
WO	Proposed Walkout
	Earth Dike
-X-X-	Tree Protection
	Existing Tree Line
L.O.D.	Limit Of Disturbance
(S)	Existing Street Tree
M.C.E.	Min. Cellar Elevation

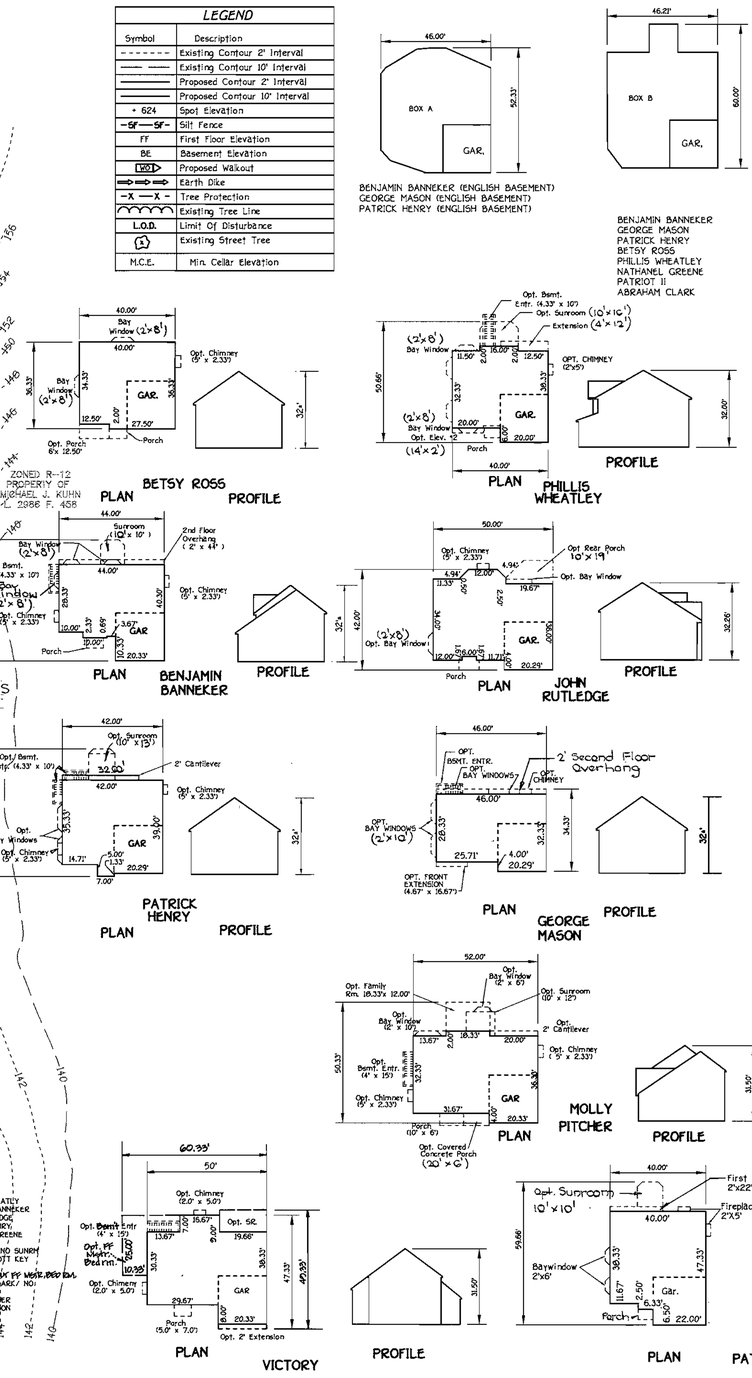

FISHER, COLLINS & CARTER, INC.
CIVIL ENGINEERING CONSULTANTS & LAND SURVEYORS
CENTENNIAL SQUARE OFFICE PARK - 10272 BALTIMORE NATIONAL PIKE
ELLICOTT CITY, MARYLAND 21042
(410) 461 - 2855

STATE OF MARYLAND — EARL D. COLLINS — No. 10968 — PROFESSIONAL ENGINEER

REVISION	
DATE	DESCRIPTION
2/19/02	REVISED HSE. & GRD. FROM H BOX TO VICTORY

ENGINEER'S CERTIFICATE

"I certify that this plan for erosion and sediment control represents a practical and workable plan based on my personal knowledge of the site conditions and that it was prepared in accordance with the requirements of the Howard Soil Conservation District."

EARL D. COLLINS — 06.26.01

DEVELOPER'S CERTIFICATE

"I/We certify that all development and construction will be done according to this plan, for sediment and erosion control and that are responsible personnel involved in the construction project will have a Certificate of Attendance at a Department of the Environment Approved Training Program for the Control of Sediment and Erosion before beginning the project. I also authorize periodic on-site inspection by the Howard Soil Conservation District."

CINDY HUNTZBARRY — 03.2.01

Reviewed for HOWARD SCD and meets Technical Requirements.

U.S.D.A.-Natural Resources Conservation Service — Date

This development plan is approved for Soil erosion and sediment control by the HOWARD SOIL CONSERVATION DISTRICT.

Howard SCD — Date 11/21/01

OWNER

PATRIOT HOMES
5485 HARPERS FARM ROAD
SUITE 200
COLUMBIA MD.
21044

APPROVED: HOWARD COUNTY DEPARTMENT OF PLANNING & ZONING

Chief, Division of Land Development — Date 12/4/01

Chief, Development Engineering Division — Date 12/4/01

Director - Department of Planning and Zoning — Date 12/5/01

PROJECT	SECTION/AREA	LOT NO.
WESLEY WOODS	ONE	1-6, 20-23, 25-29, 32-42

PLAT	BLOCK NO.	ZONE	TAX/ZONE	ELEC. DIST.	CENSUS TR.
14926 - 14929	4	R-12	38	FIRST	6012.01

WATER CODE	SEWER CODE
A01	2022700

SITE DEVELOPMENT PLAN

WESLEY WOODS

SECTION ONE
LOTS 1-6, 20-23, 25-29, 32-42

FIRST ELECTION DISTRICT HOWARD COUNTY, MARYLAND
TAX MAP No. 38 PARCEL No. 162 GRID No. 4
SCALE 1" = 30' JUNE, 2001
SHEET 2 OF 5

F-02-21

SDP 01-109

W:\Drawings\961113 Toomey\961502 Wesley Woods - Patriot Homes\1502 Site Development Plan 2.dwg, 06/01/01 02:14:58 PM