SITE DEVELOPMENT PLAN
MEADOWRIDGE BUSINESS PARK
PARCEL R-1
1st ELECTION DISTRICT
HOWARD COUNTY, MARYLAND

SHEET INDEX

NO	DESCRIPTION
1	TITLE SHEET
2	SITE DEVELOPMENT PLAN
3	GRADING, SEDIMENT CONTROL PLAN AND DRAINAGE AREA MAP
4	SEDIMENT CONTROL NOTES AND DETAILS
5	DETAILS AND PROFILES
6	STORMWATER MANAGEMENT DETAILS
7	WATER QUALITY NOTES AND DETAILS
8	DETAILS
9	LANDSCAPE PLAN
10	LANDSCAPE SCHEDULES AND DETAILS
11	STRIPING PLAN

GENERAL NOTES

1. ALL CONSTRUCTION SHALL BE IN ACCORDANCE WITH THE LATEST STANDARDS AND SPECIFICATIONS OF HOWARD COUNTY PLUS MSHA STANDARDS AND SPECIFICATIONS, IF APPLICABLE.
2. THE CONTRACTOR SHALL NOTIFY THE DEPARTMENT OF PUBLIC WORKS/BUREAU OF ENGINEERING/ CONSTRUCTION INSPECTION DIVISION AT (410) 313-1880 AT LEAST FIVE (5) WORKING DAYS PRIOR TO THE START OF WORK.
3. THE CONTRACTOR SHALL NOTIFY "MISS UTILITY" AT 1-800-257-7777 AY LEAST 48 HOURS PRIOR TO ANY EXCAVATION WORK BEING DONE.
4. TRAFFIC CONTROL DEVICES, MARKINGS, AND SIGNING SHALL BE IN ACCORDANCE WITH THE LATEST EDITION OF THE MANUAL ON UNIFORM TRAFFIC CONTROL DEVICES (MUTCD). ALL STREET AND REGULATORY SIGNS SHALL BE IN PLACE PRIOR TO THE PLACEMENT OF ANY ASPHALT.
5. ALL PLAN DIMENSIONS ARE TO FACE OF CURB AND FACE OF BUILDING UNLESS OTHERWISE NOTED.
6. THE COORDINATES SHOWN HEREON ARE BASED UPON THE HOWARD COUNTY GEODETIC CONTROL WHICH IS BASED UPON THE MARYLAND STATE PLANE COORDINATE SYSTEM. HOWARD COUNTY MONUMENT NOS. 43B6 AND 43B2 WERE USED FOR THIS PROJECT.
7. WATER IS PUBLIC. CONTRACT NO. 511-W. NEW WATER SERVICE TO BE UNDER ADO AGREEMENT.
8. SEWER IS PUBLIC. SEWER DRAINAGE AREA: PATAPSCO CONTRACT NO. 705-S. NEW SEWER SERVICE TO BE UNDER ADO AGREEMENT.
9. APPROXIMATE LOCATION OF EXISTING UTILITIES ARE SHOWN. THE CONTRACTOR SHALL TAKE ALL NECESSARY PRECAUTIONS TO PROTECT THE EXISTING UTILITIES AND MAINTAIN UNINTERRUPTED SERVICE. ANY DAMAGE INCURRED DUE TO CONTRACTOR'S OPERATION SHALL BE REPAIRED IMMEDIATELY AT THE CONTRACTOR'S EXPENSE. EXISTING UTILITIES ARE SHOWN BASED ON THE BEST
10. A 100-YEAR FLOODPLAIN STUDY WAS PREPARED BY RIEMER MUEGGE & ASSOCIATES DATED AUGUST 2000.
11. THE WETLANDS DELINEATION FOR THIS PROJECT IS FROM RECORDED PLAT 9047.
12. AN APFO TRAFFIC STUDY FOR THIS PROJECT WAS PREPARED BY LEE CUNNINGHAM & ASSOCIATES DATED MAY, 2001. ACCORDING TO THE TRAFFIC STUDY A RIGHT TURN LANE NEEDS TO BE PROVIDED AT ROUTE 1/ROUTE 103 INTERSECTION. LANE CONSTRUCTION WILL COMMENCE PRIOR TO BUILDING CONSTRUCTION.
13. A NOISE STUDY IS NOT REQUIRED FOR THIS PROJECT.
14. THE BOUNDARY SURVEY FOR THIS PROJECT IS BASED ON PREVIOUSLY RECORDED PLAT NO. 9047 AND 14861.
15. SUBJECT PROPERTY ZONED M-1 PER 10-18-93 COMPREHENSIVE ZONING PLAN.
16. ALL ELEVATIONS SHOWN ARE BASED ON THE U.S.C. AND G.S. MEAN SEA LEVEL DATUM, 1929.
17. SEE DEPARTMENT OF PLANNING AND ZONING FILE NOs WP-00-33, WP-01-115, F-01-74, WP-06-17
18. THE CONTRACTOR SHALL TEST PIT EXISTING UTILITIES AT LEAST (5) DAYS BEFORE STARTING WORK SHOWN ON THESE DRAWINGS.
19. CONTRACTOR IS SOLELY RESPONSIBLE FOR CONSTRUCTION MEANS, METHODS, TECHNIQUES, SEQUENCES, PROCEDURES, AND SAFETY PRECAUTIONS AND PROGRAMS.
20. PIPE SHALL NOT BE INSTALLED BY THE CONTRACTOR UNTIL THE LENGTH CALLED FOR AT EACH STATION HAS BEEN APPROVED BY THE ENGINEER IN THE FIELD.
21. NO PIPE SHALL BE LAID UNTIL LINES OF EXCAVATION HAVE BEEN BROUGHT WITHIN 6" OF FINISHED GRADE.
22. ALL STORM DRAIN PIPE BEDDING SHALL BE CLASS 'C' AS SHOWN IN FIG. 11.4, VOLUME 1 OF HOWARD COUNTY DESIGN MANUAL UNLESS OTHERWISE NOTED.
23. ALL INLETS SHALL BE CONSTRUCTED IN ACCORDANCE WITH HOWARD COUNTY STANDARDS.
24. ALL PIPE ELEVATIONS SHOWN ARE INVERT ELEVATIONS.
25. STORM DRAIN TRENCHES WITHIN ROAD RIGHT OF WAY SHALL BE BACKFILLED AND COMPACTED IN ACCORDANCE WITH THE HOWARD COUNTY DESIGN MANUAL, VOLUME IV, i.e., STANDARD SPECIFICATIONS AND DETAILS FOR CONSTRUCTION, LATEST AMENDMENTS.
26. PROFILES STATIONS SHALL BE ADJUSTED AS NECESSARY TO CONFORM TO PLAN DIMENSIONS.
27. ALL FILL AREAS WITHIN ROADWAY AND UNDER STRUCTURES TO BE COMPACTED TO A MINIMUM OF 95% COMPACTION OF AASHTO T180.
28. THE EXISTING TOPOGRAPHY IS TAKEN FROM FIELD RUN SURVEY WITH MAXIMUM TWO FOOT CONTOUR INTERVALS PREPARED BY RIEMER MUEGGE & ASSOCIATES, INC. DATED MARCH 2000.
29. A GEOTECHNICAL STUDY WAS PREPARED BY GTA, INC. DATED JAN. 1998.
30. STORMWATER QUALITY AND QUANTITY MANAGEMENT IS PROVIDED VIA A BAYSAVER AND A DETENTION POND.
31. WP-00-33 IS A WAIVER PETITION REQUESTING PERMISSION TO WAIVE SECTION 16.116(a)(1) AND TO PERMIT GRADING WITHIN WETLAND BUFFERS AND STREAM BUFFERS AND WAS APPROVED ON FEBRUARY 14, 2000.
32. ARMY COE/MDE PERMIT TO FILL WETLANDS EXPIRES SEPTEMBER 2, 2002. PERMIT NUMBER IS #CENAB-OP-RW 90-1204-4.
33. THIS PARCEL IS PART OF A PLANNED BUSINESS PARK GREATER THAN 75 ACRES THAT WAS RECORDED PRIOR TO DECEMBER 31, 1992 AND IS THEREFORE EXEMPT FROM THE FOREST CONSERVATION ORDINANCE.
34. THERE ARE NO CEMETARIES OR BURIAL GROUNDS ON THE SITE TO THE BEST OF OUR KNOWLEDGE.
35. WP-01-115 IS A WAIVER PETITION REQUESTING PERMISSION TO WAIVE SECTION 16.156(k) TO REACTIVATE A SITE DEVELOPMENT PLAN WHICH WAS DENIED FOR FAILURE TO SUBMIT ORIGINALS (BY 3-27-01) WITHIN 180 DAYS OF THE TECHNICALLY COMPLETE LETTER DATED SEPTEMBER 28, 2000. WAIVER WAS APPROVED MAY 10, 2001, SUBJECT TO THE FOLLOWING CONDITIONS:
    A. WITH REACTIVATION OF THIS SITE DEVELOPMENT PLAN, WP-00-33 IS ALSO REACTIVATED, SUBJECT TO THE THREE CONDITIONS STIPULATED IN THE APPROVAL LETTER DATED 2-14-00.
    B. UPDATE THE APFO STUDY STUDY AS REQUIRED BY THE ATTACHED COMMENTS FROM DEVELOPMENT ENGINEERING DIVISION (DED).
    C. SUBMIT A REVISED SDP WITHIN 45 DAYS OF THIS APPROVAL (BY JUNE 24, 2001) ADDRESSING ALL OUTSTANDING COMMENTS FROM DED. FOUR COMPLETE SETS OF THE SDP SHOULD BE SUBMITTED (2 FOR THE DIVISION OF LAND DEVELOPMENT, 2 FOR DED). TWO COMPLETE SETS OF ANY SUPPLEMENTAL INFORMATION REQUIRED BY DED SHOULD ALSO BE SUBMITTED IN THE PACKAGE FOR THAT DIVISION.
36. LANDSCAPE SURETY WILL BE POSTED WITH DEVELOPER'S AGREEMENT IN THE AMOUNT OF $21,600.00.

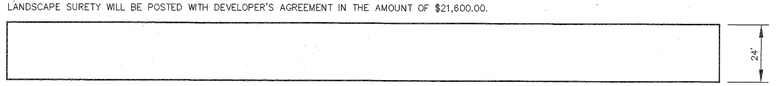

BUILDING ELEVATION
SCALE: 1" = 30'

△3 WP-06-17 - A WAIVER OF SECTION 16.156 (m)(1)(i) WAS APPROVED BY THE DIRECTOR OF PLANNING AND ZONING ON SEPTEMBER 6, 2005. THE APPROVAL IS SUBJECT TO TWO CONDITIONS:
1) SDP-00-144 IS HEREBY REACTIVATED FOR A ONE YEAR PERIOD TO APPLY FOR BUILDING PERMITS TO INITIATE CONSTRUCTION OF THE APPROVED BUILDING(S) FOR THE SUBJECT PROPERTY. THE APPLICANT SHALL COMPLY WITH ALL BUILDING PERMIT APPLICATION REQUIREMENTS OF DILP.
2) COMPLIANCE WITH DEPT. OF ENVIRONMENTAL AND COMMUNITY PLANNING COMMENTS DATED AUGUST 17, 2005, TO ADD A SIDEWALK AND STREET TREES ALONG U.S. ROUTE 1.

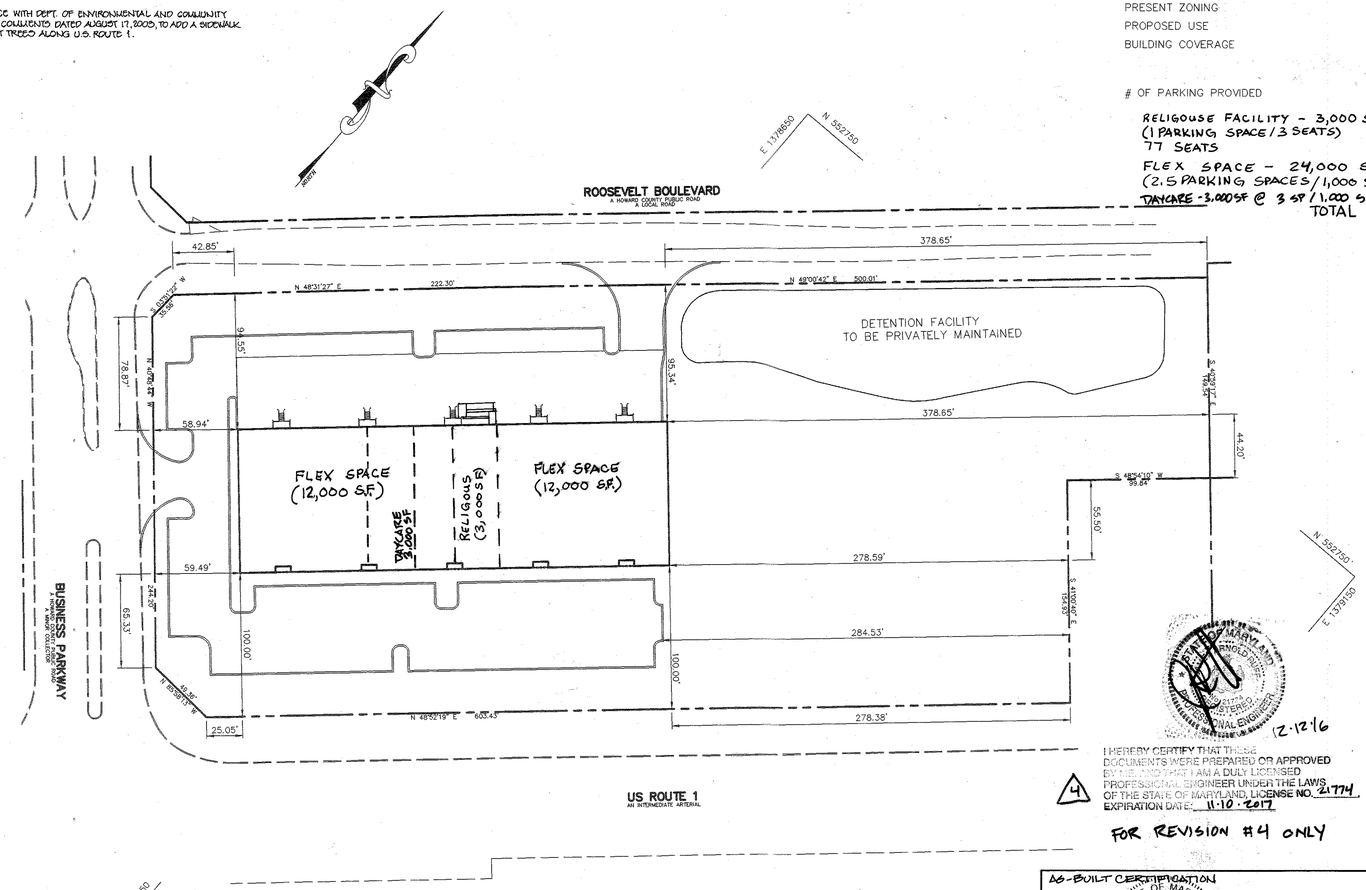

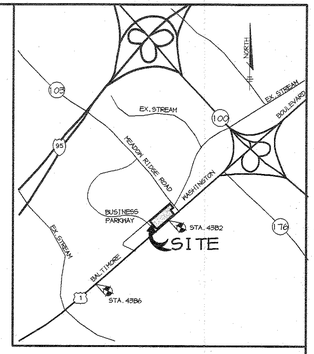

VICINITY MAP
SCALE: 1" = 2000'

AS-BUILT CONTROL
BENCHMARKS

✓ HO. CO. SURVEY CONTROL STATION 43B6
N 550,601.59 E 1,376,866.05
ELEV. 210.61

✓ HO. CO. SURVEY CONTROL STATION 43B2
N 551,655.01 E 1,378,176.94
ELEV. 209.67

SITE ANALYSIS

AREA OF PARCEL	4.62 ACRES 201,444 SF
DISTURBED AREA	3.59 ACRES 156,164 SF
PRESENT ZONING	M-1
PROPOSED USE	1 OFFICE/WAREHOUSE FACILITY (ONE STORY)
BUILDING COVERAGE	30,000 SF (15% COVERAGE)
# OF PARKING PROVIDED	97 SPACES (INCLUDING 5 HC)
RELIGOUSE FACILITY - 3,000 S.F. (1 PARKING SPACE / 3 SEATS) 77 SEATS	26 SPACES
FLEX SPACE - 24,000 S.F (2.5 PARKING SPACES / 1,000 S.F.)	60 SPACES
DAYCARE - 3,000 SF @ 3 SP / 1,000 SF	9 SPACES
TOTAL	95 SPACES REQUIRED

△4 I HEREBY CERTIFY THAT THESE DOCUMENTS WERE PREPARED OR APPROVED BY ME, AND THAT I AM A DULY LICENSED PROFESSIONAL ENGINEER UNDER THE LAWS OF THE STATE OF MARYLAND, LICENSE NO. 21774, EXPIRATION DATE: 11·10·2017

12·12·16

FOR REVISION #4 ONLY

AS-BUILT CERTIFICATION
STATE OF MARYLAND AIMEE C. REMINGTON No. 29923 PROFESSIONAL ENGINEER
AIMEE C. REMINGTON #29923 — 10.12.05 DATE

BENCHMARK ENGINEERING, INC.
410 465 6105
FOR REVISIONS BY BEI ONLY

10/8/2012
28559 — 7/27/2018

ADDRESS CHART

PARCEL	STREET ADDRESS
R-1	6785 BUSINESS PARKWAY

SUBDIVISION NAME -			SECT./AREA -	PARCEL -
MEADOWRIDGE BUSINESS PARK			-	R-1
PLAT # - 14861	BLOCK # - 23 4 & 5	ZONING - M-1	TAX MAP NO. - 37 43	ELECT. DIST. - 1st	CENSUS TRACT - 6012
WATER CODE - B01			SEWER CODE - 2153000	

NO	DATE	REVISION	BY
4	12·12·16	ADD DAY CARE + PLAY AREA TO SUITE M	PJG
3	12-20-12	ADD TEMPORARY HC ACCESS FOR SUITE G	BEI

APPROVED : HOWARD COUNTY DEPARTMENT OF PLANNING AND ZONING.

DIRECTOR — DATE 11/2/01
CHIEF, DEVELOPMENT ENGINEERING DIVISION — DATE 10/26/01
CHIEF, DIVISION OF LAND DEVELOPMENT — DATE 10/31/01

DATE	NO.	REVISION
10-5-18	2	BEI - REV. PARKING TABS FOR SUITE G
1-10-06	△1	ADDED WP-06-17 NOTE #31 WHICH STATES THAT SDP-00-144 HAS BEEN REACTIVATED AS OF 9-6-05.

OWNER/DEVELOPER
SDC, INC.
8480 BALTIMORE NATIONAL PIKE
ELLICOTT CITY, MARYLAND 21043
410-465-4244

PROJECT
MEADOWRIDGE BUSINESS PARK
PARCEL R-1
A WAREHOUSE BUILDING

AREA
ZONED M-1 PARCEL R-1
TAX MAP 37, BLOCK 23 & TAX MAP 43, BLOCK 4 & 5
1st ELECTION DISTRICT
HOWARD COUNTY, MARYLAND

TITLE
TITLE SHEET

RIEMER MUEGGE & ASSOCIATES INC
ENGINEERING • ENVIRONMENTAL SERVICES • PLANNING • SURVEYING
8818 Centre Park Drive, Columbia, MD 21045
tel 410.997.8900 fax 410.997.9282

10·9·01
DATE
STATE OF MARYLAND CHRISTOPHER J. REID No. 19949 REGISTERED PROFESSIONAL ENGINEER
CHRISTOPHER J. REID #19949

DESIGNED BY :	CJR
DRAWN BY:	K.E.V.
PROJECT NO :	00036/ SDP1.DWG
DATE :	SEPTEMBER 21, 2001
SCALE :	1"=50'
DRAWING NO.	1 OF 11

AS-BUILT
SDP-00-144

P:\project\00036\SDP1.DWG Wed Sep 19 13:12:36 2001 RIEMER MUEGGE A DIVISION OF PHR&A

Professional Certification. I hereby certify that these documents were prepared or approved by me, and that I am a duly licensed professional engineer under the laws of the State of Maryland.
License No. 28559 Expiration Date: 7-22-13

FOR REVISIONS BY BENCHMARK ENGINEERING INC. ONLY

I HEREBY CERTIFY THAT THESE DOCUMENTS WERE PREPARED OR APPROVED BY ME, AND THAT I AM A DULY LICENSED PROFESSIONAL ENGINEER UNDER THE LAWS OF THE STATE OF MARYLAND, LICENSE NO. 21714 EXPIRATION DATE: 11·10·2017

12·12·16

FOR REVISION #4 ONLY

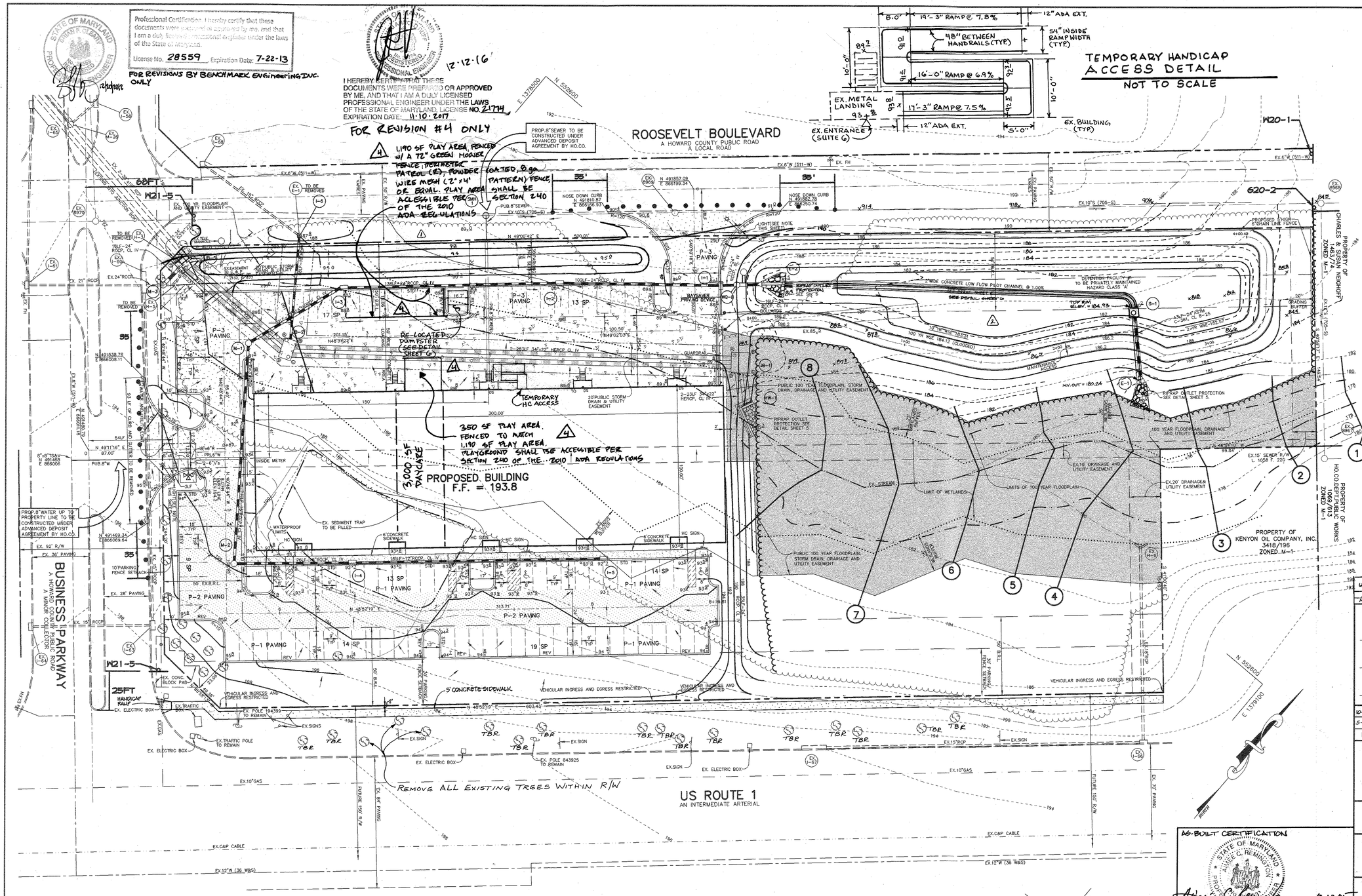

TEMPORARY HANDICAP ACCESS DETAIL
NOT TO SCALE

LEGEND

CONCRETE
P-1 PAVING
P-2 PAVING
P-3 PAVING
STD-REV — STANDARD CURB - REVERSE CURB
STREET LIGHT (SINGLE)-SEE NOTE 1

TRAFFIC CONTROL SIGNAGE LEGEND

SIGN
TEMPORARY BARRIER

SHOULDER WORK
W21-5
30" x 30"

ROAD WORK AHEAD
W20-1
30" x 30"

END ROAD WORK
G20-2
60" x 24"

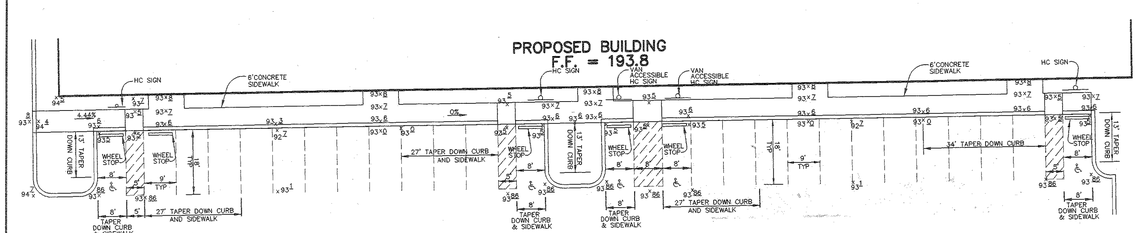

HANDICAP RAMP DETAIL
SCALE: 1" = 20'

FLOODPLAIN CHART			
X-SECT.	Q_{100} (CFS)	W.S.EL. (FT)	
1	154.64	179.21	
2	154.64	179.04	
3	154.64	179.02	
4	134.68	179.50	
5	134.68	180.48	
6	134.68	181.12	
7	134.68	182.02	
8	134.68	182.68	

SWMF #1			
SUMMARY CHART DA TO DESIGN POINT			
STORM	2 YR.	10 YR.	100 YR.
ALLOWABLE RELEASE RATE (CFS)	60.48	106.69	-
DISCHARGE (CFS)	54.17	105.21	-
ELEVATION (FEET)	182.57	183.31	184.12*
STORAGE (ACRE-FEET)	0.287	0.464	0.664

* CLOSED CONDITIONS

NOTES:

1. STREET LIGHTS TO BE 250 WATT HPS VAPOR PENDANT FIXTURE (CUTOFF) MOUNTED AT 30' ON A BRONZE FIBERGLASS POLE USING 12' ARM, ARM RADIAL TO FILLET.
   STREET LIGHT ON ROOSEVELT BLVD. IS TO BE LOCATED AT STATION 0+27.89, 29LF TO THE LEFT.
   STREET LIGHT ON BUSINESS PARKWAY IS TO BE LOCATED AT STATION 0+53.75, 24LF TO THE RIGHT.
2. ALL EXTERIOR LIGHTING SHALL CONFORM TO ZONING REGULATIONS SECTION 134.
3. ALL CURB RADII ARE 5' UNLESS OTHERWISE LABELED.
4. ALL DIMENSIONS ARE TO FACE OF CURB OR BUILDING UNLESS OTHERWISE LABELED.
5. * LIMITS OF STD/REV CURB AND GUTTER.
6. FOR BUILDING LOCATION DIMENSIONS SEE SHEET 1.
7. NO TRUCK LOADING AREA MAY EXTEND INTO THE 50' STRUCTURE AND USE SETBACK
8. TBR = TO BE REMOVED

AS-BUILT CERTIFICATION
AIMEE C. REMINGTON #29923
10.12.05
DATE

NO	DATE	REVISION	BY
4	12·12·16	ADD DAYCARE & PLAYGROUND TO SUITE M	PSS
3	12·20·12	ADD TEMPORARY HC ACCESS FOR SUITE G	BEL

APPROVED : HOWARD COUNTY DEPARTMENT OF PLANNING AND ZONING.

DIRECTOR — DATE 11/2/01
CHIEF, DEVELOPMENT ENGINEERING DIVISION — DATE 10/26/01
CHIEF, DIVISION OF LAND DEVELOPMENT — DATE 10/31/01

DATE	NO.	REVISION	
10-05-05	2	ADDED AS-BUILT DETENTION FACILITY INFO.	
5-03-04	1	ADDED SIDEWALK ON RTE 1, & BERM GRADING	S.E.L.

OWNER/DEVELOPER
SDC, INC.
8480 BALTIMORE NATIONAL PIKE
ELLICOTT CITY, MARYLAND 21043
410-465-4244

PROJECT
MEADOWRIDGE BUSINESS PARK
PARCEL R-1
A WAREHOUSE BUILDING

AREA
ZONED M-1 PARCEL R-1
TAX MAP 37, BLOCK 23 & TAX MAP 43, BLOCK 4 & 5
1st ELECTION DISTRICT
HOWARD COUNTY, MARYLAND

TITLE
SITE DEVELOPMENT PLAN

RIEMER MUEGGE & ASSOCIATES INC
ENGINEERING • ENVIRONMENTAL SERVICES • PLANNING • SURVEYING
8618 Centre Park Drive, Columbia, MD 21045
tel 410.997.8900 fax 410.997.9282

10.9.01
DATE
CHRISTOPHER J. REID #19949

DESIGNED BY :	CJR
DRAWN BY:	DAM/K.E.V.
PROJECT NO :	00036/SDP2.DWG
DATE :	SEPTEMBER 21, 2001
SCALE :	1" = 30'
DRAWING NO.	2 OF 11

AS-BUILT
SDP-00-144

P:\project\00036\SDP2.DWG Wed Sep 19 13:14:18 2001 RIEMER MUEGGE A DIVISION OF PHR&A

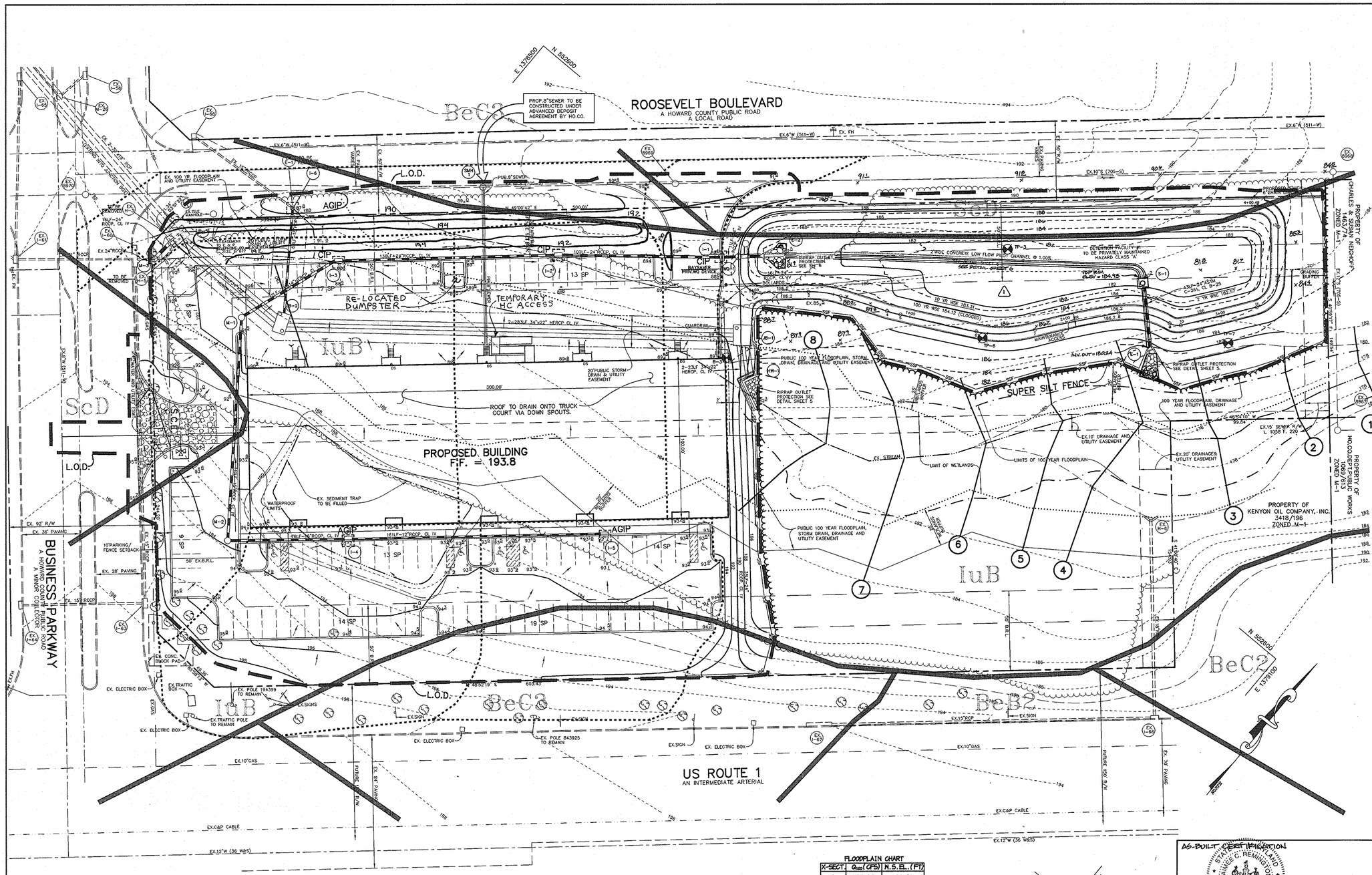

LEGEND

- DRAINAGE AREA DIVIDE
- SF — SILT FENCE
- SSF — SUPER SILT FENCE
- L.O.D. — LIMIT OF DISTURBANCE
- IP — INLET PROTECTION
- SOIL LINE
- 100-YR FLOODPLAIN LIMITS
- WETLANDS LIMITS
- EXISTING STREAM
- FILTER BAGS

BY THE DEVELOPER :

I/WE CERTIFY THAT ALL DEVELOPMENT AND CONSTRUCTION WILL BE DONE ACCORDING TO THIS PLAN, AND THAT ANY RESPONSIBLE PERSONNEL INVOLVED IN THE CONSTRUCTION PROJECT WILL HAVE A CERTIFICATE OF ATTENDANCE AT A DEPARTMENT OF THE ENVIRONMENT APPROVED TRAINING PROGRAM FOR THE CONTROL OF SEDIMENT AND EROSION BEFORE BEGINNING THE PROJECT. I ALSO AUTHORIZE PERIODIC ON-SITE INSPECTIONS BY THE HOWARD SOIL CONSERVATION DISTRICT.

DEVELOPER — DATE 10-17-01

BY THE ENGINEER :

I CERTIFY THAT THIS PLAN FOR EROSION AND SEDIMENT CONTROL REPRESENTS A PRACTICAL AND WORKABLE PLAN BASED ON MY PERSONAL KNOWLEDGE OF THE SITE CONDITIONS AND THAT IT WAS PREPARED IN ACCORDANCE WITH THE REQUIREMENTS OF THE HOWARD SOIL CONSERVATION DISTRICT.

ENGINEER — DATE 10.9.01

THESE PLANS HAVE BEEN REVIEWED FOR THE HOWARD SOIL CONSERVATION DISTRICT AND MEET THE TECHNICAL REQUIREMENTS FOR SOIL EROSION AND SEDIMENT CONTROL.

NATURAL RESOURCES CONSERVATION SERVICE — DATE 10/24/01

THIS DEVELOPMENT PLAN IS APPROVED FOR SOIL EROSION AND SEDIMENT CONTROL BY THE HOWARD SOIL CONSERVATION DISTRICT.

HOWARD SOIL CONSERVATION DISTRICT — DATE 10/24/01

APPROVED : HOWARD COUNTY DEPARTMENT OF PLANNING AND ZONING.

DIRECTOR — DATE 11/2/01

CHIEF, DEVELOPMENT ENGINEERING DIVISION — DATE 10/26/01

CHIEF, DIVISION OF LAND DEVELOPMENT — DATE 10/31/01

DATE	NO.	REVISION	
12-20-12	2	ADD TEMP. HC ACCESS FOR SUITE G	BET
10-05-05	1	ADDED AS-BUILT DETENTION FACILITY INFO	

OWNER/DEVELOPER

SDC, INC.
8480 BALTIMORE NATIONAL PIKE
ELLICOTT CITY, MARYLAND 21043
410-465-4244

PROJECT MEADOWRIDGE BUSINESS PARK
PARCEL R-1
A WAREHOUSE BUILDING

AREA ZONED M-1 PARCEL R-1
TAX MAP 37, BLOCK 23 & TAX MAP 43, BLOCK 4 & 5
1st ELECTION DISTRICT
HOWARD COUNTY, MARYLAND

TITLE GRADING, SEDIMENT CONTROL PLAN AND DRAINAGE AREA MAP

AS-BUILT CERTIFICATION
STATE OF MARYLAND — AIMEE C. REMINGTON — No. 29923 — PROFESSIONAL ENGINEER
AIMEE C. REMINGTON #29923 — DATE 10-12-05

FLOODPLAIN CHART

X-SECT.	Q_{100} (CFS)	W.S.EL. (FT)
1	154.64	179.21
2	154.64	179.09
3	154.64	179.02
4	134.68	179.50
5	134.68	180.48
6	134.68	181.12
7	134.68	182.02
8	134.68	182.68

DAM & DATA SWMF #1

① N 441816.71 E 866282.90	
② CL STA 0+34.24	① - ② N 40°12'56" E
③ CL STA 0+54.57	② - ③ R = 60.00'
④ CL STA 0+85.24	③ - ④ N 61°31'31" E
⑤ CL STA 0+44.00	④ - ⑤ R = 100.00'
⑥ CL STA 1+42.79	⑤ - ⑥ S 62°36'37"H
⑦ CL STA 1+80.01	⑥ - ⑦ R = 75.00'
⑧ CL STA 2+55.56	⑦ - ⑧ R = 300.37'
⑨ CL STA 2+66.46	⑧ - ⑨ R = 50.00'
⑩ CL STA 2+74.25	⑨ - ⑩ R = 10.00'
⑪ CL STA 3+25.18	⑩ - ⑪ R = 545.00'
⑫ CL STA 3+46.16	⑪ - ⑫ R = 18.00'
⑬ CL STA 3+74.07	⑫ - ⑬ N 84°02'15" H
⑭ CL STA 4+00.40 N 442061.87 E 866404.15	⑬ - ⑭ R = 13.00'

SOILS CHART

BeB2	BELTSVILLE SILT LOAM, 1 TO 5 PERCENT SLOPES, MODERATELY ERODED
BeC2	BELTSVILLE SILT LOAM, 5 TO 10 PERCENT SLOPES, MODERATELY ERODED
BeC3	BELTSVILLE SILT LOAM, 5 TO 10 PERCENT SLOPES, SEVERELY ERODED
IuB	IUKA LOAM, LOCAL ALLUVIUM, 1 TO 5 PERCENT SLOPES
SsD	SANDY AND CLAYEY LAND, MODERATELY SLOPING

DRAINAGE DATA

INLET NOS.	AREA IN ACRES	'C' FACTOR	PERCENT IMPERVIOUS
1	0.24	0.78	88
2	0.54	0.76	85
3	0.89	0.76	85
4	0.51	0.49	45
5	0.41	0.52	49
6	0.33	0.45	39

STATE OF MARYLAND — BRIAN F. CLEARY — No. 28559 — PROFESSIONAL ENGINEER — 12/10/2012

Professional Certification. I hereby certify that these documents were prepared or approved by me, and that I am a duly licensed professional engineer under the laws of the State of Maryland.
License No. 28559 Expiration Date: 7-22-13
FOR REVISION BY BENCHMARK ENGINEERING INC. ONLY

RIEMER MUEGGE & ASSOCIATES INC
ENGINEERING • ENVIRONMENTAL SERVICES • PLANNING • SURVEYING
6818 Centre Park Drive, Columbia, MD 21045
tel 410.997.8900 fax 410.997.9282

10.9.01 DATE

STATE OF MARYLAND — CHRISTOPHER J. REID — No. 19949 — REGISTERED PROFESSIONAL ENGINEER
CHRISTOPHER J. REID #19949

DESIGNED BY :	CJR
DRAWN BY:	DAM/K.E.V.
PROJECT NO :	00036/SDP3.DWG
DATE :	SEPTEMBER 21, 2001
SCALE :	1" = 30'
DRAWING NO.	3 OF 11

AS-BUILT

SDP-00-144

P:\project\00036\SDP3.DWG Wed Sep 19 13:19:32 2001 RIEMER MUEGGE A DIVISION OF PMRGA

TEMPORARY SEEDING NOTES

Apply to graded or cleared areas likely to be redisturbed where a short-term vegetative cover is needed.

Seedbed Preparation : Loosen upper three inches of soil by raking, discing or other acceptable means before seeding, if not previously loosened.

Soil Amendments : Apply 600 lbs. per acre 10-10-10 fertilizer (14 lbs. per 1000 sq.ft.).

Seeding : For periods March 1 thru April 30 and from August 15 thru November 15, seed with 2-1/2 bushels per acre of annual rye (3.2 lbs. per 1000 sq.ft.). For the period May 1 thru August 14, seed with 3 lbs. per acre of weeping lovegrass (0.07 lbs. per 1000 sq.ft.) For the period November 16 thru February 28, protect site by applying 2 tons per acre of well anchored straw mulch and seed as soon as possible in the spring, or use sod.

Mulching : Apply 1-1/2 to 2 tons per acre (70 to 90 lbs. per 1000 sq.ft.) of unrotted small grain straw immediately after seeding. Anchor mulch immediately after application using mulch anchoring tool or 218 gal. per acre (5 gal. per 1000 sq.ft.) of emulsified asphalt on flat areas. On slopes, 8 ft. or higher, use 347 gal. per acre (8 gal. per 1000 sq.ft.) for anchoring.

Refer to the 1983 MARYLAND STANDARDS AND SPECIFICATIONS FOR SOIL EROSION AND SEDIMENT CONTROL for rate and methods not covered.

PERMANENT SEEDING NOTES

Apply to graded or cleared areas not subject to immediate further disturbance where a permanent long-lived vegetative cover is needed.

Seedbed Preparation : Loosen upper three inches of soil by raking, discing or other acceptable means before seeding, if not previously loosened.

Soil Amendments : In lieu of soil test recommendations, use one of the following schedules :

1) Preferred - Apply 2 tons per acre dolomitic limestone (92 lbs. per 1000 sq.ft.) and 600 lbs. per acre 10-10-10 fertilizer (14 lbs. per 1000 sq.ft.) before seeding. Harrow or disc into upper three inches of soil. At time of seeding, apply 400 lbs. per acre 30-0-0 ureaform fertilizer (9 lbs per 1000 sq.ft.).

2) Acceptable - Apply 2 tons per acre dolomitic limestone (92 lbs. per 1000 sq.ft.) and 1000 lbs. per acre 10-10-10 fertilizer (23 lbs. per 1000 sq.ft.) before seeding. Harrow or disc into upper three inches of soil.

Seeding : For the period March 1 thru April 30 and from August 1 thru October 15, seed with 60 lbs. per acre (1.4 lbs. per 1000 sq.ft.) of Kentucky 31 Tall Fescue. For the period May 1 thru July 31, seed with 60 lbs. Kentucky 31 Tall Fescue per acre and 2 lbs. per acre (0.05 lbs. per 1000 sq.ft.) of weeping lovegrass. During the period October 16 thru February 28, protect site by one of the following options :

1) 2 tons per acre of well-anchored mulch straw and seed as soon as possible in the spring.

2) Use sod.

3) Seed with 60 lbs. per acre Kentucky 31 Tall Fescue and mulch with 2 tons per acre well anchored straw.

Mulching : Apply 1-1/2 to 2 tons per acre (70 to 90 lbs. per 1000 sq.ft.) of unrotted small grain straw immediately after seeding. Anchor mulch immediately after application using mulch anchoring tool or 218 gal. per acre (5 gal. per 1000 sq.ft.) of emulsified asphalt on flat areas. On slopes, 8 ft. or higher, use 347 gal. per acre (8 gal. per 1000 sq.ft.) for anchoring.

Maintenance : Inspect all seeded areas and make needed repairs, replacements and reseedings.

STANDARD SEDIMENT CONTROL NOTES

1. A MINIMUM OF 48 HOURS NOTICE MUST BE GIVEN TO THE HOWARD COUNTY DEPARTMENT OF INSPECTIONS, LICENSES AND PERMITS, SEDIMENT CONTROL DIVISION PRIOR TO THE START OF ANY CONSTRUCTION (313-1855).

2. ALL VEGETATIVE AND STRUCTURAL PRACTICES ARE TO BE INSTALLED ACCORDING TO THE PROVISIONS OF THIS PLAN AND ARE TO BE IN CONFORMANCE WITH THE 1994 MARYLAND STANDARDS AND SPECIFICATIONS FOR SOIL EROSION AND SEDIMENT CONTROL AND REVISIONS THERETO.

3. FOLLOWING INITIAL SOIL DISTURBANCE OR RE-DISTURBANCE, PERMANENT OR TEMPORARY STABILIZATION SHALL BE COMPLETED WITHIN: A) 7 CALENDAR DAYS FOR ALL PERIMETER SEDIMENT CONTROL STRUCTURES, DIKES, PERIMETER SLOPES, AND ALL SLOPES STEEPER THAN 3:1, B) 14 DAYS AS TO ALL OTHER DISTURBED OR GRADED AREAS ON THE PROJECT SITE.

4. ALL SEDIMENT TRAPS/BASINS SHOWN MUST BE FENCED AND WARNING SIGNS POSTED AROUND THE PERIMETER IN ACCORDANCE WITH VOL. 1, CHAPTER 7, OF THE HOWARD COUNTY DESIGN MANUAL, STORM DRAINAGE.

5. ALL DISTURBED AREAS MUST BE STABILIZED WITHIN THE TIME PERIOD SPECIFIED ABOVE IN ACCORDANCE WITH THE 1994 MARYLAND STANDARDS AND SPECIFICATIONS FOR SOIL EROSION AND SEDIMENT CONTROL FOR PERMANENT SEEDING, SOD, TEMPORARY SEEDING, AND MULCHING (SEC. 6.). TEMPORARY STABILIZATION WITH MULCH ALONE SHALL ONLY BE DONE WHEN RECOMMENDED SEEDING DATES DO NOT ALLOW FOR PROPER GERMINATION AND ESTABLISHED OF GRASSES.

6. ALL SEDIMENT CONTROL STRUCTURES ARE TO REMAIN IN PLACE AND ARE TO BE MAINTAINED IN OPERATIVE CONDITION UNTIL PERMISSION FOR THEIR REMOVAL HAS BEEN OBTAINED FROM THE HOWARD COUNTY SEDIMENT CONTROL INSPECTOR.

7. SITE ANALYSIS:

TOTAL AREA OF SITE	4.62 ACRES
AREA DISTURBED	3.59 ACRES
AREA TO BE ROOFED OR PAVED	2.5 ACRES
AREA TO BE VEGETATIVELY STABILIZED	1.09 ACRES
TOTAL CUT	1,200 CU. YARDS
TOTAL FILL	22,000 CU. YARDS

OFFSITE WASTE AREA LOCATION TO HAVE ACTIVE GRADING PERMIT

8. ANY SEDIMENT CONTROL PRACTICE WHICH IS DISTURBED BY GRADING ACTIVITY FOR PLACEMENT OF UTILITIES MUST BE REPAIRED ON THE SAME DAY OF DISTURBANCE.

9. ADDITIONAL SEDIMENT CONTROLS MUST BE PROVIDED, IF DEEMED NECESSARY BY THE HOWARD COUNTY SEDIMENT CONTROL INSPECTOR.

10. ON ALL SITES WITH DISTURBED AREAS IN EXCESS OF 2 ACRES, APPROVAL OF THE INSPECTION AGENCY SHALL BE REQUESTED UPON COMPLETION OF INSTALLATION OF PERIMETER EROSION AND SEDIMENT CONTROLS, BUT BEFORE PROCEEDING WITH ANY OTHER EARTH DISTURBANCE OR GRADING. OTHER BUILDING OR GRADING INSPECTION APPROVALS MAY NOT BE AUTHORIZED UNTIL THIS INITIAL APPROVAL BY THE INSPECTION AGENCY IS MADE.

11. TRENCHES FOR THE CONSTRUCTION OF UTILITIES IS LIMITED TO THREE PIPE LENGTHS OR THAT WHICH SHALL BE BACK-FILLED AND STABILIZED WITHIN ONE WORKING DAY, WHICHEVER IS SHORTER.

12. SITE GRADING WILL BEGIN ONLY AFTER ALL PERIMETER SEDIMENT CONTROL MEASURES HAVE BEEN INSTALLED AND ARE IN A FUNCTIONING CONDITION.

13. SEDIMENT WILL BE REMOVED FROM TRAPS WHEN ITS DEPTH REACHES CLEAN OUT ELEVATION SHOWN ON THE PLANS.

14. CUT AND FILL QUANTITIES PROVIDED UNDER SITE ANALYSIS DO NOT REPRESENT BID QUANTITIES. THESE QUANTITIES DO NOT DISTINGUISH BETWEEN TOPSOIL, STRUCTURAL FILL OR EMBANKMENT MATERIAL, NOR DO THEY REFLECT CONSIDERATION OF UNDERCUTTING OR REMOVAL OF UNSUITABLE MATERIAL. THE CONTRACTOR SHALL FAMILIARIZE HIMSELF WITH SITE CONDITIONS WHICH MAY AFFECT THE WORK.

21.0 STANDARD AND SPECIFICATIONS FOR TOPSOIL

Definition

Placement of topsoil over a prepared subsoil prior to establishment of permanent vegetation.

Purpose

To provide a suitable soil medium for vegetative growth. Soils of concern have low moisture content, low nutrient levels, low pH, materials toxic to plants, and/or unacceptable soil gradation.

Conditions Where Practice Applies

I. This practice is limited to areas having 2:1 or flatter slopes where:
a. The texture of the exposed subsoil/parent material is not adequate to produce vegetative growth.
b. The soil material is so shallow that the rooting zone is not deep enough to support plants or furnish continuing supplies of moisture and plant nutrients.
c. The original soil to be vegetated contains material toxic to plant growth.
d. The soil is so acidic that treatment with limestone is not feasible.

II. For the purpose of these Standards and Specifications, areas having slopes steeper than 2:1 require special consideration and design for adequate stabilization. Areas having slopes steeper than 2:1 shall have the appropriate stabilization shown on the plans.

Construction and Material Specifications

I. Topsoil salvaged from the existing site may be used provided that it meets the standards as set forth in these specifications. Typically, the depth of topsoil to be salvaged for a given soil type can be found in the representative soil profile section in the Soil Survey published by USDA-SCS in cooperation with Maryland Agricultural Experimentation Station.

II. Topsoil Specifications - Soil to be used as topsoil must meet the following:
i. Topsol shall be a loam, sandy loam, clay loam, silt loam, sandy clay loam, loamy sand. Other soils may be used if recommended by an agronomist or soil scientist and approved by the appropriate approval authority. Regardless, topsoil shall not be a mixture of contrasting textured subsoils and shall contain less than 5% by volume of cinders, stones, slag, coarse fragments, gravel, sticks, roots, trash, or other materials larger than 1½" in diameter.
ii. Topsoil must be free of plants or plant parts such as bermuda grass, quackgrass, Johnsongrass, nutsedge, poison ivy, thistle, or others as specified.
iii. Where subsoil is either highly acidic or composed of heavy clays, ground limestone shall be spread at the rate of 4-8 tons/acre (200-400 pounds per 1,000 square feet) prior to the placement of topsoil. Lime shall be distributed uniformly over designated areas and worked into the soil in conjunction with tillage operations as described in the following procedures.

For sites having disturbed areas under 5 acres:
I. Place topsoil (if required) and apply soil amendments as specified in 20.0 Vegetative Stabilization - Section I - Vegetative Stabilization Methods and Materials.

III. For sites having disturbed areas over 5 acres:
I. On soil meeting Topsoil specifications, obtain test results dictating fertilizer and lime amendments required to bring the soil into compliance with the following:
a. pH for topsoil shall be between 6.0 and 7.5. If the tested soil demonstrates a pH of less than 6.0, sufficient lime shall be prescribed to raise the pH to 6.5 or higher.
b. Organic content of topsoil shall be not less than 1.5 percent by weight.
c. Topsoil having soluble salt content greater than 500 parts per million shall not be used.
d. No sod or seed shall be placed on soil which has been treated with soil sterilants or chemicals used for weed control until sufficient time has elapsed (14 days min.) to permit dissipation of phyto-toxic materials.

Note: Topsoil substitutes to amendments, as recommended by a qualified agronomist or soil scientist and approved by the appropriate approval authority may be used in lieu of natural topsoil.

II. Place topsoil (if required) and apply soil amendments as specified in 20.0 Vegetative Stabilization - Section I - Vegetative Stabilization Methods and Materials.

V. Topsoil Application
i. When topsoiling, maintain needed erosion and sediment control practices such as diversions, Grade Stabilization Structures, Earth Dikes, Slope Silt Fence and Sediment Traps and Basins.
ii. Grades on the areas to be topsoiled, which have been previously established, shall be maintained, albeit 4" - 8" higher in elevation.
iii. Topsoil shall be uniformly distributed in a 4" - 8" layer and lightly compacted to a minimum thickness of 4". Spreading shall be performed in such a manner that sodding or seeding can proceed with a minimum of additional soil preparation and tillage. Any irregularities in the surface resulting from topsoiling or other operations shall be corrected in order to prevent the formation of depressions or water pockets.
iv. Topsoil shall not be placed while the topsoil or subsoil is in a frozen or muddy condition, when the subsoil is excessively wet or in a condition that may otherwise be detrimental to proper grading and seedbed preparation.

VI. Alternative for Permanent Seeding - Instead of applying the full amounts of lime and commercial fertilizer, composted sludge and amendments may be applied as specified below:
i. Composted Sludge Material for use as a soil conditioner for sites having disturbed areas over 5 acres shall be tested to prescribe amendments and for site having disturbed areas under 5 acres shall conform to the following requirements:
a. Composted sludge shall be supplied by, or originate from, a person or persons that are permitted (at the time of acquisition of the compost) by the Maryland Department of the Environment under COMAR 26.04.06.
b. Composted sludge shall contain at least 1 percent nitrogen, 1.5 percent phosphorus, and 0.2 percent potassium and have a pH of 7.0 to 8.0. If compost does not meet these requirements, the appropriate constituents must be added to meet the requirements prior to use.
c. Composted sludge shall be applied at a rate of 1 ton/1,000 square feet.
d. Composted sludge shall be amended with a potassium fertilizer applied at the rate of 4 lb/1,000 square feet, and 1/3 the normal lime application rate.

References: Guideline Specifications, Soil Preparation and Sodding. MD-VA, Pub. #1, Cooperative Extension Service, University of Maryland and Virginia Polytechnic Institutes. Revised 1973.

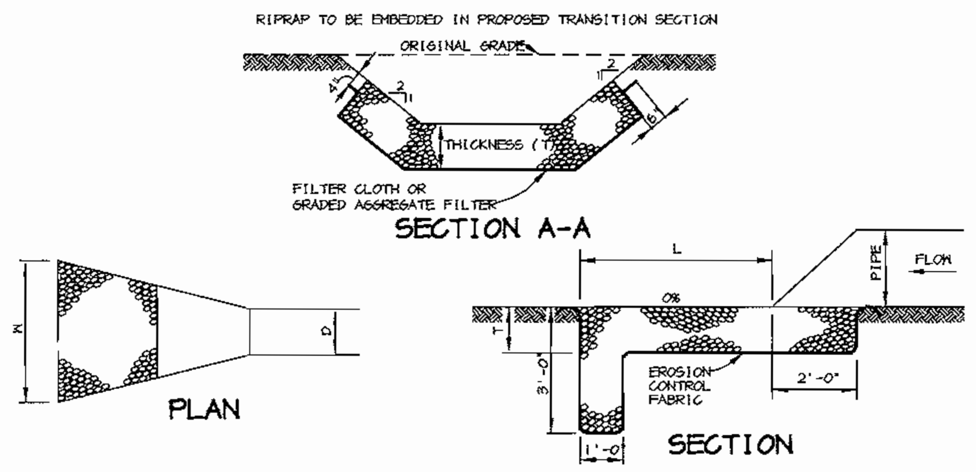

NOTE: Q_{10}, V & DEPTH CALCULATED AT END OF RIPRAP OUTLET CHANNEL.

STRUCTURE	MEDIAN STONE DIA.	LENGTH (L)	WIDTH (W)	THICKNESS (T)	Q_{10} (CFS)	V_{10} (FPS)	PARTIAL DEPTH (FT)
E-1	9.5"	10'	12'	19"	8.58	2.36	1.00
E-2	9.5"	10'	6'	19"	13.17	4.19	1.46
HW-1	9.5""	20'	8'	19"	41.43	4.22	1.87

RIPRAP OUTLET PROTECTION DETAIL

NO SCALE

CONSTRUCTION SPECIFICATIONS

1. THE SUBGRADE FOR THE FILTER, RIP-RAP, OR GABION SHALL BE PREPARED TO THE REQUIRED LINES AND GRADES. ANY FILL REQUIRED IN THE SUBGRADE SHALL BE COMPACTED TO A DENSITY OF APPROXIMATELY THAT OF THE SURROUNDING UNDISTURBED MATERIAL.

2. THE ROCK OR GRAVEL SHALL CONFORM TO THE SPECIFIED GRADING LIMITS WHEN INSTALLED RESPECTIVELY IN THE RIP-RAP OR FILTER.

3. GEOTEXTILE CLASS C OR BETTER SHALL BE PROTECTED FROM PUNCHING, CUTTING, OR TEARING. ANY DAMAGE OTHER THAN AN OCCASIONAL SMALL HOLE SHALL BE REPAIRED BY PLACING ANOTHER PIECE OF GEOTEXTILE FABRIC OVER THE DAMAGED WHETHER FOR REPAIRS OR FOR JOINING TWO PIECES OF GEOTEXTILE FABRIC SHALL BE A MINIMUM OF ONE FOOT.

4. STONE FOR THE RIP-RAP OR GABION OUTLETS MAY BE PLACED BY EQUIPMENT. THEY SHALL BE CONSTRUCTED TO THE FULL COURSE THICKNESS IN ONE OPERATION AND AND IN SUCH A MANNER AS TO AVOID DISPLACEMENT OF UNDERLYING MATERIALS. THE STONE FOR RIP-RAP OR GABION OUTLETS SHALL BE DELIVERED AND PLACED IN A MANNER THAT WILL ENSURE THAT IT IS REASONABLY HOMOGENOUS WITH THE SMALLER STONES AND SPALLS FILLING THE VOIDS BETWEEN THE LARGER STONES. RIP-RAP SHALL BE PLACED IN A MANNER TO PREVENT DAMANGE TO THE FILTER BLANKET OR GEOTEXTILE FABRIC. HAND PLACEMENT WILL BE REQUIRED TO THE EXTENT NECESSARY TO PREVENT DAMAGE TO THE PERMANENT WORKS.

5. THE STONE SHALL BE PLACED SO THAT IT BLENDS IN WITH THE EXISTING GROUND. IF THE STONE IS PLACED TOO HIGH THEN THE FLOW WILL BE FORCED OUT OF THE CHANNEL AND SCOUR ADJACENT TO THE STONE WILL OCCUR.

DEPTH	SOIL (DEPTH TO WATER: 1')
0' – 15"	TOPSOIL
15" – 2'	BROWN, VERY MOIST, VERY SOFT, SILT & CLAY, WITH ORGANIC MATERIAL, TRACE FINE SAND. (ML) AASHTO: A-6
2' – 9'	GRAY-OLIVE AND BROWN, MEDIUM STIFF, CLAY & SILT, LITTLE TO SOME FINE SAND. (CL) AASHTO: A-6
9' – 11.5'	DARK GREEN, MOIST, MEDIUM DENSE, CLAYEY SILT AND FINE SAND. (ML) AASHTO: A-5

BORING B-3

NO SCALE
BEARING STRENGTH: 3,000 PSF

DEPTH	SOIL
0' – 6"	TOPSOIL
6" – 5'	BROWN-GRAY, MOIST, CLAY & SILT, TRACE FINE SAND. (CL) AASHTO: A-6
5' – 10'	BROWN, MOIST, SILT & CLAY, SOME GRAVEL AND FINE SAND. (CL) AASHTO: A-6
10' – 11'	GRAY-GREEN, MOIST, COARSE TO FINE SAND, SOME SILTY CLAY. (SM) AASHTO: A-2-7

BORING TP-3

NO SCALE
NO GROUNDWATE ENCOUNTERED
BEARING STRENGTH: 3,000 PSF

DEPTH	SOIL (DEPTH TO WATER: 6.5')
0' – 6"	TOPSOIL
6" – 4'	BROWN, MOIST, CLAYEY SILT, SOME FINE SAND. (ML) AASHTO: A-4
4' – 8'	BROWN, MOIST, SILT & CLAY, AND FINE SAND. (SC) AASHTO: A-7-5
8' – 10'	BROWN, MOIST, FINE SAND, SOME SILT & CLAY AND ROCK FRAGMENTS. (SC) AASHTO: A-6 (PIECES OF IRONSTONE @ 8FT.)

BORING TP-6

NO SCALE
BEARING STRENGTH: 3,000 PSF

DEPTH	SOIL (DEPTH TO WATER: 6')
0' – 1'	TOPSOIL
1' – 2'	BROWN, MOIST, SILT AND FINE SAND, SOME ORGANICS. (ML) AASHTO: A-4
2' – 5'	GRAY-BROWN, MOIST CLAY & SILT, TRACE FINE SAND. (CL) AASHTO: A-5
5' – 10'	GRAY-BROWN, VERY MOIST SILT AND FINE SAND AND GRAVEL. (SM) AASHTO: A-5

BORING TP-7

NO SCALE
BEARING STRENGTH: 3,000 PSF

SEQUENCE OF CONSTRUCTION

1. OBTAIN GRADING PERMIT.
2. INSTALL SCE, SUPER SILT FENCE AND SILT FENCE. (3 DAYS)
3. CLEAR FOR & INSTALL HW-1 THRU JB-3. THEN JB-3 TO M-4, AND FC-1 TO I-6. (3 WEEKS)
4. ROUGH GRADE SITE AND COMMENCE BUILDING CONSTRUCTION.
5. CONSTRUCT SWMF #1 AND AS SUBGRADES ARE ESTABLISHED, INSTALL STORM DRAINS, WATER AND SEWER UTILITIES. (5 WEEKS)
6. INSTALL CURB AND GUTTER THEN PAVE. (2 WEEKS)
7. APPLY TOPSOIL AND STABILIZE ALL DISTURBED AREAS IN ACCORDANCE WITH THE PERMANENT SEEDING NOTES. (3 DAYS)
8. INSTALL LIGHTS, LANDSCAPING, SIGNAGE AND SIDEWALKS AND COMPLETE BUILDING CONSTRUCTION. (3 MONTHS)
9. UPON PERMISSION OF DILP SEDIMENT CONTROL INSPECTOR, CLEAN STORM DRAIN INLETS AND FLUSH OUT PIPES.
10. UPON PERMISSION OF DILP SEDIMENT CONTROL INSPECTOR, REMOVE ALL REMAINING SEDIMENT CONTROL DEVICES. STABILIZE REMAINING DISTURBED AREAS IN ACCORDANCE WITH PERMANENT SEEDING NOTES. (1 DAY)

DETAIL 24 – STABILIZED CONSTRUCTION ENTRANCE

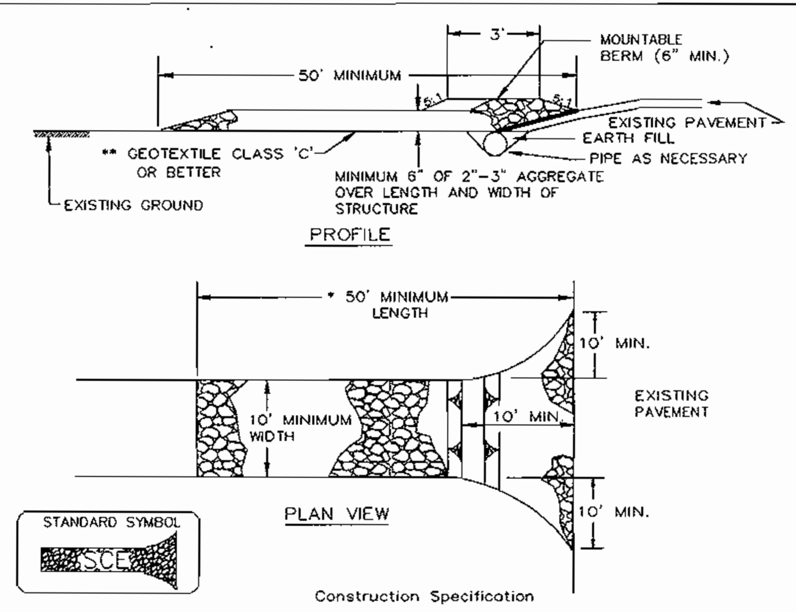

Construction Specification

1. Length – minimum of 50' (*30' for single residence lot).

2. Width – 10' minimum, should be flared at the existing road to provide a turning radius.

3. Geotextile fabric (filter cloth) shall be placed over the existing ground prior to placing stone. **The plan approval authority may not require single family residences to use geotextile.

4. Stone – crushed aggregate (2" to 3") or reclaimed or recycled concrete equivalent shall be placed at least 6" deep over the length and width of the entrance.

5. Surface Water – all surface water flowing to or diverted toward construction entrances shall be piped through the entrance, maintaining positive drainage. Pipe installed through the stabilized construction entrance shall be protected with a mountable berm with 5:1 slopes and a minimum of 6" of stone over the pipe. Pipe has to be sized according to the drainage. When the SCE is located at a high spot and has no drainage to convey a pipe will not be necessary. Pipe should be sized according to the amount of runoff to be conveyed. A 6" minimum will be required

6. Location – A stabilized construction entrance shall be located at every point where construction traffic enters or leaves a construction site. Vehicles leaving the site must travel over the entire length of the stabilized construction entrance.

U.S. DEPARTMENT OF AGRICULTURE SOIL CONSERVATION SERVICE	PAGE F - 17 - 3	MARYLAND DEPARTMENT OF ENVIRONMENT WATER MANAGEMENT ADMINISTRATION

DETAIL 33 – SUPER SILT FENCE

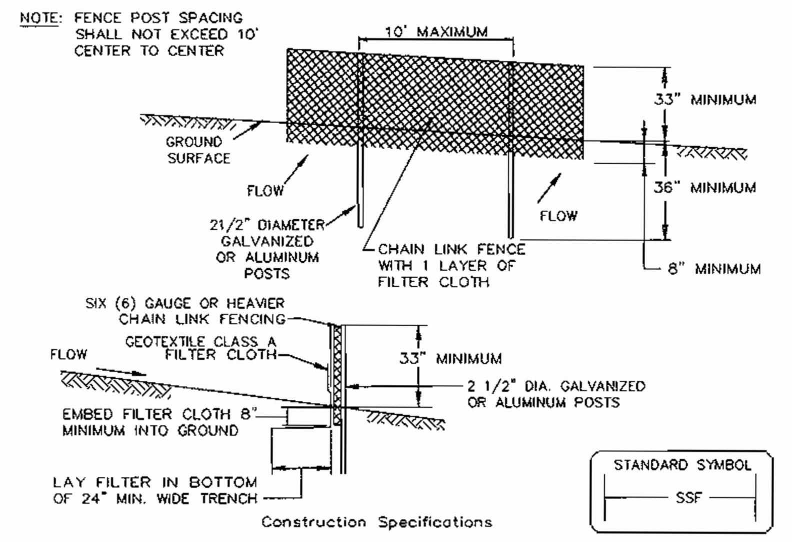

Construction Specifications

1. Fencing shall be 42" in height and constructed in accordance with the latest Maryland State Highway (SHA) Details for Chain Link Fencing. The SHA specifications for a 6 foot fence shall be used, substituting 42" fabric and 6 foot length posts.

2. The posts do not need to be set in concrete.

3. Chain link fence shall be fastened securely to the fence posts with wire ties or staples. The lower tension wire, brace and truss rods, drive anchors and post caps are not required except on the ends of the fence. The chain link fencing shall be six (6) gauge or heavier.

4. Filter cloth shall be fastened securely to the chain link fence with ties spaced every 24" at the top and mid section.

5. Filter cloth shall be embedded a minimum of 8" into the ground.

6. When two sections of geotextile fabric adjoin each other, they shall be overlapped by 6" and folded.

7. Maintenance shall be performed as needed and silt buildups removed when "bulges" develop in the silt fence, or when silt reaches 50% of fence height

U.S. DEPARTMENT OF AGRICULTURE SOIL CONSERVATION SERVICE	PAGE H - 26 - 3	MARYLAND DEPARTMENT OF ENVIRONMENT WATER MANAGEMENT ADMINISTRATION

DETAIL 22 – SILT FENCE

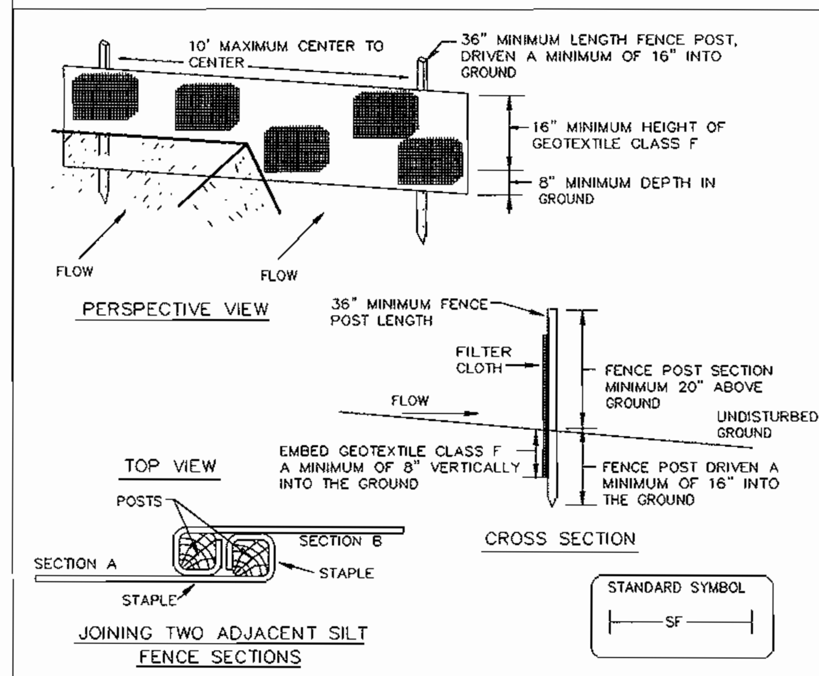

Construction Specifications

1. Fence posts shall be a minimum of 36" long driven 16" minimum into the ground. Wood posts shall be 11/2" x 11/2" square (minimum) cut, or 13/4" diameter (minimum) round and shall be of sound quality hardwood. Steel posts will be standard T or U section weighting not less than 1.00 pond per linear foot.

2. Geotextile shall be fastened securely to each fence post with wire ties or staples at top and mid-section and shall meet the following requirements for Geotextile Class F:

Tensile Strength	50 lbs/in (min.)	Test: MSMT 509
Tensile Modulus	20 lbs/in (min.)	Test: MSMT 509
Flow Rate	0.3 gal ft ²/ minute (max.)	Test: MSMT 322
Filtering Efficiency	75% (min.)	Test: MSMT 322

3. Where ends of geotextile fabric come together, they shall be overlapped, folded and stapled to prevent sediment bypass.

4. Silt Fence shall be inspected after each rainfall event and maintained when bulges occur or when sediment accumulation reached 50% of the fabric height.

U.S. DEPARTMENT OF AGRICULTURE SOIL CONSERVATION SERVICE	PAGE E - 15 - 3	MARYLAND DEPARTMENT OF ENVIRONMENT WATER MANAGEMENT ADMINISTRATION

DETAIL 23B – AT GRADE INLET PROTECTION

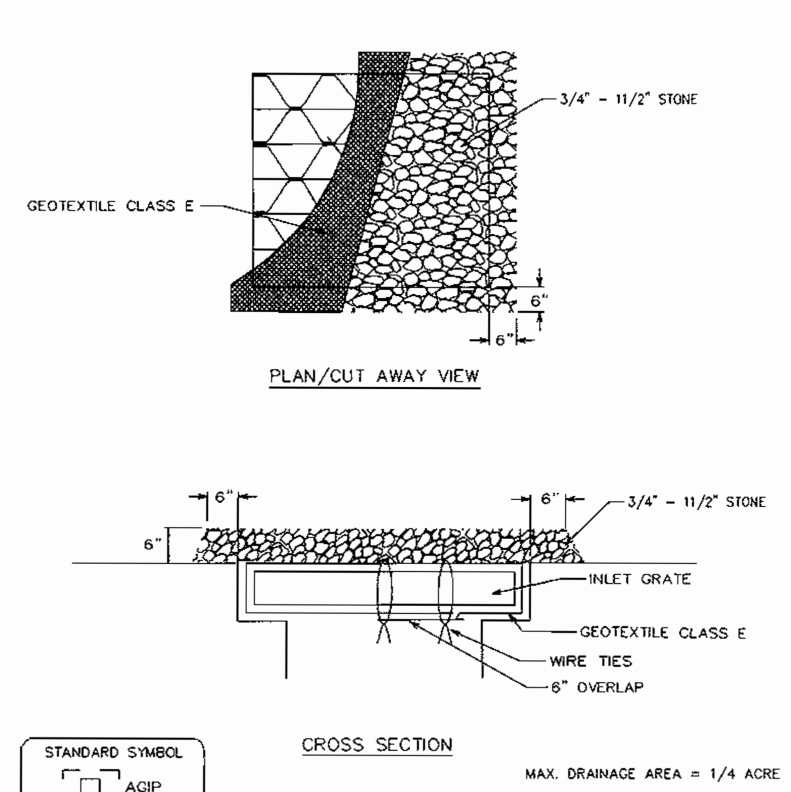

Construction Specifications

1. Lift grate and wrap with Geotextile Class E to completely cover all openings, then set grate back in place.

2. Place 3/4" to 11/2" stone, 4"-6" thick on the grate to secure the fabric and provide additional filtration.

U.S. DEPARTMENT OF AGRICULTURE SOIL CONSERVATION SERVICE	PAGE E - 16 - 5A	MARYLAND DEPARTMENT OF ENVIRONMENT WATER MANAGEMENT ADMINISTRATION

DETAIL 23C – CURB INLET PROTECTION

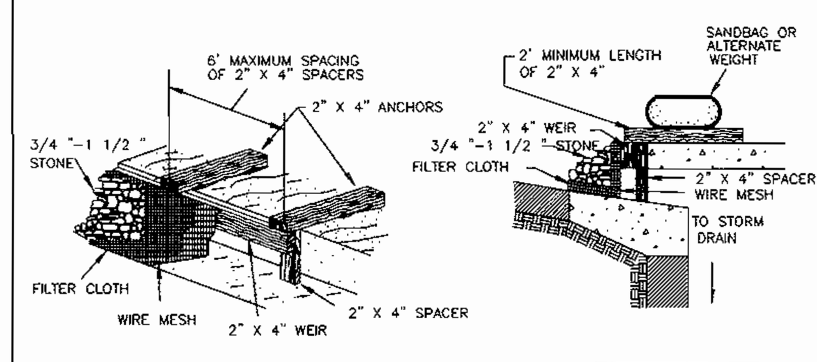

Construction Specifications

1. Attach a continuous piece of wire mesh (30" minimum width by throat length plus 4') to the 2" x 4" weir (measuring throat length plus 2') as shown on the standard drawing.

2. Place a continuous piece of Geotextile Class E the same dimensions as the wire mesh over the wire mesh and securely attach it to the 2" x 4" weir.

3. Securely nail the 2" X 4" weir to a 9" long vertical spacer to be located between the weir and the inlet face (max. 4' apart).

4. Place the assembly against the inlet throat and nail (minimum 2' lengths of 2" x 4" to the top of the weir at spacer locations). These 2" x 4" anchors shall extend across the inlet top and be held in place by sandbags or alternate weight.

5. The assembly shall be placed so that the end spacers are a minimum 1' beyond both ends of the throat opening.

6. Form the 1/2 " x 1/2 " wire mesh and the geotextile fabric to the concrete gutter and against the face of the curb on both sides of the inlet. Place clean 3/4 " x 1 1/2 " stone over the wire mesh and geotextile in such a manner to prevent water from entering the inlet under or around the geotextile.

7. This type of protection must be inspected frequently and the filter cloth and stone replaced when clogged with sediment.

8. Assure that storm flow does not bypass the inlet by installing a temporary earth or asphalt dike to direct the flow to the inlet.

U.S. DEPARTMENT OF AGRICULTURE SOIL CONSERVATION SERVICE	PAGE E - 16 - 5B	MARYLAND DEPARTMENT OF ENVIRONMENT WATER MANAGEMENT ADMINISTRATION

30.0 – DUST CONTROL

DEFINITION

CONTROLLING DUST BLOWING AND MOVEMENT ON CONSTRUCTION SITES AND ROADS.

PURPOSE

TO PREVENT BLOWING AND MOVEMENT OF DUST FROM EXPOSED SOIL SURFACES, REDUCE ON AND OFF-SITE DAMAGE, HEALTH HAZARDS, AND IMPROVE TRAFFIC SAFETY.

CONDITIONS WHERE PRACTICE APPLIES

THIS PRACTICE IS APPLICABLE TO AREAS SUBJECT TO DUST BLOWING AND MOVEMENT WHERE ON OFF-SITE DAMAGE IS LIKELY WITHOUT TREATMENT.

SPECIFICATIONS

TEMPORARY METHODS

1. MULCHES – SEE STANDARDS FOR VEGETATIVE STABILIZATION WITH MULCHES ONLY. MULCH SHOULD BE CRIMPED OR TACKED TO PREVENT BLOWING.
2. VEGATATIVE COVER – SEE STANDARDS FOR TEMPORARY VEGETATIVE COVER.
3. TILLAGE – TO ROUGHEN SURFACE AND BRING CLODS TO THE SURFACE. THIS IS AN EMERGENCY MEASURE WHICH SHOULD BE USED BEFORE SOIL BLOWING STARTS. BEGIN PLOWING ON WINDWARD SIDE OF SITE. CHISEL-TYPE PLOWS SPACED ABOUT 12" APART, SPRING-TOOTHED HARROWS, AND SIMILIAR PLOWS ARE EXAMPLES OF EQUIPMENT WHICH MAY PRODUCE THE DESIRED EFFECT.
4. IRRIGATION – THIS IS GENERALLY DONE AS AN EMERGENGY TREATMENT. SITE IS SPRINKLED WITH WATER UNTIL THE SURFACE IS MOIST. REPEAT AS NEEDED. AT NO TIME SHOULD THE SITE BE IRRIGATED TO THE POINT THAT RUNOFF BEGINS TO FLOW.
5. BARRIERS – SOLID BOARD FENCES, SILT FENCES, SNOW FENCES, BURLAP FENCES, STRAW BALES, AND SIMILAR MATERIAL CAN BE USED TO CONTROL AIR CURRENTS AND SOIL BLOWING. BARRIERS PLACED AT RIGHT ANGLES TO PREVAILING CURRENTS AT INTERVALS OF ABOUT 10 TIMES THEIR HEIGHT ARE EFFECTIVE IN CONTROLLING SOIL BLOWING.
6. CALCIUM CHLORIDE – APPLY AT RATES THAT WILL KEEP SURFACE MOIST. MAY NEED RETREATMENT.

PERMANENT METHODS

1. PERMANENT VEGETATION – SEE STANDARDS FOR PERMANENT VEGETATIVE COVER, AND PERMANENT STABILIZATION WITH SOD. EXISTING TREES OR LARGE SHRUBS MAY AFFORD VALUABLE PROTECTION IF LEFT IN PLACE.
2. TOPSOILING – COVERING WITH LESS EROSIVE SOIL MATERIALS. SEE STANDARDS FOR TOPSOILING.
3. STONE – COVER SURFACE WITH CRUSHED STONE OR COARSE GRAVEL.

REFERENCES

1. AGRICULTURE HANDBOOK 346. WIND EROSION FORCES IN THE UNITED STATES AND THEIR USES IN PREDICTING SOIL LOSS.
2. AGRICULTURE INFORMATION BULLETIN 354. HOW TO CONTROL WIND EROSION, USDA-ARS.

U.S. DEPARTMENT OF AGRICULTURE SOIL CONSERVATION SERVICE	PAGE H - 30 - 1	MARYLAND DEPARTMENT OF ENVIRONMENT WATER MANAGEMENT ADMINISTRATION

BY THE DEVELOPER :

I/WE CERTIFY THAT ALL DEVELOPMENT AND CONSTRUCTION WILL BE DONE ACCORDING TO THIS PLAN, AND THAT ANY RESPONSIBLE PERSONNEL INVOLVED IN THE CONSTRUCTION PROJECT WILL HAVE A CERTIFICATE OF ATTENDANCE AT A DEPARTMENT OF THE ENVIRONMENT APPROVED TRAINING PROGRAM FOR THE CONTROL OF SEDIMENT AND EROSION BEFORE BEGINNING THE PROJECT. I ALSO AUTHORIZE PERIODIC ON-SITE INSPECTIONS BY THE HOWARD SOIL CONSERVATION DISTRICT.

DEVELOPER [signature] DATE 10-17-01

BY THE ENGINEER :

I CERTIFY THAT THIS PLAN FOR EROSION AND SEDIMENT CONTROL REPRESENTS A PRACTICAL AND WORKABLE PLAN BASED ON MY PERSONAL KNOWLEDGE OF THE SITE CONDITIONS AND THAT IT WAS PREPARED IN ACCORDANCE WITH THE REQUIREMENTS OF THE HOWARD SOIL CONSERVATION DISTRICT.

ENGINEER [signature] DATE 10.9.01

THESE PLANS HAVE BEEN REVIEWED FOR THE HOWARD SOIL CONSERVATION DISTRICT AND MEET THE TECHNICAL REQUIREMENTS FOR SOIL EROSION AND SEDIMENT CONTROL.

NATURAL RESOURCES CONSERVATION SERVICE [signature] DATE 10/24/01

THIS DEVELOPMENT PLAN IS APPROVED FOR SOIL EROSION AND SEDIMENT CONTROL BY THE HOWARD SOIL CONSERVATION DISTRICT.

HOWARD SOIL CONSERVATION DISTRICT [signature] DATE 10/24/01

APPROVED : HOWARD COUNTY DEPARTMENT OF PLANNING AND ZONING.

DIRECTOR [signature] DATE 11/2/01

CHIEF, DEVELOPMENT ENGINEERING DIVISION [signature] DATE 10/26/01

CHIEF, DIVISION OF LAND DEVELOPMENT [signature] DATE 10/31/01

DATE	NO.	REVISION

OWNER/DEVELOPER

SDC, INC.
8480 BALTIMORE NATIONAL PIKE
ELLICOTT CITY, MARYLAND 21043
410-465-4244

PROJECT MEADOWRIDGE BUSINESS PARK PARCEL R-1
A WAREHOUSE BUILDING

AREA ZONED M-1 PARCEL R-1
TAX MAP 37, BLOCK 23 & TAX MAP 43, BLOCK 4 & 5
1st ELECTION DISTRICT
HOWARD COUNTY, MARYLAND

TITLE
SEDIMENT CONTROL NOTES AND DETAILS

RIEMER MUEGGE & ASSOCIATES INC
ENGINEERING • ENVIRONMENTAL SERVICES • PLANNING • SURVEYING
8818 Centre Park Drive, Columbia, MD 21045
tel 410.997.8900 fax 410.997.9282

10-9-01
DATE

CHRISTOPHER J. REID #19949

DESIGNED BY :	CJR
DRAWN BY:	DAM
PROJECT NO :	00036/ SDP5.DWG
DATE :	SEPTEMBER 21, 2001
SCALE :	AS SHOWN
DRAWING NO.	4 OF 11

SDP-00-144

\project\00036\SDP5.DWG Wed Sep 19 13:23:59 2001 RIEMER MUEGGE A DIVISION OF PHR&A

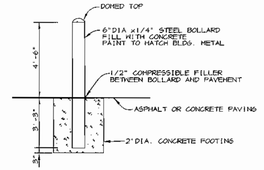

BOLLARD DETAIL
NO SCALE

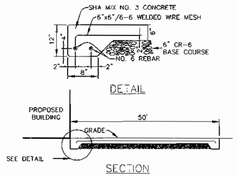

CONCRETE TRUCK COURT PAVING DETAIL
NO SCALE

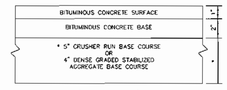

HOWARD COUNTY DESIGN MANUAL VOLUME IV- STANDARD SPECIFICATIONS AND DETAILS FOR CONSTUCTION (DRAWING R-2.01)

P-1 PAVING
NO SCALE

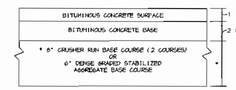

HOWARD COUNTY DESIGN MANUAL VOLUME IV- STANDARD SPECIFICATIONS AND DETAILS FOR CONSTUCTION (DRAWING R-2.01)

P-2 PAVING
NO SCALE

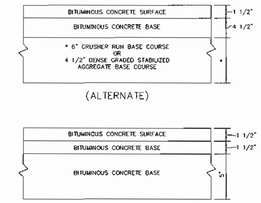

HOWARD COUNTY DESIGN MANUAL VOLUME IV- STANDARD SPECIFICATIONS AND DETAILS FOR CONSTUCTION (DRAWING R-2.01)

P-3 PAVING
NO SCALE

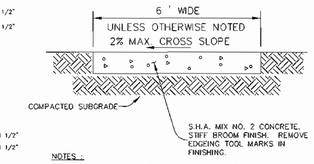

NOTES:
PROVIDE LATITUDINAL EXPANSION JOINTS AT 15' O.C. (MAX.)
PROVIDE CONTRACTION (DUMMY) JOINT AT 5' O.C. INTERVALS BETWEEN EXPANSION JOINTS. SIDEWALK TO BE SCRIBED IN 5' MAX. SQUARES.

SIDEWALK DETAIL
NO SCALE

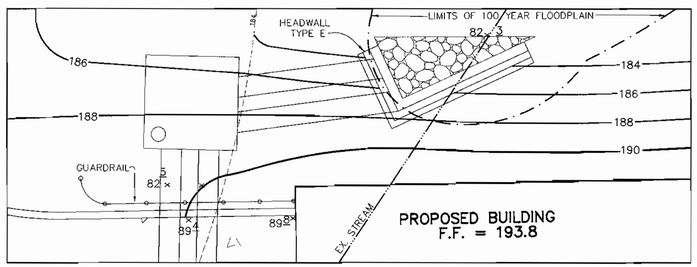

RIP-RAP @ HW-1 BLOW-UP
SCALE: 1" = 10'

STRUCTURE SCHEDULE

STRUCTURE	TYPE	LOCATION	INV. IN	INV. OUT	TOP	REMARKS
I-1	A-5 2.5' WIDE	* N 552,569.47 E 1,378,670.92	183.07 (24")	182.97 (24")	188.7	HOCO STD. DETAIL SD 4.40
I-2	A-5 3' WIDE	* N 552,504.22 E 1,378,592.63	183.68 (24")	183.58 (24")	188.9	HOCO STD. DETAIL SD 4.01
I-3	A-5 3' WIDE	* N 552,412.89 E 1,378,489.12	185.55 (23x14")	184.72 (24")	188.9	HOCO STD. DETAIL SD 4.01
I-4	A-5 3' WIDE	* N 552,282.77 E 1,378,608.02	189.87 (15")	189.77 (15")	193.3	HOCO STD. DETAIL SD 4.40
I-5	A-5 2.5' WIDE	* N 552,338.58 E 1,378,727.19	-	190.67 (12")	193.3	HOCO STD. DETAIL SD 4.40
I-6	YARD INLET	* N 552,420.99 E 1,378,444.71	185.75 (15")	184.46 (18")	187.8	HOCO STD. DETAIL SD 4.14
M-1	4' MH	* N 552,347.69 E 1,378,464.29	188.49 (15")	188.39(23x14")	191.5	HOCO STD. DETAIL 6 5.12
M-2	4' MH	* N 552,234.46 E 1,378,547.75	189.24 (15")	189.14 (15")	194.4	HOCO STD. DETAIL 6 5.12
M-3	4' MH	* N 552,340.90 E 1,378,398.63	185.40 (EX.24")	183.30 (24")	192.5	HOCO STD. DETAIL 6 5.12
S-1	CONTROL STRUCTURE	* N 552,728.00 E 1,378,884.43	180.20 (7")	180.20 (24")	184.5	SEE DETAIL SHEET 6
WQ-1	3-K	* N 552,577.28 E 1,378,678.95	182.91 (24")	182.58 (24")	188.1	SEE DETAIL SHEET 7
E-1	24" END SECTION	* N 552,698.17 E 1,378,914.89	180.00 (24")	180.00(RIPRAP)	-	HOCO STD. DETAIL SD 5.51
E-2	24" END SECTION	* N 552,587.99 E 1,378,690.42	182.50 (24")	182.50(RIPRAP)	-	HOCO STD. DETAIL SD 5.51
HW-1	HEADWALL	* N 552,522.82 E 1,378,732.84	182.30 (TWIN SD)	182.30(RIPRAP)	-	SEE DETAIL SHEET 8
JB-1	JUNCTION BOX	* A N 552,542.38 E 1,378,704.08 B N 552,541.88 E 1,378,713.46 C N 552,533.72 E 1,378,721.51 D N 552,532.23 E 1,378,712.20	182.52 (TWIN SD)	182.42 (TWIN SD)	SEE DETAIL SHEET 8	
JB-2	JUNCTION BOX	* A N 552,365.53 E 1,378,479.94 B N 552,365.47 E 1,378,487.09 C N 552,356.38 E 1,378,491.81 D N 552,353.44 E 1,378,484.57	184.12 (18") 184.04 (TWIN SD)	183.94 (TWIN SD)	SEE DETAIL SHEET 8	
JB-3	JUNCTION BOX	* A N 552,366.28 E 1,378,398.56 B N 552,366.15 E 1,378,406.21 C N 552,353.94 E 1,378,395.66 D N 552,355.51 E 1,378,388.88	185.10 (24") 185.75 (TWIN SD)	184.45(TWIN SD)	SEE DETAIL SHEET 8	

NOTES: * LOCATION OF "S" & MQ FACILITY INLETS AND MANHOLES IS AT CENTER OF TOP COVER; FOR "A" INLETS LOCATION IS GIVEN FOR CENTER OF THROAT OPENING AT FACE OF CURB.
FOR END SECTIONS AND HEADWALLS THE LOCATION IS CENTER OF THROAT OPENING AT FACE OF STRUCTURE.
TOP ELEVATION IS TOP OF CURB/GRATE/RIM.
FOR HEADWALL HW-1, THE LOCATION IS TAKEN AT THE MIDPOINT OF FACE OF WALL @ PIPE OUTFALL.

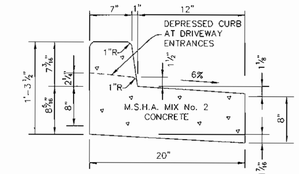

REVERSE 7" COMBINATION CURB AND GUTTER
NO SCALE

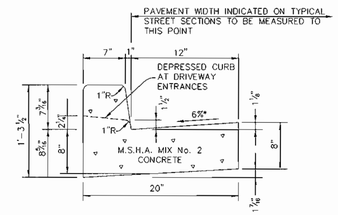

HOWARD COUNTY DESIGN MANUAL, VOLUME IV, STANDARD SPECIFICATIONS AND DETAILS FOR CONSTRUCTION (DRAWING R-3.01).

* CITTER PAN AT THE MEDIAN EDGE OF INTERMEDIATE ARTERIALS OR THE HIGH SIDE OF SUPERELEVATED SECTIONS SHALL BE SLOPED AT THE SAME RATE AS THE PAVEMENT.

STANDARD 7" COMBINATION CURB AND GUTTER
NO SCALE

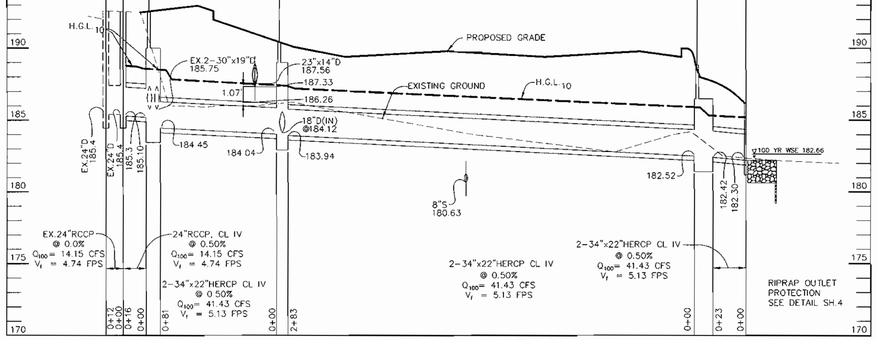

STORM DRAIN PROFILE
SCALE
HOR.-1"=50'
VERT.-1"=5'

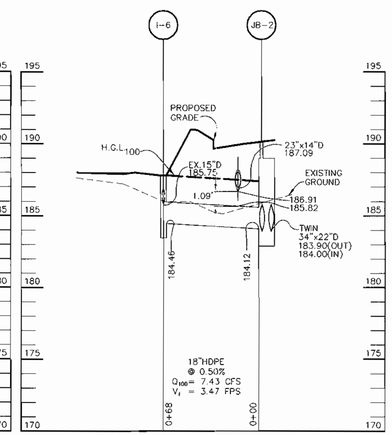

STORM DRAIN PROFILE
SCALE
HOR.-1"=50'
VERT.-1"=5

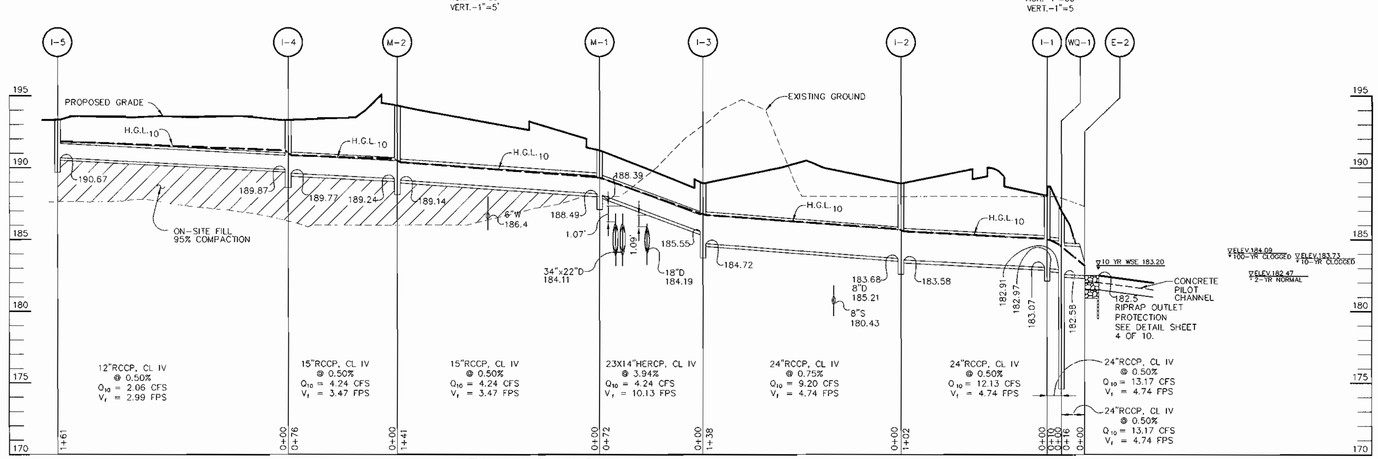

STORM DRAIN PROFILE
SCALE
HOR.-1"=50'
VERT.-1"=5'

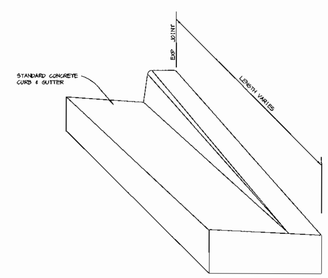

NOSE DOWN CURB DETAIL
NO SCALE

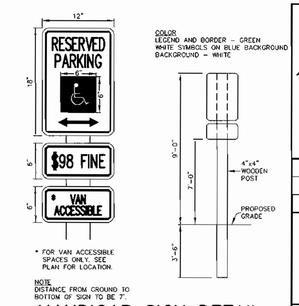

HANDICAP SIGN DETAIL
NO SCALE

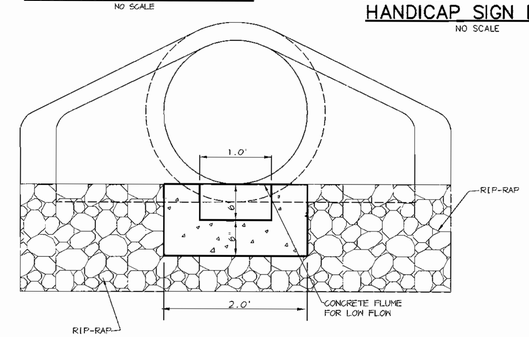

LOW FLOW PILOT CHANNEL @ END SECTION DETAIL
SCALE: 1" = 1'

APPROVED : HOWARD COUNTY DEPARTMENT OF PLANNING AND ZONING.

DIRECTOR — DATE 11/2/01

CHIEF, DEVELOPMENT ENGINEERING DIVISION — DATE 10/26/01

CHIEF, DIVISION OF LAND DEVELOPMENT — DATE 10/31/01

DATE	NO.	REVISION

OWNER/DEVELOPER
SDC, INC.
8480 BALTIMORE NATIONAL PIKE
ELLICOTT CITY, MARYLAND 21043
410-465-4244

PROJECT MEADOWRIDGE BUSINESS PARK
PARCEL R-1
A WAREHOUSE BUILDING

AREA ZONED M-1 PARCEL R-1
TAX MAP 37, BLOCK 23 & TAX MAP 43, BLOCK 4 & 5
1st ELECTION DISTRICT
HOWARD COUNTY, MARYLAND

TITLE
DETAILS AND PROFILES

RIEMER MUEGGE & ASSOCIATES INC
ENGINEERING • ENVIRONMENTAL SERVICES • PLANNING • SURVEYING
8818 Centre Park Drive, Columbia, MD 21045
tel 410.997.8900 fax 410.997.9282

10.9.01
DATE

CHRISTOPHER J. REID #19949

DESIGNED BY : CJR
DRAWN BY: DAM /KEV
PROJECT NO : 00036/SDP6.DWG
DATE : SEPTEMBER 21, 2001
SCALE : AS SHOWN
DRAWING NO. 5 OF 11

SDP-00-144

J:\project\00036\SDP6.DWG Wed Sep 19 13:25:42 2001 RIEMER MUEGGE A DIVISION OF PMGA

MD-378 STANDARDS AND SPECIFICATIONS

SPECIFICATIONS

These specifications are appropriate to all ponds within the scope of the Standard for practice MD-378. All references to ASTM and AASHTO specifications apply to the most recent version.

SITE PREPARATION

Areas designated for borrow areas, embankment, and structural works shall be cleared, grubbed and stripped of topsoil. All trees, vegetation, roots and other objectionable material shall be removed. Channel banks and sharp breaks shall be sloped to no steeper than 1:1. All trees shall be cleared and grubbed within 15 feet of the toe of the embankment.

Areas to be covered by the reservoir will be cleared of all trees, brush, logs, fences, rubbish and other objectionable material unless otherwise designated on the plans. Trees, brush and stumps shall be cut approximately level with the ground surface. For dry stormwater management ponds, a minimum of a 25 foot radius around the inlet structure shall be cleared.

All cleared and grubbed material shall be disposed of outside and below the limits of the dam and reservoir as directed by the owner or his representative. When specified, a sufficient quantity of topsoil will be stockpiled in a suitable location for use on the embankment and other designated areas.

EARTH FILL

Material - The fill material shall be taken from approved designated borrow areas. It shall be free of roots, stumps, wood, rubbish, stones greater than 6", frozen or other objectionable materials. Fill material for the center of the embankment, and cut off trench shall conform to Unified Soil Classification GC, SC, CH, or CL and must have at least 30% passing the #200 sieve. Consideration may be given to the use of other materials in the embankment if designed by a geotechnical engineer. Such special designs must have construction supervised by a geotechnical engineer.

Placement - Areas on which fill is to be placed shall be scarified prior to placement of fill. Fill materials shall be placed in maximum 8-inch thick (before compaction) layers which are to be continuous over the entire length of the fill. The most permeable borrow material shall be placed in the downstream portions of the embankment. The principal spillway must be installed concurrently with fill placement and not excavated into the embankment.

Compaction - The movement of the hauling and spreading equipment over the fill shall be controlled so that the entire surface of each lift shall be traversed by not less than one tread track of the equipment or compaction shall be achieved by a minimum of four complete passes of a sheepsfoot, rubber tire or vibratory roller. Fill material shall contain sufficient moisture such that the required degree of compaction will be obtained with the equipment used. The fill material shall contain sufficient moisture so that if formed into a ball it will not crumble yet not be so wet that water can be squeezed out.

When required by the reviewing agency the minimum required density shall not be less than 95% of maximum dry density with a moisture content within +/- 2% of the optimum. Each layer of fill shall be compacted as necessary to obtain that density, and is to be certified by the Engineer at the time of construction. All compaction is to be determined by AASHTO Method T-99 (Standard Proctor).

Cutoff Trench - The cutoff trench shall be excavated into impervious material along or parallel to the centerline of the embankment as shown on the plans. The bottom width of the trench shall be governed by the equipment used for excavation, with the minimum width being four feet. The depth shall be at least four feet below existing grade or as shown on the plans. The side slopes of the trench shall be 1 to 1 or flatter. The backfill shall compacted with construction equipment, rollers, or hand tampers to assure maximum density and maximum permeability.

Embankment Core - The core shall be parallel to the centerline of the embankment as shown on the plans. The top width of the core shall be a minimum of four feet. The height shall extend up to at least the 10 year water elevation or as shown on the plans. The side slopes shall be 1 to 1 or flatter. The core shall be compacted with construction equipment, rollers, or hand tampers to assure maximum density and minimum permeability. In addition, the core shall be placed concurrently with the outer shell of the embankment.

STRUCTURE BACKFILL

Backfill adjacent to pipes or structures shall be of the type and quality conforming to that specified for the adjoining fill material. The fill shall be placed in horizontal layers not to exceed four inches in thickness and compacted by hand tampers or other manually directed compaction equipment. The material needs to fill completely all spaces under and adjacent to the pipe. At no time during the backfilling operation shall driven equipment be allowed to operate closer than four feet, measured horizontally, to any part of a structure. Under no circumstances shall equipment be driven over any part of a concrete structure or pipe, unless there is a compacted fill of 24" or greater over the structure or pipe.

Structure backfill may be flowable fill meeting the requirements of Maryland Department of Transportation, State Highway Administration Standard Specifications for Construction and Materials, Section 313 as modified. The mixture shall have a 100-200 psi; 28 day unconfined compressive strength. The flowable fill shall have a minimum pH of 4.0 and a minimum resistivity of 2000 ohm-cm. Material shall be placed such that a minimum of 6" (measured perpendicular to the pipe) of flowable fill shall be under (bedding), over and, on the sides of the pipe. It only needs to extend up to the spring line for rigid conduits. Average slump of the fill shall be 7" to assure flowability of the material. Adequate measures shall be taken (sand bags, etc.) to prevent floating the pipe. When using flowable fill, all metal pipe shall be bituminous coated. Any adjoining soil fill shall be placed in horizontal layers not to exceed four inches in thickness and compacted by hand tampers or other manually directed compaction equipment. The material shall completely fill all voids adjacent to the flowable fill zone. At no time during the backfilling operation shall driven equipment be allowed to operate closer than four feet, measured horizontally, to any part of a structure. Under no circumstances shall equipment be driven over any part of a structure or pipe unless there is a compacted fill of 24" or greater over the structure or pipe. Backfill material outside the structural backfill (flowable fill) zone shall be of the type and quality conforming to that specified for the core of the embankment or other embankment materials.

PIPE CONDUITS

All pipes shall be circular in cross section.

Corrugated Metal Pipe - All of the following criteria shall apply for corrugated metal pipe.

1. Materials - (Polymer Coated steel pipe) - Steel pipes with polymeric coatings shall have a minimum coating thickness of 0.01 inch (10mil) on both sides of the pipe. This pipe and its appurtenances shall conform to the requirements of AASHTO Specifications M-245 & M-246 with watertight coupling bands or flanges.

   Materials - (Aluminum Coated Steel Pipe) - This pipe and its appurtenances shall conform to the requirements of AASHTO Specifications M-274 with watertight coupling bands or flanges. Aluminum Coated Steel Pipe, when used with flowable fill or when soil and/or water conditions warrant the need for increased durability, shall be fully bituminous coated per requirements of AASHTO Specification M-190 Type A. Any aluminum coating damaged or otherwise removed shall be replaced with cold applied bituminous coating compound. Aluminum surfaces that are to be in contact with concrete shall be painted with one coat of zinc chromate primer or two coats of asphalt.

   Materials - (Aluminum Pipe) - This pipe and its appurtenances shall conform to to the requirements of AASHTO Specifications M-196 or M-211 with watertight coupling bands or flanges. Aluminum Pipe, when used with flowable fill or when soil and/or water conditions warrant the need for increased durability, shall be fully bituminous coated per requirements of AASHTO Specification M-190 Type A. Aluminum surfaces that are to be in contact with concrete shall be painted with one coat of zinc chromate primer or two coats of asphalt. Hot dip galvanized bolts not be used for connections, the pH of the surrounding soils shall be between 4 and 9.

2. Coupling bands, anti-seep collars, end sections, etc., must be composed of the same material and coted as the pipe. Metals must be insulated from dissimilar materials with use of rubber or plastic insulating materials at at least 24 mils in thickness.

3. Connections - All connections with pipes must be completely watertight. The drain pipe or barrel connection to the riser shall be welded all around when the pipe and riser are metal. Anti-seep collars shall be connected to the pipe in such a manner as to be completely watertight. Dimple bands are not considered to be watertight.

   All connections shall use a rubber or neoprene gasket when joining pipe sections. The end of each pipe shall be re-rolled an adequate number of corrugations to accommodate the band width. The following type connections are acceptable for pipes less than 24" in diameter; Flanges on both ends of the pipe with a circular 3/8 inch closed cell neoprene gasket, prepunched to the flange bolt circle, sandwiched between adjacent flanges, a 12 inch wide standard lap type band with 12 inch wide by 3/8 inch thick closed cell circular neoprene gasket; and a 12 inch wide hugger type band with o-ring gaskets having a minimum diameter of 1/2 inch greater than the corrugation depth. Pipes 24 inches in diameter and larger shall be connected by a 24 inch long annular corrugated band using a minimum of 4 (four) rods and lugs, 2 on each connecting pipe ends. A 24 inch wide by 3/8 inch thick closed cell circular neoprene gasket will be installed with 12 inch on the end of each pipe. Flanged joints with 3/8 inch closed cell gaskets the full width of the flange is also acceptable.

   Helically corrugated pipe shall have either continuously welded seams or have lock seams with internal caulking or a neoprene bead.

4. Bedding - The pipe shall be firmly and uniformly bedded throughout its entire length. Where rock or soft, spongy or other unstable soil is encountered, all such material shall be removed and replaced with suitable earth compacted to provide adequate support.

5. Backfilling shall conform to "Structure Backfill."

6. Other details (anti-seep collars, valves, etc.) shall be as shown on the drawings.

Reinforced Concrete Pipe - All of the following criteria shall apply for reinforced concrete pipe:

1. Materials - Reinforced concrete pipe shall have bell and spigot joints with rubber gaskets and shall equal or exceed ASTM Designation C-361.

2. Bedding - All reinforced concrete pipe conduits shall be laid in a concrete bedding/cradle for their entire length. This bedding/cradle shall consist of high slump concrete placed under the pipe and up the side of the pipe at least 50% of its outside diameter with a minimum thickness of 6 inches. Where a concrete cradle is not needed for structural reasons, flowable fill may be used as described in the "Structure Backfill" section of this standard. Gravel bedding is not permitted.

3. Laying pipe - Bell and spigot pipe shall be placed with the bell end upstream. Joints shall be made in accordance with recommendations of the manufacturer of the material. After the joints are sealed for the entire line, the bedding shall be placed so that all spaces under the pipe are filled. Care shall be exercised to prevent any deviation from the original line and grade of the pipe. The first joint must be located within 4 feet from the riser.

4. Backfilling shall conform to "Structure Backfill."

5. Other details (anti-seep collars, valves, etc.) shall be as shown on the drawings.

Plastic Pipe - The following criteria shall apply for pipe:

1. Materials - PVC pipe shall be PVC-1120 or PVC-1220 conforming to ASTM D-1785 or ASTM D-2241. Corrugated High Density Polyethylene (HDPE) pipe, couplings and fittings shall conform to the following: 4 - 10 inch pipe shall meet the requirements of AASHTO M252 Type S, and 12" through 24" shall meet the requirements of AASHTO M294 Type S.

2. Joints and connections to anti-seep collars shall be completely watertight.

3. Bedding - The pipe shall be firmly and uniformly bedded throughout its entire length. Where rock or soft, spongy or other unstable soil is encountered, all such material shall be removed and replaced with suitable earth compacted to provide adequate support.

4. Backfilling shall conform to Structure "Backfill".

5. Other details (anti-seep collars, valves, etc.) shall be as shown on the drawings.

CONCRETE

Concrete shall meet the requirements of Maryland Department of Transportation, State Highway Administration Standard Specifications for Construction and Materials, Section 414, Mix No. 3.

ROCK RIPRAP

Rock riprap shall meet the requirements of Maryland Department of Transportation, State Highway Administration Standard Specifications for Construction and Materials, Section 311.

Geotextile shall be placed under all riprap and shall meet the requirements of Maryland Department of Transportation, State Highway Administration Standard Specifications for Construction and Materials, Section 421.04, Class C.

CARE OF WATER DURING CONSTRUCTION

All work on permanent structures shall be carried out in areas free from water. The contractor shall construct and maintain all temporary dikes, levees, cofferdams, drainage channels, and stream diversions necessary to protect the areas to be occupied by the permanent works. The contractor shall also furnish, install, operate, and maintain all necessary pumping and other equipment required for removal of water from the various parts of the work and for maintaining the excavations, foundation, and other parts of the work free from water as required or directed by the engineer for constructing each part of the work. After having served their purpose, all temporary protective works shall be removed or leveled and graded to the extent required to prevent obstruction in any degree whatsoever of the flow of water to the spillway or outlet works and so as not to interfere in any way with the operation or maintenance of the structure. Stream diversions shall be maintained until the full flow can be passed through the permanent works. The removal of water from the required excavation and the foundation shall be accomplished in a manner and to the extent that will maintain stability of the excavated slopes and bottom of required excavations and will allow satisfactory performance of all construction operations. During the placing and compacting of material in required excavations, the water level at the locations being refilled shall be maintained below the bottom of the excavation at such locations which may require draining the water to sumps from which the water shall be pumped.

STABILIZATION

All borrow areas shall be graded to provide proper drainage and left in a slightly condition. All exposed surfaces of the embankment, spillway, spoil and borrow areas, and berms shall be stabilized by seeding, liming, fertilizing and mulching in accordance with the Natural Resources Conservation Service Standards and Specifications for Critical Area Planting (MD-342) or as shown on the accompanying drawings.

EROSION AND SEDIMENT CONTROL

Construction operations will be carried out in such a manner that erosion will be controlled and water and air pollution minimized. State and local laws concerning pollution abatement will be followed. Construction plans shall detail erosion and sediment control measures.

Refer to the 2000 MARYLAND STANDARDS AND SPECIFICATIONS FOR SOIL EROSION AND SEDIMENT CONTROL for rate and methods not covered.

MAINTENANCE REQUIREMENTS FOR DETENTION PONDS

1. REMOVAL OF SILT WHEN ACCUMULATION EXCEEDS SIX (6) INCHES IN BASINS WITHOUT FOREBAYS. IN BASINS WITH FOREBAYS, REMOVAL OF SILT SHALL OCCUR WHEN THE ACCUMULATION EXCEEDS FOUR (4) INCHES IN FOREBAY.
2. REMOVAL OF ACCUMULATED PAPER, TRASH AND DEBRIS AS NECESSARY.
3. VEGETATION GROWN ON THE EMBANKMENT TOP OR FACES IS NOT ALLOWED TO EXCEED 18 INCHES IN HEIGHT AT ANY TIME.
4. ANNUAL INSPECTION AND REPAIR OF THE STRUCTURE.

EMBANKMENT AND CUT-OFF TRENCH CONSTRUCTION RECOMMENDATIONS

THE SITE SHOULD BE STRIPPED OF TOPSOIL AND ANY OTHER UNSUITABLE MATERIALS FROM THE EMBANKMENT OR STRUCTURE AREA IN ACCORDANCE WITH SOIL CONSERVATION GUIDELINES. AFTER STRIPPING OPERATIONS HAVE BEEN COMPLETED, THE EXPOSED SUBGRADE MATERIALS SHOULD BE PROOFROLLED WITH A LOADED DUMP TRUCK OR SIMILAR EQUIPMENT IN THE PRESENCE OF A GEOTECHNICAL ENGINEER OR HIS REPRESENTATIVE. FOR AREAS THAT ARE NOT ACCESSIBLE TO A DUMP TRUCK, THE EXPOSED MATERIALS SHOULD BE OBSERVED AND TESTED BY A GEOTECHNICAL ENGINEER OR HIS REPRESENTATIVE UTILIZING A DYNAMIC CONE PENETROMETER. ANY EXCESSIVELY SOFT OR LOOSE MATERIALS IDENTIFIED BY PROOFROLLING OR PENETROMETER TESTING SHOULD BE EXCAVATED TO SUITABLY FIRM SOIL, AND THEN GRADES RE-ESTABLISHED BY BACKFILLING WITH

A REPRESENTATIVE OF THE GEOTECHNICAL ENGINEER SHOULD BE PRESENT TO MONITOR PLACEMENT AND COMPACTION OF FILL FOR THE EMBANKMENT AND CUT OFF TRENCH. IN ACCORDANCE WITH MARYLAND SOIL CONSERVATION SPECIFICATION 378 SOILS CONSIDERED SUITABLE FOR THE CENTER OF EMBANKMENT AND CUT OFF TRENCH SHALL CONFORM TO UNIFIED SOIL CLASSIFICATION GC, SC, CH, OR CL. PER SCS 378, CONSIDERATION MAY BE GIVEN TO THE USE OF OTHER MATERIALS IN THE EMBANKMENT IF DESIGN AND CONSTRUCTION ARE SUPERVISED BY A GEOTECHNICAL ENGINEER.

EXPLORATION WITH TEST PITS AND ADDITIONAL LABORATORY TESTING CAN BE CONDUCTED PRIOR TO CONSTRUCTION TO IDENTIFY AND QUANTIFY POTENTIAL BORROW AREAS. ALL FILL MATERIALS MUST BE PLACED AND COMPACTED IN ACCORDANCE WITH MD SCS 378 SPECIFICATIONS.

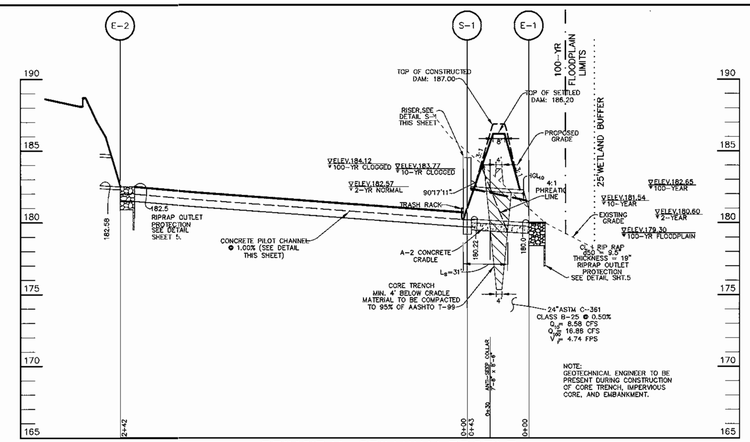

PRINCIPAL SPILLWAY PROFILE
SCALE : HOR.-1"=50' VERT.-1"=5'

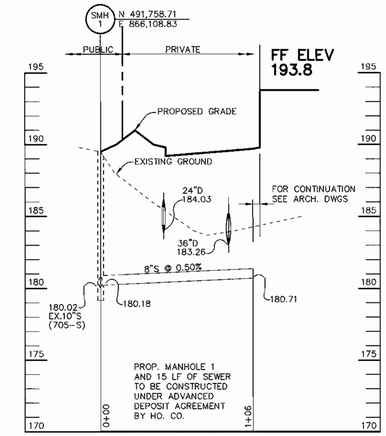

SEWER PROFILE
SCALE : HOR.-1"=50' VERT.-1"=5'

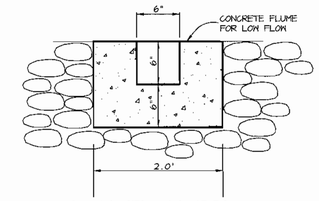

LOW FLOW PILOT CHANNEL DETAIL
NO SCALE

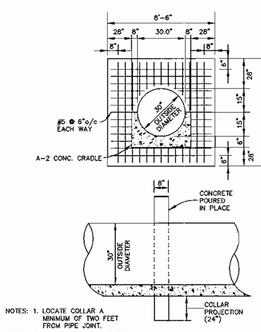

NOTES: 1. LOCATE COLLAR A MINIMUM OF TWO FEET FROM PIPE JOINT.
NOTES: 2. COLLAR/PIPE CONNECTION SHALL BE WATERTIGHT.

CONCRETE ANTI-SEEP COLLAR SWMF #1
NO SCALE

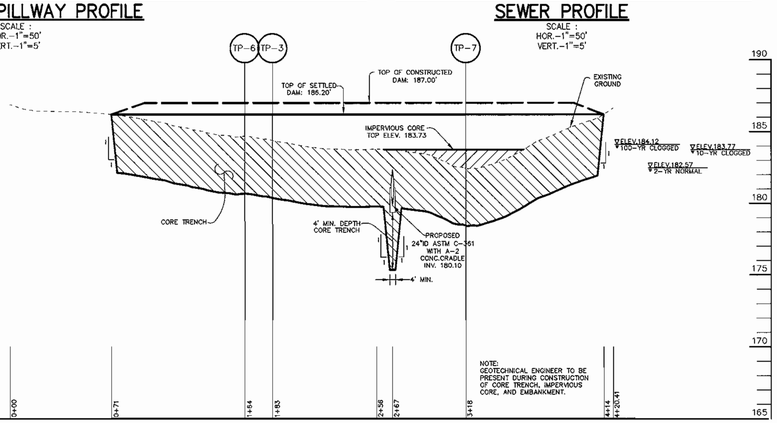

PROFILE ALONG CENTER LINE OF DAM
SCALE : HOR.-1"=50' VERT.-1"=5'

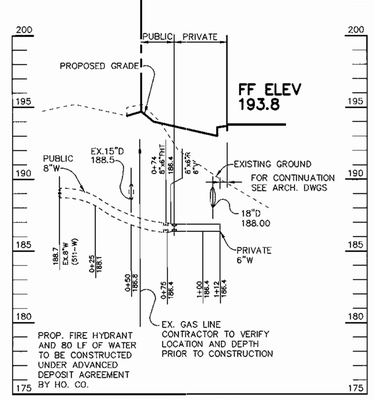

WATER PROFILE
SCALE : HOR.-1"=50' VERT.-1"=5'

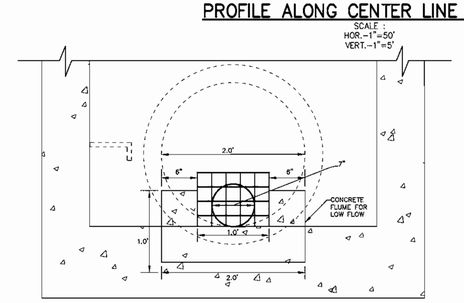

LOW FLOW PILOT CHANNEL @ S-1
SCALE: 1"=1'

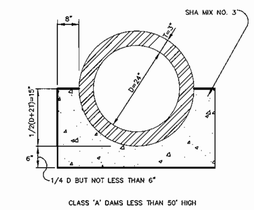

CLASS "A" DAMS LESS THAN 50' HIGH

A-2 CONCRETE CRADLE
NO SCALE

NOTES:
1. SHOP DRAWINGS TO BE SUBMITTED TO THE ENGINEER PRIOR TO FABRICATION.
2. GALVANIZE RACK AFTER FABRICATION AND PAINT BATTLESHIP GRAY.
3. RISER TO BE FITTED WITH 2' MIN. BARREL STUB. PROVIDE WATER TIGHT SEAL.

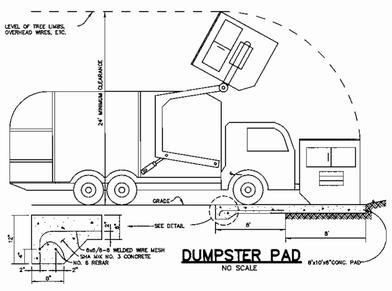

DUMPSTER PAD
NO SCALE

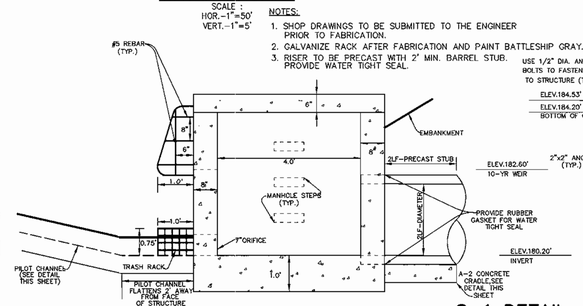

S-1 DETAIL
SCALE: 1"=2'

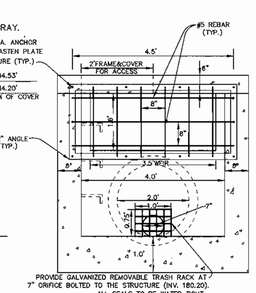

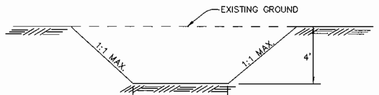

NOTE: GC, SC, CH, OR CL MATERIAL IS TO BE USED FOR CORE TRENCH. IF UNSUITABLE MATERIAL EXISTS ON SITE, ACCEPTABLE MATERIAL WILL NEED TO BE TRUCKED TO SITE.

CORE TRENCH DETAIL
NO SCALE

BY THE DEVELOPER :

I/WE CERTIFY THAT ALL DEVELOPMENT AND CONSTRUCTION WILL BE DONE ACCORDING TO THIS PLAN, AND THAT ANY RESPONSIBLE PERSONNEL INVOLVED IN THE CONSTRUCTION PROJECT WILL HAVE A CERTIFICATE OF ATTENDANCE AT A DEPARTMENT OF THE ENVIRONMENT APPROVED TRAINING PROGRAM FOR THE CONTROL OF SEDIMENT AND EROSION BEFORE BEGINNING THE PROJECT. I ALSO AUTHORIZE PERIODIC ON-SITE INSPECTIONS BY THE HOWARD SOIL CONSERVATION DISTRICT.

DEVELOPER — DATE 10-17-01

BY THE ENGINEER :

I CERTIFY THAT THIS PLAN FOR EROSION AND SEDIMENT CONTROL REPRESENTS A PRACTICAL AND WORKABLE PLAN BASED ON MY PERSONAL KNOWLEDGE OF THE SITE CONDITIONS AND THAT IT WAS PREPARED IN ACCORDANCE WITH THE REQUIREMENTS OF THE HOWARD SOIL CONSERVATION DISTRICT.

ENGINEER — DATE 10-9-01

THESE PLANS HAVE BEEN REVIEWED FOR THE HOWARD SOIL CONSERVATION DISTRICT AND MEET THE TECHNICAL REQUIREMENTS FOR SOIL EROSION AND SEDIMENT CONTROL.

NATURAL RESOURCES CONSERVATION SERVICE — DATE 10/24/01

THIS DEVELOPMENT PLAN IS APPROVED FOR SOIL EROSION AND SEDIMENT CONTROL BY THE HOWARD SOIL CONSERVATION DISTRICT.

HOWARD SOIL CONSERVATION DISTRICT — DATE 10/24/01

APPROVED : HOWARD COUNTY DEPARTMENT OF PLANNING AND ZONING.

DIRECTOR — DATE 11/2/01

CHIEF, DEVELOPMENT ENGINEERING DIVISION — DATE 10/26/01

CHIEF, DIVISION OF LAND DEVELOPMENT — DATE 10/31/01

DATE	NO.	REVISION

OWNER/DEVELOPER
SDC, INC.
8480 BALTIMORE NATIONAL PIKE
ELLICOTT CITY, MARYLAND 21043
410-465-4244

PROJECT
MEADOWRIDGE BUSINESS PARK
PARCEL R-1
A WAREHOUSE BUILDING

AREA
ZONED M-1 PARCEL R-1
TAX MAP 37, BLOCK 23 & TAX MAP 43, BLOCK 4 & 5
1st ELECTION DISTRICT
HOWARD COUNTY, MARYLAND

TITLE
STORMWATER MANAGEMENT DETAILS

RIEMER MUEGGE & ASSOCIATES INC
ENGINEERING • ENVIRONMENTAL SERVICES • PLANNING • SURVEYING
8818 Centre Park Drive, Columbia, MD 21045
tel 410.997.8900 fax 410.997.9282

10.9.01
DATE

CHRISTOPHER J. REID #19949

DESIGNED BY :	CJR
DRAWN BY:	DAM / KEV
PROJECT NO :	00036/ SDP4.DWG
DATE :	SEPTEMBER 21, 2001
SCALE :	AS SHOWN
DRAWING NO.	6 OF 11

SDP-00-144

P:\Project\00036\SDP4.DWG Wed Sep 19 13:26:54 2001 RIEMER MUEGGE A DIVISION OF PMRGA

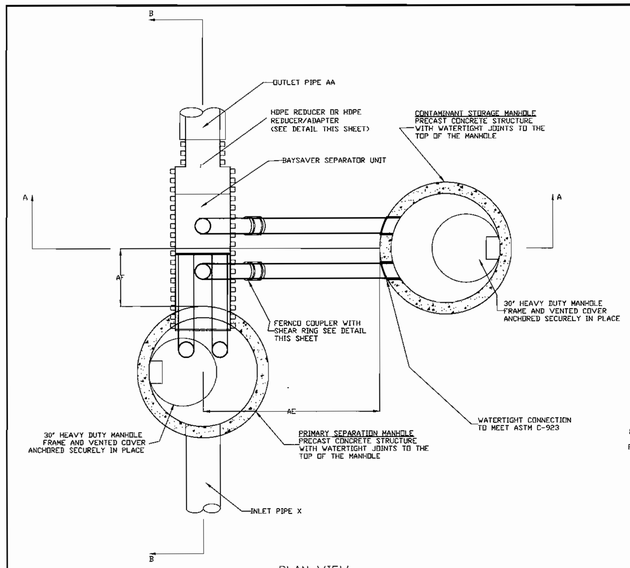

PLAN VIEW

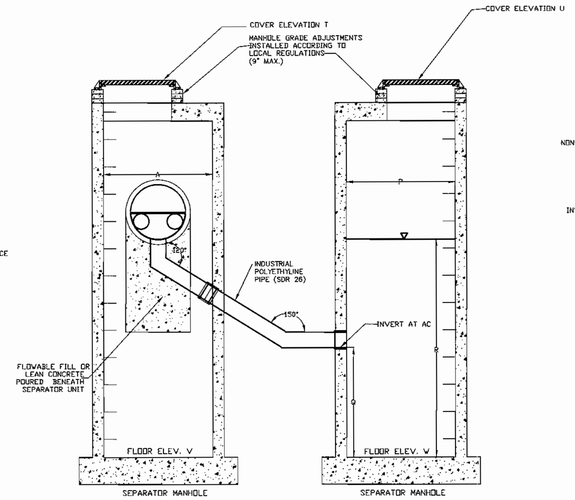

SECTION AA

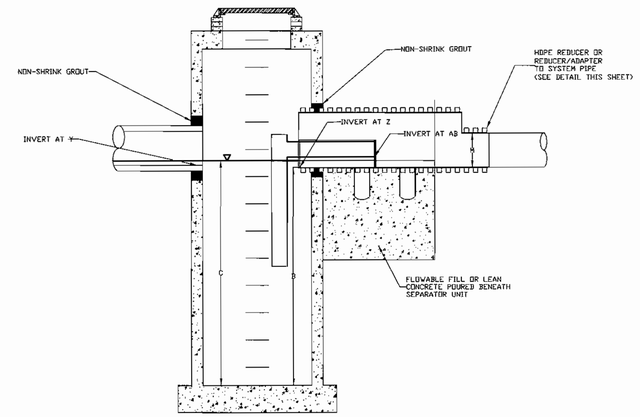

SECTION BB

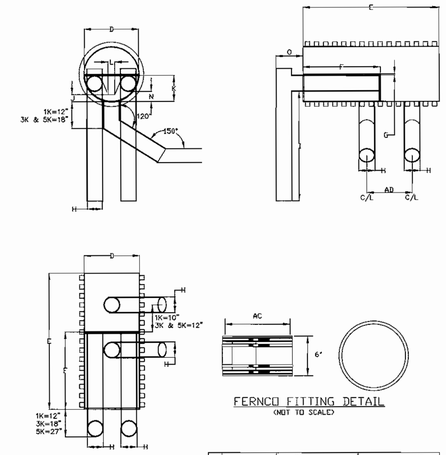

FERNCO FITTING DETAIL
(NOT TO SCALE)

	DISTANCE AC	FERNCO NO.	SHEAR RING
1K	7.10'	1055-66	SR-27
3K	10.60'	1056-1010	SR-39
5K	12.73'	1004-1010	SR-44

HDPE-HDPE REDUCER DETAIL

FOR USE WITH HDPE OUTLET PIPES
NOT TO SCALE

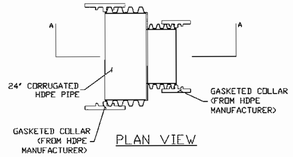

PLAN VIEW

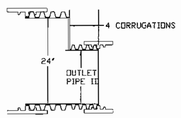

SECTION AA

REDUCER/ADAPTER DETAIL

FOR USE WITH OUTLET PIPES OTHER THAN HDPE
NOT TO SCALE

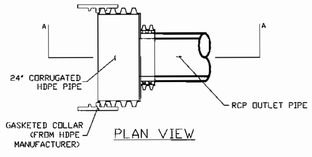

PLAN VIEW

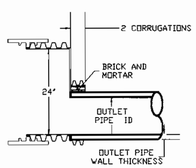

SECTION AA

SEQUENCE OF CONSTRUCTION AND INSPECTOR'S CHECK-OFF LIST FOR DUAL MANHOLE SEPARATORS

Stage (X = Approval Required)	Developer's/Engineer Approval		Inspector		Geotechnical Engineer	
	Initials	Date	Initials	Date	Initials	Date
1. Pre-Construction Meeting.	X		X		X	
2. Install Manholes and associated storm drainage: a. Obtain approval of subgrade from Geotechnical Engineer. (Subgrade to have a minimum of 95% compaction)					X	
b. Installation of precast base, lower tank and lower piping.	X		X			
c. Backfill and min. 95% compaction around lower tank and lower piping.					X	
d. Installation of precast middle section(s) with separator unit and remaining piping.	X		X			
e. Installation of precast top slab.	X		X			
f. Installation of adjustment rings and frame and cover.	X		X			
g. Installation of flowable fill or concrete backfill.					X	
3. Backfilling operation and compaction.					X	
4. Site is permanently stabilized. Sediment control measures removed and all sediment and debris removed from dual manhole separators.			X			
5. Final Inspection.			X			

GENERAL CONSTRUCTION NOTES

1. ALL WORK MUST BE DONE WITH REGARD FOR THE SAFETY OF THE CONSTRUCTION CREW.

2. ALL WORK AND MATERIALS MUST COMPLY WITH APPLICABLE STATE AND LOCAL REGULATIONS.

3. KNOW THE LOCATION AND DEPTH OF ANY UNDERGROUND UTILITIES BEFORE EXCAVATION BEGINS.

NOTE:

BAYSAVERS ARE TO BE INSTALLED WITH THE STORM DRAIN SYSTEM AND WILL FUNCTION AS SECONDARY SEDIMENT CONTROL DEVICES.

UPON COMPLETION OF SITE STABILIZATION, EACH BAYSAVER SYSTEM SHALL BE FLUSHED CLEAN & THE MANHOLES CLEANED OUT AND REFILLED WITH CLEAN WATER.

NOTE: DIMENSIONAL SHOP DRAWINGS ARE TO BE APPROVED BY THE DESIGN ENGINEER

BAYSAVER MAINTENANCE

BAYSAVER SYSTEMS MUST BE INSPECTED AND MAINTAINED PERIODICALLY. INSPECTION IS MADE BY CHECKING THE DEPTH OF SEDIMENT IN EACH MANHOLE WITH A GRADE STICK OR SIMILAR DEVICE. MAINTENANCE IS REQUIRED WHEN THE SEDIMENT DEPTH IN EITHER MANHOLE EXCEEDS 2 FEET. MINIMUM INSPECTION IS REQUIRED TWICE A YEAR TO MAINTAIN OPERATION AND FUNCTION OF BAYSAVER.

MAINTENANCE CONSISTS OF THE FOLLOWING

A. CONTAMINANT STORAGE MANHOLE

1. REMOVE THE ENTIRE VOLUME OF THE CONTAMINATED WATER BY VACUUM TRUCK.

2. CLEAN THE MANHOLE WALLS AND FLUSH OUT THE MANHOLE USING A HIGH PRESSURE HOSE AND REMOVE FLUSHING WATER BY VACUUM TRUCK. MAKE CERTAIN MANHOLE IS CLEAN.

B. PRIMARY SEPARATION MANHOLE

1. USING A SUBMERSIBLE PUMP, PUMP THE CLEAN WATER FROM THE CENTER OF THE MANHOLE DIRECTLY INTO THE EMPTY STORAGE MANHOLE UNTIL THE WATER LEVEL FALLS TO 1 FOOT ABOVE THE SEDIMENT LAYER.

2. REMOVE THE SETTLED SEDIMENT AND REMAINING WATER BY VACUUM TRUCK.

3. CLEAN THE MANHOLE WALLS AND FLUSH OUT THE MANHOLE USING A HIGH PRESSURE HOSE AND REMOVE FLUSHING WATER BY VACUUM TRUCK. MAKE CERTAIN MANHOLE IS CLEAN.

4. CONTAMINATED MATERIAL REMOVED FROM THE MANHOLES MUST BE DISPOSED OF RESPONSIBLY AND LEGALLY BY THE OPERATOR OF THE VACUUM TRUCK.

BAYSAVER INSTALLATION INSTRUCTIONS

1. EXCAVATION MUST PROVIDE ADEQUATE SPACE TO CONNECT INLET AND OUTLET PIPES TO SEPARATOR MANHOLE AND BAYSAVER UNIT. INSTALL PRECAST DROP STRUCTURES ON SOLID GROUND AS VERIFIED BY A GEOTECHNICAL ENGINEER.

2. VERIFY THE SUBGRADE ELEVATION AGAINST THE MANHOLE DIMENSIONS AND CONNECTING STORM DRAIN INVERTS.

3. MAKING SURE THE BASES ARE LEVEL AND THE STORAGE MANHOLE OPENINGS ARE ALIGNED WITH THE SEPARATOR UNIT, INSTALL PRIMARY AND STORAGE MANHOLES. INSTALL RUBBER GASKETS ON BASE UNITS AND COAT WITH LUBRICATING GREASE. INSTALL ADDITIONAL MANHOLE SECTIONS AS REQUIRED. SEAL LIFT HOLES WITH NON-SHRINK GROUT.

4. BACKFILL BASE SECTIONS OF MANHOLES TO INVERT OF STORAGE MANHOLE CONNECTING PIPES. USING APPROVED BACKFILL MATERIAL, BACKFILL AND COMPACT IN 8 INCH LIFTS. BACKFILL AND COMPACTION SHOULD BE MONITORED BY A GEOTECHNICAL ENGINEER.

5. INSTALL BAYSAVER SEPARATOR UNIT AND CONNECTING PIPES. SEAL ALL CONNECTING JOINTS AND INSTALL SEPARATOR UNIT/STORM DRAIN JOINT COLLAR. CUT EXCESS LENGTH OFF CONNECTING PIPES INSIDE STORAGE MANHOLE.

6. BACKFILL SEPARATOR UNIT AND MANHOLES. AREAS NOT ACCESSIBLE TO COMPACTION EQUIPMENT MUST BE BACKFILLED WITH LEAN CONCRETE OR FLOWABLE FILL.

7. INSTALL AND SET MANHOLE COVER GRADE ADJUSTMENT RINGS AS NECESSARY.

8. INSTALL AND SET MANHOLE FRAME AND COVER UNITS.

Project: MEADOWRIDGE BUS. Designer: RIEMER MUEGGE
Address: 6785 BUSINESS PKWY Contact: CHRIS REID
ELKRIDGE, MD. Phone: 410-997-8900
21227 Fax: 410-997-9282
Delivery Date: _____

Owner: SDC, INC. Contractor: _____
Contact: STEVE BREEDEN Address: _____
Address: ELLICOTT CITY, MD _____
21043 Contact: _____
Phone: _____
Fax: _____

Separator Unit Model:

1K ☐
3K ■
5K ☐

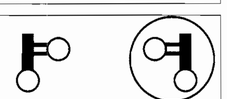

Circle system orientation above

Manhole Specifications:

Primary Manhole Diameter: 60 inches
Storage Manhole Diameter: 60 inches

Floor Elevations:
Primary Manhole 174.58
Storage Manhole 174.58

Primary Manhole Inverts:
Separator Unit 182.91
Inlet Pipe(s) 182.91 (IN)
182.58 (OUT)

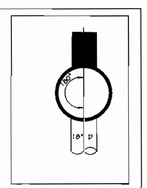

Please show orientation (including angle), size and material of inlet pipes above.

Cover Elevations:
Primary Manhole 187.0
Storage Manhole 187.0

WQ-1/WQ-1A

This order can be faxed to Bay Saver, Inc. at (301) 829-3747

OPERATION AND MAINTENANCE SCHEDULE FOR BAYSAVER UNITS

1. Baysaver structures will require periodic inspection and cleaning to maintain operation and function. Owners will have the Baysaver unit inspected yearly or as required by Howard County, utilizing the Baysaver units Inspection/Monitoring Form. Inspections can be done by using a clear Plexiglas tube ("sludge judge") to extract a water column sample. When sediment depths exceed the specified level (Table 6 of Technical Manual) then cleaning of the unit is required.

2. Baysaver structures must be checked and cleaned immediately after petroleum spills. Contact appropriate regulatory agencies.

3. Maintenance of Baysaver units should be done by a vacuum truck which will remove the water, sediment, debris, floating hydrocarbons, and other materials in the unit. The proper cleaning and disposal of the removed materials and liquid must be followed.

4. Inlet and outlet pipes must be checked for any obstructions and if any obstructions are found they must be removed. Structural parts of the Baysaver will be repaired as needed.

5. Owner shall retain and make Baysaver units Inspection/Monitoring Forms available to Howard County officials upon their request.

BAYSAVER SYSTEM DIMENSIONS

	DESCRIPTION	1K SYSTEM	3K SYSTEM	5K SYSTEM
	SEPARATOR MANHOLE DIMENSIONS			
A	PRIMARY MANHOLE DIAMETER	48"	60"	96"
B	MANHOLE DEPTH BELOW OUTLET	8' - 0"	8' - 0"	8' - 0"
C	MINIMUM FLUID DEPTH	8' - 3"	8' - 4 1/2"	8' - 6"
	STANDARD SEPARATOR UNIT DIMENSIONS			
D	SEPARATOR UNIT ID	24"	36"	48"
E	SEPARATOR UNIT LENGTH	60"	80.0"	79"
F	BYPASS PLATE LENGTH	34"	45"	45"
G	WEIR/BYPASS PLATE THICKNESS	3/4"	3/4"	3/4"
H	ELBOW AND CONNECTING PIPE OD	7.125"	10.75"	12.75"
I	ELBOW LENGTH	48"	48"	48"
J	WEIR HEIGHT ABOVE INVERT	3"	4"	6"
K	BYPASS PLATE HEIGHT ABOVE INVERT	12"	18"	24"
L	WIDTH OF WEIR AT BASE	3"	4 1/2"	6"
M	OUTLET PIPE DIAMETER	M	M	M
N	ELBOW INVERT HEIGHT ABOVE UNIT INVERT	4 1/2"	7 1/2"	11"
O	ELBOW PIPE OVERHANG	12"	18"	24"
	STORAGE MANHOLE DIMENSIONS			
P	STORAGE MANHOLE DIAMETER	48"	60"	96"
Q	MANHOLE DEPTH BELOW INLET/OUTLET	48"	48"	48"
R	FLUID DEPTH	8' - 0"	8' - 0"	8' - 0"
S	TOTAL STORAGE VOLUME	200 CF	300 CF	450 CF
	SYSTEM DIMENSIONS AND ELEVATIONS			
T	SEPARATOR MANHOLE COVER ELEVATION	T	T	T
U	STORAGE MANHOLE COVER ELEVATION	U	U	U
V	SEPARATOR MANHOLE FLOOR ELEVATION	V	V	V
W	STORAGE MANHOLE FLOOR ELEVATION	W	W	W
X	INLET PIPE ID AND MATERIAL	X1 X2	X1 X2	X1 X2
Y	INLET PIPE INVERT	Y1 Y2	Y1 Y2	Y1 Y2
Z	SEPARATOR UNIT INVERT	Z	Z	Z
AA	OUTLET PIPE ID AND MATERIAL	AA	AA	AA
AB	ELBOW INVERT ELEVATION	AB	AB	AB
AC	CONNECTING PIPE INVERT ELEVATION	AC	AC	AC
AD	CONNECTION PIPE SPACING	20"	24"	24"
AE	STORAGE MANHOLE SIDE OFFSET	72 ± 6"	72 ± 6"	72 ± 6"
AF	STORAGE MANHOLE DOWNSTREAM OFFSET	23"	31"	25"

Baysaver Separator Unit	Baysaver Manhole Sizes (prim. x stor.)	Maximum Treatment (cfs)*1	Maximum Treatment (gpm)*1	Impervious Area (acres)
1K Baysaver Separator	48x48	2.4	1076	1.2
	48x50	2.4	1076	1.4
	48x72	2.4	1076	1.6
	60x60	2.4	1076	1.5
3K Baysaver Separator	→ 60x60	7.2	3231	3.6 WQ-1
	60x72	7.2	3231	4.1
	60x84	7.2	3231	4.6
	72x72	7.2	3231	4.4
5K Baysaver Separator	72x72	11.1	4981	5.5
	72x84	11.1	4981	6.5
	72x96	11.1	4981	7.5
	96x96	11.1	4981	8.0

APPROVED : HOWARD COUNTY DEPARTMENT OF PLANNING AND ZONING.

DIRECTOR — DATE 11/2/01
CHIEF, DEVELOPMENT ENGINEERING DIVISION — DATE 10/26/01
CHIEF, DIVISION OF LAND DEVELOPMENT — DATE 10/31/01

DATE	NO.	REVISION

OWNER/DEVELOPER
SDC, INC.
8480 BALTIMORE NATIONAL PIKE
ELLICOTT CITY, MARYLAND 21043
410-465-4244

PROJECT
MEADOWRIDGE BUSINESS PARK
PARCEL R-1
A WAREHOUSE BUILDING

AREA
ZONED M-1 PARCEL R-1
TAX MAP 37, BLOCK 23 & TAX MAP 43, BLOCK 4 & 5
1st ELECTION DISTRICT
HOWARD COUNTY, MARYLAND

TITLE
WATER QUALITY NOTES AND DETAILS

RIEMER MUEGGE & ASSOCIATES INC
ENGINEERING • ENVIRONMENTAL SERVICES • PLANNING • SURVEYING
8818 Centre Park Drive, Columbia, MD 21045
tel 410.997.8900 fax 410.997.9282

10.9.01
DATE

STATE OF MARYLAND — REGISTERED PROFESSIONAL ENGINEER

CHRISTOPHER J. REID #19949

DESIGNED BY : CJR
DRAWN BY: BAYSAVER
PROJECT NO : 00036/SDP7.DWG
DATE : SEPTEMBER 21, 2001
SCALE : AS SHOWN
DRAWING NO. 7 OF 11

SDP-00-144

P:\project\00036\SDP7.DWG Wed Sep 19 13:28:19 2001 RIEMER MUEGGE A DIVISION OF PHAGA

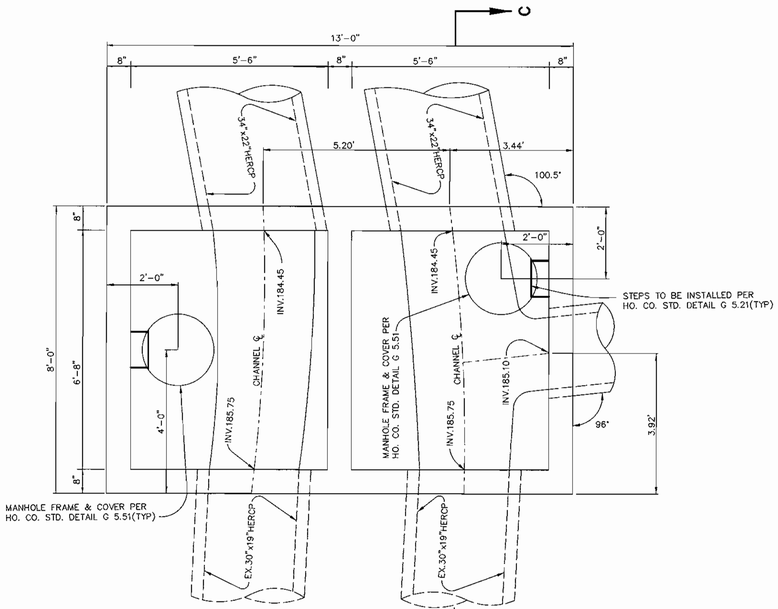

JUNCTION BOX – 3
SCALE : 1"=2'

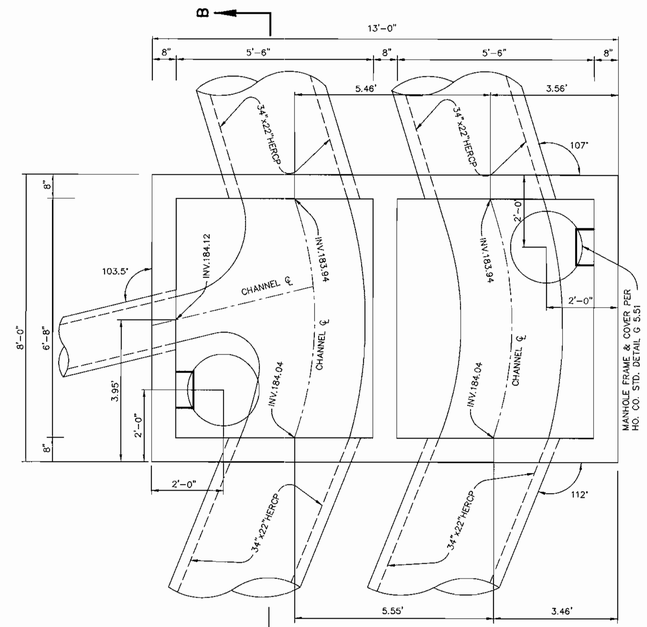

JUNCTION BOX –2
SCALE : 1"=2'

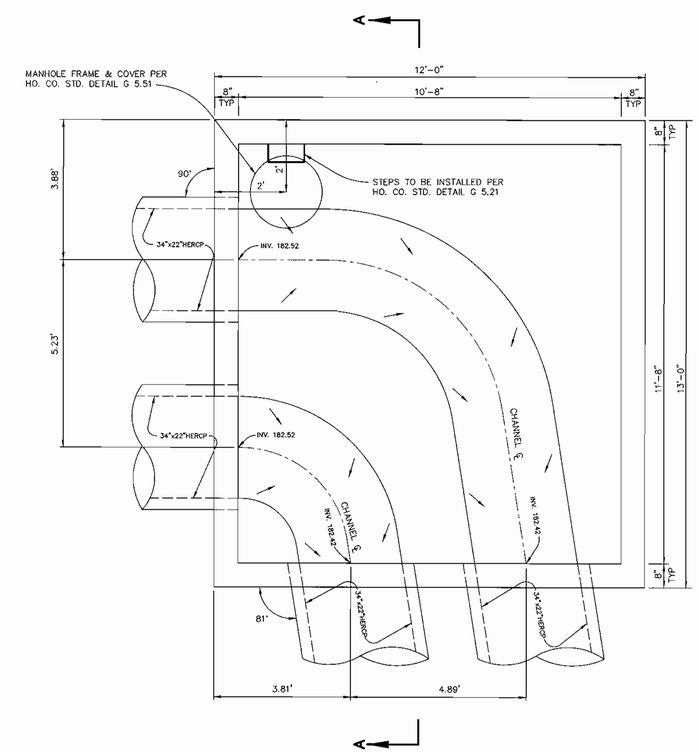

JUNCTION BOX – 1
SCALE : 1"=2'

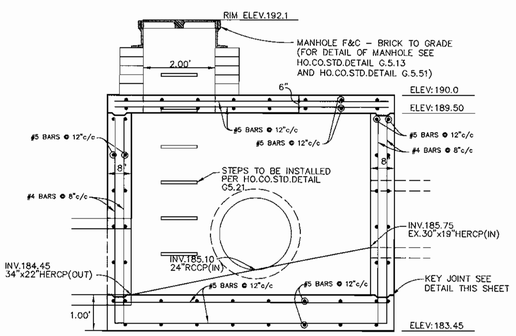

JUNCTION BOX – 3
CROSS SECTION C–C
SCALE : 1"=2'

NOTE: PIPES EXTENDING INTO BOX SHALL BE CUT BACK TO FACE OF STRUCTURE.

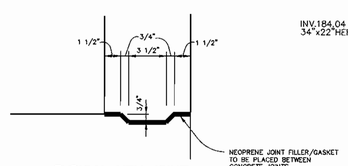

TYPICAL KEY JOINT
JUNCTION BOX – 2&3
NO SCALE

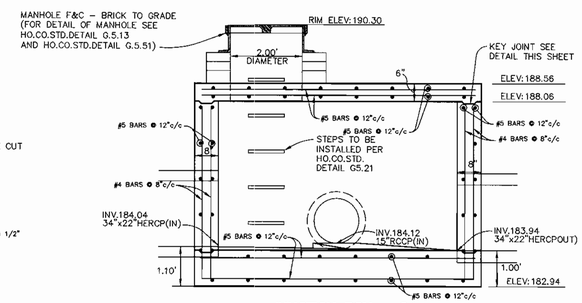

JUNCTION BOX – 2
CROSS SECTION B–B
SCALE : 1"=2'

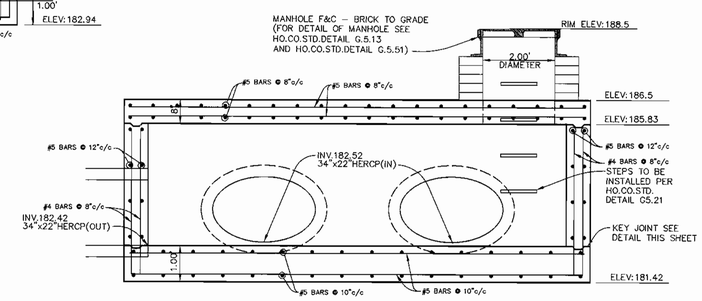

JUNCTION BOX – 1
CROSS SECTION A–A
SCALE : 1"=2'

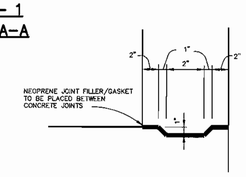

TYPICAL KEY JOINT
JUNCTION BOX – 1
NO SCALE

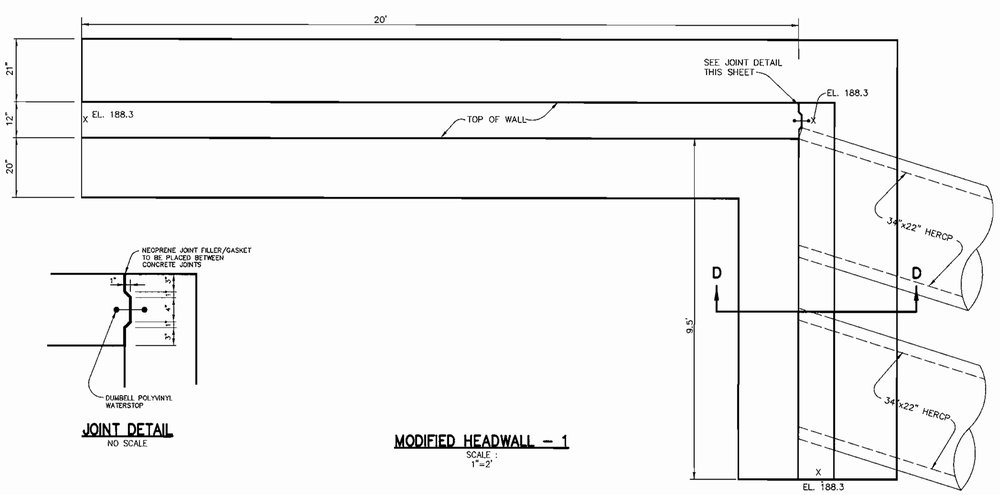

JOINT DETAIL
NO SCALE

MODIFIED HEADWALL – 1
SCALE : 1"=2'

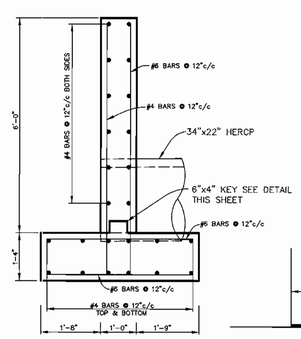

SECTION D–D
SCALE : 1"=2'

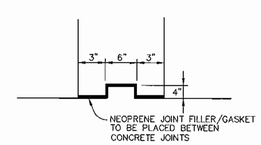

6"x4" KEY JOINT DETAIL
NO SCALE

APPROVED : HOWARD COUNTY DEPARTMENT OF PLANNING AND ZONING.

DIRECTOR	DATE 11/2/01
CHIEF, DEVELOPMENT ENGINEERING DIVISION	DATE 10/26/01
CHIEF, DIVISION OF LAND DEVELOPMENT	DATE 10/31/01

DATE	NO.	REVISION

OWNER/DEVELOPER

SDC, INC.
8480 BALTIMORE NATIONAL PIKE
ELLICOTT CITY, MARYLAND 21043
410–465–4244

PROJECT MEADOWRIDGE BUSINESS PARK
PARCEL R–1
A WAREHOUSE BUILDING

AREA ZONED M–1 PARCEL R–1
TAX MAP 37, BLOCK 23 & TAX MAP 43, BLOCK 4 & 5
1st ELECTION DISTRICT
HOWARD COUNTY, MARYLAND

TITLE
DETAILS

RIEMER MUEGGE & ASSOCIATES INC
ENGINEERING • ENVIRONMENTAL SERVICES • PLANNING • SURVEYING
8818 Centre Park Drive, Columbia, MD 21045
tel 410.997.8900 fax 410.997.9282

10-9-01
DATE

CHRISTOPHER J. REID #19949

DESIGNED BY :	CJR
DRAWN BY:	DAM/K.E.V.
PROJECT NO :	00036/ SDP8.DWG
DATE :	SEPTEMBER 21, 2001
SCALE :	AS SHOWN
DRAWING NO.	8 OF 11

SDP–00–144

P:\project\00036\SDP8.DWG Wed Sep 19 13:29:29 2001 RIEMER MUEGGE A DIVISION OF PMRGA

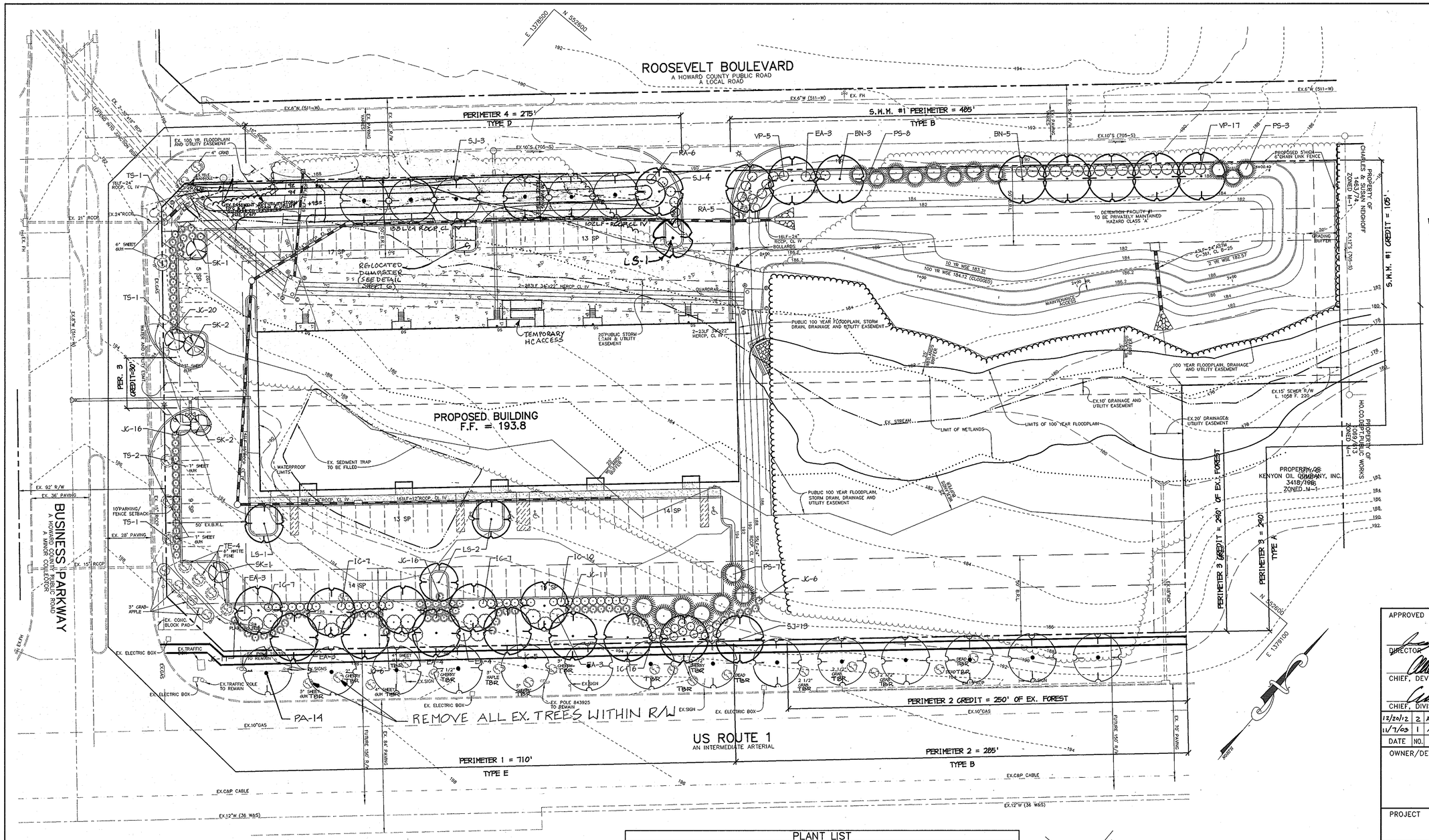

STATE OF MARYLAND
BRIAN F. CLERY
No. 28559
REGISTERED PROFESSIONAL ENGINEER
12/20/2012

Professional Certification. I hereby certify that these documents were prepared or approved by me, and that I am a duly licensed professional engineer under the laws of the State of Maryland.
License No. 28559 Expiration Date: 7-22-13

FOR REVISIONS BY BENCHMARK ENGINEERING INC ONLY

PLANTING LEGEND

PROP. SHADE TREE
PROP. ORNAMENTAL TREE
PROP. EVERGREEN TREE
PROP. CONIFEROUS SHRUB
PROP. BROADLEAF SHRUB
PROP. TREELINE
EXISTING PLANTS
EXISTING TREELINE
TRANSPLANTED TREE
TREE PROTECTION FENCE

GENERAL NOTES:

1) "THIS PLAN HAS BEEN PREPARED IN ACCORDANCE WITH THE PROVISIONS OF SECTION 16.124 OF THE HOWARD COUNTY CODE.

2) FINANCIAL SURETY FOR THE REQUIRED LANDSCAPING MUST BE POSTED AS PART OF THE DEVELOPER'S AGREEMENT IN THE AMOUNT OF $23,120

3) THIS PLAN IS FOR LANDSCAPING PURPOSES ONLY.

4) CONTRACTOR IS SOLELY RESPONSIBLE FOR CONSTRUCTION MEANS, METHODS, TECHNIQUES, SEQUENCES, PROCEDURES, AND SAFETY PRECAUTIONS AND PROGRAMS.

5) ALL "TRANSPLANTED TREES" SHALL BE REMOVED, BALLED, & BURLAPPED, AND STORED AND REPLANTED AFTER SITE GRADING HAS BEEN COMPLETED AT THE PROPOSED PLANTING LOCATION. TAKE CARE TO MAINTAIN THE TRANSPLANTED TREES ROOTBALL IN A MOIST & COMPACT CONDITION UNTIL REPLANTING.

6) THE OWNER, TENANT, AND/OR THEIR AGENTS SHALL BE RESPONSIBLE FOR MAINTENANCE OF THE REQUIRED LANDSCAPING, INCLUDING BOTH PLANT MATERIALS AND BERMS, FENCES AND WALLS. ALL PLANT MATERIALS SHALL BE MAINTAINED IN GOOD GROWING CONDITION, AND WHEN NECESSARY, REPLACED WITH NEW MATERIALS TO ENSURE CONTINUED COMPLIANCE WITH APPLICABLE REGULATIONS. ALL OTHER REQUIRED LANDSCAPING SHALL BE PERMANENTLY MAINTAINED IN GOOD CONDITION, AND WHEN NECESSARY, REPAIRED OR REPLACED.

PLANT LIST

SYMBOL	QTY.	SCIENTIFIC/ COMMON NAME	SIZE	ROOT	REMARKS
TS	5	TRANSPLANT SHADETREE	7" CAL.		
TE	4	TRANSPLANT EVERGREEN	6" CAL.		
BN	8	BETULA NIGRA / RIVER BIRCH	2.5" – 3" CAL.	B & B	
LS	4	LIQUIDAMBAR STYRACIFLUA / SWEET GUM	2.5" – 3" CAL.	B & B	
SJ	~~20~~ 19	SOPHORA JAPONICA 'REGENT' / REGENT SCHOLAR TREE	2.5" – 3" CAL.	B & B	
PS	~~48~~ 43	PINUS STROBUS / WHITE PINE	6 – 7'	B & B	
SK	6	STEWARTIA KOREANA / KOREAN STEWARTIA	5 – 6'	B & B	
EA	20	EUONYMUS ALATUS 'COMPACTUS' / COMPACT WINGED EUONYMUS	24" – 30" HT.	CONT.	
IC	~~47~~ 46	ILEX CRENATA 'GREEN LUSTER' / GREEN LUSTER JAPANESE HOLLY	24" – 30" HT.	CONT.	
JC	~~31~~ 30	JUNIPERUS CHINENSIS 'PFITZERIANA COMPACTA' / COMPACT PFITZER JUNIPER	24" – 30" HT.	CONT.	
RA	11	RHODODENDRON 'AGLO' / AGLO RHODODENDRON	24" – 30" HT.	CONT.	
VP	~~22~~ 21	VIBURNUM PLICATUM TOMENTOSUM 'SHASTA' / SHASTA DOUBLEFILE VIBURNUM	24" – 30" HT.	B & B	

AS-BUILT CERTIFICATION

STATE OF MARYLAND AIMEE C. REMINGTON No. 29923 REGISTERED PROFESSIONAL ENGINEER

Aimee C. Remington 10.12.05
AIMEE C. REMINGTON #29923 DATE

DEVELOPER'S/BUILDER'S CERTIFICATE:

I/WE CERTIFY THAT THIS PLAN HAS BEEN PREPARED IN ACCORDANCE WITH THE PROVISIONS OF SECTION 16.124 OF THE HOWARD COUNTY CODE AND THE HOWARD COUNTY LANDSCAPE MANUAL. I/WE FURTHER CERTIFY THAT UPON COMPLETION, A CERTIFICATION OF LANDSCAPE INSTALLATION, ACCOMPANIED BY AN EXECUTED ONE YEAR GUARANTEE OF PLANT MATERIALS, WILL BE SUBMITTED TO THE DEPARTMENT OF PLANNING AND ZONING.

NAME 10-17-01 DATE

APPROVED : HOWARD COUNTY DEPARTMENT OF PLANNING AND ZONING.

DIRECTOR	11/2/01 DATE
CHIEF, DEVELOPMENT ENGINEERING DIVISION	10/26/01 DATE
CHIEF, DIVISION OF LAND DEVELOPMENT	10/31/01 DATE

DATE	NO.	REVISION	
12/20/12	2	ADD TEMP. HC ACCESS FOR SUITE G	BEI
11/7/03	1	ADDED BERM ALONG ROOSEVELT, ADDED RT 1 TREES	

OWNER/DEVELOPER

SDC, INC.
8480 BALTIMORE NATIONAL PIKE
ELLICOTT CITY, MARYLAND 21043
410-465-4244

PROJECT MEADOWRIDGE BUSINESS PARK
PARCEL R-1
A WAREHOUSE BUILDING

AREA ZONED M-1 PARCEL R-1
TAX MAP 37, BLOCK 23 & TAX MAP 43, BLOCK 4 & 5
1st ELECTION DISTRICT
HOWARD COUNTY, MARYLAND

TITLE
LANDSCAPE PLAN

RIEMER MUEGGE & ASSOCIATES INC
ENGINEERING • ENVIRONMENTAL SERVICES • PLANNING • SURVEYING
8818 Centre Park Drive, Columbia, MD 21045
tel 410.997.8900 fax 410.997.9282

9.19.01
STATE OF MARYLAND DAVID DOWS No. 830
David T. Dows
DAVID T. DOWS #830

DESIGNED BY :	RAF
DRAWN BY:	GTH
PROJECT NO :	00036/ LSCP1.DWG
DATE :	SEPTEMBER 21, 2001
SCALE :	1" = 30'
DRAWING NO.	9 OF 11

AS-BUILT

SDP-00-144

P:\project\00036\LSCP1.DWG Wed Sep 19 12:00:30 2001 RIEMER MUEGGE A DIVISION OF PHRGA

PLANTING SPECIFICATIONS

1. Plants, related material, and operations shall meet the detailed description as given on the plans and as described herein.

2. All plant material, unless otherwise specified, shall be nursery grown, uniformly branched, have a vigorous root system, and shall conform to American Association of Nurserymen (AAN) Standards. Plant material shall be healthy, vigorous, free from defects, decay, disfiguring roots, sunscald injuries, abrasions of the bark, plant disease, insect pest eggs, borers and all forms of insect infestations or objectionable disfigurements. Plant material that is weak or which has been cut back from larger grades to meet specified requirements will be rejected. Trees with forked leaders will not be accepted. All plants shall be freshly dug; no healed-in plants or plants from cold storage will be accepted.

3. Unless otherwise specified, all general conditions, planting operations, details and planting specification shall conform to "Landscape Specification Guidelines for Baltimore-Washington Metropolitan Areas", (hereinafter "Landscape Guidelines") approved by the Landscape Contractors Association of Metropolitan Washington and the Potomac Chapter of the American Society of Landscape Architect, latest edition, including all agenda.

4. Contractor shall be required to guarantee all plant material for a period of one year after date of acceptance in accordance with the appropriate section of the Landscape Guidelines. Contractor's attention is directed to the maintenance requirements found within the one year specifications including watering and replacement of specified plant material.

5. Contractor shall be responsible for notifying utility companies, utility contractors and "Miss Utility" a minimum of 48 hours prior to beginning any work. Contractor may make minor adjustments in spacing and location of plant material to avoid conflicts with utilities. Damage to existing structure and utilities shall be repaired at the expense of the Contractor.

6. Protection of existing vegetation to remain shall be accomplished by the temporary installation of 4 foot high snow fence at the drip line.

7. Contractor is responsible for installing all material in the proper planting season for each plant type. All planting is to be completed within growing season of completion of site construction.

8. Bid shall be based on actual site conditions. No extra payment shall be made for work arising from site conditions differing from those indicated on drawings and specifications.

9. Plant quantities are provided for the convenience of the contractor only. If discrepancies exist between quantities shown on plan and those shown on the plant list, the quantities on the plan take precedence.

10. All shrubs and groundcover areas shall be planted in continuous prepared planting beds mulched with composted hardwood mulch as detailed and specified except where noted on plans.

11. Positive drainage shall be maintained in planting beds (minimum 2 percent slope).

12. Planting mix shall be as follows: Deciduous Plants - Two parts topsoil, one part well-rotted cow or horse manure. Add 3 lbs of standard fertilizer per cubic yard of planting mix. Evergreen Plants - two parts topsoil, one part humus or other approved organic material. Add 3 lbs. of evergreen (acidic) fertilizer per cubic yard of planting mix. Topsoil shall conform to the Landscape Guidelines.

13. Weed Control: Incorporate a pre-emergent herbicide into the planting bed following recommended rates on the label. Caution: Be sure to carefully check the chemical used to assure its adaptability to the specific groundcover to be treated.

14. Mulch: Groundcover beds should be mulched with minimum 2 inches of shredded composted hardwood, or as specified on the details, whichever is greater.

15. All areas within contract limits disturbed during or prior to construction not designated to receive plants and mulch shall be fine graded and seeded.

16. This plan is intended for landscape use only. See other plan sheets for more information on grading, sediment control, layout, etc

SCHEDULE A - PERIMETER LANDSCAPE EDGE

	ADJACENT TO ROADWAYS					ADJACENT TO PERIM. PROPERTIES	
PERIMETER	1	2	4			3	
LANDSCAPE TYPE	E	B	D			A	
LINEAR FEET OF ROADWAY FRONTAGE/ PERIMETER	710'±	285'±	275'±			290'±	
CREDIT FOR EXISTING VEGETATION (YES, NO, LINEAR FEET) (DESCRIBE BELOW IF NEEDED)	NO	FOREST 250'	NO			FOREST 290'	
CREDIT FOR WALL, FENCE, BERM OR DRIVE AISLE (YES/NO/LINEAR FEET)	AISLE 30'	NO	NO			NO	
LINEAR FEET REMAINING	680'±	35'±	275'±			290'±	
NUMBER OF PLANTS REQUIRED SHADE TREES EVERGREEN TREES SHRUBS	 17 - 170	 1 1 -	 5 28 -			 - - -	
NUMBER OF PLANTS PROVIDED SHADE TREES EVERGREEN TREES SMALL FLOWERING TREES SHRUBS	 12 8+ 4** 160	 1 1 - -	 5 9* - 150*			 - - - -	

* (150) SHRUBS SUBSTITUTED FOR (15) EVERGREEN TREES TO PROVIDE ENTRANCE ENHANCEMENT. THE REMAINING REQUIREMENT OF (4) EVERGREEN TREES IS TRANSFERRED TO PERIMETER 4 TO ASSIST IN SCREENING THE STORM WATER MANAGEMENT POND.

** (4) ORNAMENTAL TREES SUBSTITUTED FOR (2) SHADE TREES TO ACCENT THE PARKING LOT & TO AVOID OVERCROWDING OF SHADE TREES.

\+ (2) EVERGREEN TREES SUBSTITUTED FOR (10) SHRUBS TO COMPLETE SCREEN PLANTING AT WEST PROPERTY CORNER.
(6) EVERGREEN TREES SUBSTITUTED FOR (3) SHADE TREES TO SCREEN CORNER OF PARKING LOT.

SCHEDULE B - PARKING LOT INTERNAL LANDSCAPING

PARKING LOT	1
NUMBER OF PARKING SPACES	104
NUMBER OF SHADE TREES / ISLANDS REQUIRED (1/20 SP.)	5
NUMBER OF TREES PROVIDED SHADE TREES OTHER TREES (2:1 SUBSTITUTION)	 4 2*
NUMBER OF ISLANDS PROVIDED	4

* (2) ORNAMENTAL TREES SUBSTITUTED FOR (1) SHADE TREE BECAUSE (2) EXISTING SHADE TREES ARE CLOSE TO THE LANDSCAPE ISLANDS.

SCHEDULE D - STORMWATER MANAGEMENT AREA LANDSCAPING

S.W.M. POND PERIMETER	1
LANDSCAPE TYPE	B
LINEAR FEET OF TOTAL PERIMETER	485'
CREDIT FOR LINEAR FEET SHARED ALONG PERIMETER EDGE	105'*
LINEAR FEET OF REMAINING PERIMETER	380'
CREDIT FOR EX. VEGETATION (NO OR YES & %)	NO
CREDIT FOR OTHER LANDSCAPING (NO OR YES & %)	NO
NUMBER OF TREES REQUIRED: SHADE TREES EVERGREEN TREES	 8 10
NUMBER OF PLANTS PROVIDED SHADE TREES EVERGREEN TREES (2:1 SUBSTITUTION, 50% MAX.) OTHER TREES (2:1 SUBSTITUTION, 50% MAX.) SHRUBS (10:1 SUBSTITUTION, 25% MAX.)	 8 11** - 30**

* NO LANDSCAPE REQUIREMENT BETWEEN S.W.M. POND & ADJACENT NON-RESIDENTIAL PROPERTIES IN AN M-1 ZONE.

** (4) EVERGREEN TREES FROM PERIMETER 4 CONVERTED TO (1) EVERGREEN AND (30) SHRUBS TO SCREEN POND.

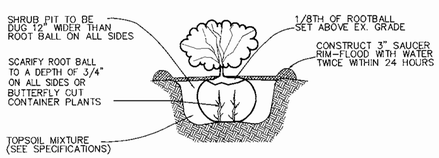

NOTE: ALL CONTAINERS OR BURLAP SHALL BE REMOVED BEFORE INSTALLATION.

SHRUB PLANTING DETAIL
NOT TO SCALE

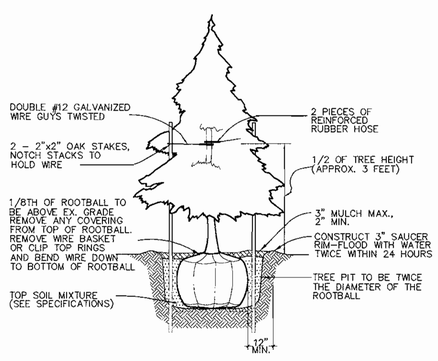

EVERGREEN PLANTING DETAIL
NOT TO SCALE

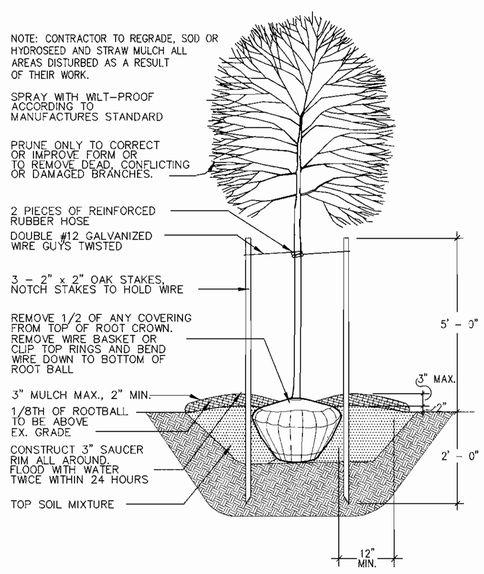

B&B TREE
TREE PLANTING DETAIL
NOT TO SCALE

APPROVED : HOWARD COUNTY DEPARTMENT OF PLANNING AND ZONING.

DIRECTOR — DATE 11/2/01

CHIEF, DEVELOPMENT ENGINEERING DIVISION — DATE 10/26/01

CHIEF, DIVISION OF LAND DEVELOPMENT — DATE 10/31/01

DATE	NO.	REVISION

OWNER/DEVELOPER
SDC, INC.
8480 BALTIMORE NATIONAL PIKE
ELLICOTT CITY, MARYLAND 21043
410-465-4244

PROJECT MEADOWRIDGE BUSINESS PARK
PARCEL R-1
A WAREHOUSE BUILDING

AREA ZONED M-1 PARCEL R-1
TAX MAP 37, BLOCK 23 & TAX MAP 43, BLOCK 4 & 5
1st ELECTION DISTRICT
HOWARD COUNTY, MARYLAND

TITLE LANDSCAPE SCHEDULES & DETAILS

RIEMER MUEGGE & ASSOCIATES INC
ENGINEERING • ENVIRONMENTAL SERVICES • PLANNING • SURVEYING
8818 Centre Park Drive, Columbia, MD 21045
tel 410.997.8900 fax 410.997.9282

9.19.01

DAVID T. DOWS #830

DESIGNED BY :	RAF
DRAWN BY:	GTH
PROJECT NO :	00036/LSCP2.DWG
DATE :	SEPTEMBER 21, 2001
SCALE :	
DRAWING NO.	10 OF 11

SDP-00-144

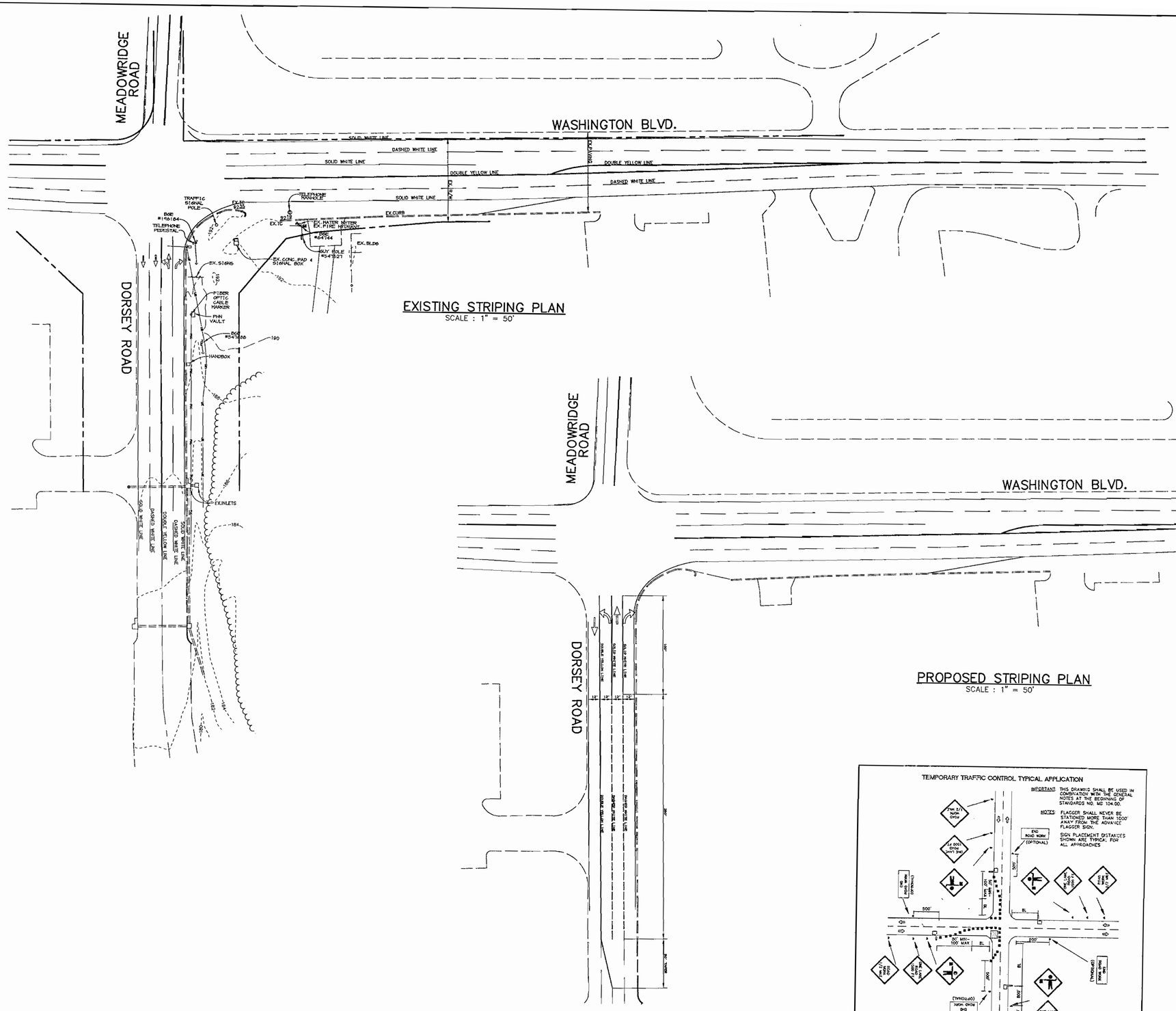

EXISTING STRIPING PLAN
SCALE : 1" = 50'

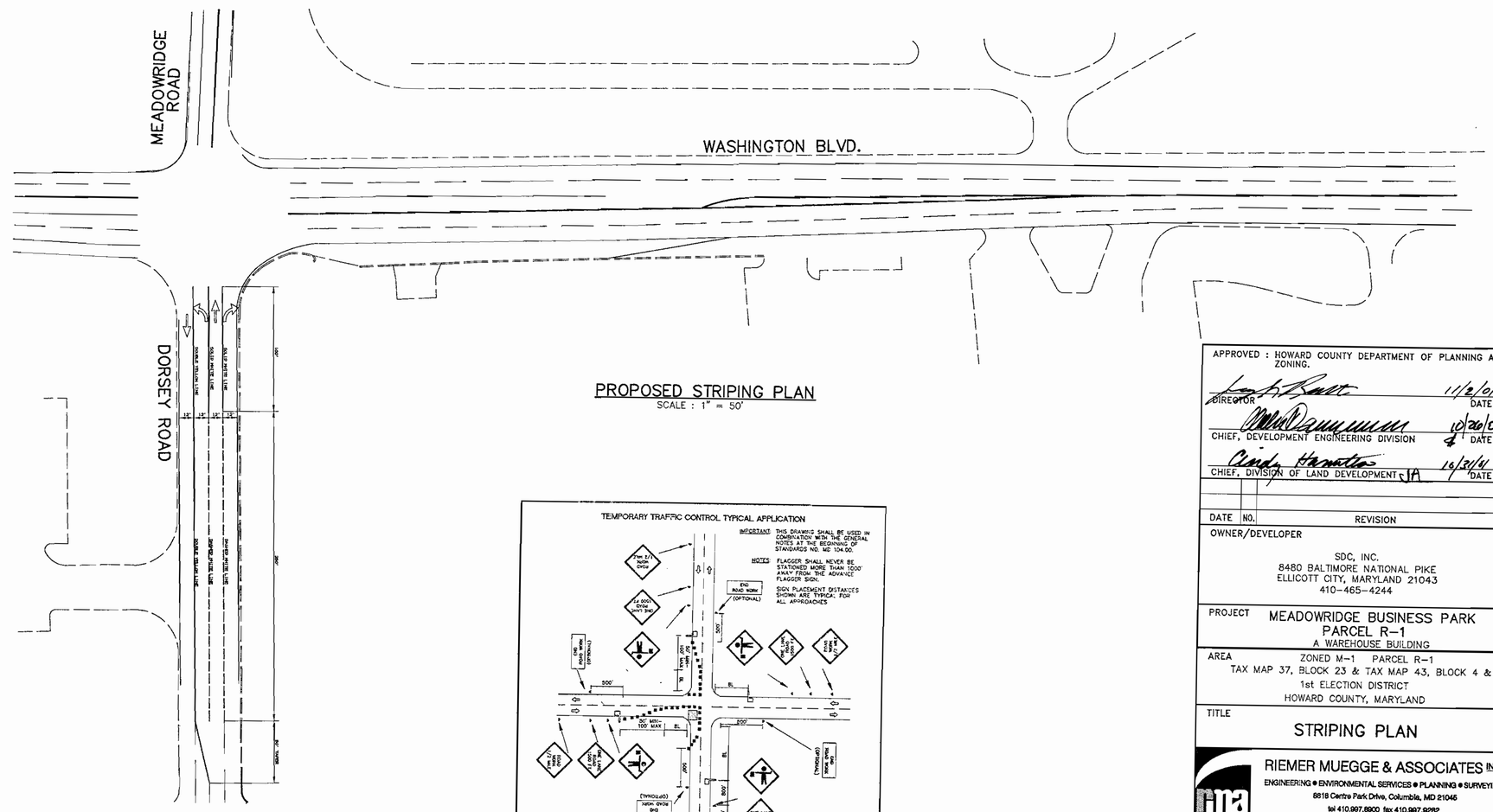

PROPOSED STRIPING PLAN
SCALE : 1" = 50'

TRAFFIC CONTROL SIGNAGE LEGEND

SIGN

TEMPORARY BARRIER

SHOULDER WORK
W21-5
30"x 30"

ROAD WORK AHEAD
W20-1
30"x 30"

END ROAD WORK
G20-2
60"x 24"

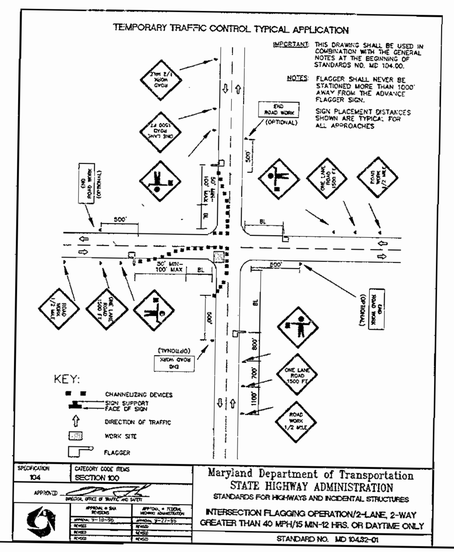

APPROVED : HOWARD COUNTY DEPARTMENT OF PLANNING AND ZONING.

DIRECTOR — DATE 11/2/01

CHIEF, DEVELOPMENT ENGINEERING DIVISION — DATE 10/26/01

CHIEF, DIVISION OF LAND DEVELOPMENT — DATE 10/31/01

DATE	NO.	REVISION

OWNER/DEVELOPER

SDC, INC.
8480 BALTIMORE NATIONAL PIKE
ELLICOTT CITY, MARYLAND 21043
410-465-4244

PROJECT MEADOWRIDGE BUSINESS PARK
PARCEL R-1
A WAREHOUSE BUILDING

AREA ZONED M-1 PARCEL R-1
TAX MAP 37, BLOCK 23 & TAX MAP 43, BLOCK 4 & 5
1st ELECTION DISTRICT
HOWARD COUNTY, MARYLAND

TITLE
STRIPING PLAN

RIEMER MUEGGE & ASSOCIATES INC
ENGINEERING • ENVIRONMENTAL SERVICES • PLANNING • SURVEYING
8818 Centre Park Drive, Columbia, MD 21045
tel 410.997.8900 fax 410.997.9282

10.9.01
DATE

CHRISTOPHER J. REID #19949

DESIGNED BY : CJR
DRAWN BY: DAM
PROJECT NO : 00036/TRAFCONT.DWG
DATE : SEPTEMBER 21, 2001
SCALE : 1" = 50'
DRAWING NO. 11 OF 11

SDP-00-144

P:\project\00036\TRAFCONT.DWG Wed Sep 19 13:30:54 2001 RIEMER MUEGGE A DIVISION OF PHGSA

SITE DEVELOPMENT PLAN
MEADOWRIDGE BUSINESS PARK
PARCEL R-1
1st ELECTION DISTRICT
HOWARD COUNTY, MARYLAND

SHEET INDEX

NO	DESCRIPTION
1	TITLE SHEET
2	SITE DEVELOPMENT PLAN
3	GRADING, SEDIMENT CONTROL PLAN AND DRAINAGE AREA MAP
4	SEDIMENT CONTROL NOTES AND DETAILS
5	DETAILS AND PROFILES
6	STORMWATER MANAGEMENT DETAILS
7	WATER QUALITY NOTES AND DETAILS
8	DETAILS
9	LANDSCAPE PLAN
10	LANDSCAPE SCHEDULES AND DETAILS
11	STRIPING PLAN

GENERAL NOTES

1. ALL CONSTRUCTION SHALL BE IN ACCORDANCE WITH THE LATEST STANDARDS AND SPECIFICATIONS OF HOWARD COUNTY PLUS MSHA STANDARDS AND SPECIFICATIONS, IF APPLICABLE.
2. THE CONTRACTOR SHALL NOTIFY THE DEPARTMENT OF PUBLIC WORKS/BUREAU OF ENGINEERING/ CONSTRUCTION INSPECTION DIVISION AT (410) 313-1880 AT LEAST FIVE (5) WORKING DAYS PRIOR TO THE START OF WORK.
3. THE CONTRACTOR SHALL NOTIFY "MISS UTILITY" AT 1-800-257-7777 AY LEAST 48 HOURS PRIOR TO ANY EXCAVATION WORK BEING DONE.
4. TRAFFIC CONTROL DEVICES, MARKINGS, AND SIGNING SHALL BE IN ACCORDANCE WITH THE LATEST EDITION OF THE MANUAL ON UNIFORM TRAFFIC CONTROL DEVICES (MUTCD). ALL STREET AND REGULATORY SIGNS SHALL BE IN PLACE PRIOR TO THE PLACEMENT OF ANY ASPHALT.
5. ALL PLAN DIMENSIONS ARE TO FACE OF CURB AND FACE OF BUILDING UNLESS OTHERWISE NOTED.
6. THE COORDINATES SHOWN HEREON ARE BASED UPON THE HOWARD COUNTY GEODETIC CONTROL WHICH IS BASED UPON THE MARYLAND STATE PLANE COORDINATE SYSTEM. HOWARD COUNTY MONUMENT NOS. 43B6 AND 43B2 WERE USED FOR THIS PROJECT.
7. WATER IS PUBLIC. CONTRACT NO. 511-W. NEW WATER SERVICE TO BE UNDER ADO AGREEMENT.
8. SEWER IS PUBLIC. SEWER DRAINAGE AREA: PATAPSCO CONTRACT NO. 705-S. NEW SEWER SERVICE TO BE UNDER ADO AGREEMENT.
9. APPROXIMATE LOCATION OF EXISTING UTILITIES ARE SHOWN. THE CONTRACTOR SHALL TAKE ALL NECESSARY PRECAUTIONS TO PROTECT THE EXISTING UTILITIES AND MAINTAIN UNINTERRUPTED SERVICE. ANY DAMAGE INCURRED DUE TO CONTRACTOR'S OPERATION SHALL BE REPAIRED IMMEDIATELY AT THE CONTRACTOR'S EXPENSE. EXISTING UTILITIES ARE SHOWN BASED ON THE BEST
10. A 100-YEAR FLOODPLAIN STUDY WAS PREPARED BY RIEMER MUEGGE & ASSOCIATES DATED AUGUST 2000.
11. THE WETLANDS DELINEATION FOR THIS PROJECT IS FROM RECORDED PLAT 9047.
12. AN APFO TRAFFIC STUDY FOR THIS PROJECT WAS PREPARED BY LEE CUNNINGHAM & ASSOCIATES DATED MAY, 2001. ACCORDING TO THE TRAFFIC STUDY A RIGHT TURN LANE NEEDS TO BE PROVIDED AT ROUTE 1/ROUTE 103 INTERSECTION. LANE CONSTRUCTION WILL COMMENCE PRIOR TO BUILDING CONSTRUCTION.
13. A NOISE STUDY IS NOT REQUIRED FOR THIS PROJECT.
14. THE BOUNDARY SURVEY FOR THIS PROJECT IS BASED ON PREVIOUSLY RECORDED PLAT NO. 9047 AND 14861.
15. SUBJECT PROPERTY ZONED M-1 PER 10-18-93 COMPREHENSIVE ZONING PLAN.
16. ALL ELEVATIONS SHOWN ARE BASED ON THE U.S.C. AND G.S. MEAN SEA LEVEL DATUM, 1929.
17. SEE DEPARTMENT OF PLANNING AND ZONING FILE NOs WP-00-33, WP-01-115, F-01-74, WP-06-17
18. THE CONTRACTOR SHALL TEST PIT EXISTING UTILITIES AT LEAST (5) DAYS BEFORE STARTING WORK SHOWN ON THESE DRAWINGS.
19. CONTRACTOR IS SOLELY RESPONSIBLE FOR CONSTRUCTION MEANS, METHODS, TECHNIQUES, SEQUENCES, PROCEDURES, AND SAFETY PRECAUTIONS AND PROGRAMS.
20. PIPE SHALL NOT BE INSTALLED BY THE CONTRACTOR UNTIL THE LENGTH CALLED FOR AT EACH STATION HAS BEEN APPROVED BY THE ENGINEER IN THE FIELD.
21. NO PIPE SHALL BE LAID UNTIL LINES OF EXCAVATION HAVE BEEN BROUGHT WITHIN 6" OF FINISHED GRADE.
22. ALL STORM DRAIN PIPE BEDDING SHALL BE CLASS 'C' AS SHOWN IN FIG. 11.4, VOLUME 1 OF HOWARD COUNTY DESIGN MANUAL UNLESS OTHERWISE NOTED.
23. ALL INLETS SHALL BE CONSTRUCTED IN ACCORDANCE WITH HOWARD COUNTY STANDARDS.
24. ALL PIPE ELEVATIONS SHOWN ARE INVERT ELEVATIONS.
25. STORM DRAIN TRENCHES WITHIN ROAD RIGHT OF WAY SHALL BE BACKFILLED AND COMPACTED IN ACCORDANCE WITH THE HOWARD COUNTY DESIGN MANUAL, VOLUME IV, i.e., STANDARD SPECIFICATIONS AND DETAILS FOR CONSTRUCTION, LATEST AMENDMENTS.
26. PROFILES STATIONS SHALL BE ADJUSTED AS NECESSARY TO CONFORM TO PLAN DIMENSIONS.
27. ALL FILL AREAS WITHIN ROADWAY AND UNDER STRUCTURES TO BE COMPACTED TO A MINIMUM OF 95% COMPACTION OF AASHTO T180.
28. THE EXISTING TOPOGRAPHY IS TAKEN FROM FIELD RUN SURVEY WITH MAXIMUM TWO FOOT CONTOUR INTERVALS PREPARED BY RIEMER MUEGGE & ASSOCIATES, INC. DATED MARCH 2000.
29. A GEOTECHNICAL STUDY WAS PREPARED BY GTA, INC. DATED JAN. 1998.
30. STORMWATER QUALITY AND QUANTITY MANAGEMENT IS PROVIDED VIA A BAYSAVER AND A DETENTION POND.
31. WP-00-33 IS A WAIVER PETITION REQUESTING PERMISSION TO WAIVE SECTION 16.116(a)(1) AND TO PERMIT GRADING WITHIN WETLAND BUFFERS AND STREAM BUFFERS AND WAS APPROVED ON FEBRUARY 14, 2000.
32. ARMY COE/MDE PERMIT TO FILL WETLANDS EXPIRES SEPTEMBER 2, 2002. PERMIT NUMBER IS #CENAB-OP-RW 90-1204-4.
33. THIS PARCEL IS PART OF A PLANNED BUSINESS PARK GREATER THAN 75 ACRES THAT WAS RECORDED PRIOR TO DECEMBER 31, 1992 AND IS THEREFORE EXEMPT FROM THE FOREST CONSERVATION ORDINANCE.
34. THERE ARE NO CEMETARIES OR BURIAL GROUNDS ON THE SITE TO THE BEST OF OUR KNOWLEDGE.
35. WP-01-115 IS A WAIVER PETITION REQUESTING PERMISSION TO WAIVE SECTION 16.156(k) TO REACTIVATE A SITE DEVELOPMENT PLAN WHICH WAS DENIED FOR FAILURE TO SUBMIT ORIGINALS (BY 3-27-01) WITHIN 180 DAYS OF THE TECHNICALLY COMPLETE LETTER DATED SEPTEMBER 28, 2000. WAIVER WAS APPROVED MAY 10, 2001, SUBJECT TO THE FOLLOWING CONDITIONS:
    A. WITH REACTIVATION OF THIS SITE DEVELOPMENT PLAN, WP-00-33 IS ALSO REACTIVATED, SUBJECT TO THE THREE CONDITIONS STIPULATED IN THE APPROVAL LETTER DATED 2-14-00.
    B. UPDATE THE APFO STUDY STUDY AS REQUIRED BY THE ATTACHED COMMENTS FROM DEVELOPMENT ENGINEERING DIVISION (DED).
    C. SUBMIT A REVISED SDP WITHIN 45 DAYS OF THIS APPROVAL (BY JUNE 24, 2001) ADDRESSING ALL OUTSTANDING COMMENTS FROM DED. FOUR COMPLETE SETS OF THE SDP SHOULD BE SUBMITTED (2 FOR THE DIVISION OF LAND DEVELOPMENT, 2 FOR DED). TWO COMPLETE SETS OF ANY SUPPLEMENTAL INFORMATION REQUIRED BY DED SHOULD ALSO BE SUBMITTED IN THE PACKAGE FOR THAT DIVISION.
36. LANDSCAPE SURETY WILL BE POSTED WITH DEVELOPER'S AGREEMENT IN THE AMOUNT OF $21,600.00.

24"

BUILDING ELEVATION
SCALE: 1" = 30'

⚠ 37. WP-06-17 - A WAIVER OF SECTION 16.156 (m)(1)(i) WAS APPROVED BY THE DIRECTOR OF PLANNING AND ZONING ON SEPTEMBER 8, 2005. THE APPROVAL IS SUBJECT TO TWO CONDITIONS:
1) SDP-00-144 IS HEREBY REACTIVATED FOR A ONE YEAR PERIOD TO APPLY FOR BUILDING PERMITS TO INITIATE CONSTRUCTION OF THE APPROVED BUILDING(S) FOR THE SUBJECT PROPERTY. THE APPLICANT SHALL COMPLY WITH ALL BUILDING PERMIT APPLICATION REQUIREMENTS OF DILP.
2) COMPLIANCE WITH DEPT. OF ENVIRONMENTAL AND COMMUNITY PLANNING COMMENTS DATED AUGUST 17, 2005, TO ADD A SIDEWALK AND STREET TREES ALONG U.S. ROUTE 1.

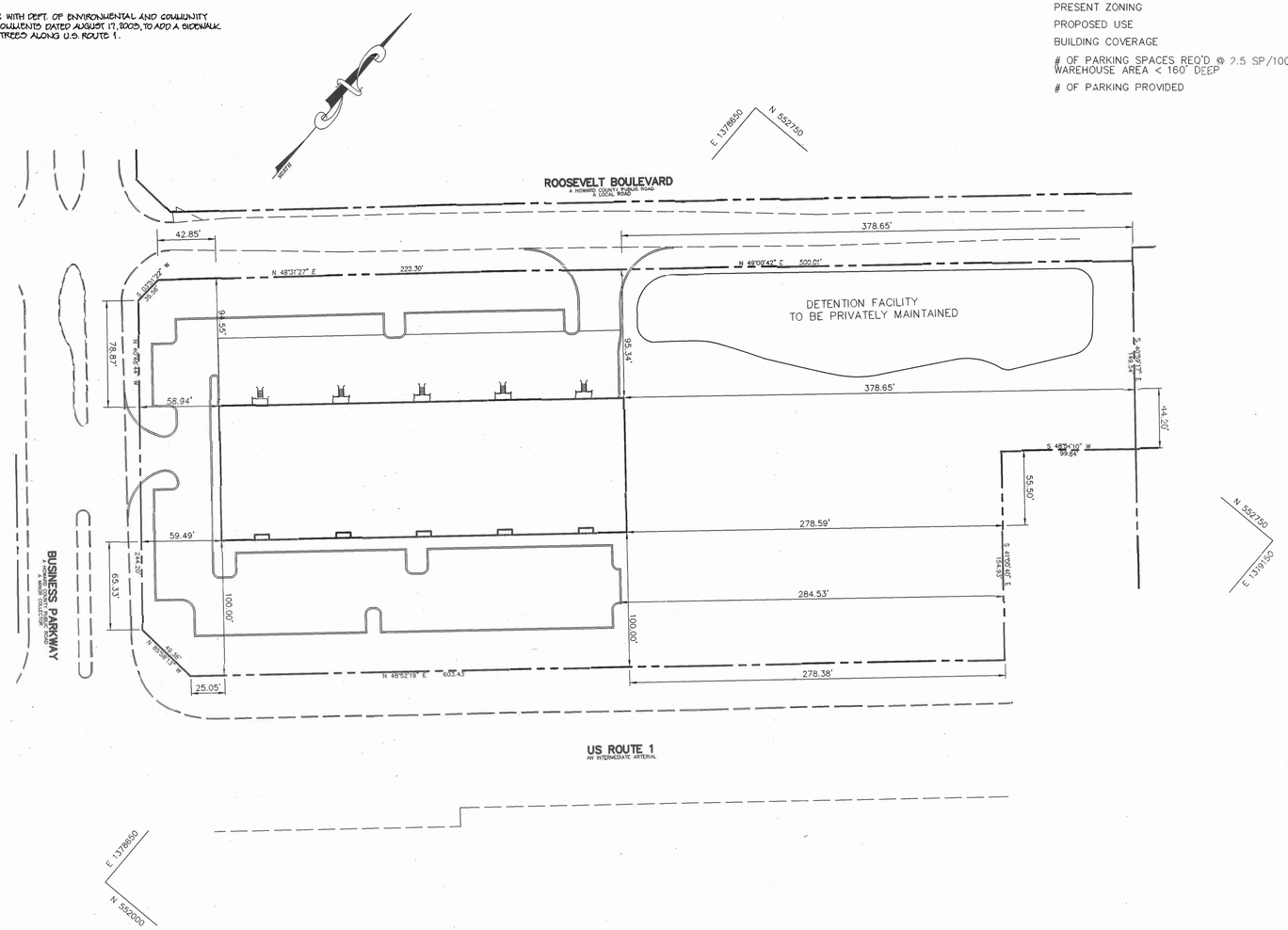

BENCHMARKS

HO. CO. SURVEY CONTROL STATION 43B6
N 550,601.59 E 1,376,866.05
ELEV. 210.61

HO. CO. SURVEY CONTROL STATION 43B2
N 551,655.01 E 1,378,176.94
ELEV. 209.67

SITE ANALYSIS

AREA OF PARCEL	4.62 ACRES 201,444 SF
DISTURBED AREA	3.59 ACRES 156,164 SF
PRESENT ZONING	M-1
PROPOSED USE	1 OFFICE/WAREHOUSE FACILITY (ONE STORY)
BUILDING COVERAGE	30,000 SF (15% COVERAGE)
# OF PARKING SPACES REQ'D @ 2.5 SP/1000 SF WAREHOUSE AREA < 160' DEEP	75 SPACES
# OF PARKING PROVIDED	104 SPACES (INCLUDING 5 HC)

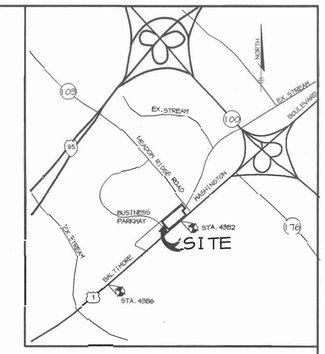

VICINITY MAP
SCALE: 1" = 2000'

ADDRESS CHART

PARCEL	STREET ADDRESS
R-1	6785 BUSINESS PARKWAY

SUBDIVISION NAME -			SECT./AREA -	PARCEL -	
MEADOWRIDGE BUSINESS PARK			-	R-1	
PLAT # -	BLOCK # -	ZONING -	TAX MAP NO. -	ELECT. DIST. -	CENSUS TRACT -
14861	23 4 & 5	M-1	37 43	1st	6012
WATER CODE -	B01		SEWER CODE -	2153000	

APPROVED : HOWARD COUNTY DEPARTMENT OF PLANNING AND ZONING.

DIRECTOR — DATE 11/2/01

CHIEF, DEVELOPMENT ENGINEERING DIVISION — DATE 10/26/01

CHIEF, DIVISION OF LAND DEVELOPMENT — DATE 10/31/01

DATE	NO.	REVISION
1-15-06	⚠	ADDED WP-06-17 NOTE #37 WHICH STATED THAT SDP-00-144 HAS BEEN REACTIVATED AS OF 9-8-05.

OWNER/DEVELOPER
SDC, INC.
8480 BALTIMORE NATIONAL PIKE
ELLICOTT CITY, MARYLAND 21043
410-465-4244

PROJECT MEADOWRIDGE BUSINESS PARK
PARCEL R-1
A WAREHOUSE BUILDING

AREA ZONED M-1 PARCEL R-1
TAX MAP 37, BLOCK 23 & TAX MAP 43, BLOCK 4 & 5
1st ELECTION DISTRICT
HOWARD COUNTY, MARYLAND

TITLE
TITLE SHEET

RIEMER MUEGGE & ASSOCIATES INC
ENGINEERING • ENVIRONMENTAL SERVICES • PLANNING • SURVEYING
8818 Centre Park Drive, Columbia, MD 21045
tel 410.997.8900 fax 410.997.9282

10.9.01
DATE

STATE OF MARYLAND — CHRISTOPHER J. REID — NO. 19949 — REGISTERED PROFESSIONAL ENGINEER

CHRISTOPHER J. REID #19949

DESIGNED BY :	CJR
DRAWN BY:	K.E.V.
PROJECT NO :	00036/ SDP1.DWG
DATE :	SEPTEMBER 21, 2001
SCALE :	1"=50'
DRAWING NO.	1 OF 11

SDP-00-144

P:\project\00036\SDP1.DWG Wed Sep 19 13:12:35 2001 RIEMER MUEGGE A DIVISION OF PHR&A

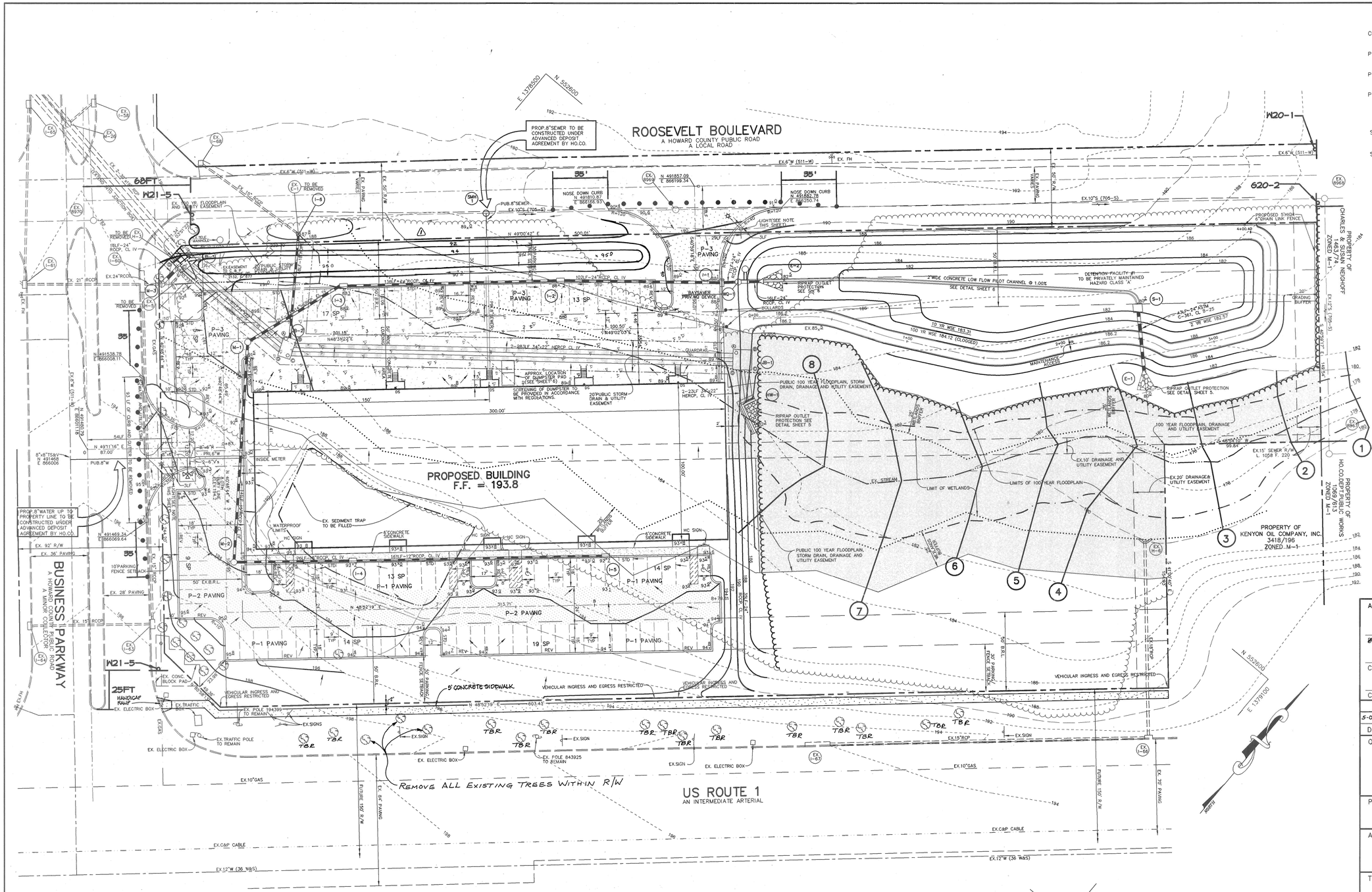

LEGEND

CONCRETE

P-1 PAVING

P-2 PAVING

P-3 PAVING

STD-REV — STANDARD CURB - REVERSE CURB

STREET LIGHT (SINGLE)-SEE NOTE 1

TRAFFIC CONTROL SIGNAGE LEGEND

SIGN

TEMPORARY BARRIER

SHOULDER WORK
W21-5
30"x 30"

ROAD WORK AHEAD
W20-1
30"x 30"

END ROAD WORK
G20-2
60"x 24"

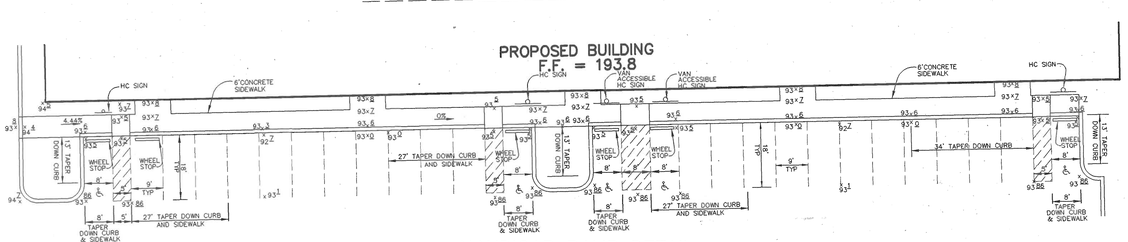

HANDICAP RAMP DETAIL
SCALE: 1" =20'

FLOODPLAIN CHART

X-SECT.	Q_{100} (CFS)	W.S.EL. (FT)
1	154.64	179.21
2	154.64	179.09
3	154.64	179.02
4	134.68	179.50
5	134.68	180.48
6	134.68	181.12
7	134.68	182.02
8	134.68	182.68

SWMF #1

SUMMARY CHART DA TO DESIGN POINT			
STORM	2 YR.	10 YR.	100 YR.
ALLOWABLE RELEASE RATE (CFS)	60.48	106.69	-
DISCHARGE (CFS)	54.17	105.21	-
ELEVATION (FEET)	182.57	183.31	184.12*
STORAGE (ACRE-FEET)	0.287	0.464	0.664

* CLOGGED CONDITIONS

NOTES:

1. STREET LIGHTS TO BE 250 WATT HPS VAPOR PENDANT FIXTURE (CUTOFF)MOUNTED AT 30' ON A BRONZE FIBERGLASS POLE USING 12' ARM, ARM RADIAL TO FILLET.
   STREET LIGHT ON ROOSEVELT BLVD. IS TO BE LOCATED AT STATION 0+27.89, 29LF TO THE LEFT.
   STREET LIGHT ON BUSINESS PARKWAY IS TO BE LOCATED AT STATION 0+53.75, 24LF TO THE RIGHT.
2. ALL EXTERIOR LIGHTING SHALL CONFORM TO ZONING REGULATIONS SECTION 134.
3. ALL CURB RADII ARE 5' UNLESS OTHERWISE LABELED.
4. ALL DIMENSIONS ARE TO FACE OF CURB OR BUILDING UNLESS OTHERWISE LABELED.
5. * LIMITS OF STD/REV CURB AND GUTTER.
6. FOR BUILDING LOCATION DIMENSIONS SEE SHEET 1.
7. NO TRUCK LOADING AREA MAY EXTEND INTO THE 50' STRUCTURE AND USE SETBACK
8. TBR - TO BE REMOVED

APPROVED : HOWARD COUNTY DEPARTMENT OF PLANNING AND ZONING.

DIRECTOR — DATE 11/2/01

CHIEF, DEVELOPMENT ENGINEERING DIVISION — DATE 10/26/01

CHIEF, DIVISION OF LAND DEVELOPMENT — DATE 10/31/01

DATE	NO.	REVISION	
5-03-04	1	ADDED SIDEWALK ON RTE 1, BERM GRADING	S.E.L.

OWNER/DEVELOPER

SDC, INC.
8480 BALTIMORE NATIONAL PIKE
ELLICOTT CITY, MARYLAND 21043
410-465-4244

PROJECT — MEADOWRIDGE BUSINESS PARK
PARCEL R-1
A WAREHOUSE BUILDING

AREA — ZONED M-1 PARCEL R-1
TAX MAP 37, BLOCK 23 & TAX MAP 43, BLOCK 4 & 5
1st ELECTION DISTRICT
HOWARD COUNTY, MARYLAND

TITLE — SITE DEVELOPMENT PLAN

RIEMER MUEGGE & ASSOCIATES INC
ENGINEERING • ENVIRONMENTAL SERVICES • PLANNING • SURVEYING
8818 Centre Park Drive, Columbia, MD 21045
tel 410.997.8900 fax 410.997.9282

10.9.01
DATE

STATE OF MARYLAND — CHRISTOPHER J. REID — NO. 19949 — REGISTERED PROFESSIONAL ENGINEER

CHRISTOPHER J. REID #19949

DESIGNED BY : CJR

DRAWN BY: DAM/K.E.V.

PROJECT NO : 00036/SDP2.DWG

DATE : SEPTEMBER 21, 2001

SCALE : 1" = 30'

DRAWING NO. 2 OF 11

SDP-00-144

P:\project\00036\SDP2.DWG Wed Sep 19 13:14:18 2001 RIEMER MUEGGE A DIVISION OF PHR&A

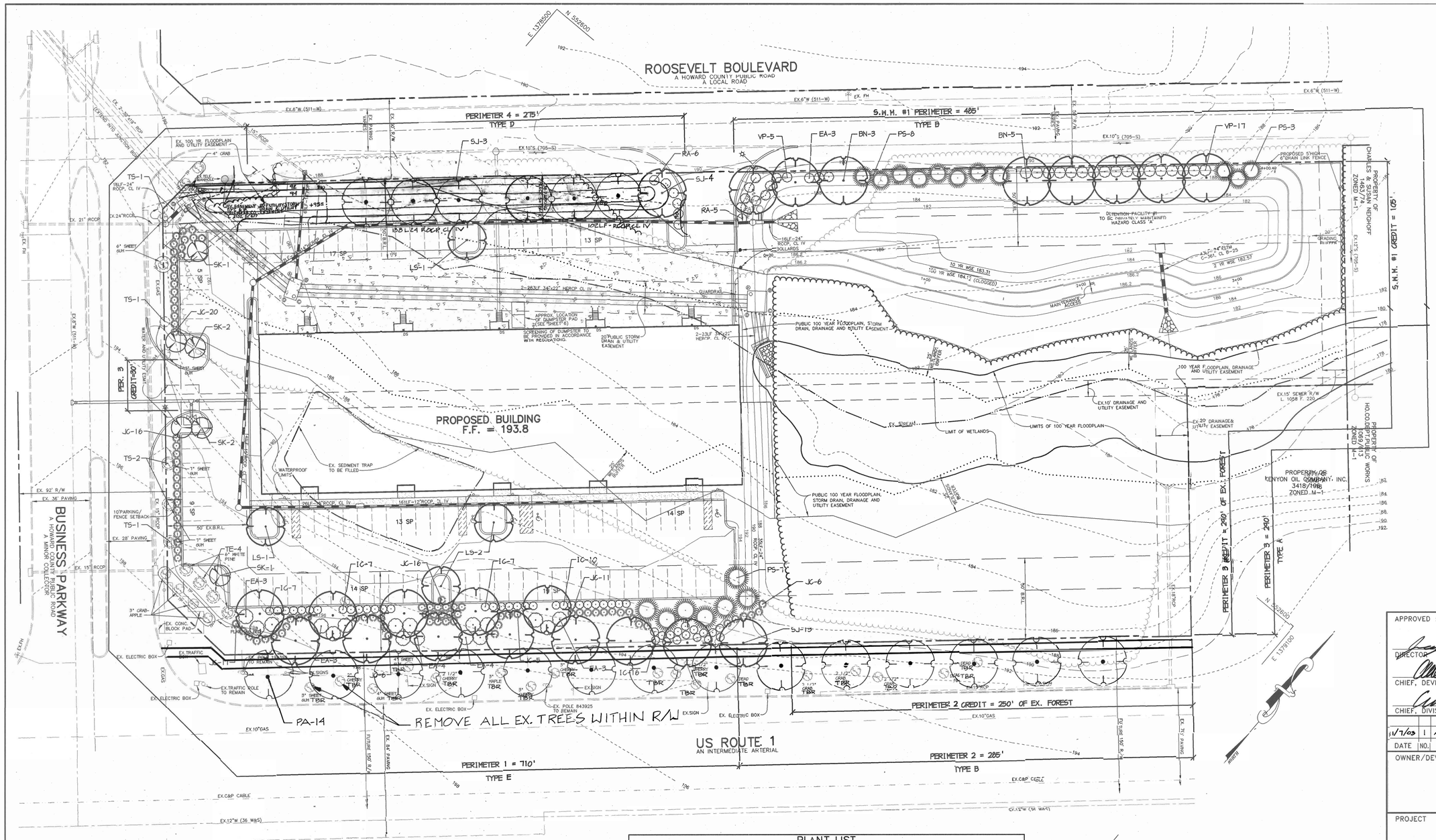

PLANTING LEGEND

- PROP. SHADE TREE
- PROP. ORNAMENTAL TREE
- PROP. EVERGREEN TREE
- PROP. CONIFEROUS SHRUB
- PROP. BROADLEAF SHRUB
- PROP. TREELINE
- EXISTING PLANTS
- EXISTING TREELINE
- TRANSPLANTED TREE
- TREE PROTECTION FENCE

PLANT LIST

SYMBOL	QTY.	SCIENTIFIC/ COMMON NAME	SIZE	ROOT	REMARKS
TS	5	TRANSPLANT SHADETREE	7" CAL.		
TE	4	TRANSPLANT EVERGREEN	6" CAL.		
BN	8	BETULA NIGRA / RIVER BIRCH	2.5" – 3" CAL.	B & B	
LS	4	LIQUIDAMBAR STYRACIFLUA / SWEET GUM	2.5" – 3" CAL.	B & B	
SJ	20	SOPHORA JAPONICA 'REGENT' / REGENT SCHOLAR TREE	2.5" – 3" CAL.	B & B	
PS	18	PINUS STROBUS / WHITE PINE	6 – 7'	B & B	
SK	6	STEWARTIA KOREANA / KOREAN STEWARTIA	5 – 6'	B & B	
EA	20	EUONYMUS ALATUS 'COMPACTUS' / COMPACT WINGED EUONYMUS	24" – 30" HT.	CONT.	
IC	37	ILEX CRENATA 'GREEN LUSTER' / GREEN LUSTER JAPANESE HOLLY	24" – 30" HT.	CONT.	
JC	91	JUNIPERUS CHINENSIS 'PFITZERIANA COMPACTA' / COMPACT PFITZER JUNIPER	24" – 30" HT.	CONT.	
RA	11	RHODODENDRON 'AGLO' / AGLO RHODODENDRON	24" – 30" HT.	CONT.	
VP	22	VIBURNUM PLICATUM TOMENTOSUM 'SHASTA' / SHASTA DOUBLEFILE VIBURNUM	24" – 30" HT.	B & B	

GENERAL NOTES:

1) "THIS PLAN HAS BEEN PREPARED IN ACCORDANCE WITH THE PROVISIONS OF SECTION 16.124 OF THE HOWARD COUNTY CODE.

2) FINANCIAL SURETY FOR THE REQUIRED LANDSCAPING MUST BE POSTED AS PART OF THE DEVELOPER'S AGREEMENT IN THE AMOUNT OF $23,120

3) THIS PLAN IS FOR LANDSCAPING PURPOSES ONLY.

4) CONTRACTOR IS SOLELY RESPONSIBLE FOR CONSTRUCTION MEANS, METHODS, TECHNIQUES, SEQUENCES, PROCEDURES, AND SAFETY PRECAUTIONS AND PROGRAMS.

5) ALL "TRANSPLANTED TREES" SHALL BE REMOVED, BALLED, & BURLAPPED, AND STORED AND REPLANTED AFTER SITE GRADING HAS BEEN COMPLETED AT THE PROPOSED PLANTING LOCATION. TAKE CARE TO MAINTAIN THE TRANSPLANTED TREES ROOTBALL IN A MOIST & COMPACT CONDITION UNTIL REPLANTING.

6) THE OWNER, TENANT, AND/OR THEIR AGENTS SHALL BE RESPONSIBLE FOR MAINTENANCE OF THE REQUIRED LANDSCAPING, INCLUDING BOTH PLANT MATERIALS AND BERMS, FENCES AND WALLS. ALL PLANT MATERIALS SHALL BE MAINTAINED IN GOOD GROWING CONDITION, AND WHEN NECESSARY, REPLACED WITH NEW MATERIALS TO ENSURE CONTINUED COMPLIANCE WITH APPLICABLE REGULATIONS. ALL OTHER REQUIRED LANDSCAPING SHALL BE PERMANENTLY MAINTAINED IN GOOD CONDITION, AND WHEN NECESSARY, REPAIRED OR REPLACED.

DEVELOPER'S/BUILDER'S CERTIFICATE:

I/WE CERTIFY THAT THIS PLAN HAS BEEN PREPARED IN ACCORDANCE WITH THE PROVISIONS OF SECTION 16.124 OF THE HOWARD COUNTY CODE AND THE HOWARD COUNTY LANDSCAPE MANUAL. I/WE FURTHER CERTIFY THAT UPON COMPLETION, A CERTIFICATION OF LANDSCAPE INSTALLATION, ACCOMPANIED BY AN EXECUTED ONE YEAR GUARANTEE OF PLANT MATERIALS, WILL BE SUBMITTED TO THE DEPARTMENT OF PLANNING AND ZONING.

NAME

10-17-01
DATE

APPROVED : HOWARD COUNTY DEPARTMENT OF PLANNING AND ZONING.

DIRECTOR	11/2/01 DATE
CHIEF, DEVELOPMENT ENGINEERING DIVISION	10/26/01 DATE
CHIEF, DIVISION OF LAND DEVELOPMENT	10/31/01 DATE

DATE	NO.	REVISION
11/7/03	1	ADDED BERM ALONG ROOSEVELT, ADDED RT 1 TREES

OWNER/DEVELOPER

SDC, INC.
8480 BALTIMORE NATIONAL PIKE
ELLICOTT CITY, MARYLAND 21043
410-465-4244

PROJECT MEADOWRIDGE BUSINESS PARK
PARCEL R-1
A WAREHOUSE BUILDING

AREA ZONED M-1 PARCEL R-1
TAX MAP 37, BLOCK 23 & TAX MAP 43, BLOCK 4 & 5
1st ELECTION DISTRICT
HOWARD COUNTY, MARYLAND

TITLE
LANDSCAPE PLAN

RIEMER MUEGGE & ASSOCIATES INC
ENGINEERING • ENVIRONMENTAL SERVICES • PLANNING • SURVEYING
8818 Centre Park Drive, Columbia, MD 21045
tel 410.997.8900 fax 410.997.9282

9.19.01

DAVID T. DOWS #830

DESIGNED BY :	RAF
DRAWN BY:	GTH
PROJECT NO :	90036/ LSCP1.DWG
DATE :	SEPTEMBER 21, 2001
SCALE :	1" = 30'
DRAWING NO.	9 OF 11

SDP-00-144

P:\project\00036\LSCP1.DWG Wed Sep 19 12:00:30 2001 RIEMER MUEGGE A DIVISION OF PHRGA

PLANTING SPECIFICATIONS

1. Plants, related material, and operations shall meet the detailed description as given on the plans and as described herein.
2. All plant material, unless otherwise specified, shall be nursery grown, uniformly branched, have a vigorous root system, and shall conform to American Association of Nurserymen (AAN) Standards. Plant material shall be healthy, vigorous, free from defects, decay, disfiguring roots, sunscald injuries, abrasions of the bark, plant disease, insect pest eggs, borers and all forms of insect infestations or objectionable disfigurements. Plant material that is weak or which has been cut back from larger grades to meet specified requirements will be rejected. Trees with forked leaders will not be accepted. All plants shall be freshly dug; no healed-in plants or plants from cold storage will be accepted.
3. Unless otherwise specified, all general conditions, planting operations, details and planting specification shall conform to "Landscape Specification Guidelines for Baltimore-Washington Metropolitan Areas", (hereinafter "Landscape Guidelines") approved by the Landscape Contractors Association of Metropolitan Washington and the Potomac Chapter of the American Society of Landscape Architect, latest edition, including all agenda.
4. Contractor shall be required to guarantee all plant material for a period of one year after date of acceptance in accordance with the appropriate section of the Landscape Guidelines. Contractor's attention is directed to the maintenance requirements found within the one year specifications including watering and replacement of specified plant material.
5. Contractor shall be responsible for notifying utility companies, utility contractors and "Miss Utility" a minimum of 48 hours prior to beginning any work. Contractor may make minor adjustments in spacing and location of plant material to avoid conflicts with utilities. Damage to existing structure and utilities shall be repaired at the expense of the Contractor.
6. Protection of existing vegetation to remain shall be accomplished by the temporary installation of 4 foot high snow fence at the drip line.
7. Contractor is responsible for installing all material in the proper planting season for each plant type. All planting is to be completed within growing season of completion of site construction.
8. Bid shall be based on actual site conditions. No extra payment shall be made for work arising from site conditions differing from those indicated on drawings and specifications.
9. Plant quantities are provided for the convenience of the contractor only. If discrepancies exist between quantities shown on plan and those shown on the plant list, the quantities on the plan take precedence.
10. All shrubs and groundcover areas shall be planted in continuous prepared planting beds mulched with composted hardwood mulch as detailed and specified except where noted on plans.
11. Positive drainage shall be maintained in planting beds (minimum 2 percent slope).
12. Planting mix shall be as follows: Deciduous Plants – Two parts topsoil, one part well-rotted cow or horse manure. Add 3 lbs of standard fertilizer per cubic yard of planting mix. Evergreen Plants – two parts topsoil, one part humus or other approved organic material. Add 3 lbs. of evergreen (acidic) fertilizer per cubic yard of planting mix. Topsoil shall conform to the Landscape Guidelines.
13. Weed Control: Incorporate a pre-emergent herbicide into the planting bed following recommended rates on the label. Caution: Be sure to carefully check the chemical used to assure its adaptability to the specific groundcover to be treated.
14. Mulch: Groundcover beds should be mulched with minimum 2 inches of shredded composted hardwood, or as specified on the details, whichever is greater.
15. All areas within contract limits disturbed during or prior to construction not designated to receive plants and mulch shall be fine graded and seeded.
16. This plan is intended for landscape use only. See other plan sheets for more information on grading, sediment control, layout, etc.

SCHEDULE A – PERIMETER LANDSCAPE EDGE

	ADJACENT TO ROADWAYS					ADJACENT TO PERIM. PROPERTIES	
PERIMETER	1	2	4			3	
LANDSCAPE TYPE	E	B	D			A	
LINEAR FEET OF ROADWAY FRONTAGE/ PERIMETER	710'±	285'±	275'±			290'±	
CREDIT FOR EXISTING VEGETATION (YES, NO, LINEAR FEET) (DESCRIBE BELOW IF NEEDED)	NO	FOREST 250'	NO			FOREST 290'	
CREDIT FOR WALL, FENCE, BERM OR DRIVE AISLE (YES/NO/LINEAR FEET)	AISLE 30'	NO	BERM 275'±			NO	
LINEAR FEET REMAINING	680'±	35'±	0'±			290'±	
NUMBER OF PLANTS REQUIRED SHADE TREES EVERGREEN TREES SHRUBS	17 – 170	1 1 –	–			– – –	
NUMBER OF PLANTS PROVIDED SHADE TREES EVERGREEN TREES SMALL FLOWERING TREES SHRUBS	12 8+ 4** 160	1 1 – –	7 6			– – – –	

** (4) ORNAMENTAL TREES SUBSTITUTED FOR (2) SHADE TREES TO ACCENT THE PARKING LOT & TO AVOID OVERCROWDING OF SHADE TREES.

+ (2) EVERGREEN TREES SUBSTITUTED FOR (10) SHRUBS TO COMPLETE SCREEN PLANTING AT WEST PROPERTY CORNER.
(6) EVERGREEN TREES SUBSTITUTED FOR (3) SHADE TREES TO SCREEN CORNER OF PARKING LOT.

STREET TREE PLANT LIST

KEY	QTY.	SCIENTIFIC/ COMMON NAME	SIZE	ROOT	SPACING
PA	14	PLATANUS XACERIFOLIA LONDON PLANETREE	2.5"-3" CAL.	B&B	PLANT AS SHOWN

SCHEDULE B – PARKING LOT INTERNAL LANDSCAPING

PARKING LOT	1
NUMBER OF PARKING SPACES	104
NUMBER OF SHADE TREES / ISLANDS REQUIRED (1/20 SP.)	5
NUMBER OF TREES PROVIDED SHADE TREES OTHER TREES (2:1 SUBSTITUTION)	4 2*
NUMBER OF ISLANDS PROVIDED	4

* (2) ORNAMENTAL TREES SUBSTITUTED FOR (1) SHADE TREE BECAUSE (2) EXISTING SHADE TREES ARE CLOSE TO THE LANDSCAPE ISLANDS.

SCHEDULE D – STORMWATER MANAGEMENT AREA LANDSCAPING

S.W.M. POND PERIMETER	1
LANDSCAPE TYPE	B
LINEAR FEET OF TOTAL PERIMETER	485'
CREDIT FOR LINEAR FEET SHARED ALONG PERIMETER EDGE	105'*
LINEAR FEET OF REMAINING PERIMETER	380'
CREDIT FOR EX. VEGETATION (NO OR YES & %)	NO
CREDIT FOR OTHER LANDSCAPING (NO OR YES & %)	NO
NUMBER OF TREES REQUIRED: SHADE TREES EVERGREEN TREES	8 10
NUMBER OF PLANTS PROVIDED SHADE TREES EVERGREEN TREES (2:1 SUBSTITUTION, 50% MAX.) OTHER TREES (2:1 SUBSTITUTION, 50% MAX.) SHRUBS (10:1 SUBSTITUTION, 25% MAX.)	8 11** – 30**

* NO LANDSCAPE REQUIREMENT BETWEEN S.W.M. POND & ADJACENT NON-RESIDENTIAL PROPERTIES IN AN M-1 ZONE.

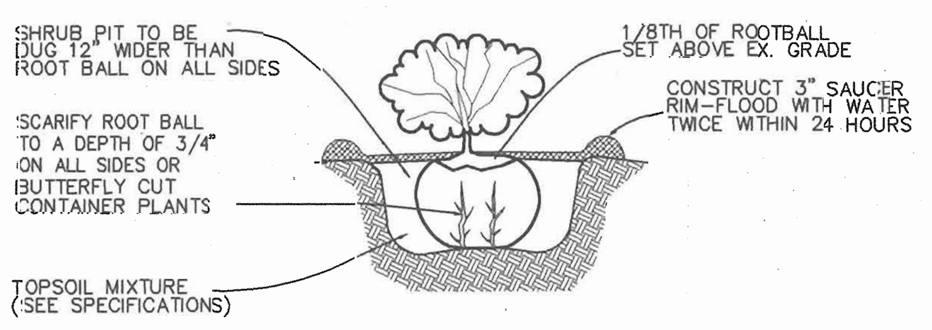

NOTE: ALL CONTAINERS OR BURLAP SHALL BE REMOVED BEFORE INSTALLATION.

SHRUB PLANTING DETAIL
NOT TO SCALE

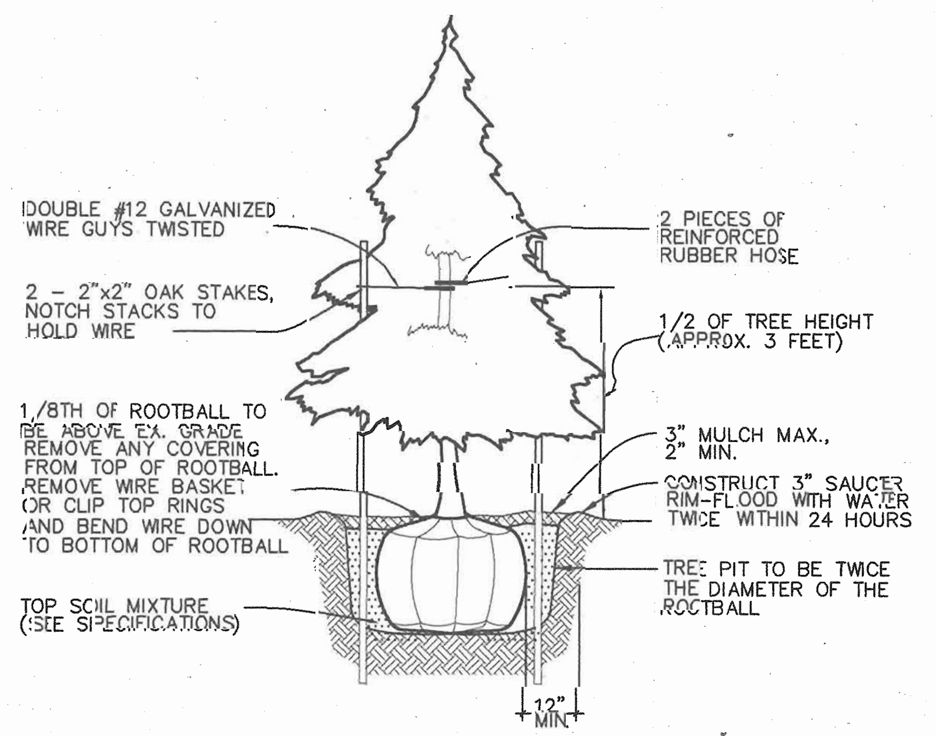

EVERGREEN PLANTING DETAIL
NOT TO SCALE

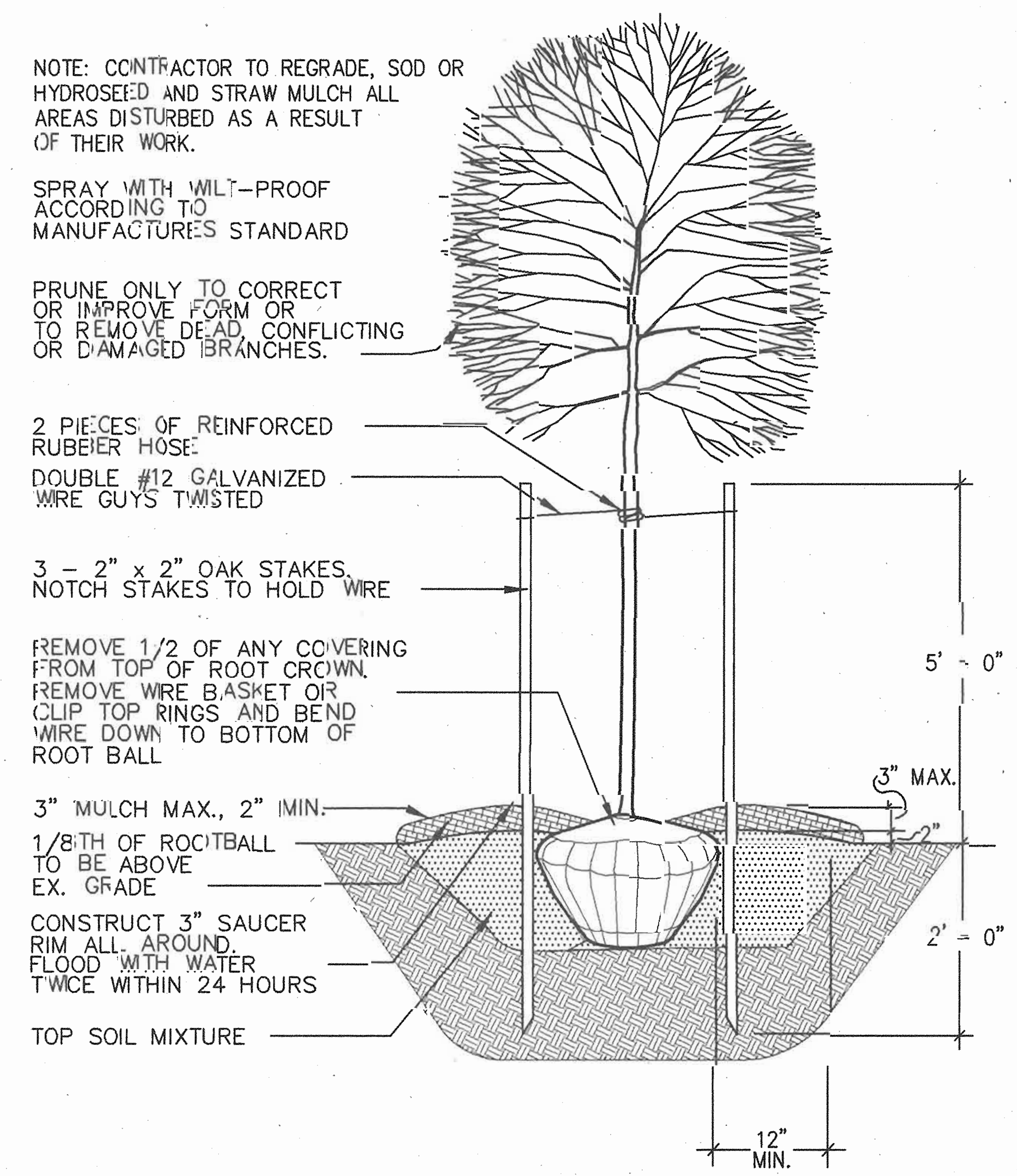

B&B TREE
TREE PLANTING DETAIL
NOT TO SCALE

APPROVED : HOWARD COUNTY DEPARTMENT OF PLANNING AND ZONING.

DIRECTOR — DATE 11/2/01

CHIEF, DEVELOPMENT ENGINEERING DIVISION — DATE 10/26/01

CHIEF, DIVISION OF LAND DEVELOPMENT JA — DATE 10/31/01

DATE	NO.	REVISION
11/7/03	1	MODIFIED SCHEDULES, ADDED STREET TREE LIST

OWNER/DEVELOPER

SDC, INC.
8450 BALTIMORE NATIONAL PIKE
ELLICOTT CITY, MARYLAND 21043
410-465-4244

PROJECT: MEADOWRIDGE BUSINESS PARK
PARCEL R-1
A WAREHOUSE BUILDING

AREA: ZONED M-1 PARCEL R-1
TAX MAP 37, BLOCK 23 & TAX MAP 43, BLOCK 4 & 5
1st ELECTION DISTRICT
HOWARD COUNTY, MARYLAND

TITLE: LANDSCAPE SCHEDULES & DETAILS

RIEMER MUEGGE & ASSOCIATES INC
ENGINEERING • ENVIRONMENTAL SERVICES • PLANNING • SURVEYING
8818 Centre Park Drive, Columbia, MD 21045
tel 410.997.8900 fax 410.997.9282

9.19.01

DAVID T. DOWS #830

DESIGNED BY : RAF
DRAWN BY: GTH
PROJECT NO : 00036/ LSCP2.DWG
DATE : SEPTEMBER 21, 2001
SCALE :
DRAWING NO. 10 OF 11

SDP-00-144

P:\project\00036\LSCP2.DWG Wed Sep 19 12:01:23 2001 RIEMER MUEGGE A DIVISION OF PHR&A

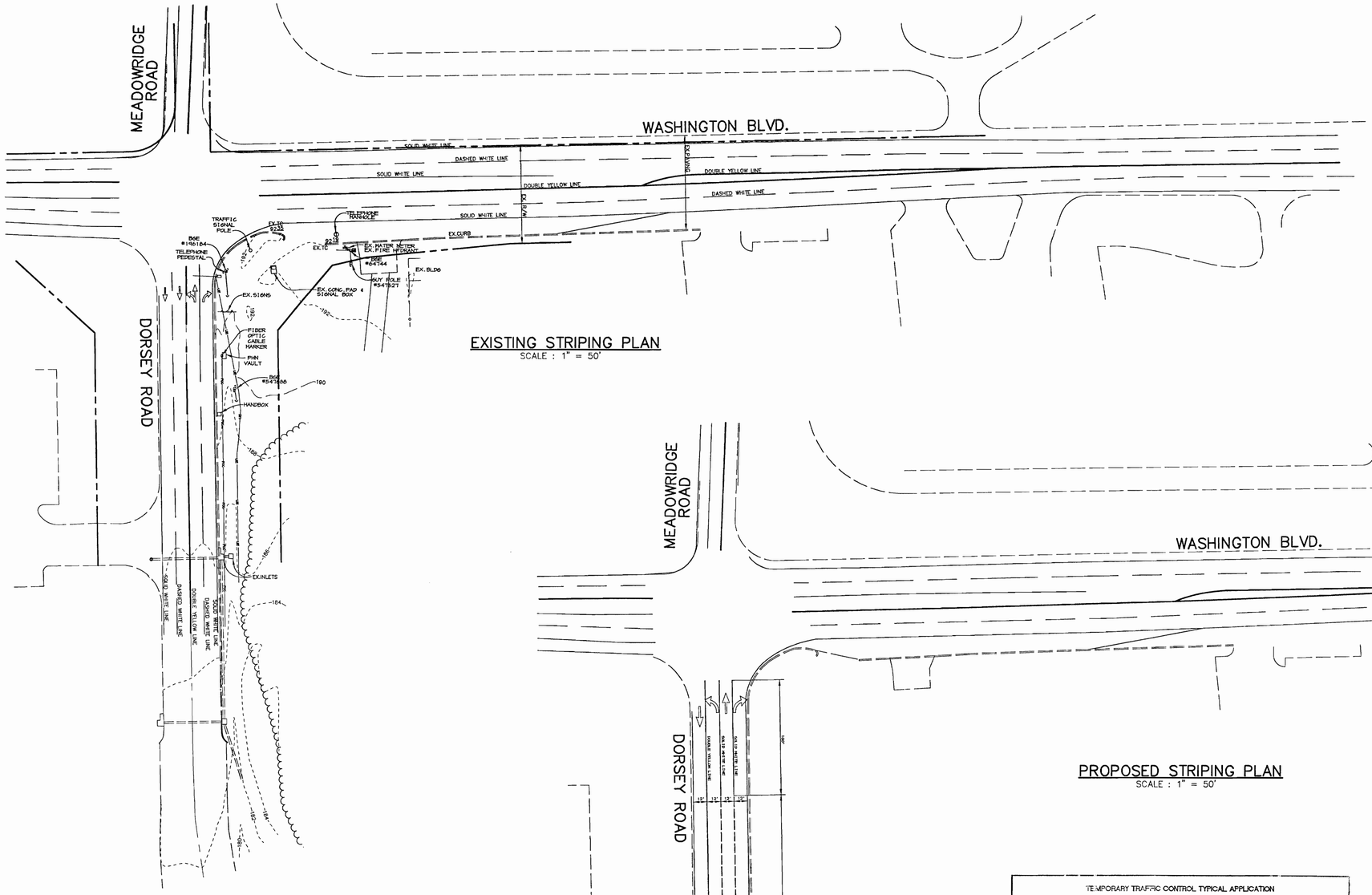

EXISTING STRIPING PLAN
SCALE : 1" = 50'

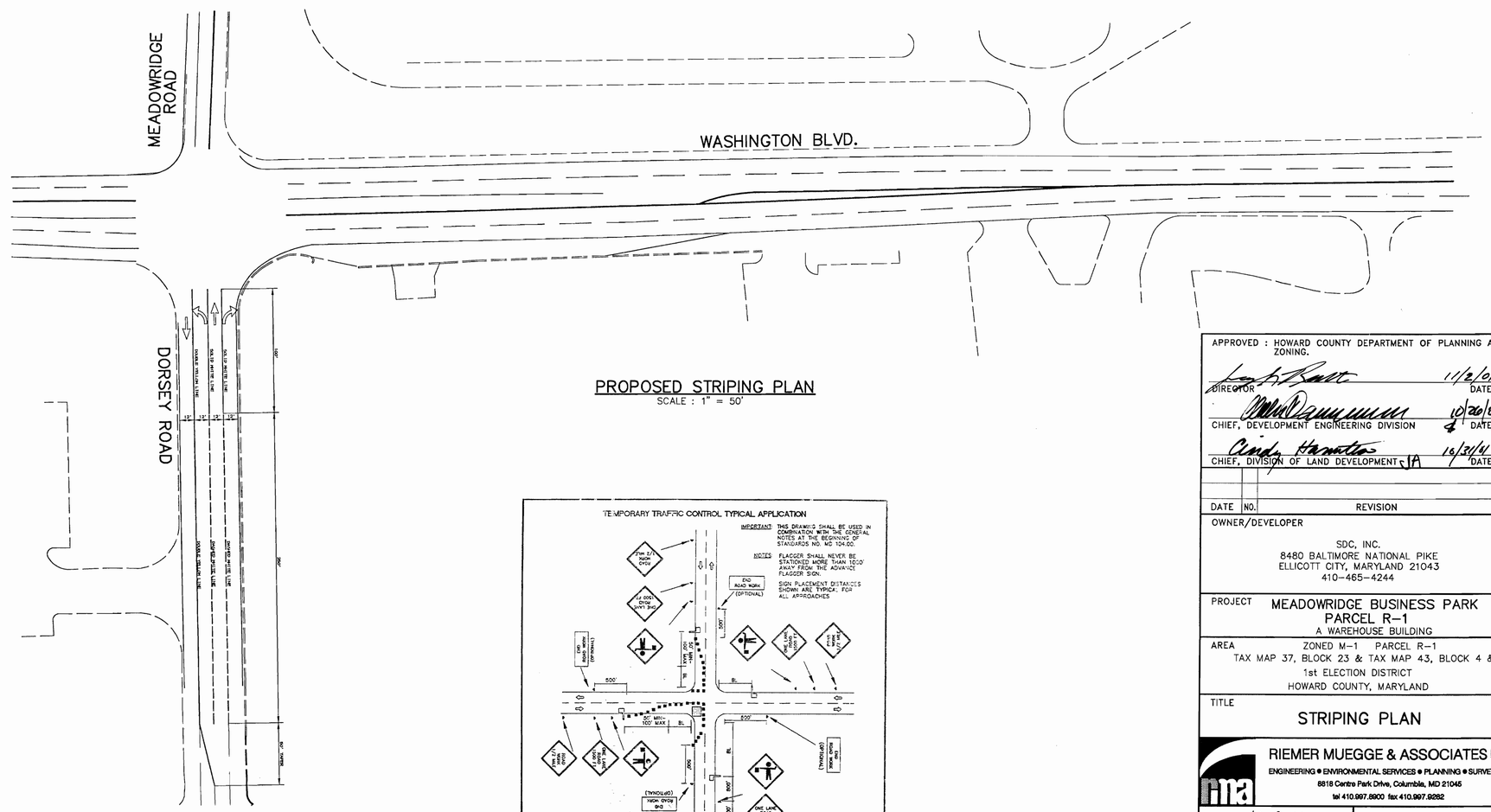

PROPOSED STRIPING PLAN
SCALE : 1" = 50'

TRAFFIC CONTROL SIGNAGE LEGEND

- SIGN
- TEMPORARY BARRIER

SHOULDER WORK
W21-5
30"x 30"

ROAD WORK AHEAD
W20-1
30"x 30"

END ROAD WORK
G20-2
60"x 24"

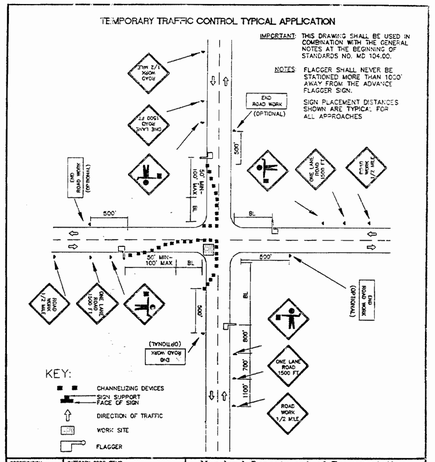

SPECIFICATION 104	CATEGORY CODE ITEMS SECTION 100
APPROVED: DIRECTOR, OFFICE OF TRAFFIC AND SAFETY	
APPROVAL FOR SHA ROADWAYS: APPROVAL 8-13-96	APPROVAL FOR FEDERAL ROADWAYS: APPROVAL 8-27-96
NOTED:	NOTED:
NOTED:	NOTED:

Maryland Department of Transportation
STATE HIGHWAY ADMINISTRATION
STANDARDS FOR HIGHWAYS AND INCIDENTAL STRUCTURES
INTERSECTION FLAGGING OPERATION/2-LANE, 2-WAY GREATER THAN 40 MPH/15 MIN-12 HRS. OR DAYTIME ONLY
STANDARD NO. MD 104.02-01

APPROVED : HOWARD COUNTY DEPARTMENT OF PLANNING AND ZONING.

DIRECTOR — DATE 11/2/01

CHIEF, DEVELOPMENT ENGINEERING DIVISION — DATE 10/26/01

CHIEF, DIVISION OF LAND DEVELOPMENT — DATE 10/31/01

DATE	NO.	REVISION

OWNER/DEVELOPER
SDC, INC.
8480 BALTIMORE NATIONAL PIKE
ELLICOTT CITY, MARYLAND 21043
410-465-4244

PROJECT MEADOWRIDGE BUSINESS PARK
PARCEL R-1
A WAREHOUSE BUILDING

AREA ZONED M-1 PARCEL R-1
TAX MAP 37, BLOCK 23 & TAX MAP 43, BLOCK 4 & 5
1st ELECTION DISTRICT
HOWARD COUNTY, MARYLAND

TITLE
STRIPING PLAN

RIEMER MUEGGE & ASSOCIATES INC
ENGINEERING • ENVIRONMENTAL SERVICES • PLANNING • SURVEYING
8818 Centre Park Drive, Columbia, MD 21045
tel 410.997.8900 fax 410.997.9282

AS-BUILT (SET IF CHANGED)
AIMEE C. REMINGTON #29923
10.12.05 DATE

10.9.01
DATE
CHRISTOPHER J. REID #19949

DESIGNED BY :	CJR
DRAWN BY:	DAM
PROJECT NO :	00036/ TRAFCONT.DWG
DATE :	SEPTEMBER 21, 2001
SCALE :	1" = 50'
DRAWING NO.	11 OF 11

AS-BUILT

SDP-00-144

P:\project\00036\TRAFCONT.DNG Wed Sep 19 13:30:54 2001 RIEMER MUEGGE A DIVISION OF PHRSA

PLANTING SPECIFICATIONS

1. Plants, related material, and operations shall meet the detailed description as given on the plans and as described herein.

2. All plant material, unless otherwise specified, shall be nursery grown, uniformly branched, have a vigorous root system, and shall conform to American Association of Nurserymen (AAN) Standards. Plant material shall be healthy, vigorous, free from defects, decay, disfiguring roots, sunscald injuries, abrasions of the bark, plant disease, insect pest eggs, borers and all forms of insect infestations or objectionable disfigurements. Plant material that is weak or which has been cut back from larger grades to meet specified requirements will be rejected. Trees with forked leaders will not be accepted. All plants shall be freshly dug; no healed-in plants or plants from cold storage will be accepted.

3. Unless otherwise specified, all general conditions, planting operations, details and planting specification shall conform to "Landscape Specification Guidelines for Baltimore-Washington Metropolitan Areas", (hereinafter "Landscape Guidelines") approved by the Landscape Contractors Association of Metropolitan Washington and the Potomac Chapter of the American Society of Landscape Architect, latest edition, including all agenda.

4. Contractor shall be required to guarantee all plant material for a period of one year after date of acceptance in accordance with the appropriate section of the Landscape Guidelines. Contractor's attention is directed to the maintenance requirements found within the one year specifications including watering and replacement of specified plant material.

5. Contractor shall be responsible for notifying utility companies, utility contractors and "Miss Utility" a minimum of 48 hours prior to beginning any work. Contractor may make minor adjustments in spacing and location of plant material to avoid conflicts with utilities. Damage to existing structure and utilities shall be repaired at the expense of the Contractor.

6. Protection of existing vegetation to remain shall be accomplished by the temporary installation of 4 foot high snow fence at the drip line.

7. Contractor is responsible for installing all material in the proper planting season for each plant type. All planting is to be completed within growing season of completion of site construction.

8. Bid shall be based on actual site conditions. No extra payment shall be made for work arising from site conditions differing from those indicated on drawings and specifications.

9. Plant quantities are provided for the convenience of the contractor only. If discrepancies exist between quantities shown on plan and those shown on the plant list, the quantities on the plan take precedence.

10. All shrubs and groundcover areas shall be planted in continuous prepared planting beds mulched with composted hardwood mulch as detailed and specified except where noted on plans.

11. Positive drainage shall be maintained in planting beds (minimum 2 percent slope).

12. Planting mix shall be as follows: Deciduous Plants - Two parts topsoil, one part well-rotted cow or horse manure. Add 3 lbs of standard fertilizer per cubic yard of planting mix. Evergreen Plants - two parts topsoil, one part humus or other approved organic material. Add 3 lbs. of evergreen (acidic) fertilizer per cubic yard of planting mix. Topsoil shall conform to the Landscape Guidelines.

13. Weed Control: Incorporate a pre-emergent herbicide into the planting bed following recommended rates on the label. Caution: Be sure to carefully check the chemical used to assure its adaptability to the specific groundcover to be treated.

14. Mulch: Groundcover beds should be mulched with minimum 2 inches of shredded composted hardwood, or as specified on the details, whichever is greater.

15. All areas within contract limits disturbed during or prior to construction not designated to receive plants and mulch shall be fine graded and seeded.

16. This plan is intended for landscape use only. See other plan sheets for more information on grading, sediment control, layout, etc.

SCHEDULE A - PERIMETER LANDSCAPE EDGE

	ADJACENT TO ROADWAYS					ADJACENT TO PERIM. PROPERTIES	
PERIMETER	1	2	4			3	
LANDSCAPE TYPE	E	B	D			A	
LINEAR FEET OF ROADWAY FRONTAGE/ PERIMETER	710'±	285'±	275'±			290'±	
CREDIT FOR EXISTING VEGETATION (YES, NO, LINEAR FEET) (DESCRIBE BELOW IF NEEDED)	NO	FOREST 250'	NO			FOREST 290'	
CREDIT FOR WALL, FENCE, BERM OR DRIVE AISLE (YES/NO/LINEAR FEET)	AISLE 30'	NO	BERM 275'±			NO	
LINEAR FEET REMAINING	680'±	35'±	0'±			290'±	
NUMBER OF PLANTS REQUIRED SHADE TREES EVERGREEN TREES SHRUBS	 17 - 170	 1 1 -	 - 			 - - -	
NUMBER OF PLANTS PROVIDED SHADE TREES EVERGREEN TREES SMALL FLOWERING TREES SHRUBS	 12 8+ 4** 160	 1 1 - -	 7 6			 - - - -	

** (4) ORNAMENTAL TREES SUBSTITUTED FOR (2) SHADE TREES TO ACCENT THE PARKING LOT & TO AVOID OVERCROWDING OF SHADE TREES.

+ (2) EVERGREEN TREES SUBSTITUTED FOR (10) SHRUBS TO COMPLETE SCREEN PLANTING AT WEST PROPERTY CORNER.
(6) EVERGREEN TREES SUBSTITUTED FOR (3) SHADE TREES TO SCREEN CORNER OF PARKING LOT.

STREET TREE PLANT LIST

KEY	QTY.	SCIENTIFIC/ COMMON NAME	SIZE	ROOT	SPACING
PA	14	PLATANUS XACERIFOLIA LONDON PLANETREE	2.5"-3" CAL.	B&B	PLANT AS SHOWN

SCHEDULE B - PARKING LOT INTERNAL LANDSCAPING

PARKING LOT	1
NUMBER OF PARKING SPACES	104
NUMBER OF SHADE TREES / ISLANDS REQUIRED (1/20 SP.)	5
NUMBER OF TREES PROVIDED SHADE TREES OTHER TREES (2:1 SUBSTITUTION)	 4 2*
NUMBER OF ISLANDS PROVIDED	4

* (2) ORNAMENTAL TREES SUBSTITUTED FOR (1) SHADE TREE BECAUSE (2) EXISTING SHADE TREES ARE CLOSE TO THE LANDSCAPE ISLANDS.

SCHEDULE D - STORMWATER MANAGEMENT AREA LANDSCAPING

S.W.M. POND PERIMETER	1
LANDSCAPE TYPE	B
LINEAR FEET OF TOTAL PERIMETER	485'
CREDIT FOR LINEAR FEET SHARED ALONG PERIMETER EDGE	105'*
LINEAR FEET OF REMAINING PERIMETER	380'
CREDIT FOR EX. VEGETATION (NO OR YES & %)	NO
CREDIT FOR OTHER LANDSCAPING (NO OR YES & %)	NO
NUMBER OF TREES REQUIRED. SHADE TREES EVERGREEN TREES	 8 10
NUMBER OF PLANTS PROVIDED SHADE TREES EVERGREEN TREES (2:1 SUBSTITUTION, 50% MAX.) OTHER TREES (2:1 SUBSTITUTION, 50% MAX.) SHRUBS (10:1 SUBSTITUTION, 25% MAX.)	 8 11** - 30**

* NO LANDSCAPE REQUIREMENT BETWEEN S.W.M. POND & ADJACENT NON-RESIDENTIAL PROPERTIES IN AN M-1 ZONE.

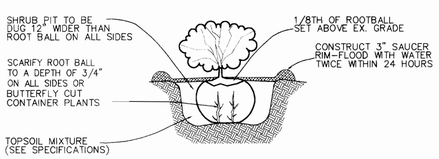

NOTE: ALL CONTAINERS OR BURLAP SHALL BE REMOVED BEFORE INSTALLATION.

SHRUB PLANTING DETAIL

NOT TO SCALE

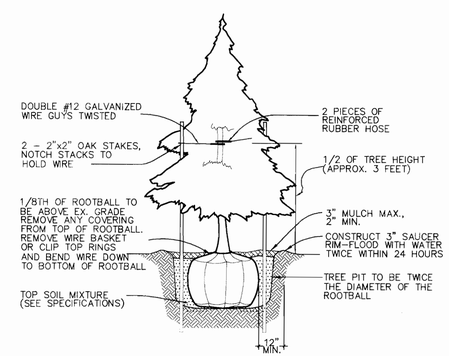

EVERGREEN PLANTING DETAIL

NOT TO SCALE

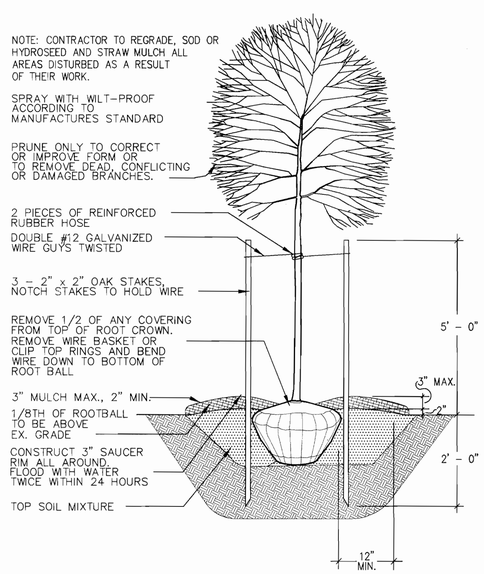

B&B TREE
TREE PLANTING DETAIL

NOT TO SCALE

AS-BUILT CERTIFICATION

AIMEE C. REMINGTON #29923 10-12-05 DATE

APPROVED : HOWARD COUNTY DEPARTMENT OF PLANNING AND ZONING.

DIRECTOR — DATE 11/2/01

CHIEF, DEVELOPMENT ENGINEERING DIVISION — DATE 10/26/01

CHIEF, DIVISION OF LAND DEVELOPMENT — DATE 10/31/01

DATE	NO.	REVISION
11/7/03	1	MODIFIED SCHEDULES, ADDED STREET TREE LIST

OWNER/DEVELOPER

SDC, INC.
8480 BALTIMORE NATIONAL PIKE
ELLICOTT CITY, MARYLAND 21043
410-465-4244

PROJECT MEADOWRIDGE BUSINESS PARK
PARCEL R-1
A WAREHOUSE BUILDING

AREA ZONED M-1 PARCEL R-1
TAX MAP 37, BLOCK 23 & TAX MAP 43, BLOCK 4 & 5
1st ELECTION DISTRICT
HOWARD COUNTY, MARYLAND

TITLE LANDSCAPE SCHEDULES & DETAILS

RIEMER MUEGGE & ASSOCIATES INC
ENGINEERING • ENVIRONMENTAL SERVICES • PLANNING • SURVEYING
8818 Centre Park Drive, Columbia, MD 21045
tel 410.997.8900 fax 410.997.9282

9.19.01

DAVID T. DOWS #830

DESIGNED BY : RAF
DRAWN BY: GTH
PROJECT NO : 00036/LSCP2.DWG
DATE : SEPTEMBER 21, 2001
SCALE :
DRAWING NO. 10 OF 11

AS-BUILT

SDP-00-144

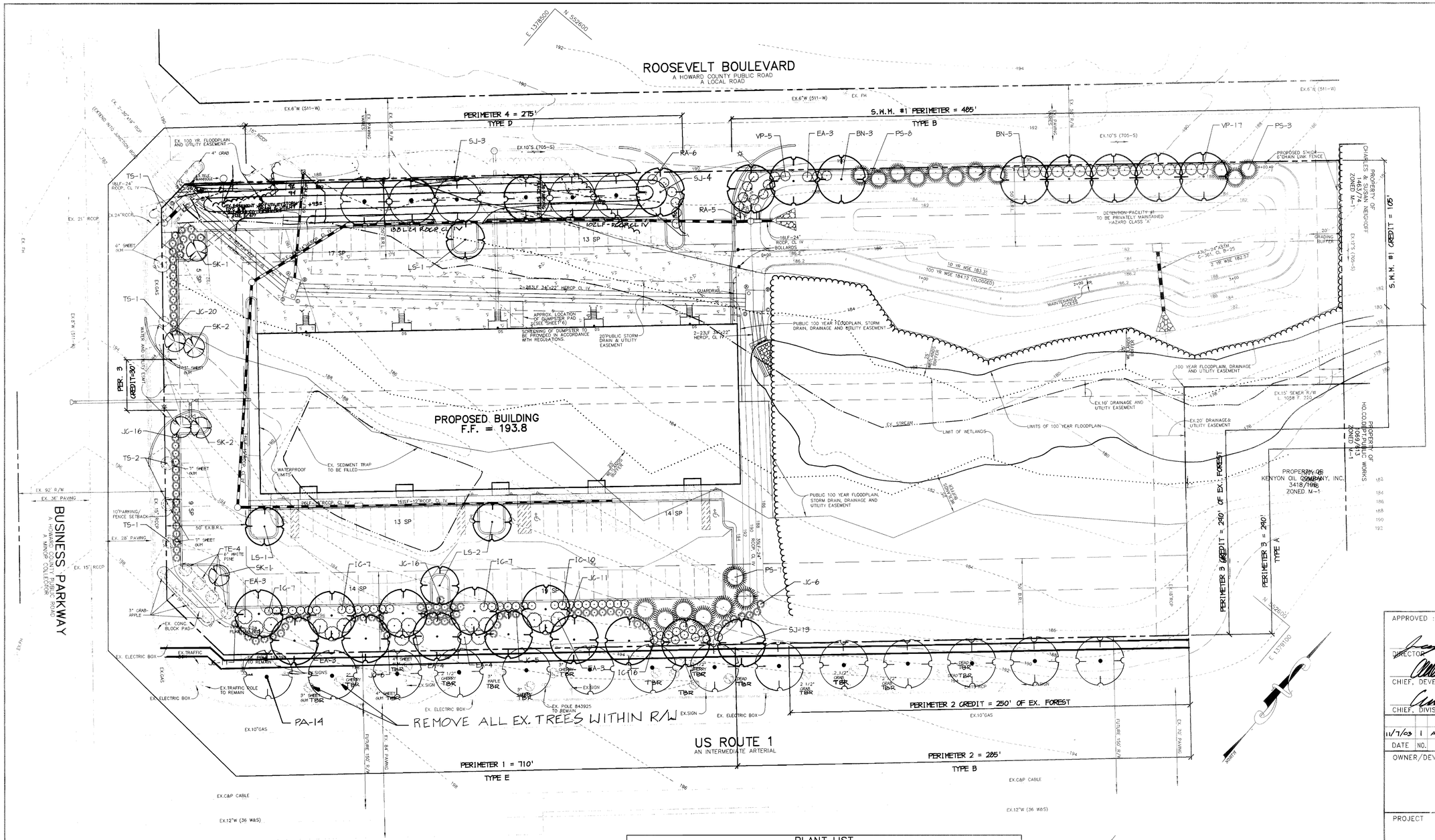

PLANTING LEGEND

- PROP. SHADE TREE
- PROP. ORNAMENTAL TREE
- PROP. EVERGREEN TREE
- PROP. CONIFEROUS SHRUB
- PROP. BROADLEAF SHRUB
- PROP. TREELINE
- EXISTING PLANTS
- EXISTING TREELINE
- TRANSPLANTED TREE
- TREE PROTECTION FENCE

PLANT LIST

SYMBOL	QTY.	SCIENTIFIC/ COMMON NAME	SIZE	ROOT	REMARKS
TS	5	TRANSPLANT SHADETREE	7" CAL.		
TE	4	TRANSPLANT EVERGREEN	6" CAL.		
BN	8	BETULA NIGRA / RIVER BIRCH	2.5" – 3" CAL.	B & B	
LS	4	LIQUIDAMBAR STYRACIFLUA / SWEET GUM	2.5" – 3" CAL.	B & B	
SJ	17 ~~20~~	SOPHORA JAPONICA 'REGENT' / REGENT SCHOLAR TREE	2.5" – 3" CAL.	B & B	
PS	18	PINUS STROBUS / WHITE PINE	6 – 7'	B & B	
SK	6	STEWARTIA KOREANA / KOREAN STEWARTIA	5 – 6'	B & B	
EA	20	EUONYMUS ALATUS 'COMPACTUS' / COMPACT WINGED EUONYMUS	24" – 30" HT.	CONT.	
IC	47	ILEX CRENATA 'GREEN LUSTER' / GREEN LUSTER JAPANESE HOLLY	24" – 30" HT.	CONT.	
JC	91	JUNIPERUS CHINENSIS 'PFITZERIANA COMPACTA' / COMPACT PFITZER JUNIPER	24" – 30" HT.	CONT.	
RA	11	RHODODENDRON 'AGLO' / AGLO RHODODENDRON	24" – 30" HT.	CONT.	
VP	22	VIBURNUM PLICATUM TOMENTOSUM 'SHASTA' / SHASTA DOUBLEFILE VIBURNUM	24" – 30" HT.	B & B	

GENERAL NOTES:

1) "THIS PLAN HAS BEEN PREPARED IN ACCORDANCE WITH THE PROVISIONS OF SECTION 16.124 OF THE HOWARD COUNTY CODE.

2) FINANCIAL SURETY FOR THE REQUIRED LANDSCAPING MUST BE POSTED AS PART OF THE DEVELOPER'S AGREEMENT IN THE AMOUNT OF $23,120

3) THIS PLAN IS FOR LANDSCAPING PURPOSES ONLY.

4) CONTRACTOR IS SOLELY RESPONSIBLE FOR CONSTRUCTION MEANS, METHODS, TECHNIQUES, SEQUENCES, PROCEDURES, AND SAFETY PREGAUTIONS AND PROGRAMS.

5) ALL "TRANSPLANTED TREES" SHALL BE REMOVED, BALLED, & BURLAPPED, AND STORED AND REPLANTED AFTER SITE GRADING HAS BEEN COMPLETED AT THE PROPOSED PLANTING LOCATION. TAKE CARE TO MAINTAIN THE TRANSPLANTED TREES ROOTBALL IN A MOIST & COMPACT CONDITION UNTIL REPLANTING.

6) THE OWNER, TENANT, AND/OR THEIR AGENTS SHALL BE RESPONSIBLE FOR MAINTENANCE OF THE REQUIRED LANDSCAPING, INCLUDING BOTH PLANT MATERIALS AND BERMS, FENCES AND WALLS. ALL PLANT MATERIALS SHALL BE MAINTAINED IN GOOD GROWING CONDITION, AND WHEN NECESSARY, REPLACED WITH NEW MATERIALS TO ENSURE CONTINUED COMPLIANCE WITH APPLICABLE REGULATIONS. ALL OTHER REQUIRED LANDSCAPING SHALL BE PERMANENTLY MAINTAINED IN GOOD CONDITION, AND WHEN NECESSARY, REPAIRED OR REPLACED.

AS-BUILT CERTIFICATION

STATE OF MARYLAND — AIMEE C. REMINGTON — No. 24923 — PROFESSIONAL ENGINEER

Aimee C. Remington 10.12.05

AIMEE C. REMINGTON #24923 DATE

DEVELOPER'S/BUILDER'S CERTIFICATE:

I/WE CERTIFY THAT THIS PLAN HAS BEEN PREPARED IN ACCORDANCE WITH THE PROVISIONS OF SECTION 16.124 OF THE HOWARD COUNTY CODE AND THE HOWARD COUNTY LANDSCAPE MANUAL. I/WE FURTHER CERTIFY THAT UPON COMPLETION, A CERTIFICATION OF LANDSCAPE INSTALLATION, ACCOMPANIED BY AN EXECUTED ONE YEAR GUARANTEE OF PLANT MATERIALS, WILL BE SUBMITTED TO THE DEPARTMENT OF PLANNING AND ZONING.

NAME 10-17-01 DATE

APPROVED : HOWARD COUNTY DEPARTMENT OF PLANNING AND ZONING.

DIRECTOR 11/2/01 DATE

CHIEF, DEVELOPMENT ENGINEERING DIVISION 10/26/01 DATE

CHIEF, DIVISION OF LAND DEVELOPMENT 10/31/01 DATE

DATE	NO.	REVISION
11/7/03	1	ADDED BERM ALONG ROOSEVELT, ADDED RT 1 TREES

OWNER/DEVELOPER

SDC, INC.
8480 BALTIMORE NATIONAL PIKE
ELLICOTT CITY, MARYLAND 21043
410-465-4244

PROJECT MEADOWRIDGE BUSINESS PARK
PARCEL R-1
A WAREHOUSE BUILDING

AREA ZONED M-1 PARCEL R-1
TAX MAP 37, BLOCK 23 & TAX MAP 43, BLOCK 4 & 5
1st ELECTION DISTRICT
HOWARD COUNTY, MARYLAND

TITLE LANDSCAPE PLAN

RIEMER MUEGGE & ASSOCIATES INC
ENGINEERING • ENVIRONMENTAL SERVICES • PLANNING • SURVEYING
8818 Centre Park Drive, Columbia, MD 21045
tel 410.997.8900 fax 410.997.9282

9.19.01

STATE OF MARYLAND — DAVID DOWS — 830

David T. Dows
DAVID T. DOWS #830

DESIGNED BY :	RAF
DRAWN BY:	GTH
PROJECT NO :	00036/ LSCP1.DWG
DATE :	SEPTEMBER 21, 2001
SCALE :	1" = 30'
DRAWING NO.	9 OF 11

AS-BUILT

SDP-00-144

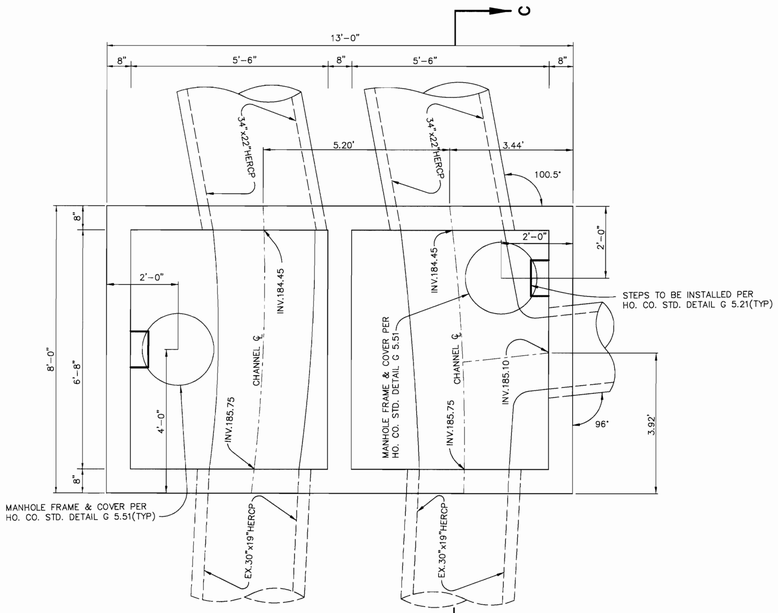

JUNCTION BOX – 3
SCALE : 1"=2'

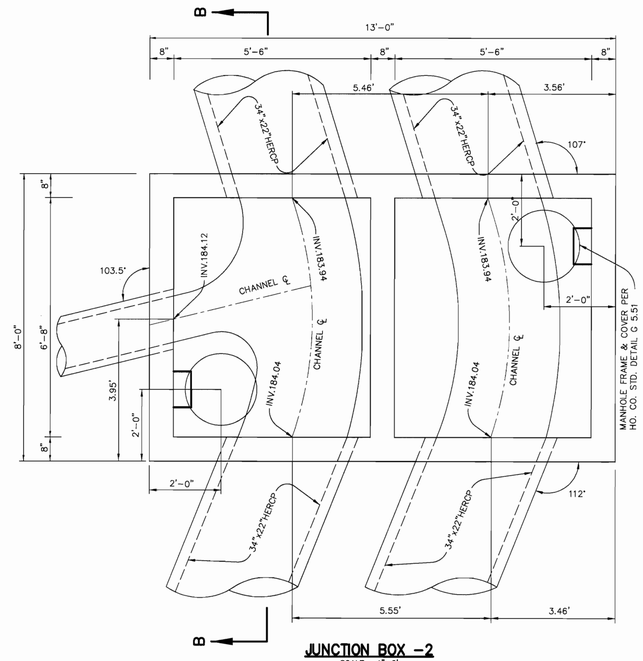

JUNCTION BOX – 2
SCALE : 1"=2'

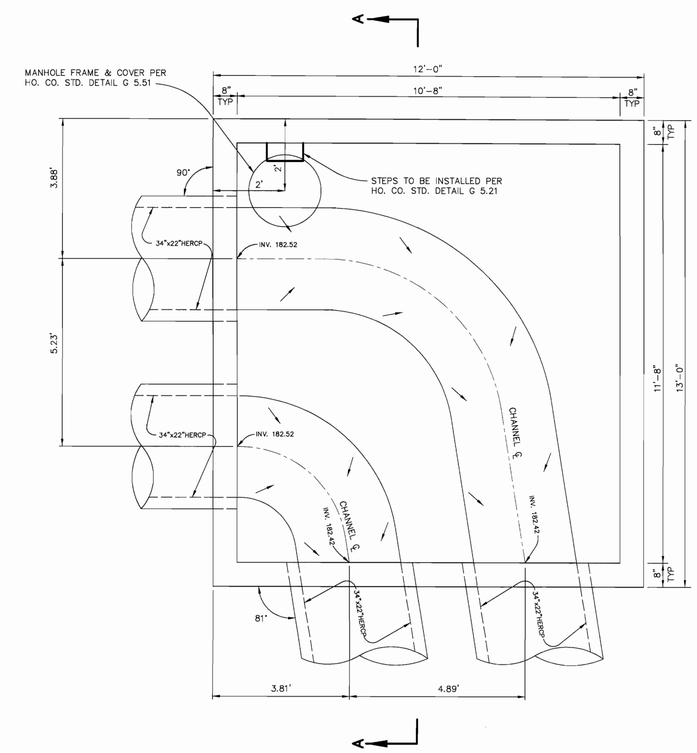

JUNCTION BOX – 1
SCALE : 1"=2'

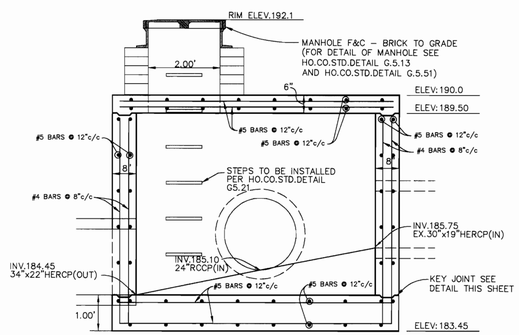

JUNCTION BOX – 3
CROSS SECTION C–C
SCALE : 1"=2'

NOTE: PIPES EXTENDING INTO BOX SHALL BE CUT BACK TO FACE OF STRUCTURE.

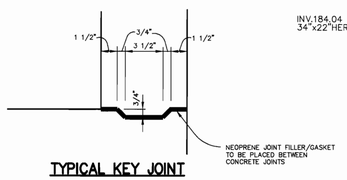

TYPICAL KEY JOINT
JUNCTION BOX – 2&3
NO SCALE

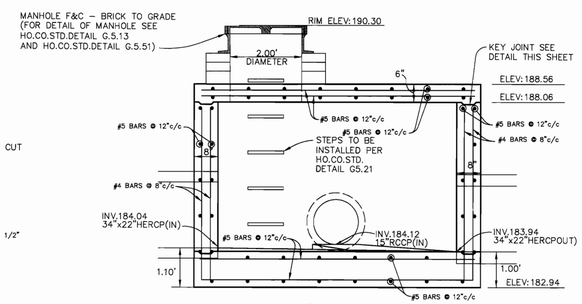

JUNCTION BOX – 2
CROSS SECTION B–B
SCALE : 1"=2'

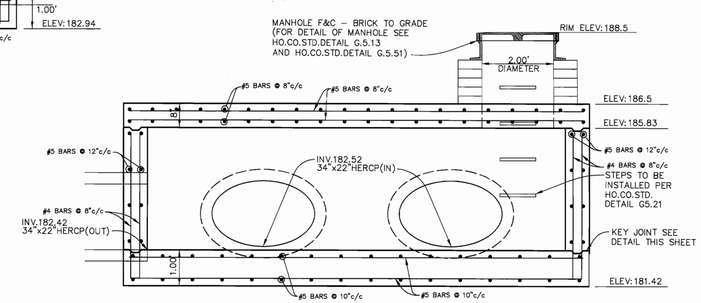

JUNCTION BOX – 1
CROSS SECTION A–A
SCALE : 1"=2'

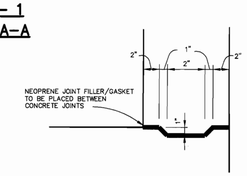

TYPICAL KEY JOINT
JUNCTION BOX – 1
NO SCALE

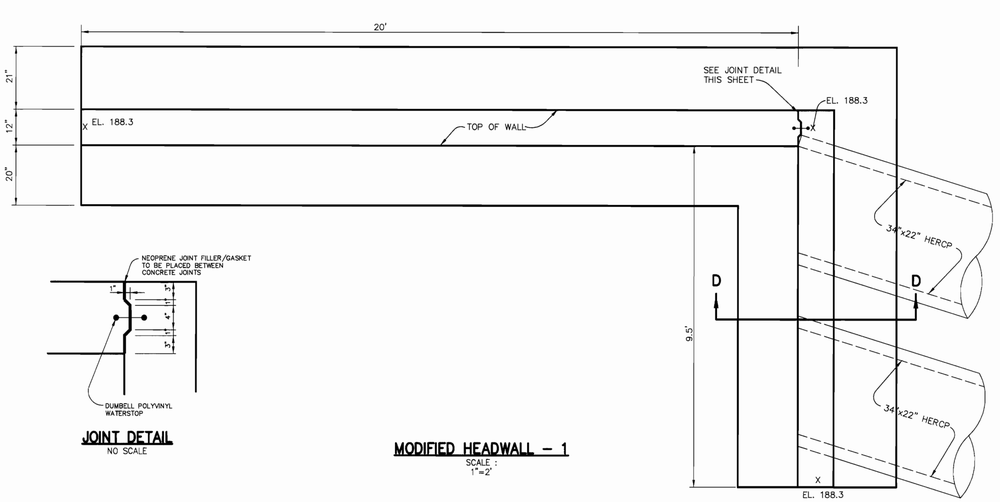

JOINT DETAIL
NO SCALE

MODIFIED HEADWALL – 1
SCALE : 1"=2'

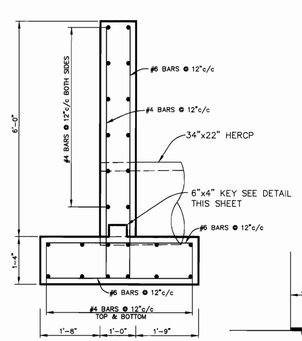

SECTION D–D
SCALE : 1"=2'

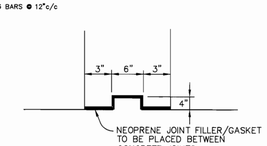

6"x4" KEY JOINT DETAIL
NO SCALE

AS-BUILT CERTIFICATION
STATE OF MARYLAND AIMEE C. REMINGTON 29923 PROFESSIONAL ENGINEER
10-12-05
AIMEE C. REMINGTON #29923 DATE

APPROVED : HOWARD COUNTY DEPARTMENT OF PLANNING AND ZONING.

DIRECTOR	11/2/01 DATE
CHIEF, DEVELOPMENT ENGINEERING DIVISION	10/26/01 DATE
CHIEF, DIVISION OF LAND DEVELOPMENT	10/31/01 DATE

DATE	NO.	REVISION

OWNER/DEVELOPER

SDC, INC.
8480 BALTIMORE NATIONAL PIKE
ELLICOTT CITY, MARYLAND 21043
410–465–4244

PROJECT MEADOWRIDGE BUSINESS PARK
PARCEL R–1
A WAREHOUSE BUILDING

AREA ZONED M–1 PARCEL R–1
TAX MAP 37, BLOCK 23 & TAX MAP 43, BLOCK 4 & 5
1st ELECTION DISTRICT
HOWARD COUNTY, MARYLAND

TITLE
DETAILS

RIEMER MUEGGE & ASSOCIATES INC
ENGINEERING • ENVIRONMENTAL SERVICES • PLANNING • SURVEYING
8818 Centre Park Drive, Columbia, MD 21045
tel 410.997.8900 fax 410.997.9282

10-9-01
DATE

CHRISTOPHER J. REID #19949

DESIGNED BY :	CJR
DRAWN BY:	DAM/K.E.V.
PROJECT NO :	00036/ SDP8.DWG
DATE :	SEPTEMBER 21, 2001
SCALE :	AS SHOWN
DRAWING NO.	8 OF 11

AS-BUILT

SDP–00–144

P:\project\00036\SDP8.DWG Wed Sep 19 13:29:29 2001 RIEMER MUEGGE A DIVISION OF PMG&A

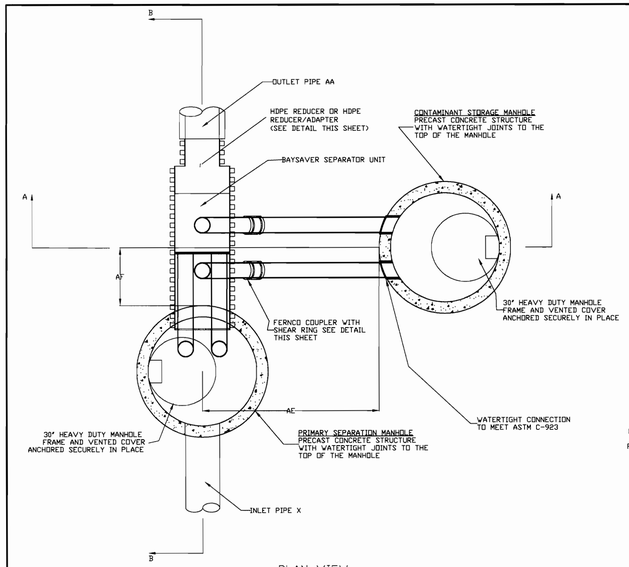

PLAN VIEW

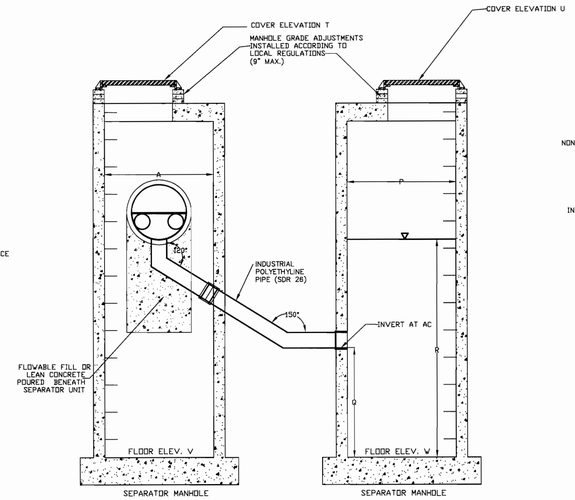

SECTION AA

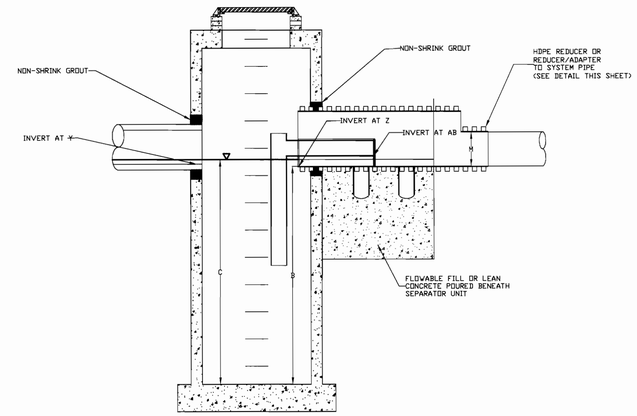

SECTION BB

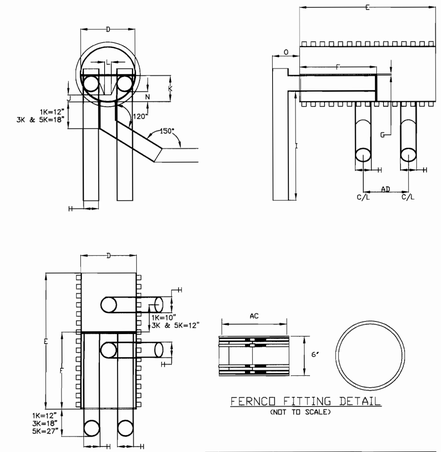

FERNCO FITTING DETAIL
(NOT TO SCALE)

	DISTANCE AC	FERNCO NO.	SHEAR RING
1K	7.10"	1055-66	SR-27
3K	10.60"	1056-1010	SR-39
5K	12.73"	1004-1010	SR-44

HDPE-HDPE REDUCER DETAIL

FOR USE WITH HDPE OUTLET PIPES
NOT TO SCALE

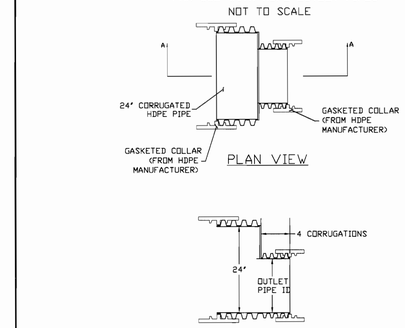

SECTION AA

REDUCER/ADAPTER DETAIL

FOR USE WITH OUTLET PIPES OTHER THAN HDPE
NOT TO SCALE

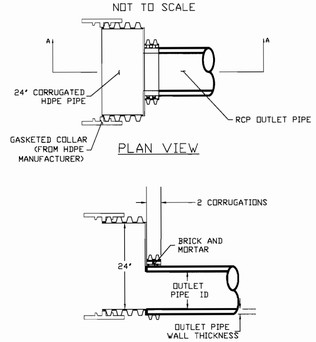

SECTION AA

SEQUENCE OF CONSTRUCTION AND INSPECTOR'S CHECK-OFF LIST FOR DUAL MANHOLE SEPARATORS

Stage (X = Approval Required)	Developer's/Engineer Approval		Inspector		Geotechnical Engineer	
	Initials	Date	Initials	Date	Initials	Date
1. Pre-Construction Meeting.	X		X		X	
2. Install Manholes and associated storm drainage: a. Obtain approval of subgrade from Geotechnical Engineer. (Subgrade to have a minimum of 95% compaction)					X	
b. Installation of precast base, lower tank and lower piping.	X		X			
c. Backfill and min. 95% compaction around lower tank and lower piping.					X	
d. Installation of precast middle section(s) with separator unit and remaining piping.	X		X			
e. Installation of precast top slab.	X		X			
f. Installation of adjustment rings and frame and cover.	X		X			
g. Installation of flowable fill or concrete backfill.					X	
3. Backfilling operation and compaction.					X	
4. Site is permanently stabilized. Sediment control measures removed and all sediment and debris removed from dual manhole separators.			X			
5. Final inspection.			X			

GENERAL CONSTRUCTION NOTES

1. ALL WORK MUST BE DONE WITH REGARD FOR THE SAFETY OF THE CONSTRUCTION CREW.

2. ALL WORK AND MATERIALS MUST COMPLY WITH APPLICABLE STATE AND LOCAL REGULATIONS.

3. KNOW THE LOCATION AND DEPTH OF ANY UNDERGROUND UTILITIES BEFORE EXCAVATION BEGINS.

NOTE:

BAYSAVERS ARE TO BE INSTALLED WITH THE STORM DRAIN SYSTEM AND WILL FUNCTION AS SECONDARY SEDIMENT CONTROL DEVICES.

UPON COMPLETION OF SITE STABILIZATION, EACH BAYSAVER SYSTEM SHALL BE FLUSHED CLEAN & THE MANHOLES CLEANED OUT AND REFILLED WITH CLEAN WATER.

NOTE: DIMENSIONAL SHOP DRAWINGS ARE TO BE APPROVED BY THE DESIGN ENGINEER

BAYSAVER MAINTENANCE

BAYSAVER SYSTEMS MUST BE INSPECTED AND MAINTAINED PERIODICALLY. INSPECTION IS MADE BY CHECKING THE DEPTH OF SEDIMENT IN EACH MANHOLE WITH A GRADE STICK OR SIMILAR DEVICE. MAINTENANCE IS REQUIRED WHEN THE SEDIMENT DEPTH IN EITHER MANHOLE EXCEEDS 2 FEET. MINIMUM INSPECTION IS REQUIRED TWICE A YEAR TO MAINTAIN OPERATION AND FUNCTION OF BAYSAVER.

MAINTENANCE CONSISTS OF THE FOLLOWING:

A. CONTAMINANT STORAGE MANHOLE

1. REMOVE THE ENTIRE VOLUME OF THE CONTAMINATED WATER BY VACUUM TRUCK.

2. CLEAN THE MANHOLE WALLS AND FLUSH OUT THE MANHOLE USING A HIGH PRESSURE HOSE AND REMOVE FLUSHING WATER BY VACUUM TRUCK. MAKE CERTAIN MANHOLE IS CLEAN.

B. PRIMARY SEPARATION MANHOLE

1. USING A SUBMERSIBLE PUMP, PUMP THE CLEAN WATER FROM THE CENTER OF THE MANHOLE DIRECTLY INTO THE EMPTY STORAGE MANHOLE UNTIL THE WATER LEVEL FALLS TO 1 FOOT ABOVE THE SEDIMENT LAYER.

2. REMOVE THE SETTLED SEDIMENT AND REMAINING WATER BY VACUUM TRUCK.

3. CLEAN THE MANHOLE WALLS AND FLUSH OUT THE MANHOLE USING A HIGH PRESSURE HOSE AND REMOVE FLUSHING WATER BY VACUUM TRUCK. MAKE CERTAIN MANHOLE IS CLEAN.

4. CONTAMINATED MATERIAL REMOVED FROM THE MANHOLES MUST BE DISPOSED OF RESPONSIBLY AND LEGALLY BY THE OPERATOR OF THE VACUUM TRUCK.

BAYSAVER INSTALLATION INSTRUCTIONS

1. EXCAVATION MUST PROVIDE ADEQUATE SPACE TO CONNECT INLET AND OUTLET PIPES TO SEPARATOR MANHOLE AND BAYSAVER UNIT. INSTALL PRECAST DROP STRUCTURES ON SOLID GROUND AS VERIFIED BY A GEOTECHNICAL ENGINEER.

2. VERIFY THE SUBGRADE ELEVATION AGAINST THE MANHOLE DIMENSIONS AND CONNECTING STORM DRAIN INVERTS.

3. MAKING SURE THE BASES ARE LEVEL AND THE STORAGE MANHOLE OPENINGS ARE ALIGNED WITH THE SEPARATOR UNIT, INSTALL PRIMARY AND STORAGE MANHOLES. INSTALL RUBBER GASKETS ON BASE UNITS AND COAT WITH LUBRICATING GREASE. INSTALL ADDITIONAL MANHOLE SECTIONS AS REQUIRED. SEAL LIFT HOLES WITH NON-SHRINK GROUT.

4. BACKFILL BASE SECTIONS OF MANHOLES TO INVERT OF STORAGE MANHOLE CONNECTING PIPES. USING APPROVED BACKFILL MATERIAL, BACKFILL AND COMPACT IN 8 INCH LIFTS. BACKFILL AND COMPACTION SHOULD BE MONITORED BY A GEOTECHNICAL ENGINEER.

5. INSTALL BAYSAVER SEPARATOR UNIT AND CONNECTING PIPES. SEAL ALL CONNECTING JOINTS AND INSTALL SEPARATOR UNIT/STORM DRAIN JOINT COLLAR. CUT EXCESS LENGTH OFF CONNECTING PIPES INSIDE STORAGE MANHOLE.

6. BACKFILL SEPARATOR UNIT AND MANHOLES. AREAS NOT ACCESSIBLE TO COMPACTION EQUIPMENT MUST BE BACKFILLED WITH LEAN CONCRETE OR FLOWABLE FILL.

7. INSTALL AND SET MANHOLE COVER GRADE ADJUSTMENT RINGS AS NECESSARY.

8. INSTALL AND SET MANHOLE FRAME AND COVER UNITS.

BAYSAVER SYSTEM DIMENSIONS

	DESCRIPTION	1K SYSTEM	3K SYSTEM	5K SYSTEM
	SEPARATOR MANHOLE DIMENSIONS			
A	PRIMARY MANHOLE DIAMETER	48"	60"	96"
B	MANHOLE DEPTH BELOW OUTLET	8' - 0"	8' - 0"	8' - 0"
C	MINIMUM FLUID DEPTH	8' - 3"	8' - 4 1/2"	8' - 6"
	STANDARD SEPARATOR UNIT DIMENSIONS			
D	SEPARATOR UNIT ID	24"	36"	48"
E	SEPARATOR UNIT LENGTH	60"	80.0"	78"
F	BYPASS PLATE LENGTH	34"	45"	45"
G	WEIR/BYPASS PLATE THICKNESS	3/4"	3/4"	3/4"
H	ELBOW AND CONNECTING PIPE OD	7.125"	10.75"	12.75"
I	ELBOW LENGTH	48"	48"	48"
J	WEIR HEIGHT ABOVE INVERT	3"	4"	6"
K	BYPASS PLATE HEIGHT ABOVE INVERT	12"	18"	24"
L	WIDTH OF WEIR AT BASE	3"	4 1/2"	6"
M	OUTLET PIPE DIAMETER	M	M	M
N	ELBOW INVERT HEIGHT ABOVE UNIT INVERT	4 1/2"	7 1/2"	11"
O	ELBOW PIPE OVERHANG	12"	18"	24"
	STORAGE MANHOLE DIMENSIONS			
P	STORAGE MANHOLE DIAMETER	48"	60"	96"
Q	MANHOLE DEPTH BELOW INLET/OUTLET	48"	48"	48"
R	FLUID DEPTH	8' - 0"	8' - 0"	8' - 0"
S	TOTAL STORAGE VOLUME	200 CF	300 CF	450 CF
	SYSTEM DIMENSIONS AND ELEVATIONS			
T	SEPARATOR MANHOLE COVER ELEVATION	T	T	T
U	STORAGE MANHOLE COVER ELEVATION	U	U	U
V	SEPARATOR MANHOLE FLOOR ELEVATION	V	V	V
W	STORAGE MANHOLE FLOOR ELEVATION	W	W	W
X	INLET PIPE ID AND MATERIAL	X1 X2	X1 X2	X1 X2
Y	INLET PIPE INVERT	Y1 Y2	Y1 Y2	Y1 Y2
Z	SEPARATOR UNIT INVERT	Z	Z	Z
AA	OUTLET PIPE ID AND MATERIAL	AA	AA	AA
AB	ELBOW INVERT ELEVATION	AB	AB	AB
AC	CONNECTING PIPE INVERT ELEVATION	AC	AC	AC
AD	CONNECTION PIPE SPACING	20"	24"	24"
AE	STORAGE MANHOLE SIDE OFFSET	72 ± 6"	72 ± 6"	72 ± 6"
AF	STORAGE MANHOLE DOWNSTREAM OFFSET	23"	31"	25"

Baysaver Separator Unit	Baysaver Manhole Sizes (prim. x stor.)	Maximum Treatment (cfs)*1	Maximum Treatment (gpm)*1	Impervious Area (acres)
1K Baysaver Separator	48x48	2.4	1076	1.2
	48x50	2.4	1076	1.4
	48x72	2.4	1076	1.6
	60x60	2.4	1076	1.5
3K Baysaver Separator	60x60	7.2	3231	3.6 WQ-1
	60x72	7.2	3231	4.1
	60x84	7.2	3231	4.6
	72x72	7.2	3231	4.4
5K Baysaver Separator	72x72	11.1	4981	5.5
	72x84	11.1	4981	6.5
	72x96	11.1	4981	7.5
	96x96	11.1	4981	8.0

Project: MEADOWRIDGE BUS. Designer: RIEMER MUEGGE
Address: 6785 BUSINESS PKWY Contact: CHRIS REID
ELKRIDGE, MD. Phone: 410-997-8900
21227 Fax: 410-997-9282
Delivery Date: _____

Owner: SDC, INC. Contractor: _____
Contact: STEVE BREEDEN Address: _____
Address: ELLICOTT CITY, MD _____
21043 Contact: _____
Phone: _____
Fax: _____

Separator Unit Model:
1K ☐
3K ■
5K ☐

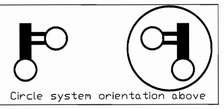

Circle system orientation above

Manhole Specifications:

Primary Manhole Diameter: 60 inches
Storage Manhole Diameter: 60 inches

Floor Elevations:
Primary Manhole 174.58
Storage Manhole 174.58

Primary Manhole Inverts:
Separator Unit 182.91
Inlet Pipe(s) 182.91 (IN)
182.58 (OUT)

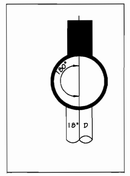

Please show orientation (including angle), size and material of inlet pipes above.

Cover Elevations:
Primary Manhole 187.0
Storage Manhole 187.0

WQ-1/WQ-1A

This order can be faxed to Bay Saver, Inc. at (301) 829-3747

OPERATION AND MAINTENANCE SCHEDULE
FOR BAYSAVER UNITS

1. Baysaver structures will require periodic inspection and cleaning to maintain operation and function. Owners will have the Baysaver unit inspected yearly or as required by Howard County, utilizing the Baysaver units Inspection/Monitoring Form. Inspections can be done by using a clear Plexiglas tube ("sludge judge") to extract a water column sample. When sediment depths exceed the specified level (Table 6 of Technical Manual) then cleaning of the unit is required.

2. Baysaver structures must be checked and cleaned immediately after petroleum spills. Contact appropriate regulatory agencies.

3. Maintenance of Baysaver units should be done by a vacuum truck which will remove the water, sediment, debris, floating hydrocarbons, and other materials in the unit. The proper cleaning and disposal of the removed materials and liquid must be followed.

4. Inlet and outlet pipes must be checked for any obstructions and if any obstructions are found they must be removed. Structural parts of the Baysaver will be repaired as needed.

5. Owner shall retain and make Baysaver units Inspection/Monitoring Forms available to Howard County officials upon their request.

AS-BUILT CERTIFICATION

STATE OF MARYLAND AIMEE C. REMINGTON No. 29923 PROFESSIONAL ENGINEER

AIMEE C. REMINGTON #29923 — 10.12.05 DATE

APPROVED : HOWARD COUNTY DEPARTMENT OF PLANNING AND ZONING.

DIRECTOR — DATE 11/2/01
CHIEF, DEVELOPMENT ENGINEERING DIVISION — DATE 10/26/01
CHIEF, DIVISION OF LAND DEVELOPMENT — DATE 10/31/01

DATE	NO.	REVISION

OWNER/DEVELOPER
SDC, INC.
8480 BALTIMORE NATIONAL PIKE
ELLICOTT CITY, MARYLAND 21043
410-465-4244

PROJECT MEADOWRIDGE BUSINESS PARK
PARCEL R-1
A WAREHOUSE BUILDING

AREA ZONED M-1 PARCEL R-1
TAX MAP 37, BLOCK 23 & TAX MAP 43, BLOCK 4 & 5
1st ELECTION DISTRICT
HOWARD COUNTY, MARYLAND

TITLE
WATER QUALITY NOTES AND DETAILS

RIEMER MUEGGE & ASSOCIATES INC
ENGINEERING • ENVIRONMENTAL SERVICES • PLANNING • SURVEYING
8818 Centre Park Drive, Columbia, MD 21045
tel 410.997.8900 fax 410.997.9282

10.9.01
DATE

STATE OF MARYLAND CHRISTOPHER J. REID No. 19949 PROFESSIONAL ENGINEER

CHRISTOPHER J. REID #19949

DESIGNED BY : CJR
DRAWN BY: BAYSAVER
PROJECT NO : 00036/SDP7.DWG
DATE : SEPTEMBER 21, 2001
SCALE : AS SHOWN
DRAWING NO. 7 OF 11

AS-BUILT

SDP-00-144

P:\proj\00036\SDP7.DWG Wed Sep 19 13:26:19 2001 RIEMER MUEGGE A DIVISION OF PHAGA

MD-378 STANDARDS AND SPECIFICATIONS

SPECIFICATIONS

These specifications are appropriate to all ponds within the scope of the Standard for practice MD-378. All references to ASTM and AASHTO specifications apply to the most recent version.

SITE PREPARATION

Areas designated for borrow areas, embankment, and structural works shall be cleared, grubbed and stripped of topsoil. All trees, vegetation, roots and other objectionable material shall be removed. Channel banks and sharp breaks shall be sloped to no steeper than 1:1. All trees shall be cleared and grubbed within 15 feet of the toe of the embankment.

Areas to be covered by the reservoir will be cleared of all trees, brush, logs, fences, rubbish and other objectionable material unless otherwise designated on the plans. Trees, brush and stumps shall be cut approximately level with the ground surface. For dry stormwater management ponds, a minimum of a 25 foot radius around the inlet structure shall be cleared.

All cleared and grubbed material shall be disposed of outside and below the limits of the dam and reservoir as directed by the owner or his representative. When specified, a sufficient quantity of topsoil will be stockpiled in a suitable location for use on the embankment and other designated areas.

EARTH FILL

Material - The fill material shall be taken from approved designated borrow areas. It shall be free of roots, stumps, wood, rubbish, stones greater than 6", frozen or other objectionable materials. Fill material for the center of the embankment, and cut off trench shall conform to Unified Soil Classification GC, SC, CH, or CL and must have at least 30% passing the #200 sieve. Consideration may be given to the use of other materials in the embankment if designed by a geotechnical engineer. Such special designs must have construction supervised by a geotechnical engineer.

Placement - Areas on which fill is to be placed shall be scarified prior to placement of fill. Fill materials shall be placed in maximum 8-inch thick (before compaction) layers which are to be continuous over the entire length of the fill. The most permeable borrow material shall be placed in the downstream portions of the embankment. The principal spillway must be installed concurrently with fill placement and not excavated into the embankment.

Compaction - The movement of the hauling and spreading equipment over the fill shall be controlled so that the entire surface of each lift shall be traversed by not less than one tread track of the equipment or compaction shall be achieved by a minimum of four complete passes of a sheepsfoot, rubber tire or vibratory roller. Fill material shall contain sufficient moisture such that the required degree of compaction will be obtained with the equipment used. The fill material shall contain sufficient moisture so that if formed into a ball it will not crumble yet not be so wet that water can be squeezed out.

When required by the reviewing agency the minimum required density shall not be less than 95% of maximum dry density with a moisture content within +/- 2% of the optimum. Each layer of fill shall be compacted as necessary to obtain that density, and is to be certified by the Engineer at the time of construction. All compaction is to be determined by AASHTO Method T-99 (Standard Proctor).

Cutoff Trench - The cutoff trench shall be excavated into impervious material along or parallel to the centerline of the embankment as shown on the plans. The bottom width of the trench shall be governed by the equipment used for excavation, with the minimum width being four feet. The depth shall be at least four feet below existing grade or as shown on the plans. The side slopes of the trench shall be 1 to 1 or flatter. The backfill shall compacted with construction equipment, rollers, or hand tampers to assure maximum density and maximum permeability.

Embankment Core - The core shall be parallel to the centerline of the embankment as shown on the plans. The top width of the core shall be a minimum of four feet. The height shall extend up to at least the 10 year water elevation or as shown on the plans. The side slopes shall be 1 to 1 or flatter. The core shall be compacted with construction equipment, rollers, or hand tampers to assure maximum density and minimum permeability. In addition, the core shall be placed concurrently with the outer shell of the embankment.

STRUCTURE BACKFILL

Backfill adjacent to pipes or structures shall be of the type and quality conforming to that specified for the adjoining fill material. The fill shall be placed in horizontal layers not to exceed four inches in thickness and compacted by hand tampers or other manually directed compaction equipment. The material needs to fill completely all spaces under and adjacent to the pipe. At no time during the backfilling operation shall driven equipment be allowed to operate closer than four feet, measured horizontally, to any part of a structure. Under no circumstances shall equipment be driven over any part of a concrete structure or pipe, unless there is a compacted fill of 24" or greater over the structure or pipe.

Structure backfill may be flowable fill meeting the requirements of Maryland Department of Transportation, State Highway Administration Standard Specifications for Construction and Materials, Section 313 as modified. The mixture shall have a 100-200 psi; 28 day unconfined compressive strength. The flowable fill shall have a minimum pH of 4.0 and a minimum resistivity of 2000 ohm-cm. Material shall be placed such that a minimum of 6" (measured perpendicular to the pipe) of flowable fill shall be under (bedding), over and, on the sides of the pipe. It only needs to extend up to the spring line for rigid conduits. Average slump of the fill shall be 7" to assure flowability of the material. Adequate measures shall be taken (sand bags, etc.) to prevent floating the pipe. When using flowable fill, all metal pipe shall be bituminous coated. Any adjoining soil fill shall be placed in horizontal layers not to exceed four inched in thickness and compacted by hand tampers or other manually directed compaction equipment. The material shall completely fill all voids adjacent to the flowable fill zone. At no time during the backfilling operation shall driven equipment be allowed to operate closer than four feet, measured horizontally, to any part of a structure. Under no circumstances shall equipment be driven over any part of a structure or pipe unless there is a compacted fill of 24" or greater over the structure or pipe. Backfill material outside the structural backfill (flowable fill) zone shall be of the type and quality conforming to that specified for the core of the embankment or other embankment materials.

PIPE CONDUITS

All pipes shall be circular in cross section.

Corrugated Metal Pipe - All of the following criteria shall apply for corrugated metal pipe:

1. Materials - (Polymer Coated steel pipe) - Steel pipes with polymeric coatings shall have a minimum coating thickness of 0.01 inch (10mil) on both sides of the pipe. This pipe and its appurtenances shall conform to the requirements of AASHTO Specifications M-245 & M-246 with watertight coupling bands or flanges.

   Materials - (Aluminum Coated Steel Pipe) - This pipe and its appurtenances shall conform to the requirements of AASHTO Specifications M-274 with watertight coupling bands or flanges. Aluminum Coated Steel Pipe, when used with flowable fill or when soil and/or water conditions warrant the need for increased durability, shall be fully bituminous coated per requirements of AASHTO Specification M-190 Type A. Any aluminum coating damaged or otherwise removed shall be replaced with cold applied bituminous coating compound. Aluminum surfaces that are to be in contact with concrete shall be painted with one coat of zinc chromate primer or two coats of asphalt.

   Materials - (Aluminum Pipe) - This pipe and its appurtenances shall conform to the requirements of AASHTO Specifications M-196 or M-211 with watertight coupling bands or flanges. Aluminum Pipe, when used with flowable fill or when soil and/or water conditions warrant the need for increased durability, shall be fully bituminous coated per requirements of AASHTO Specification M-190 Type A. Aluminum surfaces that are to be in contact with concrete shall be painted with one coat of zinc chromate primer or two coats of asphalt. Hot dip galvanized bolts not be used for connections, the pH of the surrounding soils shall be between 4 and 9.

2. Coupling bands, anti-seep collars, end sections, etc., must be composed of the same material and coated as the pipe. Metals must be insulated from dissimilar materials with use of rubber or plastic insulating materials at at least 24 mils in thickness.

3. Connections - All connections with pipes must be completely watertight. The drain pipe or barrel connection to the riser shall be welded all around when the pipe and riser are metal. Anti-seep collars shall be connected to the pipe in such a manner as to be completely watertight. Dimple bands are not considered to be watertight.

   All connections shall use a rubber or neoprene gasket when joining pipe sections. The end of each pipe shall be re-rolled an adequate number of corrugations to accommodate the band width. The following type connections are acceptable for pipes less than 24" in diameter, flanges on both ends of the pipe with a circular 3/8 inch closed cell neoprene gasket, prepunched to the flange bolt circle, sandwiched between adjacent flanges; a 12 inch wide standard lap type band with 12 inch wide by 3/8 inch thick closed cell circular neoprene gasket; and a 12 inch wide hugger type band with o-ring gaskets having a minimum diameter of 1/2 inch greater than the corrugation depth. Pipes 24 inches in diameter and larger shall be connected by a 24 inch long annular corrugated band using a minimum of 4 (four) rods and lugs, 2 on each connecting pipe ends. A 24 inch wide by 3/8 inch thick closed cell circular neoprene gasket will be installed with 12 inch on the end of each pipe. Flanged joints with 3/8 inch closed cell gaskets the full width of the flange is also acceptable.

   Helically corrugated pipe shall have either continuously welded seams or have lock seams with internal caulking or a neoprene bead.

4. Bedding - The pipe shall be firmly and uniformly bedded throughout its entire length. Where rock or soft, spongy or other unstable soil is encountered, all such material shall be removed and replaced with suitable earth compacted to provide adequate support.

5. Backfilling shall conform to "Structure Backfill".

6. Other details (anti-seep collars, valves, etc.) shall be as shown on the drawings.

Reinforced Concrete Pipe - All of the following criteria shall apply for reinforced concrete pipe.

1. Materials - Reinforced concrete pipe shall have bell and spigot joints with rubber gaskets and shall equal or exceed ASTM Designation C-361.

2. Bedding - All reinforced concrete pipe conduits shall be laid in a concrete bedding/cradle for their entire length. This bedding/cradle shall consist of high slump concrete placed under the pipe and up the side of the pipe at least 50% of its outside diameter with a minimum thickness of 6 inches. Where a concrete cradle is not needed for structural reasons, flowable fill may be used as described in the "Structure Backfill" section of this standard. Gravel bedding is not permitted.

3. Laying pipe - Bell and spigot pipe shall be placed with the bell end upstream. Joints shall be made in accordance with recommendations of the manufacturer of the material. After the joints are sealed for the entire line, the bedding shall be placed so that all spaces under the pipe are filled. Care shall be exercised to prevent any deviation from the original line and grade of the pipe. The first joint must be located within 4 feet from the riser.

4. Backfilling shall conform to "Structure Backfill."

5. Other details (anti-seep collars, valves, etc.) shall be as shown on the drawings.

Plastic Pipe - The following criteria shall apply for pipe:

1. Materials - PVC pipe shall be PVC-1120 or PVC-1220 conforming to ASTM D-1785 or ASTM D-2241. Corrugated High Density Polyethylene (HDPE) pipe, couplings and fittings shall conform to the following: 4 - 10 inch pipe shall meet the requirements of AASHTO M252 Type S, and 12" through 24" shall meet the requirements of AASHTO M294 Type S.

2. Joints and connections to anti-seep collars shall be completely watertight.

3. Bedding - The pipe shall be firmly and uniformly bedded throughout its entire length. Where rock or soft, spongy or other unstable soil is encountered, all such material shall be removed and replaced with suitable earth compacted to provide adequate support.

4. Backfilling shall conform to Structure "Backfill".

5. Other details (anti-seep collars, valves, etc.) shall be as shown on the drawings.

CONCRETE

Concrete shall meet the requirements of Maryland Department of Transportation, State Highway Administration Standard Specifications for Construction and Materials, Section 414, Mix No. 3.

ROCK RIPRAP

Rock riprap shall meet the requirements of Maryland Department of Transportation, State Highway Administration Standard Specifications for Construction and Materials, Section 311.

Geotextile shall be placed under all riprap and shall meet the requirements of Maryland Department of Transportation, State Highway Administration Standard Specifications for Construction and Materials, Section 421.04, Class C.

CARE OF WATER DURING CONSTRUCTION

All work on permanent structures shall be carried out in areas free from water. The Contractor shall construct and maintain all temporary dikes, levees, cofferdams, drainage channels, and stream diversions necessary to protect the areas to be occupied by the permanent works. The contractor shall also furnish, install, operate, and maintain all necessary pumping and other equipment required for removal of water from the various parts of the work and for maintaining the excavations, foundation, and other parts of the work free from water as required or directed by the engineer for constructing each part of the work. After having served their purpose, all temporary protective works shall be removed or leveled and graded to the extent required to prevent obstruction in any degree whatsoever of the flow of water to the spillway or outlet works and so as not to interfere in any way with the operation or maintenance of the structure. Stream diversions shall be maintained until the full flow can be passed through the permanent works. The removal of water from the required excavation and the foundation shall be accomplished in a manner and to the extent that will maintain stability of the excavated slopes and bottom of required excavations and will allow satisfactory performance of all construction operations. During the placing and compacting of material in required excavations, the water level at the locations being refilled shall be maintained below the bottom of the excavation at such locations which may require draining the water to sumps from which the water shall be pumped.

STABILIZATION

All borrow areas shall be graded to provide proper drainage and left in a slightly condition. All exposed surfaces of the embankment, spillway, spoil and borrow areas, and berms shall be stabilized by seeding, liming, fertilizing and mulching in accordance with the Natural Resources Conservation Service Standards and Specifications for Critical Area Planting (MD-342) or as shown on the accompanying drawings.

EROSION AND SEDIMENT CONTROL

Construction operations will be carried out in such a manner that erosion will be controlled and water and air pollution minimized. State and local laws concerning pollution abatement will be followed. Construction plans shall detail erosion and sediment control measures.

Refer to the 2000 MARYLAND STANDARDS AND SPECIFICATIONS FOR SOIL EROSION AND SEDIMENT CONTROL for rate and methods not covered.

MAINTENANCE REQUIREMENTS FOR DETENTION PONDS

1. REMOVAL OF SILT WHEN ACCUMULATION EXCEEDS SIX (6) INCHES IN BASINS WITHOUT FOREBAYS. IN BASINS WITH FOREBAYS, REMOVAL OF SILT SHALL OCCUR WHEN THE ACCUMULATION EXCEEDS FOUR (4) INCHES IN FOREBAY.
2. REMOVAL OF ACCUMULATED PAPER, TRASH AND DEBRIS AS NECESSARY.
3. VEGETATION GROWN ON THE EMBANKMENT TOP OR FACES IS NOT ALLOWED TO EXCEED 18 INCHES IN HEIGHT AT ANY TIME.
4. ANNUAL INSPECTION AND REPAIR OF THE STRUCTURE.

EMBANKMENT AND CUT-OFF TRENCH CONSTRUCTION RECOMMENDATIONS

THE SITE SHOULD BE STRIPPED OF TOPSOIL AND ANY OTHER UNSUITABLE MATERIALS FROM THE EMBANKMENT OR STRUCTURE AREA IN ACCORDANCE WITH SOIL CONSERVATION GUIDELINES. AFTER STRIPPING OPERATIONS HAVE BEEN COMPLETED, THE EXPOSED SUBGRADE MATERIALS SHOULD BE PROOFROLLED WITH A LOADED DUMP TRUCK OR SIMILAR EQUIPMENT IN THE PRESENCE OF A GEOTECHNICAL ENGINEER OR HIS REPRESENTATIVE. FOR AREAS THAT ARE NOT ACCESSIBLE TO A DUMP TRUCK, THE EXPOSED MATERIALS SHOULD BE OBSERVED AND TESTED BY A GEOTECHNICAL ENGINEER OR HIS REPRESENTATIVE UTILIZING A DYNAMIC CONE PENETROMETER. ANY EXCESSIVELY SOFT OR LOOSE MATERIALS IDENTIFIED BY PROOFROLLING OR PENETROMETER TESTING SHOULD BE EXCAVATED TO SUITABLY FIRM SOIL, AND THEN GRADES RE-ESTABLISHED BY BACKFILLING WITH

A REPRESENTATIVE OF THE GEOTECHNICAL ENGINEER SHOULD BE PRESENT TO MONITOR PLACEMENT AND COMPACTION OF FILL FOR THE EMBANKMENT AND CUT OFF TRENCH. IN ACCORDANCE WITH MARYLAND SOIL CONSERVATION SPECIFICATION 378 SOILS CONSIDERED SUITABLE FOR THE CENTER OF EMBANKMENT AND CUT OFF TRENCH SHALL CONFORM TO UNIFIED SOIL CLASSIFICATION GC, SC, CH, OR CL. PER SCS 378, CONSIDERATION MAY BE GIVEN TO THE USE OF OTHER MATERIALS IN THE EMBANKMENT IF DESIGN AND CONSTRUCTION ARE SUPERVISED BY A GEOTECHNICAL ENGINEER.

EXPLORATION WITH TEST PITS AND ADDITIONAL LABORATORY TESTING CAN BE CONDUCTED PRIOR TO CONSTRUCTION TO IDENTIFY AND QUANTIFY POTENTIAL BORROW AREAS. ALL FILL MATERIALS MUST BE PLACED AND COMPACTED IN ACCORDANCE WITH MD SCS 378 SPECIFICATIONS.

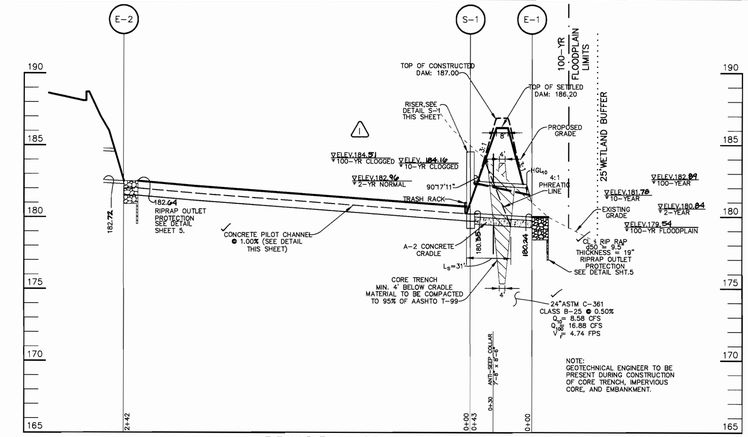

PRINCIPAL SPILLWAY PROFILE

SCALE : HOR.-1"=50' VERT.-1"=5'

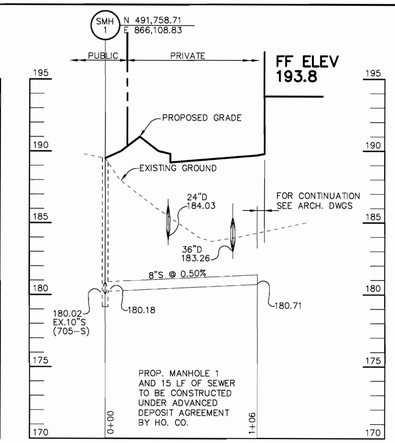

SEWER PROFILE

SCALE : HOR.-1"=50' VERT.-1"=5'

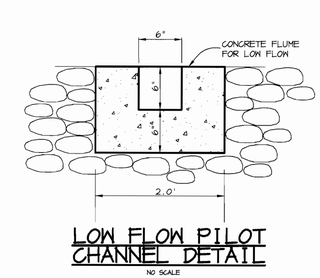

LOW FLOW PILOT CHANNEL DETAIL

NO SCALE

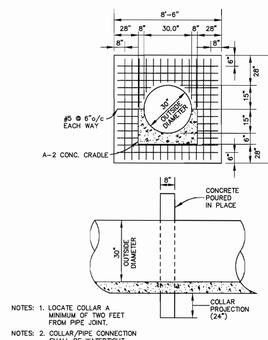

NOTES: 1. LOCATE COLLAR A MINIMUM OF TWO FEET FROM PIPE JOINT.

NOTES: 2. COLLAR/PIPE CONNECTION SHALL BE WATERTIGHT.

CONCRETE ANTI-SEEP COLLAR SWMF #1

NO SCALE

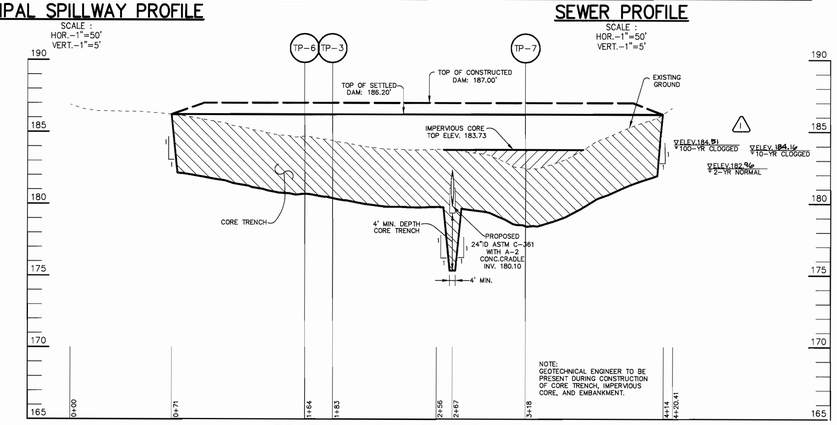

PROFILE ALONG CENTER LINE OF DAM

SCALE : HOR.-1"=50' VERT.-1"=5'

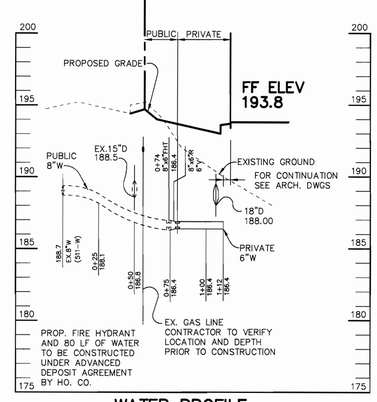

WATER PROFILE

SCALE : HOR.-1"=50' VERT.-1"=5'

NOTES:

1. SHOP DRAWINGS TO BE SUBMITTED TO THE ENGINEER PRIOR TO FABRICATION.
2. GALVANIZE RACK AFTER FABRICATION AND PAINT BATTLESHIP GRAY.
3. RISER TO BE PRECAST WITH 2' MIN. BARREL STUB. PROVIDE WATER TIGHT SEAL.

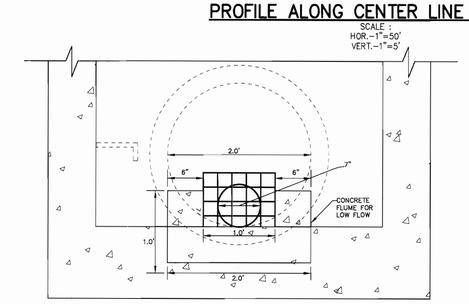

LOW FLOW PILOT CHANNEL @ S-1

SCALE: 1"=1'

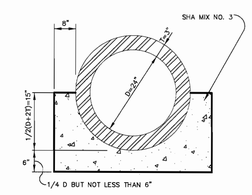

CLASS 'A' DAMS LESS THAN 50' HIGH

A-2 CONCRETE CRADLE

NO SCALE

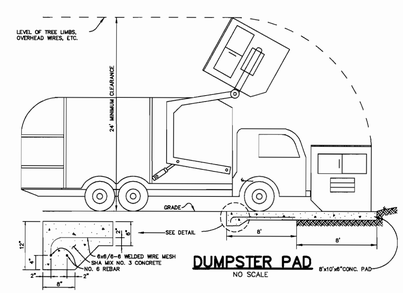

DUMPSTER PAD

NO SCALE

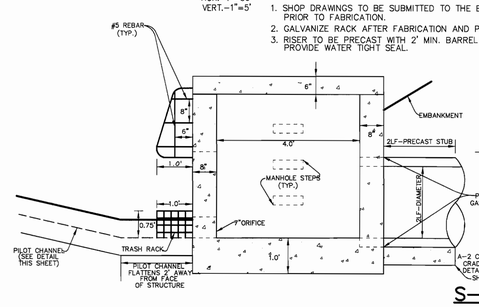

S-1 DETAIL

SCALE: 1"=2'

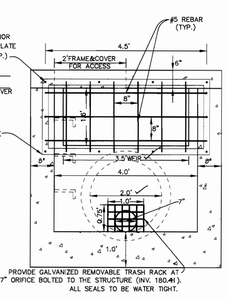

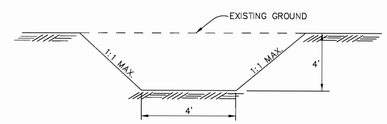

NOTE: GC, SC, CH, OR CL MATERIAL IS TO BE USED FOR CORE TRENCH. IF UNSUITABLE MATERIAL EXISTS ON SITE, ACCEPTABLE MATERIAL WILL NEED TO BE TRUCKED TO SITE.

CORE TRENCH DETAIL

NO SCALE

AS-BUILT CERTIFICATION

AIMEE C. REMINGTON #29923 — 10-12-05 DATE

BY THE DEVELOPER :

I/WE CERTIFY THAT ALL DEVELOPMENT AND CONSTRUCTION WILL BE DONE ACCORDING TO THIS PLAN, AND THAT ANY RESPONSIBLE PERSONNEL INVOLVED IN THE CONSTRUCTION PROJECT WILL HAVE A CERTIFICATE OF ATTENDANCE AT A DEPARTMENT OF THE ENVIRONMENT APPROVED TRAINING PROGRAM FOR THE CONTROL OF SEDIMENT AND EROSION BEFORE BEGINNING THE PROJECT. I ALSO AUTHORIZE PERIODIC ON-SITE INSPECTIONS BY THE HOWARD SOIL CONSERVATION DISTRICT.

DEVELOPER — 10-17-01 DATE

BY THE ENGINEER :

I CERTIFY THAT THIS PLAN FOR EROSION AND SEDIMENT CONTROL REPRESENTS A PRACTICAL AND WORKABLE PLAN BASED ON MY PERSONAL KNOWLEDGE OF THE SITE CONDITIONS AND THAT IT WAS PREPARED IN ACCORDANCE WITH THE REQUIREMENTS OF THE HOWARD SOIL CONSERVATION DISTRICT.

ENGINEER — 10-9-01 DATE

THESE PLANS HAVE BEEN REVIEWED FOR THE HOWARD SOIL CONSERVATION DISTRICT AND MEET THE TECHNICAL REQUIREMENTS FOR SOIL EROSION AND SEDIMENT CONTROL.

NATURAL RESOURCES CONSERVATION SERVICE — 10/24/01 DATE

THIS DEVELOPMENT PLAN IS APPROVED FOR SOIL EROSION AND SEDIMENT CONTROL BY THE HOWARD SOIL CONSERVATION DISTRICT.

HOWARD SOIL CONSERVATION DISTRICT — 10/24/01 DATE

APPROVED : HOWARD COUNTY DEPARTMENT OF PLANNING AND ZONING.

DIRECTOR — 11/2/01 DATE

CHIEF, DEVELOPMENT ENGINEERING DIVISION — 10/26/01 DATE

CHIEF, DIVISION OF LAND DEVELOPMENT — 10/31/01 DATE

DATE	NO.	REVISION
10-05-05	1	REV. PROFILES & S-1 DETAIL PER AS BUILT SURVEY

OWNER/DEVELOPER

SDC, INC.
8480 BALTIMORE NATIONAL PIKE
ELLICOTT CITY, MARYLAND 21043
410-465-4244

PROJECT — MEADOWRIDGE BUSINESS PARK PARCEL R-1
A WAREHOUSE BUILDING

AREA — ZONED M-1 PARCEL R-1
TAX MAP 37, BLOCK 23 & TAX MAP 43, BLOCK 4 & 5
1st ELECTION DISTRICT
HOWARD COUNTY, MARYLAND

TITLE — STORMWATER MANAGEMENT DETAILS

RIEMER MUEGGE & ASSOCIATES INC
ENGINEERING • ENVIRONMENTAL SERVICES • PLANNING • SURVEYING
8818 Centre Park Drive, Columbia, MD 21045
tel 410.997.8900 fax 410.997.9282

10.9.01 DATE

CHRISTOPHER J. REID #19949

DESIGNED BY :	CJR
DRAWN BY:	DAM / KEV
PROJECT NO :	00036/SDP-4.DWG
DATE :	SEPTEMBER 21, 2001
SCALE :	AS SHOWN
DRAWING NO.	6 OF 11

AS-BUILT

SDP-00-144

P:\project\00036\SDP4.DWG WED Sep 19 13:26:54 2001 RIEMER MUEGGE A DIVISION OF PHRGA

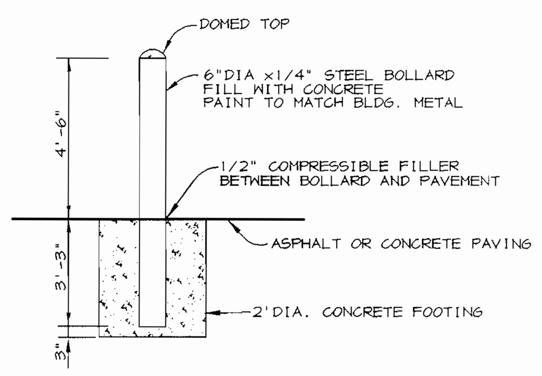

BOLLARD DETAIL
NO SCALE

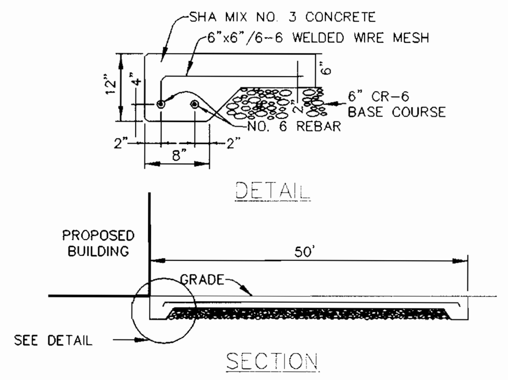

CONCRETE TRUCK COURT PAVING DETAIL
NO SCALE

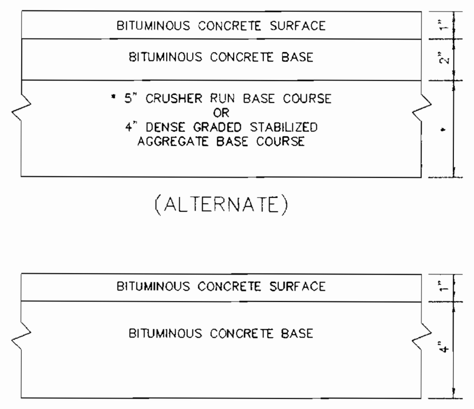

HOWARD COUNTY DESIGN MANUAL VOLUME IV-STANDARD SPECIFICATIONS AND DETAILS FOR CONSTUCTION (DRAWING R-2.01)

P-1 PAVING
NO SCALE

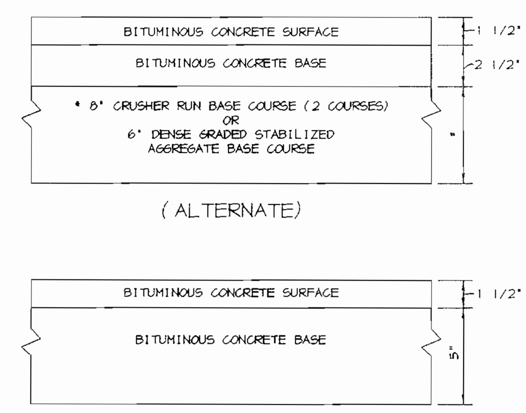

HOWARD COUNTY DESIGN MANUAL VOLUME IV-STANDARD SPECIFICATIONS AND DETAILS FOR CONSTRUCTION (DRAWING R-2.01)

P-2 PAVING
NO SCALE

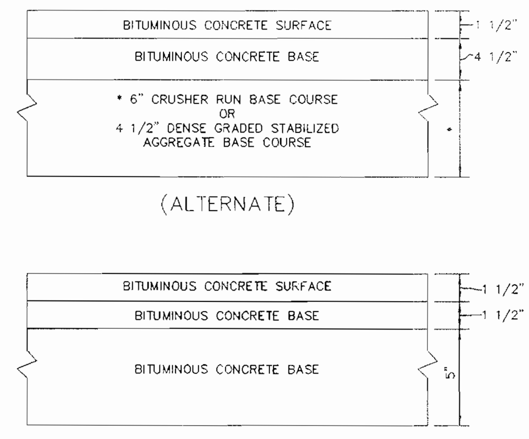

HOWARD COUNTY DESIGN MANUAL VOLUME IV-STANDARD SPECIFICATIONS AND DETAILS FOR CONSTUCTION (DRAWING R-2.01)

P-3 PAVING
NO SCALE

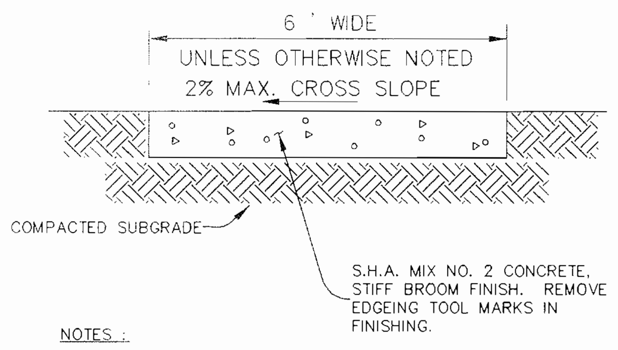

NOTES :
PROVIDE LATITUDINAL EXPANSION JOINTS AT 15' O.C. (MAX.)
PROVIDE CONTRACTION (DUMMY) JOINT AT 5' O.C. INTERVALS BETWEEN EXPANSION JOINTS. SIDEWALK TO BE SCRIBED IN 5' MAX. SQUARES.

SIDEWALK DETAIL
NO SCALE

STRUCTURE SCHEDULE

	STRUCTURE	TYPE	LOCATION		INV. IN	INV. OUT	TOP	REMARKS
⚠1	I-1	A-5 2.5'WIDE	*N 552,569.47	E 1,378,670.32	183.14 (24")	183.11 (24")	188.79	HOCO STD. DETAIL SD 4.40
	I-2	A-5 3'WIDE	*N 552,504.22	E 1,378,592.63	183.68 (24")	183.58 (24")	188.9	HOCO STD. DETAIL SD 4.01
	I-3	A-5 3'WIDE	*N 552,412.89	E 1,378,489.12	185.55 (23x14")	184.72 (24")	188.9	HOCO STD. DETAIL SD 4.01
	I-4	A-5 3'WIDE	*N 552,282.77	E 1,378,606.02	189.87 (15")	189.77 (15")	193.3	HOCO STD. DETAIL SD 4.40
	I-5	A-5 2.5'WIDE	*N 552,338.58	E 1,378,727.19	-	190.67 (12")	193.3	HOCO STD. DETAIL SD 4.40
	I-6	YARD INLET	*N 552,420.99	E 1,378,444.71	185.75 (15")	184.46 (18")	187.8	HOCO STD. DETAIL SD 4.14
	M-1	4' MH	*N 552,347.69	E 1,378,464.29	188.49 (15")	188.39(23x14")	191.5	HOCO STD. DETAIL G 5.12
	M-2	4' MH	*N 552,234.46	E 1,378,547.75	189.24 (15")	189.14 (15")	194.4	HOCO STD. DETAIL G 5.12
	M-3	4' MH	*N 552,340.90	E 1,378,398.63	185.40 (EX.24")	183.30 (24")	192.5	HOCO STD. DETAIL G 5.12
⚠1	S-1	CONTROL STRUCTURE	*N 552,728.00	E 1,378,884.43	180.41 (7")	180.35 (24")	184.93	SEE DETAIL SHEET 6
⚠1	WQ-1	3-K	*N 552,577.28	E 1,378,678.95	183.42 (24")	182.59 (24")	188.19	SEE DETAIL SHEET 7
	E-1	24" END SECTION	*N 552,698.17	E 1,378,914.89	180.00 (24")	180.00(RIPRAP)	-	HOCO STD. DETAIL SD 5.51
	E-2	24" END SECTION	*N 552,587.99	E 1,378,690.92	182.50 (24")	182.50(RIPRAP)	-	HOCO STD. DETAIL SD 5.51
	HW-1	HEADWALL	*N 552,522.82	E 1,378,732.84	182.30 (TWIN SD)	182.30(RIPRAP)	-	SEE DETAIL SHEET 8
	JB-1	JUNCTION BOX	* A N 552,542.38 B N 552,549.88 C N 552,539.72 D N 552,532.23	E 1,378,704.08 E 1,378,713.45 E 1,378,721.57 E 1,378,712.20	182.52 (TWIN SD)	182.42 (TWIN SD)		SEE DETAIL SHEET 8
	JB-2	JUNCTION BOX	* A N 552,365.53 B N 552,368.47 C N 552,356.38 D N 552,353.44	E 1,378,479.59 E 1,378,487.03 E 1,378,491.81 E 1,378,484.37	184.12 (18") 184.04 (TWIN SD)	183.94 (TWIN SD)		SEE DETAIL SHEET 8
	JB-3	JUNCTION BOX	* A N 552,368.28 B N 552,366.75 C N 552,353.99 D N 552,355.51	E 1,378,398.36 E 1,378,406.21 E 1,378,395.88 E 1,378,395.88	185.10 (24") 185.75 (TWIN SD)	184.45(TWIN SD)		SEE DETAIL SHEET 8

NOTES: * LOCATION OF "S" & WQ FACILITY INLETS AND MANHOLES IS AT CENTER OF TOP COVER; FOR "A" INLETS LOCATION IS GIVEN FOR CENTER OF THROAT OPENING AT FACE OF CURB;
FOR END SECTIONS AND HEADWALLS THE LOCATION IS CENTER OF THROAT OPENING AT FACE OF STRUCTURE.
TOP ELEVATION IS TOP OF CURB/GRATE/RIM.
FOR HEADWALL HW-1, THE LOCATION IS TAKEN AT THE MIDPOINT OF FACE OF WALL @ PIPE OUTFALL.

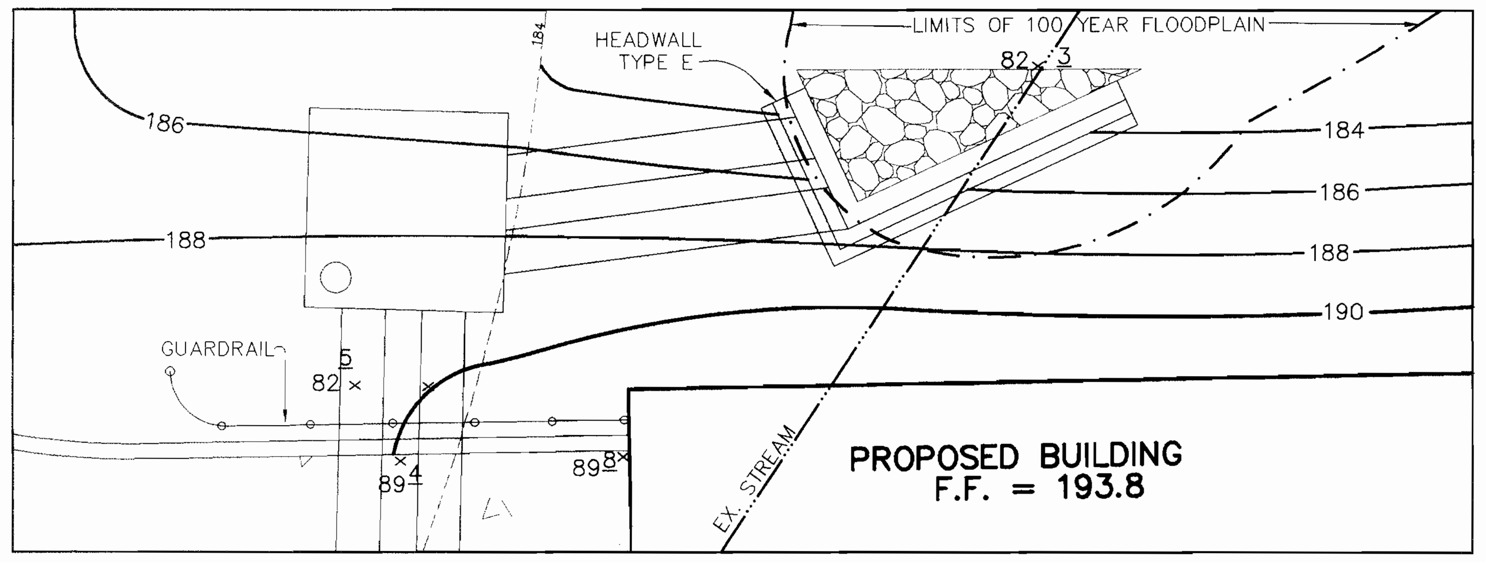

RIP-RAP @ HW-1 BLOW-UP
SCALE: 1" = 10'

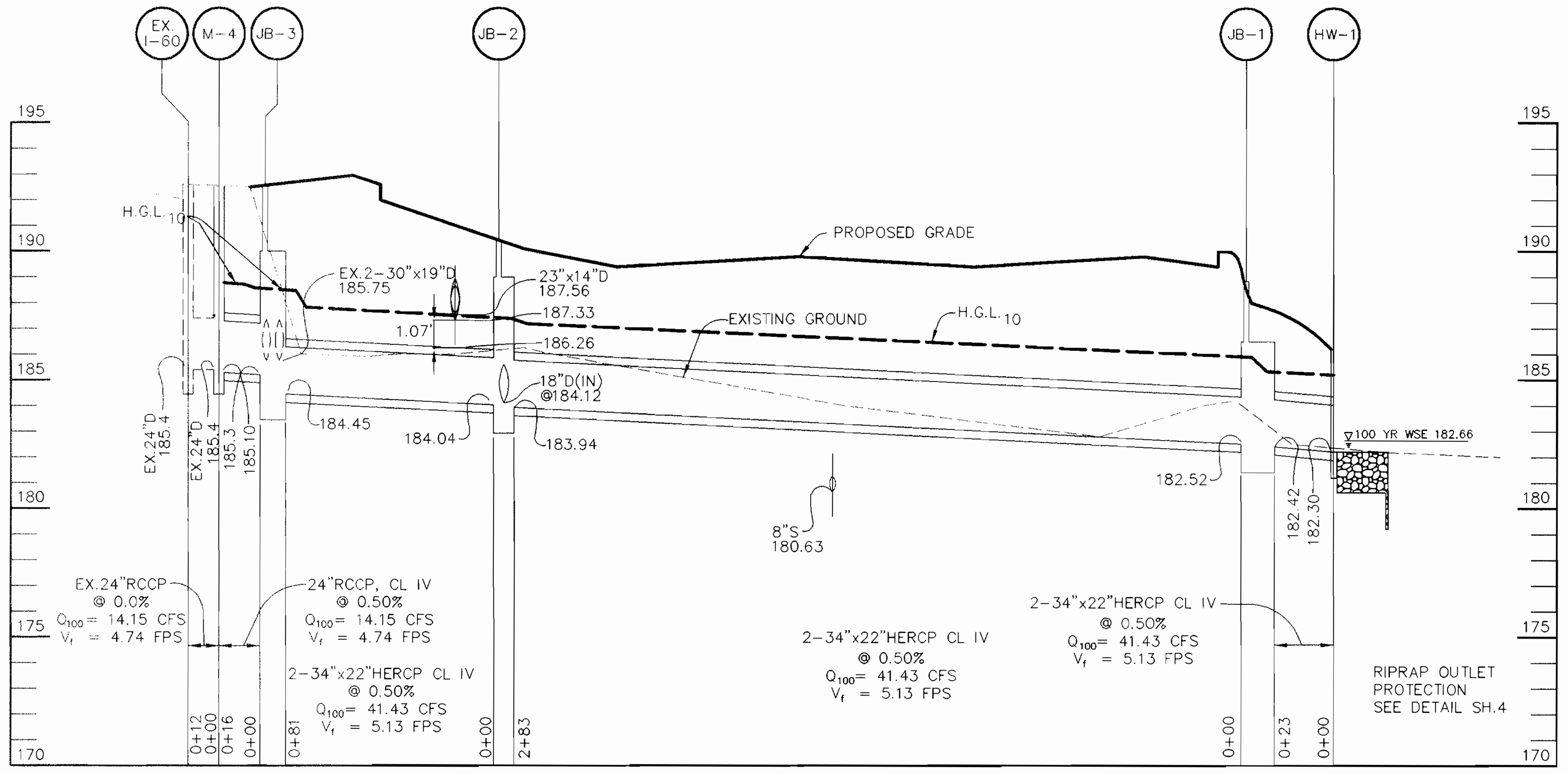

STORM DRAIN PROFILE
SCALE :
HOR.-1"=50'
VERT.-1"=5'

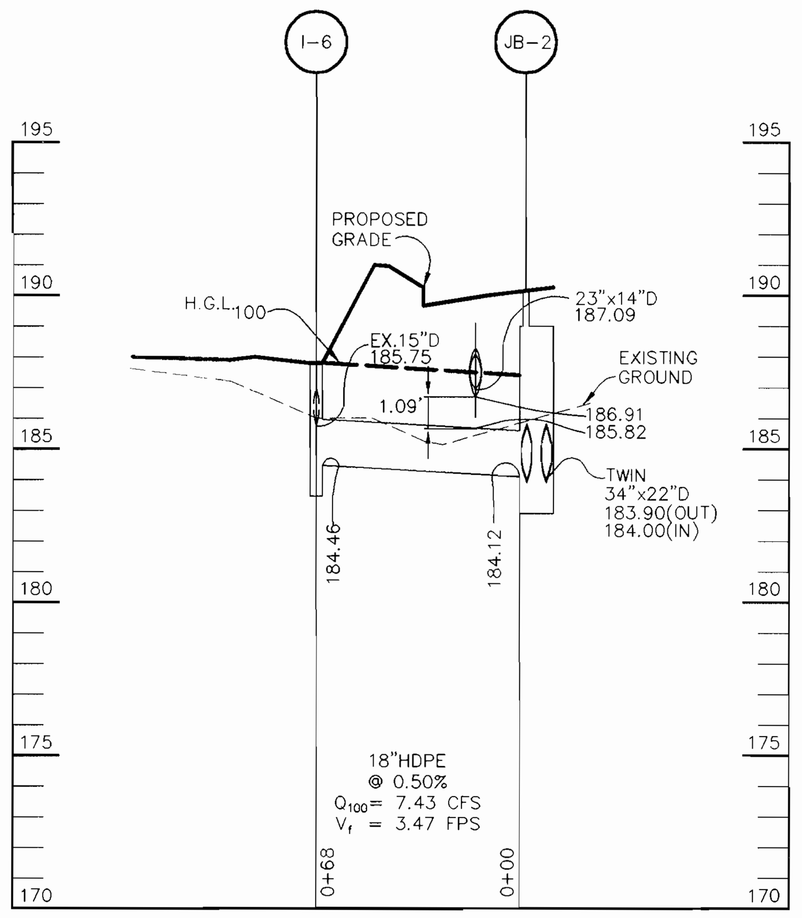

STORM DRAIN PROFILE
SCALE :
HOR.-1"=50'
VERT.-1"=5'

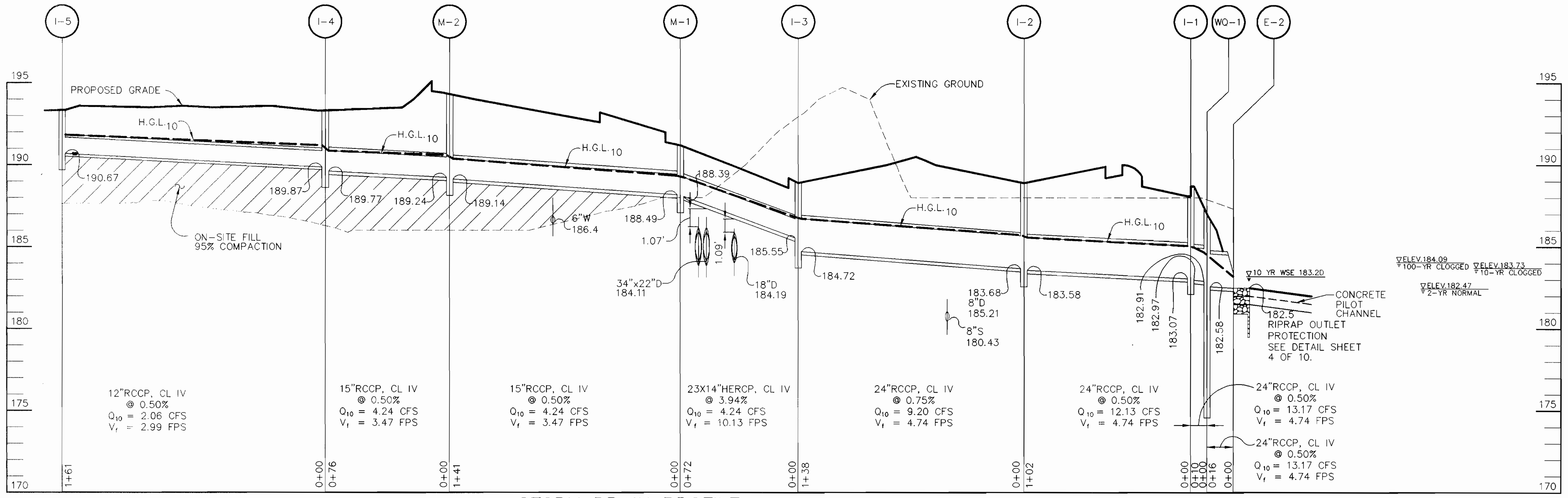

STORM DRAIN PROFILE
SCALE :
HOR.-1"=50'
VERT.-1"=5'

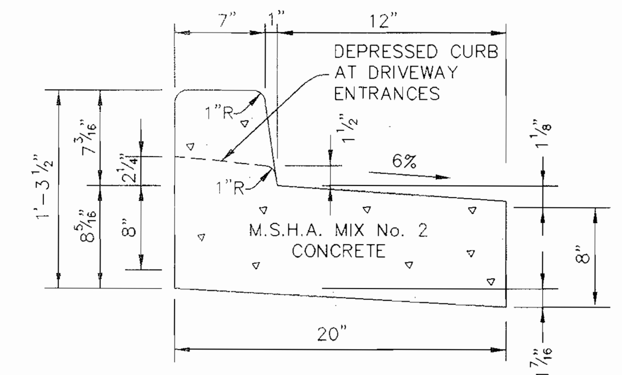

REVERSE 7" COMBINATION CURB AND GUTTER
NO SCALE

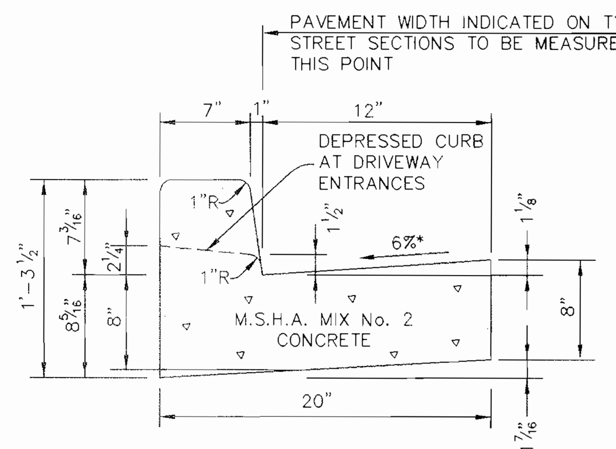

HOWARD COUNTY DESIGN MANUAL, VOLUME IV, STANDARD SPECIFICATIONS AND DETAILS FOR CONSTRUCTION (DRAWING R-3.01).

* GUTTER PAN AT THE MEDIAN EDGE OF INTERMEDIATE ARTERIALS OR THE HIGH SIDE OF SUPERELEVATED SECTIONS SHALL BE SLOPED AT THE SAME RATE AS THE PAVEMENT.

STANDARD 7" COMBINATION CURB AND GUTTER
NO SCALE

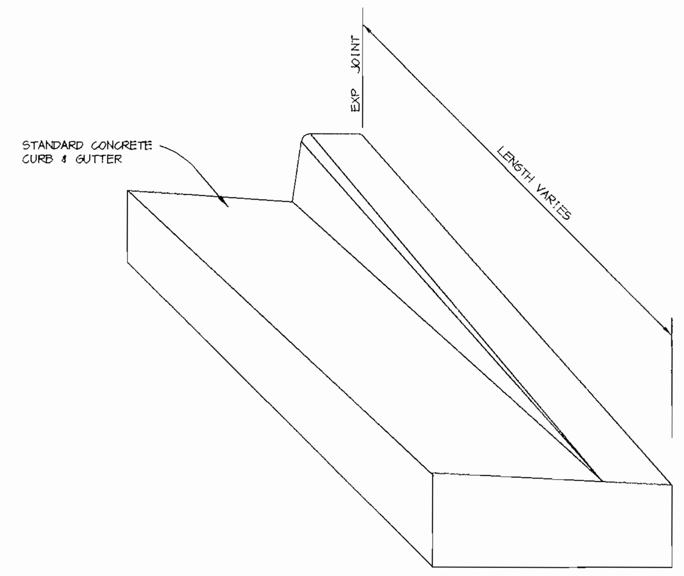

NOSE DOWN CURB DETAIL
NO SCALE

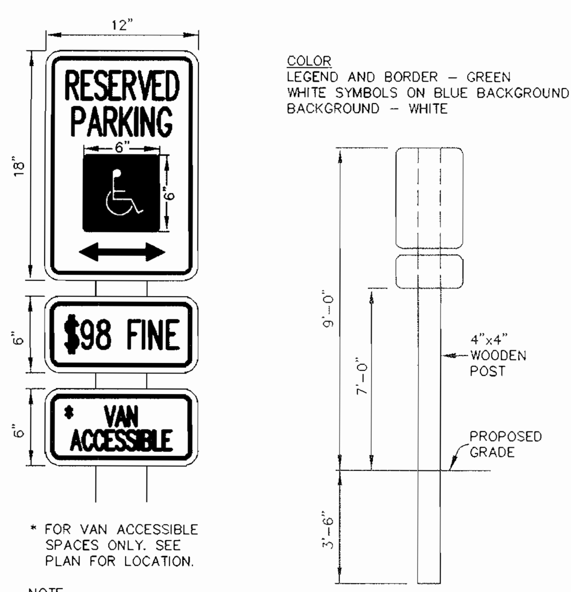

* FOR VAN ACCESSIBLE SPACES ONLY. SEE PLAN FOR LOCATION.

NOTE
DISTANCE FROM GROUND TO BOTTOM OF SIGN TO BE 7'.

HANDICAP SIGN DETAIL
NO SCALE

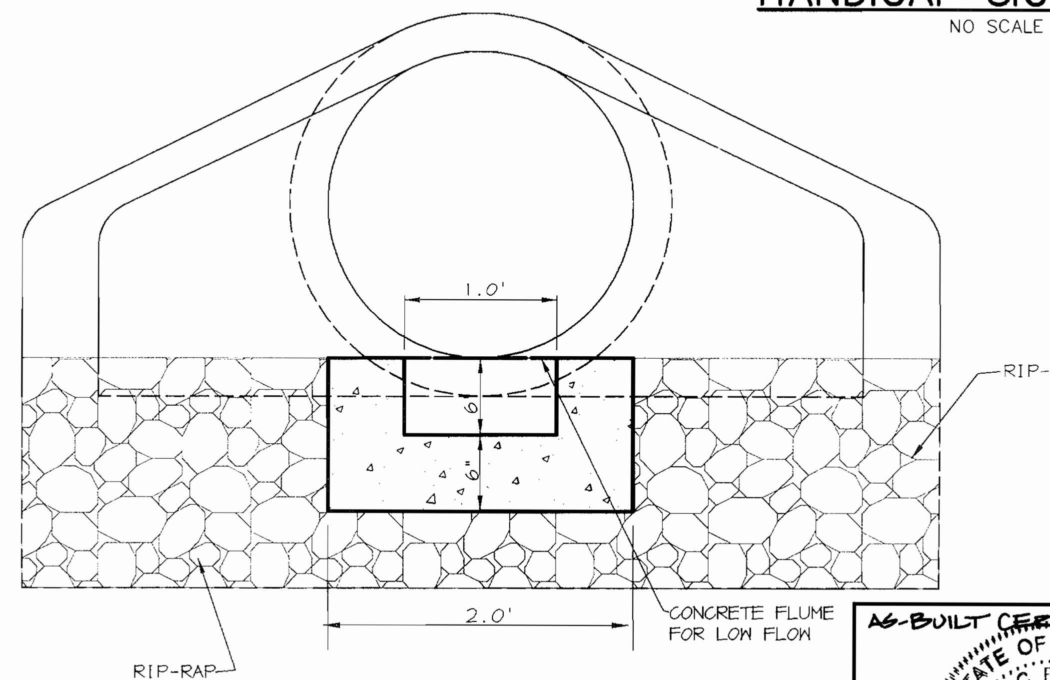

LOW FLOW PILOT CHANNEL @ END SECTION DETAIL
SCALE: 1"= 1'

AS-BUILT CERTIFICATION
STATE OF MARYLAND AIMEE C. REMINGTON PROFESSIONAL ENGINEER No. 29923
AIMEE C. REMINGTON #29923 10.12.05 DATE

APPROVED : HOWARD COUNTY DEPARTMENT OF PLANNING AND ZONING.

DIRECTOR	11/2/01 DATE
CHIEF, DEVELOPMENT ENGINEERING DIVISION	10/26/01 DATE
CHIEF, DIVISION OF LAND DEVELOPMENT JA	10/31/01 DATE

DATE	NO.	REVISION
10-05-05	1	REV. STRUCTURE SCHEDULE PER AS-BUILT SURVEY

OWNER/DEVELOPER
SDC, INC.
8480 BALTIMORE NATIONAL PIKE
ELLICOTT CITY, MARYLAND 21043
410-465-4244

PROJECT MEADOWRIDGE BUSINESS PARK
PARCEL R-1
A WAREHOUSE BUILDING

AREA ZONED M-1 PARCEL R-1
TAX MAP 37, BLOCK 23 & TAX MAP 43, BLOCK 4 & 5
1st ELECTION DISTRICT
HOWARD COUNTY, MARYLAND

TITLE
DETAILS AND PROFILES

RIEMER MUEGGE & ASSOCIATES INC
ENGINEERING • ENVIRONMENTAL SERVICES • PLANNING • SURVEYING
8818 Centre Park Drive, Columbia, MD 21045
tel 410.997.8900 fax 410.997.9282

10.9.01
DATE

CHRISTOPHER J. REID #19949

DESIGNED BY : CJR
DRAWN BY: DAM /KEV
PROJECT NO : 00036/ SDP6.DWG
DATE : SEPTEMBER 21, 2001
SCALE : AS SHOWN
DRAWING NO. 5 OF 11

AS-BUILT
SDP-00-144

TEMPORARY SEEDING NOTES

Apply to graded or cleared areas likely to be redisturbed where a short-term vegetative cover is needed.

Seedbed Preparation : Loosen upper three inches of soil by raking, discing or other acceptable means before seeding, if not previously loosened.

Soil Amendments : Apply 600 lbs. per acre 10-10-10 fertilizer (14 lbs. per 1000 sq.ft.).

Seeding : For periods March 1 thru April 30 and from August 15 thru November 15, seed with 2-1/2 bushels per acre of annual rye (3.2 lbs. per 1000 sq.ft.). For the period May 1 thru August 14, seed with 3 lbs. per acre of weeping lovegrass (0.07 lbs. per 1000 sq.ft.). For the period November 16 thru February 28, protect site by applying 2 tons per acre of well anchored straw mulch and seed as soon as possible in the spring, or use sod.

Mulching : Apply 1-1/2 to 2 tons per acre (70 to 90 lbs. per 1000 sq.ft.) of unrotted small grain straw immediately after seeding. Anchor mulch immediately after application using mulch anchoring tool or 218 gal. per acre (5 gal. per 1000 sq.ft.) of emulsified asphalt on flat areas. On slopes, 8 ft. or higher, use 347 gal. per acre (8 gal. per 1000 sq.ft.) for anchoring.

Refer to the 1983 MARYLAND STANDARDS AND SPECIFICATIONS FOR SOIL EROSION AND SEDIMENT CONTROL for rate and methods not covered.

PERMANENT SEEDING NOTES

Apply to graded or cleared areas not subject to immediate further disturbance where a permanent long-lived vegetative cover is needed.

Seedbed Preparation : Loosen upper three inches of soil by raking, discing or other acceptable means before seeding, if not previously loosened.

Soil Amendments : In lieu of soil test recommendations, use one of the following schedules :

1) Preferred - Apply 2 tons per acre dolomitic limestone (92 lbs. per 1000 sq.ft.) and 600 lbs. per acre 10-10-10 fertilizer (14 lbs. per 1000 sq.ft.) before seeding. Harrow or disc into upper three inches of soil. At time of seeding, apply 400 lbs. per acre 30-0-0 ureaform fertilizer (9 lbs. per 1000 sq.ft.).

2) Acceptable - Apply 2 tons per acre dolomitic limestone (92 lbs. per 1000 sq.ft.) and 1000 lbs. per acre 10-10-10 fertilizer (23 lbs. per 1000 sq.ft.) before seeding. Harrow or disc into upper three inches of soil.

Seeding : For the period March 1 thru April 30 and from August 1 thru October 15, seed with 60 lbs. per acre (1.4 lbs. per 1000 sq.ft.) of Kentucky 31 Tall Fescue. For the period May 1 thru July 31, seed with 60 lbs. Kentucky 31 Tall Fescue per acre and 2 lbs. per acre (0.05 lbs. per 1000 sq.ft.) of weeping lovegrass. During the period October 16 thru February 28, protect site by one of the following options :

1) 2 tons per acre of well-anchored mulch straw and seed as soon as possible in the spring.

2) Use sod.

3) Seed with 60 lbs. per acre Kentucky 31 Tall Fescue and mulch with 2 tons per acre well anchored straw.

Mulching : Apply 1-1/2 to 2 tons per acre (70 to 90 lbs. per 1000 sq.ft.) of unrotted small grain straw immediately after seeding. Anchor mulch immediately after application using mulch anchoring tool or 218 gal. per acre (5 gal. per 1000 sq.ft.) of emulsified asphalt on flat areas. On slopes, 8 ft. or higher, use 347 gal. per acre (8 gal. per 1000 sq.ft.) for anchoring.

Maintenance : Inspect all seeded areas and make needed repairs, replacements and reseedings.

STANDARD SEDIMENT CONTROL NOTES

1. A MINIMUM OF 48 HOURS NOTICE MUST BE GIVEN TO THE HOWARD COUNTY DEPARTMENT OF INSPECTIONS, LICENSES AND PERMITS, SEDIMENT CONTROL DIVISION PRIOR TO THE START OF ANY CONSTRUCTION (313-1855).
2. ALL VEGETATIVE AND STRUCTURAL PRACTICES ARE TO BE INSTALLED ACCORDING TO THE PROVISIONS OF THIS PLAN AND ARE TO BE IN CONFORMANCE WITH THE 1994 MARYLAND STANDARDS AND SPECIFICATIONS FOR SOIL EROSION AND SEDIMENT CONTROL AND REVISIONS THERETO.
3. FOLLOWING INITIAL SOIL DISTURBANCE OR RE-DISTURBANCE, PERMANENT OR TEMPORARY STABILIZATION SHALL BE COMPLETED WITHIN: A) 7 CALENDAR DAYS FOR ALL PERIMETER SEDIMENT CONTROL STRUCTURES, DIKES, PERIMETER SLOPES, AND ALL SLOPES STEEPER THAN 3:1, B) 14 DAYS AS TO ALL OTHER DISTURBED OR GRADED AREAS ON THE PROJECT SITE.
4. ALL SEDIMENT TRAPS/BASINS SHOWN MUST BE FENCED AND WARNING SIGNS POSTED AROUND THE PERIMETER IN ACCORDANCE WITH VOL. I, CHAPTER 7, OF THE HOWARD COUNTY DESIGN MANUAL, STORM DRAINAGE.
5. ALL DISTURBED AREAS MUST BE STABILIZED WITHIN THE TIME PERIOD SPECIFIED ABOVE IN ACCORDANCE WITH THE 1994 MARYLAND STANDARDS AND SPECIFICATIONS FOR SOIL EROSION AND SEDIMENT CONTROL FOR PERMANENT SEEDING, SOD, TEMPORARY SEEDING, AND MULCHING (SEC. G.). TEMPORARY STABILIZATION WITH MULCH ALONE SHALL ONLY BE DONE WHEN RECOMMENDED SEEDING DATES DO NOT ALLOW FOR PROPER GERMINATION AND ESTABLISHED OF GRASSES.
6. ALL SEDIMENT CONTROL STRUCTURES ARE TO REMAIN IN PLACE AND ARE TO BE MAINTAINED IN OPERATIVE CONDITION UNTIL PERMISSION FOR THEIR REMOVAL HAS BEEN OBTAINED FROM THE HOWARD COUNTY SEDIMENT CONTROL INSPECTOR.
7. SITE ANALYSIS:

TOTAL AREA OF SITE	4.62 ACRES
AREA DISTURBED	3.59 ACRES
AREA TO BE ROOFED OR PAVED	2.5 ACRES
AREA TO BE VEGETATIVELY STABILIZED	1.09 ACRES
TOTAL CUT	1,200 CU. YARDS
TOTAL FILL	22,000 CU. YARDS

OFFSITE WASTE AREA LOCATION TO HAVE ACTIVE GRADING PERMIT

8. ANY SEDIMENT CONTROL PRACTICE WHICH IS DISTURBED BY GRADING ACTIVITY FOR PLACEMENT OF UTILITIES MUST BE REPAIRED ON THE SAME DAY OF DISTURBANCE.
9. ADDITIONAL SEDIMENT CONTROLS MUST BE PROVIDED, IF DEEMED NECESSARY BY THE HOWARD COUNTY SEDIMENT CONTROL INSPECTOR.
10. ON ALL SITES WITH DISTURBED AREAS IN EXCESS OF 2 ACRES, APPROVAL OF THE INSPECTION AGENCY SHALL BE REQUESTED UPON COMPLETION OF INSTALLATION OF PERIMETER EROSION AND SEDIMENT CONTROLS, BUT BEFORE PROCEEDING WITH ANY OTHER EARTH DISTURBANCE OR GRADING. OTHER BUILDING OR GRADING INSPECTION APPROVALS MAY NOT BE AUTHORIZED UNTIL THIS INITIAL APPROVAL BY THE INSPECTION AGENCY IS MADE.
11. TRENCHES FOR THE CONSTRUCTION OF UTILITIES IS LIMITED TO THREE PIPE LENGTHS OR THAT WHICH SHALL BE BACK-FILLED AND STABILIZED WITHIN ONE WORKING DAY, WHICHEVER IS SHORTER.
12. SITE GRADING WILL BEGIN ONLY AFTER ALL PERIMETER SEDIMENT CONTROL MEASURES HAVE BEEN INSTALLED AND ARE IN A FUNCTIONING CONDITION.
13. SEDIMENT WILL BE REMOVED FROM TRAPS WHEN ITS DEPTH REACHES CLEAN OUT ELEVATION SHOWN ON THE PLANS.
14. CUT AND FILL QUANTITIES PROVIDED UNDER SITE ANALYSIS DO NOT REPRESENT BID QUANTITIES. THESE QUANTITIES DO NOT DISTINGUISH BETWEEN TOPSOIL, STRUCTURAL FILL OR EMBANKMENT MATERIAL, NOR DO THEY REFLECT CONSIDERATION OF UNDERCUTTING OR REMOVAL OF UNSUITABLE MATERIAL. THE CONTRACTOR SHALL FAMILIARIZE HIMSELF WITH SITE CONDITIONS WHICH MAY AFFECT THE WORK.

21.0 STANDARD AND SPECIFICATIONS FOR TOPSOIL

Definition

Placement of topsoil over a prepared subsoil prior to establishment of permanent vegetation.

Purpose

To provide a suitable soil medium for vegetative growth. Soils of concern have low moisture content, low nutrient levels, low pH, materials toxic to plants, and/or unacceptable soil gradation.

Conditions Where Practice Applies

I. This practice is limited to areas having 2:1 or flatter slopes where:
a. The texture of the exposed subsoil/parent material is not adequate to produce vegetative growth.
b. The soil material is so shallow that the rooting zone is not deep enough to support plants or furnish continuing supplies of moisture and plant nutrients.
c. The original soil to be vegetated contains material toxic to plant growth.
d. The soil is so acidic that treatment with limestone is not feasible.

II. For the purpose of these Standards and Specifications, areas having slopes steeper than 2:1 require special consideration and design for adequate stabilization. Areas having slopes steeper than 2:1 shall have the appropriate stabilization shown on the plans.

Construction and Material Specifications

I. Topsoil salvaged from the existing site may be used provided that it meets the standards as set forth in these specifications. Typically, the depth of topsoil to be salvaged for a given soil type can be found in the representative soil profile section in the Soil Survey published by USDA-SCS in cooperation with Maryland Agricultural Experimentation Station.

II. Topsoil Specifications - Soil to be used as topsoil must meet the following:
i. Topsoil shall be a loam, sandy loam, clay loam, silt loam, sandy clay loam, loamy sand. Other soils may be used if recommended by an agronomist or soil scientist and approved by the appropriate approval authority. Regardless, topsoil shall not be a mixture of contrasting textured subsoils and shall contain less than 5% by volume of cinders, stones, slag, coarse fragments, gravel, sticks, roots, trash, or other materials larger than 1½" in diameter.
ii. Topsoil must be free of plants or plant parts such as bermuda grass, quackgrass, Johnsongrass, nutsedge, poison ivy, thistle, or others as specified.
iii. Where subsoil is either highly acidic or composed of heavy clays, ground limestone shall be spread at the rate of 4-8 tons/acre (200-400 pounds per 1,000 square feet) prior to the placement of topsoil. Lime shall be distributed uniformly over designated areas and worked into the soil in conjunction with tillage operations as described in the following procedures.

For sites having disturbed areas under 5 acres:
i. Place topsoil (if required) and apply soil amendments as specified in 20.0 Vegetative Stabilization - Section I - Vegetative Stabilization Methods and Materials.

III. For sites having disturbed areas over 5 acres:
i. On soil meeting Topsoil specifications, obtain test results dictating fertilizer and lime amendments required to bring the soil into compliance with the following:
a. pH for topsoil shall be between 6.0 and 7.5. If the tested soil demonstrates a pH of less than 6.0, sufficient lime shall be prescribed to raise the pH to 6.5 or higher.
b. Organic content of topsoil shall be not less than 1.5 percent by weight.
c. Topsoil having soluble salt content greater than 500 parts per million shall not be used.
d. No sod or seed shall be placed on soil which has been treated with soil sterilants or chemicals used for weed control until sufficient time has elapsed (14 days min.) to permit dissipation of phyto-toxic materials.

Note: Topsoil substitutes to amendments, as recommended by a qualified agronomist or soil scientist and approved by the appropriate approval authority may be used in lieu of natural topsoil.

ii. Place topsoil (if required) and apply soil amendments as specified in 20.0 Vegetative Stabilization - Section I - Vegetative Stabilization Methods and Materials.

V. Topsoil Application
i. When topsoiling, maintain needed erosion and sediment control practices such as diversions, Grade Stabilization Structures, Earth Dikes, Slope Silt Fence and Sediment Traps and Basins.
ii. Grades on the areas to be topsoiled, which have been previously established, shall be maintained, albeit 4" - 8" higher in elevation.
iii. Topsoil shall be uniformly distributed in a 4" - 8' layer and lightly compacted to a minimum thickness of 4". Spreading shall be performed in such a manner that sodding or seeding can proceed with a minimum of additional soil preparation and tillage. Any irregularities in the surface resulting from topsoiling or other operations shall be corrected in order to prevent the formation of depressions or water pockets.
iv. Topsoil shall not be placed while the topsoil or subsoil is in a frozen or muddy condition, when the subsoil is excessively wet or in a condition that may otherwise be detrimental to proper grading and seedbed preparation.

VI. Alternative for Permanent Seeding - instead of applying the full amounts of lime and commercial fertilizer, composted sludge and amendments may be applied as specified below:
i. Composted Sludge Material for use as a soil conditioner for sites having disturbed areas over 5 acres shall be tested to prescribe amendments and for site having disturbed areas under 5 acres shall conform to the following requirements:
a. Composted sludge shall be supplied by, or originate from, a person or persons that are permitted (at the time of acquisition of the compost) by the Maryland Department of the Environment under COMAR 26.04.06.
b. Composted sludge shall contain at least 1 percent nitrogen, 1.5 percent phosphorus, and 0.2 percent potassium and have a pH of 7.0 to 8.0. If compost does not meet these requirements, the appropriate constituents must be added to meet the requirements prior to use.
c. Composted sludge shall be applied at a rate of 1 ton/1,000 square feet.
d. Composted sludge shall be amended with a potassium fertilizer applied at the rate of 4 lb/1,000 square feet, and 1/3 the normal lime application rate.

References: Guideline Specifications, Soil Preparation and Sodding. MD-VA, Pub. #1, Cooperative Extension Service, University of Maryland and Virginia Polytechnic Institutes. Revised 1973.

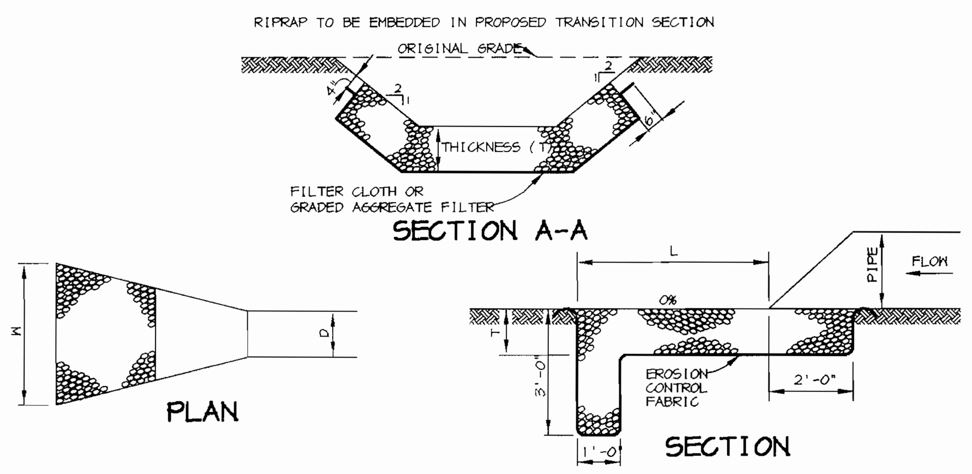

NOTE: Q_{10}, V & DEPTH CALCULATED AT END OF RIPRAP OUTLET CHANNEL.

STRUCTURE	MEDIAN STONE DIA.	LENGTH (L)	WIDTH (W)	THICKNESS (T)	Q_{10} (CFS)	V_{10} (FPS)	PARTIAL DEPTH (FT)
E-1	9.5"	10'	12'	19"	8.58	2.36	1.00
E-2	9.5"	10'	6'	19"	13.17	4.19	1.46
HW-1	9.5""	20'	8'	19"	41.43	4.22	1.87

RIPRAP OUTLET PROTECTION DETAIL

NO SCALE

CONSTRUCTION SPECIFICATIONS

1. THE SUBGRADE FOR THE FILTER, RIP-RAP, OR GABION SHALL BE PREPARED TO THE REQUIRED LINES AND GRADES. ANY FILL REQUIRED IN THE SUBGRADE SHALL BE COMPACTED TO A DENSITY OF APPROXIMATELY THAT OF THE SURROUNDING UNDISTURBED MATERIAL.
2. THE ROCK OR GRAVEL SHALL CONFORM TO THE SPECIFIED GRADING LIMITS WHEN INSTALLED RESPECTIVELY IN THE RIP-RAP OR FILTER.
3. GEOTEXTILE CLASS C OR BETTER SHALL BE PROTECTED FROM PUNCHING, CUTTING, OR TEARING. ANY DAMAGE OTHER THAN AN OCCASIONAL SMALL HOLE SHALL BE REPAIRED BY PLACING ANOTHER PIECE OF GEOTEXTILE FABRIC OVER THE DAMAGED WHETHER FOR REPAIRS OR FOR JOINING TWO PIECES OF GEOTEXTILE FABRIC SHALL BE A MINIMUM OF ONE FOOT.
4. STONE FOR THE RIP-RAP OR GABION OUTLETS MAY BE PLACED BY EQUIPMENT. THEY SHALL BE CONSTRUCTED TO THE FULL COURSE THICKNESS IN ONE OPERATION AND AND IN SUCH A MANNER AS TO AVOID DISPLACEMENT OF UNDERLYING MATERIALS. THE STONE FOR RIP-RAP OR GABION OUTLETS SHALL BE DELIVERED AND PLACED IN A MANNER THAT WILL ENSURE THAT IT IS REASONABLY HOMOGENOUS WITH THE SMALLER STONES AND SPALLS FILLING THE VOIDS BETWEEN THE LARGER STONES. RIP-RAP SHALL BE PLACED IN A MANNER TO PREVENT DAMANGE TO THE FILTER BLANKET OR GEOTEXTILE FABRIC. HAND PLACEMENT WILL BE REQUIRED TO THE EXTENT NECESSARY TO PREVENT DAMAGE TO THE PERMANENT WORKS.
5. THE STONE SHALL BE PLACED SO THAT IT BLENDS IN WITH THE EXISTING GROUND. IF THE STONE IS PLACED TOO HIGH THEN THE FLOW WILL BE FORCED OUT OF THE CHANNEL AND SCOUR ADJACENT TO THE STONE WILL OCCUR.

DEPTH: 1'

DEPTH	
0' – 15"	TOPSOIL
15" – 2'	BROWN, VERY MOIST, VERY SOFT, SILT & CLAY, WITH ORGANIC MATERIAL, TRACE FINE SAND. (ML) AASHTO: A-6
2' – 9'	GRAY-OLIVE AND BROWN, MEDIUM STIFF, CLAY & SILT, LITTLE TO SOME FINE SAND. (CL) AASHTO: A-6
9' – 11.5'	DARK GREEN, MOIST, MEDIUM DENSE, CLAYEY SILT AND FINE SAND. (ML) AASHTO: A-5

BORING B-3

NO SCALE

BEARING STRENGTH: 3,000 PSF

DEPTH	
0' – 6"	TOPSOIL
6" – 5'	BROWN-GRAY, MOIST, CLAY & SILT, TRACE FINE SAND. (CL) AASHTO: A-6
5' – 10'	BROWN, MOIST, SILT & CLAY, SOME GRAVEL AND FINE SAND. (CL) AASHTO: A-6
10' – 11'	GRAY-GREEN, MOIST, COARSE TO FINE SAND, SOME SILTY CLAY. (SM) AASHTO: A-2-7

BORING TP-3

NO SCALE

NO GROUNDWATE ENCOUNTERED

BEARING STRENGTH: 3,000 PSF

DEPTH: 6.5'

DEPTH	
0' – 6"	TOPSOIL
6" – 4'	BROWN, MOIST, CLAYEY SILT, SOME FINE SAND. (ML) AASHTO: A-4
4' – 8'	BROWN, MOIST, SILT & CLAY, AND FINE SAND. (SC) AASHTO: A-7-5
8' – 10'	BROWN, MOIST, FINE SAND, SOME SILT & CLAY AND ROCK FRAGMENTS. (SC) AASHTO: A-6 (PIECES OF IRONSTONE @ 8FT.)

BORING TP-6

NO SCALE

BEARING STRENGTH: 3,000 PSF

DEPTH: 6'

DEPTH	
0' – 1'	TOPSOIL
1' – 2'	BROWN, MOIST, SILT AND FINE SAND, SOME ORGANICS. (ML) AASHTO: A-4
2' – 5'	GRAY-BROWN, MOIST CLAY & SILT, TRACE FINE SAND. (CL) AASHTO: A-5
5' – 10'	GRAY-BROWN, VERY MOIST SILT AND FINE SAND AND GRAVEL. (SM) AASHTO: A-5

BORING TP-7

NO SCALE

BEARING STRENGTH: 3,000 PSF

SEQUENCE OF CONSTRUCTION

1. OBTAIN GRADING PERMIT.
2. INSTALL SCE, SUPER SILT FENCE AND SILT FENCE. (3 DAYS)
3. CLEAR FOR & INSTALL HW-1 THRU JB-3. THEN JB-3 TO M-4, AND FC-1 TO I-6. (3 WEEKS)
4. ROUGH GRADE SITE AND COMMENCE BUILDING CONSTRUCTION.
5. CONSTRUCT SWMF #1 AND AS SUBGRADES ARE ESTABLISHED, INSTALL STORM DRAINS, WATER AND SEWER UTILITIES. (5 WEEKS)
6. INSTALL CURB AND GUTTER THEN PAVE. (2 WEEKS)
7. APPLY TOPSOIL AND STABILIZE ALL DISTURBED AREAS IN ACCORDANCE WITH THE PERMANENT SEEDING NOTES. (3 DAYS)
8. INSTALL LIGHTS, LANDSCAPING, SIGNAGE AND SIDEWALKS AND COMPLETE BUILDING CONSTRUCTION. (3 MONTHS)
9. UPON PERMISSION OF DILP SEDIMENT CONTROL INSPECTOR, CLEAN STORM DRAIN INLETS AND FLUSH OUT PIPES.
10. UPON PERMISSION OF DILP SEDIMENT CONTROL INSPECTOR, REMOVE ALL REMAINING SEDIMENT CONTROL DEVICES. STABILIZE REMAINING DISTURBED AREAS IN ACCORDANCE WITH PERMANENT SEEDING NOTES. (1 DAY)

DETAIL 24 - STABILIZED CONSTRUCTION ENTRANCE

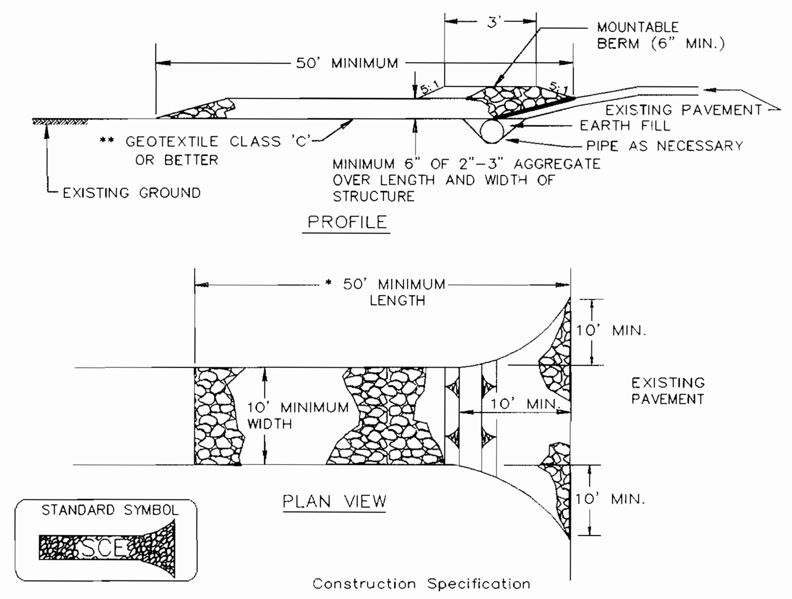

Construction Specification

1. Length – minimum of 50' (*30' for single residence lot).

2. Width – 10' minimum, should be flared at the existing road to provide a turning radius.

3. Geotextile fabric (filter cloth) shall be placed over the existing ground prior to placing stone. **The plan approval authority may not require single family residences to use geotextile.

4. Stone – crushed aggregate (2" to 3") or reclaimed or recycled concrete equivalent shall be placed at least 6" deep over the length and width of the entrance.

5. Surface Water – all surface water flowing to or diverted toward construction entrances shall be piped through the entrance, maintaining positive drainage. Pipe installed through the stabilized construction entrance shall be protected with a mountable berm with 5:1 slopes and a minimum of 6" of stone over the pipe. Pipe has to be sized according to the drainage. When the SCE is located at a high spot and has no drainage to convey a pipe will not be necessary. Pipe should be sized according to the amount of runoff to be conveyed. A 6" minimum will be required.

6. Location – A stabilized construction entrance shall be located at every point where construction traffic enters or leaves a construction site. Vehicles leaving the site must travel over the entire length of the stabilized construction entrance.

U.S. DEPARTMENT OF AGRICULTURE SOIL CONSERVATION SERVICE	PAGE F - 17 - 3	MARYLAND DEPARTMENT OF ENVIRONMENT WATER MANAGEMENT ADMINISTRATION

DETAIL 23B – AT GRADE INLET PROTECTION

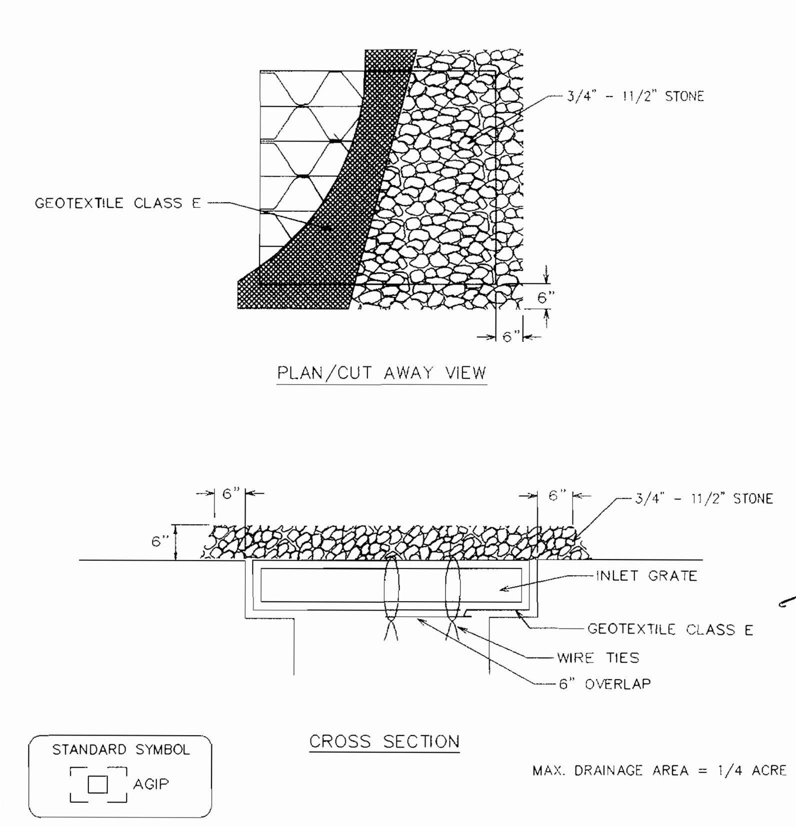

MAX. DRAINAGE AREA = 1/4 ACRE

Construction Specifications

1. Lift grate and wrap with Geotextile Class E to completely cover all openings, then set grate back in place.

2. Place 3/4" to 11/2" stone, 4"-6" thick on the grate to secure the fabric and provide additional filtration.

U.S. DEPARTMENT OF AGRICULTURE SOIL CONSERVATION SERVICE	PAGE E - 16 - 5A	MARYLAND DEPARTMENT OF ENVIRONMENT WATER MANAGEMENT ADMINISTRATION

DETAIL 33 - SUPER SILT FENCE

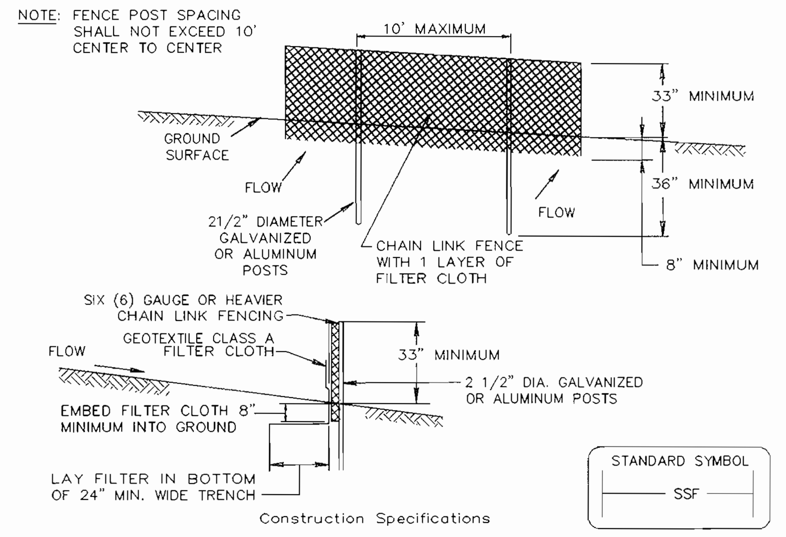

Construction Specifications

1. Fencing shall be 42" in height and constructed in accordance with the latest Maryland State Highway (SHA) Details for Chain Link Fencing. The SHA specifications for a 6 foot fence shall be used, substituting 42" fabric and 6 foot length posts.

2. The posts do not need to be set in concrete.

3. Chain link fence shall be fastened securely to the fence posts with wire ties or staples. The lower tension wire, brace and truss rods, drive anchors and post caps are not required except on the ends of the fence. The chain link fencing shall be six (6) gauge or heavier.

4. Filter cloth shall be fastened securely to the chain link fence with ties spaced every 24" at the top and mid section.

5. Filter cloth shall be embedded a minimum of 8" into the ground.

6. When two sections of geotextile fabric adjoin each other, they shall be overlapped by 6" and folded.

7. Maintenance shall be performed as needed and silt buildups removed when "bulges" develop in the silt fence, or when silt reaches 50% of fence height

U.S. DEPARTMENT OF AGRICULTURE SOIL CONSERVATION SERVICE	PAGE H - 26 - 3	MARYLAND DEPARTMENT OF ENVIRONMENT WATER MANAGEMENT ADMINISTRATION

DETAIL 23C - CURB INLET PROTECTION

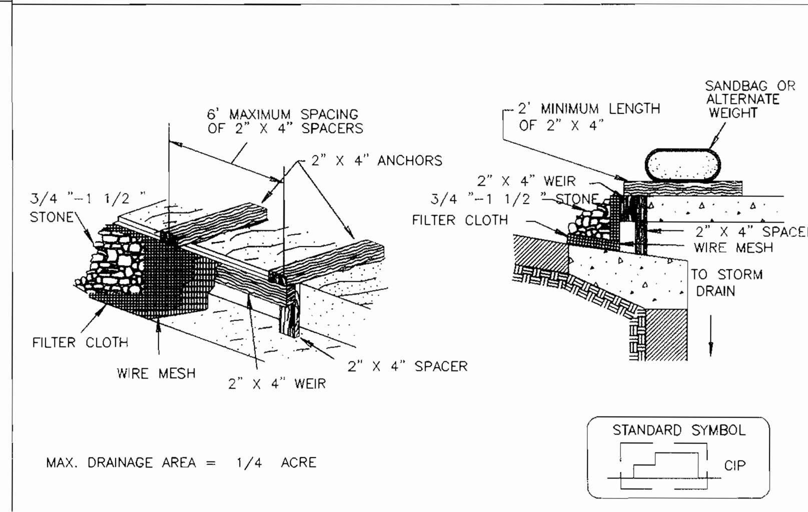

MAX. DRAINAGE AREA = 1/4 ACRE

Construction Specifications

1. Attach a continuous piece of wire mesh (30" minimum width by throat length plus 4') to the 2" x 4" weir (measuring throat length plus 2') as shown on the standard drawing.

2. Place a continuous piece of Geotextile Class E the same dimensions as the wire mesh over the wire mesh and securely attach it to the 2" x 4" weir.

3. Securely nail the 2" X 4" weir to a 9" long vertical spacer to be located between the weir and the inlet face (max. 4' apart).

4. Place the assembly against the inlet throat and nail (minimum 2' lengths of 2" x 4" to the top of the weir at spacer locations). These 2" x 4" anchors shall extend across the inlet top and be held in place by sandbags or alternate weight.

5. The assembly shall be placed so that the end spacers are a minimum 1' beyond both ends of the throat opening.

6. Form the 1/2 " x 1/2 " wire mesh and the geotextile fabric to the concrete gutter and against the face of the curb on both sides of the inlet. Place clean 3/4 " x 1 1/2 " stone over the wire mesh and geotextile in such a manner to prevent water from entering the inlet under or around the geotextile.

7. This type of protection must be inspected frequently and the filter cloth and stone replaced when clogged with sediment.

8. Assure that storm flow does not bypass the inlet by installing a temporary earth or asphalt dike to direct the flow to the inlet.

U.S. DEPARTMENT OF AGRICULTURE SOIL CONSERVATION SERVICE	PAGE E - 16 - 5B	MARYLAND DEPARTMENT OF ENVIRONMENT WATER MANAGEMENT ADMINISTRATION

DETAIL 22 - SILT FENCE

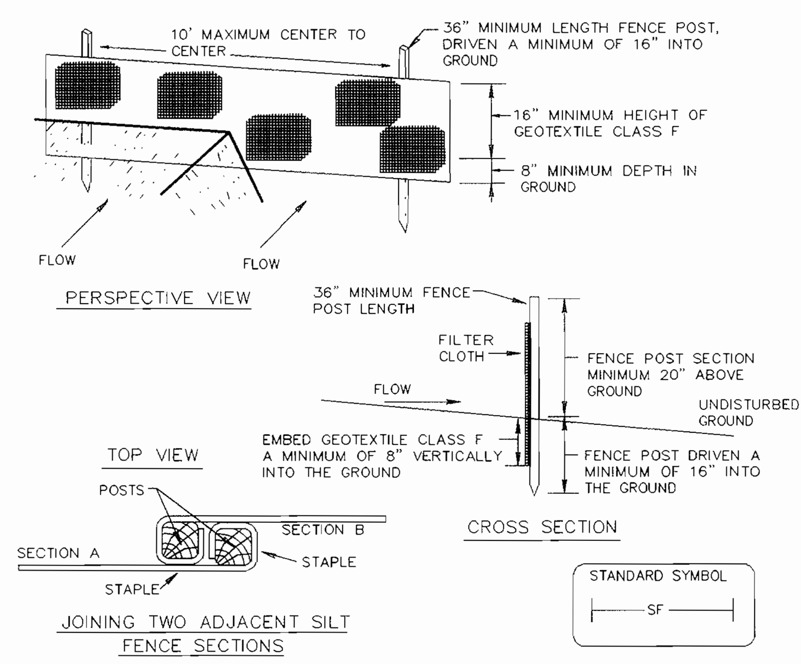

Construction Specifications

1. Fence posts shall be a minimum of 36" long driven 16" minimum into the ground. Wood posts shall be 11/2" x 11/2" square (minimum) cut, or 13/4" diameter (minimum) round and shall be of sound quality hardwood. Steel posts will be standard T or U section weighting not less than 1.00 pond per linear foot.

2. Geotextile shall be fastened securely to each fence post with wire ties or staples at top and mid-section and shall meet the following requirements for Geotextile Class F:

Tensile Strength	50 lbs/in (min.)	Test: MSMT 509
Tensile Modulus	20 lbs/in (min.)	Test: MSMT 509
Flow Rate	0.3 gal ft ²/ minute (max.)	Test: MSMT 322
Filtering Efficiency	75% (min.)	Test: MSMT 322

3. Where ends of geotextile fabric come together, they shall be overlapped, folded and stapled to prevent sediment bypass.

4. Silt Fence shall be inspected after each rainfall event and maintained when bulges occur or when sediment accumulation reached 50% of the fabric height.

F:\PROJECT\HOCO\BLOCKS\FILTER_BAG

U.S. DEPARTMENT OF AGRICULTURE SOIL CONSERVATION SERVICE	PAGE E - 15 - 3	MARYLAND DEPARTMENT OF ENVIRONMENT WATER MANAGEMENT ADMINISTRATION

30.0 – DUST CONTROL

DEFINITION

CONTROLLING DUST BLOWING AND MOVEMENT ON CONSTRUCTION SITES AND ROADS.

PURPOSE

TO PREVENT BLOWING AND MOVEMENT OF DUST FROM EXPOSED SOIL SURFACES, REDUCE ON AND OFF-SITE DAMAGE, HEALTH HAZARDS, AND IMPROVE TRAFFIC SAFETY.

CONDITIONS WHERE PRACTICE APPLIES

THIS PRACTICE IS APPLICABLE TO AREAS SUBJECT TO DUST BLOWING AND MOVEMENT WHERE ON OFF-SITE DAMAGE IS LIKELY WITHOUT TREATMENT.

SPECIFICATIONS

TEMPORARY METHODS

1. MULCHES – SEE STANDARDS FOR VEGETATIVE STABILIZATION WITH MULCHES ONLY. MULCH SHOULD BE CRIMPED OR TACKED TO PREVENT BLOWING.
2. VEGATATIVE COVER – SEE STANDARDS FOR TEMPORARY VEGETATIVE COVER.
3. TILLAGE – TO ROUGHEN SURFACE AND BRING CLODS TO THE SURFACE. THIS IS AN EMERGENCY MEASURE WHICH SHOULD BE USED BEFORE SOIL BLOWING STARTS. BEGIN PLOWING ON WINDWARD SIDE OF SITE. CHISEL-TYPE PLOWS SPACED ABOUT 12" APART, SPRING-TOOTHED HARROWS, AND SIMILIAR PLOWS ARE EXAMPLES OF EQUIPMENT WHICH MAY PRODUCE THE DESIRED EFFECT.
4. IRRIGATION – THIS IS GENERALLY DONE AS AN EMERGENGY TREATMENT. SITE IS SPRINKLED WITH WATER UNTIL THE SURFACE IS MOIST. REPEAT AS NEEDED. AT NO TIME SHOULD THE SITE BE IRRIGATED TO THE POINT THAT RUNOFF BEGINS TO FLOW.
5. BARRIERS – SOLID BOARD FENCES, SILT FENCES, SNOW FENCES, BURLAP FENCES, STRAW BALES, AND SIMILAR MATERIAL CAN BE USED TO CONTROL AIR CURRENTS AND SOIL BLOWING. BARRIERS PLACED AT RIGHT ANGLES TO PREVAILING CURRENTS AT INTERVALS OF ABOUT 10 TIMES THEIR HEIGHT ARE EFFECTIVE IN CONTROLLING SOIL BLOWING.
6. CALCIUM CHLORIDE – APPLY AT RATES THAT WILL KEEP SURFACE MOIST. MAY NEED RETREATMENT.

PERMANENT METHODS

1. PERMANENT VEGETATION – SEE STANDARDS FOR PERMANENT VEGETATIVE COVER, AND PERMANENT STABILIZATION WITH SOD. EXISTING TREES OR LARGE SHRUBS MAY AFFORD VALUABLE PROTECTION IF LEFT IN PLACE.
2. TOPSOILING – COVERING WITH LESS EROSIVE SOIL MATERIALS. SEE STANDARDS FOR TOPSOILING.
3. STONE – COVER SURFACE WITH CRUSHED STONE OR COARSE GRAVEL.

REFERENCES

1. AGRICULTURE HANDBOOK 346. WIND EROSION FORCES IN THE UNITED STATES AND THEIR USES IN PREDICTING SOIL LOSS.
2. AGRICULTURE INFORMATION BULLETIN 354. HOW TO CONTROL WIND EROSION, USDA–ARS.

U.S. DEPARTMENT OF AGRICULTURE SOIL CONSERVATION SERVICE	PAGE H - 30 - 1	MARYLAND DEPARTMENT OF ENVIRONMENT WATER MANAGEMENT ADMINISTRATION

AS-BUILT CERTIFICATION

STATE OF MARYLAND AIMEE C. REMINGTON No. 29923 PROFESSIONAL ENGINEER

Aimee C. Remington
AIMEE C. REMINGTON #29923 — 10.12.05 DATE

BY THE DEVELOPER :

I/WE CERTIFY THAT ALL DEVELOPMENT AND CONSTRUCTION WILL BE DONE ACCORDING TO THIS PLAN, AND THAT ANY RESPONSIBLE PERSONNEL INVOLVED IN THE CONSTRUCTION PROJECT WILL HAVE A CERTIFICATE OF ATTENDANCE AT A DEPARTMENT OF THE ENVIRONMENT APPROVED TRAINING PROGRAM FOR THE CONTROL OF SEDIMENT AND EROSION BEFORE BEGINNING THE PROJECT. I ALSO AUTHORIZE PERIODIC ON-SITE INSPECTIONS BY THE HOWARD SOIL CONSERVATION DISTRICT.

DEVELOPER — 10-17-01 DATE

BY THE ENGINEER :

I CERTIFY THAT THIS PLAN FOR EROSION AND SEDIMENT CONTROL REPRESENTS A PRACTICAL AND WORKABLE PLAN BASED ON MY PERSONAL KNOWLEDGE OF THE SITE CONDITIONS AND THAT IT WAS PREPARED IN ACCORDANCE WITH THE REQUIREMENTS OF THE HOWARD SOIL CONSERVATION DISTRICT.

ENGINEER — 10.9.01 DATE

THESE PLANS HAVE BEEN REVIEWED FOR THE HOWARD SOIL CONSERVATION DISTRICT AND MEET THE TECHNICAL REQUIREMENTS FOR SOIL EROSION AND SEDIMENT CONTROL.

Jim Myers
NATURAL RESOURCES CONSERVATION SERVICE — 10/24/01 DATE

THIS DEVELOPMENT PLAN IS APPROVED FOR SOIL EROSION AND SEDIMENT CONTROL BY THE HOWARD SOIL CONSERVATION DISTRICT.

John R Robertson
HOWARD SOIL CONSERVATION DISTRICT — 10/24/01 DATE

APPROVED : HOWARD COUNTY DEPARTMENT OF PLANNING AND ZONING.

DIRECTOR — 11/2/01 DATE

CHIEF, DEVELOPMENT ENGINEERING DIVISION — 10/26/01 DATE

CHIEF, DIVISION OF LAND DEVELOPMENT JH — 10/31/01 DATE

DATE	NO.	REVISION

OWNER/DEVELOPER

SDC, INC.
8480 BALTIMORE NATIONAL PIKE
ELLICOTT CITY, MARYLAND 21043
410-465-4244

PROJECT — MEADOWRIDGE BUSINESS PARK PARCEL R-1
A WAREHOUSE BUILDING

AREA — ZONED M-1 PARCEL R-1
TAX MAP 37, BLOCK 23 & TAX MAP 43, BLOCK 4 & 5
1st ELECTION DISTRICT
HOWARD COUNTY, MARYLAND

TITLE — SEDIMENT CONTROL NOTES AND DETAILS

RIEMER MUEGGE & ASSOCIATES INC
ENGINEERING • ENVIRONMENTAL SERVICES • PLANNING • SURVEYING
8818 Centre Park Drive, Columbia, MD 21045
tel 410.997.8900 fax 410.997.9282

10.9.01
DATE

CHRISTOPHER J. REID #19949

DESIGNED BY :	CJR
DRAWN BY:	DAM
PROJECT NO :	00036/ SDP5.DWG
DATE :	SEPTEMBER 21, 2001
SCALE :	AS SHOWN
DRAWING NO.	4 OF 11

AS-BUILT

SDP-00-144

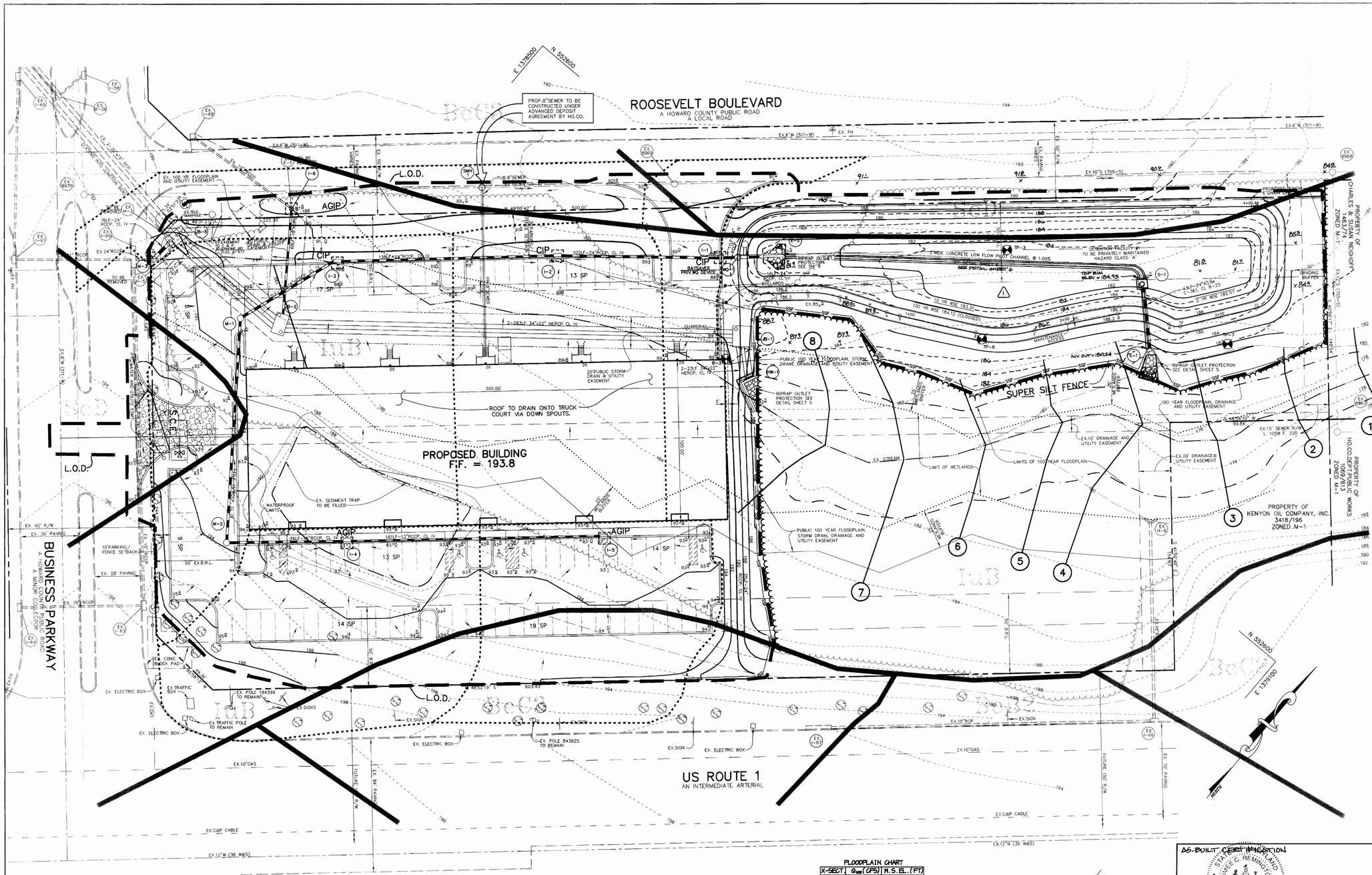

LEGEND

- DRAINAGE AREA DIVIDE
- SF — SF — SF SILT FENCE
- SSF — SSF — SSF SUPER SILT FENCE
- L.O.D. LIMIT OF DISTURBANCE
- IP INLET PROTECTION
- SOIL LINE
- 100-YR FLOODPLAIN LIMITS
- WETLANDS LIMITS
- EXISTING STREAM
- FILTER BAGS

BY THE DEVELOPER :

I/WE CERTIFY THAT ALL DEVELOPMENT AND CONSTRUCTION WILL BE DONE ACCORDING TO THIS PLAN, AND THAT ANY RESPONSIBLE PERSONNEL INVOLVED IN THE CONSTRUCTION PROJECT WILL HAVE A CERTIFICATE OF ATTENDANCE AT A DEPARTMENT OF THE ENVIRONMENT APPROVED TRAINING PROGRAM FOR THE CONTROL OF SEDIMENT AND EROSION BEFORE BEGINNING THE PROJECT. I ALSO AUTHORIZE PERIODIC ON-SITE INSPECTIONS BY THE HOWARD SOIL CONSERVATION DISTRICT.

DEVELOPER — DATE 10-17-01

BY THE ENGINEER :

I CERTIFY THAT THIS PLAN FOR EROSION AND SEDIMENT CONTROL REPRESENTS A PRACTICAL AND WORKABLE PLAN BASED ON MY PERSONAL KNOWLEDGE OF THE SITE CONDITIONS AND THAT IT WAS PREPARED IN ACCORDANCE WITH THE REQUIREMENTS OF THE HOWARD SOIL CONSERVATION DISTRICT.

ENGINEER — DATE 10.9.01

THESE PLANS HAVE BEEN REVIEWED FOR THE HOWARD SOIL CONSERVATION DISTRICT AND MEET THE TECHNICAL REQUIREMENTS FOR SOIL EROSION AND SEDIMENT CONTROL.

NATURAL RESOURCES CONSERVATION SERVICE — DATE 10/24/01

THIS DEVELOPMENT PLAN IS APPROVED FOR SOIL EROSION AND SEDIMENT CONTROL BY THE HOWARD SOIL CONSERVATION DISTRICT.

HOWARD SOIL CONSERVATION DISTRICT — DATE 10/24/01

APPROVED : HOWARD COUNTY DEPARTMENT OF PLANNING AND ZONING.

DIRECTOR — DATE 11/2/01

CHIEF, DEVELOPMENT ENGINEERING DIVISION — DATE 10/26/01

CHIEF, DIVISION OF LAND DEVELOPMENT — DATE 10/31/01

DATE	NO.	REVISION
10-05-05	1	ADDED AS-BUILT DETENTION FACILITY INFO

OWNER/DEVELOPER

SDC, INC.
8480 BALTIMORE NATIONAL PIKE
ELLICOTT CITY, MARYLAND 21043
410-465-4244

PROJECT MEADOWRIDGE BUSINESS PARK
PARCEL R-1
A WAREHOUSE BUILDING

AREA ZONED M-1 PARCEL R-1
TAX MAP 37, BLOCK 23 & TAX MAP 43, BLOCK 4 & 5
1st ELECTION DISTRICT
HOWARD COUNTY, MARYLAND

TITLE GRADING, SEDIMENT CONTROL PLAN AND DRAINAGE AREA MAP

AS-BUILT CERTIFICATION
AIMEE C. REMINGTON #29923 — DATE 10.12.05

RIEMER MUEGGE & ASSOCIATES INC
ENGINEERING • ENVIRONMENTAL SERVICES • PLANNING • SURVEYING
8818 Centre Park Drive, Columbia, MD 21045
tel 410.997.8900 fax 410.997.9282

10.9.01 — DATE
CHRISTOPHER J. REID #19949

DESIGNED BY : CJR
DRAWN BY: DAM/K.E.V.
PROJECT NO : 00036/SDP3.DWG
DATE : SEPTEMBER 21, 2001
SCALE : 1" = 30'
DRAWING NO. 3 OF 11

AS-BUILT — SDP-00-144

FLOODPLAIN CHART

X-SECT.	Q_{100} (CFS)	W.S.EL. (FT)
1	154.64	179.21
2	154.64	179.09
3	154.64	179.02
4	134.60	179.50
5	134.60	180.48
6	134.60	181.12
7	134.60	182.02
8	134.60	182.68

DAM & DATA SWMF #1

1	N 481816.71 E 866282.30	
2	CL STA 0+34.24	1 - 2 N 48°12'56" E
3	CL STA 0+54.57	2 - 3 R = 60.00'
4	CL STA 0+85.24	3 - 4 N 67°37'31" E
5	CL STA 0+94.00	4 - 5 R = 100.00'
6	CL STA 1+42.79	5 - 6 S 62°36'37"H
7	CL STA 1+80.01	6 - 7 R = 75.00'
8	CL STA 2+33.56	7 - 8 R = 358.37'
9	CL STA 2+66.46	8 - 9 R = 50.00'
10	CL STA 2+74.25	9 - 10 R = 10.00'
11	CL STA 3+23.18	10 - 11 R = 545.00'
12	CL STA 3+46.16	11 - 12 R = 18.00'
13	CL STA 3+79.67	12 - 13 N 84°02'15" H
14	CL STA 4+00.40 N 482061.51 E 866494.15	13 - 14 R = 13.00'

SOILS CHART

BeB2	BELTSVILLE SILT LOAM, 1 TO 5 PERCENT SLOPES, MODERATELY ERODED
BeC2	BELTSVILLE SILT LOAM, 5 TO 10 PERCENT SLOPES, MODERATELY ERODED
BeC3	BELTSVILLE SILT LOAM, 5 TO 10 PERCENT SLOPES, SEVERELY ERODED
IuB	IUKA LOAM, LOCAL ALLUVIUM, 1 TO 5 PERCENT SLOPES
SsD	SANDY AND CLAYEY LAND, MODERATELY SLOPING

DRAINAGE DATA

INLET NOS.	AREA IN ACRES	'C' FACTOR	PERCENT IMPERVIOUS
1	0.24	0.78	88
2	0.54	0.76	85
3	0.89	0.76	85
4	0.51	0.49	45
5	0.41	0.52	49
6	0.33	0.45	39

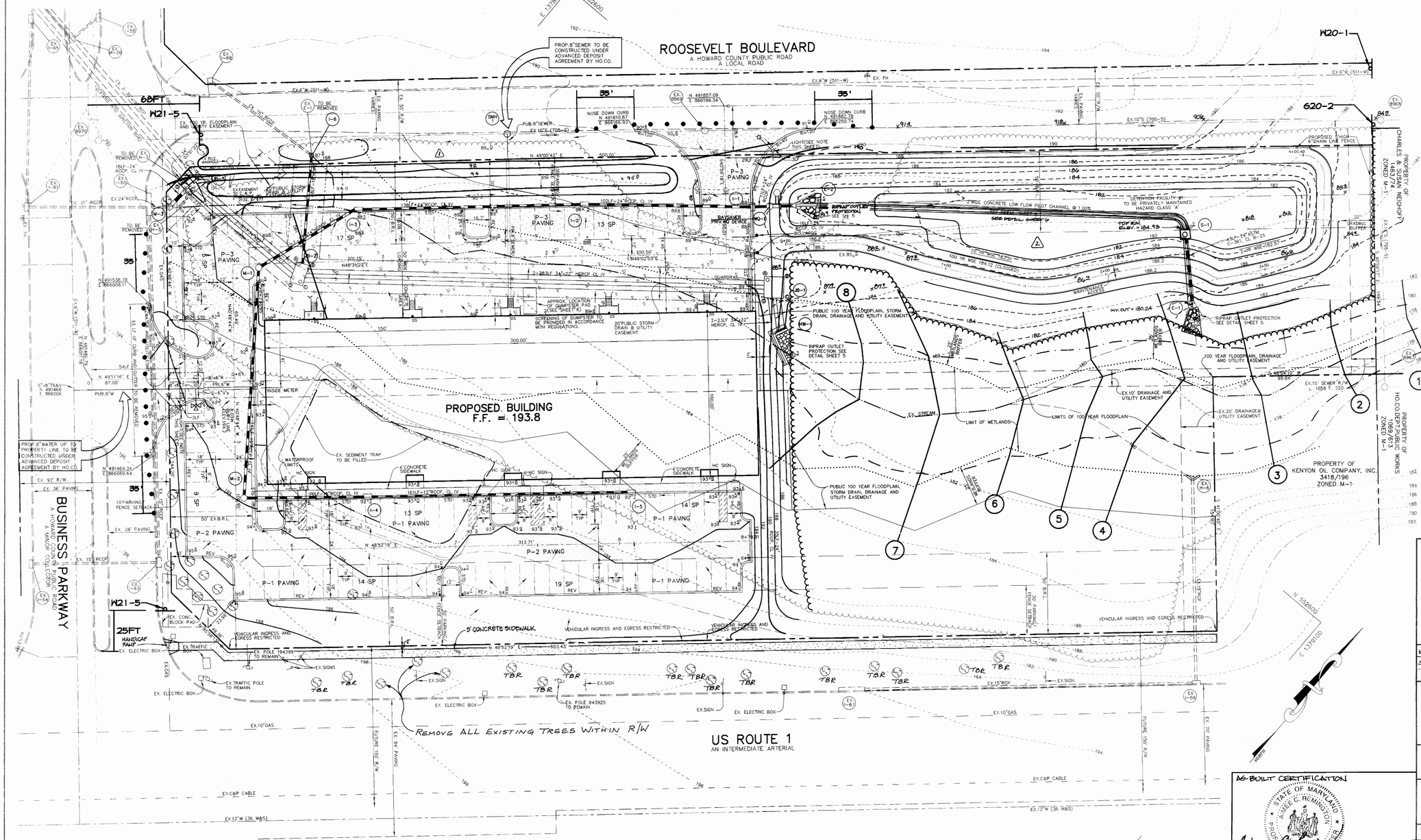

LEGEND

CONCRETE

P-1 PAVING

P-2 PAVING

P-3 PAVING

STD-REV — STANDARD CURB - REVERSE CURB

STREET LIGHT (SINGLE)-SEE NOTE 1

TRAFFIC CONTROL SIGNAGE LEGEND

SIGN

TEMPORARY BARRIER

SHOULDER WORK
W21-5
30"x 30"

ROAD WORK AHEAD
W20-1
30"x 30"

END ROAD WORK
G20-2
60"x 24"

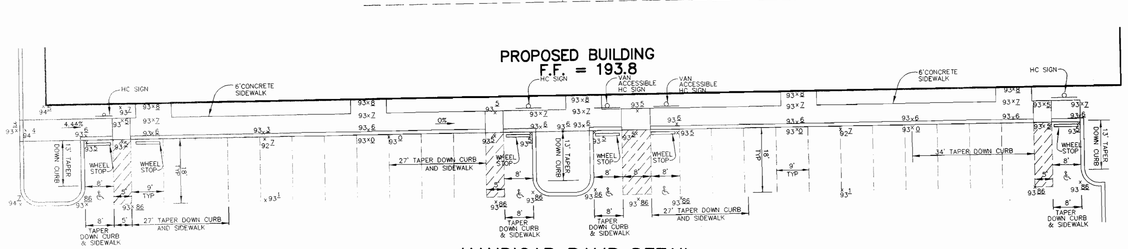

HANDICAP RAMP DETAIL

SCALE: 1" =20

FLOODPLAIN CHART		
X-SECT.	Q_{100} (CFS)	W.S.EL.(FT)
1	154.64	179.21
2	154.64	179.09
3	154.64	179.02
4	134.68	179.50
5	134.68	180.48
6	134.68	181.12
7	134.68	182.02
8	134.68	182.68

SWMF #1			
SUMMARY CHART DA TO DESIGN POINT			
STORM	2 YR.	10 YR.	100 YR.
ALLOWABLE RELEASE RATE (CFS)	60.48	106.69	-
DISCHARGE (CFS)	59.17	105.21	-
ELEVATION (FEET)	182.57	183.31	184.12*
STORAGE (ACRE-FEET)	0.287	0.464	0.664

* CLOGGED CONDITIONS

NOTES:

1. STREET LIGHTS TO BE 250 WATT HPS VAPOR PENDANT FIXTURE (CUTOFF)MOUNTED AT 30' ON A BRONZE FIBERGLASS POLE USING 12' ARM, ARM RADIAL TO FILLET.
   STREET LIGHT ON ROOSEVELT BLVD. IS TO BE LOCATED AT STATION 0+27.88, 29LF TO THE LEFT.
   STREET LIGHT ON BUSINESS PARKWAY IS TO BE LOCATED AT STATION 0+53.75, 24LF TO THE RIGHT.
2. ALL EXTERIOR LIGHTING SHALL CONFORM TO ZONING REGULATIONS SECTION 134.
3. ALL CURB RADII ARE 5' UNLESS OTHERWISE LABELED.
4. ALL DIMENSIONS ARE TO FACE OF CURB OR BUILDING UNLESS OTHERWISE LABELED.
5. * LIMITS OF STD/REV CURB AND GUTTER.
6. FOR BUILDING LOCATION DIMENSIONS SEE SHEET 1.
7. NO TRUCK LOADING AREA MAY EXTEND INTO THE 50' STRUCTURE AND USE SETBACK.
8. TBR = TO BE REMOVED

AS-BUILT CERTIFICATION

STATE OF MARYLAND — AIMEE C. REMINGTON — No. 29923

AIMEE C. REMINGTON (REGISTERED PROFESSIONAL ENGINEER) 10.12.05 DATE

APPROVED : HOWARD COUNTY DEPARTMENT OF PLANNING AND ZONING.

DIRECTOR — DATE 11/2/01

CHIEF, DEVELOPMENT ENGINEERING DIVISION — DATE 10/26/01

CHIEF, DIVISION OF LAND DEVELOPMENT — DATE 10/31/01

DATE	NO.	REVISION
10-05-05	2	ADDED AS-BUILT DETENTION FACILITY INFO
5-03-04	1	ADDED SIDEWALK ON RTE 1, BERM GRADING — S.E.L.

OWNER/DEVELOPER

SDC, INC.
8480 BALTIMORE NATIONAL PIKE
ELLICOTT CITY, MARYLAND 21043
410-465-4244

PROJECT — MEADOWRIDGE BUSINESS PARK
PARCEL R-1
A WAREHOUSE BUILDING

AREA — ZONED M-1 PARCEL R-1
TAX MAP 37, BLOCK 23 & TAX MAP 43, BLOCK 4 & 5
1st ELECTION DISTRICT
HOWARD COUNTY, MARYLAND

TITLE — SITE DEVELOPMENT PLAN

RIEMER MUEGGE & ASSOCIATES INC
ENGINEERING • ENVIRONMENTAL SERVICES • PLANNING • SURVEYING
8818 Centre Park Drive, Columbia, MD 21045
tel 410.997.8900 fax 410.997.9282

10.9.01 DATE

CHRISTOPHER J. REID #19949

DESIGNED BY :	CJR
DRAWN BY:	DAM/K.E.V.
PROJECT NO :	00036/ SDP2.DWG
DATE :	SEPTEMBER 21, 2001
SCALE :	1" = 30'
DRAWING NO.	2 OF 11

AS-BUILT

SDP-00-144

SITE DEVELOPMENT PLAN

MEADOWRIDGE BUSINESS PARK

PARCEL R-1

1st ELECTION DISTRICT

HOWARD COUNTY, MARYLAND

SHEET INDEX

NO	DESCRIPTION
1	TITLE SHEET
2	SITE DEVELOPMENT PLAN
3	GRADING, SEDIMENT CONTROL PLAN AND DRAINAGE AREA MAP
4	SEDIMENT CONTROL NOTES AND DETAILS
5	DETAILS AND PROFILES
6	STORMWATER MANAGEMENT DETAILS
7	WATER QUALITY NOTES AND DETAILS
8	DETAILS
9	LANDSCAPE PLAN
10	LANDSCAPE SCHEDULES AND DETAILS
11	STRIPING PLAN

GENERAL NOTES

1. ALL CONSTRUCTION SHALL BE IN ACCORDANCE WITH THE LATEST STANDARDS AND SPECIFICATIONS OF HOWARD COUNTY PLUS MSHA STANDARDS AND SPECIFICATIONS, IF APPLICABLE.
2. THE CONTRACTOR SHALL NOTIFY THE DEPARTMENT OF PUBLIC WORKS/BUREAU OF ENGINEERING/ CONSTRUCTION INSPECTION DIVISION AT (410) 313-1880 AT LEAST FIVE (5) WORKING DAYS PRIOR TO THE START OF WORK.
3. THE CONTRACTOR SHALL NOTIFY "MISS UTILITY" AT 1-800-257-7777 AY LEAST 48 HOURS PRIOR TO ANY EXCAVATION WORK BEING DONE.
4. TRAFFIC CONTROL DEVICES, MARKINGS, AND SIGNING SHALL BE IN ACCORDANCE WITH THE LATEST EDITION OF THE MANUAL ON UNIFORM TRAFFIC CONTROL DEVICES (MUTCD). ALL STREET AND REGULATORY SIGNS SHALL BE IN PLACE PRIOR TO THE PLACEMENT OF ANY ASPHALT.
5. ALL PLAN DIMENSIONS ARE TO FACE OF CURB AND FACE OF BUILDING UNLESS OTHERWISE NOTED.
6. THE COORDINATES SHOWN HEREON ARE BASED UPON THE HOWARD COUNTY GEODETIC CONTROL WHICH IS BASED UPON THE MARYLAND STATE PLANE COORDINATE SYSTEM. HOWARD COUNTY MONUMENT NOS. 43B6 AND 43B2 WERE USED FOR THIS PROJECT.
7. WATER IS PUBLIC. CONTRACT NO. 511-W. NEW WATER SERVICE TO BE UNDER ADO AGREEMENT.
8. SEWER IS PUBLIC. SEWER DRAINAGE AREA: PATAPSCO CONTRACT NO. 705-S. NEW SEWER SERVICE TO BE UNDER ADO AGREEMENT.
9. APPROXIMATE LOCATION OF EXISTING UTILITIES ARE SHOWN. THE CONTRACTOR SHALL TAKE ALL NECESSARY PRECAUTIONS TO PROTECT THE EXISTING UTILITIES AND MAINTAIN UNINTERRUPTED SERVICE. ANY DAMAGE INCURRED DUE TO CONTRACTOR'S OPERATION SHALL BE REPAIRED IMMEDIATELY AT THE CONTRACTOR'S EXPENSE. EXISTING UTILITIES ARE SHOWN BASED ON THE BEST
10. A 100-YEAR FLOODPLAIN STUDY WAS PREPARED BY RIEMER MUEGGE & ASSOCIATES DATED AUGUST 2000.
11. THE WETLANDS DELINEATION FOR THIS PROJECT IS FROM RECORDED PLAT 9047.
12. AN APFO TRAFFIC STUDY FOR THIS PROJECT WAS PREPARED BY LEE CUNNINGHAM & ASSOCIATES DATED MAY, 2001. ACCORDING TO THE TRAFFIC STUDY A RIGHT TURN LANE NEEDS TO BE PROVIDED AT ROUTE 1/ROUTE 103 INTERSECTION. LANE CONSTRUCTION WILL COMMENCE PRIOR TO BUILDING CONSTRUCTION.
13. A NOISE STUDY IS NOT REQUIRED FOR THIS PROJECT.
14. THE BOUNDARY SURVEY FOR THIS PROJECT IS BASED ON PREVIOUSLY RECORDED PLAT NO. 9047 AND 14861.
15. SUBJECT PROPERTY ZONED M-1 PER 10-18-93 COMPREHENSIVE ZONING PLAN.
16. ALL ELEVATIONS SHOWN ARE BASED ON THE U.S.C. AND G.S. MEAN SEA LEVEL DATUM, 1929.
17. SEE DEPARTMENT OF PLANNING AND ZONING FILE NOs WP-00-33, WP-01-115, F-01-74, WP-06-17
18. THE CONTRACTOR SHALL TEST PIT EXISTING UTILITIES AT LEAST (5) DAYS BEFORE STARTING WORK SHOWN ON THESE DRAWINGS.
19. CONTRACTOR IS SOLELY RESPONSIBLE FOR CONSTRUCTION MEANS, METHODS, TECHNIQUES, SEQUENCES, PROCEDURES, AND SAFETY PRECAUTIONS AND PROGRAMS.
20. PIPE SHALL NOT BE INSTALLED BY THE CONTRACTOR UNTIL THE LENGTH CALLED FOR AT EACH STATION HAS BEEN APPROVED BY THE ENGINEER IN THE FIELD.
21. NO PIPE SHALL BE LAID UNTIL LINES OF EXCAVATION HAVE BEEN BROUGHT WITHIN 6" OF FINISHED GRADE.
22. ALL STORM DRAIN PIPE BEDDING SHALL BE CLASS 'C' AS SHOWN IN FIG. 11.4, VOLUME 1 OF HOWARD COUNTY DESIGN MANUAL UNLESS OTHERWISE NOTED.
23. ALL INLETS SHALL BE CONSTRUCTED IN ACCORDANCE WITH HOWARD COUNTY STANDARDS.
24. ALL PIPE ELEVATIONS SHOWN ARE INVERT ELEVATIONS.
25. STORM DRAIN TRENCHES WITHIN ROAD RIGHT OF WAY SHALL BE BACKFILLED AND COMPACTED IN ACCORDANCE WITH THE HOWARD COUNTY DESIGN MANUAL, VOLUME IV, i.e., STANDARD SPECIFICATIONS AND DETAILS FOR CONSTRUCTION, LATEST AMENDMENTS.
26. PROFILES STATIONS SHALL BE ADJUSTED AS NECESSARY TO CONFORM TO PLAN DIMENSIONS.
27. ALL FILL AREAS WITHIN ROADWAY AND UNDER STRUCTURES TO BE COMPACTED TO A MINIMUM OF 95% COMPACTION OF AASHTO T180.
28. THE EXISTING TOPOGRAPHY IS TAKEN FROM FIELD RUN SURVEY WITH MAXIMUM TWO FOOT CONTOUR INTERVALS PREPARED BY RIEMER MUEGGE & ASSOCIATES, INC. DATED MARCH 2000.
29. A GEOTECHNICAL STUDY WAS PREPARED BY GTA, INC. DATED JAN. 1998.
30. STORMWATER QUALITY AND QUANTITY MANAGEMENT IS PROVIDED VIA A BAYSAVER AND A DETENTION POND.
31. WP-00-33 IS A WAIVER PETITION REQUESTING PERMISSION TO WAIVE SECTION 16.116(a)(1) AND TO PERMIT GRADING WITHIN WETLAND BUFFERS AND STREAM BUFFERS AND WAS APPROVED ON FEBRUARY 14, 2000.
32. ARMY COE/MDE PERMIT TO FILL WETLANDS EXPIRES SEPTEMBER 2, 2002. PERMIT NUMBER IS #CENAB-OP-RW 90-1204-4.
33. THIS PARCEL IS PART OF A PLANNED BUSINESS PARK GREATER THAN 75 ACRES THAT WAS RECORDED PRIOR TO DECEMBER 31, 1992 AND IS THEREFORE EXEMPT FROM THE FOREST CONSERVATION ORDINANCE.
34. THERE ARE NO CEMETARIES OR BURIAL GROUNDS ON THE SITE TO THE BEST OF OUR KNOWLEDGE.
35. WP-01-115 IS A WAIVER PETITION REQUESTING PERMISSION TO WAIVE SECTION 16.156(k) TO REACTIVATE A SITE DEVELOPMENT PLAN WHICH WAS DENIED FOR FAILURE TO SUBMIT ORIGINALS (BY 3-27-01) WITHIN 180 DAYS OF THE TECHNICALLY COMPLETE LETTER DATED SEPTEMBER 28, 2000. WAIVER WAS APPROVED MAY 10, 2001, SUBJECT TO THE FOLLOWING CONDITIONS:
    - A. WITH REACTIVATION OF THIS SITE DEVELOPMENT PLAN, WP-00-33 IS ALSO REACTIVATED, SUBJECT TO THE THREE CONDITIONS STIPULATED IN THE APPROVAL LETTER DATED 2-14-00.
    - B. UPDATE THE APFO STUDY STUDY AS REQUIRED BY THE ATTACHED COMMENTS FROM DEVELOPMENT ENGINEERING DIVISION (DED).
    - C. SUBMIT A REVISED SDP WITHIN 45 DAYS OF THIS APPROVAL (BY JUNE 24, 2001) ADDRESSING ALL OUTSTANDING COMMENTS FROM DED. FOUR COMPLETE SETS OF THE SDP SHOULD BE SUBMITTED (2 FOR THE DIVISION OF LAND DEVELOPMENT, 2 FOR DED). TWO COMPLETE SETS OF ANY SUPPLEMENTAL INFORMATION REQUIRED BY DED SHOULD ALSO BE SUBMITTED IN THE PACKAGE FOR THAT DIVISION.
36. LANDSCAPE SURETY WILL BE POSTED WITH DEVELOPER'S AGREEMENT IN THE AMOUNT OF $21,600.00.

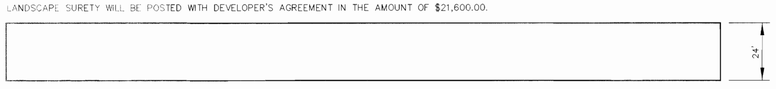

BUILDING ELEVATION
SCALE: 1" = 30'

37. WP-06-17 - A WAIVER OF SECTION 16.156 (a)(1)(i) WAS APPROVED BY THE DIRECTOR OF PLANNING AND ZONING ON SEPTEMBER 8, 2005. THE APPROVAL IS SUBJECT TO TWO CONDITIONS:
    1) SDP-00-144 IS HEREBY REACTIVATED FOR A ONE YEAR PERIOD TO APPLY FOR BUILDING PERMITS TO INITIATE CONSTRUCTION OF THE APPROVED BUILDING(S) FOR THE SUBJECT PROPERTY. THE APPLICANT SHALL COMPLY WITH ALL BUILDING PERMIT APPLICATION REQUIREMENTS OF DILP.
    2) COMPLIANCE WITH DEPT. OF ENVIRONMENTAL AND COMMUNITY PLANNING COMMENTS DATED AUGUST 17, 2005, TO ADD A SIDEWALK AND STREET TREES ALONG U.S. ROUTE 1.

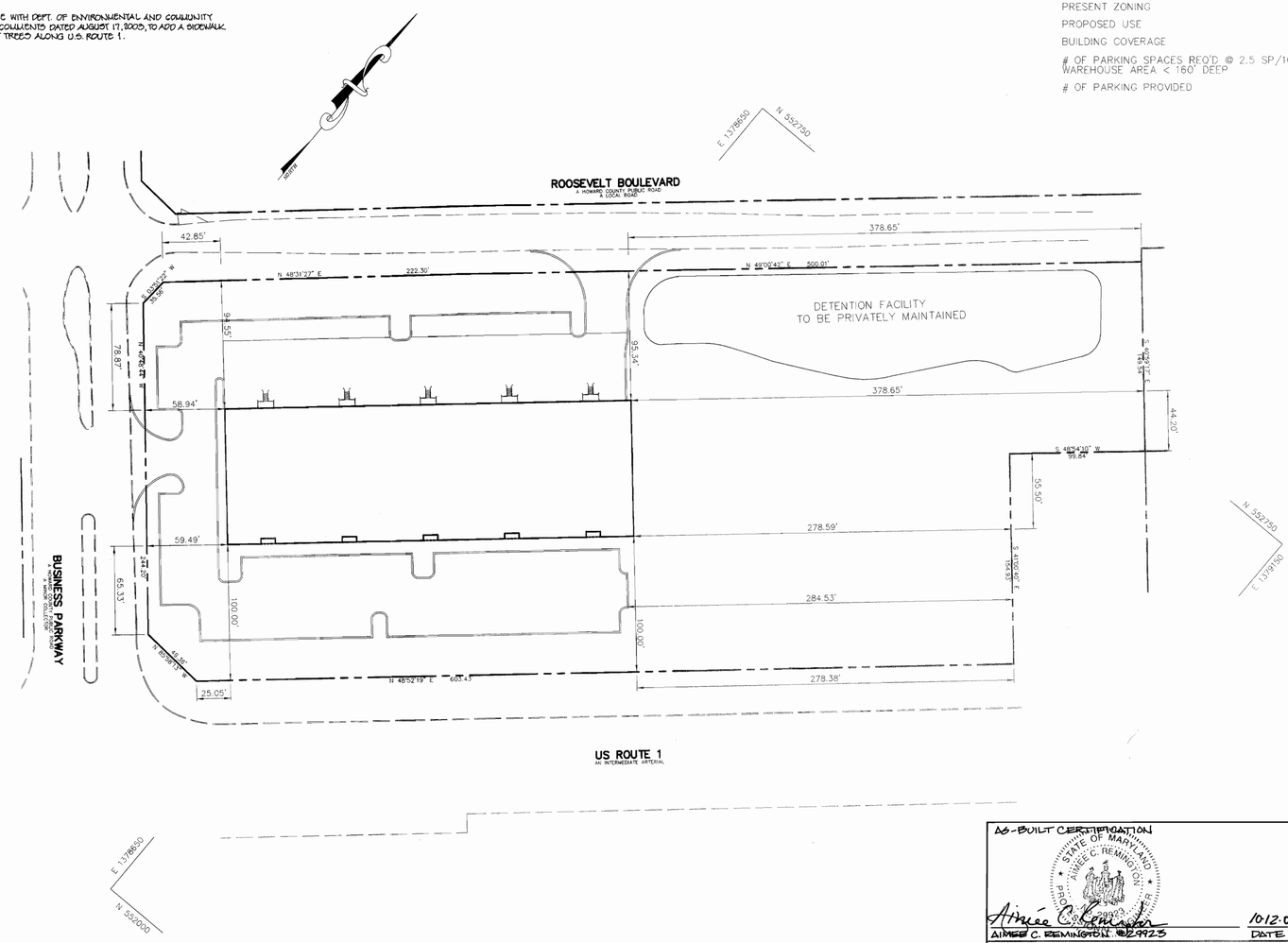

AS-BUILT CONTROL

BENCHMARKS

✓ HO. CO. SURVEY CONTROL STATION 43B6
N 550,601.59 E 1,376,866.05
ELEV. 210.61

✓ HO. CO. SURVEY CONTROL STATION 43B2
N 551,655.01 E 1,378,176.94
ELEV. 209.67

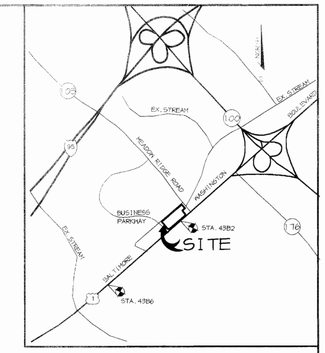

VICINITY MAP
SCALE: 1" = 2000'

SITE ANALYSIS

AREA OF PARCEL	4.62 ACRES 201,444 SF
DISTURBED AREA	3.59 ACRES 156,164 SF
PRESENT ZONING	M-1
PROPOSED USE	1 OFFICE/WAREHOUSE FACILITY (ONE STORY)
BUILDING COVERAGE	30,000 SF (15% COVERAGE)
# OF PARKING SPACES REQ'D. @ 2.5 SP/1000 SF WAREHOUSE AREA < 160' DEEP	75 SPACES
# OF PARKING PROVIDED	104 SPACES (INCLUDING 5 HC)

AS-BUILT CERTIFICATION
STATE OF MARYLAND
AIMEE C. REMINGTON
No. 22923
Aimee C. Remington 10.12.05
AIMEE C. REMINGTON #22923 DATE

ADDRESS CHART

PARCEL	STREET ADDRESS
R-1	6785 BUSINESS PARKWAY

SUBDIVISION NAME -			SECT./AREA -	PARCEL -
MEADOWRIDGE BUSINESS PARK			-	R-1
PLAT # -	BLOCK # -	ZONING -	TAX MAP NO. -	ELECT. DIST. -	CENSUS TRACT -
14861	23 4 & 5	M-1	37 43	1st	6012
WATER CODE -			SEWER CODE -	
B01			2153000	

APPROVED : HOWARD COUNTY DEPARTMENT OF PLANNING AND ZONING.

DIRECTOR	11/2/01 DATE
CHIEF, DEVELOPMENT ENGINEERING DIVISION	10/26/01 DATE
CHIEF, DIVISION OF LAND DEVELOPMENT	10/31/01 DATE

DATE	NO.	REVISION
1-10-06	1	ADDED WP-06-17 NOTE #37 WHICH STATES THAT SDP-00-144 HAS BEEN REACTIVATED AS OF 9-8-05.

OWNER/DEVELOPER
SDC, INC.
8480 BALTIMORE NATIONAL PIKE
ELLICOTT CITY, MARYLAND 21043
410-465-4244

PROJECT MEADOWRIDGE BUSINESS PARK
PARCEL R-1
A WAREHOUSE BUILDING

AREA ZONED M-1 PARCEL R-1
TAX MAP 37, BLOCK 23 & TAX MAP 43, BLOCK 4 & 5
1st ELECTION DISTRICT
HOWARD COUNTY, MARYLAND

TITLE
TITLE SHEET

RIEMER MUEGGE & ASSOCIATES INC
ENGINEERING • ENVIRONMENTAL SERVICES • PLANNING • SURVEYING
8818 Centre Park Drive, Columbia, MD 21045
tel 410.997.8900 fax 410.997.9282

10.9.01
DATE
STATE OF MARYLAND
CHRISTOPHER J. REID
No. 19949
CHRISTOPHER J. REID #19949

DESIGNED BY :	CJR
DRAWN BY:	K.E.V.
PROJECT NO :	00036/ SDP1.DWG
DATE :	SEPTEMBER 21, 2001
SCALE :	1"=50'
DRAWING NO.	1 OF 11

AS-BUILT

SDP-00-144