ROADWAYS, STORM DRAINAGE AND STORMWATER MANAGEMENT

LYNDONBROOK

3rd ELECTION DISTRICT

HOWARD COUNTY, MARYLAND

GENERAL NOTES

1. ALL CONSTRUCTION SHALL BE IN ACCORDANCE WITH THE LATEST STANDARDS AND SPECIFICATIONS OF HOWARD COUNTY, PLUS MSHA STANDARDS AND SPECIFICATIONS, IF APPLICABLE.
2. THE CONTRACTOR SHALL NOTIFY THE DEPARTMENT OF PUBLIC WORKS CONSTRUCTION INSPECTION DIVISION AT (410) 313-1880 AT LEAST 24 HOURS PRIOR TO THE START OF WORK.
3. THE CONTRACTOR SHALL NOTIFY "MISS UTILITY" AT 1-800-257-7777 AT LEAST 48 HOURS PRIOR TO ANY EXCAVATION WORK.
4. PROJECT BACKGROUND :
   LOCATION : TAX MAP 15 - PARCEL 40
   ZONING : RR-DEO
   TOTAL TRACT AREA : 64.55 AC.
   NUMBER OF PROPOSED LOTS : 30 CLUSTER LOTS
   DATE PRELIMINARY PLAN APPROVED :
   DPZ REFERENCE # : S-96-01, WP-96-37, P-96-22, WP-97-126
5. TRAFFIC CONTROL DEVICES, MARKINGS, AND SIGNING SHALL BE IN ACCORDANCE WITH THE MOST CURRENT EDITION OF THE MANUAL ON UNIFORM TRAFFIC CONTROL DEVICES (MUTCD). ALL STREET AND REGULATORY SIGNS SHALL BE IN PLACE PRIOR TO THE PLACEMENT OF ANY ASPHALT.
6. TOPOGRAPHY TAKEN FROM FIELD RUN SURVEY BY TSA GROUP, INC., PERFORMED ON OR ABOUT MAY, 1995
7. HOWARD COUNTY MONUMENTS 15CA AND 15FA WERE USED FOR HORIZONTAL AND DATUM, AND HO. CO. 3536006 WAS USED FOR VERTICAL DATUM.
8. ALL ROAD FILLS SHALL BE COMPACTED TO 95% AS DETERMINED BY AASHTO T-180.
9. SEWER FOR THIS SUBDIVISION IS PROPOSED BY A SHARED PUBLIC SEPTIC SYSTEM FOR LOTS 8-12 AND 23-28 AND INDIVIDUAL SEPTIC SYSTEMS FOR ALL OTHER LOTS. WATER IS PRIVATE FOR ALL LOTS.
10. WETLANDS DELINEATION COMPILED BY ECO-SCIENCE, INC., DATED APRIL 1995
11. TRAFFIC STUDY COMPILED BY LEE CUNNINGHAM & ASSOC., APPROVED DECEMBER 1995
12. NOISE STUDY PREPARED BY POLYSONICS ACOUSTICAL ENGINEERS DATED SEPTEMBER 1996.
13. GEOTECHNICAL REPORT COMPILED BY HILLIS-CARNES ASSOC., INC., FEBRUARY 1996.
14. EXISTING UTILITIES WERE LOCATED BY RECORD DRAWINGS AND/OR FIELD RUN SURVEY BY TSA GROUP, INC., 5/95. CONTRACTOR IS RESPONSIBLE FOR LOCATION OF ALL EXISTING UTILITIES.
15. UNLESS NOTED AS "PRIVATE" ALL EASEMENTS ARE PUBLIC.
16. STORMWATER MANAGEMENT SHALL BE PROVIDED BY TWO RETENTION FACILITIES WHICH WILL BE PRIVATELY OWNED AND PUBLICLY MAINTAINED
17. NO CLEARING, GRADING OR CONSTRUCTION IS PERMITTED WITHIN WETLANDS, WETLAND BUFFERS, STREAM BUFFERS OR FOREST CONSERVATION AREAS EXCEPT FOR WORK SHOWN ON THESE PLANS WHICH WAS APPROVED UNDER WP-96-37.
18. ANY STATE AND FEDERAL PERMITS REQUIRED FOR THIS PROJECT, IF APPLICABLE, SHALL BE OBTAINED PRIOR TO THE COMMENCEMENT OF WORK.
19. DEPARTMENT OF PUBLIC WORKS DESIGN MANUAL WAIVER WP -96-37 TO SECTION 16.116 OF THE SUBDIVISION REGULATIONS HAS BEEN APPROVED BY THE DIRECTOR OF PLANNING AND ZONING ON NOVEMBER 15, 1995 AND RECONSIDERED NOVEMBER 1, 1996 TO PERMIT THE COMMON ACCESS TO LOTS 25 - 28
20. FLOODPLAIN STUDY WAS PREPARED BY TSA GROUP, INC., DATED MAY 1996.
21. THE NOISE MITIGATION WALLS PROPOSED HEREON SHALL BE PRIVATELY OWNED BY THE HOMEOWNERS ASSOCIATION AND SHALL BE MAINTAINED BY THE HOMEOWNERS ASSOCIATION.
22. THE FOREST CONSERVATION EASEMENT(S) HAS BEEN ESTABLISHED TO FULFILL THE REQUIREMENTS OF SECTION 16.1200 OF THE HOWARD COUNTY FOREST CONSERVATION ACT. NO CLEARING, GRADING OR CONSTRUCTION IS PERMITTED WITHIN THE FOREST CONSERVATION EASEMENT, EXCEPT AS SHOWN ON AN APPROVED ROAD CONSTRUCTION DRAWING OR SITE DEVELOPMENT PLAN. HOWEVER, FOREST MANAGEMENT PRACTICES AS DEFINED IN THE DEED OF FOREST CONSERVATION EASEMENT ARE ALLOWED.
23. WAIVER REQUEST WP-97-126 REQUESTING A WAIVER TO SECTION 16.145 FOR THE SUBMISSION OF A SKETCH PLAN AND 16.144(I) FOR THE SUBMISSION OF A PRELIMINARY PLAN AND TO ALLOW REACTIVATION OF THE FINAL PLAN APPLICATION WAS CONSIDERED AND APPROVED ON JUNE 9, 1997.
24. EXISTING STRUCTURES ARE LOCATED ON LOT 29 AND ARE SHOWN TO BE REMOVED. THE DEVELOPER MUST SUBMIT DOCUMENTATION TO THE HOWARD COUNTY DEPARTMENT OF PLANNING AND ZONING.

BENCH MARKS (NAD 83)

HO. CO. #15CA — ELEV. 516.02
STAMPED CONC. MONUMENT LOCATED IN THE MEDIAN OF RTE 32, NORTH OF THE I-70 OVERPASS

HO. CO. #15FA
STAMPED CONC. MONUMENT LOCATED IN THE MEDIAN OF RTE 32, NORTH OF MD RTE 144

HO. CO. 3536006 (NAD 27) — ELEV. 517.08
USED FOR VERTICAL DATUM
CONC. MONUMENT LOCATED IN THE MEDIAN MEDIAN OF RTE 32, NORTH OF THE WEST EXIT FOR I-70

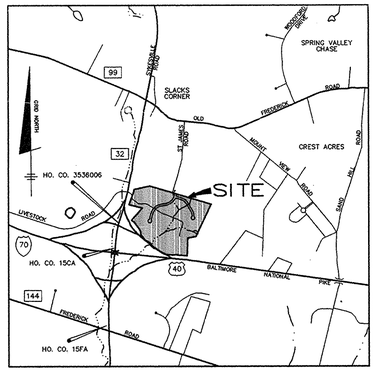

VICINITY MAP
SCALE: 1" = 2000'

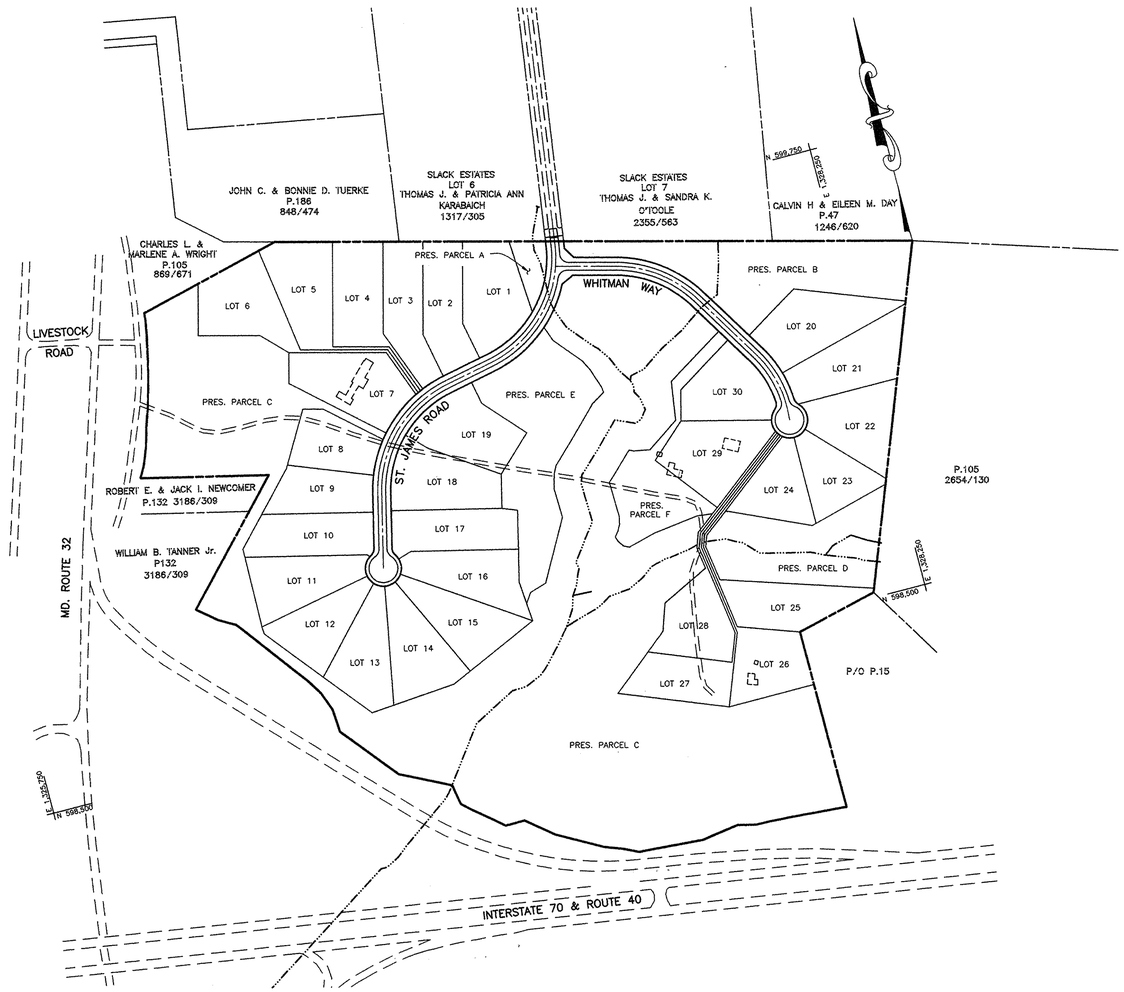

PLAN
SCALE: 1" = 200'

SHEET INDEX

NO.	DESCRIPTION
1	TITLE SHEET
2	ROAD PLAN
3	ROAD PROFILES AND DETAILS
4	DRAINAGE AREA MAP
5	STORM DRAIN PROFILES
6	STORM DRAIN PROFILES AND BORING LOGS
7	GRADING, SEDIMENT AND EROSION CONTROL PLAN
8	GRADING, SEDIMENT AND EROSION CONTROL PLAN
9	GRADING, SEDIMENT AND EROSION CONTROL PLAN
10	GRADING, SEDIMENT AND EROSION CONTROL PLAN
11	STORMWATER MANAGEMENT NOTES AND DETAILS
12	SWM AND NOISE WALL PROFILES AND DETAILS
13	SEDIMENT CONTROL NOTES AND DETAILS
14	LANDSCAPE PLAN, NOTES AND DETAILS
15	FOREST CONSERVATION PLAN
16	FOREST CONSERVATION NOTES AND DETAILS
17	RIGHT TURN LANE PLAN

APPROVED: HOWARD COUNTY DEPARTMENT OF PUBLIC WORKS
CHIEF, BUREAU OF HIGHWAYS — DATE 10-9-97

APPROVED: HOWARD COUNTY DEPARTMENT OF PLANNING AND ZONING
CHIEF, DIVISION OF LAND DEVELOPMENT — DATE 10/20/97
CHIEF, DEVELOPMENT ENGINEERING DIVISION — DATE 10/15/97

NO.	DATE	REVISION

TSA GROUP, INC.
planning • architecture • engineering
8480 Baltimore National Pike • Ellicott City, Maryland 21043 • (410) 465-6105

OWNER/DEVELOPER:
SDC GROUP, INC.
P.O. BOX 417
ELLICOTT CITY, MARYLAND 21041
(410) 465-4244

PROJECT: LYNDONBROOK
LOTS 1 THRU 30 AND PARCELS A THRU F

LOCATION: TAX MAP 15 - PARCEL 40 - BLOCKS 5 & 6
3rd ELECTION DISTRICT
HOWARD COUNTY, MARYLAND

TITLE: TITLE SHEET
WP-96-37, S-96-01, P-96-22, WP-97-126

DATE: SEPTEMBER 19, 1997 — PROJECT NO. 0761
DESIGN: DAM — DRAFT: DBT — SCALE: AS SHOWN — DRAWING 1 OF 17

F-97-126

Plotted: June 3, 1997
Accd Dwg: 7009S01

CENTERLINE CONTROL DATA			
ROAD	STATION	NORTH	EAST
ST. JAMES ROAD	LIMIT 20+53.76	599684.6241	1327499.3141
	PC 20+63.83	599674.6555	1327497.9125
	PT 24+64.71	599401.2311	1327239.8906
	PC 25+97.34	599375.1894	1327109.8411
	PT 29+66.96	599132.4697	1326857.6537
	RP 31+80.33	598925.0015	1326807.7865
WHITMAN WAY	0+00.00	599616.2499	1327484.1050
	PC 1+67.22	599574.0939	1327645.9265
	PT 4+15.29	599430.2060	1327840.6096
	PC 6+45.03	599234.6654	1327961.2187
	PT 8+34.34	599053.6918	1328004.9621
	RP 8+48.89	599039.1864	1328003.8232

CENTERLINE CURVE DATA							
ROAD	STATION	RADIUS	LENGTH	TANGENT	CHORD	BEARING	DELTA
ST. JAMES ROAD	20+63.83 TO 24+64.71	325.00'	400.88'	230.43'	375.95'	N 43°20'24" E	70°40'24"
	25+97.34 TO 29+66.96	325.00'	305.50'	165.09'	294.38'	S 40°26'41" W	53°51'32"
WHITMAN WAY	1+67.22 TO 4+15.29	325.00'	248.06'	130.43'	242.09'	S 53°31'56" E	43°43'56"
	6+45.03 TO 8+34.34	300.00'	189.31'	97.93'	186.19'	S 13°35'18" E	36°09'20"

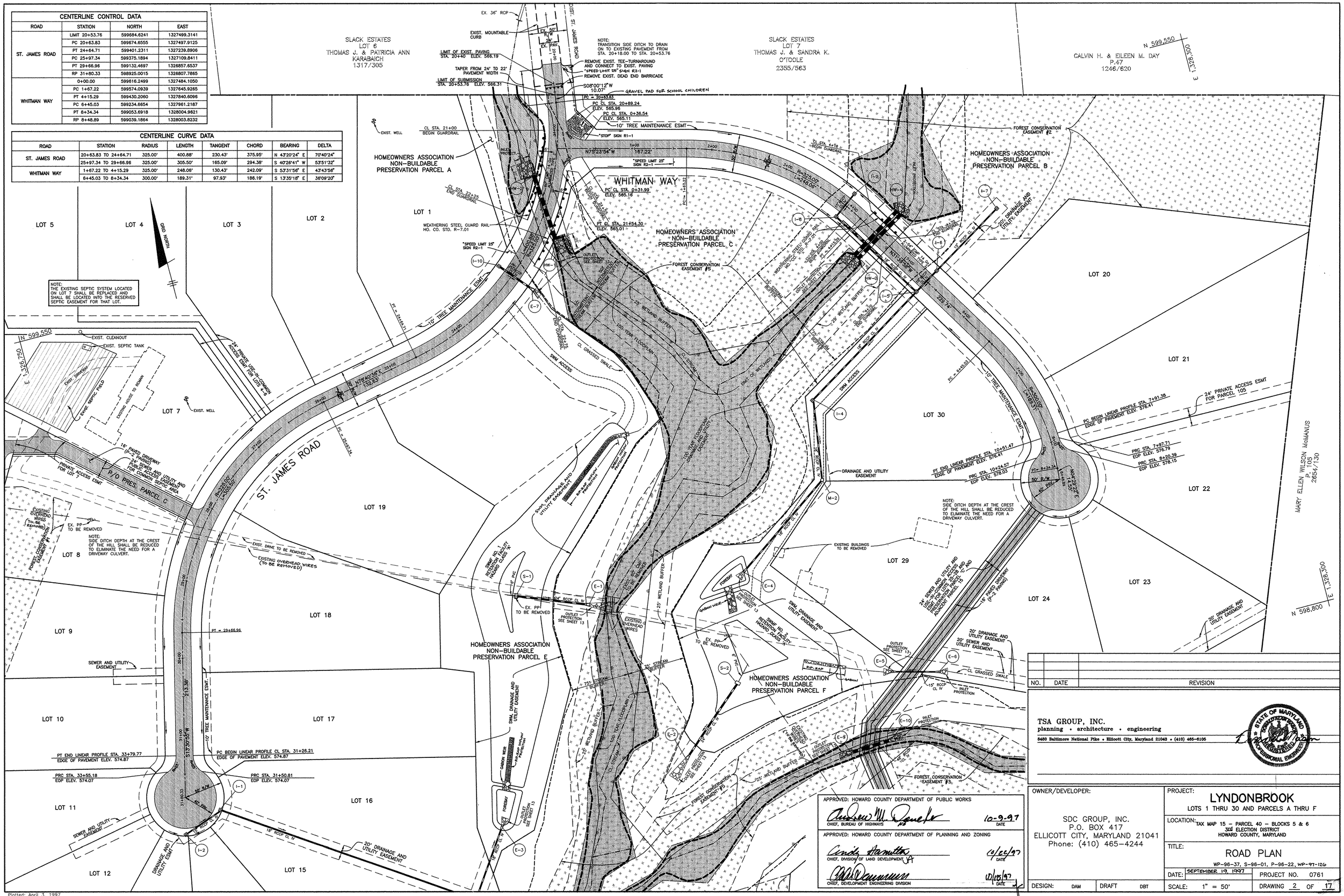

NO.	DATE	REVISION

TSA GROUP, INC.
planning • architecture • engineering
8480 Baltimore National Pike • Ellicott City, Maryland 21043 • (410) 465-6105

STATE OF MARYLAND REGISTERED PROFESSIONAL ENGINEER

APPROVED: HOWARD COUNTY DEPARTMENT OF PUBLIC WORKS

CHIEF, BUREAU OF HIGHWAYS — DATE 10-9-97

APPROVED: HOWARD COUNTY DEPARTMENT OF PLANNING AND ZONING

CHIEF, DIVISION OF LAND DEVELOPMENT — DATE 10/26/97

CHIEF, DEVELOPMENT ENGINEERING DIVISION — DATE 10/15/97

OWNER/DEVELOPER:
SDC GROUP, INC.
P.O. BOX 417
ELLICOTT CITY, MARYLAND 21041
Phone: (410) 465-4244

PROJECT:
LYNDONBROOK
LOTS 1 THRU 30 AND PARCELS A THRU F

LOCATION: TAX MAP 15 – PARCEL 40 – BLOCKS 5 & 6
3rd ELECTION DISTRICT
HOWARD COUNTY, MARYLAND

TITLE:
ROAD PLAN
WP-96-37, S-96-01, P-96-22, WP-97-126

DATE: SEPTEMBER 19, 1997 | PROJECT NO. 0761

DESIGN: DAM | DRAFT DBT | SCALE: 1" = 50' | DRAWING 2 OF 17

Plotted: April 3, 1997
Acad Dwg: 7070S02

F-97-126

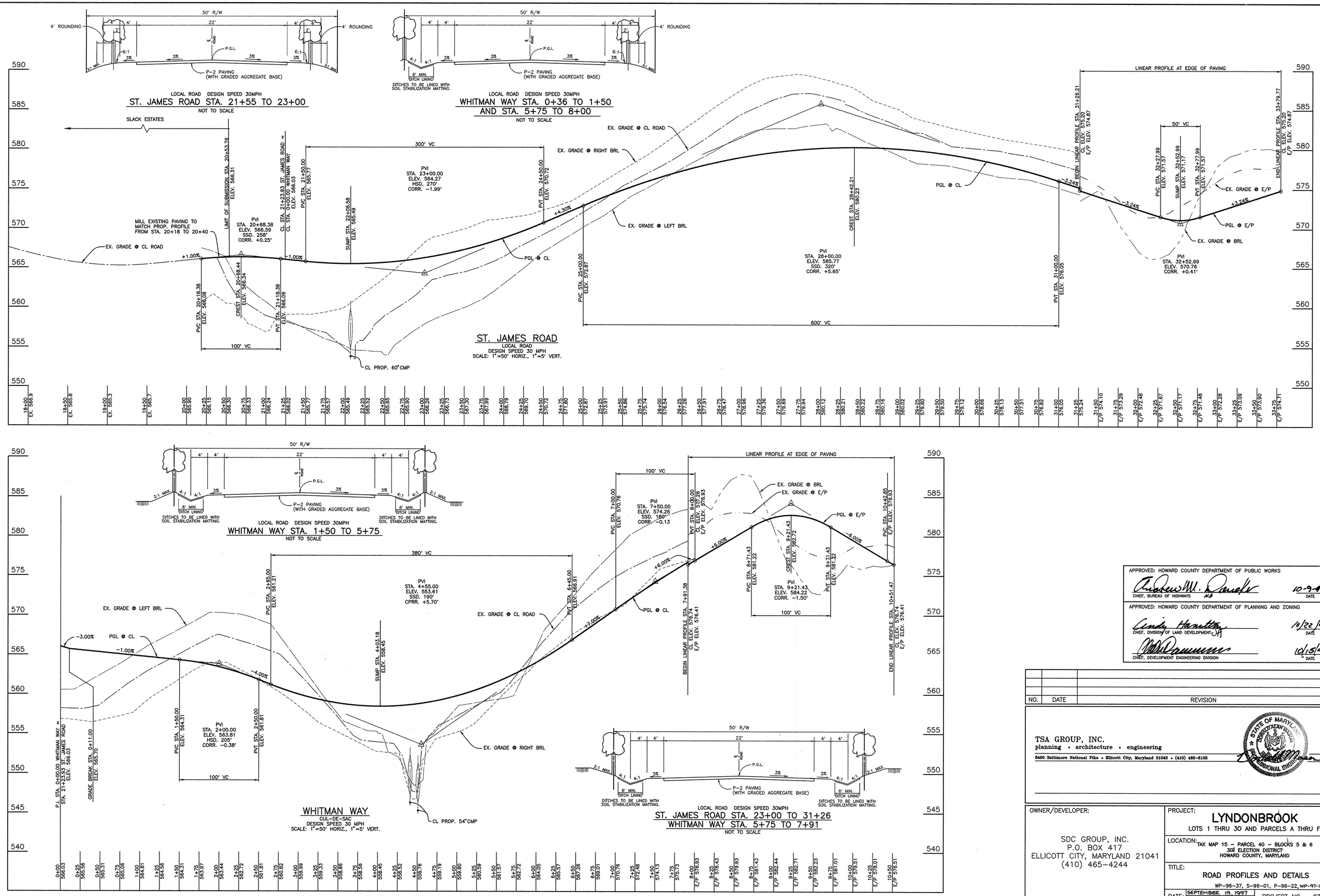

APPROVED: HOWARD COUNTY DEPARTMENT OF PUBLIC WORKS

CHIEF, BUREAU OF HIGHWAYS — DATE 10-9-97

APPROVED: HOWARD COUNTY DEPARTMENT OF PLANNING AND ZONING

CHIEF, DIVISION OF LAND DEVELOPMENT — DATE 10/22/97

CHIEF, DEVELOPMENT ENGINEERING DIVISION — DATE 10/15/97

NO.	DATE	REVISION

TSA GROUP, INC.
planning • architecture • engineering
6460 Baltimore National Pike • Ellicott City, Maryland 21043 • (410) 465-6105

STATE OF MARYLAND — REGISTERED PROFESSIONAL ENGINEER

OWNER/DEVELOPER:
SDC GROUP, INC.
P.O. BOX 417
ELLICOTT CITY, MARYLAND 21041
(410) 465-4244

PROJECT: LYNDONBROOK
LOTS 1 THRU 30 AND PARCELS A THRU F

LOCATION: TAX MAP 15 – PARCEL 40 – BLOCKS 5 & 6
3rd ELECTION DISTRICT
HOWARD COUNTY, MARYLAND

TITLE: ROAD PROFILES AND DETAILS
WP-96-37, S-96-01, P-96-22, WP-97-126

DATE: SEPTEMBER 19, 1997 | PROJECT NO. 0761

DESIGN: DAM | DRAFT DBT | SCALE: AS SHOWN | DRAWING 3 OF 17

F-97-126

Plotted: Jan. 22, 1997
Acad Dwg: 7017S03

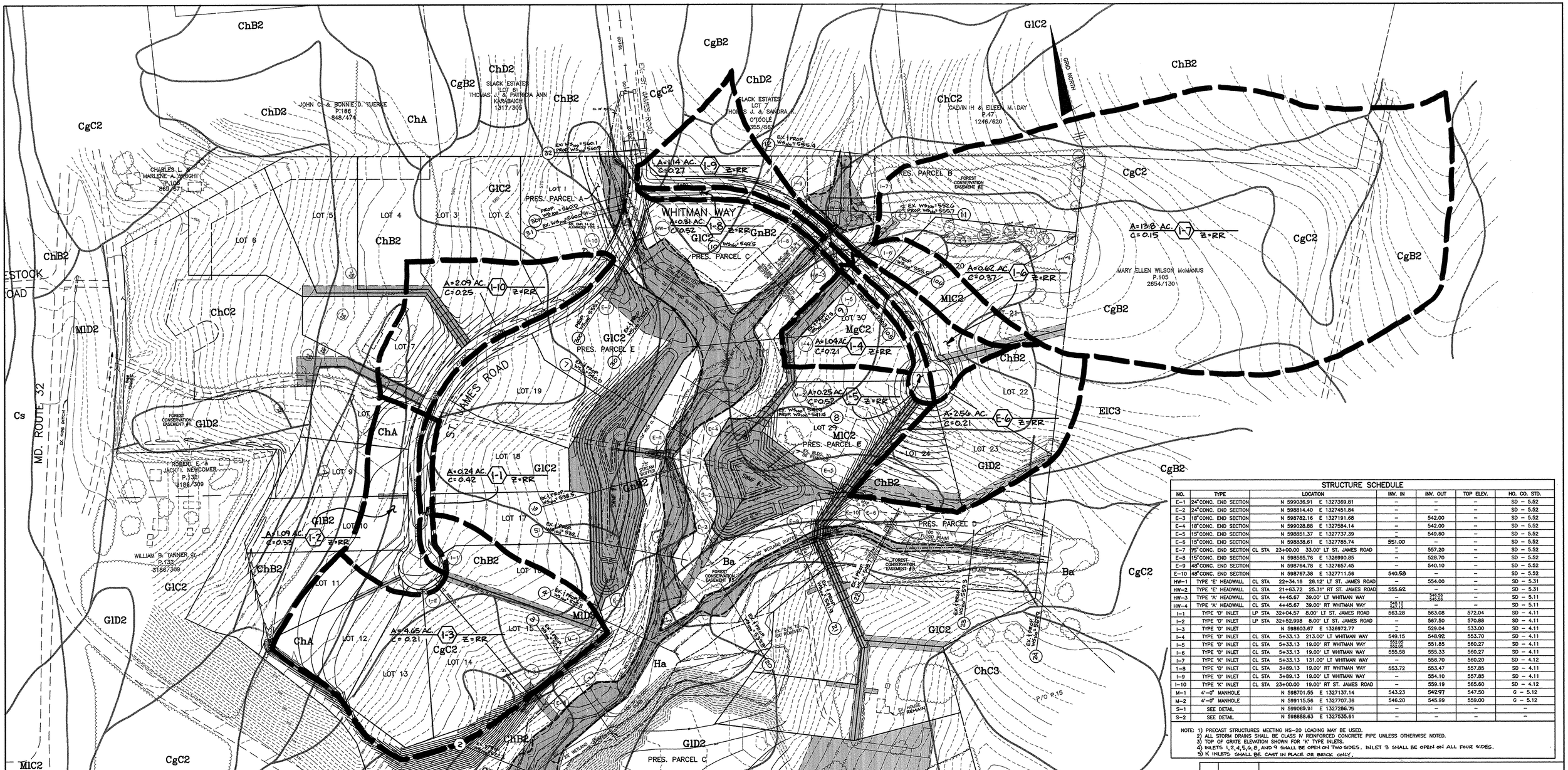

STRUCTURE SCHEDULE

NO.	TYPE	LOCATION		INV. IN	INV. OUT	TOP ELEV.	HO. CO. STD.
E-1	24"CONC. END SECTION	N 599036.91	E 1327369.81	–	–	–	SD – 5.52
E-2	24"CONC. END SECTION	N 598814.40	E 1327451.84	–	–	–	SD – 5.52
E-3	18"CONC. END SECTION	N 598782.16	E 1327191.68	–	542.00	–	SD – 5.52
E-4	18"CONC. END SECTION	N 599028.88	E 1327584.14	–	542.00	–	SD – 5.52
E-5	15"CONC. END SECTION	N 598851.37	E 1327737.39	–	549.60	–	SD – 5.52
E-6	15"CONC. END SECTION	N 598838.61	E 1327785.74	551.00	–	–	SD – 5.52
E-7	15"CONC. END SECTION	CL STA 23+00.00	33.00' LT ST. JAMES ROAD	–	557.20	–	SD – 5.52
E-8	15"CONC. END SECTION	N 598565.76	E 1326990.85	–	528.70	–	SD – 5.52
E-9	48"CONC. END SECTION	N 598764.78	E 1327657.45	–	540.10	–	SD – 5.52
E-10	48"CONC. END SECTION	N 598767.38	E 1327711.56	540.58	–	–	SD – 5.52
HW-1	TYPE 'E' HEADWALL	CL STA 22+34.16	28.12' LT ST. JAMES ROAD	–	554.00	–	SD – 5.31
HW-2	TYPE 'E' HEADWALL	CL STA 21+63.72	25.31' RT ST. JAMES ROAD	555.62	–	–	SD – 5.31
HW-3	TYPE 'A' HEADWALL	CL STA 4+45.67	39.00' LT WHITMAN WAY	–	546.50 545.58	–	SD – 5.11
HW-4	TYPE 'A' HEADWALL	CL STA 4+45.67	39.00' RT WHITMAN WAY	548.12 547.12	–	–	SD – 5.11
I-1	TYPE 'D' INLET	LP STA 32+04.57	8.00' LT ST. JAMES ROAD	563.28	563.08	572.04	SD – 4.11
I-2	TYPE 'D' INLET	LP STA 32+52.998	8.00' LT ST. JAMES ROAD	–	567.50	570.88	SD – 4.11
I-3	TYPE 'D' INLET	N 598603.67	E 1326972.77	–	529.04	533.00	SD – 4.11
I-4	TYPE 'D' INLET	CL STA 5+33.13	213.00' LT WHITMAN WAY	549.15	548.92	553.70	SD – 4.11
I-5	TYPE 'D' INLET	CL STA 5+33.13	19.00' RT WHITMAN WAY	552.00 552.05	551.85	560.27	SD – 4.11
I-6	TYPE 'D' INLET	CL STA 5+33.13	19.00' LT WHITMAN WAY	555.58	555.33	560.27	SD – 4.11
I-7	TYPE 'K' INLET	CL STA 5+33.13	131.00' LT WHITMAN WAY	–	558.70	560.20	SD – 4.12
I-8	TYPE 'D' INLET	CL STA 3+89.13	19.00' RT WHITMAN WAY	553.72	553.47	557.85	SD – 4.11
I-9	TYPE 'D' INLET	CL STA 3+89.13	19.00' LT WHITMAN WAY	–	554.10	557.85	SD – 4.11
I-10	TYPE 'K' INLET	CL STA 23+00.00	19.00' RT ST. JAMES ROAD	–	559.19	565.60	SD – 4.12
M-1	4'-0" MANHOLE	N 598701.55	E 1327137.14	543.23	542.97	547.50	G – 5.12
M-2	4'-0" MANHOLE	N 599115.56	E 1327707.36	546.20	545.99	559.00	G – 5.12
S-1	SEE DETAIL	N 599069.31	E 1327286.75	–	–	–	–
S-2	SEE DETAIL	N 598888.63	E 1327535.61	–	–	–	–

NOTE: 1) PRECAST STRUCTURES MEETING HS-20 LOADING MAY BE USED.
2) ALL STORM DRAINS SHALL BE CLASS IV REINFORCED CONCRETE PIPE UNLESS OTHERWISE NOTED.
3) TOP OF GRATE ELEVATION SHOWN FOR 'K' TYPE INLETS.
4) INLETS 1, 2, 4, 5, 6, 8, AND 9 SHALL BE OPEN ON TWO SIDES. INLET 3 SHALL BE OPEN ON ALL FOUR SIDES.
5) K INLETS SHALL BE CAST IN PLACE OR BRICK ONLY.

SOILS LEGEND

MAP SYMBOL	SOIL TYPE	MAPPING UNIT
Ba *	D	BAILE SILT LOAM
CgB2	B	CHESTER GRAVELLY SILT LOAM – 3 TO 8 PERCENT SLOPES – MODERATED
CgC2	B	CHESTER GRAVELLY SILT LOAM – 8 TO 15 PERCENT SLOPES – MODERATED
ChA	B	CHESTER SILT LOAM – 0 TO 3 PERCENT SLOPES
ChB2	B	CHESTER SILT LOAM – 3 TO 8 PERCENT SLOPES – MODERATELY ERODED
ChC2	B	CHESTER SILT LOAM – 8 TO 15 PERCENT SLOPES – MODERATELY ERODE
ChC3	B	CHESTER SILT LOAM – 8 TO 15 PERCENT SLOPES – SEVERELY ERODED
ChD2	B	CHESTER SILT LOAM – 15 TO 25 PERCENT SLOPES – MODERATELY EROD
Cs	B	COMUS SILT LOAM
EkC2	B	ELIOAK SILT LOAM – 8 TO 15 PERCENT SLOPES – MODERATELY ERODED
EIC3	B	ELIOAK SILTY CLAY LOAM – 8 TO 15 PERCENT SLOPES – SEVERELY ER
GlB2	B	GLENELG LOAM – 3 TO 8 PERCENT SLOPES – MODERATELY ERODED
GlC2	B	GLENELG LOAM – 8 TO 15 PERCENT SLOPES – MODERATELY ERODED
GlD2	B	GLENELG LOAM – 15 TO 25 PERCENT SLOPES – MODERATELY ERODED
GnB2 *	C	GLENVILLE SILT LOAM – 3 TO 8 PERCENT SLOPES – MODERATELY EROD
Ha *	D	HATBORO SILT LOAM
MgB2	B	MANOR GRAVELLY LOAM – 3 TO 8 PERCENT SLOPES – MODERATELY EROD
MgC2	B	MANOR GRAVELLY LOAM – 8 TO 15 PERCENT SLOPES – MODERATELY ERO
MlB2	B	MANOR LOAM – 3 TO 8 PERCENT SLOPES – MODERATELY ERODED
MlC2	B	MANOR LOAM – 8 TO 15 PERCENT SLOPES – MODERATELY ERODED
MlD2	B	MANOR LOAM – 15 TO 25 PERCENT SLOPES – MODERATELY ERODED
MlD3	B	MANOR LOAM – 15 TO 25 PERCENT SLOPES – SEVERELY ERODED
MlE	B	MANOR LOAM – 25 TO 45 PERCENT SLOPES

* INDICATES HYDRIC SOILS
SOILS MAP No. 8

APPROVED: HOWARD COUNTY DEPARTMENT OF PUBLIC WORKS
CHIEF, BUREAU OF HIGHWAYS — DATE 10-9-97

APPROVED: HOWARD COUNTY DEPARTMENT OF PLANNING AND ZONING
CHIEF, DIVISION OF LAND DEVELOPMENT — DATE 10/22/97
CHIEF, DEVELOPMENT ENGINEERING DIVISION — DATE 10/15/97

NO.	DATE	REVISION

TSA GROUP, INC.
planning • architecture • engineering
8480 Baltimore National Pike • Ellicott City, Maryland 21043 • (410) 465-6105

STATE OF MARYLAND — JOSEPH D. TUDAN — No. 11668 — REGISTERED PROFESSIONAL ENGINEER

OWNER/DEVELOPER:
SDC GROUP, INC.
P.O. BOX 417
ELLICOTT CITY, MARYLAND 21041
(410) 465-4244

PROJECT:
LYNDONBROOK
LOTS 1 THRU 30 AND PARCELS A THRU F

LOCATION: TAX MAP 15 – PARCEL 40 – BLOCKS 5 & 6
3rd ELECTION DISTRICT
HOWARD COUNTY, MARYLAND

TITLE: DRAINAGE AREA MAP
WP-96-37, S-96-01, P-96-22, WP-97-126

DESIGN: DAM | DRAFT: DBT | DATE: SEPTEMBER 19, 1997 | SCALE: 1" = 100' | PROJECT NO. 0761 | DRAWING 4 OF 17

F-97-126

Plotted: Jan. 17, 1997
Acad Dwg: 7032S04

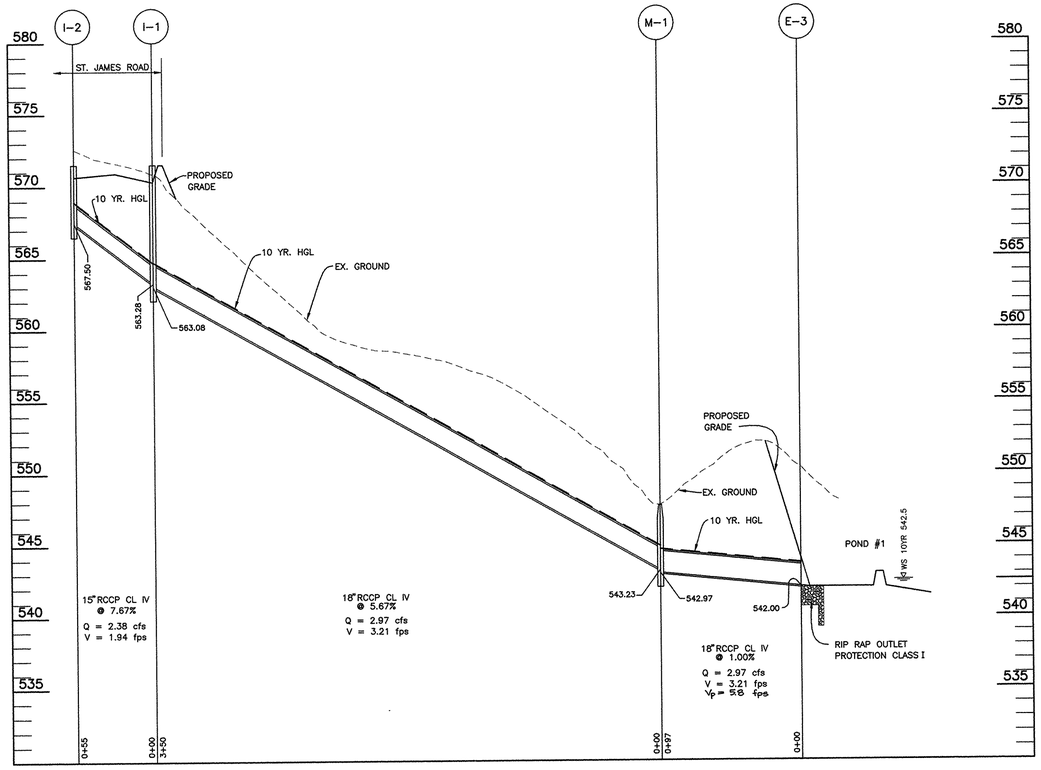

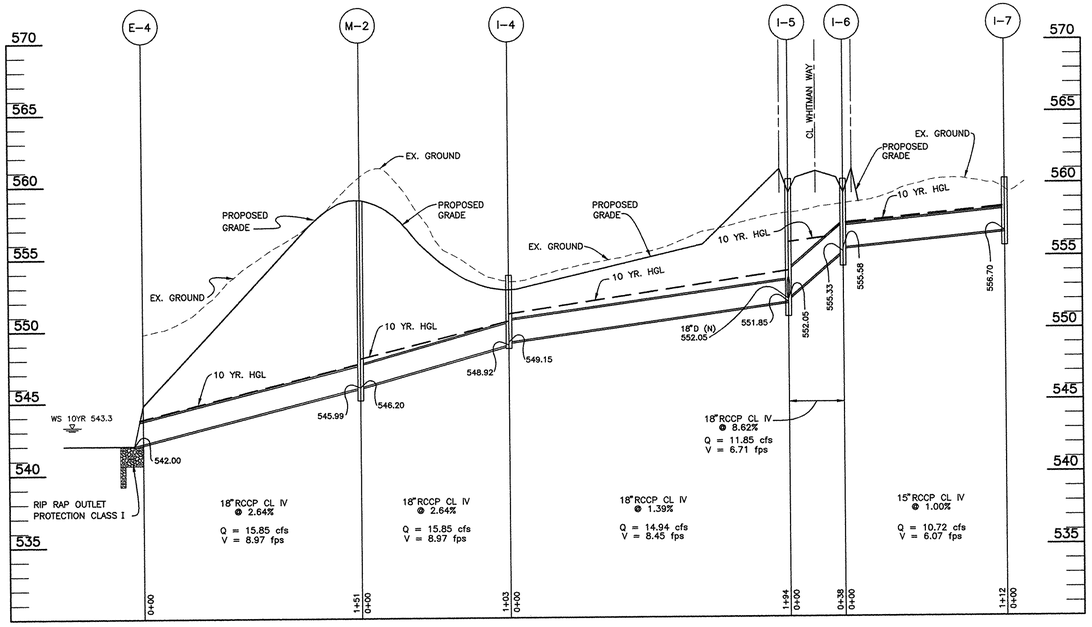

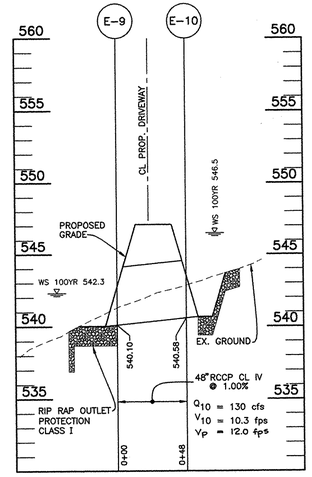

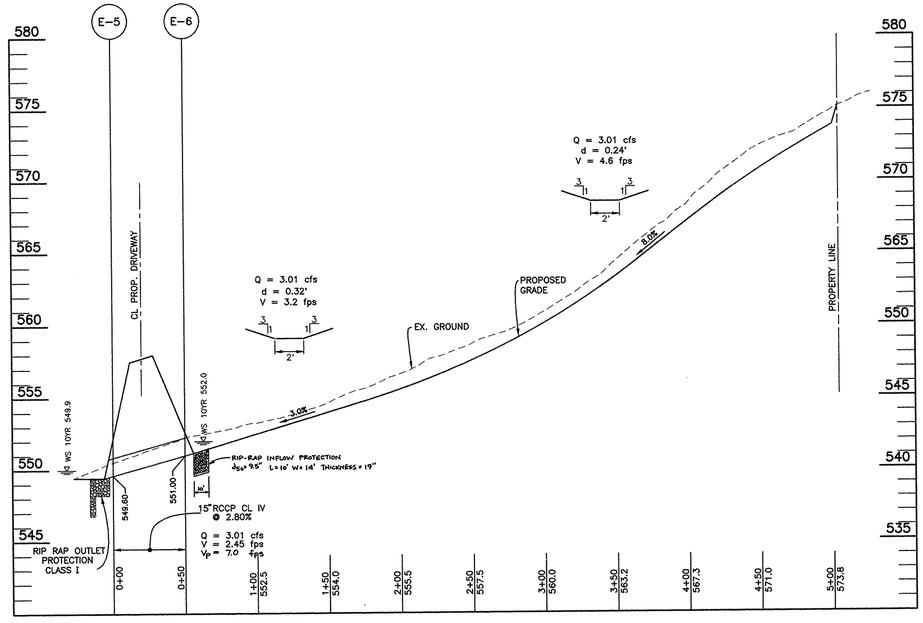

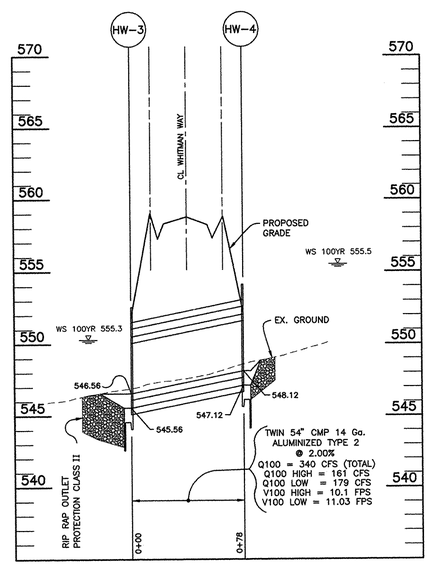

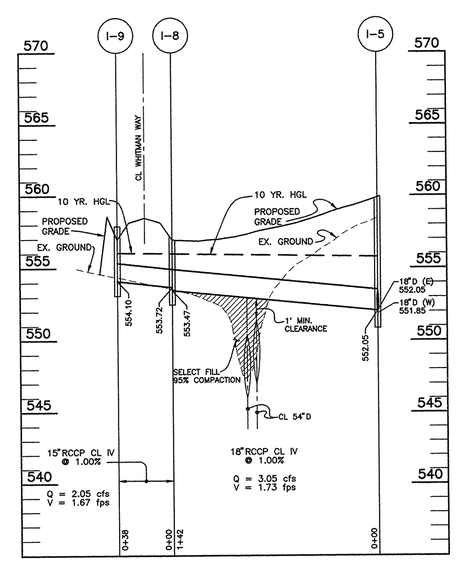

APPROVED: HOWARD COUNTY DEPARTMENT OF PUBLIC WORKS

CHIEF, BUREAU OF HIGHWAYS — DATE 10-9-97

APPROVED: HOWARD COUNTY DEPARTMENT OF PLANNING AND ZONING

CHIEF, DIVISION OF LAND DEVELOPMENT — DATE 10/22/97

CHIEF, DEVELOPMENT ENGINEERING DIVISION — DATE 10/15/97

NO.	DATE	REVISION

TSA GROUP, INC.
planning • architecture • engineering
8480 Baltimore National Pike • Ellicott City, Maryland 21043 • (410) 465-6105

STATE OF MARYLAND — CONSTANTINE PANAGOPULOS — No. 18818 — REGISTERED PROFESSIONAL ENGINEER

OWNER/DEVELOPER:
SDC GROUP, INC.
P.O. BOX 417
ELLICOTT CITY, MARYLAND 21041
(410) 465-4244

PROJECT: **LYNDONBROOK**
LOTS 1 THRU 30 AND PARCELS A THRU F

LOCATION: TAX MAP 15 – PARCEL 40 – BLOCKS 5 & 6
3rd ELECTION DISTRICT
HOWARD COUNTY, MARYLAND

TITLE: STORM DRAIN PROFILES
WP-96-37, S-96-01, P-96-22, WP-97-126

DATE: SEPTEMBER 19, 1997 — PROJECT NO. 0761

DESIGN: DAM — DRAFT: DBT — SCALE: HOR.:1"=50', VERT.:1"=5' — DRAWING 5 OF 17

F-97-126

Plotted: Jan. 23, 1997
Acad Dwg: 7044S05

Record of Soil Exploration Boring No. TP-1

SOIL DESCRIPTION color, moisture, density, size, proportion	STRA. DEPTH	DEPTH (FT.)	Sample CON	BLOWS 6"	NO	REC	BORING & SAMPLING NOTES
SURFACE		0.0					2.5" Topsoil
Brown, moist, fine sandy silt, trace mica (ML)	3.0						
Dark brown moist to wet micaceous sandy silt/silty sand (ML/SM) decomposing rock fragments with depth.	8.0	5					Groundwater encountered at 5.0' while excavating. Same as TP-3 S-8
Bottom of Hole at 8.0'		10					Backfilled at completion.
		15					
		20					

Record of Soil Exploration Boring No. TP-2

SOIL DESCRIPTION color, moisture, density, size, proportion	STRA. DEPTH	DEPTH (FT.)	Sample CON	BLOWS 6"	NO	REC	BORING & SAMPLING NOTES
SURFACE		0.0					3.0" Topsoil
Brown, moist, fine sandy silt, trace mica (ML)	3.0						
Dark brown moist to wet micaceous sandy silt/silty sand (ML/SM) decomposing rock fragments with depth.	8.0	5					Groundwater encountered at 6.0' while excavating. Same as TP-3 S-8
Bottom of Hole at 8.0'		10					Backfilled at completion.
		15					
		20					

Record of Soil Exploration Boring No. TP-3

SOIL DESCRIPTION color, moisture, density, size, proportion	STRA. DEPTH	DEPTH (FT.)	Sample CON	BLOWS 6"	NO	REC	BORING & SAMPLING NOTES
SURFACE		0.0					4.0" Topsoil
Tan gray mottled moist silty clay with little fine sand (CL)	3.0						
Brown moist to wet micaceous sandy silt/silty sand (ML/SM)	8.0	5					Groundwater encountered at 6.0' while excavating. Bag samples from 1.5' - 4.0' 4.0' - 8.0'
Bottom of Hole at 8.0'		10					Backfilled at completion.
		15					
		20					

Record of Soil Exploration Boring No. TP-4

SOIL DESCRIPTION color, moisture, density, size, proportion	STRA. DEPTH	DEPTH (FT.)	Sample CON	BLOWS 6"	NO	REC	BORING & SAMPLING NOTES
SURFACE		0.0					4.0" Topsoil
Reddish brown, moist, micaceous fine sandy silt (ML)	4.5						Bag samples from 0.0' - 4.0'
Reddish brown to tan micaceous silty fine sand (SM), little decomposing rock fragments.	12.0	5					No groundwater encountered while excavating. Infiltration test at 8.0'
Bottom of Hole at 12.0'		10					Backfilled at completion.
		15					
		20					

Record of Soil Exploration Boring No. TP-5

SOIL DESCRIPTION color, moisture, density, size, proportion	STRA. DEPTH	DEPTH (FT.)	Sample CON	BLOWS 6"	NO	REC	BORING & SAMPLING NOTES
SURFACE		0.0					5.0" Topsoil
Reddish brown, moist, micaceous fine sandy silt (ML)	5.0						
Tan moist to damp, micaceous fine sandy silt/silty sand (SM/ML) denser with depth, little to some decomposing rock fragments.	12.0	5					No groundwater encountered while excavating. Infiltration test at 8.0'
Bottom of Hole at 12.0'		10					Backfilled at completion.
		15					
		20					

Record of Soil Exploration Boring No. TP-6

SOIL DESCRIPTION color, moisture, density, size, proportion	STRA. DEPTH	DEPTH (FT.)	Sample CON	BLOWS 6"	NO	REC	BORING & SAMPLING NOTES
SURFACE		0.0					3.5" Topsoil
Tan moist to damp, micaceous silty fine sand/sandy silt (SM/ML) denser with depth, little decomposing rock fragments.	12.0	5					2" Rootmat No groundwater encountered while excavating. Bag samples from 0.0' - 6.0' Infiltration test at 8.0'
Bottom of Hole at 12.0'		10					Backfilled at completion.
		15					
		20					

Record of Soil Exploration Boring No. TP-7

SOIL DESCRIPTION color, moisture, density, size, proportion	STRA. DEPTH	DEPTH (FT.)	Sample CON	BLOWS 6"	NO	REC	BORING & SAMPLING NOTES
SURFACE		0.0					1.5" Topsoil
Reddish brown, moist silt, some fine sand little mica (ML)	1.5						
Brown, green moist micaceous silty fine sand (SM)	8.0	5					No groundwater encountered while excavating. Bag samples from 2.0' - 8.0'
Bottom of Hole at 8.0'		10					Backfilled at completion.
		15					
		20					

Record of Soil Exploration Boring No. TP-8

SOIL DESCRIPTION color, moisture, density, size, proportion	STRA. DEPTH	DEPTH (FT.)	Sample CON	BLOWS 6"	NO	REC	BORING & SAMPLING NOTES
SURFACE		0.0					1.5" Topsoil
Brown moist silt, some fine sand (ML)	1.5						
Brown, green moist to wet micaceous fine sandy silt/silty fine sand (ML/SM) with decomposing rock fragments trace quartz rock fragments 2-3'.	12.0	5					Groundwater encountered at 11.0' while excavating. Bag samples from 2.0' - 8.0'
Bottom of Hole at 12.0'		10					Backfilled at completion.
		15					
		20					

Record of Soil Exploration Boring No. TP-9

SOIL DESCRIPTION color, moisture, density, size, proportion	STRA. DEPTH	DEPTH (FT.)	Sample CON	BLOWS 6"	NO	REC	BORING & SAMPLING NOTES
SURFACE		0.0					1" Topsoil
Brown, moist, fine sandy silt (ML)	1.5						No groundwater encountered while excavating.
Yellow brown to green moist micaceous fine sandy silt/silty fine sand (ML/SM). Trace decomposing rock at 8.0'.	8.0	5					Same as TP-8
Bottom of Hole at 8.0'		10					Backfilled at completion.
		15					
		20					

Record of Soil Exploration Boring No. TP-10

SOIL DESCRIPTION color, moisture, density, size, proportion	STRA. DEPTH	DEPTH (FT.)	Sample CON	BLOWS 6"	NO	REC	BORING & SAMPLING NOTES
SURFACE		0.0					1.5" Rootmat
Orange brown moist silty fine sand (SM)	1.5						No groundwater encountered while excavating.
Brown, green moist micaceous silty sand (SM) less silt with depth some decomposing rock fragments 9-12'	12.0	5					Same as TP-11 5.0' - 10.0'
Bottom of Hole at 12.0'		10					Backfilled at completion.
		15					
		20					

Record of Soil Exploration Boring No. TP-11

SOIL DESCRIPTION color, moisture, density, size, proportion	STRA. DEPTH	DEPTH (FT.)	Sample CON	BLOWS 6"	NO	REC	BORING & SAMPLING NOTES
SURFACE		0.0					1.5" Rootmat
Dark reddish brown moist micaceous fine sandy silt (ML)	3.5						No groundwater encountered while excavating.
Tan, greenish brown moist micaceous silty sand, some decomposing rock fragments (SM).	12.0	5					Bag samples from 0.0' - 3.5' 5.0' - 10.0'
Bottom of Hole at 12.0'		10					Backfilled at completion.
		15					
		20					

Record of Soil Exploration Boring No. TP-12

SOIL DESCRIPTION color, moisture, density, size, proportion	STRA. DEPTH	DEPTH (FT.)	Sample CON	BLOWS 6"	NO	REC	BORING & SAMPLING NOTES
SURFACE		0.0					2.0" Rootmat
Dark reddish brown, moist to wet fine sandy silt (ML)	5.0						Groundwater encountered at 6.0' while excavating.
Brown, black to greenish brown wet micaceous silty sand and decomposing rock fragments (SM).	6.5	5					Backfilled at completion.
Bottom of Hole at 6.5'		10					
		15					
		20					

SOIL BORING LOGS

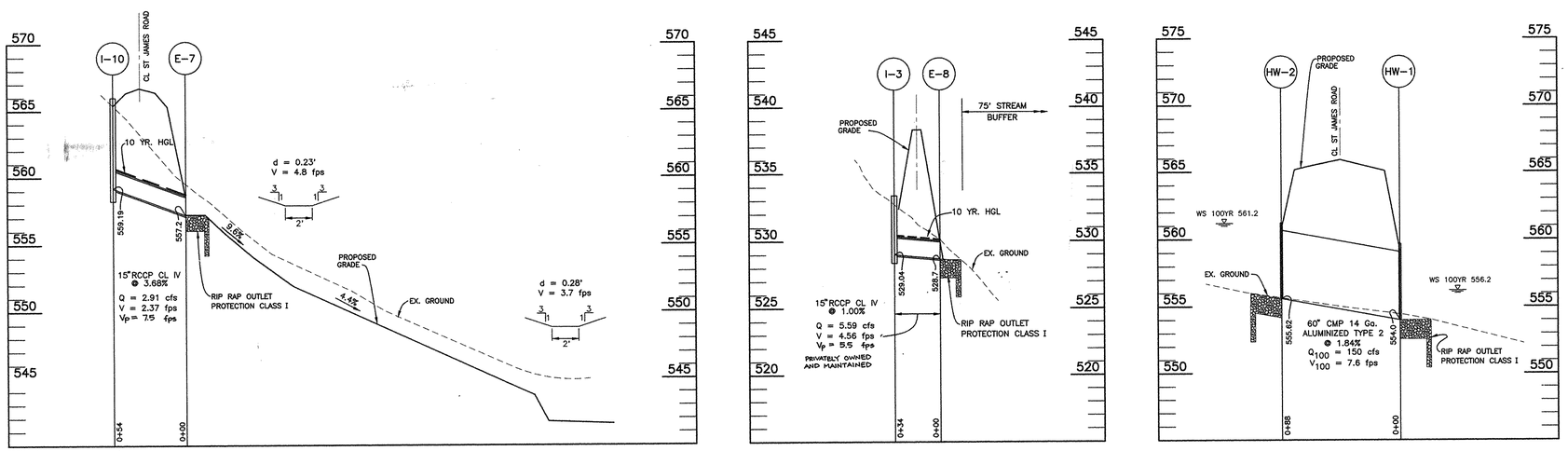

STORM DRAIN PROFILES

SCALE : HORIZ. 1"=50'
VERT. 1"=5'

APPROVED: HOWARD COUNTY DEPARTMENT OF PUBLIC WORKS

CHIEF, BUREAU OF HIGHWAYS — DATE 10-9-97

APPROVED: HOWARD COUNTY DEPARTMENT OF PLANNING AND ZONING

CHIEF, DIVISION OF LAND DEVELOPMENT — DATE 10/22/97

CHIEF, DEVELOPMENT ENGINEERING DIVISION — DATE 10/15/97

NO.	DATE	REVISION

TSA GROUP, INC.
planning • architecture • engineering
8480 Baltimore National Pike • Ellicott City, Maryland 21043 • (410) 465-6105

STATE OF MARYLAND — DAVID A. MOORE — No. 9148 — REGISTERED PROFESSIONAL ENGINEER

OWNER/DEVELOPER:
SDC GROUP, INC.
P.O. BOX 417
ELLICOTT CITY, MARYLAND 21041
(410) 465-4244

PROJECT:
LYNDONBROOK
LOTS 1 THRU 30 AND PARCELS A THRU F

LOCATION: TAX MAP 15 - PARCEL 40, BLOCKS 5 & 6
3rd ELECTION DISTRICT
HOWARD COUNTY, MARYLAND

TITLE:
STORM DRAIN PROFILES AND BORING LOGS
WP-96-37, S-96-01, P-96-22, WP-97-126

DATE: SEPTEMBER 19, 1997 | PROJECT NO. 0761

DESIGN: DAM | DRAFT DBT | SCALE: AS SHOWN | DRAWING 6 OF 17

F-97-126

Plotted: Jan. 22, 1997
Acad Dwg: 7044S06

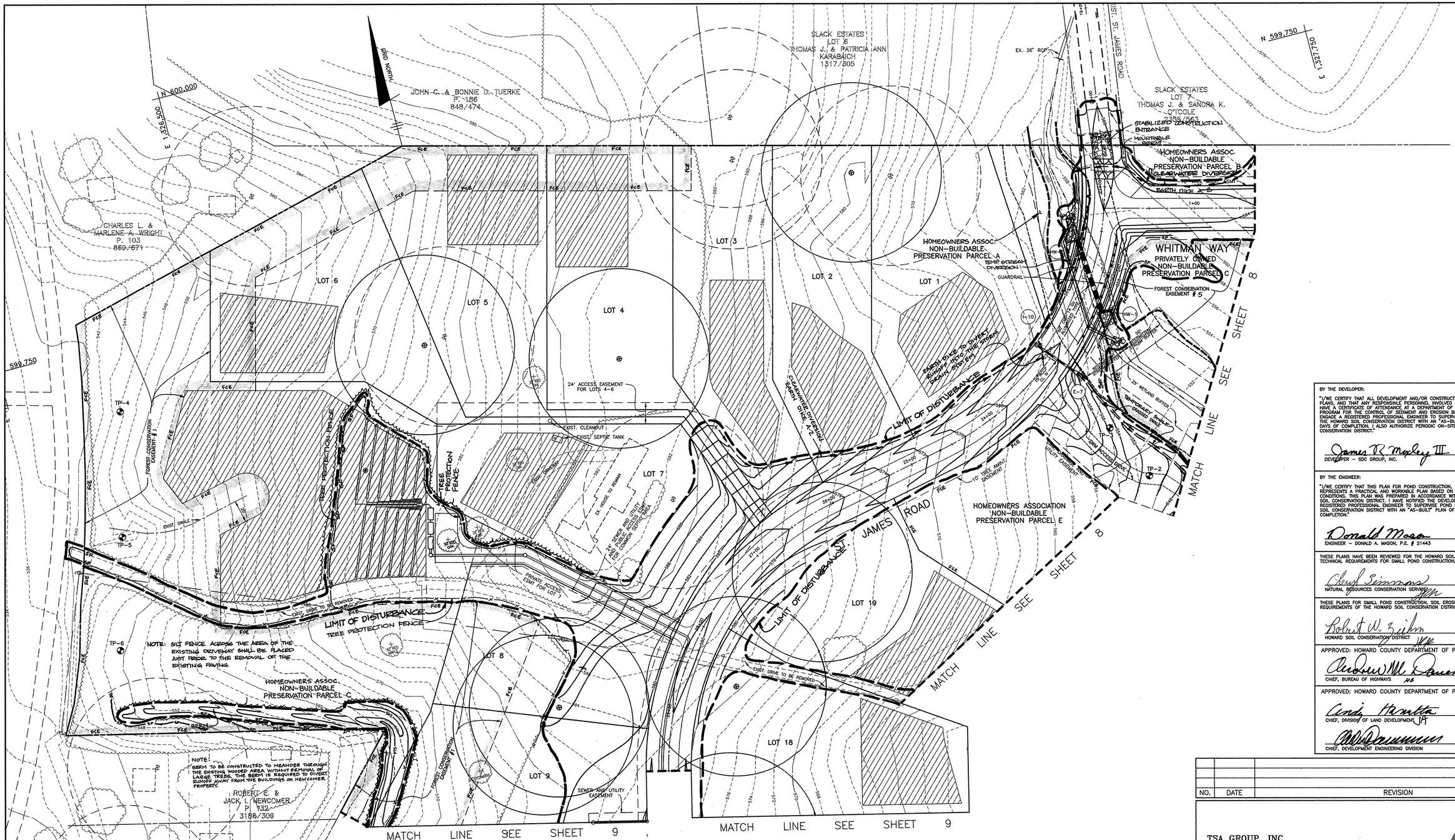

NOTE:

ACCESS TO THE EXISTING HOUSE LOCATED ON LOT 7 SHALL BE MAINTAINED DURING CONSTRUCTION VIA THE EXISTING DRIVEWAY. AFTER ST. JAMES ROAD HAS BEEN PAVED, ACCESS SHALL BE REVISED TO ST. JAMES ROAD AND THAT PORTION OF THE EXISTING DRIVEWAY SHALL BE REMOVED

NOTE: FOR SEQUENCE OF CONSTRUCTION SEE SHEET NO. 13.

LEGEND

SF SF	SILT FENCE	562	EXISTING CONTOURS		PROPOSED SEPTIC FIELD
× ×	TREE PROTECTION FENCE	560	PROPOSED CONTOURS	100' R. (TYP.)	PROPOSED WELL
	EARTH DIKE		WETLAND LIMIT		
	TEMPORARY SWALE		APPROXIMATE 100 YEAR FLOODPLAIN	562 100' R. (TYP.)	EXISTING WELL
	LIMIT OF DISTURBANCE		EXISTING WOODSLINE		
			CENTERLINE EXIST. STREAM		
	LIMIT OF FOREST CONSERVATION ESMT		EXISTING STRUCTURE		
FCE	FOREST CONSERVATION SIGNAGE				

BY THE DEVELOPER:

"I/WE CERTIFY THAT ALL DEVELOPMENT AND/OR CONSTRUCTION WILL BE DONE ACCORDING TO THESE PLANS, AND THAT ANY RESPONSIBLE PERSONNEL INVOLVED IN THE CONSTRUCTION PROJECT WILL HAVE A CERTIFICATE OF ATTENDANCE AT A DEPARTMENT OF THE ENVIRONMENT APPROVED TRAINING PROGRAM FOR THE CONTROL OF SEDIMENT AND EROSION BEFORE BEGINNING THE PROJECT. I SHALL ENGAGE A REGISTERED PROFESSIONAL ENGINEER TO SUPERVISE POND CONSTRUCTION AND PROVIDE THE HOWARD SOIL CONSERVATION DISTRICT WITH AN "AS-BUILT" PLAN OF THE POND WITHIN 30 DAYS OF COMPLETION. I ALSO AUTHORIZE PERIODIC ON-SITE INSPECTIONS BY THE HOWARD SOIL CONSERVATION DISTRICT."

James R. Morley III — 1/23/97
DEVELOPER – SDC GROUP, INC. — DATE

BY THE ENGINEER:

"I/WE CERTIFY THAT THIS PLAN FOR POND CONSTRUCTION, EROSION AND SEDIMENT CONTROL REPRESENTS A PRACTICAL AND WORKABLE PLAN BASED ON MY PERSONNAL KNOWLEDGE OF THE SITE CONDITIONS. THIS PLAN WAS PREPARED IN ACCORDANCE WITH THE REQUIREMENTS OF THE HOWARD SOIL CONSERVATION DISTRICT. I HAVE NOTIFIED THE DEVELOPER THAT HE/SHE MUST ENGAGE A REGISTERED PROFESSIONAL ENGINEER TO SUPERVISE POND CONSTRUCTION AND PROVIDE THE HOWARD SOIL CONSERVATION DISTRICT WITH AN "AS-BUILT" PLAN OF THE POND WITHIN 30 DAYS OF COMPLETION."

Donald Mason — 1/23/97
ENGINEER – DONALD A. MASON, P.E. # 21443 — DATE

THESE PLANS HAVE BEEN REVIEWED FOR THE HOWARD SOIL CONSERVATION DISTRICT AND MEET THE TECHNICAL REQUIREMENTS FOR SMALL POND CONSTRUCTION, SOIL EROSION, AND SEDIMENT CONTROL.

Cheryl Simmons — 10/1/97
NATURAL RESOURCES CONSERVATION SERVICES — DATE

THESE PLANS FOR SMALL POND CONSTRUCTION, SOIL EROSION, AND SEDIMENT CONTROL MEET THE REQUIREMENTS OF THE HOWARD SOIL CONSERVATION DISTRICT.

Robert W. Zilm — 10/1/97
HOWARD SOIL CONSERVATION DISTRICT — DATE

APPROVED: HOWARD COUNTY DEPARTMENT OF PUBLIC WORKS

Andrew M. Damico — 10-9-97
CHIEF, BUREAU OF HIGHWAYS — DATE

APPROVED: HOWARD COUNTY DEPARTMENT OF PLANNING AND ZONING

Cindy Hewitt — 10/20/97
CHIEF, DIVISION OF LAND DEVELOPMENT — DATE

10/15/97
CHIEF, DEVELOPMENT ENGINEERING DIVISION — DATE

NO.	DATE	REVISION

TSA GROUP, INC.
planning • architecture • engineering
5480 Baltimore National Pike • Ellicott City, Maryland 21043 • (410) 465-6105

STATE OF MARYLAND — DONALD A. MASON — REGISTERED PROFESSIONAL ENGINEER

OWNER/DEVELOPER:
SDC GROUP, INC.
P.O. BOX 417
ELLICOTT CITY, MARYLAND 21041
(410) 465-4244

PROJECT:
LYNDONBROOK
LOTS 1 THRU 30 AND PARCELS A THRU F

LOCATION: TAX MAP 15 – PARCEL 40 – BLOCKS 5 & 6
3rd ELECTION DISTRICT
HOWARD COUNTY, MARYLAND

TITLE: GRADING, SEDIMENT AND EROSION CONTROL PLAN
WP-96-37, S-96-01, P-96-22, WP-97-126

DATE: SEPTEMBER 19, 1997 — PROJECT NO. 0761
DESIGN: DAM — DRAFT: DBT/IW — SCALE: 1" = 50' — DRAWING 7 OF 17

F-97-126

Plotted: Jan. 16, 1997
Acad Dwg: 7026S07

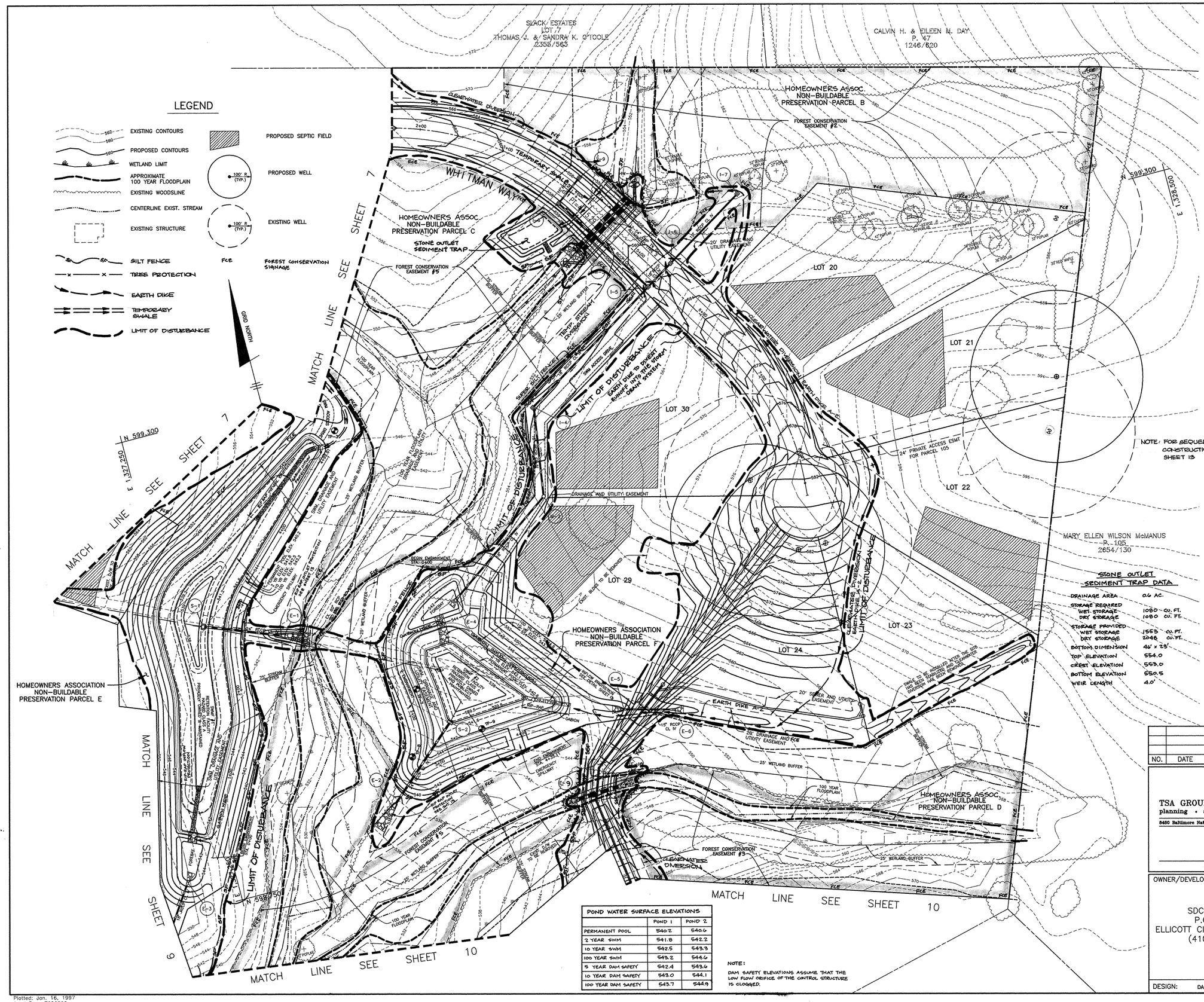

STONE OUTLET SEDIMENT TRAP DATA

DRAINAGE AREA	0.6 AC.
STORAGE REQUIRED	
WET STORAGE	1080 CU. FT.
DRY STORAGE	1080 CU. FT.
STORAGE PROVIDED	
WET STORAGE	1553 CU. FT.
DRY STORAGE	2048 CU. FT.
BOTTOM DIMENSION	46' x 23'
TOP ELEVATION	564.0
CREST ELEVATION	563.0
BOTTOM ELEVATION	560.5
WEIR LENGTH	4.0'

POND WATER SURFACE ELEVATIONS

	POND 1	POND 2
PERMANENT POOL	540.2	540.6
2 YEAR SWM	541.8	542.2
10 YEAR SWM	542.5	543.3
100 YEAR SWM	543.2	544.6
5 YEAR DAM SAFETY	542.4	543.6
10 YEAR DAM SAFETY	543.0	544.1
100 YEAR DAM SAFETY	543.7	544.9

NOTE:
DAM SAFETY ELEVATIONS ASSUME THAT THE LOW FLOW ORIFICE OF THE CONTROL STRUCTURE IS CLOGGED.

OPERATION AND MAINTENANCE SCHEDULE OF PRIVATELY OWNED AND MAINTAINED STORMWATER MANAGEMENT FACILITY WET POND

ROUTINE MAINTENANCE

1. FACILITY SHALL BE INSPECTED ANNUALLY AND AFTER MAJOR STORMS. INSPECTIONS SHOULD BE PERFORMED DURING WET WEATHER TO DETERMINE IF THE POND IS FUNCTIONING PROPERLY.
2. TOP AND SIDE SLOPES OF THE EMBANKMENT SHALL BE MOWED A MINIMUM OF TWO (2) TIMES A YEAR, ONNCE IN JUNE AND ONCE IN SEPTEMBER. OTHER SIDE SLOPES AND MAINTENANCE ACCESS SHOULD BE MOWED AS NEEDED.
3. DEBRIS AND LITTER SHALL BE REMOVED DURING REGULAR MOWING OPERATIONS AND AS NEEDED.
4. VISIBLE SIGNS OF EROSION IN THE POND AS WELL AS RIPRAP OUTLET AREA SHALL BE REPAIRED AS SOON AS IT IS NOTICED.

NON-ROUTINE MAINTENANCE

1. STRUCTURAL COMPONENTS OF THE POND SUCH AS THE DAM, THE RISER, AND THE PIPES SHALL BE REPAIRED UPON THE DETECTION OF ANY DAMAGE. THE COMPONENTS SHOULD BE INSPECTED DURING ROUTINE MAINTENANCE OPERATIONS.
2. SEDIMENT SHOULD BE REMOVED FROM THE POND NO LATER THAN WHEN THE CAPACITY OF THE POND IS HALF FULL OF SEDIMENT, WHEN DEEMED NECESSARY FOR AESTHETIC REASONS, OR WHEN DEEMED NECESSARY BY THE HOWARD COUNTY'S DEPARTMENT OF PUBLIC WORKS.

OPERATION MAINTENANCE AND INSPECTION NOTE

INSPECTION OF THE POND(S) SHOWN HEREON SHALL BE PERFORMED AT LEAST ANNUALLY, IN ACCORDANCE WITH THE CHECKLIST AND REQUIREMENTS CONTAINED WITHIN USDA, SCS "STANDARDS AND SPECIFICATIONS FOR PONDS" (MD-378). THE POND OWNER(S) AND ANY HEIRS, SUCCESSORS, OR ASSIGNS SHALL BE RESPONSIBLE FOR THE SAFETY OF THE POND AND THE CONTINUED OPERATION, SURVEILLANCE, INSPECTION, AND MAINTAINANCE THEREOF. THE POND OWNER(S) SHALL PROMPTLY NOTIFY THE SOIL CONSERVATION DISTRICT OF ANY UNUSUAL OBSERVATIONS THAT MAY BE INDICATIONS OF DISTRESS SUCH AS EXCESSIVE SEEPAGE, TURBID SEEPAGE, SLIDING OR SLUMPING.

AS-BUILT CERTIFICATION

I HEREBY CERTIFY THAT THE FACILITY SHOWN ON THIS PLAN WAS CONSTRUCTED AS SHOWN ON THE "AS-BUILT" PLANS AND MEETS THE APPROVED PLANS AND SPECIFICATIONS.

DONALD A. MASON — PE NO. _____ DATE _____

CERTIFY MEANS TO STATE OR DECLARE A PROFESSIONAL OPINION BASED UPON ONSITE INSPECTIONS AND MATERIAL TESTS WHICH ARE CONDUCTED DURING CONSTRUCTION. THE ONSITE INSPECTIONS AND MATERIAL TESTS ARE THOSE INSPECTIONS AND TESTS DEEMED SUFFICIENT AND APPROPRIATE BY COMMONLY ACCEPTED ENGINEERING STANDARDS. CERTIFY DOES NOT MEAN OR IMPLY A GUARANTEE BY THE ENGINEER NOR DOES AN ENGINEER'S CERTIFICATION RELIEVE ANY OTHER PARTY FROM MEETING REQUIREMENTS IMPOSED BY CONTRACT, EMPLOYMENT, OR OTHER MEANS, INCLUDING MEETING COMMONLY ACCEPTED INDUSTRY PRACTICES.

BY THE DEVELOPER:

"I/WE CERTIFY THAT ALL DEVELOPMENT AND/OR CONSTRUCTION WILL BE DONE ACCORDING TO THESE PLANS, AND THAT ANY RESPONSINLE PERSONNEL INVOLVED IN THE CONSTRUCTION PROJECT WILL HAVE A CERTIFICATE OF ATTENDANCE AT A DEPARTMENT OF THE ENVIRONMENT APPROVED TRAINING PROGRAM FOR THE CONTROL OF SEDIMENT AND EROSION BEFORE BEGINNING THE PROJECT. I SHALL ENGAGE A REGISTERED PROFESSIONAL ENGINEER TO SUPERVISE POND CONSTRUCTION AND PROVIDE THE HOWARD SOIL CONSERVATION DISTRICT WITH AN "AS-BUILT" PLAN OF THE POND WITHIN 30 DAYS OF COMPLETION. I ALSO AUTHORIZE PERIODIC ON-SITE INSPECTIONS BY THE HOWARD SOIL CONSERVATION DISTRICT."

James R. Morley III — 1/23/97
DEVELOPER – SDC GROUP, INC. — DATE

BY THE ENGINEER:

"I/WE CERTIFY THAT THIS PLAN FOR POND CONSTRUCTION, EROSION AND SEDIMENT CONTROL REPRESENTS A PRACTICAL AND WORKABLE PLAN BASED ON MY PERSONNAL KNOWLEDGE OF THE SITE CONDITIONS. THIS PLAN WAS PREPARED IN ACCORDANCE WITH THE REQUIREMENTS OF THE HOWARD SOIL CONSERVATION DISTRICT. I HAVE NOTIFIED THE DEVELOPER THAT HE/SHE MUST ENGAGE A REGISTERED PROFESSIONAL ENGINEER TO SUPERVISE POND CONSTRUCTION AND PROVIDE THE HOWARD SOIL CONSERVATION DISTRICT WITH AN "AS-BUILT" PLAN OF THE POND WITHIN 30 DAYS OF COMPLETION."

Donald Mason — 1/23/97
ENGINEER – DONALD A. MASON, P.E. # 21443 — DATE

THESE PLANS HAVE BEEN REVIEWED FOR THE HOWARD SOIL CONSERVATION DISTRICT AND MEET THE TECHNICAL REQUIREMENTS FOR SMALL POND CONSTRUCTION, SOIL EROSION, AND SEDIMENT CONTROL.

Cheryl Simmons — 10/1/97
NATURAL RESOURCES CONSERVATION SPECIALIST — DATE

THESE PLANS FOR SMALL POND CONSTRUCTION, SOIL EROSION, AND SEDIMENT CONTROL MEET THE REQUIREMENTS OF THE HOWARD SOIL CONSERVATION DISTRICT.

Robert W. Zirkin — 10/1/97
HOWARD SOIL CONSERVATION DISTRICT — DATE

APPROVED: HOWARD COUNTY DEPARTMENT OF PUBLIC WORKS

Andrew M. Daniels — 10-9-97
CHIEF, BUREAU OF HIGHWAYS — DATE

APPROVED: HOWARD COUNTY DEPARTMENT OF PLANNING AND ZONING

Andy Hamilton — 10/22/97
CHIEF, DIVISION OF LAND DEVELOPMENT — DATE

10/15/97
CHIEF, DEVELOPMENT ENGINEERING DIVISION — DATE

NO.	DATE	REVISION

TSA GROUP, INC.
planning • architecture • engineering
5460 Baltimore National Pike • Ellicott City, Maryland 21043 • (410) 465-6105

STATE OF MARYLAND — DONALD A. MASON — No. 21443 — REGISTERED PROFESSIONAL ENGINEER

OWNER/DEVELOPER:
SDC GROUP, INC.
P.O. BOX 417
ELLICOTT CITY, MARYLAND 21041
(410) 465-4244

PROJECT: LYNDONBROOK
LOTS 1 THRU 30 AND PARCELS A THRU F

LOCATION: TAX MAP 15 – PARCEL 40 – BLOCKS 5 & 6
3rd ELECTION DISTRICT
HOWARD COUNTY, MARYLAND

TITLE: GRADING, SEDIMENT AND EROSION CONTROL PLAN
WP-96-37, S-96-01, P-96-22, WP-97-126

DATE: SEPTEMBER 19, 1997 — PROJECT NO. 0761
DESIGN: DAM — DRAFT: DBT/IW — SCALE: 1" = 50' — DRAWING 8 OF 17

Plotted: Jan. 16, 1997
Acad Dwg: 7026S08

F-97-126

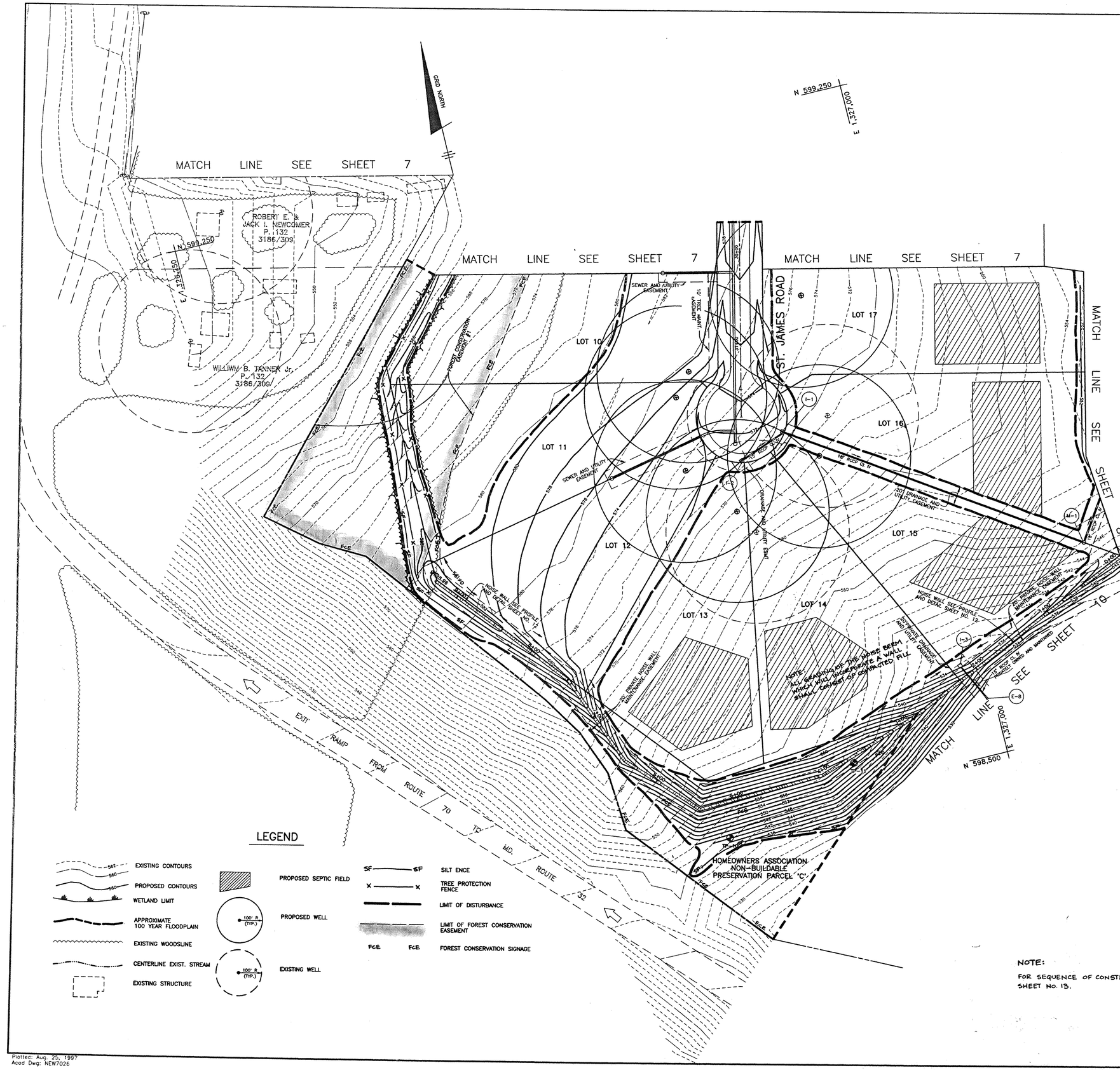

NOTE:

FOR SEQUENCE OF CONSTRUCTION SEE SHEET No. 13.

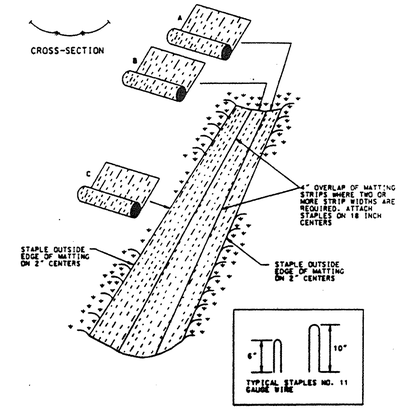

EROSION CONTROL MATTING

NOT TO SCALE

Construction Specifications

1. Key-in the matting by placing the top ends of the matting in a narrow trench, 6" in depth. Backfill the trench and tamp firmly to conform to the channel cross-section. Secure with a row of staples about 4" down slope from the trench. Spacing between staples is 6".

2. Staple the 4" overlap in the channel center using an 18" spacing between staples.

3. Before stapling the outer edges of the matting, make sure the matting is smooth and in firm contact with the soil.

4. Staples shall be placed 2' apart with 4 rows for each strip, 2 outer rows, and 2 alternating rows down the center.

5. Where one roll of matting ends and another begins, the end of the top strip shall overlap the upper end of the lower strip by 4", shiplap fashion. Reinforce the overlap with a double row of staples spaced 6" apart in a staggered pattern on either side.

6. The discharge end of the matting liner should be similarly secured with 2 double rows of staples.

Note: If flow will enter from the edge of the matting then the area affected by the flow must be keyed-in.

BY THE DEVELOPER:

"I/WE CERTIFY THAT ALL DEVELOPMENT AND/OR CONSTRUCTION WILL BE DONE ACCORDING TO THESE PLANS, AND THAT ANY RESPONSIBLE PERSONNEL INVOLVED IN THE CONSTRUCTION PROJECT WILL HAVE A CERTIFICATE OF ATTENDANCE AT A DEPARTMENT OF THE ENVIRONMENT APPROVED TRAINING PROGRAM FOR THE CONTROL OF SEDIMENT AND EROSION BEFORE BEGINNING THE PROJECT. I SHALL ENGAGE A REGISTERED PROFESSIONAL ENGINEER TO SUPERVISE POND CONSTRUCTION AND PROVIDE THE HOWARD SOIL CONSERVATION DISTRICT WITH AN "AS-BUILT" PLAN OF THE POND WITHIN 30 DAYS OF COMPLETION. I ALSO AUTHORIZE PERIODIC ON-SITE INSPECTIONS BY THE HOWARD SOIL CONSERVATION DISTRICT."

James R. Morley III — 1/23/97
DEVELOPER – SDC GROUP, INC. — DATE

BY THE ENGINEER:

"I/WE CERTIFY THAT THIS PLAN FOR POND CONSTRUCTION, EROSION AND SEDIMENT CONTROL REPRESENTS A PRACTICAL AND WORKABLE PLAN BASED ON MY PERSONNAL KNOWLEDGE OF THE SITE CONDITIONS. THIS PLAN WAS PREPARED IN ACCORDANCE WITH THE REQUIREMENTS OF THE HOWARD SOIL CONSERVATION DISTRICT. I HAVE NOTIFIED THE DEVELOPER THAT HE/SHE MUST ENGAGE A REGISTERED PROFESSIONAL ENGINEER TO SUPERVISE POND CONSTRUCTION AND PROVIDE THE HOWARD SOIL CONSERVATION DISTRICT WITH AN "AS-BUILT" PLAN OF THE POND WITHIN 30 DAYS OF COMPLETION."

Donald Mason — 1/23/97
ENGINEER – DONALD A. MASON, P.E. # 21443 — DATE

THESE PLANS HAVE BEEN REVIEWED FOR THE HOWARD SOIL CONSERVATION DISTRICT AND MEET THE TECHNICAL REQUIREMENTS FOR SMALL POND CONSTRUCTION, SOIL EROSION, AND SEDIMENT CONTROL.

Cheryl J. Simmons — 10/1/97
NATURAL RESOURCES CONSERVATION SERVICE — DATE

THESE PLANS FOR SMALL POND CONSTRUCTION, SOIL EROSION, AND SEDIMENT CONTROL MEET THE REQUIREMENTS OF THE HOWARD SOIL CONSERVATION DISTRICT.

Robert W. Zihlman — 10/1/97
HOWARD SOIL CONSERVATION DISTRICT — DATE

APPROVED: HOWARD COUNTY DEPARTMENT OF PUBLIC WORKS

Andrew M. Demler — 10-9-97
CHIEF, BUREAU OF HIGHWAYS — DATE

APPROVED: HOWARD COUNTY DEPARTMENT OF PLANNING AND ZONING

Cinda Hamilton — 10/22/97
CHIEF, DIVISION OF LAND DEVELOPMENT — DATE

10/15/97
CHIEF, DEVELOPMENT ENGINEERING DIVISION — DATE

NO.	DATE	REVISION

TSA GROUP, INC.
planning • architecture • engineering
5460 Baltimore National Pike • Ellicott City, Maryland 21043 • (410) 465-8105

STATE OF MARYLAND — DONALD ALAN MASON — No. 21443 — REGISTERED PROFESSIONAL ENGINEER

OWNER/DEVELOPER:
SDC GROUP, INC.
P.O. BOX 417
ELLICOTT CITY, MARYLAND 21041
(410) 465-4244

PROJECT: **LYNDONBROOK**
LOTS 1 THRU 30 AND PARCELS A THRU F

LOCATION: TAX MAP 15 – PARCEL 40 – BLOCKS 5 & 6
3rd ELECTION DISTRICT
HOWARD COUNTY, MARYLAND

TITLE: **GRADING, SEDIMENT AND EROSION CONTROL PLAN**
WP-96-37, S-96-01, P-96-22, WP-97-126

DESIGN: DAM	DRAFT: DBT	DATE: SEPTEMBER 19, 1997	PROJECT NO. 0761
		SCALE: 1" = 50'	DRAWING 9 OF 17

F-97-126

Plottec: Aug. 25, 1997
Acad Dwg: NEW7026

LEGEND

- EXISTING CONTOURS (562, 560)
- PROPOSED CONTOURS (560)
- WETLAND LIMIT
- APPROXIMATE 100 YEAR FLOODPLAIN
- EXISTING WOODSLINE
- CENTERLINE EXIST. STREAM
- EXISTING STRUCTURE
- PROPOSED SEPTIC FIELD
- PROPOSED WELL (100' R (TYP.))
- EXISTING WELL (100' R (TYP.))
- SF — SILT FENCE
- X — X TREE PROTECTION FENCE
- EARTH DIKE
- TEMPORARY SWALE
- LIMIT OF DISTURBANCE
- LIMIT OF FOREST CONSERVATION EASEMENT
- FCE FOREST CONSERVATION SIGNAGE

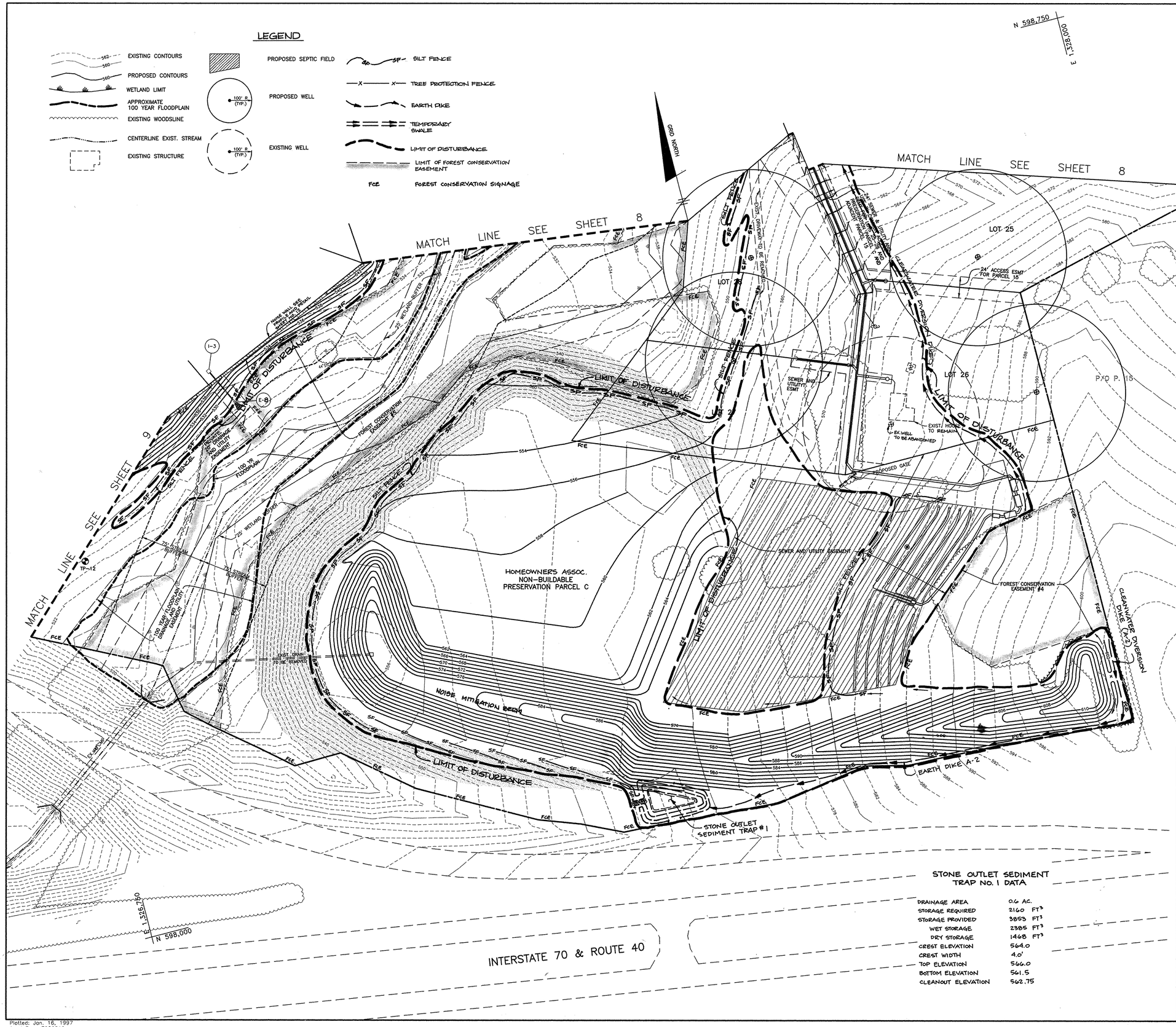

NOTE: FOR SEQUENCE OF CONSTRUCTION SEE SHEET 13.

BY THE DEVELOPER:

"I/WE CERTIFY THAT ALL DEVELOPMENT AND/OR CONSTRUCTION WILL BE DONE ACCORDING TO THESE PLANS, AND THAT ANY RESPONSIBLE PERSONNEL INVOLVED IN THE CONSTRUCTION PROJECT WILL HAVE A CERTIFICATE OF ATTENDANCE AT A DEPARTMENT OF THE ENVIRONMENT APPROVED TRAINING PROGRAM FOR THE CONTROL OF SEDIMENT AND EROSION BEFORE BEGINNING THE PROJECT. I SHALL ENGAGE A REGISTERED PROFESSIONAL ENGINEER TO SUPERVISE POND CONSTRUCTION AND PROVIDE THE HOWARD SOIL CONSERVATION DISTRICT WITH AN "AS-BUILT" PLAN OF THE POND WITHIN 30 DAYS OF COMPLETION. I ALSO AUTHORIZE PERIODIC ON-SITE INSPECTIONS BY THE HOWARD SOIL CONSERVATION DISTRICT."

James R. Mosley III — 1/23/97
DEVELOPER - SDC GROUP, INC. — DATE

BY THE ENGINEER:

"I/WE CERTIFY THAT THIS PLAN FOR POND CONSTRUCTION, EROSION AND SEDIMENT CONTROL REPRESENTS A PRACTICAL AND WORKABLE PLAN BASED ON MY PERSONNAL KNOWLEDGE OF THE SITE CONDITIONS. THIS PLAN WAS PREPARED IN ACCORDANCE WITH THE REQUIREMENTS OF THE HOWARD SOIL CONSERVATION DISTRICT. I HAVE NOTIFIED THE DEVELOPER THAT HE/SHE MUST ENGAGE A REGISTERED PROFESSIONAL ENGINEER TO SUPERVISE POND CONSTRUCTION AND PROVIDE THE HOWARD SOIL CONSERVATION DISTRICT WITH AN "AS-BUILT" PLAN OF THE POND WITHIN 30 DAYS OF COMPLETION."

Donald Mason — 1/23/97
ENGINEER - DONALD A. MASON, P.E. # 21443 — DATE

THESE PLANS HAVE BEEN REVIEWED FOR THE HOWARD SOIL CONSERVATION DISTRICT AND MEET THE TECHNICAL REQUIREMENTS FOR SMALL POND CONSTRUCTION, SOIL EROSION, AND SEDIMENT CONTROL.

Cheryl Simmons — 10/1/97
NATURAL RESOURCES CONSERVATION SERVICE — DATE

THESE PLANS FOR SMALL POND CONSTRUCTION, SOIL EROSION, AND SEDIMENT CONTROL MEET THE REQUIREMENTS OF THE HOWARD SOIL CONSERVATION DISTRICT.

Robert W. Fisher — 10/1/97
HOWARD SOIL CONSERVATION DISTRICT — DATE

APPROVED: HOWARD COUNTY DEPARTMENT OF PUBLIC WORKS

Andrew M. Daniels — 10-9-97
CHIEF, BUREAU OF HIGHWAYS — DATE

APPROVED: HOWARD COUNTY DEPARTMENT OF PLANNING AND ZONING

Cindy Hamilton — 10/22/97
CHIEF, DIVISION OF LAND DEVELOPMENT — DATE

10/15/97
CHIEF, DEVELOPMENT ENGINEERING DIVISION — DATE

NO.	DATE	REVISION

TSA GROUP, INC.
planning • architecture • engineering
8480 Baltimore National Pike • Ellicott City, Maryland 21043 • (410) 465-6105

STATE OF MARYLAND — DONALD A. MASON — No. 21443 — REGISTERED PROFESSIONAL ENGINEER

STONE OUTLET SEDIMENT TRAP NO. 1 DATA

DRAINAGE AREA	0.6 AC.
STORAGE REQUIRED	2160 FT^3
STORAGE PROVIDED	3853 FT^3
WET STORAGE	2385 FT^3
DRY STORAGE	1468 FT^3
CREST ELEVATION	564.0
CREST WIDTH	4.0'
TOP ELEVATION	566.0
BOTTOM ELEVATION	561.5
CLEANOUT ELEVATION	562.75

OWNER/DEVELOPER:
SDC GROUP, INC.
P.O. BOX 417
ELLICOTT CITY, MARYLAND 21041
(410) 465-4244

PROJECT: **LYNDONBROOK**
LOTS 1 THRU 30 AND PARCELS A THRU F

LOCATION: TAX MAP 15 - PARCEL 40 - BLOCKS 5 & 6
3rd ELECTION DISTRICT
HOWARD COUNTY, MARYLAND

TITLE: GRADING, SEDIMENT AND EROSION CONTROL PLAN
WP-96-37, S-96-01, P-96-22, WP-97-126

DATE: SEPTEMBER 19, 1997 — PROJECT NO. 0761

DESIGN: DAM — DRAFT: DBT/IW — SCALE: 1" = 50' — DRAWING 10 OF 17

F-97-126

Plotted: Jan. 16, 1997
Acad Dwg: 7026S10

POND CONSTRUCTION SPECIFICATIONS

Site Preparation

Areas designated for borrow areas, embankment, and structural works shall be cleared, grubbed and stripped of topsoil. All trees, vegetation, roots and other objectionable material shall be removed. Channel banks and sharp breaks shall be sloped to no steeper than 1:1.

Areas to be covered by the reservoir will be cleared of all trees, brush, logs, fences, rubbish and other objectionable material unless otherwise designated on the plans. Trees, brush and stumps shall be cut approximately level with the ground surface. For dry stormwater management ponds, a minimum of a 50 foot radius around the inlet structure shall be cleared.

All cleared and grubbed material shall be disposed of outside and below the limits of the dam and reservoir as directed by the owner or his representative. When specified, a sufficient quantity of topsoil will be stockpiled in a suitable location for use on the embankment and other designated areas.

Earth Fill

Material – The fill material shall be taken from approved designated borrow areas. It shall be free of roots, stumps, wood, rubbish, stones greater than 6", frozen or other objectionable materials. Fill material for the center of the embankment and cut off trench shall conform to Unified Soil Classification GC, SC, CH, or CL. Consideration may be given to the use of other materials in the embankment if design and construction are supervised by a geotechnical engineer.

Placement – Areas on which fill is to be placed shall be scarified prior to placement of fill. Fill materials shall be placed in maximum 8 inch thick (before compaction) layers which are to be continuous over the entire length of the fill. The most permeable borrow material shall be placed in the downstream portions of the embankment. The principal spillway must be installed concurrently with fill placement and not excavated into the embankment.

Compaction – The movement of the hauling and spreading equipment over the fill shall be controlled so that the entire surface of each lift shall be traversed by not less than one tread track of the equipment or compaction shall be achieved by a minimum of four complete passes of a sheepsfoot, rubber tired or vibratory roller. Fill material shall contain sufficient moisture such that the required degree of compaction will be obtained with the equipment used. The fill material shall contain sufficient moisture so that if formed into a ball it will not crumble yet not be so wet that water can be squeezed out.

Where a minimum required density is specified, it shall not be less than 95% of maximum dry density with a moisture content within +/- 2% of the optimum. Each layer of fill shall be compacted as necessary to obtain that density, and is to be certified by the Engineer at the time of construction. All compaction is to be determined by AASHTO Method T-99.

Cut Off Trench – The cutoff trench shall be excavated into impervious material along or parallel to the centerline of the embankment as shown on the plans. The bottom width of the trench shall be governed by the equipment used for excavation, with the minimum width being four feet. The depth shall be at least four feet below existing grade or as shown on the plans. The side slopes of the trench shall be 1 to 1 or flatter. The backfill shall be compacted with construction equipment, rollers, or hand tampers to assure maximum density and minimum permeability.

Structure Backfill

Backfill adjacent to pipes or structures shall be of the type and quality conforming to that specified for the adjoining fill material. The fill shall be placed in horizontal layers not to exceed four inches in thickness and compacted by hand tampers or other manually directed compaction equipment. The material needs to fill completely all spaces under and adjacent to the pipe. At no time during the backfilling operation shall driven equipment be allowed to operate closer than four feet, measured horizontally, to any part of a structure. Under no circumstances shall equipment be driven over any part of a concrete structure or pipe, unless there is a compacted fill of 24" or greater over the structure or pipe.

Pipe Conduits

All pipes shall be circular in cross section.

Corrugated Metal Pipe – All of the following criteria shall apply for corrugated metal pipe:

1. Materials – (Steel Pipe) – This pipe and its appurtenances shall be galvanized and fully bituminous coated and shall conform to the requirements of AASHTO Specification M-190 Type A with watertight coupling bands. Any bituminous coating damaged or otherwise removed shall be replaced with cold applied bituminous coating compound. Steel pipes with polymeric coatings shall have a minimum coating thickness of 0.01 inch (10 mil) on both sides of the pipe. The following coatings or an approved equal may be used: Nexon, Plasti-Cote, Blac-Klad, and Beth-Cu-Loy. Coated corrugated steel pipe shall meet the requirements of AASHTO M-245 and M-246.

   Materials – (Aluminum Coated Pipe) – This pipe and its appurtenances shall conform to the requirements of AASHTO Specification M-274 with watertight coupling bands or flanges. Any aluminum coating damaged or otherwise removed shall be replaced with cold applied bituminous coating compound.

   Materials – (Aluminum Pipe) – This pipe and its appurtenances shall conform to the requirements of AASHTO Specification M-196 or M-211 with watertight coupling bands or flanges. Aluminum surfaces that are to be in contact with concrete shall be painted with one coat of zinc chromate primer. Hot dip galvanized bolts may be used for connections. The pH of the surrounding soils shall be between 4 and 9.

2. Coupling bands, anti-seep collars, and sections, etc., must be composed of the same material as the pipe. Metals must be insulated from dissimilar materials with use of rubber or plastic insulating materials at least 24 mils in thickness.

3. Connections – All connections with pipes must be completely watertight. The drain pipe or barrel connection to the riser shall be welded all around when the pipe and riser are metal. Anti-seep collars shall be connected to the pipe in such a manner as to be completely watertight. Dimple bands are not considered to be watertight.

   All connections shall use a rubber or neoprene gasket when joining pipe sections. The end of each pipe shall be re-rolled an adequate number of corrugations to accommodate the band width. The following type connections are acceptable for pipes less than 48" in diameter: flanges on both ends of the pipe, a 12" wide standard lap type band with 12" wide by 3/8" thick closed cell circular neoprene gasket; and a 12" wide hugger type band with O-ring gaskets having a minimum diameter of 1/2" greater than the corrugation depth. Pipes 48" in diameter and larger shall be connected by a 24" long annular corrugated band using rods and lugs. A 12" wide by 3/8" thick closed cell circular neoprene gasket will be installed on the end of each pipe for a total of 24". Helically corrugated pipe shall have either continuously welded seams or have lock seams.

4. Bedding – The pipe shall be firmly and uniformly bedded throughout its entire length. Where rock or soft, spongy or other unstable soil is encountered, all such material shall be removed and replaced with suitable earth compacted to provide adequate support.

5. Backfilling shall conform to "Structure Backfill."

6. Other details (anti-seep collars, valves, etc.) shall be as shown on the drawings.

Reinforced Concrete Pipe – All of the following criteria shall apply for reinforced concrete pipe:

1. Materials – Reinforced concrete pipe shall have bell and spigot joints with rubber gaskets and shall equal or exceed ASTM Designation C-361. An approved equivalent is AWWA Specification C-302.

2. Bedding – All reinforced concrete pipe conduits shall be laid in a concrete bedding for their entire length. This bedding shall consist of high slump concrete placed under the pipe and up the sides of the pipe at least 10% of its outside diameter with a minimum thickness of 3 inches, or as shown on the drawings.

3. Laying pipe – Bell and spigot pipe shall be placed with the bell end upstream. Joints shall be made in accordance with recommendations of the manufacturer of the material. After the joints are sealed for the entire line, the bedding shall be placed so that all spaces under the pipe are filled. Care shall be exercised to prevent any deviation from the original line and grade of the pipe. The first joint must be located within 2 feet from the riser.

4. Backfilling shall conform to "Structure Backfill".

5. Other details (anti-seep collars, valves, etc.) shall be as shown on the drawings.

Polyvinyl Chloride (PVC) Pipe – All of the following criteria shall apply for polyvinyl chloride (PVC) pipe:

1. Materials – PVC pipe shall be PVC-1120 or PVC-1220 conforming to ASTM D-1785 or ASTM D-2241.

2. Joints and connections to anti-seep collars shall be completely watertight.

3. Bedding – The pipe shall be firmly and uniformly bedded throughout its entire length. Where rock or soft, spongy or other unstable soil is encountered, all such material shall be removed and replaced with suitable earth compacted to provide adequate support.

4. Backfilling shall conform to "Structure Backfill."

5. Other details (anti-seep collars, valves, etc.) shall be as shown on the drawings.

Concrete

Concrete shall meet the requirements of Maryland Department of Transportation, State Highway Administration Standard Specifications for Construction and Materials, Section 608, Mix No. 3.

Rock Riprap

All rock shall be dense, sound, and free from cracks, seams, and other defects conducive to accelerated weathering. The rock fragments shall be angular to subrounded in shape. The least dimension of an individual rock fragment shall be not less than one third the greatest dimension of the fragment.

The rock shall have the following properties:

1. Bulk specific gravity (saturated surface-dry basis) not less than 2.5.

2. Absorption not more than three percent.

3. Soundness: Weight loss in five cycles not more than 20 percent when sodium sulfate is used.

Bulk specific gravity and absorption shall be determined according to ASTM C 127. The test for soundness shall be performed according to ASTM C 88.

The riprap shall be placed to the required thickness in one operation. The rock shall be delivered and placed in a manner that will insure the riprap in place shall be reasonably homogeneous with the larger rocks uniformly distributed and firmly in contact one to another with the smaller rocks filling the voids between the larger rocks. Filter cloth shall be placed under all riprap and shall meet the requirements of Maryland Department of Transportation, State Highway Administration Standard Specifications for Construction and Materials, Section 919.12.

Care of Water during Construction

All work on permanent structures shall be carried out in areas free from water. The Contractor shall construct and maintain all temporary dikes, levees, cofferdams, drainage channels, and stream diversions necessary to protect the areas to be occupied by the permanent works. The contractor shall also furnish, install, operate, and maintain all necessary pumping and other equipment required for removal of water from the various parts of the work and for maintaining the excavations, foundation, and other parts of the work free from water as required or directed by the engineer for constructing each part of the work. After having served their purpose, all temporary protective works shall be removed or leveled and graded to the extent required to prevent obstruction in any degree whatsoever of the flow of water to the spillway or outlet works and so as not to interfere in any way with the operation or maintenance of the structure. Stream diversions shall be maintained until the full flow can be passed through the permanent works. The removal of water from the required excavation and the foundation shall be accomplished in a manner and to the extent that will maintain stability of the excavated slopes and bottom of required excavations and will allow satisfactory performance of all construction operations. During the placing and compacting of material in required excavations, the water level at the locations being refilled shall be maintained below the bottom of the excavation at such locations which may require draining the water to sumps from which the water shall be pumped.

Stabilization

All borrow areas shall be graded to provide proper drainage and left in a sightly condition. All exposed surfaces of the embankment, spillway, spoil and borrow areas, and berms shall be stabilized by seeding, liming, fertilizing and mulching in accordance with the Maryland Soil Conservation Service Standards and Specifications for Critical Area Planting (MD-342) or as shown on the accompanying drawings.

Erosion and Sediment Control

Construction operations will be carried out in such a manner that erosion will be controlled and water and air pollution minimized. State and local laws concerning pollution abatement will be followed. Construction plans shall detail erosion and sediment control measures to be employed during the construction process.

Embankment and Cut-off trench Construction

The site should be stripped of topsoil and any other unsuitable materials from the embankment or structure area in accordance with Soil Conservation Guidelines. After stripping operations have been completed, the exposed subgrade materials should be proofrolled with a loaded dumptruck or similar equipment in the presence of a geotechnical engineer or his representative. For areas that are not accessible to a dump truck, the exposed materials should be observed and tested by a geotechnical engineer or his representative utilizing a Dynamic Cone Penetrometer. Any excessively soft or loose materials identified by proofrolling or penetrometer testing should be excavated to suitable firm soil, and then grades re-established by backfilling with suitable soil.

A representative of the geotechnical Engineer should be present to monitor placement and compaction of fill for each embankment and cut-off trench. In accordance with Maryland Soil Conservation Specification 378, soils considered suitable for the center of embankment and cut-off trench shall conform to Unified Soil Classification GC, SC, CH, or CL. Per SCS 378, consideration may be given to the use of other materials in the embankment if design and construction are supervised by a geotechnical engineer.

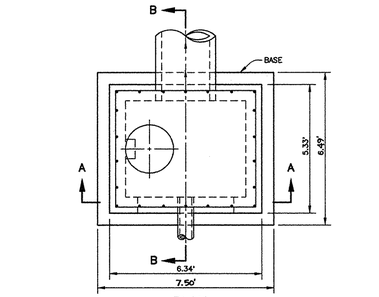

PLAN

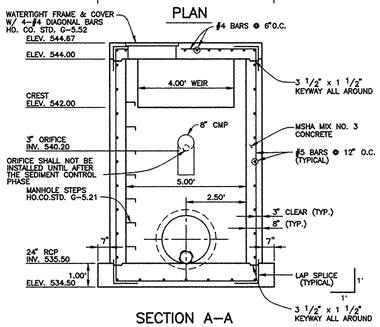

SECTION A-A

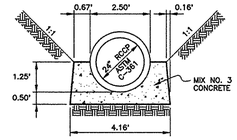

TYPE A-2
CONCRETE CRADLE – POND #1
SCALE: 1" = 3'

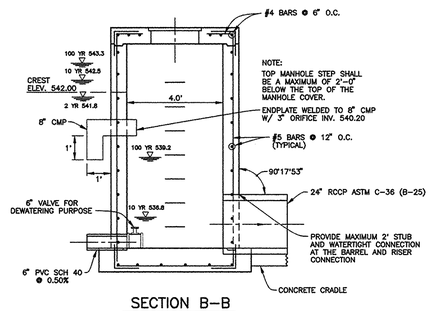

SECTION B-B

CONTROL STRUCTURE – POND #1
SCALE: 1" = 3'

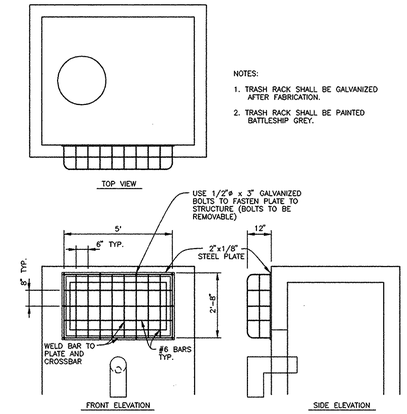

NOTES:
1. TRASH RACK SHALL BE GALVANIZED AFTER FABRICATION.
2. TRASH RACK SHALL BE PAINTED BATTLESHIP GREY.

TRASH RACK – POND #1
SCALE: 1" = 3'

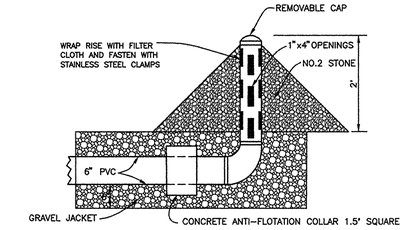

6" DEWATERING PIPE DETAIL
NO SCALE

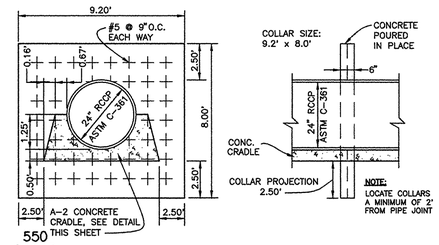

ANTI-SEEP COLLAR
NOT TO SCALE

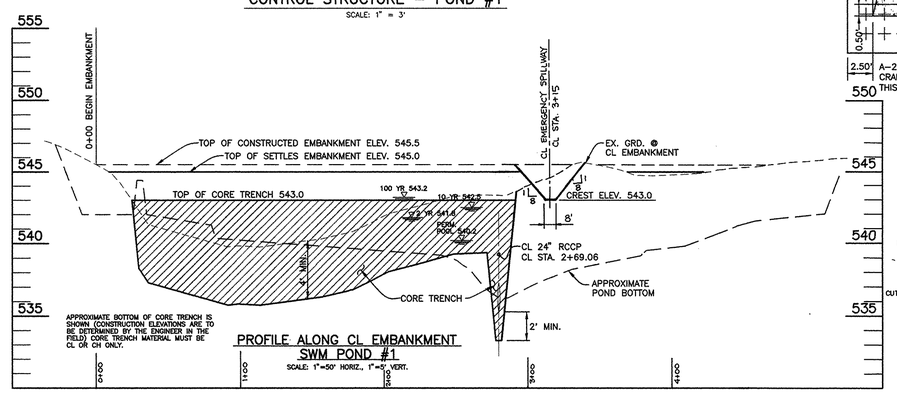

PROFILE ALONG CL EMBANKMENT
SWM POND #1
SCALE: 1"=50' HORIZ., 1"=5' VERT.

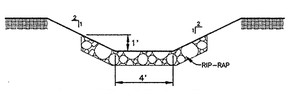

CORE TRENCH SECTION
NOT TO SCALE

NOTES:
1. IF WATER IS ENCOUNTERED DURING THE CONSTRUCTION OF THE CORE TRENCH, IT IS TO BE REMOVED BY PUMPING.
2. CORE TRENCH SHALL CONSIST OF IMPERVIOUS MATERIAL (CL,CH) AS DIRECTED BY A GEOTECHNICAL ENGINEER ONSITE AND MAY REQUIRE TO BE HAULED FROM AN OFFSITE LOCATION.

POND #1 WATER SURFACE ELEVATIONS FOR DAM SAFETY CHECK ASSUMING LOW FLOW ORIFICE IS CLOGGED.

5	YEAR	542.4
10	YEAR	543.0
100	YEAR	543.7

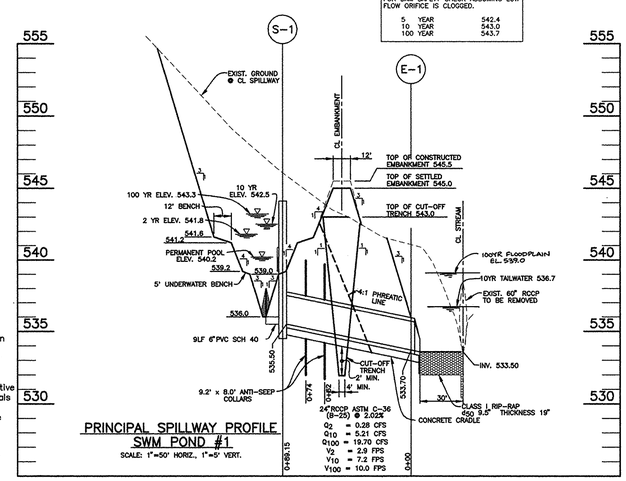

PRINCIPAL SPILLWAY PROFILE
SWM POND #1
SCALE: 1"=50' HORIZ., 1"=5' VERT.

Q_2 = 0.28 CFS
Q_{10} = 5.21 CFS
Q_{100} = 19.70 CFS
V_2 = 2.9 FPS
V_{10} = 7.2 FPS
V_{100} = 10.0 FPS

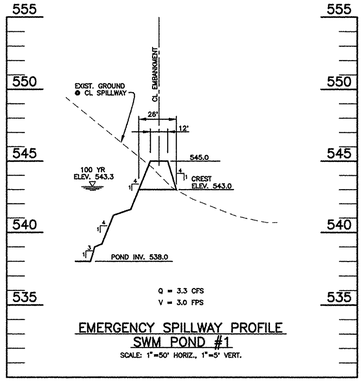

EMERGENCY SPILLWAY PROFILE
SWM POND #1
SCALE: 1"=50' HORIZ., 1"=5' VERT.

AS-BUILT CERTIFICATION

I HEREBY CERTIFY THAT THE FACILITY SHOWN ON THIS PLAN WAS CONSTRUCTED AS SHOWN ON THE "AS-BUILT" PLANS AND MEETS THE APPROVED PLANS AND SPECIFICATIONS.

PE NO. _____

DONALD A. MASON

DATE _____

CERTIFY MEANS TO STATE OR DECLARE A PROFESSIONAL OPINION BASED UPON ONSITE INSPECTIONS AND MATERIAL TESTS WHICH ARE CONDUCTED DURING CONSTRUCTION. THE ONSITE INSPECTIONS AND MATERIAL TESTS ARE THOSE INSPECTIONS AND TESTS DEEMED SUFFICIENT AND APPROPRIATE BY COMMONLY ACCEPTED ENGINEERING STANDARDS. CERTIFY DOES NOT MEAN OR IMPLY A GUARANTEE BY THE ENGINEER WORK DOES AN ENGINEER'S CERTIFICATION RELIEVE ANY OTHER PARTY FROM MEETING REQUIREMENTS IMPOSED BY CONTRACT, EMPLOYMENT, OR OTHER MEANS, INCLUDING MEETING COMMONLY ACCEPTED INDUSTRY PRACTICES.

BY THE DEVELOPER:

"I/WE CERTIFY THAT ALL DEVELOPMENT AND/OR CONSTRUCTION WILL BE DONE ACCORDING TO THESE PLANS, AND THAT ANY RESPONSIBLE PERSONNEL INVOLVED IN THE CONSTRUCTION PROJECT WILL HAVE A CERTIFICATE OF ATTENDANCE AT A DEPARTMENT OF THE ENVIRONMENT APPROVED TRAINING PROGRAM FOR THE CONTROL OF SEDIMENT AND EROSION BEFORE BEGINNING THE PROJECT. I SHALL ENGAGE A REGISTERED PROFESSIONAL ENGINEER TO SUPERVISE POND CONSTRUCTION AND PROVIDE THE HOWARD SOIL CONSERVATION DISTRICT WITH AN "AS-BUILT" PLAN OF THE POND WITHIN 30 DAYS OF COMPLETION. I ALSO AUTHORIZE PERIODIC ON-SITE INSPECTIONS BY THE HOWARD SOIL CONSERVATION DISTRICT."

James D. Morley III — 4/4/97
DEVELOPER – SDC GROUP, INC. — DATE

BY THE ENGINEER:

"I/WE CERTIFY THAT THIS PLAN FOR POND CONSTRUCTION, EROSION AND SEDIMENT CONTROL REPRESENTS A PRACTICAL AND WORKABLE PLAN BASED ON MY PERSONNAL KNOWLEDGE OF THE SITE CONDITIONS. THIS PLAN WAS PREPARED IN ACCORDANCE WITH THE REQUIREMENTS OF THE HOWARD SOIL CONSERVATION DISTRICT. I HAVE NOTIFIED THE DEVELOPER THAT HE/SHE MUST ENGAGE A REGISTERED PROFESSIONAL ENGINEER TO SUPERVISE POND CONSTRUCTION AND PROVIDE THE HOWARD SOIL CONSERVATION DISTRICT WITH AN "AS-BUILT" PLAN OF THE POND WITHIN 30 DAYS OF COMPLETION."

Donald Mason — 4/7/97
ENGINEER – DONALD A. MASON, P.E. # 21443 — DATE

THESE PLANS HAVE BEEN REVIEWED FOR THE HOWARD SOIL CONSERVATION DISTRICT AND MEET THE TECHNICAL REQUIREMENTS FOR SMALL POND CONSTRUCTION, SOIL EROSION, AND SEDIMENT CONTROL.

Cheryl Simmons — 10/1/97
NATURAL RESOURCES CONSERVATION SERVICE — DATE

THESE PLANS FOR SMALL POND CONSTRUCTION, SOIL EROSION, AND SEDIMENT CONTROL MEET THE REQUIREMENTS OF THE HOWARD SOIL CONSERVATION DISTRICT.

Robert W. Fisher — 10/7/97
HOWARD SOIL CONSERVATION DISTRICT — DATE

APPROVED: HOWARD COUNTY DEPARTMENT OF PUBLIC WORKS

Andrew M. Parker — 10-9-97
CHIEF, BUREAU OF HIGHWAYS — DATE

APPROVED: HOWARD COUNTY DEPARTMENT OF PLANNING AND ZONING

Cindy Hamilton — 10/22/97
CHIEF, DIVISION OF LAND DEVELOPMENT — DATE

10/15/97
CHIEF, DEVELOPMENT ENGINEERING DIVISION — DATE

NO.	DATE	REVISION

TSA GROUP, INC.
planning • architecture • engineering
8480 Baltimore National Pike • Ellicott City, Maryland 21043 • (410) 465-6105

STATE OF MARYLAND — DONALD A. MASON — No. 21443 — PROFESSIONAL ENGINEER

OWNER/DEVELOPER:
SDC GROUP, INC.
P.O. BOX 417
ELLICOTT CITY, MARYLAND 21041
(410) 465-4244

PROJECT: LYNDONBROOK
LOTS 1 THRU 30 AND PARCELS A THRU F

LOCATION: TAX MAP 15 – PARCEL 40 – BLOCKS 5 & 6
3rd ELECTION DISTRICT
HOWARD COUNTY, MARYLAND

TITLE: STORMWATER MANAGEMENT NOTES AND DETAILS
WP-96-37, S-96-01, P-96-22, WP-97-126

DATE: SEPTEMBER 19, 1997 — PROJECT NO. 0761

DESIGN: DAM — DRAFT DBT — SCALE: AS SHOWN — DRAWING 11 OF 17

F-97-126

Plotted: April 2, 1997
Acad Dwg: 7024S11

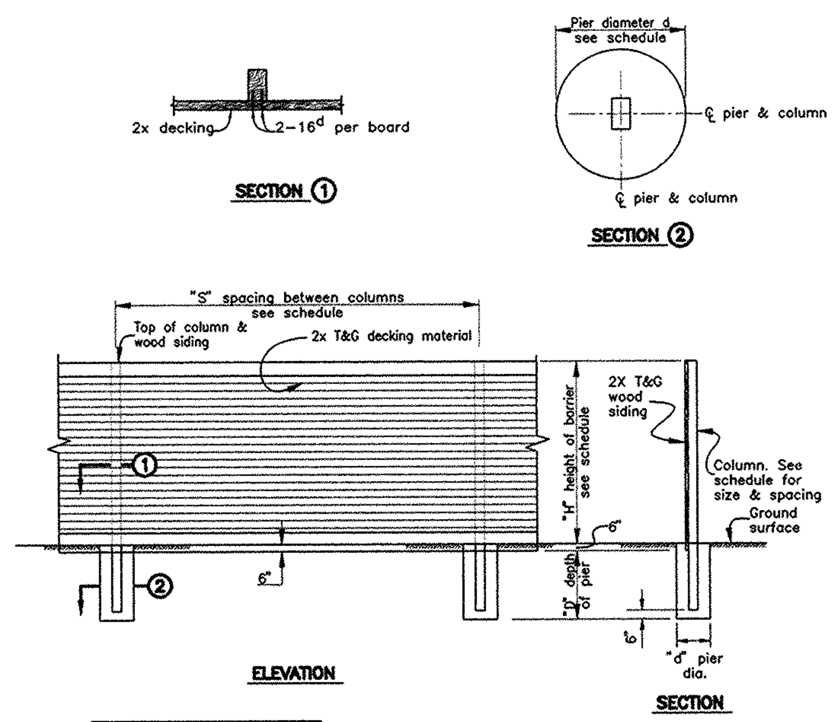

NOTES:

1. GENERAL.
   a. Height of barrier shall be based on acoustic requirements.
   b. Barrier walls having a height (H) not indicated in the tables shall be constructed as shown in the next higher height category.
2. SIDING.
   a. 2x wood decking material shall be utilized to span horizontally between posts. Design criteria is based on an allowable bending stress of 1400 lbs. per sq. in. and a 33 1/3% increase in stress for wind loads as considered appropriate. Decking shall be MC15.
   b. Siding in contact with the ground and for a distance of 6" above grade shall be treated with wood preservative.
3. POST.
   a. Wood post shall be utilized at the spacing indicated on the schedule. Design criteria is based on an allowable bending stress of 1400 lbs. per sq. in. and a 33 1/3% increase for wind loadings.
   b. Post embedded in concrete shall be treated with a wood preservative in the area of embedment and 12" above grade.
4. CONCRETE.
   a. Concrete in the piers shall have a 28 day compressive strength of 2500 lbs. per sq. in.
   b. Concrete shall be placed in drilled piers utilizing the earth as the forms.
5. FOUNDATIONS.
   a. The drilled piers have been designed utilizing an allowable passive pressure of 300 lbs. per sq. ft. and the following formula:

$$D = \left(\frac{14.52M}{pd}\right)^{1/3}$$

M = Moment at top of drilled pier(ft./lbs.)
P = Allowable passive pressure (300 lbs. per sq. ft.)
d = Diameter of pier (ft.)
D = Depth of pier (ft.)

6. ALTERNATE #1 (Preservative Treatment). Alternate #1 Represents the additional cost factor for treating the basic wood structure indicated on this reference plan. The necessity for treatment and the type of preservative will be subject to local conditions. All treatments shall conform to AWPA standard C-14.
7. ALTERNATE #2 (Painting) Alternate #2 represents the additional cost factor required to paint one side of the basic wood structure shown on this reference plan. Painting shall consist of 3 applications of paint. 2 coats of latex base paint conforming to Federal Specification TT-P-00966 shall be applied over a primer coat conforming to federal Specification TT-P-00250.
8. ALTERNATE #3 (Staining) Alternate #3 represents the additional cost factor required to stain one side of the basic wood structure. Stain shall consist of 2 coats of semi-transparent sealer stain applied in accordance with manufactures written instructions.
9. ALTERNATE #1 (Preservative Treatment) shall be utilized for this project.

SCHEDULE

40 #/ϕ horizontal loading

H	S	D	d	Post size
5'	8'	6'	12"	4x8
10'	8'	8'	18"	6x12
15'	8'	10'	24"	8x16
20'	6'	10'	30"	10x16

NOISE WALL DETAIL
NOT TO SCALE

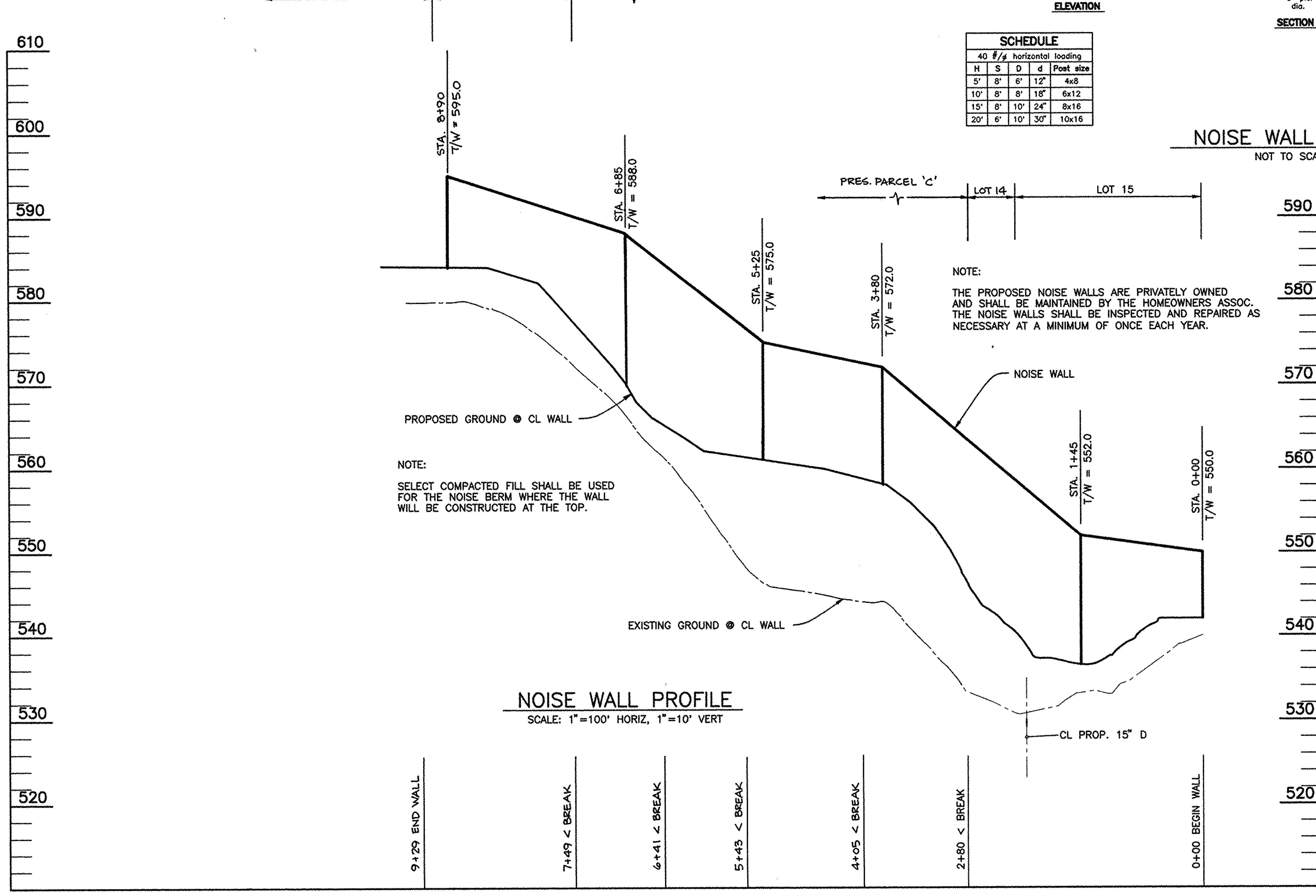

NOTE:

THE PROPOSED NOISE WALLS ARE PRIVATELY OWNED AND SHALL BE MAINTAINED BY THE HOMEOWNERS ASSOC. THE NOISE WALLS SHALL BE INSPECTED AND REPAIRED AS NECESSARY AT A MINIMUM OF ONCE EACH YEAR.

NOTE:

SELECT COMPACTED FILL SHALL BE USED FOR THE NOISE BERM WHERE THE WALL WILL BE CONSTRUCTED AT THE TOP.

NOISE WALL PROFILE
SCALE: 1"=100' HORIZ, 1"=10' VERT

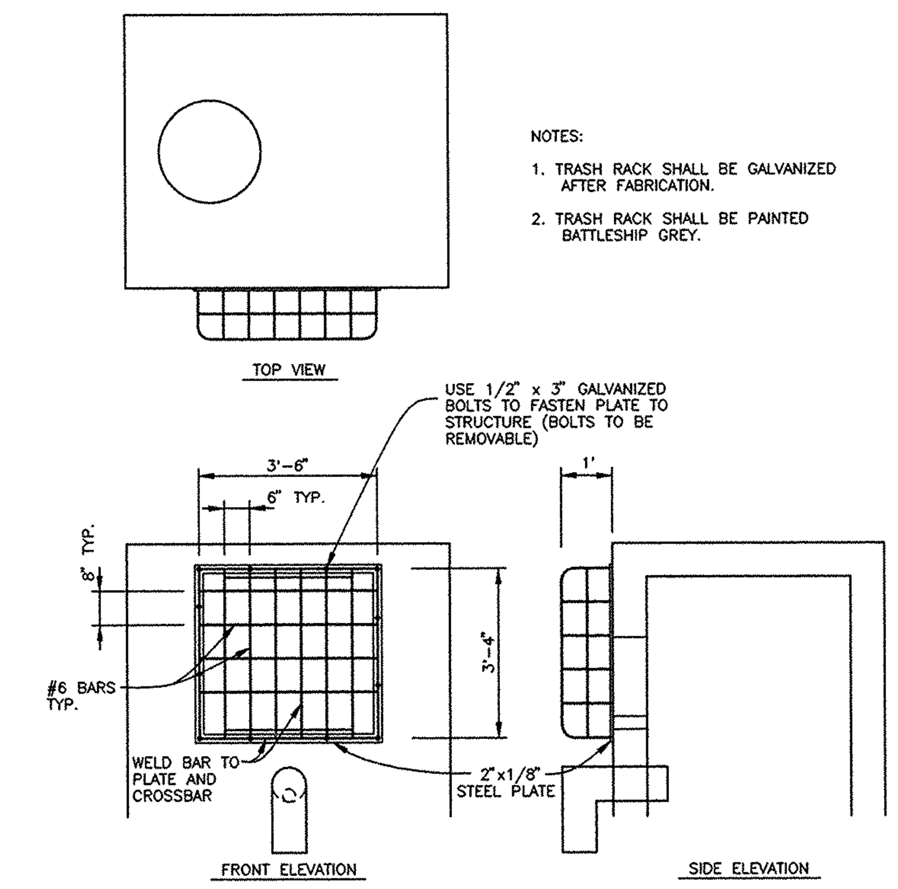

NOTES:

1. TRASH RACK SHALL BE GALVANIZED AFTER FABRICATION.
2. TRASH RACK SHALL BE PAINTED BATTLESHIP GREY.

TRASH RACK – POND #2
SCALE: 1" = 3'

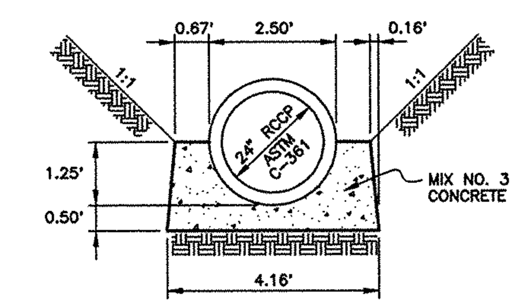

TYPE A-2 CONCRETE CRADLE – POND #2
SCALE: 1" = 3'

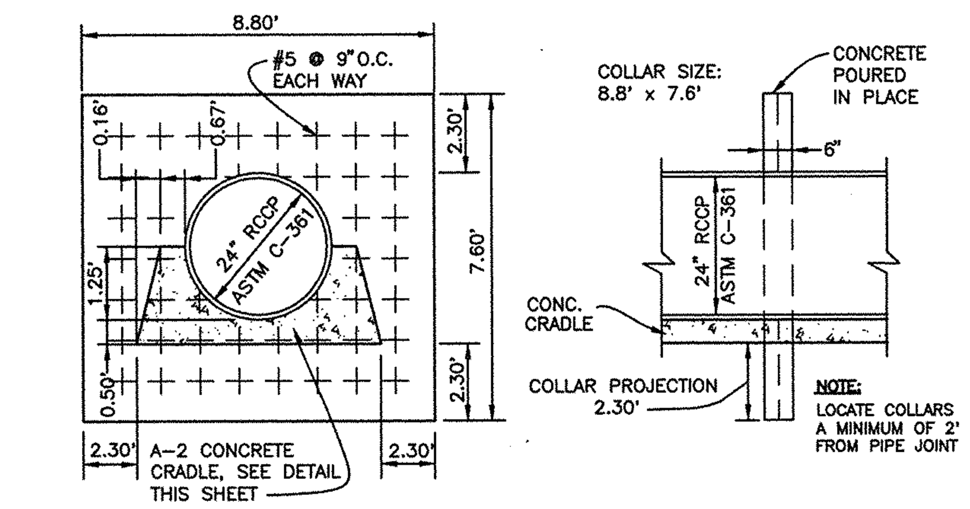

ANTI-SEEP COLLAR
NOT TO SCALE

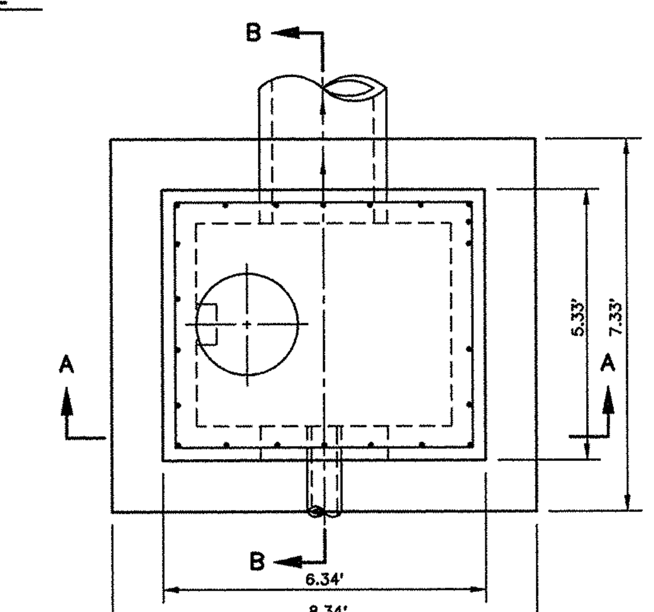

PLAN

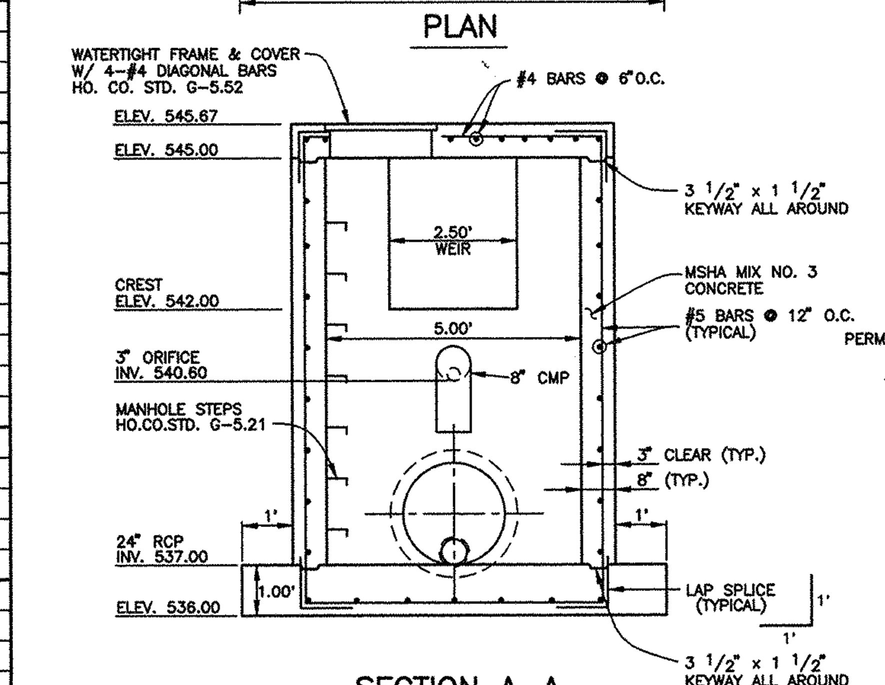

SECTION A-A

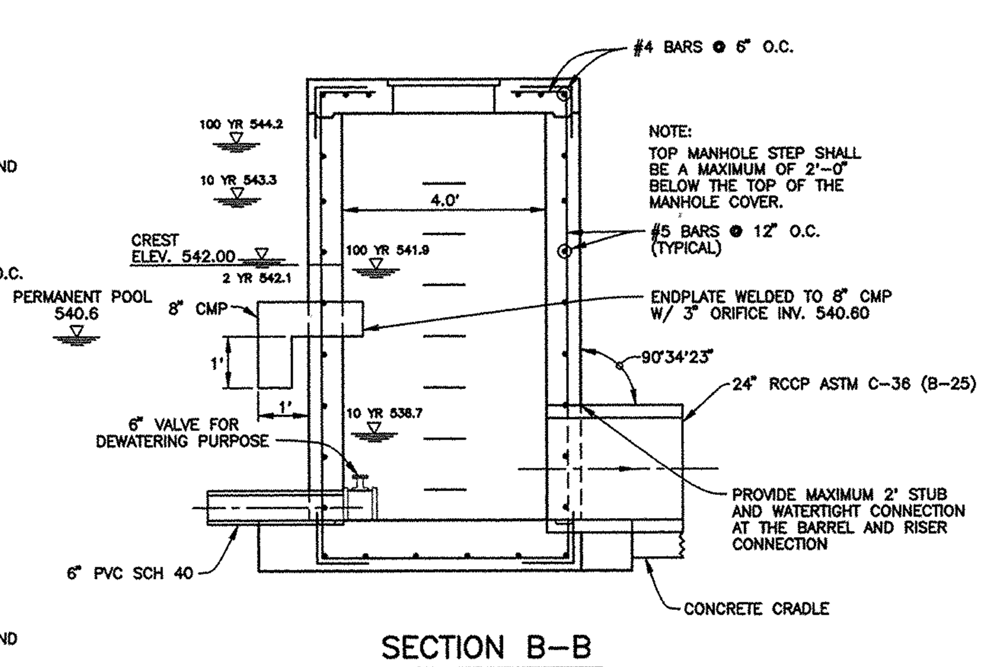

SECTION B-B

CONTROL STRUCTURE – POND #2
SCALE: 1" = 3'

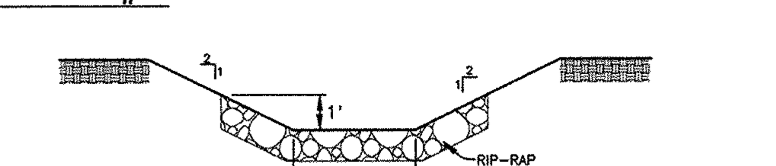

CHANNEL BELOW E-2
NOT TO SCALE

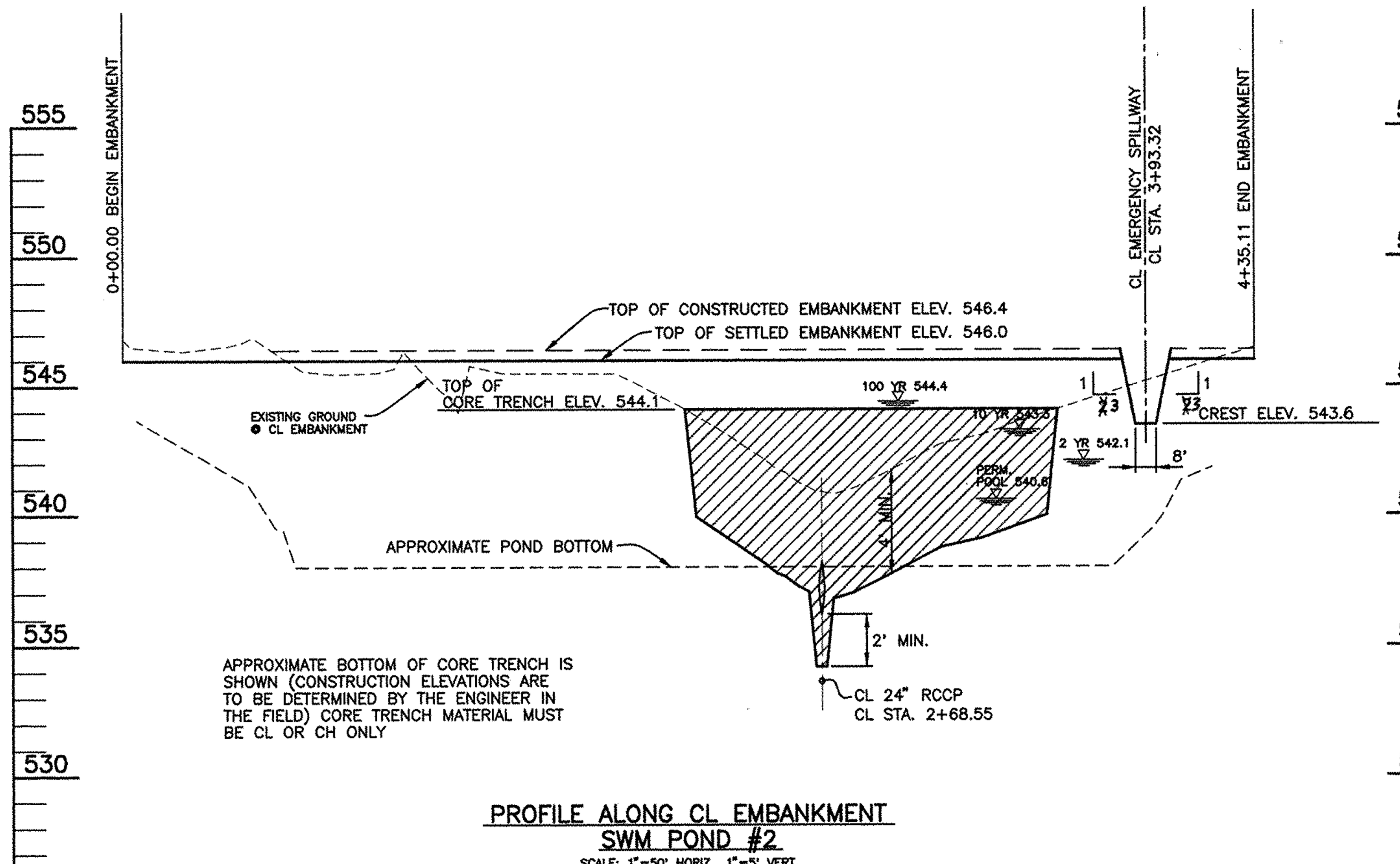

APPROXIMATE BOTTOM OF CORE TRENCH IS SHOWN (CONSTRUCTION ELEVATIONS ARE TO BE DETERMINED BY THE ENGINEER IN THE FIELD) CORE TRENCH MATERIAL MUST BE CL OR CH ONLY

PROFILE ALONG CL EMBANKMENT SWM POND #2
SCALE: 1"=50' HORIZ., 1"=5' VERT.

POND #2 WATER SURFACE ELEVATIONS FOR DAM SAFETY CHECK ASSUMING LOW FLOW ORIFICE IS CLOGGED.

5 YEAR	543.6
10 YEAR	544.1
100 YEAR	544.9

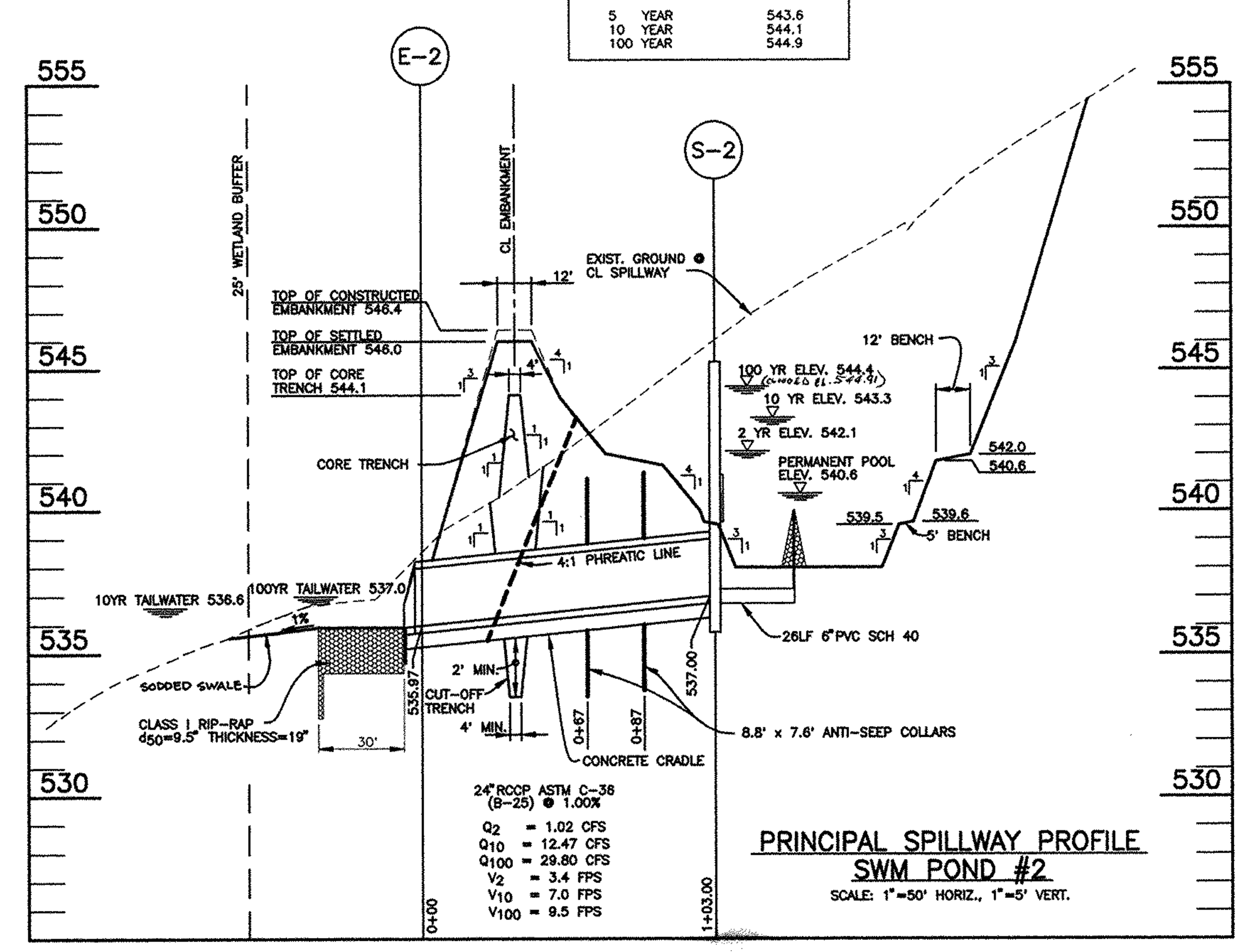

24"RCCP ASTM C-36 (B-25) @ 1.00%

Q_2 = 1.02 CFS
Q_{10} = 12.47 CFS
Q_{100} = 29.80 CFS
V_2 = 3.4 FPS
V_{10} = 7.0 FPS
V_{100} = 9.5 FPS

PRINCIPAL SPILLWAY PROFILE SWM POND #2
SCALE: 1"=50' HORIZ., 1"=5' VERT.

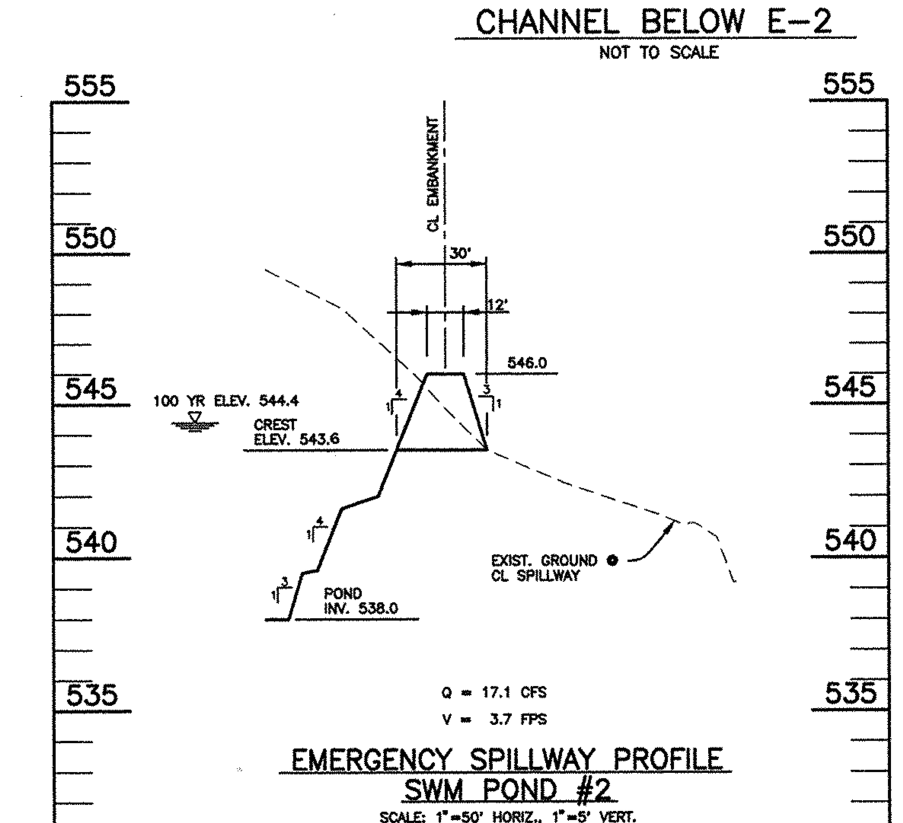

Q = 17.1 CFS
V = 3.7 FPS

EMERGENCY SPILLWAY PROFILE SWM POND #2
SCALE: 1"=50' HORIZ., 1"=5' VERT.

AS-BUILT CERTIFICATION

I HEREBY CERTIFY THAT THE FACILITY SHOWN ON THIS PLAN WAS CONSTRUCTED AS SHOWN ON THE "AS-BUILT" PLANS AND MEETS THE APPROVED PLANS AND SPECIFICATIONS.

DONALD A. MASON — PE NO. ______ DATE ______

CERTIFY MEANS TO STATE OR DECLARE A PROFESSIONAL OPINION BASED UPON ONSITE INSPECTIONS AND MATERIAL TESTS WHICH ARE CONDUCTED DURING CONSTRUCTION. THE ONSITE INSPECTIONS AND MATERIAL TESTS ARE THOSE INSPECTIONS AND TESTS DEEMED SUFFICIENT AND APPROPRIATE BY COMMONLY ACCEPTED ENGINEERING STANDARDS. CERTIFY DOES NOT MEAN OR IMPLY A GUARANTEE BY THE ENGINEER NOR DOES AN ENGINEER'S CERTIFICATION RELIEVE ANY OTHER PARTY FROM MEETING REQUIREMENTS IMPOSED BY CONTRACT, EMPLOYMENT, OR OTHER MEANS, INCLUDING MEETING COMMONLY ACCEPTED INDUSTRY PRACTICES.

BY THE DEVELOPER:

"I/WE CERTIFY THAT ALL DEVELOPMENT AND/OR CONSTRUCTION WILL BE DONE ACCORDING TO THESE PLANS, AND THAT ANY RESPONSINLE PERSONNEL INVOLVED IN THE CONSTRUCTION PROJECT WILL HAVE A CERTIFICATE OF ATTENDANCE AT A DEPARTMENT OF THE ENVIRONMENT APPROVED TRAINING PROGRAM FOR THE CONTROL OF SEDIMENT AND EROSION BEFORE BEGINNING THE PROJECT. I SHALL ENGAGE A REGISTERED PROFESSIONAL ENGINEER TO SUPERVISE POND CONSTRUCTION AND PROVIDE THE HOWARD SOIL CONSERVATION DISTRICT WITH AN "AS-BUILT" PLAN OF THE POND WITHIN 30 DAYS OF COMPLETION. I ALSO AUTHORIZE PERIODIC ON-SITE INSPECTIONS BY THE HOWARD SOIL CONSERVATION DISTRICT."

James R. Moxley III — 4/4/97
DEVELOPER – SDC GROUP, INC. — DATE

BY THE ENGINEER:

"I/WE CERTIFY THAT THIS PLAN FOR POND CONSTRUCTION, EROSION AND SEDIMENT CONTROL REPRESENTS A PRACTICAL AND WORKABLE PLAN BASED ON MY PERSONNAL KNOWLEDGE OF THE SITE CONDITIONS. THIS PLAN WAS PREPARED IN ACCORDANCE WITH THE REQUIREMENTS OF THE HOWARD SOIL CONSERVATION DISTRICT. I HAVE NOTIFIED THE DEVELOPER THAT HE/SHE MUST ENGAGE A REGISTERED PROFESSIONAL ENGINEER TO SUPERVISE POND CONSTRUCTION AND PROVIDE THE HOWARD SOIL CONSERVATION DISTRICT WITH AN "AS-BUILT" PLAN OF THE POND WITHIN 30 DAYS OF COMPLETION."

Donald Mason — 4/7/97
ENGINEER – DONALD A. MASON, P.E. # 21443 — DATE

THESE PLANS HAVE BEEN REVIEWED FOR THE HOWARD SOIL CONSERVATION DISTRICT AND MEET THE TECHNICAL REQUIREMENTS FOR SMALL POND CONSTRUCTION, SOIL EROSION, AND SEDIMENT CONTROL.

Cheryl Simmons — 10/1/97
NATURAL RESOURCES CONSERVATION SERVICE

THESE PLANS FOR SMALL POND CONSTRUCTION, SOIL EROSION, AND SEDIMENT CONTROL MEET THE REQUIREMENTS OF THE HOWARD SOIL CONSERVATION DISTRICT.

Robert W. Zichn — 10/1/97
HOWARD SOIL CONSERVATION DISTRICT — DATE

APPROVED: HOWARD COUNTY DEPARTMENT OF PUBLIC WORKS

Andrew W. Dewelt — 10-9-97
CHIEF, BUREAU OF HIGHWAYS — DATE

APPROVED: HOWARD COUNTY DEPARTMENT OF PLANNING AND ZONING

Cindy Hamilton — 10/22/97
CHIEF, DIVISION OF LAND DEVELOPMENT — DATE

10/15/97
CHIEF, DEVELOPMENT ENGINEERING DIVISION — DATE

NO.	DATE	REVISION

TSA GROUP, INC.
planning • architecture • engineering
8480 Baltimore National Pike • Ellicott City, Maryland 21043 • (410) 465-6105

STATE OF MARYLAND — DONALD ALAN MASON — REGISTERED PROFESSIONAL ENGINEER

OWNER/DEVELOPER:
SDC GROUP, INC.
P.O. BOX 417
ELLICOTT CITY, MARYLAND 21041
(410) 465-4244

PROJECT: **LYNDONBROOK**
LOTS 1 THRU 30 AND PARCELS A THRU F

LOCATION: TAX MAP 15 – PARCEL 40 – BLOCKS 5 & 6
3rd ELECTION DISTRICT
HOWARD COUNTY, MARYLAND

TITLE: STORMWATER MANAGEMENT AND NOISE WALL PROFILES AND DETAILS
WP-96-37, S-96-01, P-96-22, WP-97-126

DATE: SEPTEMBER 19, 1997 — PROJECT NO. 0761

DESIGN: DAM — DRAFT DBT — SCALE: AS SHOWN — DRAWING 12 OF 17

F-97-126

Plotted: April 2, 1997
Acad Dwg: 7024S12

SEDIMENT CONTROL NOTES

1. A MINIMUM OF 24 HOURS NOTICE MUST BE GIVEN TO THE HOWARD COUNTY DEPARTMENT OF INSPECTION, LICENSES AND PERMITS, SEDIMENT CONTROL DIVISION PRIOR TO THE START OF ANY CONSTRUCTION, (313-1850).
2. ALL VEGETATIVE AND STRUCTURAL PRACTICES ARE TO BE INSTALLED ACCORDING TO THE PROVISIONS OF THIS PLAN AND ARE TO BE IN CONFORMANCE WITH THE MOST CURRENT "MARYLAND STANDARDS AND SPECIFICATION FOR SOIL EROSION AND SEDIMENT CONTROL", REVISIONS THERETO.
3. FOLLOWING INITIAL SOIL DISTURBANCE OR REDISTURBANCE, PERMANENT OR TEMPORARY STABILIZATION SHALL BE COMPLETED WITHIN: A) 7 CALENDAR DAYS FOR ALL PERIMETER SEDIMENT CONTROL STRUCTURES, DIKES, PERIMETER SLOPES AND ALL SLOPES GREATER THAN 3:1, B) 14 DAYS AS TO ALL OTHER DISTURBED OR GRADED AREAS ON THE PROJECT SITE.
4. ALL SEDIMENT TRAPS/BASINS SHOWN MUST BE FENCED AND WARNING SIGNS POSTED AROUND THEIR PERIMETER IN ACCORDANCE WITH VOL. 1, CHAPTER 12, OF THE HOWARD COUNTY DESIGN MANUAL, STORM DRAINAGE.
5. ALL DISTURBED AREAS MUST BE STABILIZED WITHIN THE TIME PERIOD SPECIFIED ABOVE IN ACCORDANCE WITH THE 1994 MARYLAND STANDARDS AND SPECIFICATIONS FOR SOIL EROSION AND SEDIMENT CONTROL FOR PERMANENT SEEDINGS (SEC. 51) SOD (SEC. 54), TEMPORARY SEEDING (SEC. 50) AND MULCHING (SEC. 52). TEMPORARY STABILIZATION WITH MULCH ALONE CAN ONLY BE DONE WHEN RECOMMENDED SEEDING DATES DO NOT ALLOW FOR PROPER GERMINATION AND ESTABLISHMENT OF GRASSES.
6. ALL SEDIMENT CONTROL STRUCTURES ARE TO REMAIN IN PLACE AND ARE TO BE MAINTAINED IN OPERATIVE CONDITION UNTIL PERMISSION FOR THEIR REMOVAL HAS BEEN OBTAINED FROM THE HOWARD COUNTY SEDIMENT CONTROL INSPECTOR.
7. SITE ANALYSIS:

TOTAL AREA OF SITE	64.55	ACRES
AREA DISTURBED	22.60	ACRES
AREA TO BE ROOFED OR PAVED	1.76	ACRES
AREA TO BE VEGETATIVELY STABILIZED	20.84	ACRES
TOTAL CUT	65,250	CY
TOTAL FILL	65,250	CY
OFFSITE WASTE/BORROW AREA LOCATION	N/A	

8. ANY SEDIMENT CONTROL PRACTICE WHICH IS DISTURBED BY GRADING ACTIVITY FOR PLACEMENT OF UTILITIES MUST BE REPAIRED ON THE SAME DAY OF DISTURBANCE.
9. ADDITIONAL SEDIMENT CONTROL MUST BE PROVIDED, IF DEEMED NECESSARY BY THE HOWARD COUNTY SEDIMENT CONTROL INSPECTOR.
10. ON ALL SITES WITH DISTURBED AREAS IN EXCESS OF 2 ACRES, APPROVAL OF THE INSPECTION AGENCY SHALL BE REQUESTED UPON COMPLETION OF INSTALLATION OF PERIMETER EROSION AND SEDIMENT CONTROLS, BUT BEFORE PROCEEDING WITH ANY OTHER EARTH DISTURBANCE OR GRADING. OTHER BUILDING OR GRADING INSPECTION APPROVALS MAY NOT BE AUTHORIZED UNTIL THIS INITIAL APPROVAL BY THE INSPECTION AGENCY IS MADE.
11. TRENCHES FOR THE CONSTRUCTION OF UTILITIES IS LIMITED TO THREE PIPE LENGTHS OR THAT WHICH CAN BE BACK FILLED AND STABILIZED WITHIN ONE WORKING DAY, WHICHEVER IS SHORTER.

TEMPORARY SEEDBED PREPARATION

APPLY TO GRADED OR CLEARED AREAS LIKELY TO BE REDISTURBED WHERE A SHORT-TERM VEGETATIVE COVER IS NEEDED.

SEEDBED PREPARATION: LOOSEN UPPER THREE INCHES OF SOIL BY RAKING, DISCING OR OTHER ACCEPTABLE MEANS BEFORE SEEDING, IF NOT PREVIOUSLY LOOSENED.

SOIL AMENDMENTS: APPLY 600 LBS PER ACRE 10-10-10 FERTILIZER (14 LBS/1000 SQ FT).

SEEDING: FOR PERIOD MARCH 1 THROUGH APRIL 30 AND FROM AUGUST 15 THROUGH NOVEMBER 15, SEED WITH 2-1/2 BUSHELS PER ACRE OF ANNUAL RYE (3.2 LBS/1000 SQ FT). FOR THE PERIOD MAY 1 THROUGH AUGUST 14, SEED WITH 3 LBS PER ACRE OF WEEPING LOVEGRASS (.07 LBS/1000 SQ FT). FOR THE PERIOD NOVEMBER 16 THROUGH FEBRUARY 28, PROTECT SITE BY APPLYING 2 TONS PER ACRE OF WELL ANCHORED STRAW MULCH AND SEED AS SOON AS POSSIBLE IN THE SPRING, OR USE SOD.

MULCHING: APPLY 1-1/2 TO 2 TONS PER ACRE (70 TO 90 LBS/1000 SQ FT) OF UNROTTED SMALL GRAIN STRAW IMMEDIATELY AFTER SEEDING. ANCHOR MULCH IMMEDIATELY AFTER APPLICATION USING MULCH ANCHORING TOOL OR 218 GALLONS PER ACRE (5 GAL/1000 SQ FT) OF EMULSIFIED ASPHALT ON FLAT AREAS. ON SLOPES, 8 FT. OR HIGHER, USE 348 GALLONS PER ACRE (8 GAL/1000 SQ FT) FOR ANCHORING.

REFER TO THE 1983 MARYLAND STANDARDS AND SPECIFICATIONS FOR SOIL EROSION AND SEDIMENT CONTROL FOR RATE AND METHODS NOT COVERED.

PERMANENT SEEDBED PREPARATION

SEEDBED PREPARATION: LOOSEN UPPER THREE INCHES OF SOIL BY RAKING, DISCING OR OTHER ACCEPTABLE MEANS BEFORE SEEDING, IF NOT PREVIOUSLY LOOSENED.

SOIL AMENDMENTS: IN LIEU OF SOIL TEST RECOMMENDATIONS, USE ON OF THE FOLLOWING SCHEDULES:

1. PREFERRED – APPLY 2 TONS PER ACRE DOLOMITIC LIMESTONE (92 LBS/1000 SQ FT) AND 600 LBS PER ACRE 10-10-10 FERTILIZER (14 LBS/1000 SQ FT) BEFORE SEEDING. HARROW OR DISC INTO UPPER THREE INCHES OF SOIL. AT TIME OF SEEDING, APPLY 400 LBS PER ACRE 30-0-0- UREAFORM FERTILIZER (9 LBS/1000 SQ FT).
2. ACCEPTABLE – APPLY 2 TONS PER ACRE DOLOMITIC LIMESTONE (92 LBS/1000 SQ FT) AND 1000 LBS PER ACRE 10-10-10 FERTILIZER (23 LBS/1000 SQ FT) BEFORE SEEDING. HARROW OR DISC INTO UPPER THREE INCHES OF SOIL.

SEEDING: FOR THE PERIODS MARCH 1 THROUGH APRIL 30 AND AUGUST 1 THROUGH OCTOBER 15, SEED WITH 60 LBS PER ACRE (1.4 LBS/1000 SQ FT) OF KENTUCKY 31 TALL FESCUE PER ACRE AND 2 LBS PER ACRE (.05 LBS/1000 SQ FT) OF WEEPING LOVEGRASS. DURING THE PERIOD OF OCTOBER 16 THROUGH FEBRUARY 28, PROTECT SITE BY: OPTION (1) 2 TONS PER ACRE OF WELL ANCHORED STRAW MULCH AND SEED AS SOON AS POSSIBLE IN THE SPRING. OPTION (2) USE SOD. OPTION (3) SEED WITH 60 LBS PER ACRE OF KENTUCKY 31 TALL FESCUE AND MULCH WITH 2 TONS PER ACRE OF WELL ANCHORED STRAW.

MULCHING: APPLY 1-1/2 TO 2 TONS PER ACRE (70 TO 90 LBS/1000 SQ FT) OF UNROTTED SMALL GRAIN STRAW IMMEDIATELY AFTER SEEDING. ANCHOR MULCH IMMEDIATELY AFTER APPLICATION USING MULCH ANCHORING TOOL OR 218 GALLONS PER ACRE (5 GAL/1000 SQ FT) OF EMULSIFIED ASPHALT ON FLAT AREAS. ON SLOPES 8 FEET OR HIGHER, USE 348 GALLONS PER ACRE (8 GAL/1000 SQ FT) FOR ANCHORING.

MAINTENANCE: INSPECT ALL SEEDED AREAS AND MAKE NEEDED REPAIRS, REPLACEMENTS AND RESEEDINGS.

SEQUENCE OF CONSTRUCTION

DAY 1	OBTAIN A GRADING PERMIT.
DAY 2-5	INSTALL STABILIZED CONSTRUCTION ENTRANCE, SILT FENCE, CLEANWATER DIVERSION DIKES AND TREE PROTECTION DEVICES IN ACCORDANCE WITH THE FOREST CONSERVATION PLANS (SHEETS 15 & 16) ON THE NORTH SIDE OF THE STREAMS.
DAY 6-8	INSTALL TEMPORARY SWALE ACROSS WHITMAN WAY AND INSTALL STONE OUTLET SEDIMENT TRAP.
DAY 9-20	INSTALL CULVERTS UNDER ST. JAMES ROAD AND WHITMAN WAY UTILIZING TEMPORARY STREAM DIVERSION MEASURES, AND INSTALL SILT FENCE AROUND HEADWALLS.
DAY 21	INSTALL SILT FENCE BELOW STORMWATER MANAGEMENT FACILITIES NO. 1 AND 2.
DAY 22-35	INSTALL STORMWATER MANAGEMENT FACILITIES NOS. 1 AND 2, INSTALL 8" CMP AND WELDED ENDPLATE. "DO NOT DRILL LOW FLOW ORIFICE AT THIS TIME."
DAY 36-40	INSTALL THE STORM DRAIN FROM I-10 TO E-7 AND TEMPORARY SWALE FROM E-7 TO STORMWATER MANAGEMENT FACILITY NO 1 AND ALL OF THE REMAINING SEDIMENT CONTROL DEVICES WITHIN THE AREAS OF LOTS 1-19.
DAY 41-51	INSTALL THE STORM DRAIN FROM I-7 TO E-4 AND INSTALL EARTH DIKES AT I-5 AND I-6 TO DIRECT RUNOFF INTO THE STORM DRAIN SYSTEM.
DAY 52-60	INSTALL ALL OTHER SEDIMENT CONTROL DEVICES AND GRADE THE SITE TO SUBGRADE.
DAY 61-71	INSTALL REMAINING STORM DRAINS AND PAVING.
DAY 72-80	STABILIZE GRADED AREAS IN ACCORDANCE WITH PERMANENT SEEDBED NOTES.
DAY 81-90	REMOVE ALL REMAINING SEDIMENT CONTROL FEATURES, REMOVE SEDIMENT FROM THE STORMWATER MANAGEMENT FACILITIES AND RESTORE THEM TO THE PLAN GRADES, STABILIZE ANY DISTURBED AREAS IN ACCORDANCE WITH PERMANENT SEEDBED NOTES AND DRILL LOW FLOW ORIFICE IN WELDED ENDPLATE INSIDE THE STORMWATER MANAGEMENT STRUCTURES.

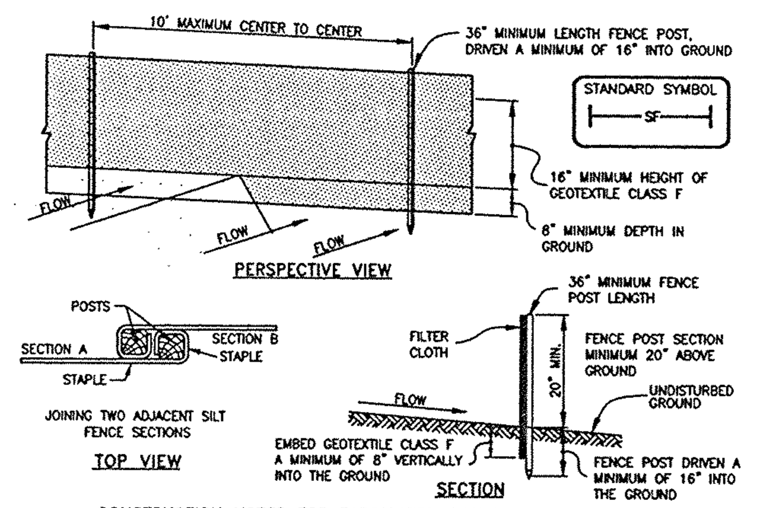

CONSTRUCTION NOTES FOR FABRICATED SILT FENCE

1. Fence posts shall be a minimum of 36" long driven 16" minimum into the ground. Wood posts shall be 1 1/2" x 1 1/2" square (minimum) cut, or 1 3/4" diameter (minimum) round and shall be of sound quality hardwood. Steel posts will be standard T or U section weighing not less than 1.00 pond per linear foot.
2. Geotextile shall be fastened securely to each fence post with wire ties or staples at top and mid-section and shall meet the following requirements for Geotextile Class F:

Tensile Strength	50 lbs/in (min.)	Test: MSMT 509
Tensile Modulus	20 lbs/in (min.)	Test: MSMT 509
Flow Rate	0.3 gal ft / minute (max.)	Test: MSMT 322
Filtering Efficiency	75% (min.)	Test: MSMT 322

3. Where ends of geotextile fabric come together, they shall be overlapped, folded and stapled to prevent sediment bypass.
4. Silt Fence shall be inspected after each rainfall event and maintained when bulges occur or when sediment accumulation reached 50% of the fabric height.

SILT FENCE

NOT TO SCALE

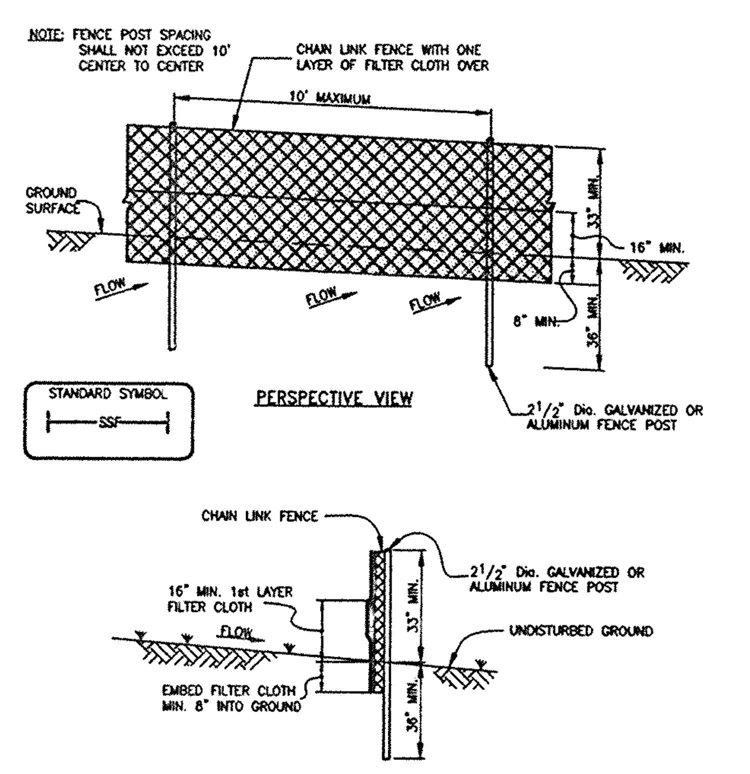

CONSTRUCTION SPECIFICATIONS

1. Fencing shall be 42" in height and constructed in accordance with the latest Maryland State Highway Details for Chain Link Fencing. The specification for a 6' fence shall be used, substituting 42" fabric and 6' length posts.
2. Chain link fence shall be fastened securely to the fence posts with wire ties. The lower tension wire, brace and truss rods, drive anchors and post caps are not required except on the ends of the fence.
3. Filter cloth shall be fastened securely to the chain link fence with ties spaced every 24" at the top and mid section.
4. Filter cloth shall be embedded a minimum of 8" into the ground.
5. When two sections of filter cloth adjoin each other, they shall be overlapped by 6" and folded.
6. Maintenance shall be performed as needed and silt buildups removed when "bulges" develop in the silt fence, or when silt reaches 50% of fence height
7. Filter cloth shall be fastened securely to each fence post with wire ties or staples at top and mid section and shall meet the following requirements for Geotextile Class F:

Tensile Strength	50 lbs/in (min.)	Test: MSMT 509
Tensile Modulus	20 lbs/in (min.)	Test: MSMT 509
Flow Rate	0.3 gal/ft /minute (max.)	Test: MSMT 322
Filtering Efficiency	75% (min.)	Test: MSMT 322

SUPER SILT FENCE

NOT TO SCALE

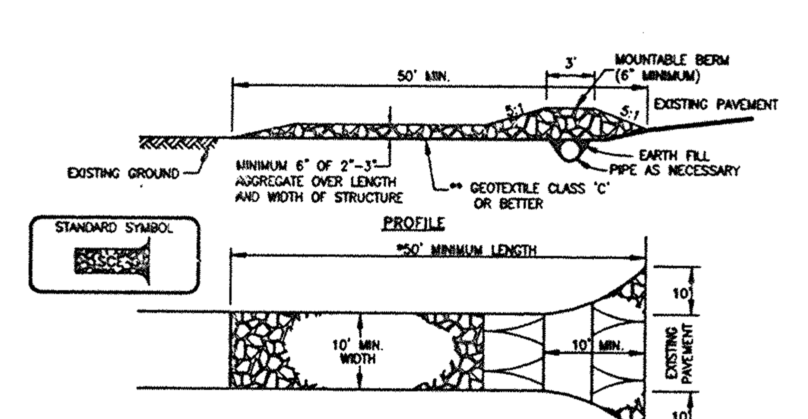

CONSTRUCTION SPECIFICATIONS

1. Length – minimum of 50' (*30' for single residence lot).
2. Width – 10' minimum, should be flared at the existing road to provide a turning radius.
3. Geotextile fabric (filter cloth) shall be placed over the existing ground prior to placing stone. **The plan approval authority may not require single family residences to use geotextile.
4. Stone – crushed aggregate (2" to 3") or reclaimed or recycled concrete equivalent shall be placed at least 6" deep over the length and width of the entrance.
5. Surface Water – all surface water flowing to or diverted toward construction entrances shall be piped through the entrance, maintaining positive drainage. Pipe installed through the stabilized construction entrance shall be protected with a mountable berm with 5:1 slopes and a minimum of 6" of stone over the pipe. Pipe has to be sized according to the drainage. When the SCE is located at a high spot and has no drainage to convey a pipe will not be necessary. Pipe should be sized according to the amount of runoff to be conveyed. A 6" minimum will be required.
6. Location – A stabilized construction entrance shall be located at every point where construction traffic enters or leaves a construction site. Vehicles leaving the site must travel over the entire length of the stabilized construction entrance.

STABILIZED CONSTRUCTION ENTRANCE

NOT TO SCALE

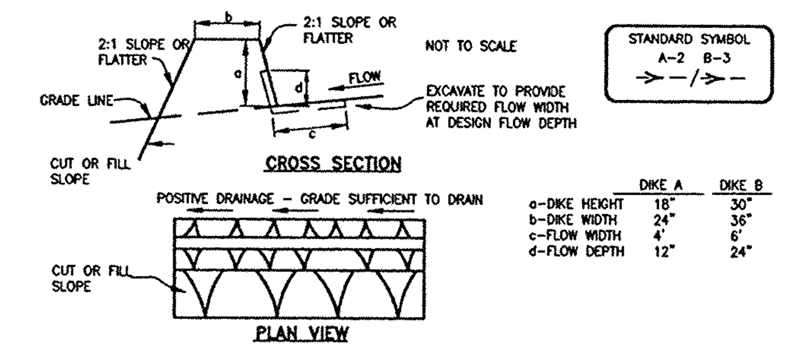

	DIKE A	DIKE B
a-DIKE HEIGHT	18"	30"
b-DIKE WIDTH	24"	36"
c-FLOW WIDTH	4'	6'
d-FLOW DEPTH	12"	24"

FLOW CHANNEL STABILIZATION
GRADE 0.5% MIN. 10% MAX.

1. Seed and cover with straw mulch.
2. Seed and cover with Erosion Control Matting or line with sod.
3. 4" – 7" stone or recycled concrete equivalent pressed into the soil 7" minimum.

CONSTRUCTION SPECIFICATIONS

1. All temporary earth dikes shall have uninterrupted positive grade to an outlet. Spot elevations may be necessary for grades less than 1%.
2. Runoff diverted from a disturbed area shall be conveyed to a sediment trapping device.
3. Runoff diverted from an undisturbed area shall outlet directly into an undisturbed, stabilized area at a non-erosive velocity.
4. All trees, brush, stumps, obstructions, and other objectional material shall be removed and disposed of so as not to interfere with the proper functioning of the dike.
5. The dike shall be excavated or shaped to line, grade and cross section as required to meet the criteria specified herein and be free of bank projections or other irregularities which will impede normal flow.
6. Fill shall be compacted by earth moving equipment.
7. All earth removed and not needed for construction shall be placed so that it will not interfere with the functioning of the dike.
8. Inspection and maintenance must be provided periodically and after each rain event.

EARTH DIKE

NOT TO SCALE

BLAZE ORANGE PLASTIC MESH

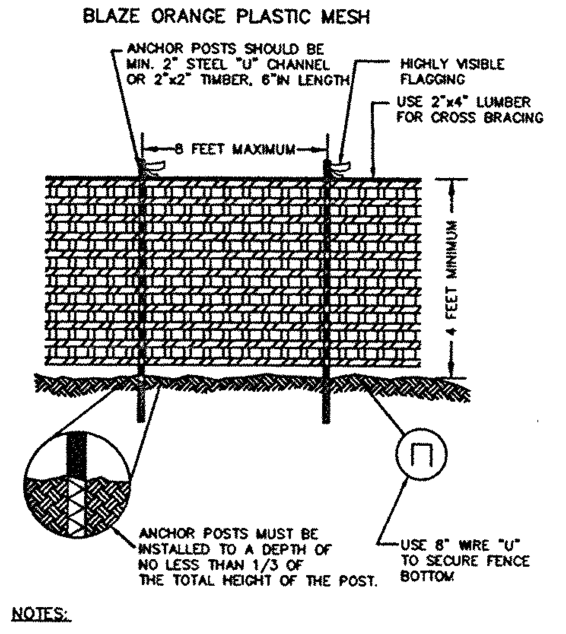

NOTES:

1. FOREST PROTECTION DEVICE ONLY.
2. RETENTION AREA WILL BE SET AS PART OF THE REVIEW PROCESS.
3. BOUNDARIES OF RETENTION AREA SHOULD BE STAKED AND FLAGGED PRIOR TO INSTALLING DEVICES.
4. AVOID ROOT DAMAGE WHEN PLACING ANCHOR POSTS.
5. DEVICE SHOULD BE PROPERLY MAINTAINED DURING CONSTRUCTION
6. PROTECTIVE SIGNAGE IS ALSO REQUIRED.

TREE PROTECTION FENCE

NOT TO SCALE

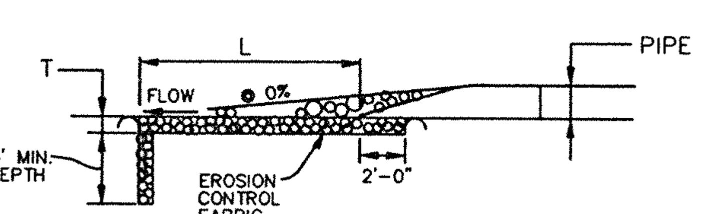

SECTION

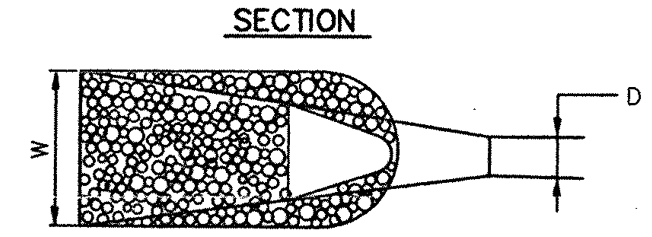

PLAN

STRUCTURE	D-50	LENGTH (L)	WIDTH (W)	THICKNESS (T)	SHA CLASS
HW-1	9.5"	20'	20'	19"	I
HW-3	16"	30'	39'	32"	II
E-3	9.5"	10'	12'	19"	I
E-4	9.5"	23'	12'	19"	I
E-5	9.5"	12'	14'	19"	I
E-7	9.5"	12'	14'	19"	I
E-8	9.5"	10'	12'	19"	I
E-9	9.5"	28'	32'	19"	I
E-1	9.5"	30'	14'	19"	I
E-2	9.5"	30'	14'	19"	I

OUTLET PROTECTION DETAIL

NOT TO SCALE

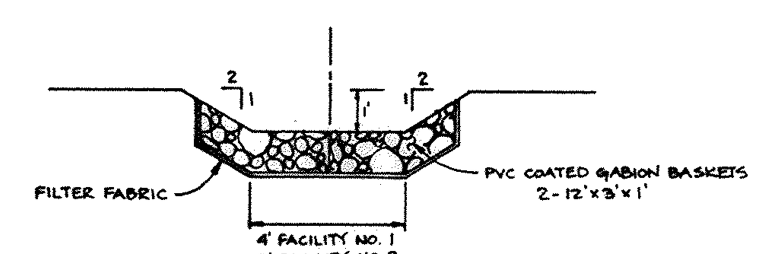

PROFILE THROUGH FOREBAY WEIR

NOT TO SCALE

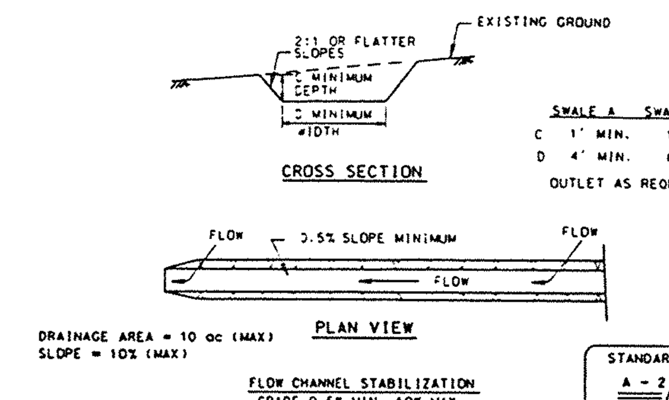

DRAINAGE AREA = 10 ac (MAX)
SLOPE = 10% (MAX)

STANDARD SYMBOL
A-2/B-3

FLOW CHANNEL STABILIZATION
GRADE 0.5% MIN. 10% MAX.

1. Seed and cover with straw mulch.
2. Seed and cover with Erosion Control Matting or line with sod.
3. 4"-7" stone or recycled concrete equivalent pressed into soil in a minimum 7" layer.

Construction Specifications

1. All temporary swales shall have uninterrupted positive grade to an outlet. Spot elevations may be necessary for grades less than 1%.
2. Runoff diverted from a disturbed area shall be conveyed to a sediment trapping device.
3. Runoff diverted from an undisturbed area shall outlet directly into an undisturbed stabilized area at a non-erosive velocity.
4. All trees, brush, stumps, obstructions, and other objectional material shall be removed and disposed of so as not to interfere with the proper functioning of the swale.
5. The swale shall be excavated or shaped to line, grade and cross section as required to meet the criteria specified herein and be free of bank projections or other irregularities which will impede normal flow.
6. Fill, if necessary, shall be compacted by earth moving equipment.
7. All earth removed and not needed for construction shall be placed so that it will not interfere with the functioning of the swale.
8. Inspection and maintenance must be provided periodically and after each rain event.

TEMPORARY SWALE

NOT TO SCALE

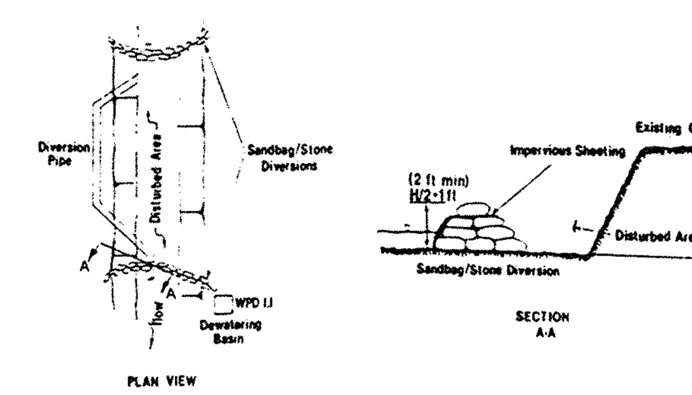

I. Description
The work shall consist of installing a flow diversion structure when construction activities take place within the stream channel such as culvert construction or culvert replacement.

II. Material Specifications
1. Sandbags: Sandbags shall consist of materials which are resistant to ultra-violet radiation, tearing and puncture and woven tightly enough to prevent leakage of fill material (i.e., sand, fine gravel, etc.).
2. Stone: Stone shall be washed and have a minimum diameter of 6 inches.
3. Sheeting: Sheeting shall consist of polyethylene or other material which is impervious and resistant to puncture and tearing.

III. Construction Requirements
1. All erosion and sediment control devices shall be installed as the first order of work.
2. The height of the sandbag/stone diversion structure shall be one half the distance from the stream bed to the bank plus one foot, as indicated in section a/a. The sandbags shall be placed on a smooth, prepared surface.
3. All excavated materials shall be disposed of in a SCD approved disposal area outside the 100-year floodplain unless otherwise approved on the plans by the WRA.
4. All dewatering of the construction area shall be pumped to a dewatering basin (Plate WPD1.1) or otherwise approved on the plans by the WRA.
5. Sheeting shall be overlapped a minimum of 18 inches.
6. The diversion pipe shall have a minimum diameter of sufficient size to convey the normal stream flow.
7. If necessary, silt fence or strawbales shall be installed around the perimeter of the work area.
8. Sediment control devices are to remain in place until all disturbed areas are stabilized and the inspecting authority approves their removal.

TEMPORARY STREAM DIVERSION

NOT TO SCALE

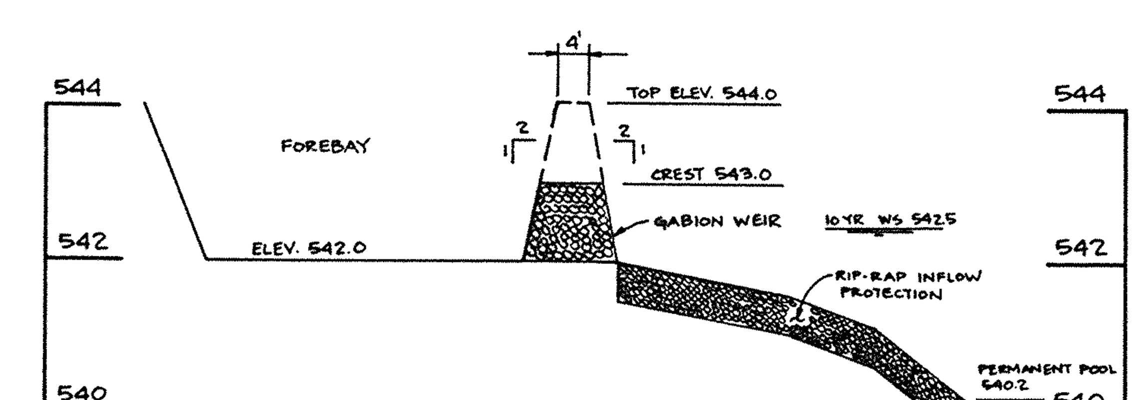

FOREBAY SECTION
POND # 1
SCALE: 1" = 20' HORIZ., 1" = 2' VERT.

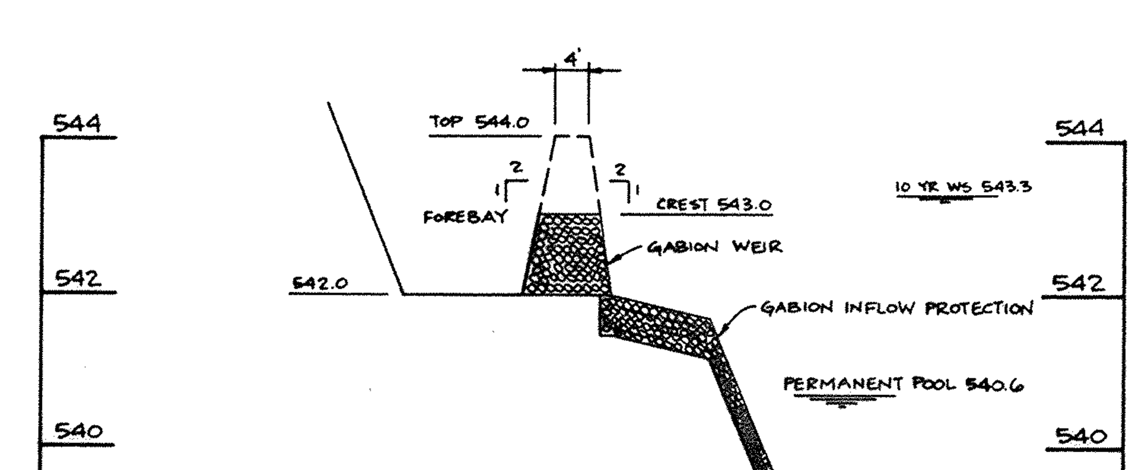

FOREBAY SECTION
POND #2
SCALE: 1" = 20' HORIZ., 1" = 2' VERT.

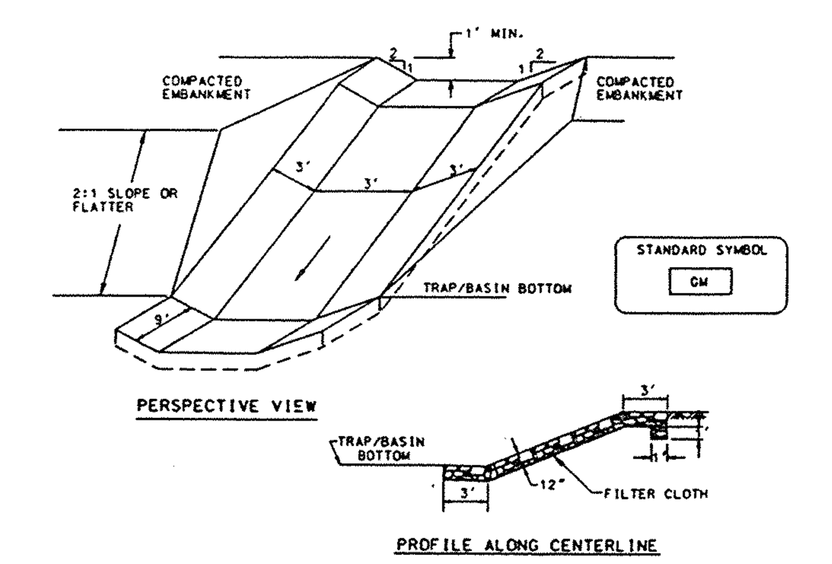

Construction Specifications

1. Gabion inflow protection shall be constructed of 9' x 3' x 9" gabion baskets forming a trapezoidal cross section 1' deep, with 2:1 side slopes, and a 3' bottom width.
2. Geotextile Class C shall be installed under all gabion baskets.
3. The stone used to fill the gabion baskets shall be 4" - 7".
4. Gabions shall be installed in accordance with manufacturers recommendations.
5. Gabion Inflow Protection shall be used where concentrated flow is present on slopes steeper than 4:1.

GABION INFLOW PROTECTION

NOT TO SCALE

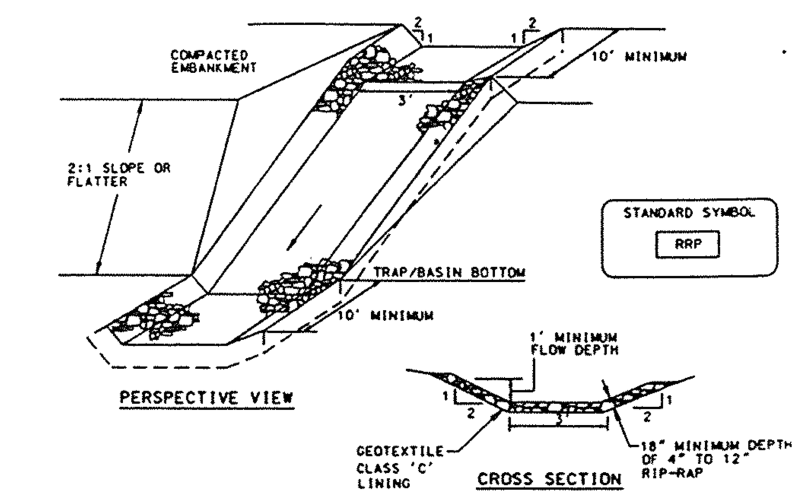

Construction Specifications

1. Rip-rap lined inflow channels shall be 1' in depth, have a trapezoidal cross section with 2:1 or flatter side slopes and 3' (min.) bottom width. The channel shall be lined with 4" to 12" rip- rap to a depth of 18".
2. Filter cloth shall be installed under all rip-rap. Filter cloth shall be Geotextile Class C.
3. Entrance and exit sections shall be installed as shown on the detail section.
4. Rip-rap used for the lining may be recycled for permanent outlet protection if the basin is to be converted to a stormwater management facility.
5. Gabion Inflow Protection may be used in lieu of Rip-rap Inflow Protection.
6. Rip-rap should blend into existing ground.
7. Rip-rap Inflow Protection shall be used where the slope is between 4:1 and 10:1. for slopes flatter than 10:1 use Earth Dike or Temporary Swale lining criteria.

RIP-RAP INFLOW PROTECTION

NOT TO SCALE

OPTIONAL SEDIMENT BASIN DEWATERING DEVICE I
WITH 6" PERFORATED RISER

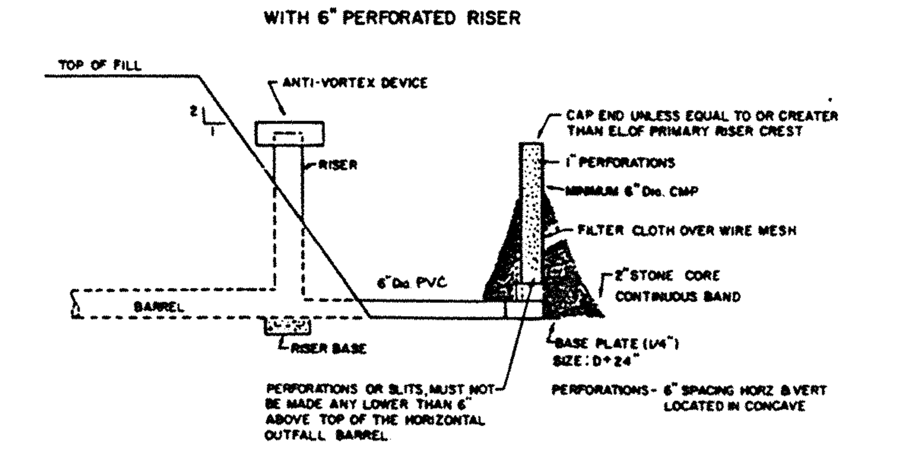

DEWATERING DEVICE

NOT TO SCALE

BY THE DEVELOPER:

"I/WE CERTIFY THAT ALL DEVELOPMENT AND/OR CONSTRUCTION WILL BE DONE ACCORDING TO THESE PLANS, AND THAT ANY RESPONSINLE PERSONNEL INVOLVED IN THE CONSTRUCTION PROJECT WILL HAVE A CERTIFICATE OF ATTENDANCE AT A DEPARTMENT OF THE ENVIRONMENT APPROVED TRAINING PROGRAM FOR THE CONTROL OF SEDIMENT AND EROSION BEFORE BEGINNING THE PROJECT. I SHALL ENGAGE A REGISTERED PROFESSIONAL ENGINEER TO SUPERVISE POND CONSTRUCTION AND PROVIDE THE HOWARD SOIL CONSERVATION DISTRICT WITH AN "AS-BUILT" PLAN OF THE POND WITHIN 30 DAYS OF COMPLETION. I ALSO AUTHORIZE PERIODIC ON-SITE INSPECTIONS BY THE HOWARD SOIL CONSERVATION DISTRICT."

James R. Moxley III — 4/4/97
DEVELOPER – SDC GROUP, INC. — DATE

BY THE ENGINEER:

"I/WE CERTIFY THAT THIS PLAN FOR POND CONSTRUCTION, EROSION AND SEDIMENT CONTROL REPRESENTS A PRACTICAL AND WORKABLE PLAN BASED ON MY PERSONNAL KNOWLEDGE OF THE SITE CONDITIONS. THIS PLAN WAS PREPARED IN ACCORDANCE WITH THE REQUIREMENTS OF THE HOWARD SOIL CONSERVATION DISTRICT. I HAVE NOTIFIED THE DEVELOPER THAT HE/SHE MUST ENGAGE A REGISTERED PROFESSIONAL ENGINEER TO SUPERVISE POND CONSTRUCTION AND PROVIDE THE HOWARD SOIL CONSERVATION DISTRICT WITH AN "AS-BUILT" PLAN OF THE POND WITHIN 30 DAYS OF COMPLETION."

Donald Mason — 4/7/97
ENGINEER – DONALD A. MASON, P.E. # 21443 — DATE

THESE PLANS HAVE BEEN REVIEWED FOR THE HOWARD SOIL CONSERVATION DISTRICT AND MEET THE TECHNICAL REQUIREMENTS FOR SMALL POND CONSTRUCTION, SOIL EROSION, AND SEDIMENT CONTROL.

Cheryl Simmons — 10/1/97
NATURAL RESOURCES CONSERVATION SERVICE

THESE PLANS FOR SMALL POND CONSTRUCTION, SOIL EROSION, AND SEDIMENT CONTROL MEET THE REQUIREMENTS OF THE HOWARD SOIL CONSERVATION DISTRICT.

Robert W. Zirhn — 10/1/97
HOWARD SOIL CONSERVATION DISTRICT — DATE

APPROVED: HOWARD COUNTY DEPARTMENT OF PUBLIC WORKS

Andrew M. Donelle — 10-9-97
CHIEF, BUREAU OF HIGHWAYS — DATE

APPROVED: HOWARD COUNTY DEPARTMENT OF PLANNING AND ZONING

Cindy Hamilton — 10/22/97
CHIEF, DIVISION OF LAND DEVELOPMENT — DATE

10/15/97
CHIEF, DEVELOPMENT ENGINEERING DIVISION — DATE

NO.	DATE	REVISION

TSA GROUP, INC.
planning • architecture • engineering
8480 Baltimore National Pike • Ellicott City, Maryland 21043 • (410) 465-6105

OWNER/DEVELOPER:
SDC GROUP, INC.
P.O. BOX 417
ELLICOTT CITY, MARYLAND 21041
(410) 465-4244

PROJECT: LYNDONBROOK
LOTS 1 THRU 30 AND PARCELS A THRU F

LOCATION: TAX MAP 15 – PARCEL 40 – BLOCKS 5 & 6
3rd ELECTION DISTRICT
HOWARD COUNTY, MARYLAND

TITLE: SEDIMENT CONTROL NOTES AND DETAILS
WP-96-37, S-96-01, P-96-22, WP-97-126

DATE: SEPTEMBER 19, 1997 — PROJECT NO. 0761
DESIGN: DAM — DRAFT: DBT — SCALE: AS SHOWN — DRAWING 13 OF 17

Plotted: Jan. 23, 1997
Acad Dwg: 7023S13

F-97-126

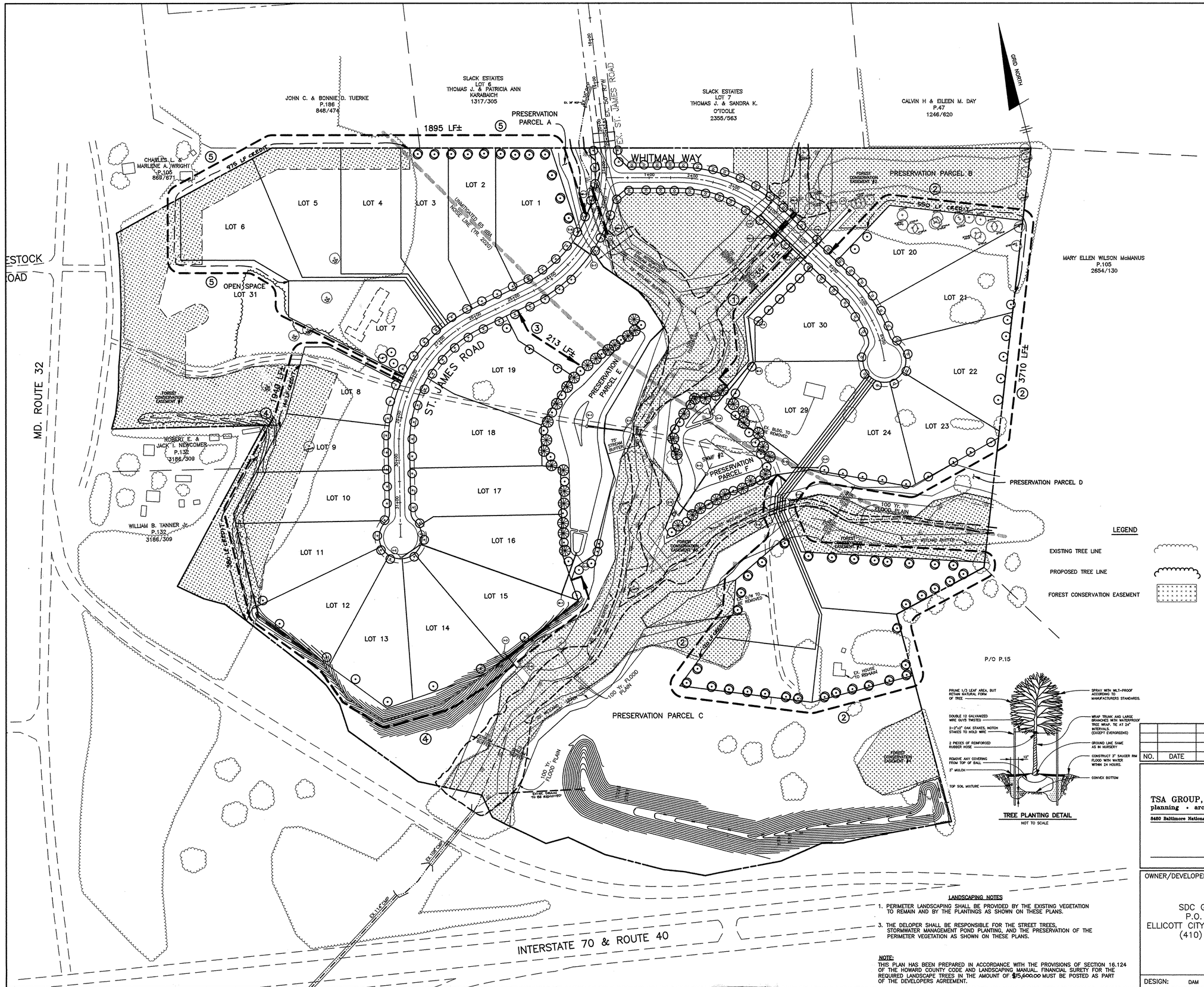

SCHEDULE A
PERIMETER LANDSCAPE EDGE

CATEGORY	ADJACENT TO ROADWAY	NO	NO	YES	NO	YES
	ADJACENT TO PERIMETER PROPERTIES	YES	YES	NO	YES	NO
PERIMETER NO. /LANDSCAPE TYPE		1 A	2 A	3 A	4 A	5 A
LINEAR FEET OF ROADWAY FRONTAGE/PERIMETER		351	3710	1895	1940	213
CREDIT FOR EXISTING VEGETATION (YES, NO, LINEAR FEET) (DESCRIBE BELOW IF NEEDED)		NO	YES 670	YES 975	YES 520	NO
CREDIT FOR WALL, FENCE OR BERM (YES, NO, LINEAR FEET) (DESCRIBE BELOW IF NEEDED)		NO	NO	NO	YES 900	NO
NUMBER OF PLANTS REQUIRED	SHADE TREES	6	51	15	9	3
	EVERGREEN TREES	–	–	–	–	–
	OTHER TREES (2:1 SUBSTITUTE)	–	–	–	–	–
	SHRUBS	–	–	–	–	–
NUMBER OF PLANTS PROVIDED	SHADE TREES	6	51	15	9	3
	EVERGREEN TREES	–	–	–	–	–
	OTHER TREES (2:1 SUBSTITUTE)	–	–	–	–	–
	SHRUBS (10:1 SUBSTITUTE)	–	–	–	–	–
(DESCRIBE PLANT SUBSTITUTION CREDITS BELOW IF NEEDED)						

PLANTING LIST

SYMBOL	QUANTITY	NAME	REMARKS
	59	PLANTANUS ACERIFOLIA 'BLOODGOOD' (Bloodgood London Plane)	2 1/2" MIN. CAL. B&B FULL HEAD
	45	TILIA CORDATA 'GREENSPIRE' (Greenspire Littleleaf Linden)	2 1/2" MIN. CAL. B&B FULL HEAD
	70	ACER RUBRA (Red Maple)	2 1/2" MIN. CAL. B&B FULL HEAD
	46	ACER SACCHARUM (Sugar Maple)	2 1/2" MIN. CAL. B&B FULL HEAD
	40	PINUS STROBUS (Eastern White Pine)	5'–6' ht. UNSHEARED

NOTE:
1. TREES SHOULD BE PLANTED A MINIMUM OF 6 FEET FROM THE EDGE OF PAVING AND MUST BE A MINIMUM OF 5 FEET FROM ANY STORM DRAIN.
2. TREES MUST BE PLANTED A MINIMUM OF 5 FEET FROM AN OPEN SPACE ACCESS STRIP AND 10 FEET FROM A DRIVEWAY.
3. SEE TREE PLANTING DETAIL – THIS SHEET.

LANDSCAPE LEGEND

SYMBOL	DESCRIPTION
	STREET TREES TO BE PROVIDED BY THE DEVELOPER TO BE INCORPORATED ON FINAL PLANS.
	SHADE TREES ALONG PERIMETER AND STORMWATER MANAGEMENT TO BE PROVIDED BY THE DEVELOPER AND INCORPORATED ON FINAL PLANS.
	EVERGREEN TREES ALONG STORMWATER MANAGEMENT AREA TO BE PROVIDED BY THE DEVELOPER AND INCORPORATED ON FINAL PLANS.

SCHEDULE D
STORMWATER MANAGEMENT AREA LANDSCAPING – TYPE 'B' BUFFER

SWMF NO.	#1	#2
LINEAR FEET OF PERIMETER	1100	780
NUMBER OF TREES REQUIRED		
SHADE TREES	16	16
EVERGREEN TREES	20	20
CREDIT FOR EXISTING VEGETATION (NO, YES AND L.F.)	YES 300	NO
CREDIT FOR OTHER LANDSCAPING (NO, YES AND %)	NO	NO
NUMBER OF TREES PROVIDED		
SHADE TREES	16	16
EVERGREEN TREES	20	20
OTHER TREES (2:1 SUBSTITUTE)		

APPROVED: HOWARD COUNTY DEPARTMENT OF PUBLIC WORKS

CHIEF, BUREAU OF HIGHWAYS — DATE 10-9-97

APPROVED: HOWARD COUNTY DEPARTMENT OF PLANNING AND ZONING

CHIEF, DIVISION OF LAND DEVELOPMENT — DATE 10/22/97

CHIEF, DEVELOPMENT ENGINEERING DIVISION — DATE 10/15/97

NO.	DATE	REVISION

LANDSCAPING NOTES

1. PERIMETER LANDSCAPING SHALL BE PROVIDED BY THE EXISTING VEGETATION TO REMAIN AND BY THE PLANTINGS AS SHOWN ON THESE PLANS.
3. THE DELOPER SHALL BE RESPONSIBLE FOR THE STREET TREES, STORMWATER MANAGEMENT POND PLANTING, AND THE PRESERVATION OF THE PERIMETER VEGETATION AS SHOWN ON THESE PLANS.

NOTE:
THIS PLAN HAS BEEN PREPARED IN ACCORDANCE WITH THE PROVISIONS OF SECTION 16.124 OF THE HOWARD COUNTY CODE AND LANDSCAPING MANUAL. FINANCIAL SURETY FOR THE REQUIRED LANDSCAPE TREES IN THE AMOUNT OF $15,600.00 MUST BE POSTED AS PART OF THE DEVELOPERS AGREEMENT.

TSA GROUP, INC.
planning • architecture • engineering
8480 Baltimore National Pike • Ellicott City, Maryland 21043 • (410) 465-6105

STATE OF MARYLAND — DONALD A. MOON — No. 11467 — PROFESSIONAL ENGINEER

OWNER/DEVELOPER:
SDC GROUP, INC.
P.O. BOX 417
ELLICOTT CITY, MARYLAND 21041
(410) 465-4244

PROJECT:
LYNDONBROOK
LOTS 1 THRU 30, PARCELS A THRU F

LOCATION: TAX MAP 15 – PARCEL 40 – BLOCKS 5 & 6, 3rd ELECTION DISTRICT, HOWARD COUNTY, MARYLAND

TITLE: LANDSCAPE PLAN, NOTES AND DETAILS
WP-96-37, S-96-01, P-96-22, WP-97-126

DATE: SEPTEMBER 19, 1997 | PROJECT NO. 0761

DESIGN: DAM | DRAFT: MBB/DBT | SCALE: 1" = 100' | DRAWING 14 OF 17

F-97-126

Plotted: July 18, 1997
Acad Dwg: 7022S14

SOILS LEGEND

MAP SYMBOL	SOIL TYPE	MAPPING UNIT
Bc *	D	BAILE SILT LOAM
CgB2	B	CHESTER GRAVELLY SILT LOAM – 3 TO 8 PERCENT SLOPES – MODERATED
CgC2	B	CHESTER GRAVELLY SILT LOAM – 8 TO 15 PERCENT SLOPES – MODERATED
ChA	B	CHESTER SILT LOAM – 0 TO 3 PERCENT SLOPES
ChB2	B	CHESTER SILT LOAM – 3 TO 8 PERCENT SLOPES – MODERATELY ERODED
ChC2	B	CHESTER SILT LOAM – 8 TO 15 PERCENT SLOPES – MODERATELY ERODE
ChC3	B	CHESTER SILT LOAM – 8 TO 15 PERCENT SLOPES – SEVERELY ERODED
ChD2	B	CHESTER SILT LOAM – 15 TO 25 PERCENT SLOPES – MODERATELY ERO0
Cs	B	COMUS SILT LOAM
EkC2	B	ELIOAK SILT LOAM – 8 TO 15 PERCENT SLOPES – MODERATELY ERODED
EIC3	B	ELIOAK SILTY CLAY LOAM – 8 TO 15 PERCENT SLOPES – SEVERELY ER
GlB2	B	GLENELG LOAM – 3 TO 8 PERCENT SLOPES – MODERATELY ERODED
GlC2	B	GLENELG LOAM – 8 TO 15 PERCENT SLOPES – MODERATELY ERODED
GlD2	B	GLENELG LOAM – 15 TO 25 PERCENT SLOPES – MODERATELY ERODED
GnB2 *	C	GLENVILLE SILT LOAM – 3 TO 8 PERCENT SLOPES – MODERATELY ERO0
Ho *	D	HATBORO SILT LOAM
MgB2	B	MANOR GRAVELLY LOAM – 3 TO 8 PERCENT SLOPES – MODERATELY ERO0
MgC2	B	MANOR GRAVELLY LOAM – 8 TO 15 PERCENT SLOPES – MODERATELY ERO
MlB2	B	MANOR LOAM – 3 TO 8 PERCENT SLOPES – MODERATELY ERODED
MlC2	B	MANOR LOAM – 8 TO 15 PERCENT SLOPES – MODERATELY ERODED
MlD2	B	MANOR LOAM – 15 TO 25 PERCENT SLOPES – MODERATELY ERODED
MlD3	B	MANOR LOAM – 15 TO 25 PERCENT SLOPES – SEVERELY ERODED
MlE	B	MANOR LOAM – 25 TO 45 PERCENT SLOPES

* INDICATES HYDRIC SOILS
SOILS MAP No. 8

Plotted: July 18, 1997
Acad Dwg: 7014S15

APPROVED: HOWARD COUNTY DEPARTMENT OF PUBLIC WORKS
CHIEF, BUREAU OF HIGHWAYS — DATE 10-9-97

APPROVED: HOWARD COUNTY DEPARTMENT OF PLANNING AND ZONING
CHIEF, DIVISION OF LAND DEVELOPMENT — DATE 10/22/97
CHIEF, DEVELOPMENT ENGINEERING DIVISION — DATE 10/15/97

Eco-Science Professionals, Inc.
CONSULTING ECOLOGISTS
P.O. Box 5006 Glen Arm, MD 21057 (410) 592-6752

MD DNR Qualified Professional
USACOE Wetland Delineator
Certification #WDCP89M0084GBE
John F. Grasles

NO.	DATE	REVISION

TSA GROUP, INC.
planning • architecture • engineering
8480 Baltimore National Pike • Ellicott City, Maryland 21043 • (410) 465-8105

STATE OF MARYLAND — DANIEL T. MAY — REG. NO. 21868 — REGISTERED PROFESSIONAL ENGINEER

OWNER/DEVELOPER:
SDC GROUP, INC.
P.O. BOX 417
ELLICOTT CITY, MARYLAND 21041
(410) 465-4244

PROJECT:
LYNDONBROOK
LOTS 1 THRU 30 AND PARCELS A THRU F

LOCATION: TAX MAP 15 – PARCEL 40 – BLOCKS 5 & 6
3rd ELECTION DISTRICT
HOWARD COUNTY, MARYLAND

TITLE:
FOREST CONSERVATION PLAN
WP-96-37, S-96-01, P-96-22, WP-97-126

DATE: SEPTEMBER 19, 1997 — PROJECT NO. 0761
DESIGN: DAM — DRAFT: DBT — SCALE: 1" = 100' — DRAWING 15 OF 17

F-97-126

Planting Schedule

Forest Conservation Easement #5 (3.6 acres)

Qty.	Species	Size	Spacing
7	Liriodendron tulipifera - Poplar	1" cal.	*
5	Quercus rubra - Red oak	1" cal.	*
190	Acer rubrum - Red maple	3-4'whip	**
100	Cornus florida - Flowering dogwood	3-4'whip	**
135	Fraxinus pennsylvanica - Green ash	3-4'whip	**
100	Lindera benzoin - Spicebush	18-24"b.t.	**
190	Liriodendron tulipifera - Poplar	2-3'whip	**
85	Prunus serotina - Black cherry	3-4'whip	**
125	Quercus rubra - Red oak	2-3'whip	**
85	Viburnum dentatum - Arrowwood	18-24"b.t.	**

BANK Forest Conservation Easement #2 (1.3 acres) (TO BE PLANTED AT A FUTURE DATE)

Qty.	Species	Size	Spacing
4	Liriodendron tulipifera - Poplar	1" cal.	*
100	Acer rubrum - Red maple	3-4'whip	**
65	Juniperus virginiana - Red Cedar	18-24" BR	**
110	Liriodendron tulipifera - Poplar	2-3'whip	**
50	Prunus serotina - Black cherry	3-4'whip	**
70	Quercus rubra - Red oak	2-3'whip	**
50	Viburnum prunifolium - Blackhaw	18-24"b.t.	**

BANK Forest Conservation Easement #3 (0.1 acres) -(TO BE PLANTED AT A FUTURE DATE)

Qty.	Species	Size	Spacing
2	Acer rubrum - Red maple	1" cal.	*
2	Liriodendron tulipifera - Poplar	1" cal.	*
6	Acer rubrum - Red maple	3-4'whip	**
3	Juglans nigra - Black walnut	2-3'whip	**
3	Prunus serotina - Black cherry	3-4'whip	**
7	Platanus occidentalis -Sycamore	2-3'whip	**
4	Viburnum dentatum - Arrowwood	18-24"b.t.	**

Conservation Bank "A" (1.3 acres) (TO BE PLANTED AT A FUTURE DATE)

Qty.	Species	Size	Spacing
4	Quercus rubra - Red oak	1" cal.	*
85	Acer rubrum - Red maple	3-4'whip	**
35	Cornus florida - Flowering dogwood	3-4'whip	**
85	Fraxinus pennsylvanica - Green ash	3-4'whip	**
55	Lindera benzoin - Spicebush	18-24"b.t.	**
45	Liriodendron tulipifera - Poplar	2-3'whip	**
30	Prunus serotina - Black cherry	3-4'whip	**
45	Quercus rubra - Red oak	2-3'whip	**
65	Viburnum dentatum - Arrowwood	18-24"b.t.	**

Forest Conservation Bank "B" (6.3 acres) (TO BE PLANTED AT A FUTURE DATE)

Qty.	Species	Size	Spacing
6	Liriodendron tulipifera - Poplar	1" cal.	*
5	Quercus rubra - Red oak	1" cal.	*
400	Acer rubrum - Red maple	3-4'whip	**
145	Cornus florida - Flowering dogwood	2-3'whip	**
175	Juniperus virginiana - Red Cedar	18-24" BR	**
450	Liriodendron tulipifera - Poplar	2-3'whip	**
250	Populus grandidentata - Bigtooth Aspen	2-3'whip	**
225	Prunus serotina - Black cherry	3-4'whip	**
325	Quercus rubra - Red oak	2-3'whip	**
200	Viburnum prunifolium - Blackhaw	12-18"b.t.	**

Forest Conservation Bank "C" (0.8 acres) (TO BE PLANTED AT A FUTURE DATE)

Qty.	Species	Size	Spacing
6	Liriodendron tulipifera - Poplar	1" cal.	*
5	Quercus rubra - Red oak	1" cal.	*
25	Acer rubrum - Red maple	3-4'whip	**
35	Cornus florida - Flowering dogwood	2-3'whip	**
40	Juniperus virginiana - Red Cedar	18-24" BR	**
45	Liriodendron tulipifera - Poplar	2-3'whip	**
25	Populus grandidentata - Bigtooth Aspen	2-3'whip	**
15	Prunus serotina - Black cherry	3-4'whip	**
25	Quercus rubra - Red oak	2-3'whip	**
25	Viburnum prunifolium - Blackhaw	12-18"b.t.	**

Forest Conservation Bank "D" (0.7 acres) (TO BE PLANTED AT A FUTURE DATE)

Qty.	Species	Size	Spacing
2	Acer rubrum - Red maple	1" cal.	*
5	Liriodendron tulipifera - Poplar	1" cal.	*
55	Acer rubrum - Red maple	3-4'whip	**
35	Juglans nigra - Black walnut	2-3'whip	**
30	Prunus serotina - Black cherry	3-4'whip	**
65	Platanus occidentalis -Sycamore	2-3'whip	**
35	Viburnum dentatum - Arrowwood	18-24"b.t.	**

* - Planting sites for 1" caliper stock is shown on FCE as
Species selection for each individual planting site should be made randomly.
** - plants shall be spaced randomly eleven feet on center, not in a grid pattern

b.t. - branched transplant; cal. - caliper; BR - bare root

Forest Conservation Easement #1 (0.5 Acres)

Qty.	Species	Size	Spacing
6	Liriodendron tulipifera - Poplar	1" cal.	*
5	Quercus rubra - Red oak	1" cal.	*
17	Acer rubrum - Red maple	3-4'whip	**
18	Cornus florida - Flowering dogwood	2-3'whip	**
17	Juniperus virginiana - Red Cedar	18-24" BR	**
18	Liriodendron tulipifera - Poplar	2-3'whip	**
17	Populus grandidentata - Bigtooth Aspen	2-3'whip	**
18	Prunus serotina - Black cherry	3-4'whip	**
17	Quercus rubra - Red oak	2-3'whip	**
18	Viburnum prunifolium - Blackhaw	12-18"b.t.	**

Planting/Soil Specifications

1. Planting of nursery stock shall take place between March 15th and April 30th.
2. A twelve (12) inch layer of topsoil shall be spread over all afforestation areas impacted by site grading to assure a suitable planting area. Disturbed areas shall be seeded and stabilized as per general construction plan for project. Planting areas not impacted by site grading shall have no additional topsoil installed.
3. All bareroot planting stock shall have their root systems dipped into an anti-desicant gel prior to planting.
4. Plants shall be installed so that the top of root mass is level with the top of existing grade. Backfill in the planting pits shall consist of 3 parts existing soil to 1 part pine fines or equivalent.
5. Fertilizer shall consist of Agriform 22-8-2, or equivalent, applied as per manufacturer's specifications.
6. A two (2) inch layer of hardwood mulch shall be placed over the root area of all plantings.
7. Plant material shall be transported to the site in a tarped or covered truck. Plants shall be kept moist prior to planting.
8. All non-organic debris associated with the planting operation shall be removed from the site by the contractor.

Sequence of Construction

1. Plants shall be installed as per Plant Schedule and the Planting/Soil Specifications for the project.
2. Upon completion of the planting, signage shall be installed as per the Forest Retention Area Protection Devices shown on Sheet 2 of the Forest Conservation Plan.
3. Plantings shall be maintained and guaranteed in accordance with the Maintenance and Guarantee requirements for project.

Maintenance of Plantings

1. Maintenance of plantings shall last for a period of 24 months.
2. All plant material shall be watered twice a month during the 1st growing season. Watering may be more or less frequent depending on weather conditions. During second growing season, once a month during May-September, if needed.
3. Invasive exotics and noxious weeds will be removed from reforestation areas. Old field successional species will be retained.
4. Plants will be examined a minimum two times during the growing season for serious plant pests and diseases. Serious problems will be treated with the appropriate agent.
5. Dead branches will be pruned from plantings.

Guarantee Requirements

1. A 75 percent survival rate of reforestation plantings will be required at the end of the 24 month maintenance period. All plant material below the 75 percent threshold will be replaced at the beginning of the next growing season. After one growing season, plant material shall be maintained at 90% survival threshold.
2. The contractor will not be liable for plant loss due to theft or vandalism.

Surety for Reforestation

1. The developer shall post a surety (bond, letter of credit) to ensure that reforestation plantings are completed. Upon acceptance of the plantings by the County, the bond shall be released.

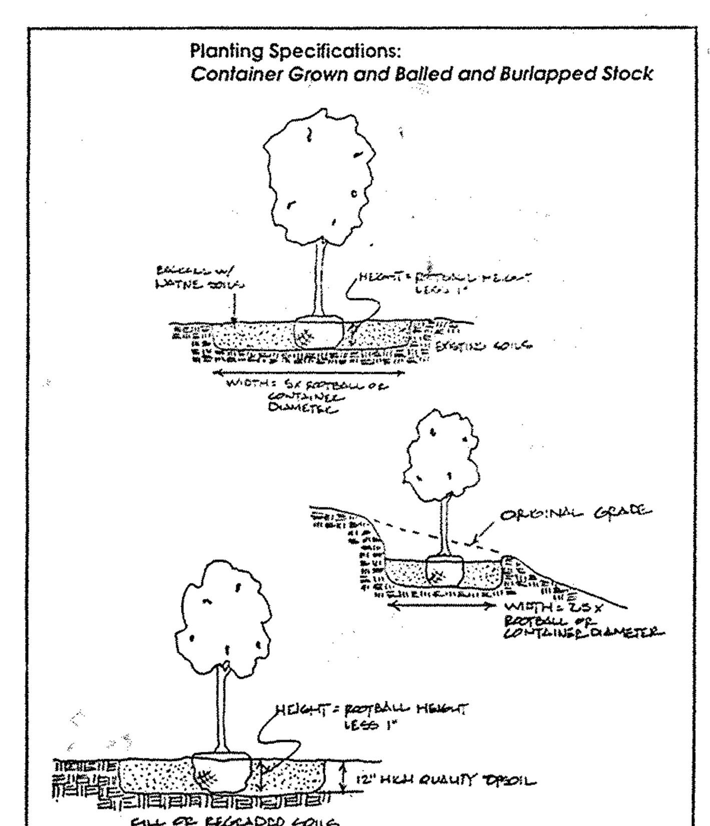

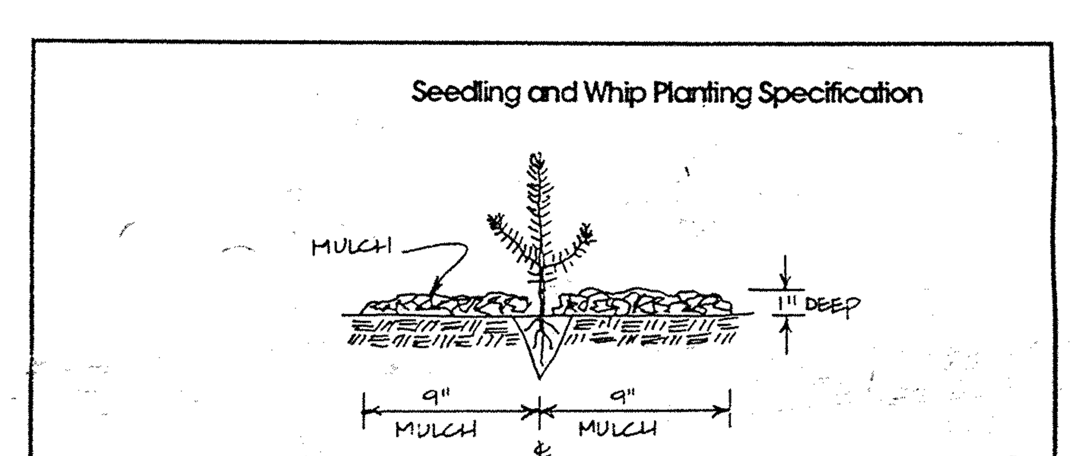

Temporary Protective Fencing

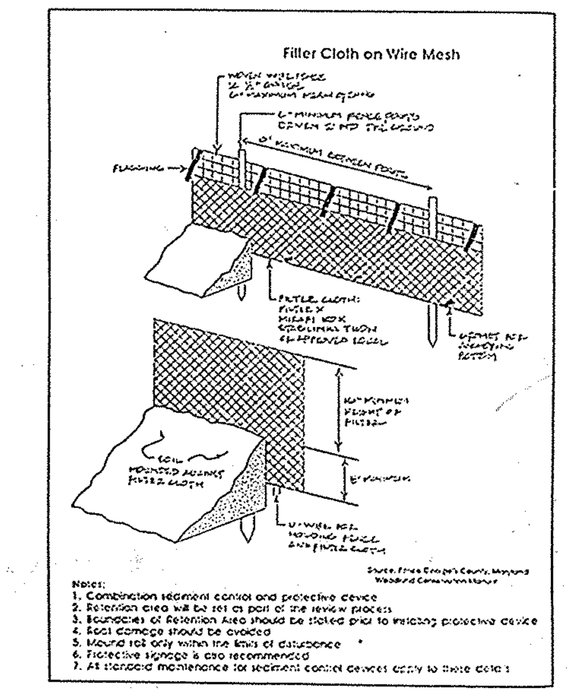

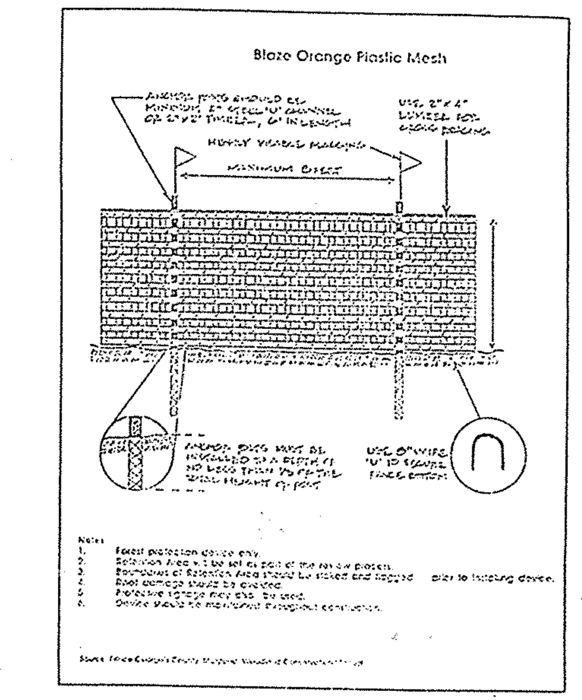

Permanent Protective Signage

FOREST CONSERVATION AREA

Unauthorized disturbance of vegetation is prohibited. Violators subject to penalties under the Howard County Forest Conservation Act of 1992.

Trees for Your Future

FCP NOTES

1. Any Forest Conservation Easement (FCE) area shown hereon is subject to protective covenants which may be found in the Land Records of Howard County which restrict the disturbance and use of these areas.
2. Forested areas occurring outside of the FCE shall not be considered part of the FCE and shall not be subject to protective land covenants.
3. Limits of disturbance shall be restricted to areas outside the limit of temporary fencing or the FCE boundary, whichever is greater.
4. There shall be no clearing, grading, construction or disturbance of vegetation in the Forest Conservation Easement, except as permitted by Howard County DPZ.
5. No stockpiles, parking areas, equipment cleaning areas, etc. shall occur within areas designated as Forest Conservation Easements.
6. Temporary fencing shall be used to protect forest resources during construction. The fencing shall be placed along all FCE boundaries which occur within 25 feet of the proposed limits of disturbance.
7. Permanent signage shall be placed 50-100' apart along the boundaries of all areas included in Forest Conservation Easements.
8. Forestation Areas shown hereon that are not labeled as Forest Conservation Easements shall be considered part of a Forest Conservation Bank and credit for this plantings will be taken to offset forestry obligations for other projects. Recordation and approval of these forestry credits will be the responsibility of the future applicants.
9. No Forest Conservation credit shall be taken without the written approval of Howard County Department of Planning and Zoning.

FOREST DATA

	Acres
Gross Area:	64.6
Ex. Lots/Unforested Preservation Parcel/Floodplain:	26.4
Net Tract Area (NTA):	38.2
Existing Forest (NTA):	12.7
Afforestation Threshold:	7.6
Reforestation Threshold:	9.6
Forest to be Cleared (NTA):	4.7
Forest to be Retained (NTA):	8.0
Reforestation Required:	4.0
Reforestation Proposed:	4.1
Forest Conservation Bank:	9.2

MD DNR Qualified Professional
USACOE Wetland Delineator
Certification # WDCP93MD0610044B2
John P. Canoles

Eco-Science Professionals, Inc.
CONSULTING ECOLOGISTS
P.O. Box 5006 Glen Arm, MD 21057 (410) 592-6752

APPROVED: HOWARD COUNTY DEPARTMENT OF PUBLIC WORKS
CHIEF, BUREAU OF HIGHWAYS — 10-9-97 DATE

APPROVED: HOWARD COUNTY DEPARTMENT OF PLANNING AND ZONING
CHIEF, DIVISION OF LAND DEVELOPMENT — 10/22/97 DATE
CHIEF, DEVELOPMENT ENGINEERING DIVISION — 10/15/97 DATE

NO.	DATE	REVISION

TSA GROUP, INC.
planning • architecture • engineering
8480 Baltimore National Pike • Ellicott City, Maryland 21043 • (410) 465-6105

OWNER/DEVELOPER:
SDC GROUP, INC.
P.O. BOX 417
ELLICOTT CITY, MARYLAND 21041
(410) 465-4244

PROJECT: LYNDONBROOK
LOTS 1 THRU 30 AND PARCELS A THRU F

LOCATION: TAX MAP 15 - PARCEL 40 - BLOCKS 5 & 6
3rd ELECTION DISTRICT
HOWARD COUNTY, MARYLAND

TITLE: FOREST CONSERVATION NOTES AND DETAILS
WP-96-37, S-96-01, P-96-22, WP-97-126

DATE: SEPTEMBER 19, 1997 | PROJECT NO. 0761
DESIGN: DAM | DRAFT: | SCALE: AS SHOWN | DRAWING 16 OF 17

Plotted: Nov. 18, 1996
Acad Dwg: 30FCPS2

F-97-126

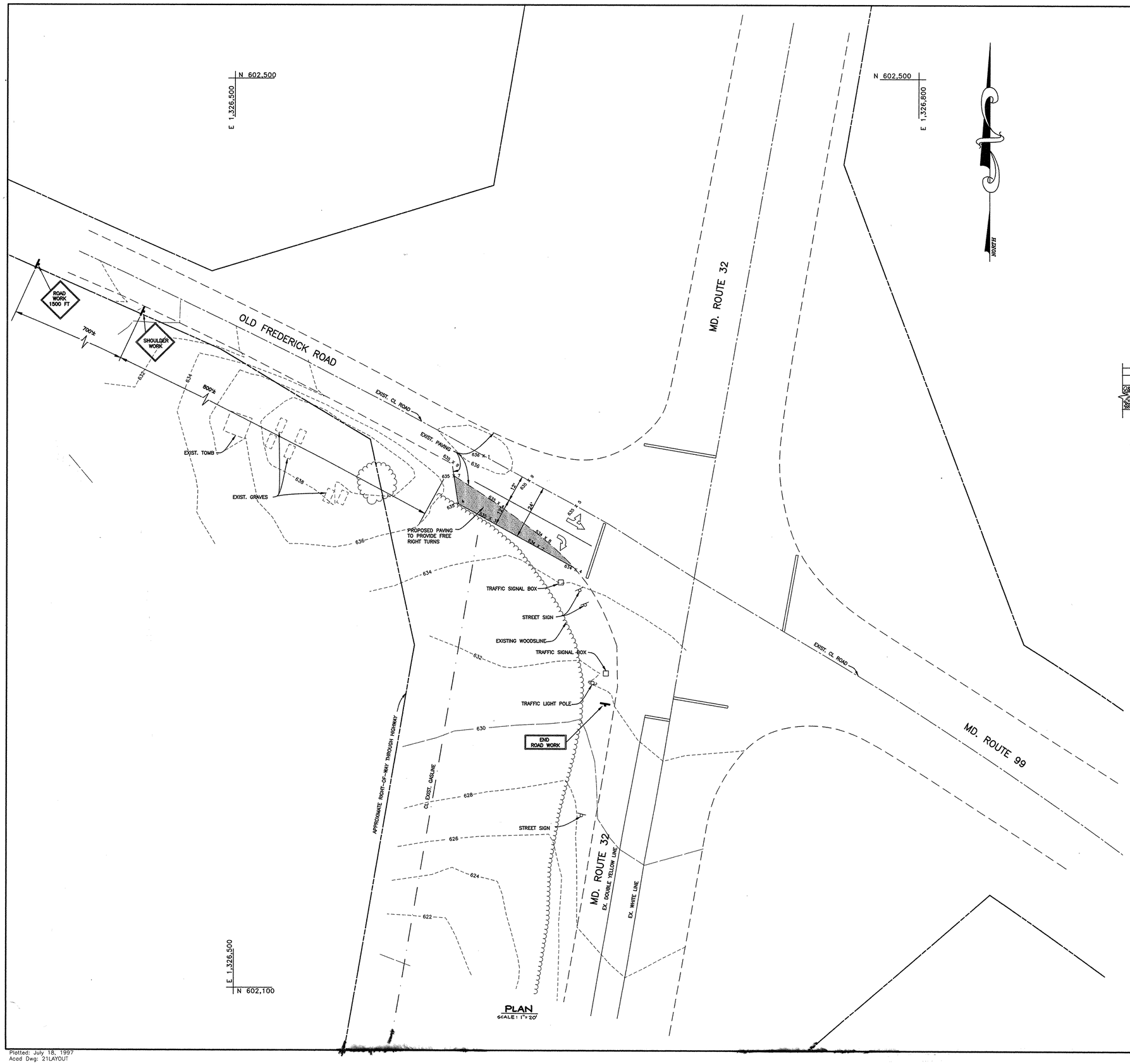

PLAN
SCALE: 1"=20'

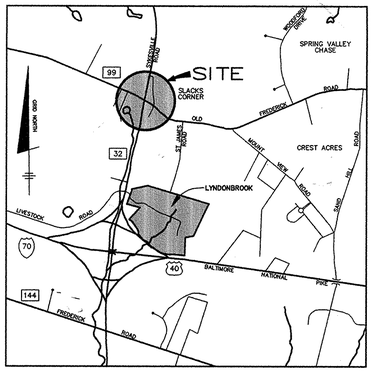

VICINITY MAP
SCALE: 1" = 2000'

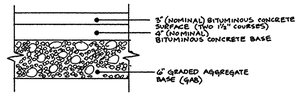

TYPICAL PAVEMENT SECTION
NOT TO SCALE

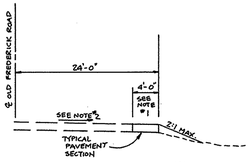

NOTES:
1. SAW CUT AND REMOVE EXIST. PAVEMENT TO ALLOW FOR MINIMUM OF 4' WIDE STRIP.
2. CROSS SLOPE VARIES. CONTINUE EXIST. CROSS THRU WIDENING WIDTH. SLOPE NOT TO EXCEED 3%.

TYPICAL ROADWAY SECTION
NOT TO SCALE

APPROVED: HOWARD COUNTY DEPARTMENT OF PUBLIC WORKS

CHIEF, BUREAU OF HIGHWAYS — DATE 10-9-97

APPROVED: HOWARD COUNTY DEPARTMENT OF PLANNING AND ZONING

CHIEF, DIVISION OF LAND DEVELOPMENT — DATE 10/22/97

CHIEF, DEVELOPMENT ENGINEERING DIVISION — DATE 10/15/97

NO.	DATE	REVISION

TSA GROUP, INC.
planning • architecture • engineering
5480 Baltimore National Pike • Ellicott City, Maryland 21043 • (410) 465-6105

STATE OF MARYLAND — DONALD M. DAVIS — REGISTERED PROFESSIONAL ENGINEER

OWNER/DEVELOPER:
SDC GROUP, INC.
P.O. BOX 417
ELLICOTT CITY, MARYLAND 21041
410-465-4244

PROJECT: LYNDONBROOK
LOTS 1 Thru 30, PARCELS A, B, C, & D

LOCATION: TAX MAP 15 – PARCEL 40 – BLOCKS 5&6
3rd ELECTION DISTRICT
HOWARD COUNTY, MARYLAND

TITLE: OLD FREDERICK ROAD AT MD. ROUTE 32
RIGHT TURN LANE PLAN
WP-96-37, S-96-01, P-96-22, WP-97-126

DATE: SEPTEMBER 19, 1997 — PROJECT NO. 0761

DESIGN: DAM — DRAFT EG/DBT — SCALE: AS SHOWN — DRAWING 17 OF 17

Plotted: July 18, 1997
Acad Dwg: 21LAYOUT

F-97-126

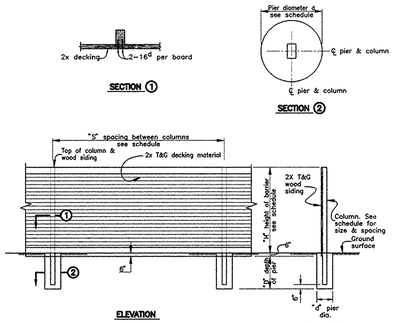

NOTES:
1. GENERAL.
   a. Height of barrier shall be based on acoustic requirements.
   b. Barrier walls having a height (H) not indicated in the tables shall be constructed as shown in the next higher height category.
2. SIDING.
   a. 2x wood decking material shall be utilized to span horizontally between posts. Design criteria is based on an allowable bending stress of 1400 lbs. per sq. in. and a 33 1/3% increase in stress for wind loads as considered appropriate. Decking shall be MC15.
   b. Siding in contact with the ground and for a distance of 6" above grade shall be treated with wood preservative.
3. POST.
   a. Wood post shall be utilized at the spacing indicated on the schedule. Design criteria is based on an allowable bending stress of 1400 lbs. per sq. in. and a 33 1/3% increase for wind loadings.
   b. Post embedded in concrete shall be treated with a wood preservative in the area of embedment and 12" above grade.
4. CONCRETE.
   a. Concrete in the piers shall have a 28 day compressive strength of 2500 lbs. per sq. in.
   b. Concrete shall be placed in drilled piers utilizing the earth as the forms.
5. FOUNDATIONS.
   a. The drilled piers have been designed utilizing an allowable passive pressure of 300 lbs. per sq. ft. and the following formula:

$$D = \left(\frac{14.52M}{pd}\right)^{1/3}$$

M = Moment at top of drilled pier(ft./lbs.)
P = Allowable passive pressure (300 lbs. per sq. ft.)
d = Diameter of pier (ft.)
D = Depth of pier (ft.)

6. ALTERNATE #1 (Preservative Treatment). Alternate #1 Represents the additional cost factor for treating the basic wood structure indicated on this reference plan. The necessity for treatment and the type of preservative will be subject to local conditions. All treatments shall conform to AWPA standard C-14.
7. ALTERNATE #2 (Painting) Alternate #2 represents the additional cost factor required to paint one side of the basic wood structure shown on this reference plan. Painting shall consist of 3 applications of paint. 2 coats of latex base paint conforming to Federal Specification TT-P-00960 shall be applied over a primer coat conforming to federal Specification TT-P-00250.
8. ALTERNATE #3 (Staining) Alternate #3 represents the additional cost factor required to stain one side of the basic wood structure. Stain shall consist of 2 coats of semi-transparent sealer stain applied in accordance with manufactures written instructions.
9. ALTERNATE #1 (Preservative Treatment) shall be utilized for this project.

SCHEDULE

40 #/s horizontal loading				
H	S	D	d	Post size
5'	8'	6'	12"	4x6
10'	8'	8'	18"	6x12
15'	8'	10'	24"	8x16
20'	6'	10'	30"	10x16

NOISE WALL DETAIL
NOT TO SCALE

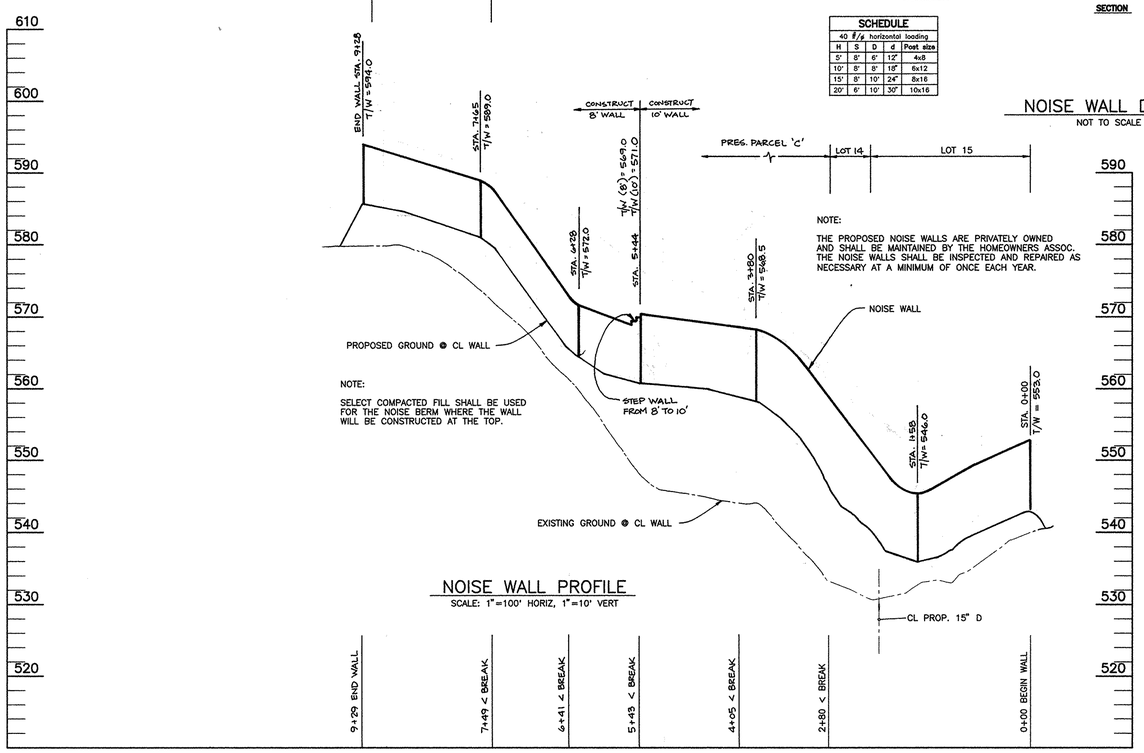

NOTE:
THE PROPOSED NOISE WALLS ARE PRIVATELY OWNED AND SHALL BE MAINTAINED BY THE HOMEOWNERS ASSOC. THE NOISE WALLS SHALL BE INSPECTED AND REPAIRED AS NECESSARY AT A MINIMUM OF ONCE EACH YEAR.

NOTE:
SELECT COMPACTED FILL SHALL BE USED FOR THE NOISE BERM WHERE THE WALL WILL BE CONSTRUCTED AT THE TOP.

NOISE WALL PROFILE
SCALE: 1"=100' HORIZ, 1"=10' VERT

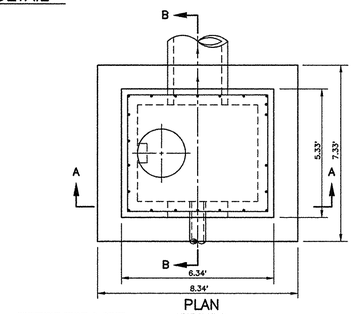

PLAN

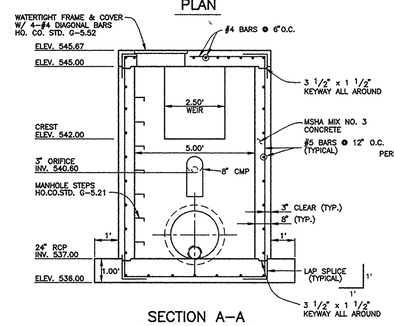

SECTION A–A

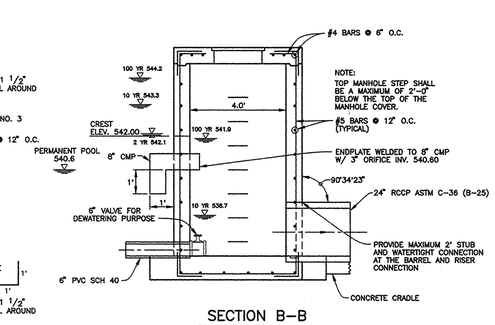

NOTE:
TOP MANHOLE STEP SHALL BE A MAXIMUM OF 2'-0" BELOW THE TOP OF THE MANHOLE COVER.

SECTION B–B

CONTROL STRUCTURE – POND #2
SCALE: 1" = 3'

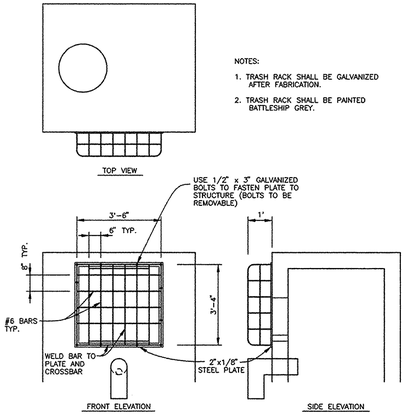

TRASH RACK – POND #2
SCALE: 1" = 3'

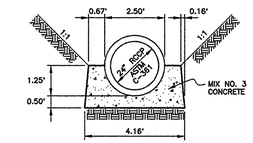

TYPE A-2
CONCRETE CRADLE – POND #2
SCALE: 1" = 3'

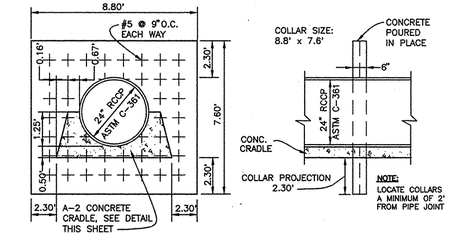

NOTE:
LOCATE COLLARS A MINIMUM OF 2' FROM PIPE JOINT

ANTI-SEEP COLLAR
NOT TO SCALE

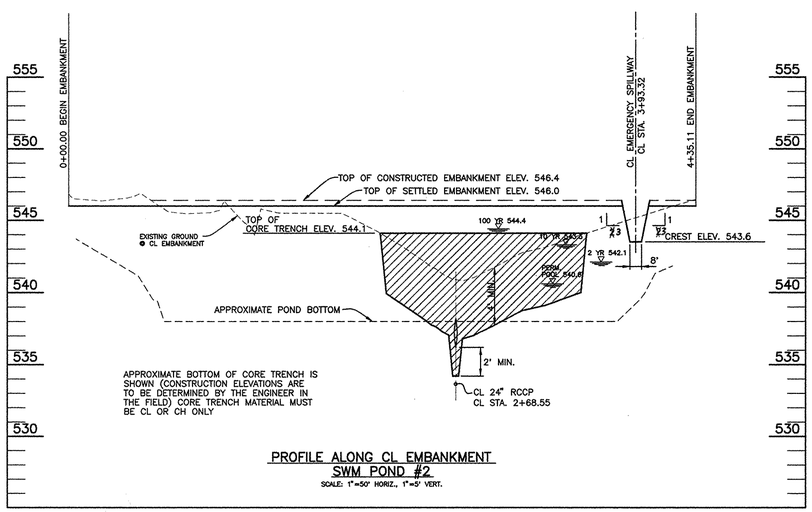

PROFILE ALONG CL EMBANKMENT
SWM POND #2
SCALE: 1"=50' HORIZ., 1"=5' VERT.

POND #2 WATER SURFACE ELEVATIONS FOR DAM SAFETY CHECK ASSUMING LOW FLOW ORIFICE IS CLOGGED.

5 YEAR	543.6
10 YEAR	544.1
100 YEAR	544.9

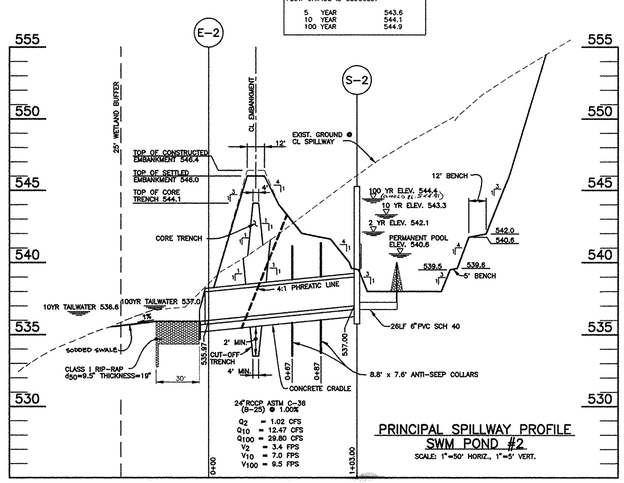

PRINCIPAL SPILLWAY PROFILE
SWM POND #2
SCALE: 1"=50' HORIZ., 1"=5' VERT.

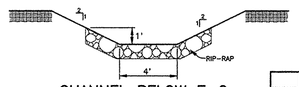

CHANNEL BELOW E-2
NOT TO SCALE

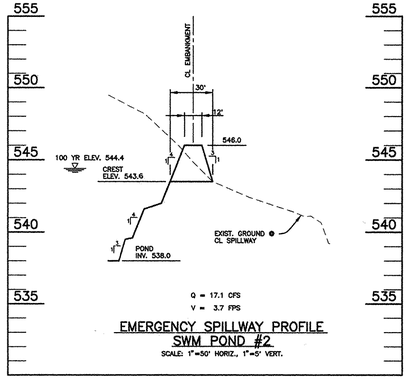

EMERGENCY SPILLWAY PROFILE
SWM POND #2
SCALE: 1"=50' HORIZ., 1"=5' VERT.

AS-BUILT CERTIFICATION

I HEREBY CERTIFY THAT THE FACILITY SHOWN ON THIS PLAN WAS CONSTRUCTED AS SHOWN ON THE "AS-BUILT" PLANS AND MEETS THE APPROVED PLANS AND SPECIFICATIONS.

PE NO. _____

DONALD A. MASON — DATE _____

CERTIFY MEANS TO STATE OR DECLARE A PROFESSIONAL OPINION BASED UPON ONSITE INSPECTIONS AND MATERIAL TESTS WHICH ARE CONDUCTED DURING CONSTRUCTION. THE ONSITE INSPECTIONS AND MATERIAL TESTS ARE THOSE INSPECTIONS AND TESTS DEEMED SUFFICIENT AND APPROPRIATE BY COMMONLY ACCEPTED ENGINEERING STANDARDS. CERTIFY DOES NOT MEAN OR IMPLY A GUARANTEE BY THE ENGINEER NOR DOES AN ENGINEER'S CERTIFICATION RELIEVE ANY OTHER PARTY FROM MEETING REQUIREMENTS IMPOSED BY CONTRACT, EMPLOYMENT, OR OTHER MEANS, INCLUDING MEETING COMMONLY ACCEPTED INDUSTRY PRACTICES.

BY THE DEVELOPER:

"I/WE CERTIFY THAT ALL DEVELOPMENT AND/OR CONSTRUCTION WILL BE DONE ACCORDING TO THESE PLANS, AND THAT ANY RESPONSIBLE PERSONNEL INVOLVED IN THE CONSTRUCTION PROJECT WILL HAVE A CERTIFICATE OF ATTENDANCE AT A DEPARTMENT OF THE ENVIRONMENT APPROVED TRAINING PROGRAM FOR THE CONTROL OF SEDIMENT AND EROSION BEFORE BEGINNING THE PROJECT. I SHALL ENGAGE A REGISTERED PROFESSIONAL ENGINEER TO SUPERVISE POND CONSTRUCTION AND PROVIDE THE HOWARD SOIL CONSERVATION DISTRICT WITH AN "AS-BUILT" PLAN OF THE POND WITHIN 30 DAYS OF COMPLETION. I ALSO AUTHORIZE PERIODIC ON-SITE INSPECTIONS BY THE HOWARD SOIL CONSERVATION DISTRICT."

James R. Mosley III — 4/4/97
DEVELOPER – SDC GROUP, INC. — DATE

BY THE ENGINEER:

"I/WE CERTIFY THAT THIS PLAN FOR POND CONSTRUCTION, EROSION AND SEDIMENT CONTROL REPRESENTS A PRACTICAL AND WORKABLE PLAN BASED ON MY PERSONAL KNOWLEDGE OF THE SITE CONDITIONS. THIS PLAN WAS PREPARED IN ACCORDANCE WITH THE REQUIREMENTS OF THE HOWARD SOIL CONSERVATION DISTRICT. I HAVE NOTIFIED THE DEVELOPER THAT HE/SHE MUST ENGAGE A REGISTERED PROFESSIONAL ENGINEER TO SUPERVISE POND CONSTRUCTION AND PROVIDE THE HOWARD SOIL CONSERVATION DISTRICT WITH AN "AS-BUILT" PLAN OF THE POND WITHIN 30 DAYS OF COMPLETION."

Donald Mason — 4/7/97
ENGINEER – DONALD A. MASON, P.E. # 21443 — DATE

THESE PLANS HAVE BEEN REVIEWED FOR THE HOWARD SOIL CONSERVATION DISTRICT AND MEET THE TECHNICAL REQUIREMENTS FOR SMALL POND CONSTRUCTION, SOIL EROSION, AND SEDIMENT CONTROL.

NATURAL RESOURCES CONSERVATION SERVICE — 10/1/97

THESE PLANS FOR SMALL POND CONSTRUCTION, SOIL EROSION, AND SEDIMENT CONTROL MEET THE REQUIREMENTS OF THE HOWARD SOIL CONSERVATION DISTRICT.

HOWARD SOIL CONSERVATION DISTRICT — 10/1/97
DATE

APPROVED: HOWARD COUNTY DEPARTMENT OF PUBLIC WORKS

CHIEF, BUREAU OF HIGHWAYS — 10-9-97
DATE

APPROVED: HOWARD COUNTY DEPARTMENT OF PLANNING AND ZONING

CHIEF, DIVISION OF LAND DEVELOPMENT — 10/22/97
DATE

CHIEF, DEVELOPMENT ENGINEERING DIVISION — 10/15/97
DATE

NO.	DATE	REVISION
1	12-7-98	REVISE NOISE WALL PROFILE UTILIZING 8' AND 10' WALL HEIGHTS.

TSA GROUP, INC.
planning • architecture • engineering
8480 Baltimore National Pike • Ellicott City, Maryland 21043 • (410) 465-6105

STATE OF MARYLAND — DONALD A. MASON — No. 21443 — REGISTERED PROFESSIONAL ENGINEER

OWNER/DEVELOPER:
SDC GROUP, INC.
P.O. BOX 417
ELLICOTT CITY, MARYLAND 21041
(410) 465-4244

PROJECT:
LYNDONBROOK
LOTS 1 THRU 30 AND PARCELS A THRU F

LOCATION: TAX MAP 15 – PARCEL 40 – BLOCKS 5 & 6
3rd ELECTION DISTRICT
HOWARD COUNTY, MARYLAND

TITLE: STORMWATER MANAGEMENT AND NOISE WALL PROFILES AND DETAILS
WP-96-37, S-96-01, P-96-22, WP-97-126

DATE: SEPTEMBER 19, 1997 — PROJECT NO. 0761

DESIGN: DAM — DRAFT: DBT — SCALE: AS SHOWN — DRAWING 12 OF 17

Plotted: April 2, 1997
Acad Dwg: 7024S12

F-97-126

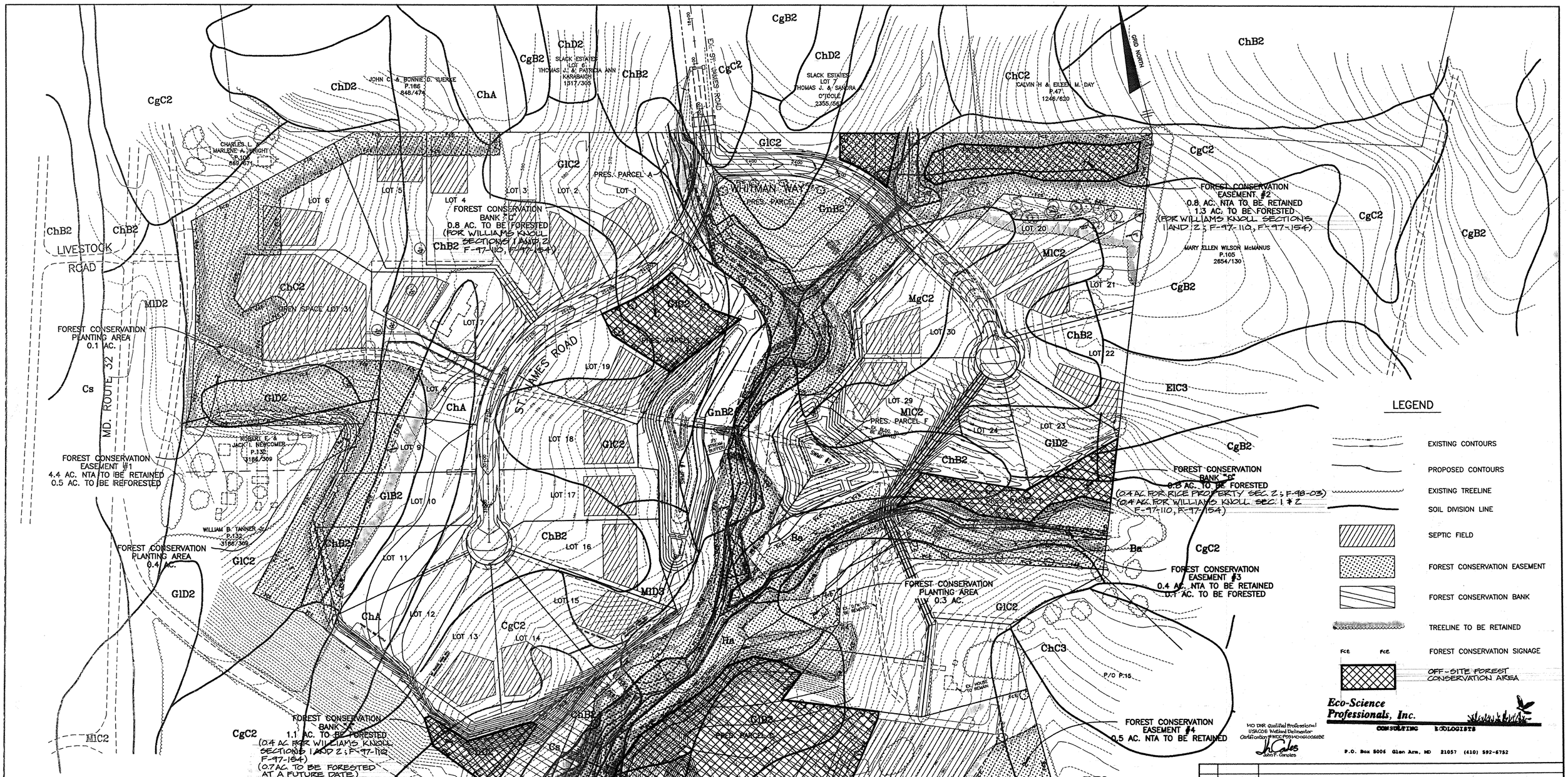

SOILS LEGEND

MAP SYMBOL	SOIL TYPE	MAPPING UNIT
Ba *	D	BAILE SILT LOAM
CgB2	B	CHESTER GRAVELLY SILT LOAM – 3 TO 8 PERCENT SLOPES – MODERATED
CgC2	B	CHESTER GRAVELLY SILT LOAM – 8 TO 15 PERCENT SLOPES – MODERATED
ChA	B	CHESTER SILT LOAM – 0 TO 3 PERCENT SLOPES
ChB2	B	CHESTER SILT LOAM – 3 TO 8 PERCENT SLOPES – MODERATELY ERODED
ChC2	B	CHESTER SILT LOAM – 8 TO 15 PERCENT SLOPES – MODERATELY ERODE
ChC3	B	CHESTER SILT LOAM – 8 TO 15 PERCENT SLOPES – SEVERELY ERODED
ChD2	B	CHESTER SILT LOAM – 15 TO 25 PERCENT SLOPES – MODERATELY EROD
Cs	B	COMUS SILT LOAM
EkC2	B	ELKDAK SILT LOAM – 8 TO 15 PERCENT SLOPES – MODERATELY ERODED
EkC3	B	ELKDAK SILTY CLAY LOAM – 8 TO 15 PERCENT SLOPES – SEVERELY ER
GlB2	B	GLENELG LOAM – 3 TO 8 PERCENT SLOPES – MODERATELY ERODED
GlC2	B	GLENELG LOAM – 8 TO 15 PERCENT SLOPES – MODERATELY ERODED
GlD2	B	GLENELG LOAM – 15 TO 25 PERCENT SLOPES – MODERATELY ERODED
GnB2 *	C	GLENVILLE SILT LOAM – 3 TO 8 PERCENT SLOPES – MODERATELY EROD
Ha *	D	HATBORO SILT LOAM
MgB2	B	MANOR GRAVELLY LOAM – 3 TO 8 PERCENT SLOPES – MODERATELY EROD
MgC2	B	MANOR GRAVELLY LOAM – 8 TO 15 PERCENT SLOPES – MODERATELY ERO
MlB2	B	MANOR LOAM – 3 TO 8 PERCENT SLOPES – MODERATELY ERODED
MlC2	B	MANOR LOAM – 8 TO 15 PERCENT SLOPES – MODERATELY ERODED
MlD2	B	MANOR LOAM – 15 TO 25 PERCENT SLOPES – MODERATELY ERODED
MlD3	B	MANOR LOAM – 15 TO 25 PERCENT SLOPES – SEVERELY ERODED
MlE	B	MANOR LOAM – 25 TO 45 PERCENT SLOPES

* INDICATES HYDRIC SOILS
SOILS MAP No. 8

Eco-Science Professionals, Inc.
CONSULTING ECOLOGISTS
P.O. Box 5006 Glen Arm, MD 21057 (410) 592-5752

MD DNR qualified Professional
USACOE Wetland Delineator
Certification #WDP-089 MO-96-1004-MBE
John F. Canales

NO.	DATE	REVISION
1	11-9-98	ADDED OFF-SITE FOREST CONSERVATION AREAS.

TSA GROUP, INC.
planning • architecture • engineering
8480 Baltimore National Pike • Ellicott City, Maryland 21043 • (410) 465-6105

STATE OF MARYLAND — REGISTERED PROFESSIONAL ENGINEER

APPROVED: HOWARD COUNTY DEPARTMENT OF PUBLIC WORKS
CHIEF, BUREAU OF HIGHWAYS — DATE 10-9-97
APPROVED: HOWARD COUNTY DEPARTMENT OF PLANNING AND ZONING
CHIEF, DIVISION OF LAND DEVELOPMENT — DATE 10/22/97
CHIEF, DEVELOPMENT ENGINEERING DIVISION — DATE 10/15/97

OWNER/DEVELOPER:
SDC GROUP, INC.
P.O. BOX 417
ELLICOTT CITY, MARYLAND 21041
(410) 465-4244

PROJECT: LYNDONBROOK
LOTS 1 THRU 30 AND PARCELS A THRU F
LOCATION: TAX MAP 15 – PARCEL 40 – BLOCKS 5 & 6
3rd ELECTION DISTRICT
HOWARD COUNTY, MARYLAND
TITLE: FOREST CONSERVATION PLAN
WP-96-37, S-96-01, P-96-22, WP-97-126
DATE: SEPTEMBER 19, 1997
PROJECT NO. 0761
DESIGN: DAM DRAFT: DBT SCALE: 1" = 100' DRAWING 15 OF 17

Plotted: July 18, 1997
Acad Dwg: 7014S15

F-97-126

Planting Schedule

Forest Conservation Easement #5 (3.6 acres)

Qty.	Species	Size	Spacing
7	Liriodendron tulipifera - Poplar	1" cal.	*
5	Quercus rubra - Red oak	1" cal.	*
190	Acer rubrum - Red maple	3-4'whip	**
100	Cornus florida - Flowering dogwood	3-4'whip	**
135	Fraxinus pennsylvanica - Green ash	3-4'whip	**
100	Lindera benzoin - Spicebush	18-24"b.t.	**
190	Liriodendron tulipifera - Poplar	2-3'whip	**
85	Prunus serotina - Black cherry	3-4'whip	**
125	Quercus rubra - Red oak	2-3'whip	**
85	Viburnum dentatum - Arrowwood	18-24"b.t.	**

BANK Forest Conservation Easement #2 (1.3 acres) FOR WILLIAMS KNOLL SECTIONS 1 AND 2 F-97-110, F-97-154

Qty.	Species	Size	Spacing
4	Liriodendron tulipifera - Poplar	1" cal.	*
100	Acer rubrum - Red maple	3-4'whip	**
65	Juniperus virginiana - Red Cedar	18-24" BR	**
110	Liriodendron tulipifera - Poplar	2-3'whip	**
50	Prunus serotina - Black cherry	3-4'whip	**
70	Quercus rubra - Red oak	2-3'whip	**
50	Viburnum prunifolium - Blackhaw	18-24"b.t.	**

BANK Forest Conservation Easement #3 (0.1 acres) - (TO BE PLANTED AT A FUTURE DATE)

Qty.	Species	Size	Spacing
2	Acer rubrum - Red maple	1" cal.	*
2	Liriodendron tulipifera - Poplar	1" cal.	*
6	Acer rubrum - Red maple	3-4'whip	**
3	Juglans nigra - Black walnut	2-3'whip	**
3	Prunus serotina - Black cherry	3-4'whip	**
7	Platanus occidentalis -Sycamore	2-3'whip	**
4	Viburnum dentatum - Arrowwood	18-24"b.t.	**

Conservation Bank "A" (1.1 acres) 0.4 Ac. FOR WILLIAMS KNOLL SECTIONS 1 AND 2 F-97-110, F-97-154

Qty.	Species	Size	Spacing
4	Quercus rubra - Red oak	1" cal.	*
85	Acer rubrum - Red maple	3-4'whip	**
35	Cornus florida - Flowering dogwood	3-4'whip	**
85	Fraxinus pennsylvanica - Green ash	3-4'whip	**
55	Lindera benzoin - Spicebush	18-24"b.t.	**
45	Liriodendron tulipifera - Poplar	2-3'whip	**
30	Prunus serotina - Black cherry	3-4'whip	**
45	Quercus rubra - Red oak	2-3'whip	**
65	Viburnum dentatum - Arrowwood	18-24"b.t.	**

Forest Conservation Bank "B" (6.2 acres) FOR WILLIAMS KNOLL SECTIONS 1 AND 2 F-97-110, F-97-154

Qty.	Species	Size	Spacing
6	Liriodendron tulipifera - Poplar	1" cal.	*
5	Quercus rubra - Red oak	1" cal.	*
400	Acer rubrum - Red maple	3-4'whip	**
145	Cornus florida - Flowering dogwood	2-3'whip	**
175	Juniperus virginiana - Red Cedar	18-24" BR	**
450	Liriodendron tulipifera - Poplar	2-3'whip	**
250	Populus grandidentata - Bigtooth Aspen	2-3'whip	**
225	Prunus serotina - Black cherry	3-4'whip	**
325	Quercus rubra - Red oak	2-3'whip	**
200	Viburnum prunifolium - Blackhaw	12-18"b.t.	**

Forest Conservation Bank "C" (0.8 acres) FOR WILLIAMS KNOLL SECTIONS 1 AND 2 F-97-110, F-97-154

Qty.	Species	Size	Spacing
6	Liriodendron tulipifera - Poplar	1" cal.	*
5	Quercus rubra - Red oak	1" cal.	*
25	Acer rubrum - Red maple	3-4'whip	**
35	Cornus florida - Flowering dogwood	2-3'whip	**
40	Juniperus virginiana - Red Cedar	18-24" BR	**
45	Liriodendron tulipifera - Poplar	2-3'whip	**
25	Populus grandidentata - Bigtooth Aspen	2-3'whip	**
15	Prunus serotina - Black cherry	3-4'whip	**
25	Quercus rubra - Red oak	2-3'whip	**
25	Viburnum prunifolium - Blackhaw	12-18"b.t.	**

Forest Conservation Bank "D" (0.8 acres) (0.4 Ac. FOR WILLIAMS KNOLL SECTIONS 1 AND 2 F-97-110, F-97-154) (0.4 Ac. FOR RICE PROPERTY SECTION 2; F-98-03)

Qty.	Species	Size	Spacing
2	Acer rubrum - Red maple	1" cal.	*
5	Liriodendron tulipifera - Poplar	1" cal.	*
55	Acer rubrum - Red maple	3-4'whip	**
35	Juglans nigra - Black walnut	2-3'whip	**
30	Prunus serotina - Black cherry	3-4'whip	**
65	Platanus occidentalis -Sycamore	2-3'whip	**
35	Viburnum dentatum - Arrowwood	18-24"b.t.	**

* - Planting sites for 1" caliper stock is shown on FCE as
Species selection for each individual planting site should be made randomly.
** - plants shall be spaced randomly eleven feet on center, not in a grid pattern

b.t. - branched transplant; cal. - caliper; BR - bare root

Forest Conservation Easement #1 (0.5 Acres)

Qty.	Species	Size	Spacing
6	Liriodendron tulipifera - Poplar	1" cal.	*
5	Quercus rubra - Red oak	1" cal.	*
17	Acer rubrum - Red maple	3-4'whip	**
18	Cornus florida - Flowering dogwood	2-3'whip	**
17	Juniperus virginiana - Red Cedar	18-24" BR	**
18	Liriodendron tulipifera - Poplar	2-3'whip	**
17	Populus grandidentata - Bigtooth Aspen	2-3'whip	**
18	Prunus serotina - Black cherry	3-4'whip	**
17	Quercus rubra - Red oak	2-3'whip	**
18	Viburnum prunifolium - Blackhaw	12-18"b.t.	**

Planting/Soil Specifications

1. Planting of nursery stock shall take place between March 15th and April 30th.
2. A twelve (12) inch layer of topsoil shall be spread over all afforestation areas impacted by site grading to assure a suitable planting area. Disturbed areas shall be seeded and stabilized as per general construction plan for project. Planting areas not impacted by site grading shall have no additional topsoil installed.
3. All bareroot planting stock shall have their root systems dipped into an anti-desicant gel prior to planting.
4. Plants shall be installed so that the top of root mass is level with the top of existing grade. Backfill in the planting pits shall consist of 3 parts existing soil to 1 part pine fines or equivalent.
5. Fertilizer shall consist of Agriform 22-8-2, or equivalent, applied as per manufacturer's specifications.
6. A two (2) inch layer of hardwood mulch shall be placed over the root area of all plantings.
7. Plant material shall be transported to the site in a tarped or covered truck. Plants shall be kept moist prior to planting.
8. All non-organic debris associated with the planting operation shall be removed from the site by the contractor.

Sequence of Construction

1. Plants shall be installed as per Plant Schedule and the Planting/Soil Specifications for the project.
2. Upon completion of the planting, signage shall be installed as per the Forest Retention Area Protection Devices shown on Sheet 2 of the Forest Conservation Plan.
3. Plantings shall be maintained and guaranteed in accordance with the Maintenance and Guarantee requirements for project.

Maintenance of Plantings

1. Maintenance of plantings shall last for a period of 24 months.
2. All plant material shall be watered twice a month during the 1st growing season. Watering may be more or less frequent depending on weather conditions. During second growing season, once a month during May-September, if needed.
3. Invasive exotics and noxious weeds will be removed from reforestation areas. Old field successional species will be retained.
4. Plants will be examined a minimum two times during the growing season for serious plant pests and diseases. Serious problems will be treated with the appropriate agent.
5. Dead branches will be pruned from plantings.

Guarantee Requirements

1. A 75 percent survival rate of reforestation plantings will be required at the end of the 24 month maintenance period. All plant material below the 75 percent threshold will be replaced at the beginning of the next growing season. After one growing season, plant material shall be maintained at 90% survival threshold.
2. The contractor will not be liable for plant loss due to theft or vandalism.

Surety for Reforestation

1. The developer shall post a surety (bond, letter of credit) to ensure that reforestation plantings are completed. Upon acceptance of the plantings by the County, the bond shall be released.

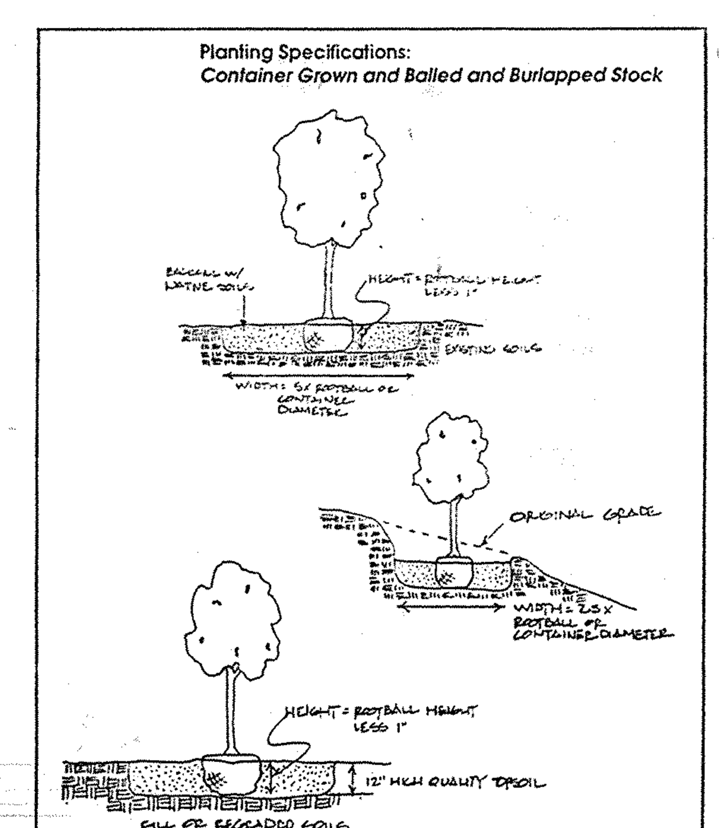

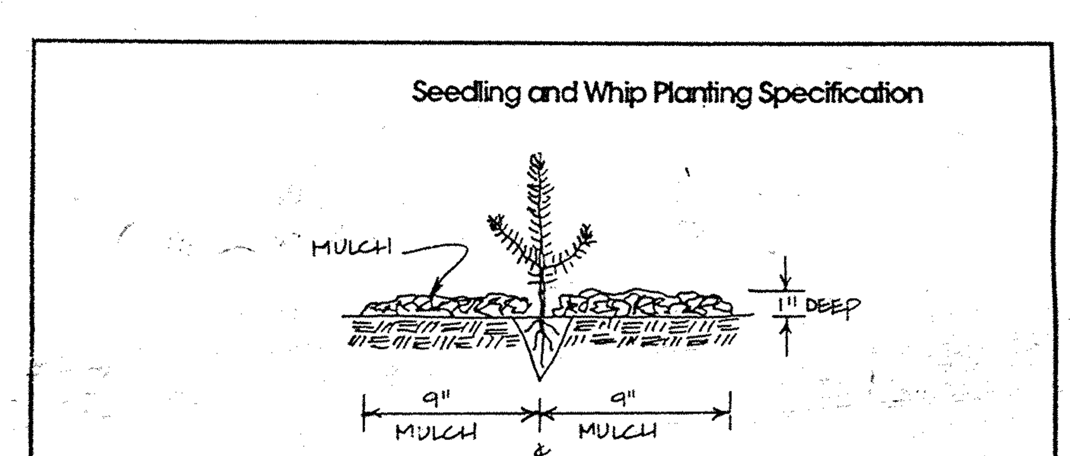

Temporary Protective Fencing

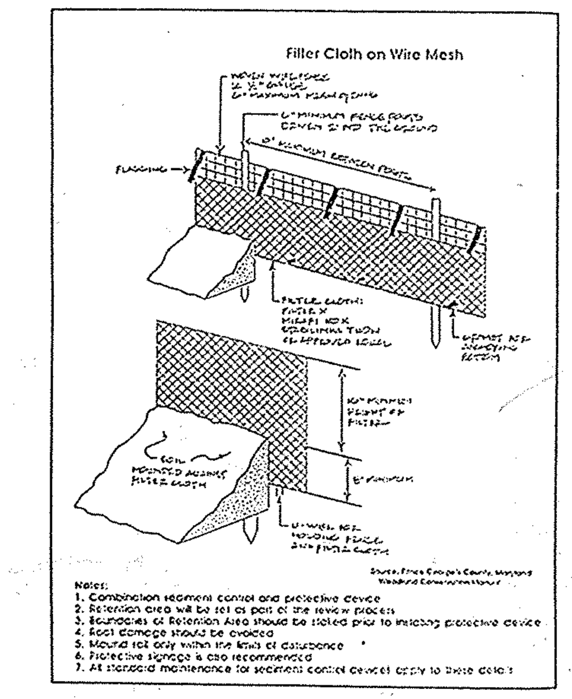

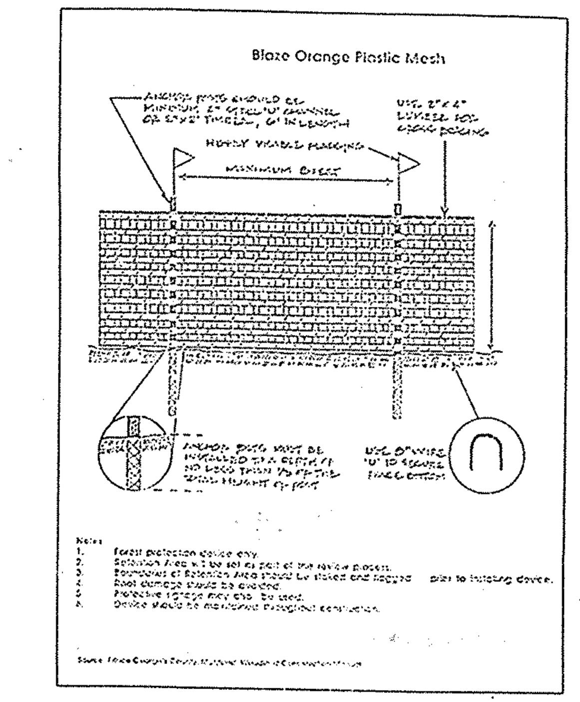

Permanent Protective Signage

FOREST CONSERVATION AREA

Unauthorized disturbance of vegetation is prohibited. Violators subject to penalties under the Howard County Forest Conservation Act of 1992.

Trees for Your Future

FCP NOTES

1. **Any Forest Conservation Easement (FCE) area shown hereon is subject to protective covenants which may be found in the Land Records of Howard County which restrict the disturbance and use of these areas.**
2. **Forested areas occurring outside of the FCE shall not be considered part of the FCE and shall not be subject to protective land covenants.**
3. **Limits of disturbance shall be restricted to areas outside the limit of temporary fencing or the FCE boundary, whichever is greater.**
4. **There shall be no clearing, grading, construction or disturbance of vegetation in the Forest Conservation Easement, except as permitted by Howard County DPZ.**
5. **No stockpiles, parking areas, equipment cleaning areas, etc. shall occur within areas designated as Forest Conservation Easements.**
6. **Temporary fencing shall be used to protect forest resources during construction. The fencing shall be placed along all FCE boundaries which occur within 25 feet of the proposed limits of disturbance.**
7. **Permanent signage shall be placed 50-100' apart along the boundaries of all areas included in Forest Conservation Easements.**
8. **Forestation Areas shown hereon that are not labeled as Forest Conservation Easements shall be considered part of a Forest Conservation Bank and credit for this plantings will be taken to offset forestry obligations for other projects. Recordation and approval of these forestry credits will be the responsibility of the future applicants.**
9. **No Forest Conservation credit shall be taken without the written approval of Howard County Department of Planning and Zoning.**

FOREST DATA

	Acres
Gross Area:	64.6
Ex. Lots/Unforested Preservation Parcel/Floodplain:	26.4
Net Tract Area (NTA):	38.2
Existing Forest (NTA):	12.7
Afforestation Threshold:	7.6
Reforestation Threshold:	9.6
Forest to be Cleared (NTA):	4.7
Forest to be Retained (NTA):	8.0
Reforestation Required:	4.0
Reforestation Proposed:	4.1
Forest Conservation Bank:	9.2

MD DNR Qualified Professional
USACOE Wetland Delineator
Certification # WDCP93MD0610044B2
John P. Canoles

Eco-Science Professionals, Inc.
CONSULTING ECOLOGISTS
P.O. Box 5006 Glen Arm, MD 21057 (410) 592-6752

APPROVED: HOWARD COUNTY DEPARTMENT OF PUBLIC WORKS
CHIEF, BUREAU OF HIGHWAYS — DATE 10-9-97

APPROVED: HOWARD COUNTY DEPARTMENT OF PLANNING AND ZONING
CHIEF, DIVISION OF LAND DEVELOPMENT — DATE 10/22/97
CHIEF, DEVELOPMENT ENGINEERING DIVISION — DATE 10/15/97

NO.	DATE	REVISION
1	11-9-98	ADD OFF-SITE FOREST CONSERVATION AREA INFORMATION

TSA GROUP, INC.
planning • architecture • engineering
8480 Baltimore National Pike • Ellicott City, Maryland 21043 • (410) 465-6105

STATE OF MARYLAND — REGISTERED PROFESSIONAL ENGINEER

OWNER/DEVELOPER: SDC GROUP, INC. P.O. BOX 417 ELLICOTT CITY, MARYLAND 21041 (410) 465-4244

PROJECT: LYNDONBROOK
LOTS 1 THRU 30 AND PARCELS A THRU F

LOCATION: TAX MAP 15 - PARCEL 40 - BLOCKS 5 & 6
3rd ELECTION DISTRICT
HOWARD COUNTY, MARYLAND

TITLE: FOREST CONSERVATION NOTES AND DETAILS
WP-96-37, S-96-01, P-96-22, WP-97-126

DATE: SEPTEMBER 19, 1997 — PROJECT NO. 0761
DESIGN: DAM — DRAFT: — SCALE: AS SHOWN — DRAWING 16 OF 17

F-97-126

Plotted: Nov. 18, 1996
Acad Dwg: 30FCPS2