GENERAL NOTES

1. ALL WORK SHALL BE DONE IN ACCORDANCE WITH HOWARD COUNTY STANDARDS, SPECIFICATIONS AND DETAILS FOR CONSTRUCTION.
2. ALL UTILITY COMPANIES MUST BE NOTIFIED 24 HRS. IN ADVANCE OF ANY CONSTRUCTION.
3. STORM DRAINAGE TRENCHES WITHIN ROAD RIGHTS-OF-WAY SHALL BE BACKFILLED AND COMPACTED IN ACCORDANCE WITH HOWARD COUNTY ROAD CODES.
4. ANY DAMAGE TO PUBLIC RIGHTS-OF-WAY, PAVING, OR EXISTING UTILITIES WILL BE CORRECTED AT THE CONTRACTORS EXPENSE.
5. CONTRACTOR TO NOTIFY THE HOWARD COUNTY INSPECTION AND SURVEY DIVISION AT LEAST 3 DAYS BEFORE STARTING WORK SHOWN ON THESE DRAWINGS. TELEPHONE: 992-7272.
6. APPROXIMATE LOCATION OF EXISTING UTILITIES ARE SHOWN FOR THE CONTRACTOR'S INFORMATION; CONTRACTOR SHALL LOCATE EXISTING UTILITIES WELL IN ADVANCE OF CONSTRUCTION ACTIVITIES AND TAKE ALL NECESSARY PRECAUTIONS TO PROTECT THE EXISTING UTILITIES AND TO MAINTAIN UNINTERRUPTED SERVICE.
7. ALL TRAFFIC CONTROL DEVICES SHALL BE INSTALLED IN ACCORDANCE WITH THE MANUAL OF UNIFORM TRAFFIC CONTROL DEVICES CURRENT REVISED EDITION.
8. SEE SHEET 2 FOR STREET LIGHT LOCATION AND DESCRIPTION.

PLAN — SURVEYED ___ PLOTTED ___ ALIGNMENT CHECKED ___ RT. OF WAY CHECKED ___ NOTE BOOK ___ NO. ___ | BY | DATE

APPROVED
DEPARTMENT OF PUBLIC WORKS
_____ DIRECTOR, DIVISION OF ENGINEERING M.K. 6/5/92 DATE
_____ CHIEF, BUREAU OF HIGHWAYS 6/5/92 DATE

APPROVED
DEPARTMENT OF PUBLIC WORKS
_____ CHIEF, BUREAU OF ENGINEERING 6-3-92 DATE

APPROVED
DEPARTMENT OF PLANNING AND ZONING
_____ CHIEF, DIVISION OF COMMUNITY PLANNING AND LAND DEVELOPMENT 6/5/92 DATE

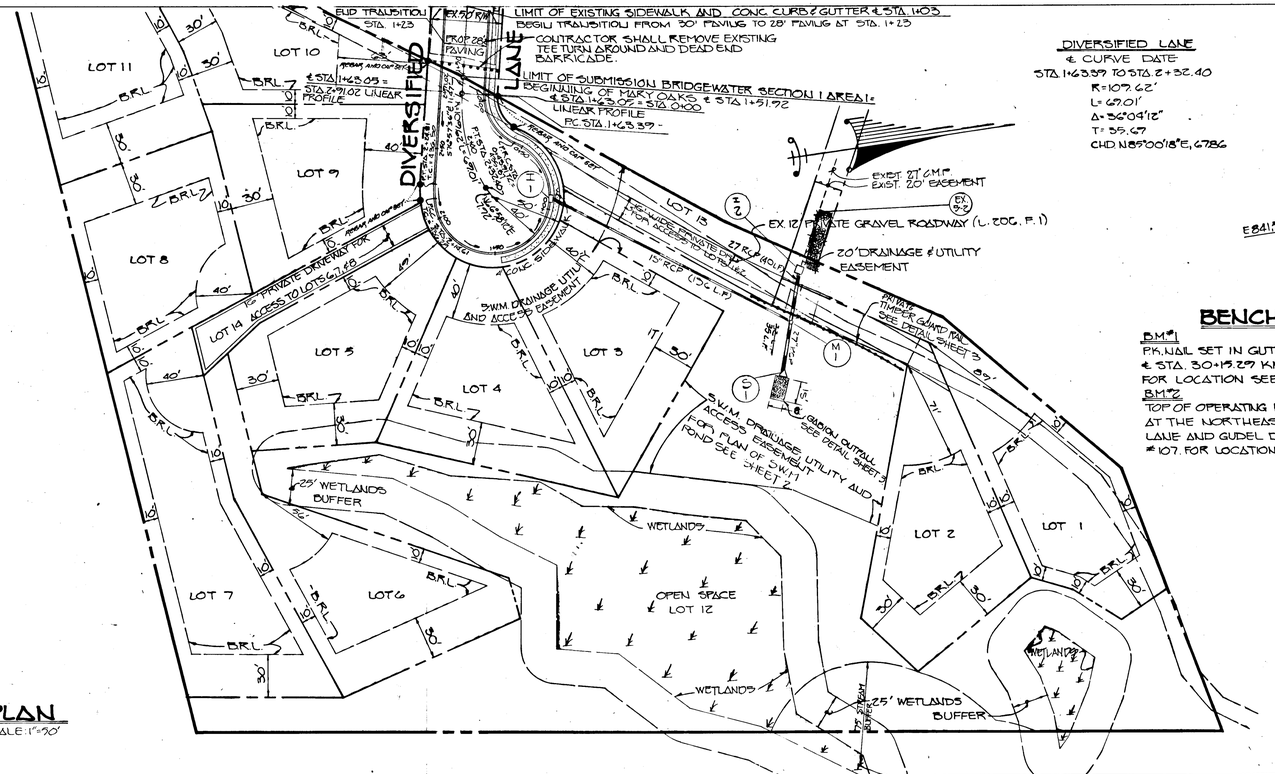

PLAN
SCALE: 1"=50'

DIVERSIFIED LANE
℄ CURVE DATA
STA. 1+63.39 TO STA. 2+32.40
R=107.62'
L=69.01'
Δ=36°04'12"
T=35.67
CHD N85°00'18"E, 67.86

BENCH MARKS

BM#1 — ELEV 407.62
PK NAIL SET IN GUTTER PAN OF GUDEL DRIVE AT ℄ STA. 30+19.29 KNOWN AS TRAVERSE STA 101. FOR LOCATION SEE SHEET TWO (2).

BM#2 — ELEV 446.77
TOP OF OPERATING BOLT ON FIRE HYDRANT LOCATED AT THE NORTHEAST INTERSECTION OF DIVERSIFIED LANE AND GUDEL DRIVE - KNOWN AS TRAVERSE STA #107. FOR LOCATION SEE SHEET TWO (2).

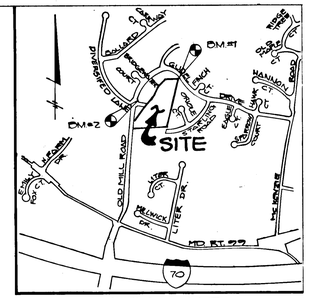

VICINITY MAP
SCALE: 1" = 1200'

STATE OF MARYLAND — CHARLES J. CROVO SR. — No. 13205 — REGISTERED PROFESSIONAL ENGINEER

CHARLES J. CROVO SR. 4/16/92 DATE

MARY OAKS
LOTS 1-14
TAX MAP #17 PARCEL 51
2ND. ELECTION DISTRICT
HOWARD COUNTY, MARYLAND

DIVERSIFIED LANE

PLAN AND PROFILES | STORMDRAIN PROFILES

OWNER AND DEVELOPER
GODFREY GARVEY
2918 CENTER DRIVE
ELLICOTT CITY MD. 21042

SCALE AS SHOWN	DATE SEPT. 27, 1991	DWG NO. 1 OF 3
DES. M. TAYLOR	DRN M. YOUNG	CHK C. CROVO

FISHER, COLLINS AND CARTER, INC.
7171 BALTIMORE NATIONAL PIKE, SUITE 100
ELLICOTT CITY MARYLAND 21042
TELEPHONE (301) 461-2855

THE COORDINATES SHOWN HEREON ARE BASED ON NAD '27, MARYLAND COORDINATE SYSTEM AS PROJECTED BY HOWARD COUNTY GEODETIC CONTROL STA. 3440002 AND STA. 3441004-R
3440002 N 533593.800 E 837983.247
3441004-R N 532658.086 E 840720.726

STRUCTURE SCHEDULE

STRUCTURE	TYPE	INVERT IN	INVERT OUT	TOP ELEVATION	ROAD STATION	REMARKS
I-1	Δ-5	~~441.83~~ 441.83	~~430.80~~ 430.80	434.87 29	LINEAR PROFILE STA 0+72	SD 4.01
S-1	CONC. END SECT.	~~416.86~~ 416.86	~~416.00~~ 416.00	~~418.31~~ 418.18	SEE PLAN	SD 5.52
~~S-2~~	CONC. END SECT.	~~425.58~~	~~425.37~~	~~427.08~~	~~SEE PLAN~~	~~SD 5.52~~
M-1	———	5'- 421.00 22 5'- 421.22 23	416.38 42	427.30 41	SEE PLAN	G. 5.13
I-2	D-INLET	420.88	424.63	433.08	SEE PLAN	SD. 4.11

PROFILE — SURVEYED ___ PLOTTED ___ GRAILES CHECKED ___ B.M.'s NOTED ___ STRUCTURE NOTATIONS CHKD ___ NOTE BOOK ___ NO. ___ | BY | DATE

1645

AS-BUILT 7-15-92

F92-52

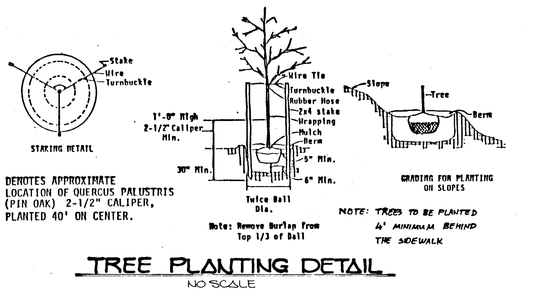

DENOTES APPROXIMATE LOCATION OF QUERCUS PALUSTRIS (PIN OAK) 2-1/2" CALIPER, PLANTED 40' ON CENTER.

TREE PLANTING DETAIL

NO SCALE

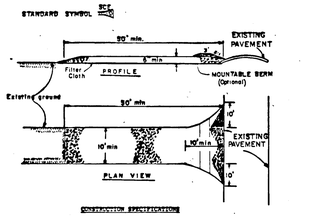

CONSTRUCTION SPECIFICATIONS

1. Stone Size - Use 2" stone, or reclaimed or recycled concrete equivalent.
2. Length - As required, but not less than 50 feet (except on a single residence lot where a 30 foot minimum length would apply).
3. Thickness - Not less than six (6) inches.
4. Width - Ten (10) foot minimum, but not less than the full width at points where ingress or egress occurs.
5. Filter Cloth - Will be placed over the entire area prior to placing of stone. Filter will not be required on a single family residence lot.
6. Surface Water - All surface water flowing or diverted toward construction entrances shall be piped across the entrance. If piping is impractical, a mountable berm with 5:1 slopes will be permitted.
7. Maintenance - The entrance shall be maintained in a condition which will prevent tracking or flowing of sediment onto public rights-of-way. This may require periodic top dressing with additional stone as conditions demand and repair and/or cleanout of any measures used to trap sediment. All sediment spilled, dropped, washed or tracked onto public rights-of-way must be removed immediately.
8. Washing - Wheels shall be cleaned to remove sediment prior to entrance onto public rights-of-way. When washing is required, it shall be done on an area stabilized with stone and which drains into an approved sediment trapping device.
9. Periodic inspection and needed maintenance shall be provided after each rain.

STABILIZED CONSTRUCTION ENTRANCE

NO SCALE

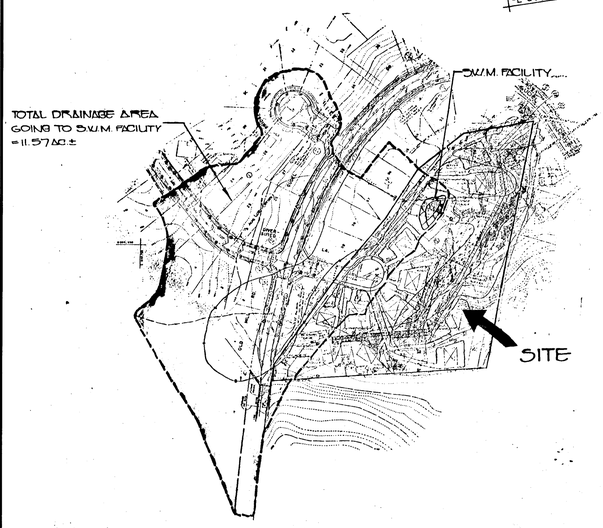

OFF SITE DRAINAGE AREA MAP (FOR SWM POND)

SCALE: 1"=200'

CONSTRUCTION SEQUENCE

1. OBTAIN GRADING PERMIT.
2. CONSTRUCT STABILIZED CONSTRUCTION ENTRANCE, EARTH DIKES AND STORMWATER MANAGEMENT FACILITY.
3. CLEAR AND GRUB SITE TO LIMITS OF DISTURBANCE.
4. GRADE ROADS TO SUBGRADE.
5. CONSTRUCT STORM DRAINS.
6. THE CONTRACTOR SHALL INSPECT AND PROVIDE NECESSARY MAINTENANCE ON THE SEDIMENT AND EROSION CONTROL STRUCTURES SHOWN HEREON, AFTER EACH RAINFALL AND ON A DAILY BASIS.
7. REMOVE SEDIMENT FROM EX-ROADWAYS AND DRESS STONE CONSTRUCTION ENTRANCE AS REQUIRED.
8. CONSTRUCT ALL UTILITIES. (SEWER MAINS, WATER MAINS, SHGs, WHGs)
9. INSTALL CURB AND GUTTER AND SUB-BASE ON ROADS.
10. REMOVE STONE CONSTRUCTION ENTRANCE. CLEAN BASE COURSE. APPLY TACK COAT AND LAY SURFACE COURSES.
11. ALL DISTURBED AREAS DUE TO REMOVAL OF SEDIMENT CONTROL MEASURES SHALL BE GRADED AND STABILIZED BY PERMANENT SEEDING.
12. FOLLOWING INITIAL SOIL DISTURBANCE OR REDISTURBANCE, PERMANENT OR TEMPORARY STABILIZATION SHALL BE COMPLETED WITHIN a) 7 CALENDAR DAYS FOR PERIMETER SEDIMENT CONTROL STRUCTURES, SLOPES GREATER THAN 3:1; b) 14 DAYS FOR ALL OTHER DISTURBED OR GRADED AREAS ON THE PROJECT SITE.
13. COMPLETE STABILIZATION OF ALL DISTURBED AREAS SHALL BE DONE PRIOR TO REMOVAL OF ALL SEDIMENT CONTROLS.
14. NOTIFY HOWARD COUNTY OFFICE OF INSPECTION AND PERMITS FOR FINAL INSPECTION AT DURATION OF PROJECT (301) 792-7272.

THE CONTRACTOR SHALL REFERENCE SHEET 2 OF THE WATER & SEWER CONSTRUCTION PLANS FOR A LIST OF CONDITIONS; CONDITIONS & MANAGEMENT PRACTICES FOR WORKING IN NONTIDAL WETLANDS.

THESE CONDITIONS APPLY TO ALL UTILITY WORK CONDUCTED WITHIN THE NONTIDAL WETLANDS & BUFFERS AS SHOWN ON THE PLANS.

* NOTE: THE CONTRACTOR OR DEVELOPER SHALL NOTIFY THE CONSTRUCTION INSPECTION DIVISION 24 HOURS BEFORE BEGINNING WORK @ 792-7272

SEDIMENT CONTROL NOTES

1) A MINIMUM OF 24 HOURS NOTICE MUST BE GIVEN TO THE HOWARD COUNTY OFFICE OF INSPECTIONS AND PERMITS PRIOR TO THE START OF ANY CONSTRUCTION (992-2437).
2) ALL VEGETATIVE AND STRUCTURAL PRACTICES ARE TO BE INSTALLED ACCORDING TO THE PROVISIONS OF THIS PLAN AND ARE TO BE IN CONFORMANCE WITH THE 1983 MARYLAND STANDARDS AND SPECIFICATIONS FOR SOIL EROSION AND SEDIMENT CONTROL.
3) FOLLOWING INITIAL SOIL DISTURBANCE OR REDISTURBANCE, PERMANENT OR TEMPORARY STABILIZATION SHALL BE COMPLETED WITHIN: a) 7 CALENDAR DAYS FOR ALL PERIMETER SEDIMENT CONTROL STRUCTURES, SLOPES GREATER THAN 3:1, b) 14 DAYS AS TO ALL OTHER DISTURBED OR GRADED AREAS ON THE PROJECT SITE.
4) ALL SEDIMENT TRAPPING DEVICES SHOWN MUST BE FENCED AND WARNING SIGNS POSTED AROUND THEIR PERIMETER IN ACCORDANCE WITH VOL. 1, CHAPTER 12, OF THE HOWARD COUNTY DESIGN MANUAL, STORM DRAINAGE.
5) ALL DISTURBED AREAS MUST BE STABILIZED WITHIN THE TIME PERIOD SPECIFIED ABOVE IN ACCORDANCE WITH THE 1983 MARYLAND STANDARDS AND SPECIFICATIONS FOR SOIL EROSION AND SEDIMENT CONTROL FOR PERMANENT SEEDINGS (SEC. 51) SOD (SEC. 54), TEMPORARY SEEDING (SEC. 50) AND MULCHING (SEC. 52). TEMPORARY STABILIZATION WITH MULCH ALONE CAN ONLY BE DONE WHEN RECOMMENDED SEEDING DATES DO NOT ALLOW FOR PROPER GERMINATION AND ESTABLISHMENT OF GRASSES.
6) ALL SEDIMENT CONTROL STRUCTURES ARE TO REMAIN IN PLACE AND ARE TO BE MAINTAINED IN OPERATIVE CONDITION UNTIL PERMISSION FOR THEIR REMOVAL HAS BEEN OBTAINED FROM THE HOWARD COUNTY SEDIMENT CONTROL INSPECTOR.
7) SITE ANALYSIS:

TOTAL AREA OF SITE	6.798	ACRES
AREA DISTURBED	1.405	ACRES
AREA TO BE ROOFED OR PAVED	0.338	ACRES
AREA TO BE VEGETATIVELY STABILIZED	0.955	ACRES
TOTAL CUT	1,000	CU.YDS.
TOTAL FILL	1,000	CU.YDS.
OFFSITE WASTE/BORROW AREA LOCATION		CU.YDS.

8) ANY SEDIMENT CONTROL PRACTICE WHICH IS DISTURBED BY GRADING ACTIVITY FOR PLACEMENT OF UTILITIES MUST BE REPAIRED ON THE SAME DAY OF DISTURBANCE.
9) ADDITIONAL SEDIMENT CONTROLS MUST BE PROVIDED, IF DEEMED NECESSARY BY THE HOWARD COUNTY DPW SEDIMENT CONTROL INSPECTOR.
10) ON ALL SITES WITH DISTURBED AREAS IN EXCESS OF 2 ACRES, APPROVAL OF THE INSPECTION AGENCY SHALL BE REQUESTED UPON COMPLETION OF INSTALLATION OF PERIMETER EROSION AND SEDIMENT CONTROLS. BUT BEFORE PROCEEDING WITH ANY OTHER EARTH DISTURBANCE OR GRADING. OTHER BUILDING OR GRADING INSPECTION APPROVALS MAY NOT BE AUTHORIZED UNTIL THIS INITIAL APPROVAL BY THE INSPECTION AGENCY IS MADE.
11) SITE ANALYSIS FOR WATER & SEWER MAIN CONSTRUCTION:

TOTAL AREA OF SITE	6.798	ACRES
AREA DISTURBED	0.790	ACRES
AREA TO BE ROOFED OR PAVED	0.008	ACRES
AREA TO BE VEGETATIVELY STABILIZED	0.782	ACRES
TOTAL CUT	1,599	CU.YDS.**
TOTAL FILL	1,472	CU.YDS.**

** TOTAL CUT IS TRENCH EXCAVATION FOR WATER & SEWER MAIN INSTALLATION. TOTAL FILL IS REFILL/BACKFILL OF WATER & SEWER MAIN TRENCHES.

PERMANENT SEEDING NOTES:

APPLY TO GRADED OR CLEARED AREAS NOT EXPECTED TO IMMEDIATELY FURTHER DISTURBANCE WHERE A PERMANENT LONG-LIVED VEGETATIVE COVER IS NEEDED.

SEEDBED PREPARATION: LOOSEN UPPER THREE-INCHES OF SOIL BY RAKING, DISCING OR OTHER ACCEPTABLE MEANS BEFORE SEEDING, IF NOT PREVIOUSLY LOOSENED. SOIL AMENDMENTS: IN LIEU OF SOIL TEST RECOMMENDATIONS, USE ONE OF THE FOLLOWING SCHEDULE.

1) PREFERRED - APPLY 2 TONS PER ACRE DOLOMITIC LIMESTONE (92 LBS/1000 SQ.FT.) AND 600 LBS PER ACRE 10-10-10 FERTILIZER (14 LBS/1000 SQ.FT.) BEFORE SEEDING.
HARROW OR DISC INTO UPPER THREE-INCHES OF SOIL. AT TIME OF SEEDING, APPLY 400 LBS. PER 1000 SQ.FT. UREA-FORM FERTILIZER (9 LBS/1000 SQ.FT.).
2) ACCEPTABLE - APPLY 2 TONS PER ACRE DOLOMITIC LIMESTONE (92 LBS/1000 SQ.FT.) AND 1000 LBS PER ACRE 10-10-10 FERTILIZER (23 LBS/1000 SQ.FT.) BEFORE SEEDING. HARROW OR DISC INTO UPPER THREE-INCHES OF SOIL.

SEEDING: FOR THE PERIODS MARCH 1 THRU APRIL 30, AND AUGUST 1 THRU OCTOBER 15, SEED WITH 60 LBS. PER ACRE (1.4 LBS/1000 SQ.FT.) OF KENTUCKY 31 TALL FESCUE; FOR THE PERIOD MAY 1 THRU JULY 31, SEED WITH 40 LBS. KENTUCKY 31 TALL FESCUE PER ACRE AND 2 LBS. PER ACRE (.05 LBS/1000 SQ.FT.) OF WEEPING LOVEGRASS. DURING THE PERIOD OF OCTOBER 16 THRU FEBRUARY 28, PROTECT SITE BY: OPTION (1) 2 TONS PER ACRE OF WELL ANCHORED STRAW MULCH AND SEED AS SOON AS POSSIBLE IN THE SPRING, OR USE SOD. OPTION (2) USE SOD. OPTION (3) SEED WITH 60 LBS/ACRE KENTUCKY 31 TALL FESCUE AND MULCH WITH 2 TONS/ACRE WELL ANCHORED STRAW.

MULCHING: APPLY 1 1/2 TO 2 TONS PER ACRE (70 TO 90 LBS/1000 SQ.FT.) OR UNROTTED SMALL GRAIN STRAW IMMEDIATELY AFTER SEEDING. ANCHOR MULCH IMMEDIATELY AFTER APPLICATION USING MULCH ANCHORING TOOL OR 218 GALLONS PER ACRE (5 GAL/1000 SQ. FT.) OF EMULSIFIED ASPHALT ON FLAT AREAS, ON SLOPES 8 FEET OR HIGHER, USE 348 GALLONS PER ACRE (8 GAL/1000 SQ.FT.) FOR ANCHORING. MAINTENANCE: INSPECT ALL SEEDED AREAS AND MAKE NEEDED REPAIRS, REPLACEMENTS AND RESEEDINGS.

TEMPORARY SEEDING NOTES:

APPLY TO GRADED OR CLEARED AREAS LIKELY TO BE REDISTURBED WHERE A SHORT-TERM VEGETATIVE COVER IS NEEDED.

SEEDBED PREPARATION: LOOSEN UPPER THREE-INCHES OF SOIL BY RAKING, DISCING OR OTHER ACCEPTABLE MEANS BEFORE SEEDING, IF NOT PREVIOUSLY LOOSENED. SOIL AMENDMENTS: APPLY 600 LBS PER ACRE 10-10-10 FERTILIZER (14 LBS/1000 SQ.FT.)

SEEDING: FOR PERIODS MARCH 1 THRU APRIL 30 AND FROM AUGUST 15 THRU NOVEMBER 15, SEED WITH 2 1/2 BUSHEL PER ACRE OF ANNUAL RYE (3.2 LBS/1000 SQ.FT.). FOR THE PERIOD MAY 1 THRU AUGUST 14, SEED WITH 3 LBS PER ACRE OF WEEPING LOVEGRASS (.07 LBS/1000 SQ.FT.). FOR THE PERIOD NOVEMBER 16 THRU FEBRUARY 28, PROTECT SITE BY APPLYING 2 TONS PER ACRE OF WELL ANCHORED STRAW MULCH AND SEED AS SOON AS POSSIBLE IN THE SPRING, OR USE SOD.

MULCHING: APPLY 1 1/2 TO 2 TONS PER ACRE (70 TO 90 LBS/1000 SQ.FT.) OF UNROTTED SMALL GRAIN STRAW IMMEDIATELY AFTER SEEDING. ANCHOR MULCH IMMEDIATELY AFTER APPLICATION USING MULCH ANCHORING TOOL OR 218 GAL PER ACRE (5 GAL/1000 SQ.FT.) OF EMULSIFIED ASPHALT ON FLAT AREAS, ON SLOPES, 8 FT. OR HIGHER, USE 348 GAL PER ACRE (8 GAL/1000 SQ.FT.) FOR ANCHORING.

REFER TO THE 1983 MARYLAND STANDARDS AND SPECIFICATIONS FOR SOIL EROSION AND SEDIMENT CONTROL FOR RATE AND METHODS NOT COVERED.

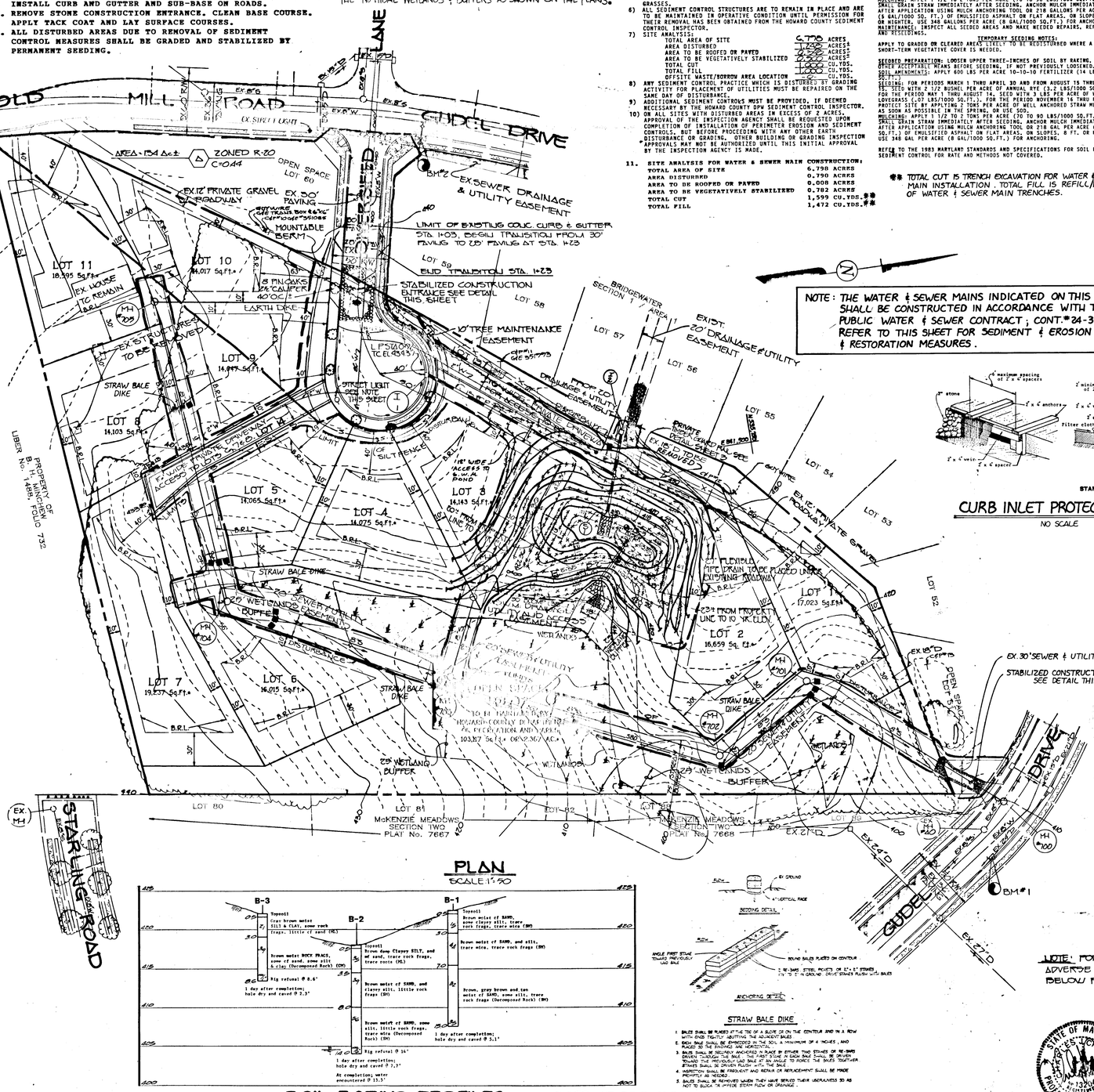

NOTE: -O- DENOTES PROPOSED 150-WATT MODERN SODIUM VAPOR LAMP-POST TOP FIXTURE ON A 14-FOOT GRAY FIBERGLASS POLE.

NOTE: THE WATER & SEWER MAINS INDICATED ON THIS SHEET SHALL BE CONSTRUCTED IN ACCORDANCE WITH THE PUBLIC WATER & SEWER CONTRACT; CONT.#24-3140-D. REFER TO THIS SHEET FOR SEDIMENT & EROSION CONTROL & RESTORATION MEASURES.

PLAN

SCALE 1"=90

SOIL BORING PROFILES

NO SCALE

STRAW BALE DIKE

1. BALES SHALL BE PLACED AT THE TOE OF A SLOPE OR ON THE CONTOUR AND IN A ROW WITH ENDS TIGHTLY ABUTTING THE ADJACENT BALES.
2. EACH BALE SHALL BE EMBEDDED IN THE SOIL A MINIMUM OF 4 INCHES, AND PLACED SO THE BINDING ARE HORIZONTAL.
3. BALES SHALL BE SECURELY ANCHORED IN PLACE BY EITHER TWO STAKES OR RE-BARS DRIVEN THROUGH THE BALE. THE FIRST STAKE IN EACH BALE SHALL BE DRIVEN TOWARD THE PREVIOUSLY LAID BALE AT AN ANGLE TO FORCE THE BALES TOGETHER. STAKES SHALL BE DRIVEN FLUSH WITH THE BALE.
4. INSPECTION SHALL BE FREQUENT AND REPAIR OR REPLACEMENT SHALL BE MADE PROMPTLY AS NEEDED.
5. BALES SHALL BE REMOVED WHEN THEY HAVE SERVED THEIR USEFULNESS SO AS NOT TO BLOCK OR IMPEDE STORM FLOW OR DRAINAGE.

NOTE: FOUND HAZZARD CLASS 'A', NO ADVERSE AFFECTS ON PROPERTY BELOW FOUND

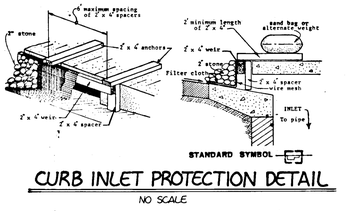

CURB INLET PROTECTION DETAIL

NO SCALE

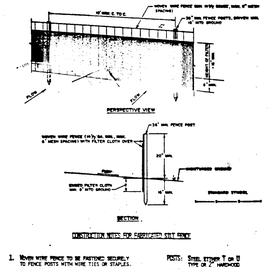

SILT FENCE

NO SCALE

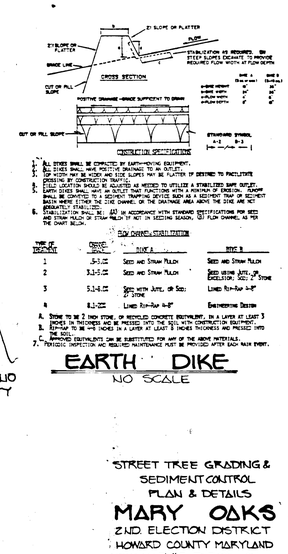

EARTH DIKE

NO SCALE

STORM WATER MANAGEMENT POND CERTIFICATION AND APPROVAL

DEVELOPER'S CERTIFICATE

"I HEREBY CERTIFY THAT ALL DEVELOPMENT AND/OR CONSTRUCTION WILL BE DONE ACCORDING TO THESE PLANS, AND THAT ANY RESPONSIBLE PERSONNEL INVOLVED IN THE CONSTRUCTION PROJECT WILL HAVE A CERTIFICATE OF ATTENDANCE AT A DEPARTMENT OF NATURAL RESOURCES APPROVED TRAINING PROGRAM FOR THE CONTROL OF SEDIMENT AND EROSION BEFORE BEGINNING THE PROJECT. I WILL PROVIDE THE HOWARD SOIL CONSERVATION DISTRICT WITH AN AS-BUILT PLAN OF THE POND WITHIN 30 DAYS OF COMPLETION".

C. Godfrey Garvey — 7/16/92
SIGNATURE OF DEVELOPER — DATE

ENGINEER'S CERTIFICATE

"I CERTIFY THAT THIS PLAN FOR POND CONSTRUCTION, EROSION AND SEDIMENT CONTROL REPRESENTS A PRACTICAL AND WORKABLE PLAN BASED ON MY PERSONAL KNOWLEDGE OF THE SITE CONDITIONS. THIS PLAN WAS PREPARED IN ACCORDANCE WITH THE REQUIREMENTS OF THE HOWARD SOIL CONSERVATION DISTRICT. I HAVE NOTIFIED THE DEVELOPER THAT HE MUST PROVIDE THE HOWARD SOIL CONSERVATION DISTRICT WITH AN "AS-BUILT" PLAN OF THE POND WITHIN 30 DAYS OF COMPLETION".

Richard Talbert — 7/16/92
SIGNATURE OF ENGINEER — DATE

THESE PLANS HAVE BEEN REVIEWED FOR THE HOWARD SOIL CONSERVATION DISTRICT AND MEET THE TECHNICAL REQUIREMENTS FOR SMALL POND CONSTRUCTION, SOIL EROSION AND SEDIMENT CONTROL.

James M. Helm /DS — 5/13/92
U.S. SOIL CONSERVATION SERVICE — DATE

THESE PLANS FOR SMALL POND CONSTRUCTION, SOIL EROSION AND SEDIMENT CONTROL MEET THE REQUIREMENTS OF THE HOWARD SOIL CONSERVATION DISTRICT.

Geoffrey K. Ahl — 5/13/92
HOWARD SOIL CONSERVATION DISTRICT — DATE

APPROVED: DEPARTMENT OF PLANNING AND ZONING

Richard Talbert — 4/5/92
CHIEF, DIVISION OF COMMUNITY PLANNING AND LAND DEVELOPMENT — DATE

APPROVED: DEPARTMENT OF PUBLIC WORKS

6-3-92
CHIEF, BUREAU OF ENGINEERING — DATE

APPROVED: DEPARTMENT OF PUBLIC WORKS

Glenn M. Tenney — 6/1/92
CHIEF, BUREAU OF HIGHWAYS — DATE

6/5/92
CHIEF, LAND DEVELOPMENT DIVISION M.K. — DATE

STREET TREE GRADING & SEDIMENT CONTROL PLAN & DETAILS

MARY OAKS

2ND ELECTION DISTRICT
HOWARD COUNTY MARYLAND
TAX MAP #17 PARCEL 31
SCALE: AS SHOWN
DATE: SEPTEMBER 27, 1991
SHEET 2 OF 3

STATE OF MARYLAND — CHARLES JOSEPH — No. 12974 — REGISTERED PROFESSIONAL ENGINEER

FISHER, COLLINS & CARTER, INC.
CIVIL ENGINEERING CONSULTANTS & LAND SURVEYORS
9171 BALTIMORE NATIONAL PIKE, SUITE 100
ELLICOTT CITY, MARYLAND 21042
(301) 461 - 2855

OWNER AND DEVELOPER
GODFREY GARVEY
2918 CENTER DRIVE
ELLICOTT CITY MD 21042

1645

AS-BUILT 7-15-92 F92-52

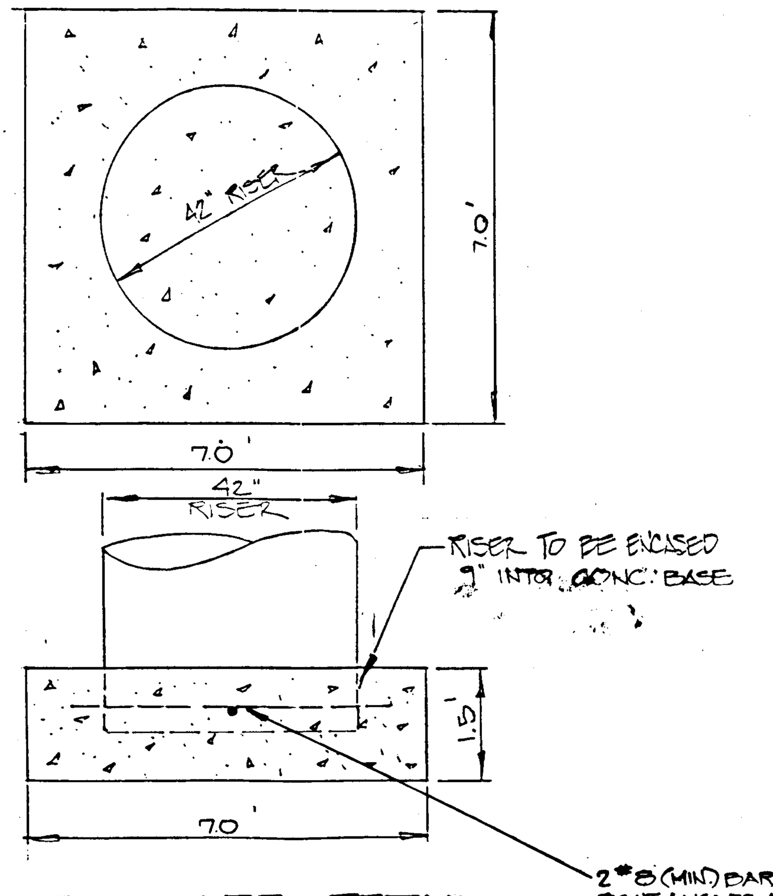

RISER BASE DETAIL
NO SCALE

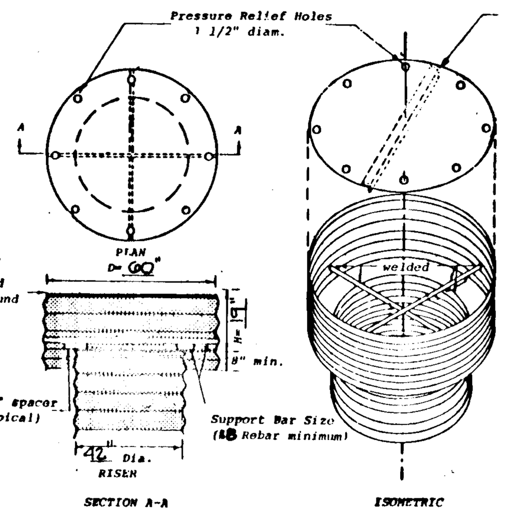

Top stiffener (if required) is ___ x ___ x ___ angle welded to top and oriented perpendicular to corrugations.

Top is 12 gage corrugated metal or 1/8" steel plate. Pressure relief holes may be omitted if ends of corrugations are left fully open when corrugated top is welded to cylinder.

Cylinder is 14 gage corrugated metal pipe or fabricated from 1/8" steel pipe.

NOTES:

1) The cylinder must be firmly fastened to the top of the riser.

2) Support bars are welded to the top of the riser or attached by straps bolted to top of riser.

CONCENTRIC TRASH RACK AND ANTI-VORTEX DEVICE
(not to scale)

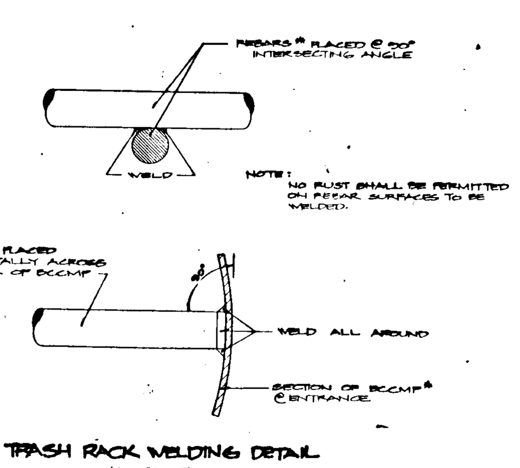

TRASH RACK WELDING DETAIL
NO SCALE

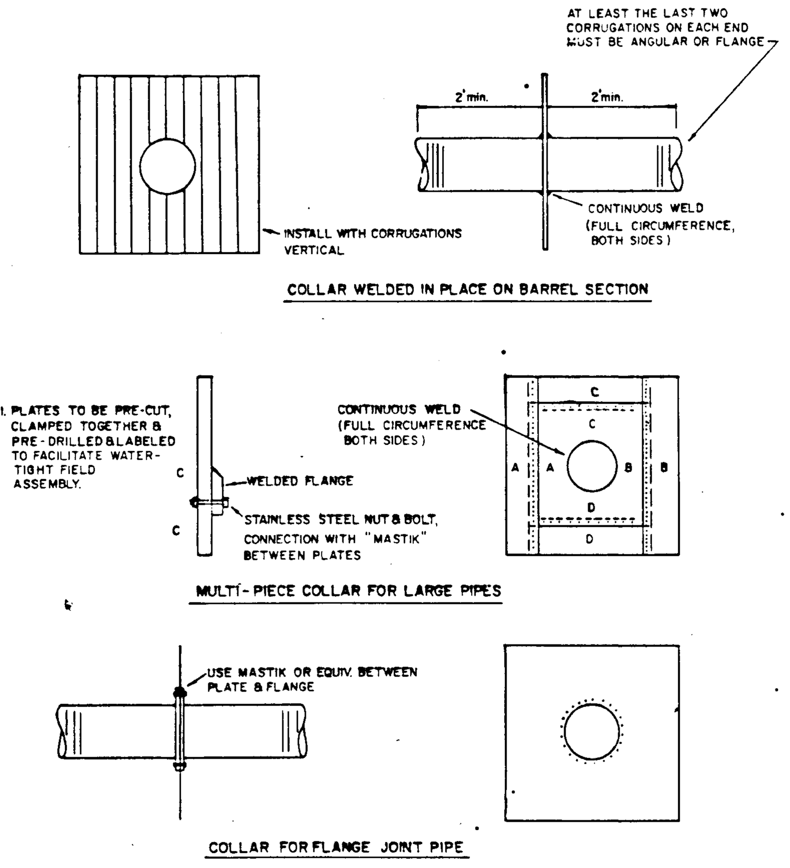

TYPICAL ANTI-SEEP COLLARS
NO SCALE

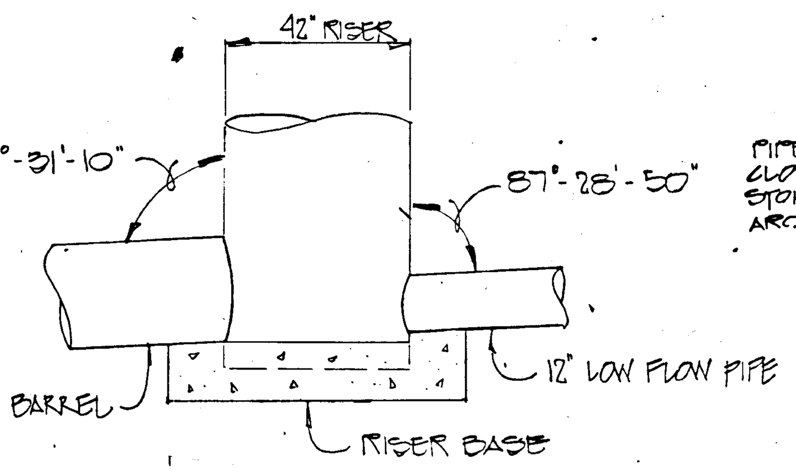

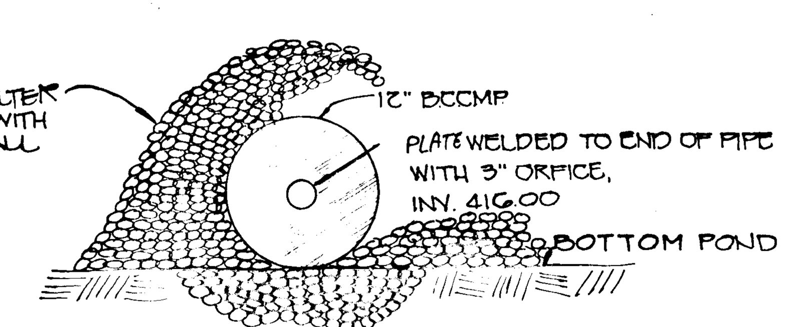

ORFICE DETAIL
NO SCALE

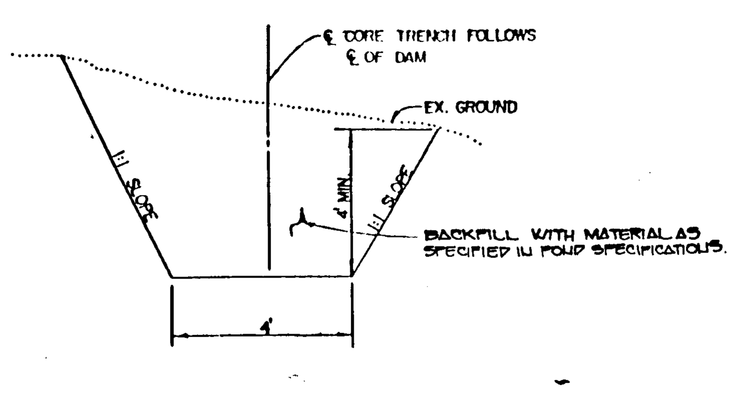

CORE TRENCH DETAIL
NO SCALE

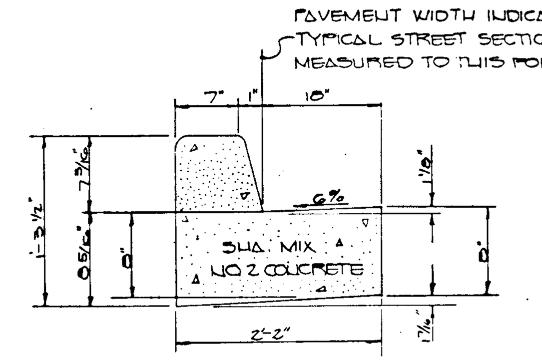

STANDARD SLOPE 7" COMB. CONC. CURB AND GUTTER
NO SCALE

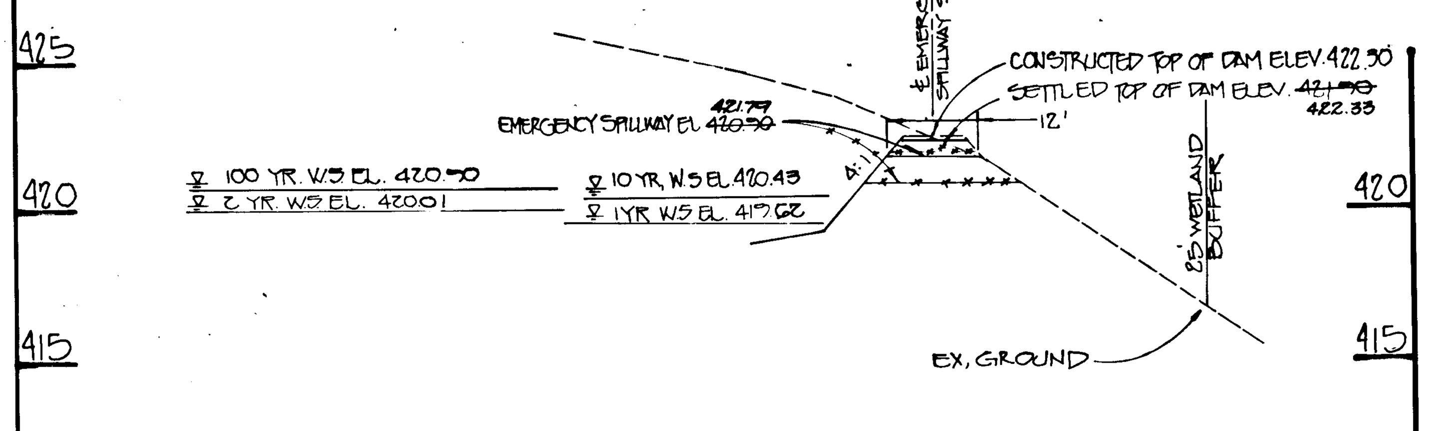

EMERGENCY SPILLWAY PROFILE
SCALE: 1"=20' HOR. 1"=5' VERT.

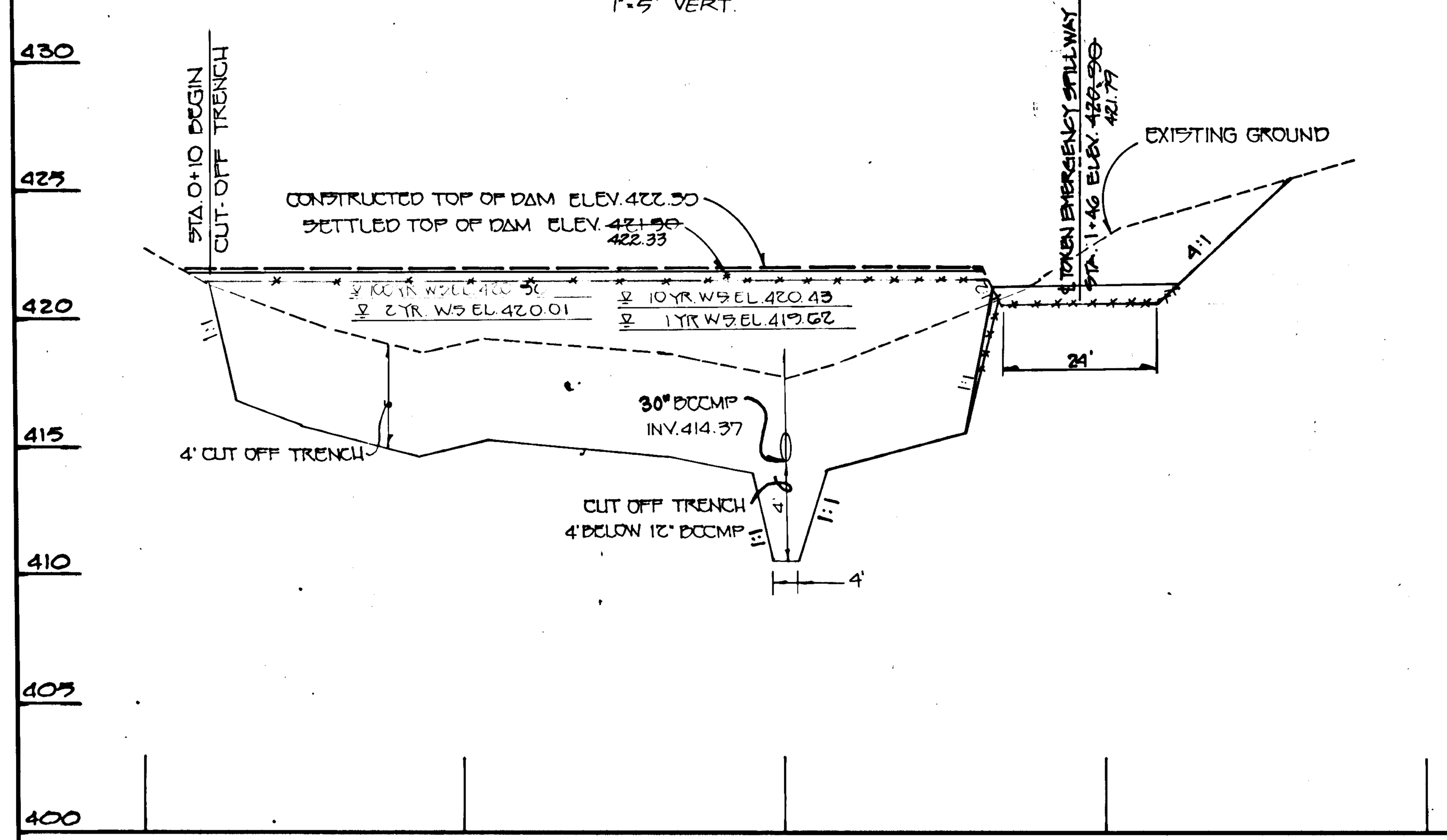

TOP OF DAM PROFILE
SCALE: 1"=20' HOR. 1"=5' VERT.

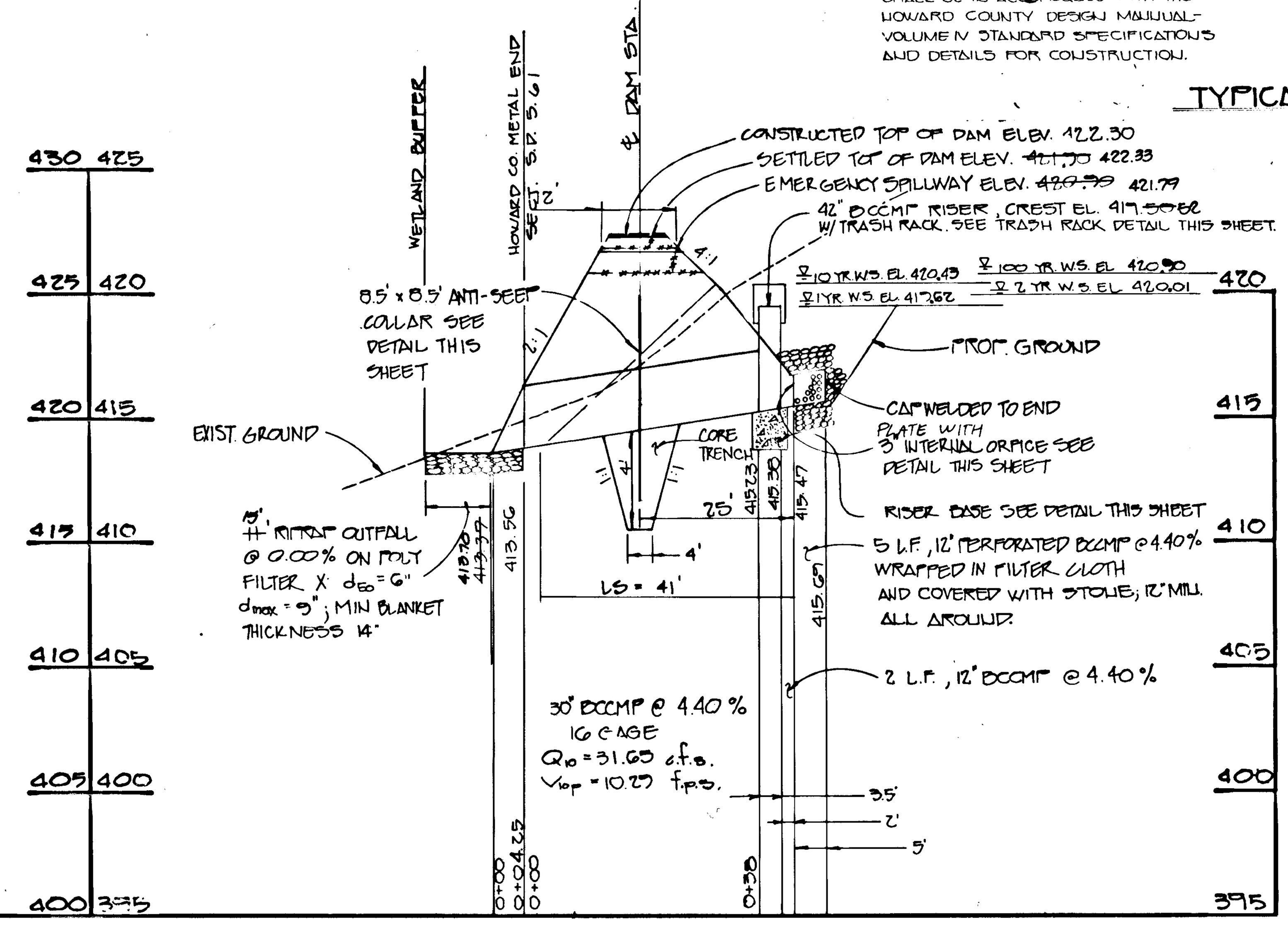

PRINCIPLE SPILLWAY PROFILE
SCALE: 1"=20' HOR. 1"=5' VERT.

POND SPECIFICATION

I. SITE PREPARATION

Areas under the embankment and structural works shall be cleared, grubbed and the topsoil stripped to remove all trees, vegetation, roots or other objectionable material. To facilitate clean out and restoration, it is recommended that the permanent pool area be cleared of all brush and trees.

II. EARTH FILL

Material

The fill material shall be taken from approved designated borrow area or areas. It shall be free from roots, stumps, wood, rubbish, over-size stones, frozen or other objectionable materials. The embankment shall be constructed to an elevation which provides for anticipated settlement to the design elevation. The fill height all along the length of the embankment shall be increased at least 10 percent above the design elevation (including free-board) unless otherwise shown on the plans. All fill materials shall be CL, GC, SC, or CH, as approved by Soils Engineer.

III. Placement

Areas on which fill is to be placed shall be scarified prior to placement of fill. Fill materials shall be placed in 8 inch maximum thickness (before compaction) layers which are to be continuous over the entire length of the fill. The most porous borrow material shall be placed in the down-stream portions of the embankment.

Core Trench

Where specified, a core trench shall be excavated along or or parallel to the centerline of the embankment, as shown on the plans. The bottom width of the trench shall be governed by the equipment used for excavation, with the minimum width being 4-feet. The depth shall be at least 4-feet or as shown on the plans. The side slopes of the trench shall be 1:1 or flatter. The backfill material for the core trench shall be compacted either by equipment or rollers to assure maximum density and minimum permeability. Compact to 95% of AASHTO T-99 density. GC, SC, CH, CL, materials only shall be used in the core trench, as approved by Soils Engineer.

IV. STRUCTURAL BACKFILL

Backfill material shall be of the type and quality conforming to that specified for the adjoining fill material. The fill shall be placed in horizontal layers not to exceed 4 inches in thickness and compacted by hand tampers or other compaction equipment. The material needs to fill competely all spaces under and adjacent to the pipe. At no time during the backfilling operation shall driven equipment be allowed to operate closer than 4 feet to any part of a structure. Under no circumstances shall the contractor drive equipment over any part of a structure or pipe unless there is a compacted fill of 2 feet or greater over the structure or pipe.

V. PIPE CONDUITS

A. CORRUGATED METAL PIPE

1. Materials - Metal Pipe - This pipe and its appurtenances shall conform to the requirements of AASHTO Specification M-196 or M-211, with water-tight coupling bands.
2. Connections - All connections with pipes must be completely watertight. The drain pipe or barrel connection to the control structure shall be mortared all around. Watertight coupling bands shall be used at all joints. Anti-seep collars shall be connected to the pipe in such a manner as to be completely watertight.
3. Bedding - The pipe shall be firmly and uniformly bedded throughout its entire lenght. Where rock or soft, spongy or other unstable soil is encountered, all such material shall be removed and replaced with suitable earth compacted to provide adequate support.
4. Laying pipe - The pipe shall be placed with inside circumferential laps pointing downstream and with the longitudinal laps at the sides.
5. Backfilling shall conform to structural backfill as shown above.
6. Other details (anti-seep collars, valves, etc.) shall be as shown on the drawings.

VI. CONCRETE

Concrete shall meet minimum requirements set forth in Maryland State Highway Administration Specifications Materials, Highways, Bridges, and Incidental Structures, Article 20.07 (Portland Cement Concrete Mixtures), Mix No. 3.

VII. STABILIZATION

All borrow areas shall be graded to provide proper drainage and left in a sightly condition. All exposed surfaces of the embankment, spillway and borrow areas shall be stabilized by permanent seeding and applying straw mulch in accordance with "Standards and Specifications for Soil Erosion and Sediment Control in Urbanizing Areas" immediately after finish grading.

Fertilizer:	10-10-10	@11.5 lbs./1000 sq.ft.
Seed:	Crownvetch inoculated	@ 0.5 lbs./1000 sq.ft.
	'KY-31' Tall Fescue	@ 1.0 lbs./1000 sq.ft.
Mulch:	Straw	@80 lbs./1000 sq.ft.
Asphalt Tie-down:	Slopes	8 gal./1000 sq.ft.
	Flat areas	@ 5 gal./1000 sq.ft.

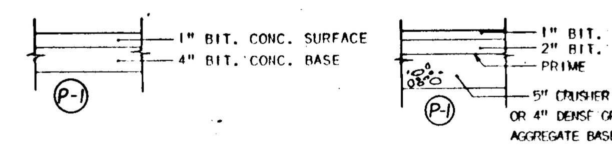

P-1 PAVING SECTION
NO SCALE
FOR USE-IN-COMMON DRIVEWAYS

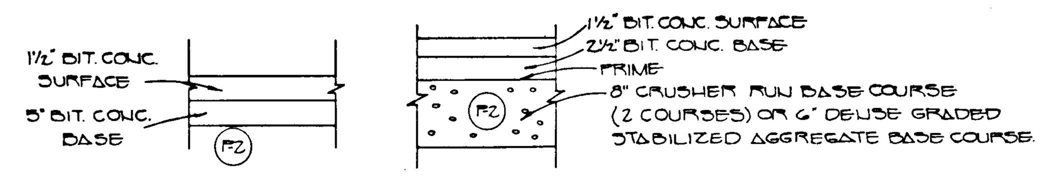

P-2 PAVING SECTION
NO SCALE

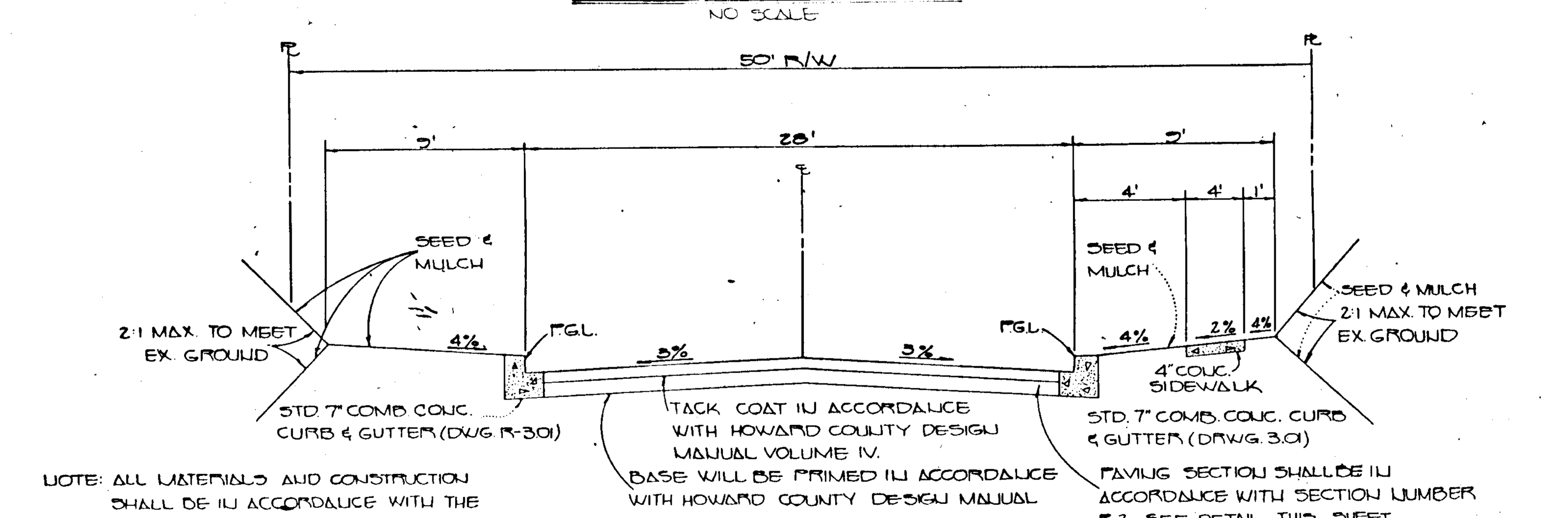

NOTE: ALL MATERIALS AND CONSTRUCTION SHALL BE IN ACCORDANCE WITH THE HOWARD COUNTY DESIGN MANUAL-VOLUME IV STANDARD SPECIFICATIONS AND DETAILS FOR CONSTRUCTION.

TYPICAL ROADWAY SECTION
NO SCALE

STORM WATER MANAGEMENT POND CERTIFICATION AND APPROVAL

DEVELOPER'S CERTIFICATE

"I HEREBY CERTIFY THAT ALL DEVELOPMENT AND/OR CONSTRUCTION WILL BE DONE ACCORDING TO THESE PLANS, AND THAT ANY RESPONSIBLE PERSONNEL INVOLVED IN THE CONSTRUCTION PROJECT WILL HAVE A CERTIFICATE OF ATTENDANCE AT A DEPARTMENT OF NATURAL RESOURCES APPROVED TRAINING PROGRAM FOR THE CONTROL OF SEDIMENT AND EROSION BEFORE BEGINNING THE PROJECT. I WILL PROVIDE THE HOWARD SOIL CONSERVATION DISTRICT WITH AN AS-BUILT PLAN OF THE POND WITHIN 30 DAYS OF COMPLETION".

SIGNATURE OF DEVELOPER — 4/16/92 — DATE

ENGINEER'S CERTIFICATE

"I CERTIFY THAT THIS PLAN FOR POND CONSTRUCTION, EROSION AND SEDIMENT CONTROL REPRESENTS A PRACTICAL AND WORKABLE PLAN BASED ON MY PERSONAL KNOWLEDGE OF THE SITE CONDITIONS. THIS PLAN WAS PREPARED IN ACCORDANCE WITH THE REQUIREMENTS OF THE HOWARD SOIL CONSERVATION DISTRICT. I HAVE NOTIFIED THE DEVELOPER THAT HE MUST PROVIDE THE HOWARD SOIL CONSERVATION DISTRICT WITH AN "AS-BUILT" PLAN OF THE POND WITHIN 30 DAYS OF COMPLETION".

SIGNATURE OF ENGINEER — 4/16/92 — DATE

THESE PLANS HAVE BEEN REVIEWED FOR THE HOWARD SOIL CONSERVATION DISTRICT AND MEET THE TECHNICAL REQUIREMENTS FOR SMALL POND CONSTRUCTION, SOIL EROSION AND SEDIMENT CONTROL.

U.S.D.A. SOIL CONSERVATION SERVICE — 5/13/92

THESE PLANS FOR SMALL POND CONSTRUCTION, SOIL EROSION AND SEDIMENT CONTROL MEET THE REQUIREMENTS OF THE HOWARD SOIL CONSERVATION DISTRICT.

HOWARD SOIL CONSERVATION DISTRICT — 5/13/92 — DATE

APPROVED: DEPARTMENT OF PLANNING AND ZONING

CHIEF, DIVISION OF LAND PLANNING AND LAND DEVELOPMENT — 6/5/92 — DATE

APPROVED: DEPARTMENT OF PUBLIC WORKS

CHIEF, BUREAU OF ENGINEERING — 6-3-92 — DATE

APPROVED: DEPARTMENT OF PUBLIC WORKS

CHIEF, BUREAU OF HIGHWAYS — 6/1/92 — DATE

CHIEF, LAND DEVELOPMENT DIVISION MK. — 6/2/92 — DATE

POND CONSTRUCTION CERTIFICATION

I CERTIFY THAT UPON COMPLETION OF CONSTRUCTION I WILL BE RESPONSIBLE FOR THE OPERATION AND MAINTENANCE (O&M) OF THE SMALL POND. O&M WILL BE PERFORMED BY ME IN ACCORDANCE WITH THE SPECIFICATIONS ON THIS PLAN. I ALSO AUTHORIZE PERIODIC ON-SITE INSPECTIONS OF THE POND BY SITE AND LOCAL AGENCIES.

SIGNATURE OF DEVELOPER — 4/16/92 — DATE

OPERATION AND MAINTENANCE SPECIFICATIONS

I HEREBY CERTIFY THAT I WILL OPERATE AND MAINTAIN THE COMPLETED POND IN ACCORDANCE WITH THE FOLLOWING:

1. PERIODIC INSPECTIONS OF THE FACILITY WILL BE MADE TO IDENTIFY POTENTIAL PROBLEMS THAT MAY AFFECT ITS SAFETY. THESE INSPECTIONS WILL BE MADE AFTER PERIODS OF HEAVY RAINFALL AND AT LEAST TWICE ANNUALLY. INSPECTION REPORTS SHALL BE KEPT UNTIL THE NEXT SUBSEQUENT INSPECTION. INSPECTIONS ITEMS TO BE LOOKED AT INCLUDE
   a) SPILLWAY AND OUTLET WORKS;
   b) RIP-RAP;
   c) VEGETATIVE COVER;
   d) CRACKS IN THE FILL;
   e) SLOPE FAILURES; AND
   f) SEEPAGE AND OTHER SIGNS OF DISTRESS.
2. PROBLEMS IDENTIFIED DURING INSPECTIONS WILL BE PROMPTLY CORRECTED. MAJOR PROBLEMS WILL BE BROUGHT TO THE ATTENTION OF THE SOIL CONSERVATION DISTRICT AND THE DAM SAFETY DIVISION OF THE MARYLAND WATER RESOURCES ADMINISTRATION. AS A VERY MINIMUM, GRASSY VEGETATION WILL BE MAINTAINED IN A DENSE AND HEALTHY STATE, AND WOODY VEGETATION WILL NOT BE PERMITTED TO GROW ON THE EMBANKMENT.

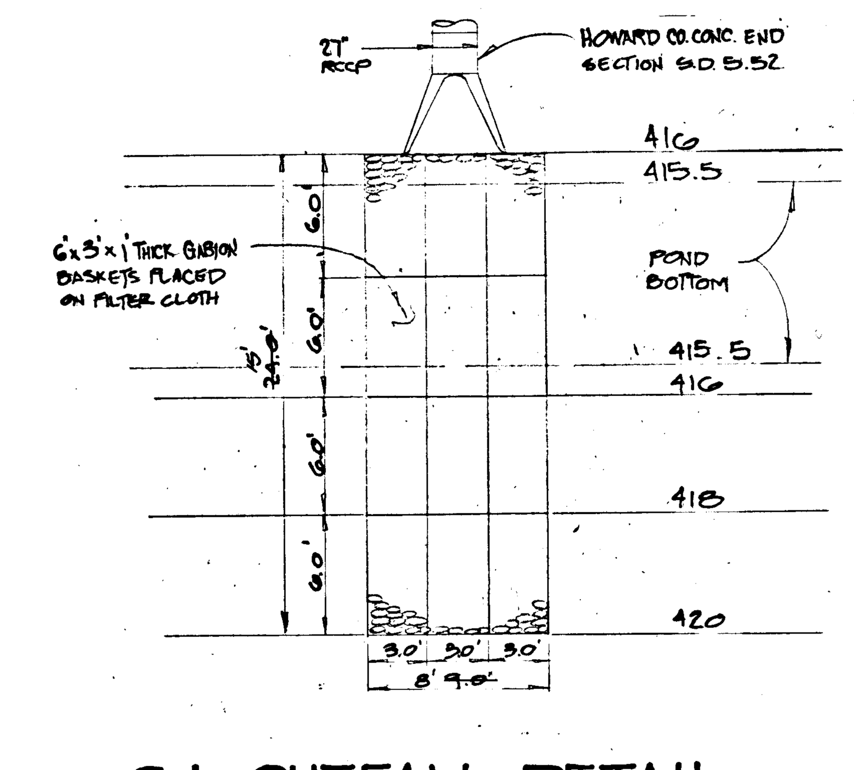

S-1 OUTFALL DETAIL
NO SCALE

RAILS TO BE UNTREATED TIMBER.

POSTS TO BE TREATED TIMBER. WHERE PAINT IS CALLED FOR, TWO COATS TO BE APPLIED

ALL LUMBER TO BE SOUTHERN YELLOW PINE OF 1400# STRESS GRADE OR BETTER.

TO BE PAINTED IN A COLOR SCHEME AND STRIPING DETAILS IN ACCORDANCE WITH THE LATEST "MANUAL OF UNIFORM TRAFFIC CONTROL DEVICES."

TO BE USED AS BARRICADE FOR STREET CLOSURES ONLY, WHERE NOTED ON CONSTRUCTION PLANS.

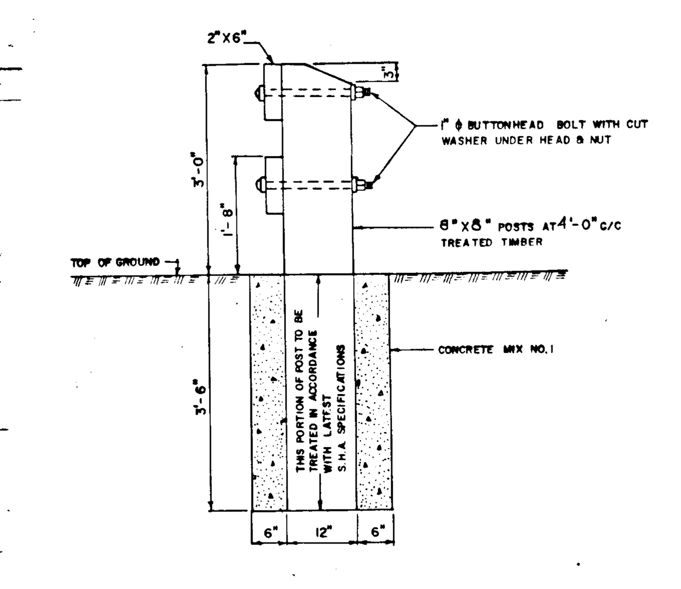

THE COST OF ALL EXCAVATION AND BACKFILL TO BE INCLUDED IN LUMP SUM PRICE BID FOR TIMBER BARRICADE.

THE LUMP SUM PRICE BID SHALL INCLUDE THE FURNISHING OF ALL MATERIALS, PRESERVATIVE TREATMENTS, TIMBER CONNECTORS AND HARDWARE, PAINTING, GALVANIZING AND CONCRETE AS WELL AS ALL LABOR, TOOLS AND EQUIPMENT AND ALL WORK INCIDENTAL THERETO.

TIMBER GUARD RAIL DETAIL
NO SCALE

OWNER AND DEVELOPER
GODFREY GARVEY
2918 CENTER DRIVE
ELLICOTT CITY MD. 21042

FISHER, COLLINS & CARTER, INC.
CIVIL ENGINEERING CONSULTANTS & LAND SURVEYORS
9171 BALTIMORE NATIONAL PIKE, SUITE 100
ELLICOTT CITY, MARYLAND 21042
(301) 461 - 2855

STORM WATER MANAGEMENT POND
PROFILES AND DETAILS
MARY OAKS
2ND. ELECTION DISTRICT
HOWARD COUNTY MARYLAND
TAX MAP #17 PARCEL 31
SCALE: AS SHOWN
DATE: SEPTEMBER 27, 1991
SHEET 3 OF 3

AS-BUILT 7-15-96 F-92-52

1645