FINAL ROAD CONSTRUCTION, GRADING AND STORMWATER MANAGEMENT PLANS

OXFORD SQUARE

"A HOWARD COUNTY GREEN NEIGHBORHOOD"

Parcels 'V' Thru 'C-C' And Open Space Lots 244 And 245

(Being A Resubdivision Of Open Space Lot 1, As Shown On Plats Entitled "Oxford Square, "Green Neighborhood", Parcels 'C' Thru 'L' And Open Space Lots 1 And 2" Recorded As Plat Nos. 22390 Thru 22395; A Resubdivision Of Parcel 'G', As Shown On Plats Entitled "Oxford Square, "Green Neighborhood" Resubdivision Plat-Parcel 'M' And Revision Plat-Parcels 'C', 'E', 'F', 'G', 'I', 'J', And 'K' Recorded As Plat Nos. 22856 Thru 22859; And A Resubdivision Of Parcels 'E', 'S' And 'T', As Shown On Plats Entitled "Oxford Square, "Green Neighborhood", Parcels 'R', 'S' And 'T' And Revision Plat-Parcel 'E'" Recorded As Plat Nos. 23103 Thru 23105)

SHEET INDEX

SHEET NO.	DESCRIPTION
1	TITLE SHEET
2	BANBURY DRIVE - PLAN AND PROFILE, CROWLEY STREET - PLAN
3	CROWLEY STREET - PLAN AND PROFILE
4	STORMWATER MANAGEMENT NOTES & DETAILS
5	STORMWATER MANAGEMENT NOTES & DETAILS
6	STORMWATER MANAGEMENT PLAN VIEWS
7	STORMWATER MANAGEMENT PLAN VIEWS
8	ROADWAY DETAILS
9	GRADING & SEDIMENT CONTROL PLAN
10	GRADING & SEDIMENT CONTROL PLAN
11	SEDIMENT CONTROL NOTES & DETAILS
12	SEDIMENT CONTROL NOTES & DETAILS
13	SIGNING AND PAVEMENT MARKING PLAN
14	STREET TREE & LANDSCAPE PLAN
15	LANDSCAPE NOTES & DETAILS
16-17	STORM DRAIN PROFILES
18	DRAINAGE AREA MAP
19-24	FOREST CONSERVATION PLANS
25-26	GREEN NEIGHBORHOOD PLANS
27	OFF-SITE FOREST CONSERVATION PLAN

ROADWAY INFORMATION CHART

ROAD NAME	CLASSIFICATION	DESIGN SPEED	POSTED SPEED LIMIT	R/W WIDTH
BANBURY DRIVE	* PUBLIC ACCESS STREET	30 M.P.H.	25 M.P.H.	40'
CROWLEY STREET	* PUBLIC ACCESS STREET	30 M.P.H.	25 M.P.H.	40'

* DESIGNED WITH MAJOR COLLECTOR CRITERIA DUE TO THE ADT VOLUME OF TRAFFIC IN THIS TOD ZONING.

SIDEWALK NOTE:

FUTURE CONCRETE SIDEWALKS WILL BE PRIVATELY OWNED & MAINTAINED BY THE OXFORD SQUARE COMMERCIAL ASSOCIATION, INC. AS RESIDENTIAL AND COMMERCIAL LOTS/PARCELS ARE DEVELOPED, PERIMETER SIDEWALKS ON EACH LOT/PARCEL SHALL BE CONSTRUCTED WITH EACH FUTURE SITE DEVELOPMENT PLAN. ADDITIONALLY, SIDEWALKS FROM RESIDENTIAL LOTS/PARCELS SHALL BE CONTINUED ON AND OVER ADJACENT RESIDENTIAL LOTS/PARCELS TO PROVIDE A CONTINUOUS WALKWAY FROM THE SUBJECT LOT/PARCEL UNDER DEVELOPMENT TO THE PUBLIC SCHOOL SITE.

STREET LIGHT CHART

STREET NAME	STATION	OFFSET	FIXTURE/POLE TYPE
BANBURY DRIVE	17+26	22.5' L	175 watt METAL HALIDE TEAR DROP FIXTURE MOUNTED AT 20' ON A 23' BLACK FIBERGLASS POLE WITH SHROUD USING A 4' ARM
	18+32	22.5' L	
	19+43	14' L	
	20+06	13' R	

TRAFFIC CONTROL SIGNS

ROAD NAME	CENTERLINE STA.	OFFSET	POSTED SIGN	SIGN CODE
BANBURY DRIVE	16+51	14' R	ROAD CLOSED 300 ft.	W20-3
	20+30 - MOUNT TO BARRICADE	---	ROAD CLOSED	R11-2
	20+30 - MOUNT TO BARRICADE	---	ROAD CLOSED	R11-2

TRAFFIC CONTROL SIGNS

ROAD NAME	CENTERLINE STA.	OFFSET	POSTED SIGN	SIGN CODE
CROWLEY STREET	0+30	18' L	STOP	R1-1
	2+65	14' R	SPEED LIMIT 25	R2-1
	5+34	14' L	SPEED LIMIT 25	R2-1
	6+70	17' R	STOP	R1-1

STREET LIGHT CHART

STREET NAME	STATION	OFFSET	FIXTURE/POLE TYPE
CROWLEY STREET	3+76	21'R	175 watt METAL HALIDE TEAR DROP FIXTURE MOUNTED AT 20' ON A 23' BLACK FIBERGLASS POLE WITH SHROUD USING A 4' ARM
	1+05	24'R	100 watt METAL HALIDE HAVRE DE GRACE ACORN POST TOP FIXTURE MOUNTED ON A 14' BLACK FIBERGLASS FLUTED POLE WITH SHROUD
	1+05	24'L	
	1+85	24'R	
	1+85	24'L	
	2+62	24'R	
	2+62	24'L	
	4+50	24'R	
	4+50	24'L	
	5+55	21'R	
	5+50	24'L	
	6+25	21'R	
	6+25	24'L	

REFER TO HOWARD CO. ADC MAP 35, D-6

VICINITY MAP
SCALE: 1" = 2000'

LEGEND

SYMBOL	DESCRIPTION
	EXISTING CONTOUR 2' INTERVAL
	EXISTING CONTOUR 10' INTERVAL
102	PROPOSED CONTOUR 2' INTERVAL
100	PROPOSED CONTOUR 10' INTERVAL
- SF - SF-	SILT FENCE
	DRAINAGE LIMITS
L.O.D.	LIMIT OF DISTURBANCE
G	EXISTING GASMAIN
	EXISTING TREELINE
	WETLANDS BUFFER
	WETLANDS LIMITS
FP	FLOODPLAIN LIMITS
ESD #21	STORMWATER MANAGEMENT DEVICE
	STORM DRAIN
B-33	BORING LOCATION
	PROPOSED STREET TREE
	EXISTING STREET TREE
	PROPOSED STREET LIGHT
	EXISTING STREET LIGHT

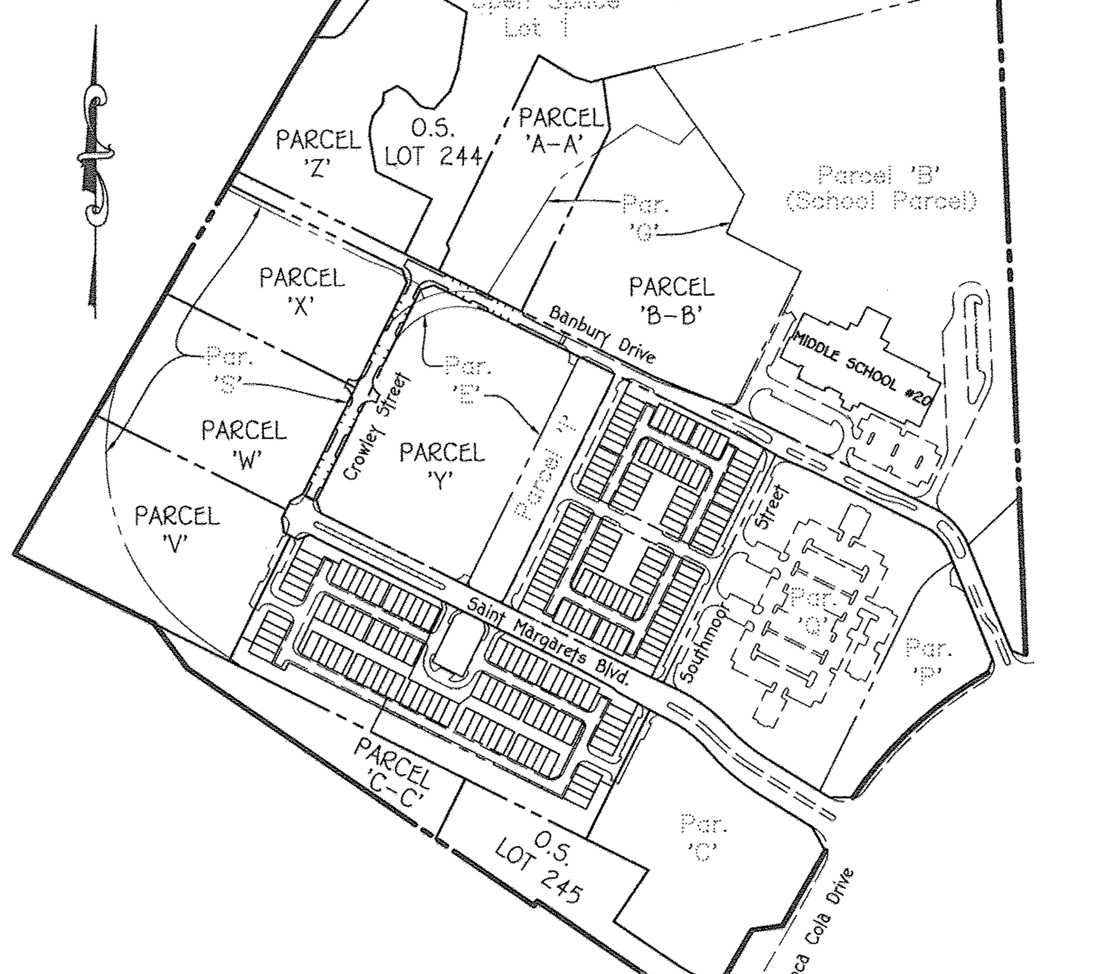

SITE MAP
SCALE: 1" = 400'

Zoned: TOD
Tax Map: 38, Parcel: 1003, Grid: 20
And
Tax Map: 44, Parcel P/O 4 & 5, Grid 1
First Election District
Howard County, Maryland

APPROVED: DEPARTMENT OF PUBLIC WORKS	
CHIEF, BUREAU OF HIGHWAYS	11/9/2015 DATE
APPROVED: DEPARTMENT OF PLANNING AND ZONING	
CHIEF, DIVISION OF LAND DEVELOPMENT	11-19-15 DATE
CHIEF, DEVELOPMENT ENGINEERING DIVISION	11-17-15 DATE

GENERAL NOTES

1. ALL CONSTRUCTION SHALL BE IN ACCORDANCE WITH THE LATEST STANDARDS AND SPECIFICATIONS OF HOWARD COUNTY PLUS MSHA STANDARDS AND SPECIFICATIONS IF APPLICABLE.

2. THE CONTRACTOR SHALL NOTIFY THE DEPARTMENT OF PUBLIC WORKS / BUREAU OF ENGINEERING / CONSTRUCTION INSPECTION DIVISION AT 410-313-1880 AT LEAST (5) WORKING DAYS PRIOR TO THE START OF WORK.

3. THE CONTRACTOR SHALL NOTIFY "MISS UTILITY" AT 1-800-257-7777 AT LEAST 48 HOURS PRIOR TO ANY EXCAVATION WORK BEING DONE.

4. THIS SUBDIVISION PLAN IS SUBJECT TO THE AMENDED FIFTH EDITION OF THE SUBDIVISION AND LAND DEVELOPMENT REGULATIONS AND THE 10-06-13 ZONING REGULATIONS PER COUNCIL BILL NO. 32-2013. DEVELOPMENT OR CONSTRUCTION ON THESE LOTS OR PARCELS MUST COMPLY WITH SETBACKS AND BUFFER REGULATIONS IN EFFECT AT THE TIME OF SUBMISSION OF A BUILDING OR GRADING PERMIT APPLICATION.

5. COORDINATES BASED ON NAD'83 MARYLAND COORDINATE SYSTEM AS PROJECTED BY HOWARD COUNTY GEODETIC CONTROL STATIONS NO. 38DA AND NO. 38GA
   Station No. 38DA N 556,796.3221 E 1,390,221.4576 Elev. = 126.08
   Station No. 38GA N 555,897.3373 E 1,390,132.0933 Elev. = 80.78

6. SUBJECT PROPERTY ZONED TOD PER ZB-1086M DATED 9/13/10, ZRA-140 DATED 8/1/12 & ZB-1102M DATED 1/17/13.

7. BACKGROUND INFORMATION:
   a. SUBDIVISION NAME: OXFORD SQUARE
   b. TAX MAP NO.: 38 & 44
   c. PARCELS NOS.: 1003 (Tax Map 38) And P/O 4 & 5 (Tax Map 44)
   d. ZONING: TOD
   e. ELECTION DISTRICT: FIRST
   f. GROSS AREA OF THIS SUBMISSION = 58.395 ACRES
   g. NUMBER OF PARCELS: 8
   h. NUMBER OF OPEN SPACE LOTS: 2
   i. AREA OF PARCELS: 40.667 ACRES
   j. AREA OF OPEN SPACE LOTS: 16.234 ACRES
   k. AREA OF PUBLIC ROADWAY TO BE DEDICATED: 1.034 ACRES
   l. PREVIOUS FILE NUMBERS: S-87-066, P-87-070, F-88-055, F-89-085, SDP-89-275, F-90-125, F-91-069, SDP-90-041, F-93-023, SDP-93-055, ZB-1086M, WP-11-130, F-11-057, WP-11-147, S-11-001, ECP-11-046, F-12-026, ZB-1102M, SDP-14-071, SDP-14-072.
   m. AREA OF FLOODPLAIN = 0.00 ACRES (WITH THIS SUBMISSION)
   n. AREA OF 25% OR GREATER SLOPES = 0.00 ACRES (WITH THIS SUBMISSION)
   o. NET AREA OF SUBMISSION = 58.395 AC.±

8. AMENITY REQUIREMENTS: T.O.D. DEVELOPMENT SHALL INCLUDE AN AMENITY AREA PER SECTION 127.4.F.I. OF THE ZONING REGULATIONS AND THE ROUTE 1 MANUAL.
   a. AMENITY AREA REQUIRED: 10.751 ACRES FOR THE ENTIRE PROJECT (107.513 x 10%)
   b. TOTAL AMENITY AREA PROVIDED: 0.00 AC. (THIS SUBMISSION) AND 23.42 AC. FOR THE ENTIRE PROJECT PER S-15-001.

9. ALL FILL AREAS WITHIN ROADWAYS AND UNDER STRUCTURES SHALL BE COMPACTED TO A MINIMUM OF 95% COMPACTION OF AASHTO T-180.

10. NOISE STUDY WAS PREPARED BY MARS GROUP DATED NOVEMBER, 2009. THE 65DBA NOISE CONTOUR LINE DRAWN ON THIS PLAN IS ADVISORY AS REQUIRED BY THE HOWARD COUNTY DESIGN MANUAL, CHAPTER 5, REVISED FEBRUARY, 1992, AND CANNOT BE CONSIDERED TO EXACTLY LOCATE THE 65DBA NOISE EXPOSURE. THE 65DBA NOISE LINE WAS ESTABLISHED BY HOWARD COUNTY TO ALERT DEVELOPERS, BUILDERS AND FUTURE RESIDENTS THAT AREAS BEYOND THIS THRESHOLD MAY EXCEED GENERALLY ACCEPTED NOISE LEVELS ESTABLISHED BY THE U.S. DEPARTMENT OF HOUSING AND URBAN DEVELOPMENT.

11. EXISTING WATER IS PUBLIC - (CONTRACT NO. 14-1707-D, 14-4728-D & 44-4801-D)
    EXISTING SEWER IS PUBLIC - (CONTRACT NO. 14-1707-D & 14-4728-D)

12. SOILS INFORMATION TAKEN ECS SOIL SURVEY DATED NOVEMBER 2, 2009. THE PROPERTY LIES WITHIN THE DEEP RUN TRIBUTARY TO THE PATAPSCO RIVER WATERSHED (2130906). MOST OF THE PARCEL 'Q' CONSISTS OF OVERGROWN FIELD HABITAT THAT DEVELOPED ON A PORTION OF THE SITE THAT WAS MASS GRADED IN THE LATE 1980'S. IT IS DUE TO THIS PREVIOUSLY MASS GRADED CONDITION THAT THE NORMAL HOWARD COUNTY SOIL SURVEY MAPS DATED JULY 1968 DO NOT APPLY. AS A RESULT OF THIS SITE CONDITION,THE OWNER/DEVELOPER HAVE CONTRACTED ECS-MID ATLANTIC, LLC OF HANOVER, MARYLAND. THE SOIL REPORT IS DATED NOVEMBER 2009 WITH AN ADDENDUM DATED FEBRUARY 2010 THAT SUMMARIZED THE SOIL GROUPS REQUIRED FOR THIS SWM REPORT.

13. BOUNDARY OUTLINE BASED ON FIELD RUN SURVEY PERFORMED BY FISHER COLLINS AND CARTER, INC. DATED OCTOBER, 2009.

14. TOPOGRAPHIC CONTOURS BASED ON AERIAL SURVEY PERFORMED BY HARFORD AERIAL SURVEYS, INC. DATED JANUARY, 2008 AND SUPPLEMENTED WITH FIELD RUN TOPOGRAPHY PREPARED BY FISHER, COLLINS AND CARTER, INC. DATED MAY, 2010.

15. THERE ARE NO STEEP SLOPES LOCATED WITHIN THIS SUBMISSION AS DEFINED BY THE HOWARD COUNTY SUBDIVISION AND LAND DEVELOPMENT REGULATIONS, SECTION 16.116.b.

16. STORMWATER MANAGEMENT WILL BE PROVIDED IN ACCORDANCE WITH THE 2007 MDE, CHAPTER 5 REGULATIONS AND THE LATEST HOWARD COUNTY DESIGN MANUAL, VOL. I, CHAPTER 5 ADOPTED ON OR AROUND MAY 4, 2010. RECHARGE VOLUME WILL BE PROVIDED THROUGH THE USE OF A STONE RESERVOIRS LOCATED BELOW THE MICRO BIO-RETENTION FACILITIES. WATER QUALITY AND CHANNEL PROTECTION VOLUME WILL BE PROVIDED BY MICRO BIO-RETENTION FACILITIES ALONG THE ROADWAY. OVERBANK FLOOD PROTECTION VOLUME AND EXTREME FLOOD VOLUMES ARE NOT REQUIRED FOR THIS SITE. ALL STONE RESERVOIRS AND MICRO BIO-RETENTION STORMWATER MANAGEMENT FACILITIES WILL BE PRIVATELY OWNED AND MAINTAINED BY THE H.O.A. OR COMMERCIAL ASSOCIATION. THE STREET TREES, PERFORATED UNDERDRAINS, FEEDERS, PLANTINGS AND SWALES WILL BE PRIVATELY OWNED AND MAINTAINED BY OXFORD SQUARE COMMERCIAL ASSOCIATION. HOWARD COUNTY WILL ONLY MAINTAIN THE INLET STRUCTURE AND OUTLET PIPE WITHIN THE MICRO BIO-RETENTION FACILITIES ADJACENT TO THE RIGHT-OF-WAY.

17. SEVERAL SPECIMEN TREES ARE KNOWN TO BE LOCATED WITHIN THE EXISTING FOREST; HOWEVER, NONE EXIST WITHIN THE LIMITS OF FOREST TO BE REMOVED.

18. NO FLOODPLAIN EXISTS WITHIN THIS SUBMISSION.

19. THE FOREST CONSERVATION ACT REQUIREMENTS FOR THE OXFORD SQUARE DEVELOPMENT WERE SATISFIED BY F-12-026, HOWEVER, ARE BEING REVISED WITH THIS F-15-008 PLAN.
THE FOREST CONSERVATION ACT REQUIREMENTS FOR THIS PROJECT UNDER F-12-026 WERE MET THROUGH THE RETENTION OF 10.51 ACRES OF ON-SITE FOREST AND THE PLANTING OF 5.25 ACRES OF ON-SITE FOREST. THE REVISED FOREST CONSERVATION ACT REQUIREMENTS WILL BE MET BY THE RETENTION OF 6.32 ACRES OF ON-SITE FOREST, THE PLANTING OF 1.58 ACRES OF ON-SITE FOREST AND THE RETENTION OF 34.04 AC. OF OFF-SITE FOREST LOCATED ON THE BERMAN PROPERTY, TAX MAP NO. 11, GRID NO. 19, PARCEL NO. 13. THE REQUIRED FOREST CONSERVATION SURETY FOR ON-SITE PLANTING IS $34,412.00. (1.58 ac. x 43,560 sq.ft. x $0.50).
"No Clearing, Grading Or Construction Is Permitted Within The Forest Conservation Easement; However, Forest Management Practices As Defined In The Deed Of Forest Conservation Easement Are Allowed."

20. THE FOREST STAND DELINEATION AND WETLAND DELINEATION FOR THIS PROJECT WAS PREPARED BY ECO-SCIENCE PROFESSIONALS, INC. DATED MARCH 17, 2011 AND APPROVED UNDER S-11-001 & ECP-11-046. A NEW FOREST STAND DELINEATION AND WETLAND DELINEATION PLAN PREPARED BY ECO-SCIENCE PROFESSIONALS, INC. DATED AUGUST, 2014 HAS BEEN SUBMITTED WITH THIS F-15-008 PLAN.

21. THIS PROPERTY IS LOCATED WITHIN THE METROPOLITAN DISTRICT.

22. NO CEMETERIES OR HISTORIC STRUCTURES EXIST WITHIN THIS SUBDIVISION.

23. STREET LIGHT PLACEMENT AND THE TYPE OF FIXTURES AND POLES SHALL BE IN ACCORDANCE WITH THE HOWARD COUNTY DESIGN MANUAL, VOLUME III (2006), SECTION 5.5.A. A MINIMUM SPACING OF 20' SHALL BE MAINTAINED BETWEEN ANY STREET LIGHT AND ANY STREET TREE.

24. TRAFFIC CONTROL DEVICES:
a) THE R1-1 (STOP) SIGNS AND THE STREET NAME SIGN (SNS) ASSEMBLIES FOR THIS DEVELOPMENT MUST BE INSTALLED BEFORE THE BASE PAVING IS COMPLETED.
b) THE TRAFFIC CONTROL DEVICE LOCATIONS (SIGNS & PAVING MARKINGS) SHOWN ON THE PLANS ARE APPROXIMATE AND MUST BE FIELD APPROVED BY THE HOWARD COUNTY TRAFFIC DIVISION (410-313-5752) PRIOR TO THE INSTALLATION OF ANY OF THESE TRAFFIC CONTROL DEVICES.
c) ALL TRAFFIC CONTROL DEVICES AND THEIR LOCATIONS SHALL BE IN ACCORDANCE WITH THE LATEST EDITION OF THE "MARYLAND MANUAL ON UNIFORM TRAFFIC CONTROL DEVICES" (MdMUTCD).
d) ALL SIGN POSTS USED FOR TRAFFIC CONTROL SIGNS INSTALLED IN THE COUNTY RIGHT-OF-WAY SHALL BE MOUNTED ON A 2" GALVANIZED STEEL, PERFORATED, SQUARE TUBE POST (14 GAUGE) INSERTED INTO A 2-1/2" GALVANIZED STEEL, PERFORATED, SQUARE TUBE SLEEVE (12 GAUGE) - 3' LONG. A GALVANIZED STEEL POLE CAP SHALL BE MOUNTED ON TOP OF EACH POST.

25. THE TRAFFIC STUDY FOR THIS PROJECT WAS PREPARED BY THE TRAFFIC GROUP, DATED MARCH 2011. PER THIS STUDY, ONCE THE TOTAL WEEKDAY EVENING PEAK HOUR TRIP GENERATION EXCEEDS 1100 TRIPS, THE ULTIMATE ROAD IMPROVEMENTS ARE NEEDED AT THE INTERSECTION OF COLA COLA DRIVE & PARK CIRCLE DRIVE. AN ADEQUATE ROAD RE-EVALUATION WILL BE PREFORMED FOR PARK CIRCLE DRIVE & COCA COLA DRIVE IN 2017 FOR EVENING PEAK HOUR.

26. NO CLEARING, GRADING OR CONSTRUCTION IS PERMITTED WITHIN THE WETLANDS, STREAMS, THEIR REQUIRED BUFFERS OR THEIR EXTENDED GREEN NEIGHBORHOOD BUFFERS, UNLESS THE ACTIVITIES ARE CONSIDERED NECESSARY OR WAIVERS ARE APPROVED BY THE DEPARTMENT OF PLANNING AND ZONING. ACTIVITIES PROPOSED IN WETLANDS, STREAMS, THEIR BUFFERS, AND THEIR EXTENDED GREEN NEIGHBORHOOD BUFFERS AS PART OF THE APPROVED STREAM AND WETLAND RESTORATION AND HABITAT MANAGEMENT PLANS ARE CONSIDERED NECESSARY BY THE DEPARTMENT OF PLANNING AND ZONING.

27. PERIMETER LANDSCAPING SHALL BE ADDRESSED IN ACCORDANCE WITH SECTION 16.124 OF THE HOWARD COUNTY CODE AND THE LANDSCAPE MANUAL AS PART OF SITE DEVELOPMENT PLAN STAGES.

28. ON JANUARY 13, 2012, A LETTER WAS RECEIVED FROM HOWARD COUNTY PLANNING AND ZONING REGARDING A DESIGN MANUAL WAIVER FOR THE FOLLOWING SECTIONS OF DMV III:
2.2.G (BUS STOP TURNOUT LANE), SECTIONS 2.3.A.1.a (MINIMUM RADIUS BASED ON DESIGN SPEED), 2.3.A.3.c (HORIZONTAL DESIGN/DIVIDED HIGHWAYS), 2.4.B.1&2 (RIGHT-OF-WAY WIDTH & PAVEMENT WIDTH AND CROSS SLOPE), 2.5.B.1&4 (INTERSECTION SPACING & MINIMUM CURVATURE), 2.6.D. (SPACING AND CORNER CLEARANCE), 2.9.B. (OVERFLOW GUEST PARKING), 2.9.C. (24' DIVE LANE WIDTH), AND 2.10.E. (REFUSE STORAGE AREA LOCATION). THE FOLLOWING ARE THE RESPONSES AND CONDITIONS OF APPROVAL FROM PUBLIC WORKS, LAND DEVELOPMENT AND DEVELOPMENT ENGINEERING:

(1) SECTION 2.2.G, BUS STOPS - APPROVED FOR STA. 7+00 (SAINT MARGARETS BLVD.) AND STA. 6+00 (CROWLEY STREET)
(2) SECTION 2.3.A.1.a., DESIGN SPEED/MINIMUM RADII - REQUEST TO REDUCE THE DESIGN SPEED FROM 40 MPH TO 30 MPH (POSTED SPEED = 25 MPH) WAS APPROVED. THE REQUEST TO REDUCE MINIMUM CENTERLINE RADII WAS APPROVED FOR SAINT MARGARETS BLVD., STA. 3+20, 4+50 AND 19+50. FOR BANBURY DRIVE, STA. 4+00, THE SIGHT DISTANCE EASEMENT WAS ADDED, GIVING APPROVAL FOR THIS LOCATION. FOR BANBURY DRIVE, STA. 19+25, THE DECISION WAS APPROVED SUBJECT TO THE REQUIRED SIGHT DISTANCE EASEMENT BEING ADDED AS PART OF PHASE 2.
(3) SECTION 2.3.A.3.c., DIVIDED ROADWAYS - REQUEST MODIFICATIONS TO ALLOW DIVIDED ROADWAY ON A MAJOR COLLECTOR AND REDUCTION OF MEDIAN WIDTH FROM 16' TO 14'. THESE REQUESTS ARE ACCEPTABLE WITH THE SWM DEVICES WITHIN THE ISLANDS TO BE MAINTAINED BY HOA OR COMMERCIAL ASSOC. ALONG SAINT MARGARETS BLVD. THE MEDIAN FOR BANBURY DRIVE WAS APPROVED SUBJECT TO ADJUSTING MEDIAN GRADES TO PROVIDE A SUMP CONDITION. THIS WAS PROVIDED ON THE PLAN.
(4) SECTION 2.4.B.1., RIGHT-OF-WAY WIDTHS-REQUEST A VARIABLE RIGHT-OF-WAY WIDTH TO EXTEND ONE FOOT BEHIND FACE OF CURB. THIS WAS APPROVED CONTINGENT ON PROVIDING AN EASEMENT ALONG SAINT MARGARETS BLVD. AND AN EASEMENT ALONG BANBURY DRIVE. THE EASEMENTS WERE PROVIDED.
(5) SECTION 2.4.B.2., PAVEMENT WIDTHS AND CROSS SLOPE-REQUEST THAT SAINT MARGARETS BLVD. HAVE LANE WIDTHS OF 16' AND ALL OTHER ROADS HAVE A TOTAL WITH OF 18' FOR ONE WAY AND 22' FOR TWO WAY TRAFFIC. APPROVED FOR ALL LOCATIONS EXCEPT THREE ALONG BANBURY DRIVE AT STA. 15+75, THE REFUGE ISLAND WAS PROVIDED. THE OTHER TWO LOCATIONS NEAR THE TRAFFIC CIRCLE AND COMMUNITY CENTER ARE DEFERRED UNTIL A FUTURE SITE PLAN PHASE, WHEN FINAL PLANS AND TURNING MOVEMENTS WILL BE PROVIDED.
(6) SECTION 2.5, TABLE 2.07, INTERSECTION SPACING-REQUEST A MINIMUM INTERSECTION SPACING OF 100 FEET. DPW RECOMMENDS APPROVAL OF THE ENTRANCES ALONG BANBURY DRIVE FOR FUTURE BUILDINGS 8, 29 & 30 (S-11-001). AND APPROVED.
(7) SECTION 2.5, TABLE 2.08, CURB FILLET RADIUS-REQUEST A REDUCTION IN THE MINIMUM CURB FILLET RADII WAS APPROVED FOR SAINT MARGARETS LANE AND BANBURY DRIVE.
(8) SECTION 2.6.D., DRIVEWAY SPACING AND CORNER CLEARANCE-REQUEST THAT THE CORNER CLEARANCE BE REDUCED FROM 75' TO 25' AND SPACING BETWEEN INTERSECTIONS BE REDUCED FROM 250' TO 100'. THE SPACING BETWEEN INTERSECTIONS REDUCTION TO 100' IS ACCEPTABLE. THE CORNER CLEARANCE REDUCTION TO 25' IS ACCEPTABLE.
(9) SECTION 2.9, TABLE 2.11, OVERFLOW/GUEST PARKING-REQUEST THAT OFF-SITE PARKING BE REDUCED FROM 2.3 SPACES PER DWELLING UNIT TO 2.0 SPACES PER DWELLING UNIT. THIS REQUEST WAS DEFERRED UNTIL FUTURE SITE PLAN PHASE ON A PARCEL BASIS.
(10) SECTION 2.10.E., SOLID WASTE STORAGE LOCATION-REQUEST THAT THE DISTANCE FROM A CENTRALIZED REFUSE STORAGE AREA TO A MULTI-FAMILY AREA BE INCREASED FROM 200' TO 300'. APPROVAL WAS GRANTED.
(11) SECTION 2.9.C., OFF STREET PARKING LOTS-REQUEST THAT THE MINIMUM AISLE WIDTHS BETWEEN ROWS OF PARKING BE REDUCED FROM 24' TO 22'. DED HAS DENIED THIS REQUEST.
(12) SECTION 5.5.A.2, STREET LIGHT LOCATION HAS BEEN APPROVED BASED ON MEETINGS WITH B.G.&E. AND HOWARD COUNTY DPW - TRAFFIC ENGINEERING.

29. IN ACCORDANCE WITH THE DESIGN MANUAL WAIVERS OUTLINED IN GENERAL NOTE No. 28 FOR REDUCED PUBLIC ROAD R/W, ALL PUBLIC ROADS SHALL PROVIDE A "PUBLIC SIGNAGE, STREET LIGHT AND UTILITY EASEMENT".

30. STREAM AND WETLAND RESTORATION AND THE HABITAT MANAGEMENT PLAN SHALL BE IMPLEMENTED WITHIN 3 YEARS OF FINAL APPROVAL OF THE SITE DEVELOPMENT PLAN (SDP-14-019) ASSOCIATED WITH CONSTRUCTION OF THE 190th RESIDENTIAL UNIT. A COPY OF THE JOINT FEDERAL/STATE APPLICATION FOR AUTHORIZATION OF REGULATED ACTIVITIES ASSOCIATED WITH THE STREAM AND WETLAND RESTORATION AND HABITAT MANAGEMENT PLAN SHALL BE SUBMITTED TO DPZ AS PART OF THE SITE DEVELOPMENT PLAN APPLICATION ASSOCIATED WITH CONSTRUCTION OF THE 190th RESIDENTIAL UNIT. MDE PERMIT TRACKING No. 12-HO-0052.

31. THIS PROPERTY IS SUBJECT TO A HABITAT MANAGEMENT AGREEMENT WHICH ALLOWS PERIODIC INSPECTIONS BY THE DEPARTMENT OF PLANNING AND ZONING.

32. THIS PLAN IS SUBJECT TO WAIVER PETITION WP-11-147 TO WAIVE SUBSECTIONS 16.144(g) AND 16.144(u) OF THE HOWARD COUNTY CODE. THIS ACTION RELIEVES THE REQUIREMENT TO SUBMIT A PRELIMINARY SUBDIVISION PLAN OR A PRELIMINARY EQUIVALENT SKETCH PLAN IN ORDER TO RECEIVE A GREEN NEIGHBORHOOD ALLOCATION. WAIVER PETITION WP-11-147 WAS APPROVED ON APRIL 27, 2011 BY THE DEPARTMENT OF PLANNING AND ZONING.

33. THE MARYLAND AVIATION ADMINISTRATION (MAA) APPROVED THIS PLAN ON JUNE 15, 2015 FOR SEDIMENT AND EROSION CONTROL, STORMWATER MANAGEMENT AND LANDSCAPING. PRIOR TO THE ISSUANCE OF ANY BUILDING PERMIT, AN APPROVED AIRPORT ZONING PERMIT MUST BE OBTAINED. THE MAA ALSO DETERMINED THAT ALTHOUGH OUTSIDE THE AIRPORT NOISE ZONE, OCCUPANTS OF THIS SUBDIVISION WILL EXPERIENCE NOISE FROM AIRCRAFT OVERFLIGHTS AND OTHER OPERATIONS DUE TO THE PROXIMITY OF THIS SITE TO THE AIRPORT.

34. PLAN IS SUBJECT TO WP-12-109 WHICH THE PLANNING DIRECTOR APPROVED ON JUNE 5, 2012 TO WAIVE SUBSECTIONS 16.120(C)(1), 16.121(E)(1) AND 16.134(A) WHICH REQUIRES ALL COMMERCIAL INDUSTRIAL AND APARTMENTS TO HAVE A MINIMUM OF 60' OF FRONTAGE ON A PUBLIC ROAD, OPEN SPACE LOTS WILL HAVE FRONTAGE ON A PUBLIC ROAD AND THE DEVELOPER SHALL PROVIDE FOR THE CONSTRUCTION OF SIDEWALKS. WAIVER APPROVAL IS SUBJECT TO THE FOLLOWING CONDITIONS:
A. PETITIONER SHALL SUBMIT A FINAL PLAN PROVIDING NO LESS THAN 60 FEET OF FRONTAGE ON AN APPROVED PUBLIC ROAD TO COMMERCIAL AND APARTMENT PARCELS PRIOR TO OR CONCURRENT WITH THE SUBMISSION OF A SITE DEVELOPMENT PLAN FOR COMMERCIAL OR RESIDENTIAL DEVELOPMENT OF SAID PARCELS.
B. PETITIONER SHALL PROVIDE NO LESS THAN 40 FEET OF FRONTAGE ON AN APPROVED PUBLIC ROAD TO OPEN SPACE LOT 1 FOR ACCESS BY PEDESTRIANS AND MAINTENANCE VEHICLES UPON SIGNATURE APPROVAL OF THE ROAD CONSTRUCTION DRAWINGS WHICH INCLUDE THE TRAFFIC CIRCLE INTERSECTION OF BANBURY DRIVE AND THE PRIVATE ROAD (ROAD 'B') LOCATED ON PARCEL 'I' (FINAL PLAN F-12-026). A DEVELOPER AGREEMENT SHALL BE SUBMITTED AND FINANCIAL SURETY POSTED FOR CONSTRUCTION OF SAID PUBLIC ROAD NO LATER THAN 60 DAYS FOLLOWING SUBMISSION OF THE ASSOCIATED ROAD CONSTRUCTION DRAWING ORIGINALS. PUBLIC ROAD FRONTAGE TO OPEN SPACE LOT 1 SHALL BE INDICATED ON A SUBDIVISION PLAT TO BE SUBMITTED FOR SIGNATURE AND RECORDATION NO LATER THAN 120 DAYS FOLLOWING SUBMISSION OF THE ASSOCIATED ROAD CONSTRUCTION DRAWING ORIGINALS.
C. PETITIONER SHALL, UPON APPROVAL OF THE FIRST SITE DEVELOPMENT PLAN FOR A RESIDENTIAL, OFFICE, COMMERCIAL, OR RECREATIONAL USE ABUTTING SAINT MARGARETS BLVD., SUBMIT A REDLINE REVISION OF FINAL PLAN F-12-026, F-13-095 TO INCLUDE SIDEWALK IMPROVEMENTS ON SAINT MARGARETS BLVD. AS REQUIRED BY SECTION 16.134 AND THE DESIGN MANUAL.
D. PETITIONER SHALL, UPON APPROVAL OF THE FIRST SITE DEVELOPMENT PLAN FOR A RESIDENTIAL, OFFICE, COMMERCIAL, OR RECREATIONAL USE ABUTTING BANBURY DRIVE, SUBMIT A REDLINE REVISION OF FINAL PLAN F-12-026, F-13-095 TO INCLUDE SIDEWALK IMPROVEMENTS ON BANBURY DRIVE AS REQUIRED BY SECTION 16.134 AND THE DESIGN MANUAL.
E. PETITIONER SHALL, UPON APPROVAL OF THE FIRST SITE DEVELOPMENT PLAN FOR A RESIDENTIAL, OFFICE, COMMERCIAL, RECREATIONAL, OR INSTITUTIONAL USE WITHIN THE LIMITS OF SKETCH PLAN S-11-011, SUBMIT A REDLINE REVISION OF THE APPROPRIATE FINAL ROAD CONSTRUCTION DRAWING(S) TO THE DEPARTMENT OF PLANNING AND ZONING TO INCLUDE SIDEWALK IMPROVEMENTS ON BOTH SIDES OF COCA COLA DRIVE AS REQUIRED BY SECTION 16.134 AND THE DESIGN MANUAL, INCLUDING CONNECTION OF THE EXISTING SIDEWALK TO THE INTERSECTION OF PARK CIRCLE DRIVE AND COCA COLA DRIVE.

Owner	Owner	Owner	Owner	Developer
Board Of Education Of Howard County, Maryland c/o Dr. Renee A. Foose, Ed.D, Superintendent 10910 Maryland Route 108 Ellicott City, Maryland 21042 Ph# 410-313-6600	Oxford Square Master Association, Inc. 2330 West Joppa Road Lutherville, Maryland 21093 Ph# 410-296-3800	Kellogg-CCP, LLC c/o David P. Scheffenacker, Jr., Managing Member 2330 West Joppa Road, Suite 190 Lutherville, Maryland 21093-4614 Ph# 410-296-3800	U.S. Home Corporation, D/B/A Lennar c/o Joseph Fortino, Vice President 10211 Wincopin Circle Suite 300 Columbia, Maryland 21044 Ph# 410-423-0460	Preston • Scheffenacker Properties 2330 West Joppa Road, Suite 190 Lutherville, Maryland 21093-4614 Ph# 410-296-3800

FISHER, COLLINS & CARTER, INC.
CIVIL ENGINEERING CONSULTANTS & LAND SURVEYORS
CENTENNIAL SQUARE OFFICE PARK - 10272 BALTIMORE NATIONAL PIKE
ELLICOTT CITY, MARYLAND 21042
(410) 461 - 2855

REVISIONS

NO.	DESCRIPTION	DATE
1	Revise Street Lights Along Banbury Drive	4·1·16

STATE OF MARYLAND ALDO MICHAEL VITUCCI PROFESSIONAL ENGINEER

ALDO M. VITUCCI, P.E. 10/28/15 DATE

"Professional Certification. I hereby certify that these documents were prepared by me, and that I am a duly Licensed Professional Engineer under the laws of the State of Maryland, License No. 20748, Expiration Date 2-22-17."

OXFORD SQUARE

"A Howard County Green Neighborhood"
Parcels 'V' Thru 'C-C' And
Open Space Lots 244 And 245

(Being A Resubdivision Of Open Space Lot 1, As Shown On Plats Entitled "Oxford Square, "Green Neighborhood", Parcels 'C' Thru 'L' And Open Space Lots 1 And 2" Recorded As Plat Nos. 22390 Thru 22395; A Resubdivision Of Parcel 'G', As Shown On Plats Entitled "Oxford Square, "Green Neighborhood" Resubdivision Plat-Parcel 'M' And Revision Plat-Parcels 'C', 'E', 'F', 'G', 'I', 'J', And 'K' Recorded As Plat Nos. 22856 Thru 22859; And A Resubdivision Of Parcels 'E', 'S' And 'T', As Shown On Plats Entitled "Oxford Square, "Green Neighborhood", Parcels 'R', 'S' And 'T' And Revision Plat-Parcel 'E'" Recorded As Plat Nos. 23103 Thru 23105)

Zoned: TOD
Tax Map: 38, Parcel: 1003, Grid: 20 And Tax Map: 44, Parcel P/O 4 & 5, Grid 1
First Election District - Howard County, Maryland
Date: June 12, 2015

F-15-008

I:\2009\09014\dwg\Finals - Phase Four\redline - forest con\09014 sheet 1 title sheet.dwg, 8/31/2015 8:53:28 AM, 1:1

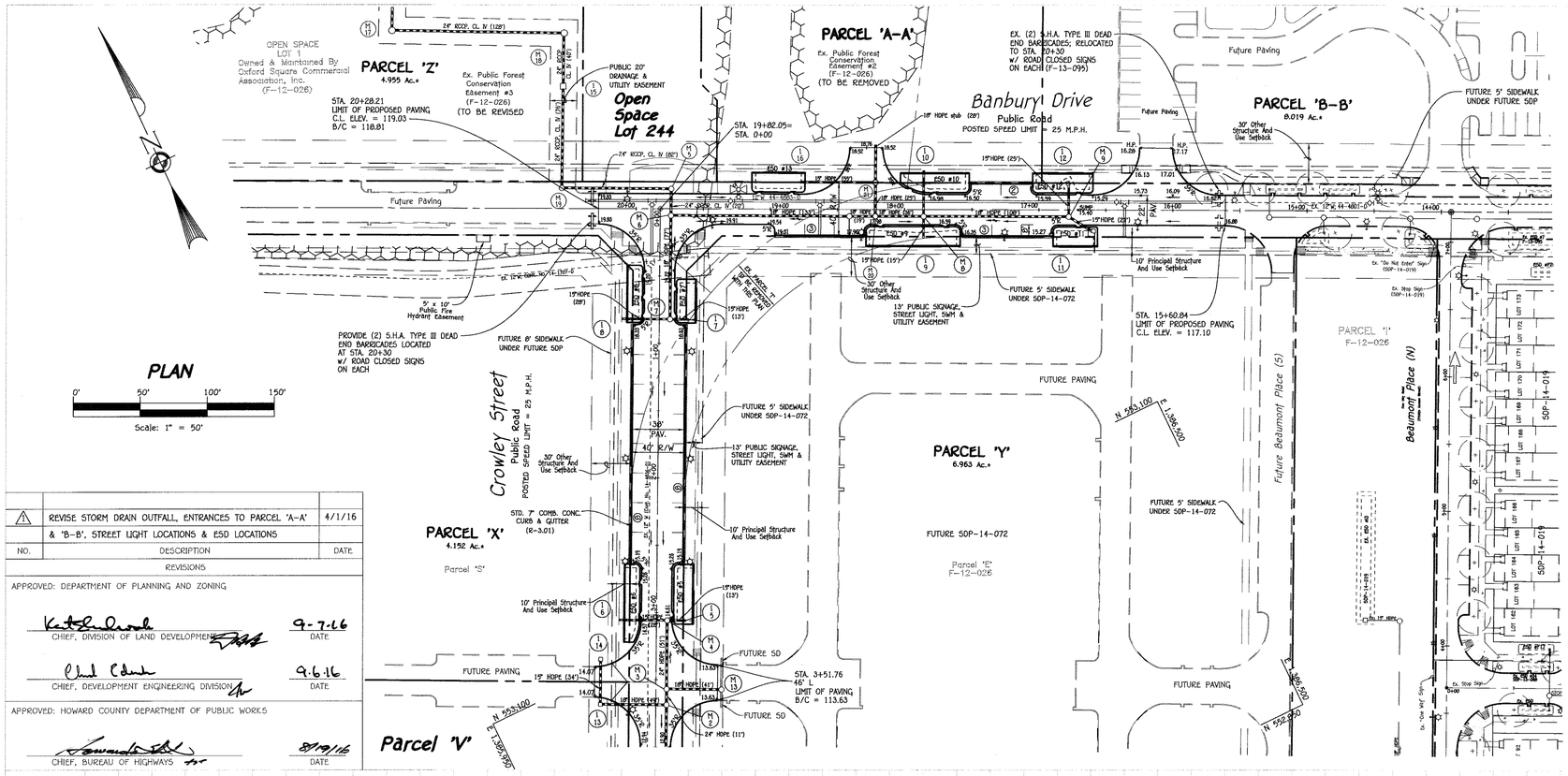

PLAN

0' 50' 100' 150'

Scale: 1" = 50'

NO.	DESCRIPTION	DATE
1	REVISE STORM DRAIN OUTFALL, ENTRANCES TO PARCEL 'A-A' & 'B-B', STREET LIGHT LOCATIONS & ESD LOCATIONS	4/1/16

REVISIONS

APPROVED: DEPARTMENT OF PLANNING AND ZONING

CHIEF, DIVISION OF LAND DEVELOPMENT — DATE 9-7-16

CHIEF, DEVELOPMENT ENGINEERING DIVISION — DATE 9.6.16

APPROVED: HOWARD COUNTY DEPARTMENT OF PUBLIC WORKS

CHIEF, BUREAU OF HIGHWAYS — DATE 8/19/16

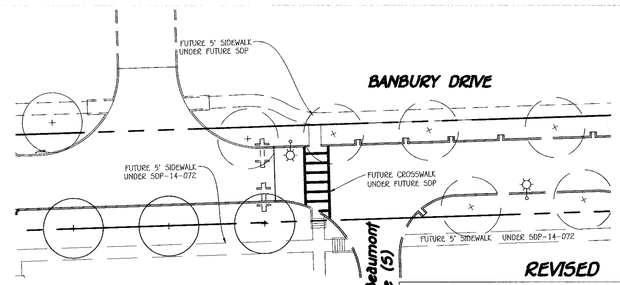

FUTURE SIDEWALK DETAIL

SCALE: 1" = 30'

STATE OF MARYLAND — ALDO MICHAEL VITUCCI — No. 20746

7/20/16

ALDO M. VITUCCI, P.E. — DATE

"Professional Certification. I hereby certify that these documents were prepared by me, and that I am a duly Licensed Professional Engineer under the laws of the State of Maryland, License No. 20746, Expiration Date 2-22-17."

REVISED

OXFORD SQUARE

"A Howard County Green Neighborhood"

Parcels 'V' Thru 'C-C' And Open Space Lots 244 And 245

(Being A Resubdivision Of Open Space Lot 1, As Shown On Plats Entitled "Oxford Square, "Green Neighborhood", Parcels 'C' Thru 'L' And Open Space Lots 1 And 2" Recorded As Plat Nos. 22390 Thru 22395; A Resubdivision Of Parcel 'G', As Shown On Plats Entitled "Oxford Square, "Green Neighborhood" Resubdivision Plat–Parcel 'M' And Revision Plat–Parcels 'C', 'E', 'F', 'G', 'I', 'J', And 'K' Recorded As Plat Nos. 22856 Thru 22859; And A Resubdivision Of Parcels 'E', 'S' And 'T', As Shown On Plats Entitled "Oxford Square, "Green Neighborhood", Parcels 'E', 'S' And 'T' And Revision Plat–Parcel 'E'" Recorded As Plat Nos. 23103 Thru 23105)

Zoned: TOD

Tax Map: 38, Parcel: 1003, Grid: 20 And Tax Map: 44, Parcel P/O 4 & 5, Grid 1

First Election District – Howard County, Maryland

BANBURY DRIVE PLAN AND PROFILE

CROWLEY STREET PLAN

Owner
Kellogg-CCP, LLC
c/o David F. Scheffenacker, Jr.,
Managing Member
2330 West Joppa Road, Suite 190
Lutherville, Maryland 21093-4614
Ph# 410-296-3800

Owner
Oxford Square Master Association, Inc.
2330 West Joppa Road
Lutherville, Maryland 21093
Ph# 410-296-3800

Owner
U.S. Home Corporation,
D/B/A Lennar
c/o Joseph Fortino, Vice President
10211 Wincopin Circle
Suite 300
Columbia, Maryland 21044
Ph# 410-423-0460

Owner
Board Of Education Of
Howard County, Maryland
c/o Dr. Renee A. Foose, Ed.D., Superintendent
10910 Maryland Route 108
Ellicott City, Maryland 21042
Ph# 410-313-6600

Developer
Preston - Scheffenacker Properties
2330 West Joppa Road, Suite 190
Lutherville, Maryland 21093-4614
Ph# 410-296-3800

SCALE: AS SHOWN	DATE: JUNE 12, 2015	DWG. NO. 2 OF 27
DES. R.A.I. / J.C.L.	DRN. J.C.L.	CHK. A.M.V.

FISHER, COLLINS & CARTER, INC.
CIVIL ENGINEERING CONSULTANTS & LAND SURVEYORS
CENTENNIAL SQUARE OFFICE PARK – 10272 BALTIMORE NATIONAL PIKE
ELLICOTT CITY, MARYLAND 21042
(410) 461 – 2855

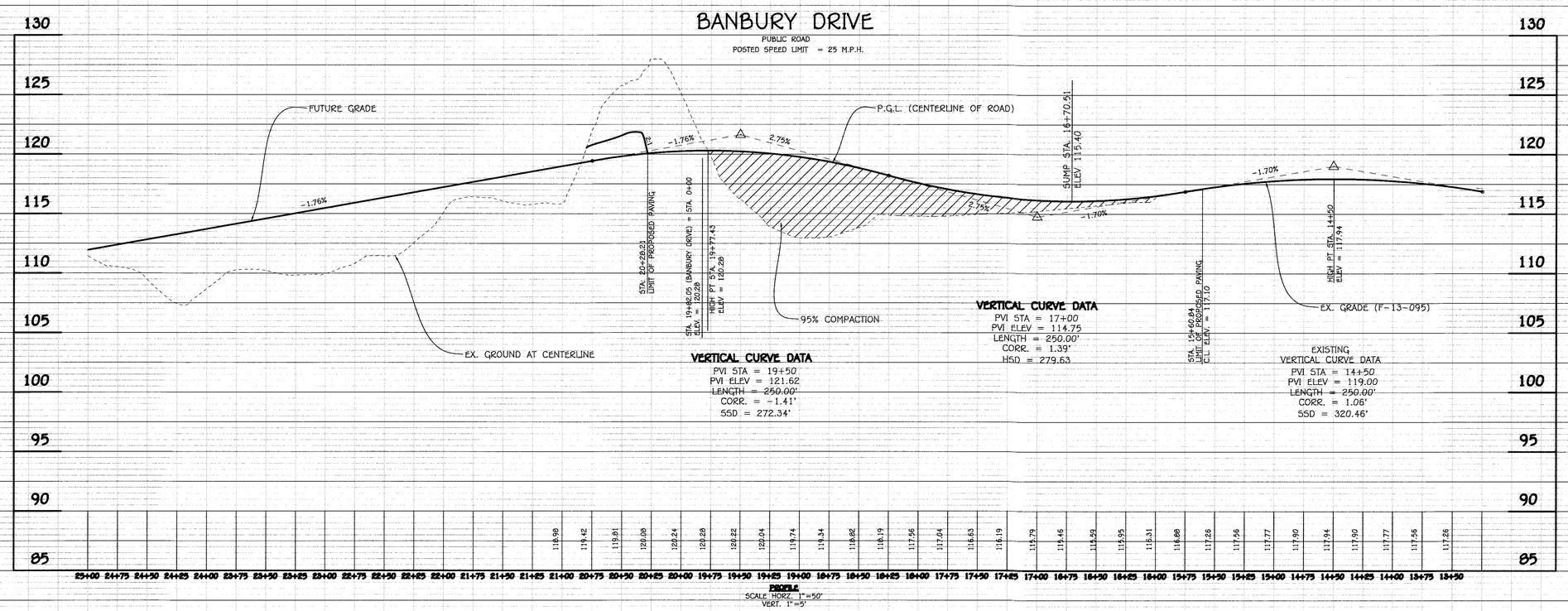

PROFILE
SCALE HORZ. 1"=50'
VERT. 1"=5'

1:\2009\09014\dwg\Finals - Phase Four\redline 2016\09014 sheet 2 myler.dwg, 7/20/2016 8:50:42 AM, 1:1

F-15-008

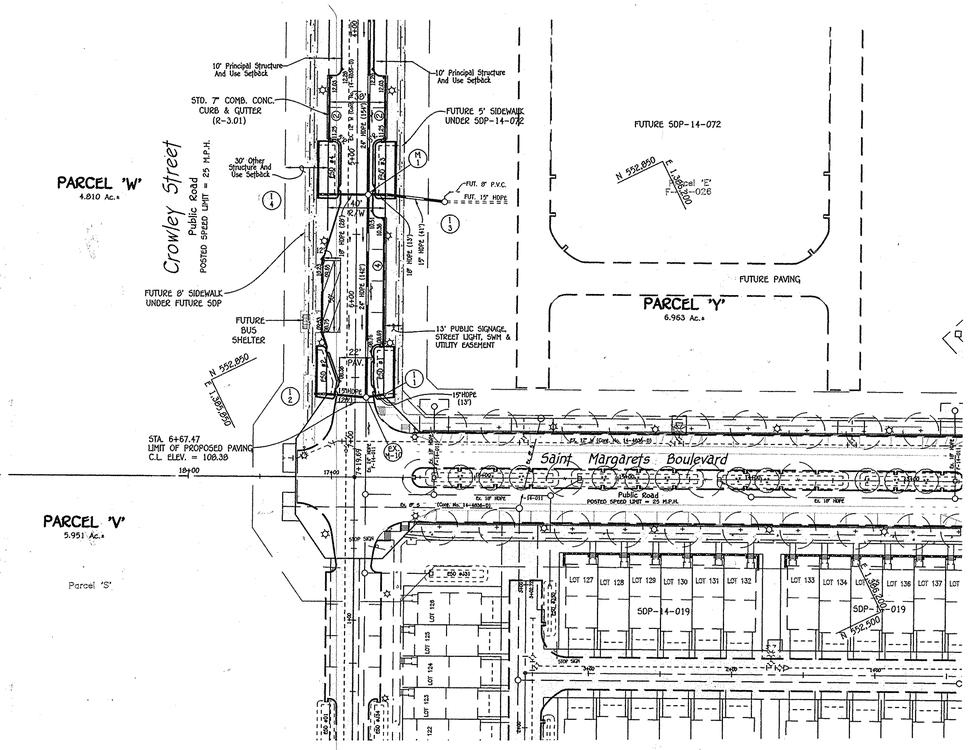

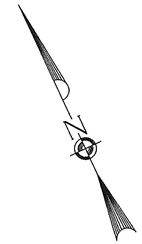

PLAN

0' 50' 100' 150'

Scale: 1" = 50'

NO.	DESCRIPTION	DATE

REVISIONS

APPROVED: DEPARTMENT OF PLANNING AND ZONING

CHIEF, DIVISION OF LAND DEVELOPMENT — DATE 4-29-15

CHIEF, DEVELOPMENT ENGINEERING DIVISION — DATE 7.14.15

APPROVED: HOWARD COUNTY DEPARTMENT OF PUBLIC WORKS

CHIEF, BUREAU OF HIGHWAYS — DATE 7/29/15

STATE OF MARYLAND — ALDO MICHAEL VITUCCI — No. 20748 — PROFESSIONAL ENGINEER

ALDO M. VITUCCI, P.E. — DATE 6/15/15

"Professional Certification. I hereby certify that these documents were prepared by me, and that I am a duly Licensed Professional Engineer under the laws of the State of Maryland, License No. 20748, Expiration Date 2-22-17."

OXFORD SQUARE

"A Howard County Green Neighborhood"

Parcels 'V' Thru 'C-C' And

Open Space Lots 244 And 245

(Being A Resubdivision Of Open Space Lot 1, As Shown On Plats Entitled "Oxford Square, "Green Neighborhood", Parcels 'C' Thru 'L' And Open Space Lots 1 And 2' Recorded As Plat Nos. 22390 Thru 22395; A Resubdivision Of Parcel 'G', As Shown On Plats Entitled "Oxford Square, "Green Neighborhood" Resubdivision Plat-Parcel 'M' And Revision Plat-Parcels 'C', 'E', 'F', 'G', 'I', 'J', And 'K' Recorded As Plat Nos. 22896 Thru 22899; And A Resubdivision Of Parcels 'E', 'S' And 'T', As Shown On Plats Entitled "Oxford Square, "Green Neighborhood", Parcels 'E', 'S' And 'T' And Revision Plat-Parcel 'E" Recorded As Plat Nos. 23103 Thru 23105)

Zoned: TOD

Tax Map: 38, Parcel: 1003, Grid: 20 And Tax Map: 44, Parcel P/O 4 & 5, Grid 1

First Election District – Howard County, Maryland

CROWLEY STREET

PLAN AND PROFILE

Owner
Kellogg-CCP, LLC
c/o David P. Scheffenacker, Jr.,
Managing Member
2330 West Joppa Road, Suite 190
Lutherville, Maryland 21093-4614
Ph# 410-296-3800

Owner
Oxford Square Master Association, Inc.
2330 West Joppa Road
Lutherville, Maryland 21093
Ph# 410-296-3800

Owner
U.S. Home Corporation,
D/B/A Lennar
c/o Joseph Fortino, Vice President
10211 Wincopin Circle
Suite 300
Columbia, Maryland 21044
Ph# 410-423-0450

Owner
Board Of Education Of
Howard County, Maryland
c/o Dr. Renee A. Foose, Ed.D. Superintendent
10910 Maryland Route 108
Ellicott City, Maryland 21042
Ph# 410-313-6600

Developer
Preston - Scheffenacker Properties
2330 West Joppa Road, Suite 190
Lutherville, Maryland 21093-4614
Ph# 410-296-3800

SCALE: AS SHOWN	DATE: JUNE 12, 2015	DWG. NO. 3 OF 27
DES. R.A.I. / J.C.L.	DRN. J.C.L.	CHK. A.M.V.

FISHER, COLLINS & CARTER, INC.
CIVIL ENGINEERING CONSULTANTS & LAND SURVEYORS
CENTENNIAL SQUARE OFFICE PARK - 10272 BALTIMORE NATIONAL PIKE
ELLICOTT CITY, MARYLAND 21042
(410) 461 - 2855

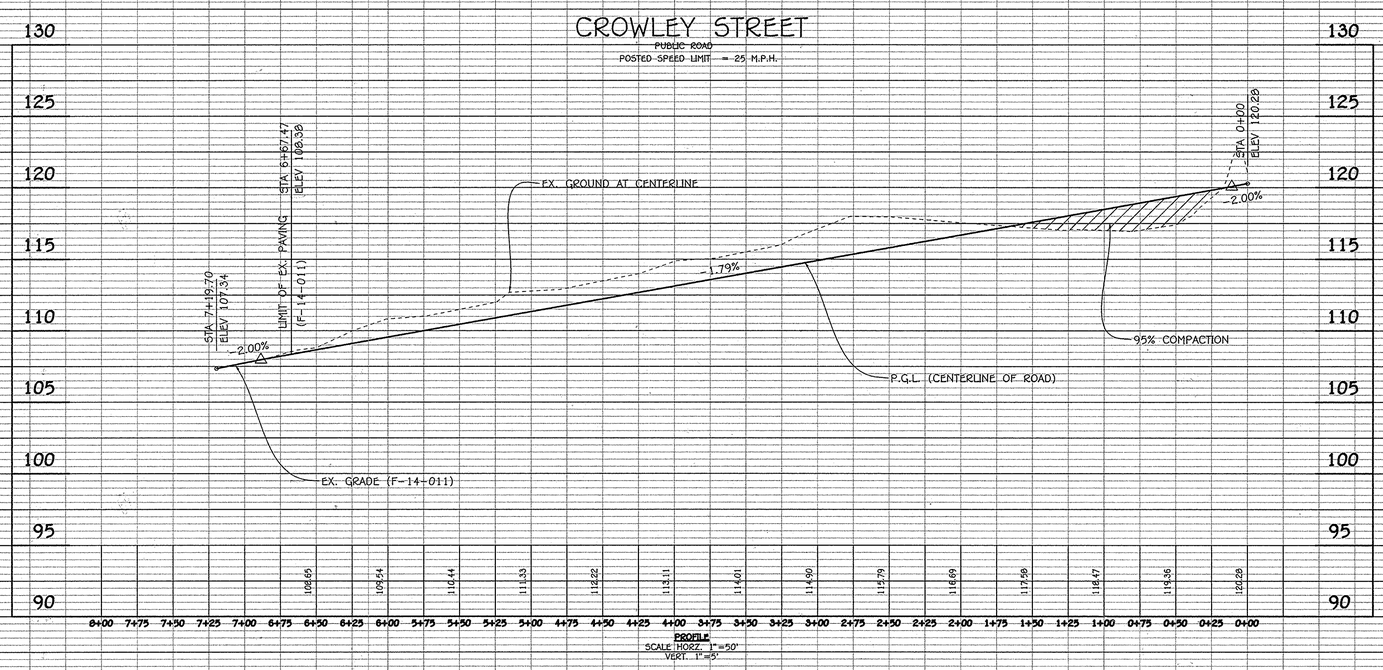

1:\2009\09014\dwg\Finals - Phase Four\09014 sheet 2-3 road plan.dwg, 6/12/2015 10:13:28 AM, 1:1

F-15-008

Approved: Department Of Planning And Zoning	
Chief, Division Of Land Development	11-19-15 Date
Chief, Development Engineering Division	7.14.15 Date
Approved: Howard County Department Of Public Works	
Chief, Bureau Of Highways	7/27/15 Date

REVISIONS		
NO.	DESCRIPTION	DATE
1	Revise Future Sidewalk/Retaining Wall Detail Along Road	10-6-16

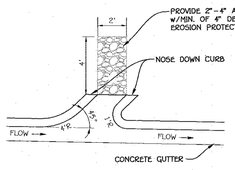

ON GRADE PLAN

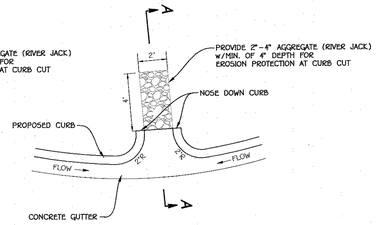

SUMP PLAN

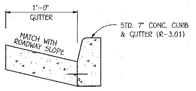

CURB SECTION

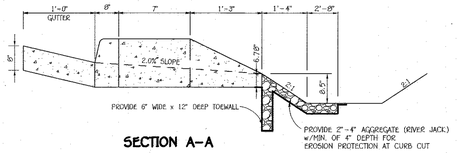

SECTION A-A

STANDARD CURB OPENING DETAIL FOR 7" CONCRETE CURB

NO SCALE

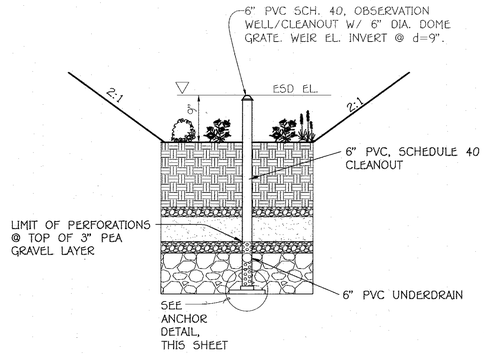

SECTION @ OBSERVATION WELL LOCATION

NOT TO SCALE

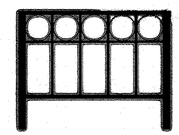

FUTURE
18" High Ornamental Iron Fence w/Top Row Of Rings (OR EQUAL)

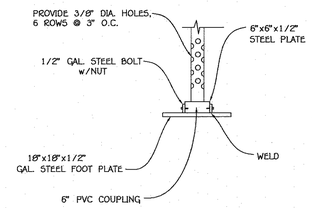

ANCHOR DETAIL

NO SCALE

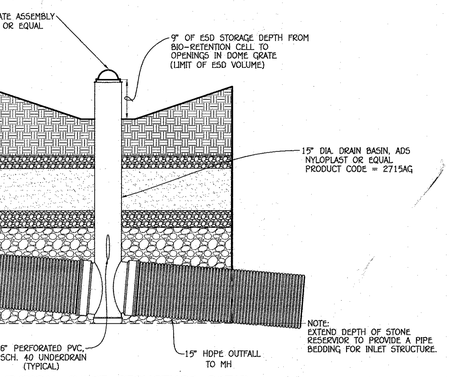

TYPICAL INLET STRUCTURE DETAIL @ BIO-RETENTION

NO SCALE

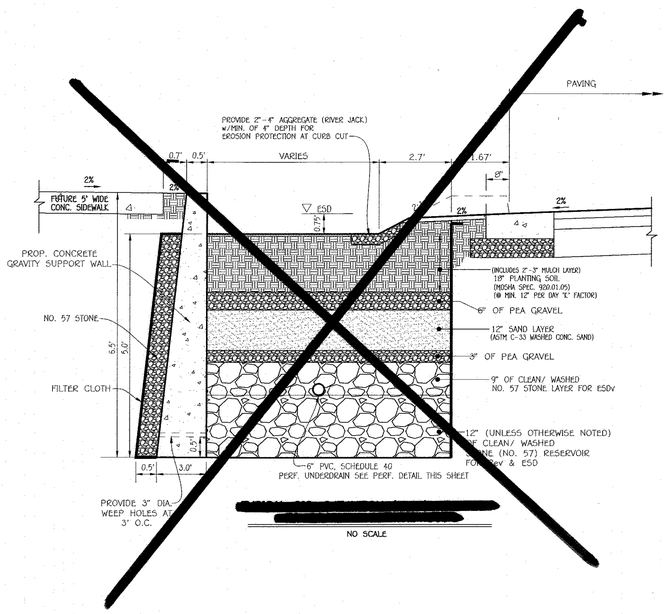

NO SCALE

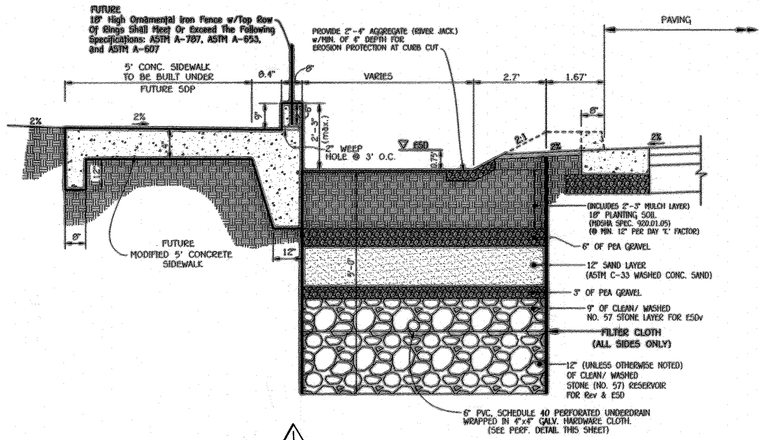

1 TYPICAL BIO-RETENTION (M-8) ADJACENT TO ROADWAY @ CURB CUT AND/OR SIDEWALK

NO SCALE

Owner	Owner	Owner	Owner	Developer
Board Of Education Of Howard County, Maryland c/o Dr. Renee A. Foose, Ed.D. Superintendent 10910 Maryland Route 108 Ellicott City, Maryland 21042 Ph# 410-313-6600	Oxford Square Master Association, Inc. 2330 West Joppa Road Lutherville, Maryland 21093 Ph# 410-296-3800	Kellogg-CCP, LLC c/o David P. Scheffenacker, Jr., Managing Member 2330 West Joppa Road, Suite 190 Lutherville, Maryland 21093-4614 Ph# 410-296-3800	U.S. Home Corporation, D/B/A Lennar c/o Joseph Fortino, Vice President 10211 Wincopin Circle Suite 300 Columbia, Maryland 21044 Ph# 410-423-0460	Preston + Scheffenacker Properties 2330 West Joppa Road, Suite 190 Lutherville, Maryland 21093-4614 Ph# 410-296-3800

STATE OF MARYLAND — ALDO MICHAEL VITUCCI — No. 20748

6/15/15

ALDO M. VITUCCI, P.E. — DATE

"Professional Certification. I hereby certify that these documents were prepared by me, and that I am a duly Licensed Professional Engineer under the laws of the State of Maryland, License No. 20748, Expiration Date 2-22-17"

FISHER, COLLINS & CARTER, INC.
CIVIL ENGINEERING CONSULTANTS & LAND SURVEYORS
CENTENNIAL SQUARE OFFICE PARK – 10272 BALTIMORE NATIONAL PIKE
ELLICOTT CITY, MARYLAND 21042
(410) 461 – 2855

STORMWATER MANAGEMENT NOTES & DETAILS

OXFORD SQUARE

"A Howard County Green Neighborhood"

Parcels 'V' Thru 'C-C' And Open Space Lots 244 And 245

(Being A Resubdivision Of Open Space Lot 1, As Shown On Plats Entitled "Oxford Square, "Green Neighborhood", Parcels 'C' Thru 'L' And Open Space Lots 1 And 2" Recorded As Plat Nos. 22390 Thru 22395; A Resubdivision Of Parcel 'G', As Shown On Plats Entitled "Oxford Square, "Green Neighborhood" Resubdivision Plat-Parcel 'M' And Revision Plat-Parcels 'C', 'E', 'F', 'G', 'I', 'J', And 'K' Recorded As Plat Nos. 22856 Thru 22859; And A Resubdivision Of Parcels 'E', 'S' And 'T', As Shown On Plats Entitled "Oxford Square, "Green Neighborhood", Parcels 'R', 'S' And 'T' And Revision Plat-Parcel 'E'" Recorded As Plat Nos. 23103 Thru 23105)

Zoned: TOD

Tax Map: 38, Parcel: 1003, Grid: 20 And Tax Map: 44, Parcel P/O 4 & 5, Grid 1

First Election District – Howard County, Maryland

Date: June 12, 2015

Sheet 4 of 27

F-15-008

1:\2009\09014\dwg\Finals - Phase Four\09014 sheet 4-7 swm plans.dwg, 6/12/2015 9:54:13 AM, 1:1

Infiltration and Filter System Construction Specifications

Infiltration and filter systems either take advantage of existing permeable soils or create a permeable medium such as sand for WQ, and Ke v. In some instances where permeability is great, these facilities may be used for Qp as well. The most common systems include infiltration trenches, infiltration basins, sand filters, and organic filters.

When properly planted, vegetation will thrive and enhance the functioning of these systems. For example, pre-treatment buffers will trap sediments that often are bound with phosphorous and metals. Vegetation planted in the facility will aid in nutrient uptake and water storage. Additionally, plant roots will provide arteries for stormwater to permeate soil for groundwater recharge. Finally, successful plantings provide aesthetic value and wildlife habitat making these facilities more desirable to the public.

Design Constraints:

> Planting buffer strips of at least 20 feet will cause sediments to settle out before reaching the facility, thereby reducing the possibility of clogging.
> Determine areas that will be saturated with water and water table depth so that appropriate plants may be selected (hydrology will be similar to bioretention facilities, see figure A.5 and Table A.4 for planting material guidance).
> Plants known to send down deep taproots should be avoided in systems where filter fabric is used as part of facility design.
> Test soil conditions to determine if soil amendments are necessary.
> Plants shall be located so that access is possible for structure maintenance.
> Stabilize heavy flow areas with erosion control mats or sod.
> Temporarily divert flows from seeded areas until vegetation is established.
> See Table A.9 for additional design considerations.

Bio-retention

Soil Bed Characteristics

The characteristics of the soil for the bioretention facility are perhaps as important as the facility location, size, and treatment volume. The soil must be permeable enough to allow runoff to filter through the media, while having characteristics suitable to promote and sustain a robust vegetative cover crop. In addition, much of the nutrient pollutant uptake (nitrogen and phosphorus) is accomplished through absorption and microbial activity within the soil profile. Therefore, soils must balance their chemical and physical properties to support biotic communities above and below ground.

The planting soil should be a sandy loam, loamy sand, loam (USDA), or a loam/sand mix (should contain a minimum 35 to 60% sand, by volume). The clay content for these soils should be less than 25% by volume (Environmental Quality Resources (EQR), 1996; Engineering Technology Inc. and Biohabitats, Inc. (ETAB), 1993). Soils should fall within the SM, ML, SC classifications or the Unified Soil Classification System (USCS). A permeability of at least 1.0 feet per day (0.5"/hr) is required (a conservative value of 0.5 feet per day is used for design). The soil should be free of stones, stumps, roots, or other woody material over 1" in diameter. Brush or seeds from noxious weeds (e.g., Johnson Grass, Mugwort, Nutsedge, and Canada Thistle or other noxious weeds as specified under COMAR 15.08.01.05.) should not be present in the soils. Placement of the planting soil should be in 12 to 18 lifts that are loosely compacted (tamped lightly with a backhoe bucket or traversed by dozer tracks). The specific characteristics are presented in Table A.3.

Table A.3 Planting Soil Characteristics

Parameter	Value
pH range	5.2 to 7.00
Organic matter	1.5 to 4.0% (by weight)
Magnesium	35 lbs. per acre, minimum
Phosphorus (phosphate - P2O5)	75 lbs. per acre, minimum
Potassium (potash -(K2O)	85 lbs. per acre, minimum
Soluble salts	500 ppm
Clay	10 to 25 %
Silt	30 to 55 %
Sand	35 to 60%

Mulch Layer

The mulch layer plays an important role in the performance of the bioretention system. The mulch layer helps maintain soil moisture and avoids surface sealing, which reduces permeability. Mulch helps prevent erosion, and provides a microenvironment suitable for soil biota at the mulch/soil interface. It also serves as a pretreatment layer, trapping the finer sediments, which remain suspended after the primary pretreatment.

The mulch layer should be standard landscape style, single or double shredded hardwood mulch or chips. The mulch layer should be well aged (stockpiled or stored for at least 12 months), uniform in color, and free of other materials, such as weed seeds, soil, roots, etc. The mulch should be applied to a maximum depth of three inches. Grass clippings should not be used as a mulch material.

Planting Guidance

Plant material selection should be based on the goal of simulating a terrestrial forested community of native species. Bioretention simulates an upland-species ecosystem. The community should be dominated by trees, but have a distinct community of understory trees, shrubs and herbaceous materials. By creating a diverse, dense plant cover, a bioretention facility will be able to treat stormwater runoff and withstand urban stresses from insects, disease, drought, temperature, wind, and exposure.
The proper selection and installation of plant materials is key to a successful system. There are essentially three zones within a bioretention facility (Figure A.5). The lowest elevation supports plant species adapted to standing and fluctuating water levels. The middle elevation supports plants that like drier soil conditions, but can still tolerate occasional inundation by water. The outer edge
is the highest elevation and generally supports plants adapted to dryer conditions. For appropriate plant materials for bioretention facilities, Refer To MAA Approved Species List. The layout of plant material should be flexible, but should follow the general principals described in Table A.5. The objective is to have a system, which resembles a random, and natural plant layout, while maintaining optimal conditions for plant establishment and growth. For a more extensive bioretention plan, consult ETAB, 1993 or Clayton and Schueler, 1997.

Operation And Maintenance Schedule For Commercial Association Owned & Maintained Bio-Retention Areas (M-6)

1. The owner shall maintain the plant material, mulch layer and soil layer annually. maintenance of mulch and soil is limited to correcting areas of erosion or wash out. Any mulch replacement shall be done in the spring. Plant material shall be checked for disease and insect infestation and maintenance will address dead material and pruning. Acceptable replacement plant material is limited to the following: 2000 Maryland stormwater design manual volume II, table A.4.1 and 2.

2. The owner shall perform a plant in the spring and in the fall each year. during the inspection, the owner shall remove dead and diseased vegetation considered beyond treatment, replace dead plant material with acceptable replacement plant material. Treat diseased trees and shrubs and replace all deficient stakes and wires.

3. The owner shall inspect the mulch each spring. The mulch shall be replaced every two to three years. The previous mulch layer shall be removed before the new layer is applied.

4. The owner shall correct soil erosion on an as needed basis, with a minimum of once per month and after each heavy storm.

5. The owner shall maintain all observation wells, clean-outs and perforated underdrains.

6. Filter material must be replaced when water remains on the surface of the filter bed for more than 24 hours following a 1 or 2 year storm event or more than 48 hours following a 10 year storm event.

B.4.C Specifications for Micro-Bioretention. Rain Gardens, Landscape Infiltration & Infiltration Berms

1. Material Specifications

The allowable materials to be used in these practices are detailed in Table B.4.1.

2. Filtering Media or Planting Soil

The soil shall be a uniform mix, free of stones, stumps, roots or other similar objects larger than two inches. No other materials or substances shall be mixed or dumped within the micro-bioretention practice that may be harmful to plant growth, or prove a hindrance to the planting or maintenance operations. The planting soil shall be free of Bermuda grass, Quackgrass, Johnson grass, or other noxious weeds as specified under COMAR 15.08.01.05.

The planting soil shall be tested and shall meet the following criteria:

Soil Component - Loamy Sand or Sandy Loam (USDA Soil Textural Classification)

Organic Content - Minimum 10% by dry weight (ASTM D 2974). In general, this can be met with a mixture of loamy sand (60%-85%) and compost (35% to 40%) or sandy loam (30%), coarse sand (30%), and compost (40%).

Clay Content - Media shall have a clay content of less than 5%.

pH Range - Should be between 5.5 - 7.0. Amendments (e.g., lime, iron sulfate plus sulfur) may be mixed into the soil to increase or decrease pH.

There shall be at least one soil test per project. Each test shall consist of both the standard soil test for pH, and additional tests of organic matter, and soluble salts. A textural analysis is required from the site stockpiled topsoil. If topsoil is imported, then a texture analysis shall be performed for each location where the topsoil was excavated.

3. Compaction

It is very important to minimize compaction of both the base of bioretention practices and the required backfill. When possible, use excavation hoes to remove original soil. If practices are excavated using a loader, the contractor should use wide track or marsh track equipment, or light equipment with turf type tires. Use of equipment with narrow tracks or narrow tires, rubber tires with large lugs, or high-pressure tires will cause excessive compaction resulting in reduced infiltration rates and is not acceptable. Compaction will significantly contribute to design failure.

Compaction can be alleviated at the base of the bioretention facility by using a primary tilling operation such as a chisel plow, ripper, or subsoiler. These tilling operations are to refracture the soil profile through the 12 inch compaction zone. Substitute methods must be approved by the engineer. Rototillers typically do not till deep enough to reduce the effects of compaction from heavy equipment.

Rototill 2 to 3 inches of sand into the base of the bioretention facility before backfilling the optional sand layer. Pump any ponded water before preparing (rototilling) base.

When backfilling the topsoil over the sand layer, first place 3 to 4 inches of topsoil over the sand, then rototill the sand/topsoil to create a gradation zone. Backfill the remainder of the topsoil to final grade.

When backfilling the bioretention facility, place soil in lifts 12"to 18". Do not use heavy equipment within the bioretention basin. Heavy equipment can be used around the perimeter of the basin to supply soils and sand. Grade bioretention materials with light equipment such as a compact loader or a dozer/loader with marsh tracks.

4. Plant Material

Recommended plant material for micro-bioretention practices can be found in Appendix A, Section A.2.3.

5. Plant Installation

Compost is a better organic material source, is less likely to float, and should be placed in the invert and other low areas. Mulch should be placed in surrounding to a uniform thickness of 2"to 3". Shredded or chipped hardwood mulch is the only accepted mulch. Fine mulch and wood chips will float and move to the perimeter of the bioretention area during a storm event and are not acceptable. Shredded mulch must be well aged (6 to 12 months) for acceptance.

Rootstock of the plant material shall be kept moist during transport and on-site storage. The plant root ball should be planted so 1/4th of the ball is above final grade surface. The diameter of the planting pit shall be at least six inches larger than the diameter of the planting ball. Set and maintain the plant straight during the entire planting process. Thoroughly water ground bed cover after installation.

Trees shall be braced using 2"by 2"stakes only as necessary and for the first growing season only. Stakes are to be equally spaced on the outside of the tree ball.

Grasses and legume seed should be drilled into the soil to a depth of at least one inch. Grass and legume plugs shall be planted following the non-grass ground cover planting specifications.

The topsoil specifications provide enough organic material to adequately supply nutrients from natural cycling. The primary function of the bioretention structure is to improve water quality. Adding fertilizers defeats, or at a minimum, impedes this goal. Only add fertilizer if wood chips or mulch are used to amend the soil. Rototill urea fertilizer at a rate of 2 pounds per 1000 square feet.

6. Underdrains

Underdrains should meet the following criteria:

Pipe- Should be 4"to 6"diameter, slotted or perforated rigid plastic pipe (ASTMF 758, Type PS 28, or AASHTO-M-278) in a gravel layer. The preferred material is slotted. 4" rigid pipe (e.g., PVC or HDPE).

Perforations - If perforated pipe is used, perforations should be 3/8" diameter located 6" center with a minimum of four holes per row. Pipe shall be wrapped with a 1/4"(No. 4 or 4x4) galvanized hardware cloth.

Gravel -The gravel layer (No. 57 stone preferred) shall be at least 3"thick above and below the underdrain.

The main collector pipe shall be at a minimum 0.5% slope.

A rigid, non-perforated observation well must be provided (one per every 1,0000 squire feet) to provide a clean-out port and monitor performance of the filter.

A 4" layer of pea gravel (1/8" to 3/8"stone) shall be located between the filter media and underdrain to prevent migration of fines into the underdrain. This layer may be considered part of the filter bed when bed thickness exceeds 24".

The main collector pipe for underdrain systems shall be constructed at a minimum slope of 0.5%. Observation wells and/or clean-out pipes must be provided (one minimum per every 1000 square feet of surface area).

7. Miscellaneous

These practices may not be constructed until all contributing drainage area has been stabilized

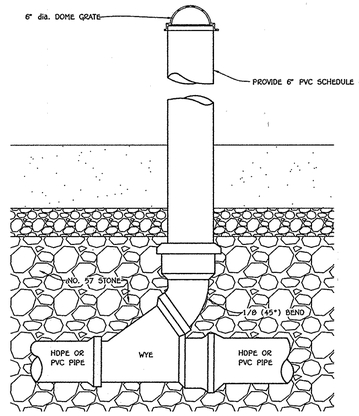

TYPICAL CLEAN-OUT DETAIL
NO SCALE

NOTES:
UNDERDRAIN PIPE SHALL BE 4" TO 6" DIAMETER, SLOTTED OR PERFORATED RIGID PLASTIC PIPE (ASTMF 758, TYPE PS 28 OR AASHTO-M- 278) IN A GRAVEL LAYER. THE PREFERRED MATERIAL IS SLOTTED 4" RIGID PIPE (e.g., PVC OR HDPE).

PERFORATIONS SHALL BE 3/8" DIAMETER LOCATED 6" ON CENTER WITH A MINIMUM OF FOUR HOLES PER ROW. PIPE SHALL BE WRAPPED WITH A 1/4" (No. 4 OR 4 x 4) GALVANIZED HARDWARE CLOTH.

GRAVEL LAYER SHALL BE (No. 57 STONE PREFERRED) AT LEAST 3" THICK ABOVE AND BELOW THE UNDERDRAIN.

THE MAIN COLLECTOR PIPE SHALL BE AT A MINIMUM 0.5% SLOPE.

A RIGID, NON PERFORATED OBERSERVATION WELL MUST BE PROVIDED (ONE PER EVERY 1,000 SQ.FT.) TO PROVIDE A CLEANOUT PORT AND MONITOR PERFORMANCE OF THE FILTER.

A 4" LAYER OF PEA GRAVEL (1/8" TO 3/8" STONE) SHALL BE LOCATED BETWEEN THE FILTER MEDIA AND UNDERDRAIN TO PREVENT MIGRATION OF FINES INTO THE UNDERDRAIN. THIS LAYER MAY BE CONSIDERED PART OF THE FILTER BED WHEN BED THICKNESS EXCEEDS 24".

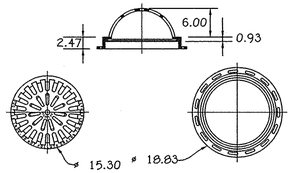

ALL DIMENSIONS IN INCHES UNLESS NOTED OTHERWISE
QUALITY: MATERIAL SHALL CONFORM TO ASTM A536 GRADE 70-50-05
PAINT: CASTINGS ARE FURNISHED WITH A BLACK PAINT
LOCKING DEVICE AVAILABLE UPON REQUEST
SEE DRAWING NO. 7001-110-230

Nyloplast
3130 VERONA AVE
BUFORD, GA 30518
PHN (770) 932-2443
FAX (770) 932-2490
www.nyloplast-us.com

15" DOME GRATE ASSEMBLY
NYLOPLAST OR EQUAL

STORMWATER MANAGEMENT MAINTENANCE NOTE

ALL STORMWATER MANAGEMENT FACILITIES WILL BE PRIVATELY OWNED AND MAINTAINED BY THE OXFORD SQUARE COMMERCIAL ASSOCIATION, INC. THE STREET TREES, TREES WITHIN THE BIO-RETENTION, PERFORATED UNDERDRAINS, FEEDERS, PLANTINGS AND SWALES WILL ALSO BE PRIVATELY OWNED AND MAINTAINED BY THE OXFORD SQUARE COMMERCIAL ASSOCIATION. HOWARD COUNTY WILL ONLY MAINTAIN THE INLET STRUCTURE WITHIN THE MICRO BIO-RETENTION FACILITIES ADJACENT TO THE RIGHT-OF-WAY.

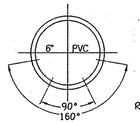

PIPE SIZE: 6"
HOLE SIZE: 3/8"
CENTER TO CENTER: 3"
ROWS OF HOLES: 2 @ 90°
2 @ 160° (+/-3°)

SCH 40 PVC PERFORATED UNDERDRAIN PIPE DETAIL FOR HORIZONTAL DRAIN PIPE
NO SCALE

Approved: Department Of Planning And Zoning

Chief, Division Of Land Development — Date 11-19-15

Chief, Development Engineering Division — Date 7-14-15

Approved: Howard County Department Of Public Works

Chief, Bureau Of Highways — Date 7-24-15

REVISIONS		
NO.	DESCRIPTION	DATE

Owner
Board Of Education Of Howard County, Maryland
c/o Dr. Renee A. Foose, Ed.D. Superintendent
10910 Maryland Route 108
Ellicott City, Maryland 21042
Ph# 410-313-6600

Owner
Oxford Square Master Association, Inc.
2330 West Joppa Road
Lutherville, Maryland 21093
Ph# 410-296-3800

Owner
Kellogg-CCP, LLC
c/o David P. Scheffenacker, Jr., Managing Member
2330 West Joppa Road, Suite 190
Lutherville, Maryland 21093-4614
Ph# 410-296-3800

Owner
U.S. Home Corporation, D/B/A Lennar
c/o Joseph Fortino, Vice President
10211 Wincopin Circle
Suite 300
Columbia, Maryland 21044
Ph# 410-423-0460

Developer
Preston • Scheffenacker Properties
2330 West Joppa Road, Suite 190
Lutherville, Maryland 21093-4614
Ph# 410-296-3800

STATE OF MARYLAND — ALDO MICHAEL VITUCCI — No. 20748 — PROFESSIONAL ENGINEER

ALDO M. VITUCCI, P.E. — DATE 6/15/15

"Professional Certification. I hereby certify that these documents were prepared by me, and that I am a duly Licensed Professional Engineer under the laws of the State of Maryland, License No. 20748, Expiration Date 2-22-17."

FISHER, COLLINS & CARTER, INC.
CIVIL ENGINEERING CONSULTANTS & LAND SURVEYORS
CENTENNIAL SQUARE OFFICE PARK - 10272 BALTIMORE NATIONAL PIKE
ELLICOTT CITY, MARYLAND 21042
(410) 461-2855

STORMWATER MANAGEMENT NOTES & DETAILS

OXFORD SQUARE

"A Howard County Green Neighborhood"

Parcels 'V' Thru 'C-C' And Open Space Lots 244 And 245

(Being A Resubdivision Of Open Space Lot 1, As Shown On Plats Entitled "Oxford Square, "Green Neighborhood", Parcels 'C' Thru 'L' And Open Space Lots 1 And 2' Recorded As Plat Nos. 22390 Thru 22395; A Resubdivision Of Parcel 'G', As Shown On Plats Entitled "Oxford Square, "Green Neighborhood' Resubdivision Plat-Parcel 'H' And Revision Plat-Parcels 'C', 'E', 'F', 'G', 'I', 'J', And 'K' Recorded As Plat Nos. 22856 Thru 22859; And A Resubdivision Of Parcels 'E', 'S' And 'T', As Shown On Plats Entitled "Oxford Square, "Green Neighborhood', Parcels 'E', 'S' And 'T' And Revision Plat-Parcel 'E" Recorded As Plat Nos. 23103 Thru 23105)
Zoned: TOD
Tax Map: 38, Parcel: 1003, Grid: 20 And Tax Map: 44, Parcel P/O 4 & 5, Grid 1
First Election District - Howard County, Maryland
Date: June 12, 2015
Sheet 5 of 27

F-15-000

1:\2009\09014\dwg\Finals - Phase Four\09014 sheet 4-7 swm plans.dwg, 6/22/2015 10:15:31 AM, 1:1

Approved: Department Of Planning And Zoning	
Chief, Division Of Land Development	9-7-16 Date
Chief, Development Engineering Division	9.6.16 Date
Approved: Howard County Department Of Public Works	
Chief, Bureau Of Highways	8/19/16 Date

REVISIONS		
NO.	DESCRIPTION	DATE
1	REVISE STORM DRAIN OUTFALL, ENTRANCES TO PARCEL 'A-A' & 'B-B', STREET LIGHT LOCATIONS & ESD LOCATIONS	4/1/16

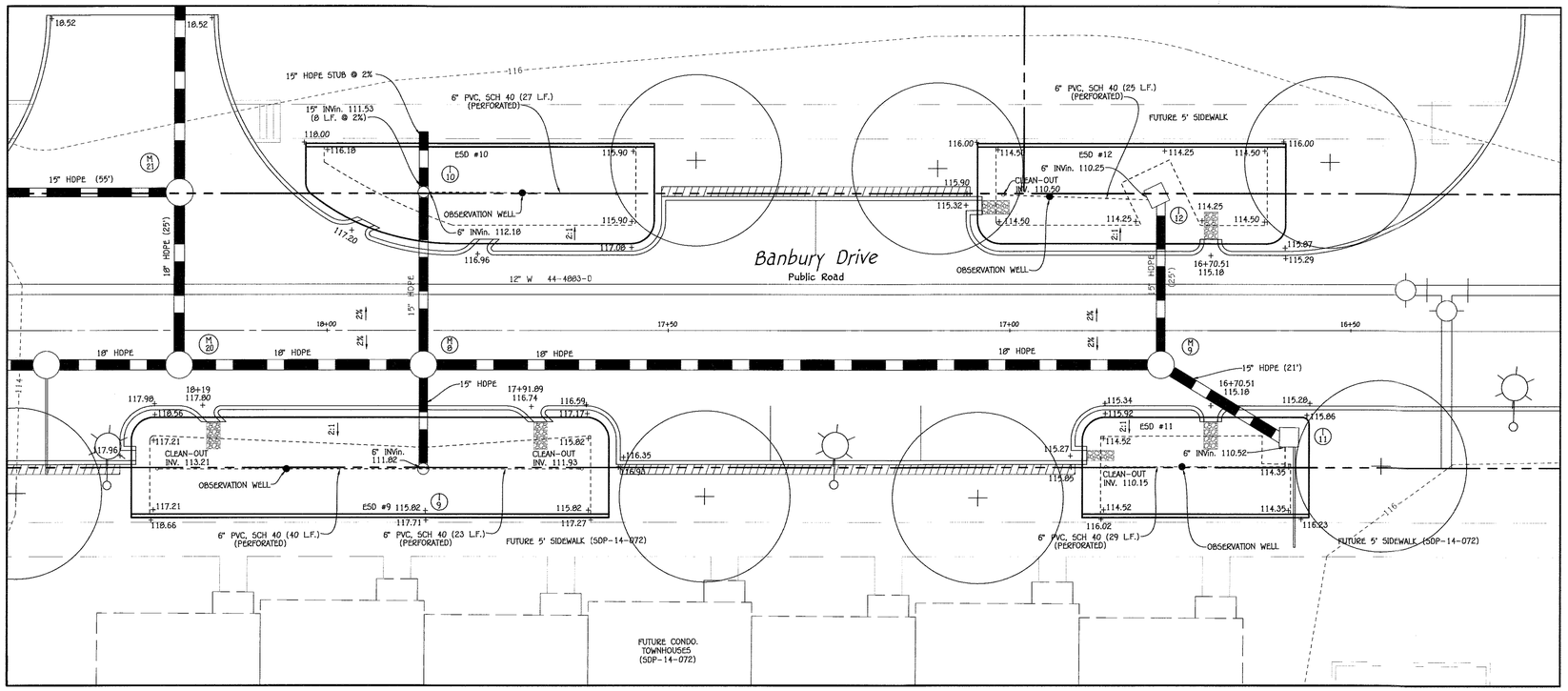

PROPOSED MICRO BIO-RETENTION (M-6)
ESD Nos. 9 thru 12 PLAN VIEW

SCALE: 1" = 10'

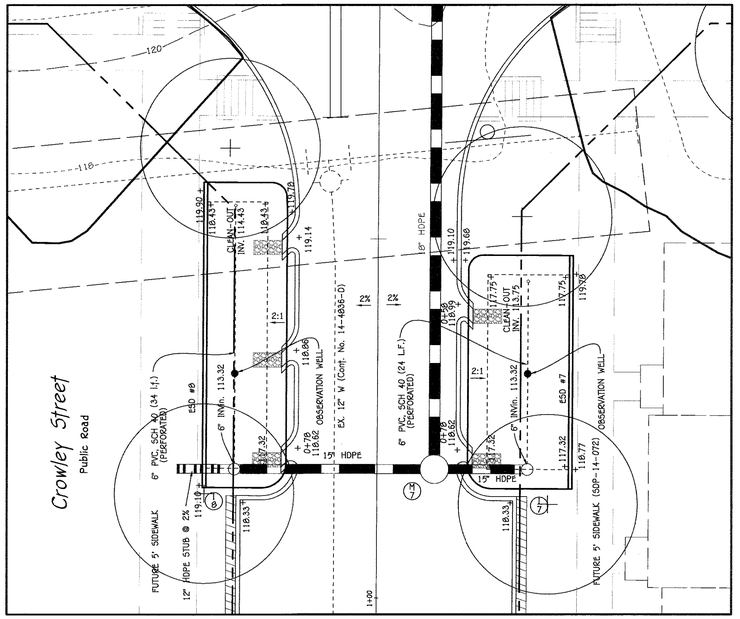

PROPOSED MICRO BIO-RETENTION (M-6)
ESD Nos. 7 & 8 PLAN VIEW

SCALE: 1" = 10'

STORMWATER MANAGEMENT MAINTENANCE NOTE

ALL STORMWATER MANAGEMENT FACILITIES WILL BE PRIVATELY OWNED AND MAINTAINED BY THE OXFORD SQUARE COMMERCIAL ASSOCIATION, INC. THE STREET TREES, TREES WITHIN THE BIO-RETENTION, PERFORATED UNDERDRAINS, FEEDERS, PLANTINGS AND SWALES WILL ALSO BE PRIVATELY OWNED AND MAINTAINED BY THE OXFORD SQUARE COMMERCIAL ASSOCIATION. HOWARD COUNTY WILL ONLY MAINTAIN THE INLET STRUCTURE WITHIN THE MICRO BIO-RETENTION FACILITIES ADJACENT TO THE RIGHT-OF-WAY.

0' 10' 15' 20'
Scale: 1" = 10'

Owner	Owner	Owner	Owner	Developer
Board Of Education Of Howard County, Maryland c/o Dr. Renee A. Foose, Ed.D. Superintendent 10910 Maryland Route 108 Ellicott City, Maryland 21042 Ph# 410-313-6600	Oxford Square Master Association, Inc. 2330 West Joppa Road Lutherville, Maryland 21093 Ph# 410-296-3800	Kellogg-CCP, LLC c/o David P. Scheffenacker, Jr., Managing Member 2330 West Joppa Road, Suite 190 Lutherville, Maryland 21093-4614 Ph# 410-296-3800	U.S. Home Corporation, D/B/A Lennar c/o Joseph Fortino, Vice President 10211 Wincopin Circle Suite 300 Columbia, Maryland 21044 Ph# 410-423-0460	Preston - Scheffenacker Properties 2330 West Joppa Road, Suite 190 Lutherville, Maryland 21093-4614 Ph# 410-296-3800

STATE OF MARYLAND — ALDO MICHAEL VITUCCI — No. 20748 — PROFESSIONAL ENGINEER

ALDO M. VITUCCI, P.E. — DATE 7/8/16

"Professional Certification. I hereby certify that these documents were prepared by me, and that I am a duly Licensed Professional Engineer under the laws of the State of Maryland, License No. 20748, Expiration Date 2-22-17."

Revised

STORMWATER MANAGEMENT PLANS

OXFORD SQUARE

"A Howard County Green Neighborhood"

Parcels 'V' Thru 'C-C' And Open Space Lots 244 And 245

(Being A Resubdivision Of Open Space Lot 1, As Shown On Plats Entitled "Oxford Square, "Green Neighborhood", Parcels 'C' Thru 'L' And Open Space Lots 1 And 2" Recorded As Plat Nos. 22390 Thru 22395; A Resubdivision Of Parcel 'G', As Shown On Plats Entitled "Oxford Square, "Green Neighborhood" Resubdivision Plat-Parcel 'M' And Revision Plat-Parcels 'C', 'E', 'F', 'G', 'I', 'J', And 'K' Recorded As Plat Nos. 22956 Thru 22959; And A Resubdivision Of Parcels 'E', 'S' And 'T', As Shown On Plats Entitled "Oxford Square, "Green Neighborhood", Parcels 'R', 'S' And 'T' And Revision Plat-Parcel 'E'" Recorded As Plat Nos. 23103 Thru 23105)

Zoned: TOD

Tax Map: 38, Parcel: 1003, Grid: 20 And Tax Map: 44, Parcel P/O 4 & 5, Grid 1

First Election District - Howard County, Maryland

Date: June 12, 2015

Sheet 6 of 27

FISHER, COLLINS & CARTER, INC.
CIVIL ENGINEERING CONSULTANTS & LAND SURVEYORS
CENTENNIAL SQUARE OFFICE PARK - 10272 BALTIMORE NATIONAL PIKE
ELLICOTT CITY, MARYLAND 21042
(410) 461 - 2855

F-15-008

I:\2005\05014\dwg\Finals - Phase Four\redline 2016\05014 sheet 6 mylar.dwg, 6/29/2016 1:55:41 PM, 1:1

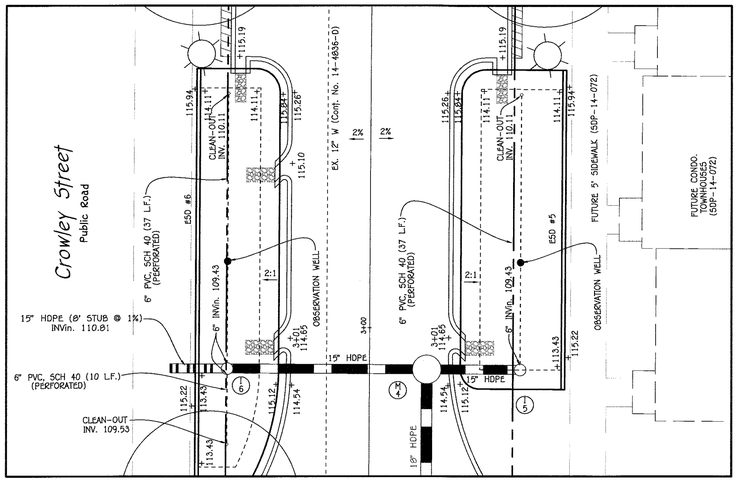

PROPOSED MICRO BIO-RETENTION (M-6) ESD Nos. 5 & 6 PLAN VIEW

SCALE: 1" = 10'

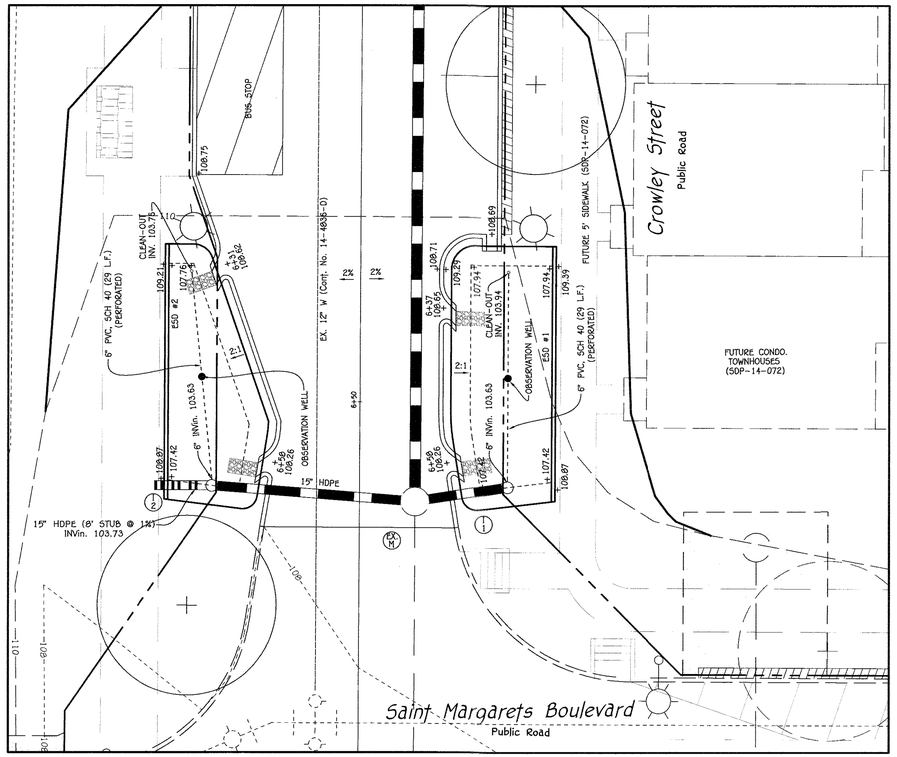

PROPOSED MICRO BIO-RETENTION (M-6) ESD Nos. 1 & 2 PLAN VIEW

SCALE: 1" = 10'

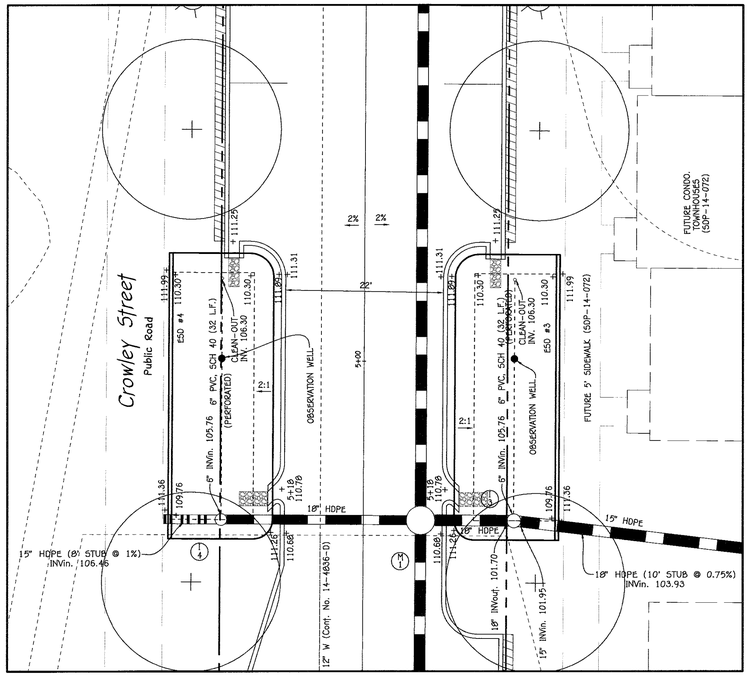

PROPOSED MICRO BIO-RETENTION (M-6) ESD Nos. 3 & 4 PLAN VIEW

SCALE: 1" = 10'

0' 10' 15' 20'

Scale: 1" = 10'

Approved: Department Of Planning And Zoning

Chief, Division Of Land Development — Date 9-7-16

Chief, Development Engineering Division — Date 9-6-16

Approved: Howard County Department Of Public Works

Chief, Bureau Of Highways — Date 8/19/16

REVISIONS

NO.	DESCRIPTION	DATE
1	REVISE STORM DRAIN OUTFALL, ENTRANCES TO PARCEL 'A-A' & 'B-B', STREET LIGHT LOCATIONS & ESD LOCATIONS	4/1/16

STORMWATER MANAGEMENT MAINTENANCE NOTE

ALL STORMWATER MANAGEMENT FACILITIES WILL BE PRIVATELY OWNED AND MAINTAINED BY THE OXFORD SQUARE COMMERCIAL ASSOCIATION, INC. THE STREET TREES, TREES WITHIN THE BIO-RETENTION, PERFORATED UNDERDRAINS, FEEDERS, PLANTINGS AND SWALES WILL ALSO BE PRIVATELY OWNED AND MAINTAINED BY THE OXFORD SQUARE COMMERCIAL ASSOCIATION. HOWARD COUNTY WILL ONLY MAINTAIN THE INLET STRUCTURE WITHIN THE MICRO BIO-RETENTION FACILITIES ADJACENT TO THE RIGHT-OF-WAY.

Owner

Board Of Education Of Howard County, Maryland
c/o Dr. Renee A. Foose, Ed.D, Superintendent
10910 Maryland Route 108
Ellicott City, Maryland 21042
Ph# 410-313-6600

Owner

Oxford Square Master Association, Inc.
2330 West Joppa Road
Lutherville, Maryland 21093
Ph# 410-296-3800

Owner

Kellogg-CCP, LLC
c/o David P. Scheffenacker, Jr., Managing Member
2330 West Joppa Road, Suite 190
Lutherville, Maryland 21093-4614
Ph# 410-296-3800

Owner

U.S. Home Corporation, D/B/A Lennar
c/o Joseph Fortino, Vice President
10211 Wincopin Circle
Suite 300
Columbia, Maryland 21044
Ph# 410-423-0460

Developer

Preston - Scheffenacker Properties
2330 West Joppa Road, Suite 190
Lutherville, Maryland 21093-4614
Ph# 410-296-3800

STATE OF MARYLAND — ALDO MICHAEL VITUCCI — No. 20748 — PROFESSIONAL ENGINEER

ALDO M. VITUCCI, P.E. — DATE 7/29/16

"Professional Certification. I hereby certify that these documents were prepared by me, and that I am a duly Licensed Professional Engineer under the laws of the State of Maryland, License No. 20748, Expiration Date 2-22-17."

FISHER, COLLINS & CARTER, INC.
CIVIL ENGINEERING CONSULTANTS & LAND SURVEYORS
CENTENNIAL SQUARE OFFICE PARK - 10272 BALTIMORE NATIONAL PIKE
ELLICOTT CITY, MARYLAND 21042
(410) 461 - 2855

Revised STORMWATER MANAGEMENT PLANS

OXFORD SQUARE

"A Howard County Green Neighborhood"

Parcels 'V' Thru 'C-C' And Open Space Lots 244 And 245

(Being A Resubdivision Of Open Space Lot 1, As Shown On Plats Entitled "Oxford Square, "Green Neighborhood", Parcels 'C' Thru 'L' And Open Space Lots 1 And 2" Recorded As Plat Nos. 22390 Thru 22395; A Resubdivision Of Parcel 'G', As Shown On Plats Entitled "Oxford Square, "Green Neighborhood" Resubdivision Plat-Parcel 'M' And Revision Plat-Parcels 'C', 'E', 'F', 'G', 'I', 'J', And 'K' Recorded As Plat Nos. 22856 Thru 22859; And A Resubdivision Of Parcels 'E', 'S' And 'T', As Shown On Plats Entitled "Oxford Square, "Green Neighborhood", Parcels 'K', 'S' And 'T' And Revision Plat-Parcel 'E" Recorded As Plat Nos. 23103 Thru 23105)

Zoned: TOD

Tax Map: 38, Parcel: 1003, Grid: 20 And Tax Map: 44, Parcel P/O 4 & 5, Grid 1

First Election District - Howard County, Maryland

Date: June 12, 2015

Sheet 7 of 27

F-15-008

L:\2009\09014\dwg\Finals - Phase Four\redline 2016\09014 sheet 7 MYLAR.dwg 6/29/2016 2:09:38 PM, 1:1

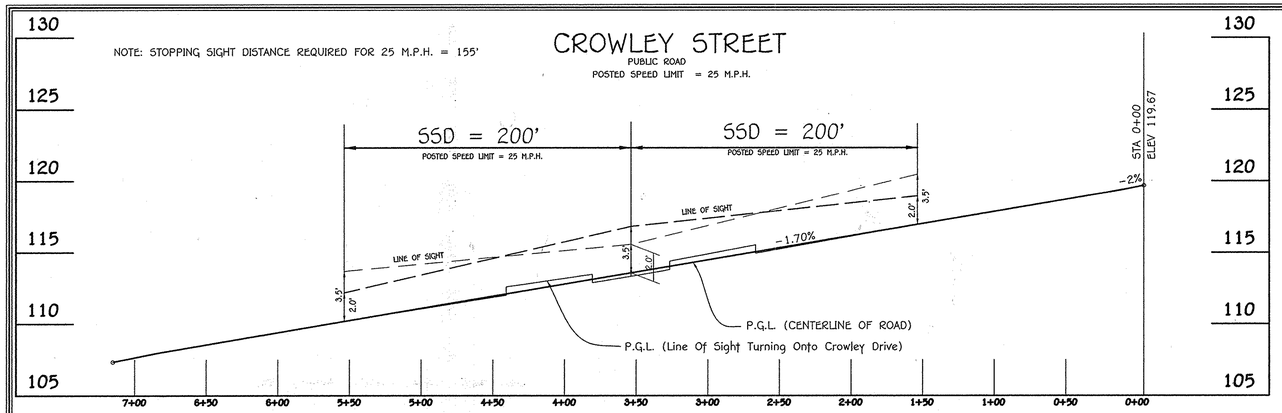

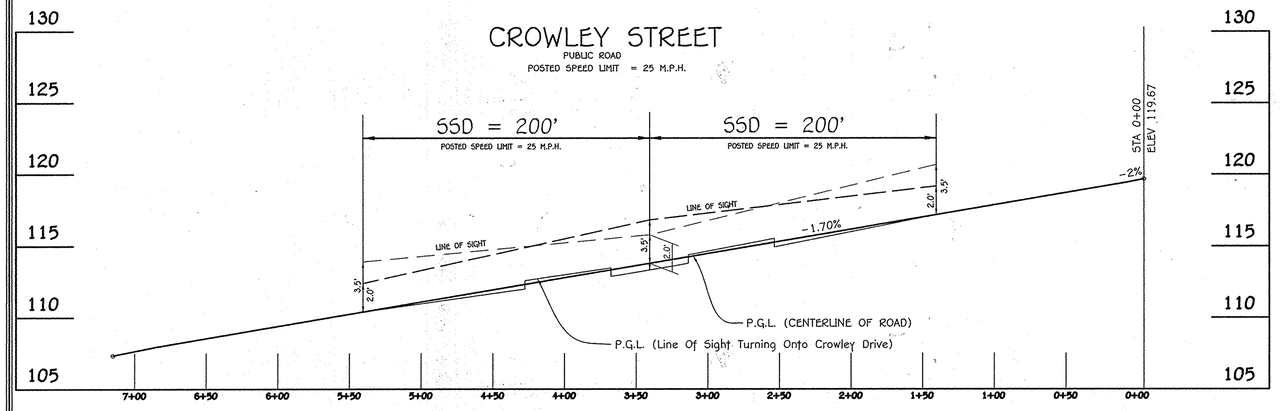

SIGHT DISTANCE PROFILES

SCALE: HOR. : 1" = 50'
VER. : 1" = 5'

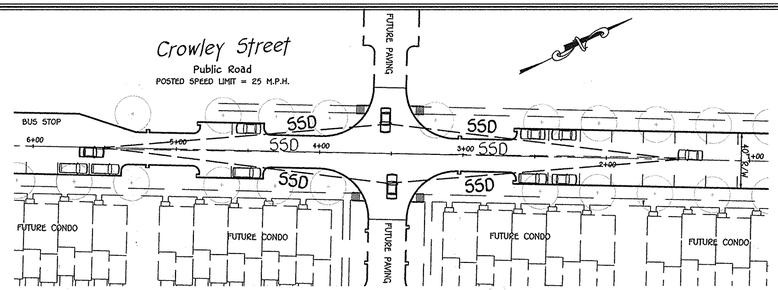

SIGHT DISTANCE PLAN

SCALE: 1" = 50'

APPROVED: DEPARTMENT OF PUBLIC WORKS

CHIEF, BUREAU OF HIGHWAYS — DATE 7/9/15

APPROVED: DEPARTMENT OF PLANNING AND ZONING

CHIEF, DIVISION OF LAND DEVELOPMENT — DATE 11-19-15

CHIEF, DEVELOPMENT ENGINEERING DIVISION — DATE 7-14-15

REVISIONS

NO.	DESCRIPTION	DATE

SIDEWALK NOTE:
FUTURE CONCRETE SIDEWALKS WILL BE PRIVATELY OWNED & MAINTAINED BY THE OXFORD SQUARE COMMERCIAL ASSOCIATION, INC. AS RESIDENTIAL AND COMMERCIAL LOTS/PARCELS ARE DEVELOPED, PERIMETER SIDEWALKS ON EACH LOT/PARCEL SHALL BE CONSTRUCTED WITH EACH FUTURE SITE DEVELOPMENT PLAN. ADDITIONALLY, SIDEWALKS FROM RESIDENTIAL LOTS/PARCELS SHALL BE CONTINUED ON AND OVER ADJACENT RESIDENTIAL LOTS/PARCELS TO PROVIDE A CONTINUOUS WALKWAY FROM THE SUBJECT LOT/PARCEL UNDER DEVELOPMENT TO THE PUBLIC SCHOOL SITE.

SECTION NUMBER	ROAD AND STREET CLASSIFICATION	CALIFORNIA BEARING RATIO (CBR)	3 TO <5	5 TO <7	≥7	3 TO <5	5 TO <7	≥7
		PAVEMENT MATERIAL (INCHES)	MIN HMA WITH GAB			HMA WITH CONSTANT GAB		
P-4	MINOR COLLECTORS: NON-RESIDENTIAL MAJOR COLLECTORS:	HMA SUPERPAVE FINAL SURFACE 12.5 MM, PG 64-22, LEVEL 2 (LOW ESAL)	2.0	2.0	2.0	2.0	2.0	2.0
		HMA SUPERPAVE INTERMEDIATE SURFACE 12.5 MM, PG 64-22, LEVEL 2 (LOW ESAL)	2.0	2.0	2.0	2.0	2.0	2.0
		HMA SUPERPAVE BASE 19.0 MM, PG 64-22, LEVEL 2 (LOW ESAL)	4.0	4.0	3.0	6.0	5.0	3.0
		GRADED AGGREGATE BASE (GAB)	13.0	7.0	4.0	6.0	6.0	6.0

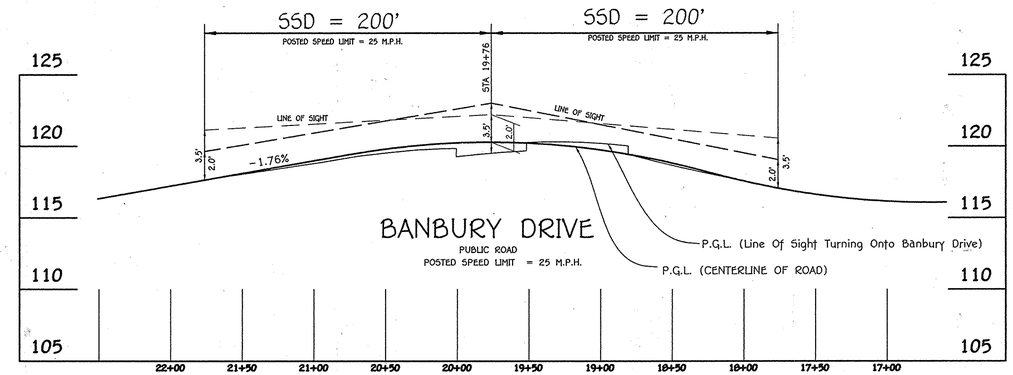

SIGHT DISTANCE PROFILE

SCALE: HOR. : 1" = 50'
VER. : 1" = 5'

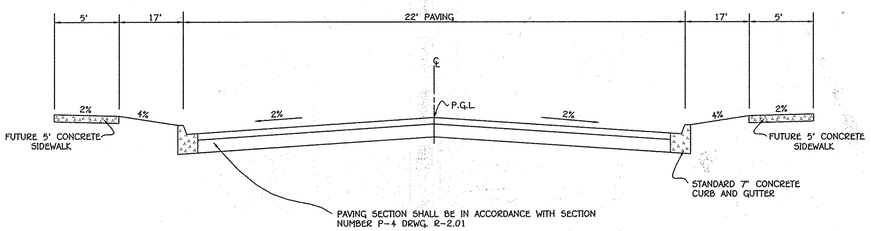

TYPICAL ROADWAY SECTION

NO SCALE

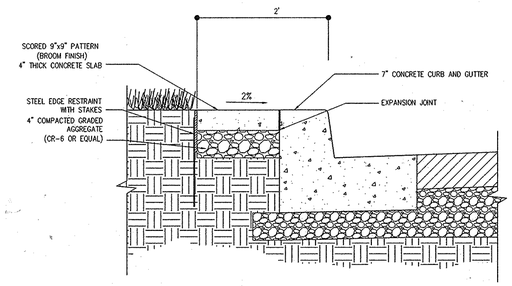

18" CONCRETE STRIP AT PARALLEL PARKING

NOT TO SCALE

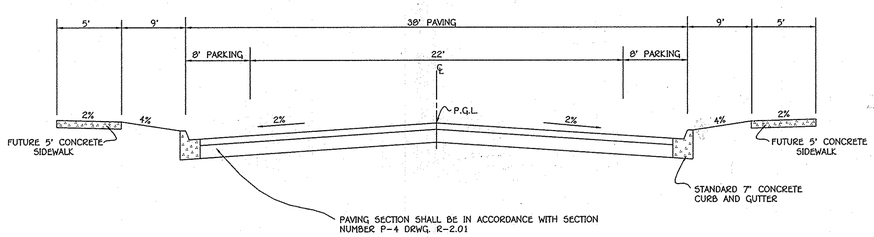

TYPICAL ROADWAY SECTION

NO SCALE

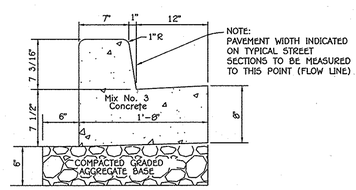

STD. 7" CONC. CURB AND GUTTER

NO SCALE R-3.01

NOTE: SEE SHEET 4 FOR STANDARD CURB OPENING DETAILS

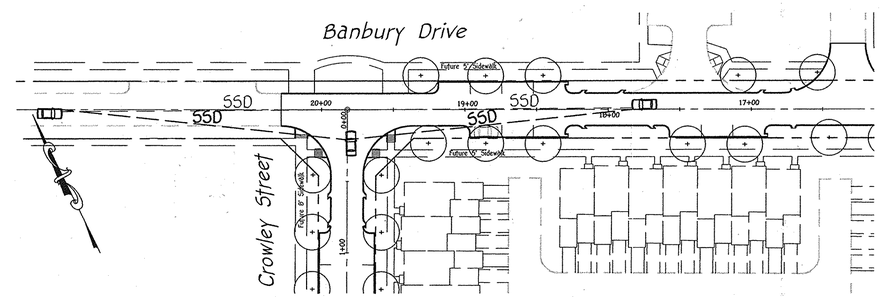

SIGHT DISTANCE PLAN

SCALE: 1" = 50'

0' 50' 100' 150'
Scale: 1" = 50'

FISHER, COLLINS & CARTER, INC.
CIVIL ENGINEERING CONSULTANTS & LAND SURVEYORS
CENTENNIAL SQUARE OFFICE PARK - 10272 BALTIMORE NATIONAL PIKE
ELLICOTT CITY, MARYLAND 21042
(410) 461 - 2855

Owner	Owner	Owner	Owner	Developer
Board Of Education Of Howard County, Maryland c/o Dr. Renee A. Foose, Ed.D, Superintendent 10910 Maryland Route 108 Ellicott City, Maryland 21042 Ph# 410-313-6600	Oxford Square Master Association, Inc. 2330 West Joppa Road Lutherville, Maryland 21093 Ph# 410-296-3800	Kellogg-CCP, LLC c/o David P. Scheffenacker, Jr., Managing Member 2330 West Joppa Road, Suite 190 Lutherville, Maryland 21093-4614 Ph# 410-296-3800	U.S. Home Corporation, D/B/A Lennar c/o Joseph Fortino, Vice President 10211 Wincopin Circle Suite 300 Columbia, Maryland 21044 Ph# 410-423-0460	Preston - Scheffenacker Properties 2330 West Joppa Road, Suite 190 Lutherville, Maryland 21093-4614 Ph# 410-296-3800

STATE OF MARYLAND — ALDO MICHAEL VITUCCI — No. 20746 — PROFESSIONAL ENGINEER

ALDO M. VITUCCI, P.E. — DATE 6/5/15

"Professional Certification. I hereby certify that these documents were prepared by me, and that I am a duly Licensed Professional Engineer under the laws of the State of Maryland, License No. 20746, Expiration Date 6-22-17."

ROADWAY DETAILS

OXFORD SQUARE

"A Howard County Green Neighborhood"

Parcels 'V' Thru 'C-C' And Open Space Lots 244 And 245

(Being A Resubdivision Of Open Space Lot 1, As Shown On Plats Entitled "Oxford Square, "Green Neighborhood", Parcels 'C' Thru 'L' And Open Space Lots 1 And 2" Recorded As Plat Nos. 22390 Thru 22395; A Resubdivision Of Parcel 'G', As Shown On Plats Entitled "Oxford Square, "Green Neighborhood" Resubdivision Plat-Parcel 'M' And Revision Plat-Parcels 'D', 'E', 'F', 'G', 'I', 'J', And 'K' Recorded As Plat Nos. 22896 Thru 22899; And A Resubdivision Of Parcels 'E', 'S' And 'T', As Shown On Plats Entitled "Oxford Square, "Green Neighborhood", Parcels 'R', 'S' And 'T' And Revision Plat-Parcel 'B' Recorded As Plat Nos. 23103 Thru 23105)

Zoned: TOD

Tax Map: 38, Parcel: 1003, Grid: 20 And Tax Map: 44, Parcel P/O 4 & 5, Grid 1
First Election District - Howard County, Maryland
Date: June 12, 2015
Sheet 8 of 27

F-15-008

L:\2009\09014\dwg\finals - Phase Four\09014 sheet 8 road details.dwg, 6/12/2015 10:30:05 AM, 1:1

STONE/RIPRAP OUTLET SEDIMENT TRAP ST-II, TRAP NO. 1		
DRAINAGE AREA – INITIAL	0.48	ACRES
DRAINAGE AREA – INTERIM	0.70	ACRES
DRAINAGE AREA – FINAL	2.05	ACRES
TOTAL STORAGE REQUIRED	7,380	CF
TOTAL STORAGE PROVIDED	7,380	CF
WET STORAGE REQUIRED	3,690	CF
WET STORAGE PROVIDED (@ EL. 100.00)	4,928	CF
DRY STORAGE REQUIRED	3,690	CF
DRY STORAGE PROVIDED (@ EL. 101.50)	4,928	CF
EXISTING GROUND ELEVATION AT OUTLET (WET STORAGE ELEVATION)	100.00	FT
TRAP BOTTOM ELEVATION	98.00	FT
TRAP BOTTOM DIMENSIONS	30' x 60'	FT x FT
WEIR LENGTH	6.0	FT
WEIR CREST (DRY STORAGE) ELEVATION	101.5	FT
CLEANOUT ELEVATION	99.3	FT
TOP OF EMBANKMENT ELEVATION	102.0	FT
SIDE SLOPE	2:1	H:V RATIO
EMBANKMENT TOP WIDTH	6.0	FT
OUTLET PROTECTION – LENGTH	10.0	FT
OUTLET PROTECTION – DEPTH	19	IN

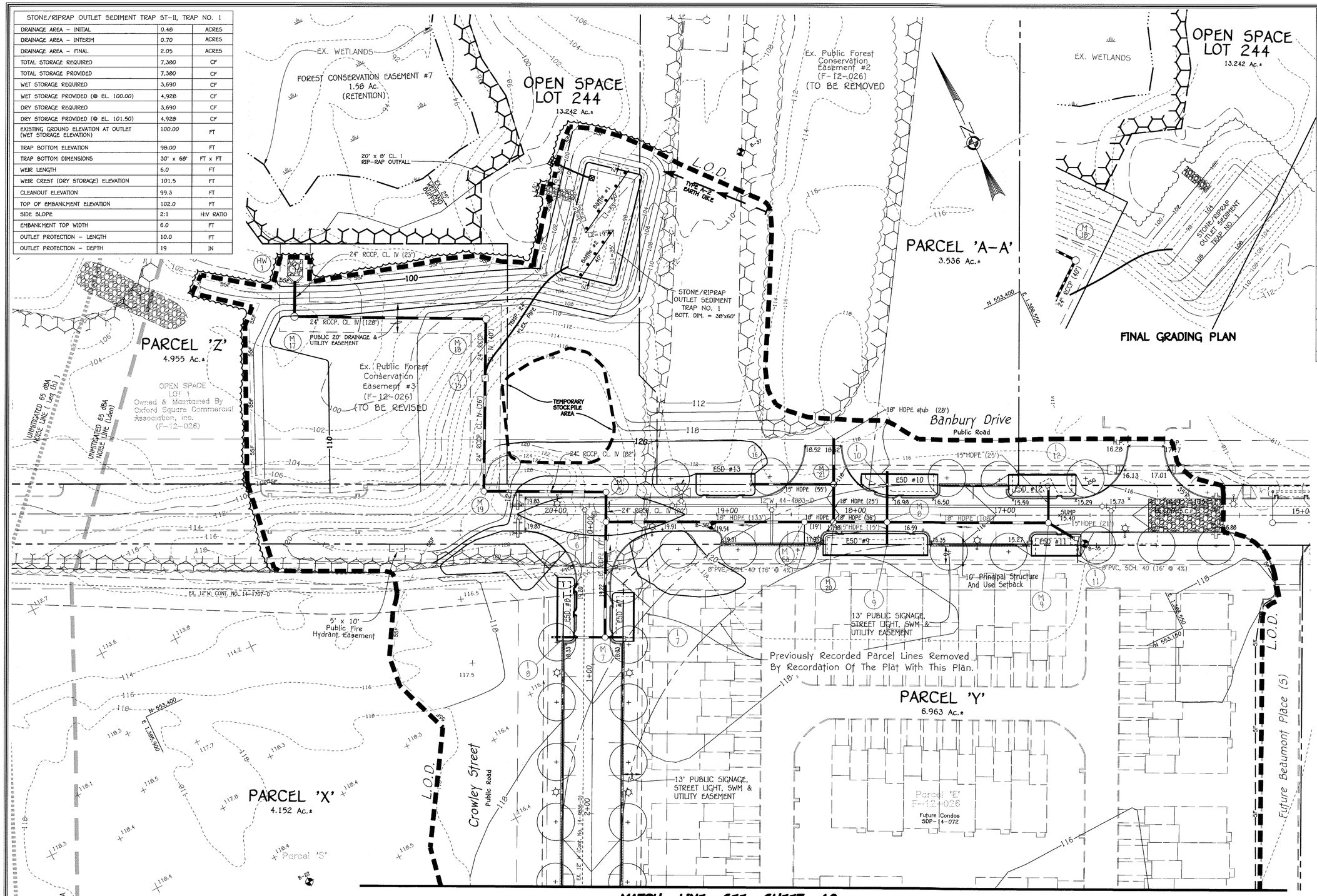

MATCH LINE SEE SHEET 10

PLAN

0' 30' 60' 120'

SCALE: 1" = 30'

ENGINEER'S CERTIFICATE

I Hereby Certify That This Plan For Erosion And Sediment Control Represents A Practical And Workable Plan, Based On My Personal Knowledge Of The Site Condition And That It Was Prepared In Accordance With The Requirements Of The Howard Soil Conservation District.

Signature Of Engineer — Date: 7/20/16

DEVELOPER'S CERTIFICATE

"I/We Certify That All Development And Construction Will Be Done According To This Plan Of Development And Plan For Erosion And Sediment Control And That All Responsible Personnel Involved In The Construction Project Will Have A Certificate Of Attendance At A Department Of Natural Resources Approved Training Program For The Control Of Sediment And Erosion Before Beginning The Project. I Also Authorize Periodic On-Site Inspection By The Howard Soil Conservation District Or Their Authorized Agent, As Are Deemed Necessary."

Signature Of Developer — Date: 7/25/16

Approved: This Development Is Approved For Erosion And Sediment Control By The Howard Soil Conservation District.

District Howard Soil Conservation Dist. — Date: 8/5/16

Approved: Department Of Planning And Zoning

Chief, Division Of Land Development — Date: 9-7-16

Chief, Development Engineering Division — Date: 9.6.16

Approved: Howard County Department Of Public Works

Chief, Bureau Of Highways — Date: 8/19/16

REVISIONS		
NO.	DESCRIPTION	DATE
1	REVISE STORM DRAIN OUTFALL, ENTRANCES TO PARCEL 'A-A' & 'B-B', STREET LIGHT LOCATIONS & ESD LOCATIONS	4/1/16

BAFFLE CALCULATIONS:

TOP OF BAFFLES EL. 100.75

$We = (A/2)^{.5} = (2,888/2)^{.5} = 38'$

Le req'd. = We x 2 = 76'

BAFFLE #1 L1 + L2 = 78'

BAFFLE #2 L1 + L2 + L3 = 79'

SEDIMENT CONTROL LEGEND

- SF — SF — SF — SILT FENCE
- SSF — SSF — SSF — SUPER-SILT FENCE
- S.C.E. — STABILIZED CONSTRUCTION ENTRANCE
- L.O.D. — LIMIT OF DISTURBANCE
- R.R.P. — RIP-RAP INFLOW PROTECTION
- R.P.S. — REMOVABLE PUMPING STATION
- F.B. — FILTER BAG

REVISED GRADING & SEDIMENT CONTROL PLAN

OXFORD SQUARE

"A Howard County Green Neighborhood"

Parcels 'V' Thru 'C-C' And Open Space Lots 244 And 245

(Being A Resubdivision Of Open Space Lot 1, As Shown On Plats Entitled "Oxford Square, "Green Neighborhood", Parcels 'C' Thru 'L' And Open Space Lots 1 And 2" Recorded As Plat Nos. 22390 Thru 22395; A Resubdivision Of Parcel 'G', As Shown On Plats Entitled "Oxford Square, "Green Neighborhood" Resubdivision Plat-Parcel 'H' And Revision Plat-Parcels 'C', 'E', 'F', 'G', 'I', 'J', And 'K' Recorded As Plat Nos. 22856 Thru 22859; And A Resubdivision Of Parcels 'E', 'S' And 'T', As Shown On Plats Entitled "Oxford Square, "Green Neighborhood", Parcels 'X', 'S' And 'T' And Revision Plat-Parcel 'E" Recorded As Plat Nos. 23103 Thru 23105)

Zoned: TOD

Tax Map: 38, Parcel: 1003, Grid: 20 And Tax Map: 44, Parcel P/O 4 & 5, Grid 1

First Election District – Howard County, Maryland

Date: June 12, 2015

Sheet 9 of 27

FISHER, COLLINS & CARTER, INC.
CIVIL ENGINEERING CONSULTANTS & LAND SURVEYORS
CENTENNIAL SQUARE OFFICE PARK – 10272 BALTIMORE NATIONAL PIKE
ELLICOTT CITY, MARYLAND 21042
(410) 461 – 2855

Owner	Owner	Owner	Owner	Developer
Board Of Education Of Howard County, Maryland c/o Dr. Renee A. Foose, Ed.D, Superintendent 10910 Maryland Route 108 Ellicott City, Maryland 21042 Ph# 410-313-6600	Oxford Square Master Association, Inc. 2330 West Joppa Road Lutherville, Maryland 21093 Ph# 410-296-3800	Kellogg-CCP, LLC c/o David P. Scheffenacker, Jr., Managing Member 2330 West Joppa Road, Suite 190 Lutherville, Maryland 21093-4614 Ph# 410-296-3800	U.S. Home Corporation, D/B/A Lennar c/o Joseph Fortino, Vice President 10211 Wincopin Circle Suite 300 Columbia, Maryland 21044 Ph# 410-423-0460	Preston • Scheffenacker Properties 2330 West Joppa Road, Suite 190 Lutherville, Maryland 21093-4614 Ph# 410-296-3800

STATE OF MARYLAND — ALDO MICHAEL VITUCCI — No. 20748 — PROFESSIONAL ENGINEER

ALDO M. VITUCCI, P.E. — DATE: 7/20/16

"Professional Certification. I hereby certify that these documents were prepared by me, and that I am a duly Licensed Professional Engineer under the laws of the State of Maryland, License No. 20748, Expiration Date 2-22-17."

F-15-008

I:\2009\09014\dwg\Finals - Phase Four\redline 2016\09014 sheet 9 mylar.dwg, 7/20/2016 6:55:04 AM, 1:1

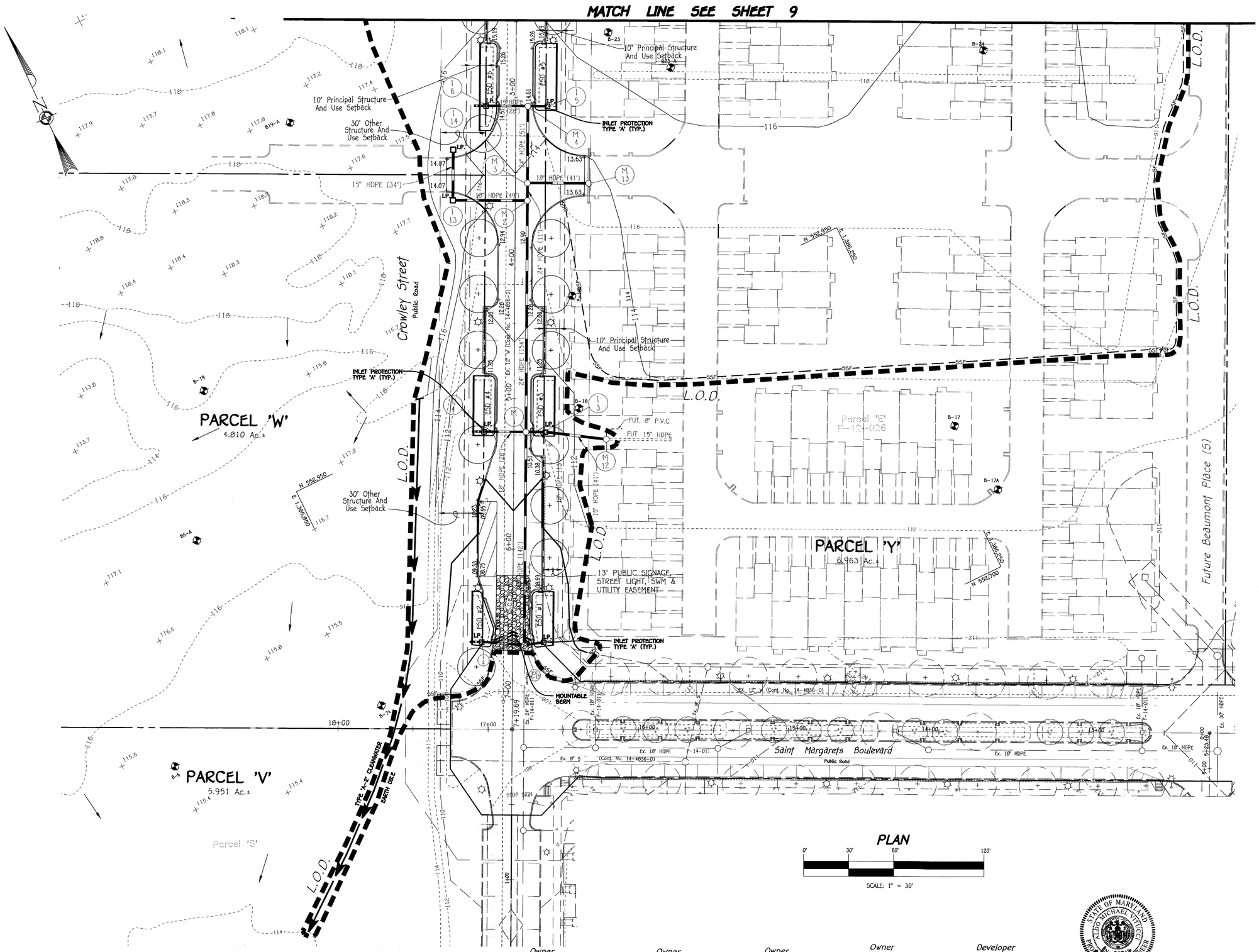

PLAN

0' 30' 60' 120'

SCALE: 1" = 30'

ENGINEER'S CERTIFICATE

I Hereby Certify That This Plan For Erosion And Sediment Control Represents A Practical And Workable Plan Based On My Personal Knowledge Of The Site Condition And That It Was Prepared In Accordance With The Requirements Of The Howard Soil Conservation District.

Signature Of Engineer — Date: 7/20/16

DEVELOPER'S CERTIFICATE

"I/We Certify That All Development And Construction Will Be Done According To This Plan Of Development And Plan For Erosion And Sediment Control And That All Responsible Personnel Involved In The Construction Project Will Have A Certificate Of Attendance At A Department Of Natural Resources Approved Training Program For The Control Of Sediment And Erosion Before Beginning The Project. I Also Authorize Periodic On-Site Inspection By The Howard Soil Conservation District Or Their Authorized Agent: As Are Deemed Necessary."

Signature Of Developer — Date: 7/25/16

Approved: This Development Is Approved For Erosion And Sediment Control By The Howard Soil Conservation District.

District Howard Soil Conservation Dist. — Date: 8/5/16

Approved: Department Of Planning And Zoning

Chief, Division Of Land Development — Date: 9-7-16

Chief, Development Engineering Division — Date: 9.6.16

Approved: Howard County Department Of Public Works

Chief, Bureau Of Highways — Date: 8/19/16

REVISIONS		
NO.	DESCRIPTION	DATE
1	REVISE STORM DRAIN OUTFALL, ENTRANCES TO PARCEL 'A-A' & 'B-B', STREET LIGHT LOCATIONS & ESD LOCATIONS	4/1/16

SEDIMENT CONTROL LEGEND

- —SF—SF—SF— SILT FENCE
- —SSF—SSF—SSF— SUPER-SILT FENCE
- S.C.E. — STABILIZED CONSTRUCTION ENTRANCE
- L.O.D. — LIMIT OF DISTURBANCE
- L.P. — INLET PROTECTION (TYPE 'A')

REVISED
GRADING & SEDIMENT CONTROL PLAN
OXFORD SQUARE

"A Howard County Green Neighborhood"

Parcels 'V' Thru 'C-C' And Open Space Lots 244 And 245

(Being A Resubdivision Of Open Space Lot 1, As Shown On Plats Entitled "Oxford Square, "Green Neighborhood", Parcels 'C' Thru 'L' And Open Space Lots 1 And 2" Recorded As Plat Nos. 22390 Thru 22395; A Resubdivision Of Parcel 'G', As Shown On Plats Entitled "Oxford Square, "Green Neighborhood" Resubdivision Plat-Parcel 'H' And Revision Plat-Parcels 'C', 'E', 'F', 'G', 'I', 'J', And 'K' Recorded As Plat Nos. 22856 Thru 22859; And A Resubdivision Of Parcels 'E', 'S' And 'T', As Shown On Plats Entitled "Oxford Square, "Green Neighborhood", Parcels 'K', 'S' And 'T' And Revision Plat-Parcel 'E" Recorded As Plat Nos. 23103 Thru 23105)

Zoned: TOD

Tax Map: 38, Parcel: 1003, Grid: 20 And Tax Map: 44, Parcel P/O 4 & 5, Grid 1

First Election District - Howard County, Maryland

Date: June 12, 2015

Sheet 10 of 27

Owner	Owner	Owner	Owner	Developer
Board Of Education Of Howard County, Maryland c/o Dr. Renee A. Foose, Ed.D, Superintendent 10910 Maryland Route 108 Ellicott City, Maryland 21042 Ph# 410-313-6600	Oxford Square Master Association, Inc. 2330 West Joppa Road Lutherville, Maryland 21093 Ph# 410-296-3800	Kellogg-CCP, LLC c/o David P. Scheffenacker, Jr., Managing Member 2330 West Joppa Road, Suite 190 Lutherville, Maryland 21093-4614 Ph# 410-296-3800	U.S. Home Corporation, D/B/A Lennar c/o Joseph Fortino, Vice President 10211 Wincopin Circle Suite 300 Columbia, Maryland 21044 Ph# 410-423-0460	Preston - Scheffenacker Properties 2330 West Joppa Road, Suite 190 Lutherville, Maryland 21093-4614 Ph# 410-296-3800

STATE OF MARYLAND — ALDO MICHAEL VITUCCI — No. 20748 — PROFESSIONAL ENGINEER

ALDO M. VITUCCI, P.E. — DATE: 7/20/16

"Professional Certification. I hereby certify that these documents were prepared by me, and that I am a duly Licensed Professional Engineer under the laws of the State of Maryland, License No. 20748, Expiration Date 2-22-17."

FISHER, COLLINS & CARTER, INC.
CIVIL ENGINEERING CONSULTANTS & LAND SURVEYORS
CENTENNIAL SQUARE OFFICE PARK - 10272 BALTIMORE NATIONAL PIKE
ELLICOTT CITY, MARYLAND 21042
(410) 461 - 2855

F-15-000

1:\2009\0901\dwg\Finals - Phase Four\redline 2016\09014 sheet 10 mylar.dwg, 6/29/2016 3:21:30 PM, 1:1

SOIL PREPARATION, TOPSOILING AND SOIL AMENDMENTS (B-4-2)

A. Soil Preparation

1. Temporary Stabilization

a. Seedbed preparation consists of loosening soil to a depth of 3 to 5 inches by means of suitable agricultural or construction equipment, such as disc harrows or chisel plows or rippers mounted on construction equipment. After the soil is loosened, it must not be rolled or dragged smooth but left in the roughened condition. Slopes 3:1 or flatter are to be tracked with ridges running parallel to the contour of the slope.

b. Apply fertilizer and lime as prescribed on the plans.

c. Incorporate lime and fertilizer into the top 3 to 5 inches of soil by disking or other suitable means.

2. Permanent Stabilization

a. A soil test is required for any earth disturbance of 5 acres or more. The minimum soil conditions required for permanent vegetative establishment are:

i. Soil pH between 6.0 and 7.0.
ii. Soluble salts less than 500 parts per million (ppm).
iii. Soil contains less than 40 percent clay but enough fine grained material (greater than 30 percent silt plus clay) to provide the capacity to hold a moderate amount of moisture. An exception: if lovegrass will be planted, then a sandy soil (less than 30 percent silt plus clay) would be acceptable.
iv. Soil contains 1.5 percent minimum organic matter by weight.
v. Soil contains sufficient pore space to permit adequate root penetration.

b. Application of amendments or topsoil is required if on-site soils do not meet the above conditions.

c. Graded areas must be maintained in a true and even grade as specified on the approved plan, then scarified or otherwise loosened to a depth of 3 to 5 inches.

d. Apply soil amendments as specified on the approved plan or as indicated by the results of a soil test.

e. Mix soil amendments into the top 3 to 5 inches of soil by disking or other suitable means. Rake lawn areas to smooth the surface, remove large objects like stones and branches, and ready the area for seed application. Loosen surface soil by dragging with a heavy chain or other equipment to roughen the surface where site conditions will not permit normal seedbed preparation. Track slopes 3:1 or flatter with tracked equipment leaving the soil in an irregular condition with ridges running parallel to the contour of the slope. Leave the top 1 to 3 inches of soil loose and friable. Seedbed loosening may be unnecessary on newly disturbed areas.

B. Topsoiling

1. Topsoil is placed over prepared subsoil prior to establishment of permanent vegetation. The purpose is to provide a suitable soil medium for vegetative growth. Soils of concern have low moisture content, low nutrient levels, low pH, materials toxic to plants, and/or unacceptable soil gradation.

2. Topsoil salvaged from an existing site may be used provided it meets the standards as set forth in these specifications. Typically, the depth of topsoil to be salvaged for a given soil type can be found in the representative soil profile section in the Soil Survey published by USDA-NRCS.

3. Topsoiling is limited to areas having 2:1 or flatter slopes where:

a. The texture of the exposed subsoil/parent material is not adequate to produce vegetative growth.

b. The soil material is so shallow that the rooting zone is not deep enough to support plants or furnish continuing supplies of moisture and plant nutrients.

c. The original soil to be vegetated contains material toxic to plant growth.

d. The soil is so acidic that treatment with limestone is not feasible.

4. Areas having slopes steeper than 2:1 require special consideration and design.

5. Topsoil Specifications: Soil to be used as topsoil must meet the following criteria:

a. Topsoil must be a loam, sandy loam, clay loam, silt loam, sandy clay loam, or loamy sand. Other soils may be used if recommended by an agronomist or soil scientist and approved by the appropriate approval authority. Topsoil must not be a mixture of contrasting textured subsoils and must contain less than 5 percent by volume of cinders, stones, slag, coarse fragments, gravel, sticks, roots, trash, or other materials larger than 1 1/2 inches in diameter.

b. Topsoil must be free of noxious plants or plant parts such as Bermuda grass, quack grass, Johnson grass, nut sedge, poison ivy, thistle, or others as specified.

c. Topsoil substitutes or amendments, as recommended by a qualified agronomist or soil scientist and approved by the appropriate approval authority, may be used in lieu of natural topsoil.

6. Topsoil Application

a. Erosion and sediment control practices must be maintained when applying topsoil.

b. Uniformly distribute topsoil in a 5 to 8 inch layer and lightly compact to a minimum thickness of 4 inches. Spreading is to be performed in such a manner that sodding or seeding can proceed with a minimum of additional soil preparation and tillage. Any irregularities in the surface resulting from topsoiling or other operations must be corrected in order to prevent the formation of depressions or water pockets.

c. Topsoil must not be placed if the topsoil or subsoil is in a frozen or muddy condition, when the subsoil is excessively wet or in a condition that may otherwise be detrimental to proper grading and seedbed preparation.

C. Soil Amendments (Fertilizer and Lime Specifications)

1. Soil tests must be performed to determine the exact ratios and application rates for both lime and fertilizer on sites having disturbed areas of 5 acres or more. Soil analysis may be performed by a recognized private or commercial laboratory. Soil samples taken for engineering purposes may also be used for chemical analyses.

2. Fertilizers must be uniform in composition, free flowing and suitable for accurate application by appropriate equipment. Manure may be substituted for fertilizer with prior approval from the appropriate approval authority. Fertilizers must all be delivered to the site fully labeled according to the applicable laws and must bear the name, trade name or trademark and warranty of the producer.

3. Lime materials must be ground limestone (hydrated or burnt lime may be substituted except when hydroseeding) which contains at least 50 percent total oxides (calcium oxide plus magnesium oxide). Limestone must be ground to such fineness that at least 50 percent will pass through a #100 mesh sieve and 98 to 100 percent will pass through a #20 mesh sieve.

4. Lime and fertilizer are to be evenly distributed and incorporated into the top 3 to 5 inches of soil by disking or other suitable means.

5. Where the subsoil is either highly acidic or composed of heavy clays, spread ground limestone at the rate of 4 to 8 tons/acre (200-400 pounds per 1,000 square feet) prior to the placement of topsoil.

TEMPORARY SEEDING NOTES (B-4-4)

Definition

To stabilize disturbed soils with vegetation for up to 6 months.

Purpose

To use fast growing vegetation that provides cover on disturbed soils.

Conditions Where Practice Applies

Exposed soils where ground cover is needed for a period of 6 months or less. For longer duration of time, permanent stabilization practices are required.

Criteria

1. Select one or more of the species or seed mixtures listed in Table B.1 for the appropriate Plant Hardiness Zone (from Figure B.3), and enter them in the Temporary Seeding Summary below along with application rates, seeding dates and seeding depths. If this Summary is not put on the plan and completed, then Table B.1 plus fertilizer and lime rates must be put on the plan.

2. For sites having soil tests performed, use and show the recommended rates by the testing agency. Soil tests are not required for Temporary Seeding.

3. When stabilization is required outside of a seeding season, apply seed and mulch or straw mulch alone as prescribed in Section B-4-3.A.1.b and maintain until the next seeding season.

Temporary Seeding Summary

Hardiness Zone (from Figure B.3): 6b Seed Mixture (from Table B.1):				Fertilizer Rate (10-20-20)	Lime Rate
Species	Application Rate (lb/ac)	Seeding Dates	Seeding Depths		
BARLEY	96	3/1 - 5/15, 8/15 - 10/15	1"	436 lb/ac (10 lb/ 1000 sf)	2 tons/ac (90 lb/ 1000 sf)
OATS	72	3/1 - 5/15, 8/15 - 10/15	1"		
RYE	112	3/1 - 5/15, 8/15 - 10/15	1"		

PERMANENT SEEDING NOTES (B-4-5)

A. Seed Mixtures

1. General Use

a. Select one or more of the species or mixtures listed in Table B.3 for the appropriate Plant Hardiness Zone (from Figure B.3) and based on the site condition or purpose found on Table B.2. Enter selected mixture(s), application rates, and seeding dates in the Permanent Seeding Summary. The Summary is to be placed on the plan.

b. Additional planting specifications for exceptional sites such as shorelines, stream banks, or dunes or for special purposes such as wildlife or aesthetic treatment may be found in USDA-NRCS Technical Field Office Guide, Section 342 - Critical Area Planting.

c. For sites having disturbed area over 5 acres, use and show the rates recommended by the soil testing agency. d. For areas receiving low maintenance, apply urea form fertilizer (46-0-0) at 3 1/2 pounds per 1000 square feet (150 pounds per acre) at the time of seeding in addition to the soil amendments shown in the Permanent Seeding Summary .

2. Turfgrass Mixtures

a. Areas where turfgrass may be desired include lawns, parks, playgrounds, and commercial sites which will receive a medium to high level of maintenance.

b. Select one or more of the species or mixtures listed below based on the site conditions or purpose. Enter selected mixture(s), application rates, and seeding dates in the Permanent Seeding Summary. The summary is to be placed on the plan.

i. Kentucky Bluegrass: Full Sun Mixture: For use in areas that receive intensive management. Irrigation required in the areas of central Maryland and Eastern Shore. Recommended Certified Kentucky Bluegrass Cultivars Seeding Rate: 1.5 to 2.0 pounds per 1000 square feet. Choose a minimum of three Kentucky bluegrass cultivars with each ranging from 10 to 35 percent of the total mixture by weight.

ii. Kentucky Bluegrass/Perennial Rye: Full Sun Mixture: For use in full sun areas where rapid establishment is necessary and when turf will receive medium to intensive management. Certified Perennial Ryegrass Cultivars/Certified Kentucky Bluegrass Seeding Rate: 2 pounds mixture per 1000 square feet. Choose a minimum of three Kentucky bluegrass cultivars with each ranging from 10 to 35 percent of the total mixture by weight.

iii. Tall Fescue/Kentucky Bluegrass: Full Sun Mixture: For use in drought prone areas and/or for areas receiving low to medium management in full sun to medium shade. Recommended mixture includes; Certified Tall Fescue Cultivars 95 to 100 percent, Certified Kentucky Bluegrass Cultivars 0 to 5 percent. Seeding Rate: 5 to 8 pounds per 1000 square feet. One or more cultivars may be blended.

iv. Kentucky Bluegrass/Fine Fescue: Shade Mixture: For use in areas with shade in Bluegrass lawns. For establishment in high quality, intensively managed turf area. Mixture includes; Certified Kentucky Bluegrass Cultivars 30 to 40 percent and Certified Fine Fescue and 60 to 70 percent. Seeding Rate: 1 1/2 to 3 pounds per 1000 square feet.

Notes:
Select turfgrass varieties from those listed in the most current University of Maryland Publication, Agronomy Memo #77, "Turfgrass Cultivar Recommendations for Maryland"

Choose certified material. Certified material is the best guarantee of cultivar purity. The certification program of the Maryland Department of Agriculture, Turf and Seed Section, provides a reliable means of consumer protection and assures a pure genetic line

c. Ideal Times of Seeding for Turf Grass Mixtures Western MD: March 15 to June 1, August 1 to October 1 (Hardiness Zones: 5b, 6a) Central MD: March 1 to May 15, August 15 to October 15 (Hardiness Zone: 6b) Southern MD, Eastern Shore: March 1 to May 15, August 15 to October 15 (Hardiness Zones: 7a, 7b)

d. Till areas to receive seed by disking or other approved methods to a depth of 2 to 4 inches, level and rake the areas to prepare a proper seedbed. Remove stones and debris over 1 1/2 inches in diameter. The resulting seedbed must be in such condition that future mowing of grasses will pose no difficulty.

e. If soil moisture is deficient, supply new seedings with adequate water for plant growth (1/2 to 1 inch every 3 to 4 days depending on soil texture) until they are firmly established. This is especially true when seedings are made late in the planting season, in abnormally dry or hot seasons, or on adverse sites.

Permanent Seeding Summary

Hardiness Zone (from Figure B.3): 6b Seed Mixture (from Table B.3): 8					Fertilizer Rate (10-20-20)			Lime Rate
No.	Species	Application Rate (lb/ac)	Seeding Dates	Seeding Depths	N	P_2O_5	K_2O	
8	TALL FESCUE	100	Mar. 1-May 15 Aug. 1-Oct. 15	1/4-1/2 in.	45 lbs. per acre (1.0 lb/ 1000 sf)	90 lb/ac (2 lb/ 1000 sf)	90 lb/ac (2 lb/ 1000 sf)	2 tons/ac (90 lb/ 1000 sf)

STANDARD STABILIZATION NOTE

FOLLOWING INITIAL SOIL DISTURBANCE OR RE-DISTURBANCE, PERMANENT OR TEMPORARY STABILIZATION MUST BE COMPLETED WITHIN:

a.) THREE (3) CALENDAR DAYS AS TO THE SURFACE OF ALL PERIMETER DIKES, SWALES, DITCHES, PERIMETER SLOPES AND ALL SLOPES STEEPER THAN 3 HORIZONTAL TO 1 VERTICAL (3:1); AND

b.) SEVEN (7) CALENDAR DAYS AS TO ALL OTHER DISTURBED OR GRADED AREAS ON THE PROJECT SITE NOT UNDER ACTIVE GRADING.

STANDARDS AND SPECIFICATIONS FOR STOCKPILE AREA (B-4-8)

Definition

The mound or pile of soil protected by appropriately designed erosion and sediment control measures.

Purpose

To provide a designated location for the temporary storage of soil that controls the potential for erosion, sedimentation, and changes to drainage patterns.

Conditions Where Practice Applies

Stockpile areas are utilized when it is necessary to salvage and store soil for later use.

Criteria

1. The stockpile location and all related sediment control practices must be clearly indicated on the erosion and sediment control plan.
2. The footprint of the stockpile must be sized to accommodate the anticipated volume of material and based on a side slope ratio no steeper tha 2:1. Benching must be provided in accordance with Section B-3 Land Grading.
3. Runoff from the stockpile area must drain to a suitable sediment control practice.
4. Access the stockpile area from the upgrade side.
5. Clear water runoff into the stockpile area must be minimized by use of a diversion device such as an earth dike, temporary swale or diversion fence. Provisions must be made for discharging concentrated flow in a non-erosive manner.
6. Where runoff concentrates along the toe of the stockpile fill, an appropriate erosion/sediment control practice must be used to intercept the discharge.
7. Stockpiles must be stabilized in accordance with the 3/7 day stabilization requirement as well as Standard B-4-1 Incremental Stabilization and Standard B-4-4 Temporary Stabilization.
8. If the stockpile is located on an impervious surface, a liner should be provided below the stockpile to facilitate cleanup. Stockpiles containing contaminated material must be covered with impermeable sheeting.

Maintenance

The stockpile area must continuously meet the requirements for Adequate Vegetative Establishment in accordance with Section B-4 Vegetative Stabilization. Side slopes must be maintained at no steeper than a 2:1 ratio. The stockpile area must be kept free of erosion. If the vertical height of a stockpile exceeds 20 feet for 2:1 slopes, 30 feet for 3:1 slopes, or 40 feet for 4:1 slopes, benching must be provided in accordance with Section B-3 Land Grading.

STANDARDS AND SPECIFICATIONS FOR SEEDING AND MULCHING (B-4-3)

Definition

The application of seed and mulch to establish vegetative cover.

Purpose

To protect disturbed soils from erosion during and at the end of construction.

Conditions Where Practice Applies

To the surface of all perimeter controls, slopes, and any disturbed area not under active grading.

Criteria

A. Seeding
1. Specifications
a. All seed must meet the requirement of the Maryland State Seed Law. All seed must be subject to re-testing by a recognized seed laboratory. All seed used must have been tested within the 6 months immediately preceding the date of sowing such material on any project. Refer to Table B.4 regarding the quality of seed. Seed tags must be available upon request to the inspector to verify type of seed and seeding rate.
b. Mulch alone may be applied between the fall and spring seeding dates only if the ground is frozen. The appropriate seeding mixture must be applied when the ground thaws.
c. Inoculants: The inoculant for treating legume seed in the seed mixtures must be a pure culture of nitrogen fixing bacteria prepared specifically for the species. Inoculants must not be used later than the date indicated on the container. Add fresh inoculants as directed on the package. Use four times the recommended rate when hydroseeding. Note: It is very important to keetp inoculant as cook as possible until used. Temperatures above 75 to 80 degrees Fahrenheit can weaken bacteria and make the inoculant less effective.
d. Sod or seed must not be placed on soil which has been treated with soil sterilants or chemicals used for weedcontrol until sufficient time has elapsed (14 days min.) to permit dissipation of phyto-toxic materials.

2. Application
a. Dry Seeding: This includes use of conventional drop or broadcast spreaders.
i. Incorporate seed into the subsoil at the rates prescribed on Temporary Seeding Table B.1, Permanent Seeding Table B.3, or site-specific seeding summaries.
ii. Apply seed in two directions, perpendicular to each other. Apply half the seeding rate in each direction. Roll the seeded area with weighted roller to provide good seed to soil contact.
b. Drill or Cultipacker Seeding: Mechanized seeders that apply and cover seed with soil.
i. Cultipacking seeders are required to bury the seed in such a fashion as to provide at least 1/4 inch of soil covering. Seedbed must be firm after planting.
ii. Apply seed in two directions, perpendicular to each other. Apply half the seeding rate in each direction.
c. Hydroseeding: Apply seed uniformly with hydroseeder (slurry includes seed and fertilizer).
i. If fertilizer is being applied at the time of seeding, the application rates should not exceed the following: nitrogen, 100 pounds per acre total of soluble nitrogen; P_2O_5 (phosphorus), 200 pounds per acre; K_2O (potassium), 200 pounds per acre.
ii. Lime: Use only ground agricultural limestone (up to 3 tons per acre may be applied by hydroseeding). Normally, not more than 2 tons are applied by hydroseeding at any one time. Do not use burnt or hydrated lime when hydroseeding.
iii. Mix seed and fertilizer on site and seed immediately and without interruption.
iv. When hydroseeding do not incorporate seed into the soil.

B. Mulching
1. Mulch Materials (in order of preference)
a. Straw consisting of thoroughly threshed wheat, rye, oat, or barley and reasonably bright in color. Straw is to be free of noxious weed seeds as specified in the Maryland Seed Law and not musty, moldy, caked, decayed, or excessively dusty. Note: Use only sterile straw mulch in areas where one species of grass is desired.
b. Wood Cellulose Fiber Mulch (WCFM) consisting of specially prepared wood cellulose processed into uniform fibrous physical state.
i. WCFM is to be dyed green or contain a green dye in the package that will provide an appropriate colot to facilitate visual inspection of the uniformly spread slurry.
ii. WCFM, including dye, must contain no germination or growth inhibiting factors.
iii. WCFM materials are to be manufactured and processed in such a manner that the wood cellulose fiber mulch will remain in uniform suspension in water under agitation and will blend with seed, fertilizer and other additives to form a homogeneous slurry. The mulch material must form a blotter-like ground cover, on application, having moisture absorption and percolation properties and must cover and hold grass seed in contact with the soil without inhibiting the growth of the grass seedlings.
iv. WCFM material must not contain elements or compounds at concentration levels that will by phyto-toxic.
v. WCFM must conform to the following physical requirements: fiber length of approximately 10 millimeters, diameter approximately 1 millimeter, pH range of 4.0 to 8.5, ash content of 1.6 percent maximum and water holding capacity of 90 percent minimum.
2. Application
a. Apply mulch to all seeded areas immediately after seeding.
b. When straw mulch is used, spread it over all seeded areas at the rate of 2 tons per acre to a uniform loose depth of 1 to 2 inches. Apply mulch to achieve a uniform distribution and depth so that the soil surface is not exposed. When using a mulch anchoring tool, increase the application rate to 2.5 tons per acre.
c. Wood cellulose fiber used as mulch must be applied to a net dry weight of 1500 pounds per acre. Mix the wood cellulose fiber with water to attain a mixture with a maximum of 50 pounds of wood cellulose fiber per 100 gallons of water.
3. Anchoring
a. Perform mulch anchoring immediately following application of mulch to minimize loss by wind or water. This may be done by one of the following methods (listed by preference), depending upon the size of the area and erosion hazard:
i. A mulch anchoring tool is a tractor drawn implement designed to punch and anchor mulch into the soil surface a minimum of 2 inches. This practice is most effective on large areas, but is limited to flatter slopes where equipment can operate safely. If used on sloping land, this practice should follow the contour.
ii. Wood cellulose fiber may be used for anchoring straw. Apply the fiber binder at a net dry weight of 750 pounds per acre. Mix the wood cellulose fiber with water at a maximum of 50 pounds of wood cellulose fiber per 100 gallons of water.
iii. Synthetic binders such as Acrylic DLR (Agro-Tack), DCA-70, Petroset, Terra Tax II, Terra Tack AR or other approved equal may be used. Follow application rates as specified by the manufacturer. Application of liquid binders needs to be heavier at the edges where wind catches mulch, such as in valleys and on crests of banks. Use of asphalt binders is strictly prohibited.
iv. Lightweight plastic netting may be stapled over the mulch according to manufacturer recommendations. Netting is usually available in rolls 4-15 feet wide and 300 to 3,000 feet long.

HOWARD SOIL CONSERVATION DISTRICT STANDARD SEDIMENT CONTROL NOTES

1) A MINIMUM OF 48 HOURS NOTICE MUST BE GIVEN TO THE HOWARD COUNTY DEPARTMENT OF INSPECTIONS, LICENSES AND PERMITS, SEDIMENT CONTROL DIVISION PRIOR TO THE START OF ANY CONSTRUCTION (410-313-1855).
2) ALL VEGETATIVE AND STRUCTURAL PRACTICES ARE TO BE INSTALLED ACCORDING TO THE PROVISIONS OF THIS PLAN AND ARE TO BE IN CONFORMANCE WITH THE MOST CURRENT MARYLAND STANDARDS AND SPECIFICATIONS FOR SOIL EROSION AND SEDIMENT CONTROL AND REVISIONS THERETO.
3) FOLLOWING INITIAL SOIL DISTURBANCE OR RE-DISTURBANCE, PERMANENT OR TEMPORARY STABILIZATION SHALL BE COMPLETED WITHIN: a) 3 CALENDAR DAYS FOR ALL PERIMETER SEDIMENT CONTROL STRUCTURES, DIKES, PERIMETER SLOPES AND ALL SLOPES GREATER THAN 3:1, b) 7 DAYS AS TO ALL OTHER DISTURBED OR GRADED AREAS ON THE PROJECT SITE.
4) ALL DISTURBED AREAS MUST BE STABILIZED WITHIN THE TIME PERIOD SPECIFIED ABOVE IN ACCORDANCE WITH THE 2011 MARYLAND STANDARDS AND SPECIFICATIONS FOR SOIL EROSION AND SEDIMENT CONTROL FOR PERMANENT SEEDING (SEC. B-4-5), TEMPORARY SEEDING (SEC. B-4-4) AND MULCHING (SEC. B-4-3). TEMPORARY STABILIZATION WITH MULCH ALONE CAN ONLY BE DONE WHEN RECOMMENDED SEEDING DATES DO NOT ALLOW FOR PROPER GERMINATION AND ESTABLISHMENT OF GRASSES.
5) ALL SEDIMENT CONTROL STRUCTURES ARE TO REMAIN IN PLACE AND ARE TO BE MAINTAINED IN OPERATIVE CONDITION UNTIL PERMISSION FOR THEIR REMOVAL HAS BEEN OBTAINED FROM THE HOWARD COUNTY SEDIMENT CONTROL INSPECTOR.
6) SITE ANALYSIS:

TOTAL AREA OF SITE	1.03	ACRES (PUBLIC R/W)
AREA DISTURBED	6.35	ACRES
AREA TO BE ROOFED OR PAVED	1.76	ACRES
AREA TO BE VEGETATIVELY STABILIZED	4.59	ACRES
TOTAL CUT	7,052	CU.YDS.
TOTAL FILL	3,158	CU.YDS.
OFFSITE WASTE/BORROW AREA LOCATION	N/A	

7) ANY SEDIMENT CONTROL PRACTICE THAT IS DISTURBED BY GRADING ACTIVITY FOR PLACEMENT OF UTILITIES MUST BE REPAIRED ON THE SAME DAY OF DISTURBANCE.
8) ADDITIONAL SEDIMENT CONTROL MUST BE PROVIDED, IF DEEMED NECESSARY BY THE HOWARD COUNTY SEDIMENT CONTROL INSPECTOR.
9) ON ALL SITES WITH DISTURBED AREAS IN EXCESS OF 2 ACRES, APPROVAL OF THE INSPECTION AGENCY SHALL BE REQUESTED UPON COMPLETION OF INSTALLATION OF PERIMETER EROSION AND SEDIMENT CONTROLS, BUT BEFORE PROCEEDING WITH ANY OTHER EARTH DISTURBANCE OR GRADING. OTHER BUILDING OR GRADING INSPECTION APPROVALS MAY NOT BE AUTHORIZED UNTIL THIS INITIAL APPROVAL BY THE INSPECTION AGENCY IS MADE.
10) TRENCHES FOR THE CONSTRUCTION OF UTILITIES IS LIMITED TO THREE PIPE LENGTHS OR THAT WHICH SHALL BE BACK-FILLED AND STABILIZED BY THE END OF EACH WORKDAY, WHICHEVER IS SHORTER.
11) ANY CHANGES OR REVISIONS TO THE SEQUENCE OF CONSTRUCTION MUST BE REVIEWED AND APPROVED BY THE PLAN APPROVAL AUTHORITY PRIOR TO PROCEEDING WITH CONSTRUCTION.
12) A PROJECT IS TO BE SEQUENCED SO THAT GRADING ACTIVITIES BEGIN ON ONE GRADING UNIT (MAXIMUM ACREAGE OF 20 ACRE PER GRADING UNIT) AT A TIME. WORK MAY PROCEED TO A SUBSEQUENT GRADING UNIT WHEN AT LEAST 50 PERCENT OF THE DISTURBED AREA IN THE PROCEEDING GRADING UNIT HAS BEEN STABILIZED AND APPROVED BY THE ENFORCEMENT AUTHORITY. UNLESS OTHERWISE SPECIFIED AND APPROVED BY THE APPROVAL AUTHORITY, NO MORE THAN 30 ACRES CUMULATIVELY MAY BE DISTURBED AT A GIVEN TIME.

DETAIL G-2-4 BAFFLE BOARDS

STANDARD SYMBOL BB

BAFFLES ARE REQUIRED TO PROVIDE A FLOW LENGTH BETWEEN INFLOW POINT AND OUTLET EQUAL TO TWICE THE EFFECTIVE TRAP/BASIN WIDTH.

TOP OF BAFFLES EL. 100.75

We = $(A/2)^{.5}$ = $(2,888/2)^{.5}$ = 38'

Le req'd. = We x 2 = 76'

BAFFLE #1 L1 + L2 = 78'
BAFFLE #2 L1 + L2 + L3 = 79'

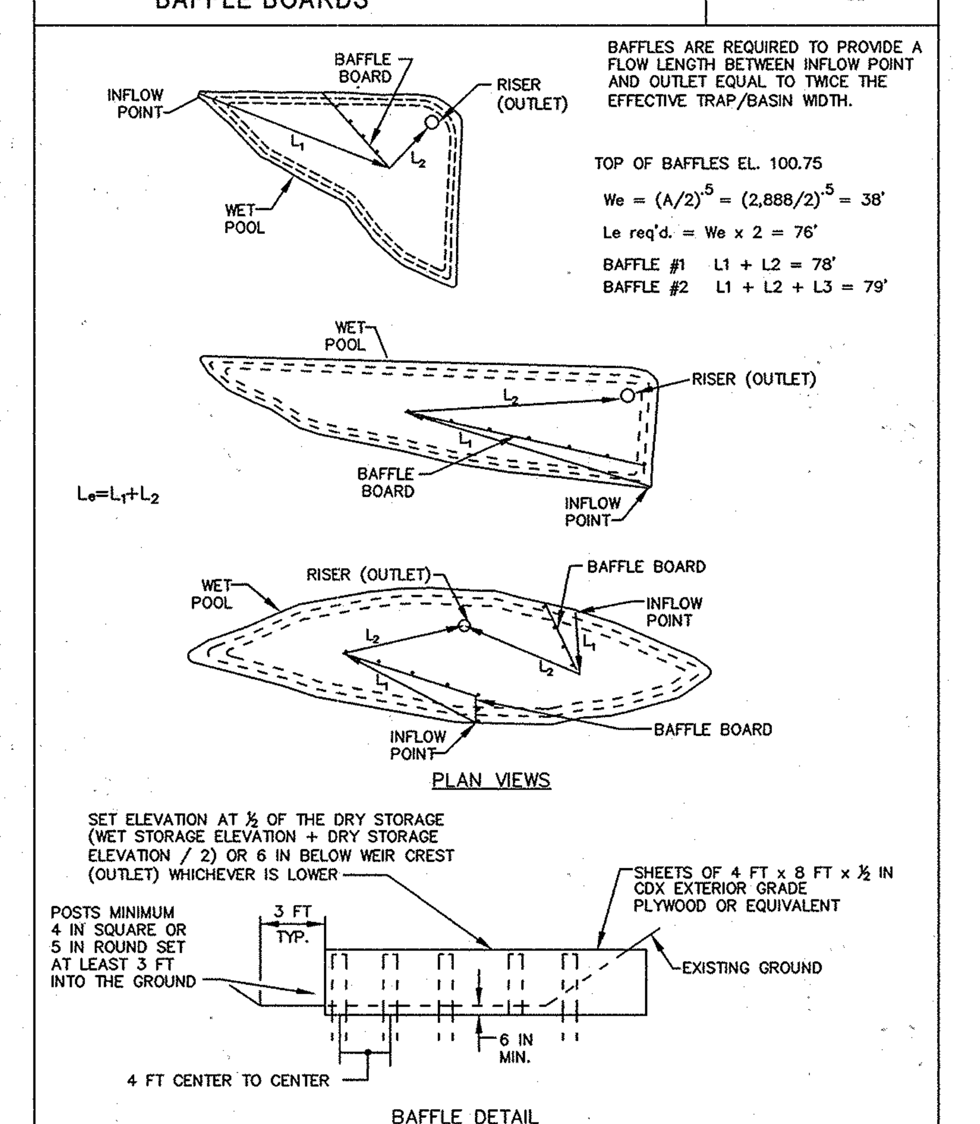

MARYLAND STANDARDS AND SPECIFICATIONS FOR SOIL EROSION AND SEDIMENT CONTROL		
U.S. DEPARTMENT OF AGRICULTURE NATURAL RESOURCES CONSERVATION SERVICE	2011	MARYLAND DEPARTMENT OF ENVIRONMENT WATER MANAGEMENT ADMINISTRATION

SEQUENCE OF CONSTRUCTION

1. OBTAIN GRADING PERMITS. (2 WEEKS)

2. NOTIFY "MISS UTILITY" AT LEAST 48 HOURS BEFORE BEGINNING ANY WORK AT 1-800-257-7777. NOTIFY HOWARD COUNTY OFFICE OF CONSTRUCTION/INSPECTION DIVISION AT 410-313-1870 AT LEAST 24 HOURS BEFORE STARTING ANY WORK. IN ADDITION, NOTIFY AT&T PRIOR TO ANY ACTIVITY WITHIN THEIR EASEMENT.

3. INSTALL STABILIZED CONSTRUCTION ENTRANCES, SILT FENCE & SUPER-SILT FENCE WHERE SHOWN ON THE PLANS. CLEAR AND GRUB WHERE NECESSARY FOR ROADWAY CONSTRUCTION. (1 WEEK)

4. INSTALL STONE OUTLET SEDIMENT TRAP No. 1. (1 WEEK)

5. INSTALL REMAINING PERIMETER SEDIMENT CONTROL MEASURES AS SHOWN. (3 DAYS)

6. STABILIZE ALL DISTURBED AREAS WITH TEMPORARY SEEDING. CONTACT THE COUNTY SEDIMENT EROSION CONTROL INSPECTOR BEFORE PROCEEDING. (2 DAYS)

7. INSTALL STORM DRAIN LOCATED IN CROWLEY STREET FROM I-5/I-6 TO M-4 TO EXISTING MANHOLE ALONG WITH INLETS I-1 THRU I-4 AND PIPE FROM M-3 TO M-2. (1 WEEK)

8. INSTALL STORM DRAIN ALONG BANBURY DRIVE FROM I-12/I-11 TO M-9 TO M-6 INCLUDING I-9, I-10 AND M-8. INSTALL STORM DRAIN FROM I-7/I-8 TO M-7 TO M-6. INSTALL M-6 TO M-5 AND PLACE TEMPORARY FLEXIBLE PIPE FROM M-5 TO S.O.S.T. #1. (2 WEEKS)

9. GRADE SITE TO MASS GRADING CONTOURS AND GRADE ROADWAYS TO SUB BASE. (GRADING SHALL BE HELD TO THE ROAD RIGHT OF WAY AREAS WHILE SEDIMENT CONTROLS AND STORM DRAIN ARE INSTALLED, THEN GRADING FOR THE REMAINDER OF THE SITE CAN CONTINUE. (8 WEEKS)

10. STABILIZE ALL DISTURBANCE WITH TEMPORARY SEEDING. RECEIVE PERMISSION TO CONTINUE FROM THE EROSION AND SEDIMENT CONTROL INSPECTOR. (2 DAYS)

11. WATER LINE AND SEWER LINE CONSTRUCTION FOR BANBURY DRIVE AND CROWLEY STREET. (3 WEEKS)

12. ONCE STORM DRAINS ARE INSTALLED, PLACE STANDARD INLET PROTECTION AT THE INLETS AS SHOWN IN CROWLEY STREET. WRAP ALL THE INLETS WITH SUPER-SILT FENCE. THE CONSTRUCTION OF THE FILTER MEDIA, UNDERDRAIN AND PLANTINGS FOR EACH BIO-RETENTION CELL SHALL BE DELAYED UNTIL THE CONTRIBUTING DRAINAGE AREA IS PERMANENTLY STABILIZED. PLACE ROADWAY SUB-BASE WITHIN CROWLEY STREET. PAVE CROWLEY STREET AND ASSOCIATED UP TO THE INTERMEDIATE SURFACE LAYER WITHIN THE P-4 PAVING SECTION. SEE R-2.01 OF THE HOWARD COUNTY DESIGN MANUAL VOLUME IV. (1 WEEK)
NOTE: FUTURE SITE PLANS WILL PROTECT BIO-RETENTION FACILITIES WITH SILT FENCE AS WELL.

13. INSTALL WATER LINE AND SEWER LINE PER PLAN FOR BANBURY DRIVE. THE CONSTRUCTION OF THE FILTER MEDIA, UNDERDRAIN AND PLANTINGS FOR EACH BIO-RETENTION CELL SHALL BE DELAYED UNTIL THE CONTRIBUTING DRAINAGE AREA IS PERMANENTLY STABILIZED. (2 WEEKS)
NOTE: FUTURE SITE PLANS WILL PROTECT BIO-RETENTION FACILITIES WITH SILT FENCE AS WELL.

14. INSTALL SUB-BASE WITHIN BANBURY DRIVE. PAVE BANBURY DRIVE UP TO THE INTERMEDIATE SURFACE LAYER WITHIN THE P-4 SECTION. SEE R-2.01 OF HOWARD COUNTY DESIGN MANUAL VOLUME IV. (1 WEEK)

15. INSTALL BASE COURSE OF PAVING FOR BANBURY DRIVE AND CROWLEY STREET. (2 WEEKS)

16. STABILIZE ALL DISTURBED AREAS THAT DRAIN ONTO BANBURY DRIVE WITH PERMANENT SEEDING. INSTALL THE PROPOSED MICRO BIO-RETENTION FACILITIES INCLUDING THE FILTER MEDIA AND UNDERDRAINS LOCATED OUTSIDE OF THE ROADWAY. REMOVE TEMPORARY PIPE AND INSTALL OUTFALL FROM M-5 TO S-1. (3 WEEKS)

17. INSTALL THE PROPOSED SWM DEVICES ALONG CROWLEY STREET. ONCE THIS AREA IS STABILIZED, REMOVE THE INLET PROTECTION LOCATED AROUND THE INLETS. (4 DAYS)

18. NOTE: REMOVAL OF THE PERIMETER SEDIMENT CONTROL FEATURES AND BASINS SHALL BE COORDINATED WITH FUTURE SITE PLANS BEFORE THE FINAL SWM CONVERSIONS TAKE PLACE AS SHOWN ON THIS PLAN.

19. PROVIDE PERMANENT SEEDING TO ANY DISTURBED AREAS ONSITE AND STABILIZE THE ENTIRE SITE. (3 DAYS)

20. WITH THE APPROVAL OF THE SEDIMENT CONTROL INSPECTOR START REMOVING ANY SEDIMENT CONTROL FEATURES NOT REQUIRED TO REMAIN FOR FUTURE SITE PLAN PHASES AND STABILIZE THE AREAS WITH PERMANENT SEEDING. (1 WEEK)

21. NOTE CONTRACTOR SHALL PUMP THE SEDIMENT TRAP COMPLETELY DRY THROUGH A FILTERING DEVICE TO A CLEAN WATER OUTFALL WITHIN 24 HOURS FOLLOWING ANY RAINFALL EVENT.

NOTE: CONTRACTOR SHALL CLEAN AND RESTORE THE RECEIVING PONDS OF ANY AND ALL SEDIMENT, TO THEIR ORIGINALLY DESIGNED GRADE.

NOTE: THE CONTRACTOR SHALL INSPECT AND PROVIDE NECESSARY MAINTENANCE ON ALL SEDIMENT AND EROSION CONTROL STRUCTURES SHOWN HEREON AFTER EACH RAINFALL AND ON A DAILY BASIS. REMOVE SEDIMENT FROM STONE OUTLET SEDIMENT TRAP #1 WHEN CLEANOUT ELEVATIONS ARE REACHED. ALL SEDIMENT MUST BE PLACED UPSTREAM OF AN APPROVED BASIN DEVICE.

NOTE: ALL CONSTRUCTION WASTE MUST BE MANAGED IN ACCORDANCE WITH THE CONSTRUCTION WASTE MANAGEMENT PLAN.

ENGINEER'S CERTIFICATE

I Hereby Certify That This Plan For Erosion And Sediment Control Represents A Practical And Workable Plan Based On My Personal Knowledge Of The Site Conditions And That It Was Prepared In Accordance With The Requirements Of The Howard Soil Conservation District.

Signature Of Engineer — 6/15/15 Date

DEVELOPER'S CERTIFICATE

"I/We Certify That All Development And Construction Will Be Done According To This Plan Of Development And Plan For Erosion And Sediment Control And That All Responsible Personnel Involved In The Construction Project Will Have A Certificate Of Attendance At A Department Of Natural Resources Approved Training Program For The Control Of Sediment And Erosion Before Beginning The Project. I Also Authorize Periodic On-Site Inspection By The Howard Soil Conservation District Or Their Authorized Agents, As Are Deemed Necessary."

Signature Of Developer — 6/17/16 Date

Approved: This Development Is Approved For Erosion And Sediment Control By The Howard Soil Conservation District.

District Howard Soil Conservation Dist. — 6/23/15 Date

Approved: Department Of Planning And Zoning

Chief, Division Of Land Development — 11-15-15 Date

Chief, Development Engineering Division — 7.15.14 Date

Approved: Howard County Department Of Public Works

Chief, Bureau Of Highways — 7/1/15 Date

REVISIONS

NO.	DESCRIPTION	DATE

DETAIL C-1 EARTH DIKE

STANDARD SYMBOL A-1
PLACE DESIGNATION (e.g. A-1) ON FLOW CHANNEL SIDE OF DIKE.

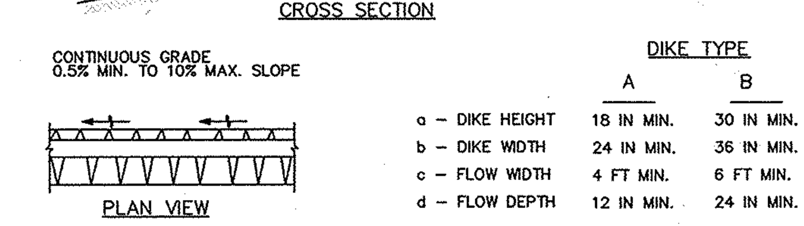

CROSS SECTION

CONTINUOUS GRADE 0.5% MIN. TO 10% MAX. SLOPE

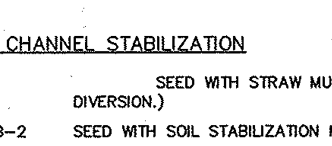

PLAN VIEW

DIKE TYPE

	A	B
a - DIKE HEIGHT	18 IN MIN.	30 IN MIN.
b - DIKE WIDTH	24 IN MIN.	36 IN MIN.
c - FLOW WIDTH	4 FT MIN.	6 FT MIN.
d - FLOW DEPTH	12 IN MIN.	24 IN MIN.

FLOW CHANNEL STABILIZATION

A-1 SEED WITH STRAW MULCH AND TACK. (NOT ALLOWED FOR CLEAR WATER DIVERSION.)

A-2/B-2 SEED WITH SOIL STABILIZATION MATTING OR LINE WITH SOD.

A-3/B-3 4 TO 7 INCH STONE OR EQUIVALENT RECYCLED CONCRETE PRESSED INTO SOIL A MINIMUM OF 7 INCHES AND FLUSH WITH GROUND.

CONSTRUCTION SPECIFICATIONS

1. REMOVE AND DISPOSE OF ALL TREES, BRUSH, STUMPS, OBSTRUCTIONS, AND OTHER OBJECTIONABLE MATERIAL SO AS NOT TO INTERFERE WITH PROPER FUNCTION OF EARTHDIKE.
2. EXCAVATE OR SHAPE EARTH DIKE TO LINE, GRADE, AND CROSS SECTION AS SPECIFIED. BANK PROJECTIONS OR OTHER IRREGULARITIES ARE NOT ALLOWED.
3. COMPACT FILL.
4. CONSTRUCT FLOW CHANNEL ON AN UNINTERRUPTED, CONTINUOUS GRADE, ADJUSTING THE LOCATION DUE TO FIELD CONDITIONS AS NECESSARY TO MAINTAIN POSITIVE DRAINAGE.
5. PROVIDE OUTLET PROTECTION AS REQUIRED ON APPROVED PLAN.
6. STABILIZE EARTH DIKE WITHIN THREE DAYS OF INSTALLATION. STABILIZE FLOW CHANNEL FOR CLEAR WATER DIVERSION WITHIN 24 HOURS OF INSTALLATION.
7. MAINTAIN LINE, GRADE, AND CROSS SECTION. REMOVE ACCUMULATED SEDIMENT AND DEBRIS, AND MAINTAIN POSITIVE DRAINAGE. KEEP EARTH DIKE AND POINT OF DISCHARGE FREE OF EROSION, AND CONTINUOUSLY MEET REQUIREMENTS FOR ADEQUATE VEGETATIVE ESTABLISHMENT IN ACCORDANCE WITH SECTION B-4 VEGETATIVE STABILIZATION.
8. UPON REMOVAL OF EARTH DIKE, GRADE AREA FLUSH WITH EXISTING GROUND. WITHIN 24 HOURS OF REMOVAL STABILIZE DISTURBED AREA WITH TOPSOIL, SEED, AND MULCH, OR AS SPECIFIED ON APPROVED PLAN.

MARYLAND STANDARDS AND SPECIFICATIONS FOR SOIL EROSION AND SEDIMENT CONTROL		
U.S. DEPARTMENT OF AGRICULTURE NATURAL RESOURCES CONSERVATION SERVICE	2011	MARYLAND DEPARTMENT OF ENVIRONMENT WATER MANAGEMENT ADMINISTRATION

FISHER, COLLINS & CARTER, INC.
CIVIL ENGINEERING CONSULTANTS & LAND SURVEYORS
CENTENNIAL SQUARE OFFICE PARK - 10272 BALTIMORE NATIONAL PIKE
ELLICOTT CITY, MARYLAND 21042
(410) 461 - 2855

I:\2009\09014\dwg\Finals - Phase Four\09014 sheet 11-12 sed con details.dwg, 6/12/2015 10:41:17 AM, 1:1

Owner
Board Of Education Of Howard County, Maryland
c/o Dr. Renee A. Foose, Ed.D, Superintendent
10910 Maryland Route 108
Ellicott City, Maryland 21042
Ph# 410-313-6600

Owner
Oxford Square Master Association, Inc.
2330 West Joppa Road
Lutherville, Maryland 21093
Ph# 410-296-3800

Owner
Kellogg-CCP, LLC
c/o David P. Scheffenacker, Jr., Managing Member
2330 West Joppa Road, Suite 190
Lutherville, Maryland 21093-4614
Ph# 410-296-3800

Owner
U.S. Home Corporation, D/B/A Lennar
c/o Joseph Fortino, Vice President
10211 Wincopin Circle
Suite 300
Columbia, Maryland 21044
Ph# 410-423-0460

Developer
Preston • Scheffenacker Properties
2330 West Joppa Road, Suite 190
Lutherville, Maryland 21093-4614
Ph# 410-296-3800

STATE OF MARYLAND — ALDO MICHAEL VITUCCI — PROFESSIONAL ENGINEER

ALDO M. VITUCCI, P.E. — 6/15/15 DATE
"Professional Certification. I hereby certify that these documents were prepared by me, and that I am a duly Licensed Professional Engineer under the laws of the State of Maryland, License No. 20748, Expiration Date 2-22-17."

SEDIMENT AND EROSION CONTROL NOTES & DETAILS

OXFORD SQUARE

"A Howard County Green Neighborhood"

Parcels 'V' Thru 'C-C' And Open Space Lots 244 And 245

(Being A Resubdivision Of Open Space Lot 1, As Shown On Plats Entitled "Oxford Square, "Green Neighborhood", Parcels 'C' Thru 'L' And Open Space Lots 1 And 2" Recorded As Plat Nos. 22390 Thru 22395; A Resubdivision Of Parcel 'G', As Shown On Plats Entitled "Oxford Square, "Green Neighborhood" Resubdivision Plat-Parcel 'M' And Revision Plat-Parcels 'C', 'E', 'F', 'G', 'I', 'J', And 'K' Recorded As Plat Nos. 22856 Thru 22859; And A Resubdivision Of Parcels 'E', 'S' And 'T', As Shown On Plats Entitled "Oxford Square, "Green Neighborhood", Parcels 'R', 'S' And 'T' And Revision Plat-Parcel 'E'" Recorded As Plat Nos. 23103 Thru 23105)

Zoned: TOD
Tax Map: 38, Parcel: 1003, Grid: 20 And Tax Map: 44, Parcel P/O 4 & 5, Grid 1
First Election District - Howard County, Maryland
Date: June 12, 2015

F-15-008

ENGINEER'S CERTIFICATE

I Hereby Certify That This Plan For Erosion And Sediment Control Represents A Practical And Workable Plan Based On My Personal Knowledge Of The Site Condition And That It Was Prepared In Accordance With The Requirements Of The Howard Soil Conservation District.

Signature Of Engineer — 6/15/15 Date

DEVELOPER'S CERTIFICATE

"I/We Certify That All Development And Construction Will Be Done According To This Plan Of Development And Plan For Erosion And Sediment Control And That All Responsible Personnel Involved In The Construction Project Will Have A Certificate Of Attendance At A Department Of Natural Resources Approved Training Program For The Control Of Sediment And Erosion Before Beginning The Project. I Also Authorize Periodic On-Site Inspection By The Howard Soil Conservation District Or Their Authorized Agents, As Are Deemed Necessary."

Signature Of Developer — 6/12/15 Date

Approved: This Development Is Approved For Erosion And Sediment Control By The Howard Soil Conservation District.

District Howard Soil Conservation Dist. — 6/23/15 Date

Approved: Department Of Planning And Zoning

Chief, Division Of Land Development — 11-19-15 Date

Chief, Development Engineering Division — 7.14.15 Date

Approved: Howard County Department Of Public Works

Chief, Bureau Of Highways — 7/2/15 Date

REVISIONS

NO.	DESCRIPTION	DATE

DETAIL E-1 SILT FENCE

STANDARD SYMBOL: ├──SF──┤

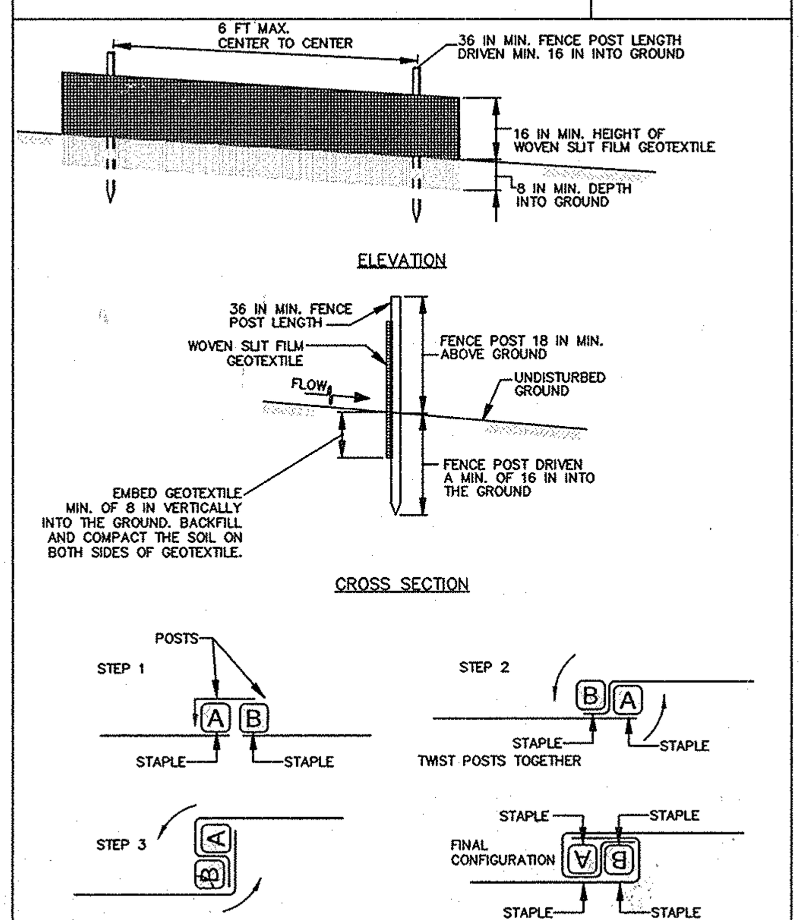

CONSTRUCTION SPECIFICATIONS

1. USE WOOD POSTS 1¾ X 1¾ ± ⅛ INCH (MINIMUM) SQUARE CUT OF SOUND QUALITY HARDWOOD. AS AN ALTERNATIVE TO WOODEN POST USE STANDARD "T" OR "U" SECTION STEEL POSTS WEIGHING NOT LESS THAN 1 POUND PER LINEAR FOOT.
2. USE 36 INCH MINIMUM POSTS DRIVEN 16 INCH MINIMUM INTO GROUND NO MORE THAN 6 FEET APART.
3. USE WOVEN SLIT FILM GEOTEXTILE AS SPECIFIED IN SECTION H-1 MATERIALS AND FASTEN GEOTEXTILE SECURELY TO UPSLOPE SIDE OF FENCE POSTS WITH WIRE TIES OR STAPLES AT TOP AND MID-SECTION.
4. PROVIDE MANUFACTURER CERTIFICATION TO THE AUTHORIZED REPRESENTATIVE OF THE INSPECTION/ENFORCEMENT AUTHORITY SHOWING THAT THE GEOTEXTILE USED MEETS THE REQUIREMENTS IN SECTION H-1 MATERIALS.
5. EMBED GEOTEXTILE A MINIMUM OF 8 INCHES VERTICALLY INTO THE GROUND. BACKFILL AND COMPACT THE SOIL ON BOTH SIDES OF FABRIC.
6. WHERE TWO SECTIONS OF GEOTEXTILE ADJOIN: OVERLAP, TWIST, AND STAPLE TO POST IN ACCORDANCE WITH THIS DETAIL.
7. EXTEND BOTH ENDS OF THE SILT FENCE A MINIMUM OF FIVE HORIZONTAL FEET UPSLOPE AT 45 DEGREES TO THE MAIN FENCE ALIGNMENT TO PREVENT RUNOFF FROM GOING AROUND THE ENDS OF THE SILT FENCE.
8. REMOVE ACCUMULATED SEDIMENT AND DEBRIS WHEN BULGES DEVELOP IN SILT FENCE OR WHEN SEDIMENT REACHES 25% OF FENCE HEIGHT. REPLACE GEOTEXTILE IF TORN. IF UNDERMINING OCCURS, REINSTALL FENCE.

MARYLAND STANDARDS AND SPECIFICATIONS FOR SOIL EROSION AND SEDIMENT CONTROL

U.S. DEPARTMENT OF AGRICULTURE NATURAL RESOURCES CONSERVATION SERVICE | 2011 | MARYLAND DEPARTMENT OF ENVIRONMENT WATER MANAGEMENT ADMINISTRATION

DETAIL G-1-2 STONE/RIPRAP OUTLET SEDIMENT TRAP ST-II

STANDARD SYMBOL: ST-II

MAXIMUM DRAINAGE AREA = 10 ACRES

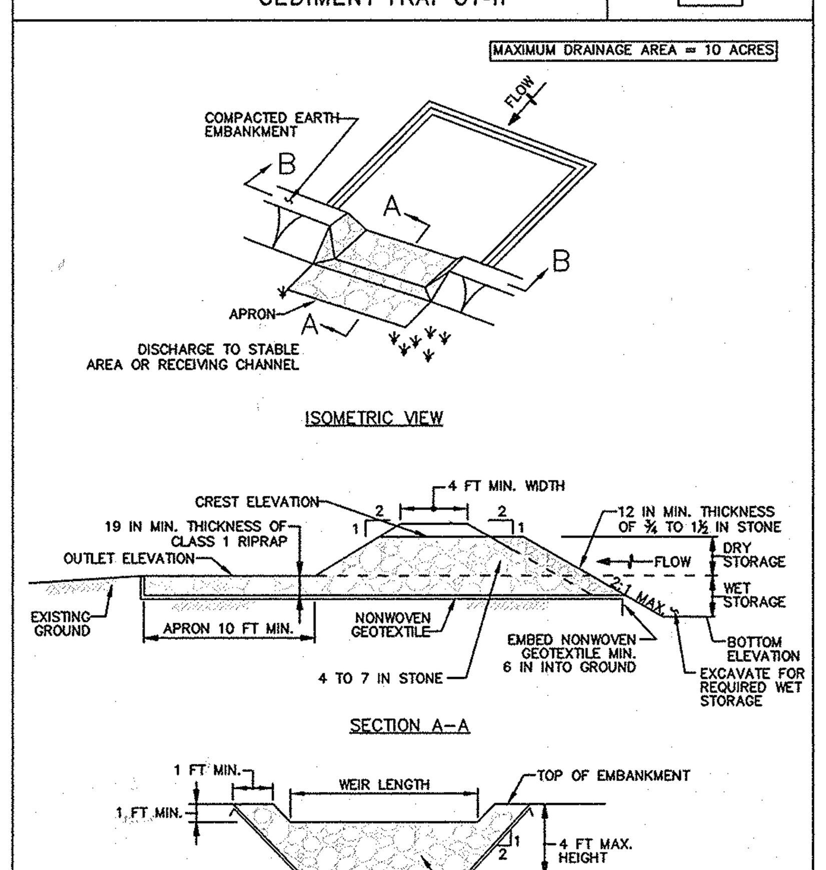

CONSTRUCTION SPECIFICATIONS

1. CONSTRUCT TRAP IN SUCH A MANNER THAT EROSION AND WATER POLLUTION ARE AVOIDED.
2. CLEAR, GRUB, AND STRIP ANY VEGETATION AND ROOT MAT FROM THE AREA UNDER THE EMBANKMENT AND TRAP BOTTOM.
3. USE FILL MATERIAL FREE OF ROOTS, WOODY VEGETATION, OVERSIZED STONES, ROCKS, ORGANIC MATERIAL, OR OTHER OBJECTIONABLE MATERIAL FOR THE EMBANKMENT.
4. CONSTRUCT TOP OF EMBANKMENT 1 FOOT MINIMUM ABOVE WEIR CREST. COMPACT THE EMBANKMENT BY TRAVERSING WITH EQUIPMENT WHILE IT IS BEING CONSTRUCTED.
5. MAKE ALL CUT AND FILL SLOPES 2:1 OR FLATTER.
6. PLACE NONWOVEN GEOTEXTILE, AS SPECIFIED IN SECTION H-1 MATERIALS, OVER THE BOTTOM AND SIDES OF OUTLET AND APRON PRIOR TO PLACEMENT OF RIPRAP. OVERLAP SECTIONS OF GEOTEXTILE AT LEAST 1 FOOT WITH THE SECTION NEARER TO THE TRAP PLACED ON TOP. EMBED GEOTEXTILE AT LEAST 6 INCHES INTO EXISTING GROUND AT ENTRANCE OF OUTLET CHANNEL.
7. USE CLEAN 4 TO 7 INCH RIPRAP TO CONSTRUCT THE WEIR. USE CLASS I RIPRAP FOR THE APRON. USE OF RECYCLED CONCRETE EQUIVALENT IS ACCEPTABLE.
8. PLACE 1 FOOT OF CLEAN ¾ TO 1½ INCH STONE OR EQUIVALENT RECYCLED CONCRETE ON THE UPSTREAM FACE OF THE WEIR.
9. CONSTRUCT AND MAINTAIN THE OUTLET ACCORDING TO APPROVED PLAN, AND IN SUCH A MANNER THAT EROSION AT OR BELOW THE OUTLET DOES NOT OCCUR.
10. STABILIZE THE EMBANKMENT AND INTERIOR SLOPES WITH SEED AND MULCH. STABILIZE POINTS OF CONCENTRATED INFLOW AS SHOWN ON APPROVED PLAN.
11. REMOVE SEDIMENT AND RESTORE TRAP TO ORIGINAL DIMENSIONS WHEN SEDIMENT HAS ACCUMULATED TO CLEANOUT ELEVATION (50% OF WET STORAGE DEPTH). DEPOSIT REMOVED SEDIMENT IN AN APPROVED AREA AND IN SUCH A MANNER THAT IT WILL NOT ERODE. KEEP POINTS OF INFLOW AND OUTFLOW AS WELL AS INTERIOR OF THE TRAP FREE FROM EROSION, AND REMOVE ACCUMULATED DEBRIS. MAINTAIN EMBANKMENTS TO CONTINUOUSLY MEET REQUIREMENTS FOR ADEQUATE VEGETATIVE ESTABLISHMENT IN ACCORDANCE WITH SECTION B-4 VEGETATIVE STABILIZATION. REMOVE ANY TREES, BRUSH, OR OTHER WOODY VEGETATION GROWING ON EMBANKMENT OR NEAR PRINCIPAL SPILLWAY. MAINTAIN LINE, GRADE, AND CROSS SECTION.
12. WHEN DEWATERING TRAP, PASS REMOVED WATER THROUGH AN APPROVED SEDIMENT CONTROL PRACTICE.
13. UPON REMOVAL, GRADE AND STABILIZE THE AREA OCCUPIED BY TRAP.

MARYLAND STANDARDS AND SPECIFICATIONS FOR SOIL EROSION AND SEDIMENT CONTROL

U.S. DEPARTMENT OF AGRICULTURE NATURAL RESOURCES CONSERVATION SERVICE | 2011 | MARYLAND DEPARTMENT OF ENVIRONMENT WATER MANAGEMENT ADMINISTRATION

DETAIL E-9-1 STANDARD INLET PROTECTION

STANDARD SYMBOL: SIP

TYPE A MAXIMUM DRAINAGE AREA = ¼ ACRE
TYPE B MAXIMUM DRAINAGE AREA = 1 ACRE

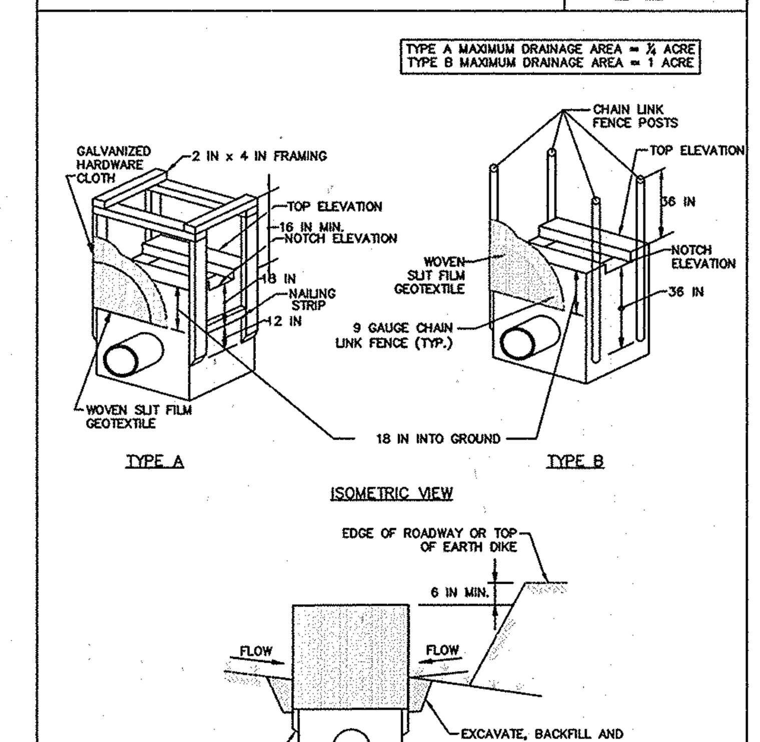

1 OF 2

MARYLAND STANDARDS AND SPECIFICATIONS FOR SOIL EROSION AND SEDIMENT CONTROL

U.S. DEPARTMENT OF AGRICULTURE NATURAL RESOURCES CONSERVATION SERVICE | 2011 | MARYLAND DEPARTMENT OF ENVIRONMENT WATER MANAGEMENT ADMINISTRATION

DETAIL E-9-1 STANDARD INLET PROTECTION

STANDARD SYMBOL: SIP

CONSTRUCTION SPECIFICATIONS

1. USE WOVEN SLIT FILM GEOTEXTILE AS SPECIFIED IN SECTION H-1 MATERIALS.
2. EXCAVATE COMPLETELY AROUND THE INLET TO A DEPTH OF 18 INCHES BELOW THE NOTCH ELEVATION.
3. FOR TYPE A, USE NOMINAL 2 INCH X 4 INCH CONSTRUCTION GRADE LUMBER POSTS, DRIVEN 1 FOOT INTO THE GROUND AT EACH CORNER OF THE INLET. PLACE NAIL STRIPS BETWEEN THE POSTS ON THE ENDS OF THE INLET. ASSEMBLE THE TOP PORTION OF THE 2X4 FRAME AS SHOWN. STRETCH ½ INCH GALVANIZED HARDWARE CLOTH TIGHTLY AROUND THE FRAME AND FASTEN SECURELY. FASTEN GEOTEXTILE SECURELY TO THE HARDWARE CLOTH WITH TIES SPACED EVERY 24 INCHES AT THE TOP AND MID SECTION. EMBED GEOTEXTILE AND HARDWARE CLOTH A MINIMUM OF 18 INCHES BELOW THE WEIR CREST. THE ENDS OF THE GEOTEXTILE MUST MEET AT A POST, BE OVERLAPPED AND FOLDED, THEN FASTENED TO THE POST.

   FOR TYPE B, USE 2⅜ INCH DIAMETER GALVANIZED STEEL POSTS OF 0.095 INCH WALL THICKNESS AND 6 FOOT LENGTH, DRIVEN A MINIMUM OF 36 INCHES BELOW THE WEIR CREST AT EACH CORNER OF THE STRUCTURE. FASTEN 9 GAUGE OR HEAVIER CHAIN LINK FENCE, 42 INCHES IN HEIGHT, SECURELY TO THE FENCE POSTS WITH WIRE TIES. FASTEN GEOTEXTILE SECURELY TO THE CHAIN LINK FENCE WITH TIES SPACED EVERY 24 INCHES AT THE TOP AND MID SECTION. EMBED GEOTEXTILE AND CHAIN LINK FENCE A MINIMUM OF 18 INCHES BELOW THE WEIR CREST.
4. BACKFILL AROUND THE INLET IN LOOSE 4 INCH LIFTS AND COMPACT UNTIL SOIL IS LEVEL WITH THE NOTCH ELEVATION ON THE ENDS AND TOP ELEVATION ON THE SIDES.
5. STORM DRAIN INLET PROTECTION REQUIRES FREQUENT MAINTENANCE. REMOVE ACCUMULATED SEDIMENT AFTER EACH RAIN EVENT TO MAINTAIN FUNCTION AND AVOID PREMATURE CLOGGING. IF INLET PROTECTION DOES NOT COMPLETELY DRAIN WITHIN 24 HOURS AFTER A STORM EVENT, IT IS CLOGGED. WHEN THIS OCCURS, REMOVE ACCUMULATED SEDIMENT AND CLEAN, OR REPLACE GEOTEXTILE AND STONE.

2 OF 2

MARYLAND STANDARDS AND SPECIFICATIONS FOR SOIL EROSION AND SEDIMENT CONTROL

U.S. DEPARTMENT OF AGRICULTURE NATURAL RESOURCES CONSERVATION SERVICE | 2011 | MARYLAND DEPARTMENT OF ENVIRONMENT WATER MANAGEMENT ADMINISTRATION

DETAIL B-1 STABILIZED CONSTRUCTION ENTRANCE

STANDARD SYMBOL: SCE

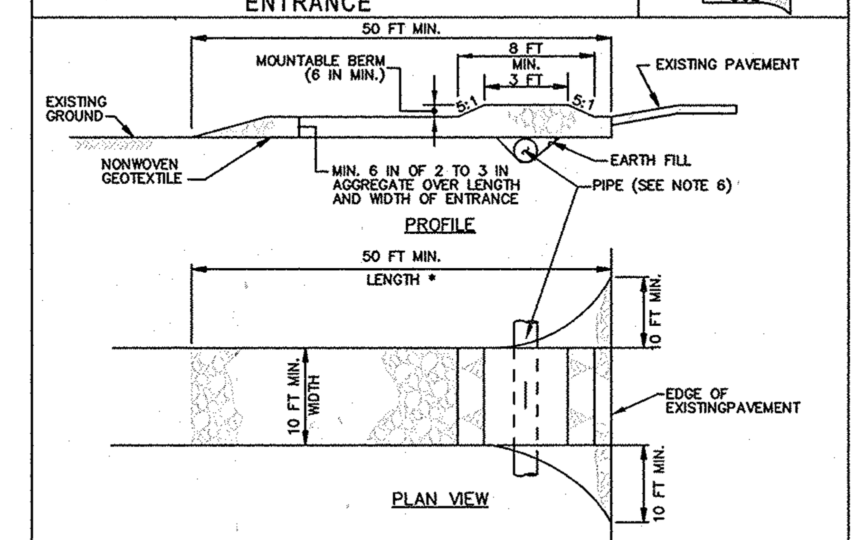

CONSTRUCTION SPECIFICATIONS

1. PLACE STABILIZED CONSTRUCTION ENTRANCE IN ACCORDANCE WITH THE APPROVED PLAN. VEHICLES MUST TRAVEL OVER THE ENTIRE LENGTH OF THE SCE. USE MINIMUM LENGTH OF 50 FEET (*30 FEET FOR SINGLE RESIDENCE LOT). USE MINIMUM WIDTH OF 10 FEET. FLARE SCE 10 FEET MINIMUM AT THE EXISTING ROAD TO PROVIDE A TURNING RADIUS.
2. PIPE ALL SURFACE WATER FLOWING TO OR DIVERTED TOWARD THE SCE UNDER THE ENTRANCE, MAINTAINING POSITIVE DRAINAGE. PROTECT PIPE INSTALLED THROUGH THE SCE WITH A MOUNTABLE BERM WITH 5:1 SLOPES AND A MINIMUM OF 12 INCHES OF STONE OVER THE PIPE. PROVIDE PIPE AS SPECIFIED ON APPROVED PLAN. WHEN THE SCE IS LOCATED AT A HIGH SPOT AND HAS NO DRAINAGE TO CONVEY, A PIPE IS NOT NECESSARY. A MOUNTABLE BERM IS REQUIRED WHEN SCE IS NOT LOCATED AT A HIGH SPOT.
3. PREPARE SUBGRADE AND PLACE NONWOVEN GEOTEXTILE, AS SPECIFIED IN SECTION H-1 MATERIALS.
4. PLACE CRUSHED AGGREGATE (2 TO 3 INCHES IN SIZE) OR EQUIVALENT RECYCLED CONCRETE (WITHOUT REBAR) AT LEAST 6 INCHES DEEP OVER THE LENGTH AND WIDTH OF THE SCE.
5. MAINTAIN ENTRANCE IN A CONDITION THAT MINIMIZES TRACKING OF SEDIMENT. ADD STONE OR MAKE OTHER REPAIRS AS CONDITIONS DEMAND TO MAINTAIN CLEAN SURFACE, MOUNTABLE BERM, AND SPECIFIED DIMENSIONS. IMMEDIATELY REMOVE STONE AND/OR SEDIMENT SPILLED, DROPPED, OR TRACKED ONTO ADJACENT ROADWAY BY VACUUMING, SCRAPING, AND/OR SWEEPING. WASHING ROADWAY TO REMOVE MUD TRACKED ONTO PAVEMENT IS NOT ACCEPTABLE UNLESS WASH WATER IS DIRECTED TO AN APPROVED SEDIMENT CONTROL PRACTICE.

MARYLAND STANDARDS AND SPECIFICATIONS FOR SOIL EROSION AND SEDIMENT CONTROL

U.S. DEPARTMENT OF AGRICULTURE NATURAL RESOURCES CONSERVATION SERVICE | 2011 | MARYLAND DEPARTMENT OF ENVIRONMENT WATER MANAGEMENT ADMINISTRATION

DETAIL B-4-6-C PERMANENT SOIL STABILIZATION MATTING CHANNEL APPLICATION

STANDARD SYMBOL: PSSMC — * lb/ft² (* INCLUDE SHEAR STRESS)

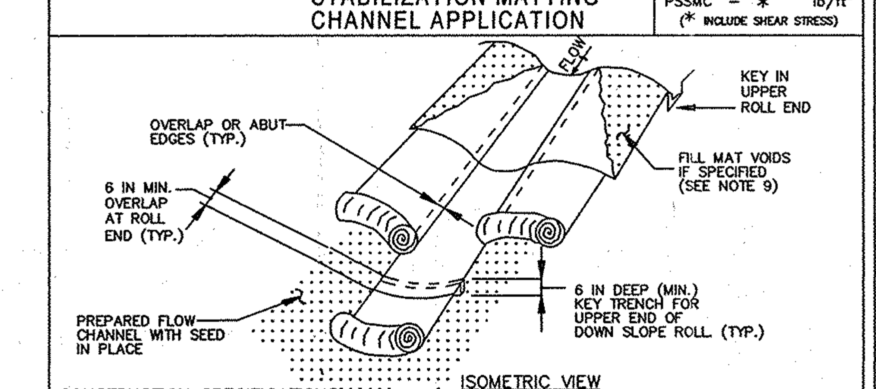

CONSTRUCTION SPECIFICATIONS

1. USE MATTING THAT HAS A DESIGN VALUE FOR SHEAR STRESS EQUAL TO OR HIGHER THAN THE SHEAR STRESS DESIGNATED ON APPROVED PLANS.
2. USE PERMANENT SOIL STABILIZATION MATTING MADE OF OPEN WEAVE SYNTHETIC, NON-DEGRADABLE FIBERS OR ELEMENTS OF UNIFORM THICKNESS AND DISTRIBUTION THROUGHOUT. CHEMICALS USED IN THE MAT MUST BE NON-LEACHING AND NON-TOXIC TO VEGETATION AND SEED GERMINATION AND NON-INJURIOUS TO THE SKIN. IF PRESENT, NETTING MUST BE EXTRUDED PLASTIC WITH A MAXIMUM MESH OPENING OF 2x2 INCHES AND SUFFICIENTLY BONDED OR SEWN ON 2 INCH CENTERS ALONG LONGITUDINAL AXIS OF THE MATERIAL TO PREVENT SEPARATION OF THE NET FROM THE PARENT MATERIAL.
3. SECURE MATTING USING STEEL STAPLES OR WOOD STAKES. STAPLES MUST BE "U" OR "T" SHAPED STEEL WIRE HAVING A MINIMUM GAUGE OF NO. 11 AND NO. 8 RESPECTIVELY. "U" SHAPED STAPLES MUST AVERAGE 1 TO 1 ½ INCHES WIDE AND BE A MINIMUM OF 6 INCHES LONG. "T" SHAPED STAPLES MUST HAVE A MINIMUM 8 INCH MAIN LEG, A MINIMUM 1 INCH SECONDARY LEG, AND MINIMUM 4 INCH HEAD. WOOD STAKES MUST BE ROUGH-SAWN HARDWOOD, 12 TO 24 INCHES IN LENGTH, 1x3 INCH IN CROSS SECTION, AND WEDGE SHAPE AT THE BOTTOM.
4. PERFORM FINAL GRADING, TOPSOIL APPLICATION, SEEDBED PREPARATION, AND PERMANENT SEEDING IN ACCORDANCE WITH SPECIFICATIONS. PLACE MATTING WITHIN 48 HOURS OF COMPLETING SEEDING OPERATIONS, UNLESS END OF WORKDAY STABILIZATION IS SPECIFIED ON THE APPROVED EROSION AND SEDIMENT CONTROL PLAN.
5. UNROLL MATTING IN DIRECTION OF WATER FLOW, CENTERING THE FIRST ROLL ON THE CHANNEL CENTER LINE. WORK FROM CENTER OF CHANNEL OUTWARD WHEN PLACING ROLLS. LAY MATTING SMOOTHLY AND FIRMLY UPON THE SEEDED SURFACE. AVOID STRETCHING THE MATTING.
6. OVERLAP OR ABUT EDGES OF MATTING ROLLS PER MANUFACTURER RECOMMENDATIONS. OVERLAP ROLL ENDS BY 6 INCHES (MINIMUM), WITH THE UPSTREAM MAT OVERLAPPING ON TOP OF THE NEXT DOWNSTREAM MAT.
7. KEY IN THE TOP OF SLOPE END OF MAT 6 INCHES (MINIMUM) BY DIGGING A TRENCH, PLACING THE MATTING ROLL END IN THE TRENCH, STAPLING THE MAT IN PLACE, REPLACING THE EXCAVATED MATERIAL, AND TAMPING TO SECURE THE MAT END IN THE KEY.
8. STAPLE/STAKE MAT IN A STAGGERED PATTERN ON 4 FOOT (MAXIMUM) CENTERS THROUGHOUT AND 2 FOOT (MAXIMUM) CENTERS ALONG SEAMS, JOINTS, AND ROLL ENDS.
9. IF SPECIFIED BY THE DESIGNER OR MANUFACTURER AND DEPENDING ON THE TYPE OF MAT BEING INSTALLED, ONCE THE MATTING IS KEYED AND STAPLED IN PLACE, FILL THE MAT VOIDS WITH TOP SOIL OR GRANULAR MATERIAL AND LIGHTLY COMPACT OR ROLL TO MAXIMIZE SOIL/MAT CONTACT WITHOUT CRUSHING MAT.
10. ESTABLISH AND MAINTAIN VEGETATION SO THAT REQUIREMENTS FOR ADEQUATE VEGETATIVE ESTABLISHMENT ARE CONTINUOUSLY MET IN ACCORDANCE WITH SECTION B-4 VEGETATIVE STABILIZATION.

MARYLAND STANDARDS AND SPECIFICATIONS FOR SOIL EROSION AND SEDIMENT CONTROL

U.S. DEPARTMENT OF AGRICULTURE NATURAL RESOURCES CONSERVATION SERVICE | 2011 | MARYLAND DEPARTMENT OF ENVIRONMENT WATER MANAGEMENT ADMINISTRATION

DETAIL F-1 REMOVABLE PUMPING STATION

STANDARD SYMBOL: ⊠RPS

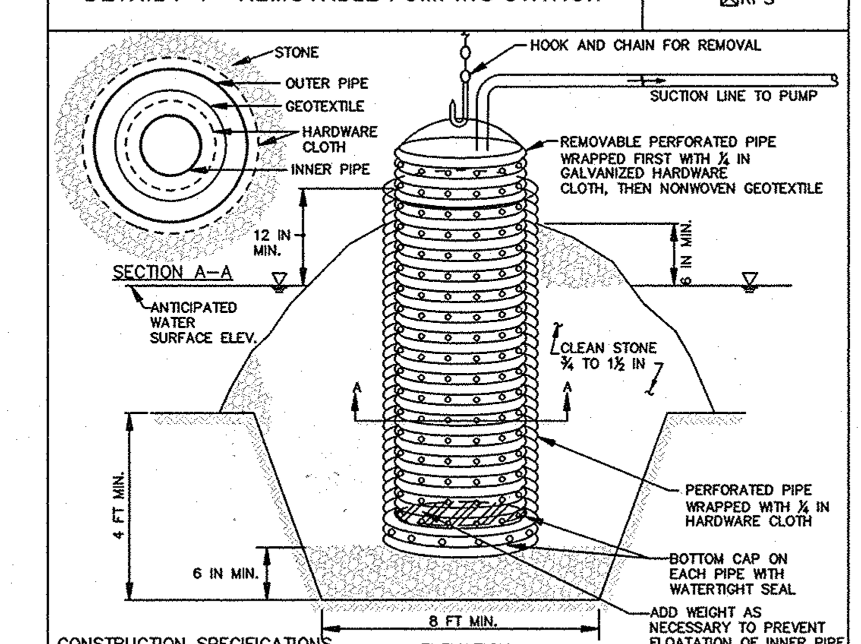

CONSTRUCTION SPECIFICATIONS

1. USE CORRUGATED METAL OR PLASTIC PIPE WITH 1 INCH DIAMETER PERFORATIONS 6 INCHES ON CENTER.
2. USE A MINIMUM 12 INCH DIAMETER INNER PIPE WITH AN OUTER PIPE A MINIMUM 6 INCHES LARGER IN DIAMETER. BOTTOM OF EACH PIPE MUST BE CAPPED WITH WATERTIGHT SEAL.
3. WRAP EACH PIPE WITH ¼ INCH GALVANIZED HARDWARE CLOTH. ON INNER PIPE WRAP NONWOVEN GEOTEXTILE, AS SPECIFIED IN SECTION H-1 MATERIALS, OVER THE HARDWARE CLOTH.
4. EXCAVATE 8 FEET X 8 FEET X 4 FEET DEEP PIT FOR PIPE PLACEMENT. PLACE CLEAN ¾ TO 1½ INCH STONE OR EQUIVALENT RECYCLED CONCRETE, 6 INCHES IN DEPTH PRIOR TO PIPE PLACEMENT.
5. SET TOP OF INNER AND OUTER PIPES MINIMUM 12 INCHES ABOVE ANTICIPATED WATER SURFACE ELEVATION (OR RISER CREST ELEVATION WHEN DEWATERING A BASIN).
6. BACKFILL PIT AROUND THE OUTER PIPE WITH ¾ TO 1½ INCH CLEAN STONE OR EQUIVALENT RECYCLED CONCRETE AND EXTEND STONE A MINIMUM OF 6 INCHES ABOVE ANTICIPATED WATER SURFACE ELEVATION.
7. DISCHARGE TO A STABLE AREA AT A NONEROSIVE RATE.
8. A REMOVABLE PUMPING STATION REQUIRES FREQUENT MAINTENANCE. IF SYSTEM CLOGS, PULL OUT INNER PIPE AND REPLACE GEOTEXTILE. KEEP POINT OF DISCHARGE FREE OF EROSION.

MARYLAND STANDARDS AND SPECIFICATIONS FOR SOIL EROSION AND SEDIMENT CONTROL

U.S. DEPARTMENT OF AGRICULTURE NATURAL RESOURCES CONSERVATION SERVICE | 2011 | MARYLAND DEPARTMENT OF ENVIRONMENT WATER MANAGEMENT ADMINISTRATION

DETAIL D-3-1 RIPRAP INFLOW PROTECTION

STANDARD SYMBOL: RRP

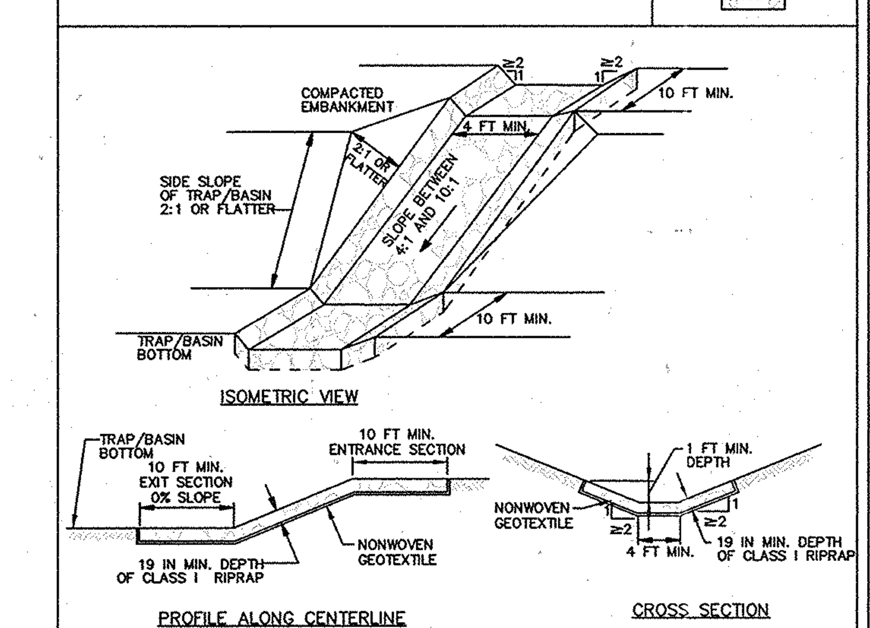

CONSTRUCTION SPECIFICATIONS

1. PROVIDE NONWOVEN GEOTEXTILE, AS SPECIFIED IN SECTION H-1 MATERIALS, UNDER THE BOTTOM AND ALONG SIDES OF ALL RIPRAP.
2. CONSTRUCT INFLOW CHANNEL WITH CLASS I RIPRAP OR EQUIVALENT RECYCLED CONCRETE LINING TO A MINIMUM DEPTH OF 19 INCHES (2 x D_{50}) AND A 1 FOOT DEEP FLOW CHANNEL. INFLOW RIPRAP PROTECTION CHANNEL MUST HAVE A TRAPEZOIDAL CROSS SECTION WITH 2:1 OR FLATTER SIDE SLOPES AND A 4 FOOT MINIMUM BOTTOM WIDTH.
3. INSTALL ENTRANCE AND EXIT SECTIONS AS SHOWN ON THE PROFILE.
4. BLEND RIPRAP INTO EXISTING GROUND.
5. MAINTAIN LINE, GRADE, AND CROSS SECTION. REMOVE ACCUMULATED SEDIMENT AND DEBRIS. KEEP POINTS OF INFLOW AND OUTFLOW FREE OF EROSION.

MARYLAND STANDARDS AND SPECIFICATIONS FOR SOIL EROSION AND SEDIMENT CONTROL

U.S. DEPARTMENT OF AGRICULTURE NATURAL RESOURCES CONSERVATION SERVICE | 2011 | MARYLAND DEPARTMENT OF ENVIRONMENT WATER MANAGEMENT ADMINISTRATION

DETAIL E-3 SUPER SILT FENCE

STANDARD SYMBOL: ├──SSF──┤

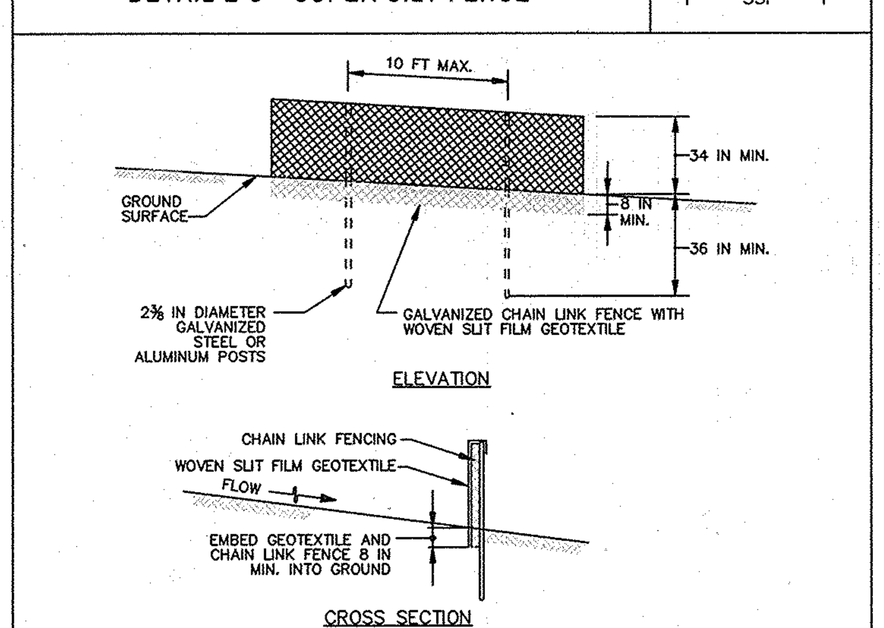

CONSTRUCTION SPECIFICATIONS

1. INSTALL 2⅜ INCH DIAMETER GALVANIZED STEEL POSTS OF 0.095 INCH WALL THICKNESS AND SIX FOOT LENGTH SPACED NO FURTHER THAN 10 FEET APART. DRIVE THE POSTS A MINIMUM OF 36 INCHES INTO THE GROUND.
2. FASTEN 9 GAUGE OR HEAVIER GALVANIZED CHAIN LINK FENCE (2⅜ INCH MAXIMUM OPENING) 42 INCHES IN HEIGHT SECURELY TO THE FENCE POSTS WITH WIRE TIES OR HUG RINGS.
3. FASTEN WOVEN SLIT FILM GEOTEXTILE AS SPECIFIED IN SECTION H-1 MATERIALS, SECURELY TO THE UPSLOPE SIDE OF CHAIN LINK FENCE WITH TIES SPACED EVERY 24 INCHES AT THE TOP AND MID SECTION. EMBED GEOTEXTILE AND CHAIN LINK FENCE A MINIMUM OF 8 INCHES INTO THE GROUND.
4. WHERE ENDS OF THE GEOTEXTILE COME TOGETHER, THE ENDS SHALL BE OVERLAPPED BY 6 INCHES, FOLDED, AND STAPLED TO PREVENT SEDIMENT BY PASS.
5. EXTEND BOTH ENDS OF THE SUPER SILT FENCE A MINIMUM OF FIVE HORIZONTAL FEET UPSLOPE AT 45 DEGREES TO THE MAIN FENCE ALIGNMENT TO PREVENT RUNOFF FROM GOING AROUND THE ENDS OF THE SUPER SILT FENCE.
6. PROVIDE MANUFACTURER CERTIFICATION TO THE INSPECTION/ENFORCEMENT AUTHORITY SHOWING THAT GEOTEXTILE USED MEETS THE REQUIREMENTS IN SECTION H-1 MATERIALS.
7. REMOVE ACCUMULATED SEDIMENT AND DEBRIS WHEN BULGES DEVELOP IN FENCE OR WHEN SEDIMENT REACHES 25% OF FENCE HEIGHT. REPLACE GEOTEXTILE IF TORN. IF UNDERMINING OCCURS, REINSTALL CHAIN LINK FENCING AND GEOTEXTILE.

MARYLAND STANDARDS AND SPECIFICATIONS FOR SOIL EROSION AND SEDIMENT CONTROL

U.S. DEPARTMENT OF AGRICULTURE NATURAL RESOURCES CONSERVATION SERVICE | 2011 | MARYLAND DEPARTMENT OF ENVIRONMENT WATER MANAGEMENT ADMINISTRATION

DETAIL F-4 FILTER BAG

STANDARD SYMBOL: ⊠FB

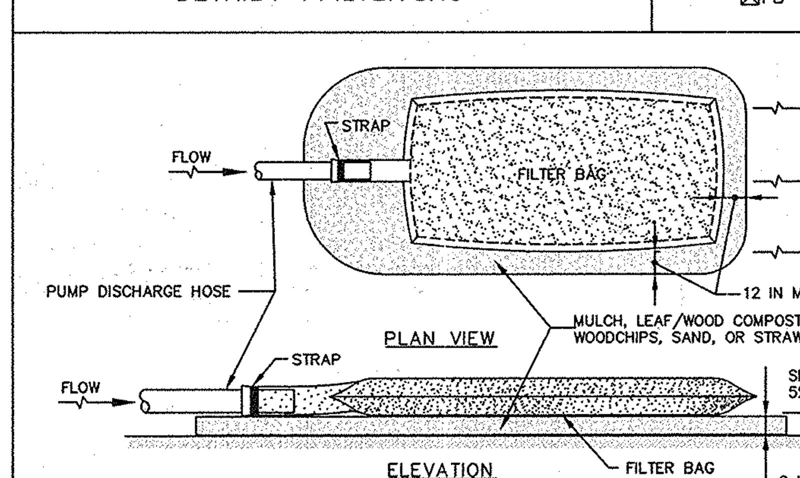

CONSTRUCTION SPECIFICATIONS

1. TIGHTLY SEAL SLEEVE AROUND THE PUMP DISCHARGE HOSE WITH A STRAP OR SIMILAR DEVICE.
2. PLACE FILTER BAG ON SUITABLE BASE (E.G., MULCH, LEAF/WOOD COMPOST, WOODCHIPS, SAND, OR STRAW BALES) LOCATED ON A LEVEL OR 5% MAXIMUM SLOPING SURFACE. DISCHARGE TO A STABILIZED AREA. EXTEND BASE A MINIMUM OF 12 INCHES FROM EDGES OF BAG.
3. CONTROL PUMPING RATE TO PREVENT EXCESSIVE PRESSURE WITHIN THE FILTER BAG IN ACCORDANCE WITH THE MANUFACTURER RECOMMENDATIONS. AS THE BAG FILLS WITH SEDIMENT, REDUCE PUMPING RATE.
4. REMOVE AND PROPERLY DISPOSE OF FILTER BAG UPON COMPLETION OF PUMPING OPERATIONS OR AFTER BAG HAS REACHED CAPACITY, WHICHEVER OCCURS FIRST. SPREAD THE DEWATERED SEDIMENT FROM THE BAG IN AN APPROVED UPLAND AREA AND STABILIZE WITH SEED AND MULCH BY THE END OF THE WORK DAY. RESTORE THE SURFACE AREA BENEATH THE BAG TO ORIGINAL CONDITION UPON REMOVAL OF THE DEVICE.
5. USE NONWOVEN GEOTEXTILE WITH DOUBLE STITCHED SEAMS USING HIGH-STRENGTH THREAD. SIZE SLEEVE TO ACCOMMODATE A MAXIMUM 4 INCH DIAMETER PUMP DISCHARGE HOSE. THE BAG MUST BE MANUFACTURED FROM A NONWOVEN GEOTEXTILE THAT MEETS OR EXCEEDS MINIMUM AVERAGE ROLL VALUES (MARV) FOR THE FOLLOWING:

GRAB TENSILE	250 LB	ASTM D-4632
PUNCTURE	150 LB	ASTM D-4833
FLOW RATE	70 GAL/MIN/FT²	ASTM D-4491
PERMITTIVITY (SEC^{-1})	1.2 SEC^{-1}	ASTM D-4491
UV RESISTANCE	70% STRENGTH @ 500 HOURS	ASTM D-4355
APPARENT OPENING SIZE (AOS)	0.15-0.18 MM	ASTM D-4751
SEAM STRENGTH	90%	ASTM D-4632

6. REPLACE FILTER BAG IF BAG CLOGS OR HAS RIPS, TEARS, OR PUNCTURES. DURING OPERATION KEEP CONNECTION BETWEEN PUMP HOSE AND FILTER BAG WATER TIGHT. REPLACE BEDDING IF IT BECOMES DISPLACED.

MARYLAND STANDARDS AND SPECIFICATIONS FOR SOIL EROSION AND SEDIMENT CONTROL

U.S. DEPARTMENT OF AGRICULTURE NATURAL RESOURCES CONSERVATION SERVICE | 2011 | MARYLAND DEPARTMENT OF ENVIRONMENT WATER MANAGEMENT ADMINISTRATION

DETAIL C-1 EARTH DIKE

STANDARD SYMBOL: A-1 — PLACE DESIGNATION (e.g. A-1) ON FLOW CHANNEL SIDE OF DIKE.

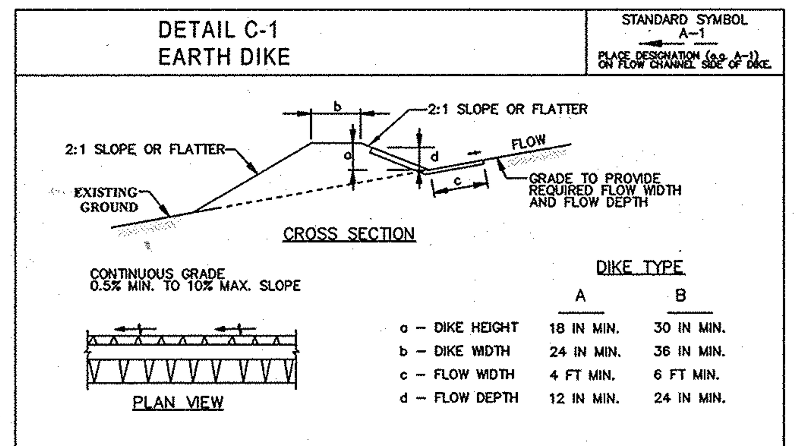

DIKE TYPE

	A	B
a - DIKE HEIGHT	18 IN MIN.	30 IN MIN.
b - DIKE WIDTH	24 IN MIN.	36 IN MIN.
c - FLOW WIDTH	4 FT MIN.	6 FT MIN.
d - FLOW DEPTH	12 IN MIN.	24 IN MIN.

FLOW CHANNEL STABILIZATION

A-1 — SEED WITH STRAW MULCH AND TACK. (NOT ALLOWED FOR CLEAR WATER DIVERSION.)

A-2/B-2 — SEED WITH SOIL STABILIZATION MATTING OR LINE WITH SOD.

A-3/B-3 — 4 TO 7 INCH STONE OR EQUIVALENT RECYCLED CONCRETE PRESSED INTO SOIL A MINIMUM OF 7 INCHES AND FLUSH WITH GROUND.

CONSTRUCTION SPECIFICATIONS

1. REMOVE AND DISPOSE OF ALL TREES, BRUSH, STUMPS, OBSTRUCTIONS, AND OTHER OBJECTIONABLE MATERIAL SO AS NOT TO INTERFERE WITH PROPER FUNCTION OF EARTHDIKE.
2. EXCAVATE OR SHAPE EARTH DIKE TO LINE, GRADE, AND CROSS SECTION AS SPECIFIED. BANK PROJECTIONS OR OTHER IRREGULARITIES ARE NOT ALLOWED.
3. COMPACT FILL.
4. CONSTRUCT FLOW CHANNEL ON AN UNINTERRUPTED, CONTINUOUS GRADE, ADJUSTING THE LOCATION DUE TO FIELD CONDITIONS AS NECESSARY TO MAINTAIN POSITIVE DRAINAGE.
5. PROVIDE OUTLET PROTECTION AS REQUIRED ON APPROVED PLAN.
6. STABILIZE EARTH DIKE WITHIN THREE DAYS OF INSTALLATION. STABILIZE FLOW CHANNEL FOR CLEAR WATER DIVERSION WITHIN 24 HOURS OF INSTALLATION.
7. MAINTAIN LINE, GRADE, AND CROSS SECTION. REMOVE ACCUMULATED SEDIMENT AND DEBRIS, AND MAINTAIN POSITIVE DRAINAGE. KEEP EARTH DIKE AND POINT OF DISCHARGE FREE OF EROSION, AND CONTINUOUSLY MEET REQUIREMENTS FOR ADEQUATE VEGETATIVE ESTABLISHMENT IN ACCORDANCE WITH SECTION B-4 VEGETATIVE STABILIZATION.
8. UPON REMOVAL OF EARTH DIKE, GRADE AREA FLUSH WITH EXISTING GROUND. WITHIN 24 HOURS OF REMOVAL STABILIZE DISTURBED AREA WITH TOPSOIL, SEED, AND MULCH, OR AS SPECIFIED ON APPROVED PLAN.

MARYLAND STANDARDS AND SPECIFICATIONS FOR SOIL EROSION AND SEDIMENT CONTROL

U.S. DEPARTMENT OF AGRICULTURE NATURAL RESOURCES CONSERVATION SERVICE | 2011 | MARYLAND DEPARTMENT OF ENVIRONMENT WATER MANAGEMENT ADMINISTRATION

FISHER, COLLINS & CARTER, INC.
CIVIL ENGINEERING CONSULTANTS & LAND SURVEYORS
CENTENNIAL SQUARE OFFICE PARK - 10272 BALTIMORE NATIONAL PIKE
ELLICOTT CITY, MARYLAND 21042
(410) 461 - 2855

Owner
Board Of Education Of
Howard County, Maryland
c/o Dr. Renee A. Foose, Ed.D, Superintendent
10910 Maryland Route 108
Ellicott City, Maryland 21042
Ph# 410-313-6600

Owner
Oxford Square Master Association, Inc.
2330 West Joppa Road
Lutherville, Maryland 21093
Ph# 410-296-3800

Owner
Kellogg-CCP, LLC
c/o David P. Scheffenacker, Jr.,
Managing Member
2330 West Joppa Road, Suite 190
Lutherville, Maryland 21093-4614
Ph# 410-296-3800

Owner
U.S. Home Corporation,
D/B/A Lennar
c/o Joseph Fortino, Vice President
10211 Wincopin Circle
Suite 300
Columbia, Maryland 21044
Ph# 410-423-0460

Developer
Preston • Scheffenacker Properties
2330 West Joppa Road, Suite 190
Lutherville, Maryland 21093-4614
Ph# 410-296-3800

STATE OF MARYLAND — ALDO MICHAEL VITUCCI — PROFESSIONAL ENGINEER

ALDO M. VITUCCI, P.E. — 6/15/15 DATE

"Professional Certification. I hereby certify that these documents were prepared by me, and that I am a duly Licensed Professional Engineer under the laws of the State of Maryland, License No. 20748, Expiration Date 2-22-17."

SEDIMENT AND EROSION CONTROL NOTES & DETAILS

OXFORD SQUARE

"A Howard County Green Neighborhood"

Parcels 'V' Thru 'C-C' And Open Space Lots 244 And 245

(Being A Resubdivision Of Open Space Lot 1, As Shown On Plats Entitled "Oxford Square, "Green Neighborhood", Parcels 'C' Thru 'L' And Open Space Lots 1 And 2" Recorded As Plat Nos. 22390 Thru 22395; A Resubdivision Of Parcel 'G', As Shown On Plats Entitled "Oxford Square, "Green Neighborhood" Resubdivision Plat-Parcel 'M' And Revision Plat-Parcels 'C', 'E', 'F', 'G', 'I', 'J', And 'K' Recorded As Plat Nos. 22856 Thru 22859; And A Resubdivision Of Parcels 'E', 'S' And 'T', As Shown On Plats Entitled "Oxford Square, "Green Neighborhood", Parcels 'R', 'S' And 'T' And Revision Plat-Parcel 'E'" Recorded As Plat Nos. 23103 Thru 23105)

Zoned: TOD

Tax Map: 38, Parcel: 1003, Grid: 20 And Tax Map: 44, Parcel P/O 4 & 5, Grid 1
First Election District - Howard County, Maryland

Date: June 12, 2015

Sheet 12 of 27

F-15-008

I:\2009\09014\dwg\Finals - Phase Four\09014 sheet 11-12 sed con details.dwg, 6/12/2015 10:42:20 AM, 1:1

APPROVED: DEPARTMENT OF PUBLIC WORKS	
CHIEF, BUREAU OF HIGHWAYS	DATE 8/19/16
APPROVED: DEPARTMENT OF PLANNING AND ZONING	
CHIEF, DIVISION OF LAND DEVELOPMENT	DATE 9-7-16
CHIEF, DEVELOPMENT ENGINEERING DIVISION	DATE 9.6.16

REVISIONS

NO.	DESCRIPTION	DATE
1	REVISE STORM DRAIN OUTFALL, ENTRANCES TO PARCEL 'A-A' & 'B-B', STREET LIGHT LOCATIONS & ESD LOCATIONS	4/1/16

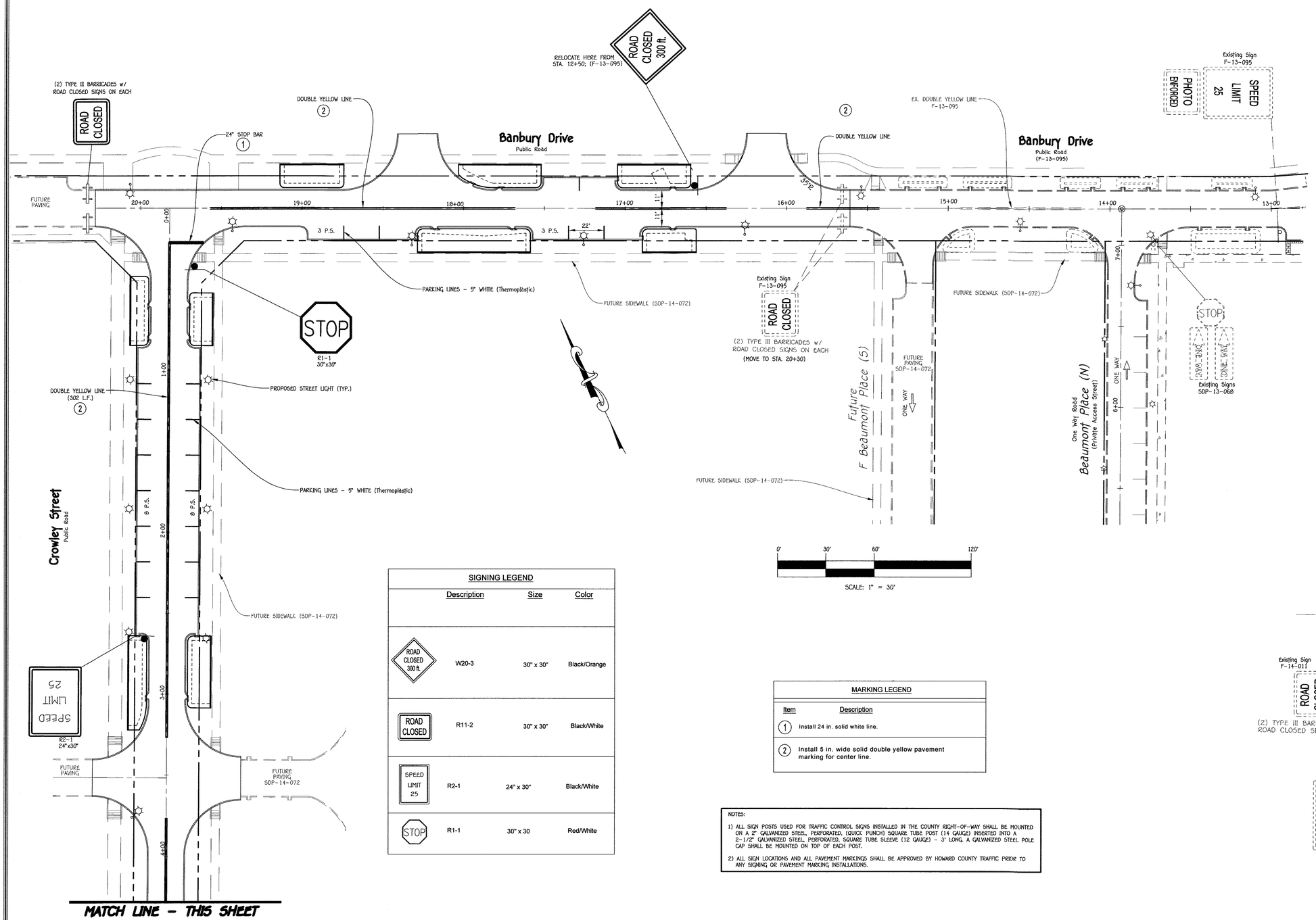

MATCH LINE - THIS SHEET

0' 30' 60' 120'

SCALE: 1" = 30'

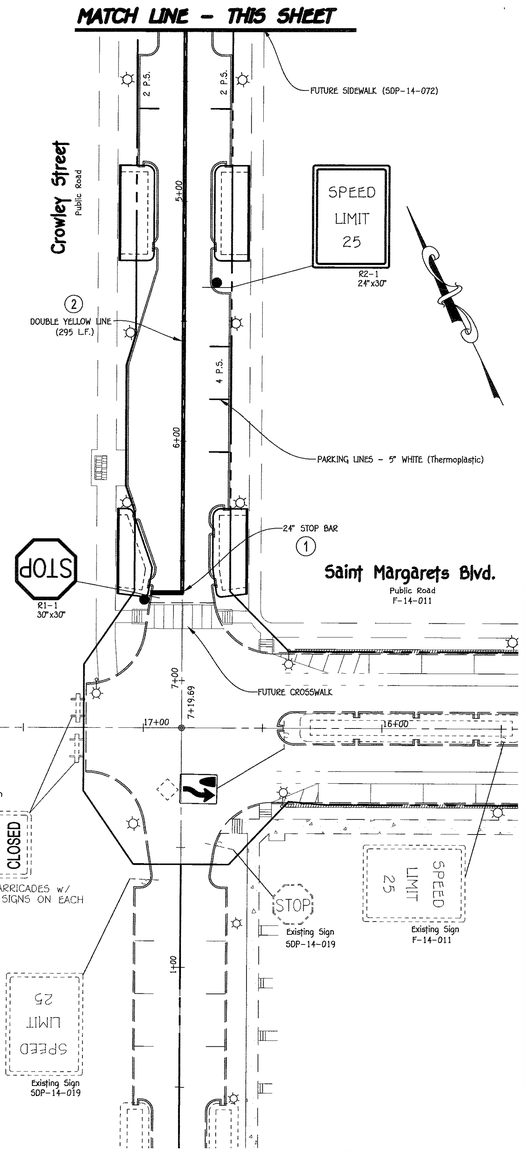

SIGNING LEGEND

Description	Size	Color
ROAD CLOSED 300 ft. W20-3	30" x 30"	Black/Orange
ROAD CLOSED R11-2	30" x 30"	Black/White
SPEED LIMIT 25 R2-1	24" x 30"	Black/White
STOP R1-1	30" x 30	Red/White

MARKING LEGEND

Item	Description
1	Install 24 in. solid white line.
2	Install 5 in. wide solid double yellow pavement marking for center line.

NOTES:

1) ALL SIGN POSTS USED FOR TRAFFIC CONTROL SIGNS INSTALLED IN THE COUNTY RIGHT-OF-WAY SHALL BE MOUNTED ON A 2" GALVANIZED STEEL, PERFORATED, (QUICK PUNCH) SQUARE TUBE POST (14 GAUGE) INSERTED INTO A 2-1/2" GALVANIZED STEEL, PERFORATED, SQUARE TUBE SLEEVE (12 GAUGE) - 3' LONG. A GALVANIZED STEEL POLE CAP SHALL BE MOUNTED ON TOP OF EACH POST.

2) ALL SIGN LOCATIONS AND ALL PAVEMENT MARKINGS SHALL BE APPROVED BY HOWARD COUNTY TRAFFIC PRIOR TO ANY SIGNING OR PAVEMENT MARKING INSTALLATIONS.

REVISED SIGNING AND PAVEMENT MARKING PLAN

OXFORD SQUARE

"A Howard County Green Neighborhood"

Parcels 'V' Thru 'C-C' And Open Space Lots 244 And 245

(Being A Resubdivision Of Open Space Lot 1, As Shown On Plats Entitled "Oxford Square, "Green Neighborhood", Parcels 'C' Thru 'L' And Open Space Lots 1 And 2" Recorded As Plat Nos. 22390 Thru 22395; A Resubdivision Of Parcel 'G', As Shown On Plats Entitled "Oxford Square, "Green Neighborhood" Resubdivision Plat-Parcel 'M' And Revision Plat-Parcels 'C', 'E', 'F', 'G', 'I', 'J', And 'K' Recorded As Plat Nos. 22956 Thru 22959; And A Resubdivision Of Parcels 'E', 'S' And 'T', As Shown On Plats Entitled "Oxford Square, "Green Neighborhood", Parcels 'E', 'S' And 'T' And Revision Plat-Parcel 'E" Recorded As Plat Nos. 23103 Thru 23105)

Zoned: TOD

Tax Map: 38, Parcel: 1003, Grid: 20 And Tax Map: 44, Parcel P/O 4 & 5, Grid 1

First Election District – Howard County, Maryland

Date: June 12, 2015

Sheet 13 of 27

Owner

Board Of Education Of Howard County, Maryland
c/o Dr. Renee A. Foose, Ed.D, Superintendent
10910 Maryland Route 108
Ellicott City, Maryland 21042
Ph# 410-313-6600

Owner

Oxford Square Master Association, Inc.
2330 West Joppa Road
Lutherville, Maryland 21093
Ph# 410-296-3800

Owner

Kellogg-CCP, LLC
c/o David P. Scheffenacker, Jr., Managing Member
2330 West Joppa Road, Suite 190
Lutherville, Maryland 21093-4614
Ph# 410-296-3800

Owner

U.S. Home Corporation, D/B/A Lennar
c/o Joseph Fortino, Vice President
10211 Wincopin Circle
Suite 300
Columbia, Maryland 21044
Ph# 410-423-0460

Developer

Preston • Scheffenacker Properties
2330 West Joppa Road, Suite 190
Lutherville, Maryland 21093-4614
Ph# 410-296-3800

STATE OF MARYLAND — ALDO MICHAEL VITUCCI — No. 20748 — PROFESSIONAL ENGINEER

ALDO M. VITUCCI, P.E. — DATE 7/20/16

"Professional Certification. I hereby certify that these documents were prepared by me, and that I am a duly Licensed Professional Engineer under the laws of the State of Maryland, License No. 20748, Expiration Date 2-22-17."

FISHER, COLLINS & CARTER, INC.
CIVIL ENGINEERING CONSULTANTS & LAND SURVEYORS
CENTENNIAL SQUARE OFFICE PARK - 10272 BALTIMORE NATIONAL PIKE
ELLICOTT CITY, MARYLAND 21042
(410) 461 - 2855

48 Hours Before You Dig Call "MISS UTILITY" Service Protection Center — MEMBER — CALL TOLL FREE 1-800-257-7777

Call "MISS UTILITY" at 1-800-257-7777, 48 hours prior to the start of work the excavator must notify all public utility companies with under ground facilities in the area of proposed excavation and have those facilities located by the utility companies prior to commencing excavation. the excavator is responsible for compliance with requirements of Chapter 36a of the Montgomery County Code.

"MISS UTILITY"

F-15-008

I:\2009\0904\dwg\Finals - Phase Four\redline 2016\09904 sheet 13 MYLAR.dwg, 6/29/2016 3:31:44 PM, 1:1

Approved: Department Of Public Works	
Chief, Bureau Of Highways	Date 8/19/16
Approved: Department Of Planning And Zoning	
Chief, Division Of Land Development	Date 9-7-16
Chief, Development Engineering Division	Date 9.6.16

REVISIONS		
NO.	DESCRIPTION	DATE
1	REVISE STORM DRAIN OUTFALL, ENTRANCES TO PARCEL 'A-A' & 'B-B', STREET LIGHT LOCATIONS & ESD LOCATIONS	4/1/16

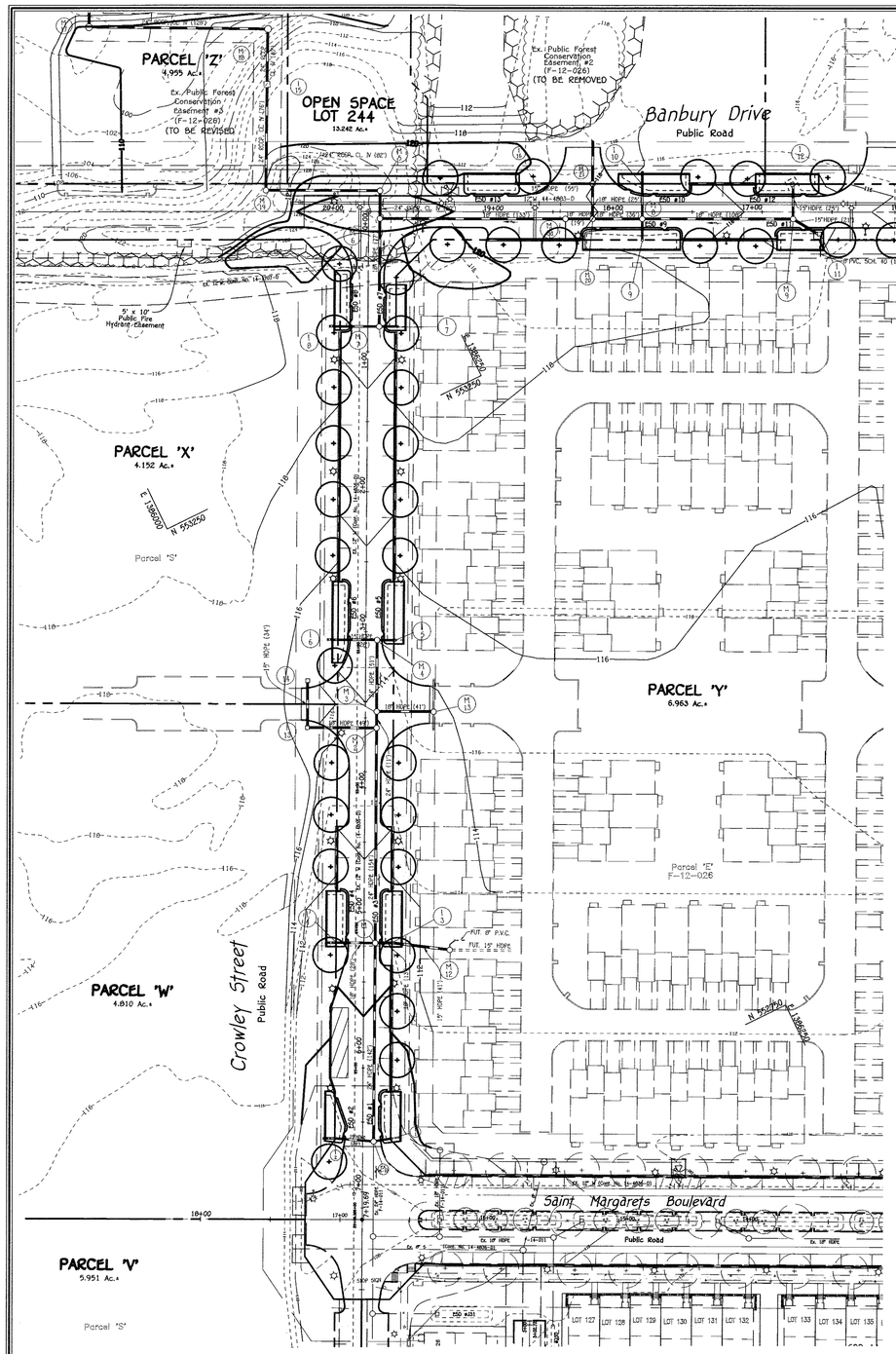

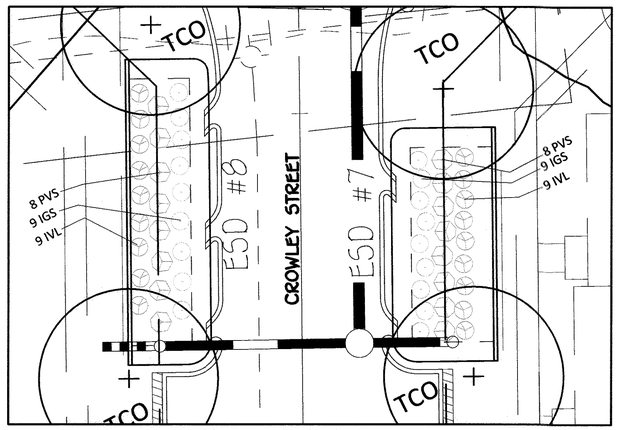

ESD Nos. 7 & 8 PLAN

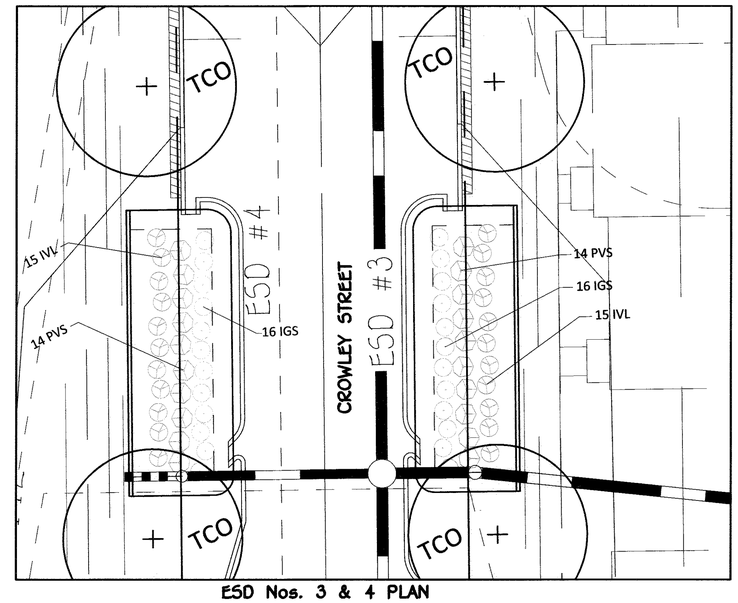

ESD Nos. 3 & 4 PLAN

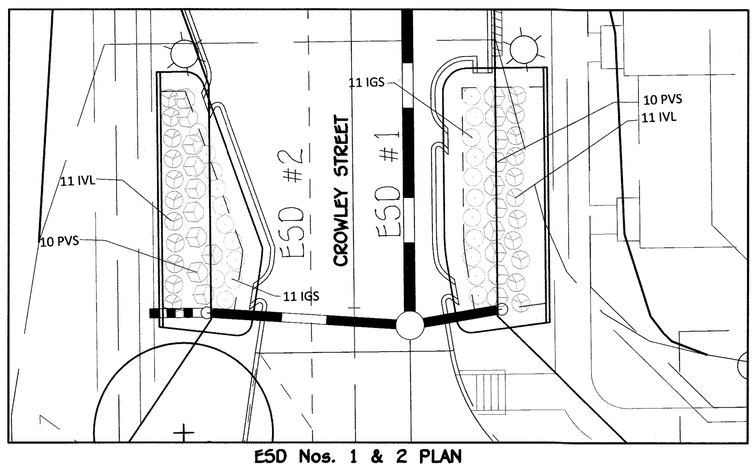

ESD Nos. 1 & 2 PLAN

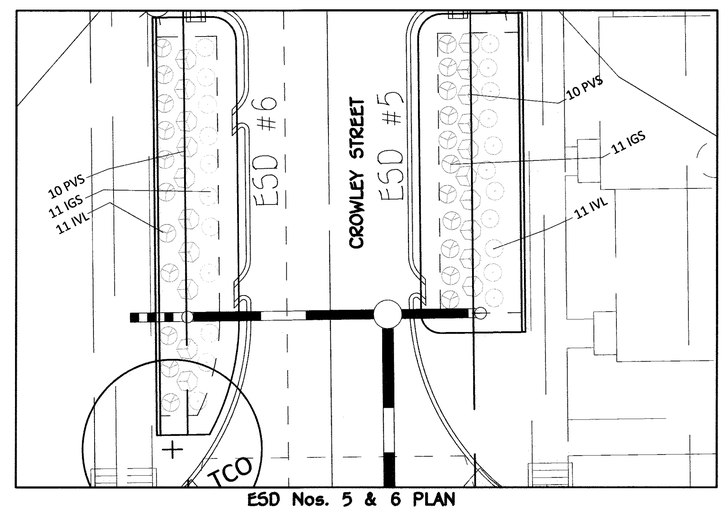

ESD Nos. 5 & 6 PLAN

Scale: 1" = 10'

STREET TREE NOTE:
ALL TREES SHALL BE LOCATED A MINIMUM OF 20' FROM ANY PUBLIC STREET LIGHT LOCATION.

LANDSCAPE DEVELOPER'S CERTIFICATE

I/We certify that the landscaping shown on this plan will be done according to the plan, Section 16.124 of the Howard County Code and the Howard County Landscape Manual. I/We further certify that upon completion a letter of landscape installation accompanied by an executed one year guarantee of plant materials will be submitted to the Department of Planning and Zoning.

Name — Date 7/25/16

FISHER, COLLINS & CARTER, INC.
CIVIL ENGINEERING CONSULTANTS & LAND SURVEYORS
CENTENNIAL SQUARE OFFICE PARK - 10272 BALTIMORE NATIONAL PIKE
ELLICOTT CITY, MARYLAND 21042
(410) 461 - 2855

Owner	Owner	Owner	Owner	Developer
Board Of Education Of Howard County, Maryland c/o Dr. Renee A. Foose, Ed.D, Superintendent 10910 Maryland Route 108 Ellicott City, Maryland 21042 Ph# 410-313-6600	Oxford Square Master Association, Inc. 2330 West Joppa Road Lutherville, Maryland 21093 Ph# 410-296-3800	Kellogg-CCP, LLC c/o David P. Scheffenacker, Jr., Managing Member 2330 West Joppa Road, Suite 190 Lutherville, Maryland 21093-4614 Ph# 410-296-3800	U.S. Home Corporation, D/B/A Lennar c/o Joseph Fortino, Vice President 10211 Wincopin Circle Suite 300 Columbia, Maryland 21044 Ph# 410-423-0460	Preston • Scheffenacker Properties 2330 West Joppa Road, Suite 190 Lutherville, Maryland 21093-4614 Ph# 410-296-3800

STATE OF MARYLAND — ALDO MICHAEL VITUCCI — No. 20748 — PROFESSIONAL ENGINEER

ALDO M. VITUCCI, P.E. — DATE 7/25/16

"Professional Certification. I hereby certify that these documents were prepared by me, and that I am a duly Licensed Professional Engineer under the laws of the State of Maryland, License No. 20748, Expiration Date 2-22-17."

REVISED STREET TREE AND LANDSCAPE PLAN

OXFORD SQUARE

"A Howard County Green Neighborhood"

Parcels 'V' Thru 'C-C' And Open Space Lots 244 And 245

(Being A Resubdivision Of Open Space Lot 1, As Shown On Plats Entitled "Oxford Square, "Green Neighborhood", Parcels 'C' Thru 'L' And Open Space Lots 1 And 2' Recorded As Plat Nos. 22390 Thru 22395; A Resubdivision Of Parcel 'G', As Shown On Plats Entitled "Oxford Square, "Green Neighborhood" Resubdivision Plat-Parcel 'M' And Revision Plat-Parcels 'C', 'E', 'F', 'G', 'I', 'J', And 'K' Recorded As Plat Nos. 22896 Thru 22899; And A Resubdivision Of Parcels 'E', 'S' And 'T', As Shown On Plats Entitled "Oxford Square, "Green Neighborhood", Parcels 'R', 'S' And 'T' And Revision Plat-Parcel 'E" Recorded As Plat Nos. 23103 Thru 23105)

Zoned: TOD

Tax Map: 38, Parcel: 1003, Grid: 20 And Tax Map: 44, Parcel P/O 4 & 5, Grid 1

First Election District - Howard County, Maryland

Date: June 12, 2015

Sheet 14 of 27

F-15-008

I:\2009\09014\dwg\Finals - Phase Four\redline 2016\09014 sheet 14-15 mylars.dwg, 7/20/2016 9:04:07 AM, 1:1

Approved: Department Of Public Works Chief Bureau Of Highways	8/19/16 Date
Approved: Department Of Planning And Zoning Chief, Division Of Land Development	9-7-16 Date
Chief, Development Engineering Division	9.6.16 Date

REVISIONS

NO.	DESCRIPTION	DATE
1	REVISE STORM DRAIN OUTFALL, ENTRANCES TO PARCEL 'A-A' & 'B-B', STREET LIGHT LOCATIONS & ESD LOCATIONS	4/1/16

PLANTING SPECIFICATIONS

Plants, related material, and operations shall meet the detailed description as given on the plans and as described herein.

All plant material, unless otherwise specified, shall be nursery grown, uniformly branched, have a vigorous root system, and shall conform to the species, size, root and shape shown on the plant list and the American Association of Nurserymen (AAN) Standards. Plant material shall be healthy, vigorous, free from defects, decay, disfiguring roots, sun scald injuries, abrasions of the bark, plant disease, insect pest eggs, borers and all forms of insect infestations or objectionable disfigurements. Plant material that is weak or which has been cut back from larger grades to meet specified requirements will be rejected. Trees with forked leaders will not be accepted. All plants shall be freshly dug; no heeled-in plants from cold storage will be accepted.

Unless otherwise specified, all general conditions, planting operations, details and planting specification shall conform to "Landscape Specification Guidelines for Baltimore-Washington Metropolitan Areas", (hereinafter "Landscape Guidelines") approved by the Landscape Contractors Association of Metropolitan Washington and the Potomac Chapter of the American Society of Landscape Architect, latest edition, including all agenda.

Contractor shall be required to guarantee all plant material for a period of one year after date of acceptance in accordance with the appropriate section of the Landscape Guidelines. Contractor's attention is directed to the maintenance requirements found within the one year specifications including watering and replacement of specified plant material.

Contractor shall be responsible for notifying utility companies, utility contractors and "Miss Utility" a minimum of 48 hours prior to beginning any work. Contractor may make minor adjustments in spacing and location of plant material to avoid conflicts with utilities. Damage to existing structure and utilities shall be repaired at the expense of the Contractor.

Protection of existing vegetation to remain shall be accomplished by the temporary installation of 4 foot high snow fence or blaze orange safety fence at the drip line.

Contractor is responsible for installing all material in the proper planting season for each plant type. All planting is to be completed within the growing season of completion of site construction.

Bid shall be base on actual site conditions. No extra payment shall be made for work arising from site conditions differing from those indicated on drawings and specifications.

Plant quantities are provided for the convenience of the contractor only. If discrepancies exist between quantities shown on plan and those shown on the plant list, the quantities on the plan take precedence.

All shrubs shall be planted in continuous trenches or prepared planting beds and mulched with composted hardwood mulch as details and specified except where noted on plans.

Positive drainage shall be maintained in planting beds (2 percent slope).

Planting mix shall be as follows: Deciduous Plants - Two parts topsoil, one part well-rotted cow or horse manure. Add 3 lbs. of standard fertilizer per cubic yard of planting mix. Evergreen Plants - two parts topsoil, one part humus or other approved organic material. Add 3 lbs. of evergreen (acidic) fertilizer per cubic yard of planting mix. Topsoil shall conform to the Landscape Guidelines.

Weed Control: Incorporate a pre-emergent herbicide into the planting bed following recommended rates on the label. Caution: Be sure to carefully check the chemical used to assure its adaptability to the specific ground cover to be treated.

All areas within contract limits disturbed during or prior to construction not designated to receive plants and mulch shall be fine graded and seeded.

This plan is intended for landscape use only. See other plan sheets for more information on grading, sediment control, layout, etc.

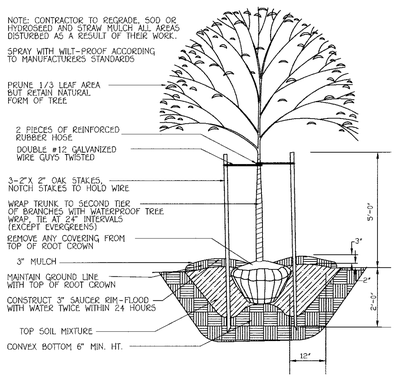

SHADE TREE PLANTING DETAIL

NO SCALE

NOTES:

Should any tree designated for preservation for which landscaping credit is given, die prior to release of bonds, the owner will be required to replace the tree with the equivalent species or with a tree which will obtain the same height, spread and growth characteristics. The replacement tree must be a minimum of 3 inches in caliper and installed as required in the Howard County landscape manual.
At the time of plant installation, all trees listed and approved on the landscape Plan, shall comply with the proper height requirement in accordance with the Howard County Landscape Manual. In addition, no substitutions or relocations of the required plantings may be made without prior review and approval from the Department of Planning and Zoning. Any deviations from the approved Landscape Plan may result in denial or delay in the release of landscape surety until such time as all required materials are planted and/or revisions are made to the road drawing plans.

The Owner, tenants and/or their agents shall be responsible for maintenace of the required perimeter landscaping. All plant materials shall be maintained in good growing condition, and when necessary, replaced with new materials to ensure continued compliance with applicable regulations. All the other required landscaping shall be permanently maintained in good condition, and when necessary, repaired or replaced.

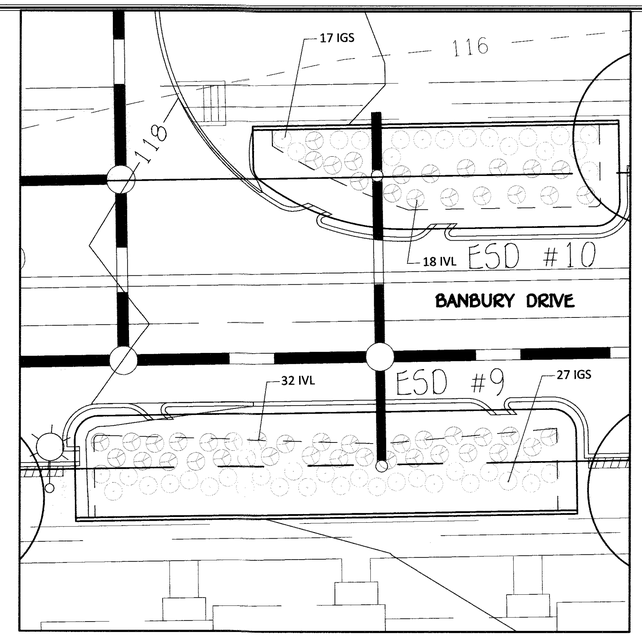

ESD Nos. 9 & 10 PLAN

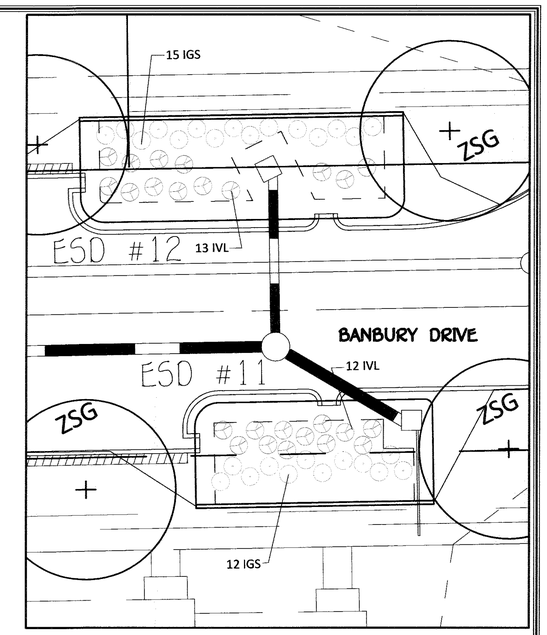

ESD Nos. 11 & 12 PLAN

0' 10' 15' 20'
Scale: 1" = 10'

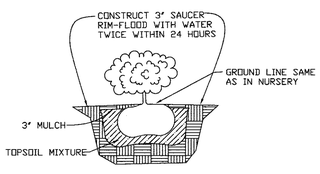

SHRUB PLANTING DETAIL

NO SCALE

STREET TREE SCHEDULE

QTY. REQUIRED	BOTANICAL AND COMMON NAME	SIZE	COMMENTS
ZSG ×	ZELKOVA SERRATA 'GREEN VASE' GREEN VASE JAPANESE ZELKOVA	2-1/2" cal. min.	13 ALONG PUBLIC R/W BANBURY DRIVE (SEE PLAN)
TCO ×	TILIA CORDATA LITTLELEAF LINDEN	4" - 4-1/2" cal.	24 ALONG PUBLIC R/W CROWLEY STREET (SEE PLAN)

NOTES:
1. FINAL PLACEMENT OF STREET TREES WILL OCCUR IN THE FIELD AND BE PLACED A MINIMUM OF 30 FEET FROM ALL SIGNS AND INTERSECTIONS WHEN PLANTED BETWEEN SIDEWALK AND CURB, BE LOCATED WITH CONSIDERATION OF UNDERGROUND UTILITIES AND STRUCTURES AND MAINTAIN A MINIMUM 5 FEET DISTANCE ON CENTER FROM A DRAIN INLET STRUCTURE, 5 FEET FROM AN OPEN SPACE ACCESS STRIP AND 10 FEET FROM A DRIVEWAY.
2. FINANCIAL SURETY FOR THE 37 STREET TREES HAS BEEN POSTED AS PART OF THE DEVELOPER'S AGREEMENT IN THE AMOUNT OF $11,100.00

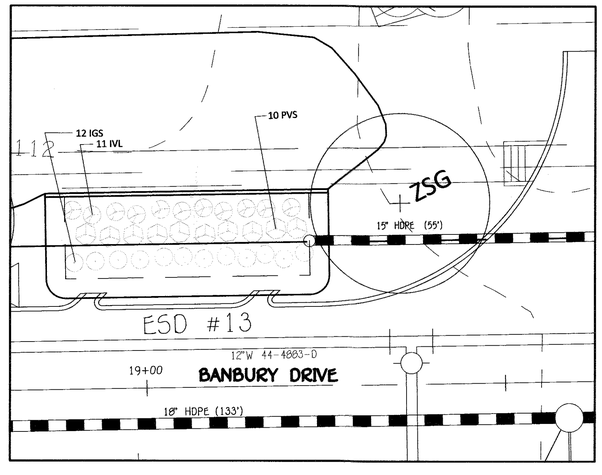

ESD No. 13 PLAN

PLANT LIST (F-15-008)

QTY.	SYM.	BOTANICAL/COMMON NAME	SIZE	CONT.	REMARKS
DECIDUOUS TREES					
24	TCO	Tilia cordata Littleleaf Linden	2-1/2" cal. min.	B&B	
13	ZSG	Zelkova serrata 'Green Vase' Green Vase Japanese Zelkova	4" - 4-1/2" cal.	B&B	
ESD SHRUBS					
169	IGS	Ilex glabra 'Shamrock' Inkberry Holly	18" - 24" Ht.	3 Gal.	30" o.c. min.
150	IVL	Itea virginica 'Little Henry' Dwarf Virginia Sweetspire	18" - 24" Ht.	3 Gal.	30" o.c. min.
88	PVS	Panicum virgatum 'Shenandoh' Switchgrass	18" - 24" Ht.	3 Gal.	30" o.c. min.

STREET TREE NOTE:
ALL TREES SHALL BE LOCATED A MINIMUM OF 20' FROM ANY PUBLIC STREET LIGHT LOCATION.

LANDSCAPE DEVELOPER'S CERTIFICATE

I/We certify that the landscaping shown on this plan will be done according to the plan, Section 16.124 of the Howard County Code and the Howard County Landscape Manual. I/We further certify that upon completion a letter of landscape installation accompanied by an executed one year guarantee of plant materials will be submitted to the Department of Planning and Zoning.

Name — Date: 7/25/16

Owner	Owner	Owner	Owner	Developer
Board Of Education Of Howard County, Maryland c/o Dr. Renee A. Foose, Ed.D, Superintendent 10910 Maryland Route 108 Ellicott City, Maryland 21042 Ph# 410-313-6600	Oxford Square Master Association, Inc. 2330 West Joppa Road Lutherville, Maryland 21093 Ph# 410-296-3800	Kellogg-CCP, LLC c/o David P. Scheffenacker, Jr., Managing Member 2330 West Joppa Road, Suite 190 Lutherville, Maryland 21093-4614 Ph# 410-296-3800	U.S. Home Corporation, D/B/A Lennar c/o Joseph Fortino, Vice President 10211 Wincopin Circle Suite 300 Columbia, Maryland 21044 Ph# 410-423-0460	Preston • Scheffenacker Properties 2330 West Joppa Road, Suite 190 Lutherville, Maryland 21093-4614 Ph# 410-296-3800

STATE OF MARYLAND — ALDO MICHAEL VITUCCI — No. 20748 — PROFESSIONAL ENGINEER

ALDO M. VITUCCI, P.E. — DATE: 7/25/16

"Professional Certification. I hereby certify that these documents were prepared by me, and that I am a duly Licensed Professional Engineer under the laws of the State of Maryland, License No." 20748, Expiration Date 2-22-17."

FISHER, COLLINS & CARTER, INC.
CIVIL ENGINEERING CONSULTANTS & LAND SURVEYORS
CENTENNIAL SQUARE OFFICE PARK - 10272 BALTIMORE NATIONAL PIKE
ELLICOTT CITY, MARYLAND 21042
(410) 461 - 2855

REVISED
LANDSCAPE NOTES & DETAILS

OXFORD SQUARE

"A Howard County Green Neighborhood"
Parcels 'V' Thru 'C-C' And Open Space Lots 244 And 245

(Being A Resubdivision Of Open Space Lot 1, As Shown On Plats Entitled "Oxford Square, "Green Neighborhood", Parcels 'C' Thru 'L' And Open Space Lots 1 And 2" Recorded As Plat Nos. 22390 Thru 22395; A Resubdivision Of Parcel 'G', As Shown On Plats Entitled "Oxford Square, "Green Neighborhood" Resubdivision Plat-Parcel 'M' And Revision Plat-Parcels 'C', 'E', 'F', 'G', 'I', 'J', And 'K' Recorded As Plat Nos. 22956 Thru 22959; And A Resubdivision Of Parcels 'E', 'S' And 'T', As Shown On Plats Entitled "Oxford Square, "Green Neighborhood", Parcels 'R', 'S' And 'T' And Revision Plat-Parcel 'E" Recorded As Plat Nos. 23103 Thru 23105)
Zoned: TOD
Tax Map: 38, Parcel: 1003, Grid: 20 And Tax Map: 44, Parcel P/O 4 & 5, Grid 1
First Election District - Howard County, Maryland
Date: June 12, 2015
Sheet 15 of 27

F-15-008

1:\2009\09014\dwg\finals - Phase Four\redline 2016\09014 sheet 14-15 mylars.dwg, 6/30/2016 8:11:43 AM, 1:1

STRUCTURE SCHEDULE

STRUCTURE NO.	TOP ELEVATION	INV.IN	INV.OUT	LOCATION	ROAD STA./ COORDINATE	OFFSET	TYPE AND WIDTH	REMARKS
I-1	* 108.17	103.63 (6")	103.63 (15")	CROWLEY STREET	6+62	20.6' L	15" BASIN	Nyloplast OR EQUAL
I-2	* 108.17	103.73 (15" stub), 103.63 (6")	103.63 (15")	CROWLEY STREET	6+62	20.6' R	15" BASIN	Nyloplast OR EQUAL
I-3	* 110.51	101.95 (15"), 105.76 (6")	101.70 (18")	CROWLEY STREET	5+22	19.8' L	15" BASIN	Nyloplast OR EQUAL
I-4	* 110.51	105.86 (15" stub), 105.76 (6")	105.76 (18")	CROWLEY STREET	5+22	19.8' R	15" BASIN	Nyloplast OR EQUAL
I-5	* 114.18	109.43 (6")	109.43 (15")	CROWLEY STREET	3+06	19.8' L	15" BASIN	Nyloplast OR EQUAL
I-6	* 114.18	109.53 (15" stub), 109.43 (6")	109.43 (15")	CROWLEY STREET	3+06	19.8' R	15" BASIN	Nyloplast OR EQUAL
I-7	* 118.07	113.32 (6")	112.57 (15")	CROWLEY STREET	0+82	19.8' L	15" BASIN	Nyloplast OR EQUAL
I-8	* 118.07	112.82 (12" stub), 113.32 (6")	112.57 (15")	CROWLEY STREET	0+82	19.8' R	15" BASIN	Nyloplast OR EQUAL
I-9	* 116.57	111.82 (6")	111.07 (15")	BANBURY DRIVE	17+86	15.3' L	15" BASIN	Nyloplast OR EQUAL
I-10	* 116.93	112.18 (6"), 111.53 (15" stub)	111.43 (15")	BANBURY DRIVE	17+86	15.3' R	15" BASIN	Nyloplast OR EQUAL
I-11	115.10	110.52 (6"), 110.79 (8")	110.45 (15")	BANBURY DRIVE	16+59	15.6' L	'S' INLET	D - 4.
I-12	115.00	110.25 (6")	110.25 (15")	BANBURY DRIVE	16+59	23.4' R	'S' INLET	D - 4.
I-13	114.05	107.92 (15"), FUT. 109.30 (6")	105.37 (18")	CROWLEY STREET	3+69	41.5' R	'S' INLET	D - 4.
I-14	114.05	FUT. 109.30 (6")	108.17 (15")	CROWLEY STREET	3+35	41.5' R	'S' INLET	D - 4.
I-15	112.50	103.27 (24")	103.02 (24")	N 553,504.07 E 1,386,202.78	----	----	'S' INLET	D - 4.22
I-16	119.15	114.40 (6")	112.65 (15")	BANBURY DRIVE	18+77	20' R	15" BASIN	Nyloplast OR EQUAL
M-1	110.77	105.62 (18"), 101.07 (24"), 101.57 (18")	100.82 (24")	CROWLEY STREET	5+22	8.0' L	5' DIA. MANHOLE	G - 5.13
M-2	113.52	104.39 (18"), 103.99 (24")	103.89 (24")	CROWLEY STREET	3+68	8.0' L	5' DIA. MANHOLE	G - 5.13
M-3	113.43	107.50 (18"), 107.00 (24")	104.29 (24")	CROWLEY STREET	3+57	8.0' L	4' DIA. MANHOLE	G - 5.12
M-4	114.64	109.30 (15"), 109.15 (15")	108.40 (24")	CROWLEY STREET	3+06	8.0' L	4' DIA. MANHOLE	G - 5.12
M-5	120.72	105.83 (24")	105.73 (24")	BANBURY DRIVE	19+74	15' R	4' DIA. MANHOLE	G - 5.12
M-6	120.18	111.41 (18"), 106.54 (18")	106.24 (24")	BANBURY DRIVE	19+74	5.0' L	4' DIA. MANHOLE	G - 5.12
M-6a	118.51	111.68 (8"), 107.97 (18")	107.87 (18")	BANBURY DRIVE	18+41	5.0' L	4' DIA. MANHOLE	G - 5.12
M-7	118.63	112.43 (15"), 112.43 (15")	112.18 (18")	CROWLEY STREET	0+82	8.0' L	5' DIA. MANHOLE	G - 5.13
M-8	117.15	111.21 (15"), 110.92 (15"), 108.72 (18")	108.62 (18")	BANBURY DRIVE	17+86	5.0' L	5' DIA. MANHOLE	G - 5.13
M-9	115.35	110.24 (15"), 110.00 (15")	109.75 (18")	BANBURY DRIVE	16+59	5.0' L	4' DIA. MANHOLE	G - 5.12
EX. M-10	108.34	99.38 (24"), 103.45 (15"), 103.45 (15")	99.28 (EX. 24")	N 552791.69 E 1385941.88	---	---	4' DIA. MANHOLE	G - 5.12
M-11	115.46	104.60 (24")	104.35 (24")	N 553,430.69 E 1,386,284.03	---	----	4' DIA. MANHOLE	G - 5.12
M-12	110.85	FUT. 102.46 (15"), FUT. 107.12 (8")	102.36 (15")	CROWLEY STREET	5+27	61.4' L	4' DIA. MANHOLE	G - 5.12 (Private)
M-13	113.92	108.57 (FUT. 15"), 108.57 (FUT. 15")	107.91 (18")	CROWLEY STREET	3+57	48.8' L	4' DIA. MANHOLE	G - 5.12 (Private)
M-17	110.00	99.65 (24")	97.65 (24")	N 553,596.91 E 1,386,105.78	----	----	4' DIA. MANHOLE	G - 5.12
M-18	113.50	102.46 (24")	102.21 (24")	N 553,539.36 E 1,386,220.62	----	----	4' DIA. MANHOLE	G - 5.12
M-19	119.42	104.58 (24")	104.33 (24")	BANBURY DRIVE	20+56	15'R	4' DIA. MANHOLE	G - 5.12
M-20	118.00	108.26 (18"), 108.26 (18")	108.16 (18")	BANBURY DRIVE	18+21.7	5' L	5' DIA. MANHOLE	G - 5.13
M-21	118.06	110.11 (15"), 108.61 (18")	108.51 (18")	BANBURY DRIVE	18+21.7	20' R	5' DIA. MANHOLE	G - 5.13
HW-1	99.50	96.00 (24")	----	N 553,618.12 E 1,386,116.41	---	---	TYPE 'A' HEADWALL	D - 5.11

* - DENOTES TOP OF 15" BASIN ELEVATION BEFORE DOME GRATE IS INSTALLED
***- A.O.S. FLARED END SECTION OR EQUAL
(Private) - DENOTES PRIVATELY OWNED AND MAINTAINED

PIPE SCHEDULE

SIZE	CLASS	LENGTH
6"	PVC, SCH. 40 (PERFORATED)	441'
6"	PVC, SCH. 40 (SOLID)	32'
15"	HDPE	398'
18"	HDPE	654'
24"	HDPE	454'
24"	RCCP, CL. IV	362'

Nyloplast®
3130 VERONA AVE
BUFORD, GA 30518
PHN (770) 932-2443
FAX (770) 932-2490
www.nyloplast-us.com

APPROVED: DEPARTMENT OF PUBLIC WORKS
CHIEF, BUREAU OF HIGHWAYS — DATE 8/19/16
APPROVED: DEPARTMENT OF PLANNING AND ZONING
CHIEF, DIVISION OF LAND DEVELOPMENT — DATE 9-7-16
CHIEF, DEVELOPMENT ENGINEERING DIVISION — DATE 9-6-16

NO.	DESCRIPTION	DATE
1	REVISE STORM DRAIN OUTFALL & STRUCTURE SCHEDULE	4/1/16

REVISIONS

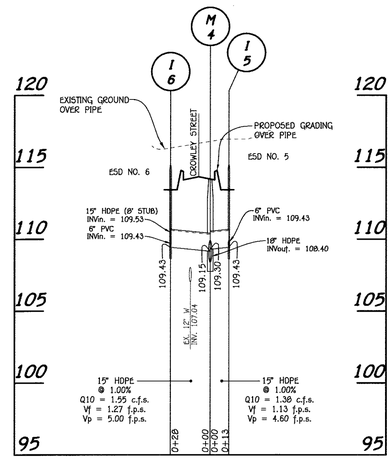

PROFILE
SCALE: HORIZ. : 1" = 50'
VERT. : 1" = 5'

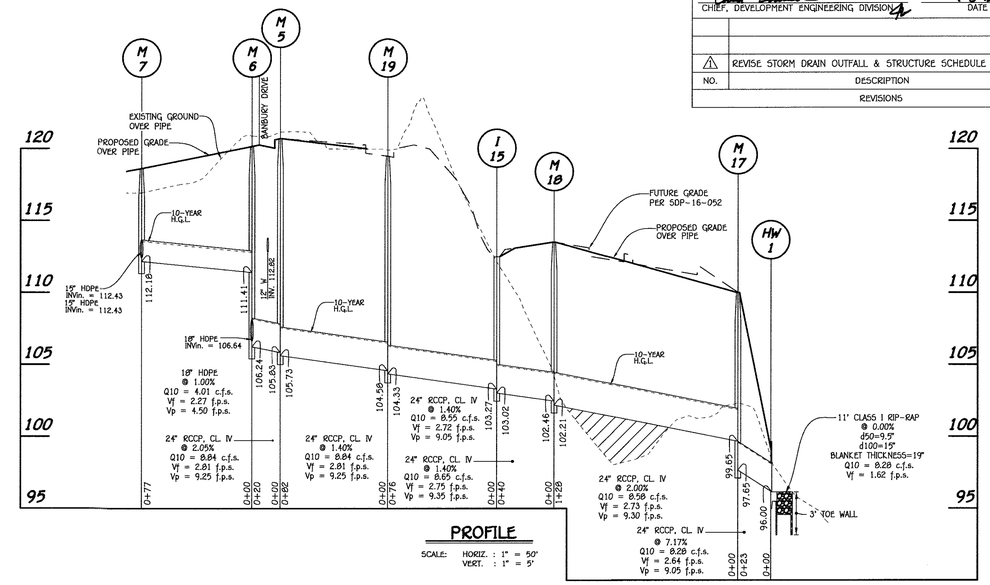

PROFILE
SCALE: HORIZ. : 1" = 50'
VERT. : 1" = 5'

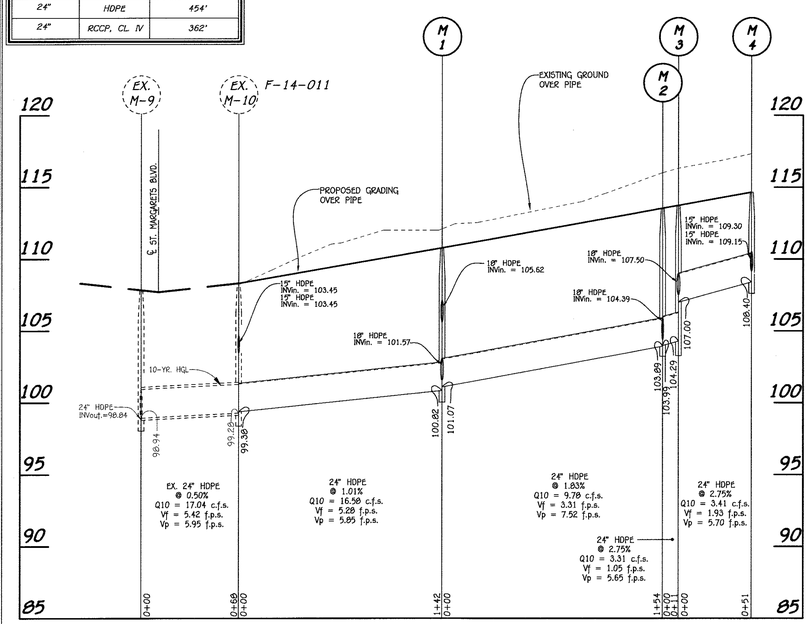

PROFILE
SCALE: HORIZ. : 1" = 50'
VERT. : 1" = 5'

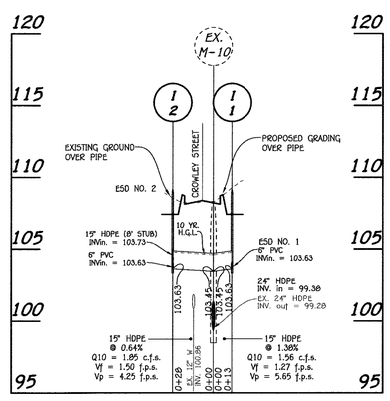

PROFILE
SCALE: HORIZ. : 1" = 50'
VERT. : 1" = 5'

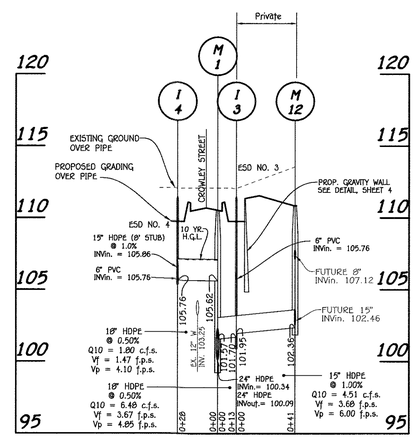

PROFILE
SCALE: HORIZ. : 1" = 50'
VERT. : 1" = 5'

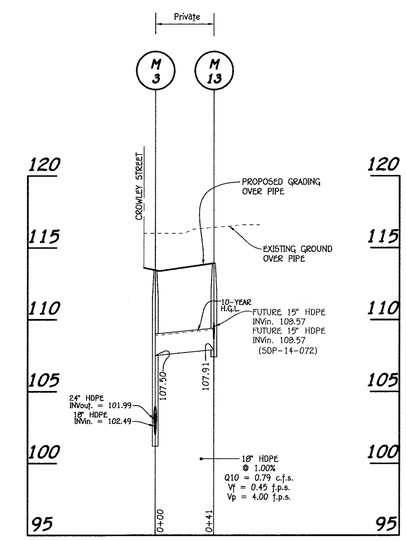

PROFILE
SCALE: HORIZ. : 1" = 50'
VERT. : 1" = 5'

REVISED
STORM DRAIN PROFILES

OXFORD SQUARE

"A Howard County Green Neighborhood"

Parcels 'V' Thru 'C-C' And Open Space Lots 244 And 245

(Being A Resubdivision Of Open Space Lot 1, As Shown On Plats Entitled "Oxford Square, "Green Neighborhood", Parcels 'C' Thru 'L' And Open Space Lots 1 And 2" Recorded As Plat Nos. 22390 Thru 22395; A Resubdivision Of Parcel 'G', As Shown On Plats Entitled "Oxford Square, "Green Neighborhood" Resubdivision Plat-Parcel 'M' And Revision Plat-Parcels 'C', 'E', 'F', 'G', 'I', 'J', And 'K' Recorded As Plat Nos. 22896 Thru 22899; And A Resubdivision Of Parcels 'E', 'S' And 'T', As Shown On Plats Entitled "Oxford Square, "Green Neighborhood", Parcels 'K', 'S' And 'T' And Revision Plat-Parcel 'E'" Recorded As Plat Nos. 23103 Thru 23105)

Zoned: TOD

Tax Map: 38, Parcel: 1003, Grid: 20 And Tax Map: 44, Parcel P/O 4 & 5, Grid 1
First Election District - Howard County, Maryland

Date: June 12, 2015
Sheet 16 of 27

Owner	Owner	Owner	Owner	Developer
Board Of Education Of Howard County, Maryland c/o Dr. Renee A. Foose, Ed.D, Superintendent 10910 Maryland Route 108 Ellicott City, Maryland 21042 Ph# 410-313-6600	Oxford Square Master Association, Inc. 2330 West Joppa Road Lutherville, Maryland 21093 Ph# 410-296-3800	Kellogg-CCP, LLC c/o David P. Scheffenacker, Jr., Managing Member 2330 West Joppa Road, Suite 190 Lutherville, Maryland 21093-4614 Ph# 410-296-3800	U.S. Home Corporation, D/B/A Lennar c/o Joseph Fortino, Vice President 10211 Wincopin Circle Suite 300 Columbia, Maryland 21044 Ph# 410-423-0460	Preston • Scheffenacker Properties 2330 West Joppa Road, Suite 190 Lutherville, Maryland 21093-4614 Ph# 410-296-3800

STATE OF MARYLAND — ALDO MICHAEL VITUCCI — No. 20748 — PROFESSIONAL ENGINEER

ALDO M. VITUCCI, P.E. — DATE
"Professional Certification. I hereby certify that these documents were prepared by me, and that I am a duly Licensed Professional Engineer under the laws of the State of Maryland, License No. 20748, Expiration Date 2-22-17."

FISHER, COLLINS & CARTER, INC.
CIVIL ENGINEERING CONSULTANTS & LAND SURVEYORS
CONTINENTAL SQUARE OFFICE PARK - 10272 BALTIMORE NATIONAL PIKE
ELLICOTT CITY, MARYLAND 21042
(410) 461 - 2855

0' 50' 100' 150'
Scale: 1" = 50'

F-15-000

I:\2009\09014\dwg\Finals - Phase Four\redline 2016\09014 sheet 16-17 mylars.dwg, 7/25/2016 9:45:28 AM, 1:1

APPROVED: DEPARTMENT OF PUBLIC WORKS
CHIEF, BUREAU OF HIGHWAYS — DATE 8/19/16
APPROVED: DEPARTMENT OF PLANNING AND ZONING
CHIEF, DIVISION OF LAND DEVELOPMENT — DATE 9-7-16
CHIEF, DEVELOPMENT ENGINEERING DIVISION — DATE 9-6-16

NO.	DESCRIPTION	DATE
1	REVISE STORM DRAIN OUTFALL & STRUCTURE SCHEDULE	4/1/16

REVISIONS

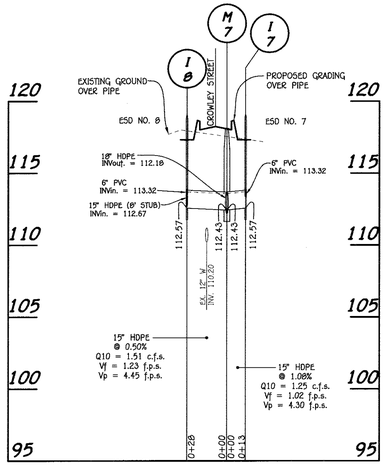

PROFILE

SCALE: HORIZ. : 1" = 50'
VERT. : 1" = 5'

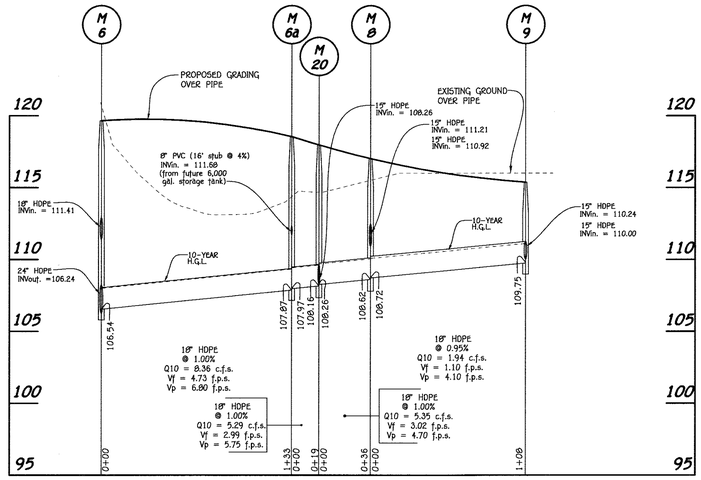

PROFILE

SCALE: HORIZ. : 1" = 50'
VERT. : 1" = 5'

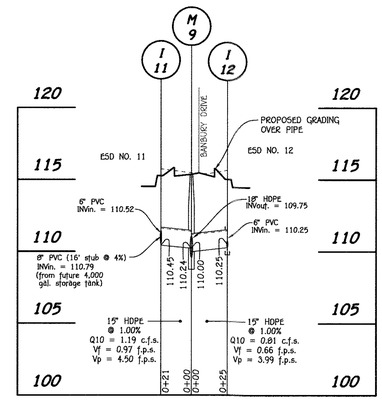

PROFILE

SCALE: HORIZ. : 1" = 50'
VERT. : 1" = 5'

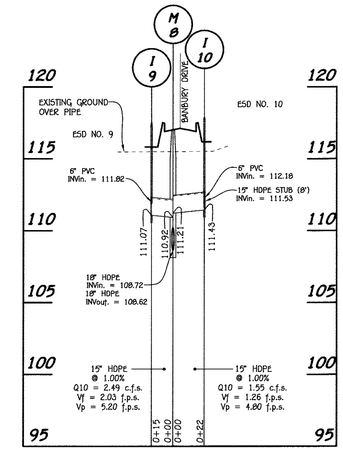

PROFILE

SCALE: HORIZ. : 1" = 50'
VERT. : 1" = 5'

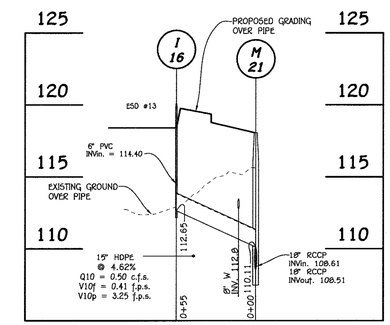

PROFILE

SCALE: HORIZ. : 1" = 50'
VERT. : 1" = 5'

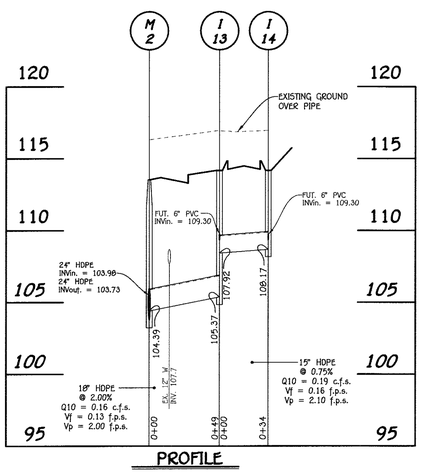

PROFILE

SCALE: HORIZ. : 1" = 50'
VERT. : 1" = 5'

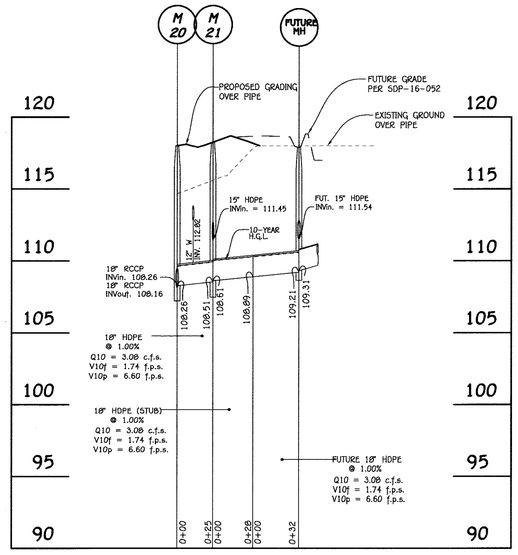

PROFILE

SCALE: HORIZ. : 1" = 50'
VERT. : 1" = 5'

0' 50' 100' 150'
Scale: 1" = 50'

REVISED
STORM DRAIN PROFILES

OXFORD SQUARE

"A Howard County Green Neighborhood"

Parcels 'V' Thru 'C-C' And
Open Space Lots 244 And 245

(Being A Resubdivision Of Open Space Lot 1, As Shown On Plats Entitled "Oxford Square, "Green Neighborhood", Parcels 'C' Thru 'L' And Open Space Lots 1 And 2" Recorded As Plat Nos. 22390 Thru 22395; A Resubdivision Of Parcel 'G', As Shown On Plats Entitled "Oxford Square, "Green Neighborhood" Resubdivision Plat-Parcel 'M' And Revision Plat-Parcels 'C', 'E', 'F', 'G', 'I', 'J', And 'K' Recorded As Plat Nos. 22896 Thru 22899; And A Resubdivision Of Parcels 'E', 'S' And 'T', As Shown On Plats Entitled "Oxford Square, "Green Neighborhood", Parcels 'R', 'S' And 'T' And Revision Plat-Parcel 'E" Recorded As Plat Nos. 23103 Thru 23105)
Zoned: TOD
Tax Map: 36, Parcel: 1003, Grid: 20 And Tax Map: 44, Parcel P/O 4 & 5, Grid 1
First Election District – Howard County, Maryland
Date: June 12, 2015
Sheet 17 of 27

STATE OF MARYLAND — ALDO MICHAEL VITUCCI — No. 20748 — PROFESSIONAL ENGINEER

ALDO M. VITUCCI, P.E. — DATE
"Professional Certification. I hereby certify that these documents were prepared by me, and that I am a duly Licensed Professional Engineer under the laws of the State of Maryland, License No. 20748, Expiration Date 2-22-17."

Owner
Board Of Education Of
Howard County, Maryland
c/o Dr. Renee A. Foose, Ed.D, Superintendent
10910 Maryland Route 108
Ellicott City, Maryland 21042
Ph# 410-313-6600

Owner
Oxford Square Master Association, Inc.
2330 West Joppa Road
Lutherville, Maryland 21093
Ph# 410-296-3800

Owner
Kellogg-CCP, LLC
c/o David P. Scheffenacker, Jr.,
Managing Member
2330 West Joppa Road, Suite 190
Lutherville, Maryland 21093-4614
Ph# 410-296-3800

Owner
U.S. Home Corporation,
D/B/A Lennar
c/o Joseph Fortino, Vice President
10211 Wincopin Circle
Suite 300
Columbia, Maryland 21044
Ph# 410-423-0460

Developer
Preston + Scheffenacker Properties
2330 West Joppa Road, Suite 190
Lutherville, Maryland 21093-4614
Ph# 410-296-3800

FISHER, COLLINS & CARTER, INC.
CIVIL ENGINEERING CONSULTANTS & LAND SURVEYORS
CENTENNIAL SQUARE OFFICE PARK - 10272 BALTIMORE NATIONAL PIKE
ELLICOTT CITY, MARYLAND 21042
(410) 461 - 2855

F-15-008

ELCOSH/09014/dwgs/finals - Phase Four\redline 2016\09014 sheet 16-17 mylars.dwg 7/25/2016 9:46:08 AM 11

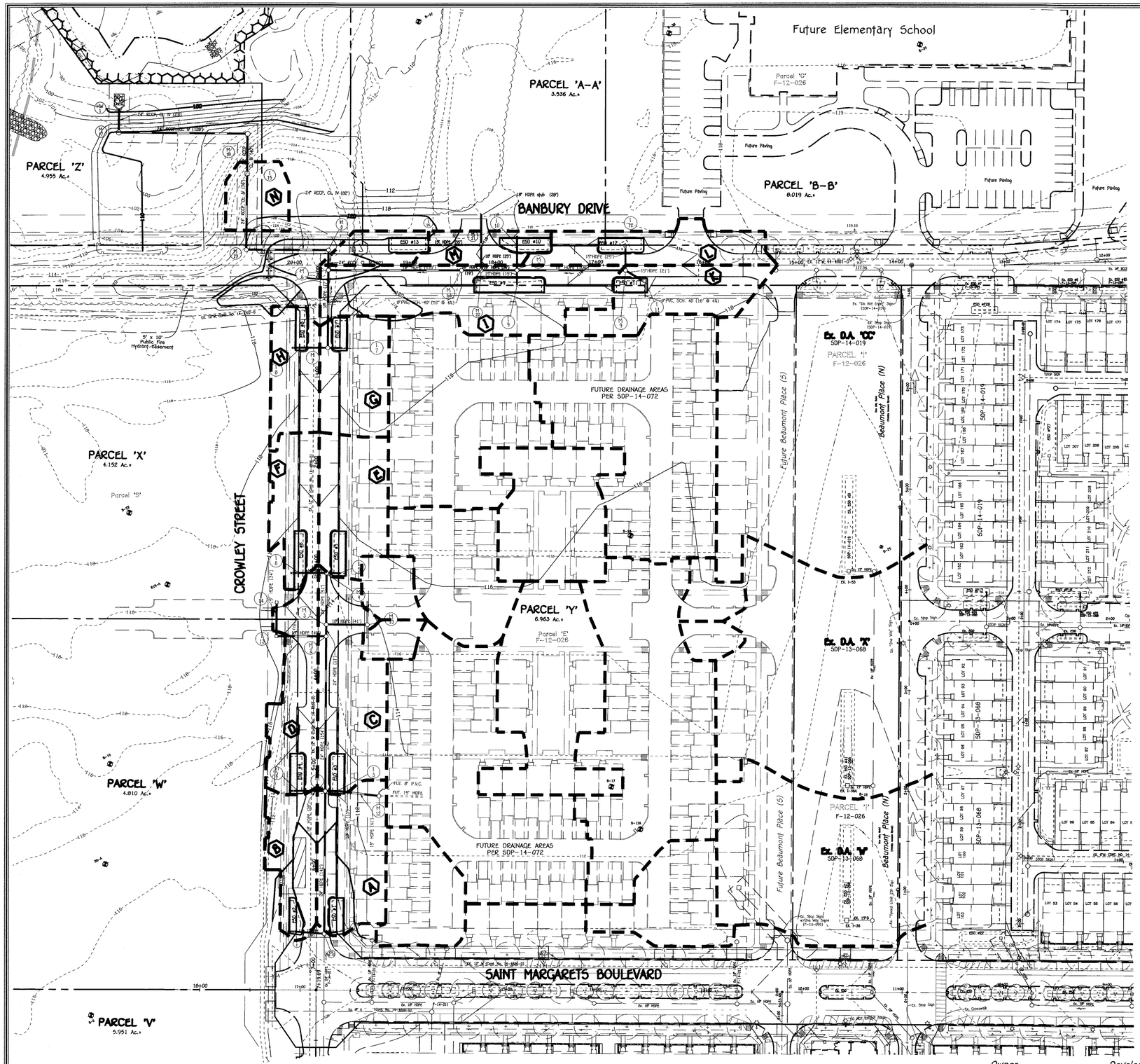

Approved: Department Of Planning And Zoning

Chief, Division Of Land Development — Date 9-7-16

Chief, Development Engineering Division — Date 4-6-16

Approved: Howard County Department Of Public Works

Chief, Bureau Of Highways — Date 8/19/16

REVISIONS

NO.	DESCRIPTION	DATE
1	REVISE STORM DRAIN OUTFALL, ENTRANCES TO PARCEL 'A-A' & 'B-B', STREET LIGHT LOCATIONS & ESD LOCATIONS	4/1/16

DRAINAGE AREA DATA

STRUCTURE NO.	DRAINAGE AREA	AREA	'C'	ZONED	% IMP.
I-1	A	0.22 AC.	0.72	TOD	67%
I-2	B	0.26 AC.	0.72	TOD	67%
I-3	C	0.29 AC.	0.72	TOD	68%
I-4	D	0.26 AC.	0.72	TOD	67%
I-5	E	0.21 AC.	0.68	TOD	61%
I-6	F	0.24 AC.	0.65	TOD	58%
I-7	G	0.19 AC.	0.69	TOD	63%
I-8	H	0.23 AC.	0.68	TOD	61%
I-9	I	0.38 AC.	0.67	TOD	60%
I-10	M	0.09 AC.	0.74	TOD	70%
I-11	K	0.20 AC.	0.60	TOD	50%
I-12	L	0.18 AC.	0.72	TOD	67%
I-15	N	0.07 AC.	0.55	TOD	42%
I-16	J	0.07 AC.	0.74	TOD	70%

I-15 (AREA N) IS BASED ON THE SDP-16-052 LAYOUT

PLAN

0' 50' 100' 150'

Scale: 1" = 50'

REVISED STORM DRAIN DRAINAGE AREA MAP

OXFORD SQUARE

"A Howard County Green Neighborhood"

Parcels 'V' Thru 'C-C' And Open Space Lots 244 And 245

(Being A Resubdivision Of Open Space Lot 1, As Shown On Plats Entitled "Oxford Square, "Green Neighborhood", Parcels 'C' Thru 'L' And Open Space Lots 1 And 2" Recorded As Plat Nos. 22390 Thru 22395; A Resubdivision Of Parcel 'G', As Shown On Plats Entitled "Oxford Square, "Green Neighborhood" Resubdivision Plat-Parcel 'H' And Revision Plat-Parcels 'C', 'E', 'F', 'G', 'I', 'J', And 'K' Recorded As Plat Nos. 22396 Thru 22899; And A Resubdivision Of Parcels 'E', 'S' And 'T', As Shown On Plats Entitled "Oxford Square, "Green Neighborhood", Parcels 'R', 'S' And 'T' And Revision Plat-Parcel 'E'" Recorded As Plat Nos. 23103 Thru 23105)

Zoned: TOD

Tax Map: 38, Parcel: 1003, Grid: 20 And Tax Map: 44, Parcel P/O 4 & 5, Grid 1

First Election District - Howard County, Maryland

Date: June 12, 2015

Sheet 18 of 27

Owner	Owner	Owner	Owner	Developer
Board Of Education Of Howard County, Maryland c/o Dr. Renee A. Foose, Ed.D. Superintendent 10910 Maryland Route 108 Ellicott City, Maryland 21042 Ph# 410-313-6600	Oxford Square Master Association, Inc. 2330 West Joppa Road Lutherville, Maryland 21093 Ph# 410-296-3800	Kellogg-CCP, LLC c/o David P. Scheffenacker, Jr., Managing Member 2330 West Joppa Road, Suite 190 Lutherville, Maryland 21093-4614 Ph# 410-296-3800	U.S. Home Corporation, D/B/A Lennar c/o Joseph Fortino, Vice President 10211 Wincopin Circle Suite 300 Columbia, Maryland 21044 Ph# 410-423-0460	Preston • Scheffenacker Properties 2330 West Joppa Road, Suite 190 Lutherville, Maryland 21093-4614 Ph# 410-296-3800

STATE OF MARYLAND — ALDO MICHAEL VITUCCI — No. 20748 — PROFESSIONAL ENGINEER

ALDO M. VITUCCI, P.E. — DATE 7/20/16

"Professional Certification. I hereby certify that these documents were prepared by me, and that I am a duly Licensed Professional Engineer under the laws of the State of Maryland, License No. 20748, Expiration Date 2-22-17."

FISHER, COLLINS & CARTER, INC.
CIVIL ENGINEERING CONSULTANTS & LAND SURVEYORS
CENTENNIAL SQUARE OFFICE PARK - 10272 BALTIMORE NATIONAL PIKE
ELLICOTT CITY, MARYLAND 21042
(410) 461 - 2855

F-15-008

I:\2009\09014\dwg\Finals - Phase Four\redline 2016\09014 sheet 18 mylar.dwg, 7/20/2016 9:13:48 AM, 1:1

Approved: Department Of Planning And Zoning

Chief, Division Of Land Development — Date 11-19-15

Chief, Development Engineering Division — Date 11-17-15

Approved: Howard County Department Of Public Works

Chief, Bureau Of Highways — Date 11/19/2015

REVISIONS		
NO.	DESCRIPTION	DATE

FOREST CONSERVATION DATA (F-12-026)			
EASEMENT NO.	RETENTION AREA	PLANTING AREA	TOTAL EASEMENT AREA
1	3.65 AC.	1.86 AC.	5.51 AC.
2	1.16 AC.	1.03 AC.	2.19 AC.
3	5.70 AC.	1.17 AC.	6.87 AC.
4	0.00 AC.	0.50 AC.	0.50 AC.
5	0.00 AC.	0.40 AC.	0.40 AC.
6	0.00 AC.	0.29 AC.	0.29 AC.
TOTAL	10.51 AC.	5.25 AC.	15.76 AC.

FOREST CONSERVATION DATA (F-15-008)					
EASEMENT NO.	CREDITED RETENTION AREA	NON-CREDITED RETENTION AREA	PLANTING AREA	TOTAL EASEMENT AREA	
1A	2.52 AC.	0.00 AC.	0.06 AC.	2.58 AC.	REVISED WITH THIS PLAN
2	Removed				
3	Removed				
4	Removed				
5	0.00 AC.	0.00 AC.	0.40 AC.	0.40 AC.	EXISTING EASEMENTS PER F-12-026 TO REMAIN
6	0.00 AC.	0.00 AC.	0.29 AC.	0.29 AC.	
7	1.47 AC.	0.00 AC.	0.00 AC.	1.47 AC.	PROPOSED EASEMENTS TO BE RECORDED WITH F-15-008
8	0.48 AC.	1.32 AC.	0.83 AC.	2.63 AC.	
9	1.32 AC.	0.00 AC.	0.00 AC.	1.32 AC.	
10	0.53 AC.	1.00 AC.	0.00 AC.	1.53 AC.	
TOTAL	6.32 AC.	2.324 AC.	1.58 AC.	10.22 AC.	

LEGEND

- Existing Contours
- Wetland Limits
- Wetland/Stream Buffer
- Proposed Contours
- Forest Conservation Easement (TO BE REMOVED)
- Forest Conservation Easement (TO REMAIN)
- Forest Conservation Easement (Retention Area)
- Forest Conservation Easement To Be Planted
- Forest Conservation Signs
- TP — Tree Protection Fence

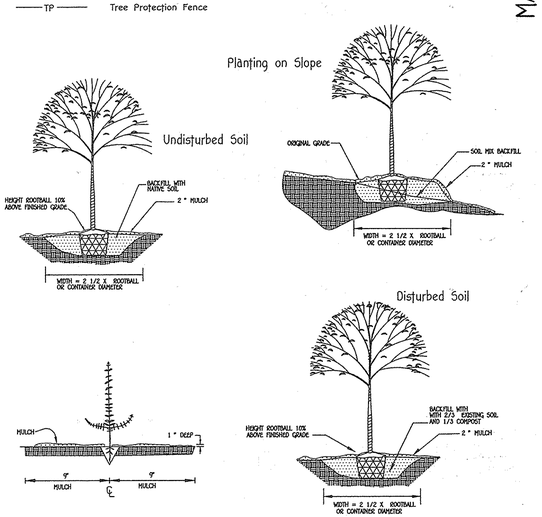

Seeding and Whip Planting Specification

MATCH LINE SEE SHEET 21

MATCH LINE SEE SHEET 20

PLAN

0' 50' 100' 150'

Scale: 1" = 50'

Owner	Owner	Owner	Owner	Developer
Board Of Education Of Howard County, Maryland c/o Dr. Renee A. Foose, Ed.D, Superintendent 10910 Maryland Route 108 Ellicott City, Maryland 21042 Ph# 410-313-6600	Oxford Square Master Association, Inc. 2330 West Joppa Road Lutherville, Maryland 21093 Ph# 410-296-3800	Kellogg-CCP, LLC c/o David P. Scheffenacker, Jr., Managing Member 2330 West Joppa Road, Suite 190 Lutherville, Maryland 21093-4614 Ph# 410-296-3800	U.S. Home Corporation, D/B/A Lennar c/o Joseph Fortino, Vice President 10211 Wincopin Circle Suite 300 Columbia, Maryland 21044 Ph# 410-423-0460	Preston - Scheffenacker Properties 2330 West Joppa Road, Suite 190 Lutherville, Maryland 21093-4614 Ph# 410-296-3800

STATE OF MARYLAND — ALDO MICHAEL VITUCCI — No. 20748

ALDO M. VITUCCI, P.E. — DATE 10/20/15

"Professional Certification. I hereby certify that these documents were prepared by me, and that I am a duly Licensed Professional Engineer under the laws of the State of Maryland, License No. 20748, Expiration Date 2-22-17."

FOREST CONSERVATION PLAN

OXFORD SQUARE

"A Howard County Green Neighborhood"

Parcels 'V' Thru 'C-C' And Open Space Lots 244 And 245

(Being A Resubdivision Of Open Space Lot 1, As Shown On Plats Entitled "Oxford Square, "Green Neighborhood", Parcels 'C' Thru 'L' And Open Space Lots 1 And 2" Recorded As Plat Nos. 22390 Thru 22395. A Resubdivision Of Parcel 'G', As Shown On Plats Entitled "Oxford Square, "Green Neighborhood" Resubdivision Plat-Parcel 'M' And Revision Plat-Parcels 'C', 'E', 'F', 'G', 'I', 'J', And 'K' Recorded As Plat Nos. 22856 Thru 22859; And A Resubdivision Of Parcels 'E', 'S' And 'T', As Shown On Plats Entitled "Oxford Square, "Green Neighborhood", Parcels 'R', 'S' And 'T' And Revision Plat-Parcel 'E" Recorded As Plat Nos. 23103 Thru 23105)

Zoned: TOD

Tax Map: 38, Parcel: 1003, Grid: 20 And Tax Map: 44, Parcel P/O 4 & 5, Grid 1

Election District - Howard County, Maryland

Date: June 12, 2015

Sheet 19 of 27

FISHER, COLLINS & CARTER, INC.
CIVIL ENGINEERING CONSULTANTS & LAND SURVEYORS
CENTENNIAL SQUARE OFFICE PARK - 10272 BALTIMORE NATIONAL PIKE
ELLICOTT CITY, MARYLAND 21042
(410) 461 - 2855

Eco-Science Professionals, Inc.
CONSULTING ECOLOGISTS

MD DNR Qualified Professional
USACOE Wetland Delineator
Certification # WDCP93M006100448

JOHN P. CANOLES

REPLACEMENT SHEET

F-15-008

I:\2009\09004\dwg\Finals - Phase Four\09014 sheet 19-24 forest con plan august 2015.dwg, 8/31/2015 9:32:25 AM, 1:1

Approved: Department Of Planning And Zoning

Chief, Division Of Land Development — Date: 11-19-15

Chief, Development Engineering Division — Date: 11-17-15

Approved: Howard County Department Of Public Works

Chief, Bureau Of Highways — Date: 10/9/2015

REVISIONS		
NO.	DESCRIPTION	DATE

LEGEND

- Existing Contours
- Wetland Limits
- Wetland/Stream Buffer
- Proposed Contours
- Forest Conservation Easement (TO BE REMOVED)
- Forest Conservation Easement (TO REMAIN)
- Forest Conservation Easement (Retention Area)
- Forest Conservation Easement To Be Planted
- Forest Conservation Signs
- TP — Tree Protection Fence

FOREST CONSERVATION WORKSHEET
VERSION 1.0
(F-15-008)

NET TRACT AREA	ACRES
A. TOTAL TRACT AREA	129.5
B. DEDUCTIONS (AREA WITHIN 100 YEAR FLOODPLAIN)	18.5
C. AREA IN UNDERGROUND EASEMENT	3.8
D. NET TRACT AREA	107.2
LAND USE CATEGORY: ARA MDR IDA HDR MPD CIA X	
E. AFFORESTATION THRESHOLD (NET TRACT AREA (C) x 15%)	16.1
F. CONSERVATION THRESHOLD (NET TRACT AREA (C) x 15%)	16.1
EXISTING FOREST COVER	
G. EXISTING FOREST COVER (EXCLUDING FLOODPLAIN)	15.1
H. AREA OF FOREST ABOVE AFFORESTATION TRESHOLD	0
I. AREA OF FOREST ABOVE CONSERVATION TRESHOLD	0
BREAKEVEN POINT	
J. FOREST RETENTION ABOVE THRESHOLD WITH NO MITIGATION	N/A
BREAKEVEN POINT	N/A
K. CLEARING PERMITTED WITHOUT MITIGATION	0
PROPOSED FOREST CLEARING	
L. TOTAL AREA OF FOREST TO BE CLEARED OR RETAINED OUTSIDE FCE	8.8
M. TOTAL AREA OF FOREST TO BE RETAINED	6.3
PLANTING REQUIREMENTS	
N. REFORESTATION FOR CLEARING ABOVE THE CONSERVATION TRESHOLD	0
P. REFORESTATION FOR CLEARING BELOW THE CONSERVATION TRESHOLD	17.6
Q. CREDIT FOR RETENTION ABOVE THE CONSERVATION TRESHOLD	0
R. TOTAL REFORESTATION REQUIRED	17.6
S. TOTAL AFFORESTATION REQUIRED	1.0
T. TOTAL PLANTING REQUIREMENT	18.6

NOTE: THE F-12-026 FINAL PLAN PROPOSED 10.5 AC. OF RETENTION AND 3.5 AC. OF PLANTING, KEEPING THE ENTIRE FOREST OBLIGATION ON-SITE. THE SUBMISSION OF S-15-001 REVISED THE PROPOSED LAYOUT AND REMOVED EXISTING FOREST. THIS PLAN PROPOSES 6.3 AC. OF ON-SITE RETENTION, 1.58 AC. OF ON-SITE PLANTING LEAVING A REMAINDER OF 17.02 AC. (Planting). THIS OUTSTANDING OBLIGATION WITH BE PROVIDED OFF-SITE BY PROVIDING 34.04 AC. (Reforestation) ON "BARNAN PROPERTY, TAX MAP No. 11, GRID No. 19, PARCEL No. 13".

FOREST CONSERVATION WORKSHEET
VERSION 1.0
(F-12-026)

NET TRACT AREA	ACRES
A. TOTAL TRACT AREA	111.0
B. DEDUCTIONS (AREA WITHIN 100 YEAR FLOODPLAIN)	6.0
C. AREA IN UNDERGROUND EASEMENT	11.6
D. NET TRACT AREA	93.4
LAND USE CATEGORY: ARA MDR IDA HDR MPD CIA X	
E. AFFORESTATION THRESHOLD (NET TRACT AREA (C) x 15%)	14.0
F. CONSERVATION THRESHOLD (NET TRACT AREA (C) x 15%)	14.0
EXISTING FOREST COVER	
G. EXISTING FOREST COVER (EXCLUDING FLOODPLAIN)	10.5
H. AREA OF FOREST ABOVE AFFORESTATION TRESHOLD	0
I. AREA OF FOREST ABOVE CONSERVATION TRESHOLD	0
BREAKEVEN POINT	
J. FOREST RETENTION ABOVE THRESHOLD WITH NO MITIGATION	N/A
BREAKEVEN POINT	N/A
K. CLEARING PERMITTED WITHOUT MITIGATION	0
PROPOSED FOREST CLEARING	
L. TOTAL AREA OF FOREST TO BE CLEARED OR RETAINED OUTSIDE FCE	0
M. TOTAL AREA OF FOREST TO BE RETAINED	10.5
PLANTING REQUIREMENTS	
N. REFORESTATION FOR CLEARING ABOVE THE CONSERVATION TRESHOLD	0
P. REFORESTATION FOR CLEARING BELOW THE CONSERVATION TRESHOLD	0
Q. CREDIT FOR RETENTION ABOVE THE CONSERVATION TRESHOLD	0
R. TOTAL REFORESTATION REQUIRED	0
S. TOTAL AFFORESTATION REQUIRED	3.5
T. TOTAL PLANTING REQUIREMENT	3.5

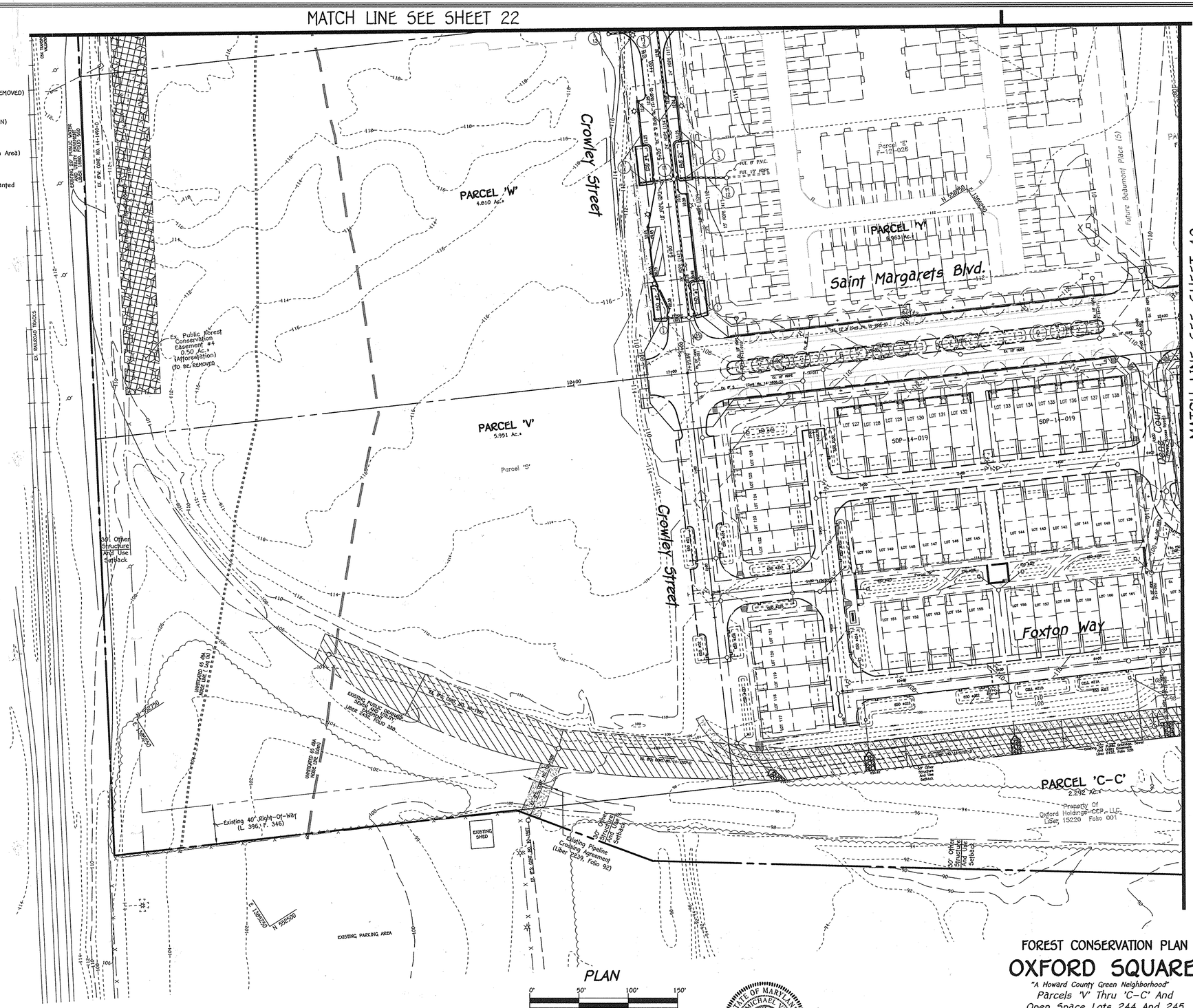

PLAN

0' 50' 100' 150'

Scale: 1" = 50'

Owner	Owner	Owner	Owner	Developer
Board Of Education Of Howard County, Maryland c/o Dr. Renee A. Foose, Ed.D. Superintendent 10910 Maryland Route 108 Ellicott City, Maryland 21042 Ph# 410-313-6600	Oxford Square Master Association, Inc. 2330 West Joppa Road Lutherville, Maryland 21093 Ph# 410-296-3800	Kellogg-CCP, LLC c/o David P. Scheffenacker, Jr., Managing Member 2330 West Joppa Road, Suite 190 Lutherville, Maryland 21093-4614 Ph# 410-296-3800	U.S. Home Corporation, D/B/A Lennar c/o Joseph Fortino, Vice President 10211 Wincopin Circle Suite 300 Columbia, Maryland 21044 Ph# 410-423-0460	Preston - Scheffenacker Properties 2330 West Joppa Road, Suite 190 Lutherville, Maryland 21093-4614 Ph# 410-296-3800

STATE OF MARYLAND — ALDO MICHAEL VITUCCI — No. 20748 — PROFESSIONAL ENGINEER

ALDO M. VITUCCI, P.E. — DATE: 10/20/15

"Professional Certification. I hereby certify that these documents were prepared by me, and that I am a duly Licensed Professional Engineer under the laws of the State of Maryland, License No. 20748, Expiration Date 2-22-17."

FOREST CONSERVATION PLAN
OXFORD SQUARE

"A Howard County Green Neighborhood"

Parcels 'V' Thru 'C-C' And Open Space Lots 244 And 245

(Being A Resubdivision Of Open Space Lot 1, As Shown On Plats Entitled "Oxford Square, "Green Neighborhood", Parcels 'C' Thru 'L' And Open Space Lots 1 And 2' Recorded As Plat Nos. 22390 Thru 22395; A Resubdivision Of Parcel 'G', As Shown On Plats Entitled "Oxford Square, "Green Neighborhood" Resubdivision Plat-Parcel 'M' And Revision Plat-Parcels 'C', 'E', 'F', 'G', 'I', 'J', And 'K' Recorded As Plat Nos. 22896 Thru 22899; And A Resubdivision Of Parcels 'E', 'S' And 'T', As Shown On Plats Entitled "Oxford Square, "Green Neighborhood", Parcels 'E', 'S' And 'T' And Revision Plat-Parcel 'E'" Recorded As Plat Nos. 23103 Thru 23105)

Zoned: TOD

Tax Map: 38, Parcel: 1003, Grid: 20 And Tax Map: 44, Parcel P/O 4 & 5, Grid 1

First Election District - Howard County, Maryland

Date: June 12, 2015

Sheet 20 of 27

FISHER, COLLINS & CARTER, INC.
CIVIL ENGINEERING CONSULTANTS & LAND SURVEYORS
CENTENNIAL SQUARE OFFICE PARK - 10272 BALTIMORE NATIONAL PIKE
ELLICOTT CITY, MARYLAND 21042
(410) 461 - 2855

Eco-Science Professionals, Inc.
CONSULTING ECOLOGISTS

MD DNR Qualified Professional
USACOE Wetland Delineator
Certification # WDCP93MD0610244B

JOHN P. CANOLES

REPLACEMENT SHEET — F-15-008

1:\2009\09014\dwg\finals - Phase Four\09014 sheet 19-24 forest con plan august 2015.dwg, 8/31/2015 9:11:19 AM, 1:1

MATCH LINE SEE SHEET 23

MATCH LINE SEE SHEET 22

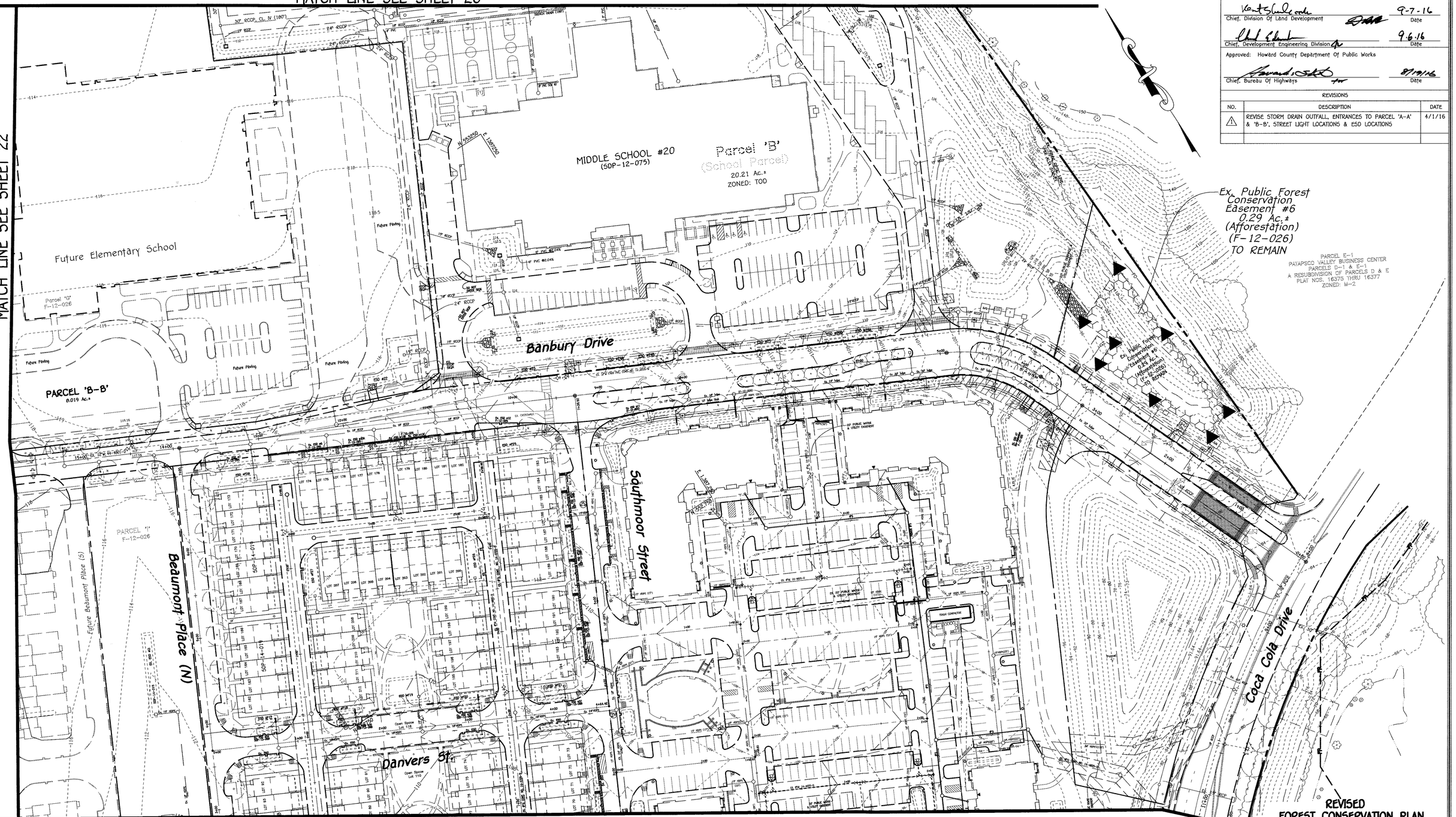

MATCH LINE SEE SHEET 19

Approved: Department Of Planning And Zoning

Chief, Division Of Land Development — Date: 9-7-16

Chief, Development Engineering Division — Date: 9.6.16

Approved: Howard County Department Of Public Works

Chief, Bureau Of Highways — Date: 8/19/16

REVISIONS		
NO.	DESCRIPTION	DATE
1	REVISE STORM DRAIN OUTFALL, ENTRANCES TO PARCEL 'A-A' & 'B-B', STREET LIGHT LOCATIONS & ESD LOCATIONS	4/1/16

PLAN

0' 50' 100' 150'

Scale: 1" = 50'

REVISED FOREST CONSERVATION PLAN
OXFORD SQUARE

"A Howard County Green Neighborhood"

Parcels 'V' Thru 'C-C' And Open Space Lots 244 And 245

(Being A Resubdivision Of Open Space Lot 1, As Shown On Plats Entitled "Oxford Square, "Green Neighborhood", Parcels 'C' Thru 'L' And Open Space Lots 1 And 2" Recorded As Plat Nos. 22390 Thru 22395; A Resubdivision Of Parcel 'G', As Shown On Plats Entitled "Oxford Square, "Green Neighborhood" Resubdivision Plat-Parcel 'M' And Revision Plat-Parcels 'C', 'E', 'F', 'G', 'I', 'J', And 'K' Recorded As Plat Nos. 22896 Thru 22899; And A Resubdivision Of Parcels 'E', 'S' And 'T', As Shown On Plats Entitled "Oxford Square, "Green Neighborhood", Parcels 'K', 'S' And 'T' And Revision Plat-Parcel 'E'" Recorded As Plat Nos. 23103 Thru 23109)

Zoned: TOD

Tax Map: 38, Parcel: 1003, Grid: 20 And Tax Map: 44, Parcel P/O 4 & 5, Grid 1

First Election District – Howard County, Maryland

Date: June 12, 2015

Sheet 21 of 27

STATE OF MARYLAND — ALDO MICHAEL VITUCCI — No. 20748 — PROFESSIONAL ENGINEER

ALDO M. VITUCCI, P.E. — DATE: 7/20/16

"Professional Certification. I hereby certify that these documents were prepared by me, and that I am a duly Licensed Professional Engineer under the laws of the State of Maryland, License No. 20748, Expiration Date 2-22-17."

Owner
Board Of Education Of Howard County, Maryland
c/o Dr. Renee A. Foose, Ed.D. Superintendent
10910 Maryland Route 108
Ellicott City, Maryland 21042
Ph# 410-313-6600

Owner
Oxford Square Master Association, Inc.
2330 West Joppa Road
Lutherville, Maryland 21093
Ph# 410-296-3800

Owner
Kellogg-CCP, LLC
c/o David P. Scheffenacker, Jr., Managing Member
2330 West Joppa Road, Suite 190
Lutherville, Maryland 21093-4614
Ph# 410-296-3800

Owner
U.S. Home Corporation, D/B/A Lennar
c/o Joseph Fortino, Vice President
10211 Wincopin Circle
Suite 300
Columbia, Maryland 21044
Ph# 410-423-0460

Developer
Preston • Scheffenacker Properties
2330 West Joppa Road, Suite 190
Lutherville, Maryland 21093-4614
Ph# 410-296-3800

MD DNR Qualified Professional
USACOE Wetland Delineator
Certification # WDCP93MD0610044B
JOHN P. CANODES — 7/20/16

Eco-Science Professionals, Inc.
CONSULTING ECOLOGISTS

FISHER, COLLINS & CARTER, INC.
CIVIL ENGINEERING CONSULTANTS & LAND SURVEYORS
CENTENNIAL SQUARE OFFICE PARK - 10272 BALTIMORE NATIONAL PIKE
ELLICOTT CITY, MARYLAND 21042
(410) 461 - 2855

F-15-008

I:\2005\05014\dwg\Finals - Phase Four\redline 2016\05014 sheet 21-22 MYLARS.dwg, 6/30/2016 8:49:18 AM, 1:1

Approved: Department Of Planning And Zoning

Chief, Division Of Land Development — Date: 9-7-16

Chief, Development Engineering Division — Date: 9.6.16

Approved: Howard County Department Of Public Works

Chief, Bureau Of Highways — Date: 8/19/16

REVISIONS

NO.	DESCRIPTION	DATE
1	REVISE STORM DRAIN OUTFALL, ENTRANCES TO PARCEL 'A-A' & 'B-B', STREET LIGHT LOCATIONS & ESD LOCATIONS	4/1/16

Construction Period Protection Program

A. Forest Protection Techniques

1. Soil Protection Area (Critical Root Zone)

The soil protection area, or critical root zone, of a tree is that portion of the soil column where most of its roots may be found. The majority of roots responsible for water and nutrient uptake are located just below the soil surface.

The limit of disturbance (LOD) line depicted on the plan shows the proposed extent of construction activities. Eco-Science Professionals, or another qualified professional designated by the developer, will assist in the field flagging of the LOD to ensure that the Critical Root Zone for the Forest Retention Area is determined in accordance with the In-Field Edge Determination Guidelines in Appendix A. Eco-Science Professionals, or another qualified professional, will also assess the condition of the new forest edge to determine if selective thinning or pruning is needed to improve the condition of the edge.

2. Fencing And Signage

All forest retention areas will be protected from unauthorized intrusion by appropriate signage and fencing. Signage and fencing will be installed prior to any construction activity. Installation of these devices will be supervised by Eco-Science Professionals or another qualified professional. Fencing will placed along all LOD lines that occur within 35 feet of existing treelines. Signage will be placed along the edge of the FCE every 100 feet. Fencing will consist of blaze orange mesh fence or super silt fence. See Forest Conservation Plan for extended specifications.

B. Pre-Construction Meeting

Upon staking of limits of disturbance and installation of all signage, a pre-construction meeting will be held between the developer, contractor and appropriate County inspector. The purpose of the meeting will be to verify that all tree protection measures outlined in the FCP are in place, that all sediment control is in order, and to notify the contractor of possible penalties for non-compliance with the FCP.

C. Storage Facilities/Equipment Cleaning

All equipment storage, parking, sanitary facilities, material stockpiling, etc. associated with construction of the project will be restricted to those areas shown within the limit of disturbance. Washing of equipment will be prohibited from all forest retention areas. Wastewater resulting from equipment cleaning will be controlled to prevent runoff into wetlands, streams and other environmentally sensitive areas.

D. Sequence of Construction

The following timetable represents the proposed timetable for construction of the proposed project. The construction start date for this project has not been formalized. The actual project start date is predicated on the issuance of all necessary permits and approvals for the project. The terms outlined in the Forest Conservation Plan will be enacted upon commencement of the project.

Below find a sequence of construction.

1. Install all tree protection signage, fencing, and sediment control devices.
2. Hold pre-construction meeting between developer, contractor and County inspector.
3. Grade site and construct improvements. Stabilize all disturbed areas in accordance with grading plan.
4. Remove sediment control. Replace any forest retention signage in poor condition.
5. Hold post-construction meeting with County inspectors to assure compliance with FCP.

E. Construction Monitoring

Eco-Science Professionals, or another qualified professional designated by the developer, will monitor construction of the project to ensure that all activities are in compliance with the Forest Conservation Plan. This will include inspections to ensure that signage is properly maintained and that no unauthorized intrusions have been made into forest retention areas.

F. Activities Permitted During Construction

The forest conservation plan will allow the following activities within forest resources during the construction phase of the project:

1. Passive recreation (birdwatching, hiking, etc.)

These activities will not damage or negatively impact the forest resources on the property.

G. Post-Construction Meeting

Upon completion of construction, Eco-Science Professionals, or another qualified professional designated by the developer, will notify the County that construction has been completed and arrange for a post-construction meeting to review the project site. The meeting will allow the County inspector to verify that all Forest Conservation Easement Areas have been properly retained and that all post construction protection measures (permanent signage) have been installed.

Post-Construction Management Plan

The post-construction management plan will further ensure that all Forest Conservation Easement Areas are maintained. The developer will be responsible for implementation of the post-construction management plan.

The following items will be incorporated into the plan for the subject property:

A. Signage

Signage indicating the limits of the forest retention areas shall be maintained.

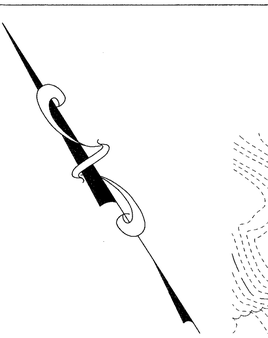

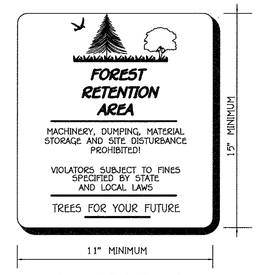

ON-SITE SIGNAGE

Planting/Soil Specifications

1. Installation of bareroot plant stock shall take place between March 15 - April 20; B&B/container stock March 15 -May 30 or September 15 - November 15. Fall planting of B&B stock is not recommended.
2. Disturbed areas shall be seeded and stabilized as per general construction plan for project. Planting areas not impacted by site grading shall have no additional topsoil installed.
3. Bareroot plants shall be installed so that the top of root mass is level with the top of existing grade. Roots shall be dipped in an anti-desiccant gel prior to planting. Backfill in the planting pits shall consist of 3 parts existing soil to 1 part pine fines or equivalent.
4. Fertilizer shall consist of Agriform 22-8-2, or equivalent, applied as per manufacturer's specifications, for woody plants. Herbaceous plants shall be fertilized with Osmocote 8-8-12.
5. Plant material shall be transported to the site in a tarped or covered truck. Plants shall be kept moist prior to planting.
6. All non-organic debris associated with the planting operation shall be removed from the site by the contractor.

Sequence of Construction

1. Sediment control shall be installed in accordance with general construction plan for site.
2. Plants shall be installed as per Plant Schedule and the Planting/Soil Specifications for the project.
3. Upon completion of the planting, signage shall be installed as shown.
4. Plantings shall be maintained and guaranteed in accordance with the Maintenance And Guarantee requirements for project.

Maintenance of Plantings

1. Maintenance of plantings shall last for a period of 2 years.
2. Plantings must receive 2 gallons of water, either through precipitation or watering, weekly during the 1st growing season, as needed. During second growing season, once a month during May-September, if needed.
3. Invasive exotics and noxious weeds will be removed, as required, from planting areas mechanically and/or with limited herbicide application (see groundcover note where appropriate). Old field successional species will be retained.
4. Plants will be examined a minimum two times during the growing season for serious plant pests and diseases. Serious problems will be treated with the appropriate agent.
5. Dead branches will be pruned from plantings.

Guarantee Requirements

1. A 75 percent survival rate of forestation plantings will be required at the end of 2 growing seasons. All plant material below the 75 percent threshold will be replaced at the beginning of the next growing season. Wild trees arising from natural regeneration may be counted up to 50 percent towards the total survival number if they are healthy, native species at least 12 inches tall.

Surety for Forestation

1. The developer shall post a surety (bond, letter of credit) to ensure that forestation plantings are completed. See GENERAL NOTE 19, SHEET 1.

Planting Notes

When possible, plants shall be installed within 24 hours of delivery. If installation cannot be performed within this time frame, plant stock shall be watered and protected from dessication

Application of herbicide, Round-up or equivalent, may be used to reduce plant competition from old field successional growth at the time of installation. Mowing, re-application of herbicide, or a combination thereof, may be used to control unwanted, competing vegetation.

Planting shall be installed within one year or two growing seasons of subdivision approval. Plantings shall be installed in accordance with the time schedule included in Note 1 of the planting /Seeding Specifications.

PLAN

0' 50' 100' 150'

Scale: 1" = 50'

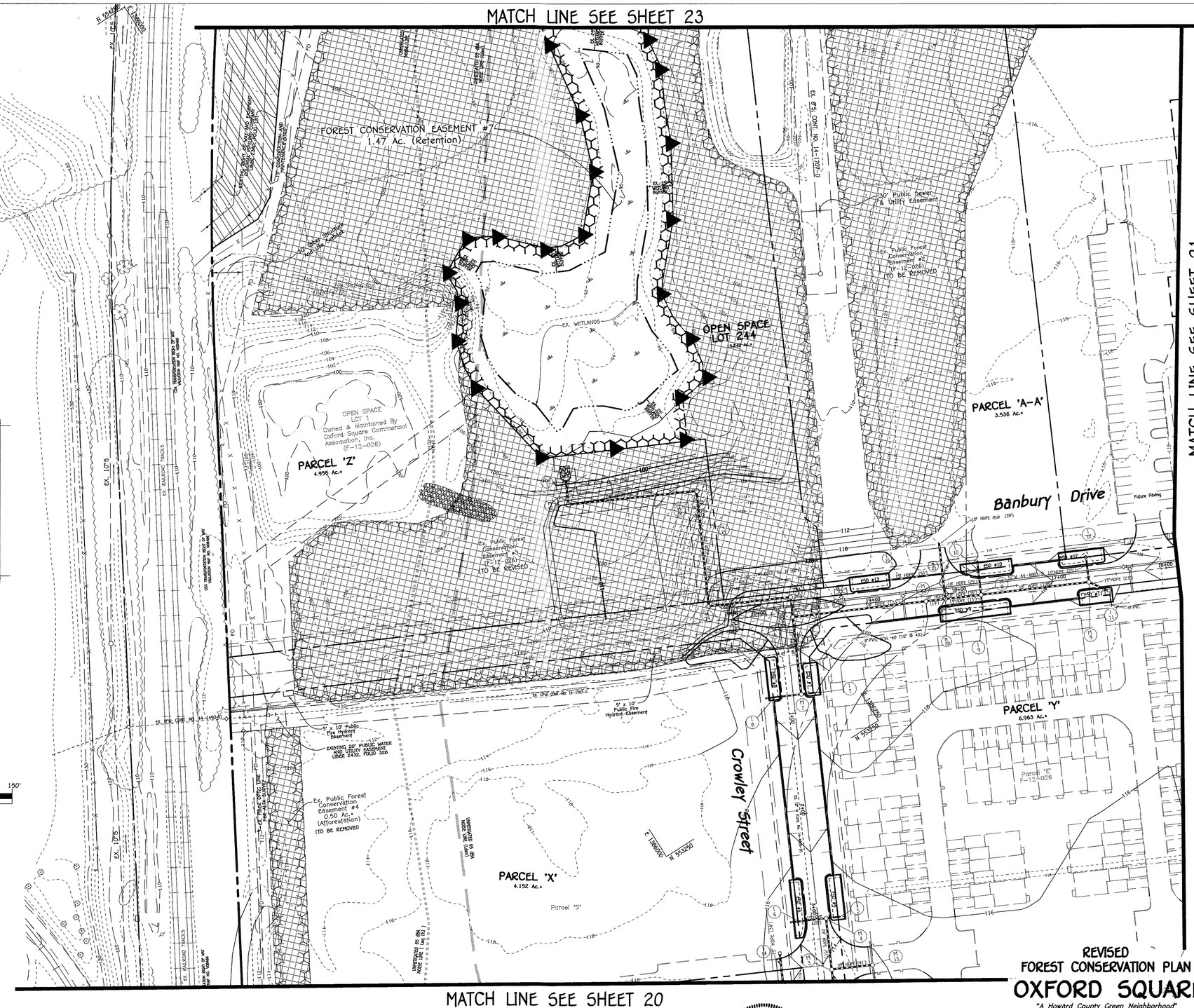

- Denotes Forest Conservation Easement (F-12-026) To Be Removed

REVISED FOREST CONSERVATION PLAN
OXFORD SQUARE

"A Howard County Green Neighborhood"

Parcels 'V' Thru 'C-C' And Open Space Lots 244 And 245

(Being A Resubdivision Of Open Space Lot 1, As Shown On Plats Entitled "Oxford Square, "Green Neighborhood", Parcels 'C' Thru 'L' And Open Space Lots 1 And 2' Recorded As Plat Nos. 22390 Thru 22395; A Resubdivision Of Parcel 'G', As Shown On Plats Entitled "Oxford Square, "Green Neighborhood" Resubdivision Plat-Parcel 'M' And Revision Plat-Parcels 'C', 'E', 'F', 'G', 'I', 'J', And 'K' Recorded As Plat Nos. 22956 Thru. 22959; And A Resubdivision Of Parcels 'E', 'S' And 'T', As Shown On Plats Entitled "Oxford Square, "Green Neighborhood", Parcels 'X', 'S' And 'T' And Revision Plat-Parcel 'E" Recorded As Plat Nos. 23103 Thru 23105)

Zoned: TOD

Tax Map: 38, Parcel: 1003, Grid: 20 And Tax Map: 44, Parcel P/O 4 & 5, Grid 1

First Election District - Howard County, Maryland

Date: June 12, 2015

Sheet 22 of 27

FISHER, COLLINS & CARTER, INC.
CIVIL ENGINEERING CONSULTANTS & LAND SURVEYORS
CENTENNIAL SQUARE OFFICE PARK - 10272 BALTIMORE NATIONAL PIKE
ELLICOTT CITY, MARYLAND 21042
(410) 461 - 2855

Eco-Science Professionals, Inc.
CONSULTING ECOLOGISTS

MD DNR Qualified Professional
USACOE Wetland Delineator
Certification # WDCP93MD0610044B
JOHN P. CANOLES 7/20/16

Owner
Board Of Education Of Howard County, Maryland
c/o Dr. Renee A. Foose, Ed.D, Superintendent
10910 Maryland Route 108
Ellicott City, Maryland 21042
Ph# 410-313-6600

Owner
Oxford Square Master Association, Inc.
2330 West Joppa Road
Lutherville, Maryland 21093
Ph# 410-296-3800

Owner
Kellogg-CCP, LLC
c/o David P. Scheffenacker, Jr., Managing Member
2330 West Joppa Road, Suite 190
Lutherville, Maryland 21093-4614
Ph# 410-296-3800

Owner
U.S. Home Corporation, D/B/A Lennar
c/o Joseph Fortino, Vice President
10211 Wincopin Circle
Suite 300
Columbia, Maryland 21044
Ph# 410-423-0460

Developer
Preston • Scheffenacker Properties
2330 West Joppa Road, Suite 190
Lutherville, Maryland 21093-4614
Ph# 410-296-3800

STATE OF MARYLAND — ALDO MICHAEL VITUCCI — No. 20746 — PROFESSIONAL ENGINEER
7/20/16
DATE
ALDO M. VITUCCI, P.E.
"Professional Certification. I hereby certify that these documents were prepared by me, and that I am a duly Licensed Professional Engineer under the laws of the State of Maryland, License No. 20746, Expiration Date 2-22-17."

F-15-008

I:\2009\09014\dwg\Finals - Phase Four\redline 2016\09014 sheet 21-22 MYLARS.dwg, 7/20/2016 9:23:36 AM, 1:1

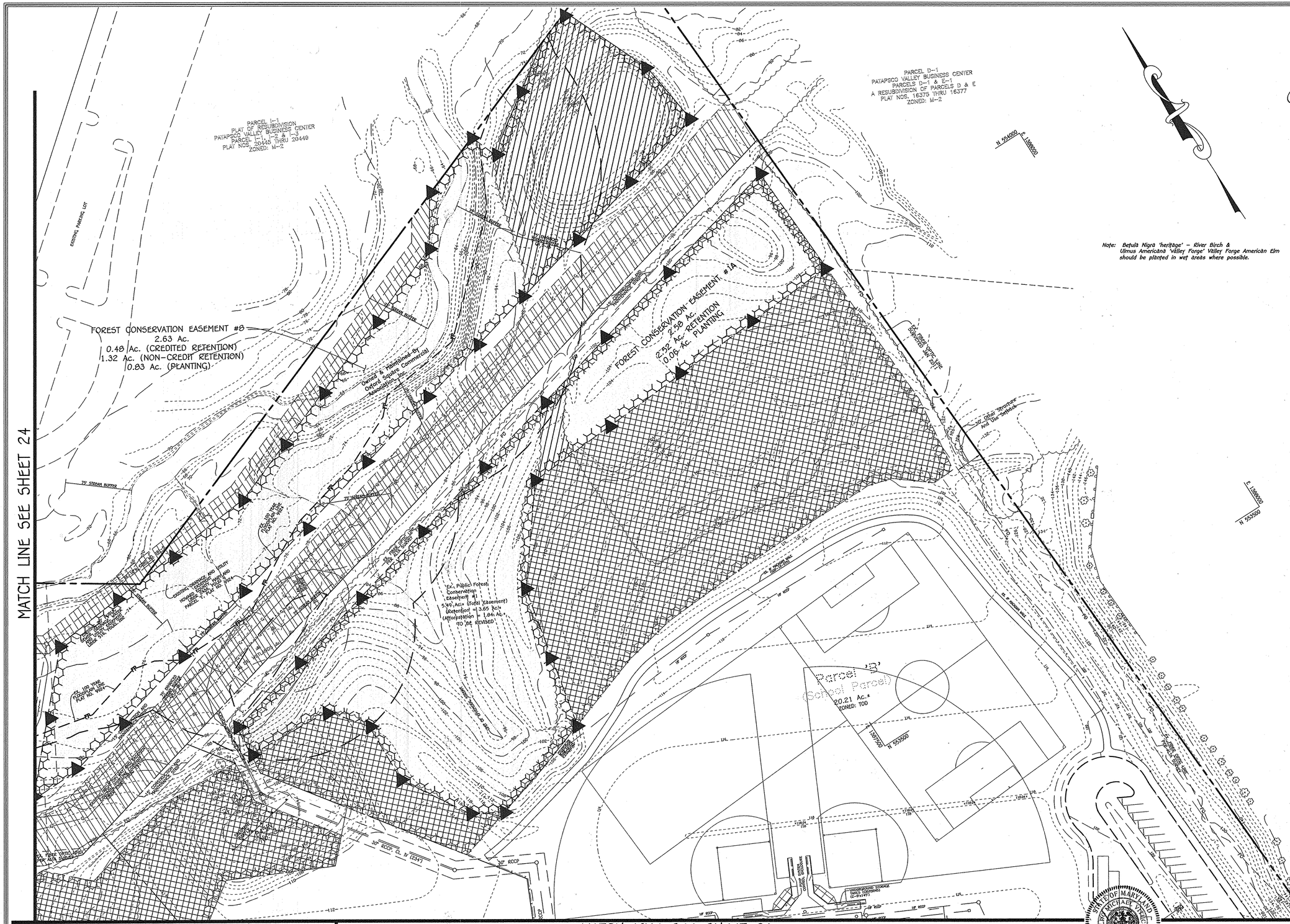

Approved: Department Of Planning And Zoning

Chief, Division Of Land Development — Date: 11-19-15

Chief, Development Engineering Division — Date: 11-17-15

Approved: Howard County Department Of Public Works

Chief, Bureau Of Highways — Date: 11/9/2015

REVISIONS		
NO.	DESCRIPTION	DATE

Note: *Betula Nigra 'heritage' – River Birch & Ulmus Americana 'Valley Forge' Valley Forge American Elm should be planted in wet areas where possible.*

LEGEND

- Existing Contours
- Wetland Limits
- Wetland/Stream Buffer
- Proposed Contours
- Forest Conservation Easement (TO BE REMOVED)
- Forest Conservation Easement (TO REMAIN)
- Forest Conservation Easement (Retention Area)
- Forest Conservation Easement To Be Planted
- Forest Conservation Signs
- TP — Tree Protection Fence

FCE Planting Area # 8 – 0.83 acres

Planting units required: 582 (291 whips)
Planting units provided: 582 (291 whips)

QTY	Species	Size	Spacing	Total FCA Units
39	Acer x Freemanii 'Autumn Blaze' – Freeman Maple	2-3' whip	11' o.c.	
36	Cercis canadensis – Red bud	2-3' whip	11' o.c.	
36	Carpinus caroliniana – American Hornbeam	2-3' whip	11' o.c.	
36	Liriodendron tulipifera – Tulip poplar	2-3' whip	11' o.c.	
36	Betula Nigra 'heritage' – River Birch	2-3' whip	11' o.c.	
36	Ostrya virginiana – American Hophornbeam	2-3' whip	11' o.c.	
36	Ulmus Americana 'Valley Forge' Valley Forge American Elm	2-3' whip	11' o.c.	
36	Acer campestre – Hedge Maple	2-3' whip	11' o.c.	
	291 Total whip plantings (2 planting units per tree) =			582 Total FCA unit credit

1" CAL. TREES = 200/ACRE
WHIPS w/shelters = 350/ACRE = 350 x 0.83 AC. = 290.5 WHIPS
3.5 Planting units = 1 - 1" Cal. Tree
2 Planting units = 1 Whip

PLAN

0' 50' 100' 150'
Scale: 1" = 50'

FOREST CONSERVATION PLAN

OXFORD SQUARE

"A Howard County Green Neighborhood"

Parcels 'V' Thru 'C-C' And Open Space Lots 244 And 245

(Being A Resubdivision Of Open Space Lot 1, As Shown On Plats Entitled "Oxford Square, "Green Neighborhood", Parcels 'C' Thru 'L' And Open Space Lots 1 And 2" Recorded As Plat Nos. 22390 Thru 22395; A Resubdivision Of Parcel 'G', As Shown On Plats Entitled "Oxford Square, "Green Neighborhood" Resubdivision Plat-Parcel 'M' And Revision Plat-Parcels 'C', 'E', 'F', 'G', 'I', 'J', And 'K' Recorded As Plat Nos. 22956 Thru 22959; And A Resubdivision Of Parcels 'E', 'S' And 'T', As Shown On Plats Entitled "Oxford Square, "Green Neighborhood", Parcels 'E', 'S' And 'T' And Revision Plat-Parcel 'E" Recorded As Plat Nos. 23103 Thru 23105)
Zoned: TOD
Tax Map: 38, Parcel: 1003, Grid: 20 And Tax Map: 44, Parcel P/O 4 & 5, Grid 1
First Election District – Howard County, Maryland
Date: June 12, 2015
Sheet 23 of 27

STATE OF MARYLAND — ALDO M. VITUCCI — PROFESSIONAL ENGINEER

ALDO M. VITUCCI, P.E. — DATE: 10/29/15

"Professional Certification. I hereby certify that these documents were prepared by me, and that I am a duly Licensed Professional Engineer under the laws of the State of Maryland, License No. 20748, Expiration Date 2-22-17."

Owner
Board Of Education Of
Howard County, Maryland
c/o Dr. Renee A. Foose, Ed.D. Superintendent
10910 Maryland Route 108
Ellicott City, Maryland 21042
Ph# 410-313-6600

Owner
Oxford Square Master Association, Inc.
2330 West Joppa Road
Lutherville, Maryland 21093
Ph# 410-296-3800

Owner
Kellogg-CCP, LLC
c/o David P. Scheffenacker, Jr.,
Managing Member
2330 West Joppa Road, Suite 190
Lutherville, Maryland 21093-4614
Ph# 410-296-3800

Owner
U.S. Home Corporation,
D/B/A Lennar
c/o Joseph Fortino, Vice President
10211 Wincopin Circle
Suite 300
Columbia, Maryland 21044
Ph# 410-423-0460

Developer
Preston - Scheffenacker Properties
2330 West Joppa Road, Suite 190
Lutherville, Maryland 21093-4614
Ph# 410-296-3800

FISHER, COLLINS & CARTER, INC.
CIVIL ENGINEERING CONSULTANTS & LAND SURVEYORS
CENTENNIAL SQUARE OFFICE PARK - 10272 BALTIMORE NATIONAL PIKE
ELLICOTT CITY, MARYLAND 21042
(410) 461 - 2855

Eco-Science Professionals, Inc.
CONSULTING ECOLOGISTS

MD DNR Qualified Professional
USACOE Wetland Delineator
Certification # WDCP93M0610044B

JOHN P. CANOLES

REPLACEMENT SHEET

F-15-008

I:\2005\05014\dwg\Finals - Phase Four\05014 sheet 19-24 forest con plan august 2015.dwg 8/31/2015 9:25:45 AM 1:1

Planting Notes:

Planting units defined by the spacing requirements established in the FCA Manual. One plant unit is defined as 1 seedling or whip without shelter. The Manual states that 700 seedlings/whips without shelters are required per acre, or 350 whips w/shelters, or 200 1" caliper trees, or 100 2" caliper trees. By conversion it has been determined that a seeding or whip without shelter = 1 unit, whip with shelter = 2 units, 1"caliper tree = 3.5 units and 2" caliper tree = 7 units. The use of plant units simplifies the plant density calculations when mixing stock size.

** – These species should not be planted within the wetland limits.

1" caliper trees should be staggered along the outer perimeter of the planting area to serve as demarcation of the boundary. The trees should be no closer than 15 Foot Spacing. Whip spacing to be placed on 11 foot centers, shelters will be required per Howard County policy.

Planting shall be made in a curvilinear fashion along contour. The planting should avoid a grid appearance but should be spaced to facilitate maintenance

Multiflora rose/heavy brush removal/control may be required prior to installation of planting.

All whips are required to be installed with tree shelters per Howard County FCA requirements.

LEGEND

- Existing Contours
- Wetland Limits
- Wetland/Stream Buffer
- Proposed Contours
- Forest Conservation Easement (TO BE REMOVED)
- Forest Conservation Easement (TO REMAIN)
- Forest Conservation Easement (Retention Area)
- Forest Conservation Easement To Be Planted
- Forest Conservation Signs
- TP — Tree Protection Fence

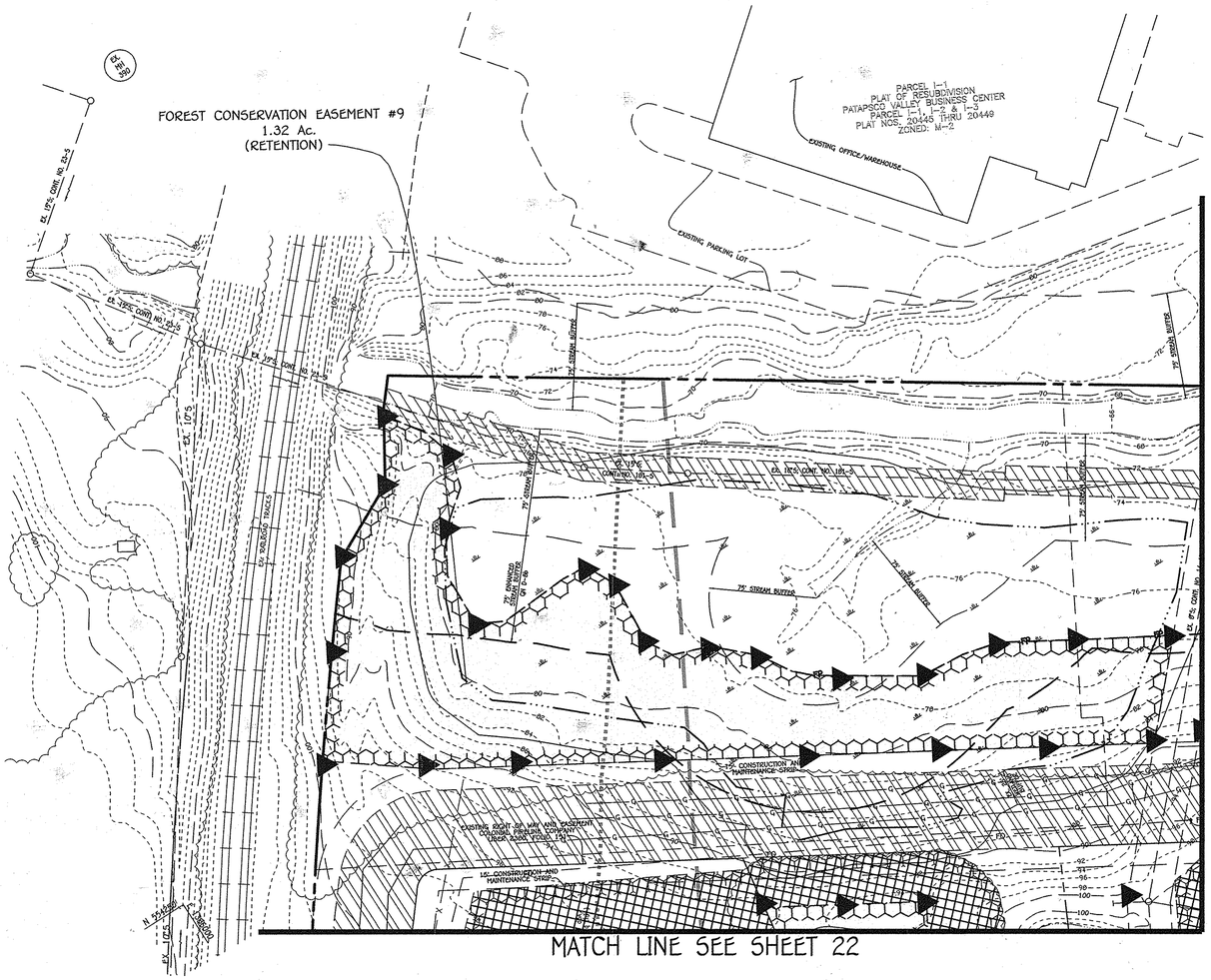

PLAN

0' 50' 100' 150'

Scale: 1" = 50'

Approved: Department Of Planning And Zoning

Chief, Division Of Land Development — Date 12-19-18

Chief, Development Engineering Division — Date 7-14-15

Approved: Howard County Department Of Public Works

Chief, Bureau Of Highways — Date 7/21/15

REVISIONS		
NO.	DESCRIPTION	DATE

FCE Planting Area # 1A – 0.06 acres

Planting units required: 42 (21 whips)
Planting units provided: 42 (21 whips)

Qty	Species	Size	Spacing	Total FCA Units
3	Acer x Freemanii 'Autumn Blaze' – Freeman Maple	2–3' whip	11' o.c.	
3	Cercis canadensis – Red bud	2–3' whip	11' o.c.	
3	Carpinus caroliniana – American Hornbeam	2–3' whip	11' o.c.	
2	Liriodendron tulipifera – Tulip poplar	2–3' whip	11' o.c.	
3	Betula Nigra 'heritage' – River Birch	2–3' whip	11' o.c.	
2	Ostrya virginiana – American Hophornbeam	2–3' whip	11' o.c.	
2	Ulmus Americana 'Valley Forge' Valley Forge American Elm	2–3' whip	11' o.c.	
3	Acer campestre – Hedge Maple	2–3' whip	11' o.c.	
21 Total whip plantings (2 planting units per tree) =			42 Total FCA unit credit	

1" CAL. TREES = 200/ACRE
WHIPS w/shelters = 350/ACRE = 350 x 0.06 AC. = 21 WHIPS
3.5 Planting units = 1 – 1" Cal. Tree
2 Planting units = 1 Whip

FCE Planting Area # 5 – 0.40 acres (F-12-026)

Planting units required: 280 (140 whips)
Planting units provided: 280 (140 whips)

Qty	Species	Size	Spacing	Total FCA Units
20	Acer x Freemanii 'Autumn Blaze' – Freeman Maple	2–3' whip	11' o.c.	
20	Cercis canadensis – Red bud	2–3' whip	11' o.c.	
20	Carpinus caroliniana – American Hornbeam	2–3' whip	11' o.c.	
20	Liriodendron tulipifera – Tulip poplar	2–3' whip	11' o.c.	
15	Betula Nigra 'heritage' – River Birch	2–3' whip	11' o.c.	
15	Ostrya virginiana – American Hophornbeam	2–3' whip	11' o.c.	
15	Ulmus Americana 'Valley Forge' Valley Forge American Elm	2–3' whip	11' o.c.	
15	Acer campestre – Hedge Maple	2–3' whip	11' o.c.	
140 Total whip plantings (2 planting units per tree) =			280 Total FCA unit credit	
Total Unit Credit				280

WHIPS w/shelters = 350/ACRE = 350 x 0.40 AC. = 140 WHIPS
2 Planting units = 1 Whip

FCE Planting Area # 6 – 0.29 acres (F-12-026)

Planting units required: 204 (102 whips)
Planting units provided: 204 (102 whips)

Qty	Species	Size	Spacing	Total FCA Units
22	Acer x Freemanii 'Autumn Blaze' – Freeman Maple	2–3' whip	11' o.c.	
20	Cercis canadensis – Red bud	2–3' whip	11' o.c.	
10	Carpinus caroliniana – American Hornbeam	2–3' whip	11' o.c.	
10	Liriodendron tulipifera – Tulip poplar	2–3' whip	11' o.c.	
10	Betula Nigra 'heritage' – River Birch	2–3' whip	11' o.c.	
10	Ostrya virginiana – American Hophornbeam	2–3' whip	11' o.c.	
10	Ulmus Americana 'Valley Forge' Valley Forge American Elm	2–3' whip	11' o.c.	
10	Acer campestre – Hedge Maple	2–3' whip	11' o.c.	
102 Total whip plantings (2 planting units per whip) =			204 Total FCA unit credit	
Total Unit Credit				204

WHIPS w/shelters = 350/ACRE = 350 x 0.29 AC. = 102 WHIPS
2 Planting units = 1 Whip

PATTERN SPACING DIAGRAM

```
* * * * * * * * * * *
* * * * * * * * * * *
 * * * * * * * * * *
# # # # # # # # # #
 # # # # # # # # #
```

* – whip w/shelter 11' on center spacing
\# – 1" caliper tree 15' on center spacing
Species shall be randomly interspersed, rows should be planting along contours

FOREST CONSERVATION PLAN

OXFORD SQUARE

"A Howard County Green Neighborhood"

Parcels 'V' Thru 'C-C' And Open Space Lots 244 And 245

(Being A Resubdivision Of Open Space Lot 1, As Shown On Plats Entitled "Oxford Square, "Green Neighborhood", Parcels 'C' Thru 'L' And Open Space Lots 1 And 2' Recorded As Plat Nos. 22390 Thru 22395; A Resubdivision Of Parcel 'G', As Shown On Plats Entitled "Oxford Square, "Green Neighborhood' Resubdivision Plat–Parcel 'H' And Revision Plat–Parcels 'C', 'E', 'F', 'G', 'I', 'J', And 'L' Recorded As Plat Nos. 22856 Thru 22859; And A Resubdivision Of Parcels 'E', 'S' And 'T', As Shown On Plats Entitled "Oxford Square, "Green Neighborhood", Parcels 'R', 'S' And 'T' And Revision Plat–Parcel 'E'" Recorded As Plat Nos. 23103 Thru 23105)
Zoned: TOD
Tax Map: 38, Parcel: 1003, Grid: 20 And Tax Map: 44, Parcel P/O 4 & 5, Grid 1
First Election District – Howard County, Maryland
Date: June 12, 2015
Sheet 24 of 27

F-15-008

FISHER, COLLINS & CARTER, INC.
CIVIL ENGINEERING CONSULTANTS & LAND SURVEYORS
CENTENNIAL SQUARE OFFICE PARK – 10272 BALTIMORE NATIONAL PIKE
ELLICOTT CITY, MARYLAND 21042
(410) 461 – 2855

Eco-Science Professionals, Inc.
CONSULTING ECOLOGISTS

MD DNR Qualified Professional
USACOE Wetland Delineator
Certification # WDCP93M006100448
JOHN P. CANOLES 6/15/15

Owner
Board Of Education Of Howard County, Maryland
c/o Dr. Renee A. Foose, Ed.D, Superintendent
10910 Maryland Route 108
Ellicott City, Maryland 21042
Ph# 410-313-6600

Owner
Oxford Square Master Association, Inc.
2330 West Joppa Road
Lutherville, Maryland 21093
Ph# 410-296-3800

Owner
Kellogg-CCP, LLC
c/o David P. Scheffenacker, Jr.,
Managing Member
2330 West Joppa Road, Suite 190
Lutherville, Maryland 21093-4614
Ph# 410-296-3800

Owner
U.S. Home Corporation,
D/B/A Lennar
c/o Joseph Fortino, Vice President
10211 Wincopin Circle
Suite 300
Columbia, Maryland 21044
Ph# 410-423-0460

Developer
Preston • Scheffenacker Properties
2330 West Joppa Road, Suite 190
Lutherville, Maryland 21093-4614
Ph# 410-296-3800

STATE OF MARYLAND
ALDO MICHAEL VITUCCI
No. 20748
PROFESSIONAL ENGINEER

ALDO M. VITUCCI, P.E. — DATE 6/15/15

"Professional Certification. I hereby certify that these documents were prepared by me, and that I am a duly Licensed Professional Engineer under the laws of the State of Maryland, License No. 20748, Expiration Date 2-22-17."

I:\2009\09014\dwg\Finals - Phase Four\09014 sheet 19-24 forest con plan.dwg, 6/12/2015 1:36:59 PM, 1:1

GREEN NEIGHBORHOOD COMPLIANCE CHECKLIST

Credit No.	Credit	Champion (Name, Role)	Requirement	Site Development Plan GN Strategies	Documentation Location	Max Points	Requested Points
A	**Innovative / Integrated Design Process**					**4**	**4**
A-1	Green Development Plan	FCM/Petitoner; HCM/Planners	Shows how plans meet criteria, includes checklist, natural resource inventory and energy analysis	Provide documentation	GN Report GN Plan	REQ'D	
A-2	Interdisciplinary Project Team	FCM/Petitoner	Includes U.S. Green Building Council Leadership in Energy and Environmental Design (LEED) Accredited professional, ecologist / environmental professional / landscape architect, and engineer	The design team includes a LEED AP professional, an ecologist, a civil engineer, an architect and landscape architect.	GN Report GN Plan	REQ'D	
A-3	Third Party Certification	FCM/Petitoner	Certification of credits by independent LEED accredited professional	Alexander Design Studio	GN Report GN Plan	REQ'D	
A-4a	Innovative Design A	HCM/Planners	Green Streets	Green Streets	GN Report Final Plan (F-15-008) Sheet 8 Reference: Sketch Plan (S-15-001)	1	1
A-4b	Innovative Design B	HCM/Planners	Priority Parking for Fuel Efficient Cars	Reserve 5% for Priority Parking for Fuel Efficient Cars	GN Plan References: Sketch Plan (S-15-001)	1	1
A-4c	Innovative Design C	HCM/Planners	Compact Development	Residential Development will exceed 20 DU/AC	GN Plan References: Sketch Plan (S-15-001)	1	1
A-4d	Innovative Design D	HCM/Planners	Walkable Streets	More than 80% building frontage oriented towards public spaces; Less than 20% service and garage openings to public spaces.	GN Plan References: Sketch Plan (S-15-001)	1	1
B	**Location, Linkages & Community Context**					**27**	**8**
B-1a	Redevelopment Site	HCM/Planners FCC/Civil	Reuse of previously developed site (minimum 25% existing impervious, with sliding scale for credits based on amount or % impervious)	More than 25% area previously developed (former sand and gravel operation).	GN Plan Reference: Sketch Plan (S-15-001)	4	2
B-1b	Redevelopment Site (Brownfield)	N/A	Brownfield cleanup of redevelopment site	N/A	N/A	8	0
B-2	Historic Buildings	N/A	Preserve, restore or rehabilitate historic properties.	N/A	N/A	4	0
B-3a	Transit Access & Amenities for Reduced Auto Dependence (Stop)	HCM/Planners	Site is served by transit stop within 1/2 mile (1 point) or 1/4 mile (2 points) walk from property	Private Shuttle Service with 2 stops (94% DU within 1/4 mile walking distance)	GN Plan Final Plan (F-15-008) Sheet 3 Reference: Sketch Plan (S-15-001) F Plan (F-13-095)	2	2
B-3b	Transit Access & Amenities for Reduced Auto Dependence (Shelter)	HCM/Planners	Provide county-specified transit shelter with benches and lighting at transit stop within 1/2 mile of property and provided pedestrian link to stop if none currently exists	Provide HoCo transit approved shelter for private shuttle service	Reference: Sketch Plan (S-15-001) SDP (SDP-13-068)	4	4
B-4	Proximity to Community Resources	N/A	Credit for 1/2 mile proximity to existing or proposed community resources such as schools, parks, library, post office, etc.	N/A	N/a	5	0
C	**Compact, Complete & Connected Development**					**27**	**25**
C-1	Diversity of Uses	HCM/Planners	1 point per different landuse; minimum 100 sf for ech non-residential per DU. Minimum of 149,200 SF each of office, instituional and civic use, per 1,492 DU	Provide 3 Uses: Institutional, Civic and Office	GN Plan References: Sketch Plan (S-15-001)	3	3
C-2	Planned Service Area	HCM/Planners	Locate the project within the Planned Service Area	The project is within the Planned Service Area	GN Plan	5	5
C-3a	Pedestrian System (Path)	HCM/Planners	Provide an off-site pathway/trail system with 2 connections to internal or external sidewalks, with minimal environmental impacts, long-term maintenance	Provide a shared use path system.	GN Plan References: Sketch Plan (S-15-001) Sketch Plan (S-14-001) SDP-14-071 SDP-14-019 SDP-13-068 SDP-12-075	2	2
C-3b	Pedestrian System (Connections)	N/A	Provide an off-site pathway/trail connection	N/A	N/A	2	0
C-3c	Pedestrian System (Amenities)	HCM/Planners	Provide at least two different pedestrian experience features	Provide pedestrian amenities at trailheads, the lawn, school and residential mews	GN Plan References: Sketch Plan (S-15-001) Sketch Plan (S-14-001)	2	2
C-4	Connected On-site Street Network	HCM/Planners	Provide a gridded street network	More than 75% connected streets	GN Plan References: Sketch Plan (S-15-001)	2	2
C-5	Parking does not exceed Required Minimum	HCM/Planners	Surface parking lots do not exceed required parking ratios (1 point); plan takes advantage of shared parking provisions parking structure provided (in deck or beneath building; does not include garages within individual units) (4 points)	Provide common parking structures (4 points)	GN Plan References: Sketch Plan (S-15-001)	4	4
C-6	Exceed Minimum Open Space Requirements	HCM/Planners	1 point for every 5% above required minimum open space for the TOD zone. 1 point for every 10% of non-buildable HOA parcels above 50% of the site (up tp 3 points).	Provide more than 25% increase in amenity space above the required minimum amenity space (TOD zoning regulations)	GN Plan References: Sketch Plan (S-15-001)	5	5
C-7	Green Spaces and Amenity Areas	HCM/Planners	Open space along public/private roads available for public use	Publically accessible open space will be provided at Lawn/Barn and clubhouse and pool.	GN Plan References: Sketch Plan (S-15-001) SDP (SDP-13-068)	2	2
D	**Environmental Preservation**					**52**	**32**
D-1	Stream Restoration or Wetland Creation or Restoration	EcoScience	Restoration of degraded on-site stream channel; on-site restoration of degraded wetland or creation of additional wetlands (sliding scale based on % or length of stream restored and % or acres of wetland created or restored)	Provide Wetland Restoration fo +/- 80,810 SF	References: Sketch Plan (S-15-001) Skech Plan (S-11-001) SDP (SDP-14-019)	16	16
D-2	Habitat Management Plan	EcoScience	Prepare and implement plan that identifies, conserves and enhances natural resources and ecological communities (may include clean up of debris, removal of invasives, etc.)	Provide Habitat Management Plan	Reference: Sketch Plan (S-15-001) Sketch Plan (S-11-001) SDP (SDP-14-019)	4	4
D-3	25% Steep Slope Preservation	N/A	Protect all existing steep slopes as defined by County regulations required; provide 25' minimum buffer at top of 25% slope (2 points)	N/A	N/A	2	0
D-4	15% Slope Preservation	FCC/Civil; HCM/Planners	Protect existing 15%+ slopes (protect minimum 1/2 acre, with sliding scale based on area or % protected)	Preserve between 26-50% of 15%-24.9% slopes	GN Plan References: Sketch Plan (S-15-001)	4	2
D-5	Minimize Grading and Site Disturbance	FCC/Civil; HCM/Planners	Minimize limit of disturbance: leave at least 20% of site undisturbed (1 point), 30% (2 points), 40% (3 points); balancecut and fill on site (2 points); retaining walls 3-5.9' (deduct 1 point) retaining walls 6-8.9' (deduct 2 points), walls 9' and higher (deduct 3 points), no new created steep slopes over 25% (1 point); amend soil nutrients in turf and planting areas (1 point)	Balance Cut and Fill on entire site-- 2 points Minimize Retaining Walls-- 0 points No new > 25% Steep slopes- 1 point Leave more than 20% of site undisturbed -- 1 points	GN Plan References: Sketch Plan (S-15-001)	5	4
D-6	Exceed Minimum Forest Conservation Requirements	EcoScience FCC/Civil; HCM/Planners	1 point for every 10% of existing forest retained above break even point; 1 point for every 10% of on-site forest planted in excess of afforestation obligation	N/A	N/A	5	0
D-7	Save Trees above 12" Minimum Caliper	N/A	1 point for protecting each 25% of all specimen trees (does not include specimen trees within forest conservation area or within forests that are being cleared)	N/A	N/A	4	0
D-8a	Exceed Minimum Stream Buffer Requirements	FCC/Civil;	75' buffer required for perennial and intermittent streams inside PSA, 100' buffer required for perennial and intermittent streams outside PSA	75' buffer required for perennial and intermittent streams inside PSA,	F-15-008 Sheet 23, 24 Reference: Sketch Plan (S-15-001) F Plan (F-12-026)	REQ'D	
D-8b	Exceed Minimum Stream Buffer Requirements	EcoScience FCC/Civil; HCM/Planners	2 points for each additional 25' of buffer provided in excess of requirements in D-8a outside wetland buffer or floodplain	Provide 150 FT Stream Buffer (75 FT enhanced buffer)-- 6 points	F-15-008 Sheet 23, 24 Reference: Sketch Plan (S-15-001) F Plan (F-12-026)	6	6
D-9	Exceed Minimum Wetland Buffer Requirements	EcoScience FCC/Civil; HCM/Planners	2 points for each additional 25' of wetland buffer outside stream buffer or floodplain	N/A	N/A	4	0
D-10	Floodplain Buffer	N/A	1 point for each 25' of buffer to floodplain outside required or provided wetland or stream buffer	N/A	N/A	2	0
E	**Site Landscape Improvements**					**10**	**3**
E-1	Landscaping exceeds Minimum Requirements and Reduces Heat Island Effect	N/A	1 point for each 10% increase in number of plants (must be native plants) provided above total minimum required in Landscape Manual; retain or plant trees on south and west sides of buildings and increase trees within parking areas and along sidewalks and paths	Provide 20% increase in Landscape Requirements	GN Plan GN Report F-Plan (F-15-008) Sheets 14, 15	5	2
E-2	Native Plants	N/A	1 point for 80%, 2 points for 90%, 3 points for 100% of all plants native to within 200 miles of site	N/A	N/A	3	0
E-3	No Invasive Plants	HCM/Planners	No plants that are on DNR, USDA or Cooperative Extension Service lists of invasive plants	Will not plant invasive plants	GN Plan F-Plan (F-15-008) Sheets 14, 15 References: Sketch Plan (S-15-001)	REQ'D	
E-4	Limit Turf	HCM/Planners	Turf does not exceed 30% of unpaved site (1 point); no turf on new created steep slopes 25%+ or in densely shaded areas (1 point); nonturf areas must be planted in native vegetation	Will not plant conventional turf in densely shaded areas and on newly created >25% steep slopes	GN Plan References: Sketch Plan (S-15-001)	2	1
F	**Water Conservation / Efficiency / Management**					**17**	**11**
F-1	Rainwater Harvesting System	Straughan	Collect and make use of water runoff from minimum 50% of roof area; provide storage system and monitoring device and maintenance / management program	Provide rainwater harvesting for school and recreational fields	Reference: SDP (SDP-12-075)	5	5
F-2	Water-Permeable Walkways	N/A	Use water-permeable materials in 50% or more of pathways; provide maintenance program	N/A	N/A	4	0
F-3a	Low Impact Development (LID) Stormwater Treatment	FCC/Civil	Meets minimum Design Manual requirements; no dry ponds allowed	No dry ponds	GN Plan F-Plan (F-15-008) Sheets 4-7 Reference: Sketch Plan (S-15-001)	REQ'D	
F-3b	Low Impact Development (LID) Stormwater Treatment	FCC/Civil	Exceeds Design Manual requirements; maximize use of bioretention (esp. for parking lots), rain gardens, rain barrels, stormwater wetlands, green roof, etc.	Will provide 51% water quality volume stored and infiltrated/re-used On-Site	GN Plan GN Report F-Plan (F-15-008) Sheets 4-7 Reference: Sketch Plan (S-15-001)	8	6
G	**Energy Efficiency**					**13**	**0**
G-1	Light Pollution Reduction	FCC/Civil; HCM/Planners	Shield all site lighting fixtures to reduce light and spillover below county code requirements; install sensors or timers on all exterior site lighting fixtures	N/A	N/A	4	0
G-2	Solar Orientation	N/A	Orient 50% (1 point) or 75% (2 points) or 100% (3 points) of buildings to make available for solar strategies	N/A	N/A	3	0
G-3	Infrastructure Energy Efficiency	N/A	Select high efficiency fixtures for parking lot and other site light fixtures	N/A	N/A	6	0
H	**Materials Beneficial to the Environment / Waste Management**					**17**	**7**
H-1	Environmentally Preferable Site Products	Straughan FCC/Civil; HCM/Planners	Select products from a list including: recycled materials (concrete, asphalt, tires, plastic, etc.), materials with recycled content, salvaged or engineered materials;	N/A	N/A	8	0
H-2	Reduce Heat-Island Effect of Paving	N/A	Use light-colored or high albedo materials and/or porous paving with a minimum Solar Reflective Index of 0.6 or over for at least 30% of the site hardscape	N/A	N/A	2	0
H-3	Site Construction Waste Management	Straughan	Develop and implement a construction waste management plan to divert, reuse, recycle or reduce the amount of site material sent to the landfill by 25% (2 points) or 50% (3 points) or 75% (4 points)	Divert 75% or more site construction waste	GN Report	4	4
H-4	Regionally Provided Materials	Straughan FCC/Civil; HCM/Planners	20% of common and public infrastructure materials from within 200 miles	Use regionally produced materials for 20% of total site materials	GN Report	3	3
I	**Operations and Maintenance Education**					**0**	**0**
I-1	HOA Documents	Straughan;	Include information about green site features and maintenance requirements in HOA documents	Provide HOA document	Reference: SDP-13-068	REQ'D	
I-2	Maintenance Manual for Owner / HOA / Manager	Straughan	Provide a manual that includes information on how to maintain the green features of the site, including paving materials, landscaping and stormwater management LID and encourages additional green activities such as recycling, gardening, etc.	Provide manual	Reference: SDP-13-068	REQ'D	
I-3	Public Awareness of Sustainable Community	Straughan; HCM	Develop a program to advertise the environmental benefits of the community	Implement public awareness strategy	Reference: SDP-13-068	REQ'D	
					TOTAL GREEN NEIGHBORHOOD SITE POINTS	**167**	**90**
					Number of points required to obtain Green Neighborhood Allocations	**90**	

Third Party Certification

By affixing my signature below, the undersigned does hereby declare and affirm to Howard County that the targeted Green Neighborhood Site credits and point total, as specified in this Green Neighborhood Site Compliance Checklist, are reasonable and achievable.

[signature] PRESIDENT No. 10439208 6.16.15

Signature Title Date

CHARLES ALEXANDER ALEXANDER DESIGN STUDIO

Name Organization

Submission (mark "X" where applicable): X F Plan (F-15-008)

APPROVED
HOWARD COUNTY DEPARTMENT OF PLANNING & ZONING
GREEN NEIGHBORHOOD PLAN FOR SITES

Beth Burgess 7.30.15
CHIEF, RESOURCE CONSERVATION DIVISION DATE

LEED ACCREDITED PROFESSIONAL CERTIFICATE
GREEN NEIGHBORHOOD PLAN FOR SITES

I hereby certify that this plan represnets a practical and workable plan for achieving the targeted credits and point total shown on the Green Neighborhood for Sites Compliance Checklist.

[signature] 10007912 6/15/15
MATTHEW J FITZSIMMONS, LEED AP LEED ACCREDITATION NUMBER DATE

APPROVED: DEPARTMENT OF PLANNING AND ZONING

[signature] 1-19-15
Chief, Division of Land Development Date

[signature] 7.14.15
Chief, Development Engineering Division Date

APPROVED: DEPARTMENT OF PUBLIC WORKS

[signature] 7/7/15
Chief, Bureau Of Highways Date

REVISIONS

NO.	DESCRIPTION	DATE

Owner
Board Of Education Of
Howard County, Maryland
c/o Dr. Renee A. Foose, Ed.D, Superintendent
10910 Maryland Route 108
Ellicott City, Maryland 21042
Ph# 410-313-6600

Owner
Oxford Square Master Association, Inc.
2330 West Joppa Road
Lutherville, Maryland 21093
Ph# 410-296-3800

Owner
Kellogg-CCP, LLC
c/o David P. Scheffenacker, Jr., Managing Member
2330 West Joppa Road, Suite 190
Lutherville, Maryland 21093-4614
Ph# 410-296-3800

Owner
U.S. Home Corporation, D/B/A Lennar
c/o Joseph Fortino, Vice President
10211 Wincopin Circle
Suite 300
Columbia, Maryland 21044
Ph# 410-423-0460

Developer
Preston • Scheffenacker Properties
2330 West Joppa Road, Suite 190
Lutherville, Maryland 21093-4614
Ph# 410-296-3800

FISHER, COLLINS & CARTER, INC.
CIVIL ENGINEERING CONSULTANTS & LAND SURVEYORS
CENTENNIAL SQUARE OFFICE PARK - 10272 BALTIMORE NATIONAL PIKE
ELLICOTT CITY, MARYLAND 21042
(410) 461 - 2855

hord | coplan | macht
750 E. Pratt Street, Suite 1100 Baltimore MD 21202
410.837.7311 | www.hcm2.com
Hord Coplan Macht, Inc. 2014

STATE OF MARYLAND ALDO MICHAEL VITUCCI PROFESSIONAL ENGINEER

[signature] 6/15/15
ALDO M. VITUCCI, P.E. DATE

"Professional Certification. I hereby certify that these documents were prepared by me, and that I am a duly Licensed Professional Engineer under the laws of the State of Maryland, License No. 20748, Expiration Date 2-22-17."

GREEN NEIGHBORHOOD PLAN

OXFORD SQUARE

"A Howard County Green Neighborhood"

Parcels 'V' Thru 'C-C' And Open Space Lots 244 And 245

(Being A Resubdivision Of Open Space Lot 1, As Shown On Plats Entitled "Oxford Square, "Green Neighborhood", Parcels 'C' Thru 'L' And Open Space Lots 1 And 2" Recorded As Plat Nos. 22390 Thru 22395; A Resubdivision Of Parcel 'G', As Shown On Plats Entitled "Oxford Square, "Green Neighborhood" Resubdivision Plat-Parcel 'M' And Revision Plat-Parcels 'C', 'E', 'F', 'G', 'I', 'J', And 'K' Recorded As Plat Nos. 22856 Thru 22859; And A Resubdivision Of Parcels 'E', 'S' And 'T', As Shown On Plats Entitled "Oxford Square, "Green Neighborhood", Parcels 'R', 'S' And 'T' And Revision Plat-Parcel 'E'" Recorded As Plat Nos. 23103 Thru 23105)

Zoned: TOD

Tax Map: 38, Parcel: 1003, Grid: 20 And Tax Map: 44, Parcel P/O 4 & 5, Grid 1

First Election District - Howard County, Maryland

Date: June 12, 2015

F-15-008

I:\2009\09014\dwg\Finals - Phase Four\09014 sheet 25-26 gn plans.dwg, 6/12/2015 1:53:33 PM, 1:1

GREEN NEIGHBORHOOD NOTES:

A-2 THE DESIGN AND DEVELOPMENT TEAM INCLUDES A LEED AP (MATTHEW FITZSIMMONS- HORD COPLAN MACHT), ENVIRONMENTAL PROFESSIONAL (JOHN CANOLES- ECO-SCIENCE PROFESSIONALS, INC.), LANDSCAPE ARCHITECT (JOSH KILRAIN- HORD COPLAN MACHT) AND AN ENGINEER (ALDO VITUCCI- FISHER, COLLINS & CARTER INC.)

A-3 THE THIRD PARTY CERTIFICATION IS PROVIDED BY CHARLES ALEXANDER, LEED-AP OF ALEXANDER DESIGN STUDIOS.

B-1a THE 118.5 ACRES GREEN NEIGHBORHOOD BOUNDARY AREA CONSISTS OF 30.4 ACRES OF PREVIOUSLY DEVELOPED LAND (25.7% OF THE OXFORD SQUARE DEVELOPMENT).

B-3a OXFORD SQUARE WILL PROVIDE TWO TRANSIT STOPS FOR THE PROPOSED PRIVATE SHUTTLE SERVICE CONNECTING OXFORD SQUARE TO THE DORSEY MARC COMMUTER RAIL STATION. THE STOPS WILL BE WITHIN 1/4 WALKING DISTANCE TO 94.0% OF DWELLING UNITS.

B-3b OXFORD SQUARE WILL PROVIDE ONE SHELTER AT ONE OF THE PRIVATE SHUTTLE STOPS. THE SHELTER WILL COMPLY WITH COUNTY -APPROVED CRITERIA INCLUDING BENCHES AND LIGHTING.

C-1 OXFORD SQUARE WILL PROVIDE THREE DIVERSE USES OTHER THAN RESIDENTIAL: INSTITUTIONAL (MIDDLE SCHOOL BUILDING AND OUTDOOR CLASSROOM SPACE, ELEMENTARY SCHOOL) AND CIVIC (SCHOOL'S RECREATIONAL PLAYING FIELDS AND SHARED-USE PATH) AND OFFICE.

C-2 OXFORD SQUARE IS LOCATED WITHIN THE EXISTING PLANNED WATER AND SEWER SERVICE AREA.

C-3c OXFORD SQUARE WILL PROVIDE A MINIMUM OF TWO PEDESTRIAN SYSTEM AMENITY EXPERIENCES: 1) SHARED USE PATH AND NATURE TRAIL (TRAIL SIGNS AND MARKERS, BENCHES, LITTER RECEPTACLES, INFORMATIONAL SIGNS, BIKE RACKS), 2) THE LAWN (BENCHES, EXTERIOR LIGHTING, SHADE TREES, INFORMATIONAL SIGNS), 3) RESIDENTIAL COURTYARDS AND MEWS (BENCHES), AND 4) SCHOOL SITES (PLAYING FIELDS, BENCHES, BIKE RACKS)

D-8b OXFORD SQUARE WILL PROVIDE A MINIMUM 75 FT ENHANCED STREAM BUFFER.

E-3 OXFORD SQUARE WILL NOT PLANT INVASIVE PLANTS.

E-4 OXFORD SQUARE WILL NOT PLANT TURF IN DENSELY SHADED AREAS.

F-3b OXFORD SQUARE WILL PROVIDE AT LEAST 51% WATER QUALITY VOLUME STORED AND INFILTRATED/RE-USED ON-SITE.

GREEN NEIGHBORHOOD CALCULATIONS & TABLES:

A-4b Priority Parking for Low-Emitting and Fuel Efficient Vehicles

Total Number of Off-Street Parking Spaces:	0 Spaces
Total Number of Proposed Preferred Parking Spaces:	0 Spaces
Percent of Preferred Parking Spaces:	**0.0%**

A-4c Compact Development

	Complete Build-Out
Total Dwelling Units:	1,492 DU
Residential Land Area:	50.8 AC
Residential Density:	**29.39 DU/AC**

A-4d Walkable Streets

	Complete Build-Out
Length of Buildings Frontage Oriented Towards the Public Space:	12,175 FT
Total Length of Building Frontage:	14,302 FT
% of Building Frontage Oriented Towards the Public Spaces:	**85.1%**
Length of Building Frontage with Service or Garage Openings:	1,230 FT
Length of Building Frontage Oriented Towards Public Spaces (including Service and Garage openings):	13,405 FT
% of Building Frontage with Service or Garage Openings:	**9.2%**

B-1a Redevelopment Site

Gross Site Area:	118.5 Acres
Area of Existing Development:	30.4 Acres
Percent of Previously Developed:	**25.7%**

B-3a Transit Access & Amenities for Reduced Auto Dependence (Stop)

Residential Buildings within 1/4 Mile (<1,320 FT)	Total Number of Qualifying Units	Percent of all Units
All Buildings except the most distant buildings on Parcel 'Z'	1,402 DU	94%

C-1 Diversity of Uses

Residential Uses	Number of Units	Percent of Total Units
Apartments & Townhouses	1,492 DU	100%

Nonresidential Uses		Area	SF per Dwelling Unit
Office:		166,000 SF	111 SF/DU
Institutional:	Middle School	95,747 SF	
	Middle School Outdoor Classroom Space	2,500 SF	
	Elementary School	101,014 SF	
	Institutional Subtotal:	**199,261 SF**	**134 SF/DU**
Civic:	Recreational Playing Fields (School Site)	236,139 SF	
	Northern Loop Shared- Use Path (8 FT wide)	22,968 SF	
	Southern Loop Shared-Use Path (8 FT wide)	8,016 SF	
	Civic Subtotal:	**267,123 SF**	**179 SF/DU**

C-3a Pedestrian System (Paths and Trails)

Northern Shared Use Path:	Width of Path: 8 FT *Length:* 2,871 FT (0.54 Miles)
Southern Shared Use Path:	Width of Path: 8 FT *Length:* 1,002 FT (0.19 Miles)
Nature Path	Width of Path: 8 FT *Length:* 1,129 FT (0.21 Miles)

C-4 Street Connections

Street Name / ID	Street Length	Qualifying Street Length
Saint Margarets Boulevard	1,684 FT	1,684 FT
Banbury Drive	2,491 FT	2,491 FT
Southmoor Street	960 FT	960 FT
Dene Court	514 FT	- FT
Crowley Street	1,136 FT	947 FT
Danvers Street	465 FT	465 FT
Beaumont Place	1,450 FT	1,450 FT
Dunstead Street	240 FT	- FT
Headley Street	120 FT	- FT
Pattison Street	120 FT	- FT
Road I	736 FT	736 FT
Road B	554 FT	554 FT
Road C	1,613 FT	928 FT

Summary		
Total Street Length:	12,083 FT	
Total Connected Street Length:		10,215 FT
Percent Connected Streets:	**84.5%**	

C-5 Parking Does Not Exceed Required Minimum

Number of Spaces within a Common Parking Structure:	1,916 spaces

C-6 Exceed Minimum Open Space

Net Acreage:	107.4 AC
Required Amenity Space (TOD: 10% of Net Acreage):	10.7 AC
Provided Amenity Space:	23.4 AC
Percent Increase above the Minimum Required:	**118.1 %**

C-7 Green Spaces and Amenity Areas

Parcel	Road Frontage	Amenity Type	Amenity Area
Open Space 1: Lawn and Barn Parcel 'I' (future SDP)	+/-108 FT (length along Banbury Drive)	Lawn: passive recreation and gathering space Barn: learning, meeting and performance space	57,604 SF (1.32 AC)
Open Space 2: Pool House and Pool O.S. Lot #107 (SDP-13-068)	+/-138 FT (length along Dene Court)	Pool house, Pool, Fitness Room, and Warming Kitchen	11,282 SF (0.26 AC)

D-4 15% Slope Preservation

	GN Boundary
Total Area of Slopes 15-24.9%:	506,841 SF
Area of Undisturbed Slopes 15-24.9%:	200,866 SF
Percent of Undisturbed Slopes:	**39.6 %**

Note: 1. The area of undisturbed slopes is the summation of slopes impacted by the greatest extent of LOD accumulated from the entire development (Sketch Plan (S-15-001) and future environmental restoration work).

D-5 Minimize Grading and Site Disturbance

	Complete Build Out
Gross Area of Site	118.5 AC
Existing Impervious Cover	30.4 AC
Area of Site	88.1 AC
Area of Site to Remain Undisturbed	24.2 AC
Precent of Site to Remain Undistrubed:	**27.5 %**
Ratio of Cut to Fill:	**1.16 Ratio**
Retaining Wall:	**<3 FT**

Note: 1. Complete Build Out Calculations are based on the aggregate greatest extent of LOD's (Sketch Plan (S-15-001), and future environmental restoration work).

D-8b Exceed Minimum Stream Buffer Requirements

Total Stream Buffer Width:	150 FT
Width of Buffer Exceeding Requirements:	75 FT
Total Length of Stream Buffer:	1,984.2 FT
Length of Stream Buffer Outside Other Buffers:	1,352.3 FT
Percent of Stream Buffer Outside Other Buffers:	**68.2 %**

APPROVED
HOWARD COUNTY DEPARTMENT OF PLANNING & ZONING
GREEN NEIGHBORHOOD PLAN FOR SITES

CHIEF, RESOURCE CONSERVATION DIVISION	DATE 7-30-15

LEED ACCREDITED PROFESSIONAL CERTIFICATE
GREEN NEIGHBORHOOD PLAN FOR SITES

I hereby certify that this plan represents a practical and workable plan for achieving the targeted credits and point total shown on the Green Neighborhood for Sites Compliance Checklist.

MATTHEW J FITZSIMMONS, LEED AP	LEED ACCREDITATION NUMBER 10007912	DATE 6/15/15

APPROVED: DEPARTMENT OF PLANNING AND ZONING

Chief, Division of Land Development	Date 11-19-15
Chief, Development Engineering Division	Date 7.14.15

APPROVED: DEPARTMENT OF PUBLIC WORKS

Chief, Bureau Of Highways	Date 7/24/15

REVISIONS

NO.	DESCRIPTION	DATE

Plants Required	Shade Trees	Evergreen	Shrubs	Total	Percent
Number of Plants Required by Landscape Manual	37	0	0	37	
Number Excess Plants Required for GN Credit	8	0	0	8	21.6
Landscape Manual and GN Requirements	45	0	0	45	

Plants Provided

Plants Provided	Shade Trees	Shade Tree (Substitute)	Evergreen	Evergreen (Substitute)	Other Trees (Substitute)	Shrubs	Shrub (Substitute)	Total
Number of Plants Provided to Meet Landscape Manual	37	0	0	0			0	37
Number of Plants Provided to Meet GN Credits	0	--	0	0	0	0	0	0
Total Number of Plants Provided	37	0	0	0	0	0	0	37

Notes: 1. This plan provides no surplus native trees towards the project's 20% goal.

Owner	Owner	Owner	Owner	Developer
Board Of Education Of Howard County, Maryland c/o Dr. Renee A. Foose, Ed.D, Superintendent 10910 Maryland Route 108 Ellicott City, Maryland 21042 Ph# 410-313-6600	Oxford Square Master Association, Inc. 2330 West Joppa Road Lutherville, Maryland 21093 Ph# 410-296-3800	Kellogg-CCP, LLC c/o David P. Scheffenacker, Jr., Managing Member 2330 West Joppa Road, Suite 190 Lutherville, Maryland 21093-4614 Ph# 410-296-3800	U.S. Home Corporation, D/B/A Lennar c/o Joseph Fortino, Vice President 10211 Wincopin Circle Suite 300 Columbia, Maryland 21044 Ph# 410-423-0460	Preston - Scheffenacker Properties 2330 West Joppa Road, Suite 190 Lutherville, Maryland 21093-4614 Ph# 410-296-3800

STATE OF MARYLAND — ALDO MICHAEL VITUCCI — No. 20748 — PROFESSIONAL ENGINEER

ALDO M. VITUCCI, P.E. — DATE 6/15/15

"Professional Certification. I hereby certify that these documents were prepared by me, and that I am a duly Licensed Professional Engineer under the laws of the State of Maryland, License No. 20748, Expiration Date 2-22-17."

GREEN NEIGHBORHOOD PLAN

OXFORD SQUARE

"A Howard County Green Neighborhood"

Parcels 'V' Thru 'C-C' And

Open Space Lots 244 And 245

(Being A Resubdivision Of Open Space Lot 1, As Shown On Plats Entitled "Oxford Square, "Green Neighborhood", Parcels 'C' Thru 'L' And Open Space Lots 1 And 2" Recorded As Plat Nos. 22390 Thru 22395; A Resubdivision Of Parcel 'G', As Shown On Plats Entitled "Oxford Square, "Green Neighborhood" Resubdivision Plat-Parcel 'H' And Revision Plat-Parcels 'C', 'E', 'F', 'G', 'I', 'J', And 'K' Recorded As Plat Nos. 22956 Thru 22959; And A Resubdivision Of Parcels 'E', 'S' And 'T', As Shown On Plats Entitled "Oxford Square, "Green Neighborhood", Parcels 'E', 'S' And 'T' And Revision Plat-Parcel 'E' Recorded As Plat Nos. 23105 Thru 23105)

Zoned: TOD

Tax Map: 38, Parcel: 1003, Grid: 20 And Tax Map: 44, Parcel P/O 4 & 5, Grid 1

First Election District – Howard County, Maryland

Date: June 12, 2015

Sheet 26 of 27

F-15-000

FISHER, COLLINS & CARTER, INC.
CIVIL ENGINEERING CONSULTANTS & LAND SURVEYORS
CENTENNIAL SQUARE OFFICE PARK - 10272 BALTIMORE NATIONAL PIKE
ELLICOTT CITY, MARYLAND 21042
(410) 461 - 2855

hord | coplan | macht
750 E. Pratt Street, Suite 1100 Baltimore MD 21202
410.837.7311 | www.hcm2.com
Hord Coplan Macht, Inc. 2014

I:\2009\09014\dwg\Finals - Phase Four\09014 sheet 25-26 gn plants.dwg, 6/12/2015 1:52:17 PM, 1:1

APPROVED: DEPARTMENT OF PUBLIC WORKS	
CHIEF, BUREAU OF HIGHWAYS	DATE 10/23/2015
APPROVED: DEPARTMENT OF PLANNING AND ZONING	
CHIEF, DIVISION OF LAND DEVELOPMENT	DATE 11-19-15
CHIEF, DEVELOPMENT ENGINEERING DIVISION	DATE 11.19.15

REVISIONS

NO.	DESCRIPTION	DATE

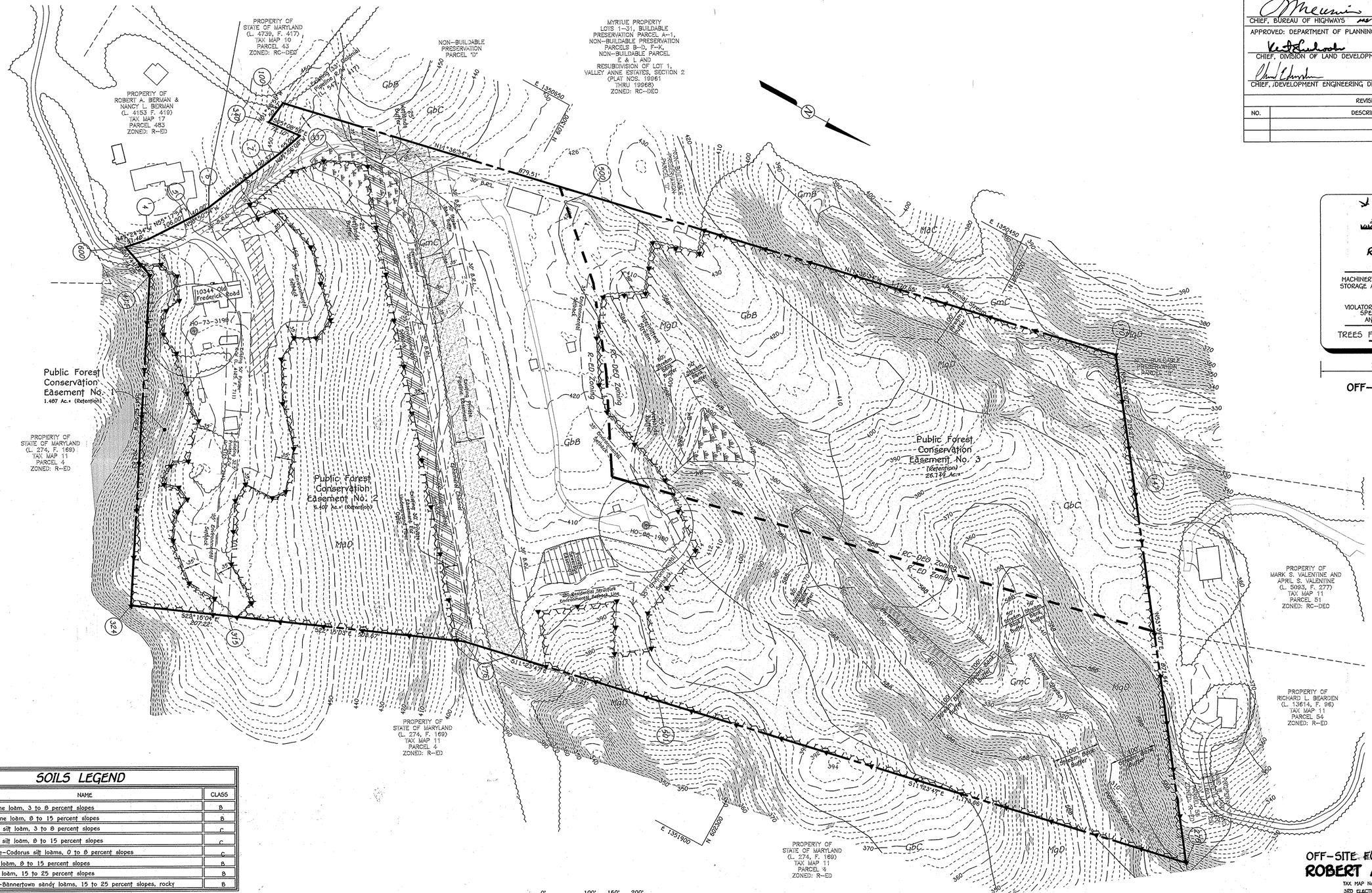

FOREST RETENTION AREA

MACHINERY, DUMPING, MATERIAL STORAGE AND SITE DISTURBANCE PROHIBITED!

VIOLATORS SUBJECT TO FINES SPECIFIED BY STATE AND LOCAL LAWS

TREES FOR YOUR FUTURE

15" MINIMUM

11" MINIMUM

OFF-SITE SIGNAGE

SOILS LEGEND

SOIL	NAME	CLASS
GbB	Gladstone loam, 3 to 8 percent slopes	B
GbC	Gladstone loam, 8 to 15 percent slopes	B
GmB	Glenville silt loam, 3 to 8 percent slopes	C
GmC	Glenville silt loam, 8 to 15 percent slopes	C
GoB	Glenville-Codorus silt loams, 0 to 8 percent slopes	C
MaC	Manor loam, 8 to 15 percent slopes	B
MaD	Manor loam, 15 to 25 percent slopes	B
MgD	Manor-Bannertown sandy loams, 15 to 25 percent slopes, rocky	B

NOTES:

- * Hydric soils and/or contains hydric inclusions
- ** May contain hydric inclusions
- † Generally only within 100-year floodplain areas

FISHER, COLLINS & CARTER, INC.
CIVIL ENGINEERING CONSULTANTS & LAND SURVEYORS
CENTENNIAL SQUARE OFFICE PARK - 10272 BALTIMORE NATIONAL PIKE
ELLICOTT CITY, MARYLAND 21042
(410) 461 - 2855

Eco-Science Professionals, Inc.
CONSULTING ECOLOGISTS

MD DNR Qualified Professional
USACOE Wetland Delineator
Certification #: WDCP93MD0610044B
JOHN P. CANOLES

Owner	Owner	Owner	Owner	Developer
Board Of Education Of Howard County, Maryland c/o Dr. Renee A. Foose, Ed.D, Superintendent 10910 Maryland Route 108 Ellicott City, Maryland 21042 Ph# 410-313-6600	Oxford Square Master Association, Inc. 2330 West Joppa Road Lutherville, Maryland 21093 Ph# 410-296-3800	Kellogg-CCP, LLC c/o David P. Scheffenacker, Jr., Managing Member 2330 West Joppa Road, Suite 190 Lutherville, Maryland 21093-4614 Ph# 410-296-3800	U.S. Home Corporation, D/B/A Lennar c/o Joseph Fortino, Vice President 10211 Wincopin Circle Suite 300 Columbia, Maryland 21044 Ph# 410-423-0460	Preston • Scheffenacker Properties 2330 West Joppa Road, Suite 190 Lutherville, Maryland 21093-4614 Ph# 410-296-3800

STATE OF MARYLAND
ALDO MICHAEL VITUCCI
No. 20748
PROFESSIONAL ENGINEER

ALDO M. VITUCCI, P.E. DATE 10/22/15

"Professional Certification. I hereby certify that these documents were prepared by me, and that I am a duly Licensed Professional Engineer under the laws of the State of Maryland, License No. 20748, Expiration Date 2-22-17."

OFF-SITE FOREST CONSERVATION PLAN
ROBERT AND NANCY BERMAN

TAX MAP No. 41 GRID No. 19 PARCEL No.: 13
3RD ELECTION DISTRICT HOWARD COUNTY, MARYLAND

OXFORD SQUARE

"A Howard County Green Neighborhood"

Parcels 'A' Thru 'C-C' And Open Space Lots 244 And 245

(Being A Resubdivision Of Open Space Lot 1, As Shown On Plats Entitled "Oxford Square, "Green Neighborhood", Parcels 'C' Thru 'L' And Open Space Lots 1 And 2" Recorded As Plat Nos. 22390 Thru 22395; A Resubdivision Of Parcel 'G', As Shown On Plats Entitled "Oxford Square, "Green Neighborhood" Resubdivision Plat-Parcel 'H' And Revision Plat-Parcels 'C1', 'E', 'F', 'G', 'I', 'J', And 'K' Recorded As Plat Nos. 22396 Thru 22399; And A Resubdivision Of Parcels 'E', 'S' And 'T', As Shown On Plats Entitled "Oxford Square, "Greenneighborhood", Parcels 'E', 'S' And 'T' And Revision Plat-Parcel 'E' Recorded As Plat Nos. 23103 Thru 23105)

Zone: TOD

Tax Map: 38, Parcel: 1003; Grid 20 And Tax Map: 44, Parcel P/O 4 & 5, Grid 1
First Election District - Howard County, Maryland

Date: June 12, 2015
Sheet 27 of 27

F-15-008

I:\2009\09014\dwg\Finals - Phase Four\09014 sheet 27 offsite fc august 2015.dwg 10/22/2015 12:31:17 PM, 1:1