CONSTRUCTION PLANS
MAPLE LAWN FARMS
GARDEN DISTRICT - AREA 1
LOTS 1 thru 98, OPEN SPACE LOTS 99 thru 110, COMMON OPEN AREA LOTS 111 thru 114 and NON-BUILDABLE BULK PARCELS 'X' thru 'Z'

GENERAL NOTES:

1. ZONING: SITE IS BEING DEVELOPED UNDER MXD-3 REGULATIONS, PER ZB995M, APPROVED ON 2/8/01 AND ZB-1039M APPROVED 03/20/06 AND THE COMPREHENSIVE ZONING PLAN DATED 02/02/04. UNDERLYING ZONING IS RR-DEO AND THE COMP LITE ZONING REGULATION AMENDMENTS DATED 07/28/06.
2. THE PREVIOUS DEPARTMENT OF PLANNING AND ZONING FILE NUMBERS: S 01-17, S-06-16, ZB-995M, ZB-1039M, PB-353, PB-378, WP-01-111, WP-03-02, WP-03-120, F-12-29, F-12-30, F-13-007, F-13-008, AND P-13-03.
3. THIS PROJECT IS IN CONFORMANCE WITH THE LATEST HOWARD COUNTY STANDARDS UNLESS WAIVERS HAVE BEEN APPROVED.
4. THE SCENIC ROADS MAP DOES NOT INDICATE ANY SCENIC ROADS WITHIN OR ADJACENT TO THE PROJECT LIMITS.
5. THIS PROPERTY WAS BROUGHT INTO THE METROPOLITAN DISTRICT ON APRIL 26, 2011.
6. SITE ANALYSIS

GROSS SITE AREA FOR PHASES 1 THROUGH 9D	494.93 ACRES ±
AREA OF THIS PLAN SUBMISSION:	75.79 ACRES ±
DISTURBED AREA:	57.4 ACRES ±
AREA OF OPEN SPACE:	23.87 ACRES ±
AREA OF 100 YR FLOODPLAIN:	5.42 ACRES ±
AREA OF ROADWAY (PUBLIC):	7.42 ACRES ±
AREA OF ROADWAY (PRIVATE):	1.35 ACRES ±
AREA OF RESIDENTIAL LOTS:	17.35 ACRES ±
AREA OF OR LOTS/PARCELS:	0.00 ACRES ±
AREA OF SFD LOTS:	17.35 ACRES ±
TOTAL UNITS (PER S-06-16 ALLOCATIONS):	98 LOTS
TOTAL NUMBER OF LOTS / PARCELS (THIS PLAN SUBMISSION):	101 LOTS
NO. OF OR LOTS/PARCELS:	0 LOTS
NO. OF SFD LOTS:	98 LOTS
AREA OF NON-BUILDABLE PARCELS:	25.80 ACRES ±
NO. NON-BUILDABLE PARCELS:	3 PARCELS

7. SOILS DATA WAS TAKEN FROM THE SOIL SURVEY OF HOWARD COUNTY, MARYLAND ISSUED JULY 1968.
8. CONTOURS SHOWN WERE TAKEN FROM AERIAL TOPOGRAPHY PREPARED DURING MARCH 1997 BY 3DI AND THEN UPDATED BY GRADE CHECKS PERFORMED BY GUTSCHICK, LITTLE & WEBER, P. A. AND BASED ON F-13-008. BOUNDARY INFORMATION SHOWN IS BASED UPON A FIELD SURVEY PREPARED BY GUTSCHICK, LITTLE, AND WEBER, P.A. ON OR ABOUT JUNE, 2001.
9. WETLAND DELINEATION WAS DETERMINED BY EXPLORATION RESEARCH, INC. AND APPROVED BY THE CORPS OF OF ENGINEERS UNDER JD 63787-3 ON 05/14/98. IMPACTS TO WETLANDS AND WATERS OF THE STATE RESULTING FROM THIS DEVELOPMENT ARE AUTHORIZED BY MDE PERMIT #01-NT-0311/200165421.
10. THE 100-YEAR FLOOD PLAIN LIMITS WERE DETERMINED BY THE FLOODPLAIN STUDY PREPARED BY GUTSCHICK, LITTLE AND WEBER, P.A. AS PART OF P-02-12 AND P-11-02.
11. HORIZONTAL AND VERTICAL DATUM IS BASED ON HOWARD COUNTY STATION 46BC AND 41EA.
12. EXISTING UTILITIES WERE TAKEN FROM AVAILABLE HOWARD COUNTY RECORDS.
13. PUBLIC WATER AND SEWER TO BE UTILIZED:
    EXISTING WATER CONTRACT NUMBER: 24-4785-D AND 24-4786-D
    EXISTING SEWER CONTRACT NUMBERS: 24-4785-D AND 24-4786-D
14. TRAFFIC STUDY WAS PREPARED AND SUBMITTED AS PART OF S 06-16, WHICH WAS SIGNED BY THE PLANNING BOARD ON 02/20/07.
15. PERENNIAL STREAM BUFFERS ARE DETERMINED BY LAND USE ADJOINING THE OPEN SPACE (I.E. EMPLOYMENT = 50' BUFFER, RESIDENTIAL = 75' BUFFER). ALL USES ADJOINING AN INTERMITTENT STREAM = 50' BUFFER.
16. STORMWATER MANAGEMENT, FOR BOTH QUALITY AND QUANTITY, FOR THE INFRASTRUCTURE AND RESIDENTIAL LOTS WILL BE SATISFIED BY TWO REGIONAL FACILITIES CONSTRUCTED UNDER F-13-008. THE FACILITIES WILL BE P-3 PONDS WITH EXTENDED DETENTION. THEY WILL BE PUBLICLY OWNED WITH JOINT MAINTENANCE. THE TWO P-3 PONDS WILL SERVE AS SEDIMENT BASINS FOR THE GRADING SHOWN BEFORE BEING CONVERTED. THE RECHARGE REQUIREMENTS FOR THIS AREA WILL BE PROVIDED IN PRIVATELY OWNED AND MAINTAINED FACILITIES TO BE LOCATED WITHIN OPEN SPACE LOTS 110 AND 111. OPEN SPACE LOTS 110 AND 111 WILL BE CONVEYED TO THE HOMEOWNER'S ASSOCIATION. THE REV FACILITIES WILL BE CONSTRUCTED WITH THESE FINAL ROAD PLANS.
17. THE RESIDENTIAL LOTS, PARCELS AND EMPLOYMENT USE STRUCTURES DEVELOPED OR PROPOSED ON THE ORIGINAL 507 ACRE TRACT FOR MAPLE LAWN FARMS ARE GRANDFATHERED TO THE FOURTH EDITION OF THE SUBDIVISION AND LAND DEVELOPMENT REGULATIONS AS DEVELOPED UNDER S-01-17, PB CASE 353 AND ZB CASE NO. 995M. HOWEVER, THE PROPOSED RESIDENTIAL AND EMPLOYMENT USES THAT ARE TO BE DEVELOPED UNDER THE AMENDED CSP, S-06-16 AND ZB CASE NO. 1039M FOR THE FORMER WESSEL AND OLIVER PROPERTIES ARE SUBJECT TO THE AMENDED FIFTH EDITION OF THE SUBDIVISION AND LAND DEVELOPMENT REGULATIONS PER COUNCIL BILL NO. 45-2003 AND THE ZONING REGULATIONS PER COUNCIL BILL NO. 75-2003.
18. AS STATED IN THE DECISION AND ORDER FOR THIS PLAN, THE PLANNING BOARD SHALL REVIEW AND APPROVE SITE DEVELOPMENT PLANS FOR ALL SINGLE FAMILY ATTACHED AND MULTI-FAMILY RESIDENTIAL USES, AND ALL EMPLOYMENT AND OPEN SPACE USE DEVELOPMENT FOR THE SUBJECT MAPLE LAWN FARMS PROJECT. ALL OF THE IMPROVEMENTS THAT WERE NECESSARY FOR THE MAPLE LAWN FARMS PROJECT TO BE IN COMPLIANCE WITH THE FUNDING TEST EVALUATION RESTRICTIONS ENUNCIATED BY THE ZONING BOARD ON PAGE 22-23 OF ITS DECISION ON THE PDP HAVE BEEN CONSTRUCTED.
19. NO GRADING, REMOVAL OF VEGETATIVE COVER OR TREES, OR PLACEMENT OF NEW STRUCTURES IS PERMITTED WITHIN LIMITS OF WETLANDS, STREAMS OR THEIR REQUIRED BUFFERS, AND 100 YEAR FLOOD PLAIN AREAS, EXCEPT AS PERMITTED UNDER WP-02-54, WP-03-02, AND WP-03-120.
20. OPEN SPACE LOTS MAY CONTAIN ACTIVE RECREATIONAL FACILITIES AS ALLOWED BY THE APPROVED COMPREHENSIVE DEVELOPMENT CRITERIA.
21. PHASING FOR THIS PROJECT IS IN ACCORDANCE WITH THE DECISION AND ORDER FOR ZONING BOARD CASE NO. ZB-995M & ZB-1039M AND THE DECISION AND ORDER FOR PB CASE NO. 353 (COMPREHENSIVE SKETCH PLAN, S-01-17) AND NO. 378 (COMPREHENSIVE SKETCH PLAN, S-06-16) AND THE DPZ APFO RE-PHASING LETTER DATED JULY 8, 2008.
22. DEVELOPMENT FOR THIS PHASE WILL BE DONE IN ACCORDANCE WITH THE COMPREHENSIVE DEVELOPMENT CRITERIA APPROVED WITH S-01-17, S-06-16, PB-353, AND PB-378.
23. THE TRANSPORTATION AND TRANSIT DESIGN WILL BE IMPLEMENTED AS OUTLINED IN THE PETITIONER'S EXHIBIT 55 AS SUBMITTED AS PART OF ZB995M.
24. A NOISE STUDY WAS PREPARED BY WILDMAN & ASSOCIATES FOR S 01-17, (APPROVED BY PLANNING BOARD ON AUGUST 8, 2001), AND UPDATED BY WILSON T. BALLARD COMPANY IN MAY 2006 FOR S-06-16 (APPROVED BY PLANNING BOARD ON FEBRUARY 20, 2007).
25. THE LIMITS OF THIS SUBMISSION DOES NOT INCLUDE MODERATE INCOME HOUSING UNITS.
26. FOR SOIL TYPES, DESCRIPTIONS AND LIMITATIONS, SEE S 01-17, AND S-06-16.

GENERAL NOTES (cont.) :

30. THE ORIGINAL FOREST CONSERVATION OBLIGATION THAT WAS ESTIMATED FOR ALL OF MAPLE LAWN FARMS HAS BEEN FULFILLED WITH THE FOREST CONSERVATION EASEMENTS CREATED UNDER P-12-002 AND PLATS 22468 THRU 22478.
31. THE 75' TREE CONFLICT EASEMENT SHOWN ON THESE PLANS GRANTS PEPCO THE RIGHT TO ENTER THE EASEMENT FOR THE PURPOSE OF CUTTING DOWN, TRIMMING, REMOVING AND/OR KEEPING CUT ALL TREES WHICH MAY INTERFERE WITH ANY TOWERS, POLES, STRUCTURES, WIRES, CABLES, CONDUITS OR OTHER IMPROVEMENTS WITHIN THE PEPCO R/W, AS PER LIBER 2305 FOLIO 33.
32. ALL BUFFERING AND OTHER LANDSCAPING REQUIREMENTS/FEATURES WILL BE PROVIDED AT THE SITE DEVELOPMENT PLAN STAGE AND/OR THE FINAL PLAN STAGE AND WILL BE PROVIDED IN ACCORDANCE WITH THE COMPREHENSIVE SKETCH PLAN CRITERIA.
33. STORMWATER MANAGEMENT IS PROVIDED IN ACCORDANCE WITH THE 2000 MARYLAND STORMWATER DESIGN MANUAL, VOLUMES I AND II. IT WAS DETERMINED THAT THIS PROJECT MET THE CRITERIA OUTLINED IN THE MDE STORMWATER MANAGEMENT REGULATIONS; GUIDANCE FOR IMPLEMENTATION FOR ACCEPTANCE OF THE 2000 DESIGN CRITERIA AND THROUGH THE ADMINISTRATVE WAIVER PROCESS, WAS GRANTED A WAIVER. THIS PLAN RECEIVED COMPREHENSIVE SKETCH PLAN APPROVAL (S 06-16) ON JANUARY 25, 2007. THIS PLAN IS ALSO SUBJECT TO THE EXPIRATION OF THIS WAIVER UNLESS ALL OF THE STORMWATER MANAGEMENT IS CONSTRUCTED BY MAY 4, 2017.
34. TRAFFIC CONTROL DEVICES:
    A) THE R1-1 "STOP" SIGN AND THE STREET NAME SIGN (SNS) ASSEMBLY FOR THIS DEVELOPMENT MUST BE INSTALLED BEFORE THE BASE PAVING IS COMPLETED.
    B) THE TRAFFIC CONTROL DEVICE LOCATIONS SHOWN ON THESE PLANS ARE APPROXIMATE AND MUST BE FIELD APPROVED BY HOWARD COUNTY TRAFFIC DIVISION (410-313-2430) PRIOR TO THE INSTALLATION OF ANY OF THE TRAFFIC CONTROL DEVICES.
    C) ALL TRAFFIC CONTROL DEVICES AND THEUR LOCATIONS SHALL BE IN ACCORDANCE WITH THE LATEST EDITION OF THE "MARYLAND MANUAL ON UNIFORM TRAFFIC CONTROL DEVICES" (MdMUTCD).
    D) ALL SIGNS POSTS USED FOR TRAFFIC CONTROL SIGNS INSTALLED IN THE COUNTY RIGHT-OF-WAY SHALL BE MOUNTED ON A 2"GALVANIZED STEEL PERFORATED "QUICK PUNCH", SQUARE TUBE POST (14 GAUGE) INSERTED INTO A 2-1/2" GALVANIZED STEEL, PERFORATED, SQUARE TUBE SLEEVE (12 GAUGE) - 3' LONG. THE ANCHOR SHALL NOT EXTEND MORE THAN 2 "QUICK PUNCH" HOLES ABOVE GROUND LEVEL. A GALVANIZED STEEL POLE CAP SHALL BE MOUNTED ON TOP OF EACH POST.
35. STREET LIGHT PLACEMENT AND THE TYPE OF FIXTURES AND POLES SHALL BE IN ACCORDANCE WITH THE HOWARD COUNTY DESIGN MANUAL, VOLUME III (2006), SECTION 5.5.A. A MINIMUM OF 20' SHALL BE MAINTAINED BETWEEN ANY STREET LIGHT AND ANY TREE.
36. 95% COMPACTION AT ALL FILL AREAS SHALL BE IN ACCORDANCE WITH THE AASHTO-180 STANDARDS.
37. PRIOR TO COMMENCEMENT OF GRADING OPERATIONS ON THE AREA IDENTIFIED AS GARDEN DISTRICT-PARCEL "W" (MAPLE LAWN FARMS, INC.), THE EXISTING WELL MUST BE SEALED AND THE EXISTING SEPTIC FIELD MUST BE ABANDONED AT THE RESIDENCE IDENTIFIED AS "7451 CHERRY TREE DRIVE", WHICH IS ON THE SUBJECT PROPERTY. THE DRILLED WELL, HO-73-4052, IS TO BE SEALED BY A LICENSED WELL DRILLER. THE WELL ABANDONMENT REPORT IS TO BE RECIEVED BY THE HEALTH DEPARTMENT PRIOR TO GRADING OPERATIONS. THE SEPTIC TANK IS TO BE PUMPED, CRUSHED, AND FILLED WITH CLEAN EARTH MATERIALS. THE CONTRACTOR ABANDONING THE SEPTIC SYSTEM IS TO SEND THE INVOICE FOR PUMPING THE TANK AND A WRITTEN REPORT WITH PHOTOS TO THE HEALTH DEPARTMENT.

WP-01-111
ON MAY 2, 2001, WP-01-111 WAS GRANTED FOR THE FOLLOWING:
- ADDITIONAL POINTS OF ACCESS ALLOWED ONTO SANNER ROAD OTHER THAN THOSE PERMITTED BY 16.119(F)(1), SUBJECT TO FURTHER ANALYSIS AND APPROVALS AT LATER PLAN STAGES.
- RESIDENTIAL LOTS ARE ALLOWED TO FRONT ON NEIGHBORHOOD PARKS INSTEAD BEING LIMITED FRONTAGE ON PUBLIC R/W'S AS IN 16.120(C)(2), SUBJECT TO ADEQUATE PRIVATE ALLEY ACCESS.

WP-03-02
ON OCT. 11,2002, WP-03-02 WAS GRANTED TO ALLOW:
- GRADING WITHIN THE 75' STREAM BUFFER AND FLOODPLAIN AS SHOWN ON THE REVISED GRADING EXHIBIT SUBMITTED 9/6/02 (WAIVER FROM SECTION 16.116 (A)(2)(II) AND SECTION 16.115 (C)(2) RESPECTIVELY.
- ELIMINATION OF TRUNCATION AT RIGHT-OF-WAY CORNERS OF RESIDENTIAL LOTS AND OTHER PARCEL CORNERS AT RIGHT-OF-WAYS WHERE NECESSARY TO ACHIEVE THE TRADITIONAL NEIGHBORHOOD DESIGN (WAIVER FROM SECTION 16.119 (E)(5).

THE DISTURBANCE WITHIN THE FLOODPLAIN AND STREAM BUFFER IS SUBJECT TO OBTAINING THE NECESSARY PERMITS FROM MDE AND DNR. ELIMINATION OF THE TRUNCATIONS IS SUBJECT TO HAVING ADEQUATE SIGHT AND INTERSECTION DISTANCE AS DETERMINED BY THE DPZ, DEVELOPMENT ENGINEERING DIVISION.

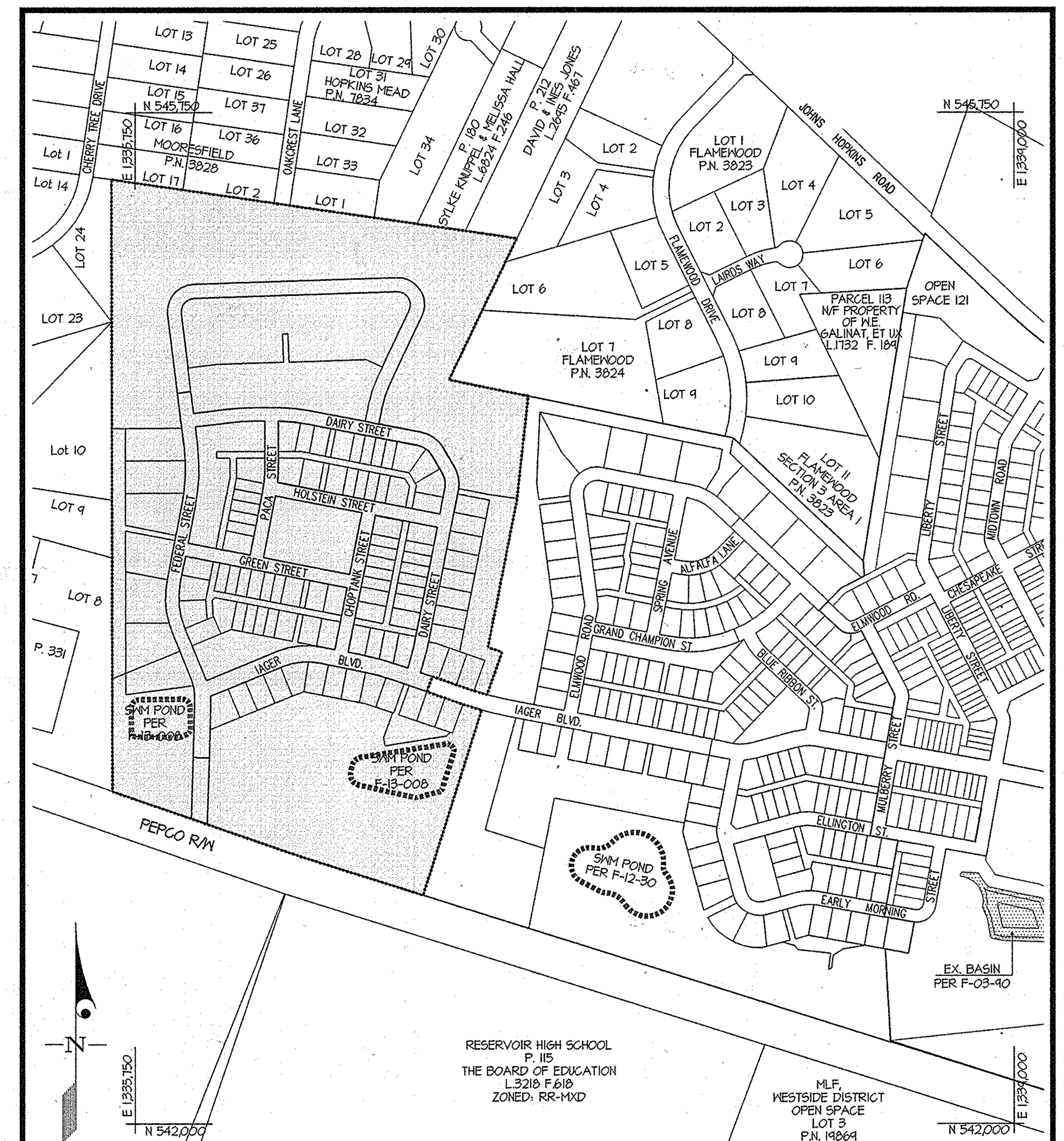

LOCATION PLAN
SCALE: 1" = 400'

0 100 200 400
GRAPHIC SCALE

LEGEND

----- 400 -----	EXISTING CONTOUR		PROPOSED STREET LIGHT
400	PROPOSED CONTOUR		STREET LIGHT PER F 13-007
	EXISTING TREELINE		PROPOSED STREET TREE
	PROPOSED STORM DRAIN		STREET TREE PER F-13-007
1 / 20	STORM DRAIN STRUCTURE NO.		PROPOSED STREET SIGN
	PROPOSED SEWER MAIN		STREET SIGN PER F 13-007
	PROPOSED WATER MAIN	X#	TOP OF CURB LOCATION
	CONCRETE SIDEWALK		
	EXISTING CURB AND GUTTER		
	PROPOSED CURB AND GUTTER		
	PROPOSED BITUMINOUS CURB		
FP	100 YEAR FLOODPLAIN		
SB	STREAM BUFFER		
FCE	FOREST CONSERVATION EASEMENT		
	BOTTOM OF STREAM		
	CENTERLINE OF STREAM		
	LIMIT OF WETLAND		
	WETLAND AREA		
WB	WETLAND BUFFER		

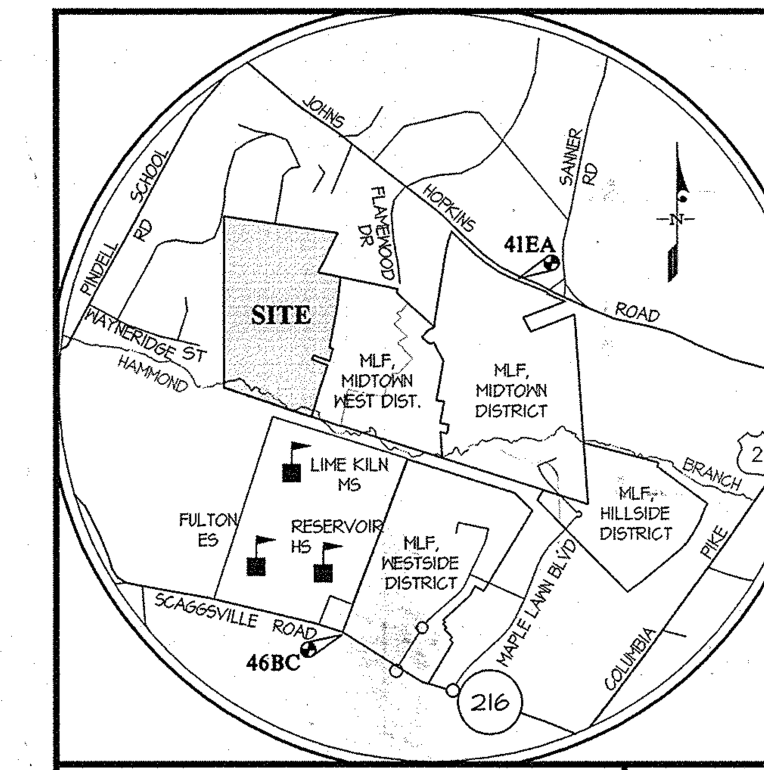

VICINITY MAP
SCALE: 1" = 2000'

ADC MAP 5052
GRID 7 E5

BENCHMARKS

46BC	41EA
ELEV. = 472.16	ELEV. = 407.05
N = 539,925.13 E=1,337,205.77	N = 544,825.81 E=1,339,217.44
STANDARD DISC ON CONCRETE MONUMENT	STANDARD DISC ON CONCRETE MONUMENT

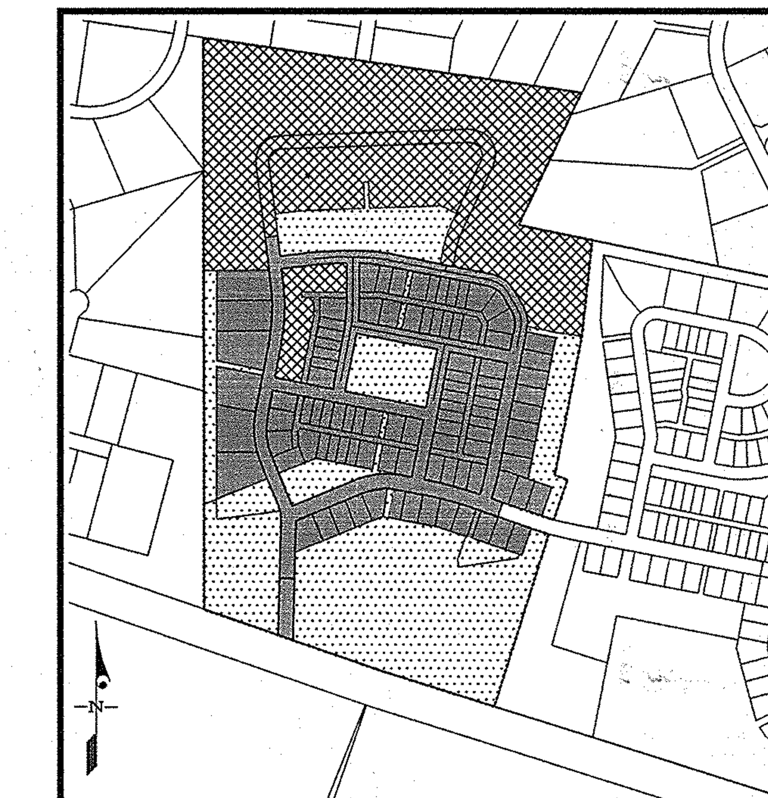

SINGLE FAMILY DETACHED = 17.33 AC.
OPEN SPACE LOTS = 23.86 AC.
NON-BUILDABLE = 25.80 AC.

LAND USE MAP
SCALE: 1" = 600'

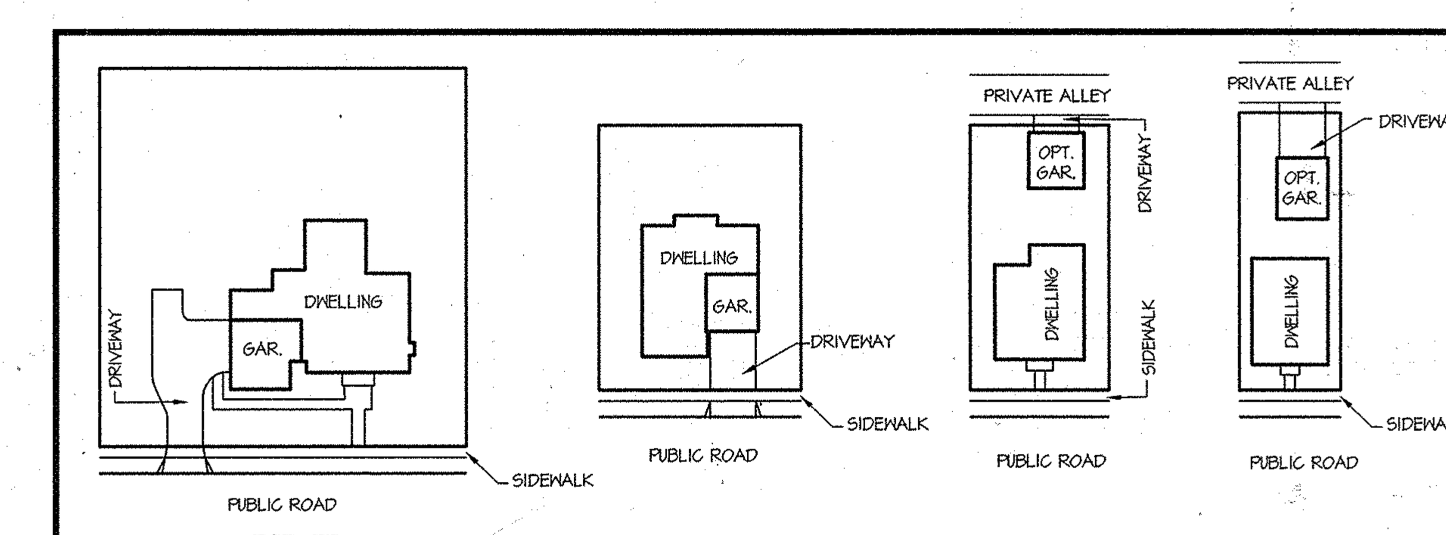

ESTATE VILLA MANOR COTTAGE

TYPICAL FOOTPRINT
SCALE: 1" = 60'

SHEET INDEX

1 - COVER SHEET
2 - OVERALL PROJECT CRITERIA AND INFORMATION
3 - ROAD CONSTRUCTION PLAN
4 - ROAD CONSTRUCTION PLAN
5 - ROAD CONSTRUCTION PROFILES - IAGER BOULEVARD
6 - ROAD CONSTRUCTION PROFILES - FEDERAL STREET
7 - ROAD CONSTRUCTION PROFILES - FEDERAL STREET
8 - ROAD CONSTRUCTION PROFILES - GREEN STREET & HOLSTEIN STREET
9 - ROAD CONSTRUCTION PROFILES - DAIRY STREET
10 - ROAD CONSTRUCTION PROFILES - DAIRY STREET
11 - ROAD CONSTRUCTION PROFILES - CHOPTANK STREET & PACA STREET
12 - ROAD CONSTRUCTION DETAILS
13 - ADA COMPLIANT SIDEWALK RAMPS
14 - SIGNING, STREET TREE and LIGHTING PLAN
15 - SIGNING, STREET TREE and LIGHTING PLAN
16 - DRAINAGE AREA MAP
17 - DRAINAGE AREA MAP
18 - DRAINAGE AREA MAP
19 - STORM DRAIN INFORMATION PLAN
20 - STORM DRAIN INFORMATION PLAN
21 - STORM DRAIN PROFILES
22 - STORM DRAIN PROFILES
23 - STORM DRAIN PROFILES
24 - STORM DRAIN PROFILES
25 - STORM DRAIN PROFILES
26 - STORM DRAIN PROFILES
27 - OVERALL SEDIMENT CONTROL PHASE LIMITS
28 - SEDIMENT CONTROL and GRADING PLAN
29 - SEDIMENT CONTROL and GRADING PLAN
30 - SEDIMENT CONTROL and GRADING PLAN
31 - PONDS 3 & 4 DETAILS (APPROVED UNDER F-13-008)
32 - POND NOTES and DETAILS (APPROVED UNDER F-13-008)
33 - SEDIMENT CONTROL NOTES and DETAILS
34 - RECHARGE FACILITY NOTES and DETAILS
35 - RECHARGE FACILITY NOTES and DETAILS
36 - LANDSCAPE PLAN

LOT INFORMATION

LOT TYPE	LOTS	MINIMUM LOT SIZE & WIDTH AT FRONT BRL	MINIMUM SETBACK REQUIREMENTS
COTTAGE	32-36, 45-49, 52-55, 63-66, 72-76, 83-86, 93-98	SEE SHEET 2	SEE SHEET 2
MANOR	37-44, 60-61, 68-70	SEE SHEET 2	SEE SHEET 2
VILLA	1-24, 31, 50-51, 56-59, 62, 67, 71, 77-82, 87-92	SEE SHEET 2	SEE SHEET 2
ESTATE	25-30	SEE SHEET 2	SEE SHEET 2

APPROVED: HOWARD COUNTY DEPARTMENT OF PUBLIC WORKS
Chief, Bureau of Highways — Date 5-7-14

APPROVED: HOWARD COUNTY DEPARTMENT OF PLANNING & ZONING
Chief, Division of Land Development — Date 5-21-14
Chief, Development Engineering Division — Date 5-20-14

GLW GUTSCHICK LITTLE & WEBER, P.A.
CIVIL ENGINEERS, LAND SURVEYORS, LAND PLANNERS, LANDSCAPE ARCHITECTS
3909 NATIONAL DRIVE - SUITE 250 - BURTONSVILLE OFFICE PARK
BURTONSVILLE, MARYLAND 20866
TEL: 301-421-4024 BALT: 410-880-1820 DC/VA: 301-989-2524 FAX: 301-421-4186

L:\CADD\DRAWINGS\12001\PLANS BY GLW\FINALS\12001 01-02_CS.dwg | DES. DEV | DRN. KLP | CHK. CKG

DATE	REVISION	BY	APP'R.

PREPARED FOR:
MAPLE LAWN FARMS I, LLC
SUITE 300 WOODHOLME CENTER
1829 REISTERSTOWN ROAD
BALTIMORE, MD 21208
ATTN: MARK BENNETT
410-484-8400

PROFESSIONAL CERTIFICATION
I HEREBY CERTIFY THAT THESE PLANS WERE PREPARED OR APPROVED BY ME, AND THAT I AM A DULY LICENSED PROFESSIONAL ENGINEER UNDER THE LAWS OF THE STATE OF MARYLAND, LICENSE NO. 12975, EXPIRATION DATE: MAY 26, 2016
4/24/14

ELECTION DISTRICT No. 5

COVER SHEET
MAPLE LAWN FARMS
GARDEN DISTRICT - AREA 1
LOTS 1 thru 98, OPEN SPACE LOTS 99 thru 110,
COMMON OPEN AREA LOTS 111 thru 114
and NON-BUILDABLE BULK PARCELS 'X' thru 'Z'
HOWARD COUNTY, MARYLAND

SCALE	ZONING	G. L. W. FILE No.
AS SHOWN	MXD-3	12001
DATE	TAX MAP - GRID	SHEET
APRIL, 2014	41-21/46-3	1 OF 36

L:\CADD\DRAWINGS\12001\PLANS BY GLW\FINALS\12001 01-02_CS.dwg, 4/24/2014 7:14:06 AM, dougv, 1:1, © GLW 2013
PLOTTED: 4/24/2014 7:14 AM, LAST SAVED: 4/22/2014 11:40 AM, PLOTTED BY: Doug Vande Ryt
© GLW 2014

F-14-033

SUMMARY OF DEVELOPMENT CRITERIA (PER S-06-16)

OPEN SPACE (OS)

PERMITTED USES
ANY USES WHICH DO NOT INVOLVE ANY EXTENSIVE COVERAGE OF LAND WITH STRUCTURES, INCLUDING, BUT NOT LIMITED TO, PARKS, PLAYING FIELDS, PLAYGROUNDS, TENNIS, BASKETBALL AND ALL PURPOSE COURTS, GOLF COURSES, POOLS, PATHWAYS, ANY OTHER OUTDOOR RECREATIONAL USES, AND ENVIRONMENTAL FACILITIES SUCH AS STORM WATER MANAGEMENT FACILITIES OR WATER QUALITY FACILITIES. IN ADDITION, BUILDINGS AND PARKING LOTS SHALL BE PERMITTED IF THEY ARE FOR THE PUBLIC OR FOR RESIDENTS AND PEOPLE WORKING WITHIN THE SUBJECT PROPERTY AND ARE OWNED BY A HOMEOWNERS' OR BUSINESS OWNERS' ASSOCIATION, OR ARE FOR NON-PROFIT USES, SUCH AS A SCHOOL, LIBRARY, FIRE AND RESCUE STATION, POST OFFICE, MUSEUM, ART GALLERY, NATURE CENTER, OR COMMUNITY BUILDING. PARKING LOTS ARE PERMITTED ONLY AS AN ACCESSORY USE TO AN APPROVED USE ON THE SAME LOT. OPEN LAND WITHIN DESIGNATED RESIDENTIAL LAND USE AREAS SHALL BE CONSIDERED OPEN SPACE IF IT IS HELD FOR THE COMMON USE OF PERSONS RESIDING IN THE VICINITY OF SUCH LAND.

OTHER PERMITTED USES:
- a. PUBLIC OR PRIVATE CHILD CARE CENTER.
- b. COMMUNITY CENTER FOR CUSTOMARY COMMUNITY ACTIVITIES INCLUDING BUT NOT LIMITED TO:
  1. THE PRESENTATION AND PERFORMANCE OF OUTDOOR COMMUNITY ACTIVITIES, PUBLIC OR PRIVATE, SUCH AS MUSICAL AND THEATRICAL PERFORMANCES, OUTDOOR PICNICS, ART SHOWS, AND CARNIVALS.
  2. RUMMAGE SALES, WHITE ELEPHANT SALES, CAKE SALES, DANCES, AND SIMILAR ACTIVITIES.
  3. OPERATION OF A COMMUNITY HALL INCLUDING LEASING OF SAME FOR PUBLIC OR PRIVATE USE.
  4. OPERATION OF INCIDENTAL COMMERCIAL ACTIVITIES SUCH AS A SNACK BAR.
- c. PUBLIC OR PRIVATE TENNIS COURTS, TOGETHER WITH SUCH INCIDENTAL COMMERCIAL ACTIVITIES AS ARE CONSISTENT WITH PRIMARY USE OF THE LOT AS A TENNIS FACILITY.
- d. BUILDINGS AND PARKING LOTS WHICH ARE OWNED AND USED BY ANY GOVERNMENTAL ENTITY OR HOMEOWNERS' ASSOCIATION OR ARE USED FOR NON-PROFIT PURPOSES INCLUDING BUT NOT LIMITED TO:
  1. COMMUNITY LIBRARY FACILITY
  2. TEEN CENTER BUILDING INCLUDING INCIDENTAL SALES ON THE PREMISES OF FOOD AND BEVERAGES
  3. BUILDINGS USED PRIMARILY FOR RELIGIOUS ACTIVITIES
  4. MAIL ROOM, POST OFFICE, POOL HOUSE, MEETING HALL, EXERCISE FACILITY, LEASING OFFICES, ADMINISTRATIVE OFFICES, INCLUDING INCIDENTAL SALES ON THE PREMISES OF FOOD AND BEVERAGES.
- e. PARK STRUCTURES INCLUDING BUT NOT LIMITED TO GAZEBOS, PAVILIONS, AMPHITHEATER SEATING, DECKS, FOUNTAINS, WALKS, HARDSCAPE PLAZAS, TRAILS, PATIOS, ETC.
- f. UTILITY FACILITIES
- g. ENVIRONMENTAL FACILITIES SUCH AS DRAINAGE, STORMWATER MANAGEMENT FACILITIES, WETLAND MITIGATION, AFFORESTATION OR REFORESTATION.
- h. ACTIVITY AREAS SUCH AS TOT LOTS, VOLLEYBALL AND MULTI-PURPOSE COURTS, PICNIC AREAS, ETC.
- i. SIGN AND ENTRY FEATURES MAY BE LOCATED AT ANY LOCATION IN A SETBACK, IF APPROVED BY THE PLANNING BOARD AND DOES NOT INTERFERE WITH SIGHT DISTANCE ALONG PUBLIC ROADS.

LOT AREA
NO MINIMUM/MAXIMUM LOT SIZES APPLY WITHIN OPEN SPACE LAND USE AREAS EXCEPT THAT 35% OF THE GROSS ACREAGE OF ALL RECORDED LAND MUST BE OPEN SPACE AND 10% OF THE OPEN SPACE MUST BE AVAILABLE FOR ACTIVE RECREATION.

SETBACKS
BUILDINGS OR STRUCTURES WITHIN OPEN SPACE LAND USE AREAS SHALL BE A MINIMUM OF 10' FROM ANY RIGHT-OF-WAY OR PROPERTY LINE, EXCEPT THAT PARK LIKE STRUCTURES SUCH AS GAZEBOS, PAVILIONS, BENCHES FOUNTAINS AND SIMILAR STRUCTURES MAY BE LOCATED ANYWHERE WITHIN AN OPEN SPACE LOT; EXCEPT, HOWEVER, THAT BUILDINGS AND STRUCTURES MAY BE PERMITTED ANYWHERE WITHIN OPEN SPACE LAND USE AREAS IN ACCORDANCE WITH A SITE DEVELOPMENT PLAN APPROVED BY THE HOWARD COUNTY PLANNING BOARD.

HEIGHT
THERE SHALL BE NO HEIGHT LIMITATIONS FOR BUILDINGS OR STRUCTURES IN OPEN SPACE LAND USE AREAS, PROVIDED IMPROVEMENTS ARE CONSTRUCTED IN ACCORDANCE WITH A SITE DEVELOPMENT PLAN APPROVED BY THE HOWARD COUNTY PLANNING BOARD.

COVERAGE
NO COVERAGE REQUIREMENT IS IMPOSED UPON LOTS WITHIN OPEN SPACE LAND USE AREAS.

PARKING

HEALTH CLUB	10.0 SPACES PER 1,000 SQUARE FEET OF NET LEASABLE AREA
SWIMMING POOL, COMMUNITY	1.0 SPACE PER SEVEN PERSONS PERMITTED IN THE POOL AT ONE TIME BY THE HEALTH DEPT.
TENNIS COURT	2.0 SPACES PER COURT

SUCH PARKING AREAS MAY BE IN PARKING LOTS, PARALLEL SPACES LOCATED ON PAVED AREAS IN AND/OR ADJACENT TO PUBLICLY MAINTAINED ROADWAYS, ADJACENT TO PUBLIC OR PRIVATE SERVICE DRIVES OR ORIENTED DIAGONALLY OR AT RIGHT ANGLES TO SUCH ROADWAYS OR SERVICE DRIVES.

REDUCTIONS IN PARKING REQUIREMENTS ARE PERMITTED PURSUANT TO THE HOWARD COUNTY ZONING REGULATIONS SECTIONS 133.D.8 (PARKING STUDIES), AND 133.E.1 (SHARED PARKING).

ACCESSORY USES
ANY USE NORMALLY AND CUSTOMARILY INCIDENTAL TO ANY USE PERMITTED IN ANY LAND USE AREA SHALL BE PERMITTED.

SINGLE FAMILY DETACHED (SFD)

PERMITTED USES
ALL LOTS WITHIN SINGLE FAMILY DETACHED LAND USE AREAS SHALL BE USED ONLY FOR ONE SINGLE FAMILY DETACHED DWELLING, OR ONE ZERO LOT LINE DWELLING UNIT PER LOT. PRIVATE RECREATIONAL FACILITIES, SUCH AS SWIMMING POOLS, TENNIS COURTS AND BASKETBALL COURTS RESERVED FOR THE ON-SITE RESIDENTS AND THEIR GUESTS ARE ALSO PERMITTED. ACCESSORY STRUCTURES AND ACCESSORY USES ARE ALSO PERMITTED.

ANY OF THE PERMITTED USES MAY INCLUDE HOME OCCUPATIONS WITHIN THE PRINCIPAL STRUCTURE.

THE FOLLOWING ADDITIONAL USES NOT REFERRED TO OR INCLUDED IN THE ABOVE USES, WHICH ARE ALLOWED BY SPECIAL EXCEPTION IN THE RR DISTRICT, WILL BE PERMITTED AS A MATTER OF RIGHT IN THE SINGLE FAMILY DETACHED LAND USE AREAS, AND ARE SPECIFICALLY APPROVED BY THE PLANNING BOARD ON THIS AMENDED COMPREHENSIVE SKETCH PLAN.
- ANTIQUE SHOPS, ART GALLERIES AND CRAFT SHOPS
- BED AND BREAKFAST INNS
- CONCERT OR RECITAL ESTABLISHMENTS
- HOME OCCUPATIONS (ALSO SEE SECTION 128.C.1 FOR ACCESSORY USE PROVISIONS)
- CHARITABLE AND PHILANTHROPIC INSTITUTIONS
- HOMES-NURSING HOMES, GROUP CARE FACILITIES, CHILDREN'S HOMES
- ATHLETIC FACILITIES-ATHLETIC FIELDS, COMMERCIAL OR COMMUNITY SWIMMING POOLS, TENNIS CLUBS AND SIMILAR USES
- COUNTRY CLUBS AND GOLF COURSES
- PUBLIC UTILITY USES, LIMITED TO: (A) UTILITY SUBSTATION, (B) ABOVE GROUND PIPELINES, (C) PUMPING STATIONS, (D) TELEPHONE EXCHANGES, (E) OTHER UTILITY DEVICES SUCH AS TRANSFORMERS, SWITCH GEAR, TELEPHONE CABINETS, ETC.
- ENTRANCE FEATURES FOR SUBDIVISIONS
- ACCESSORY DWELLING UNITS (SUCH UNITS SHALL NOT COUNT TOWARDS THE MAXIMUM NUMBER OF DWELLING UNITS; SUCH UNITS SHALL BE OWNED AND MAINTAINED BY THE OWNER OF THE PRINCIPAL DWELLING UNIT; ALSO SEE SECTION 109).

FOR ALL LOTS AND PARCELS WHICH ARE TECHNICALLY IN THE SFD LAND USE, BUT LATER RECORDED AS ADDITIONAL OPEN SPACE (E.G. NCOS & WALKWAY PARCELS) THE PROVISIONS OF THE OPEN SPACE CRITERIA SHALL BE USED IN LIEU OF THE SFD CRITERIA.

DENSITY
AVERAGE DENSITY SHALL NOT EXCEED 2.8 DWELLING UNITS PER GROSS ACRE BASED ON THE ENTIRE AREA OF THE SINGLE FAMILY DETACHED LAND USE.

APPROVED: HOWARD COUNTY DEPARTMENT OF PUBLIC WORKS
[signature] 5-7-14
Chief, Bureau of Highways — Date

APPROVED: HOWARD COUNTY DEPARTMENT OF PLANNING & ZONING
[signature] 5-21-14
Chief, Division of Land Development — Date
[signature] 5.20.14
Chief, Development Engineering Division — Date

SUMMARY OF DEVELOPMENT CRITERIA (CONTINUED)

LOT SIZE AND WIDTH

LOT TYPE	MINIMUM LOT SIZE	MIN. LOT WIDTH AT FRONT BRL
Cottage	2,500 Square Feet	32'
Manor	4,000 Square Feet	48'
Villa	5,400 Square Feet	54'
Estate	20,000 Square Feet	120'*

*EXCEPT FOR LOTS IDENTIFIED ON AMENDED CSP, WHICH SHALL NOT BE LESS THAN 100' AT FRONT BRL

LOT TYPE SHALL BE DESIGNATED ON FINAL PLATS FOR ALL SINGLE FAMILY DETACHED AREAS. ESTATE LOTS SHALL BE LOCATED AS SHOWN ON THIS PLAN.

STRUCTURE SETBACKS
THE MINIMUM REQUIRED SETBACKS FOR SINGLE FAMILY DETACHED STRUCTURES SHALL BE AS FOLLOWS:

LOT TYPE	MIN. FRONT SETBACK	MIN. SIDE SETBACK	MINIMUM REAR SETBACK: TO PRINCIPAL STRUCTURE	MINIMUM REAR SETBACK: TO REAR GARAGE (ATTACHED OR DETACHED) OR TO ACCESSORY STRUCTURE
Cottage	10'	4' EXCEPT FOR GARAGE WHICH MAY BE 0'	20'	3'
Manor	12'	6' EXCEPT FOR GARAGE WHICH MAY BE 0'	20'	3'
Villa	12'	6' EXCEPT FOR GARAGE WHICH MAY BE 0'	20'	3'
Estate	20'	20' EXCEPT FOR GARAGE WHICH MAY BE 10'	20'	20'

A ZERO LOT LINE DWELLING UNIT MAY BE LOCATED ON ANY PROPERTY LINE WHICH IS NOT A STREET RIGHT-OF-WAY PROVIDED THAT (I) NO PART OF THE DWELLING SHALL ENCROACH ONTO THE ADJOINING LOT: (II) AN ACCESS EASEMENT FOR THE PURPOSE OF MAINTENANCE TO THE SIDE OF THE STRUCTURE SHALL BE INCLUDED IN THE DEED WHERE APPROPRIATE. SPACING BETWEEN DWELLING UNITS SHALL BE A MINIMUM OF 8'. GARAGES HOWEVER, MAY ADJOIN ALONG THE PROPERTY LINE, PROVIDED THEY COMPLY WITH ALL BUILDING AND FIRE CODE REGULATIONS.

HABITABLE SPACE AND/OR OPEN/ENCLOSED DECKS MAY BE BUILT OVER ATTACHED GARAGES. IN THOSE CASES, THE GARAGE SETBACKS SHALL GOVERN.

OTHER DECKS MUST BE A MINIMUM OF 10' FROM REAR PROPERTY LINE, AND ARE SUBJECT TO SIDE YARD SETBACKS.

FACING ACCESSORY STRUCTURES AND DETACHED GARAGES (ACROSS AN ALLEY/LANE R.O.W.) SHALL BE A MINIMUM OF 30' APART.

STRUCTURES MAY BE LOCATED ANYWHERE WITHIN SUCH SETBACK AREAS IN ACCORDANCE WITH A SITE DEVELOPMENT PLAN APPROVED BY THE HOWARD COUNTY PLANNING BOARD.

EXCEPTIONS TO SETBACK REQUIREMENTS
EXCEPT FOR THE FOLLOWING, SECTION 128.A.1 APPLIES:
- PORCHES MAY ENCROACH INTO THE FRONT YARD TO WITHIN 2' FROM THE FRONT PROPERTY LINE OR RIGHT-OF-WAY FOR COTTAGES, MANORS, AND VILLAS; TO WITHIN 12' FOR ESTATES. PORCHES MAY ENCROACH INTO THE SIDE YARD OF CORNER LOTS TO WITHIN 2' FROM THE RIGHT-OF-WAY FOR COTTAGES, MANORS, AND VILLAS; TO WITHIN 12' FOR ESTATES. WHERE A SIDE YARD ABUTS AN OPEN SPACE OR PASSAGE, PORCHES MAY ENCROACH TO WITHIN 1' FROM THE SIDE PROPERTY LINE FOR COTTAGES, MANORS, AND VILLAS; TO WITHIN 12' FOR ESTATES.
- STOOPS AND STEPS MAY ENCROACH INTO THE FRONT AND SIDE YARDS TO WITHIN 1' FROM THE FRONT PROPERTY LINE.
- GARDEN WALLS, FENCES, PIERS, GATES AND SIMILAR ORNAMENTS MAY BE BUILT IN THE FRONT AND SIDE YARDS NOT CLOSER THAN 1' FROM THE FRONT PROPERTY LINE; NOT GREATER THAN 48" IN HEIGHT ALONG THE FRONT PROPERTY LINE AND NOT GREATER THAN 72" ALONG THE SIDE AND REAR PROPERTY LINES. AN ARCHWAY OR PIERS DEFINING A LEAD WALK MAY BE UP TO 9'.
- MASONRY VENEERS MAY ENCROACH A MAXIMUM OF SIX INCHES INTO ANY REQUIRED SETBACK.

ACCESS
PERMANENT ACCESS TO LOTS MAY BE PROVIDED BY MEANS OF ALLEYS, USING PERPETUAL RECIPROCAL EASEMENTS OR OTHER ACCEPTABLE LEGAL PROVISIONS.

BUILDING HEIGHT
MAXIMUM BUILDING HEIGHT ON ALL LOTS SHALL BE 38' TO THE MIDPOINT OF THE ROOF HEIGHT MEASURED FROM THE HIGHEST ADJOINING GROUND ELEVATION ADJACENT TO THE BUILDING, EXCEPT AS OTHERWISE APPROVED ON A SITE DEVELOPMENT PLAN BY THE HOWARD COUNTY PLANNING BOARD.

COVERAGE
LOT COVERAGE FOR ESTATE LOTS SHALL NOT EXCEED 50 PERCENT, INCLUDING PRINCIPAL AND ACCESSORY STRUCTURES BUT NOT INCLUDING SIDEWALKS, PAVED PARKING AREAS, DRIVEWAYS, PORCHES, STOOPS, STEPS, DECKS, PATIOS, IN-GROUND POOLS, LANDSCAPING AND SIMILAR STRUCTURES.

PARKING
NO LESS THAN TWO PARKING SPACES SHALL BE PROVIDED FOR EACH SINGLE FAMILY DETACHED DWELLING UNIT. NO LESS THAN ONE PARKING SPACE SHALL BE PROVIDED FOR EACH ACCESSORY DWELLING UNIT. SUCH SPACES MAY CONSIST OF GARAGE, DRIVEWAY AND/OR SIMILAR OFF-STREET PARKING SPACES. VISITOR PARKING AND OVERFLOW PARKING MAY BE ACCOMMODATED AS ON-STREET PARKING WITHIN THE PUBLIC RIGHT-OF-WAY.

REDUCTIONS IN PARKING REQUIREMENTS ARE PERMITTED PURSUANT TO THE HOWARD COUNTY ZONING REGULATIONS SECTION 133.E.1 (SHARED PARKING).

OTHER RESIDENTIAL (OR)

PERMITTED USES
APARTMENT DWELLINGS (INCLUDING STACKED TOWNHOUSES AND OTHER ARCHITECTURAL LAYOUTS WITH BOTH HORIZONTAL AND VERTICAL PARTY WALLS), SINGLE-FAMILY ATTACHED DWELLINGS, LIVE-WORK UNITS, SEMI-DETACHED DWELLINGS AND TWO-FAMILY DWELLINGS SHALL BE PERMITTED WITHIN OTHER RESIDENTIAL LAND USE AREAS. MIDTOWN PARCEL A-1 AND THE OR AREA OF THE WESTSIDE DISTRICT MAY CONTAIN LIVE-WORK UNITS.

STACKED TOWNHOUSES HAVE THE APPEARANCE OF CONVENTIONAL TOWNHOUSES, BUT ARE ACTUALLY SEPARATED BOTH HORIZONTALLY AND VERTICALLY. THE UNITS MAY OR MAY NOT HAVE INTEGRAL AT-GRADE GARAGES.

LIVE-WORK UNITS ARE VERTICALLY INTEGRATED BUILDING TYPES, WHERE THE FIRST FLOOR (AND BASEMENT, IF PROVIDED) SHALL BE UTILIZED AS COMMERCIAL SPACE AND THE UPPER LEVEL(S) SHALL BE RESIDENTIAL USES ONLY.

UPPER FLOORS OF ALL OTHER RESIDENTIAL STRUCTURES SHALL BE RESIDENTIAL USE ONLY.

APARTMENT BUILDING TYPES MAY ALSO INCLUDE ACCESSORY USES, SUPPORT SERVICES, AND AMENITIES INCLUDING BUT NOT LIMITED TO EXERCISE FACILITY, ADMINISTRATIVE OFFICES, MAIL ROOM, MEETING ROOMS, ETC. WITH NO LIMITATIONS IN SIZE. COMMERCIAL/RETAIL SPACE ON THE FIRST FLOOR OF AN APARTMENT BUILDING MAY NOT EXCEED 1200 SQUARE FEET OR 15% OF THE GROSS FIRST FLOOR AREA, WHICHEVER IS GREATER. THIS CRITERIA IS NOT MEANT TO PROHIBIT VERTICALLY INTEGRATED USES WHERE THE FIRST FLOOR IS COMMERCIAL/RETAIL AND THE UPPER FLOORS RESIDENTIAL.

OTHER PERMITTED USES INCLUDE PRIVATE RECREATIONAL FACILITIES SUCH AS TOT LOTS, SWIMMING POOLS, BASKETBALL COURTS AND TENNIS COURTS, RESERVED FOR THE USE OF A SPECIFIC PROJECT'S RESIDENTS AND THEIR GUESTS. SUCH FACILITIES MAY BE LOCATED WITHIN CONDOMINIUM DEVELOPMENTS AS WELL AS WITHIN COMMUNITIES WHERE ALL PROPERTIES ARE INCLUDED WITHIN RECORDED COVENANTS AND LIENS, WHICH GOVERN AND PROVIDE FINANCIAL SUPPORT FOR OPERATIONS OF THE FACILITIES.

ANY OF THE PERMITTED USES MAY INCLUDE HOME OCCUPATIONS WITHIN THE PRINCIPAL STRUCTURE.

ACCESSORY STRUCTURES AND USES ARE ALSO PERMITTED FOR ALL OTHER RESIDENTIAL LAND USE AREAS.

THE FOLLOWING ADDITIONAL USES NOT REFERRED TO OR INCLUDED IN THE ABOVE USES, WHICH ARE ALLOWED BY SPECIAL EXCEPTION IN THE RR DISTRICT, WILL BE PERMITTED AS A MATTER OF RIGHT IN THE OTHER RESIDENTIAL LAND USE AREAS, AND ARE SPECIFICALLY APPROVED BY THE PLANNING BOARD ON THIS AMENDED COMPREHENSIVE SKETCH PLAN.

- ANTIQUE SHOPS, ART GALLERIES AND CRAFT SHOPS
- BED AND BREAKFAST INNS
- CONCERT OR RECITAL ESTABLISHMENTS
- HOME OCCUPATIONS (ALSO SEE SECTION 128.C.1 FOR ACCESSORY USE PROVISIONS)
- CHARITABLE AND PHILANTHROPIC INSTITUTIONS
- HOMES-NURSING HOMES, GROUP CARE FACILITIES, CHILDREN'S HOMES
- ATHLETIC FACILITIES-ATHLETIC FIELDS, COMMERCIAL OR COMMUNITY SWIMMING POOLS, TENNIS CLUBS AND SIMILAR USES.
- COUNTRY CLUBS AND GOLF COURSES
- PUBLIC UTILITY USES, LIMITED TO: (A) UTILITY SUBSTATION, (B) ABOVE GROUND PIPELINES, (C) PUMPING STATIONS, (D) TELEPHONE EXCHANGES, (E) OTHER UTILITY DEVICES SUCH AS TRANSFORMERS, SWITCH GEAR, TELEPHONE CABINETS, ETC.
- ENTRANCE FEATURES FOR SUBDIVISIONS
- ACCESSORY DWELLING UNITS (SUCH UNITS SHALL NOT COUNT TOWARDS THE MAXIMUM NUMBER OF DWELLING UNITS; SUCH UNITS SHALL BE OWNED AND MAINTAINED BY THE OWNER OF THE PRINCIPAL DWELLING UNIT; ALSO SEE SECTION 109).

FOR ALL LOTS AND PARCELS WHICH ARE TECHNICALLY IN THE OR LAND USE, BUT LATER RECORDED AS ADDITIONAL OPEN SPACE (E.G. NCOS & WALKWAY PARCELS) THE PROVISIONS OF THE OPEN SPACE CRITERIA SHALL BE USED IN LIEU OF THE OR CRITERIA.

DENSITY
AVERAGE DENSITY SHALL NOT EXCEED 14.0 UNITS PER GROSS ACRE BASED ON THE ENTIRE AREA OF OTHER RESIDENTIAL LAND USE.

LOT SIZE
NO MINIMUM OR MAXIMUM LOT SIZE IS ESTABLISHED FOR THE OTHER RESIDENTIAL LAND USE AREAS.

SUMMARY OF DEVELOPMENT CRITERIA (CONTINUED)

STRUCTURE SETBACKS
THE MINIMUM REQUIRED SETBACKS FOR OTHER RESIDENTIAL STRUCTURES SHALL BE AS FOLLOWS:

LOT TYPE	MIN. FRONT SETBACK	MIN. SIDE SETBACK	MINIMUM REAR SETBACK: TO PRINC. STRUCT.	MINIMUM REAR SETBACK: TO REAR GARAGE (ATTACHED OR DETACHED) OR TO ACCESSORY STRUCTURE	MINIMUM FRONT, SIDE, AND REAR SETBACK FROM MAPLE LAWN BLVD.
SINGLE FAMILY ATTACHED	0'	0'	20'	3'	20'
LIVE-WORK	0'	0'	20'	3'	20'
SEMI-DETACHED	10'	4' EXCEPT FOR GARAGE WHICH MAY BE 0'	20'	3'	20'
TWO-FAMILY	10'	4' EXCEPT FOR GARAGE WHICH MAY BE 0'	20'	3'	20'
APARTMENT	10'	10' EXCEPT FOR GARAGE WHICH MAY BE 0'	20'	3'	20'

HABITABLE SPACE AND/OR OPEN/ENCLOSED DECKS MAY BE BUILT OVER ATTACHED GARAGES. IN THOSE CASES, THE GARAGE SETBACKS SHALL GOVERN. WHERE THE REAR LOT LINE IS CONTIGUOUS TO GREEN OPEN SPACE, THE REAR PRINCIPAL STRUCTURE SETBACK MAY BE REDUCED TO 10' AND THE REAR SETBACK FOR DECKS MAY BE REDUCED TO 3'.

OTHER DECKS MUST BE A MINIMUM OF 10' FROM REAR PROPERTY LINE, AND ARE SUBJECT TO SIDE YARD SETBACKS.

FACING ACCESSORY STRUCTURES AND DETACHED GARAGES (ACROSS AN ALLEY/LANE R.O.W.) SHALL BE A MINIMUM OF 30' APART.

BETWEEN APARTMENT BUILDINGS, THE MINIMUM SETBACK DISTANCES SHALL BE 30' FRONT TO FRONT, 50' BACK TO BACK, 50' FRONT TO BACK AND 15' FOR ALL OTHER CONDITIONS. BETWEEN SINGLE-FAMILY ATTACHED BUILDINGS, THE MINIMUM SETBACK DISTANCES SHALL BE 30' FRONT TO FRONT, 50' BACK TO BACK (EXCEPT ACROSS AN ALLEY), 50' BACK TO FRONT AND 6' (OR AS REQUIRED BY THE BUILDING CODE) FOR ALL OTHER CONDITIONS.

IN THE HILLSIDE DISTRICT, THE FRONT AND SIDE SETBACKS FROM MAPLE LAWN BLVD. MAY BE REDUCED TO 5'. ON PARCEL A-1 IN MIDTOWN, THE FRONT SETBACK FOR APARTMENTS, ALONG MAPLE LAWN BLVD. MAY BE REDUCED TO 10'.

STRUCTURES MAY BE LOCATED ANYWHERE WITHIN SUCH SETBACK AREAS IN ACCORDANCE WITH A SITE DEVELOPMENT PLAN APPROVED BY THE HOWARD COUNTY PLANNING BOARD.

EXCEPTIONS TO SETBACK REQUIREMENTS
EXCEPT FOR THE FOLLOWING, SECTION 128.A.1 APPLIES:
- PORCHES MAY ENCROACH INTO THE FRONT YARD TO WITHIN 2' FROM THE FRONT PROPERTY LINE OR RIGHT-OF-WAY FOR ALL OTHER RESIDENTIAL LOT TYPES.
- STOOPS AND STEPS MAY ENCROACH INTO THE FRONT YARD TO WITHIN 1' FROM THE FRONT PROPERTY LINE FOR ALL OTHER RESIDENTIAL TYPES.
- GARDEN WALLS, FENCES, PIERS, GATES AND SIMILAR ORNAMENTS MAY BE BUILT IN THE FRONT AND SIDE YARDS NOT CLOSER THAN 1' FROM THE PROPERTY LINE; NOT GREATER THAN 48" IN HEIGHT ALONG THE FRONT PROPERTY LINE AND NOT GREATER THAN 72" ALONG THE SIDE AND REAR PROPERTY LINES. AN ARCHWAY OR PIERS DEFINING A LEAD WALK MAY BE UP TO 9'.
- MASONRY VENEERS MAY ENCROACH A MAXIMUM OF 6" INTO ANY REQUIRED SETBACK AREA.

ACCESS
PERMANENT ACCESS TO LOTS MAY BE PROVIDED BY MEANS OF ALLEYS, USING PERPETUAL RECIPROCAL EASEMENTS OR OTHER ACCEPTABLE LEGAL PROVISIONS.

BUILDING HEIGHT
MAXIMUM BUILDING HEIGHT IN THE OTHER RESIDENTIAL LAND USE AREAS SHALL BE 50' FOR ATTACHED, SEMI-DETACHED, OR TWO-FAMILY DWELLING UNITS, AND 60' FOR LIVE-WORK UNITS AND APARTMENTS, IN EACH CASE TO THE MIDPOINT OF THE ROOF HEIGHT MEASURED FROM THE HIGHEST ADJOINING GROUND ELEVATION ADJACENT TO THE BUILDING, EXCEPT AS OTHERWISE APPROVED ON A SITE DEVELOPMENT PLAN BY THE HOWARD COUNTY PLANNING BOARD.

COVERAGE
NO COVERAGE REQUIREMENTS ARE IMPOSED IN OTHER RESIDENTIAL LAND USE AREAS.

PARKING
NO LESS THAN TWO PARKING SPACES SHALL BE PROVIDED FOR EACH SINGLE FAMILY ATTACHED, LIVE-WORK, SEMI-DETACHED, AND TWO-FAMILY DWELLING UNIT. NO LESS THAN ONE AND ONE-HALF PARKING SPACES SHALL BE PROVIDED FOR EACH APARTMENT UNIT. SUCH SPACES MAY CONSIST OF GARAGE, DRIVEWAY AND/OR SIMILAR OFF-STREET PARKING SPACES. NO LESS THAN ONE PARKING SPACE SHALL BE PROVIDED FOR EACH ACCESSORY DWELLING UNIT. SUCH PARKING SHALL BE PROVIDED IN PROXIMITY TO SUCH DWELLING UNIT AND MAY BE INCLUDED AS PART OF A COMMON PARKING AREA PROVIDED FOR RESIDENTS, TENANTS, AND GUESTS. PRINCIPAL STRUCTURES SHALL BE NO CLOSER THAN 15' TO THE CURB OF COMMON PARKING AREAS WITH HEAD-IN OR ANGLED PARKING, AND NO CLOSER THAN 10' TO THE CURB FOR PARALLEL PARKING, UNLESS SUFFICIENT LANDSCAPING IS PROVIDED TO JUSTIFY A REDUCTION IN THE SETBACK, PER THE HOWARD COUNTY LANDSCAPE MANUAL. LIVE-WORK UNITS ARE EXEMPT FROM THIS SETBACK REQUIREMENT. VISITOR PARKING AND OVERFLOW PARKING MAY ALSO BE ACCOMMODATED AS ON STREET AND PARALLEL PARKING WITHIN THE PUBLIC RIGHT-OF-WAY.

SUCH PARKING AREAS MAY BE PARALLEL SPACES LOCATED ON PAVED AREAS IN AND/OR ADJACENT TO PUBLICLY MAINTAINED ROADWAYS, ADJACENT TO PUBLIC OR PRIVATE SERVICE DRIVES OR ORIENTED DIAGONALLY OR AT RIGHT ANGLES TO SUCH ROADWAYS OR SERVICE DRIVES.

REDUCTIONS IN PARKING REQUIREMENTS ARE PERMITTED PURSUANT TO THE HOWARD COUNTY ZONING REGULATIONS SECTION 133.E.1 (SHARED PARKING).

HOUSING FOR ELDERLY AND/OR HANDICAPPED PERSONS
IN THE EVENT A FACILITY QUALIFIES UNDER FEDERAL, STATE OR COUNTY PROGRAMS INTENDED TO PROMOTE HOUSING FOR THE ELDERLY OR HANDICAPPED, THE PARKING REQUIREMENTS MAY BE MODIFIED TO PROVIDE FOR FOUR PARKING SPACES FOR EVERY TEN DWELLING UNITS PARTICIPATING IN SUCH PROGRAM. IN THE EVENT THE UNITS ARE WITHDRAWN FROM SUCH A HOUSING PROGRAM, THE OWNER OF THE FACILITY SHALL IMMEDIATELY NOTIFY THE DEPARTMENT OF PLANNING AND ZONING AND SHALL CONSTRUCT, PRIOR TO FURTHER OCCUPANCY OF THE WITHDRAWN UNITS, SUCH ADDITIONAL PARKING SPACES AS ARE NECESSARY TO PROVIDE ONE AND ONE-HALF PARKING SPACE FOR EACH DWELLING UNIT WITHDRAWN.

OVERALL TRACKING CHART

PHASE NO.	FILE REF. NO.	GROSS ACREAGE	NON-BUILDABLE SF	NON-BUILDABLE OR	NON-BUILDABLE EMP	NON-BUILDABLE OS	NON-BUILDABLE %	S.F.D. AC. (%)	O.R. AC. (%)	EMP. AC. (%)	O.S. AC. (%)	PUB. RD. SF	PUB. RD. OR	PUB. RD. EMP	PRIV. RD. ACREAGE	SFD UNITS	O.R. UNITS (APT./S.F.A.)	S.F.D. DENSITY	O.R. DENSITY	EMP. BLDG. AREA	EMP. F.A.R.
1	F-03-07	51.98	0.00	0.00	0.00	0.00	(0.0)	------	------	30.83 (59.3)	21.15 (40.7)	0.00	0.00	4.35	------	------	------	------	------	------	------
2	F-03-90	37.43	0.52	0.43	0.24	0.00	(3.2)	10.84 (29.0)	8.09 (21.6)	1.56 (4.2)	15.75 (42.1)	3.12	3.74	1.56	1.68	55	65	5.1/AC.	8.0/AC.	------	------
3	F-04-92	58.80	-0.52	-0.43	2.71	0.00	(3.0)	7.11 (12.1)	12.28 (20.9)	14.80 (25.2)	22.85 (38.9)	2.52	0.46	0.00	1.00	41	190	5.8/AC.	15.5/AC.	------	------
4a	F-05-81 / F-05-82	15.47	0.00	1.48	-1.69	0.00	-(1.4)	0.00 (0.0)	7.29 (47.1)	1.69 (10.9)	6.70 (43.3)	0.00	3.40	1.69	0.46	------	60	------	8.2/AC.	------	------
4b	F-05-139 / F-07-06	3.12	0.00	0.00	-1.26	0.00	-(40.4)	0.00 (0.0)	0.00 (0.0)	3.15 (101.0)	1.23 (39.4)	0.00	0.00	2.04	0.00	------	------	------	------	------	------
4c	F-05-112 / F-05-113	3.00	0.00	0.00	0.00	0.00	(0.0)	0.00 (0.0)	0.95 (31.7)	2.05 (68.3)	0.00 (0.0)	0.00	0.95	2.05	0.00	------	------	------	------	------	------
5a	F-06-43	0.00	0.00	-1.25	0.00	0.00	(0.0)	0.00 (0.0)	1.25 (0.0)	0.00 (0.0)	0.00 (0.0)	0.00	0.00	0.00	0.00	------	15	------	12.0/AC.	------	------
5b	F-06-161	33.26	0.00	-0.23	0.00	0.00	-(0.7)	7.73 (23.2)	7.26 (21.8)	0.00 (0.0)	18.50 (55.6)	2.22	3.16	0.00	0.88	41	63	5.3/AC.	8.7/AC.	------	------
6a	F-08-72	15.05	0.00	0.00	0.00	0.00	(0.0)	0.00 (0.0)	9.55 (63.5)	0.00 (0.0)	5.50 (36.5)	0.00	0.80	0.00	2.18	------	100	------	10.5/AC.	------	------
n/a	F-07-37	0.00	0.00	0.00	0.00	0.00	(0.0)	0.00 (0.0)	0.63 (0.0)	-0.63 (0.0)	0.00 (0.0)	0.00	0.00	0.00	0.00	------	------	------	------	------	------
n/a	F-07-183	3.05	0.00	0.00	0.00	0.00	(0.0)	0.00 (0.0)	0.00 (0.0)	3.05 (100.0)	0.00 (0.0)	0.00	0.00	0.00	0.00	------	------	------	------	------	------
6b	F-08-54 / F-08-55	90.60	0.00	16.95	13.04	1.37	(34.6)	0.00 (0.0)	0.00 (0.0)	32.60 (36.0)	26.65 (29.4)	0.00	0.00	1.91	0.00	------	------	------	------	------	------
n/a	F-09-97	0.00	0.00	0.00	-11.23	0.00	(0.0)	0.00 (0.0)	0.00 (0.0)	11.23 (0.0)	0.00 (0.0)	0.00	0.00	0.00	0.00	------	------	------	------	------	------
n/a	F-10-46	0.00	0.03	0.00	0.00	0.00	(0.0)	0.00 (0.0)	-0.03 (0.0)	0.00 (0.0)	0.00 (0.0)	0.00	0.00	0.00	0.00	------	------	------	------	------	------
7	F-10-61	16.60	1.15	0.00	0.00	0.20	(8.1)	5.86 (35.3)	8.45 (50.9)	0.00 (0.0)	0.94 (5.7)	1.18	2.45	0.00	1.45	39	111	6.7/AC.	13.1/AC.	------	------
8a	F-11-27	0.00	-1.18	0.00	0.00	-0.20	(0.0)	1.18 (0.0)	0.00 (0.0)	0.00 (0.0)	0.20 (0.0)	0.00	0.00	0.00	0.00	12	0	10.2/AC.	------	------	------
8b	F-12-21	0.00	0.00	-7.32	-0.32	-0.68	(0.0)	0.00 (0.0)	7.96 (0.0)	-0.31 (0.0)	0.67 (0.0)	0.00	2.93	0.32	1.29	-----	67	------	8.4/AC.	------	------
8c	F-12-20	1.65	0.00	0.00	0.00	0.00	(0.0)	1.56 (94.5)	0.00 (0.0)	0.00 (0.0)	0.09 (5.5)	0.00	0.00	0.00	0.00	10	------	6.4/AC.	------	------	------
8c	F-12-29	30.22	0.00	0.00	0.00	0.00	(0.0)	16.63 (55.0)	0.00 (0.0)	0.00 (0.0)	13.59 (45.0)	4.11	0.00	0.00	0.99	71	------	4.3/AC.	------	------	------
n/a	F-12-15	9.37	0.00	0.59	13.01	0.00	(0.0)	0.00 (0.0)	0.00 (0.0)	-4.23 (0.0)	0.00 (0.0)	0.00	0.00	0.00	0.00	------	------	------	------	------	------
9b	F-13-03	0.00	0.00	-3.99	0.00	-0.69	(0.0)	0.00 (0.0)	3.99 (0.0)	0.00 (0.0)	0.69 (0.0)	0.00	0.97	0.00	0.26	------	43	------	10.8/AC.	------	------
9c	F-13-07	34.08	0.00	0.00	0.00	0.00	(0.0)	20.48 (60.1)	0.00 (0.0)	0.00 (0.0)	13.60 (39.9)	4.73	0.00	0.00	0.97	85		4.2/AC.	------	------	------
9c	F-13-08	75.79	46.90	0.00	0.00	28.89	(100.0)	0.00 (0.0)	0.00 (0.0)	0.00 (0.0)	0.00 (0.0)	0.00	0.00	0.00	0.00	------	------	------	------	------	------
n/a	F-12-86	15.46	0.00	0.00	0.00	0.00	(0.00)	0.00 (0.00)	0.00 (0.0)	11.72 (75.8)	3.74 (24.2)	0.00	0.00	0.00	0.00	------	------	------	------	------	------
10b	F-14-15	0.00	0.00	-4.32	0.00	0.00	(0.0)	0.00 (0.0)	4.32 (0.0)	0.00 (0.0)	0.00 (0.0)	0.00	0.57	0.00	0.20	------	53	------	12.3/Ac.	------	------
10c	F-14-33	0.00	-26.12	0.00	0.00	-23.86	(0.0)	26.12 (0.0)	0.00 (0.0)	0.00 (0.0)	23.86 (0.0)	7.43	0.00	0.00	1.37	98	------	3.8/Ac.	------	------	------
11c	P-14-01	0.00	-18.98	0.00	0.00	-5.02	(0.00)	18.98 (0.00)	0.00 (0.0)	0.00 (0.0)	5.02 (0.0)	2.02	0.00	0.00	0.50	45	------	2.4/Ac.	------	------	------
11b	F-14-69	0.00	0.00	-1.91	0.00	0.00	(0.00)	0.00 (0.00)	1.91 (0.0)	0.00 (0.0)	0.00 (0.0)	0.00	0.00	0.00	0.27	------	35	------	18.3/Ac.	------	------
TOTALS		494.93	16.31				(3.29)	116.49 (23.54)	73.90 (14.93)	107.51 (21.72)	180.73 (36.52)	54.26			13.50	497	802	4.3/AC.	10.9/AC.	0.00	0.00

OVERALL DENSITY TABULATION	PROPOSED	ALLOWED
OVERALL NUMBER OF S.F.D UNITS / GROSS ACRE OF S.F.D.	4.3 UNITS/AC.	2.8 UNITS/AC.
OVERALL NUMBER OF O.R. UNITS / GROSS ACRE OF O.R.	10.9 UNITS/AC.	14.0 UNITS/AC.
OVERALL EMPLOYMENT F.A.R		0.35
OVERALL S.F.D/O.R. DENSITY PER OVERALL GROSS ACRE	2.6 UNITS/AC.	2.2 UNITS/AC.

LAND USE ACREAGES *	PROPOSED	ALLOWED
SINGLE FAMILY DETACHED (S.F.D.)	118.29	192.6
OTHER RESIDENTIAL (O.R.)	73.90	73.6
EMPLOYMENT	122.01	122.0
OPEN SPACE	180.73	217.1
TOTALS	494.93	605.3

MAX. RES. UNITS ALLOWED	S-06-16
SINGLE FAMILY DETACHED	507 (37.8%)
APARTMENTS (O.R.)	210 (15.7%)
SINGLE FAMILY ATTACHED	623 (46.5%)
TOTAL	1340

* LAND ACREAGES INCLUDE NON-BUILDABLE AREAS
** INDICATES TOTAL NUMBER OF UNITS ALLOWED AT "BUILD OUT" PER THE COMPREHENSIVE SKETCH PLAN.

OVERALL OPEN SPACE TRACKING CHART

PHASE NO.	FILE REF. NO.	GROSS ACREAGE	O.S. AC. (%)	ACTIVE O.S. AC. (%)
1	F-03-07	51.98	21.15 (40.7)	———
2	F-03-90	37.43	15.75 (42.1)	7.52 (47.7) ①
3	F-04-92	58.80	22.85 (38.9)	———
4a	F-05-81 / F-05-82	15.47	6.70 (43.3)	0.29 (4.3) ②
4b	F-05-139	3.12	1.23 (39.4)	———
4c	F-05-112 / F-05-113	3.00	0.00 (0.0)	———
5a	F-06-43	0.00	0.00 (0.0)	———
5b	F-06-161	33.26	18.50 (55.6)	1.61 (8.7) ③
6a	F-08-72	15.05	5.50 (36.5)	———
n/a	F-07-183	3.05	0.00 (0.00)	———
6b	F-08-54 / F-08-55	90.60	26.65 (29.4)	4.76 (17.9) ④
7	F-10-61	16.60	0.94 (5.7)	———
8a	F-11-27	0.00	0.20 (0.0)	———
8b	F-12-21	0.00	0.67 (0.0)	0.67 (100) ⑤
8c	F-12-20	1.65	0.09 (5.5)	———
8c	F-12-29	30.22	13.59 (45.0)	1.29 (9.5) ⑥
n/a	F-12-15	9.37	0.00 (0.0)	0.00 (0.0)
9b	F-13-03	0.00	0.69 (0.0)	0.69 (100) ⑦
9c	F-13-07	34.08	13.59 (39.9)	5.05 (37.2) ⑧
9d	F-13-08	75.79	0.00 (0.0)	0.00 (0.0)
n/a	F-12-86	15.46	3.74 (24.2)	0.00 (0.0)
10b	F-14-015	0.00	0.00 (0.0)	0.00 (0.0)
10c	F-14-033	0.00	23.86 (0.0)	7.94 (33.3) ⑨
11c	P-14-001	0.00	5.02 (0.0)	0.00 (0.0)
11b	F-14-69	0.00	0.00 (0.0)	0.00 (0.0)
	TOTALS	494.93	180.72 (36.5)	29.82 (16.5)

* The percent of active open space is based upon the total open space provided. 10% RECREATIONAL OPEN SPACE IS REQUIRED.
Active Open Spaces Credited:

	Area	Area used	Total
①	Midtown Area 1 (F-03-90)	OS 125 (community center) [5.01 ac.], OS 126 [0.55 ac.], OS 123(230) [1.96 ac.]	7.52 ac.
②	Hillside Area 1 (F-05-81/F-05-82)	Pathways	0.29 ac.
③	Hillside Area 3 (F-06-161)	OS 213 [1.00 ac.], OS 214 [0.61 ac.]	1.61 ac.
④	Westside Area 1 (F-08-54)	OS 4 (Recreational Field) [4.76 ac.]	4.76 ac.
⑤	Westside Area 2 (F-12-21)	OS 68 [0.67 ac.]	0.67 ac.
⑥	Midtown West Area 1 (F-12-29)	OS 84 [0.66 ac.], OS 85 [0.63 ac.]	1.29 ac.
⑦	Westside Area 3 (F-13-03)	OS 115 [0.69 ac.]	0.69 ac.
⑧	Midtown West Area 2 (F-13-07)	OS 179 [0.73 ac.], OS 180 [0.74 ac.], OS 182 [3.58 ac.]	5.05 ac.
⑨	Garden District Area 1 (P-13-03)	OS 99 [0.90 ac.], OS 101 [1.75 ac.], OS 104 [2.85 ac.], OS 107 [2.44 ac.]	7.94 ac.
		TOTAL	29.82 ac.

NON-BUILDABLE TRACKING CHART

PARCEL	TOTAL NON-BUILDABLE PARCEL AREA	FILE UNDER WHICH PARCEL WAS CREATED	FILE UNDER WHICH PARCEL WAS CONVERTED	AREA CONVERTED	CONVERTED TO:	AREA REMAINING
A	0.52	F-03-90	F-04-92	0.52	O.R. LOTS	---
B	0.43	F-03-90	F-04-92	0.43	S.F. LOTS	---
C	0.24	F-03-90	F-05-139	0.24	R/W (EMP.)	---
D	1.02	F-04-92	F-05-139	1.02	R/W (EMP.)	---
E	1.69	F-04-92	F-05-82	1.69	R/W (EMP.)	---
F	1.38	F-05-81	F-06-43 (PH. 5A)	1.38	O.R. LOTS/NON-BLD. PAR. 'H'	---
G	0.10	F-05-81	F-06-43 (PH. 5A)	0.10	O.R. LOTS	---
H	0.23	F-06-43	F-06-161	0.23	O.R. LOTS	---
I	18.31	F-08-54	F-12-21	18.31	O.R. LOTS, NON-BLD. PAR. 'Q'-'T', O.S. LOT, C.O.A.'s & R/W (O.R.)	---
J	12.72	F-08-54	F-09-97	12.72	---	---
K	0.32	F-08-54	---	0.32	R/W (EMP.)	---
L	1.49	F-09-97	---	---	---	1.49
M	0.03	F-10-46	F-10-61	0.03	NON-BUILD. PAR. 'O' & PRIV. ALLEY	---
N	0.15	F-10-61	F-11-27	0.15	S.F. LOTS	---
O	0.63	F-10-61	F-11-27	0.63	S.F. LOTS	---
P	0.59	F-12-15	F-14-69	0.59	---	---
Q	0.63	F-12-21	F-14-69	0.63	---	---
R	0.25	F-12-21	F-14-69	0.25	---	---
S	0.44	F-12-21	F-14-69	0.44	---	---
T	9.00	F-12-21	F-13-03	9.00	NON-BUILD. PAR. 'U' & 'V', S.F. LOTS, ROAD R/W AND C.O.A. LOTS	---
C-27	13.01	F-12-15	---	---	---	13.01
U	0.13	F-13-03	F 14-15	0.13	S.F. LOTS	---
V	3.59	F-13-03	F 14-15	3.59	S.F. LOTS, ROAD R/W AND C.O.A. LOTS	---
W	75.79	F-13-08	F-14-33	75.79	NON.-BUILD. PAR. 'X' THRU 'Z', S.F. LOTS, O.S. LOTS, ROAD R/W AND C.O.A. LOTS	---
X	0.33	F-14-33	---	0.00	---	0.33
Y	24.00	F-14-33	P-14-01	24.00	---	---
Z	1.47	F-14-33	---	0.00	---	1.47
					TOTAL	16.30

PARKING TABULATION

RESIDENT PARKING:
IN ACCORDANCE WITH S 06-16 AND SECTION 33.D.2.a OF THE SUBDIVISION REGULATIONS, 2 PARKING SPACES ARE REQUIRED FOR EACH UNIT. THIS REQUIREMENT WILL BE MET WITHIN THE GARAGE OF EACH UNIT. ALL OF THE UNITS WITHIN MAPLE LAWN FARMS WILL HAVE AT LEAST A 2 CAR GARAGE, WHILE A FEW WILL HAVE A 3 CAR GARAGE.

GUEST PARKING:
IN ACCORDANCE WITH TABLE 2.11 OF DESIGN MANUAL VOLUME III, 0.5 SPACES PER UNIT IS REQUIRED FOR OVERFLOW/GUEST PARKING. FOR THE 152 UNITS WITHIN THE GARDEN DISTRICT, 76 SPACES. THERE ARE 91 ON-STREET, INDENTED PARALLEL PARKING SPACES PROVIDED WITHIN THE GARDEN DISTRICT.

GLW GUTSCHICK LITTLE & WEBER, P.A.
CIVIL ENGINEERS, LAND SURVEYORS, LAND PLANNERS, LANDSCAPE ARCHITECTS
3909 NATIONAL DRIVE – SUITE 250 – BURTONSVILLE OFFICE PARK
BURTONSVILLE, MARYLAND 20866
TEL: 301-421-4024 BALT: 410-880-1820 DC/VA: 301-989-2524 FAX: 301-421-4186

L:\CADD\DRAWINGS\12001\PLANS BY GLW\FINALS\12001 01-02_CS.dwg | DES. dev | DRN. awl | CHK. CKG

DATE	REVISION	BY	APP'R.

PREPARED FOR:
MAPLE LAWN FARMS I, LLC
SUITE 300 WOODHOLME CENTER
1829 REISTERSTOWN ROAD
BALTIMORE, MD 21208
ATTN: MARK BENNETT
410-484-8400

PROFESSIONAL CERTIFICATION
I HEREBY CERTIFY THAT THESE PLANS WERE PREPARED OR APPROVED BY ME, AND THAT I AM A DULY LICENSED PROFESSIONAL ENGINEER UNDER THE LAWS OF THE STATE OF MARYLAND, LICENSE NO. 12975, EXPIRATION DATE: MAY 26, 2016
4/24/14

OVERALL PROJECT CRITERIA AND INFORMATION

MAPLE LAWN FARMS
GARDEN DISTRICT - AREA 1
LOTS 1 thru 98, OPEN SPACE LOTS 99 thru 110,
COMMON OPEN AREA LOTS 111 thru 114
and NON-BUILDABLE BULK PARCELS 'X' thru 'Z'

ELECTION DISTRICT No. 5 — HOWARD COUNTY, MARYLAND

SCALE	ZONING	G. L. W. FILE No.
NO SCALE	MXD-3	12001
DATE	TAX MAP – GRID	SHEET
APRIL, 2014	41-21/46-3	2 OF 36

L:\CADD\DRAWINGS\12001\PLANS BY GLW\FINALS\12001 01-02_CS.dwg, PLOTTED BY: Jennifer R. Dicks
PLOTTED: 4/22/2014 11:39 AM, LAST SAVED: 4/18/2014 3:51 PM
©GLW 2014

NOTES:

1. ROAD CONSTRUCTION PROFILE FOR IAGER BOULEVARD IS ON SHEET 5.
2. ROAD CONSTRUCTION PROFILES FOR FEDERAL STREET ARE ON SHEETS 6 AND 7.
3. ROAD CONSTRUCTION PROFILES FOR GREEN STREET AND HOLSTEIN STREET ARE ON SHEET 8.
4. ROAD CONSTRUCTION PROFILES FOR DAIRY STREET ARE ON SHEETS 9 AND 10.
5. ROAD CONSTRUCTION PROFILES FOR CHOPTANK STREET AND PACA STREET ARE ON SHEET 11.
6. ALL CURB RADII ARE 25' UNLESS OTHERWISE NOTED.
7. FOR TYPICAL ROAD SECTIONS SEE SHEET 12.
8. FOR STREET TREE AND STREET LIGHT INFORMATION SEE SHEETS 14 AND 15.
9. FOR STORM DRAIN INFORMATION SEE SHEETS 19 AND 20.
10. ALL STORM DRAIN IN COMMON OPEN AREAS SHALL BE PRIVATELY OWNED AND MAINTAINED.
11. A PUBLIC SIDEWALK MAINTENANCE, WATER HOUSE CONNECTION, SEWER HOUSE CONNECTION & UTILITY EASEMENT HAS BEEN ADDED TO LOTS WITH FRONT AND/OR SIDE LOT LINES ADJACENT TO A PUBLIC RIGHT-OF-WAY.
12. ALL SIDEWALK IS 4' UNLESS OTHERWISE NOTED.
13. ALL SIDEWALKS THAT END WITH A HANDICAP RAMP MUST MEET HOWARD COUNTY STANDARD R-4.02 (SIDEWALK RAMP TYPE 'B').
14. THERE WILL BE A 10' TRANSITION FROM 4' SIDEWALK TO 5' SIDEWALK ADJACENT TO THE CURB. THE 5' WIDTH IS TO BE MEASURED FROM THE BACK OF CURB.
15. FOR 8"W AND 8"S SEE CONT. #24-4785-D AND CONT. #24-4786-D.

TOP OF CURB ELEVATION TABLE FOR DAIRY STREET

PT. NO	STATION	OFFSET	ELEV.	ASBUILT	PT. NO	STATION	OFFSET	ELEV.	ASBUILT
D1	0+39.00	14.0' RT.	427.85		D21	1665.19	20.0' RT.	461.99	
D2	0+46.26	14.0' RT.	428.06		D22	17+46.98	20.0' RT.	460.01	
D3	1+17.24	14.0' RT.	430.18		D23	17+54.98	12.0' RT.	460.04	
D4	7+16.09	14.0' RT.	448.02		D24	17+82.56	12.0' RT.	459.32	
D5	7+87.79	14.0' RT.	450.16		D25	0+39.00	14.0' LT.	427.85	
D6	8+67.32	14.0' RT.	452.53		D26	0+46.26	14.0' LT.	428.06	
D7	9+52.70	14.0' RT.	455.07		D27	1+17.24	14.0' LT.	430.18	
D8	10+97.91	14.0' RT.	458.78		D28	5+53.03	14.0' LT.	443.16	
D9	11+22.91	39.0' RT.	459.11		D29	6+31.03	14.0' LT.	445.49	
D10	11+48.91	39.0' RT.	459.17		D30	7+16.09	14.0' LT.	448.02	
D11	11+48.91	37.0' RT.	459.11		D31	7+87.79	14.0' LT.	450.16	
D12	11+73.91	12.0' RT.	458.85		D32	8+67.32	14.0' LT.	452.53	
D13	12+04.62	12.0' RT.	458.46		D33	9+52.70	14.0' LT.	455.07	
D14	12+12.62	20.0' RT.	458.11		D34	13+74.73	14.0' LT.	456.98	
D15	13+74.73	20.0' RT.	456.80		D35	14+67.83	14.0' LT.	458.95	
D16	14+74.45	20.0' RT.	458.97		D36	15+46.66	14.0' LT.	461.32	
D17	14+82.26	12.0' RT.	459.45		D37	15+65.05	14.0' LT.	461.80	
D18	15+39.48	12.0' RT.	461.16		D38	16+65.19	14.0' LT.	462.17	
D19	15+47.48	20.0' RT.	461.16		D39	17+80.56	14.0' LT.	459.31	
D20	15+65.05	20.0' RT.	461.62						

TOP OF CURB ELEVATION TABLE FOR IAGER BOULEVARD

PT. NO	STATION	OFFSET	ELEV.	ASBUILT
I1	26+64.61	14.0' RT.	425.43	
I2	26+96.71	14.0' RT.	426.17	
I3	27+75.34	14.0' RT.	427.99	
I4	27+83.40	22.0' RT.	428.07	
I5	29+27.09	20.0' RT.	431.22	
I6	29+35.63	20.0' RT.	431.34	
I7	29+43.49	12.0' RT.	431.69	
I8	29+70.18	12.0' RT.	431.93	
I9	30+48.18	12.0' RT.	431.63	
I10	30+84.58	12.0' RT.	430.85	
I11	31+45.69	12.0' RT.	429.17	
I12	31+53.34	20.0' RT.	428.75	
I13	32+36.22	20.0' RT.	426.41	
I14	34+82.56	20.0' RT.	420.17	
I15	34+90.56	12.0' RT.	420.00	
I16	35+03.19	12.0' RT.	419.75	
I17	26+64.61	14.0' LT.	425.43	
I18	27+87.06	14.0' LT.	428.26	
I19	29+43.21	14.0' LT.	431.63	
I20	30+84.58	14.0' LT.	430.79	
I21	32+36.22	14.0' LT.	426.59	
I22	35+18.10	14.0' LT.	419.41	

TOP OF CURB ELEVATION TABLE FOR FEDERAL STREET

PT. NO	STATION	OFFSET	ELEV.	ASBUILT
F1	18+52.59	14.0' RT.	459.75	
F2	19+81.02	14.0' RT.	457.41	
F3	22+02.15	14.0' RT.	453.10	
F4	24+89.09	14.0' RT.	439.89	
F5	26+78.64	14.0' RT.	430.50	
F6	28+75.68	14.0' RT.	421.04	
F7	29+41.79	14.0' RT.	418.84	
F8	18+52.59	12.0' LT.	459.81	
F9	19+28.59	14.0' LT.	458.37	
F10	19+81.02	14.0' LT.	457.41	
F11	22+02.15	14.0' LT.	453.10	
F12	23+27.24	14.0' LT.	447.91	
F13	24+05.57	14.0' LT.	444.02	
F14	24+89.09	14.0' LT.	439.89	
F15	26+78.64	14.0' LT.	430.50	
F16	28+79.73	14.0' LT.	420.88	
F17	29+41.79	14.0' LT.	418.84	

TOP OF CURB ELEVATION TABLE FOR PACA STREET

PT. NO	STATION	OFFSET	ELEV.	ASBUILT
P1	0+37.00	12.0' RT.	441.24	
P2	0+55.00	12.0' RT.	441.90	
P3	0+63.00	20.0' RT.	441.96	
P4	2+39.00	20.0' RT.	448.41	
P5	2+46.99	12.0' RT.	448.94	
P6	3+18.71	14.0' RT.	451.50	
P7	3+61.27	14.0' RT.	453.07	
P8	5+17.81	14.0' RT.	458.81	
P9	0+34.00	14.0' LT.	441.26	
P10	2+56.29	14.0' LT.	449.22	
P11	3+61.27	14.0' LT.	453.07	
P12	5+17.93	14.0' LT.	458.81	

TOP OF CURB ELEVATION TABLE FOR CHOPTANK STREET

PT. NO	STATION	OFFSET	ELEV.	ASBUILT
C1	0+37.00	14.0' RT.	432.33	
C2	5+34.00	14.0' RT.	448.53	
C3	0+37.00	14.0' LT.	432.33	
C4	2+50.00	14.0' LT.	439.27	
C5	3+26.00	12.0' LT.	441.81	
C6	3+66.01	12.0' LT.	443.11	
C7	3+74.01	20.0' LT.	443.13	
C8	5+28.00	20.0' LT.	448.15	
C9	5+36.00	12.0' LT.	448.65	

TOP OF CURB ELEVATION TABLE FOR GREEN STREET

PT. NO	STATION	OFFSET	ELEV.	ASBUILT
G1	0+37.00	12.0' RT.	439.77	
G2	0+44.56	12.0' RT.	439.64	
G3	0+52.56	20.0' RT.	439.26	
G4	2+97.56	20.0' RT.	439.16	
G5	3+05.56	12.0' RT.	439.54	
G6	3+38.00	12.0' RT.	440.14	
G7	4+14.00	14.0' RT.	441.48	
G8	6+20.00	14.0' RT.	445.28	
G9	0+39.00	14.0' LT.	439.68	
G10	6+20.00	14.0' LT.	445.28	

TOP OF CURB ELEVATION TABLE FOR HOLSTEIN STREET

PT. NO	STATION	OFFSET	ELEV.	ASBUILT
H1	0+39.00	14.0' RT.	444.54	
H2	6+23.79	14.0' RT.	449.35	
H3	0+39.00	14.0' LT.	444.54	
H4	2+45.00	14.0' LT.	449.51	
H5	3+20.99	12.0' LT.	449.60	
H6	3+75.56	12.0' LT.	448.54	
H7	3+83.56	20.0' LT.	448.11	
H8	6+06.56	20.0' LT.	448.81	
H9	6+14.56	12.0' LT.	449.22	
H10	6+22.11	12.0' LT.	449.38	

C.L. CURVE DATA CHART

STREET NAME	CURVE	PC STA.	PT STA.	RADIUS	TANGENT	ARC	CHORD	BEARING	DELTA
IAGER BOULEVARD	A	27+87.08	29+43.19	1100.00'	78.21'	156.15'	156.02'	N 74°53'00" W	8°08'00"
IAGER BOULEVARD	B	30+84.58	32+36.22	260.00'	78.04'	151.64'	149.50'	S 84°20'30" W	33°25'00"
DAIRY STREET	C	0+46.26	1+17.24	500.00'	35.55'	70.98'	70.92'	N 15°07'00" E	8°08'00"
DAIRY STREET	D	7+16.09	7+87.79	100.00'	37.47'	71.70'	70.18'	N 09°29'30" W	41°05'00"
DAIRY STREET	E	8+67.32	9+52.70	100.00'	45.48'	85.38'	82.81'	N 54°29'30" W	48°55'00"
DAIRY STREET	F	13+74.73	14+79.63	550.00'	52.61'	104.90'	104.74'	N 84°24'50" W	10°55'40"
DAIRY STREET	G	15+65.05	16+65.19	800.00'	50.14'	100.14'	100.08'	S 86°32'10" W	7°10'20"
PACA STREET	H	2+61.07	3+56.48	500.00'	47.85'	95.41'	95.27'	N 05°35'00" E	10°56'00"
FEDERAL STREET	K	19+81.02	22+02.15	700.00'	111.50'	221.13'	220.21'	N 02°00'00" E	18°06'00"
FEDERAL STREET	J	24+89.09	26+78.64	325.00'	97.56'	189.55'	186.87'	S 05°39'30" E	33°25'00"
FEDERAL STREET	L	28+75.68	29+53.06	185.00'	39.27'	77.38'	76.82'	N 10°23'00" W	23°58'00"

GRAPHIC SCALE
0 25 50 100

APPROVED: HOWARD COUNTY DEPARTMENT OF PUBLIC WORKS

Chief, Bureau of Highways — Date: 5-7-14

APPROVED: HOWARD COUNTY DEPARTMENT OF PLANNING & ZONING

Chief, Division of Land Development — Date: 5-21-14

Chief, Development Engineering Division — Date: 5.20.14

GLW GUTSCHICK LITTLE & WEBER, P.A.
CIVIL ENGINEERS, LAND SURVEYORS, LAND PLANNERS, LANDSCAPE ARCHITECTS
3909 NATIONAL DRIVE - SUITE 250 - BURTONSVILLE OFFICE PARK
BURTONSVILLE, MARYLAND 20866
TEL: 301-421-4024 BALT: 410-880-1820 DC/VA: 301-989-2524 FAX: 301-421-4186

L:\CADD\DRAWINGS\12001\PLANS BY GLW\FINALS\12001 03-04_SG PLAN.dwg | DES. DEV | DRN. KLP | CHK. CKG

DATE	REVISION	BY	APP'R.

PREPARED FOR:
MAPLE LAWN FARMS I, LLC
SUITE 300 WOODHOLME CENTER
1829 REISTERSTOWN ROAD
BALTIMORE, MD 21208
ATTN: MARK BENNETT
410-484-8400

PROFESSIONAL CERTIFICATION
I HEREBY CERTIFY THAT THESE PLANS WERE PREPARED OR APPROVED BY ME, AND THAT I AM A DULY LICENSED PROFESSIONAL ENGINEER UNDER THE LAWS OF THE STATE OF MARYLAND, LICENSE NO. 12975, EXPIRATION DATE: MAY 26, 2016
4/24/14

ELECTION DISTRICT No. 5

ROAD CONSTRUCTION PLAN

MAPLE LAWN FARMS

GARDEN DISTRICT - AREA 1
LOTS 1 thru 98, OPEN SPACE LOTS 99 thru 110,
COMMON OPEN AREA LOTS 111 thru 114
and NON-BUILDABLE BULK PARCELS 'X' thru 'Z'

HOWARD COUNTY, MARYLAND

SCALE	ZONING	G. L. W. FILE No.
1" = 50'	MXD-3	12001
DATE	TAX MAP - GRID	SHEET
APRIL, 2014	41-21/46-3	3 OF 36

L:\CADD\DRAWINGS\12001\PLANS BY GLW\FINALS\12001 03-04_SG PLAN.dwg, PLOTTED: 4/22/2014 11:48 AM, LAST SAVED: 4/18/2014 4:30 PM, PLOTTED BY: Jennifer R. Dicks
©GLW 2014

NOTES:

1. ROAD CONSTRUCTION PROFILE FOR IAGER BOULEVARD IS ON SHEET 5.
2. ROAD CONSTRUCTION PROFILES FOR FEDERAL STREET ARE ON SHEETS 6 AND 7.
3. ROAD CONSTRUCTION PROFILES FOR GREEN STREET AND HOLSTEIN STREET ARE ON SHEET 8.
4. ROAD CONSTRUCTION PROFILES FOR DAIRY STREET ARE ON SHEETS 9 AND 10.
5. ROAD CONSTRUCTION PROFILES FOR CHOPTANK STREET AND PACA STREET ARE ON SHEET 11.
6. ALL CURB RADII ARE 25' UNLESS OTHERWISE NOTED.
7. FOR TYPICAL ROAD SECTIONS SEE SHEET 12.
8. FOR STREET TREE AND STREET LIGHT INFORMATION SEE SHEETS 14 AND 15.
9. FOR STORM DRAIN INFORMATION SEE SHEETS 19 AND 20.
10. ALL STORM DRAIN IN COMMON OPEN AREAS SHALL BE PRIVATELY OWNED AND MAINTAINED.
11. A PUBLIC SIDEWALK MAINTENANCE, WATER HOUSE CONNECTION, SEWER HOUSE CONNECTION & UTILITY EASEMENT HAS BEEN ADDED TO LOTS WITH FRONT AND/OR SIDE LOT LINES ADJACENT TO A PUBLIC RIGHT-OF-WAY.
12. ALL SIDEWALK IS 4' UNLESS OTHERWISE NOTED.
13. ALL SIDEWALKS THAT END WITH A HANDICAP RAMP MUST MEET HOWARD COUNTY STANDARD R-4.02 (SIDEWALK RAMP TYPE 'B').
14. THERE WILL BE A 10' TRANSITION FROM 4' SIDEWALK TO 5' SIDEWALK ADJACENT TO THE CURB. THE 5' WIDTH IS TO BE MEASURED FROM THE BACK OF CURB.
15. FOR 8'WI AND 8'S SEE CONT. #24-4785-D AND CONT. #24-4786-D.

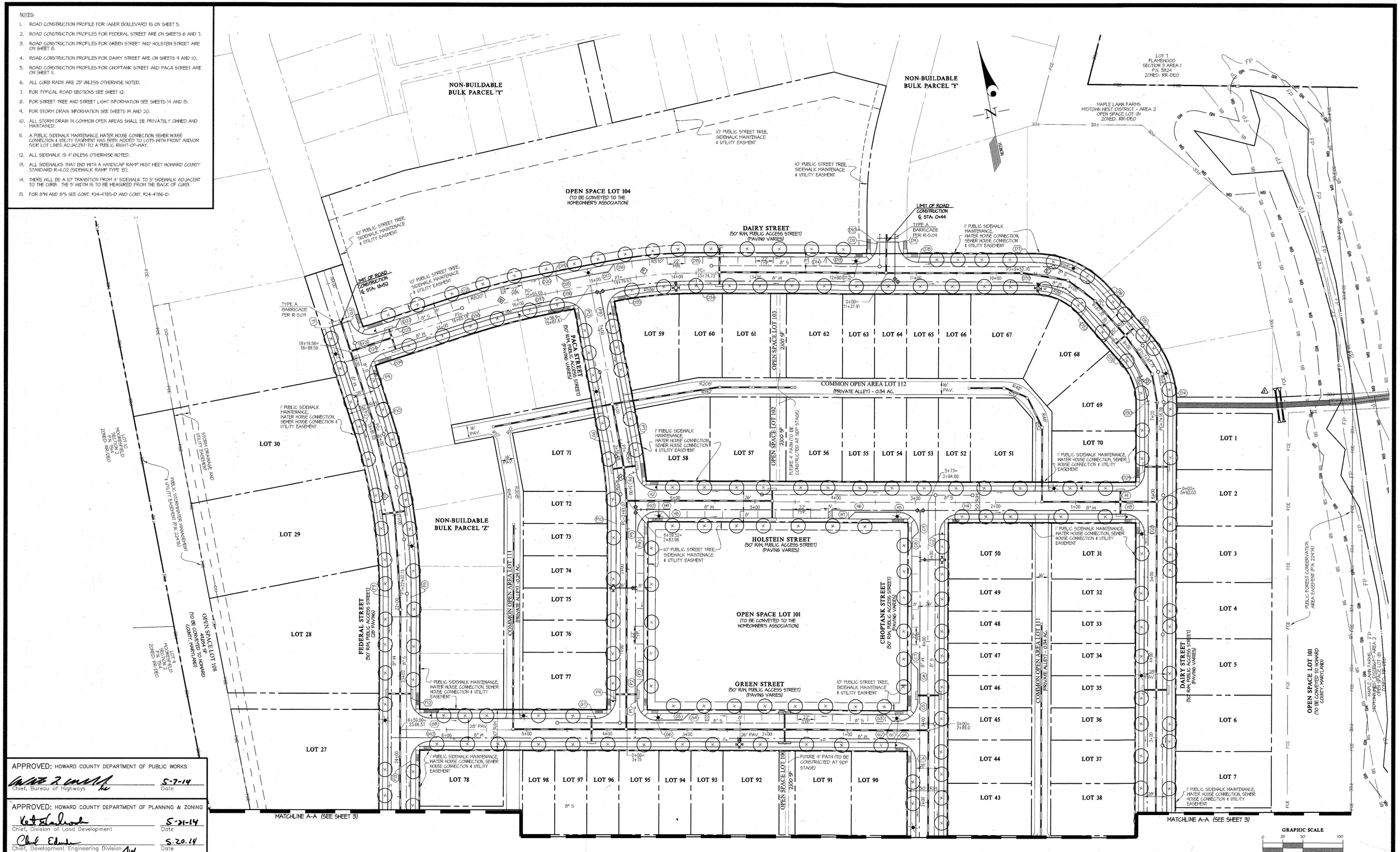

APPROVED: HOWARD COUNTY DEPARTMENT OF PUBLIC WORKS

Chief, Bureau of Highways — Date 5-7-14

APPROVED: HOWARD COUNTY DEPARTMENT OF PLANNING & ZONING

Chief, Division of Land Development — Date 5-21-14

Chief, Development Engineering Division — Date 5.20.14

GLW GUTSCHICK LITTLE & WEBER, P.A.

CIVIL ENGINEERS, LAND SURVEYORS, LAND PLANNERS, LANDSCAPE ARCHITECTS
3909 NATIONAL DRIVE – SUITE 250 – BURTONSVILLE OFFICE PARK
BURTONSVILLE, MARYLAND 20866
TEL: 301-421-4024 BALT: 410-880-1820 DC/VA: 301-989-2524 FAX: 301-421-4186

L:\CADD\DRAWINGS\12001\PLANS BY GLW\FINALS\12001 03-04_SG PLAN.dwg | DES. DEV | DRN. KLP | CHK. CKG

DATE	REVISION	BY	APP'R.
2016-08-04	△1 ADDED OPEN SPACE CULVERT	HKJ	DEV

PREPARED FOR:
MAPLE LAWN FARMS I, LLC
SUITE 300 WOODHOLME CENTER
1829 REISTERSTOWN ROAD
BALTIMORE, MD 21208
ATTN: MARK BENNETT
410-484-8400

PROFESSIONAL CERTIFICATION

I HEREBY CERTIFY THAT THESE PLANS WERE PREPARED OR APPROVED BY ME, AND THAT I AM A DULY LICENSED PROFESSIONAL ENGINEER UNDER THE LAWS OF THE STATE OF MARYLAND, LICENSE NO. 12975. EXPIRATION DATE: MAY 28, 2016

STATE OF MARYLAND — CHRISTOPHER K. GUTSCHICK — No. 12975

4/24/14

ROAD CONSTRUCTION PLAN

MAPLE LAWN FARMS

GARDEN DISTRICT - AREA 1
LOTS 1 thru 98, OPEN SPACE LOTS 99 thru 110, COMMON OPEN AREA LOTS 111 thru 114 and NON-BUILDABLE BULK PARCELS 'X' thru 'Z'

ELECTION DISTRICT No. 5 — HOWARD COUNTY, MARYLAND

SCALE	ZONING	G. L. W. FILE No.
1" = 50'	MXD-3	12001
DATE	TAX MAP – GRID	SHEET
APRIL, 2014	41-21/46-3	4 OF 36

L:\CADD\DRAWINGS\12001\PLANS BY GLW\FINALS\12001 03-04_SG PLAN.dwg, PLOTTED: 4/22/2014 11:51 AM, LAST SAVED: 4/18/2014 4:30 PM, PLOTTED BY: Jennifer R. Dicks

© GLW 2014

F-14-033

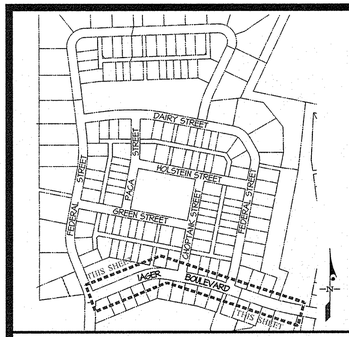

KEY MAP SCALE: 1" = 400'

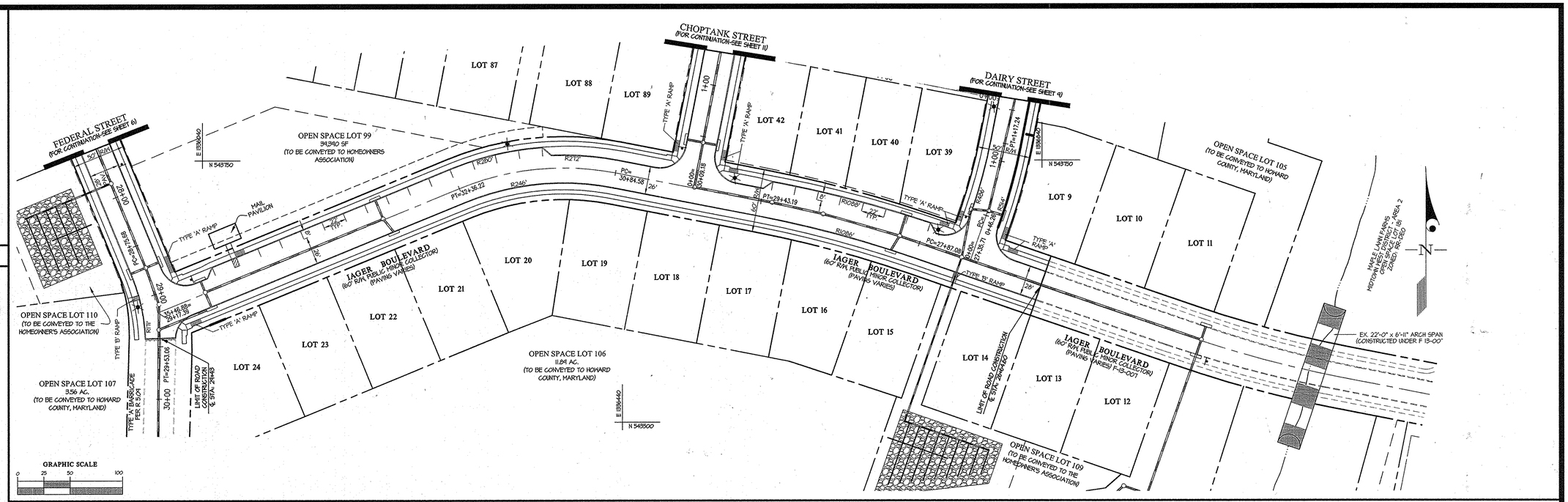

ROAD CONSTRUCTION PLAN VIEW - IAGER BOULEVARD SCALE: 1" = 50'

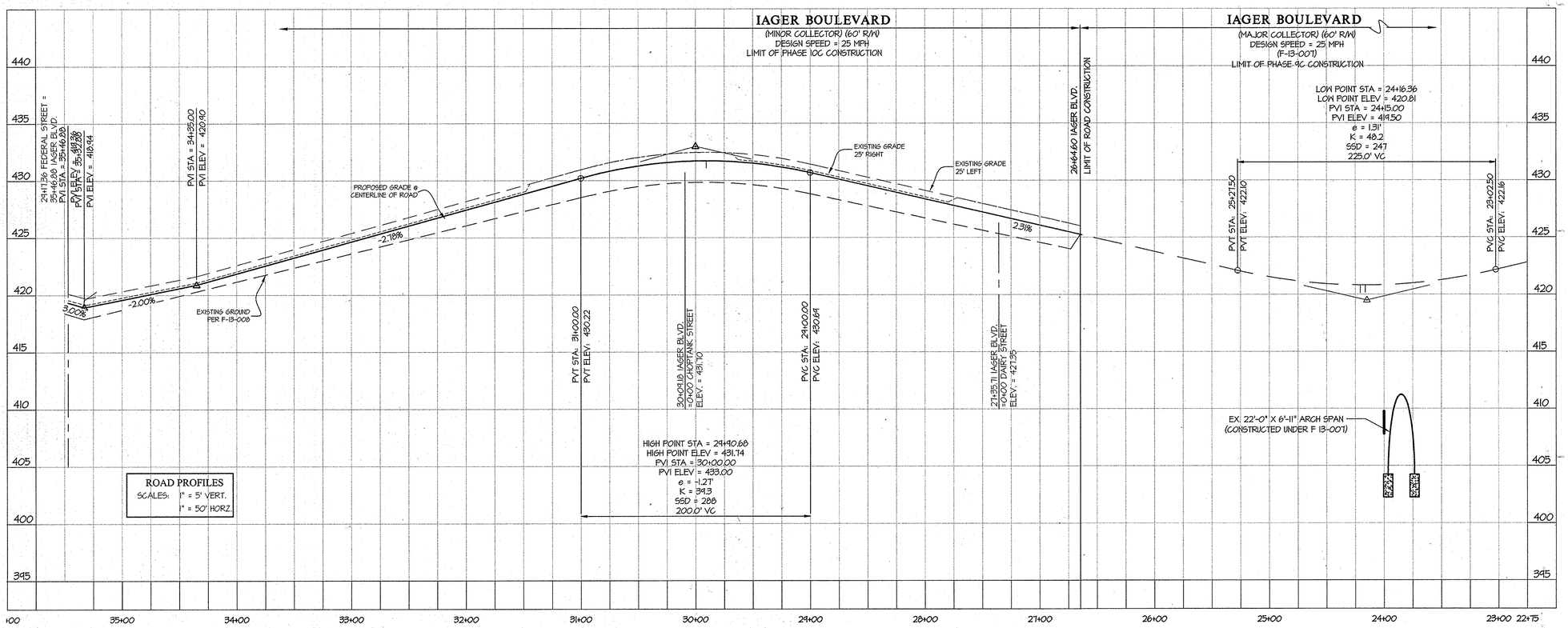

NOTES:

1. ALL CURB RADII ARE 25' UNLESS OTHERWISE NOTED.
2. FOR TYPICAL ROAD SECTIONS SEE SHEET 12.
3. FOR STREET TREE AND STREET LIGHT INFORMATION, SEE SHEETS 14-15.
4. FOR STORM DRAIN INFORMATION, SEE SHEET 19-20.
5. ALL STORM DRAIN IN COMMON OPEN AREAS SHALL BE PRIVATELY OWNED AND MAINTAINED.
6. A PUBLIC SIDEWALK MAINTENANCE, WATER HOUSE CONNECTION, SEWER HOUSE CONNECTION & UTILITY EASEMENT HAS BEEN ADDED TO LOTS WITH FRONT AND/OR SIDE LOT LINES ADJACENT TO A PUBLIC RIGHT-OF-WAY.
7. ALL SIDEWALK IS 4' UNLESS OTHERWISE NOTED.
8. ALL SIDEWALKS THAT END WITH A HANDICAP RAMP MUST MEET HOWARD COUNTY STANDARD R-4.02 (SIDEWALK RAMP TYPE 'B').
9. THERE WILL BE A 10' TRANSITION FROM 4' SIDEWALK TO 5' SIDEWALK ADJACENT TO THE CURB. THE 5' WIDTH IS TO BE MEASURED FROM THE BACK OF CURB.
10. FOR MAIL PAVILION DETAILS, SEE SHEET 12.

LEGEND

——— ———	EXISTING GRADE
— — — —	EXISTING GRADE LEFT
- - - - - - - -	EXISTING GRADE RIGHT
———	PROPOSED GRADE @ CENTERLINE

APPROVED: HOWARD COUNTY DEPARTMENT OF PUBLIC WORKS

Chief, Bureau of Highways — Date 5-7-14

APPROVED: HOWARD COUNTY DEPARTMENT OF PLANNING & ZONING

Chief, Division of Land Development — Date 5-21-14

Chief, Development Engineering Division — Date 5.20.14

GLW GUTSCHICK LITTLE & WEBER, P.A.
CIVIL ENGINEERS, LAND SURVEYORS, LAND PLANNERS, LANDSCAPE ARCHITECTS
3909 NATIONAL DRIVE – SUITE 250 – BURTONSVILLE OFFICE PARK
BURTONSVILLE, MARYLAND 20866
TEL: 301-421-4024 BALT: 410-880-1820 DC/VIC 301-989-2524 FAX: 301-421-4186

L:\12001\DRAWINGS\12001\PLANS BY GLW\FINALS\12001 05-11_SG PROFILES.dwg
PLOTTED: 4/22/2014 11:57 AM, LAST SAVED: 4/18/2014 4:53 PM, PLOTTED BY: Jennifer R Ricks

DATE	REVISION	BY	APP'R.

PREPARED FOR:

MAPLE LAWN FARMS I, LLC
SUITE 300 WOODHOLME CENTER
1829 REISTERSTOWN ROAD
BALTIMORE, MD 21208
ATTN: MARK BENNETT
410-484-8400

PROFESSIONAL CERTIFICATION

I HEREBY CERTIFY THAT THESE PLANS WERE PREPARED OR APPROVED BY ME, AND THAT I AM A DULY LICENSED PROFESSIONAL ENGINEER UNDER THE LAWS OF THE STATE OF MARYLAND, LICENSE NO. 12975
EXPIRATION DATE: MAY 26, 2016

4/24/14

STATE OF MARYLAND — CHRISTOPHER K. GUTSCHICK — REGISTERED PROFESSIONAL ENGINEER

ROAD CONSTRUCTION PROFILES - IAGER BOULEVARD

MAPLE LAWN FARMS

GARDEN DISTRICT - AREA 1
LOTS 1 thru 98, OPEN SPACE LOTS 99 thru 110,
COMMON OPEN AREA LOTS 111 thru 114
and NON-BUILDABLE BULK PARCELS 'X' thru 'Z'

ELECTION DISTRICT No. 5 — HOWARD COUNTY, MARYLAND

SCALE	ZONING	G. L. W. FILE No.
AS SHOWN	MXD-3	12001
DATE	TAX MAP – GRID	SHEET
APRIL, 2014	41-21/46-3	5 OF 36

DES. DEV | DRN. JRD | CHK. CKG

© GLW 2014

F-14-033

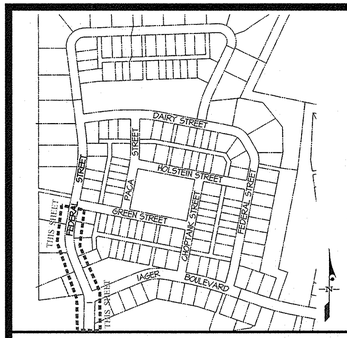

KEY MAP SCALE: 1" = 400'

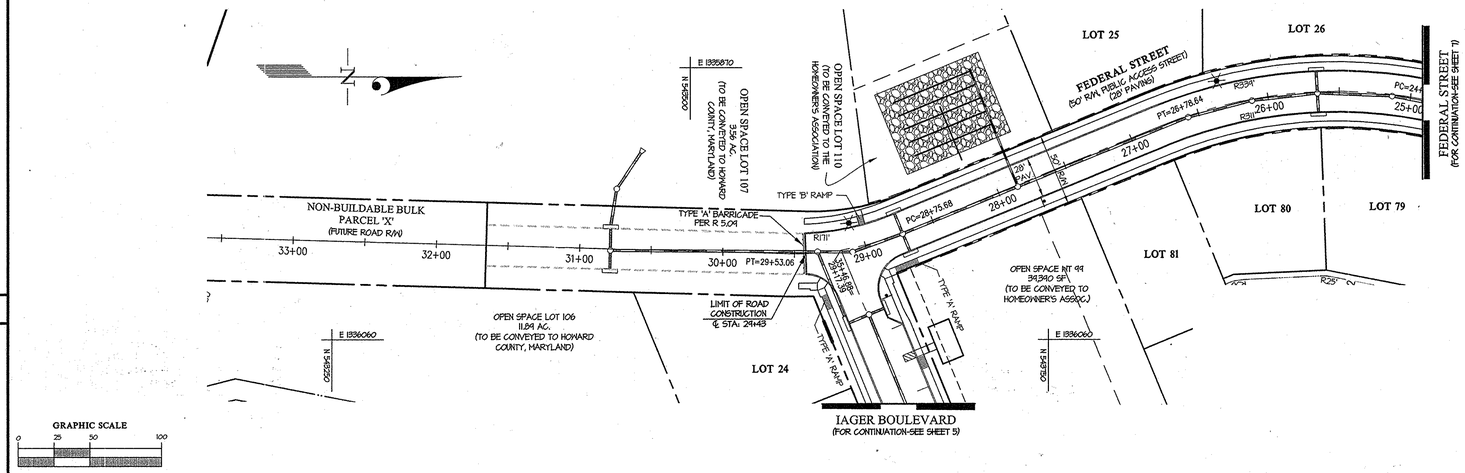

ROAD CONSTRUCTION PLAN VIEW - FEDERAL STREET SCALE: 1" = 50'

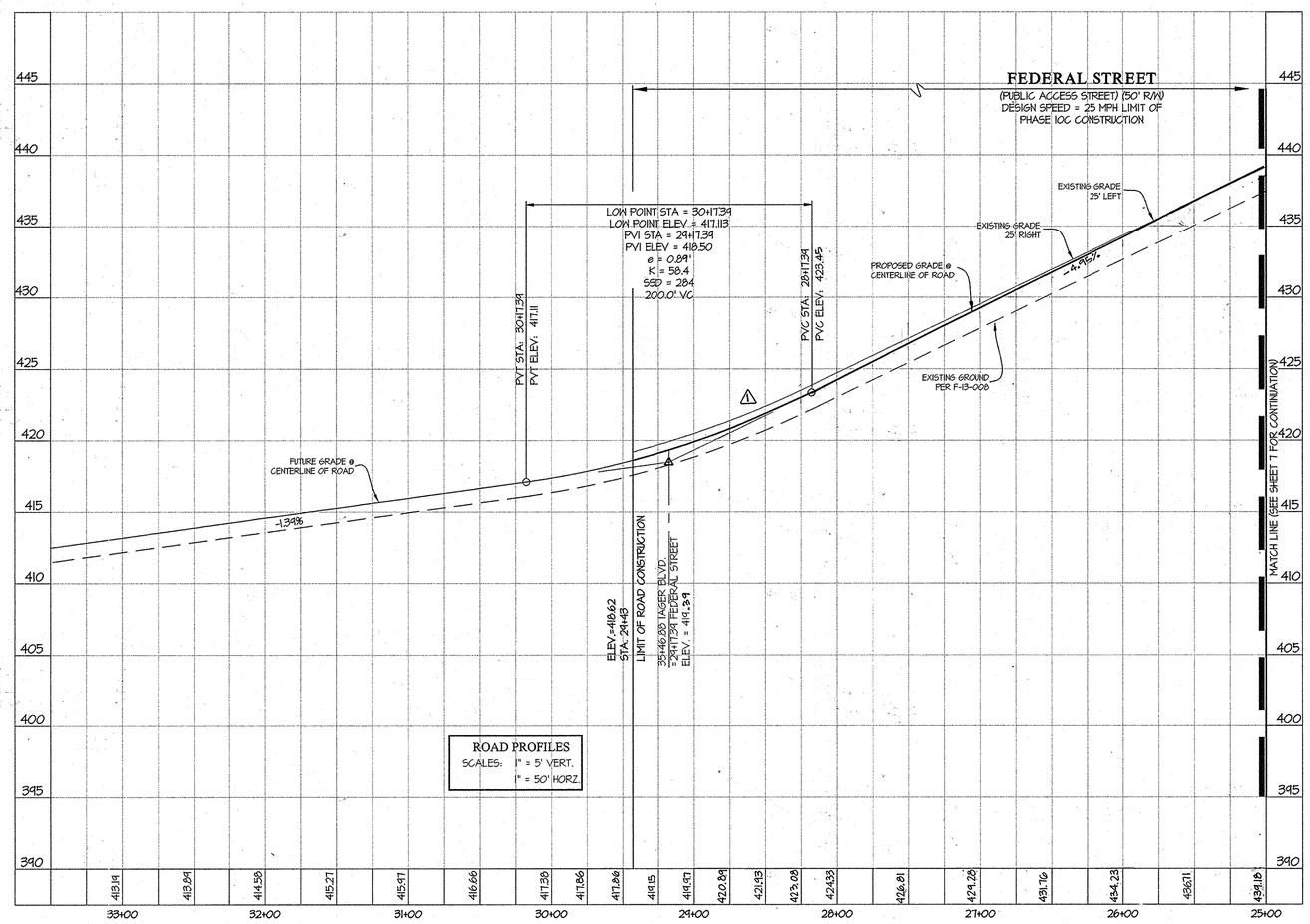

NOTES:

1. ALL CURB RADII ARE 25' UNLESS OTHERWISE NOTED.
2. FOR TYPICAL ROAD SECTIONS SEE SHEET 12.
3. FOR STREET TREE AND STREET LIGHT INFORMATION, SEE SHEETS 14-15.
4. FOR STORM DRAIN INFORMATION, SEE SHEET 19-20.
5. ALL STORM DRAIN IN COMMON OPEN AREAS SHALL BE PRIVATELY OWNED AND MAINTAINED.
6. A PUBLIC SIDEWALK MAINTENANCE, WATER HOUSE CONNECTION, SEWER HOUSE CONNECTION & UTILITY EASEMENT HAS BEEN ADDED TO LOTS WITH FRONT AND/OR SIDE LOT LINES ADJACENT TO A PUBLIC RIGHT-OF-WAY.
7. ALL SIDEWALK IS 4' UNLESS OTHERWISE NOTED.
8. ALL SIDEWALKS THAT END WITH A HANDICAP RAMP MUST MEET HOWARD COUNTY STANDARD R-4.02 (SIDEWALK RAMP TYPE 'B').
9. THERE WILL BE A 10' TRANSITION FROM 4' SIDEWALK TO 5' SIDEWALK ADJACENT TO THE CURB. THE 5' WIDTH IS TO BE MEASURED FROM THE BACK OF CURB.

LEGEND

- EXISTING GRADE
- EXISTING GRADE LEFT
- EXISTING GRADE RIGHT
- PROPOSED GRADE @ CENTERLINE

APPROVED: HOWARD COUNTY DEPARTMENT OF PUBLIC WORKS

Chief, Bureau of Highways — Date 5-7-14

APPROVED: HOWARD COUNTY DEPARTMENT OF PLANNING & ZONING

Chief, Division of Land Development — Date 5-21-14

Chief, Development Engineering Division — Date 5-20-14

GLW GUTSCHICK LITTLE & WEBER, P.A.
CIVIL ENGINEERS, LAND SURVEYORS, LAND PLANNERS, LANDSCAPE ARCHITECTS
3909 NATIONAL DRIVE – SUITE 250 – BURTONSVILLE OFFICE PARK
BURTONSVILLE, MARYLAND 20866
TEL: 301-421-4024 BALT: 410-880-1820 DC/VA: 301-989-2524 FAX: 301-421-4186

L:\CADD\DRAWINGS\12001\PLANS BY GLW\FINALS\12001 05-11_SC PROFILES.dwg
DES. DEV | DRN. JRD | CHK. CKG

DATE	REVISION	BY	APP'R.
2015-4-28	△1 REVISED ROAD GRADE OF FEDERAL STREET TO BALANCE THE SITE	JH	DEV

PREPARED FOR:

MAPLE LAWN FARMS I, LLC
SUITE 300 WOODHOLME CENTER
1829 REISTERSTOWN ROAD
BALTIMORE, MD 21208
ATTN: MARK BENNETT
410-484-8400

PROFESSIONAL CERTIFICATION

I HEREBY CERTIFY THAT THESE PLANS WERE PREPARED OR APPROVED BY ME, AND THAT I AM A DULY LICENSED PROFESSIONAL ENGINEER UNDER THE LAWS OF THE STATE OF MARYLAND, LICENSE NO. 12275
EXPIRATION DATE: MAY 26, 2016
4/24/14

STATE OF MARYLAND — DEVON V. SMITH — No. 12275 — PROFESSIONAL ENGINEER

ROAD CONSTRUCTION PROFILES - FEDERAL STREET

MAPLE LAWN FARMS

GARDEN DISTRICT - AREA 1
LOTS 1 thru 98, OPEN SPACE LOTS 99 thru 110,
COMMON OPEN AREA LOTS 111 thru 114
and NON-BUILDABLE BULK PARCELS 'X' thru 'Z'

ELECTION DISTRICT No. 5 — HOWARD COUNTY, MARYLAND

SCALE	ZONING	G. L. W. FILE No.
AS SHOWN	MXD-3	12001
DATE	TAX MAP – GRID	SHEET
APRIL, 2014	41-21/46-3	6 OF 36

F-14-033

© GLW 2014

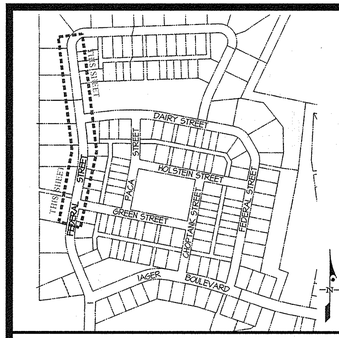
DAIRY STREET
NAUSTEIN STREET
GREEN STREET
FEDERAL STREET
FIRST STREET
SECOND STREET
THIRD STREET
FOURTH STREET
FIFTH STREET
SIXTH STREET
SEVENTH STREET
EIGHTH STREET
NINTH STREET
TENTH STREET
ELEVENTH STREET
TWELFTH STREET
THIRTEENTH STREET
FOURTEENTH STREET
FIFTEENTH STREET
SIXTEENTH STREET
SEVENTEENTH STREET
EIGHTEENTH STREET
NINETEENTH STREET
TWENTIETH STREET
TWENTY-FIRST STREET
TWENTY-SECOND STREET
TWENTY-THIRD STREET
TWENTY-FOURTH STREET
TWENTY-FIFTH STREET
TWENTY-SIXTH STREET
TWENTY-SEVENTH STREET
TWENTY-EIGHTH STREET
TWENTY-NINTH STREET
THIRTIETH STREET
THIRTY-FIRST STREET
THIRTY-SECOND STREET
THIRTY-THIRD STREET
THIRTY-FOURTH STREET
THIRTY-FIFTH STREET
THIRTY-SIXTH STREET
THIRTY-SEVENTH STREET
THIRTY-EIGHTH STREET
THIRTY-NINTH STREET
FORTIETH STREET
FORTY-FIRST STREET
FORTY-SECOND STREET
FORTY-THIRD STREET
FORTY-FOURTH STREET
FORTY-FIFTH STREET
FORTY-SIXTH STREET
FORTY-SEVENTH STREET
FORTY-EIGHTH STREET
FORTY-NINTH STREET
FIFTIETH STREET
FIFTY-FIRST STREET
FIFTY-SECOND STREET
FIFTY-THIRD STREET
FIFTY-FOURTH STREET
FIFTY-FIFTH STREET
FIFTY-SIXTH STREET
FIFTY-SEVENTH STREET
FIFTY-EIGHTH STREET
FIFTY-NINTH STREET
SIXTIETH STREET
SIXTY-FIRST STREET
SIXTY-SECOND STREET
SIXTY-THIRD STREET
SIXTY-FOURTH STREET
SIXTY-FIFTH STREET
SIXTY-SIXTH STREET
SIXTY-SEVENTH STREET
SIXTY-EIGHTH STREET
SIXTY-NINTH STREET
SEVENTIETH STREET
SEVENTY-FIRST STREET
SEVENTY-SECOND STREET
SEVENTY-THIRD STREET
SEVENTY-FOURTH STREET
SEVENTY-FIFTH STREET
SEVENTY-SIXTH STREET
SEVENTY-SEVENTH STREET
SEVENTY-EIGHTH STREET
SEVENTY-NINTH STREET
EIGHTIETH STREET
EIGHTY-FIRST STREET
EIGHTY-SECOND STREET
EIGHTY-THIRD STREET
EIGHTY-FOURTH STREET
EIGHTY-FIFTH STREET
EIGHTY-SIXTH STREET
EIGHTY-SEVENTH STREET
EIGHTY-EIGHTH STREET
EIGHTY-NINTH STREET
NINETIETH STREET
NINETY-FIRST STREET
NINETY-SECOND STREET
NINETY-THIRD STREET
NINETY-FOURTH STREET
NINETY-FIFTH STREET
NINETY-SIXTH STREET
NINETY-SEVENTH STREET
NINETY-EIGHTH STREET
NINETY-NINTH STREET
HUNDRED STREET
HUNDRED AND FIRST STREET
HUNDRED AND SECOND STREET
HUNDRED AND THIRD STREET
HUNDRED AND FOURTH STREET
HUNDRED AND FIFTH STREET
HUNDRED AND SIXTH STREET
HUNDRED AND SEVENTH STREET
HUNDRED AND EIGHTH STREET
HUNDRED AND NINTH STREET
HUNDRED AND TENTH STREET
HUNDRED AND ELEVENTH STREET
HUNDRED AND TWELFTH STREET
HUNDRED AND THIRTEENTH STREET
HUNDRED AND FOURTEENTH STREET
HUNDRED AND FIFTEENTH STREET
HUNDRED AND SIXTEENTH STREET
HUNDRED AND SEVENTEENTH STREET
HUNDRED AND EIGHTEENTH STREET
HUNDRED AND NINETEENTH STREET
HUNDRED AND TWENTIETH STREET
HUNDRED AND TWENTY-FIRST STREET
HUNDRED AND TWENTY-SECOND STREET
HUNDRED AND TWENTY-THIRD STREET
HUNDRED AND TWENTY-FOURTH STREET
HUNDRED AND TWENTY-FIFTH STREET
HUNDRED AND TWENTY-SIXTH STREET
HUNDRED AND TWENTY-SEVENTH STREET
HUNDRED AND TWENTY-EIGHTH STREET
HUNDRED AND TWENTY-NINTH STREET
HUNDRED AND THIRTIETH STREET
HUNDRED AND THIRTY-FIRST STREET
HUNDRED AND THIRTY-SECOND STREET
HUNDRED AND THIRTY-THIRD STREET
HUNDRED AND THIRTY-FOURTH STREET
HUNDRED AND THIRTY-FIFTH STREET
HUNDRED AND THIRTY-SIXTH STREET
HUNDRED AND THIRTY-SEVENTH STREET
HUNDRED AND THIRTY-EIGHTH STREET
HUNDRED AND THIRTY-NINTH STREET
HUNDRED AND FORTIETH STREET
HUNDRED AND FORTY-FIRST STREET
HUNDRED AND FORTY-SECOND STREET
HUNDRED AND FORTY-THIRD STREET
HUNDRED AND FORTY-FOURTH STREET
HUNDRED AND FORTY-FIFTH STREET
HUNDRED AND FORTY-SIXTH STREET
HUNDRED AND FORTY-SEVENTH STREET
HUNDRED AND FORTY-EIGHTH STREET
HUNDRED AND FORTY-NINTH STREET
HUNDRED AND FIFTIETH STREET
HUNDRED AND FIFTY-FIRST STREET
HUNDRED AND FIFTY-SECOND STREET
HUNDRED AND FIFTY-THIRD STREET
HUNDRED AND FIFTY-FOURTH STREET
HUNDRED AND FIFTY-FIFTH STREET
HUNDRED AND FIFTY-SIXTH STREET
HUNDRED AND FIFTY-SEVENTH STREET
HUNDRED AND FIFTY-EIGHTH STREET
HUNDRED AND FIFTY-NINTH STREET
HUNDRED AND SIXTIETH STREET
HUNDRED AND SIXTY-FIRST STREET
HUNDRED AND SIXTY-SECOND STREET
HUNDRED AND SIXTY-THIRD STREET
HUNDRED AND SIXTY-FOURTH STREET
HUNDRED AND SIXTY-FIFTH STREET
HUNDRED AND SIXTY-SIXTH STREET
HUNDRED AND SIXTY-SEVENTH STREET
HUNDRED AND SIXTY-EIGHTH STREET
HUNDRED AND SIXTY-NINTH STREET
HUNDRED AND SEVENTIETH STREET
HUNDRED AND SEVENTY-FIRST STREET
HUNDRED AND SEVENTY-SECOND STREET
HUNDRED AND SEVENTY-THIRD STREET
HUNDRED AND SEVENTY-FOURTH STREET
HUNDRED AND SEVENTY-FIFTH STREET
HUNDRED AND SEVENTY-SIXTH STREET
HUNDRED AND SEVENTY-SEVENTH STREET
HUNDRED AND SEVENTY-EIGHTH STREET
HUNDRED AND SEVENTY-NINTH STREET
HUNDRED AND EIGHTIETH STREET
HUNDRED AND EIGHTY-FIRST STREET
HUNDRED AND EIGHTY-SECOND STREET
HUNDRED AND EIGHTY-THIRD STREET
HUNDRED AND EIGHTY-FOURTH STREET
HUNDRED AND EIGHTY-FIFTH STREET
HUNDRED AND EIGHTY-SIXTH STREET
HUNDRED AND EIGHTY-SEVENTH STREET
HUNDRED AND EIGHTY-EIGHTH STREET
HUNDRED AND EIGHTY-NINTH STREET
HUNDRED AND NINETIETH STREET
HUNDRED AND NINETY-FIRST STREET
HUNDRED AND NINETY-SECOND STREET
HUNDRED AND NINETY-THIRD STREET
HUNDRED AND NINETY-FOURTH STREET
HUNDRED AND NINETY-FIFTH STREET
HUNDRED AND NINETY-SIXTH STREET
HUNDRED AND NINETY-SEVENTH STREET
HUNDRED AND NINETY-EIGHTH STREET
HUNDRED AND NINETY-NINTH STREET
HUNDRED AND TWO HUNDRED STREET
HUNDRED AND TWO HUNDRED AND FIRST STREET
HUNDRED AND TWO HUNDRED AND SECOND STREET
HUNDRED AND TWO HUNDRED AND THIRD STREET
HUNDRED AND TWO HUNDRED AND FOURTH STREET
HUNDRED AND TWO HUNDRED AND FIFTH STREET
HUNDRED AND TWO HUNDRED AND SIXTH STREET
HUNDRED AND TWO HUNDRED AND SEVENTH STREET
HUNDRED AND TWO HUNDRED AND EIGHTH STREET
HUNDRED AND TWO HUNDRED AND NINTH STREET
HUNDRED AND TWO HUNDRED AND TENTH STREET
HUNDRED AND TWO HUNDRED AND ELEVENTH STREET
HUNDRED AND TWO HUNDRED AND TWELFTH STREET
HUNDRED AND TWO HUNDRED AND THIRTEENTH STREET
HUNDRED AND TWO HUNDRED AND FOURTEENTH STREET
HUNDRED AND TWO HUNDRED AND FIFTEENTH STREET
HUNDRED AND TWO HUNDRED AND SIXTEENTH STREET
HUNDRED AND TWO HUNDRED AND SEVENTEENTH STREET
HUNDRED AND TWO HUNDRED AND EIGHTEENTH STREET
HUNDRED AND TWO HUNDRED AND NINETEENTH STREET
HUNDRED AND TWO HUNDRED AND TWENTIETH STREET
HUNDRED AND TWO HUNDRED AND TWENTY-FIRST STREET
HUNDRED AND TWO HUNDRED AND TWENTY-SECOND STREET
HUNDRED AND TWO HUNDRED AND TWENTY-THIRD STREET
HUNDRED AND TWO HUNDRED AND TWENTY-FOURTH STREET
HUNDRED AND TWO HUNDRED AND TWENTY-FIFTH STREET
HUNDRED AND TWO HUNDRED AND TWENTY-SIXTH STREET
HUNDRED AND TWO HUNDRED AND TWENTY-SEVENTH STREET
HUNDRED AND TWO HUNDRED AND TWENTY-EIGHTH STREET
HUNDRED AND TWO HUNDRED AND TWENTY-NINTH STREET
HUNDRED AND TWO HUNDRED AND THIRTIETH STREET
HUNDRED AND TWO HUNDRED AND THIRTY-FIRST STREET
HUNDRED AND TWO HUNDRED AND THIRTY-SECOND STREET
HUNDRED AND TWO HUNDRED AND THIRTY-THIRD STREET
HUNDRED AND TWO HUNDRED AND THIRTY-FOURTH STREET
HUNDRED AND TWO HUNDRED AND THIRTY-FIFTH STREET
HUNDRED AND TWO HUNDRED AND THIRTY-SIXTH STREET
HUNDRED AND TWO HUNDRED AND THIRTY-SEVENTH STREET
HUNDRED AND TWO HUNDRED AND THIRTY-EIGHTH STREET
HUNDRED AND TWO HUNDRED AND THIRTY-NINTH STREET
HUNDRED AND TWO HUNDRED AND FORTIETH STREET
HUNDRED AND TWO HUNDRED AND FORTY-FIRST STREET
HUNDRED AND TWO HUNDRED AND FORTY-SECOND STREET
HUNDRED AND TWO HUNDRED AND FORTY-THIRD STREET
HUNDRED AND TWO HUNDRED AND FORTY-FOURTH STREET
HUNDRED AND TWO HUNDRED AND FORTY-FIFTH STREET
HUNDRED AND TWO HUNDRED AND FORTY-SIXTH STREET
HUNDRED AND TWO HUNDRED AND FORTY-SEVENTH STREET
HUNDRED AND TWO HUNDRED AND FORTY-EIGHTH STREET
HUNDRED AND TWO HUNDRED AND FORTY-NINTH STREET
HUNDRED AND TWO HUNDRED AND FIFTIETH STREET
HUNDRED AND TWO HUNDRED AND FIFTY-FIRST STREET
HUNDRED AND TWO HUNDRED AND FIFTY-SECOND STREET
HUNDRED AND TWO HUNDRED AND FIFTY-THIRD STREET
HUNDRED AND TWO HUNDRED AND FIFTY-FOURTH STREET
HUNDRED AND TWO HUNDRED AND FIFTY-FIFTH STREET
HUNDRED AND TWO HUNDRED AND FIFTY-SIXTH STREET
HUNDRED AND TWO HUNDRED AND FIFTY-SEVENTH STREET
HUNDRED AND TWO HUNDRED AND FIFTY-EIGHTH STREET
HUNDRED AND TWO HUNDRED AND FIFTY-NINTH STREET
HUNDRED AND TWO HUNDRED AND SIXTIETH STREET
HUNDRED AND TWO HUNDRED AND SIXTY-FIRST STREET
HUNDRED AND TWO HUNDRED AND SIXTY-SECOND STREET
HUNDRED AND TWO HUNDRED AND SIXTY-THIRD STREET
HUNDRED AND TWO HUNDRED AND SIXTY-FOURTH STREET
HUNDRED AND TWO HUNDRED AND SIXTY-FIFTH STREET
HUNDRED AND TWO HUNDRED AND SIXTY-SIXTH STREET
HUNDRED AND TWO HUNDRED AND SIXTY-SEVENTH STREET
HUNDRED AND TWO HUNDRED AND SIXTY-EIGHTH STREET
HUNDRED AND TWO HUNDRED AND SIXTY-NINTH STREET
HUNDRED AND TWO HUNDRED AND SEVENTIETH STREET
HUNDRED AND TWO HUNDRED AND SEVENTY-FIRST STREET
HUNDRED AND TWO HUNDRED AND SEVENTY-SECOND STREET
HUNDRED AND TWO HUNDRED AND SEVENTY-THIRD STREET
HUNDRED AND TWO HUNDRED AND SEVENTY-FOURTH STREET
HUNDRED AND TWO HUNDRED AND SEVENTY-FIFTH STREET
HUNDRED AND TWO HUNDRED AND SEVENTY-SIXTH STREET
HUNDRED AND TWO HUNDRED AND SEVENTY-SEVENTH STREET
HUNDRED AND TWO HUNDRED AND SEVENTY-EIGHTH STREET
HUNDRED AND TWO HUNDRED AND SEVENTY-NINTH STREET
HUNDRED AND TWO HUNDRED AND EIGHTIETH STREET
HUNDRED AND TWO HUNDRED AND EIGHTY-FIRST STREET
HUNDRED AND TWO HUNDRED AND EIGHTY-SECOND STREET
HUNDRED AND TWO HUNDRED AND EIGHTY-THIRD STREET
HUNDRED AND TWO HUNDRED AND EIGHTY-FOURTH STREET
HUNDRED AND TWO HUNDRED AND EIGHTY-FIFTH STREET
HUNDRED AND TWO HUNDRED AND EIGHTY-SIXTH STREET
HUNDRED AND TWO HUNDRED AND EIGHTY-SEVENTH STREET
HUNDRED AND TWO HUNDRED AND EIGHTY-EIGHTH STREET
HUNDRED AND TWO HUNDRED AND EIGHTY-NINTH STREET
HUNDRED AND TWO HUNDRED AND NINETIETH STREET
HUNDRED AND TWO HUNDRED AND NINETY-FIRST STREET
HUNDRED AND TWO HUNDRED AND NINETY-SECOND STREET
HUNDRED AND TWO HUNDRED AND NINETY-THIRD STREET
HUNDRED AND TWO HUNDRED AND NINETY-FOURTH STREET
HUNDRED AND TWO HUNDRED AND NINETY-FIFTH STREET
HUNDRED AND TWO HUNDRED AND NINETY-SIXTH STREET
HUNDRED AND TWO HUNDRED AND NINETY-SEVENTH STREET
HUNDRED AND TWO HUNDRED AND NINETY-EIGHTH STREET
HUNDRED AND TWO HUNDRED AND NINETY-NINTH STREET
HUNDRED AND THREE HUNDRED STREET
HUNDRED AND THREE HUNDRED AND FIRST STREET
HUNDRED AND THREE HUNDRED AND SECOND STREET
HUNDRED AND THREE HUNDRED AND THIRD STREET
HUNDRED AND THREE HUNDRED AND FOURTH STREET
HUNDRED AND THREE HUNDRED AND FIFTH STREET
HUNDRED AND THREE HUNDRED AND SIXTH STREET
HUNDRED AND THREE HUNDRED AND SEVENTH STREET
HUNDRED AND THREE HUNDRED AND EIGHTH STREET
HUNDRED AND THREE HUNDRED AND NINTH STREET
HUNDRED AND THREE HUNDRED AND TENTH STREET
HUNDRED AND THREE HUNDRED AND ELEVENTH STREET
HUNDRED AND THREE HUNDRED AND TWELFTH STREET
HUNDRED AND THREE HUNDRED AND THIRTEENTH STREET
HUNDRED AND THREE HUNDRED AND FOURTEENTH STREET
HUNDRED AND THREE HUNDRED AND FIFTEENTH STREET
HUNDRED AND THREE HUNDRED AND SIXTEENTH STREET
HUNDRED AND THREE HUNDRED AND SEVENTEENTH STREET
HUNDRED AND THREE HUNDRED AND EIGHTEENTH STREET
HUNDRED AND THREE HUNDRED AND NINETEENTH STREET
HUNDRED AND THREE HUNDRED AND TWENTIETH STREET
HUNDRED AND THREE HUNDRED AND TWENTY-FIRST STREET
HUNDRED AND THREE HUNDRED AND TWENTY-SECOND STREET
HUNDRED AND THREE HUNDRED AND TWENTY-THIRD STREET
HUNDRED AND THREE HUNDRED AND TWENTY-FOURTH STREET
HUNDRED AND THREE HUNDRED AND TWENTY-FIFTH STREET
HUNDRED AND THREE HUNDRED AND TWENTY-SIXTH STREET
HUNDRED AND THREE HUNDRED AND TWENTY-SEVENTH STREET
HUNDRED AND THREE HUNDRED AND TWENTY-EIGHTH STREET
HUNDRED AND THREE HUNDRED AND TWENTY-NINTH STREET
HUNDRED AND THREE HUNDRED AND THIRTIETH STREET
HUNDRED AND THREE HUNDRED AND THIRTY-FIRST STREET
HUNDRED AND THREE HUNDRED AND THIRTY-SECOND STREET
HUNDRED AND THREE HUNDRED AND THIRTY-THIRD STREET
HUNDRED AND THREE HUNDRED AND THIRTY-FOURTH STREET
HUNDRED AND THREE HUNDRED AND THIRTY-FIFTH STREET
HUNDRED AND THREE HUNDRED AND THIRTY-SIXTH STREET
HUNDRED AND THREE HUNDRED AND THIRTY-SEVENTH STREET
HUNDRED AND THREE HUNDRED AND THIRTY-EIGHTH STREET
HUNDRED AND THREE HUNDRED AND THIRTY-NINTH STREET
HUNDRED AND THREE HUNDRED AND FORTIETH STREET
HUNDRED AND THREE HUNDRED AND FORTY-FIRST STREET
HUNDRED AND THREE HUNDRED AND FORTY-SECOND STREET
HUNDRED AND THREE HUNDRED AND FORTY-THIRD STREET
HUNDRED AND THREE HUNDRED AND FORTY-FOURTH STREET
HUNDRED AND THREE HUNDRED AND FORTY-FIFTH STREET
HUNDRED AND THREE HUNDRED AND FORTY-SIXTH STREET
HUNDRED AND THREE HUNDRED AND FORTY-SEVENTH STREET
HUNDRED AND THREE HUNDRED AND FORTY-EIGHTH STREET
HUNDRED AND THREE HUNDRED AND FORTY-NINTH STREET
HUNDRED AND THREE HUNDRED AND FIFTIETH STREET
HUNDRED AND THREE HUNDRED AND FIFTY-FIRST STREET
HUNDRED AND THREE HUNDRED AND FIFTY-SECOND STREET
HUNDRED AND THREE HUNDRED AND FIFTY-THIRD STREET
HUNDRED AND THREE HUNDRED AND FIFTY-FOURTH STREET
HUNDRED AND THREE HUNDRED AND FIFTY-FIFTH STREET
HUNDRED AND THREE HUNDRED AND FIFTY-SIXTH STREET
HUNDRED AND THREE HUNDRED AND FIFTY-SEVENTH STREET
HUNDRED AND THREE HUNDRED AND FIFTY-EIGHTH STREET
HUNDRED AND THREE HUNDRED AND FIFTY-NINTH STREET
HUNDRED AND THREE HUNDRED AND SIXTIETH STREET
HUNDRED AND THREE HUNDRED AND SIXTY-FIRST STREET
HUNDRED AND THREE HUNDRED AND SIXTY-SECOND STREET
HUNDRED AND THREE HUNDRED AND SIXTY-THIRD STREET
HUNDRED AND THREE HUNDRED AND SIXTY-FOURTH STREET
HUNDRED AND THREE HUNDRED AND SIXTY-FIFTH STREET
HUNDRED AND THREE HUNDRED AND SIXTY-SIXTH STREET
HUNDRED AND THREE HUNDRED AND SIXTY-SEVENTH STREET
HUNDRED AND THREE HUNDRED AND SIXTY-EIGHTH STREET
HUNDRED AND THREE HUNDRED AND SIXTY-NINTH STREET
HUNDRED AND THREE HUNDRED AND SEVENTIETH STREET
HUNDRED AND THREE HUNDRED AND SEVENTY-FIRST STREET
HUNDRED AND THREE HUNDRED AND SEVENTY-SECOND STREET
HUNDRED AND THREE HUNDRED AND SEVENTY-THIRD STREET
HUNDRED AND THREE HUNDRED AND SEVENTY-FOURTH STREET
HUNDRED AND THREE HUNDRED AND SEVENTY-FIFTH STREET
HUNDRED AND THREE HUNDRED AND SEVENTY-SIXTH STREET
HUNDRED AND THREE HUNDRED AND SEVENTY-SEVENTH STREET
HUNDRED AND THREE HUNDRED AND SEVENTY-EIGHTH STREET
HUNDRED AND THREE HUNDRED AND SEVENTY-NINTH STREET
HUNDRED AND THREE HUNDRED AND EIGHTIETH STREET
HUNDRED AND THREE HUNDRED AND EIGHTY-FIRST STREET
HUNDRED AND THREE HUNDRED AND EIGHTY-SECOND STREET
HUNDRED AND THREE HUNDRED AND EIGHTY-THIRD STREET
HUNDRED AND THREE HUNDRED AND EIGHTY-FOURTH STREET
HUNDRED AND THREE HUNDRED AND EIGHTY-FIFTH STREET
HUNDRED AND THREE HUNDRED AND EIGHTY-SIXTH STREET
HUNDRED AND THREE HUNDRED AND EIGHTY-SEVENTH STREET
HUNDRED AND THREE HUNDRED AND EIGHTY-EIGHTH STREET
HUNDRED AND THREE HUNDRED AND EIGHTY-NINTH STREET
HUNDRED AND THREE HUNDRED AND NINETIETH STREET
HUNDRED AND THREE HUNDRED AND NINETY-FIRST STREET
HUNDRED AND THREE HUNDRED AND NINETY-SECOND STREET
HUNDRED AND THREE HUNDRED AND NINETY-THIRD STREET
HUNDRED AND THREE HUNDRED AND NINETY-FOURTH STREET
HUNDRED AND THREE HUNDRED AND NINETY-FIFTH STREET
HUNDRED AND THREE HUNDRED AND NINETY-SIXTH STREET
HUNDRED AND THREE HUNDRED AND NINETY-SEVENTH STREET
HUNDRED AND THREE HUNDRED AND NINETY-EIGHTH STREET
HUNDRED AND THREE HUNDRED AND NINETY-NINTH STREET
HUNDRED AND FOUR HUNDRED STREET
HUNDRED AND FOUR HUNDRED AND FIRST STREET
HUNDRED AND FOUR HUNDRED AND SECOND STREET
HUNDRED AND FOUR HUNDRED AND THIRD STREET
HUNDRED AND FOUR HUNDRED AND FOURTH STREET
HUNDRED AND FOUR HUNDRED AND FIFTH STREET
HUNDRED AND FOUR HUNDRED AND SIXTH STREET
HUNDRED AND FOUR HUNDRED AND SEVENTH STREET
HUNDRED AND FOUR HUNDRED AND EIGHTH STREET
HUNDRED AND FOUR HUNDRED AND NINTH STREET
HUNDRED AND FOUR HUNDRED AND TENTH STREET
HUNDRED AND FOUR HUNDRED AND ELEVENTH STREET
HUNDRED AND FOUR HUNDRED AND TWELFTH STREET
HUNDRED AND FOUR HUNDRED AND THIRTEENTH STREET
HUNDRED AND FOUR HUNDRED AND FOURTEENTH STREET
HUNDRED AND FOUR HUNDRED AND FIFTEENTH STREET
HUNDRED AND FOUR HUNDRED AND SIXTEENTH STREET
HUNDRED AND FOUR HUNDRED AND SEVENTEENTH STREET
HUNDRED AND FOUR HUNDRED AND EIGHTEENTH STREET
HUNDRED AND FOUR HUNDRED AND NINETEENTH STREET
HUNDRED AND FOUR HUNDRED AND TWENTIETH STREET
HUNDRED AND FOUR HUNDRED AND TWENTY-FIRST STREET
HUNDRED AND FOUR HUNDRED AND TWENTY-SECOND STREET
HUNDRED AND FOUR HUNDRED AND TWENTY-THIRD STREET
HUNDRED AND FOUR HUNDRED AND TWENTY-FOURTH STREET
HUNDRED AND FOUR HUNDRED AND TWENTY-FIFTH STREET
HUNDRED AND FOUR HUNDRED AND TWENTY-SIXTH STREET
HUNDRED AND FOUR HUNDRED AND TWENTY-SEVENTH STREET
HUNDRED AND FOUR HUNDRED AND TWENTY-EIGHTH STREET
HUNDRED AND FOUR HUNDRED AND TWENTY-NINTH STREET
HUNDRED AND FOUR HUNDRED AND THIRTIETH STREET
HUNDRED AND FOUR HUNDRED AND THIRTY-FIRST STREET
HUNDRED AND FOUR HUNDRED AND THIRTY-SECOND STREET
HUNDRED AND FOUR HUNDRED AND THIRTY-THIRD STREET
HUNDRED AND FOUR HUNDRED AND THIRTY-FOURTH STREET
HUNDRED AND FOUR HUNDRED AND THIRTY-FIFTH STREET
HUNDRED AND FOUR HUNDRED AND THIRTY-SIXTH STREET
HUNDRED AND FOUR HUNDRED AND THIRTY-SEVENTH STREET
HUNDRED AND FOUR HUNDRED AND THIRTY-EIGHTH STREET
HUNDRED AND FOUR HUNDRED AND THIRTY-NINTH STREET
HUNDRED AND FOUR HUNDRED AND FORTIETH STREET
HUNDRED AND FOUR HUNDRED AND FORTY-FIRST STREET
HUNDRED AND FOUR HUNDRED AND FORTY-SECOND STREET
HUNDRED AND FOUR HUNDRED AND FORTY-THIRD STREET
HUNDRED AND FOUR HUNDRED AND FORTY-FOURTH STREET
HUNDRED AND FOUR HUNDRED AND FORTY-FIFTH STREET
HUNDRED AND FOUR HUNDRED AND FORTY-SIXTH STREET
HUNDRED AND FOUR HUNDRED AND FORTY-SEVENTH STREET
HUNDRED AND FOUR HUNDRED AND FORTY-EIGHTH STREET
HUNDRED AND FOUR HUNDRED AND FORTY-NINTH STREET
HUNDRED AND FOUR HUNDRED AND FIFTIETH STREET
HUNDRED AND FOUR HUNDRED AND FIFTY-FIRST STREET
HUNDRED AND FOUR HUNDRED AND FIFTY-SECOND STREET
HUNDRED AND FOUR HUNDRED AND FIFTY-THIRD STREET
HUNDRED AND FOUR HUNDRED AND FIFTY-FOURTH STREET
HUNDRED AND FOUR HUNDRED AND FIFTY-FIFTH STREET
HUNDRED AND FOUR HUNDRED AND FIFTY-SIXTH STREET
HUNDRED AND FOUR HUNDRED AND FIFTY-SEVENTH STREET
HUNDRED AND FOUR HUNDRED AND FIFTY-EIGHTH STREET
HUNDRED AND FOUR HUNDRED AND FIFTY-NINTH STREET
HUNDRED AND FOUR HUNDRED AND SIXTIETH STREET
HUNDRED AND FOUR HUNDRED AND SIXTY-FIRST STREET
HUNDRED AND FOUR HUNDRED AND SIXTY-SECOND STREET
HUNDRED AND FOUR HUNDRED AND SIXTY-THIRD STREET
HUNDRED AND FOUR HUNDRED AND SIXTY-FOURTH STREET
HUNDRED AND FOUR HUNDRED AND SIXTY-FIFTH STREET
HUNDRED AND FOUR HUNDRED AND SIXTY-SIXTH STREET
HUNDRED AND FOUR HUNDRED AND SIXTY-SEVENTH STREET
HUNDRED AND FOUR HUNDRED AND SIXTY-EIGHTH STREET
HUNDRED AND FOUR HUNDRED AND SIXTY-NINTH STREET
HUNDRED AND FOUR HUNDRED AND SEVENTIETH STREET
HUNDRED AND FOUR HUNDRED AND SEVENTY-FIRST STREET
HUNDRED AND FOUR HUNDRED AND SEVENTY-SECOND STREET
HUNDRED AND FOUR HUNDRED AND SEVENTY-THIRD STREET
HUNDRED AND FOUR HUNDRED AND SEVENTY-FOURTH STREET
HUNDRED AND FOUR HUNDRED AND SEVENTY-FIFTH STREET
HUNDRED AND FOUR HUNDRED AND SEVENTY-SIXTH STREET
HUNDRED AND FOUR HUNDRED AND SEVENTY-SEVENTH STREET
HUNDRED AND FOUR HUNDRED AND SEVENTY-EIGHTH STREET
HUNDRED AND FOUR HUNDRED AND SEVENTY-NINTH STREET
HUNDRED AND FOUR HUNDRED AND EIGHTIETH STREET
HUNDRED AND FOUR HUNDRED AND EIGHTY-FIRST STREET
HUNDRED AND FOUR HUNDRED AND EIGHTY-SECOND STREET
HUNDRED AND FOUR HUNDRED AND EIGHTY-THIRD STREET
HUNDRED AND FOUR HUNDRED AND EIGHTY-FOURTH STREET
HUNDRED AND FOUR HUNDRED AND EIGHTY-FIFTH STREET
HUNDRED AND FOUR HUNDRED AND EIGHTY-SIXTH STREET
HUNDRED AND FOUR HUNDRED AND EIGHTY-SEVENTH STREET
HUNDRED AND FOUR HUNDRED AND EIGHTY-EIGHTH STREET
HUNDRED AND FOUR HUNDRED AND EIGHTY-NINTH STREET
HUNDRED AND FOUR HUNDRED AND NINETIETH STREET
HUNDRED AND FOUR HUNDRED AND NINETY-FIRST STREET
HUNDRED AND FOUR HUNDRED AND NINETY-SECOND STREET
HUNDRED AND FOUR HUNDRED AND NINETY-THIRD STREET
HUNDRED AND FOUR HUNDRED AND NINETY-FOURTH STREET
HUNDRED AND FOUR HUNDRED AND NINETY-FIFTH STREET
HUNDRED AND FOUR HUNDRED AND NINETY-SIXTH STREET
HUNDRED AND FOUR HUNDRED AND NINETY-SEVENTH STREET
HUNDRED AND FOUR HUNDRED AND NINETY-EIGHTH STREET
HUNDRED AND FOUR HUNDRED AND NINETY-NINTH STREET
HUNDRED AND FOUR HUNDRED AND FIFTIETH STREET
HUNDRED AND FOUR HUNDRED AND FIFTY-FIRST STREET
HUNDRED AND FOUR HUNDRED AND FIFTY-SECOND STREET
HUNDRED AND FOUR HUNDRED AND FIFTY-THIRD STREET
HUNDRED AND FOUR HUNDRED AND FIFTY-FOURTH STREET
HUNDRED AND FOUR HUNDRED AND FIFTY-FIFTH STREET
HUNDRED AND FOUR HUNDRED AND FIFTY-SIXTH STREET
HUNDRED AND FOUR HUNDRED AND FIFTY-SEVENTH STREET
HUNDRED AND FOUR HUNDRED AND FIFTY-EIGHTH STREET
HUNDRED AND FOUR HUNDRED AND FIFTY-NINTH STREET
HUNDRED AND FOUR HUNDRED AND SIXTIETH STREET
HUNDRED AND FOUR HUNDRED AND SIXTY-FIRST STREET
HUNDRED AND FOUR HUNDRED AND SIXTY-SECOND STREET
HUNDRED AND FOUR HUNDRED AND SIXTY-THIRD STREET
HUNDRED AND FOUR HUNDRED AND SIXTY-FOURTH STREET
HUNDRED AND FOUR HUNDRED AND SIXTY-FIFTH STREET
HUNDRED AND FOUR HUNDRED AND SIXTY-SIXTH STREET
HUNDRED AND FOUR HUNDRED AND SIXTY-SEVENTH STREET
HUNDRED AND FOUR HUNDRED AND SIXTY-EIGHTH STREET
HUNDRED AND FOUR HUNDRED AND SIXTY-NINTH STREET
HUNDRED AND FOUR HUNDRED AND SEVENTIETH STREET
HUNDRED AND FOUR HUNDRED AND SEVENTY-FIRST STREET
HUNDRED AND FOUR HUNDRED AND SEVENTY-SECOND STREET
HUNDRED AND FOUR HUNDRED AND SEVENTY-THIRD STREET
HUNDRED AND FOUR HUNDRED AND SEVENTY-FOURTH STREET
HUNDRED AND FOUR HUNDRED AND SEVENTY-FIFTH STREET
HUNDRED AND FOUR HUNDRED AND SEVENTY-SIXTH STREET
HUNDRED AND FOUR HUNDRED AND SEVENTY-SEVENTH STREET
HUNDRED AND FOUR HUNDRED AND SEVENTY-EIGHTH STREET
HUNDRED AND FOUR HUNDRED AND SEVENTY-NINTH STREET
HUNDRED AND FOUR HUNDRED AND EIGHTIETH STREET
HUNDRED AND FOUR HUNDRED AND EIGHTY-FIRST STREET
HUNDRED AND FOUR HUNDRED AND EIGHTY-SECOND STREET
HUNDRED AND FOUR HUNDRED AND EIGHTY-THIRD STREET
HUNDRED AND FOUR HUNDRED AND EIGHTY-FOURTH STREET
HUNDRED AND FOUR HUNDRED AND EIGHTY-FIFTH STREET
HUNDRED AND FOUR HUNDRED AND EIGHTY-SIXTH STREET
HUNDRED AND FOUR HUNDRED AND EIGHTY-SEVENTH STREET
HUNDRED AND FOUR HUNDRED AND EIGHTY-EIGHTH STREET
HUNDRED AND FOUR HUNDRED AND EIGHTY-NINTH STREET
HUNDRED AND FOUR HUNDRED AND NINETIETH STREET
HUNDRED AND FOUR HUNDRED AND NINETY-FIRST STREET
HUNDRED AND FOUR HUNDRED AND NINETY-SECOND STREET
HUNDRED AND FOUR HUNDRED AND NINETY-THIRD STREET
HUNDRED AND FOUR HUNDRED AND NINETY-FOURTH STREET
HUNDRED AND FOUR HUNDRED AND NINETY-FIFTH STREET
HUNDRED AND FOUR HUNDRED AND NINETY-SIXTH STREET
HUNDRED AND FOUR HUNDRED AND NINETY-SEVENTH STREET
HUNDRED AND FOUR HUNDRED AND NINETY-EIGHTH STREET
HUNDRED AND FOUR HUNDRED AND NINETY-NINTH STREET
HUNDRED AND FOUR HUNDRED AND FIFTIETH STREET
HUNDRED AND FOUR HUNDRED AND FIFTY-FIRST STREET
HUNDRED AND FOUR HUNDRED AND FIFTY-SECOND STREET
HUNDRED AND FOUR HUNDRED AND FIFTY-THIRD STREET
HUNDRED AND FOUR HUNDRED AND FIFTY-FOURTH STREET
HUNDRED AND FOUR HUNDRED AND FIFTY-FIFTH STREET
HUNDRED AND FOUR HUNDRED AND FIFTY-SIXTH STREET
HUNDRED AND FOUR HUNDRED AND FIFTY-SEVENTH STREET
HUNDRED AND FOUR HUNDRED AND FIFTY-EIGHTH STREET
HUNDRED AND FOUR HUNDRED AND FIFTY-NINTH STREET
HUNDRED AND FOUR HUNDRED AND SIXTIETH STREET
HUNDRED AND FOUR HUNDRED AND SIXTY-FIRST STREET
HUNDRED AND FOUR HUNDRED AND SIXTY-SECOND STREET
HUNDRED AND FOUR HUNDRED AND SIXTY-THIRD STREET
HUNDRED AND FOUR HUNDRED AND SIXTY-FOURTH STREET
HUNDRED AND FOUR HUNDRED AND SIXTY-FIFTH STREET
HUNDRED AND FOUR HUNDRED AND SIXTY-SIXTH STREET
HUNDRED AND FOUR HUNDRED AND SIXTY-SEVENTH STREET
HUNDRED AND FOUR HUNDRED AND SIXTY-EIGHTH STREET
HUNDRED AND FOUR HUNDRED AND SIXTY-NINTH STREET
HUNDRED AND FOUR HUNDRED AND SEVENTIETH STREET
HUNDRED AND FOUR HUNDRED AND SEVENTY-FIRST STREET
HUNDRED AND FOUR HUNDRED AND SEVENTY-SECOND STREET
HUNDRED AND FOUR HUNDRED AND SEVENTY-THIRD STREET
HUNDRED AND FOUR HUND

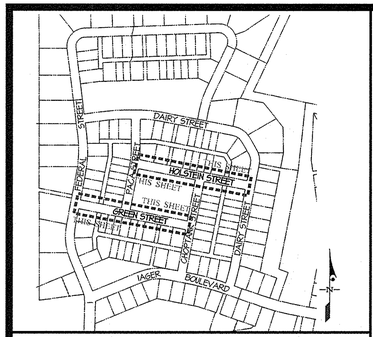

KEY MAP SCALE: 1" = 400'

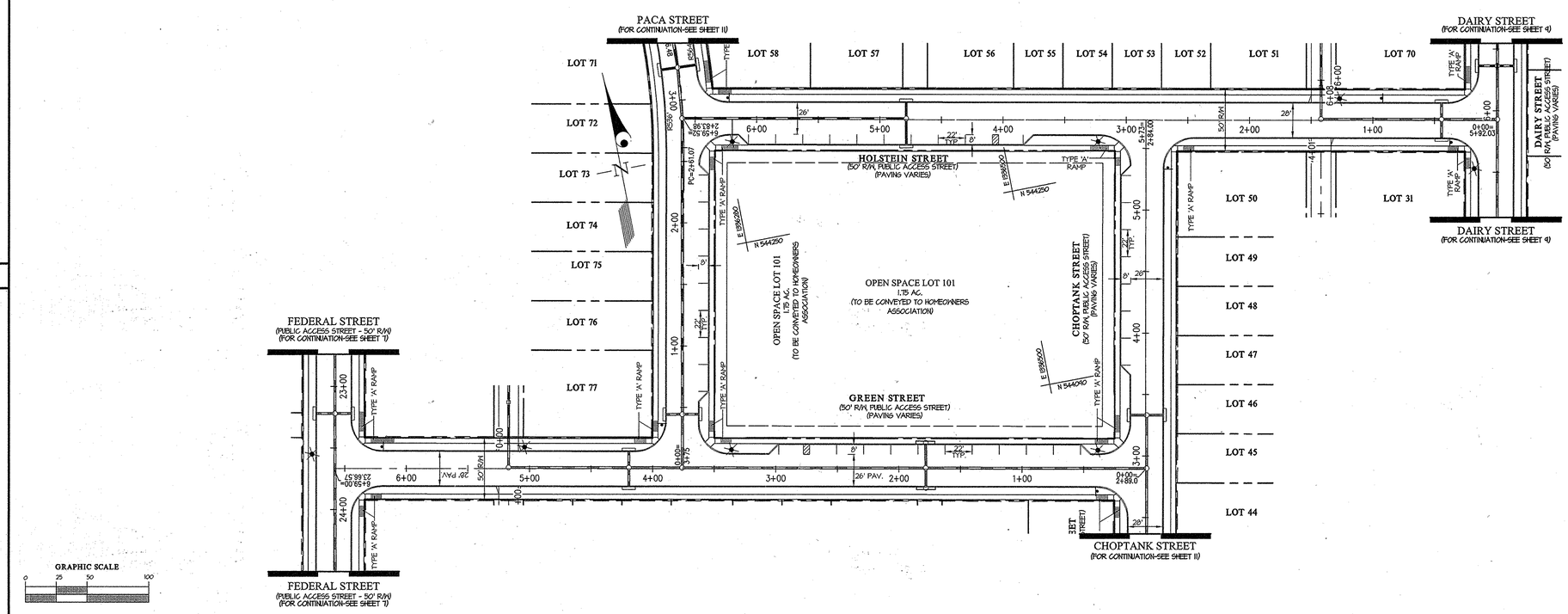

ROAD CONSTRUCTION PLAN VIEW - GREEN STREET & HOLSTEIN STREET SCALE: 1" = 50'

NOTES:

1. ALL CURB RADII ARE 25' UNLESS OTHERWISE NOTED.
2. FOR TYPICAL ROAD SECTIONS SEE SHEET 12.
3. FOR STREET TREE AND STREET LIGHT INFORMATION, SEE SHEETS 14-15.
4. FOR STORM DRAIN INFORMATION, SEE SHEET 19-20.
5. ALL STORM DRAIN IN COMMON OPEN AREAS SHALL BE PRIVATELY OWNED AND MAINTAINED.
6. A PUBLIC SIDEWALK MAINTENANCE, WATER HOUSE CONNECTION, SEWER HOUSE CONNECTION & UTILITY EASEMENT HAS BEEN ADDED TO LOTS WITH FRONT AND/OR SIDE LOT LINES ADJACENT TO A PUBLIC RIGHT-OF-WAY.
7. ALL SIDEWALK IS 4' UNLESS OTHERWISE NOTED.
8. ALL SIDEWALKS THAT END WITH A HANDICAP RAMP MUST MEET HOWARD COUNTY STANDARD R-4.02 (SIDEWALK RAMP TYPE 'B').
9. THERE WILL BE A 10' TRANSITION FROM 4' SIDEWALK TO 5' SIDEWALK ADJACENT TO THE CURB. THE 5' WIDTH IS TO BE MEASURED FROM THE BACK OF CURB.

LEGEND

- EXISTING GRADE
- EXISTING GRADE LEFT
- EXISTING GRADE RIGHT
- PROPOSED GRADE @ CENTERLINE

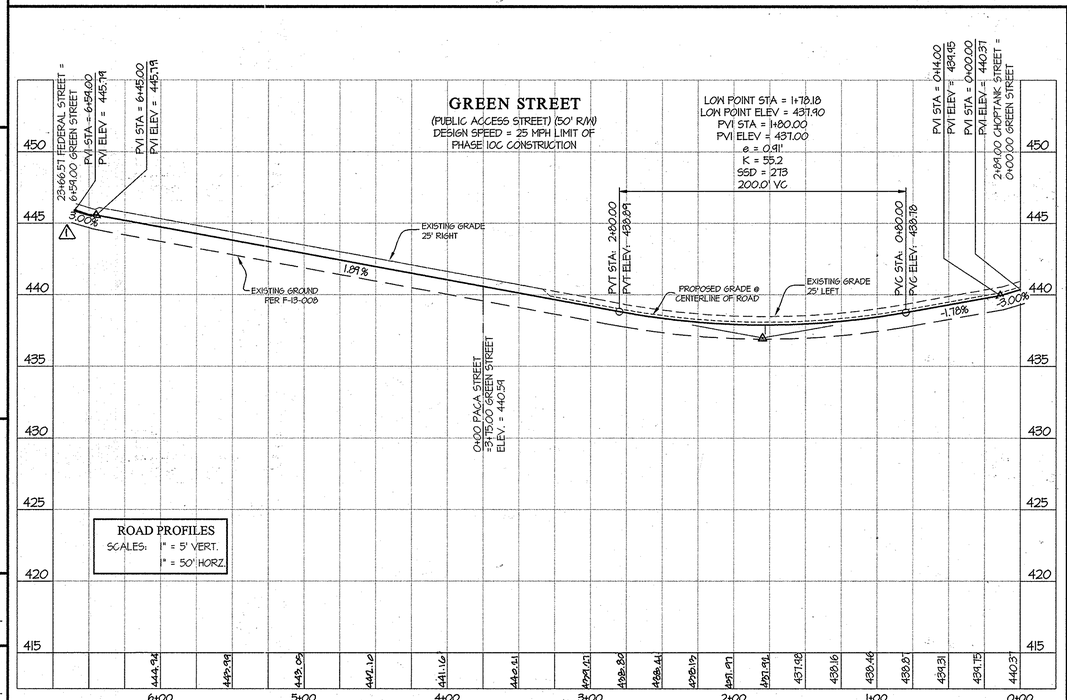

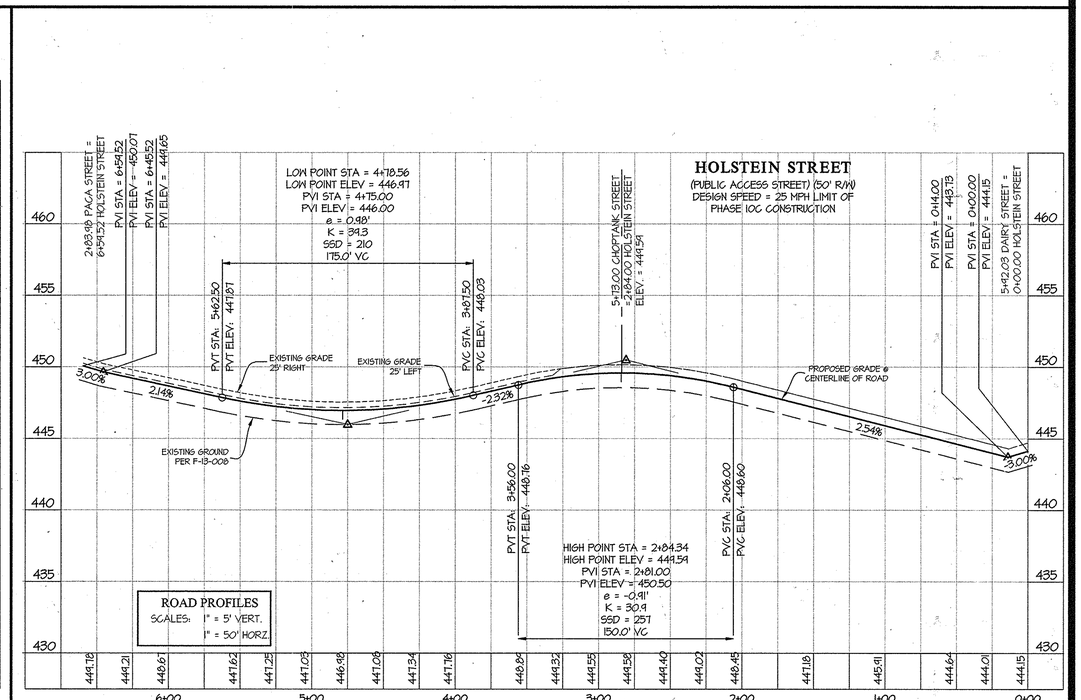

APPROVED: HOWARD COUNTY DEPARTMENT OF PUBLIC WORKS

Chief, Bureau of Highways — Date 5-7-14

APPROVED: HOWARD COUNTY DEPARTMENT OF PLANNING & ZONING

Chief, Division of Land Development — Date 5-21-14

Chief, Development Engineering Division — Date 5.20.14

GLW GUTSCHICK LITTLE & WEBER, P.A.

CIVIL ENGINEERS, LAND SURVEYORS, LAND PLANNERS, LANDSCAPE ARCHITECTS
3909 NATIONAL DRIVE – SUITE 250 – BURTONSVILLE OFFICE PARK
BURTONSVILLE, MARYLAND 20866
TEL: 301-421-4024 BALT: 410-880-1820 DC/VA: 301-989-2524 FAX: 301-421-4186

DATE	REVISION	BY	APP'R.
2015-4-28	REVISED ROAD GRADE OF GREEN STREET AT INTERSECTION WITH FEDERAL ROAD	GH	DEV

L:\CADD\DRAWINGS\12001\PLANS BY GLW\FINALS\12001 05-11_SG PROFILES.dwg DES. DEV DRN. JRD CHK. CKG

PREPARED FOR:

MAPLE LAWN FARMS I, LLC
SUITE 300 WOODHOLME CENTER
1829 REISTERSTOWN ROAD
BALTIMORE, MD 21208
ATTN: MARK BENNETT
410-484-8400

PROFESSIONAL CERTIFICATION

I HEREBY CERTIFY THAT THESE PLANS WERE PREPARED OR APPROVED BY ME, AND THAT I AM A DULY LICENSED PROFESSIONAL ENGINEER UNDER THE LAWS OF THE STATE OF MARYLAND, LICENSE NO.12905, EXPIRATION DATE: MAY 26, 2016.

4/24/14

STATE OF MARYLAND — JENNIFER R. BICKS — REG. NO. 12905

ROAD CONSTRUCTION PROFILES - GREEN STREET & HOLSTEIN STREET

MAPLE LAWN FARMS

GARDEN DISTRICT - AREA 1
LOTS 1 thru 98, OPEN SPACE LOTS 99 thru 110,
COMMON OPEN AREA LOTS 111 thru 114
and NON-BUILDABLE BULK PARCELS 'X' thru 'Z'

ELECTION DISTRICT No. 5 — HOWARD COUNTY, MARYLAND

SCALE	ZONING	G. L. W. FILE No.
AS SHOWN	MXD-3	12001
DATE	TAX MAP – GRID	SHEET
APRIL, 2014	41-21/46-3	8 OF 36

© GLW 2014

F-14-033

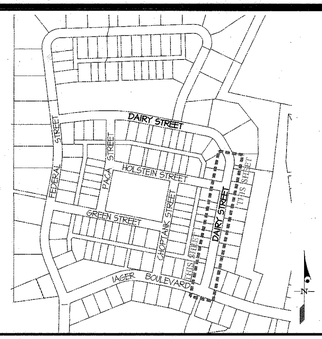

KEY MAP SCALE: 1" = 400'

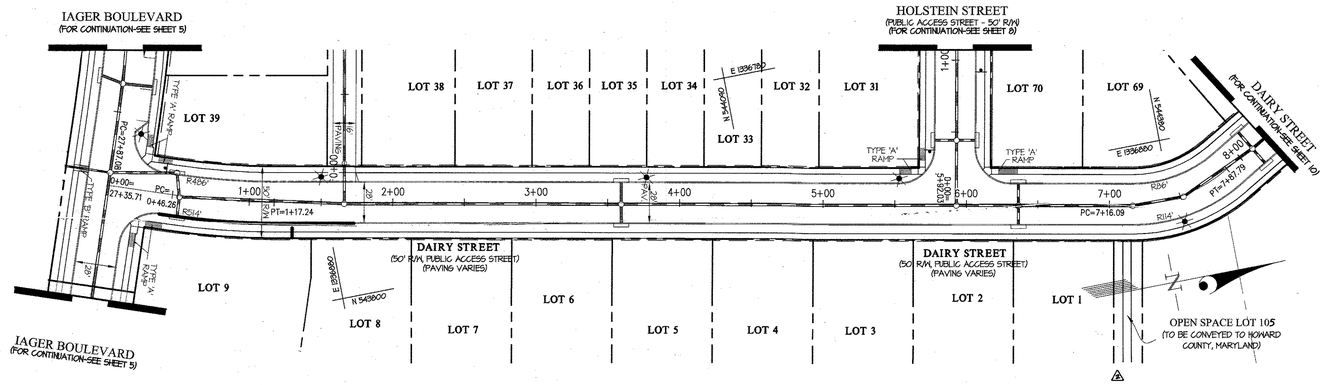

GRAPHIC SCALE

0 25 50 100

ROAD CONSTRUCTION PLAN VIEW - DAIRY STREET SCALE: 1" = 50'

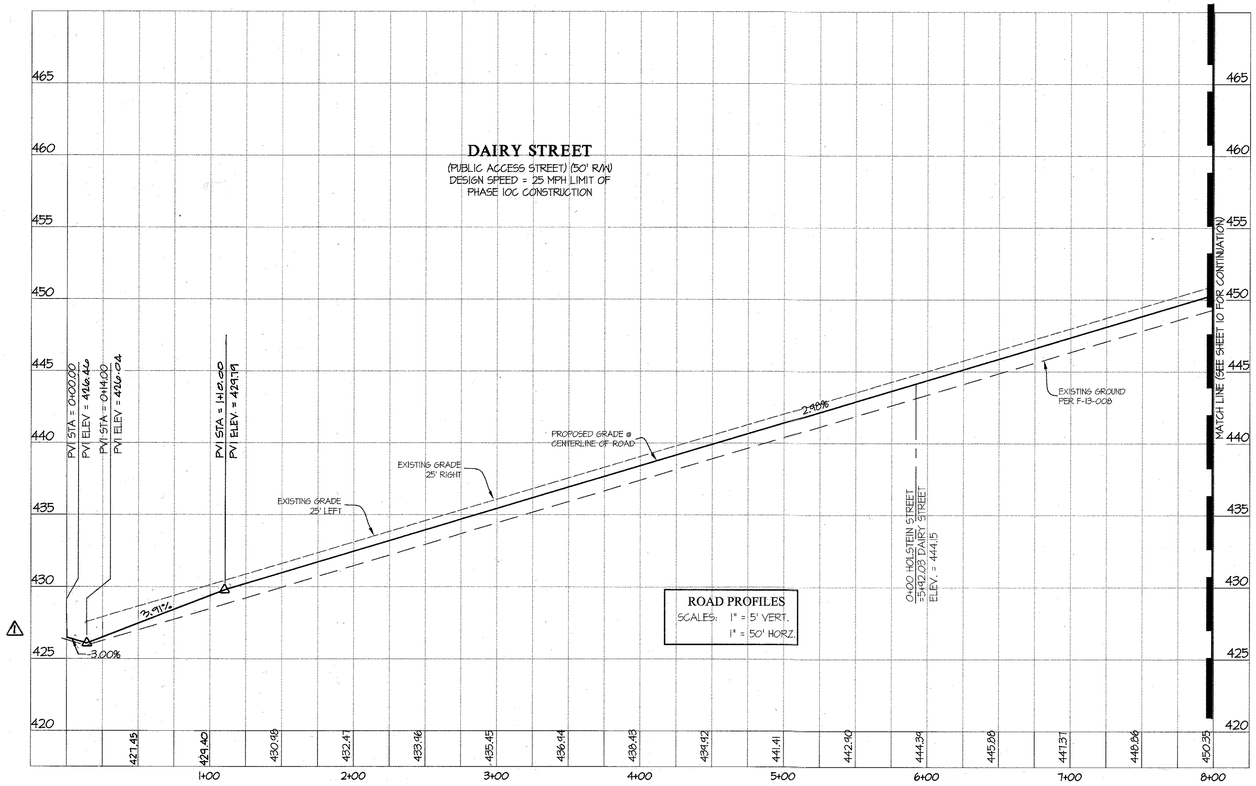

NOTES:

1. ALL CURB RADII ARE 25' UNLESS OTHERWISE NOTED.
2. FOR TYPICAL ROAD SECTIONS SEE SHEET 12.
3. FOR STREET TREE AND STREET LIGHT INFORMATION, SEE SHEETS 14-15.
4. FOR STORM DRAIN INFORMATION, SEE SHEET 19-20.
5. ALL STORM DRAIN IN COMMON OPEN AREAS SHALL BE PRIVATELY OWNED AND MAINTAINED.
6. A PUBLIC SIDEWALK MAINTENANCE, WATER HOUSE CONNECTION, SEWER HOUSE CONNECTION & UTILITY EASEMENT HAS BEEN ADDED TO LOTS WITH FRONT AND/OR SIDE LOT LINES ADJACENT TO A PUBLIC RIGHT-OF-WAY.
7. ALL SIDEWALK IS 4' UNLESS OTHERWISE NOTED.
8. ALL SIDEWALKS THAT END WITH A HANDICAP RAMP MUST MEET HOWARD COUNTY STANDARD R-4.02 (SIDEWALK RAMP TYPE 'B').
9. THERE WILL BE A 10' TRANSITION FROM 4' SIDEWALK TO 5' SIDEWALK ADJACENT TO THE CURB. THE 5' WIDTH IS TO BE MEASURED FROM THE BACK OF CURB.

LEGEND

- EXISTING GRADE
- EXISTING GRADE LEFT
- EXISTING GRADE RIGHT
- PROPOSED GRADE @ CENTERLINE

APPROVED: HOWARD COUNTY DEPARTMENT OF PUBLIC WORKS

Chief, Bureau of Highways — Date 5-7-14

APPROVED: HOWARD COUNTY DEPARTMENT OF PLANNING & ZONING

Chief, Division of Land Development — Date 5-21-14

Chief, Development Engineering Division — Date 5-20-14

GLW GUTSCHICK LITTLE & WEBER, P.A.
CIVIL ENGINEERS, LAND SURVEYORS, LAND PLANNERS, LANDSCAPE ARCHITECTS
3909 NATIONAL DRIVE – SUITE 250 – BURTONSVILLE OFFICE PARK
BURTONSVILLE, MARYLAND 20866
TEL: 301-421-4024 BALT: 410-880-1820 DC/VA: 301-989-2524 FAX: 301-421-4186

L:\CADD\DRAWINGS\12001\PLANS BY GLW\FINALS\12001 05-11_50 PROFILES.dwg DES. DEV DRN. JRD CHK. CKG

DATE	REVISION	BY	APP'R.
2016-08-04	⚠ ADDED OPEN SPACE 105 PATH	HKJ	DEV
2015-4-20	⚠ REVISED ROAD GRADE OF DAIRY STREET AT INTERSECTION WITH IAGER BLVD.	GT	DEV

PREPARED FOR:

MAPLE LAWN FARMS I, LLC
SUITE 300 WOODHOLME CENTER
1829 REISTERSTOWN ROAD
BALTIMORE, MD 21208
ATTN: MARK BENNETT
410-484-8400

PROFESSIONAL CERTIFICATION

I HEREBY CERTIFY THAT THESE PLANS WERE PREPARED OR APPROVED BY ME, AND THAT I AM A DULY LICENSED PROFESSIONAL ENGINEER UNDER THE LAWS OF THE STATE OF MARYLAND, LICENSE NO. 12975
EXPIRATION DATE: MAY 28, 2016

4/24/14

STATE OF MARYLAND — GARY L. GUTSCHICK — No. 12975 — PROFESSIONAL ENGINEER

ROAD CONSTRUCTION PROFILES - DAIRY STREET

MAPLE LAWN FARMS

GARDEN DISTRICT - AREA 1
LOTS 1 thru 98, OPEN SPACE LOTS 99 thru 110,
COMMON OPEN AREA LOTS 111 thru 114
and NON-BUILDABLE BULK PARCELS 'X' thru 'Z'

ELECTION DISTRICT No. 5 — HOWARD COUNTY, MARYLAND

SCALE	ZONING	G. L. W. FILE No.
AS SHOWN	MXD-3	12001
DATE	TAX MAP – GRID	SHEET
APRIL, 2014	41-21/46-3	9 OF 36

© GLW 2014

F-14-033

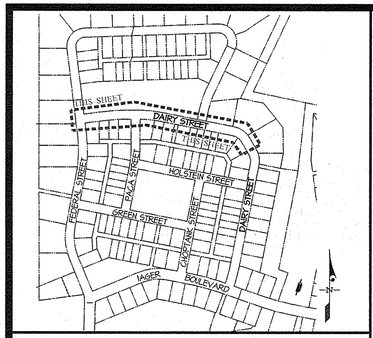

KEY MAP SCALE: 1" = 400'

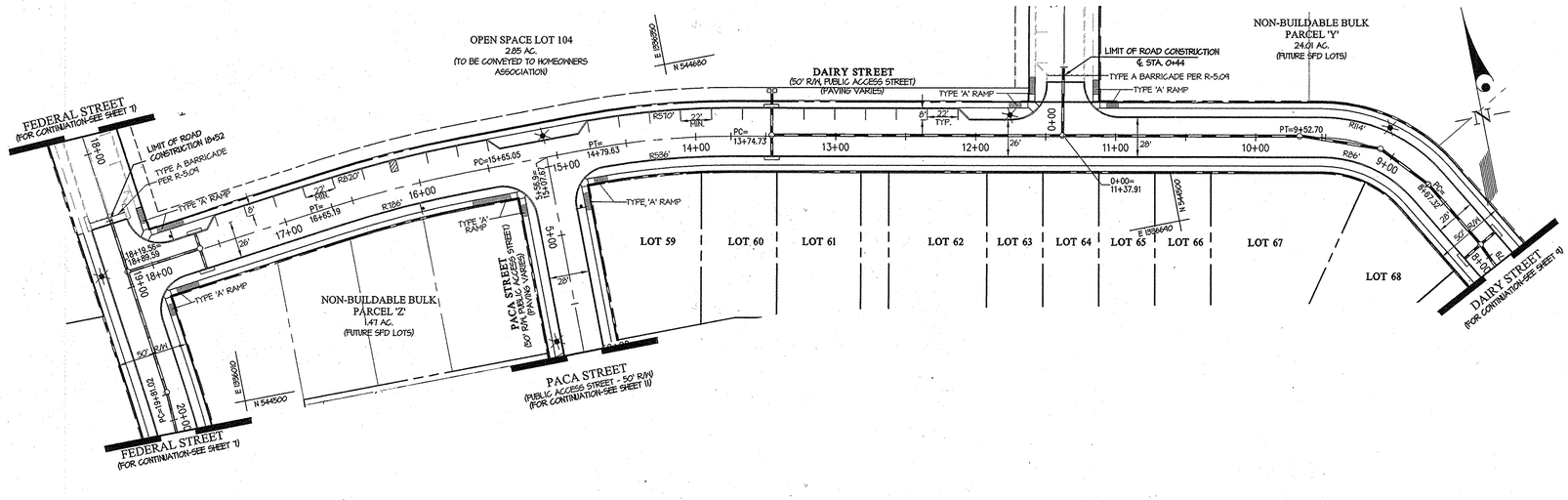

GRAPHIC SCALE
0 25 50 100

ROAD CONSTRUCTION PLAN VIEW - DAIRY STREET SCALE: 1" = 50'

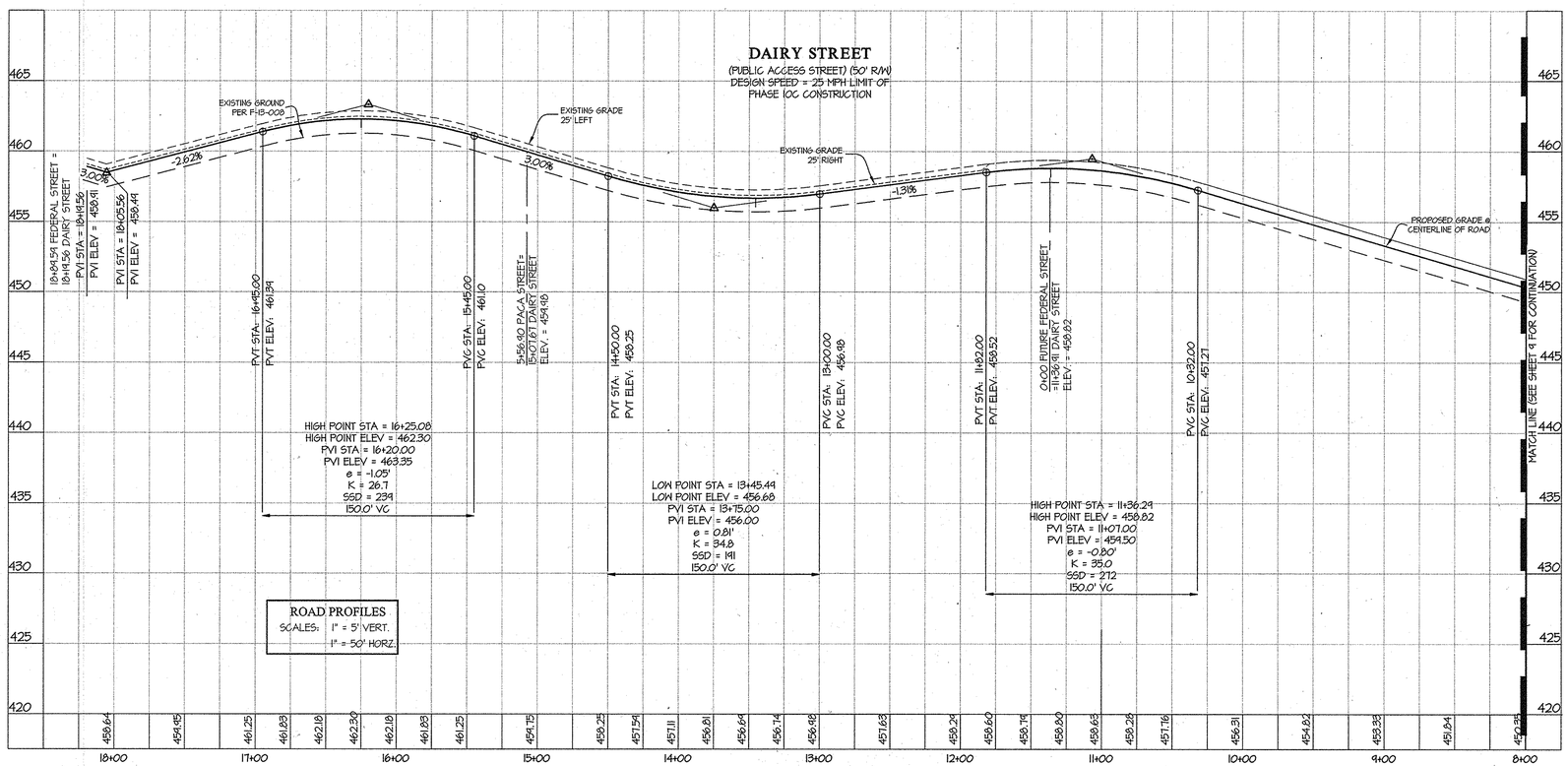

ROAD PROFILES
SCALES: 1" = 5' VERT.
1" = 50' HORZ.

NOTES:

1. ALL CURB RADII ARE 25' UNLESS OTHERWISE NOTED.
2. FOR TYPICAL ROAD SECTIONS SEE SHEET 12.
3. FOR STREET TREE AND STREET LIGHT INFORMATION, SEE SHEETS 14-15.
4. FOR STORM DRAIN INFORMATION, SEE SHEET 19-20.
5. ALL STORM DRAIN IN COMMON OPEN AREAS SHALL BE PRIVATELY OWNED AND MAINTAINED.
6. A PUBLIC SIDEWALK MAINTENANCE, WATER HOUSE CONNECTION, SEWER HOUSE CONNECTION & UTILITY EASEMENT HAS BEEN ADDED TO LOTS WITH FRONT AND/OR SIDE LOT LINES ADJACENT TO A PUBLIC RIGHT-OF-WAY.
7. ALL SIDEWALK IS 4' UNLESS OTHERWISE NOTED.
8. ALL SIDEWALKS THAT END WITH A HANDICAP RAMP MUST MEET HOWARD COUNTY STANDARD R-4.02 (SIDEWALK RAMP TYPE 'B').
9. THERE WILL BE A 10' TRANSITION FROM 4' SIDEWALK TO 5' SIDEWALK ADJACENT TO THE CURB. THE 5' WIDTH IS TO BE MEASURED FROM THE BACK OF CURB.

LEGEND

——— ———	EXISTING GRADE
— — — —	EXISTING GRADE LEFT
- - - - - - - -	EXISTING GRADE RIGHT
———	PROPOSED GRADE @ CENTERLINE

APPROVED: HOWARD COUNTY DEPARTMENT OF PUBLIC WORKS

Chief, Bureau of Highways	Date 5-7-14

APPROVED: HOWARD COUNTY DEPARTMENT OF PLANNING & ZONING

Chief, Division of Land Development	Date 5-21-14
Chief, Development Engineering Division	Date 5-20-14

GLW GUTSCHICK LITTLE & WEBER, P.A.
CIVIL ENGINEERS, LAND SURVEYORS, LAND PLANNERS, LANDSCAPE ARCHITECTS
3909 NATIONAL DRIVE – SUITE 250 – BURTONSVILLE OFFICE PARK
BURTONSVILLE, MARYLAND 20866
TEL: 301-421-4024 BALT: 410-880-1820 DC/VA: 301-989-2524 FAX: 301-421-4186

DATE	REVISION	BY	APP'R.

E:\CADD\DRAWINGS\12001\PLANS BY GLW\FINALS\12001 05-11_SC PROFILES.dwg DES. DEV DRN. JRD CHK. CKG

PREPARED FOR:
MAPLE LAWN FARMS I, LLC
SUITE 300 WOODHOLME CENTER
1829 REISTERSTOWN ROAD
BALTIMORE, MD 21208
ATTN: MARK BENNETT
410-484-8400

PROFESSIONAL CERTIFICATION
I HEREBY CERTIFY THAT THESE PLANS WERE PREPARED OR APPROVED BY ME, AND THAT I AM A DULY LICENSED PROFESSIONAL ENGINEER UNDER THE LAWS OF THE STATE OF MARYLAND, LICENSE NO. 12975
EXPIRATION DATE: MAY 26, 2016
4/24/14

STATE OF MARYLAND
CLAYTON K. GUTSCHICK
No. 12975
PROFESSIONAL ENGINEER

ROAD CONSTRUCTION PROFILES - DAIRY STREET

MAPLE LAWN FARMS
GARDEN DISTRICT - AREA 1
LOTS 1 thru 98, OPEN SPACE LOTS 99 thru 110,
COMMON OPEN AREA LOTS 111 thru 114
and NON-BUILDABLE BULK PARCELS 'X' thru 'Z'

ELECTION DISTRICT No. 5 HOWARD COUNTY, MARYLAND

SCALE	ZONING	G. L. W. FILE No.
AS SHOWN	MXD-3	12001
DATE	TAX MAP – GRID	SHEET
APRIL, 2014	41-21/46-3	10 OF 36

© GLW 2014

F-14-033

L:\CADD\DRAWINGS\12001\PLANS BY GLW\FINALS\12001 05-11_SC PROFILES.dwg, PLOTTED: 4/22/2014 1:00 PM, LAST SAVED: 4/18/2014 4:53 PM, PLOTTED BY: Jennifer R. Dicks

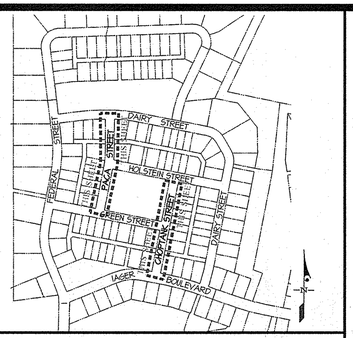

KEY MAP SCALE: 1" = 400'

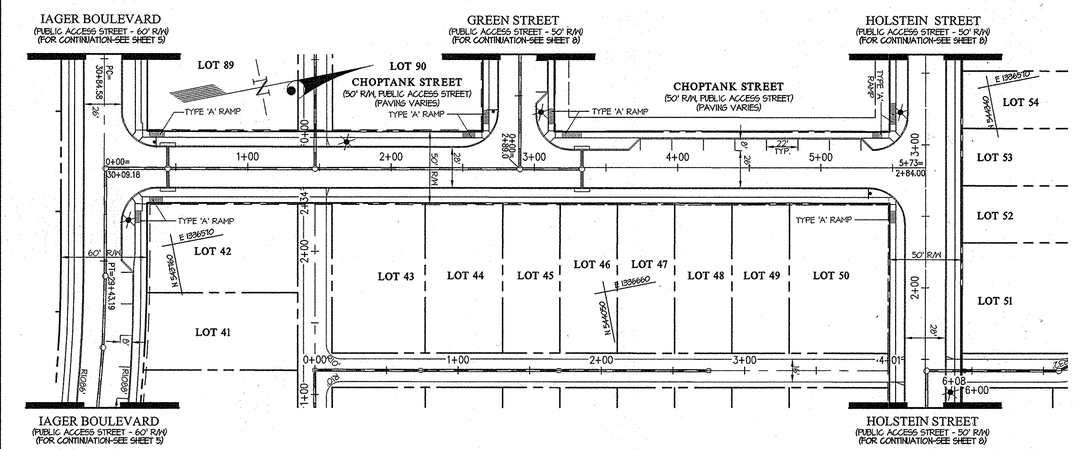

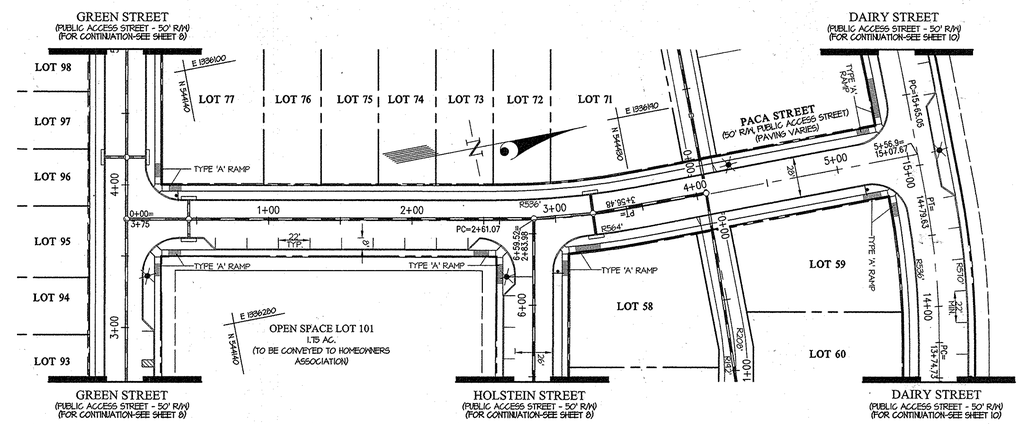

ROAD CONSTRUCTION PLAN VIEW - CHOPTANK STREET & PACA STREET SCALE: 1" = 50'

NOTES:

1. ALL CURB RADII ARE 25' UNLESS OTHERWISE NOTED.
2. FOR TYPICAL ROAD SECTIONS SEE SHEET 12.
3. FOR STREET TREE AND STREET LIGHT INFORMATION, SEE SHEETS 14-15.
4. FOR STORM DRAIN INFORMATION, SEE SHEET 19-20.
5. ALL STORM DRAIN IN COMMON OPEN AREAS SHALL BE PRIVATELY OWNED AND MAINTAINED.
6. A PUBLIC SIDEWALK MAINTENANCE, WATER HOUSE CONNECTION, SEWER HOUSE CONNECTION & UTILITY EASEMENT HAS BEEN ADDED TO LOTS WITH FRONT AND/OR SIDE LOT LINES ADJACENT TO A PUBLIC RIGHT-OF-WAY.
7. ALL SIDEWALK IS 4' UNLESS OTHERWISE NOTED.
8. ALL SIDEWALKS THAT END WITH A HANDICAP RAMP MUST MEET HOWARD COUNTY STANDARD R-4.02 (SIDEWALK RAMP TYPE 'B').
9. THERE WILL BE A 10' TRANSITION FROM 4' SIDEWALK TO 5' SIDEWALK ADJACENT TO THE CURB. THE 5' WIDTH IS TO BE MEASURED FROM THE BACK OF CURB.

LEGEND

- EXISTING GRADE
- EXISTING GRADE LEFT
- EXISTING GRADE RIGHT
- PROPOSED GRADE @ CENTERLINE

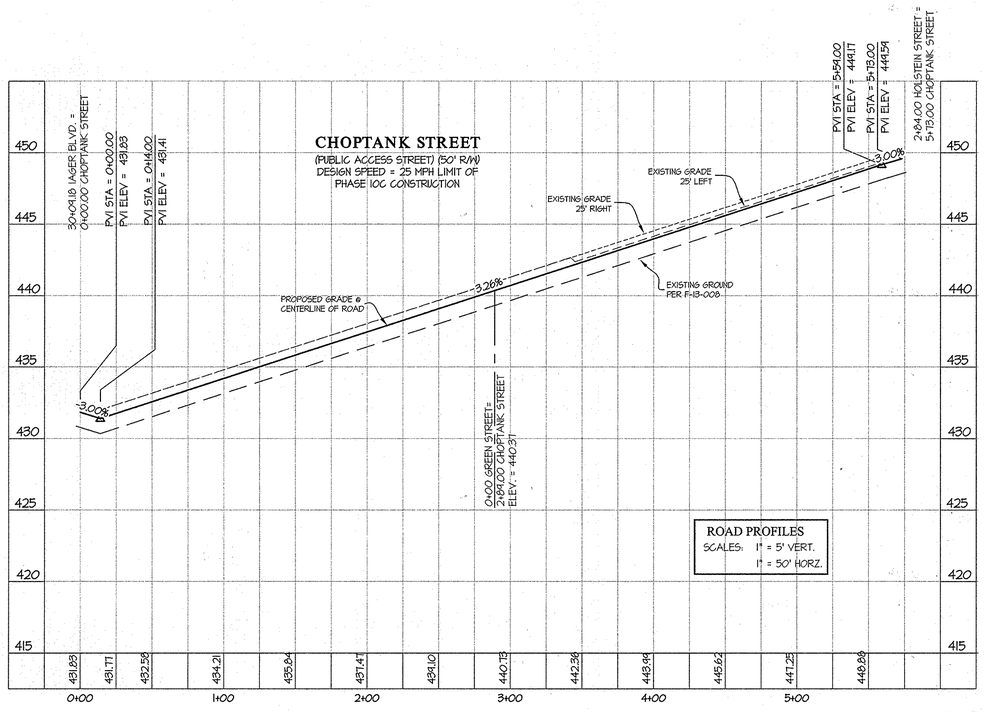

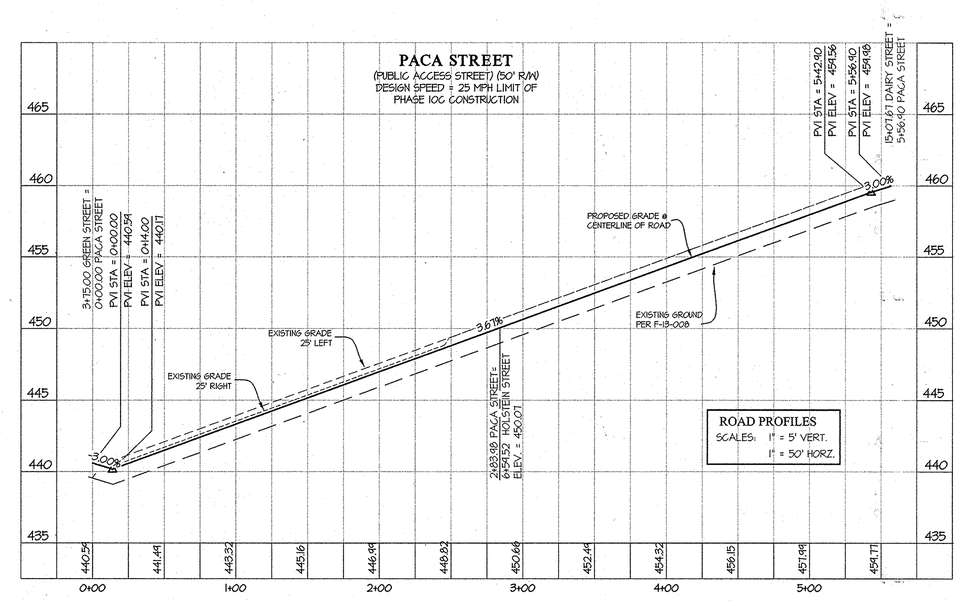

APPROVED: HOWARD COUNTY DEPARTMENT OF PUBLIC WORKS

Chief, Bureau of Highways — Date 5-7-14

APPROVED: HOWARD COUNTY DEPARTMENT OF PLANNING & ZONING

Chief, Division of Land Development — Date 5-21-14

Chief, Development Engineering Division — Date 5-20-14

GLW GUTSCHICK LITTLE & WEBER, P.A.

CIVIL ENGINEERS, LAND SURVEYORS, LAND PLANNERS, LANDSCAPE ARCHITECTS
3909 NATIONAL DRIVE – SUITE 250 – BURTONSVILLE OFFICE PARK
BURTONSVILLE, MARYLAND 20866
TEL: 301-421-4024 BALT: 410-880-1820 DC/VA: 301-989-2524 FAX: 301-421-4186

L:\12001\DRAWINGS\12001\PLANS BY GLW\FINALS\12001 05-11_SC PROFILES.dwg | DES. DEV | DRN. JRD | CHK. CKG

DATE	REVISION	BY	APP'R.

PREPARED FOR:

MAPLE LAWN FARMS I, LLC
SUITE 300 WOODHOLME CENTER
1829 REISTERSTOWN ROAD
BALTIMORE, MD 21208
ATTN: MARK BENNETT
410-484-8400

PROFESSIONAL CERTIFICATION

I HEREBY CERTIFY THAT THESE PLANS WERE PREPARED OR APPROVED BY ME, AND THAT I AM A DULY LICENSED PROFESSIONAL ENGINEER UNDER THE LAWS OF THE STATE OF MARYLAND, LICENSE NO. 12975
EXPIRATION DATE: MAY 26, 2016

4/24/14

STATE OF MARYLAND — JAMES W. GUTSCHICK — No. 12975 — PROFESSIONAL ENGINEER

ROAD CONSTRUCTION PROFILES - CHOPTANK STREET & PACA STREET

MAPLE LAWN FARMS

GARDEN DISTRICT - AREA 1
LOTS 1 thru 98, OPEN SPACE LOTS 99 thru 110,
COMMON OPEN AREA LOTS 111 thru 114
and NON-BUILDABLE BULK PARCELS 'X' thru 'Z'

ELECTION DISTRICT No. 5 — HOWARD COUNTY, MARYLAND

SCALE	ZONING	G. L. W. FILE No.
AS SHOWN	MXD-3	12001
DATE	TAX MAP – GRID	SHEET
APRIL, 2014	41-21/46-3	11 OF 36

© GLW 2014

F-14-033

L:\12001\DRAWINGS\12001\PLANS BY GLW\FINALS\12001 05-11_SC PROFILES.dwg, PLOTTED: 4/22/2014 1:03 PM, LAST SAVED: 4/18/2014 4:53 PM, PLOTTED BY: Jennifer R. Dicks

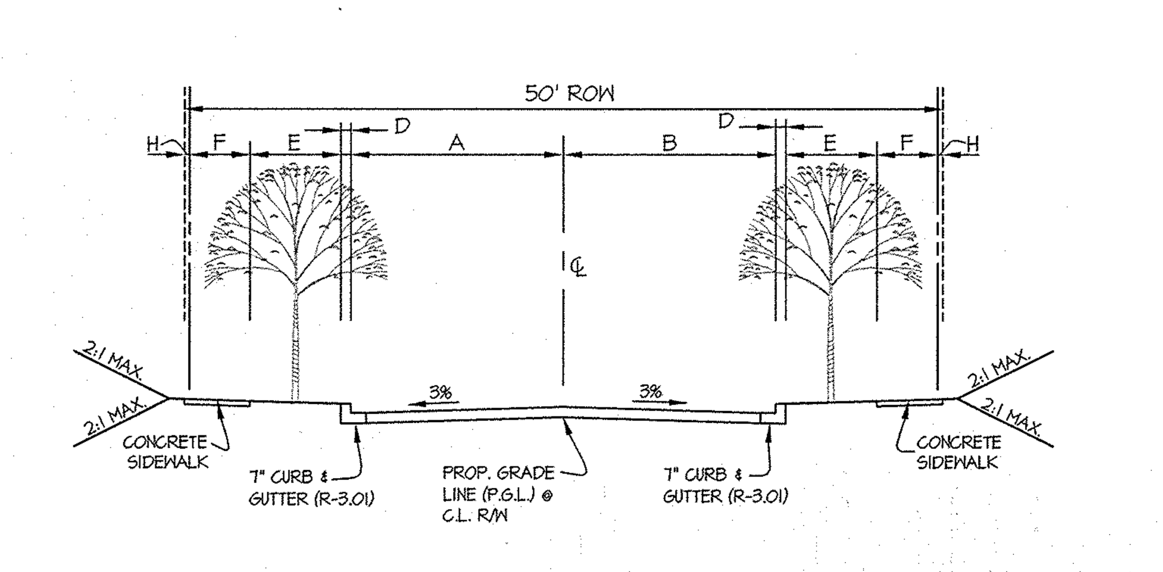

1 TYPICAL SECTION FOR 50' R/W WITH NO PARALLEL PARKING NO SCALE

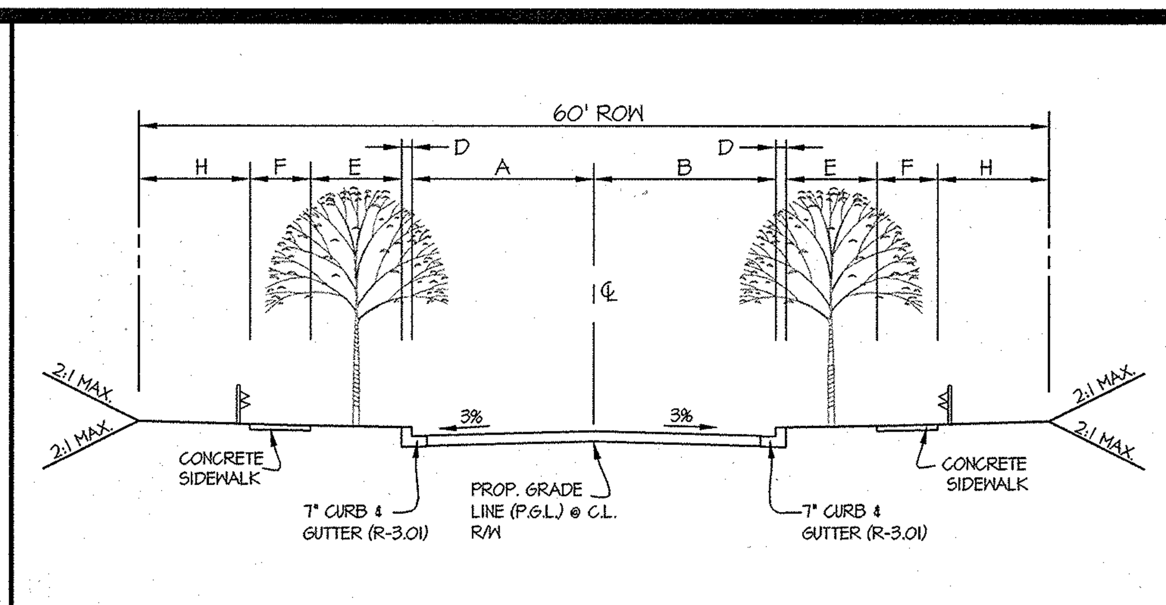

4 TYPICAL SECTION FOR 60' R/W WITH NO PARALLEL PARKING NO SCALE

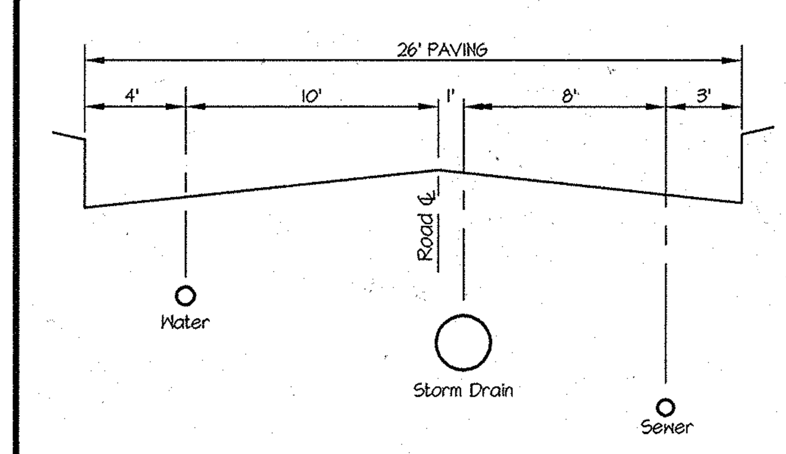

26' PAVING WIDTH

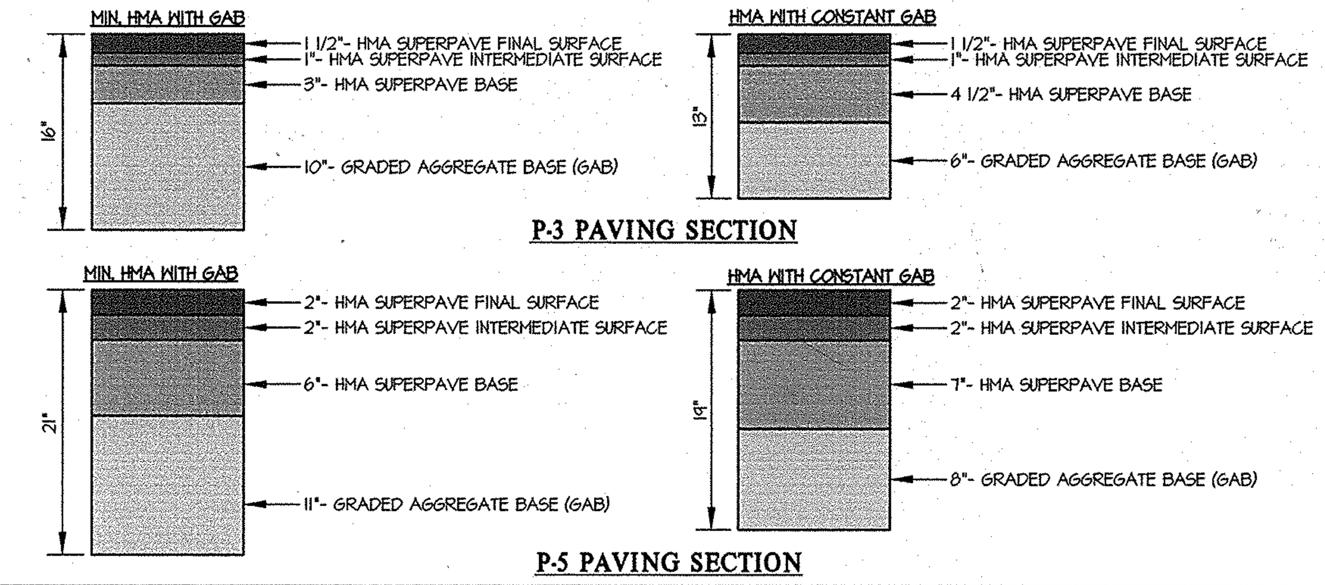

NOTE:
DEPENDING ON THE CBR VALUES OBTAINED IN THE FIELD, THE PAVING SECTIONS MAY BE REVISED, IF APPROVED BY A PROFESSIONAL SOILS ENGINEER. THESE SUBSTITUTIONS MUST ALSO BE APPROVED BY THE HOWARD COUNTY DEPT. OF PUBLIC WORKS.

10 PAVING SECTIONS NO SCALE

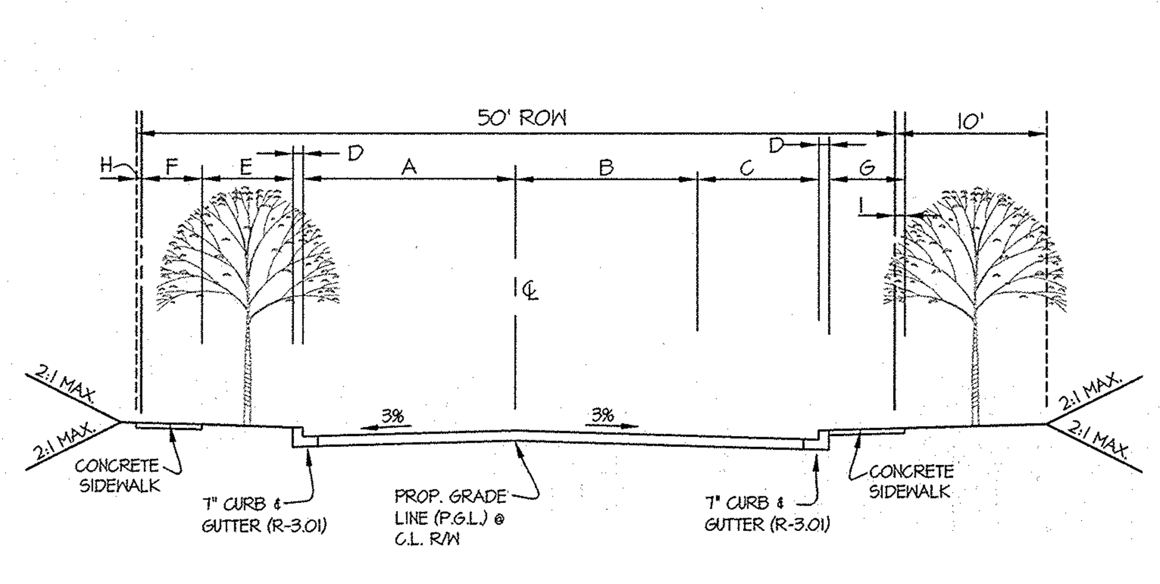

2 TYPICAL SECTION FOR 50' R/W WITH RIGHT PARALLEL PARKING NO SCALE

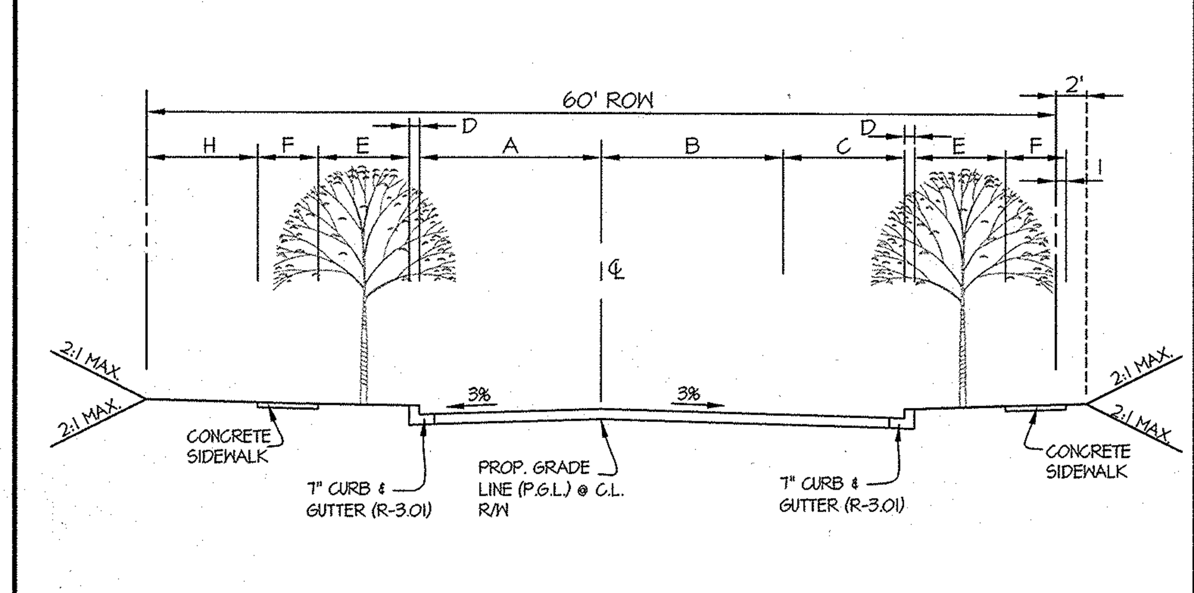

5 TYPICAL SECTION FOR 60' R/W WITH RIGHT PARALLEL PARKING NO SCALE

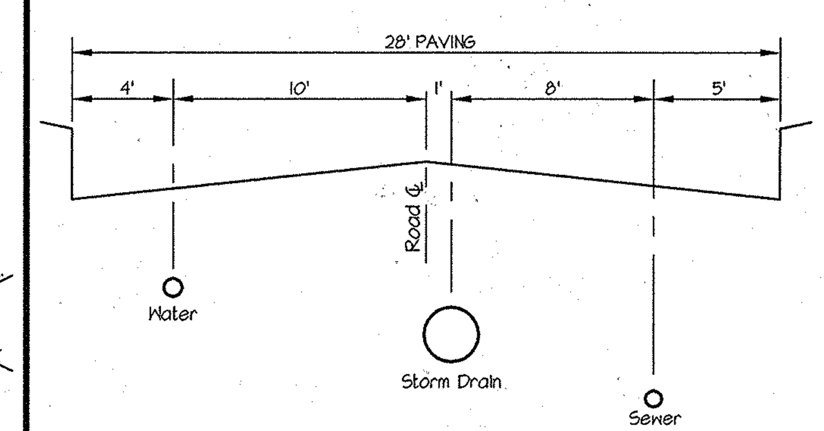

28' PAVING WIDTH

7 TYPICAL UTILITY LOCATIONS SCALE: 1"=6'

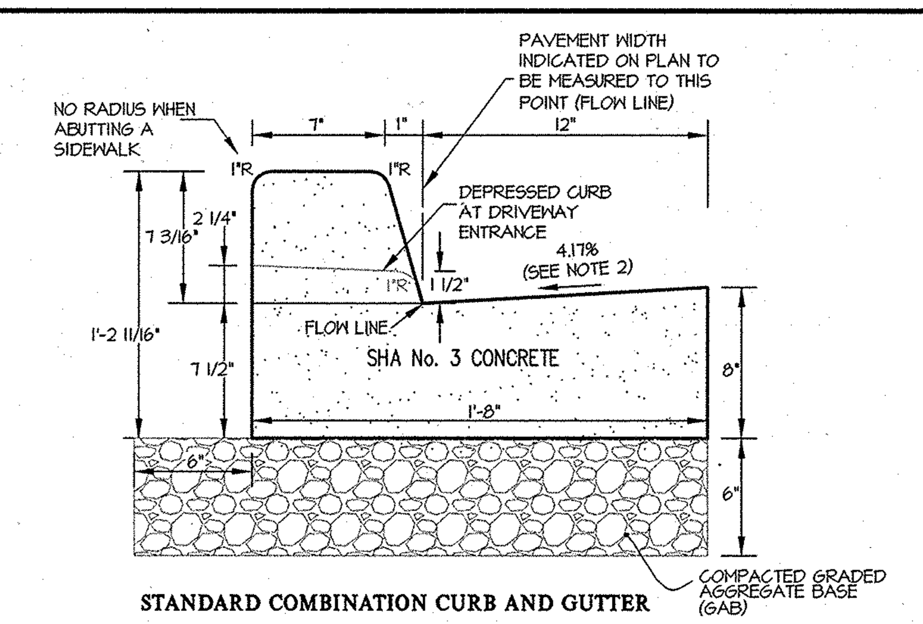

STANDARD COMBINATION CURB AND GUTTER

NOTES:
1. 1. STANDARD 7" COMBINATION CURB AND GUTTER TO BE USED IN ALL PUBLIC RIGHTS OF WAY.
2. A REVERSE GUTTER PAN SHALL HAVE A GUTTER SLOPE OF 4.17% AWAY FROM THE FLOW LINE, AND SHALL NOT BE USED WHERE THIS CREATES A HAZARDOUS CONDITION.
3. GUTTER PAN AT THE MEDIAN EDGE OF INTERMEDIATE ARTERIALS OR THE HIGH SIDE OF SUPERELEVATED SECTIONS SHALL BE SLOPED AT THE SAME RATE AND IN THE SAME DIRECTION AS THE PAVEMENT, MATCH PAVEMENT CROSS SLOPE WHEN CURB IS LOCATED ON THE LOW SIDE OF SUPERLEVATED SECTION AND THE RATE OF SUPERELEVATION IS GREATER THAN 3% FOR MODIFIED CURB AND GUTTER.
4. A MINIMUM OF TWO (2) FEET OF COMPACTED STABILIZED EARTH, OR EQUIVALENT, SHALL SUPPORT THE ENTIRE BACK OF CURB.
5. POSITIVE DRAINAGE SHALL BE PROVIDED BOTH BEHIND THE CURB AND ALONG THE GUTTER AND FLOW LINE.
6. 50' MAX. BETWEEN EXPANSION JOINTS & 10' MAX. BETWEEN CONTROL JOINTS.

REF. HOWARD COUNTY DPW DETAILS R-3.01 & R-9.01

11 7" CONCRETE CURB AND GUTTER (STANDARD AND REVERSE) NO SCALE

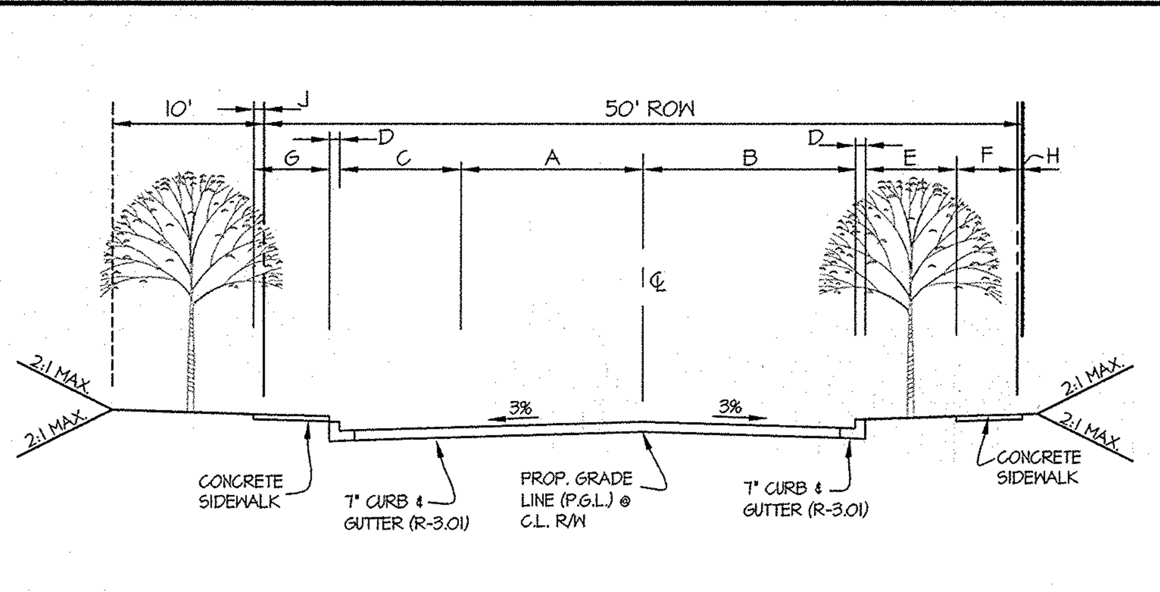

3 TYPICAL SECTION FOR 50' R/W WITH LEFT PARALLEL PARKING NO SCALE

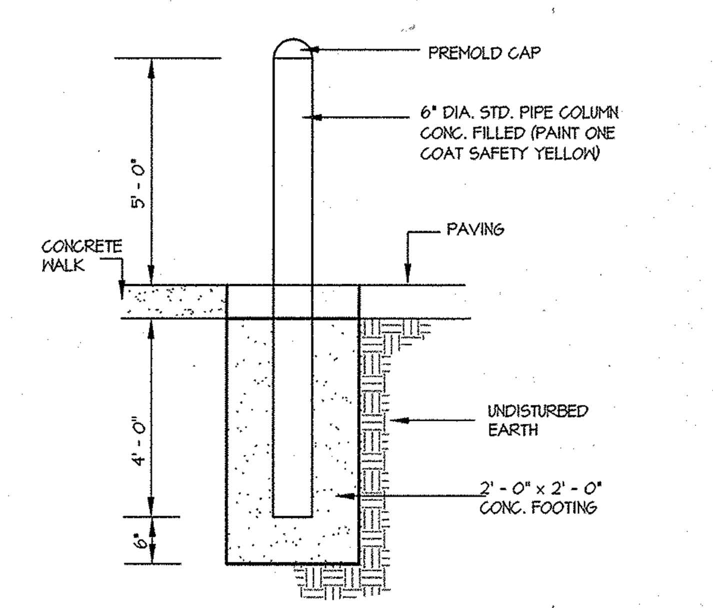

6 BOLLARD DETAIL NO SCALE

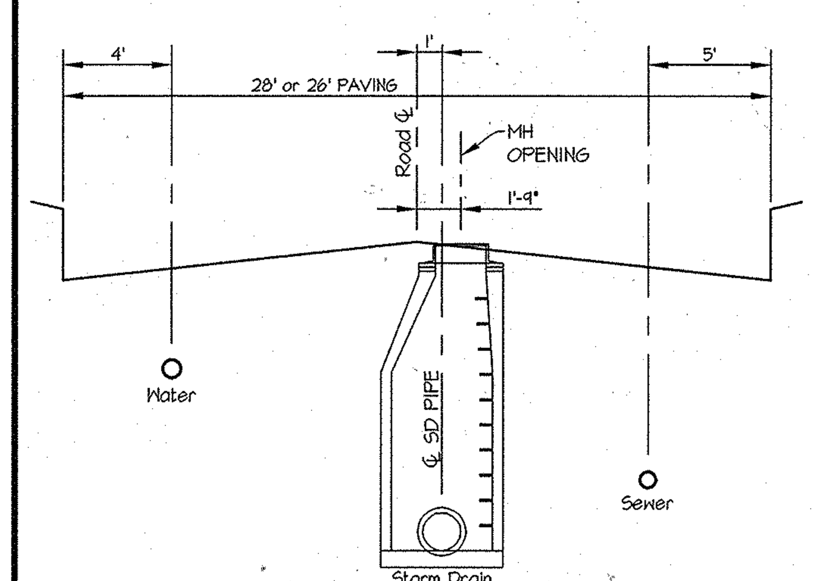

8 DETAIL FOR SETTING STORM DRAIN MANHOLES IN ROADS SCALE: 1"=6'

ROAD INFORMATION

ROAD NAME	STATION	CLASSIFICATION	DESIGN SPEED	A	B	C	D	E	F	G	H	I	J	R/W	PAVING SECTION	SECTION
IAGER BOULEVARD	26+64.6 TO 27+75	MINOR COLLECTOR	25 MPH	12'	12'	-	8"	6'	4'	-	7'-4"	-	-	60'	P-5	4
IAGER BOULEVARD	27+75 TO 29+65	MINOR COLLECTOR	25 MPH	12'	12'	8'	8"	6'	4'	-	7'-4"	8"	-	60'	P-5	5
IAGER BOULEVARD	29+65 TO 31+46	MINOR COLLECTOR	25 MPH	12'	12'	-	8"	6'	4'	-	7'-4"	-	-	60'	P-5	4
IAGER BOULEVARD	31+46 TO 35+46.88	MINOR COLLECTOR	25 MPH	12'	12'	8'	8"	6'	4'	-	7'-4"	8"	-	60'	P-5	5
CHOPTANK STREET	00+00 TO 03+44	ACCESS STREET	25 MPH	14'	14'	-	8"	6'	4'	-	4"	-	-	50'	P-3	1
CHOPTANK STREET	03+44 TO 05+73	ACCESS STREET	25 MPH	12'	14'	8'	8"	6'	4'	5'	4"	-	8"	50'	P-3	3
GREEN STREET	00+00 TO 03+31	ACCESS STREET	25 MPH	14'	12'	8'	8"	6'	4'	5'	-	8"	-	50'	P-3	2
GREEN STREET	03+31 TO 06+59	ACCESS STREET	25 MPH	14'	14'	-	8"	6'	4'	-	4"	-	-	50'	P-3	1
HOLSTEIN STREET	00+00 TO 03+29	ACCESS STREET	25 MPH	14'	14'	-	8"	6'	4'	-	4"	-	-	50'	P-3	1
HOLSTEIN STREET	03+29 TO 06+59.52	ACCESS STREET	25 MPH	12'	14'	8'	8"	6'	4'	5'	4"	-	8"	50'	P-3	3
PACA STREET	00+00 TO 02+47	ACCESS STREET	25 MPH	14'	12'	8'	8"	6'	4'	5'	-	8"	-	50'	P-3	2
PACA STREET	02+47 TO 05+56.9	ACCESS STREET	25 MPH	14'	14'	-	8"	6'	4'	-	4"	-	-	50'	P-3	1
DAIRY STREET	00+00 TO 11+83	ACCESS STREET	25 MPH	14'	14'	-	8"	6'	4'	-	4"	-	-	50'	P-3	1
DAIRY STREET	11+83 TO 18+19.56	ACCESS STREET	25 MPH	14'	12'	8'	8"	6'	4'	5'	-	8"	-	50'	P-3	2
FEDERAL STREET	18+52 TO 31+65	ACCESS STREET	25 MPH	14'	14'	-	8"	6'	4'	-	4"	-	-	50'	P-3	1

NOTE: ALL TYPICAL SECTIONS HAVE BEEN SHOWN LOOKING UP STATION

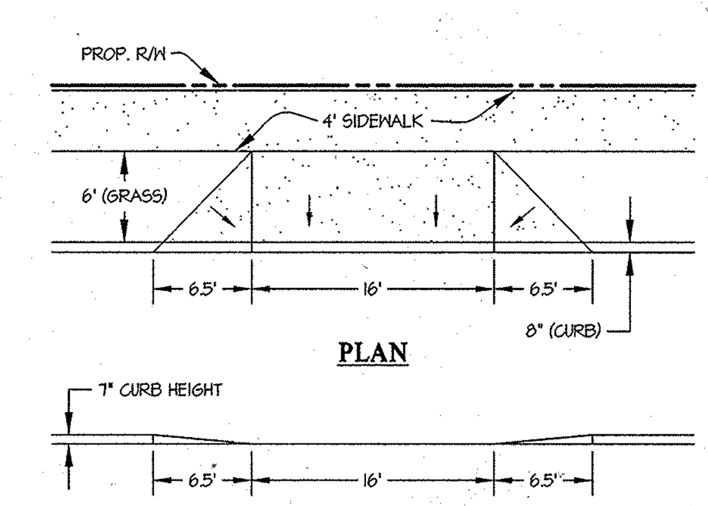

PLAN

PROFILE ALONG CURB

9 TYPICAL ALLEY ENTRANCE DETAIL NO SCALE

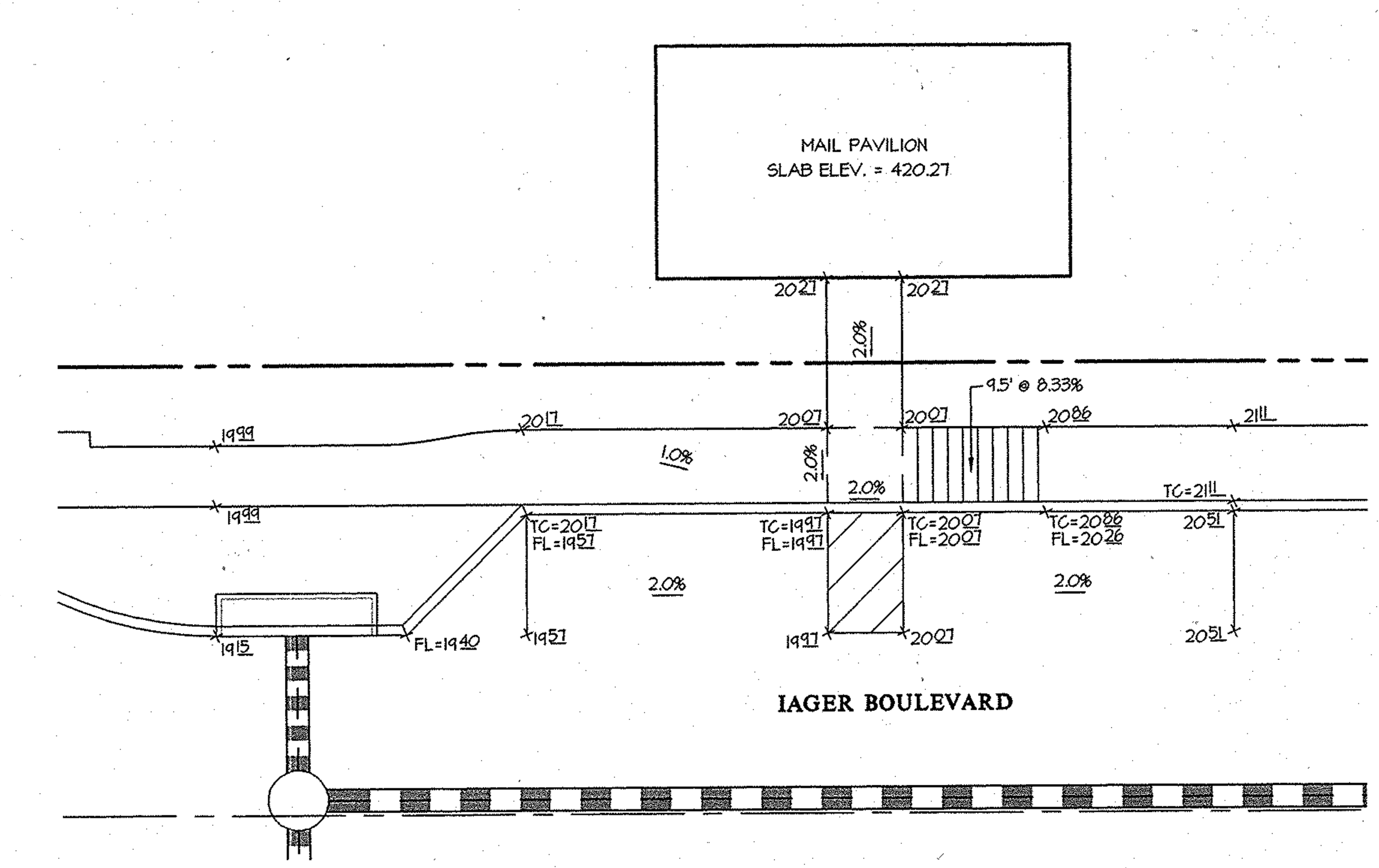

12 MAIL PAVILION 1" = 10'

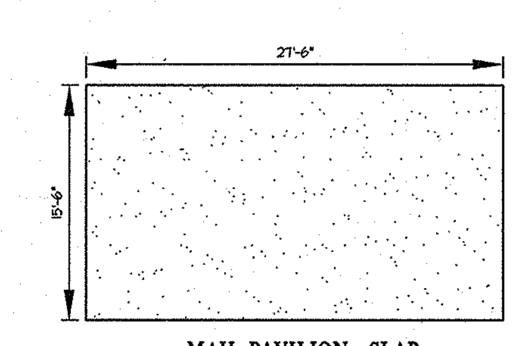

MAIL PAVILION - SLAB

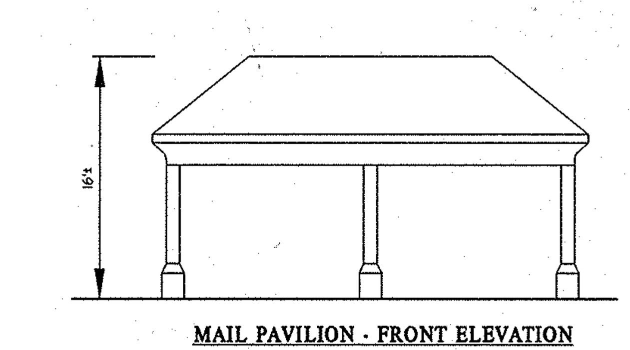

MAIL PAVILION - FRONT ELEVATION

NOTES:
1. THE PAVILION IS EXEMPT FROM THE 10' BRL IN ACCORDANCE WITH THE COMPREHENSIVE SKETCH PLAN.
2. MAILBOX SLAB SHALL BE 3500 PSI 4" CONCRETE SLAB ON GRADE REINFORCED WITH 6"X6" - W 2.9/W 2.9 WELDED WIRE FABRIC POURED OVER 4" OF POROUS FILL.

13 MAIL PAVILION DETAILS SCALE: 1" = 10'

APPROVED: HOWARD COUNTY DEPARTMENT OF PUBLIC WORKS

Chief, Bureau of Highways — Date: 5-7-14

APPROVED: HOWARD COUNTY DEPARTMENT OF PLANNING & ZONING

Chief, Division of Land Development — Date: 5-21-14

Chief, Development Engineering Division — Date: 5.20.14

GLW GUTSCHICK LITTLE & WEBER, P.A.
CIVIL ENGINEERS, LAND SURVEYORS, LAND PLANNERS, LANDSCAPE ARCHITECTS
3909 NATIONAL DRIVE - SUITE 250 - BURTONSVILLE OFFICE PARK
BURTONSVILLE, MARYLAND 20866
TEL: 301-421-4024 BALT: 410-880-1820 DC/VA: 301-989-2524 FAX: 301-421-4186

L:\CADD\DRAWINGS\12001\PLANS BY GLW\FINALS\12001 12_SG DET.dwg | DES. DEV | DRN. GT | CHK. CKG

DATE	REVISION	BY	APP'R.

PREPARED FOR:
MAPLE LAWN FARMS I, LLC
SUITE 300 WOODHOLME CENTER
1829 REISTERSTOWN ROAD
BALTIMORE, MD 21208
ATTN: MARK BENNETT
410-484-8400

PROFESSIONAL CERTIFICATION
I HEREBY CERTIFY THAT THESE PLANS WERE PREPARED OR APPROVED BY ME, AND THAT I AM A DULY LICENSED PROFESSIONAL ENGINEER UNDER THE LAWS OF THE STATE OF MARYLAND, LICENSE NO. 12975, EXPIRATION DATE: MAY 26, 2016
4/24/14

STATE OF MARYLAND · CARLTON K. GUTSCHICK · PROFESSIONAL ENGINEER

ROAD CONSTRUCTION DETAILS

MAPLE LAWN FARMS

GARDEN DISTRICT - AREA 1
LOTS 1 thru 98, OPEN SPACE LOTS 99 thru 110,
COMMON OPEN AREA LOTS 111 thru 114
and NON-BUILDABLE BULK PARCELS 'X' thru 'Z'

ELECTION DISTRICT No. 5 — HOWARD COUNTY, MARYLAND

SCALE	ZONING	G. L. W. FILE No.
AS SHOWN	MXD-3	12001
DATE	TAX MAP - GRID	SHEET
APRIL, 2014	41-21/46-3	12 OF 36

L:\CADD\DRAWINGS\12001\PLANS BY GLW\FINALS\12001 12_SG DET.dwg, PLOTTED: 4/22/2014 1:06 PM, LAST SAVED: 4/17/2014 7:50 AM, PLOTTED BY: Jennifer R. Dicks

© GLW 2014

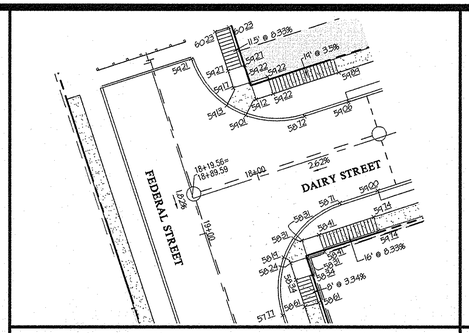

INTERSECTION 'A'

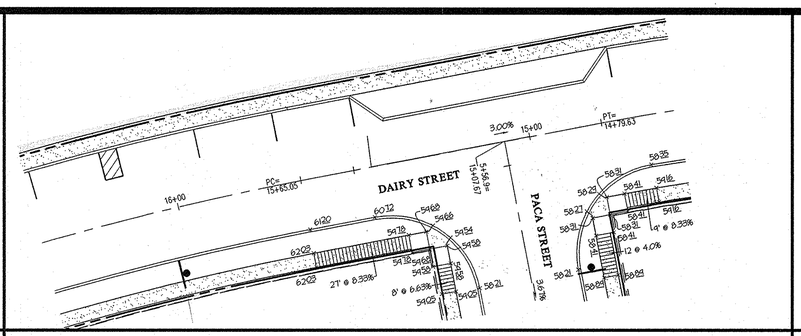

INTERSECTION 'B'

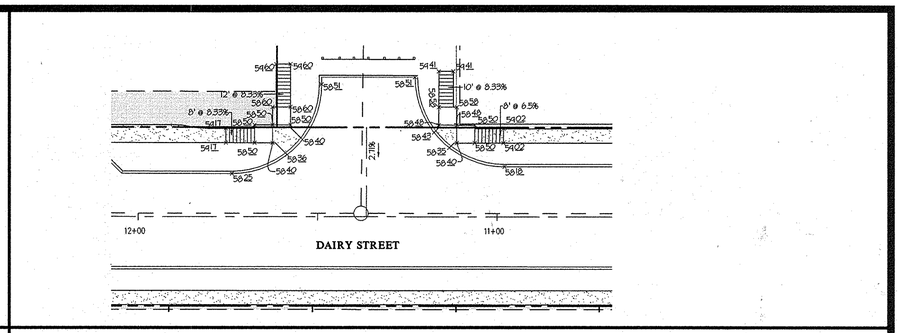

INTERSECTION 'C'

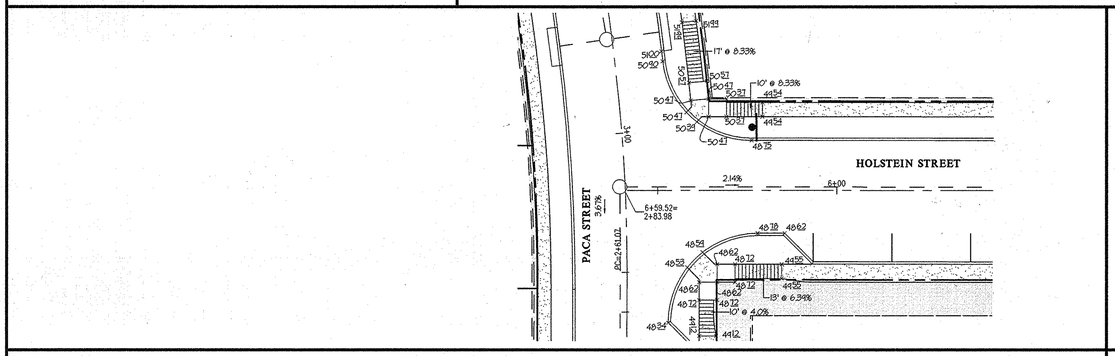

INTERSECTION 'D'

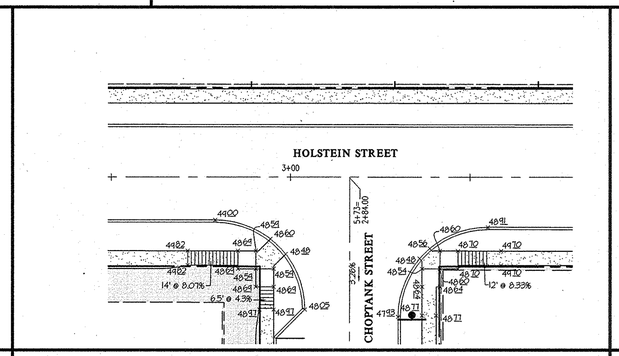

INTERSECTION 'E'

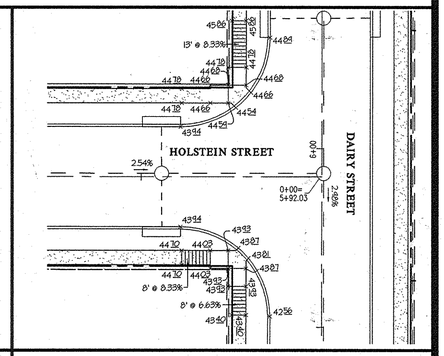

INTERSECTION 'F'

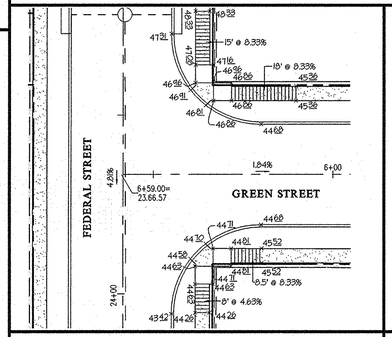

INTERSECTION 'G'

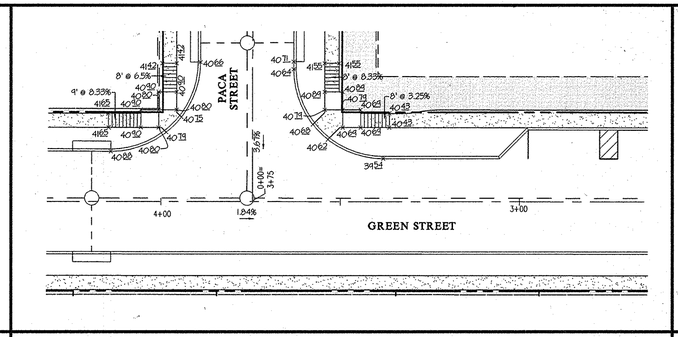

INTERSECTION 'H'

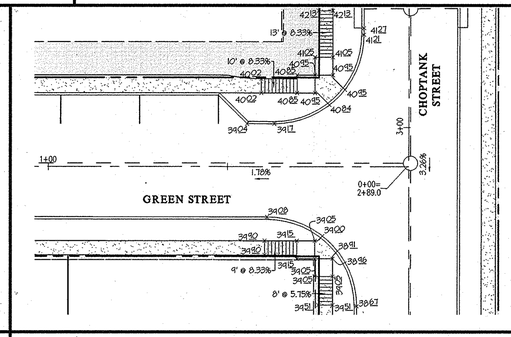

INTERSECTION 'I'

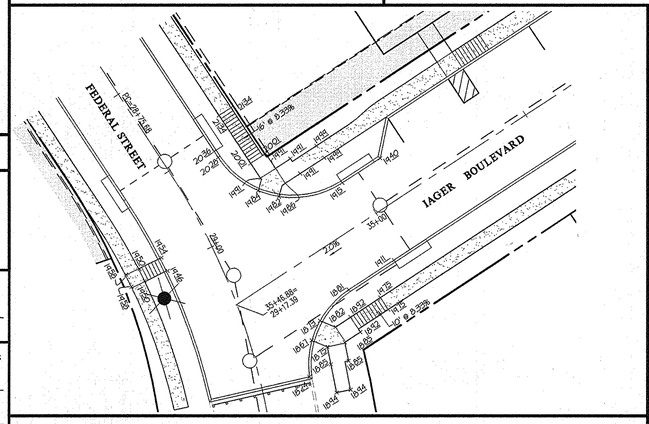

INTERSECTION 'J'

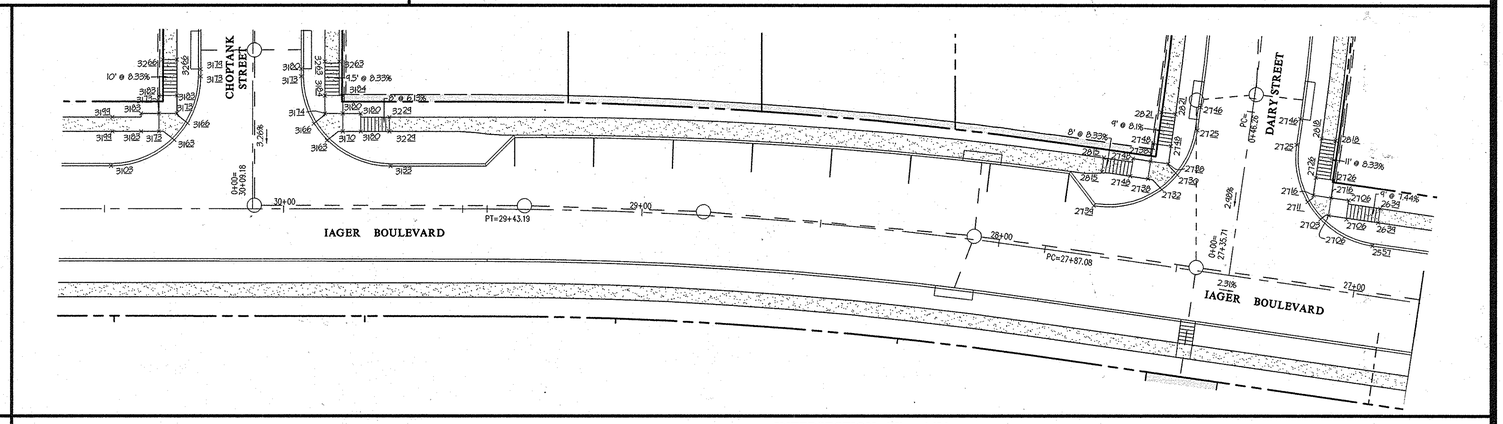

INTERSECTION 'K' and 'L'

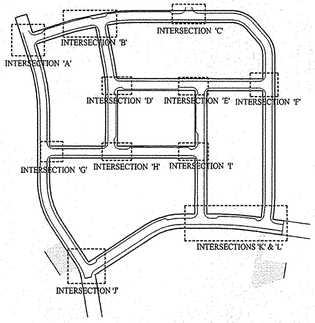

KEY MAP SCALE: 1" = 300'

GRAPHIC SCALE

0 10 20 40 80

APPROVED: HOWARD COUNTY DEPARTMENT OF PUBLIC WORKS

Chief, Bureau of Highways — Date 5-7-14

APPROVED: HOWARD COUNTY DEPARTMENT OF PLANNING & ZONING

Chief, Division of Land Development — Date 5-21-14

Chief, Development Engineering Division — Date 5-20-14

GLW GUTSCHICK LITTLE & WEBER, P.A.

CIVIL ENGINEERS, LAND SURVEYORS, LAND PLANNERS, LANDSCAPE ARCHITECTS
3909 NATIONAL DRIVE – SUITE 250 – BURTONSVILLE OFFICE PARK
BURTONSVILLE, MARYLAND 20866
TEL: 301-421-4024 BALT: 410-880-1820 DC/VA: 301-989-2524 FAX: 301-421-4186

L:\CADD\DRAWINGS\12001\PLANS BY GLW\FINALS\12001 13_ADA.dwg | DES. DEV | DRN. KLP | CHK. CKG

DATE	REVISION	BY	APP'R.

PREPARED FOR:

MAPLE LAWN FARMS I, LLC
SUITE 300 WOODHOLME CENTER
1829 REISTERSTOWN ROAD
BALTIMORE, MD 21208
ATTN: MARK BENNETT
410-484-8400

PROFESSIONAL CERTIFICATION

I HEREBY CERTIFY THAT THESE PLANS WERE PREPARED OR APPROVED BY ME, AND THAT I AM A DULY LICENSED PROFESSIONAL ENGINEER UNDER THE LAWS OF THE STATE OF MARYLAND, LICENSE NO. 12975.

EXPIRATION DATE: MAY 26, 2016

4/24/14

STATE OF MARYLAND — SALVATORE A. GUTSCHICK — No. 12975 — PROFESSIONAL ENGINEER

ADA COMPLIANT SIDEWALK RAMPS

MAPLE LAWN FARMS

GARDEN DISTRICT - AREA 1
LOTS 1 thru 98, OPEN SPACE LOTS 99 thru 110,
COMMON OPEN AREA LOTS 111 thru 114
and NON-BUILDABLE BULK PARCELS 'X' thru 'Z'

ELECTION DISTRICT No. 5 — HOWARD COUNTY, MARYLAND

SCALE	ZONING	G. L. W. FILE No.
1" = 20'	MXD-3	12001
DATE	TAX MAP – GRID	SHEET
APRIL, 2014	41-21/46-3	13 OF 36

L:\CADD\DRAWINGS\12001\PLANS BY GLW\FINALS\12001 13_ADA.dwg
PLOTTED: 4/22/2014 1:09 PM, LAST SAVED: 4/16/2014 5:08 PM, PLOTTED BY: Jennifer R. Dicks

© GLW 2014

F-14-033

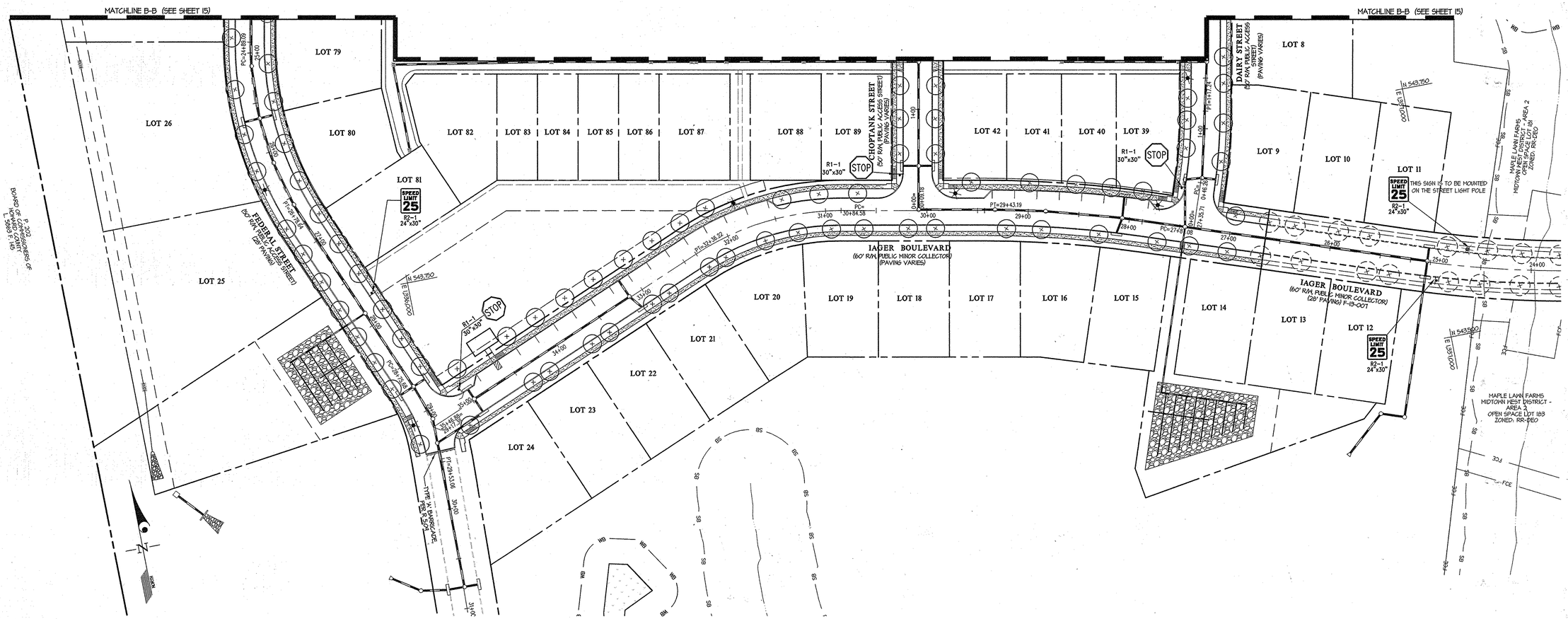

LEGEND

100 WATT HPS VAPOR (ACORN POST TOP)

STREET TREE PER F-13-007

PROPOSED STREET TREE

NOTES:

1. STREET TREES SHALL BE PLACED A MINIMUM OF 15' FROM ALL SIGNS AND INTERSECTIONS WHEN PLANTED BETWEEN THE SIDEWALK AND CURB, AND BE LOCATED WITH CONSIDERATION TO UNDERGROUND UTILITIES AND STRUCTURES. STREET TREES MAY NOT BE PLANTED WITHIN 5' OF A DRAIN INLET STRUCTURE, WITHIN 5' OF AN OPEN SPACE ACCESS STRIP, AND WITHIN 10' OF A DRIVEWAY. FINAL PLACEMENT OF THE STREET TREES WILL BE DETERMINED IN THE FIELD BY THE DEPARTMENT OF PUBLIC WORKS TO BEST ACCOMMODATE THESE SETBACKS WHILE PROVIDING THE MAXIMUM NUMBER OF STREET TREES REQUIRED.
2. SIDEWALKS AND STREET TREES ALONG PRIVATE ACCESS ROADS WILL BE PROVIDED AT SITE DEVELOPMENT PLAN STAGE.
3. ALL PAVEMENT MARKINGS AND SIGN LOCATIONS SHALL BE APPROVED BY HOWARD COUNTY TRAFFIC DIVISION PRIOR TO ANY INSTALLATION (410-313-5752).

GRAPHIC SCALE

0 25 50 100

APPROVED: HOWARD COUNTY DEPARTMENT OF PUBLIC WORKS

Chief, Bureau of Highways — Date 5-7-14

APPROVED: HOWARD COUNTY DEPARTMENT OF PLANNING & ZONING

Chief, Division of Land Development — Date 5-21-14

Chief, Development Engineering Division — Date 5.20.14

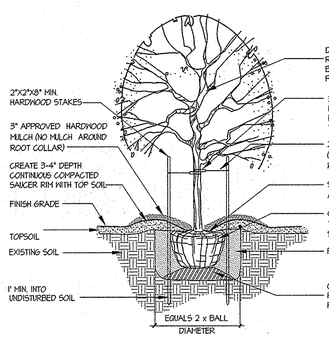

NOTE: ALL SUPPORTING DEVICES (STAKES, WIRES, ETC.) SHALL BE REMOVED AFTER 2 GROWING SEASONS.

DECIDUOUS TREE PLANTING DETAIL
FOR PLANTING MATERIAL UP TO 3 1/2" CALIPER — NTS

STREET TREE REQUIREMENTS

ROAD	LENGTH OF CURB (L.F.)	# OF TREES REQUIRED	# OF TREES PROVIDED
IAGER BOULEVARD	1,552'	34	34
CHOPTANK STREET	983'	25	25
GREEN STREET	1,047'	26	26
HOLSTEIN STREET	1,051'	26	26
PAGA STREET	843'	21	21
DAIRY STREET	3,244'	81	81
FEDERAL STREET	1,851'	44	44
	TOTAL	267	267

SYMBOL	NAME (BOTANICAL/COMMON)	SIZE	REMARKS
×	ACER SACHARUM / GREEN MOUNTAIN SUGAR MAPLE	2 1/2" cal.	B & B FULL HEADS

MINIMUM TREE QUANTITIES AND PREFERRED SPACING ARE AS FOLLOWS (PER S-06-16):

ALL STREETS — 1 TREE PER 40 LINEAR FEET, BOTH SIDES.
PRIVATE ALLEYS — NO TREES REQUIRED

THESE ARE ONLY MINIMUM STANDARDS. WHILE TREES SHOULD BE PLACED TO ALIGN WHERE POSSIBLE WITH LOT LINES AND DEMISING WALLS OF UNITS SO AS TO AVOID BLOCKING THE FRONTS AND/OR DOORS AND WINDOWS OF UNITS, SPACING REQUIREMENTS WITH RESPECT TO STREET LIGHTS AND UTILITIES MUST BE SATISFIED.

STREET LIGHT SCHEDULE

LOCATION		
℄ STA. 21+74.26	IAGER BOULEVARD	18.50' RT.
℄ STA. 24+72.00	IAGER BOULEVARD	17.00' RT.
℄ STA. 31+83.00	IAGER BOULEVARD	27.83' RT.
℄ STA. 0+38.54	GREEN STREET	18.00' RT.
℄ STA. 5+36.12	GREEN STREET	17.50' RT.
℄ STA. 5+04.00	GREEN STREET	17.50' RT.
℄ STA. 1+27.00	HOLSTEIN STREET	17.50' RT.
℄ STA. 3+22.73	HOLSTEIN STREET	17.50' LT.
℄ STA. 6+14.78	HOLSTEIN STREET	18.00' LT.
℄ STA. 4+25.76	PAGA STREET	18.00' LT.
℄ STA. 1+50.00	DAIRY STREET	17.50' LT.
℄ STA. 3+75.00	DAIRY STREET	17.50' LT.
℄ STA. 5+53.05	DAIRY STREET	17.50' LT.
℄ STA. 7+47.53	DAIRY STREET	17.50' RT.
℄ STA. 9+10.74	DAIRY STREET	17.50' RT.
℄ STA. 11+73.51	DAIRY STREET	17.50' RT.
℄ STA. 15+07.62	DAIRY STREET	18.00' RT.
℄ STA. 24+08.00	FEDERAL STREET	17.50' RT.
℄ STA. 26+32.00	FEDERAL STREET	17.50' RT.
℄ STA. 29+55.00	FEDERAL STREET	17.50' RT.
℄ STA. 21+40.01	FEDERAL STREET	17.50' LT.
℄ STA. 19+86.01	FEDERAL STREET	17.50' RT.
℄ STA. 16+41.00	CHOPTANK STREET	17.50' LT.

ALL STREET LIGHTS ARE 100 WATT HPS VAPOR WITH AN ACORN POST TOP ON A 12' BLACK FIBERGLASS POLE

GLW GUTSCHICK LITTLE & WEBER, P.A.
CIVIL ENGINEERS, LAND SURVEYORS, LAND PLANNERS, LANDSCAPE ARCHITECTS
3909 NATIONAL DRIVE – SUITE 250 – BURTONSVILLE OFFICE PARK
BURTONSVILLE, MARYLAND 20866
TEL: 301-421-4024 BALT: 410-880-1820 DC/VA: 301-989-2524 FAX: 301-421-4186

L:\CADD\DRAWINGS\12001\PLANS BY GLW\FINALS\12001 14-15_SSTL.dwg | DES. DEV | DRN. KLP | CHK. CKG

DATE	REVISION	BY	APP'R.

PREPARED FOR:
MAPLE LAWN FARMS I, LLC
SUITE 300 WOODHOLME CENTER
1829 REISTERSTOWN ROAD
BALTIMORE, MD 21208
ATTN: MARK BENNETT
410-484-8400

PROFESSIONAL CERTIFICATION

I HEREBY CERTIFY THAT THESE PLANS WERE PREPARED OR APPROVED BY ME, AND THAT I AM A DULY LICENSED PROFESSIONAL ENGINEER UNDER THE LAWS OF THE STATE OF MARYLAND, LICENSE NO. 12975
EXPIRATION DATE: MAY 26, 2016

4/22/14

STATE OF MARYLAND — CHRISTOPHER L. KIDWELL — No. 12975 — PROFESSIONAL ENGINEER

SIGNING, STREET TREE and LIGHTING PLAN

MAPLE LAWN FARMS

GARDEN DISTRICT - AREA 1
LOTS 1 thru 98, OPEN SPACE LOTS 99 thru 110,
COMMON OPEN AREA LOTS 111 thru 114
and NON-BUILDABLE BULK PARCELS 'X' thru 'Z'

ELECTION DISTRICT No. 5 — HOWARD COUNTY, MARYLAND

SCALE	ZONING	G. L. W. FILE No.
1" = 50'	MXD-3	12001
DATE	TAX MAP – GRID	SHEET
APRIL, 2014	41-21/46-3	14 OF 36

F-14-033

© GLW 2014

L:\CADD\DRAWINGS\12001\PLANS BY GLW\FINALS\12001 14-15_SSTL.dwg, PLOTTED: 4/22/2014 1:12 PM, LAST SAVED: 4/16/2014 5:16 PM, PLOTTED BY: Jennifer R. Dicks

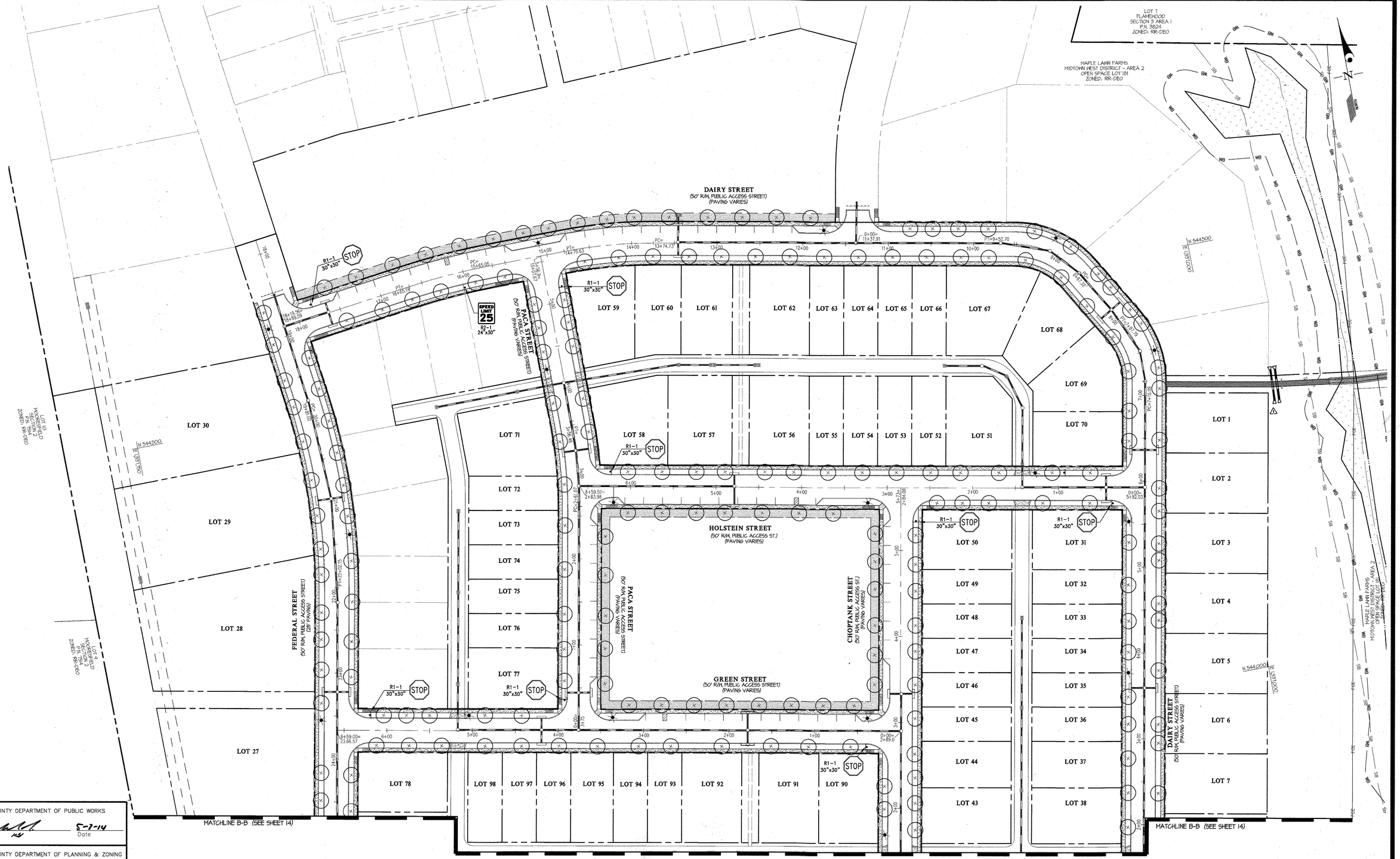

APPROVED: HOWARD COUNTY DEPARTMENT OF PUBLIC WORKS

Chief, Bureau of Highways — Date 5-7-14

APPROVED: HOWARD COUNTY DEPARTMENT OF PLANNING & ZONING

Chief, Division of Land Development — Date 5-21-14

Chief, Development Engineering Division — Date 5.20.14

GLW GUTSCHICK LITTLE & WEBER, P.A.

CIVIL ENGINEERS, LAND SURVEYORS, LAND PLANNERS, LANDSCAPE ARCHITECTS
3909 NATIONAL DRIVE – SUITE 250 – BURTONSVILLE OFFICE PARK
BURTONSVILLE, MARYLAND 20866
TEL: 301-421-4024 BALT: 410-880-1820 DC/VA: 301-989-2524 FAX: 301-421-4186

L:\CADD\DRAWINGS\12001\PLANS BY GLW\FINALS\12001 14-15_SSTL.dwg | DES. DEV | DRN. KLP | CHK. CKG

DATE	REVISION	BY	APP'R.
2016-08-09	⚠1 ADDED OPEN SPACE CULVERT	HKJ	DEV

PREPARED FOR:

MAPLE LAWN FARMS I, LLC
SUITE 300 WOODHOLME CENTER
1829 REISTERSTOWN ROAD
BALTIMORE, MD 21208
ATTN: MARK BENNETT
410-484-8400

PROFESSIONAL CERTIFICATION

I HEREBY CERTIFY THAT THESE PLANS WERE PREPARED OR APPROVED BY ME, AND THAT I AM A DULY LICENSED PROFESSIONAL ENGINEER UNDER THE LAWS OF THE STATE OF MARYLAND, LICENSE NO. 12975
EXPIRATION DATE: MAY 26, 2016

STATE OF MARYLAND — CARLTON K. GIPPENSCHOLD — No. 12975 — PROFESSIONAL ENGINEER

4/24/14

SIGNING, STREET TREE and LIGHTING PLAN

MAPLE LAWN FARMS

GARDEN DISTRICT - AREA 1
LOTS 1 thru 98, OPEN SPACE LOTS 99 thru 110,
COMMON OPEN AREA LOTS 111 thru 114
and NON-BUILDABLE BULK PARCELS 'X' thru 'Z'

ELECTION DISTRICT No. 5 — HOWARD COUNTY, MARYLAND

SCALE	ZONING	G. L. W. FILE No.
1" = 50'	MXD-3	12001
DATE	TAX MAP – GRID	SHEET
APRIL, 2014	41-21/46-3	15 OF 36

L:\CADD\DRAWINGS\12001\PLANS BY GLW\FINALS\12001 14-15_SSTL.dwg, PLOTTED: 4/22/2014 1:13 PM, LAST SAVED: 4/18/2014 5:16 PM, PLOTTED BY: Jennifer R. Dicks

© GLW 2014

F-14-033

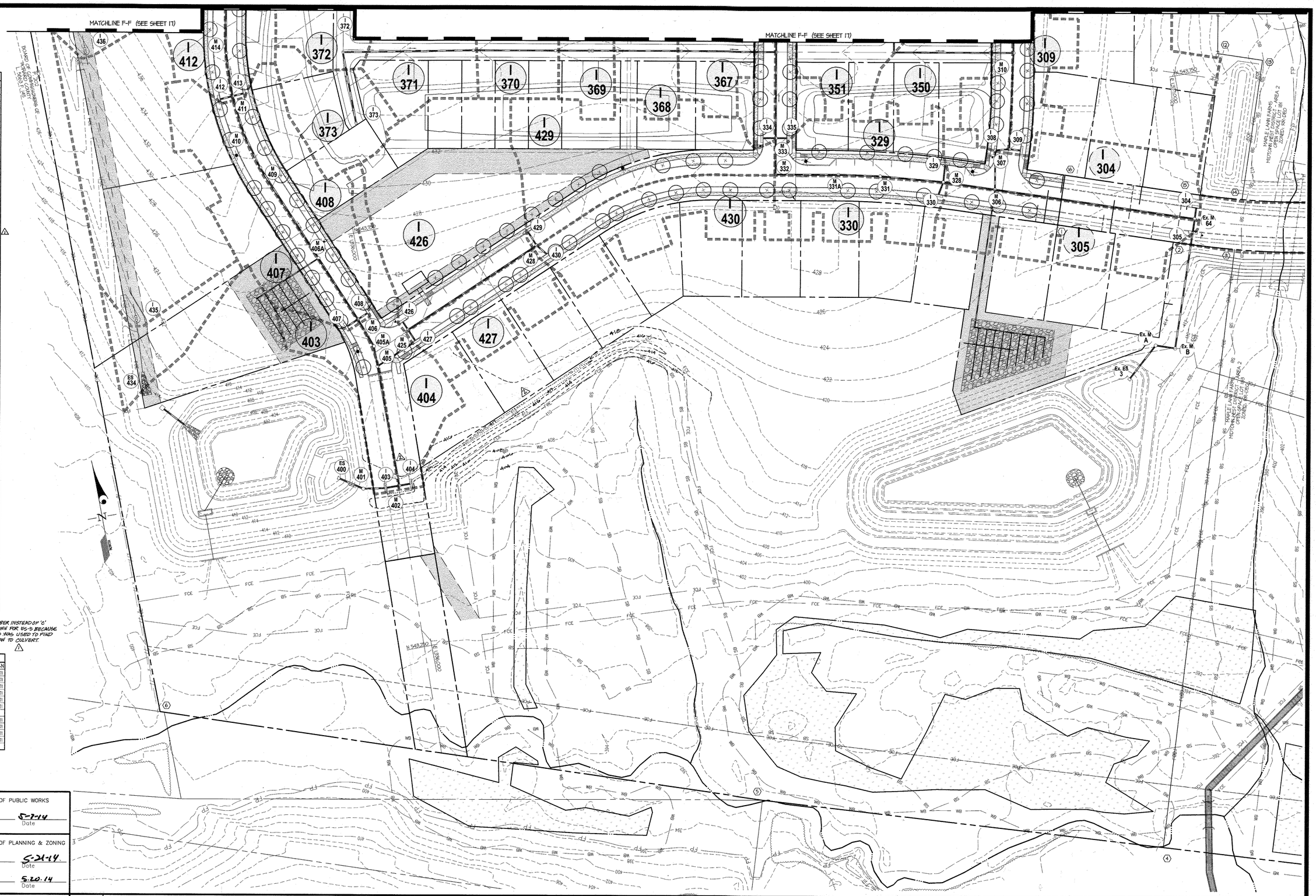

'C' FACTOR COMPUTATIONS

STRUCTURE	AREA (AC.)	'C'	IMPERVIOUS
I-438	4.56 Ac	0.56	55%
I-431	1.54 Ac	0.56	55%
I-436	1.22 Ac	0.56	55%
I-435	1.03 Ac	0.56	55%
I-433	0.19 Ac	0.56	55%
I-432	0.11 Ac	0.56	55%
I-430	0.45 Ac	0.56	55%
I-421	0.70 Ac	0.56	55%
I-427	0.30 Ac	0.56	55%
I-426	0.84 Ac	0.56	55%
ST-424	5.16 Ac	0.50	46%
I-421	0.35 Ac	0.56	55%
I-420	0.36 Ac	0.56	55%
I-411	0.32 Ac	0.56	55%
I-416	0.36 Ac	0.56	55%
I-413	0.31 Ac	0.56	55%
I-412	0.38 Ac	0.56	55%
I-408	0.42 Ac	0.56	55%
I-407	0.53 Ac	0.56	55%
I-404	0.31 Ac	0.56	55%
I-403	0.23 Ac	0.56	55%
ES-5	7.24 Ac.	78*	14%
I-341	0.34 Ac	0.56	55%
I-340	0.30 Ac	0.56	55%
I-394	0.35 Ac	0.56	55%
I-388	0.22 Ac	0.56	55%
I-387	0.23 Ac	0.56	55%
I-386	0.40 Ac	0.56	55%
I-385	0.60 Ac	0.56	55%
I-383	0.31 Ac	0.56	55%
I-382	0.31 Ac	0.56	55%
I-381	0.35 Ac	0.56	55%
I-379	0.23 Ac	0.56	55%
I-378	0.21 Ac	0.56	55%
I-376	0.36 Ac	0.56	55%
I-375	0.24 Ac	0.56	55%
I-373	0.31 Ac	0.56	55%
I-372	0.30 Ac	0.56	55%
I-371	0.36 Ac	0.56	55%
I-370	0.26 Ac	0.56	55%
I-369	0.24 Ac	0.56	55%
I-368	0.28 Ac	0.56	55%
I-367	0.24 Ac	0.56	55%
I-366	0.46 Ac	0.56	55%
I-365	0.46 Ac	0.56	55%
I-365A	1.75 Ac	0.56	55%
I-363	0.26 Ac	0.56	55%
I-361	0.28 Ac	0.56	55%
I-359	0.38 Ac	0.56	55%
I-357	0.23 Ac	0.56	55%
I-356	0.24 Ac	0.56	55%
I-354	0.35 Ac	0.56	55%
I-353	0.28 Ac	0.56	55%
I-352	0.33 Ac	0.56	55%
I-351	0.31 Ac	0.56	55%
I-350	0.36 Ac	0.56	55%
I-348	0.21 Ac	0.56	55%
I-347	0.38 Ac	0.56	55%
I-344	0.34 Ac	0.56	55%
I-343	0.50 Ac	0.56	55%
I-340	0.60 Ac	0.56	55%
I-339	1.44 Ac	0.56	55%
I-335	0.36 Ac	0.56	55%
I-334	0.20 Ac	0.56	55%
I-330	0.31 Ac	0.56	55%
I-329	0.32 Ac	0.56	55%
ST-327	6.73 Ac	0.50	46%
I-322	0.54 Ac	0.56	55%
I-321	0.47 Ac	0.56	55%
I-311	0.51 Ac	0.56	55%
I-316	0.19 Ac	0.56	55%
I-313	0.41 Ac	0.56	55%
I-312	0.45 Ac	0.56	55%
I-309	0.44 Ac	0.56	55%
I-308	0.39 Ac	0.56	55%
I-305	0.46 Ac	0.56	55%
I-304	0.48 Ac	0.56	55%

NOTE: DUE TO MASS GRADING, 'C' SOIL WAS USED FOR CALCULATIONS.

NOTE: STRUCTURES M-64, I-304, I-305, M-A, M-B AND ES-3 ARE EXISTING UNDER F-13-001.

*CURVE NUMBER INSTEAD OF 'C' FACTOR SHOWN FOR ES-5 BECAUSE SCS METHOD WAS USED TO FIND 10-YEAR FLOW TO CULVERT. △1

SWALE 'C' FACTOR COMPUTATIONS

SWALE	STATION	AREA (AC.)	TOTAL AREA (AC.)	CN
WEST	14+15	3.36	3.36	71
WEST	10+70	1.20	4.56	71
WEST	7+40	1.54	1.54	71
WEST	4+20	1.22	1.22	71
WEST	0+15	1.03	1.03	71
WEST	0+00	0.23	0.23	71
EAST	14+32	2.45	2.45	71
EAST	9+78	1.62	4.07	71
EAST	5+00	1.35	5.42	71
EAST	0+00	1.51	6.93	71

APPROVED: HOWARD COUNTY DEPARTMENT OF PUBLIC WORKS

Chief, Bureau of Highways — Date 5-7-14

APPROVED: HOWARD COUNTY DEPARTMENT OF PLANNING & ZONING

Chief, Division of Land Development — Date 5-21-14

Chief, Development Engineering Division — Date 5.20.14

GLW GUTSCHICK LITTLE & WEBER, P.A.

CIVIL ENGINEERS, LAND SURVEYORS, LAND PLANNERS, LANDSCAPE ARCHITECTS
3909 NATIONAL DRIVE – SUITE 250 – BURTONSVILLE OFFICE PARK
BURTONSVILLE, MARYLAND 20866
TEL: 301-421-4024 BALT: 410-880-1820 DC/VA: 301-989-2524 FAX: 301-421-4186

L:\CADD\DRAWINGS\12001\PLANS BY GLW\FINALS\12001 16-18_SD DAM.dwg | DES. DEV | DRN. KLP | CHK. CKG

DATE	REVISION	BY	APP'R.
10.10.2016	△3 REV. contours to reflect field conditions	gt	DEV
2016-08-04	△1 ADDED STRUCTURE TO 'C' FACTOR COMPUTATIONS TABLE	HJ	DEV

PREPARED FOR:

MAPLE LAWN FARMS I, LLC
SUITE 300 WOODHOLME CENTER
1829 REISTERSTOWN ROAD
BALTIMORE, MD 21208
ATTN: MARK BENNETT
410-484-8400

PROFESSIONAL CERTIFICATION

I HEREBY CERTIFY THAT THESE PLANS WERE PREPARED OR APPROVED BY ME, AND THAT I AM A DULY LICENSED PROFESSIONAL ENGINEER UNDER THE LAWS OF THE STATE OF MARYLAND, LICENSE NO. 12975
EXPIRATION DATE: MAY 26, 2016

4/24/14

STATE OF MARYLAND — CHRISTOPHER K. KUTCHMA — No. 12975 — PROFESSIONAL ENGINEER

DRAINAGE AREA MAP

MAPLE LAWN FARMS

GARDEN DISTRICT - AREA 1
LOTS 1 thru 98, OPEN SPACE LOTS 99 thru 110,
COMMON OPEN AREA LOTS 111 thru 114
and NON-BUILDABLE BULK PARCELS 'X' thru 'Z'

ELECTION DISTRICT No. 5 — HOWARD COUNTY, MARYLAND

SCALE	ZONING	G. L. W. FILE No.
1" = 50'	MXD-3	12001
DATE	TAX MAP – GRID	SHEET
APRIL, 2014	41-21/46-3	16 OF 36

© GLW 2014

F-14-033

L:\CADD\DRAWINGS\12001\PLANS BY GLW\FINALS\12001 16-18_SD DAM.dwg, PLOTTED 4/22/2014 1:17 PM, LAST SAVED 4/16/2014 3:49 PM, PLOTTED BY: Jennifer R. Dicks

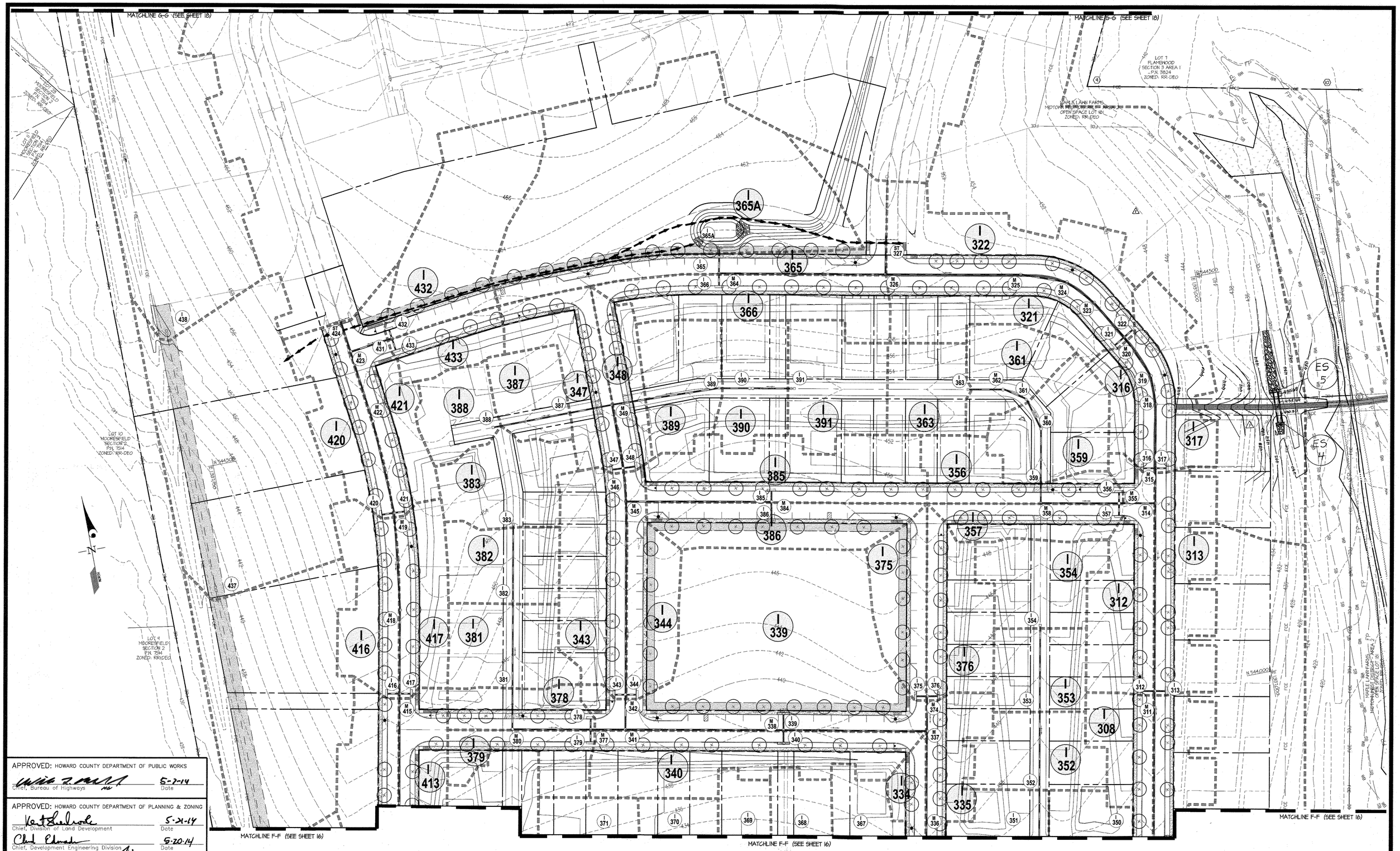

APPROVED: HOWARD COUNTY DEPARTMENT OF PUBLIC WORKS

Chief, Bureau of Highways — Date: 5-7-14

APPROVED: HOWARD COUNTY DEPARTMENT OF PLANNING & ZONING

Chief, Division of Land Development — Date: 5-21-14

Chief, Development Engineering Division — Date: 5-20-14

GLW GUTSCHICK LITTLE & WEBER, P.A.

CIVIL ENGINEERS, LAND SURVEYORS, LAND PLANNERS, LANDSCAPE ARCHITECTS
3909 NATIONAL DRIVE – SUITE 250 – BURTONSVILLE OFFICE PARK
BURTONSVILLE, MARYLAND 20866
TEL: 301-421-4024 BALT: 410-880-1820 DC/VA: 301-989-2524 FAX: 301-421-4186

L:\CADD\DRAWINGS\12001\PLANS BY GLW\FINALS\12001 16-18_SD DAM.dwg	DES. DEV	DRN. KLP	CHK. CKG

DATE	REVISION	BY	APP'R.
2016-08-04	1 REVISED DRAINAGE AREA AND ADDED OPEN SPACE CULVERT	HKJ	DEV

PREPARED FOR:

MAPLE LAWN FARMS I, LLC
SUITE 300 WOODHOLME CENTER
1829 REISTERSTOWN ROAD
BALTIMORE, MD 21208
ATTN: MARK BENNETT
410-484-8400

PROFESSIONAL CERTIFICATION

I HEREBY CERTIFY THAT THESE PLANS WERE PREPARED OR APPROVED BY ME, AND THAT I AM A DULY LICENSED PROFESSIONAL ENGINEER UNDER THE LAWS OF THE STATE OF MARYLAND, LICENSE NO. 12975
EXPIRATION DATE: MAY 26, 2016.

4/24/14

STATE OF MARYLAND — CARLTON K. GUTSCHICK — REG. NO. 12975 — PROFESSIONAL ENGINEER

DRAINAGE AREA MAP

MAPLE LAWN FARMS

GARDEN DISTRICT - AREA 1
LOTS 1 thru 98, OPEN SPACE LOTS 99 thru 110,
COMMON OPEN AREA LOTS 111 thru 114
and NON-BUILDABLE BULK PARCELS 'X' thru 'Z'

ELECTION DISTRICT No. 5 — HOWARD COUNTY, MARYLAND

SCALE	ZONING	G. L. W. FILE No.
1" = 50'	MXD-3	12001
DATE	TAX MAP – GRID	SHEET
APRIL, 2014	41-21/46-3	17 OF 36

© GLW 2014

F-14-033

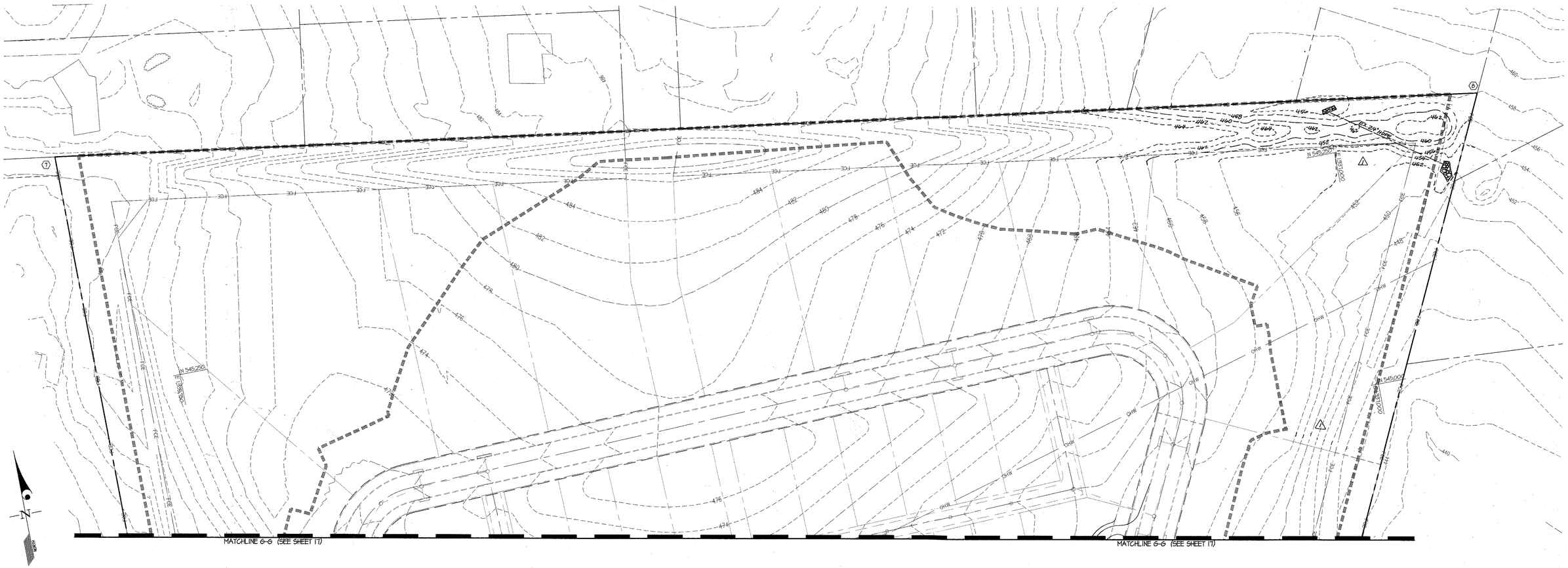

APPROVED: HOWARD COUNTY DEPARTMENT OF PUBLIC WORKS

Chief, Bureau of Highways — Date: 5-7-14

APPROVED: HOWARD COUNTY DEPARTMENT OF PLANNING & ZONING

Chief, Division of Land Development — Date: 5-21-14

Chief, Development Engineering Division — Date: 5-20-14

GLW GUTSCHICK LITTLE & WEBER, P.A.

CIVIL ENGINEERS, LAND SURVEYORS, LAND PLANNERS, LANDSCAPE ARCHITECTS
3909 NATIONAL DRIVE - SUITE 250 - BURTONSVILLE OFFICE PARK
BURTONSVILLE, MARYLAND 20866
TEL: 301-421-4024 BALT: 410-880-1820 DC/VA: 301-989-2524 FAX: 301-421-4186

L:\CADD\DRAWINGS\12001\PLANS BY GLW\FINALS\12001 16-18_SD DAM.dwg

DES. DEV	DRN. KLP	CHK. CKG

DATE	REVISION	BY	APP'R.
2016-08-04	1 REVISED DRAINAGE AREA AND EXISTING TOPOGRAPHY	HKJ	DEV

PREPARED FOR:

MAPLE LAWN FARMS I, LLC
SUITE 300 WOODHOLME CENTER
1829 REISTERSTOWN ROAD
BALTIMORE, MD 21208
ATTN: MARK BENNETT
410-484-8400

PROFESSIONAL CERTIFICATION

I HEREBY CERTIFY THAT THESE PLANS WERE PREPARED OR APPROVED BY ME, AND THAT I AM A DULY LICENSED PROFESSIONAL ENGINEER UNDER THE LAWS OF THE STATE OF MARYLAND, LICENSE NO. 12975
EXPIRATION DATE: MAY 26, 2016

4/24/14

STATE OF MARYLAND — CLAYTON K. GUTSCHICK — REG. NO. 12975 — PROFESSIONAL ENGINEER

DRAINAGE AREA MAP

MAPLE LAWN FARMS

GARDEN DISTRICT - AREA 1
LOTS 1 thru 98, OPEN SPACE LOTS 99 thru 110,
COMMON OPEN AREA LOTS 111 thru 114
and NON-BUILDABLE BULK PARCELS 'X' thru 'Z'

ELECTION DISTRICT No. 5 — HOWARD COUNTY, MARYLAND

SCALE	ZONING	G. L. W. FILE No.
1" = 50'	MXD-3	12001
DATE	TAX MAP - GRID	SHEET
APRIL, 2014	41-21/46-3	18 OF 36

© GLW 2014

F-14-033

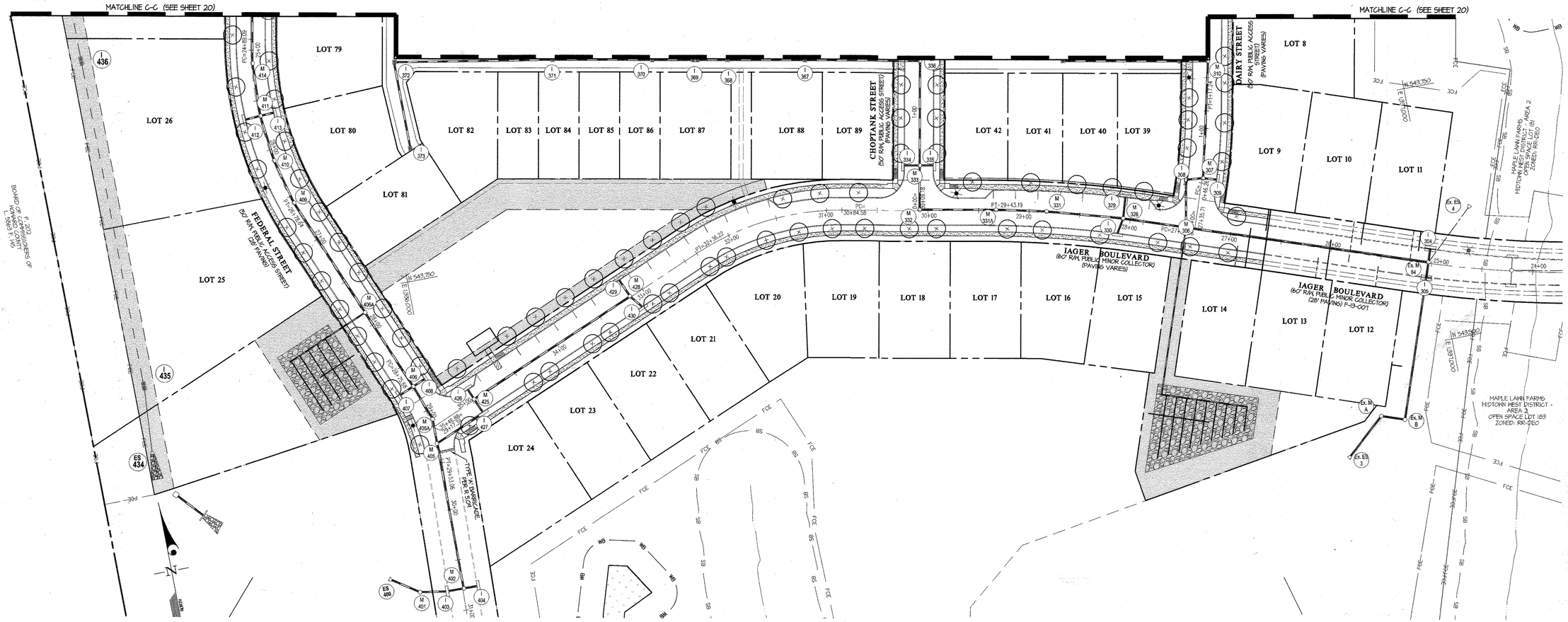

FROM NO.	TO NO.	DIA. (IN.) & TYPE OF PIPE	L (ft)	PUBLIC/ PRIVATE
ST-381A	I-381	15" HDPE	80	PRIVATE
I-381	I-380	15" HDPE	46	" "
I-380	I-379	15" HDPE	36	" "
I-379	M-349	15" HDPE	132	" "
ST-368A	I-368	15" HDPE	50	" "
I-368	I-367	15" HDPE	93	" "
I-367	M-344	15" HDPE	52	" "
M-344	M-346	15" HDPE	76	PUBLIC
I-348	M-346	15" HDPE	13	" "
I-347	M-346	15" HDPE	11	" "
M-346	M-345	15" HDPE	37	" "
I-386	M-384	15" HDPE	19	" "
I-385	M-384	15" HDPE	11	" "
M-384	M-345	15" HDPE	176	" "
M-345	M-342	18" HDPE	237	" "
I-344	M-342	15" HDPE	11	" "
I-343	M-342	15" HDPE	11	" "
M-342	M-341	24" HDPE	34	" "
ST-383A	I-383	15" HDPE	51	" "
I-383	I-382	15" HDPE	92	PRIVATE
I-382	I-381	15" HDPE	104	" "
I-381	M-380	15" HDPE	50	" "
M-380	M-377	15" HDPE	94	" "
I-379	M-377	15" HDPE	13	" "
I-378	M-377	15" HDPE	11	" "
M-377	M-341	15" HDPE	34	" "
M-341	M-338	24" HDPE	196	" "
I-340	M-338	15" HDPE	13	" "
I-339	M-338	18" HDPE	171	" "
M-338	M-337	30" HDPE	177	" "
I-376	M-374	15" HDPE	11	" "
I-375	M-374	15" HDPE	11	" "
M-374	M-337	15" HDPE	34	" "
M-337	M-336	30" HDPE	134	" "

FROM NO.	TO NO.	DIA. (IN.) & TYPE OF PIPE	L (ft)	PUBLIC/ PRIVATE
I-313	I-312	15" HDPE	83	PRIVATE
ST-312A	I-312	15" HDPE	60	" "
I-312	I-311	15" HDPE	152	" "
I-371	I-370	15" HDPE	95	" "
I-370	I-364	18" HDPE	36	" "
I-364	I-368	18" HDPE	28	" "
I-368	I-367	18" HDPE	73	" "
I-367	M-336	24" HDPE	110	" "
M-336	M-333	30" HDPE	99	PUBLIC
I-335	M-333	15" HDPE	11	" "
I-334	M-333	15" HDPE	13	" "
M-333	M-332	30" HDPE	34	" "
M-332	M-331A	30" HDPE	71	" "
M-331A	M-331	30" HDPE	46	" "
M-331	M-328	30" HDPE	72	" "
I-330	M-328	15" HDPE	13	" "
I-329	M-328	15" HDPE	19	" "
M-328	M-306	30" HDPE	68	" "
I-365A	I-365	18" HDPE	8	" "
I-365	M-364	18" HDPE	17	" "
I-366	M-364	15" HDPE	13	" "
M-364	M-326	18" HDPE	204	" "
ST-327	M-326	24" HDPE	46	" "
M-326	M-325	24" HDPE	165	" "
M-325	M-324	24" HDPE	54	" "
M-324	M-323	24" HDPE	34	" "
M-323	M-320	24" HDPE	53	" "
I-322	M-320	15" HDPE	11	" "
I-321	M-320	15" HDPE	12	" "
M-320	M-319	24" HDPE	54	" "
M-319	M-316	24" HDPE	32	" "
M-316	M-315	24" HDPE	76	" "
I-317	M-315	15" HDPE	11	" "
I-316	M-315	15" HDPE	13	" "

FROM NO.	TO NO.	DIA. (IN.) & TYPE OF PIPE	L (ft)	PUBLIC/ PRIVATE
M-315	M-314	24" HDPE	34	PUBLIC
ST-363A	I-363	15" HDPE	84	PRIVATE
I-363	M-362	15" HDPE	40	" "
M-362	I-361	15" HDPE	28	" "
I-361	M-360	15" HDPE	38	" "
M-360	I-354	15" HDPE	63	" "
I-354	M-358	15" HDPE	23	" "
M-358	M-355	15" HDPE	94	PUBLIC
I-357	M-355	15" HDPE	13	" "
I-356	M-355	15" HDPE	11	" "
M-355	M-314	15" HDPE	41	" "
M-314	M-311	24" HDPE	238	" "
I-313	M-311	15" HDPE	10	" "
I-312	M-311	15" HDPE	12	" "
M-311	M-310	30" HDPE	181	" "
ST-354A	I-354	15" HDPE	66	PRIVATE
I-354	I-353	15" HDPE	102	" "
I-353	I-352	15" HDPE	93	" "
I-352	I-351	15" HDPE	71	" "
I-351	I-350	15" HDPE	112	" "
I-350	M-310	15" HDPE	24	" "
M-310	M-307	30" HDPE	111	PUBLIC
I-309	M-307	15" HDPE	11	" "
I-308	M-307	15" HDPE	13	" "
M-307	M-306	30" HDPE	46	" "
M-306	Ex. M-64	36" HDPE	227	" "
I-305	Ex. M-64	15" HDPE	13	" "
I-304	Ex. M-64	15" HDPE	10	" "
Ex. M-64	Ex. M-B	36" HDPE	152	" "
Ex. M-B	Ex. M-A	36" HDPE	24	" "
Ex. M-A	Ex. ES-3	36" HDPE	49	" "
ES-5	ES-4	24" HDPE	33	PRIVATE

FROM NO.	TO NO.	DIA. (IN.) & TYPE OF PIPE	L (ft)	PUBLIC/ PRIVATE
I-438	I-437	15" HDPE	314	PUBLIC
I-437	I-436	18" HDPE	314	" "
I-436	I-435	18" HDPE	320	" "
I-435	ES-434	18" HDPE	62	" "
I-433	M-431	15" HDPE	13	" "
I-432	M-431	15" HDPE	8	" "
M-431	M-423	15" HDPE	50	" "
ST-424	M-423	18" HDPE	34	" "
M-423	M-422	24" HDPE	87	" "
M-422	M-419	24" HDPE	113	" "
I-421	M-419	15" HDPE	11	" "
I-420	M-419	15" HDPE	13	" "
M-419	M-418	24" HDPE	117	" "
M-418	M-415	24" HDPE	100	" "
I-417	M-415	15" HDPE	11	" "
I-416	M-415	15" HDPE	13	" "
M-415	M-414	24" HDPE	187	" "
M-414	M-411	24" HDPE	48	" "
I-413	M-411	15" HDPE	11	" "
I-412	M-411	15" HDPE	13	" "
M-411	M-410	24" HDPE	42	" "
M-410	M-409	24" HDPE	42	" "
M-409	M-406A	24" HDPE	126	" "
M-406A	M-406	24" HDPE	83	" "
I-408	M-406	15" HDPE	11	" "
I-407	M-406	15" HDPE	13	" "
M-406	M-405	24" HDPE	33	" "
M-405A	M-405	24" HDPE	20	" "
I-430	M-428	15" HDPE	14	" "
I-429	M-428	15" HDPE	17	" "
M-428	M-425	15" HDPE	180	" "
I-426	M-425	15" HDPE	9	" "
M-425	I-427	18" HDPE	13	" "
I-427	M-405	18" HDPE	47	" "
M-405	M-402	24" HDPE	141	" "
I-404	M-402	15" HDPE	11	" "
M-402	I-403	30" HDPE	12	" "
I-403	M-401	30" HDPE	23	" "
M-401	ES-400	30" HDPE	28	" "

GRAPHIC SCALE
0 25 50 100

APPROVED: HOWARD COUNTY DEPARTMENT OF PUBLIC WORKS

Chief, Bureau of Highways — Date 5-7-14

APPROVED: HOWARD COUNTY DEPARTMENT OF PLANNING & ZONING

Chief, Division of Land Development — Date 5/21/14

Chief, Development Engineering Division — Date 5.20.14

GLW GUTSCHICK LITTLE & WEBER, P.A.
CIVIL ENGINEERS, LAND SURVEYORS, LAND PLANNERS, LANDSCAPE ARCHITECTS
3909 NATIONAL DRIVE – SUITE 250 – BURTONSVILLE OFFICE PARK
BURTONSVILLE, MARYLAND 20866
TEL: 301-421-4024 BALT: 410-880-1820 DC/VA: 301-989-2524 FAX: 301-421-4186

L:\CADD\DRAWINGS\12001\PLANS BY GLW\FINALS\12001 19-20_SD INFO.dwg DES. DEV DRN. KLP CHK. CKG

DATE	REVISION	BY	APP'R.
2016-08-04	△1 ADDED OPEN SPACE 105 CULVERT INFORMATION TO CHART	HKJ	DEV

PREPARED FOR:
MAPLE LAWN FARMS I, LLC
SUITE 300 WOODHOLME CENTER
1829 REISTERSTOWN ROAD
BALTIMORE, MD 21208
ATTN: MARK BENNETT
410-484-8400

PROFESSIONAL CERTIFICATION
I HEREBY CERTIFY THAT THESE PLANS WERE PREPARED OR APPROVED BY ME, AND THAT I AM A DULY LICENSED PROFESSIONAL ENGINEER UNDER THE LAWS OF THE STATE OF MARYLAND, LICENSE NO. 12975, EXPIRATION DATE: MAY 26, 2016.
4/24/14

STORM DRAIN INFORMATION PLAN

MAPLE LAWN FARMS

GARDEN DISTRICT - AREA 1
LOTS 1 thru 98, OPEN SPACE LOTS 99 thru 110,
COMMON OPEN AREA LOTS 111 thru 114
and NON-BUILDABLE BULK PARCELS 'X' thru 'Z'

ELECTION DISTRICT No. 5 — HOWARD COUNTY, MARYLAND

SCALE	ZONING	G. L. W. FILE No.
1" = 50'	MXD-3	12001
DATE	TAX MAP – GRID	SHEET
APRIL, 2014	41-21/46-3	19 OF 36

© GLW 2014

F-14-033

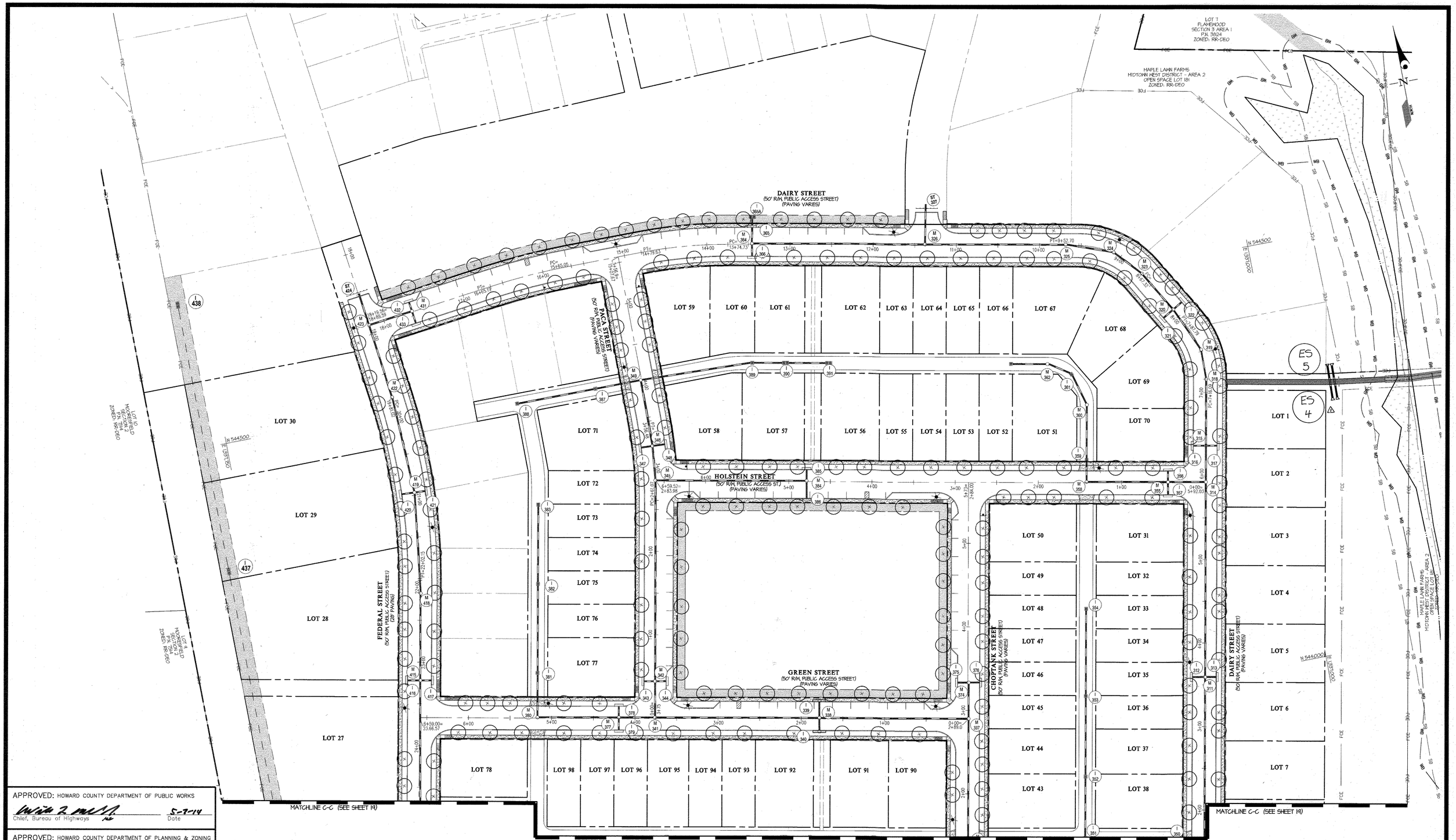

APPROVED: HOWARD COUNTY DEPARTMENT OF PUBLIC WORKS

Chief, Bureau of Highways — Date: 5-7-14

APPROVED: HOWARD COUNTY DEPARTMENT OF PLANNING & ZONING

Chief, Division of Land Development — Date: 5/21/14

Chief, Development Engineering Division — Date: 5-20-14

GLW GUTSCHICK LITTLE & WEBER, P.A.

CIVIL ENGINEERS, LAND SURVEYORS, LAND PLANNERS, LANDSCAPE ARCHITECTS
3909 NATIONAL DRIVE – SUITE 250 – BURTONSVILLE OFFICE PARK
BURTONSVILLE, MARYLAND 20866
TEL: 301-421-4024 BALT: 410-880-1820 DC/VA: 301-989-2524 FAX: 301-421-4186

DATE	REVISION	BY	APP'R.
2018-08-04	△1 ADDED OPEN SPACE CULVERT	HKJ	DEV

L:\CADD\DRAWINGS\12001\PLANS BY GLW\FINALS\12001 19-20_SD INFO.dwg | DES. DEV | DRN. KLP | CHK. CKG

PREPARED FOR:

MAPLE LAWN FARMS I, LLC
SUITE 300 WOODHOLME CENTER
1829 REISTERSTOWN ROAD
BALTIMORE, MD 21208
ATTN: MARK BENNETT
410-484-8400

PROFESSIONAL CERTIFICATION

I HEREBY CERTIFY THAT THESE PLANS WERE PREPARED OR APPROVED BY ME, AND THAT I AM A DULY LICENSED PROFESSIONAL ENGINEER UNDER THE LAWS OF THE STATE OF MARYLAND, LICENSE NO. 12975
EXPIRATION DATE: MAY 26, 2016

4/24/14

STORM DRAIN INFORMATION PLAN

MAPLE LAWN FARMS

GARDEN DISTRICT - AREA 1
LOTS 1 thru 98, OPEN SPACE LOTS 99 thru 110,
COMMON OPEN AREA LOTS 111 thru 114
and NON-BUILDABLE BULK PARCELS 'X' thru 'Z'

ELECTION DISTRICT No. 5 — HOWARD COUNTY, MARYLAND

SCALE	ZONING	G. L. W. FILE No.
1" = 50'	MXD-3	12001
DATE	TAX MAP – GRID	SHEET
APRIL, 2014	41-21/46-3	20 OF 36

© GLW 2014

F-14-033

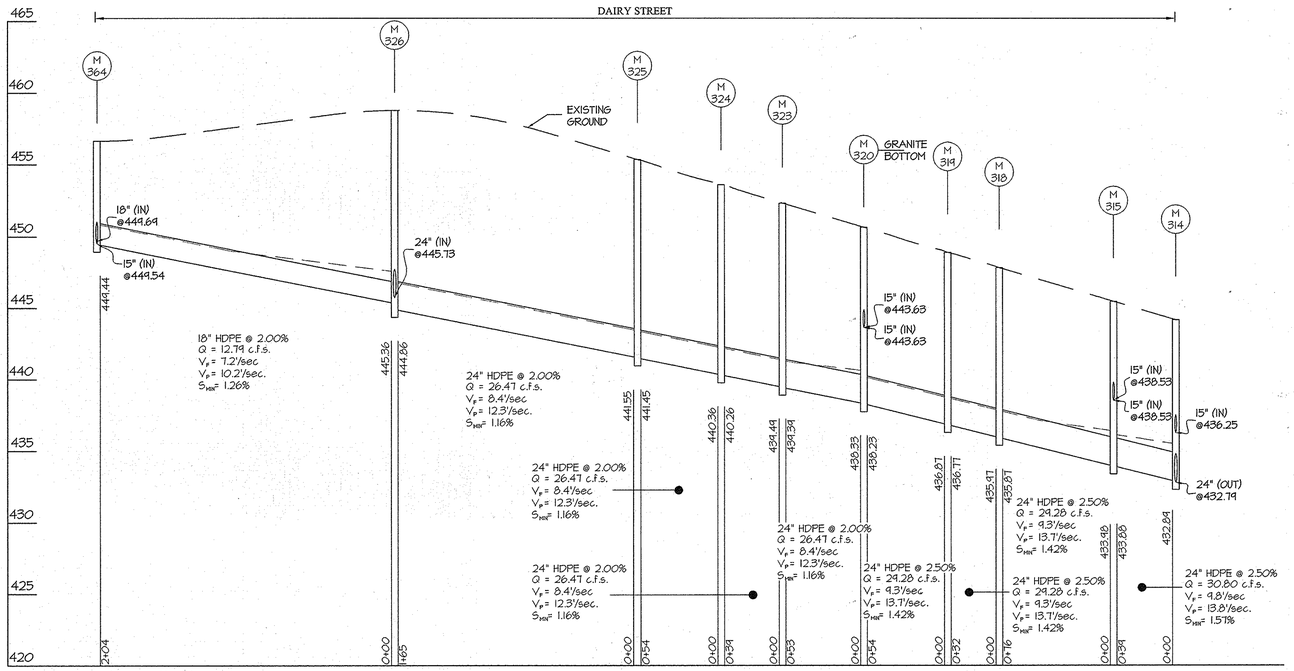

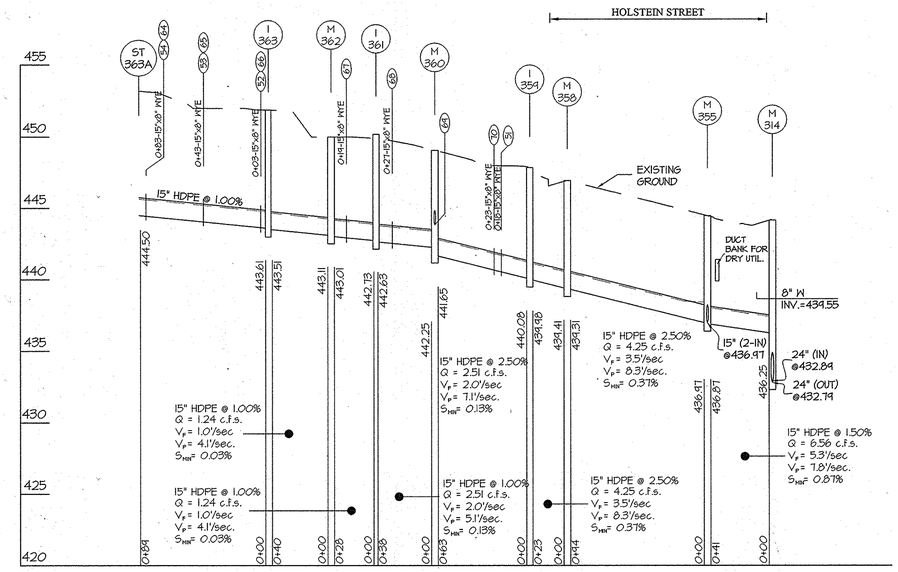

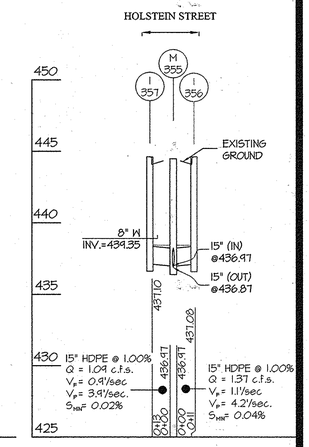

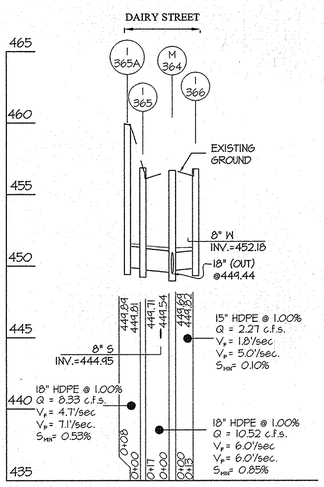

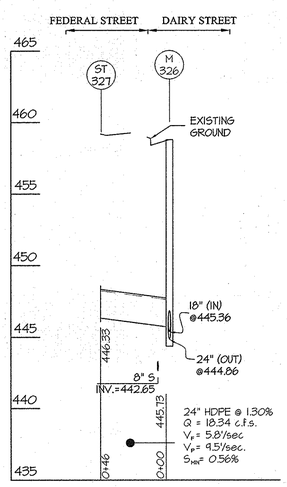

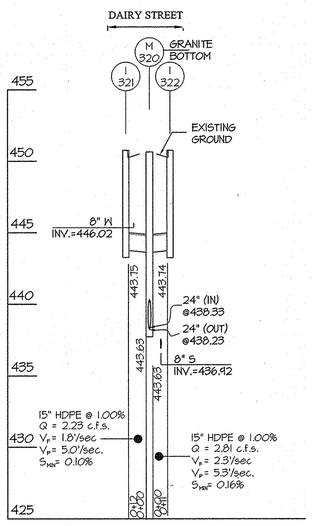

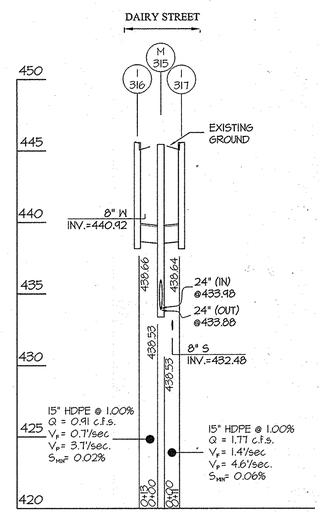

STRUCTURE SCHEDULE

NO	TYPE	WIDTH (INSIDE)	TOP ELEVATION PROPOSED UPPER	TOP ELEVATION PROPOSED LOWER	TOP ELEVATION AS-BUILT UPPER	TOP ELEVATION AS-BUILT LOWER	INVERT PROPOSED UPPER	INVERT PROPOSED LOWER	INVERT AS-BUILT UPPER	INVERT AS-BUILT LOWER	STD. DETAIL	LOCATIONS	REMARKS
ST-327	STUB	2'-0"	---	---			---	446.33			HO. CO. SD 4.03	N 544,623 E 1,336,629	
I-316	A-10 INLET	2'-6"	445.81	445.49			---	438.66			HO. CO. SD 4.03	N 544,218 E 1,336,840	
I-317	A-10 INLET	2'-6"	445.81	445.49			---	438.64			HO. CO. SD 4.03	N 544,212 E 1,336,920	
I-321	A-10 INLET	2'-6"	450.83	450.68			---	443.75			HO. CO. SD 4.03	N 544,435 E 1,336,884	
I-322	COG-15 INLET	2'-6"	450.90	450.46			---	443.74			SHA MD. SD 374.62	N 544,450 E 1,336,910	
I-356	A-10 INLET	2'-6"	444.80	444.53			---	437.08			HO. CO. SD 4.03	N 544,255 E 1,336,856	
I-357	A-10 INLET	2'-6"	44.80	44.53			---	437.10			HO. CO. SD 4.03	N 544,225 E 1,336,850	
I-359	S INLET	2'-7.5"	447.56	447.48			440.08	434.98			HO. CO. SD 4.22	N 544,285 E 1,336,762	
I-361	S INLET	2'-7.5"	444.17	444.13			442.73	442.63			HO. CO. SD 4.22	N 544,340 E 1,336,763	
I-363	S INLET	2'-7.5"	450.76	450.68			443.61	443.51			HO. CO. SD 4.22	N 544,416 E 1,336,694	
I-365	A-10 INLET	2'-6"	456.68	456.68			444.81	444.71			HO. CO. SD 4.03	N 544,636 E 1,336,419	
I-365A	SG INLET	2'-7.5"	XXX	XXX			---	444.84			HO. CO. SD 4.23	N 544,646 E 1,336,422	
I-366	A-10 INLET	2'-6"	456.86	456.86			---	444.82			HO. CO. SD 4.03	N 544,600 E 1,336,413	
M-314	STANDARD MANHOLE	4'-0"	444.16	---			436.25	432.79			HO. CO. G-5.12	N 544,232 E 1,336,847	
M-315	STANDARD MANHOLE	4'-0"	445.45	---			438.53	433.88			HO. CO. G-5.12	N 544,215 E 1,336,906	
M-318	STANDARD MANHOLE	4'-0"	447.83	---			435.97	435.87			HO. CO. G-5.12	N 544,353 E 1,336,921	
M-319	STANDARD MANHOLE	4'-0"	448.84	---			436.87	436.77			HO. CO. G-5.12	N 544,384 E 1,336,921	
M-320	STANDARD MANHOLE	4'-0"	450.64	---			443.63	438.23			HO. CO. G-5.12	N 544,443 E 1,336,848	
M-323	STANDARD MANHOLE	4'-0"	452.33	---			434.44	434.34			HO. CO. G-5.12	N 544,442 E 1,336,869	
M-324	STANDARD MANHOLE	4'-0"	453.60	---			440.36	440.26			HO. CO. G-5.12	N 544,524 E 1,336,841	
M-325	STANDARD MANHOLE	4'-0"	455.35	---			441.55	441.45			HO. CO. G-5.12	N 544,544 E 1,336,786	
M-326	STANDARD MANHOLE	4'-0"	458.79	---			445.73	444.86			HO. CO. G-5.12	N 544,576 E 1,336,620	
M-355	STANDARD MANHOLE	4'-0"	444.47	---			436.97	436.87			HO. CO. G-5.12	N 544,241 E 1,336,853	
M-358	STANDARD MANHOLE	4'-0"	446.45	---			434.41	434.31			HO. CO. G-5.12	N 544,260 E 1,336,757	
M-360	STANDARD MANHOLE	4'-0"	448.52	---			442.25	441.65			HO. CO. G-5.12	N 544,350 E 1,336,715	
M-362	STANDARD MANHOLE	4'-0"	449.72	---			443.11	443.01			HO. CO. G-5.12	N 544,407 E 1,336,737	
M-364	STANDARD MANHOLE	4'-0"	456.66	---			449.69	449.44			HO. CO. G-5.12	N 544,616 E 1,336,416	

YARD DRAIN SCHEDULE

LOT No.	INV. OF MAIN LINE	INV. 8" HDPE @ MAIN	INV. 8" HDPE @ PROP. LINE
51	436.18	436.47	436.60
52	434.34	434.63	434.76
53	434.74	440.03	440.16
54	440.14	440.43	440.56
64	440.14	440.43	440.56
65	434.74	440.03	440.16
66	434.34	434.63	434.76
67	438.62	438.91	434.09
68	438.22	438.51	438.67
69	---	444.23	444.33
70	436.23	436.52	436.65

NOTE: ALL YARD DRAINS ARE 8" HDPE RUN @ 1.00% UNLESS OTHERWISE NOTED.

PIPE SCHEDULE

SIZE	TYPE	QUANTITY (I.F.)	REMARKS
8"	HDPE	141	
15"	HDPE	500	
18"	HDPE	229	
24"	HDPE	558	

APPROVED: HOWARD COUNTY DEPARTMENT OF PUBLIC WORKS

Chief, Bureau of Highways — Date 5-7-14

APPROVED: HOWARD COUNTY DEPARTMENT OF PLANNING & ZONING

Chief, Division of Land Development — Date 5-21-14

Chief, Development Engineering Division — Date 5-20-14

GLW GUTSCHICK LITTLE & WEBER, P.A.

CIVIL ENGINEERS, LAND SURVEYORS, LAND PLANNERS, LANDSCAPE ARCHITECTS
3909 NATIONAL DRIVE – SUITE 250 – BURTONSVILLE OFFICE PARK
BURTONSVILLE, MARYLAND 20866
TEL: 301-421-4024 BALT: 410-880-1820 DC/VA: 301-989-2524 FAX: 301-421-4186

E:\12001\DRAWINGS\12001\PLANS BY GLW\FINALS\12001 21-24_SD PROFILES_300.dwg | DES. DEV | DRN. JRD | CHK. CKG

DATE	REVISION	BY	APP'R.

PREPARED FOR:

MAPLE LAWN FARMS I, LLC
SUITE 300 WOODHOLME CENTER
1829 REISTERSTOWN ROAD
BALTIMORE, MD 21208
ATTN: MARK BENNETT
410-484-8400

PROFESSIONAL CERTIFICATION

I HEREBY CERTIFY THAT THESE PLANS WERE PREPARED OR APPROVED BY ME, AND THAT I AM A DULY LICENSED PROFESSIONAL ENGINEER UNDER THE LAWS OF THE STATE OF MARYLAND, LICENSE NO. 12975
EXPIRATION DATE: May 26, 2016
4/24/14

STATE OF MARYLAND — CHRISTOPHER K. GUTSCHICK — No. 12975 — PROFESSIONAL ENGINEER

STORM DRAIN PROFILES

MAPLE LAWN FARMS

GARDEN DISTRICT - AREA I
LOTS 1 thru 98, OPEN SPACE LOTS 99 thru 110,
COMMON OPEN AREA LOTS 111 thru 114
and NON-BUILDABLE BULK PARCELS 'X' thru 'Z'

ELECTION DISTRICT No. 5 — HOWARD COUNTY, MARYLAND

SCALE	ZONING	G. L. W. FILE No.
1"=50' (H) 1" = 5' (V)	MXD-3	12001
DATE	TAX MAP – GRID	SHEET
APRIL, 2014	41-21/46-3	21 OF 36

F-14-033

© GLW 2014

L:\CADD\DRAWINGS\12001\PLANS BY GLW\FINALS\12001 21-24_SD PROFILES_300.dwg
PLOTTED: 4/23/2014 12:27 PM, LAST SAVED: 4/17/2014 8:15 AM, PLOTTED BY: Doug Vanda Rykt

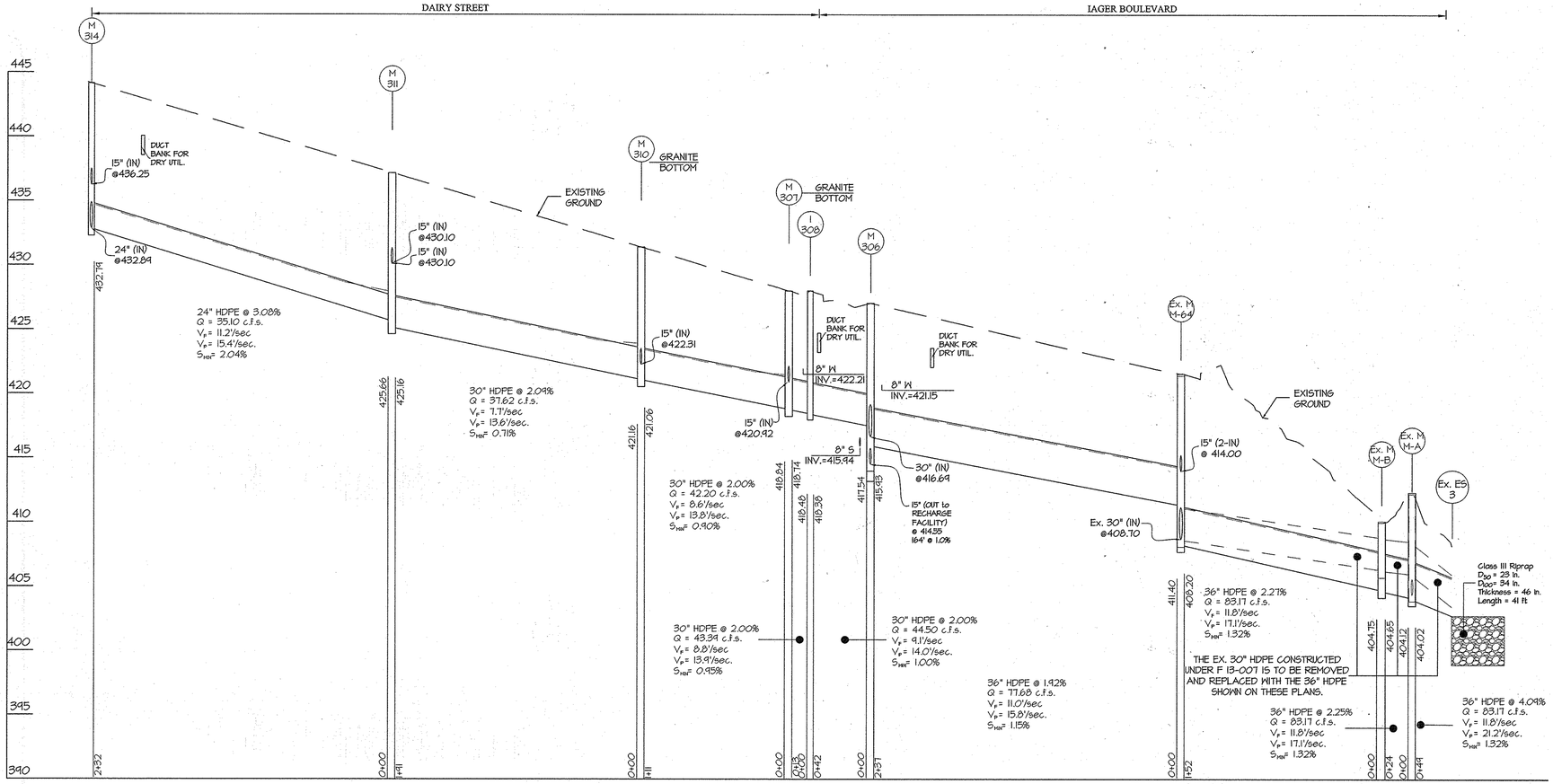

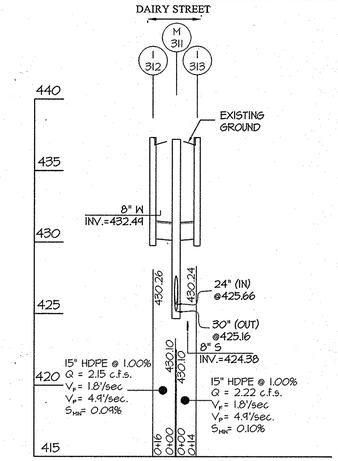

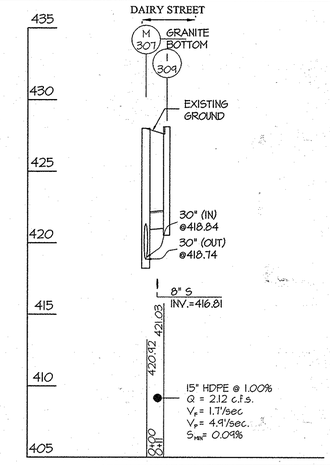

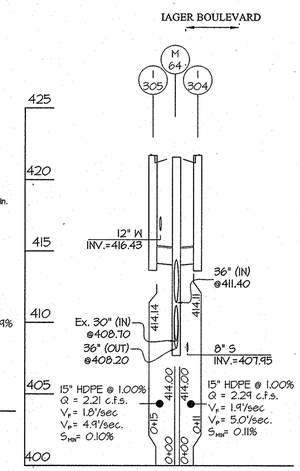

YARD DRAIN SCHEDULE			
LOT No.	INV. OF MAIN LINE	INV. 8" HDPE @ MAIN	INV. 8" HDPE @ PROP. LINE
31	434.01	434.30	434.43
32	433.61	433.90	434.03
33	431.80	432.09	432.22
34	430.40	430.69	430.82
35	429.00	429.29	429.42
36	428.06	428.35	428.48
37	426.98	427.27	427.40
38	425.29	425.58	425.71
39	422.98	423.28	423.41
40	423.61	423.90	424.03
41	424.91	425.20	425.33
42	425.45	425.74	425.87
43	425.29	425.58	425.71
44	426.98	427.27	427.40
45	428.06	428.35	428.48
46	429.00	429.29	429.42
47	430.40	430.69	430.82
48	431.80	432.09	432.22
49	433.61	433.90	434.03
50	434.01	434.30	434.43

NOTE: ALL YARD DRAINS ARE 8" HDPE RUN @ 1.00% UNLESS OTHERWISE NOTED.

PIPE SCHEDULE			
SIZE	TYPE	QUANTITY (L.F.)	REMARKS
8"	HDPE	260	
15"	HDPE	599	
24"	HDPE	232	
30"	HDPE	357	
36"	HDPE	462	

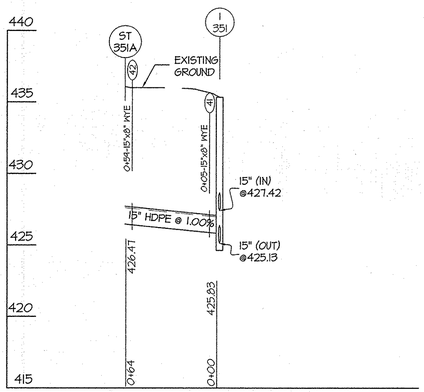

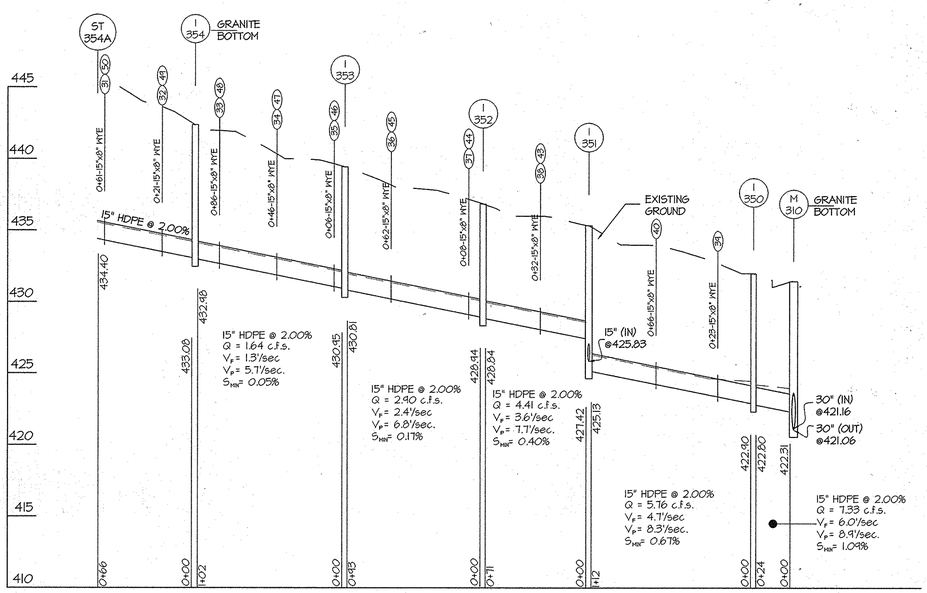

STRUCTURE SCHEDULE												
NO	TYPE	WIDTH (INSIDE)	TOP ELEVATION				INVERT				STD. DETAIL	LOCATIONS	REMARKS
			PROPOSED		AS-BUILT		PROPOSED		AS-BUILT				
			UPPER	LOWER	UPPER	LOWER	UPPER	LOWER	UPPER	LOWER			
I-304	A-10 INLET	2'-6"	421.87	421.68			---	414.11			HO. CO. SD 4.03	N 543,542 E 1,336,996	
I-305	A-10 INLET	2'-6"	421.87	421.68			---	414.14			HO. CO. SD 4.03	N 543,562 E 1,336,986	
I-308	COG-10 INLET	2'-6"	428.25	427.45			418.48	418.38			SHA MD. SD 374.62	N 543,703 E 1,336,772	
I-309	A-10 INLET	2'-6"	428.37	428.04			---	421.03			HO. CO. SD 4.03	N 543,697 E 1,336,803	
I-312	A-10 INLET	2'-6"	437.55	437.23			---	430.26			HO. CO. SD 4.03	N 544,006 E 1,336,836	
I-313	A-10 INLET	2'-6"	437.55	437.23			---	430.24			HO. CO. SD 4.03	N 544,000 E 1,336,867	
I-350	S INLET	2'-7.5"	432.00	431.45			422.90	422.80			HO. CO. SD 4.22	N 543,819 E 1,336,788	
I-351	S INLET	2'-7.5"	434.57	434.49			427.42	425.13			HO. CO. SD 4.22	N 543,841 E 1,336,675	
I-352	S INLET	2'-7.5"	436.51	436.44			428.94	428.84			HO. CO. SD 4.22	N 543,913 E 1,336,684	
I-353	S INLET	2'-7.5"	438.45	438.87			430.45	430.81			HO. CO. SD 4.22	N 544,008 E 1,336,708	
I-354	S INLET	2'-7.5"	442.31	442.18			433.08	432.98			HO. CO. SD 4.22	N 544,111 E 1,336,728	
Ex. M-64	STANDARD MANHOLE	5'-0"	421.42	---			414.00	408.20			HO. CO. G-5.13	N 543,576 E 1,336,991	
M-306	STANDARD MANHOLE	5'-0"	421.08	---			417.54	414.55			HO. CO. G-5.13	N 543,657 E 1,336,763	
M-307	STANDARD MANHOLE	5'-0"	428.01	---			418.84	418.74			HO. CO. G-5.13	N 543,702 E 1,336,789	
M-310	STANDARD MANHOLE	5'-0"	431.43	---			422.31	421.06			HO. CO. G-5.13	N 543,813 E 1,336,816	
M-311	STANDARD MANHOLE	5'-0"	437.19	---			430.10	425.16			HO. CO. G-5.13	N 544,003 E 1,336,853	
M-314	STANDARD MANHOLE	4'-0"	444.16	---			436.25	432.79			HO. CO. G-5.12	N 544,232 E 1,336,897	

APPROVED: HOWARD COUNTY DEPARTMENT OF PUBLIC WORKS

Chief, Bureau of Highways — Date: 5-7-14

APPROVED: HOWARD COUNTY DEPARTMENT OF PLANNING & ZONING

Chief, Division of Land Development — Date: 5-21-14

Chief, Development Engineering Division — Date: 5-20-14

GLW GUTSCHICK LITTLE & WEBER, P.A.
CIVIL ENGINEERS, LAND SURVEYORS, LAND PLANNERS, LANDSCAPE ARCHITECTS
3909 NATIONAL DRIVE – SUITE 250 – BURTONSVILLE OFFICE PARK
BURTONSVILLE, MARYLAND 20866
TEL: 301-421-4024 BALT: 410-880-1820 DC/VA: 301-989-2524 FAX: 301-421-4186

L:\12000\DRAWINGS\12001\PLANS BY GLW\FINALS\12001 21-24_SD PROFILES_300.dwg
PLOTTED: 4/23/2014 12:25 PM, LAST SAVED: 4/17/2014 8:15 AM, PLOTTED BY: Doug Vande Ryt

DES. DEV | DRN. JRD | CHK. CKG

DATE	REVISION	BY	APP'R.

PREPARED FOR:

MAPLE LAWN FARMS I, LLC
SUITE 300 WOODHOLME CENTER
1829 REISTERSTOWN ROAD
BALTIMORE, MD 21208
ATTN: MARK BENNETT
410-484-8400

PROFESSIONAL CERTIFICATION

I HEREBY CERTIFY THAT THESE PLANS WERE PREPARED OR APPROVED BY ME, AND THAT I AM A DULY LICENSED PROFESSIONAL ENGINEER UNDER THE LAWS OF THE STATE OF MARYLAND, LICENSE NO. 12975
EXPIRATION DATE: May 26, 2016

4/24/14

STATE OF MARYLAND — CHRISTOPHER K. GUTSCHICK — No. 12975 — PROFESSIONAL ENGINEER

STORM DRAIN PROFILES

MAPLE LAWN FARMS

GARDEN DISTRICT - AREA I
LOTS 1 thru 98, OPEN SPACE LOTS 99 thru 110,
COMMON OPEN AREA LOTS 111 thru 114
and NON-BUILDABLE BULK PARCELS 'X' thru 'Z'

ELECTION DISTRICT No. 5 — HOWARD COUNTY, MARYLAND

SCALE	ZONING	G. L. W. FILE No.
1"=50' (H) 1" = 5' (V)	MXD-3	12001
DATE	TAX MAP – GRID	SHEET
APRIL, 2014	41-21/46-3	22 OF 36

© GLW 2014

F-14-033

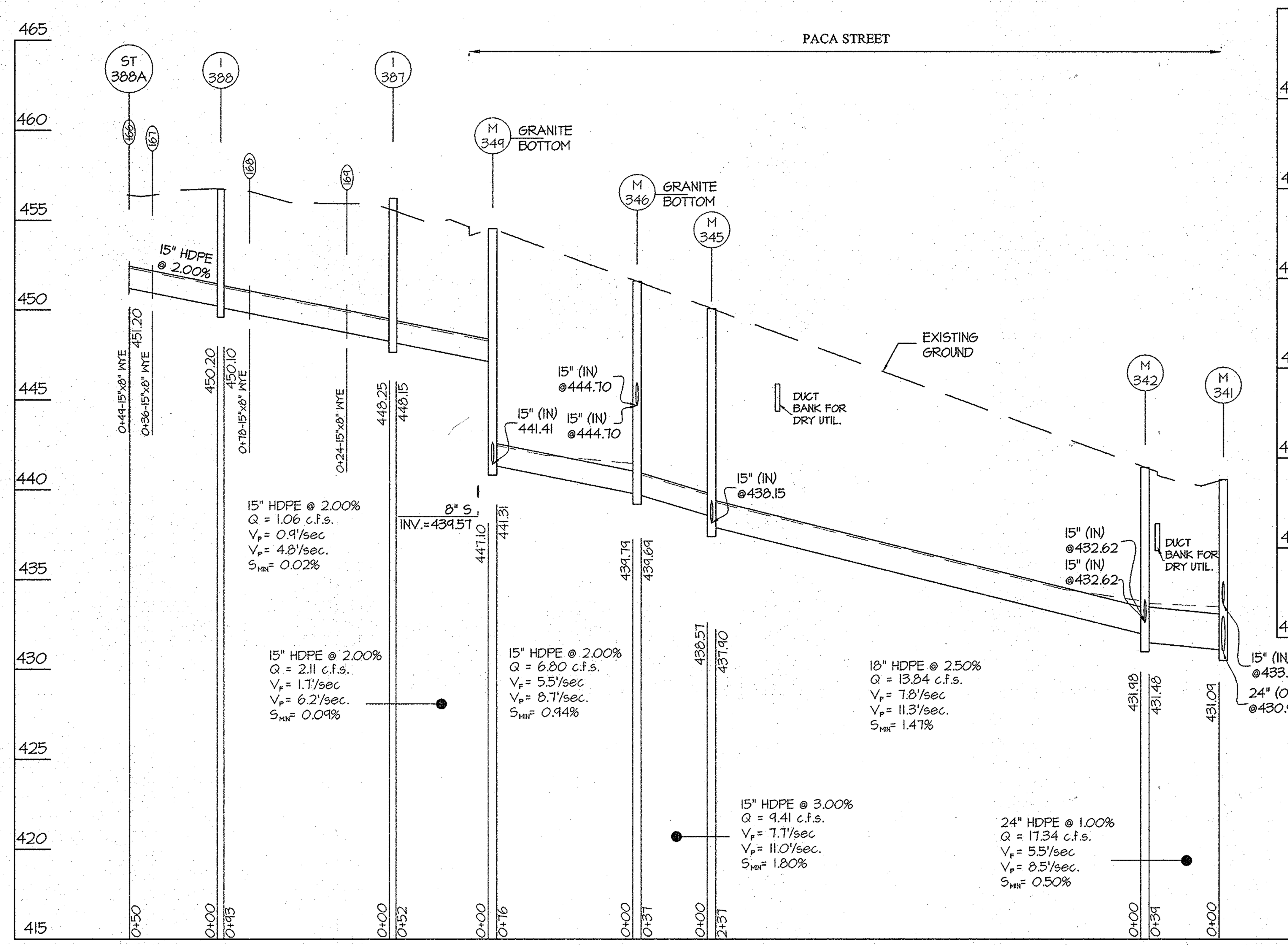

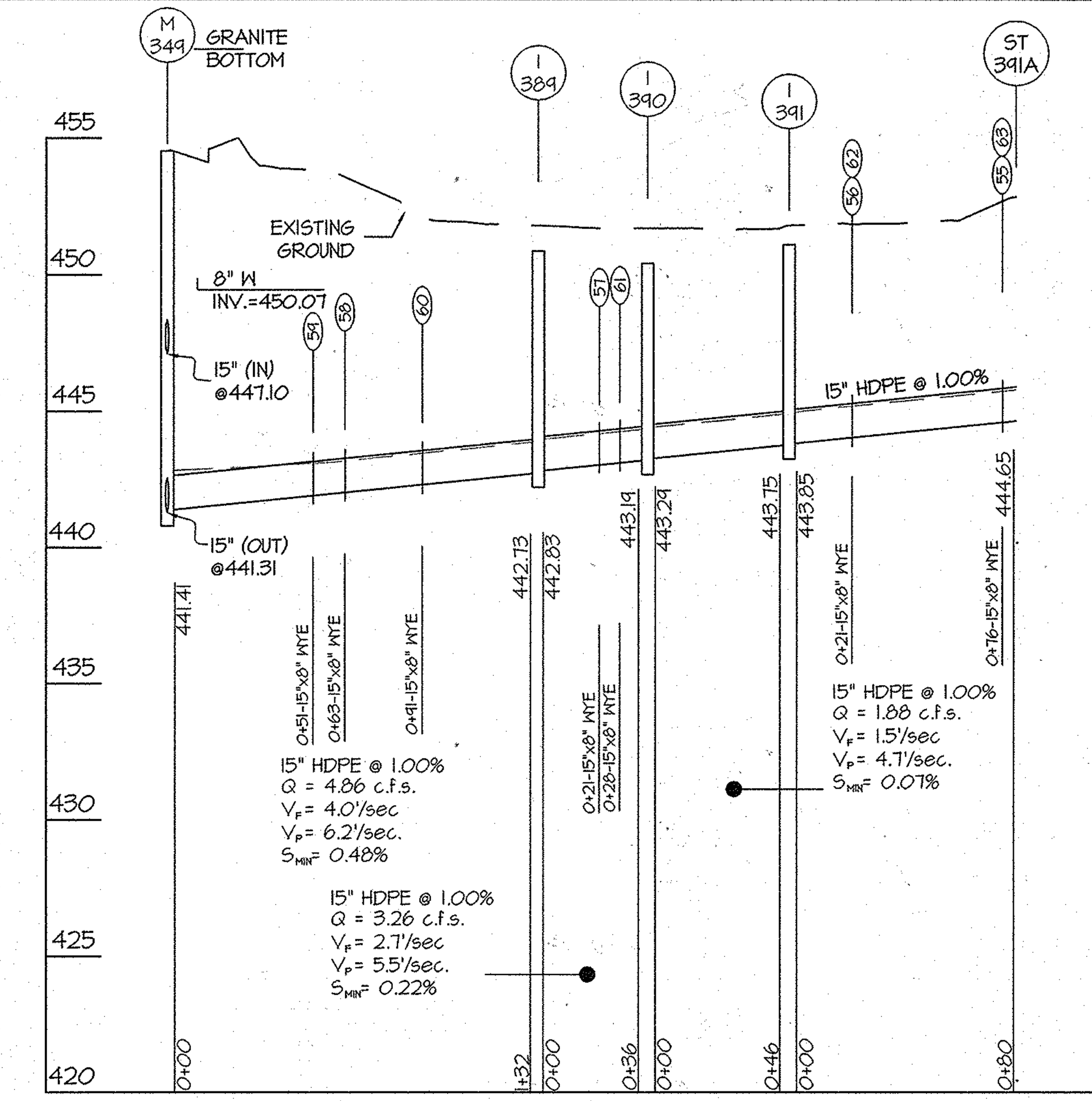

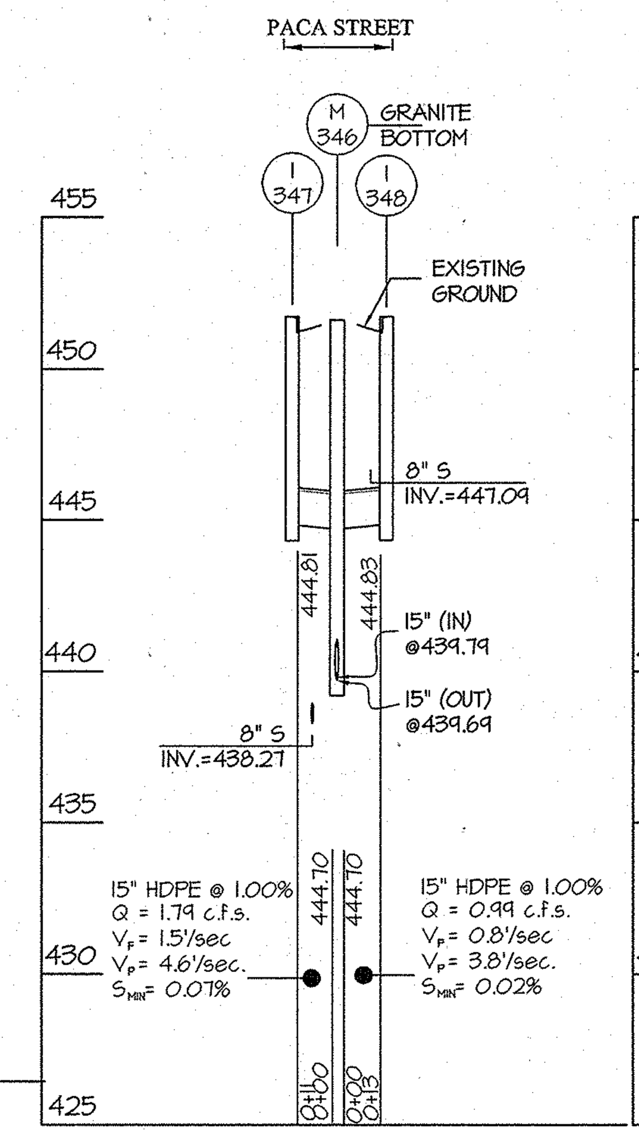

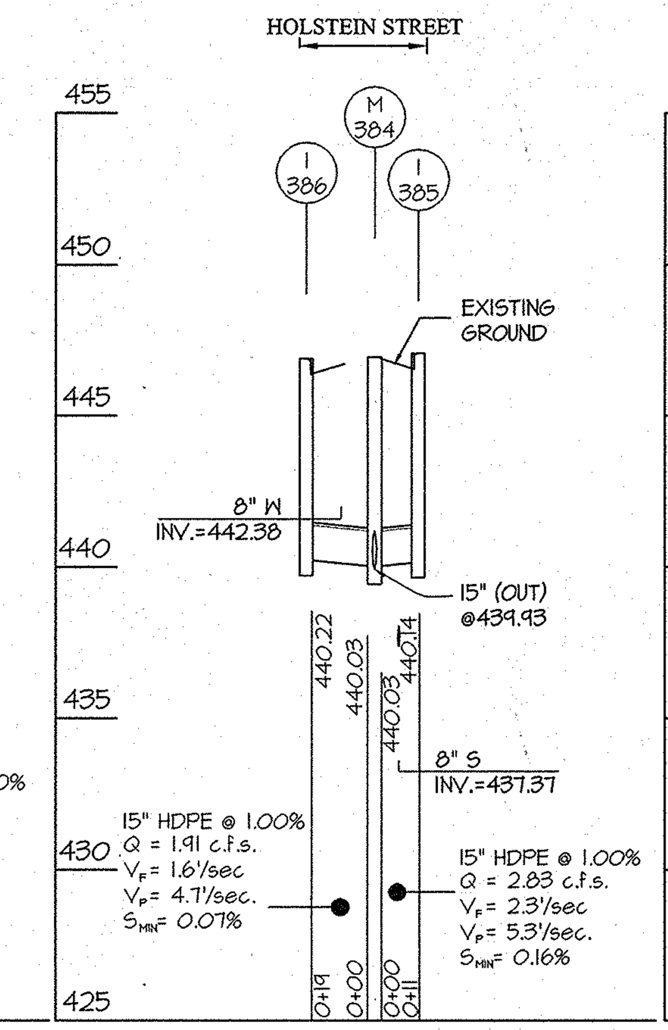

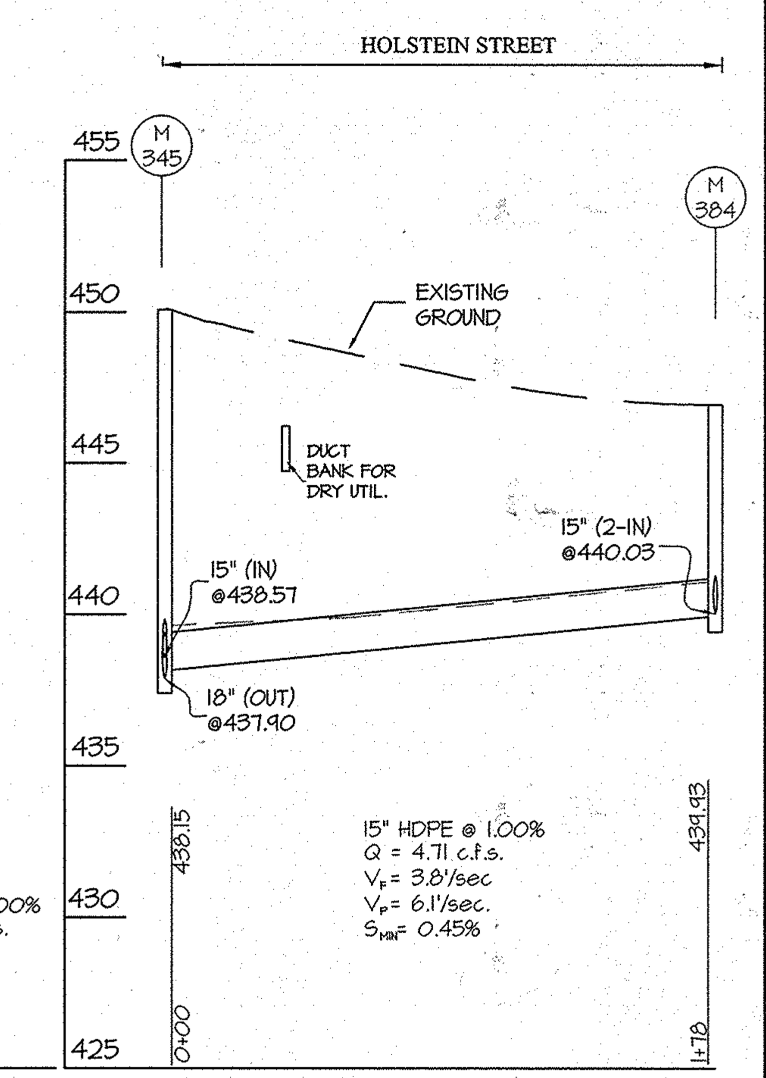

PIPE SCHEDULE			
SIZE	TYPE	QUANTITY (l.f.)	REMARKS
8"	HDPE	300	
15"	HDPE	1310	
18"	HDPE	237	
24"	HDPE	39	

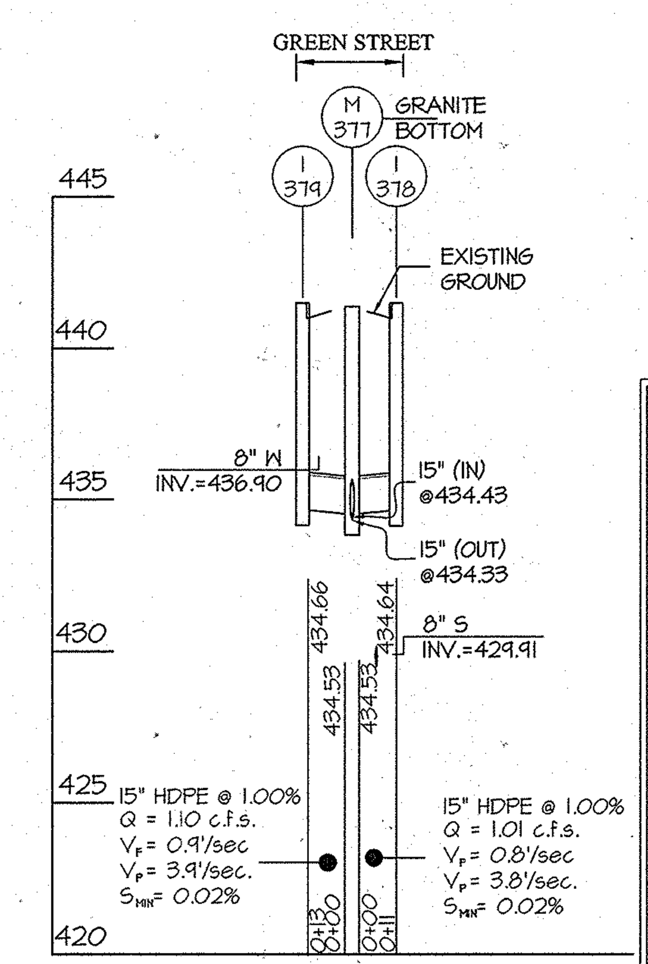

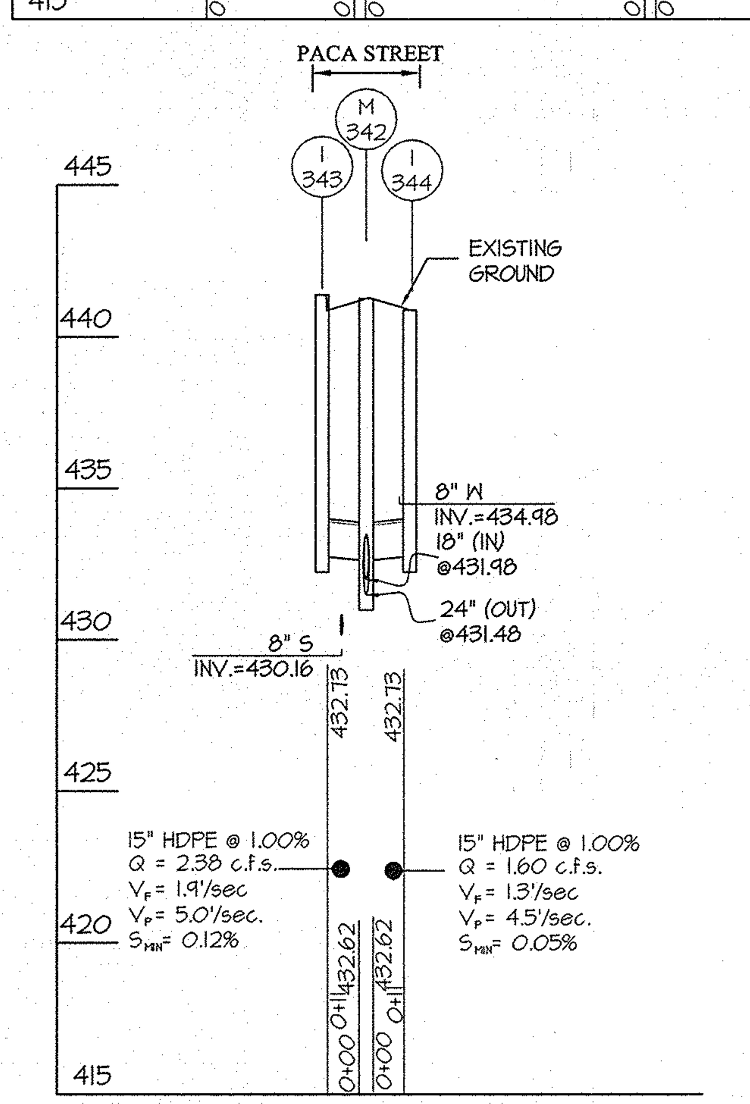

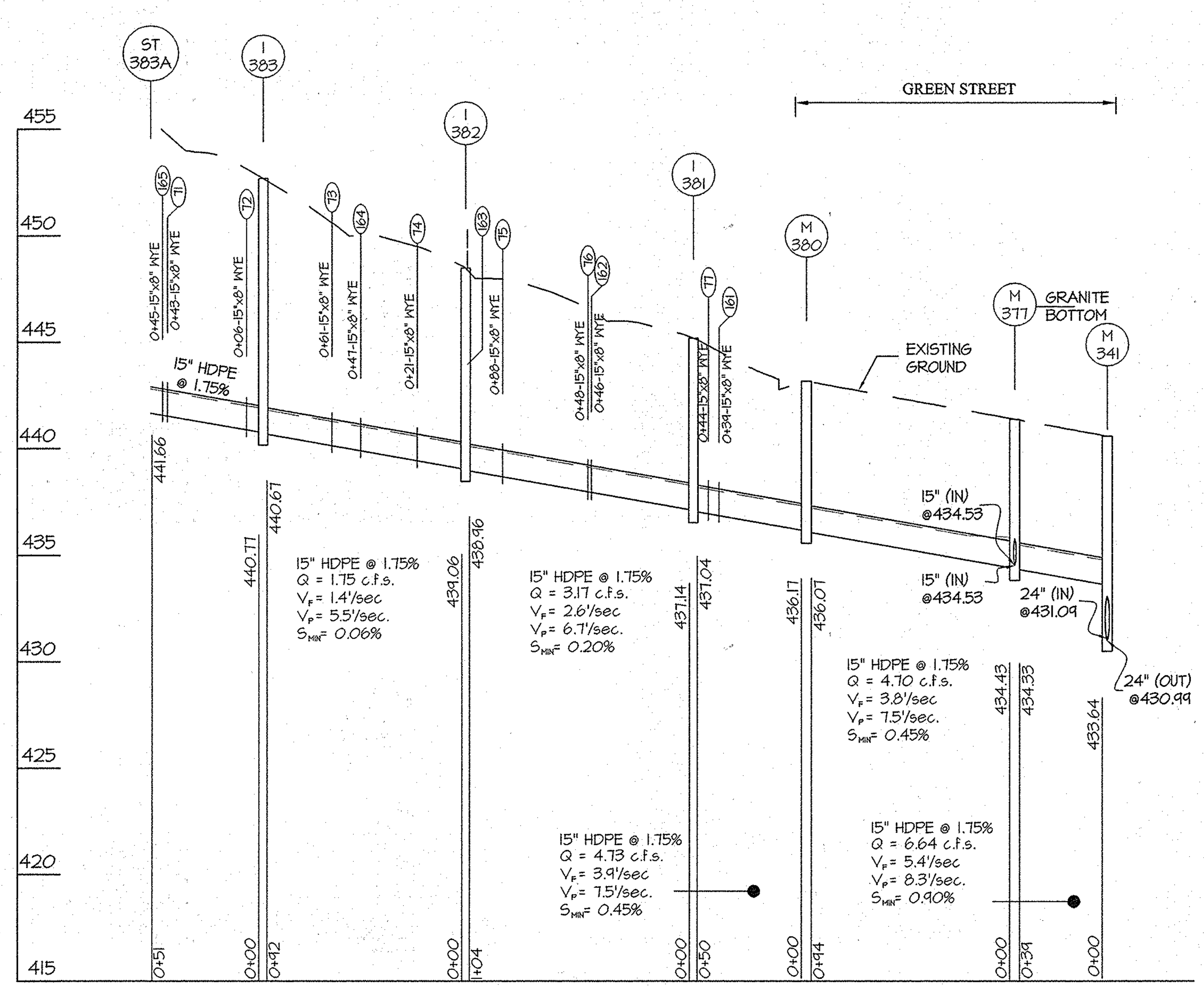

YARD DRAIN SCHEDULE			
LOT No.	INV. OF MAIN LINE	INV. 8" HDPE @ MAIN	INV. 8" HDPE @ PROP. LINE
55	442.34	442.63	442.76
56	441.79	442.08	442.21
57	440.77	441.06	441.19
58	439.77	440.06	440.17
59	439.65	439.94	440.09
60	440.05	440.34	440.51
61	440.84	441.13	441.26
62	441.79	442.08	442.21
63	442.34	442.63	442.76
71	442.95	443.24	443.38
72	442.58	442.87	443.01
73	439.53	439.82	439.95
74	439.13	439.42	439.55
75	436.93	437.22	437.35
76	436.53	436.82	436.95
77	434.68	434.97	435.10
161	434.63	434.92	435.05
162	436.51	436.80	436.93
163	---	443.97	444.07
164	439.39	439.68	439.81
165	442.97	443.26	443.39
166	449.91	450.20	450.20
167	449.65	449.94	450.07
168	448.54	448.83	448.96
169	447.46	447.75	447.88

NOTE: ALL YARD DRAINS ARE 8" HDPE RUN @ 1.00% UNLESS OTHERWISE NOTED.

STRUCTURE SCHEDULE

NO	TYPE	WIDTH (INSIDE)	TOP ELEVATION PROPOSED UPPER	TOP ELEVATION PROPOSED LOWER	TOP ELEVATION AS-BUILT UPPER	TOP ELEVATION AS-BUILT LOWER	INVERT PROPOSED UPPER	INVERT PROPOSED LOWER	INVERT AS-BUILT UPPER	INVERT AS-BUILT LOWER	STD. DETAIL	LOCATIONS (1)	REMARKS
I-343	A-10 INLET	2'-6"	441.65	441.26			---	432.73			HO. CO. SD 4.03	N 544,126 E 1,336,188	
I-344	A-10 INLET	2'-6"	441.65	441.26			---	432.73			HO. CO. SD 4.03	N 544,120 E 1,336,217	
I-347	A-10 INLET	2'-6"	451.99	451.60			---	444.81			HO. CO. SD 4.03	N 544,401 E 1,336,238	
I-348	A-10 INLET	2'-6"	451.99	451.60			---	444.83			HO. CO. SD 4.03	N 544,400 E 1,336,268	
I-378	A-10 INLET	2'-6"	441.68	441.48			---	434.64			HO. CO. SD 4.03	N 544,103 E 1,336,154	
I-379	A-10 INLET	2'-6"	441.68	441.48			---	434.66			HO. CO. SD 4.03	N 554,073 E 1,336,149	
I-381	S INLET	2'-7.5"	444.91	444.70			437.14	437.04			HO. CO. SD 4.22	N 544,159 E 1,336,066	
I-382	S INLET	2'-7.5"	448.20	448.10			439.06	438.96			HO. CO. SD 4.22	N 544,264 E 1,336,086	
I-383	S INLET	2'-7.5"	451.93	451.77			440.77	440.67			HO. CO. SD 4.22	N 544,357 E 1,336,105	
I-385	A-10 INLET	2'-6"	447.15	447.15			---	440.14			HO. CO. SD 4.03	N 544,338 E 1,336,429	
I-386	A-10 INLET	2'-6"	446.97	446.97			---	440.22			HO. CO. SD 4.03	N 544,302 E 1,336,423	
I-387	S INLET	2'-7.5"	454.88	454.82			448.25	448.15			HO. CO. SD 4.22	N 544,481 E 1,336,198	
I-388	S INLET	2'-7.5"	456.80	456.73			450.20	450.10			HO. CO. SD 4.22	N 544,481 E 1,336,102	
I-389	S INLET	2'-7.5"	450.86	450.80			442.83	442.73			HO. CO. SD 4.22	N 544,475 E 1,336,389	
I-390	SS INLET	2'-7.5"	450.48	450.48			443.29	443.19			HO. CO. SD 4.23	N 544,458 E 1,336,428	
I-391	SS INLET	2'-7.5"	451.09	451.01			443.85	443.75			HO. CO. SD 4.23	N 544,458 E 1,336,479	
M-341	STANDARD MANHOLE	4'-0"	440.58	---			433.64	430.99			HO. CO. G-5.12	N 544,080 E 1,336,194	
M-342	STANDARD MANHOLE	4'-0"	441.26	---			432.73	431.48			HO. CO. G-5.12	N 544,123 E 1,336,203	
M-345	STANDARD MANHOLE	4'-0"	450.08	---			438.57	437.90			HO. CO. G-5.12	N 544,359 E 1,336,248	
M-346	STANDARD MANHOLE	4'-0"	451.60	---			444.70	439.69			HO. CO. G-5.12	N 544,400 E 1,336,252	
M-349	STANDARD MANHOLE	4'-0"	454.54	---			447.10	441.31			HO. CO. G-5.12	N 544,481 E 1,336,253	
M-377	STANDARD MANHOLE	4'-0"	441.38	---			434.43	434.33			HO. CO. G-5.12	N 544,089 E 1,336,152	
M-380	STANDARD MANHOLE	4'-0"	443.18	---			436.17	436.07			HO. CO. G-5.12	N 544,107 E 1,336,056	
M-384	STANDARD MANHOLE	4'-0"	446.95	---			440.03	439.93			HO. CO. G-5.12	N 544,324 E 1,336,427	

APPROVED: HOWARD COUNTY DEPARTMENT OF PUBLIC WORKS
Chief, Bureau of Highways — Date 5-7-14

APPROVED: HOWARD COUNTY DEPARTMENT OF PLANNING & ZONING
Chief, Division of Land Development — Date 5-21-14
Chief, Development Engineering Division — Date 5.20.14

GLW GUTSCHICK LITTLE & WEBER, P.A.
CIVIL ENGINEERS, LAND SURVEYORS, LAND PLANNERS, LANDSCAPE ARCHITECTS
3909 NATIONAL DRIVE – SUITE 250 – BURTONSVILLE OFFICE PARK
BURTONSVILLE, MARYLAND 20866
TEL: 301-421-4024 BALT: 410-880-1820 DC/VA: 301-989-2524 FAX: 301-421-4186

L:\CADD\DRAWINGS\12001\PLANS BY GLW\FINALS\12001 21-24_SD PROFILES_300.dwg | DES. DEV | DRN. JRD | CHK. CKG

DATE	REVISION	BY	APP'R.

PREPARED FOR:
MAPLE LAWN FARMS I, LLC
SUITE 300 WOODHOLME CENTER
1829 REISTERSTOWN ROAD
BALTIMORE, MD 21208
ATTN: MARK BENNETT
410-484-8400

PROFESSIONAL CERTIFICATION
I HEREBY CERTIFY THAT THESE PLANS WERE PREPARED OR APPROVED BY ME, AND THAT I AM A DULY LICENSED PROFESSIONAL ENGINEER UNDER THE LAWS OF THE STATE OF MARYLAND, LICENSE NO. 12975, EXPIRATION DATE: May 26, 2016
4/24/14

STATE OF MARYLAND — PROFESSIONAL ENGINEER

STORM DRAIN PROFILES
MAPLE LAWN FARMS
GARDEN DISTRICT - AREA 1
LOTS 1 thru 98, OPEN SPACE LOTS 99 thru 110, COMMON OPEN AREA LOTS 111 thru 114 and NON-BUILDABLE BULK PARCELS 'X' thru 'Z'

ELECTION DISTRICT No. 5 — HOWARD COUNTY, MARYLAND

SCALE	ZONING	G. L. W. FILE No.
1"=50' (H) 1" = 5' (V)	MXD-3	12001
DATE	TAX MAP – GRID	SHEET
APRIL, 2014	41–21/46–3	23 OF 36

L:\CADD\DRAWINGS\12001\PLANS BY GLW\FINALS\12001 21-24_SD PROFILES_300.dwg, PLOTTED: 4/22/2014 12:21 PM, LAST SAVED: 4/17/2014 8:15 AM, PLOTTED BY: Doug Vande Ryt
©GLW 2014

F-14-033

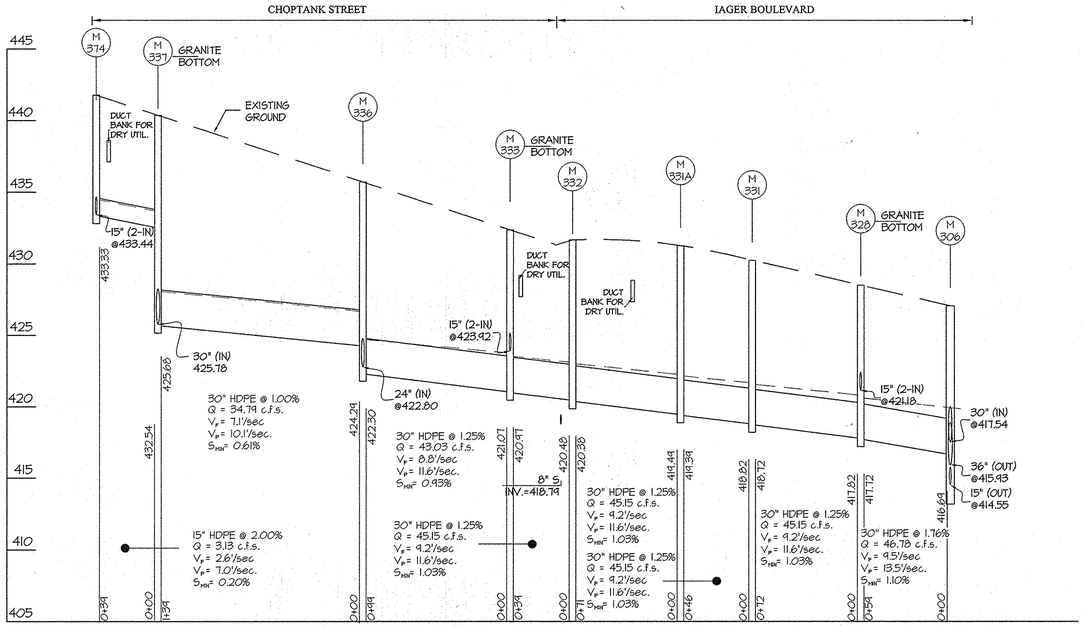

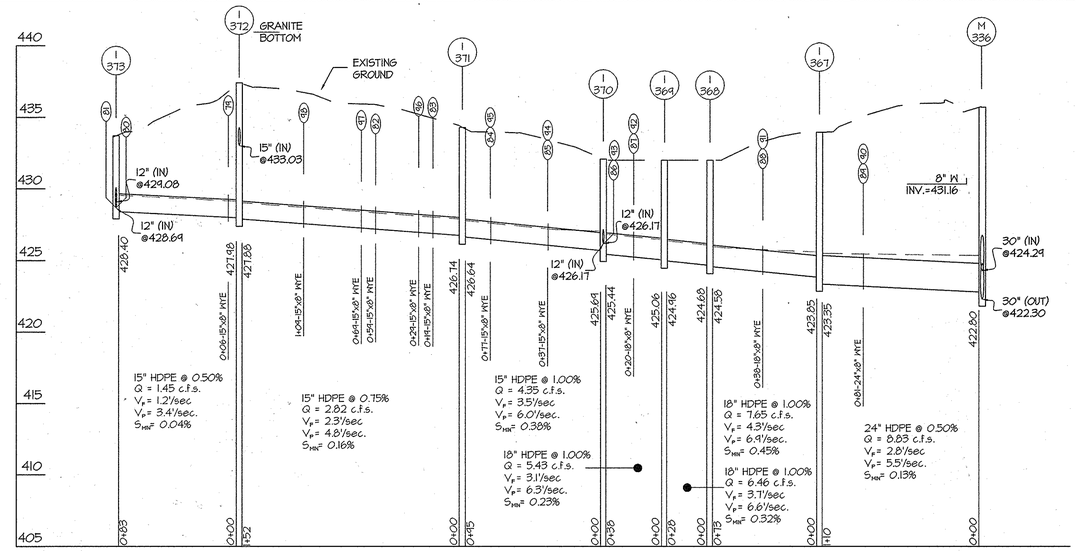

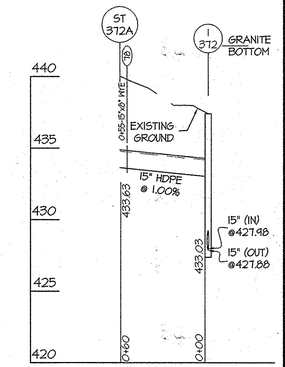

YARD DRAIN SCHEDULE			
LOT No.	INV. OF MAIN LINE	INV. 8" HDPE @ MAIN	INV. 8" HDPE @ PROP. LINE
78	431.34	431.68	431.81
79	428.13	428.42	428.58
80	---	424.10	424.20
81	---	424.10	424.10
82	427.07	427.36	427.48
83	426.67	426.96	427.09
84	426.20	426.49	426.62
85	425.80	426.09	426.22
86	---	426.17	426.27
87	425.00	425.42	425.55
88	423.97	424.39	424.52
89	423.35	424.02	424.15
90	423.35	424.02	424.15
91	423.97	424.39	424.52
92	425.00	425.42	425.55
93	---	426.17	426.27
94	425.80	426.09	426.22
95	426.20	426.49	426.62
96	426.77	427.06	427.20
97	427.17	427.46	427.60
98	427.57	427.86	428.01

NOTE: ALL YARD DRAINS ARE 8" HDPE RUN @ 1.00% UNLESS OTHERWISE NOTED.

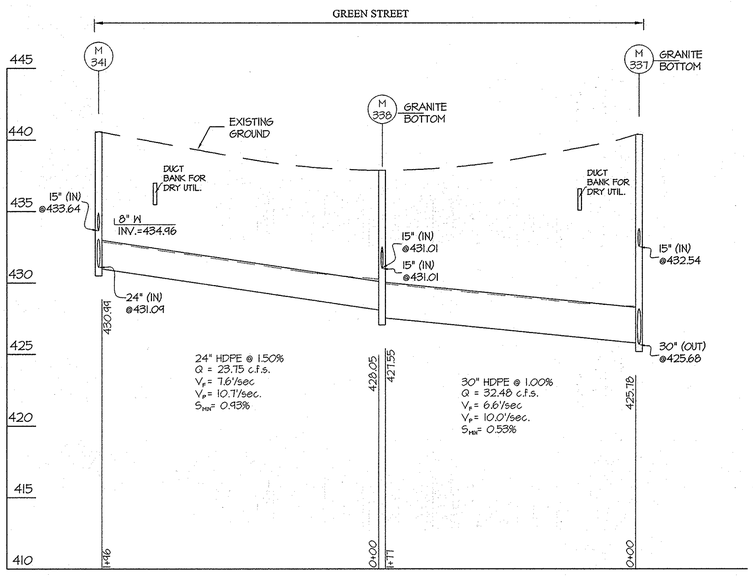

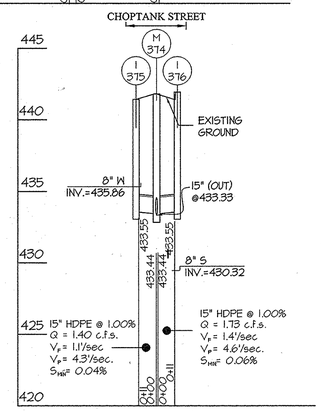

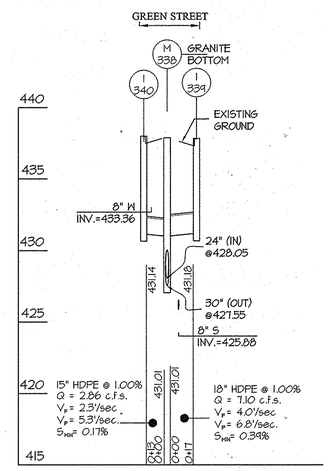

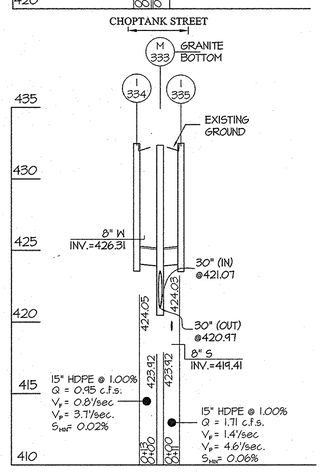

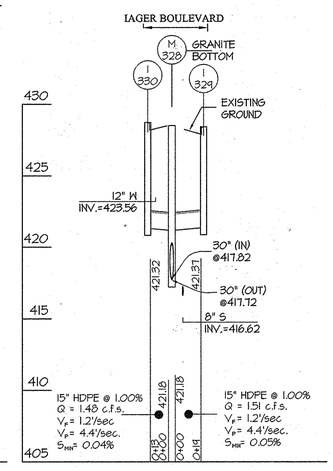

PIPE SCHEDULE			
SIZE	TYPE	QUANTITY (l.f.)	REMARKS
8"	HDPE	257	
15"	HDPE	520	
18"	HDPE	156	
24"	HDPE	306	
30"	HDPE	102	

STRUCTURE SCHEDULE												
NO	TYPE	WIDTH (INSIDE)	TOP ELEVATION				INVERT				STD. DETAIL	LOCATIONS (1)	REMARKS
			PROPOSED		AS-BUILT		PROPOSED		AS-BUILT				
			UPPER	LOWER	UPPER	LOWER	UPPER	LOWER	UPPER	LOWER			
I-329	A-10 INLET	2'-6"	428.62	428.38			---	421.37			HO. CO. SD 4.03	N 543,649 E 1,336,711	
I-330	A-10 INLET	2'-6"	428.43	428.68			---	421.32			HO. CO. SD 4.03	N 543,663 E 1,336,846	
I-334	A-10 INLET	2'-6"	432.74	432.40			---	424.05			HO. CO. SD 4.03	N 543,710 E 1,336,501	
I-335	A-10 INLET	2'-6"	432.74	432.40			---	424.03			HO. CO. SD 4.03	N 543,764 E 1,336,531	
I-339	COS-15 INLET	2'-6"	437.90	437.90			---	431.18			SHA MD. SD 374.63	N 544,063 E 1,336,342	
I-340	COS-15 INLET	2'-6"	438.08	438.08			---	431.14			SHA MD. SD 374.63	N 544,026 E 1,336,385	
I-367	S INLET	2'-7.5"	433.79	433.70			423.85	423.35			HO. CO. SD 4.22	N 543,840 E 1,336,426	
I-368	S INLET	2'-7.5"	431.90	431.85			424.68	424.58			HO. CO. SD 4.22	N 543,904 E 1,336,251	
I-369	SS INLET	2'-7.5"	431.60	431.60			425.06	424.96			HO. CO. SD 4.23	N 543,910 E 1,336,319	
I-370	S INLET	2'-7.5"	432.06	432.01			426.17	425.44			HO. CO. SD 4.22	N 543,918 E 1,336,218	
I-371	S INLET	2'-7.5"	426.74	426.64			426.48	426.38			HO. CO. SD 4.22	N 543,937 E 1,336,181	
I-372	S INLET	2'-7.5"	433.03	427.88			430.84	428.00			HO. CO. SD 4.22	N 543,964 E 1,336,028	
I-373	S INLET	2'-7.5"	429.08	428.40			429.10	428.52			HO. CO. SD 4.22	N 543,878 E 1,336,027	
I-375	A-10 INLET	2'-6"	442.22	441.64			---	433.55			HO. CO. SD 4.03	N 544,053 E 1,336,558	
I-376	A-10 INLET	2'-6"	442.16	441.81			---	433.55			HO. CO. SD 4.03	N 544,048 E 1,336,587	
M-306	STANDARD MANHOLE	5'-0"	427.08	---			417.54	414.55			HO. CO. 6-5.13	N 543,657 E 1,336,763	
M-328	STANDARD MANHOLE	5'-0"	428.52	---			417.82	417.72			HO. CO. 6-5.13	N 543,678 E 1,336,704	
M-331	STANDARD MANHOLE	5'-0"	430.26	---			418.82	418.72			HO. CO. 6-5.13	N 543,694 E 1,336,632	
M-331A	STANDARD MANHOLE	5'-0"	431.27	---			419.49	419.39			HO. CO. 6-5.13	N 543,710 E 1,336,583	
M-332	STANDARD MANHOLE	5'-0"	431.67	---			420.48	420.38			HO. CO. 6-5.13	N 543,724 E 1,336,504	
M-333	STANDARD MANHOLE	5'-0"	432.37	---			423.92	420.97			HO. CO. 6-5.13	N 543,767 E 1,336,517	
M-336	STANDARD MANHOLE	5'-0"	435.71	---			424.29	422.30			HO. CO. 6-5.13	N 543,868 E 1,336,537	
M-337	STANDARD MANHOLE	5'-0"	440.37	---			432.54	425.68			HO. CO. 6-5.13	N 554,008 E 1,336,564	
M-338	STANDARD MANHOLE	5'-0"	437.88	---			431.01	427.55			HO. CO. 6-5.13	N 544,042 E 1,336,388	
M-341	STANDARD MANHOLE	4'-0"	440.58	---			433.64	430.94			HO. CO. 6-5.12	N 544,080 E 1,336,948	
M-374	STANDARD MANHOLE	4'-0"	441.79	---			433.44	433.33			HO. CO. 6-5.12	N 544,051 E 1,336,512	

APPROVED: HOWARD COUNTY DEPARTMENT OF PUBLIC WORKS

Chief, Bureau of Highways — Date 5-7-14

APPROVED: HOWARD COUNTY DEPARTMENT OF PLANNING & ZONING

Chief, Division of Land Development — Date 5-21-14

Chief, Development Engineering Division — Date 5.20.14

GLW GUTSCHICK LITTLE & WEBER, P.A.

CIVIL ENGINEERS, LAND SURVEYORS, LAND PLANNERS, LANDSCAPE ARCHITECTS
3909 NATIONAL DRIVE – SUITE 250 – BURTONSVILLE OFFICE PARK
BURTONSVILLE, MARYLAND 20866
TEL: 301-421-4024 BALT: 410-880-1820 DC/VA: 301-989-2524 FAX: 301-421-4186

L:\CADD\DRAWINGS\12001\PLANS BY GLW\FINALS\12001 21-24_SD PROFILES_300.dwg

DES. DEV | DRN. JRD | CHK. CKG

DATE	REVISION	BY	APP'R.

PREPARED FOR:

MAPLE LAWN FARMS I, LLC
SUITE 300 WOODHOLME CENTER
1829 REISTERSTOWN ROAD
BALTIMORE, MD 21208
ATTN: MARK BENNETT
410-484-8400

PROFESSIONAL CERTIFICATION

I HEREBY CERTIFY THAT THESE PLANS WERE PREPARED OR APPROVED BY ME, AND THAT I AM A DULY LICENSED PROFESSIONAL ENGINEER UNDER THE LAWS OF THE STATE OF MARYLAND, LICENSE NO. 12975
EXPIRATION DATE: May 26, 2016

4/24/14

STATE OF MARYLAND — CLIFTON W. GUTSCHICK — No. 12975 — PROFESSIONAL ENGINEER

STORM DRAIN PROFILES

MAPLE LAWN FARMS

GARDEN DISTRICT - AREA 1
LOTS 1 thru 98, OPEN SPACE LOTS 99 thru 110,
COMMON OPEN AREA LOTS 111 thru 114
and NON-BUILDABLE BULK PARCELS 'X' thru 'Z'

ELECTION DISTRICT No. 5 — HOWARD COUNTY, MARYLAND

SCALE	ZONING	G. L. W. FILE No.
1"=50' (H) 1" = 5' (V)	MXD-3	12001
DATE	TAX MAP – GRID	SHEET
APRIL, 2014	41-21/46-3	24 OF 36

© GLW 2014

F-14-033

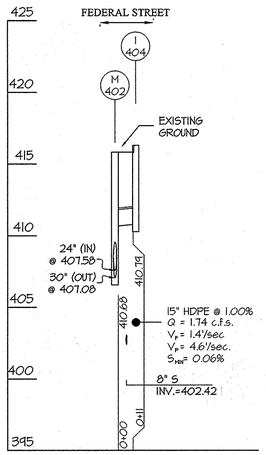

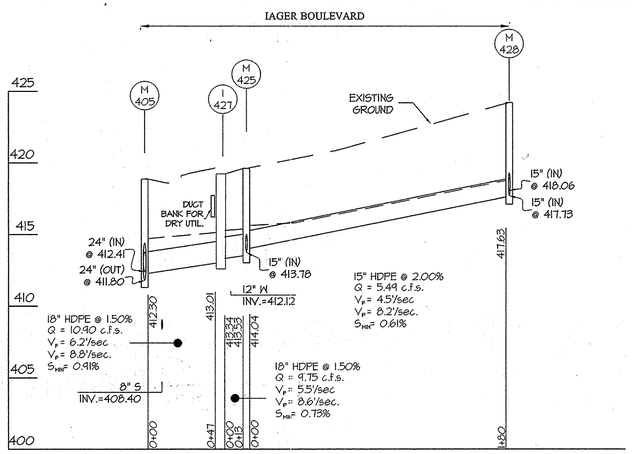

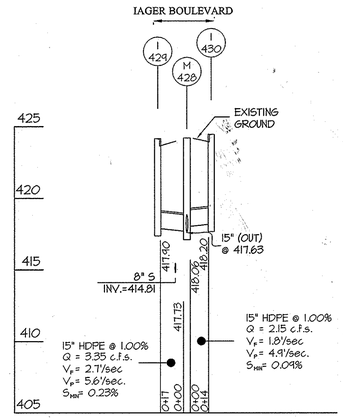

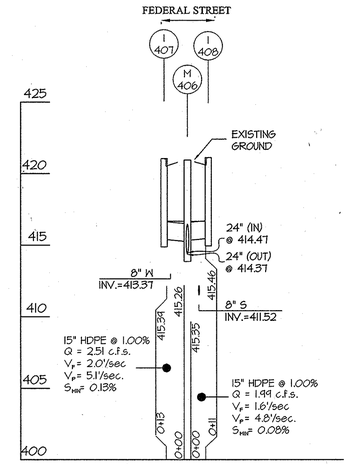

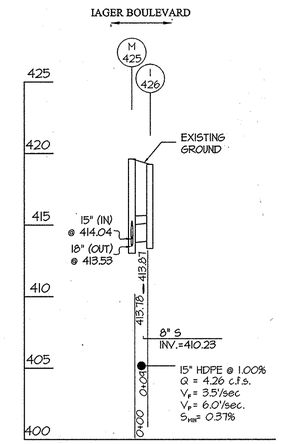

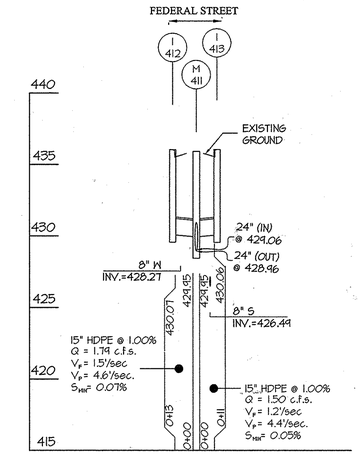

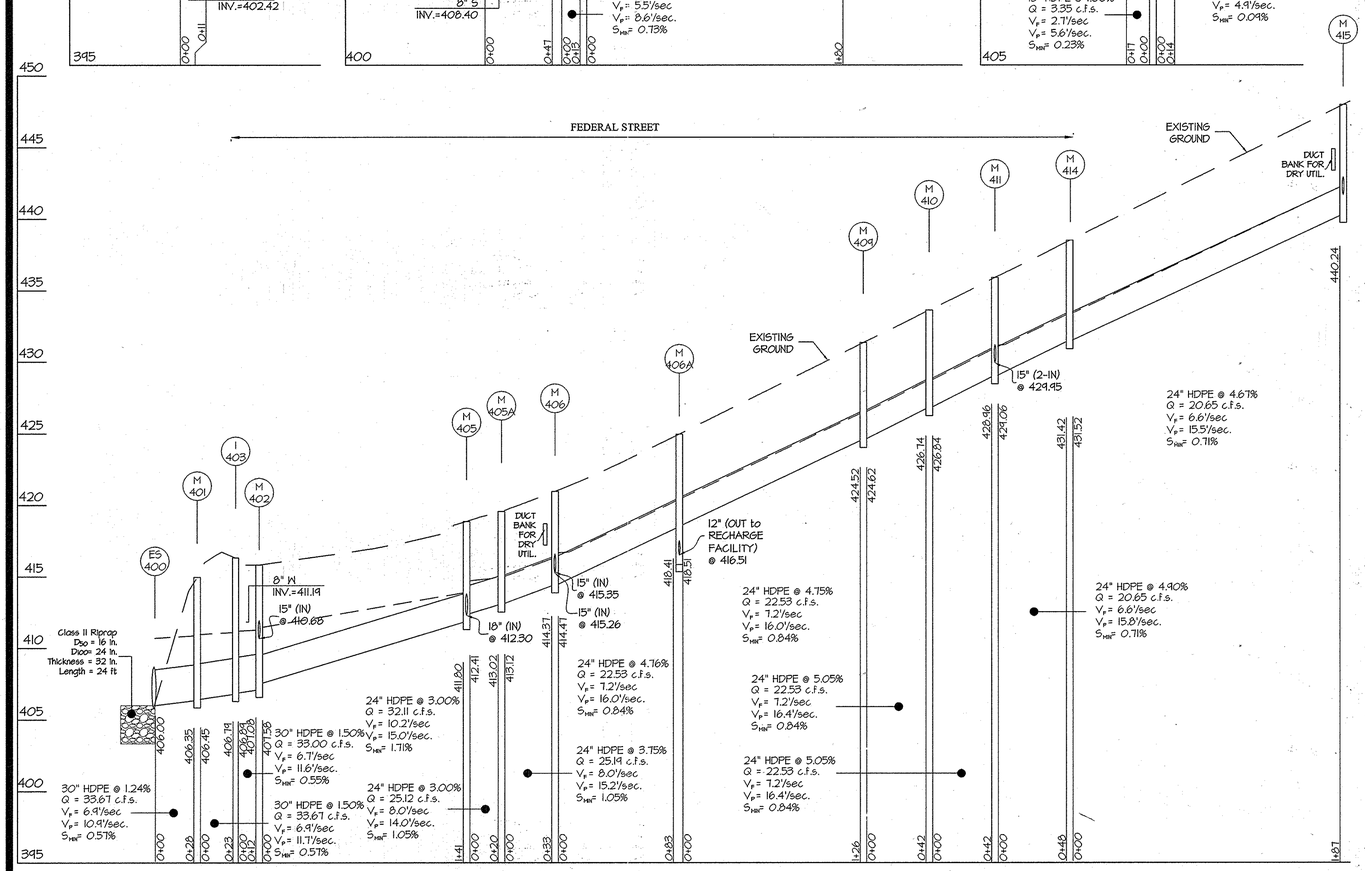

STRUCTURE SCHEDULE

NO	TYPE	WIDTH (INSIDE)	TOP ELEVATION ⚠ PROPOSED UPPER	TOP ELEVATION ⚠ PROPOSED LOWER	TOP ELEVATION AS-BUILT UPPER	TOP ELEVATION AS-BUILT LOWER	INVERT PROPOSED UPPER	INVERT PROPOSED LOWER	INVERT AS-BUILT UPPER	INVERT AS-BUILT LOWER	STD. DETAIL	LOCATIONS ⚠	REMARKS
ES-400	END SECTION	2'-6"	408.50	406.00			-	406.00			-	N 543,466 E 1,335,929	
I-403	A-10 INLET	2'-6"	416.51	416.36			406.84	406.74			HO. CO. SD 4.03	N 543,445 E 1,335,981	
I-404	A-10 INLET	2'-6"	416.51	416.36			-	410.74			HO. CO. SD 4.03	N 543,444 E 1,336,012	
I-407	A-10 INLET	2'-6"	421.28	420.87			-	415.39			HO. CO. SD 4.03	N 543,642 E 1,335,971	
I-408	A-10 INLET	2'-6"	421.28	420.87			-	415.46			HO. CO. SD 4.03	N 543,654 E 1,335,999	
I-412	A-10 INLET	2'-6"	436.50	435.80			-	430.07			HO. CO. SD 4.03	N 543,937 E 1,335,872	
I-413	A-10 INLET	2'-6"	436.40	435.85			-	430.06			HO. CO. SD 4.03	N 543,938 E 1,335,902	
I-426	A-10 INLET	2'-6"	419.98	419.76			-	413.87			HO. CO. SD 4.03	N 543,636 E 1,336,038	
I-427	A-10 INLET	2'-6"	419.92	419.70			413.34	413.01			HO. CO. SD 4.03	N 543,610 E 1,336,049	
I-429	A-10 INLET	2'-6"	424.39	424.10			-	417.90			HO. CO. SD 4.03	N 543,713 E 1,336,204	
I-430	A-10 INLET	2'-6"	424.40	424.70			-	418.20			HO. CO. SD 4.03	N 543,681 E 1,336,223	
M-401	STANDARD MANHOLE	5'-0"	415.16	-			406.45	406.35			HO. CO. 6-5.13	N 543,444 E 1,335,955	
M-402	STANDARD MANHOLE	4'-0"	416.24	-			407.58	407.08			HO. CO. 6-5.12	N 543,444 E 1,335,948	
M-405	STANDARD MANHOLE	5'-0"	418.87	-			412.41	411.80			HO. CO. 6-5.13	N 543,584 E 1,335,999	
M-405A	STANDARD MANHOLE	4'-0"	419.56	-			413.12	413.02			HO. CO. 6-5.12	N 543,613 E 1,335,999	
M-406	STANDARD MANHOLE	4'-0"	420.96	-			415.37	414.37			HO. CO. 6-5.12	N 543,648 E 1,335,986	
M-406A	STANDARD MANHOLE	4'-0"	424.97	-			418.51	XXX			HO. CO. 6-5.12	N 543,724 E 1,335,953	
M-409	STANDARD MANHOLE	4'-0"	431.35	-			424.62	424.52			HO. CO. 6-5.12	N 543,848 E 1,335,905	
M-410	STANDARD MANHOLE	4'-0"	433.63	-			426.84	426.74			HO. CO. 6-5.12	N 543,842 E 1,335,843	
M-411	STANDARD MANHOLE	4'-0"	435.91	-			429.06	428.96			HO. CO. 6-5.12	N 543,938 E 1,335,888	
M-414	STANDARD MANHOLE	4'-0"	438.51	-			431.52	431.42			HO. CO. 6-5.12	N 543,940 E 1,335,840	
M-415	STANDARD MANHOLE	4'-0"	447.97	-			441.68	440.24			HO. CO. 6-5.12	N 544,177 E 1,335,926	
M-425	STANDARD MANHOLE	4'-0"	419.61	-			414.04	413.53			HO. CO. 6-5.12	N 543,625 E 1,336,043	
M-428	STANDARD MANHOLE	4'-0"	424.23	-			418.06	417.63			HO. CO. 6-5.12	N 543,645 E 1,336,212	

PIPE SCHEDULE

SIZE	TYPE	QUANTITY (L.F.)	REMARKS
15"	HDPE	279	
18"	HDPE	60	
24"	HDPE	722	
30"	HDPE	63	

APPROVED: HOWARD COUNTY DEPARTMENT OF PUBLIC WORKS

Chief, Bureau of Highways — Date 5-7-14

APPROVED: HOWARD COUNTY DEPARTMENT OF PLANNING & ZONING

Chief, Division of Land Development — Date 5-21-14

Chief, Development Engineering Division — Date 5-20-14

GLW GUTSCHICK LITTLE & WEBER, P.A.

CIVIL ENGINEERS, LAND SURVEYORS, LAND PLANNERS, LANDSCAPE ARCHITECTS
3909 NATIONAL DRIVE – SUITE 250 – BURTONSVILLE OFFICE PARK
BURTONSVILLE, MARYLAND 20866
TEL: 301-421-4024 BALT: 410-880-1820 DC/VA: 301-989-2524 FAX: 301-421-4186

DATE	REVISION	BY	APP'R.
2015-4-28	⚠1 REVISED SD TOP ELEVATIONS PER ROAD GRADE REVISIONS	SH.	DEV

L:\CADD\DRAWINGS\12001\PLANS BY GLW\FINALS\12001 25-28,SD PROFILES_400.dwg
PLOTTED: 4/22/2014 12:31 PM, LAST SAVED: 4/17/2014 8:28 AM, PLOTTED BY: Doug Tomas, R24

DES. DEV | DRN. JRD | CHK. CKG

PREPARED FOR:

MAPLE LAWN FARMS I, LLC
SUITE 300 WOODHOLME CENTER
1829 REISTERSTOWN ROAD
BALTIMORE, MD 21208
ATTN: MARK BENNETT
410-484-8400

PROFESSIONAL CERTIFICATION

I HEREBY CERTIFY THAT THESE PLANS WERE PREPARED OR APPROVED BY ME, AND THAT I AM A DULY LICENSED PROFESSIONAL ENGINEER UNDER THE LAWS OF THE STATE OF MARYLAND, LICENSE NO. 12975
EXPIRATION DATE: May 26, 2016

4/24/14

STATE OF MARYLAND — DOUGLAS W. DEMBOWSKI — No. 12975 — PROFESSIONAL ENGINEER

STORM DRAIN PROFILES

MAPLE LAWN FARMS

GARDEN DISTRICT - AREA 1
LOTS 1 thru 98, OPEN SPACE LOTS 99 thru 110,
COMMON OPEN AREA LOTS 111 thru 114
and NON-BUILDABLE BULK PARCELS 'X' thru 'Z'

ELECTION DISTRICT No. 5 — HOWARD COUNTY, MARYLAND

SCALE	ZONING	G. L. W. FILE No.
1"=50' (H) 1" = 5' (V)	MXD-3	12001
DATE	TAX MAP – GRID	SHEET
APRIL, 2014	41-21/46-3	25 OF 36

F-14-033

© GLW 2014

STRUCTURE SCHEDULE

NO	TYPE	WIDTH (INSIDE)	TOP ELEVATION PROPOSED UPPER	TOP ELEVATION PROPOSED LOWER	TOP ELEVATION AS-BUILT UPPER	TOP ELEVATION AS-BUILT LOWER	INVERT PROPOSED UPPER	INVERT PROPOSED LOWER	INVERT AS-BUILT UPPER	INVERT AS-BUILT LOWER	STD. DETAIL	LOCATIONS (1)	REMARKS
ST-424	STUB		-	-			-	449.36			HO. CO. SD 4.03	N 544,646 E 1,335,940	
I-416	A-10 INLET	2'-6"	448.43	447.90			-	441.80			HO. CO. SD 4.03	N 544,180 E 1,335,910	
I-417	A-10 INLET	2'-6"	448.43	447.90			-	441.78			HO. CO. SD 4.03	N 544,175 E 1,335,940	
I-420	A-10 INLET	2'-6"	455.41	455.21			-	448.31			HO. CO. SD 4.03	N 544,400 E 1,335,944	
I-421	A-10 INLET	2'-6"	455.41	455.21			-	448.29			HO. CO. SD 4.03	N 544,399 E 1,335,975	
I-432	A-10 INLET	2'-6"	459.94	459.66			-	452.63			HO. CO. SD 4.03	N 544,626 E 1,335,997	
I-433	A-10 INLET	2'-6"	459.88	459.60			-	453.14			HO. CO. SD 4.03	N 544,597 E 1,336,001	
I-435	DOUBLE S-INLET	2'-6"	419.00	419.00			414.72	414.62			HO. CO. SD 4.22	N 543,699 E 1,335,125	
I-436	DOUBLE S-INLET	2'-6"	432.50	432.50			427.60	427.50			HO. CO. SD 4.22	N 544,024 E 1,335,125	
I-437	DOUBLE S-INLET	2'-6"	438.00	438.00			431.04	430.79			HO. CO. SD 4.22	N 544,349 E 1,335,124	
I-438	DOUBLE S-INLET	2'-6"	450.00	450.00			-	442.85			HO. CO. SD 4.23	N 544,674 E 1,335,124	
ES-434	END STRUCTURE	18"	414.00	412.50			414.00	-			-	N 543,635 E 1,335,120	
ES-5		24"	432.68				430.68					N 544,340 E 1,337,071	
M-414	STANDARD MANHOLE	4'-0"	438.51	-			431.52	431.42			HO. CO. G-5.12	N 543,990 E 1,335,840	
M-415	STANDARD MANHOLE	4'-0"	447.97	-			441.68	440.24			HO. CO. G-5.12	N 544,177 E 1,335,926	
M-418	STANDARD MANHOLE	4'-0"	452.42	-			441.98	441.88			HO. CO. G-5.12	N 544,280 E 1,335,946	
M-419	STANDARD MANHOLE	4'-0"	455.11	-			448.18	443.38			HO. CO. G-5.12	N 544,340 E 1,335,961	
M-422	STANDARD MANHOLE	4'-0"	457.24	-			444.71	444.61			HO. CO. G-5.12	N 544,517 E 1,335,956	
M-423	STANDARD MANHOLE	4'-0"	458.84	-			451.94	445.58			HO. CO. G-5.12	N 544,607 E 1,335,945	
M-431	STANDARD MANHOLE	4'-0"	459.54	-			453.00	452.44			HO. CO. G-5.12	N 544,614 E 1,336,000	
ES-4		24"	432.30	-			430.30					N 544,302 E 1,337,060	

(2)

PIPE SCHEDULE

SIZE	TYPE	QUANTITY (L.F.)	REMARKS
15"	HDPE	438	
18"	HDPE	738	
24"	HDPE	403	

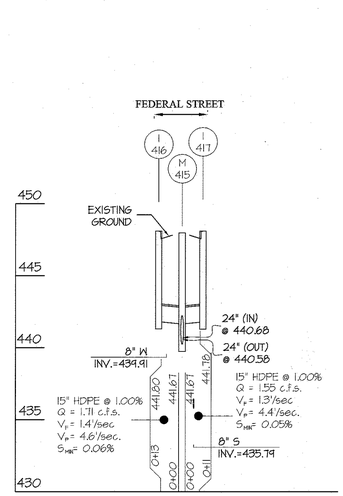

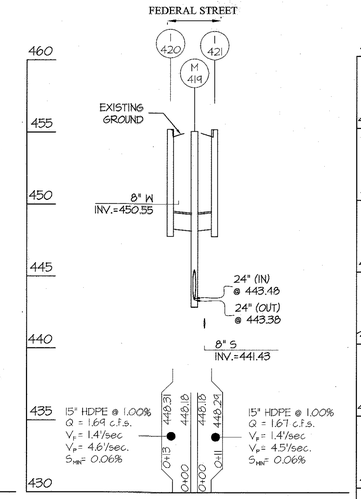

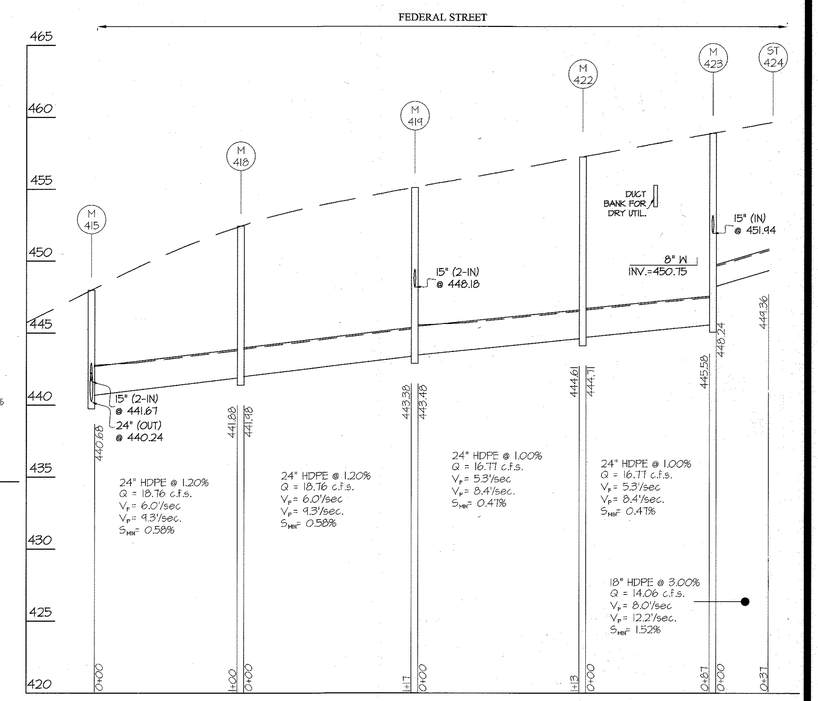

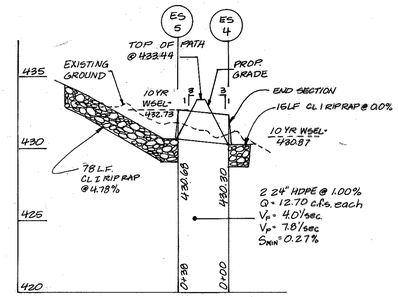

OPEN SPACE LOT 105 CULVERT

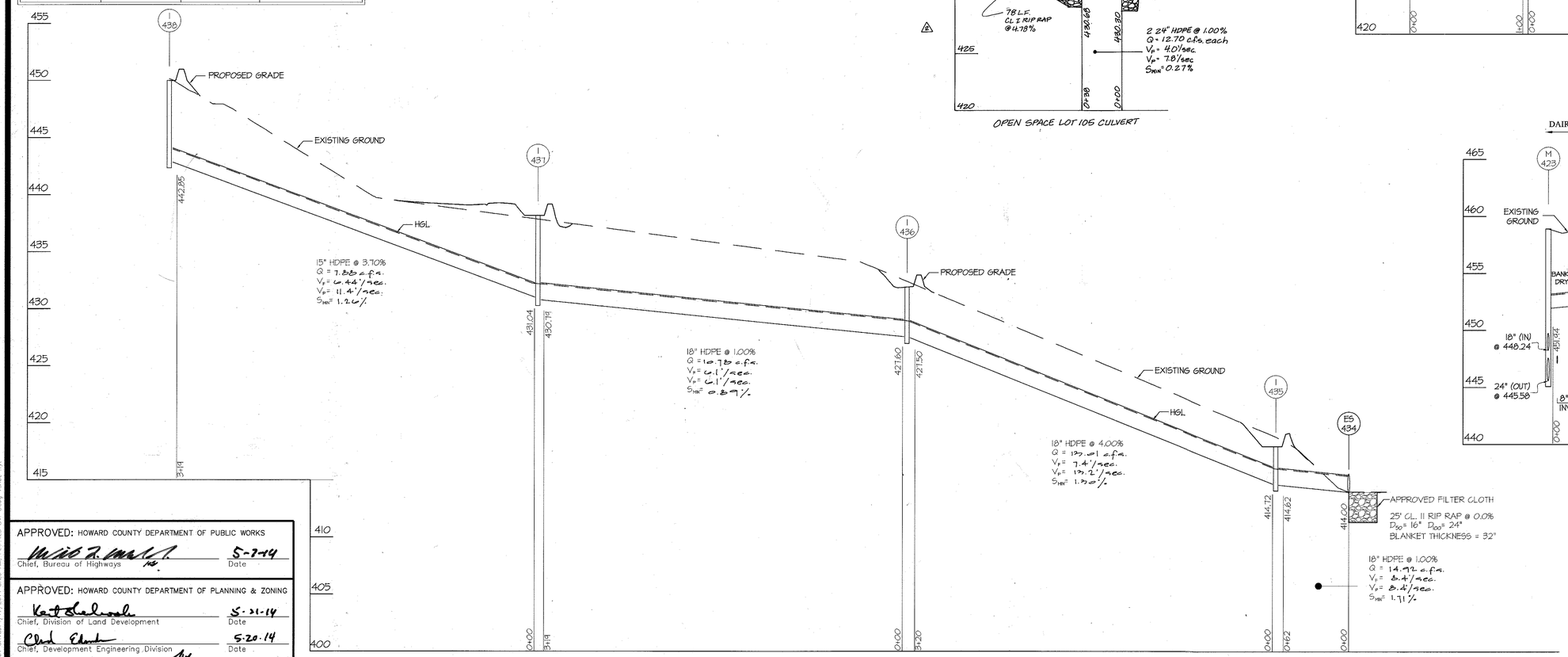

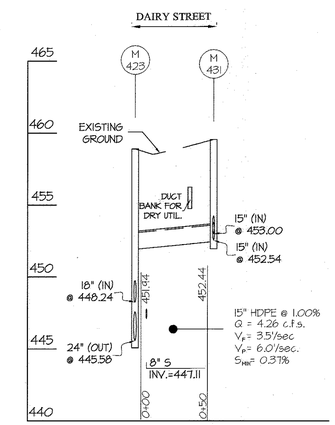

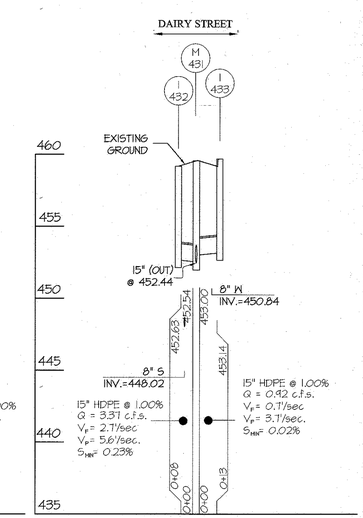

APPROVED: HOWARD COUNTY DEPARTMENT OF PUBLIC WORKS

Chief, Bureau of Highways — Date 5-7-14

APPROVED: HOWARD COUNTY DEPARTMENT OF PLANNING & ZONING

Chief, Division of Land Development — Date 5-21-14

Chief, Development Engineering Division — Date 5-20-14

GLW GUTSCHICK LITTLE & WEBER, P.A.

CIVIL ENGINEERS, LAND SURVEYORS, LAND PLANNERS, LANDSCAPE ARCHITECTS
3909 NATIONAL DRIVE – SUITE 250 – BURTONSVILLE OFFICE PARK
BURTONSVILLE, MARYLAND 20866
TEL: 301-421-4024 BALT: 410-880-1820 DC/VA: 301-989-2524 FAX: 301-421-4186

L:\CADD\DRAWINGS\12001\PLANS BY GLW\FINALS\12001 25-26_SD PROFILES_400.dwg

DATE	REVISION	BY	APP'R.
2018-08-04	(4) ADDED OPEN SPACE CULVERT PROFILE	HKJ	DEV
2015-4-28	(1) REVISED SD TOP ELEVATIONS PER ROAD GRADE REVISIONS	SH	DEV

DES. DEV | DRN. JRD | CHK. CKG

PREPARED FOR:
MAPLE LAWN FARMS I, LLC
SUITE 300 WOODHOLME CENTER
1829 REISTERSTOWN ROAD
BALTIMORE, MD 21208
ATTN: MARK BENNETT
410-484-8400

PROFESSIONAL CERTIFICATION

I HEREBY CERTIFY THAT THESE PLANS WERE PREPARED OR APPROVED BY ME, AND THAT I AM A DULY LICENSED PROFESSIONAL ENGINEER UNDER THE LAWS OF THE STATE OF MARYLAND, LICENSE NO. 12975
EXPIRATION DATE: May 26, 2016

4/24/14

STATE OF MARYLAND — CARLTON K. GUTSCHICK — REG. NO. 12975 — PROFESSIONAL ENGINEER

STORM DRAIN PROFILES

MAPLE LAWN FARMS

GARDEN DISTRICT - AREA I
LOTS 1 thru 98, OPEN SPACE LOTS 99 thru 110, COMMON OPEN AREA LOTS 111 thru 114 and NON-BUILDABLE BULK PARCELS 'X' thru 'Z'

ELECTION DISTRICT No. 5 — HOWARD COUNTY, MARYLAND

SCALE	ZONING	G. L. W. FILE No.
1"=50' (H) 1" = 5' (V)	MXD-3	12001
DATE	TAX MAP – GRID	SHEET
APRIL, 2014	41-21/46-3	26 OF 36

© GLW 2014

F-14-033

GRADING/SEDIMENT CONTROL LEGEND

- 400 — EXISTING CONTOUR
- 400 — PROPOSED CONTOUR
- EXISTING TREELINE
- PROPOSED TREELINE
- 8+8 — FLOODPLAIN CROSS SECTION
- LIMIT OF SUBMISSION
- 2 — PROPERTY CORNER
- LIMITS OF DISTURBANCE
- STABILIZED CONSTRUCTION ENTRANCE
- EXISTING EARTH DIKE
- PROPOSED EARTH DIKE
- SSF — EXISTING SUPER SILT FENCE
- SF — PROPOSED SILT FENCE
- SSF — PROPOSED SUPER SILT FENCE
- EROSION CONTROL MATTING

SEQUENCE OF CONSTRUCTION

1. OBTAIN GRADING PERMIT AND ARRANGE FOR AN ON-SITE PRE-CONSTRUCTION MEETING . (1 WEEK)
2. INSTALL STONE CONSTRUCTION ENTRANCE AND SILT FENCE AS SHOWN ON THESE PLANS. (1 WEEK)
3. INSPECT SEDIMENT CONTROL DEVICES CONSTRUCTED UNDER F 13-008 AND MAKE REPAIRS AS NEEDED. THE CONTRACTOR IS TO CONSTRUCT THE CLEANWATER DIVERSION ALONG THE RIGHT-OF-WAY ON THE NORTH SIDE OF DAIRY STREET AT THE NORTHERN MOST LIMITS OF PHASE 1 AS SHOWN ON SHEET 27. FOR THE DIVERSION DRAINING TO THE EAST, THE CONTRACTOR IS TO INSTALL THE DIVERSION IN THE "INITIAL" LOCATION(2 WEEKS)

PHASE 1

1. BEGIN CONSTRUCTION OF THE FOLLOWING STORM DRAINS PER THIS PLAN. E5 434 NORTH ALONG WESTERN MOST BOUNDARY OF THE PROJECT TO I-438, E5 400 NORTH ALONG FEDERAL STREET TO ST-424 AND ALL OF THE RUNS CONTRIBUTING TO THEM, E5 3 TO THE STORM DRAINS THAT RUN NORTH ALONG CHOPTANK STREET UP TO MH 374, NORTH ALONG DAIRY STREET TO I-365A, EAST ALONG GREEN STREET TO MH 380, AND NORTH ALONG PAGA STREET TO MH 348. ONLY THE WATER AND SEWER SHOWN ON CONT. #24-4785-D AND CONT. #24-4786-D WITHIN THESE SAME LIMITS CAN BE CONSTRUCTED AT THIS TIME. CONTRACTOR IS TO BLOCK INLETS I-403 AND I-404 UNTIL THE CURB AND GUTTER HAS BEEN EXTENDED TO THIS POINT. ALL OTHER INLETS ARE TO REMAIN OPEN TO DIRECT RUNOFF TO THE SEDIMENT BASINS. THE CONTRACTOR MUST INSURE THAT SEDIMENT LADEN RUNOFF IS DIRECTED TO THE INLETS. THEREFORE, TEMPORARY STONE AND/OR ASPHALT BERMS MUST BE INSTALLED UNTIL THE SURFACE COURSE OF PAVING HAS BEEN LAID DOWN. (3 MONTHS)
2. ONCE PERMISSION HAS BEEN GRANTED BY THE SEDIMENT CONTROL INSPECTOR, THE CONTRACTOR IS TO RELOCATE THE DIVERSION ALONG THE NORTH RIGHT-OF-WAY LINE OF DAIRY STREET TO ITS "FINAL" LOCATION. (1 WEEK)
3. ONCE PERMISSION HAS BEEN GRANTED FROM THE SEDIMENT CONTROL, BEGIN THE LOT GRADING. THE LOW POINTS CREATED AS A RESULT OF THE GRADING WILL DRAIN TO STUBS PROVIDED IN THE ALLEY DRAINAGE SYSTEM. ANY EXCESS MATERIAL IS TO BE TAKEN TO OPEN SPACE LOT 98 AT THE INTERSECTION OF IAGER BOULEVARD AND FEDERAL STREET. THE CONTRACTOR MUST IMPLEMENT DUST CONTROL MEASURES PER THE SPECIFICATIONS ON SHEET 33. (1 MONTH)
4. STABILIZE THE DISTURBED AREAS IN ACCORDANCE WITH THE TEMPORARY SEEDING SPECIFICATIONS ON SHEET 33. WITH THE PERMISSION OF THE SEDIMENT CONTROL INSPECTOR, BEGIN THE WORK SHOWN WITHIN THE AREA SHOWN AS PHASE 2 ON SHEET 27. (1 WEEK)

PHASE 2

5. BEGIN CONSTRUCTION OF THE FOLLOWING STORM DRAINS PER THIS PLAN. MH 346 NORTH ALONG PAGA STREET, FROM MH 358 NORTH TO THE STORM DRAINS WITHIN OPEN SPACE LOT 112, FROM MH 380 NORTH TO THE STORM DRAINS WITHIN OPEN SPACE LOT 111. ONLY THE WATER AND SEWER SHOWN ON CONT. #24-4785-D AND CONT. #24-4786-D WITHIN THESE LIMITS CAN BE CONSTRUCTED AT THIS TIME. ALL INLETS ARE TO REMAIN OPEN TO DIRECT RUNOFF TO THE SEDIMENT BASINS. THE CONTRACTOR MUST INSURE THAT SEDIMENT LADEN RUNOFF IS DIRECTED TO THE INLETS. THEREFORE, TEMPORARY STONE AND/OR ASPHALT BERMS MUST BE INSTALLED UNTIL THE SURFACE COURSE OF PAVING HAS BEEN LAID DOWN. (3 MONTHS)
6. ONCE PERMISSION HAS BEEN GRANTED FROM THE SEDIMENT CONTROL, BEGIN THE LOT GRADING. THE LOW POINTS CREATED AS A RESULT OF THE GRADING WILL DRAIN TO STUBS PROVIDED IN THE ALLEY DRAINAGE SYSTEM. ANY EXCESS MATERIAL IS TO BE TAKEN TO OPEN SPACE LOT 101 NEAR THE CENTER OF THE SITE. THE CONTRACTOR MUST IMPLEMENT DUST CONTROL MEASURES PER THE SPECIFICATIONS ON SHEET 33. (1 MONTH)
7. STABILIZE THE DISTURBED AREAS IN ACCORDANCE WITH THE TEMPORARY SEEDING SPECIFICATIONS ON SHEET 33. (1 WEEK)
8. INSTALL THE CURB AND GUTTER, SIDEWALKS, PATHWAY, AND BASE PAVING. (2 MONTHS)
9. FINE GRADE SITE AND STABILIZE DISTURBED AREAS. AT THIS POINT, THE GRADING BEING DONE SHOULD FALL WITHIN THE ROAD RIGHT-OF-WAY. (1 MONTH)
10. AS AREAS ARE STABILIZED AND PERMISSION HAS BEEN GRANTED BY THE SEDIMENT CONTROL INSPECTOR, THE SEDIMENT CONTROL DEVICES CAN BE REMOVED. IMMEDIATELY STABILIZE ANY DISTURBANCE DUE TO THEIR REMOVAL. (1 MONTH)
11. WITH THE PERMISSION OF THE SEDIMENT CONTROL INSPECTOR FLUSH THE STORM DRAIN SYSTEMS. (2 DAYS)

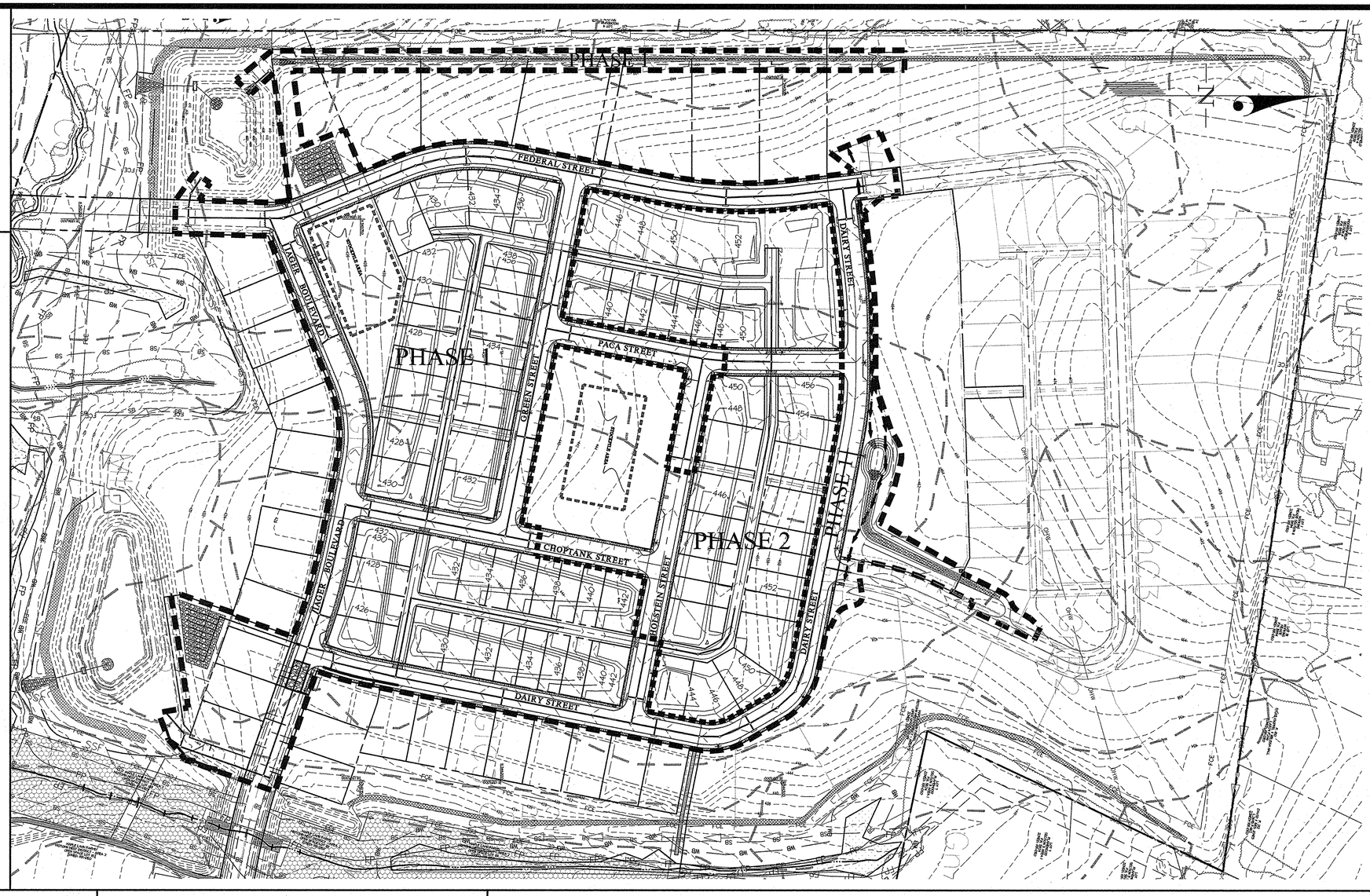

GRAPHIC SCALE
0 50 100 200

APPROVED: HOWARD COUNTY DEPARTMENT OF PUBLIC WORKS
Chief, Bureau of Highways — Date 5-7-14

APPROVED: HOWARD COUNTY DEPARTMENT OF PLANNING & ZONING
Chief, Division of Land Development — Date 5-21-14
Chief, Development Engineering Division — Date 5-20-14

ENGINEER'S CERTIFICATE

"I CERTIFY THAT THIS PLAN FOR EROSION AND SEDIMENT CONTROL REPRESENTS A PRACTICAL AND WORKABLE PLAN BASED ON MY PERSONAL KNOWLEDGE OF THE SITE CONDITIONS AND THAT IT WAS PREPARED IN ACCORDANCE WITH THE REQUIREMENTS OF THE HOWARD SOIL CONSERVATION DISTRICT."

SIGNATURE OF ENGINEER — DATE 4/24/14

BUILDER'S CERTIFICATE

"I/WE CERTIFY THAT ALL DEVELOPMENT AND/OR CONSTRUCTION WILL BE DONE ACCORDING TO THIS PLAN, AND THAT ANY RESPONSIBLE PERSONNEL INVOLVED IN THE CONSTRUCTION PROJECT WILL HAVE A CERTIFICATE OF ATTENDANCE AT A MARYLAND DEPARTMENT OF THE ENVIRONMENT APPROVED TRAINING PROGRAM FOR THE CONTROL OF SEDIMENT AND EROSION BEFORE BEGINNING THE PROJECT. I ALSO AUTHORIZE PERIODIC ON-SITE INSPECTION BY THE HSCD."

SIGNATURE OF DEVELOPER/BUILDER — DATE 4/23/14

THIS DEVELOPMENT PLAN IS APPROVED FOR SOIL EROSION AND SEDIMENT CONTROL BY THE HOWARD SOIL CONSERVATION DISTRICT.

HOWARD S.C.D. — DATE 5/6/14

100 YEAR FLOODPLAIN STUDY	
CROSS SECTION	MSEL FT.
STREAM 'A'	
2+60	394.32
6+50	403.66
7+71	408.66
8+65	409.42
9+50	410.66
10+00	413.60
14+00	423.33
16+00	435.84
STREAM 'B'	
3+00	400.70
4+00	400.13
STREAM HB-11	
3+39	406.58
1+50	415.34
HAWKINS BRANCH	
13+64	391.04
17+00	394.32
39+00	394.51
81+68	395.80
84+40	395.87
87+23	398.42
88+38	400.04
90+82	401.17

AREA OF PROPOSED PHASES
PHASE 1: 17.30 Ac.
PHASE 2: 8.43 Ac.

EARTH DIKE TREATMENT (ED #1) - LOCATED ALONG THE WESTERN LIMIT OF DISTURBANCE				
STARTING STATION	ENDING STATION	PERCENT SLOPE	INCREMENTAL AREA SQUARE FEET	INCREMENTAL AREA ACRES	TOTAL AREA	TREATMENT
25+20	13+00	2.90%	249,548 SF	5.7 Ac.	5.7 Ac.	A-2
13+00	11+00	0.90%	100,188 SF	2.3 Ac.	8.0 Ac.	B-2
11+00	9+00	6.70%	69,696 SF	1.6 Ac.	9.6 Ac.	B-3

EARTH DIKE TREATMENT (ED #1) - ENGINEERED SWALE ALONG THE WESTERN LIMIT OF DISTURBANCE												
STARTING STATION	ENDING STATION	TOTAL AREA	CN	TC	Q_2	A	B	C	D	TREATMENT	REMARKS
9+00	7+00	11.5 Ac.	94	0.11	45.7 cfs	2.0'	1.21'	12.3'	3	STONE LINED	
7+00	5+00	12.9 Ac.	94	0.13	51.3 cfs	2.0'	0.93'	10.7'	3	STONE LINED	
5+00	3+00	13.9 Ac.	94	0.15	55.2 cfs	2.0'	1.01'	11.0'	3	STONE LINED	
3+00	1+00	16.8 Ac.	94	0.17	66.8 cfs	2.0'	1.12'	11.7'	3	STONE LINED	

EARTH DIKE TREATMENT (ED #2) - LOCATED ALONG THE EASTERN LIMIT OF DISTURBANCE				
STARTING STATION	ENDING STATION	PERCENT SLOPE	INCREMENTAL AREA SQUARE FEET	INCREMENTAL AREA ACRES	TOTAL AREA	TREATMENT
25+00	17+00	2.90%	0	0	0 Ac.	A-2*
17+00	13+00	0.90%	175,000	4.0	4.0 Ac.	A-2
13+00	11+00	6.70%	261,360	6.0	10.0 Ac.	B-3

EARTH DIKE TREATMENT (ED #2) - ENGINEERED SWALE ALONG THE EASTERN LIMIT OF DISTURBANCE												
STARTING STATION	ENDING STATION	TOTAL AREA	CN	TC	Q_2	A	B	C	D	TREATMENT	REMARKS
11+00	7+00	12.3 Ac.	94	TC	48.9 cfs	2.0'	0.98'	11.0'	3	STONE LINED	
7+00	3+00	14.8 Ac.	94	TC	58.8 cfs	2.0'	1.09'	11.2'	3	STONE LINED	
3+00	1+00	16.2 Ac.	94	TC	64.4 cfs	2.0'	1.10'	11.6'	3	STONE LINED	

* SIZED FOR CLEANWATER DIVERSION FOR OFFSITE DRAINAGE AREA

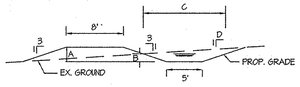

ENGINEERED EARTH DIKE - CROSS SECTION
SCALE: NTS

NOTE: EARTHDIKE TREATMENT AND THE ENGINEERED EARTHDIKE CROSS SECTION DETAIL CORRESPOND TO THE EARTHDIKE/SWALES THAT WERE CONSTRUCTED AT THE WESTERN AND EASTERN LIMITS OF THE SITE UNDER APPROVED PLANS F-13-008.

GLW GUTSCHICK LITTLE & WEBER, P.A.
CIVIL ENGINEERS, LAND SURVEYORS, LAND PLANNERS, LANDSCAPE ARCHITECTS
3909 NATIONAL DRIVE – SUITE 250 – BURTONSVILLE OFFICE PARK
BURTONSVILLE, MARYLAND 20866
TEL: 301-421-4024 BALT: 410-880-1820 DC/VA: 301-989-2524 FAX: 301-421-4186

L:\CADD\DRAWINGS\12001\PLANS BY GLW\FINALS\12001 27-30_GP-SC.dwg | DES. JRD | DRN. JRD | CHK. DEV

DATE	REVISION	BY	APP'R.

PREPARED FOR:
MAPLE LAWN FARMS I, LLC
SUITE 300 WOODHOLME CENTER
1829 REISTERSTOWN ROAD
BALTIMORE, MD 21208
ATTN: MARK BENNETT
410-484-8400

PROFESSIONAL CERTIFICATION
I HEREBY CERTIFY THAT THESE PLANS WERE PREPARED OR APPROVED BY ME, AND THAT I AM A DULY LICENSED PROFESSIONAL ENGINEER UNDER THE LAWS OF THE STATE OF MARYLAND, LICENSE NO. 12975
EXPIRATION DATE: MAY 28, 2016
4/24/14

STATE OF MARYLAND — WILLIAM K. GUTSCHICK — REG. NO. 12975 — PROFESSIONAL ENGINEER

OVERALL SEDIMENT CONTROL PHASE LIMITS

MAPLE LAWN FARMS

GARDEN DISTRICT - AREA 1
LOTS 1 thru 98, OPEN SPACE LOTS 99 thru 110,
COMMON OPEN AREA LOTS 111 thru 114
and NON-BUILDABLE BULK PARCELS 'X' thru 'Z'

ELECTION DISTRICT No. 5 — HOWARD COUNTY, MARYLAND

SCALE	ZONING	G. L. W. FILE No.
1"=100'	MXD-3	12001
DATE	TAX MAP – GRID	SHEET
APRIL, 2014	41-21/46-3	27 OF 36

© GLW 2014

F-14-033

L:\CADD\DRAWINGS\12001\PLANS BY GLW\FINALS\12001 27-30_GP-SC.dwg, PLOTTED: 4/22/2014 4:36 PM, LAST SAVED: 4/22/2014 11:28 AM, PLOTTED BY: Doug Vanda Ryt

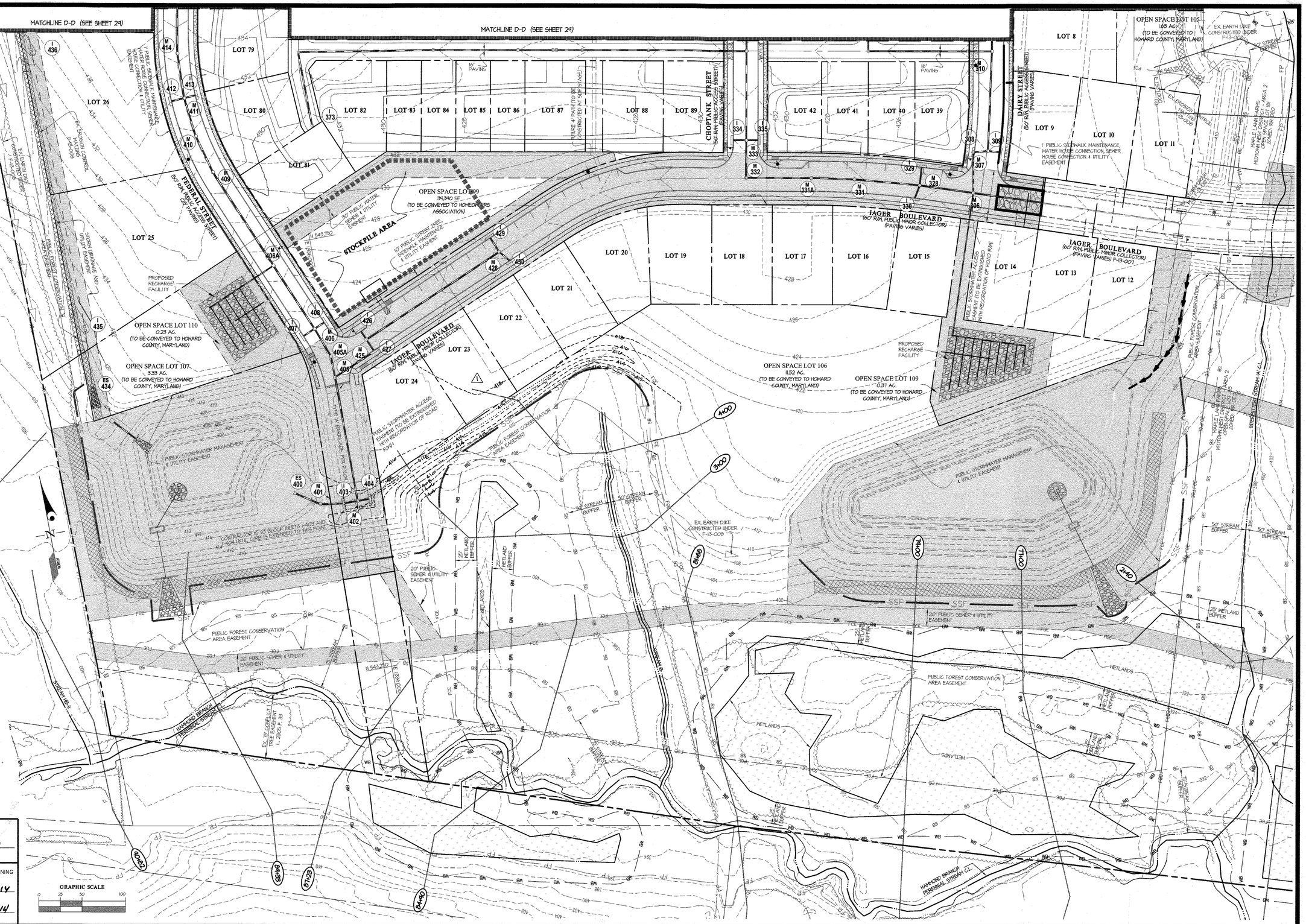

ENGINEER'S CERTIFICATE

"I CERTIFY THAT THIS PLAN FOR EROSION AND SEDIMENT CONTROL REPRESENTS A PRACTICAL AND WORKABLE PLAN BASED ON MY PERSONAL KNOWLEDGE OF THE SITE CONDITIONS AND THAT IT WAS PREPARED IN ACCORDANCE WITH THE REQUIREMENTS OF THE HOWARD SOIL CONSERVATION DISTRICT."

SIGNATURE OF ENGINEER — DATE 4/24/14

BUILDER'S CERTIFICATE

"I/WE CERTIFY THAT ALL DEVELOPMENT AND/OR CONSTRUCTION WILL BE DONE ACCORDING TO THIS PLAN, AND THAT ANY RESPONSIBLE PERSONNEL INVOLVED IN THE CONSTRUCTION PROJECT WILL HAVE A CERTIFICATE OF ATTENDANCE AT A MARYLAND DEPARTMENT OF THE ENVIRONMENT APPROVED TRAINING PROGRAM FOR THE CONTROL OF SEDIMENT AND EROSION BEFORE BEGINNING THE PROJECT. I ALSO AUTHORIZE PERIODIC ON-SITE INSPECTION BY THE HSCD."

SIGNATURE OF DEVELOPER/BUILDER — DATE 4/23/14

THIS DEVELOPMENT PLAN IS APPROVED FOR SOIL EROSION AND SEDIMENT CONTROL BY THE HOWARD SOIL CONSERVATION DISTRICT.

HOWARD S.C.D. — DATE 5/6/14

APPROVED: HOWARD COUNTY DEPARTMENT OF PUBLIC WORKS

Chief, Bureau of Highways — Date 5-7-14

APPROVED: HOWARD COUNTY DEPARTMENT OF PLANNING & ZONING

Chief, Division of Land Development — Date 5-21-14

Chief, Development Engineering Division — Date 5.20.14

GLW GUTSCHICK LITTLE & WEBER, P.A.

CIVIL ENGINEERS, LAND SURVEYORS, LAND PLANNERS, LANDSCAPE ARCHITECTS
3909 NATIONAL DRIVE – SUITE 250 – BURTONSVILLE OFFICE PARK
BURTONSVILLE, MARYLAND 20866
TEL: 301-421-4024 BALT: 410-880-1820 DC/VA: 301-989-2524 FAX: 301-421-4186

L:\CADD\DRAWINGS\12001\PLANS BY GLW\FINALS\12001 27-30_GP-SC.dwg | DES. DEV | DRN. KLP | CHK. CKG

DATE	REVISION	BY	APP'R.
8-16-16	△1 Revised contours to reflect field conditions	gt	DEV

PREPARED FOR:

MAPLE LAWN FARMS I, LLC
SUITE 300 WOODHOLME CENTER
1829 REISTERSTOWN ROAD
BALTIMORE, MD 21208
ATTN: MARK BENNETT
410-484-8400

PROFESSIONAL CERTIFICATION

I HEREBY CERTIFY THAT THESE PLANS WERE PREPARED OR APPROVED BY ME, AND THAT I AM A DULY LICENSED PROFESSIONAL ENGINEER UNDER THE LAWS OF THE STATE OF MARYLAND, LICENSE NO. 12975, EXPIRATION DATE: MAY 26, 2016

4/24/14

STATE OF MARYLAND — CLAYTON K. GUTSCHICK — No. 12975 — PROFESSIONAL ENGINEER

SEDIMENT CONTROL and GRADING PLAN

MAPLE LAWN FARMS

GARDEN DISTRICT - AREA 1
LOTS 1 thru 98, OPEN SPACE LOTS 99 thru 110,
COMMON OPEN AREA LOTS 111 thru 114
and NON-BUILDABLE BULK PARCELS 'X' thru 'Z'

ELECTION DISTRICT No. 5 — HOWARD COUNTY, MARYLAND

SCALE	ZONING	G. L. W. FILE No.
1" = 50'	MXD-3	12001
DATE	TAX MAP – GRID	SHEET
APRIL, 2014	41-21/46-3	28 OF 36

© GLW 2014

F-14-033

L:\CADD\DRAWINGS\12001\PLANS BY GLW\FINALS\12001 27-30_GP-SC.dwg, PLOTTED: 4/22/2014 11:04 AM, LAST SAVED: 4/21/2014 1:45 PM, PLOTTED BY: Jennifer R. Dicks

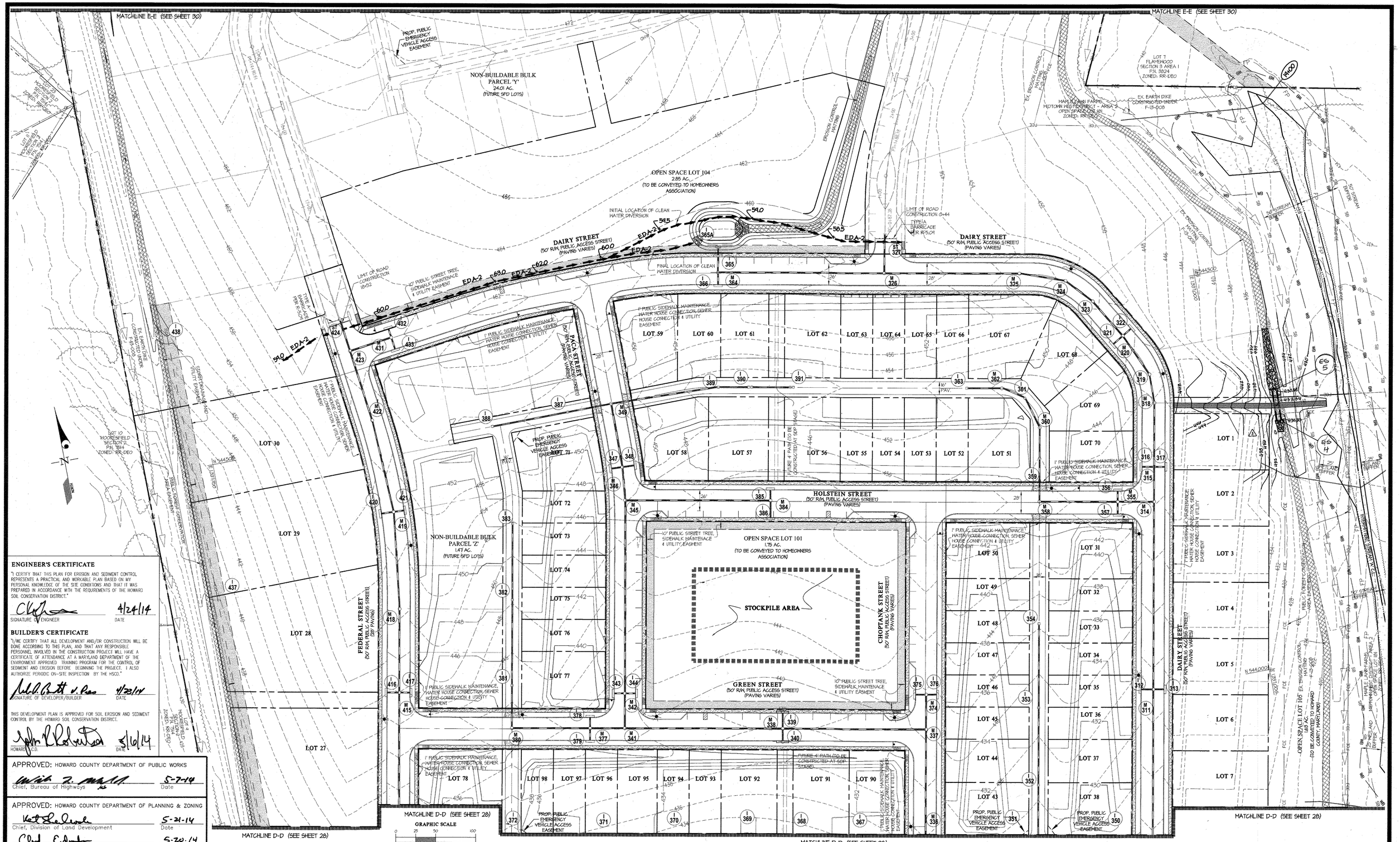

ENGINEER'S CERTIFICATE

"I CERTIFY THAT THIS PLAN FOR EROSION AND SEDIMENT CONTROL REPRESENTS A PRACTICAL AND WORKABLE PLAN BASED ON MY PERSONAL KNOWLEDGE OF THE SITE CONDITIONS AND THAT IT WAS PREPARED IN ACCORDANCE WITH THE REQUIREMENTS OF THE HOWARD SOIL CONSERVATION DISTRICT."

SIGNATURE OF ENGINEER — DATE 4/24/14

BUILDER'S CERTIFICATE

"I/WE CERTIFY THAT ALL DEVELOPMENT AND/OR CONSTRUCTION WILL BE DONE ACCORDING TO THIS PLAN, AND THAT ANY RESPONSIBLE PERSONNEL INVOLVED IN THE CONSTRUCTION PROJECT WILL HAVE A CERTIFICATE OF ATTENDANCE AT A MARYLAND DEPARTMENT OF THE ENVIRONMENT APPROVED TRAINING PROGRAM FOR THE CONTROL OF SEDIMENT AND EROSION BEFORE BEGINNING THE PROJECT. I ALSO AUTHORIZE PERIODIC ON-SITE INSPECTION BY THE HSCD."

SIGNATURE OF DEVELOPER/BUILDER — DATE 4/23/14

THIS DEVELOPMENT PLAN IS APPROVED FOR SOIL EROSION AND SEDIMENT CONTROL BY THE HOWARD SOIL CONSERVATION DISTRICT.

HOWARD S.C.D. — DATE 5/6/14

APPROVED: HOWARD COUNTY DEPARTMENT OF PUBLIC WORKS

Chief, Bureau of Highways — Date 5-7-14

APPROVED: HOWARD COUNTY DEPARTMENT OF PLANNING & ZONING

Chief, Division of Land Development — Date 5-21-14

Chief, Development Engineering Division — Date 5-20-14

GLW GUTSCHICK LITTLE & WEBER, P.A.

CIVIL ENGINEERS, LAND SURVEYORS, LAND PLANNERS, LANDSCAPE ARCHITECTS
3909 NATIONAL DRIVE – SUITE 250 – BURTONSVILLE OFFICE PARK
BURTONSVILLE, MARYLAND 20866
TEL: 301-421-4024 BALT: 410-880-1820 DC/VA: 301-989-2524 FAX: 301-421-4186

L:\CADD\DRAWINGS\12001\PLANS BY GLW\FINALS\12001 27-30_DP-SC.dwg | DES. DEV | DRN. KLP | CHK. CKG

DATE	REVISION	BY	APP'R.
2016-08-04	△1 ADDED OPEN SPACE CULVERT	HKJ	DEV

PREPARED FOR:
MAPLE LAWN FARMS I, LLC
SUITE 300 WOODHOLME CENTER
1829 REISTERSTOWN ROAD
BALTIMORE, MD 21208
ATTN: MARK BENNETT
410-484-8400

PROFESSIONAL CERTIFICATION
I HEREBY CERTIFY THAT THESE PLANS WERE PREPARED OR APPROVED BY ME, AND THAT I AM A DULY LICENSED PROFESSIONAL ENGINEER UNDER THE LAWS OF THE STATE OF MARYLAND, LICENSE NO. 12975
EXPIRATION DATE: MAY 26, 2016
4/24/14

STATE OF MARYLAND — CLIFTON K. GUTSCHICK — REG. NO. 12975 — PROFESSIONAL ENGINEER

SEDIMENT CONTROL and GRADING PLAN

MAPLE LAWN FARMS

GARDEN DISTRICT - AREA 1
LOTS 1 thru 98, OPEN SPACE LOTS 99 thru 110, COMMON OPEN AREA LOTS 111 thru 114 and NON-BUILDABLE BULK PARCELS 'X' thru 'Z'

ELECTION DISTRICT No. 5 — HOWARD COUNTY, MARYLAND

SCALE	ZONING	G. L. W. FILE No.
1" = 50'	MXD-3	12001
DATE	TAX MAP – GRID	SHEET
APRIL, 2014	41-21/46-3	29 OF 36

© GLW 2014

F-14-033

L:\CADD\DRAWINGS\12001\PLANS BY GLW\FINALS\12001 27-30_DP-SC.dwg, PLOTTED: 4/22/2014 11:09 AM, LAST SAVED: 4/21/2014 1:45 PM, PLOTTED BY: Jennifer R. Dicks

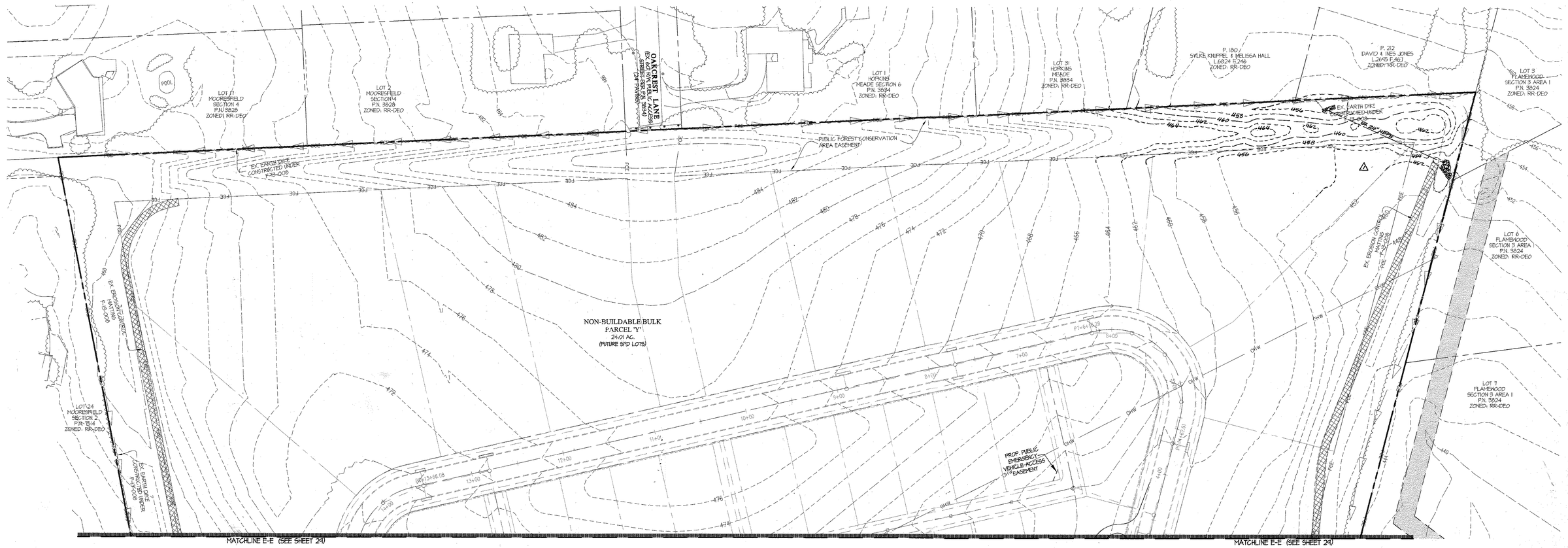

COORDINATE TABLE		
PT. NO.	NORTH	EAST
1	543601.7846	1336828.8127
2	543554.7123	1336465.6218
3	543533.4754	1337031.5250
4	542846.1618	1336814.2878
5	542944.5243	1336354.2066
6	543232.4536	1335685.8732
7	543501.4803	1335662.6764
8	545282.2471	1337161.3565
9	544751.8404	1336411.0446
10	544971.1904	1337203.6218
11	544313.2440	1337161.7814
12	543766.5844	1337055.0274
13	543748.7134	1337106.4085
14	543540.2561	1337051.2785
15	543610.8234	1336465.3866
16	543658.4374	1336848.5202

APPROVED: HOWARD COUNTY DEPARTMENT OF PUBLIC WORKS

Chief, Bureau of Highways — Date 5-7-14

APPROVED: HOWARD COUNTY DEPARTMENT OF PLANNING & ZONING

Chief, Division of Land Development — Date 5-21-14

Chief, Development Engineering Division — Date 5.20.14

ENGINEER'S CERTIFICATE

"I CERTIFY THAT THIS PLAN FOR EROSION AND SEDIMENT CONTROL REPRESENTS A PRACTICAL AND WORKABLE PLAN BASED ON MY PERSONAL KNOWLEDGE OF THE SITE CONDITIONS AND THAT IT WAS PREPARED IN ACCORDANCE WITH THE REQUIREMENTS OF THE HOWARD SOIL CONSERVATION DISTRICT."

SIGNATURE OF ENGINEER — DATE 4/24/14

BUILDER'S CERTIFICATE

"I/WE CERTIFY THAT ALL DEVELOPMENT AND/OR CONSTRUCTION WILL BE DONE ACCORDING TO THIS PLAN, AND THAT ANY RESPONSIBLE PERSONNEL INVOLVED IN THE CONSTRUCTION PROJECT WILL HAVE A CERTIFICATE OF ATTENDANCE AT A MARYLAND DEPARTMENT OF THE ENVIRONMENT APPROVED TRAINING PROGRAM FOR THE CONTROL OF SEDIMENT AND EROSION BEFORE BEGINNING THE PROJECT. I ALSO AUTHORIZE PERIODIC ON-SITE INSPECTION BY THE HSCD."

SIGNATURE OF DEVELOPER/BUILDER — DATE 4/23/14

THIS DEVELOPMENT PLAN IS APPROVED FOR SOIL EROSION AND SEDIMENT CONTROL BY THE HOWARD SOIL CONSERVATION DISTRICT.

HOWARD S.C.D. — DATE 5/27/14

GRAPHIC SCALE

0 25 50 100

GLW GUTSCHICK LITTLE & WEBER, P.A.

CIVIL ENGINEERS, LAND SURVEYORS, LAND PLANNERS, LANDSCAPE ARCHITECTS
3909 NATIONAL DRIVE – SUITE 250 – BURTONSVILLE OFFICE PARK
BURTONSVILLE, MARYLAND 20866
TEL: 301-421-4024 BALT: 410-880-1820 DC/VA: 301-989-2524 FAX: 301-421-4186

L:\CADD\DRAWINGS\12001\PLANS BY GLW\FINALS\12001 27-30_GP-SC.dwg | DES. DEV | DRN. KLP | CHK. CKG

DATE	REVISION	BY	APP'R.
2016-08-04	⚠1 REVISED EXISTING TOPOGRAPHY	HKJ	DEV

PREPARED FOR:

MAPLE LAWN FARMS I, LLC
SUITE 300 WOODHOLME CENTER
1829 REISTERSTOWN ROAD
BALTIMORE, MD 21208
ATTN: MARK BENNETT
410-484-8400

PROFESSIONAL CERTIFICATION

I HEREBY CERTIFY THAT THESE PLANS WERE PREPARED OR APPROVED BY ME, AND THAT I AM A DULY LICENSED PROFESSIONAL ENGINEER UNDER THE LAWS OF THE STATE OF MARYLAND, LICENSE NO. 12975, EXPIRATION DATE: MAY 26, 2016.

4/24/14

STATE OF MARYLAND — CHRISTOPHER K. DEWEESE — No. 12975

SEDIMENT CONTROL and GRADING PLAN

MAPLE LAWN FARMS

GARDEN DISTRICT - AREA 1
LOTS 1 thru 98, OPEN SPACE LOTS 99 thru 110,
COMMON OPEN AREA LOTS 111 thru 114
and NON-BUILDABLE BULK PARCELS 'X' thru 'Z'

ELECTION DISTRICT No. 5 — HOWARD COUNTY, MARYLAND

SCALE	ZONING	G. L. W. FILE No.
1" = 50'	MXD-3	12001
DATE	TAX MAP – GRID	SHEET
APRIL, 2014	41-21/46-3	30 OF 36

L:\CADD\DRAWINGS\12001\PLANS BY GLW\FINALS\12001 27-30_GP-SC.dwg, PLOTTED: 4/22/2014 11:11 AM, LAST SAVED: 4/21/2014 1:45 PM, PLOTTED BY: Jennifer R. Dicks

© GLW 2014

F-14-033

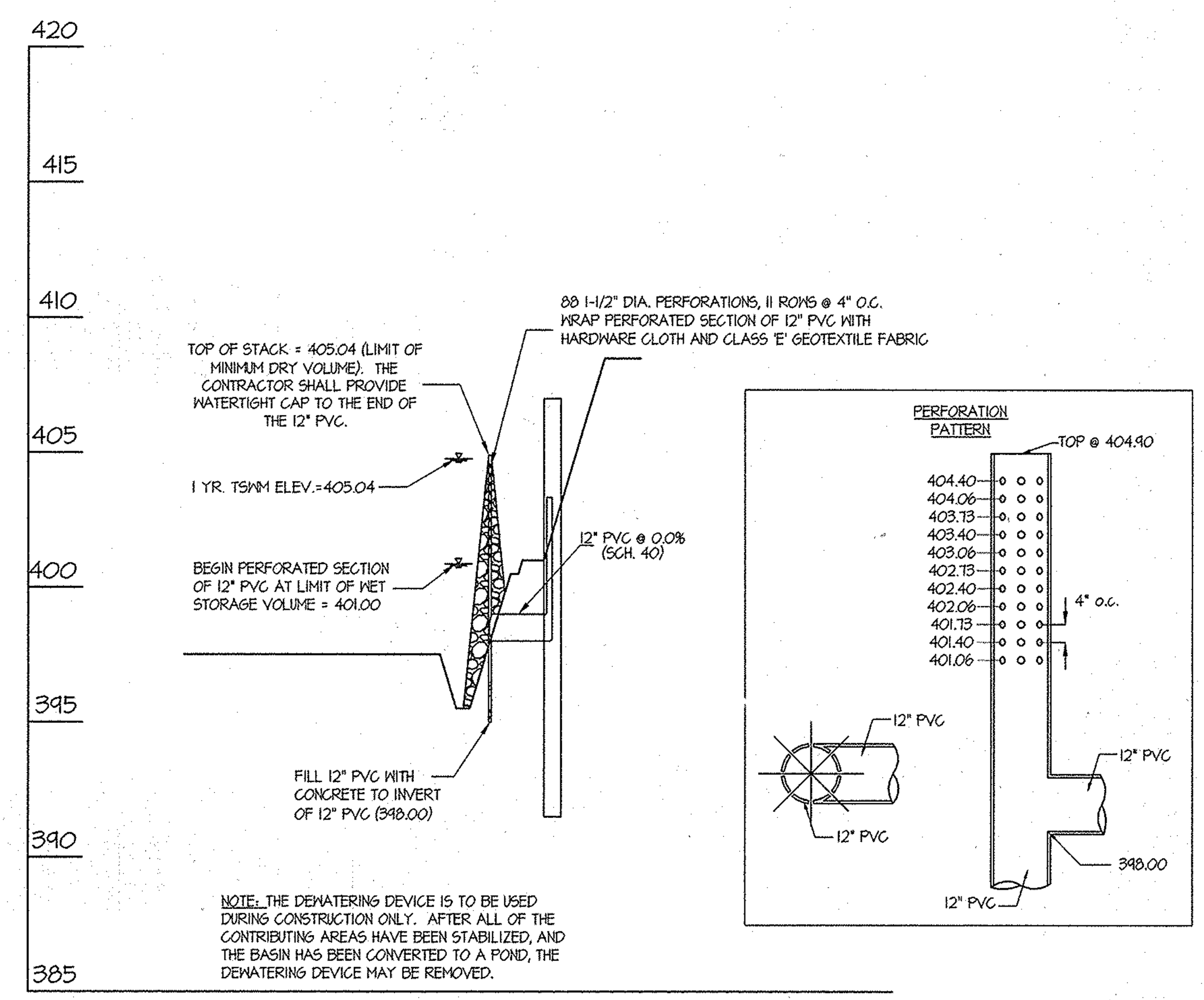

DEWATERING DEVICE - TEMPORARY SWM

SCALE: 1"=5' (H)
1"=50' (V)

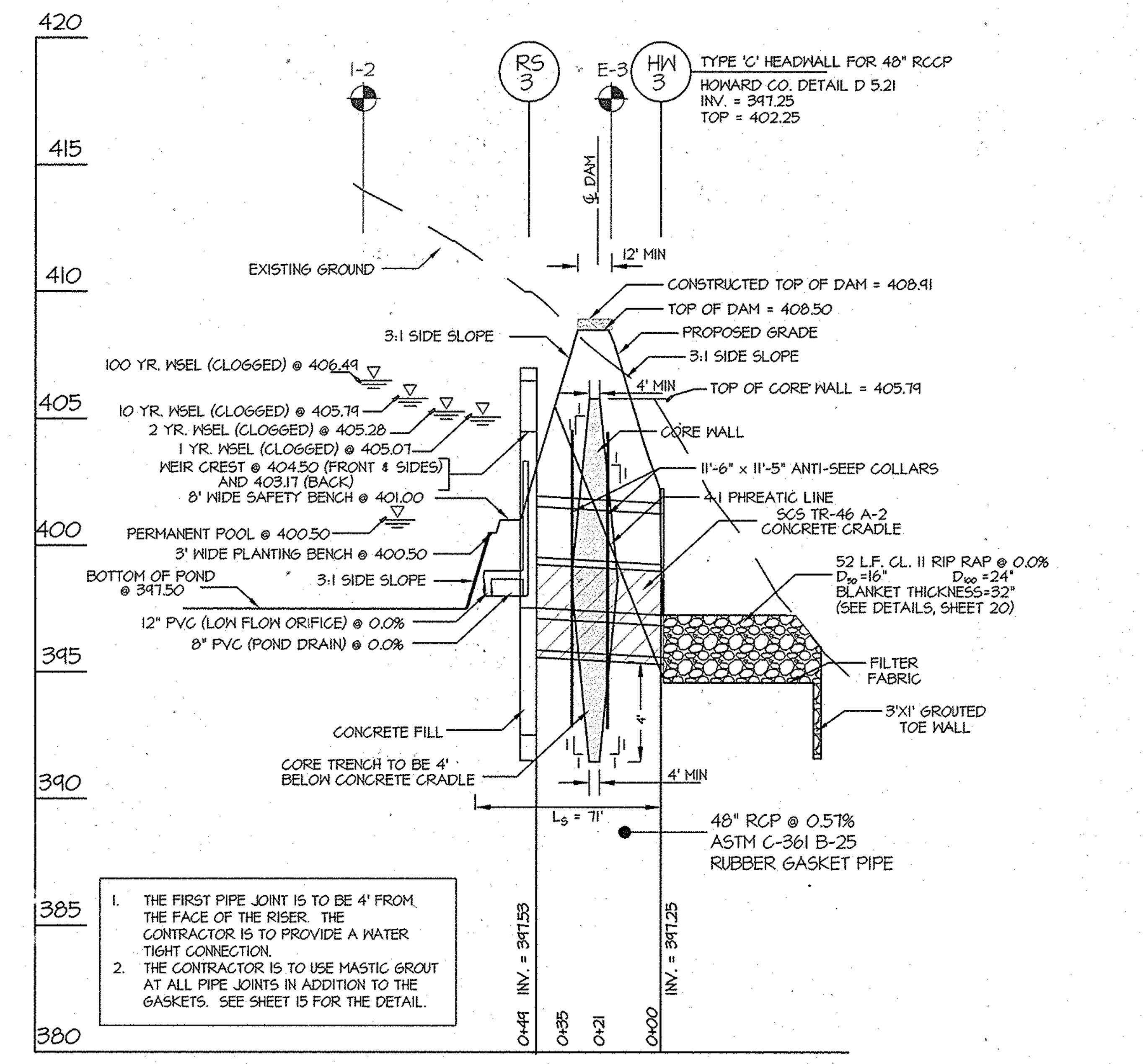

PROFILE THROUGH PRINCIPAL SPILLWAY SCALE: 1"= 5' (V) 1"=50' (H)

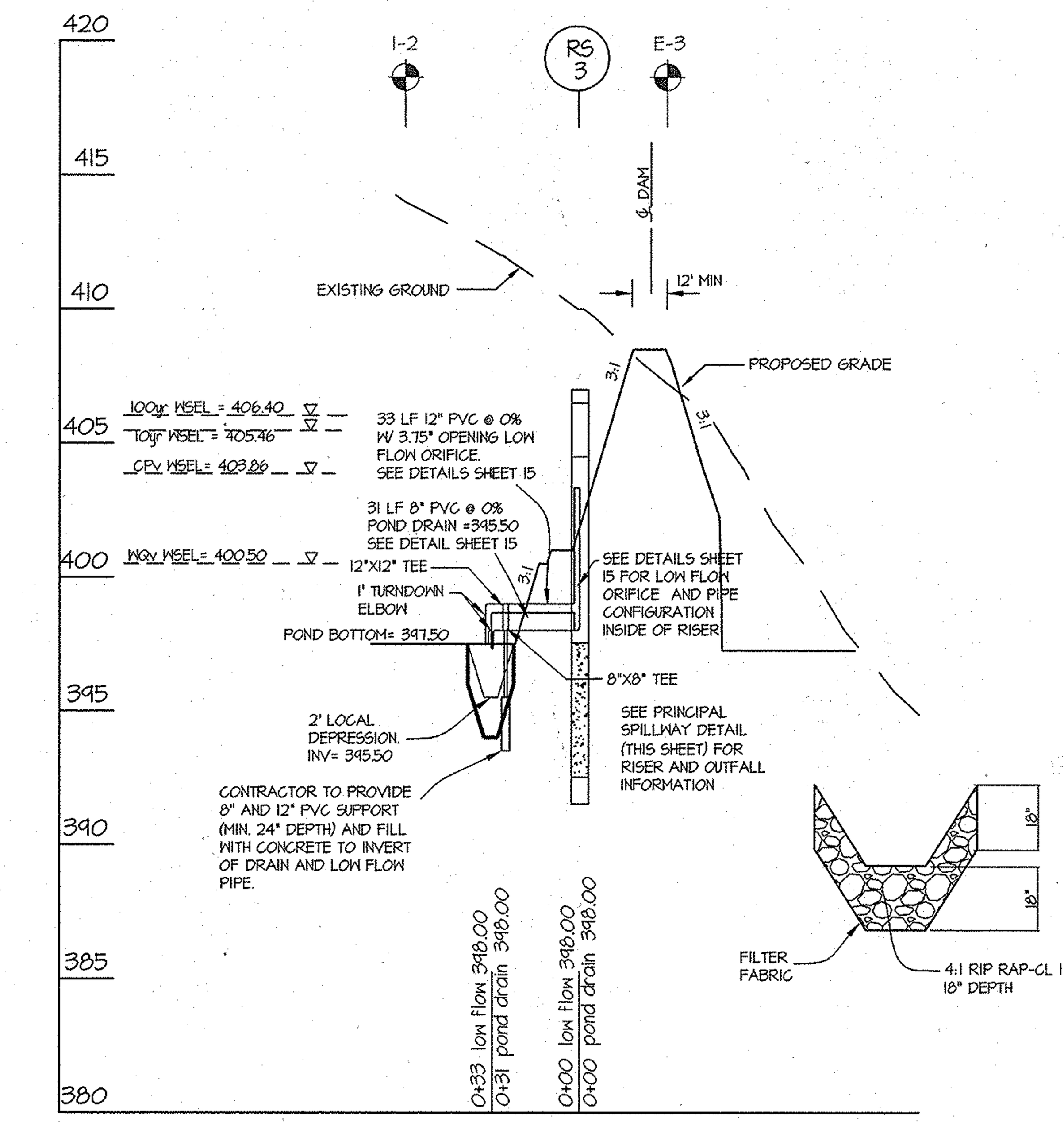

PROFILE THROUGH POND DRAIN AND LOW FLOW RELEASE SCALE: 1"= 5' (V) 1"=50' (H)

POND 3 DETAILS

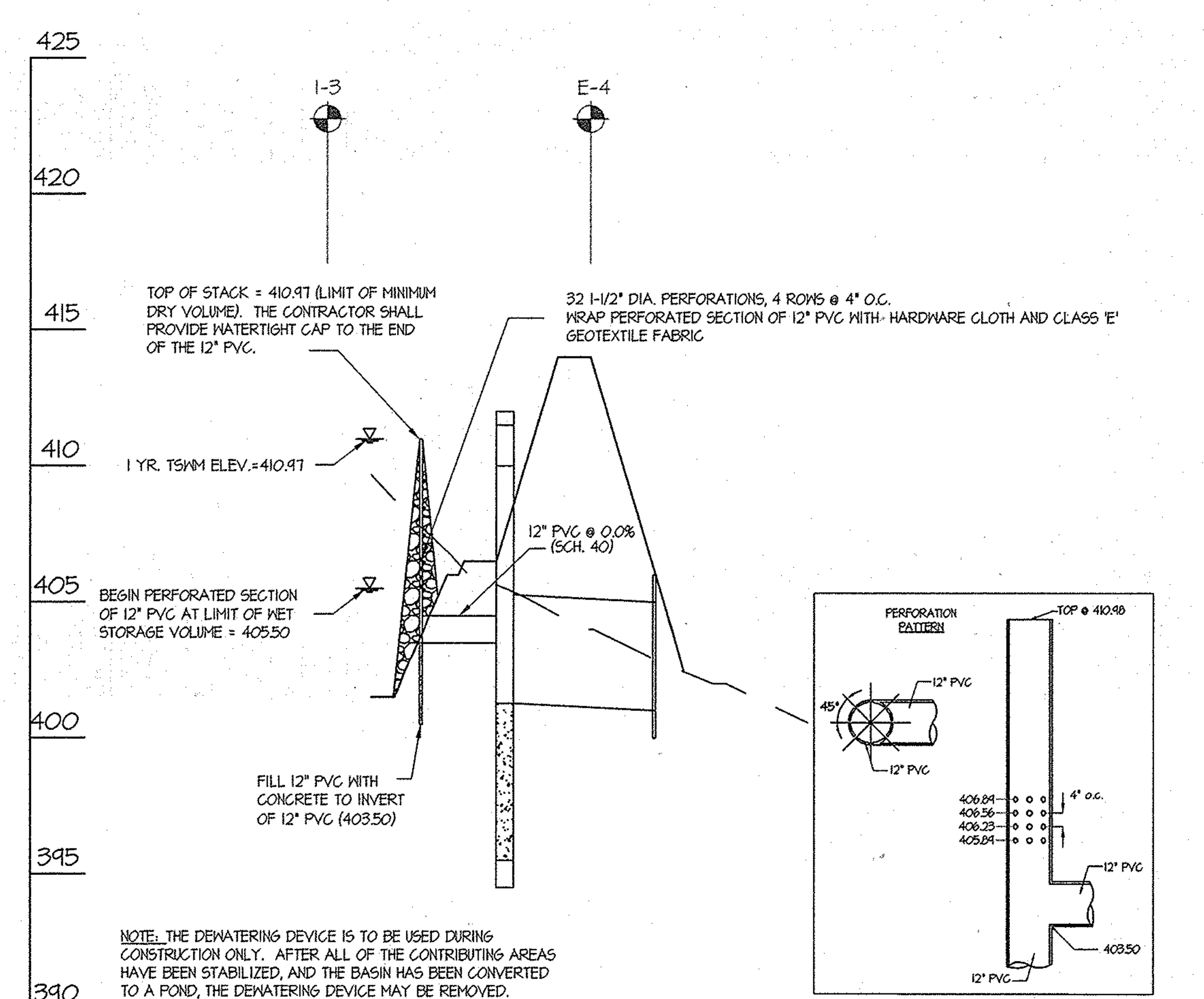

DEWATERING DEVICE - TEMPORARY SWM

SCALE: 1"=5' (V)
1"=50' (H)

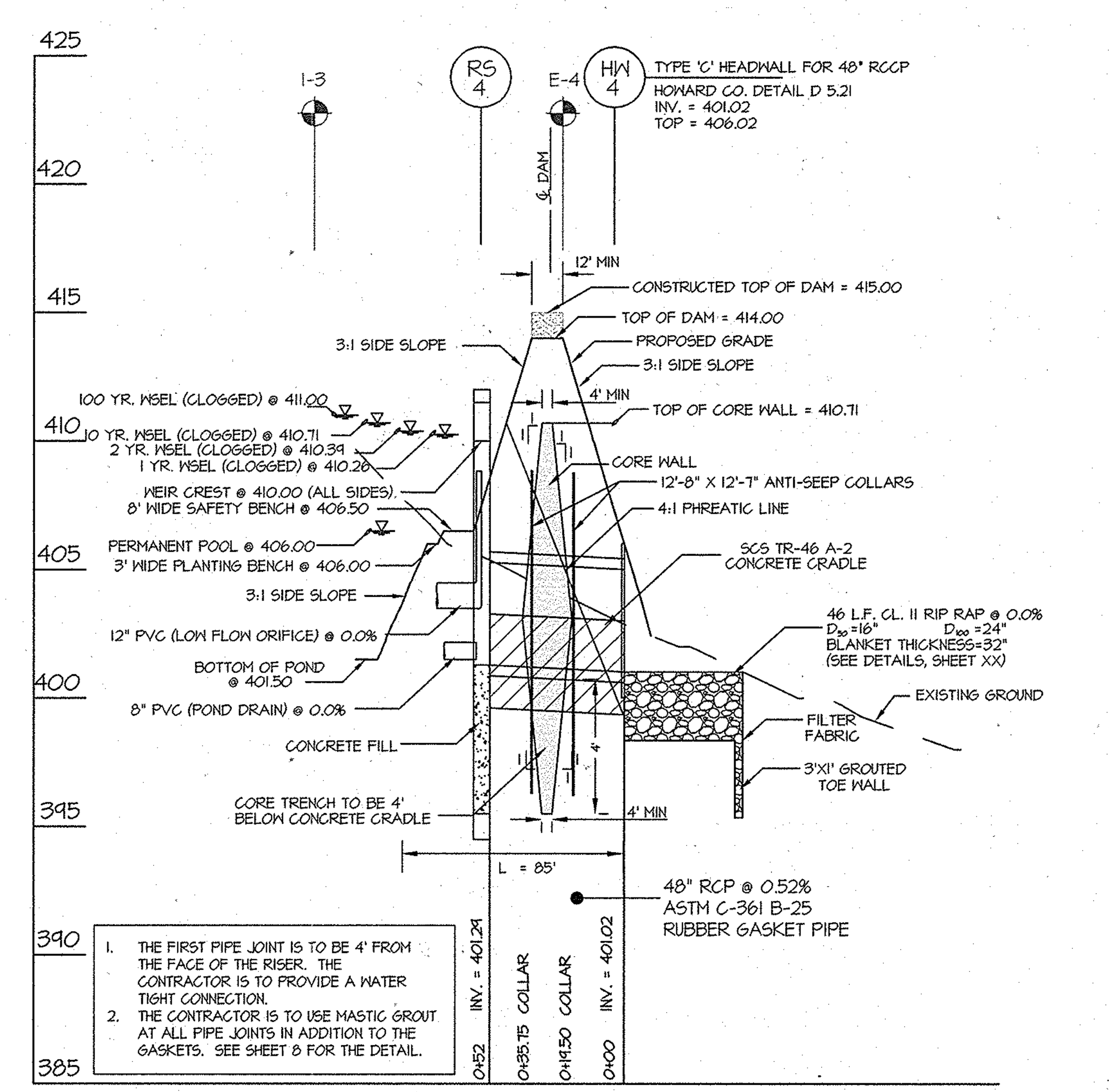

PROFILE THROUGH PRINCIPAL SPILLWAY SCALE: 1"= 5' (V) 1"=50' (H)

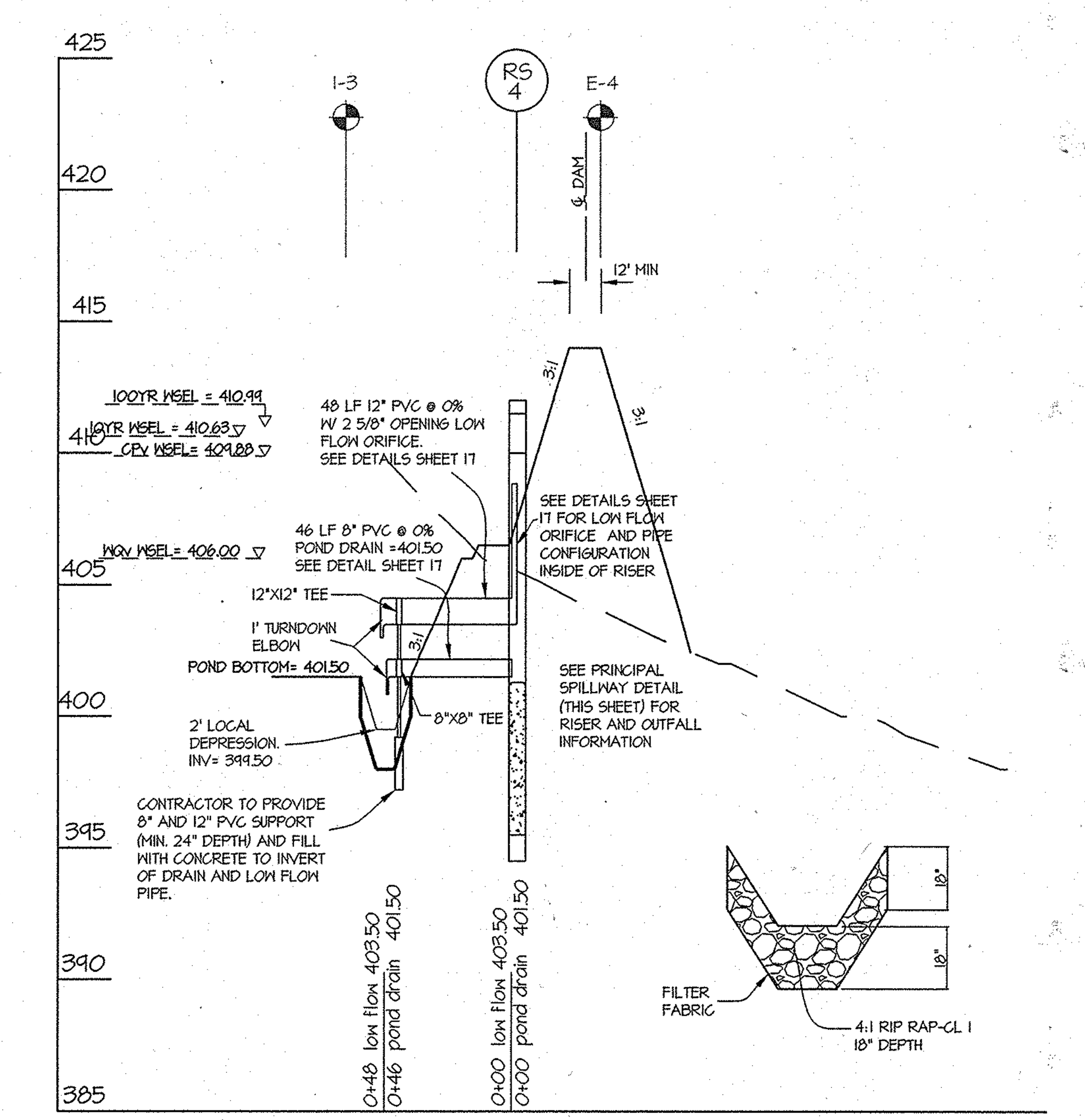

PROFILE THROUGH POND DRAIN AND LOW FLOW RELEASE SCALE: 1"= 5' (V) 1"=50' (H)

POND 4 DETAILS

ENGINEER'S CERTIFICATE

"I CERTIFY THAT THIS PLAN FOR POND CONSTRUCTION, EROSION AND SEDIMENT CONTROL REPRESENTS A PRACTICAL AND WORKABLE PLAN BASED ON MY PERSONAL KNOWLEDGE OF THE SITE CONDITIONS. THIS PLAN WAS PREPARED IN ACCORDANCE WITH THE REQUIREMENTS OF THE HOWARD SOIL CONSERVATION DISTRICT. I HAVE NOTIFIED THE DEVELOPER THAT HE/SHE MUST ENGAGE A REGISTERED PROFESSIONAL ENGINEER TO SUPERVISE POND CONSTRUCTION AND PROVIDE THE HOWARD SOIL CONSERVATION DISTRICT WITH AN "AS-BUILT" PLAN OF THE POND WITHIN 30 DAYS OF COMPLETION."

ENGINEER'S SIGNATURE — DATE 4/24/14

BUILDER'S CERTIFICATE

"I/WE CERTIFY THAT ALL DEVELOPMENT AND/OR CONSTRUCTION WILL BE DONE ACCORDING TO THESE PLANS, AND THAT ANY RESPONSIBLE PERSONNEL INVOLVED IN THE CONSTRUCTION PROJECT WILL HAVE A CERTIFICATE OF ATTENDANCE AT A MARYLAND DEPARTMENT OF THE ENVIRONMENT APPROVED TRAINING PROGRAM FOR THE CONTROL OF SEDIMENT AND EROSION BEFORE BEGINNING THE PROJECT. I SHALL ENGAGE A REGISTERED PROFESSIONAL ENGINEER TO SUPERVISE POND CONSTRUCTION AND PROVIDE THE HOWARD SOIL CONSERVATION DISTRICT WITH AN "AS-BUILT" PLAN OF THE POND WITHIN 30 DAYS OF COMPLETION. I ALSO AUTHORIZE PERIODIC ON-SITE INSPECTIONS BY THE HOWARD SOIL CONSERVATION DISTRICT.

SIGNATURE OF DEVELOPER/BUILDER V. Pres — DATE 4/23/14

THESE PLANS FOR SMALL POND CONSTRUCTION, SOIL EROSION AND SEDIMENT CONTROL MEET THE REQUIREMENTS OF THE HOWARD SOIL CONSERVATION DISTRICT.

HOWARD S.C.D. — DATE 5/6/14

THE PROFILES SHOWN ON THESE PLANS ARE FOR INFORMATIONAL PURPOSES ONLY. THEY ARE BEING PROVIDED TO ASSIST THE SEDIMENT CONTROL INSPECTOR WITH DETERMINING WHEN THE CLEAN OUT ELEVATION HAS BEEN REACHED AND MAINTENANCE ON THE FACILITIES IS REQUIRED. THE STORMWATER MANAGEMENT FACILITIES SHOWN ON THESE SHEETS WERE CONSTRUCTED UNDER F 13-008 AND WILL REMAIN AS SEDIMENT BASINS THROUGH OUT THE THE TIME THE AREA SHOWN ON THESE PLANS IS DEVELOPED.

APPROVED: HOWARD COUNTY DEPARTMENT OF PUBLIC WORKS

Chief, Bureau of Highways — Date 5-7-14

APPROVED: HOWARD COUNTY DEPARTMENT OF PLANNING & ZONING

Chief, Division of Land Development — Date 5-21-14

Chief, Development Engineering Division — Date 5-20-14

GLW GUTSCHICK LITTLE & WEBER, P.A.

CIVIL ENGINEERS, LAND SURVEYORS, LAND PLANNERS, LANDSCAPE ARCHITECTS
3909 NATIONAL DRIVE – SUITE 250 – BURTONSVILLE OFFICE PARK
BURTONSVILLE, MARYLAND 20866
TEL: 301-421-4024 BALT: 410-880-1820 DC/VA: 301-989-2524 FAX: 301-421-4186

L:\CADD\DRAWINGS\12001\PLANS BY GLW\FINALS\12001 31-32_APPROVED POND DETAILS.dwg	DES. JRD	DRN. JRD	CHK. DEV

DATE	REVISION	BY	APP'R.

PREPARED FOR:

MAPLE LAWN FARMS I, LLC
SUITE 300 WOODHOLME CENTER
1829 REISTERSTOWN ROAD
BALTIMORE, MD 21208
ATTN: MARK BENNETT
410-484-8400

PROFESSIONAL CERTIFICATION

I HEREBY CERTIFY THAT THESE PLANS WERE PREPARED OR APPROVED BY ME, AND THAT I AM A DULY LICENSED PROFESSIONAL ENGINEER UNDER THE LAWS OF THE STATE OF MARYLAND, LICENSE NO. 12975, EXPIRATION DATE: MAY 26, 2016

4/24/14

STATE OF MARYLAND — CARLTON K. GUTSCHICK — REG. NO. 12975 — PROFESSIONAL ENGINEER

PONDS 3 & 4 DETAILS (APPROVED UNDER F-13-008)

MAPLE LAWN FARMS

GARDEN DISTRICT - AREA 1
LOTS 1 thru 98, OPEN SPACE LOTS 99 thru 110,
COMMON OPEN AREA LOTS 111 thru 114
and NON-BUILDABLE BULK PARCELS 'X' thru 'Z'

ELECTION DISTRICT No. 5 — HOWARD COUNTY, MARYLAND

SCALE	ZONING	G. L. W. FILE No.
AS SHOWN	MXD-3	12001
DATE	TAX MAP – GRID	SHEET
APRIL, 2014	41-21/46-3	31 OF 36

L:\CADD\DRAWINGS\12001\PLANS BY GLW\FINALS\12001 31-32_APPROVED POND DETAILS.dwg
PLOTTED: 4/22/2014 11:18 AM, LAST SAVED: 4/18/2014 11:14 AM, PLOTTED BY: Jennifer R. Dicks

©GLW 2014

DETAIL 27 - ROCK OUTLET PROTECTION III

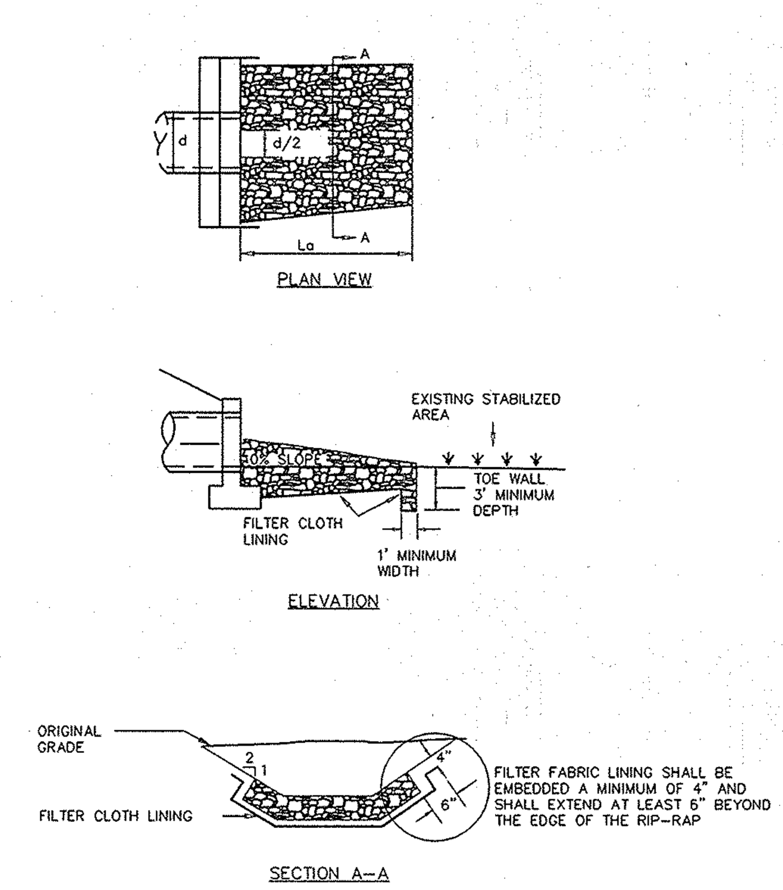

NOTE: FILTER CLOTH SHALL BE GEOTEXTILE CLASS C

U.S. DEPARTMENT OF AGRICULTURE SOIL CONSERVATION SERVICE	PAGE F - 18 - 10	MARYLAND DEPARTMENT OF ENVIRONMENT WATER MANAGEMENT ADMINISTRATION

ROCK OUTLET PROTECTION III

Construction Specifications

1. The subgrade for the filter, riprap, or gabion shall be prepared to the required lines and grades. Any fill required in the subgrade shall be compacted to a density of approximately that of the surrounding undisturbed material.

2. The rock or gravel shall conform to the specified grading limits when installed respectively in the rip-rap or filter.

3. Geotextile shall be protected from punching, cutting,or tearing. ny damage other than an occasional small hole shall be repaired by placing another piece of geotextile over the damaged part or by completely replacing the geotextile. All overlaps whether for repairs or for joining two pieces of geotextile shall be a minimum of one foot.

4. Stone for the rip-rap or gabion outlets may be placed by equipment. They shall be constructed to the full course thickness in one operation and in such a manner as to avoid displacement of underlying materials. The stone for riprap or gabion outlets shall be delivered and placed in a manner that will ensure that it is reasonably homogeneous with the smaller stones and spalls filling the voids between the larger stones. Rip-rap shall be placed in a manner to prevent damage to the filter blanket or geotextile. Hand placement will be required to the extent necessary to prevent damage to the permanent works.

5. The stone shall be placed so that it blends in with the existing ground. If the stone is placed too high then the flow will be forced out of the channel and scour adjacent to the stone will occur.

U.S. DEPARTMENT OF AGRICULTURE SOIL CONSERVATION SERVICE	PAGE F - 18 - 10A	MARYLAND DEPARTMENT OF ENVIRONMENT WATER MANAGEMENT ADMINISTRATION

DETAIL 20A - REMOVABLE PUMPING STATION

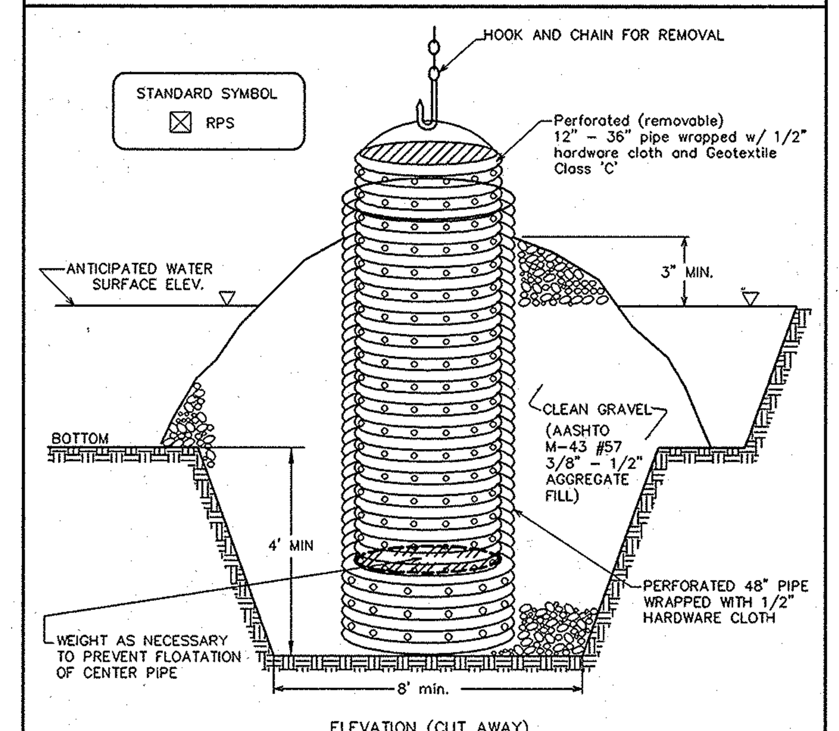

Construction Specifications

1. The outer pipe should be 48" dia. or shall, in any case, be at least 4" greater in diameter than the center pipe. The outer pipe shall be wrapped with 1/2" hardware cloth to prevent backfill material from entering the perforations.

2. After installing the outer pipe, backfill around outer pipe with 2" aggregate or clean gravel.

3. The inside stand pipe (center pipe) should be constructed by perforating a corrugated or PVC pipe between 12" and 36" in diameter. The perforations shall be 1/2" X 6" slits or 1" diameter holes 6" on center. The center pipe shall be wrapped with 1/2" hardware cloth first, then wrapped again with Geotextile Class C.

4. The center pipe should extend 12" to 18" above the anticipated water surface elevation or riser crest elevation when dewatering a basin.

U.S. DEPARTMENT OF AGRICULTURE SOIL CONSERVATION SERVICE	PAGE D - 12 - 5	MARYLAND DEPARTMENT OF ENVIRONMENT WATER MANAGEMENT ADMINISTRATION

DETAIL 18 - SEDIMENT BASIN BAFFLES

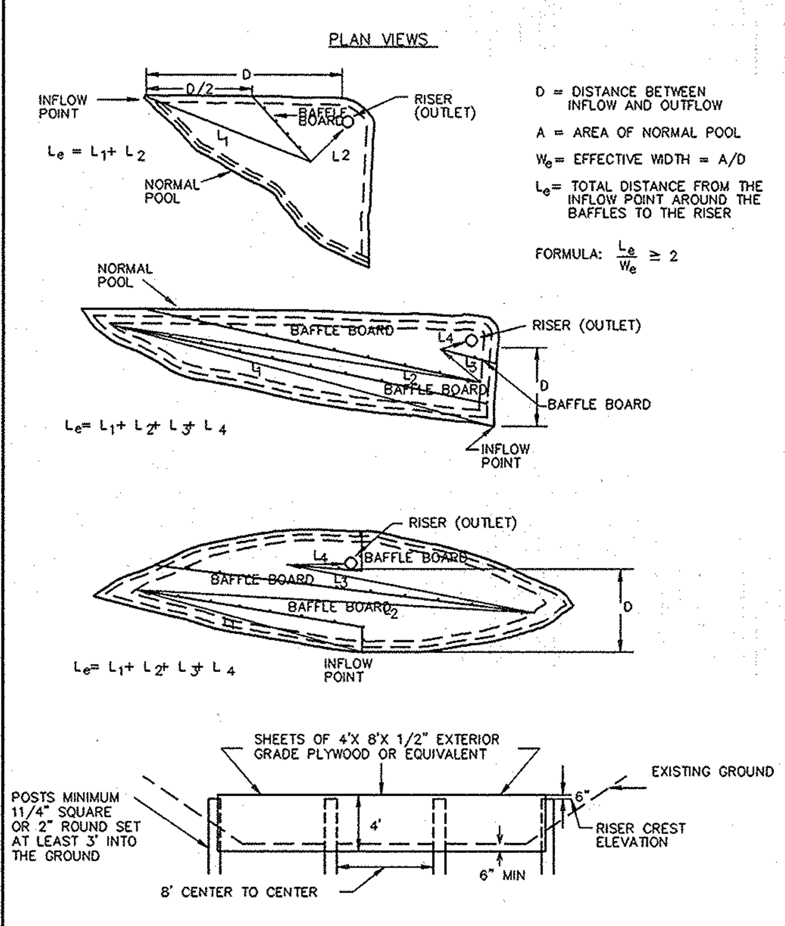

U.S. DEPARTMENT OF AGRICULTURE SOIL CONSERVATION SERVICE	PAGE C - 10 - 28	MARYLAND DEPARTMENT OF ENVIRONMENT WATER MANAGEMENT ADMINISTRATION

BASIN DRAWDOWN SCHEMATIC VERTICAL DRAW-DOWN DEVICE

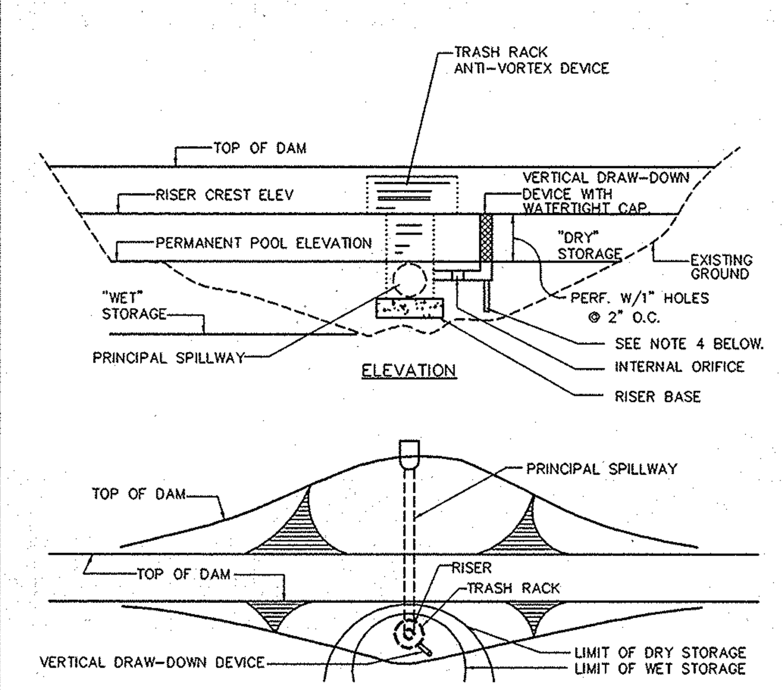

CONSTRUCTION SPECIFICATIONS

1. Perforations in the draw-down device may not extend into the wet storage.

2. The total area of the perforations must be greater than 4 times the area of the internal orifice.

3. The perforated portion of the draw-down device shall be wrapped with 1/2" hardware cloth and geotextile fabric. The geotextile fabric shall meet the specifications for Geotextile Class E.

4. Provide support of draw-down device to prevent sagging and floatation. An acceptable preventative measure is to stake both sides of draw-down device with 1" steel angle, or 1' by 4" square or 2" round wooden posts set 3' minimum into the ground then joining them to the device by wrapping with 12 gauge minimum wire.

U.S. DEPARTMENT OF AGRICULTURE SOIL CONSERVATION SERVICE	PAGE C - 10 - 30	MARYLAND DEPARTMENT OF ENVIRONMENT WATER MANAGEMENT ADMINISTRATION

EMBANKMENT AND CUT-OFF TRENCH CONSTRUCTION

The area of the SWM pond facilities should be stripped of topsoil and any other unsuitable materials from the embankment or structure areas in accordance with Soil Conservation Guidelines. After stripping operations have been completed, the exposed subgrade materials should be proofrolled with a loaded dump truck or similar equipment in the presence of a geotechnical engineer or his representative. For areas that are not accessible to a dump truck, the exposed materials should be observed and tested by a geotechnical engineer or his representative utilizing a Dynamic Cone Penetrometer. Any excessively soft or loose materials identified by proofrolling or penetrometer testing should be excavated to suitable firm soil, and then grades re-established by backfilling with suitable soil.

A representative of the Geotechnical Engineer should be present to monitor placement and compaction of fill for the embankment and cut-off trench. In accordance with NRCS-MD Code No. 378 Pond Standards/Specifications, soils considered suitable for the center of embankment and cut-off trench shall conform to Unified Soil Classification GC, SC, CH, or CL and must have at least 30% passing the #200 sieve.

It is our professional opinion that in addition to the soil materials described above a fine-grained soil, including Silt (ML) with a plasticity index of 10 or more can be utilized for the center of the embankment and core trench. All fill materials must be placed and compacted in accordance with NRCS-MD Code No. 378 specifications.

REMARKS

The evaluations contained in this report are based on our understanding of the proposed construction, the data obtained from our field exploration, and our experience with the soils and subsurface conditions in this area. If there are any changes to the project characteristics, this office should be advised so that the evaluations made in this report may be re-evaluated.

The reader is referred to the Records of Soil Exploration in the Appendix for details related to the subsurface conditions encountered in the borings. It should be noted that stratification lines shown on the Records of Soil Exploration represent approximate transitions between material types. In-situ, strata changes could occur gradually or at slightly different levels. Also, it should be noted that the soil borings depict conditions at the particular locations and at the particular times indicated. Some conditions, particularly groundwater conditions, could change with time.

We appreciate having been of service to you in the subsurface exploration of this project and we are prepared to assist you during the construction phase as well. If you have any questions concerning the contents of this report or any of our consulting, design, testing, and inspection services, please contact this office.

POND CONSTRUCTION SPECIFICATIONS

THESE SPECIFICATIONS ARE APPROPRIATE TO ALL PONDS FACILITIES. ALL REFERENCES TO ASTM AND AASHTO SPECIFICATIONS APPLY TO THE MOST RECENT VERSION.

SITE PREPARATION

AREAS DESIGNATED FOR BORROW AREAS, EMBANKMENT, AND STRUCTURAL WORKS SHALL BE CLEARED, GRUBBED AND STRIPPED OF TOPSOIL. ALL TREES, VEGETATION, ROOTS AND OTHER OBJECTIONABLE MATERIAL SHALL BE REMOVED. CHANNEL BANKS AND SHARP BREAKS SHALL BE SLOPED TO NO STEEPER THAN 1:1. ALL TREES SHALL BE CLEARED AND GRUBBED WITHIN 20 FEET OF THE TOE OF THE EMBANKMENT.

AREAS TO BE COVERED BY THE RESERVOIR WILL BE CLEARED OF ALL TREES, BRUSH, LOGS, FENCES, RUBBISH AND OTHER OBJECTIONABLE MATERIAL UNLESS OTHERWISE DESIGNATED ON THE PLANS. TREES, BRUSH, AND STUMPS SHALL BE CUT APPROXIMATELY LEVEL WITH THE GROUND SURFACE.

ALL CLEARED AND GRUBBED MATERIAL SHALL BE DISPOSED OF OUTSIDE AND BELOW THE LIMITS OF THE DAM AND RESERVOIR AS DIRECTED BY THE OWNER OR HIS REPRESENTATIVE. WHEN SPECIFIED, A SUFFICIENT QUANTITY OF TOPSOIL WILL BE STOCKPILED IN A SUITABLE LOCATION FOR USE ON THE EMBANKMENT AND OTHER DESIGNATED AREAS.

EARTH FILL

MATERIAL - THE FILL MATERIAL SHALL BE TAKEN FROM APPROVED DESIGNATED BORROW AREAS. IT SHALL BE FREE OF ROOTS, STUMPS, WOOD, RUBBISH, STONES GREATER THAN 6", FROZEN OR OTHER OBJECTIONABLE MATERIALS. FILL MATERIAL FOR THE CENTER OF THE EMBANKMENT CONFORM TO UNIFIED SOIL CLASSIFICATION GC, SC, CH, OR CL AND MUST HAVE AT LEAST 30 % PASSING THE #200 SIEVE. CONSIDERATION MAY BE GIVEN TO THE USE OF OTHER MATERIALS IN THE EMBANKMENT IF DESIGNED BY A GEOTECHNICAL ENGINEER. SUCH SPECIAL DESIGNS MUST HAVE CONSTRUCTION SUPERVISED BY A GEOTECHNICAL ENGINEER.

MATERIALS USED IN THE OUTER SHELL OF THE EMBANKMENT MUST HAVE THE CAPABILITY TO SUPPORT VEGETATION OF THE QUALITY REQUIRED TO PREVENT EROSION OF THE EMBANKMENT.

PLACEMENT - AREAS ON WHICH FILL IS TO BE PLACED SHALL BE SCARIFIED PRIOR TO PLACEMENT OF FILL. FILL MATERIALS SHALL BE PLACED IN MAXIMUM 8-INCH THICK (BEFORE COMPACTION) LAYERS WHICH ARE TO BE CONTINUOUS OVER THE ENTIRE LENGTH OF THE FILL. THE MOST PERMEABLE BORROW MATERIAL SHALL BE PLACED IN THE DOWNSTREAM PORTIONS OF THE EMBANKMENT. THE PRINCIPAL SPILLWAY MUST BE INSTALLED CONCURRENTLY WITH FILL PLACEMENT AND NOT EXCAVATED INTO THE EMBANKMENT.

COMPACTION - THE MOVEMENT OF THE HAULING AND SPREADING EQUIPMENT OVER THE FILL SHALL BE CONTROLLED SO THAT THE ENTIRE SURFACE OF EACH LIFT SHALL BE TRAVERSED BY NOT LESS THAN ONE TREAD TRACK OF HEAVY EQUIPMENT OR COMPACTION SHALL BE ACHIEVED BY A MINIMUM OF FOUR COMPLETE PASSES OF A SHEEPSFOOT, RUBBER TIRED OR VIBRATORY ROLLER. FILL MATERIAL SHALL CONTAIN SUFFICIENT MOISTURE SUCH THAT THE REQUIRED DEGREE OF COMPACTION WILL BE OBTAINED WITH THE EQUIPMENT USED. THE FILL MATERIAL SHALL CONTAIN SUFFICIENT MOISTURE SO THAT IF FORMED INTO A BALL IT WILL NOT CRUMBLE, YET NOT BE SO WET THAT WATER CAN BE SQUEEZED OUT.

WHEN REQUIRED BY THE REVIEWING AGENCY THE MINIMUM REQUIRED DENSITY SHALL NOT BE LESS THAN 95% OF MAXIMUM DRY DENSITY WITH A MOISTURE CONTENT WITHIN ±2% OF THE OPTIMUM. EACH LAYER OF FILL SHALL BE COMPACTED AS NECESSARY TO OBTAIN THAT DENSITY, AND IS TO BE CERTIFIED BY THE ENGINEER AT THE TIME OF CONSTRUCTION. ALL COMPACTION IS TO BE DETERMINED BY AASHTO METHOD T-99 (STANDARD PROCTOR).

EMBANKMENT CORE - THE CORE SHALL BE PARALLEL TO THE CENTERLINE OF THE EMBANKMENT AS SHOWN ON THE PLANS. THE TOP WIDTH OF THE CORE SHALL BE A MINIMUM OF FOUR FEET. THE HEIGHT SHALL EXTEND UP TO AT LEAST THE 10-YEAR WATER ELEVATION OR AS SHOWN ON THE PLANS. THE SIDE SLOPES SHALL BE 1 TO 1 OR FLATTER. THE CORE SHALL BE COMPACTED WITH CONSTRUCTION EQUIPMENT, ROLLERS, OR HAND TAMPERS TO ASSURE MAXIMUM DENSITY AND MINIMUM PERMEABILITY. IN ADDITION, THE CORE SHALL BE PLACED CONCURRENTLY WITH THE OUTER SHELL OF THE EMBANKMENT.

STRUCTURE BACKFILL

BACKFILL ADJACENT TO PIPES OR STRUCTURES SHALL BE OF THE TYPE AND QUALITY CONFORMING TO THAT SPECIFIED FOR THE ADJOINING FILL MATERIAL. THE FILL SHALL BE PLACED IN HORIZONTAL LAYERS NOT TO EXCEED FOUR INCHES IN THICKNESS AND COMPACTED BY HAND TAMPERS OR OTHER MANUALLY DIRECTED COMPACTION EQUIPMENT. THE MATERIAL NEEDS TO FILL COMPLETELY ALL SPACES UNDER AND ADJACENT TO THE PIPE. AT NO TIME DURING THE BACKFILLING OPERATION SHALL DRIVEN EQUIPMENT BE ALLOWED TO OPERATE CLOSER THAN FOUR FEET, MEASURED HORIZONTALLY, TO ANY PART OF A STRUCTURE. UNDER NO CIRCUMSTANCES SHALL EQUIPMENT BE DRIVEN OVER ANY PART OF A CONCRETE STRUCTURE OR PIPE, UNLESS THERE IS A COMPACTED FILL OF 24" OR GREATER OVER PIPE.

STRUCTURE BACKFILL MAY BE FLOWABLE FILL MEETING THE REQUIREMENTS OF MARYLAND DEPARTMENT OF TRANSPORTATION, STATE HIGHWAY ADMINISTRATION STANDARD SPECIFICATIONS FOR CONSTRUCTION AND MATERIALS, SECTION 313 AS MODIFIED. THE MIXTURE SHALL HAVE A 100-200 PSI; 28 DAY UNCONFINED COMPRESSIVE STRENGTH. THE FLOWABLE FILL SHALL HAVE A MINIMUM PH OF 4.0 AND A MINIMUM RESISTIVITY OF 2,000 OHM-CM. MATERIAL SHALL BE PLACED SUCH THAT A MINIMUM OF 6" (MEASURED PERPENDICULAR TO THE OUTSIDE OF THE PIPE) OF FLOWABLE FILL SHALL BE UNDER (BEDDING), OVER AND, ON THE SIDES OF THE PIPE. IT ONLY NEEDS TO EXTEND UP TO THE SPRING LINE FOR RIGID CONDUITS. AVERAGE SLUMP OF THE FILL SHALL BE 7" TO ASSURE FLOWABILITY OF THE MATERIAL. ADEQUATE MEASURES SHALL BE TAKEN (SAND BAGS, ETC.) TO PREVENT FLOATING THE PIPE. WHEN USING FLOWABLE FILL, ALL METAL PIPE SHALL BE BITUMINOUS COATED. ANY ADJOINING SOIL FILL SHALL BE PLACED IN HORIZONTAL LAYERS NOT TO EXCEED FOUR INCHES IN THICKNESS AND COMPACTED BY HAND TAMPERS OR OTHER MANUALLY DIRECTED COMPACTION EQUIPMENT. THE MATERIAL SHALL COMPLETELY FILL ALL VOIDS ADJACENT TO THE FLOWABLE FILL ZONE. AT NO TIME DURING THE BACKFILLING OPERATION SHALL DRIVEN EQUIPMENT BE ALLOWED TO OPERATE CLOSER THAN FOUR FEET, MEASURED HORIZONTALLY, TO ANY PART OF A STRUCTURE. UNDER NO CIRCUMSTANCES SHALL EQUIPMENT BE DRIVEN OVER ANY PART OF A STRUCTURE OR PIPE UNLESS THERE IS A COMPACTED FILL OF 24" OR GREATER OVER THE STRUCTURE OR PIPE. BACKFILL MATERIAL OUTSIDE THE STRUCTURAL BACKFILL (FLOWABLE FILL) ZONE SHALL BE OF THE TYPE AND QUALITY CONFORMING TO OTHER EMBANKMENT MATERIALS.

PIPE CONDUITS

ALL PIPES SHALL BE CIRCULAR IN CROSS SECTION.

CORRUGATED METAL PIPE - ALL OF THE FOLLOWING CRITERIA SHALL APPLY FOR CORRUGATED METAL PIPE:

1. MATERIALS -(POLYMER COATED STEEL PIPE) - STEEL PIPES WITH POLYMERIC COATINGS SHALL HAVE A MINIMUM COATING THICKNESS OF 0.01 INCH (10 MIL) ON BOTH SIDES OF THE PIPE. THIS PIPE AND ITS APPURTENANCES SHALL CONFORM TO THE REQUIREMENTS OF AASHTO SPECIFICATIONS M-245 & M-246 WITH WATERTIGHT COUPLING BANDS OR FLANGES.

MATERIALS - (ALUMINUM COATED STEEL PIPE) - THIS PIPE AND ITS APPURTENANCES SHALL CONFORM TO THE REQUIREMENTS OF AASHTO SPECIFICATION M-274 WITH WATERTIGHT COUPLING BANDS OR FLANGES. ALUMINUM COATED STEEL PIPE, WHEN USED WITH FLOWABLE FILL OR WHEN SOIL AND/OR WATER CONDITIONS WARRANT THE NEED FOR INCREASED DURABILITY, SHALL BE FULLY BITUMINOUS COATED PER REQUIREMENTS OF AASHTO SPECIFICATION M-190 TYPE A. ANY ALUMINUM COATING DAMAGED OR OTHERWISE REMOVED SHALL BE REPLACED WITH COLD APPLIED BITUMINOUS COATING COMPOUND. ALUMINUM SURFACES THAT ARE TO BE IN CONTACT WITH CONCRETE SHALL BE PAINTED WITH ONE COAT OF ZINC CHROMATE PRIMER OR TWO COATS OF ASPHALT.

MATERIALS - (ALUMINUM PIPE) - THIS PIPE AND ITS APPURTENANCES SHALL CONFORM TO THE REQUIREMENTS OF AASHTO SPECIFICATION M-196 OR M-211 WITH WATERTIGHT COUPLING BANDS OR FLANGES. ALUMINUM PIPE, WHEN USED WITH FLOWABLE FILL OR WHEN SOIL AND/OR WATER CONDITIONS WARRANT FOR INCREASED DURABILITY, SHALL BE FULLY BITUMINOUS COATED PER REQUIREMENTS OF AASHTO SPECIFICATION M-190 TYPE A. ALUMINUM SURFACES THAT ARE TO BE IN CONTACT WITH CONCRETE SHALL BE PAINTED WITH ONE COAT OF ZINC CHROMATE PRIMER OR TWO COATS OF ASPHALT. HOT DIP GALVANIZED BOLTS MAY BE USED FOR CONNECTIONS. THE PH OF THE SURROUNDING SOILS SHALL BE BETWEEN 4 AND 9.

2. COUPLING BANDS, ANTI-SEEP COLLARS, END SECTIONS, ETC., MUST BE COMPOSED OF THE SAME MATERIAL AND COATINGS AS THE PIPE. METALS MUST BE INSULATED FROM DISSIMILAR MATERIALS WITH USE OF RUBBER OR PLASTIC INSULATING MATERIALS AT LEAST 24 MILS IN THICKNESS.

3. CONNECTIONS - ALL CONNECTIONS WITH PIPES MUST BE COMPLETELY WATERTIGHT. THE DRAIN PIPE OR BARREL CONNECTION TO THE RISER SHALL BE WELDED ALL AROUND WHEN THE PIPE AND RISER ARE METAL. ANTI-SEEP COLLARS SHALL BE CONNECTED TO THE PIPE IN SUCH A MANNER AS TO BE COMPLETELY WATERTIGHT. DIMPLE BANDS ARE NOT CONSIDERED TO BE WATERTIGHT.

ALL CONNECTIONS SHALL USE A RUBBER OR NEOPRENE GASKET WHEN JOINING PIPE SECTIONS. THE END OF EACH PIPE SHALL BE RE-ROLLED AN ADEQUATE NUMBER OF CORRUGATIONS TO ACCOMMODATE THE BANDWIDTH. THE FOLLOWING TYPE CONNECTIONS ARE ACCEPTABLE FOR PIPES LESS THAN 24 INCHES IN DIAMETER: FLANGES ON BOTH ENDS OF THE PIPE WITH A CIRCULAR 3/8 INCH CLOSED CELL NEOPRENE GASKET, PRE-PUNCHED TO THE FLANGE BOLT CIRCLE, SANDWICHED BETWEEN ADJACENT FLANGES; A 12-INCH WIDE STANDARD LAP TYPE BAND WITH 12-INCH WIDE BY 3/8-INCH THICK CLOSED CELL CIRCULAR NEOPRENE GASKET; AND A 12-INCH WIDE HUGGER TYPE BAND WITH O-RING GASKETS HAVING A MINIMUM DIAMETER OF 1/2 INCH GREATER THAN THE CORRUGATION DEPTH. PIPES 24 INCHES IN DIAMETER AND LARGER SHALL BE CONNECTED BY A 24 INCH LONG ANNULAR CORRUGATED BAND USING A MINIMUM OF 4 (FOUR) RODS AND LUGS, 2 ON EACH CONNECTING PIPE END. A 24-INCH WIDE BY 3/8-INCH THICK CLOSED CELL CIRCULAR NEOPRENE GASKET WILL BE INSTALLED WITH 12 INCHES ON THE END OF EACH PIPE. FLANGED JOINTS WITH 3/8 INCH CLOSED CELL GASKETS THE FULL WIDTH OF THE FLANGE IS ALSO ACCEPTABLE.

HELICALLY CORRUGATED PIPE SHALL HAVE EITHER CONTINUOUSLY WELDED SEAMS OR HAVE LOCK SEAMS WITH INTERNAL CAULKING OR A NEOPRENE BEAD.

4. BEDDING - THE PIPE SHALL BE FIRMLY AND UNIFORMLY BEDDED THROUGHOUT ITS ENTIRE LENGTH. WHERE ROCK OR SOFT, SPONGY OR OTHER UNSTABLE SOIL IS ENCOUNTERED, ALL SUCH MATERIAL SHALL BE REMOVED AND REPLACED WITH SUITABLE EARTH COMPACTED TO PROVIDE ADEQUATE SUPPORT.

5. BACKFILLING SHALL CONFORM TO "STRUCTURE BACKFILL".

6. OTHER DETAILS (ANTI-SEEP COLLARS, VALVES, ETC.) SHALL BE AS SHOWN ON THE DRAWINGS.

PLASTIC PIPE - THE FOLLOWING CRITERIA SHALL APPLY FOR PLASTIC PIPE:

1. MATERIALS - PVC PIPE SHALL BE PVC-1120 OR PVC-1220 CONFORMING TO ASTM D-1785 OR ASTM D-2241. CORRUGATED HIGH DENSITY POLYETHYLENE (HDPE) PIPE, COUPLINGS AND FITTINGS SHALL CONFORM TO THE FOLLOWING: 4" - 10" INCH PIPE SHALL MEET THE REQUIREMENTS OF AASHTO M252 TYPE S, AND 12" THROUGH 24" INCH SHALL MEET THE REQUIREMENTS OF AASHTO M294 TYPE S.

2. JOINTS AND CONNECTIONS TO ANTI-SEEP COLLARS SHALL BE COMPLETELY WATERTIGHT.

3. BEDDING - THE PIPE SHALL BE FIRMLY AND UNIFORMLY BEDDED THROUGHOUT ITS ENTIRE LENGTH. WHERE ROCK OR SOFT, SPONGY OR OTHER UNSTABLE SOIL IS ENCOUNTERED, ALL SUCH MATERIAL SHALL BE REMOVED AND REPLACED WITH SUITABLE EARTH COMPACTED TO PROVIDE ADEQUATE SUPPORT.

4. BACKFILLING SHALL CONFORM TO "STRUCTURE BACKFILL".

5. OTHER DETAILS (ANTI-SEEP COLLARS, VALVES, ETC.) SHALL BE AS SHOWN ON THE DRAWINGS.

CONCRETE

CONCRETE SHALL MEET THE REQUIREMENTS OF MARYLAND DEPARTMENT OF TRANSPORTATION, STATE HIGHWAY ADMINISTRATION STANDARD SPECIFICATIONS FOR CONSTRUCTION AND MATERIALS, SECTION 414, MIX NO. 3.

ROCK RIPRAP

ROCK RIPRAP SHALL MEET THE REQUIREMENTS OF MARYLAND DEPARTMENT OF TRANSPORTATION, STATE HIGHWAY ADMINISTRATION STANDARD SPECIFICATIONS FOR CONSTRUCTION AND MATERIALS, SECTION 311.

GEOTEXTILE SHALL BE PLACED UNDER ALL RIPRAP AND SHALL MEET THE REQUIREMENTS OF MARYLAND DEPARTMENT OF TRANSPORTATION, STATE HIGHWAY ADMINISTRATION STANDARD SPECIFICATIONS FOR CONSTRUCTION AND MATERIALS, SECTION 921.09, CLASS C.

CARE OF WATER DURING CONSTRUCTION

ALL WORK ON PERMANENT STRUCTURES SHALL BE CARRIED OUT IN AREAS FREE FROM WATER. THE CONTRACTOR SHALL CONSTRUCT AND MAINTAIN ALL TEMPORARY DIKES, LEVEES, COFFERDAMS, DRAINAGE CHANNELS, AND STREAM DIVERSIONS NECESSARY TO PROTECT THE AREAS TO BE OCCUPIED BY THE PERMANENT WORKS. THE CONTRACTOR SHALL ALSO FURNISH, INSTALL, OPERATE, AND MAINTAIN ALL NECESSARY PUMPING AND OTHER EQUIPMENT REQUIRED FOR REMOVAL OF WATER FROM VARIOUS PARTS OF THE WORK AND FOR MAINTAINING THE EXCAVATIONS, FOUNDATION, AND OTHER PARTS OF THE WORK FREE FROM WATER AS REQUIRED OR DIRECTED BY THE ENGINEER FOR CONSTRUCTING EACH PART OF THE WORK. AFTER HAVING SERVED THEIR PURPOSE, ALL TEMPORARY PROTECTIVE WORKS SHALL BE REMOVED OR LEVELED AND GRADED TO THE EXTENT REQUIRED TO PREVENT OBSTRUCTION IN ANY DEGREE WHATSOEVER OF THE FLOW OF WATER TO THE SPILLWAY OR OUTLET WORKS AND SO AS NOT TO INTERFERE IN ANY WAY WITH THE OPERATION OR MAINTENANCE OF THE STRUCTURE. STREAM DIVERSIONS SHALL BE MAINTAINED UNTIL THE FULL FLOW CAN BE PASSED THROUGH THE PERMANENT WORKS. THE REMOVAL OF WATER FROM THE REQUIRED EXCAVATION AND THE FOUNDATION SHALL BE ACCOMPLISHED IN A MANNER AND TO THE EXTENT THAT WILL MAINTAIN STABILITY OF THE EXCAVATED SLOPES AND BOTTOM REQUIRED EXCAVATIONS AND WILL ALLOW SATISFACTORY PERFORMANCE OF ALL CONSTRUCTION OPERATIONS. DURING THE PLACING AND COMPACTING OF MATERIAL IN REQUIRED EXCAVATIONS, THE WATER LEVEL AT THE LOCATIONS BEING REFILLED SHALL BE MAINTAINED BELOW THE BOTTOM OF THE EXCAVATION AT SUCH LOCATIONS WHICH MAY REQUIRE DRAINING THE WATER SUMPS FROM WHICH THE WATER SHALL BE PUMPED.

STABILIZATION

ALL BORROW AREAS SHALL BE GRADED TO PROVIDE PROPER DRAINAGE AND LEFT IN A SIGHTLY CONDITION. ALL EXPOSED SURFACES OF THE EMBANKMENT, SPILLWAY, SPOIL AND BORROW AREAS, AND BERMS SHALL BE STABILIZED BY SEEDING, LIMING, FERTILIZING AND MULCHING.

EROSION AND SEDIMENT CONTROL

CONSTRUCTION OPERATIONS WILL BE CARRIED OUT IN SUCH A MANNER THAT EROSION WILL BE CONTROLLED AND WATER AND AIR POLLUTION MINIMIZED. STATE AND LOCAL LAWS CONCERNING POLLUTION ABATEMENT WILL BE FOLLOWED. CONSTRUCTION PLANS SHALL DETAIL EROSION AND SEDIMENT CONTROL MEASURES.

OPERATION AND MAINTENANCE

AN OPERATION AND MAINTENANCE PLAN IN ACCORDANCE WITH LOCAL OR STATE REGULATIONS WILL BE PREPARED FOR ALL PONDS. AS A MINIMUM, THE DAM INSPECTION CHECKLIST LOCATED IN APPENDIX A SHALL BE INCLUDED AS PART OF THE OPERATION AND MAINTENANCE PLAN AND PERFORMED AT LEAST ANNUALLY. WRITTEN RECORDS OF MAINTENANCE AND MAJOR REPAIRS NEEDS TO BE RETAINED IN A FILE. THE ISSUANCE OF A MAINTENANCE AND REPAIR PERMIT FOR ANY REPAIRS OR MAINTENANCE THAT INVOLVES THE MODIFICATION OF THE DAM OR SPILLWAY FROM ITS ORIGINAL DESIGN AND SPECIFICATIONS IS REQUIRED. A PERMIT IS ALSO REQUIRED FOR ANY REPAIRS OR RECONSTRUCTION THAT INVOLVE A SUBSTANTIAL PORTION OF THE STRUCTURE. ALL INDICATED REPAIRS ARE TO BE MADE AS SOON AS PRACTICAL.

HOWARD SOIL CONSERVATION DISTRICT OPERATION, MAINTENANCE AND INSPECTION NOTE

INSPECTION OF THE POND(S) SHOWN HEREON SHALL BE PERFORMED AT LEAST ANNUALLY, IN ACCORDANCE WITH THE CHECKLIST AND REQUIREMENTS CONTAINED WITHIN THE USDA, SCS "STANDARDS AND SPECIFICATIONS FOR PONDS" (MD-378). THE POND OWNER(S) AND ANY HEIRS, SUCCESSORS OR ASSIGNS SHALL BE RESPONSIBLE FOR THE SAFETY OF THE POND AND THE CONTINUED OPERATION, SURVEILLANCE, INSPECTION, AND MAINTENANCE THEREOF. THE POND OWNER(S) SHALL PROMPTLY NOTIFY THE SOIL CONSERVATION DISTRICT OF ANY UNUSUAL OBSERVATIONS THAT MAY BE INDICATIONS OF DISTRESS SUCH AS EXCESSIVE SEEPAGE, TURBID SEEPAGE, SLIDING OR SLUMPING.

OPERATION AND MAINTENANCE SCHEDULE FOR PUBLICLY OWNED AND MAINTAINED RETENTION POND

ROUTINE MAINTENANCE (BY HOMEOWNER'S ASSOCIATION)

1. FACILITY SHALL BE INSPECTED ANNUALLY AND AFTER MAJOR STORMS. INSPECTIONS SHALL BE PERFORMED DURING WET WEATHER TO DETERMINE IF THE POND IS FUNCTIONING PROPERLY.
2. TOP AND SIDE SLOPED OF THE EMBANKMENT SHALL BE MOWED A MINIMUM OF TWO (2) TIMES PER YEAR, ONCE IN JUNE AND ONCE IN SEPTEMBER. OTHER SIDE SLOPES AND MAINTENANCE ACCESS SHALL BE MOWED AS NEEDED.
3. DEBRIS AND LITTLER SHALL BE REMOVED DURING REGULAR MOWING OPERATIONS AS NEEDED.
4. VISIBLE SIGNS OF EROSION IN THE POND AS WELL AS THE RIP-RAP OR GABION OUTLET SHALL BE REPAIRED AS SOON AS IT IS NOTICED.

NON-ROUTINE MAINTENANCE (BY HOWARD COUNTY)

1. STRUCTURAL COMPONENTS OF THE POND SUCH AS THE DAM, THE RISER, AND THE PIPES SHALL BE REPAIRED UPON THE DETECTION OF ANY DAMAGE. THE COMPONENTS SHALL BE INSPECTED DURING ROUTINE MAINTENANCE OPERATIONS.
2. SEDIMENT SHALL BE REMOVED FROM THE POND AND FOREBAY NO LATER THEN WHEN THE CAPACITY OF THE POND IS HALF-FULL OF SEDIMENT OR WHEN DEEMED NECESSARY FOR AESTHETIC REASONS, UPON APPROVAL FROM THE DEPARTMENT OF PUBLIC WORKS.

APPROVED: HOWARD COUNTY DEPARTMENT OF PUBLIC WORKS

Chief, Bureau of Highways — Date 5-7-14

APPROVED: HOWARD COUNTY DEPARTMENT OF PLANNING & ZONING

Chief, Division of Land Development — Date 5-21-14

Chief, Development Engineering Division — Date 5-20-14

ENGINEER'S CERTIFICATE

"I CERTIFY THAT THIS PLAN FOR POND CONSTRUCTION, EROSION AND SEDIMENT CONTROL REPRESENTS A PRACTICAL AND WORKABLE PLAN BASED ON MY PERSONAL KNOWLEDGE OF THE SITE CONDITIONS. THIS PLAN WAS PREPARED IN ACCORDANCE WITH THE REQUIREMENTS OF THE HOWARD SOIL CONSERVATION DISTRICT. I HAVE NOTIFIED THE DEVELOPER THAT HE/SHE MUST ENGAGE A REGISTERED PROFESSIONAL ENGINEER TO SUPERVISE POND CONSTRUCTION AND PROVIDE THE HOWARD SOIL CONSERVATION DISTRICT WITH AN "AS-BUILT" PLAN OF THE POND WITHIN 30 DAYS OF COMPLETION."

ENGINEER'S SIGNATURE — DATE 4/24/14

BUILDER'S CERTIFICATE

"I/WE CERTIFY THAT ALL DEVELOPMENT AND/OR CONSTRUCTION WILL BE DONE ACCORDING TO THESE PLANS, AND THAT ANY RESPONSIBLE PERSONNEL INVOLVED IN THE CONSTRUCTION PROJECT WILL HAVE A CERTIFICATE OF ATTENDANCE AT A MARYLAND DEPARTMENT OF THE ENVIRONMENT APPROVED TRAINING PROGRAM FOR THE CONTROL OF SEDIMENT AND EROSION BEFORE BEGINNING THE PROJECT. I SHALL ENGAGE A REGISTERED PROFESSIONAL ENGINEER TO SUPERVISE POND CONSTRUCTION AND PROVIDE THE HOWARD SOIL CONSERVATION DISTRICT WITH AN "AS-BUILT" PLAN OF THE POND WITHIN 30 DAYS OF COMPLETION. I ALSO AUTHORIZE PERIODIC ON-SITE INSPECTIONS BY THE HOWARD SOIL CONSERVATION DISTRICT.

SIGNATURE OF DEVELOPER/BUILDER — DATE 4/23/14

THESE PLANS FOR SMALL POND CONSTRUCTION, SOIL EROSION AND SEDIMENT CONTROL MEET THE REQUIREMENTS OF THE HOWARD SOIL CONSERVATION DISTRICT.

HOWARD S.C.D. — DATE 5/6/14

GLW GUTSCHICK LITTLE & WEBER, P.A.

CIVIL ENGINEERS, LAND SURVEYORS, LAND PLANNERS, LANDSCAPE ARCHITECTS
3909 NATIONAL DRIVE - SUITE 250 - BURTONSVILLE OFFICE PARK
BURTONSVILLE, MARYLAND 20866
TEL: 301-421-4024 BALT: 410-880-1820 DC/VA: 301-989-2524 FAX: 301-421-4186

L:\CADD\DRAWINGS\12001\PLANS BY GLW\FINALS\12001 31-32_APPROVED POND DETAILS.dwg	DES. JRD	DRN. JRD	CHK. DEV

DATE	REVISION	BY	APP'R.

PREPARED FOR:

MAPLE LAWN FARMS I, LLC
SUITE 300 WOODHOLME CENTER
1829 REISTERSTOWN ROAD
BALTIMORE, MD 21208
ATTN: MARK BENNETT
410-484-8400

PROFESSIONAL CERTIFICATION

I HEREBY CERTIFY THAT THESE PLANS WERE PREPARED OR APPROVED BY ME, AND THAT I AM A DULY LICENSED PROFESSIONAL ENGINEER UNDER THE LAWS OF THE STATE OF MARYLAND, LICENSE NO. 12975, EXPIRATION DATE: MAY 26, 2016

4/24/14

POND NOTES and DETAILS (APPROVED UNDER F-13-008)

MAPLE LAWN FARMS

GARDEN DISTRICT · AREA 1
LOTS 1 thru 98, OPEN SPACE LOTS 99 thru 110,
COMMON OPEN AREA LOTS 111 thru 114
and NON-BUILDABLE BULK PARCELS 'X' thru 'Z'

ELECTION DISTRICT No. 5 — HOWARD COUNTY, MARYLAND

SCALE	ZONING	G. L. W. FILE No.
AS SHOWN	MXD-3	12001
DATE	TAX MAP - GRID	SHEET
APRIL, 2014	41-21/46-3	32 OF 36

L:\CADD\DRAWINGS\12001\PLANS BY GLW\FINALS\12001 31-32_APPROVED POND DETAILS.dwg, PLOTTED: 4/22/2014 11:21 AM, LAST SAVED: 4/18/2014 11:14 AM, PLOTTED BY: Jennifer R. Dicks

©GLW 2014

B-4-2 STANDARD AND SPECIFICATIONS FOR SOIL PREPARATION, TOPSOILING, AND SOIL AMENDMENTS

DEFINITION

THE PROCESS OF PREPARING THE SOILS TO SUSTAIN ADEQUATE VEGETATIVE STABILIZATION.

PURPOSE

TO PROVIDE A SUITABLE SOIL MEDIUM FOR VEGETATIVE GROWTH.

CONDITIONS WHERE PRACTICE APPLIES

WHERE VEGETATIVE STABILIZATION IS TO BE ESTABLISHED.

CRITERIA

A. SOIL PREPARATION

1. TEMPORARY STABILIZATION

a. SEEDBED PREPARATION CONSISTS OF LOOSENING SOIL TO A DEPTH OF 3 TO 5 INCHES BY MEANS OF SUITABLE AGRICULTURAL OR CONSTRUCTION EQUIPMENT, SUCH AS DISC HARROWS OR CHISEL PLOWS OR RIPPERS MOUNTED ON CONSTRUCTION EQUIPMENT. AFTER THE SOIL IS LOOSENED, IT MUST NOT BE ROLLED OR DRAGGED SMOOTH BUT LEFT IN THE ROUGHENED CONDITION. SLOPES 3:1 OR FLATTER ARE TO BE TRACKED WITH RIDGES RUNNING PARALLEL TO THE CONTOUR OF THE SLOPE.
b. APPLY FERTILIZER AND LIME AS PRESCRIBED ON THE PLANS.
c. INCORPORATE LIME AND FERTILIZER INTO THE TOP 3 TO 5 INCHES OF SOIL BY DISKING OR OTHER SUITABLE MEANS.

2. PERMANENT STABILIZATION

a. A SOIL TEST IS REQUIRED FOR ANY EARTH DISTURBANCE OF 5 ACRES OR MORE. THE MINIMUM SOIL CONDITIONS REQUIRED FOR PERMANENT VEGETATIVE ESTABLISHMENT ARE:

I. SOIL PH BETWEEN 6.0 AND 7.0.

II. SOLUBLE SALTS LESS THAN 500 PARTS PER MILLION (PPM).

III. SOIL CONTAINS LESS THAN 40 PERCENT CLAY BUT ENOUGH FINE GRAINED MATERIAL (GREATER THAN 30 PERCENT SILT PLUS CLAY) TO PROVIDE THE CAPACITY TO HOLD A MODERATE AMOUNT OF MOISTURE. AN EXCEPTION: IF LOVEGRASS WILL BE PLANTED, THEN A SANDY SOIL (LESS THAN 30 PERCENT SILT PLUS CLAY) WOULD BE ACCEPTABLE.

IV. SOIL CONTAINS 1.5 PERCENT MINIMUM ORGANIC MATTER BY WEIGHT.

V. SOIL CONTAINS SUFFICIENT PORE SPACE TO PERMIT ADEQUATE ROOT PENETRATION.

b. APPLICATION OF AMENDMENTS OR TOPSOIL IS REQUIRED IF ON-SITE SOILS DO NOT MEET THE ABOVE CONDITIONS.

c. GRADED AREAS MUST BE MAINTAINED IN A TRUE AND EVEN GRADE AS SPECIFIED ON THE APPROVED PLAN, THEN SCARIFIED OR OTHERWISE LOOSENED TO A DEPTH OF 3 TO 5 INCHES.

d. APPLY SOIL AMENDMENTS AS SPECIFIED ON THE APPROVED PLAN OR AS INDICATED BY THE RESULTS OF A SOIL TEST.

e. MIX SOIL AMENDMENTS INTO THE TOP 3 TO 5 INCHES OF SOIL BY DISKING OR OTHER SUITABLE MEANS. RAKE LAWN AREAS TO SMOOTH THE SURFACE, REMOVE LARGE OBJECTS LIKE STONES AND BRANCHES, AND READY THE AREA FOR SEED APPLICATION. LOOSEN SURFACE SOIL BY DRAGGING WITH A HEAVY CHAIN OR OTHER EQUIPMENT TO ROUGHEN THE SURFACE WHERE SITE CONDITIONS WILL NOT PERMIT NORMAL SEEDBED PREPARATION. TRACK SLOPES 3:1 OR FLATTER WITH TRACKED EQUIPMENT LEAVING THE SOIL IN AN IRREGULAR CONDITION WITH RIDGES RUNNING PARALLEL TO THE CONTOUR OF THE SLOPE. LEAVE THE TOP 1 TO 3 INCHES OF SOIL LOOSE AND FRIABLE. SEEDBED LOOSENING MAY BE UNNECESSARY ON NEWLY DISTURBED AREAS.

B. TOPSOILING

1. TOPSOIL IS PLACED OVER PREPARED SUBSOIL PRIOR TO ESTABLISHMENT OF PERMANENT VEGETATION. THE PURPOSE IS TO PROVIDE A SUITABLE SOIL MEDIUM FOR VEGETATIVE GROWTH. SOILS OF CONCERN HAVE LOW MOISTURE CONTENT, LOW NUTRIENT LEVELS, LOW PH, MATERIALS TOXIC TO PLANTS, AND/OR UNACCEPTABLE SOIL GRADATION.

2. TOPSOIL SALVAGED FROM AN EXISTING SITE MAY BE USED PROVIDED IT MEETS THE STANDARDS AS SET FORTH IN THESE SPECIFICATIONS. TYPICALLY, THE DEPTH OF TOPSOIL TO BE SALVAGED FOR A GIVEN SOIL TYPE CAN BE FOUND IN THE REPRESENTATIVE SOIL PROFILE SECTION IN THE SOIL SURVEY PUBLISHED BY USDA-NRCS.

3. TOPSOILING IS LIMITED TO AREAS HAVING 2:1 OR FLATTER SLOPES WHERE:

a. THE TEXTURE OF THE EXPOSED SUBSOIL/PARENT MATERIAL IS NOT ADEQUATE TO PRODUCE VEGETATIVE GROWTH.
b. THE SOIL MATERIAL IS SO SHALLOW THAT THE ROOTING ZONE IS NOT DEEP ENOUGH TO SUPPORT PLANTS OR FURNISH CONTINUING SUPPLIES OF MOISTURE AND PLANT NUTRIENTS.
c. THE ORIGINAL SOIL TO BE VEGETATED CONTAINS MATERIAL TOXIC TO PLANT GROWTH.
d. THE SOIL IS SO ACIDIC THAT TREATMENT WITH LIMESTONE IS NOT FEASIBLE.

4. AREAS HAVING SLOPES STEEPER THAN 2:1 REQUIRE SPECIAL CONSIDERATION AND DESIGN.

5. TOPSOIL SPECIFICATIONS: SOIL TO BE USED AS TOPSOIL MUST MEET THE FOLLOWING CRITERIA:

a. TOPSOIL MUST BE A LOAM, SANDY LOAM, CLAY LOAM, SILT LOAM, SANDY CLAY LOAM, OR LOAMY SAND. OTHER SOILS MAY BE USED IF RECOMMENDED BY AN AGRONOMIST OR SOIL SCIENTIST AND APPROVED BY THE APPROPRIATE APPROVAL AUTHORITY. TOPSOIL MUST NOT BE A MIXTURE OF CONTRASTING TEXTURED SUBSOILS AND MUST CONTAIN LESS THAN 5 PERCENT BY VOLUME OF CINDERS, STONES, SLAG, COARSE FRAGMENTS, GRAVEL, STICKS, ROOTS, TRASH, OR OTHER MATERIALS LARGER THAN 1.5 INCHES IN DIAMETER.

b. TOPSOIL MUST BE FREE OF NOXIOUS PLANTS OR PLANT PARTS SUCH AS BERMUDA GRASS, QUACK GRASS, JOHNSON GRASS, NUT SEDGE, POISON IVY, THISTLE, OR OTHERS AS SPECIFIED.

c. TOPSOIL SUBSTITUTES OR AMENDMENTS, AS RECOMMENDED BY A QUALIFIED AGRONOMIST OR SOIL SCIENTIST AND APPROVED BY THE APPROPRIATE APPROVAL AUTHORITY, MAY BE USED IN LIEU OF NATURAL TOPSOIL.

6. TOPSOIL APPLICATION

a. EROSION AND SEDIMENT CONTROL PRACTICES MUST BE MAINTAINED WHEN APPLYING TOPSOIL.
b. UNIFORMLY DISTRIBUTE TOPSOIL IN A 5 TO 8 INCH LAYER AND LIGHTLY COMPACT TO A MINIMUM THICKNESS OF 4 INCHES. SPREADING IS TO BE PERFORMED IN SUCH A MANNER THAT SODDING OR SEEDING CAN PROCEED WITH A MINIMUM OF ADDITIONAL SOIL PREPARATION AND TILLAGE. ANY IRREGULARITIES IN THE SURFACE RESULTING FROM TOPSOILING OR OTHER OPERATIONS MUST BE CORRECTED IN ORDER TO PREVENT THE FORMATION OF DEPRESSIONS OR WATER POCKETS.
c. TOPSOIL MUST NOT BE PLACED IF THE TOPSOIL OR SUBSOIL IS IN A FROZEN OR MUDDY CONDITION, WHEN THE SUBSOIL IS EXCESSIVELY WET OR IN A CONDITION THAT MAY OTHERWISE BE DETRIMENTAL TO PROPER GRADING AND SEEDBED PREPARATION.

C. SOIL AMENDMENTS (FERTILIZER AND LIME SPECIFICATIONS)

1. SOIL TESTS MUST BE PERFORMED TO DETERMINE THE EXACT RATIOS AND APPLICATION RATES FOR BOTH LIME AND FERTILIZER ON SITES HAVING DISTURBED AREAS OF 5 ACRES OR MORE. SOIL ANALYSIS MAY BE PERFORMED BY A RECOGNIZED PRIVATE OR COMMERCIAL LABORATORY. SOIL SAMPLES TAKEN FOR ENGINEERING PURPOSES MAY ALSO BE USED FOR CHEMICAL ANALYSES.
2. FERTILIZERS MUST BE UNIFORM IN COMPOSITION, FREE FLOWING AND SUITABLE FOR ACCURATE APPLICATION BY APPROPRIATE EQUIPMENT. MANURE MAY BE SUBSTITUTED FOR FERTILIZER WITH PRIOR APPROVAL FROM THE APPROPRIATE APPROVAL AUTHORITY. FERTILIZERS MUST ALL BE DELIVERED TO THE SITE FULLY LABELED ACCORDING TO THE APPLICABLE LAWS AND MUST BEAR THE NAME, TRADE NAME OR TRADEMARK AND WARRANTY OF THE PRODUCER.
3. LIME MATERIALS MUST BE GROUND LIMESTONE (HYDRATED OR BURNT LIME MAY BE SUBSTITUTED EXCEPT WHEN HYDROSEEDING) WHICH CONTAINS AT LEAST 50 PERCENT TOTAL OXIDES (CALCIUM OXIDE PLUS MAGNESIUM OXIDE). LIMESTONE MUST BE GROUND TO SUCH FINENESS THAT AT LEAST 50 PERCENT WILL PASS THROUGH A #100 MESH SIEVE AND 98 TO 100 PERCENT WILL PASS THROUGH A #20 MESH SIEVE.
4. LIME AND FERTILIZER ARE TO BE EVENLY DISTRIBUTED AND INCORPORATED INTO THE TOP 3 TO 5 INCHES OF SOIL BY DISKING OR OTHER SUITABLE MEANS. WHERE THE SUBSOIL IS EITHER HIGHLY ACIDIC OR COMPOSED OF HEAVY CLAYS, SPREAD GROUND LIMESTONE AT THE AT THE RATE OF 4 TO 8 TONS/ACRE (200-400 POUNDS PER 1,000 SQUARE FEET) PRIOR TO THE PLACEMENT OF TOPSOIL.

B-4-3 STANDARDS AND SPECIFICATIONS FOR SEEDING and MULCHING

DEFINITION

THE APPLICATION OF SEED AND MULCH TO ESTABLISH VEGETATIVE COVER.

PURPOSE

TO PROTECT DISTURBED SOILS FROM EROSION DURING AND AT THE END OF CONSTRUCTION.

CONDITIONS WHERE PRACTICE APPLIES

TO THE SURFACE OF ALL PERIMETER CONTROLS, SLOPES, AND ANY DISTURBED AREA NOT UNDER ACTIVE GRADING.

CRITERIA

A. SEEDING

1. SPECIFICATIONS

a. ALL SEED MUST MEET THE REQUIREMENTS OF THE MARYLAND STATE SEED LAW. ALL SEED MUST BE SUBJECT TO RE-TESTING BY A RECOGNIZED SEED LABORATORY. ALL SEED USED MUST HAVE BEEN TESTED WITHIN THE 6 MONTHS IMMEDIATELY PRECEDING THE DATE OF SOWING SUCH MATERIAL ON ANY PROJECT. REFER TO TABLE B.4 REGARDING THE QUALITY OF SEED. SEED TAGS MUST BE AVAILABLE UPON REQUEST TO THE INSPECTOR TO VERIFY TYPE OF SEED AND SEEDING RATE.
b. MULCH ALONE MAY BE APPLIED BETWEEN THE FALL AND SPRING SEEDING DATES ONLY IF THE GROUND IS FROZEN. THE APPROPRIATE SEEDING MIXTURE MUST BE APPLIED WHEN THE GROUND THAWS.
c. INOCULANTS: THE INOCULANT FOR TREATING LEGUME SEED IN THE SEED MIXTURES MUST BE A PURE CULTURE OF NITROGEN FIXING BACTERIA PREPARED SPECIFICALLY FOR THE SPECIES. INOCULANTS MUST NOT BE USED LATER THAN THE DATE INDICATED ON THE CONTAINER. ADD FRESH INOCULANTS AS DIRECTED ON THE PACKAGE. USE FOUR TIMES THE RECOMMENDED RATE WHEN HYDROSEEDING. NOTE: IT IS VERY IMPORTANT TO KEEP INOCULANT AS COOL AS POSSIBLE UNTIL USED. TEMPERATURES ABOVE 75 TO 80 DEGREES FAHRENHEIT CAN WEAKEN BACTERIA AND MAKE THE INOCULANT LESS EFFECTIVE.
d. SOD OR SEED MUST NOT BE PLACED ON SOIL WHICH HAS BEEN TREATED WITH SOIL STERILANTS OR CHEMICALS USED FOR WEED CONTROL UNTIL SUFFICIENT TIME HAS ELAPSED (14 DAYS MIN.) TO PERMIT DISSIPATION OF PHYTO-TOXIC MATERIALS.

2. APPLICATION

a. DRY SEEDING: THIS INCLUDES USE OF CONVENTIONAL DROP OR BROADCAST SPREADERS.
   i. INCORPORATE SEED INTO THE SUBSOIL AT THE RATES PRESCRIBED ON TEMPORARY SEEDING TABLE B.1, PERMANENT SEEDING TABLE B.3, OR SITE-SPECIFIC SEEDING SUMMARIES.
   ii. APPLY SEED IN TWO DIRECTIONS, PERPENDICULAR TO EACH OTHER. APPLY HALF THE SEEDING RATE IN EACH DIRECTION. ROLL THE SEEDED AREA WITH A WEIGHTED ROLLER TO PROVIDE GOOD SEED TO SOIL CONTACT.
b. DRILL OR CULTIPACKER SEEDING: MECHANIZED SEEDERS THAT APPLY AND COVER SEED WITH SOIL.
   i. CULTIPACKING SEEDERS ARE REQUIRED TO BURY THE SEED IN SUCH A FASHION AS TO PROVIDE AT LEAST 1/4 INCH OF SOIL COVERING. SEEDBED MUST BE FIRM AFTER PLANTING.
   ii. APPLY SEED IN TWO DIRECTIONS, PERPENDICULAR TO EACH OTHER. APPLY HALF THE SEEDING RATE IN EACH DIRECTION.
c. HYDROSEEDING: APPLY SEED UNIFORMLY WITH HYDROSEEDER (SLURRY INCLUDES SEED AND FERTILIZER).
   i. IF FERTILIZER IS BEING APPLIED AT THE TIME OF SEEDING, THE APPLICATION RATES SHOULD NOT EXCEED THE FOLLOWING: NITROGEN, 100 POUNDS PER ACRE TOTAL OF SOLUBLE NITROGEN; P205 (PHOSPHOROUS), 200 POUNDS PER ACRE; K20 (POTASSIUM), 200 POUNDS PER ACRE.
   ii. LIME: USE ONLY GROUND AGRICULTURAL LIMESTONE (UP TO 3 TONS PER ACRE MAY BE APPLIED BY HYDROSEEDING). NORMALLY, NOT MORE THAN 2 TONS ARE APPLIED BY HYDROSEEDING AT ANY ONE TIME. DO NOT USE BURNT OR HYDRATED LIME WHEN HYDROSEEDING.
   iii. MIX SEED AND FERTILIZER ON SITE AND SEED IMMEDIATELY AND WITHOUT INTERRUPTION.
   iv. WHEN HYDROSEEDING DO NOT INCORPORATE SEED INTO THE SOIL.

B. MULCHING

1. MULCH MATERIALS (IN ORDER OF PREFERENCE)

a. STRAW CONSISTING OF THOROUGHLY THRESHED WHEAT, RYE, OAT, OR BARLEY AND REASONABLY BRIGHT IN COLOR. STRAW IS TO BE FREE OF NOXIOUS WEED SEEDS AS SPECIFIED IN THE MARYLAND SEED LAW AND NOT MUSTY, MOLDY, CAKED, DECAYED, OR EXCESSIVELY DUSTY. NOTE: USE ONLY STERILE STRAW MULCH IN AREAS WHERE ONE SPECIES OF GRASS IS DESIRED.
b. WOOD CELLULOSE FIBER MULCH (WCFM) CONSISTING OF SPECIALLY PREPARED WOOD CELLULOSE PROCESSED INTO A UNIFORM FIBROUS PHYSICAL STATE.
   i. WCFM IS TO BE DYED GREEN OR CONTAIN A GREEN DYE IN THE PACKAGE THAT WILL PROVIDE AN APPROPRIATE COLOR TO FACILITATE VISUAL INSPECTION OF THE UNIFORMLY SPREAD SLURRY.
   ii. WCFM, INCLUDING DYE, MUST CONTAIN NO GERMINATION OR GROWTH INHIBITING FACTORS.
   iii. WCFM MATERIALS ARE TO BE MANUFACTURED AND PROCESSED IN SUCH A MANNER THAT THE WOOD CELLULOSE FIBER MULCH WILL REMAIN IN UNIFORM SUSPENSION IN WATER UNDER AGITATION AND WILL BLEND WITH SEED, FERTILIZER AND OTHER ADDITIVES TO FORM A HOMOGENEOUS SLURRY. THE MULCH MATERIAL MUST FORM A BLOTTER-LIKE GROUND COVER, ON APPLICATION, HAVING MOISTURE ABSORPTION AND PERCOLATION PROPERTIES AND MUST COVER AND HOLD GRASS SEED IN CONTACT WITH THE SOIL WITHOUT INHIBITING THE GROWTH OF THE GRASS SEEDLINGS.
   iv. WCFM MATERIAL MUST NOT CONTAIN ELEMENTS OR COMPOUNDS AT CONCENTRATION LEVELS THAT WILL BE PHYTO-TOXIC.
   v. WCFM MUST CONFORM TO THE FOLLOWING PHYSICAL REQUIREMENTS: FIBER LENGTH OF APPROXIMATELY 10 MILLIMETERS, DIAMETER APPROXIMATELY 1 MILLIMETER, PH RANGE OF 4.0 TO 8.5, ASH CONTENT OF 1.6 PERCENT MAXIMUM AND WATER HOLDING CAPACITY OF 90 PERCENT MINIMUM.

2. APPLICATION

a. APPLY MULCH TO ALL SEEDED AREAS IMMEDIATELY AFTER SEEDING.
b. WHEN STRAW MULCH IS USED, SPREAD IT OVER ALL SEEDED AREAS AT THE RATE OF 2 TONS PER ACRE TO A UNIFORM LOOSE DEPTH OF 1 TO 2 INCHES. APPLY MULCH TO ACHIEVE A UNIFORM DISTRIBUTION AND DEPTH SO THAT THE SOIL SURFACE IS NOT EXPOSED. WHEN USING A MULCH ANCHORING TOOL, INCREASE THE APPLICATION RATE TO 2.5 TONS PER ACRE.
c. WOOD CELLULOSE FIBER USED AS MULCH MUST BE APPLIED AT A NET DRY WEIGHT OF 1500 POUNDS PER ACRE. MIX THE WOOD CELLULOSE FIBER WITH WATER TO ATTAIN A MIXTURE WITH A MAXIMUM OF 50 POUNDS OF WOOD CELLULOSE FIBER PER 100 GALLONS OF WATER.

3. ANCHORING

a. PERFORM MULCH ANCHORING IMMEDIATELY FOLLOWING APPLICATION OF MULCH TO MINIMIZE LOSS BY WIND OR WATER. THIS MAY BE DONE BY ONE OF THE FOLLOWING METHODS (LISTED BY PREFERENCE), DEPENDING UPON THE SIZE OF THE AREA AND EROSION HAZARD:
   i. A MULCH ANCHORING TOOL IS A TRACTOR DRAWN IMPLEMENT DESIGNED TO PUNCH AND ANCHOR MULCH INTO THE SOIL SURFACE A MINIMUM OF 2 INCHES. THIS PRACTICE IS MOST EFFECTIVE ON LARGE AREAS, BUT IS LIMITED TO FLATTER SLOPES WHERE EQUIPMENT CAN OPERATE SAFELY. IF USED ON SLOPING LAND, THIS PRACTICE SHOULD FOLLOW THE CONTOUR.
   ii. WOOD CELLULOSE FIBER MAY BE USED FOR ANCHORING STRAW. APPLY THE FIBER BINDER AT A NET DRY WEIGHT OF 750 POUNDS PER ACRE. MIX THE WOOD CELLULOSE FIBER WITH WATER AT A MAXIMUM OF 50 POUNDS OF WOOD CELLULOSE FIBER PER 100 GALLONS OF WATER.
   iii. SYNTHETIC BINDERS SUCH AS ACRYLIC DLR (AGRO-TACK), DCA-70, PETROSET, TERRA TAX II, TERRA MANUFACTURER. APPLICATION OF LIQUID BINDERS NEEDS TO BE HEAVIER AT THE EDGES WHERE WIND CATCHES MULCH, SUCH AS IN VALLEYS AND ON CRESTS OF BANKS. USE OF ASPHALT BINDERS IS STRICTLY PROHIBITED.
   iv. LIGHTWEIGHT PLASTIC NETTING MAY BE STAPLED OVER THE MULCH ACCORDING TO MANUFACTURER RECOMMENDATIONS. NETTING IS USUALLY AVAILABLE IN ROLLS 4 TO 15 FEET WIDE AND 300 TO 3,000 FEET LONG.

B-4-4 STANDARDS AND SPECIFICATIONS FOR TEMPORARY STABILIZATION

DEFINITION

TO STABILIZE DISTURBED SOILS WITH VEGETATION FOR UP TO 6 MONTHS.

PURPOSE

TO USE FAST GROWING VEGETATION THAT PROVIDES COVER ON DISTURBED SOILS.

CONDITIONS WHERE PRACTICE APPLIES EXPOSED SOILS WHERE GROUND COVER IS NEEDED FOR A PERIOD OF 6 MONTHS OR LESS. FOR LONGER DURATION OF TIME, PERMANENT STABILIZATION PRACTICES ARE REQUIRED.

CRITERIA

1. SELECT ONE OR MORE OF THE SPECIES OR SEED MIXTURES LISTED IN TABLE B.1 FOR THE APPROPRIATE PLANT HARDINESS ZONE (FROM FIGURE B.3), AND ENTER THEM IN THE TEMPORARY SEEDING SUMMARY BELOW ALONG WITH APPLICATION RATES, SEEDING DATES AND SEEDING DEPTHS. IF THIS SUMMARY IS NOT PUT ON THE PLAN AND COMPLETED, THEN TABLE B.1 PLUS FERTILIZER AND LIME RATES MUST BE PUT ON THE PLAN.
2. FOR SITES HAVING SOIL TESTS PERFORMED, USE AND SHOW THE RECOMMENDED RATES BY THE TESTING AGENCY SOIL TESTS ARE NOT REQUIRED FOR TEMPORARY SEEDING.
3. WHEN STABILIZATION IS REQUIRED OUTSIDE OF A SEEDING SEASON, APPLY SEED AND MULCH OR STRAW MULCH ALONE AS PRESCRIBED IN SECTION B-4-3.A.1.B AND MAINTAIN UNTIL THE NEXT SEEDING SEASON.

TEMPORARY SEEDING SUMMARY

HARDINESS ZONE: 6b SEED MIXTURE:					FERTILIZER RATE (10-10-10)	LIME RATE
No.	SPECIES	APPLICATION RATE (lb/ac.)	SEEDING DATES	SEEDING DEPTHS		
1	ANNUAL RYEGRASS	40 lb/ac	Mar. 1 to May 15, Aug. 1 to Oct. 15	0.5 INCHES	436 lb./ac. (10 lb./ 1,000 sf)	2 tons/ac. (90 lb./ 1,000 sf)
2	PEARL MILLET	20 lb/ac	May 16 to July 31	0.5 INCHES		

SEDIMENT CONTROL NOTES

1. A MINIMUM OF 48 HOURS NOTICE MUST BE GIVEN TO THE HOWARD COUNTY DEPARTMENT OF INSPECTION, LICENSES AND PERMITS, SEDIMENT CONTROL DIVISION PRIOR TO THE START OF ANY CONSTRUCTION. (410-313-1855).

2. ALL VEGETATIVE AND STRUCTURAL PRACTICES ARE TO BE INSTALLED ACCORDING TO THE PROVISIONS OF THIS PLAN AND ARE TO BE IN CONFORMANCE WITH THE MOST CURRENT "MARYLAND STANDARDS AND SPECIFICATIONS FOR SOIL EROSION AND SEDIMENT CONTROL" AND REVISIONS THERETO.

3. FOLLOWING INITIAL SOIL DISTURBANCE OR RE-DISTURBANCE, PERMANENT OR TEMPORARY STABILIZATION SHALL BE COMPLETED WITHIN:
   A. 3 CALENDAR DAYS FOR ALL PERIMETER SEDIMENT CONTROL STRUCTURES, DIKES, PERIMETER SLOPES AND ALL SLOPES GREATER THAN 3:1,
   B. 7 DAYS AS TO ALL OTHER DISTURBED OR GRADED AREAS ON THE PROJECT SITE.

4. ALL DISTURBED AREAS MUST BE STABILIZED WITHIN THE TIME PERIOD SPECIFIED ABOVE IN ACCORDANCE WITH THE "2011 MARYLAND STANDARDS AND SPECIFICATIONS FOR SOIL EROSION AND SEDIMENT CONTROL" FOR PERMANENT SEEDING (Sec. B-4-5), TEMPORARY SEEDING (Sec. B-4-4) AND MULCHING (Sec. B-4-3). TEMPORARY STABILIZATION WITH MULCH ALONE CAN ONLY BE DONE WHEN RECOMMENDED SEEDING DATES DO NOT ALLOW FOR PROPER GERMINATION AND ESTABLISHMENT OF GRASSES.

5. ALL SEDIMENT CONTROL STRUCTURES ARE TO REMAIN IN PLACE AND ARE TO BE MAINTAINED IN OPERATIVE CONDITION UNTIL PERMISSION FOR THEIR REMOVAL HAS BEEN OBTAINED FROM THE HOWARD COUNTY SEDIMENT CONTROL INSPECTOR.

6. SITE ANALYSIS:

TOTAL AREA OF SITE	:	75.8± AC.
AREA DISTURBED	:	25.7± AC.
AREA TO BE ROOFED OR PAVED	:	6.1± AC.
AREA TO BE VEGETATIVELY STABILIZED	:	19.6± AC.
TOTAL CUT	:	42,000± CY
TOTAL FILL	:	42,000± CY
OFF-SITE WASTE/BORROW AREA LOCATION	:	NONE

7. ANY SEDIMENT CONTROL PRACTICE WHICH IS DISTURBED BY GRADING ACTIVITY FOR PLACEMENT OF UTILITIES MUST BE REPAIRED ON THE SAME DAY OF DISTURBANCE

8. ADDITIONAL SEDIMENT CONTROL MUST BE PROVIDED, IF DEEMED NECESSARY BY THE HOWARD COUNTY SEDIMENT CONTROL INSPECTOR.

9. ON ALL SITES WITH DISTURBED AREAS IN EXCESS OF 2 ACRES, APPROVAL OF THE INSPECTION AGENCY SHALL BE REQUESTED UPON COMPLETION OF INSTALLATION OF PERIMETER EROSION AND SEDIMENT CONTROLS, BUT BEFORE PROCEEDING WITH ANY OTHER EARTH DISTURBANCE OR GRADING. OTHER BUILDING OR GRADING INSPECTION APPROVALS MAY NOT BE AUTHORIZED UNTIL THIS INITIAL APPROVAL BY THE INSPECTION AGENCY IS MADE.

10. TRENCHES FOR THE CONSTRUCTION OF UTILITIES IS LIMITED TO 3 PIPE LENGTHS OR THAT WHICH SHALL BE BACKFILLED AND STABILIZED BY THE END OF EACH WORK DAY, WHICHEVER IS SHORTER.

11. ANY CHANGES OR REVISIONS TO THE SEQUENCE OF CONSTRUCTION MUST BE REVIEWED AND APPROVED BY THE PLAN APPROVAL AUTHORITY PRIOR TO PROCEEDING WITH CONSTRUCTION.

12. A PROJECT IS TO BE SEQUENCED SO THAT THE GRADING ACTIVITIES BEGIN ON ONE GRADING UNIT (MAXIMUM ACREAGE OF 20 AC. PER GRADING UNIT) AT A TIME. WORK MAY PROCEED TO A SUBSEQUENT GRADING UNIT WHEN AT LEAST 50 PERCENT OF THE DISTURBED AREA IN THE PRECEDING GRADING UNIT HAS BEEN STABILIZED AND APPROVED BY THE ENFORCEMENT AUTHORITY. UNLESS OTHERWISE SPECIFIED AND APPROVED BY THE APPROVAL AUTHORITY, NO MORE THAN 30 ACRES CUMULATIVELY MAY BE DISTURBED AT A GIVEN TIME.

STANDARDS AND SPECIFICATIONS FOR DUST CONTROL

DEFINITION

CONTROLLING THE SUSPENSION OF DUST PARTICLES FROM CONSTRUCTION ACTIVITIES.

PURPOSE

TO PREVENT BLOWING AND MOVEMENT OF DUST FROM EXPOSED SOIL SURFACES TO REDUCE ON AND OFF-SITE DAMAGE INCLUDING HEALTH AND TRAFFIC HAZARDS.

CONDITIONS WHERE PRACTICE APPLIES

AREAS SUBJECT TO DUST BLOWING AND MOVEMENT WHERE ON AND OFF-SITE DAMAGE IS LIKELY WITHOUT TREATMENT.

SPECIFICATIONS

1. MULCHES: SEE SECTION B-4-2 SOIL PREPARATION, TOPSOILING, AND SOIL AMENDMENTS, SECTION B-4-3 SEEDING AND MULCHING, AND SECTION B-4-4 TEMPORARY STABILIZATION. MULCH MUST BE ANCHORED TO PREVENT BLOWING.
2. VEGETATIVE COVER: SEE SECTION B-4-4 TEMPORARY STABILIZATION.
3. TILLAGE: TILL TO ROUGHEN SURFACE AND BRING CLODS TO THE SURFACE. BEGIN PLOWING ON WINDWARD SIDE OF SITE. CHISEL-TYPE PLOWS SPACED ABOUT 12 INCHES APART, SPRING-TOOTHED HARROWS, AND SIMILAR PLOWS ARE EXAMPLES OF EQUIPMENT THAT MAY PRODUCE THE DESIRED EFFECT.
4. IRRIGATION: SPRINKLE SITE WITH WATER UNTIL THE SURFACE IS MOIST. REPEAT AS NEEDED. THE SITE MUST NOT BE IRRIGATED TO THE POINT THAT RUNOFF OCCURS.
5. BARRIERS: SOLID BOARD FENCES, SILT FENCES, SNOW FENCES, BURLAP FENCES, STRAW BALES, AND SIMILAR MATERIAL CAN BE USED TO CONTROL AIR CURRENTS AND SOIL BLOWING.
6. CHEMICAL TREATMENT: USE OF CHEMICAL TREATMENT REQUIRES APPROVAL BY THE APPROPRIATE PLAN REVIEW AUTHORITY.

B-4-5 STANDARDS AND SPECIFICATIONS FOR PERMANENT STABILIZATION

DEFINITION

TO STABILIZE DISTURBED SOILS WITH PERMANENT VEGETATION.

PURPOSE

TO USE LONG-LIVED PERENNIAL GRASSES AND LEGUMES TO ESTABLISH PERMANENT GROUND COVER ON DISTURBED SOILS.

CONDITIONS WHERE PRACTICE APPLIES

EXPOSED SOILS WHERE GROUND COVER IS NEEDED FOR 6 MONTHS OR MORE.

CRITERIA

A. SEED MIXTURES

1. GENERAL USE
   a. SELECT ONE OR MORE OF THE SPECIES OR MIXTURES LISTED IN TABLE B.3 FOR THE APPROPRIATE PLANT HARDINESS ZONE (FROM FIGURE B.3) AND BASED ON THE SITE CONDITION OR PURPOSE FOUND ON TABLE B.2. ENTER SELECTED MIXTURE(S), APPLICATION RATES, AND SEEDING DATES IN THE PERMANENT SEEDING SUMMARY. THE SUMMARY IS TO BE PLACED ON THE PLAN.
   b. ADDITIONAL PLANTING SPECIFICATIONS FOR EXCEPTIONAL SITES SUCH AS SHORELINES, STREAM BANKS, OR DUNES OR FOR SPECIAL PURPOSES SUCH AS WILDLIFE OR AESTHETIC TREATMENT MAY BE FOUND IN USDA-NRCS TECHNICAL FIELD OFFICE GUIDE, SECTION 342 - CRITICAL AREA PLANTING.
   c. FOR SITES HAVING DISTURBED AREA OVER 5 ACRES, USE AND SHOW THE RATES RECOMMENDED BY THE SOIL TESTING AGENCY.
   d. FOR AREAS RECEIVING LOW MAINTENANCE, APPLY UREA FORM FERTILIZER (46-0-0) AT 3 1/2 POUNDS PER 1000 SQUARE FEET (150 POUNDS PER ACRE) AT THE TIME OF SEEDING IN ADDITION TO THE SOIL AMENDMENTS SHOWN IN THE PERMANENT SEEDING SUMMARY.

2. TURFGRASS MIXTURES
   a. AREAS WHERE TURFGRASS MAY BE DESIRED INCLUDE LAWNS, PARKS, PLAYGROUNDS, AND COMMERCIAL SITES WHICH WILL RECEIVE A MEDIUM TO HIGH LEVEL OF MAINTENANCE.
   b. SELECT ONE OR MORE OF THE SPECIES OR MIXTURES LISTED BELOW BASED ON THE SITE CONDITIONS OR PURPOSE. ENTER SELECTED MIXTURE(S), APPLICATION RATES, AND SEEDING DATES IN THE PERMANENT SEEDING SUMMARY. THE SUMMARY IS TO BE PLACED ON THE PLAN.
      i. KENTUCKY BLUEGRASS: FULL SUN MIXTURE: FOR USE IN AREAS THAT RECEIVE INTENSIVE MANAGEMENT. IRRIGATION REQUIRED IN THE AREAS OF CENTRAL MARYLAND AND EASTERN SHORE. RECOMMENDED CERTIFIED KENTUCKY BLUEGRASS CULTIVARS SEEDING RATE: 1.5 TO 2.0 POUNDS PER 1000 SQUARE FEET. CHOOSE A MINIMUM OF THREE KENTUCKY BLUEGRASS CULTIVARS WITH EACH RANGING FROM 10 TO 35 PERCENT OF THE TOTAL MIXTURE BY WEIGHT.
      ii. KENTUCKY BLUEGRASS/PERENNIAL RYE: FULL SUN MIXTURE: FOR USE IN FULL SUN AREAS WHERE RAPID ESTABLISHMENT IS NECESSARY AND WHEN TURF WILL RECEIVE MEDIUM TO INTENSIVE MANAGEMENT. CERTIFIED PERENNIAL RYEGRASS CULTIVARS/CERTIFIED KENTUCKY BLUEGRASS SEEDING RATE: 2 POUNDS MIXTURE PER 1000 SQUARE FEET. CHOOSE A MINIMUM OF THREE KENTUCKY BLUEGRASS CULTIVARS WITH EACH RANGING FROM 10 TO 35 PERCENT OF THE TOTAL MIXTURE BY WEIGHT.
      iii. TALL FESCUE/KENTUCKY BLUEGRASS: FULL SUN MIXTURE: FOR USE IN DROUGHT PRONE AREAS AND/OR FOR AREAS RECEIVING LOW TO MEDIUM MANAGEMENT IN FULL SUN TO MEDIUM SHADE. RECOMMENDED MIXTURE INCLUDES; CERTIFIED TALL FESCUE CULTIVARS 95 TO 100 PERCENT, CERTIFIED KENTUCKY BLUEGRASS CULTIVARS 0 TO 5 PERCENT. SEEDING RATE: 5 TO 8 POUNDS PER 1000 SQUARE FEET. ONE OR MORE CULTIVARS MAY BE BLENDED.
      iv. KENTUCKY BLUEGRASS/FINE FESCUE: SHADE MIXTURE: FOR USE IN AREAS WITH SHADE IN BLUEGRASS LAWNS. FOR ESTABLISHMENT IN HIGH QUALITY, INTENSIVELY MANAGED TURF AREA. MIXTURE INCLUDES; CERTIFIED KENTUCKY BLUEGRASS CULTIVARS 30 TO 40 PERCENT AND CERTIFIED FINE FESCUE AND 60 TO 70 PERCENT. SEEDING RATE: 1 1/2 TO 3 POUNDS PER 1000 SQUARE FEET.

      NOTES:

      SELECT TURFGRASS VARIETIES FROM THOSE LISTED IN THE MOST CURRENT UNIVERSITY OF MARYLAND PUBLICATION, AGRONOMY MEMO #77, "TURFGRASS CULTIVAR RECOMMENDATIONS FOR MARYLAND"

      CHOOSE CERTIFIED MATERIAL. CERTIFIED MATERIAL IS THE BEST GUARANTEE OF CULTIVAR PURITY. THE CERTIFICATION PROGRAM OF THE MARYLAND DEPARTMENT OF AGRICULTURE, TURF AND SEED SECTION, PROVIDES A RELIABLE MEANS OF CONSUMER PROTECTION AND ASSURES A PURE GENETIC LINE

   i. IDEAL TIMES OF SEEDING FOR TURF GRASS MIXTURES
      WESTERN MD: MARCH 15 TO JUNE 1, AUGUST 1 TO OCTOBER 1 (HARDINESS ZONES: 5B, 6A)
      CENTRAL MD: MARCH 1 TO MAY 15, AUGUST 15 TO OCTOBER 15 (HARDINESS ZONE: 6B)
      SOUTHERN MD, EASTERN SHORE: MARCH 1 TO MAY 15, AUGUST 15 TO OCTOBER 15 (HARDINESS ZONES: 7A, 7B)
   j. TILL AREAS TO RECEIVE SEED BY DISKING OR OTHER APPROVED METHODS TO A DEPTH OF 2 TO 4 INCHES, LEVEL AND RAKE THE AREAS TO PREPARE A PROPER SEEDBED. REMOVE STONES AND DEBRIS OVER 1 1/2 INCHES IN DIAMETER. THE RESULTING SEEDBED MUST BE IN SUCH CONDITION THAT FUTURE MOWING OF GRASSES WILL POSE NO DIFFICULTY.
   k. IF SOIL MOISTURE IS DEFICIENT, SUPPLY NEW SEEDINGS WITH ADEQUATE WATER FOR PLANT GROWTH (1/2 TO 1 INCH EVERY 3 TO 4 DAYS DEPENDING ON SOIL TEXTURE) UNTIL THEY ARE FIRMLY ESTABLISHED. THIS IS ESPECIALLY TRUE WHEN SEEDINGS ARE MADE LATE IN THE PLANTING SEASON, IN ABNORMALLY DRY OR HOT SEASONS, OR ON ADVERSE SITES.

PERMANENT SEEDING SUMMARY

HARDINESS ZONE: 6b SEED MIXTURE: #9 (Tall Fescue/ Kentucky Bluegrass)					FERTILIZER RATE (10-20-20)	LIME RATE
No.	SPECIES	APPLICATION RATE	SEEDING DATES	SEEDING DEPTHS		
9	*Certified Tall Fescue blend (95% by weight): *Falcon IV, Penn 1901 & Rebel Exedo* and Certified Kentucky Bluegrass blend (5% by weight): *Courtyard, Raven & Yankee*	6-8 lb/ 1000 s.f.	Mar. 1 to May 15, Aug. 15 to Oct. 15	1/4 - 1/2 IN.	1.0 lb/ 1000 s.f. (45 lb/acre)	90 lb/ 1000 s.f.

* Other cultivars listed as "proven" in the most current UMD TT-77 may also be used

B. SOD: TO PROVIDE QUICK COVER ON DISTURBED AREAS (2:1 GRADE OR FLATTER).

1. GENERAL SPECIFICATIONS
   a. CLASS OF TURFGRASS SOD MUST BE MARYLAND STATE CERTIFIED. SOD LABELS MUST BE MADE AVAILABLE TO THE JOB FOREMAN AND INSPECTOR.
   b. SOD MUST BE MACHINE CUT AT A UNIFORM SOIL THICKNESS OF 3/4 INCH, PLUS OR MINUS 1/4 INCH, AT THE TIME OF CUTTING. MEASUREMENT FOR THICKNESS MUST EXCLUDE TOP GROWTH AND THATCH. BROKEN PADS AND TORN OR UNEVEN ENDS WILL NOT BE ACCEPTABLE.
   c. STANDARD SIZE SECTIONS OF SOD MUST BE STRONG ENOUGH TO SUPPORT THEIR OWN WEIGHT AND RETAIN THEIR SIZE AND SHAPE WHEN SUSPENDED VERTICALLY WITH A FIRM GRASP ON THE UPPER 10 PERCENT OF THE SECTION.
   d. SOD MUST NOT BE HARVESTED OR TRANSPLANTED WHEN MOISTURE CONTENT (EXCESSIVELY DRY OR WET) MAY ADVERSELY AFFECT ITS SURVIVAL.
   e. SOD MUST BE HARVESTED, DELIVERED, AND INSTALLED WITHIN A PERIOD OF 36 HOURS. SOD NOT TRANSPLANTED WITHIN THIS PERIOD MUST BE APPROVED BY AN AGRONOMIST OR SOIL SCIENTIST PRIOR TO ITS INSTALLATION.

2. SOD INSTALLATION
   a. DURING PERIODS OF EXCESSIVELY HIGH TEMPERATURE OR IN AREAS HAVING DRY SUBSOIL, LIGHTLY IRRIGATE THE SUBSOIL IMMEDIATELY PRIOR TO LAYING THE SOD.
   b. LAY THE FIRST ROW OF SOD IN A STRAIGHT LINE WITH SUBSEQUENT ROWS PLACED PARALLEL TO IT AND TIGHTLY WEDGED AGAINST EACH OTHER. STAGGER LATERAL JOINTS TO PROMOTE MORE UNIFORM GROWTH AND STRENGTH. ENSURE THAT SOD IS NOT STRETCHED OR OVERLAPPED AND THAT ALL JOINTS ARE BUTTED TIGHT IN ORDER TO PREVENT VOIDS WHICH WOULD CAUSE AIR DRYING OF THE ROOTS.
   c. WHEREVER POSSIBLE, LAY SOD WITH THE LONG EDGES PARALLEL TO THE CONTOUR AND WITH STAGGERING JOINTS. ROLL AND TAMP, PEG OR OTHERWISE SECURE THE SOD TO PREVENT SLIPPAGE ON SLOPES. ENSURE SOLID CONTACT EXISTS BETWEEN SOD ROOTS AND THE UNDERLYING SOIL SURFACE.
   d. WATER THE SOD IMMEDIATELY FOLLOWING ROLLING AND TAMPING UNTIL THE UNDERSIDE OF THE NEW SOD PAD AND SOIL SURFACE BELOW THE SOD ARE THOROUGHLY WET. COMPLETE THE OPERATIONS OF LAYING, TAMPING AND IRRIGATING FOR ANY PIECE OF SOD WITHIN EIGHT HOURS.

3. SOD MAINTENANCE
   a. IN THE ABSENCE OF ADEQUATE RAINFALL, WATER DAILY DURING THE FIRST WEEK OR AS OFTEN AND SUFFICIENTLY AS NECESSARY TO MAINTAIN MOIST SOIL TO A DEPTH OF 4 INCHES. WATER SOD DURING THE HEAT OF THE DAY TO PREVENT WILTING.
   b. AFTER THE FIRST WEEK, SOD WATERING IS REQUIRED AS NECESSARY TO MAINTAIN ADEQUATE MOISTURE CONTENT.
   c. DO NOT MOW UNTIL THE SOD IS FIRMLY ROOTED. NO MORE THAN 1/3 OF THE GRASS LEAF MUST BE REMOVED BY THE INITIAL CUTTING OR SUBSEQUENT CUTTINGS. MAINTAIN A GRASS HEIGHT OF AT LEAST 3 INCHES UNLESS OTHERWISE SPECIFIED.

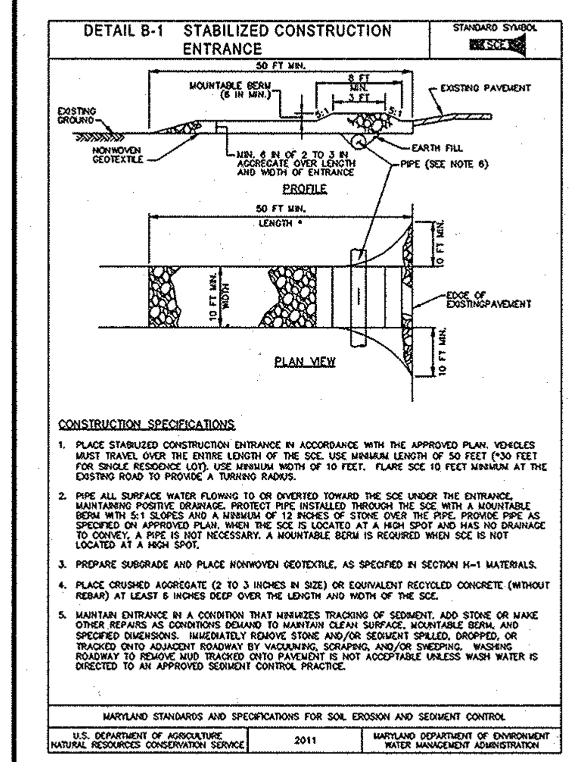

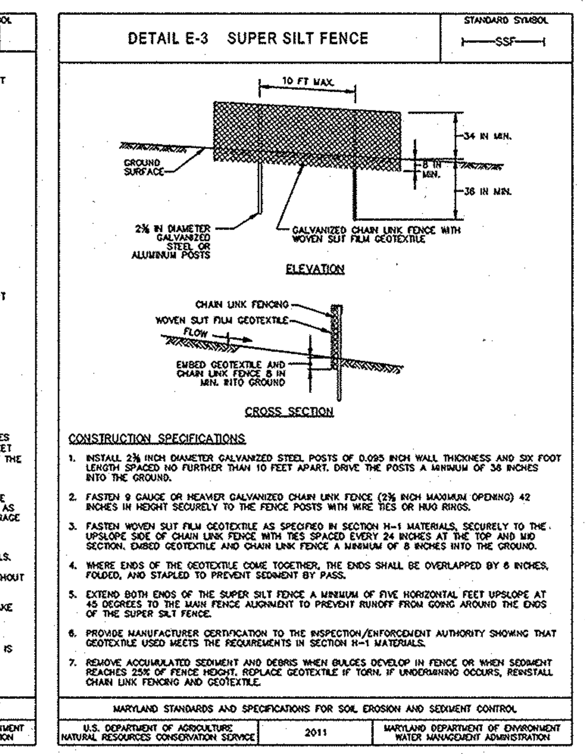

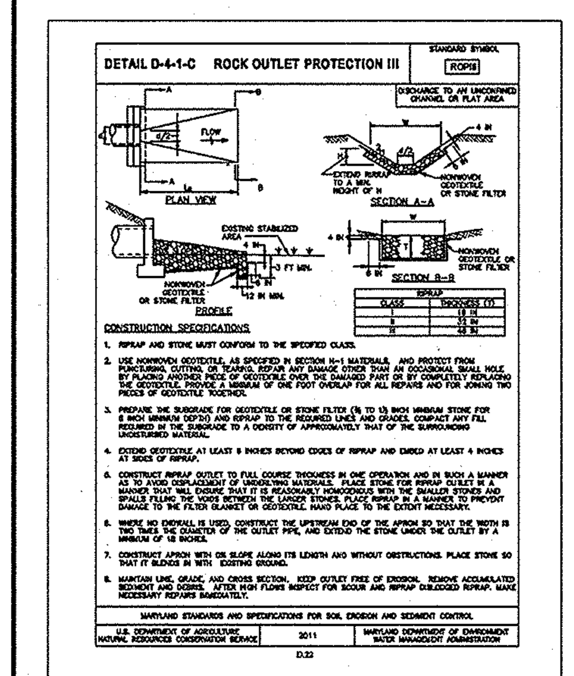

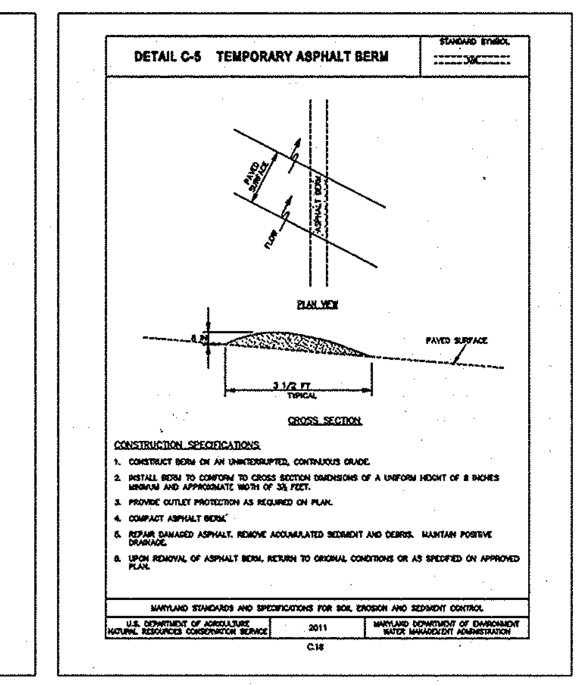

B-4-8 STANDARDS AND SPECIFICATIONS FOR STOCKPILE AREA

DEFINITION

A MOUND OR PILE OF SOIL PROTECTED BY APPROPRIATELY DESIGNED EROSIN AND SEDIMENT CONTROL MEASURES.

PURPOSE

TO PROVIDE A DESIGNATED LOCATION FOR THE TEMPORARY STORAGE OF SOIL THAT CONTROLS THE POTENTIAL FOR EROSION, SEDIMENTATION, AND CHANGES TO DRAINAGE PATTERNS.

CONDITIONS WHERE PRACTICE APPLIES

STOCKPILE AREAS ARE UTILIZED WHEN IT IS NECESSARY TO SALVAGE AND STORE SOIL FOR LATER USE.

CRITERIA

1. THE STOCKPILE LOCATION AND ALL RELATED SEDIMENT CONTROL PRACTICES MUST BE CLEARLY INDICATED ON THE EROSION AND SEDIMENT CONTROL PLAN.
2. THE FOOTPRINT OF THE STOCKPILE MUST BE SIZED TO ACCOMMODATE THR ANTICIPATED VOLUME OF MATERIAL AND BASED ON A SIDE SLOPE RATIO NO STEEPER THAN 2:1. BENCHING MUST BE PROVIDED IN ACCORDANCE WITH SECTION B-3 LAND GRADING.
3. RUNOFF FROM THE STOCKPILE AREA MUST DRAIN TO A SUITABLE SEDIMENT CONTROL PRACTICE.
4. ACCESS THE STOCKPILE AREA FROM THE UPGRADE SIDE.
5. CLEAR WATER RUNOFF INTO THE STOCKPILE AREA MUST BE MINIMIZED BY USE OF A DIVERSION DEVICE SUCH AS AN EARTH DIKE, TEMPORARY SWALE OR DIVERSION FENCE. PROVISIONS MUST BE MADE FOR DISCHARGING CONCENTRATED FLOWS IN A NON-EROSIVE MANNER.
6. WHERE RUNOFF CONCENTRATES ALONG THE TOE OF THE STOCKPILE FILL, AN APPROPRIATE EROSION/SEDIMENT CONTROL PRACTICE MUST BE USED TO INTERCEPT THE DISCHARGE.
7. STOCKPILES MUST BE STABILIZED IN ACCORDANCE WITH THE 3/7 STABILIZATION REQUIREMENT AS WELL AS STANDARD B-4-1 INCREMENTAL STABILIZATION AND STANDARD B-4-4 TEMPORARY STABLIZATION.
8. IF THE STOCKPILE IS LOCATED ON AN IMPERVIOUS SURFACE, A LINER SHOULD BE PROVIDED BELOW THE STOCKPILE TO FACILITATE CLEANUP. STOCKPILE CONTAINING CONTAMINATED MATERIAL MUST BE COVERED WITH IMPERMEABLE SHEETING.

MAINTENANCE

THE STOCKPILE AREA MUST CONTIUOUSLY MEET THE REQUIREMENTS FOR ADEQUATE VEGETATIVE ESTABLISHMENT IN ACCORDANCE WITH SECTION B-4 VEGETATIVE STABILIZATION. SIDE SLOPES MUST BE MAINTAINED AT NO STEEPER THAN 2:1 RATIO. THE STOCKPILE AREA MUST BE KEPT FREE OF EROSION. IF THE VERTICAL HEIGHT OF THE STOCKPILE EXCEEDS 20 FEET FOR 2:1SLOPES, 30 FEET FOR 3:1 SLOPES, OR 40 FEET FOR 4:1 SLOPES, BENCHING MUST BE PROVIDED IN ACCORDANCE WITH SECTION B-3 LAND GRADING.

ENGINEER'S CERTIFICATE

"I CERTIFY THAT THIS PLAN FOR EROSION AND SEDIMENT CONTROL REPRESENTS A PRACTICAL AND WORKABLE PLAN BASED ON MY PERSONAL KNOWLEDGE OF THE SITE CONDITIONS AND THAT IT WAS PREPARED IN ACCORDANCE WITH THE REQUIREMENTS OF THE HOWARD SOIL CONSERVATION DISTRICT."

[signature] 4/24/14
SIGNATURE OF ENGINEER DATE

THIS DEVELOPMENT PLAN IS APPROVED FOR SOIL EROSION AND SEDIMENT CONTROL BY THE HOWARD SOIL CONSERVATION DISTRICT.

[signature] 5/6/14
HOWARD S.C.D. DATE

BUILDER'S CERTIFICATE

"I/WE CERTIFY THAT ALL DEVELOPMENT AND/OR CONSTRUCTION WILL BE DONE ACCORDING TO THIS PLAN, AND THAT ANY RESPONSIBLE PERSONNEL INVOLVED IN THE CONSTRUCTION PROJECT WILL HAVE A CERTIFICATE OF ATTENDANCE AT A MARYLAND DEPARTMENT OF THE ENVIRONMENT APPROVED TRAINING PROGRAM FOR THE CONTROL OF SEDIMENT AND EROSION BEFORE BEGINNING THE PROJECT. I ALSO AUTHORIZE PERIODIC ON-SITE INSPECTION BY THE HSCD."

[signature] 4/23/14
SIGNATURE OF DEVELOPER/BUILDER DATE

APPROVED: HOWARD COUNTY DEPARTMENT OF PUBLIC WORKS

[signature] 5-7-14
Chief, Bureau of Highways Date

APPROVED: HOWARD COUNTY DEPARTMENT OF PLANNING & ZONING

[signature] 5-21-14
Chief, Division of Land Development Date

[signature] 5-20-14
Chief, Development Engineering Division Date

THIS PLAN IS FOR SEDIMENT CONTROL PURPOSES ONLY

GLW GUTSCHICK LITTLE & WEBER, P.A.
CIVIL ENGINEERS, LAND SURVEYORS, LAND PLANNERS, LANDSCAPE ARCHITECTS
3909 NATIONAL DRIVE - SUITE 250 - BURTONSVILLE OFFICE PARK
BURTONSVILLE, MARYLAND 20866
TEL: 301-421-4024 BALT: 410-880-1820 DC/VA: 301-989-2524 FAX: 301-421-4186

L:\CADD\DRAWINGS\12001\PLANS BY GLW\FINALS\12001 33_SC DETAILS.dwg	DES. DEV	DRN. JRD	CHK. DEV

DATE	REVISION	BY	APP'R.

PREPARED FOR:
MAPLE LAWN FARMS I, LLC
SUITE 300 WOODHOLME CENTER
1829 REISTERSTOWN ROAD
BALTIMORE, MD 21208
ATTN: MARK BENNETT
410-484-8400

PROFESSIONAL CERTIFICATION
I HEREBY CERTIFY THAT THESE PLANS WERE PREPARED OR APPROVED BY ME, AND THAT I AM A DULY LICENSED PROFESSIONAL ENGINEER UNDER THE LAWS OF THE STATE OF MARYLAND, LICENSE NO. 12975
EXPIRATION DATE: MAY 26, 2016
4/24/14

SEDIMENT CONTROL NOTES and DETAILS

MAPLE LAWN FARMS

GARDEN DISTRICT - AREA 1
LOTS 1 thru 98, OPEN SPACE LOTS 99 thru 110,
COMMON OPEN AREA LOTS 111 thru 114
and NON-BUILDABLE BULK PARCELS 'X' thru 'Z'

ELECTION DISTRICT No. 5 HOWARD COUNTY, MARYLAND

SCALE	ZONING	G. L. W. FILE No.
AS SHOWN	MXD-3	12001
DATE	TAX MAP - GRID	SHEET
APRIL, 2014	41-21/46-3	33 OF 36

L:\CADD\DRAWINGS\12001\PLANS BY GLW\FINALS\12001 33_SC DETAILS.dwg, PLOTTED: 4/22/2014 11:28 AM, LAST SAVED: 4/18/2014 5:31 PM, PLOTTED BY: Jennifer R. Dicks
©GLW 2014

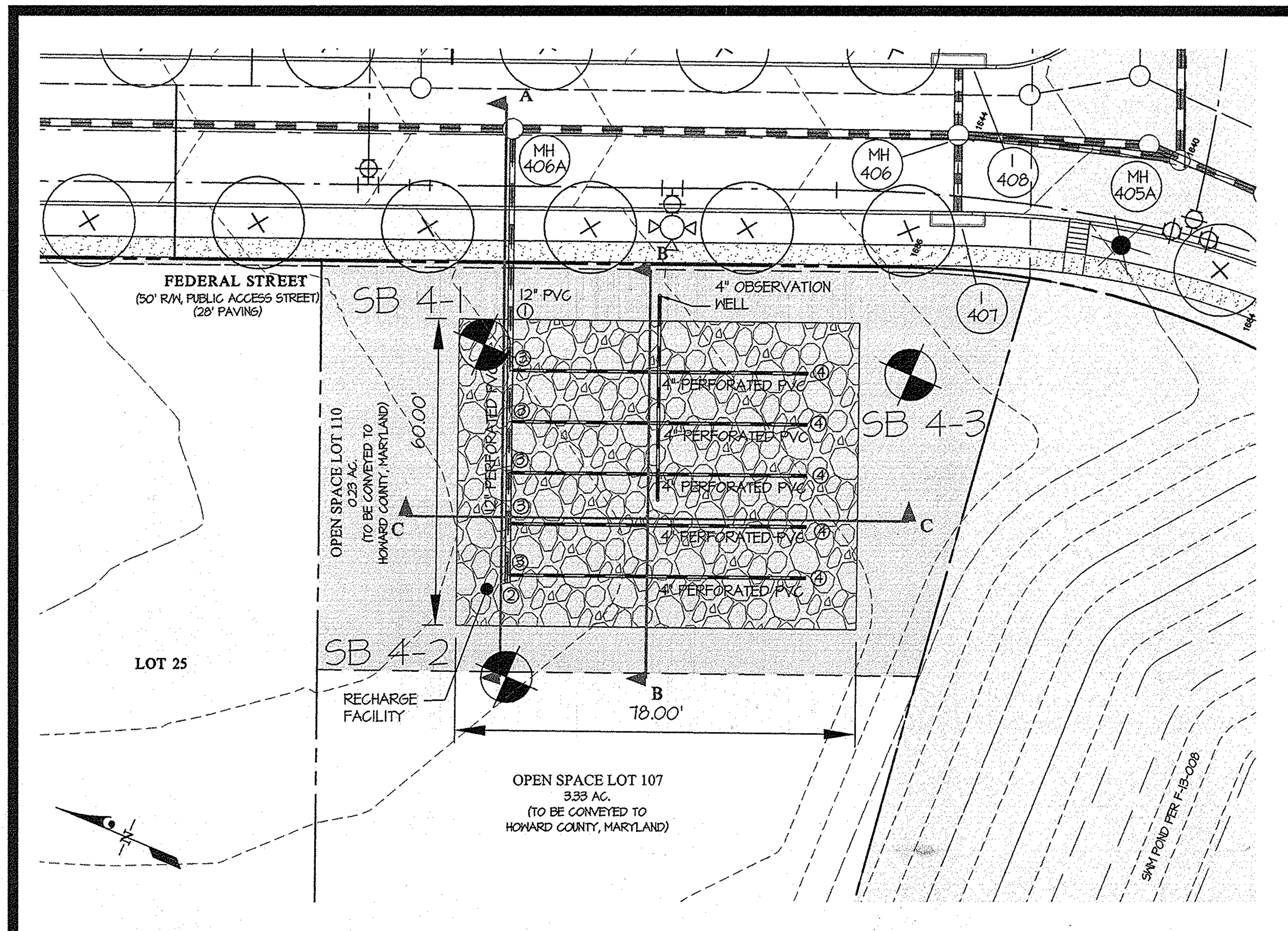

RECHARGE FACILITY PLAN VIEW SCALE: 1"= 20'

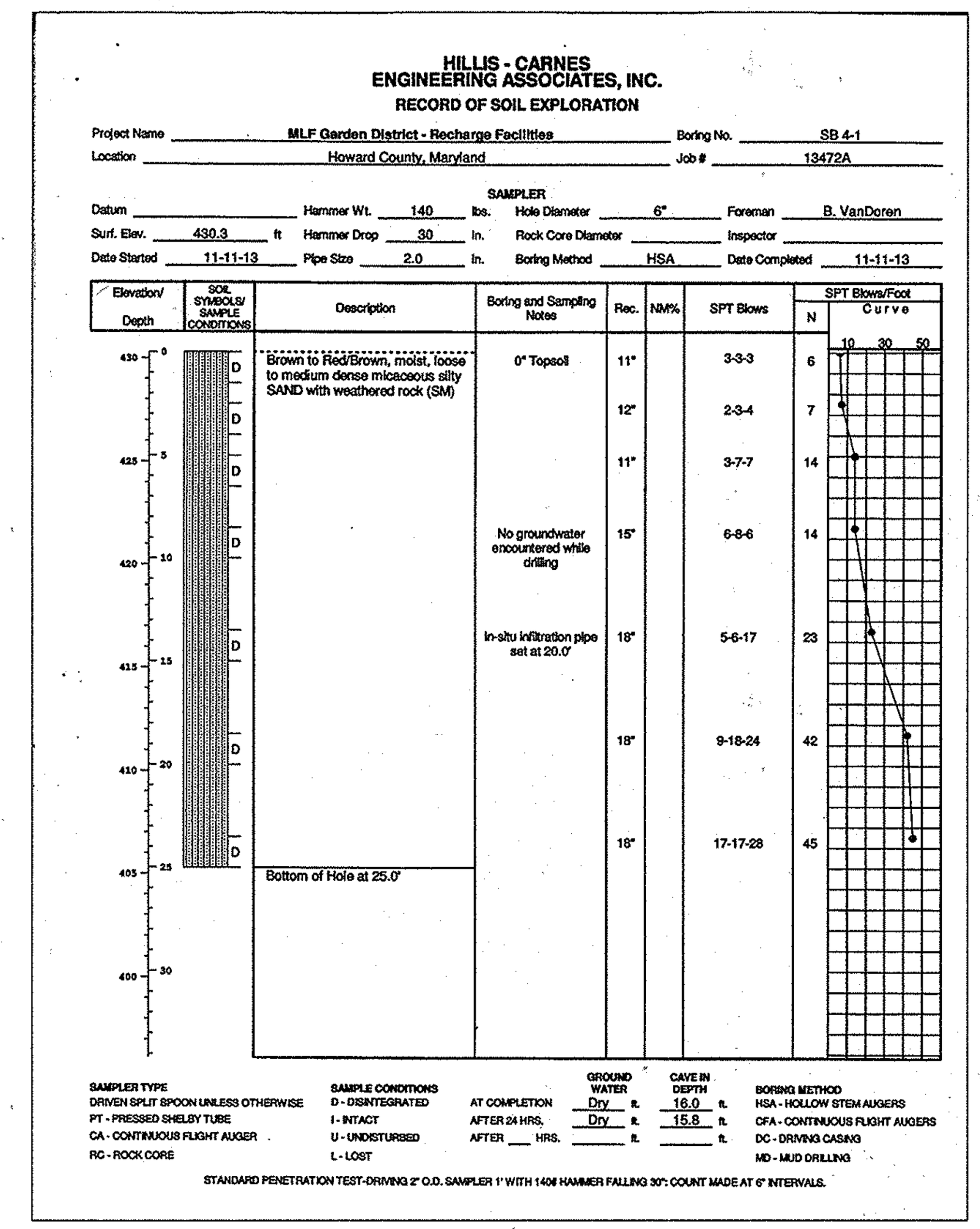

HILLIS - CARNES ENGINEERING ASSOCIATES, INC.
RECORD OF SOIL EXPLORATION

Project Name: MLF Garden District - Recharge Facilities — Boring No. SB 4-1
Location: Howard County, Maryland — Job # 13472A

SAMPLER
Datum: — Hammer Wt. 140 lbs. — Hole Diameter 6" — Foreman B. VanDoren
Surf. Elev. 430.3 ft — Hammer Drop 30 in. — Rock Core Diameter — Inspector
Date Started 11-11-13 — Pipe Size 2.0 in. — Boring Method HSA — Date Completed 11-11-13

Elevation/Depth	Soil Symbols/Sample Conditions	Description	Boring and Sampling Notes	Rec.	NM%	SPT Blows	N
430 / 0	D	Brown to Red/Brown, moist, loose to medium dense micaceous silty SAND with weathered rock (SM)	0" Topsoil	11"		3-3-3	6
	D			12"		2-3-4	7
	D			11"		3-7-7	14
	D		No groundwater encountered while drilling	15"		6-8-6	14
	D		In-situ infiltration pipe set at 20.0'	18"		5-6-17	23
	D			18"		9-18-24	42
	D			18"		17-17-28	45
405 / 25		Bottom of Hole at 25.0'					

Ground Water: At Completion Dry ft.; After 24 Hrs. Dry ft. — Cave in Depth: 16.0 ft.; 15.8 ft.

SAMPLER TYPE: DRIVEN SPLIT SPOON UNLESS OTHERWISE; PT - PRESSED SHELBY TUBE; CA - CONTINUOUS FLIGHT AUGER; RC - ROCK CORE
SAMPLE CONDITIONS: D - DISINTEGRATED; I - INTACT; U - UNDISTURBED; L - LOST
BORING METHOD: HSA - HOLLOW STEM AUGERS; CFA - CONTINUOUS FLIGHT AUGERS; DC - DRIVING CASING; MD - MUD DRILLING
STANDARD PENETRATION TEST-DRIVING 2" O.D. SAMPLER 1" WITH 140# HAMMER FALLING 30"; COUNT MADE AT 6" INTERVALS.

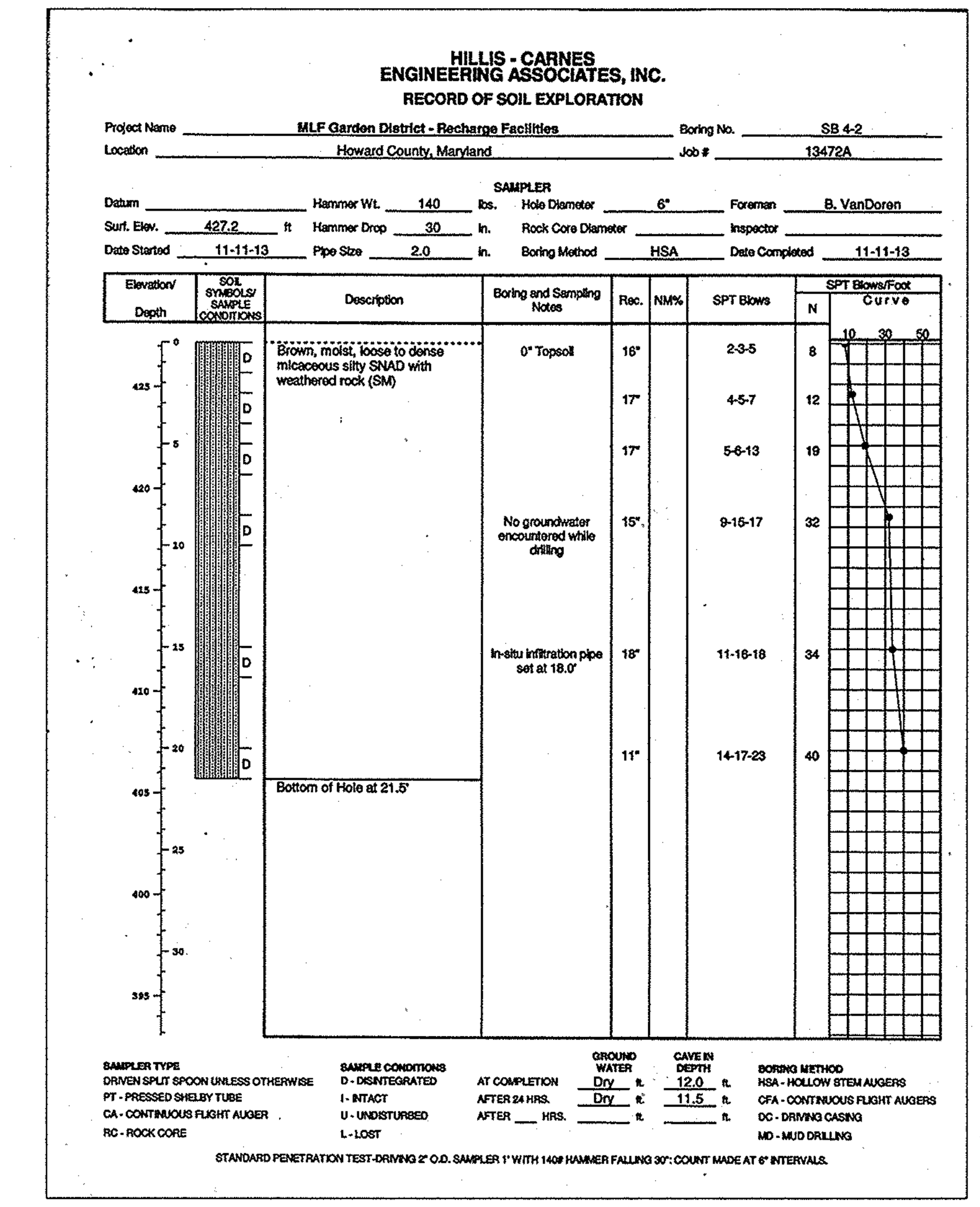

HILLIS - CARNES ENGINEERING ASSOCIATES, INC.
RECORD OF SOIL EXPLORATION

Project Name: MLF Garden District - Recharge Facilities — Boring No. SB 4-2
Location: Howard County, Maryland — Job # 13472A

SAMPLER
Datum: — Hammer Wt. 140 lbs. — Hole Diameter 6" — Foreman B. VanDoren
Surf. Elev. 427.2 ft — Hammer Drop 30 in. — Rock Core Diameter — Inspector
Date Started 11-11-13 — Pipe Size 2.0 in. — Boring Method HSA — Date Completed 11-11-13

Elevation/Depth	Soil Symbols/Sample Conditions	Description	Boring and Sampling Notes	Rec.	NM%	SPT Blows	N
0	D	Brown, moist, loose to dense micaceous silty SNAD with weathered rock (SM)	0" Topsoil	16"		2-3-5	8
	D			17"		4-5-7	12
	D			17"		5-6-13	19
	D		No groundwater encountered while drilling	15"		9-15-17	32
	D		In-situ infiltration pipe set at 18.0'	18"		11-16-18	34
	D			11"		14-17-23	40
		Bottom of Hole at 21.5'					

Ground Water: At Completion Dry ft.; After 24 Hrs. Dry ft. — Cave in Depth: 12.0 ft.; 11.5 ft.

SAMPLER TYPE: DRIVEN SPLIT SPOON UNLESS OTHERWISE; PT - PRESSED SHELBY TUBE; CA - CONTINUOUS FLIGHT AUGER; RC - ROCK CORE
SAMPLE CONDITIONS: D - DISINTEGRATED; I - INTACT; U - UNDISTURBED; L - LOST
BORING METHOD: HSA - HOLLOW STEM AUGERS; CFA - CONTINUOUS FLIGHT AUGERS; DC - DRIVING CASING; MD - MUD DRILLING
STANDARD PENETRATION TEST-DRIVING 2" O.D. SAMPLER 1" WITH 140# HAMMER FALLING 30"; COUNT MADE AT 6" INTERVALS.

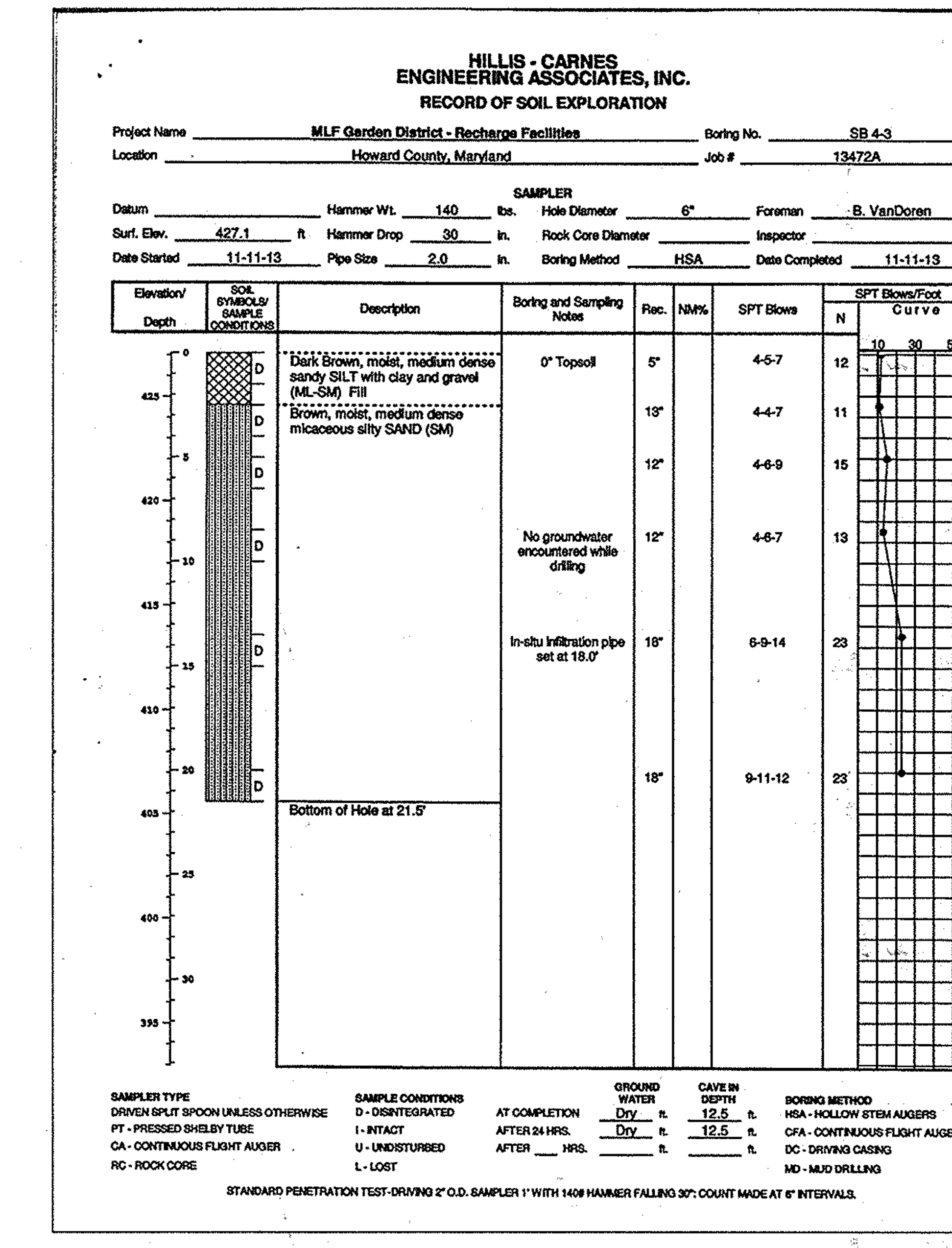

HILLIS - CARNES ENGINEERING ASSOCIATES, INC.
RECORD OF SOIL EXPLORATION

Project Name: MLF Garden District - Recharge Facilities — Boring No. SB 4-3
Location: Howard County, Maryland — Job # 13472A

SAMPLER
Datum: — Hammer Wt. 140 lbs. — Hole Diameter 6" — Foreman B. VanDoren
Surf. Elev. 427.1 ft — Hammer Drop 30 in. — Rock Core Diameter — Inspector
Date Started 11-11-13 — Pipe Size 2.0 in. — Boring Method HSA — Date Completed 11-11-13

Elevation/Depth	Soil Symbols/Sample Conditions	Description	Boring and Sampling Notes	Rec.	NM%	SPT Blows	N
0	D	Dark Brown, moist, medium dense sandy SILT with clay and gravel (ML-SM) Fill	0" Topsoil	5"		4-5-7	12
	D	Brown, moist, medium dense micaceous silty SAND (SM)		13"		4-4-7	11
	D			12"		4-6-9	15
	D		No groundwater encountered while drilling	12"		4-6-7	13
	D		In-situ infiltration pipe set at 18.0'	18"		6-9-14	23
	D			18"		9-11-12	23
		Bottom of Hole at 21.5'					

Ground Water: At Completion Dry ft.; After 24 Hrs. Dry ft. — Cave in Depth: 12.5 ft.; 12.5 ft.

SAMPLER TYPE: DRIVEN SPLIT SPOON UNLESS OTHERWISE; PT - PRESSED SHELBY TUBE; CA - CONTINUOUS FLIGHT AUGER; RC - ROCK CORE
SAMPLE CONDITIONS: D - DISINTEGRATED; I - INTACT; U - UNDISTURBED; L - LOST
BORING METHOD: HSA - HOLLOW STEM AUGERS; CFA - CONTINUOUS FLIGHT AUGERS; DC - DRIVING CASING; MD - MUD DRILLING
STANDARD PENETRATION TEST-DRIVING 2" O.D. SAMPLER 1" WITH 140# HAMMER FALLING 30"; COUNT MADE AT 6" INTERVALS.

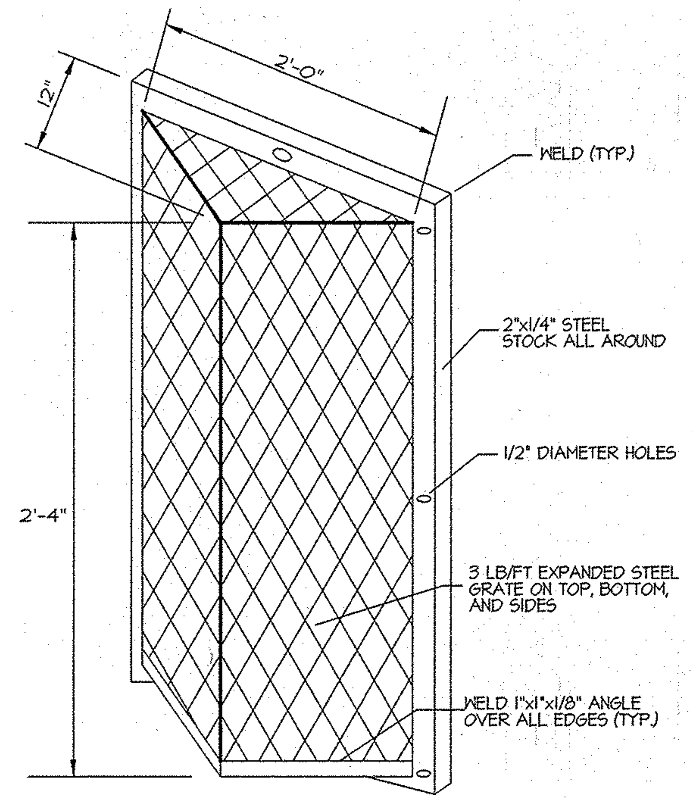

NOTES FOR TRASH RACK

1. TRASH RACK TO BE CENTERED OVER OPENINGS.
2. STEEL TO CONFORM TO ASTM A-36.
3. ALL SURFACES TO BE COATED WITH ZRC COLD GALVANIZING COMPOUND AFTER WELDING.
4. TRASH RACK TO BE FASTENED TO THE WALL WITH 1/2" MASONRY ANCHORS. TRASH RACK TO BE REMOVABLE.
5. BOTTOM OF TRASH RACK TO BE LEFT OPEN (HOODED) AND SET 8" BELOW INVERT OF OPENING

NOT TO SCALE

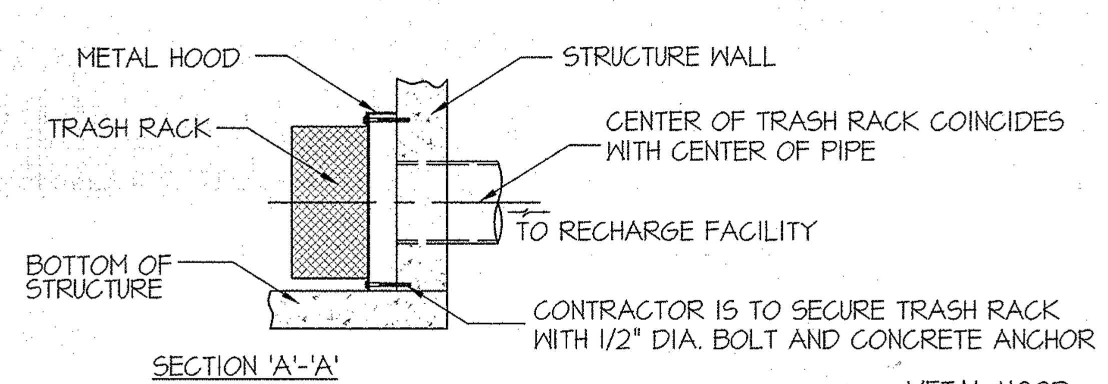

SECTION 'A'-'A'

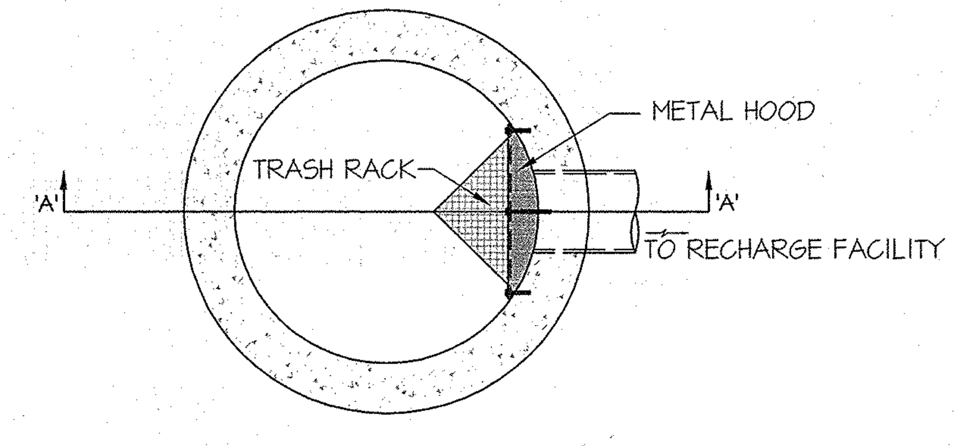

PLAN VIEW

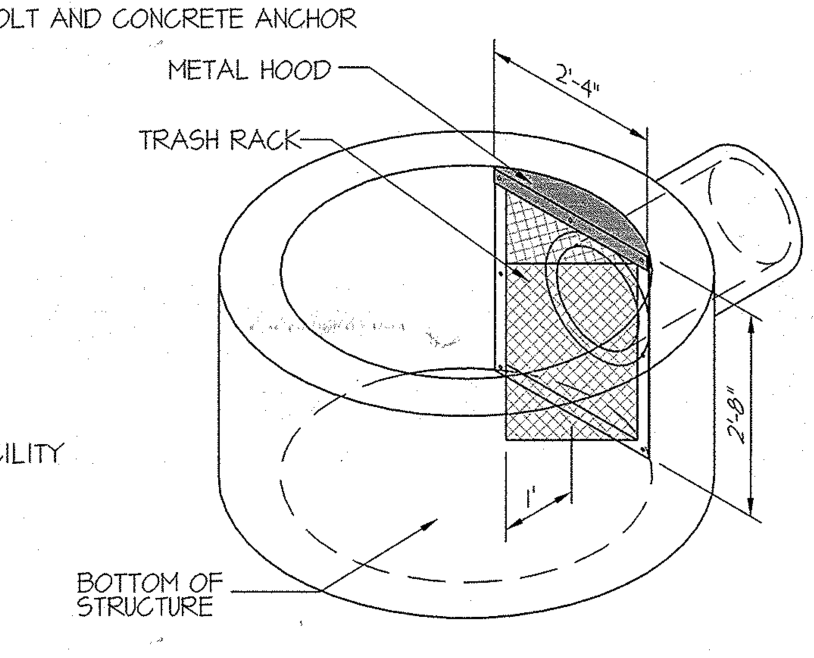

ISOMETRIC VIEW

SCALE: 1" = 2'

DETAIL FOR LOW FLOW TRASH RACK PROTECTION FOR MH 306 AND MH 406A

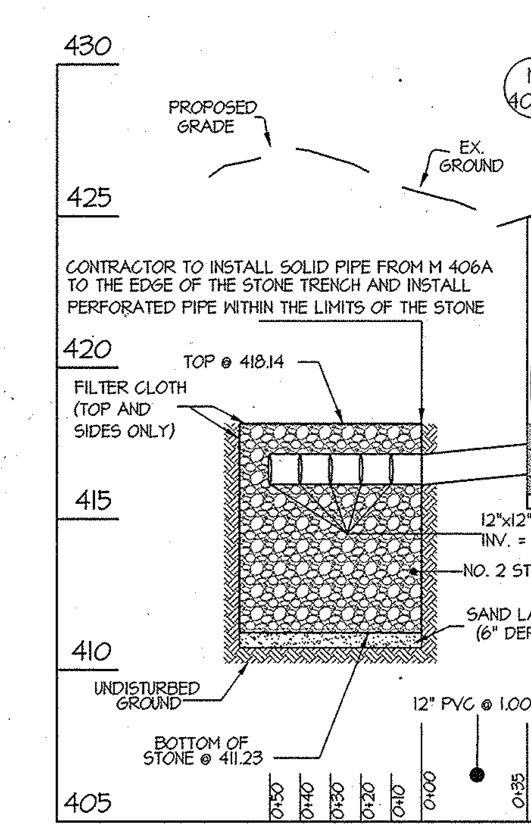

SECTION A-A
SCALE: 1" = 50' (HORZ.)
1" = 5' (VERT.)

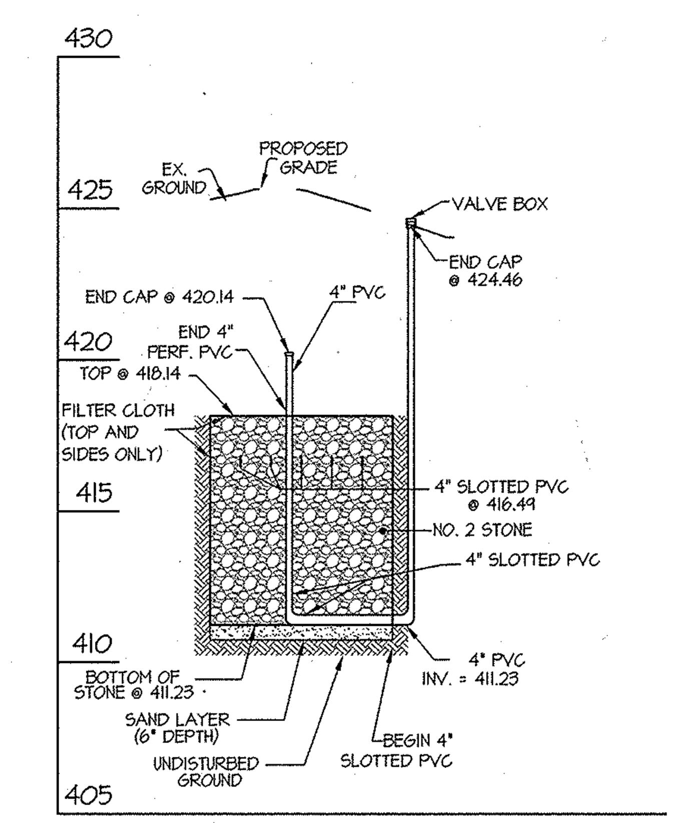

SECTION B-B
SCALE: 1" = 50' (HORZ.)
1" = 5' (VERT.)

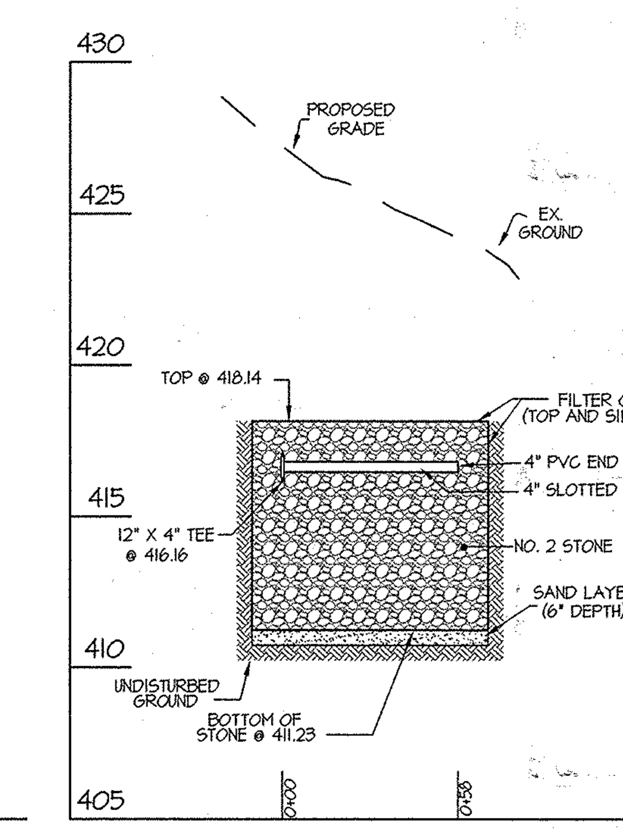

SECTION C-C
SCALE: 1" = 50' (HORZ.)
1" = 5' (VERT.)

OPERATION AND MAINTENANCE SCHEDULE FOR PRIVATELY OWNED AND MAINTAINED STORMWATER INFILTRATION TRENCHES

1. THE MONITORING WELLS AND STRUCTURES SHALL BE INSPECTED ON A QUARTERLY BASIS AND AFTER EVERY LARGE STORM EVENT.
2. WATER LEVELS AND SEDIMENT BUILD UP IN THE MONITORING WELLS SHALL BE RECORDED OVER A PERIOD OF SEVERAL DAYS TO INSURE TRENCH DRAINAGE.
3. A LOG BOOK SHALL BE MAINTAINED TO DETERMINE THE RATE AT WHICH THE FACILITY DRAINS.
4. WHEN THE FACILITY BECOMES CLOGGED SO THAT IT DOES NOT DRAIN DOWN WITHIN THE 72 HOUR TIME PERIOD, CORRECTIVE ACTION SHALL BE TAKEN.
5. THE MAINTENANCE LOG BOOK SHALL BE AVAILABLE TO HOWARD COUNTY FOR INSPECTION TO INSURE COMPLIANCE WITH OPERATION AND MAINTENANCE CRITERIA.
6. ONCE THE PERFORMANCE CHARACTERISTICS OF THE INFILTRATION FACILITY HAVE BEEN VERIFIED, THE MONITORING SCHEDULE CAN BE REDUCED TO AN ANNUAL BASIS UNLESS THE PERFORMANCE DATA INDICATES THAT A MORE FREQUENT SCHEDULE IS REQUIRED.

S.D. PIPE SUMMARY TABLE
PRIVATELY OWNED AND MAINTAINED

SIZE (INCHES)	TYPE	QUANTITY (L.F.)	REMARKS
4	SLOTTED PVC	330	SCHEDULE 40
4	PVC	20	SCHEDULE 40
12	SLOTTED PVC	50	SCHEDULE 40
12	PVC	35	SCHEDULE 40

PARTS LIST

	TYPE	QUANTITY	ADS PART #
1	12" PVC CONVERTER	1	XXX
2	12" END CAP	1	XXX
3	12" x 4" TEE	5	1260AN85B
4	4" END CAP	5	XXX

APPROVED: HOWARD COUNTY DEPARTMENT OF PUBLIC WORKS
Chief, Bureau of Highways — Date 5-7-14

APPROVED: HOWARD COUNTY DEPARTMENT OF PLANNING & ZONING
Chief, Division of Land Development — Date 5-21-14
Chief, Development Engineering Division — Date 5-20.14

GLW GUTSCHICK LITTLE & WEBER, P.A.
CIVIL ENGINEERS, LAND SURVEYORS, LAND PLANNERS, LANDSCAPE ARCHITECTS
3909 NATIONAL DRIVE - SUITE 250 - BURTONSVILLE OFFICE PARK
BURTONSVILLE, MARYLAND 20866
TEL: 301-421-4024 BALT: 410-880-1820 DC/VA: 301-989-2524 FAX: 301-421-4186

L:\CADD\DRAWINGS\12001\PLANS BY GLW\FINALS\12001 34-35_RECHARGE.dwg | DES. DEV | DRN. JRD | CHK. DEV

DATE	REVISION	BY	APP'R.

PREPARED FOR:
MAPLE LAWN FARMS I, LLC
SUITE 300 WOODHOLME CENTER
1829 REISTERSTOWN ROAD
BALTIMORE, MD 21208
ATTN: MARK BENNETT
410-484-8400

PROFESSIONAL CERTIFICATION
I HEREBY CERTIFY THAT THESE PLANS WERE PREPARED OR APPROVED BY ME, AND THAT I AM A DULY LICENSED PROFESSIONAL ENGINEER UNDER THE LAWS OF THE STATE OF MARYLAND, LICENSE NO. 12975, EXPIRATION DATE: May 26, 2016
4/24/14

RECHARGE FACILITY NOTES and DETAILS

MAPLE LAWN FARMS

GARDEN DISTRICT - AREA 1
LOTS 1 thru 98, OPEN SPACE LOTS 99 thru 110,
COMMON OPEN AREA LOTS 111 thru 114
and NON-BUILDABLE BULK PARCELS 'X' thru 'Z'

ELECTION DISTRICT No. 5 — HOWARD COUNTY, MARYLAND

SCALE	ZONING	G. L. W. FILE No.
AS SHOWN	MXD-3	12001
DATE	TAX MAP - GRID	SHEET
APRIL, 2014	41-21/46-3	34 OF 36

L:\CADD\DRAWINGS\12001\PLANS BY GLW\FINALS\12001 34-35_RECHARGE.dwg, PLOTTED: 4/22/2014 11:55 AM, LAST SAVED: 4/18/2014 11:24 AM, PLOTTED BY: Doug Vande Ryt

© GLW 2014

F-14-033

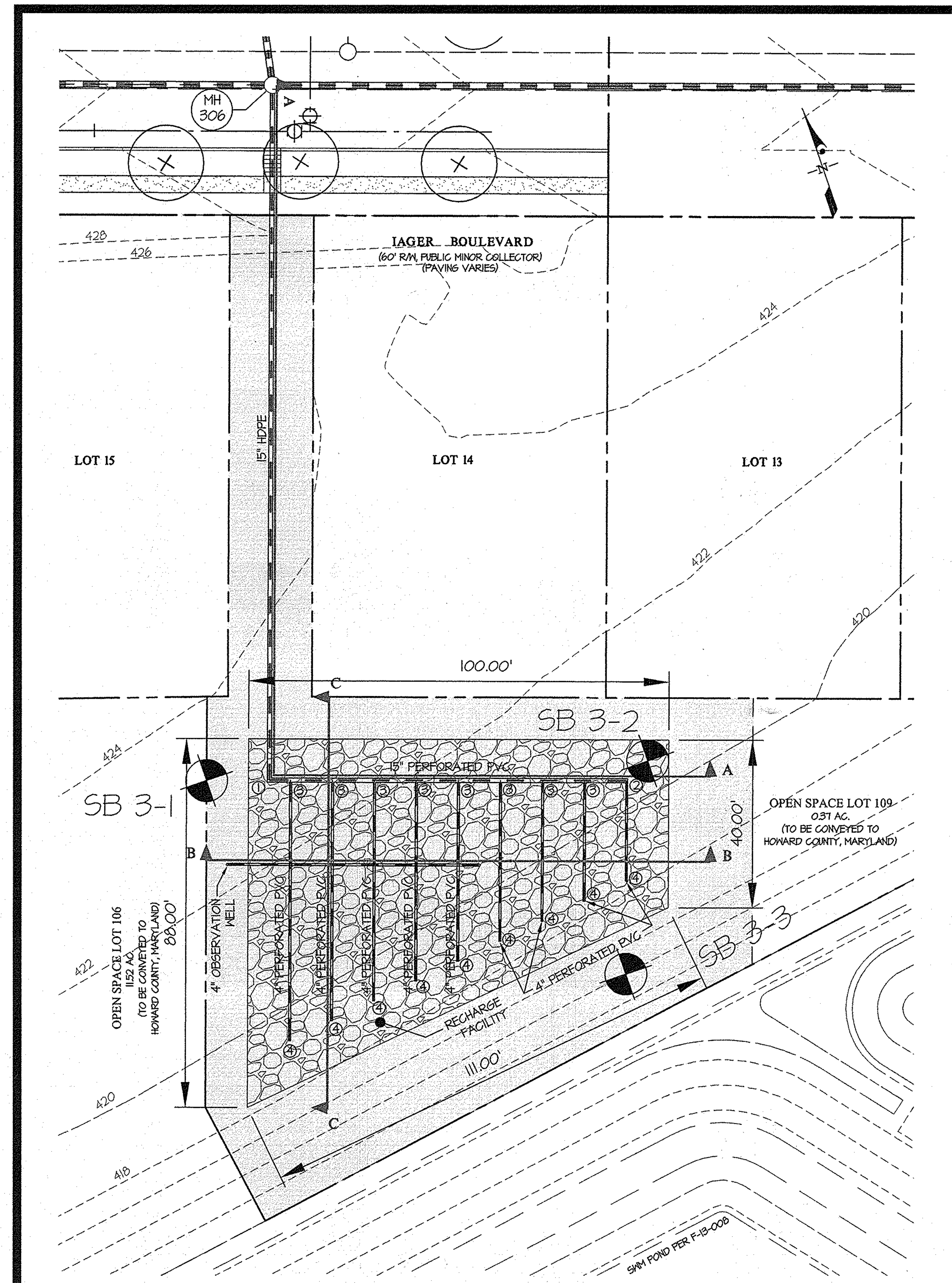

RECHARGE FACILITY PLAN VIEW SCALE: 1"= 20'

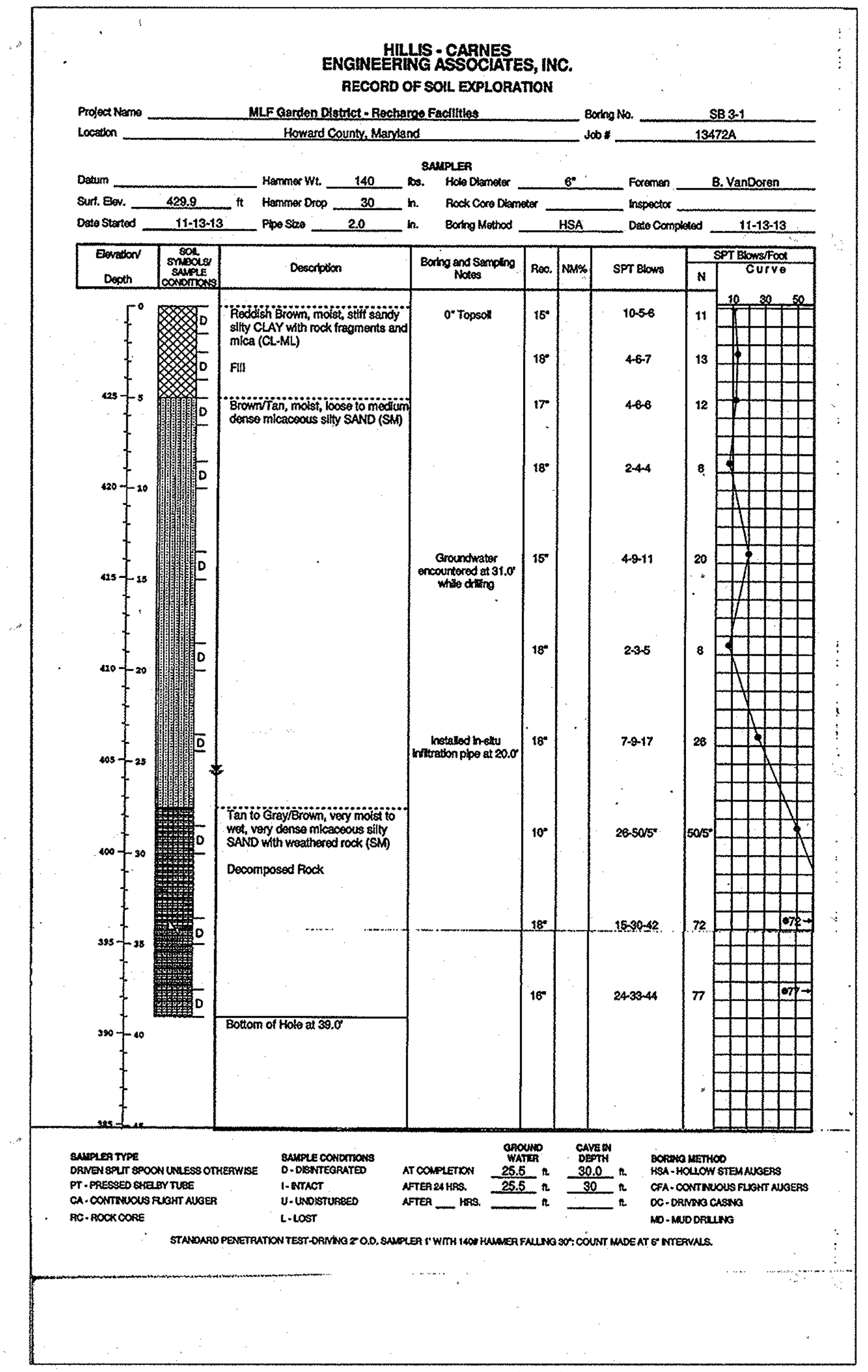

HILLIS - CARNES ENGINEERING ASSOCIATES, INC.
RECORD OF SOIL EXPLORATION

Project Name: MLF Garden District - Recharge Facilities — Boring No. SB 3-1
Location: Howard County, Maryland — Job # 13472A
Datum: — Hammer Wt. 140 lbs. — Hole Diameter 6" — Foreman B. VanDoren
Surf. Elev. 429.9 ft — Hammer Drop 30 in. — Rock Core Diameter — Inspector
Date Started 11-13-13 — Pipe Size 2.0 in. — Boring Method HSA — Date Completed 11-13-13

Description	Boring and Sampling Notes	Rec.	SPT Blows	N
Reddish Brown, moist, stiff sandy silty CLAY with rock fragments and mica (CL-ML) Fill	0" Topsoil	15"	10-5-6	11
		18"	4-6-7	13
Brown/Tan, moist, loose to medium dense micaceous silty SAND (SM)		17"	4-6-6	12
		18"	2-4-4	8
	Groundwater encountered at 31.0' while drilling	15"	4-9-11	20
		18"	2-3-5	8
	Installed in-situ infiltration pipe at 20.0'	18"	7-9-17	26
Tan to Gray/Brown, very moist to wet, very dense micaceous silty SAND with weathered rock (SM) Decomposed Rock		10"	26-50/5"	50/5"
		18"	15-30-42	72
		16"	24-33-44	77
Bottom of Hole at 39.0'				

Ground Water: At Completion 25.5 ft.; After 24 Hrs. 25.5 ft. — Cave In Depth: 30.0 ft.; 30 ft.

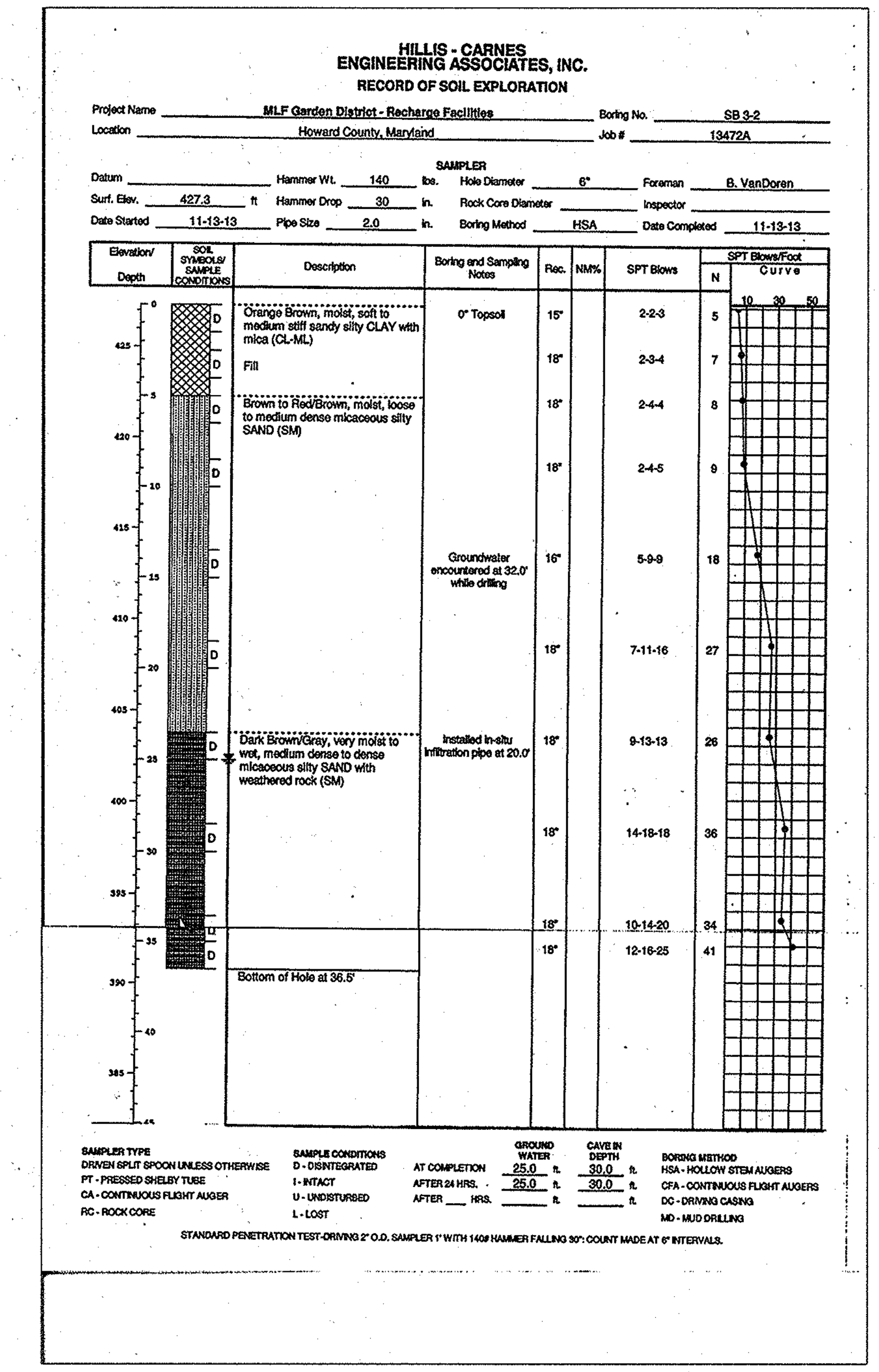

HILLIS - CARNES ENGINEERING ASSOCIATES, INC.
RECORD OF SOIL EXPLORATION

Project Name: MLF Garden District - Recharge Facilities — Boring No. SB 3-2
Location: Howard County, Maryland — Job # 13472A
Hammer Wt. 140 lbs. — Hole Diameter 6" — Foreman B. VanDoren
Surf. Elev. 427.3 ft — Hammer Drop 30 in.
Date Started 11-13-13 — Pipe Size 2.0 in. — Boring Method HSA — Date Completed 11-13-13

Description	Boring and Sampling Notes	Rec.	SPT Blows	N
Orange Brown, moist, soft to medium stiff sandy silty CLAY with mica (CL-ML) Fill	0" Topsoil	15"	2-2-3	5
		18"	2-3-4	7
Brown to Red/Brown, moist, loose to medium dense micaceous silty SAND (SM)		18"	2-4-4	8
		18"	2-4-5	9
	Groundwater encountered at 32.0' while drilling	16"	5-9-9	18
		18"	7-11-16	27
Dark Brown/Gray, very moist to wet, medium dense to dense micaceous silty SAND with weathered rock (SM)	Installed in-situ infiltration pipe at 20.0'	18"	9-13-13	26
		18"	14-18-18	36
		18"	10-14-20	34
		18"	12-16-25	41
Bottom of Hole at 36.5'				

Ground Water: At Completion 25.0 ft.; After 24 Hrs. 25.0 ft. — Cave In Depth: 30.0 ft.; 30.0 ft.

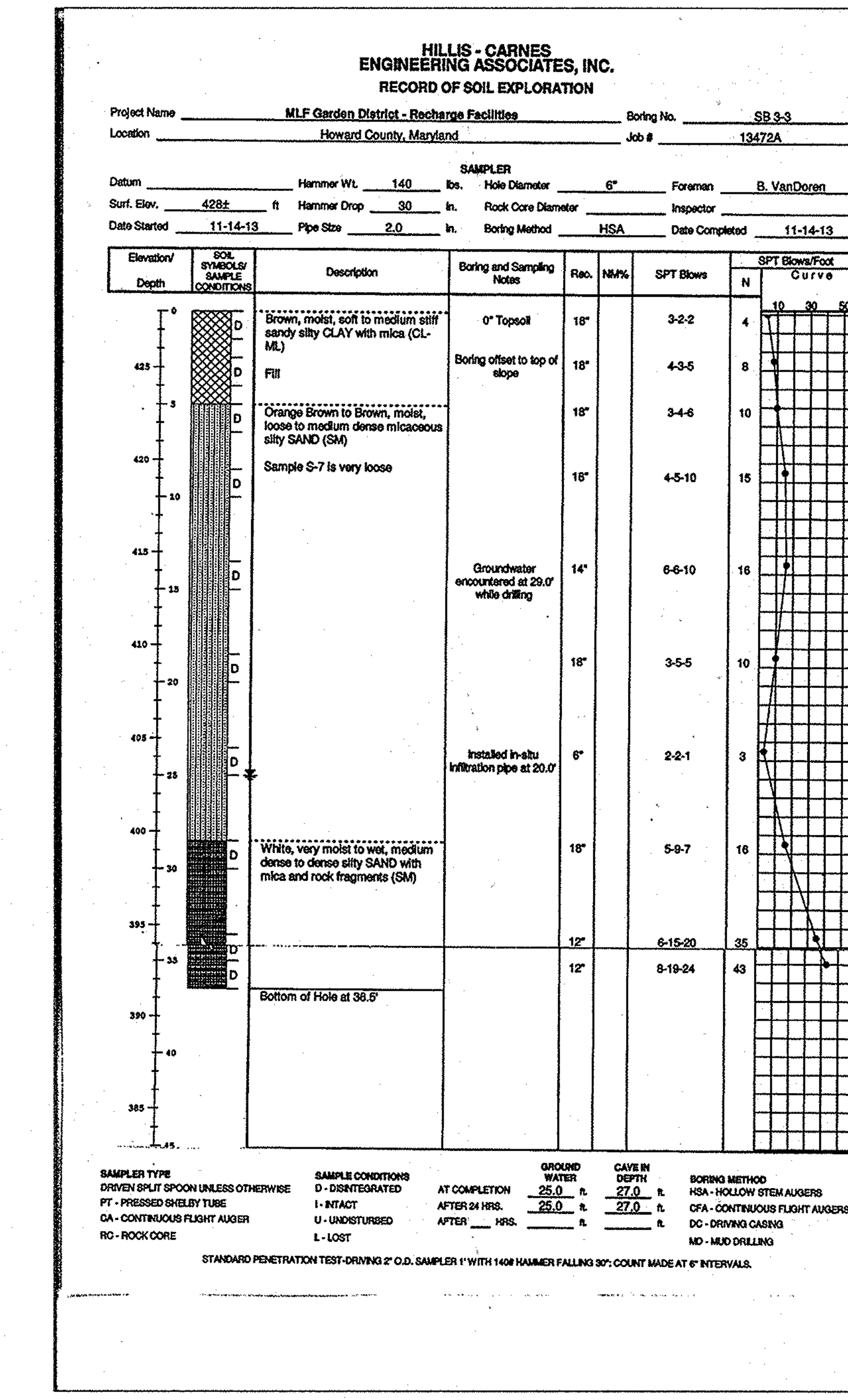

HILLIS - CARNES ENGINEERING ASSOCIATES, INC.
RECORD OF SOIL EXPLORATION

Project Name: MLF Garden District - Recharge Facilities — Boring No. SB 3-3
Location: Howard County, Maryland — Job # 13472A
Hammer Wt. 140 lbs. — Hole Diameter 6" — Foreman B. VanDoren
Surf. Elev. 428± ft — Hammer Drop 30 in.
Date Started 11-14-13 — Pipe Size 2.0 in. — Boring Method HSA — Date Completed 11-14-13

Description	Boring and Sampling Notes	Rec.	SPT Blows	N
Brown, moist, soft to medium stiff sandy silty CLAY with mica (CL-ML)	0" Topsoil	18"	3-2-2	4
Fill	Boring offset to top of slope	18"	4-3-5	8
Orange Brown to Brown, moist, loose to medium dense micaceous silty SAND (SM) Sample S-7 is very loose		18"	3-4-6	10
		18"	4-5-10	15
	Groundwater encountered at 29.0' while drilling	14"	6-6-10	16
		18"	3-5-5	10
	Installed in-situ infiltration pipe at 20.0'	6"	2-2-1	3
White, very moist to wet, medium dense to dense silty SAND with mica and rock fragments (SM)		18"	5-9-7	16
		12"	6-15-20	35
		12"	8-19-24	43
Bottom of Hole at 38.5'				

Ground Water: At Completion 25.0 ft.; After 24 Hrs. 25.0 ft. — Cave In Depth: 27.0 ft.; 27.0 ft.

SAMPLER TYPE: DRIVEN SPLIT SPOON UNLESS OTHERWISE; PT - PRESSED SHELBY TUBE; CA - CONTINUOUS FLIGHT AUGER; RC - ROCK CORE
SAMPLE CONDITIONS: D - DISINTEGRATED; I - INTACT; U - UNDISTURBED; L - LOST
BORING METHOD: HSA - HOLLOW STEM AUGERS; CFA - CONTINUOUS FLIGHT AUGERS; DC - DRIVING CASING; MD - MUD DRILLING
STANDARD PENETRATION TEST-DRIVING 2" O.D. SAMPLER 1" WITH 140# HAMMER FALLING 30"; COUNT MADE AT 6" INTERVALS.

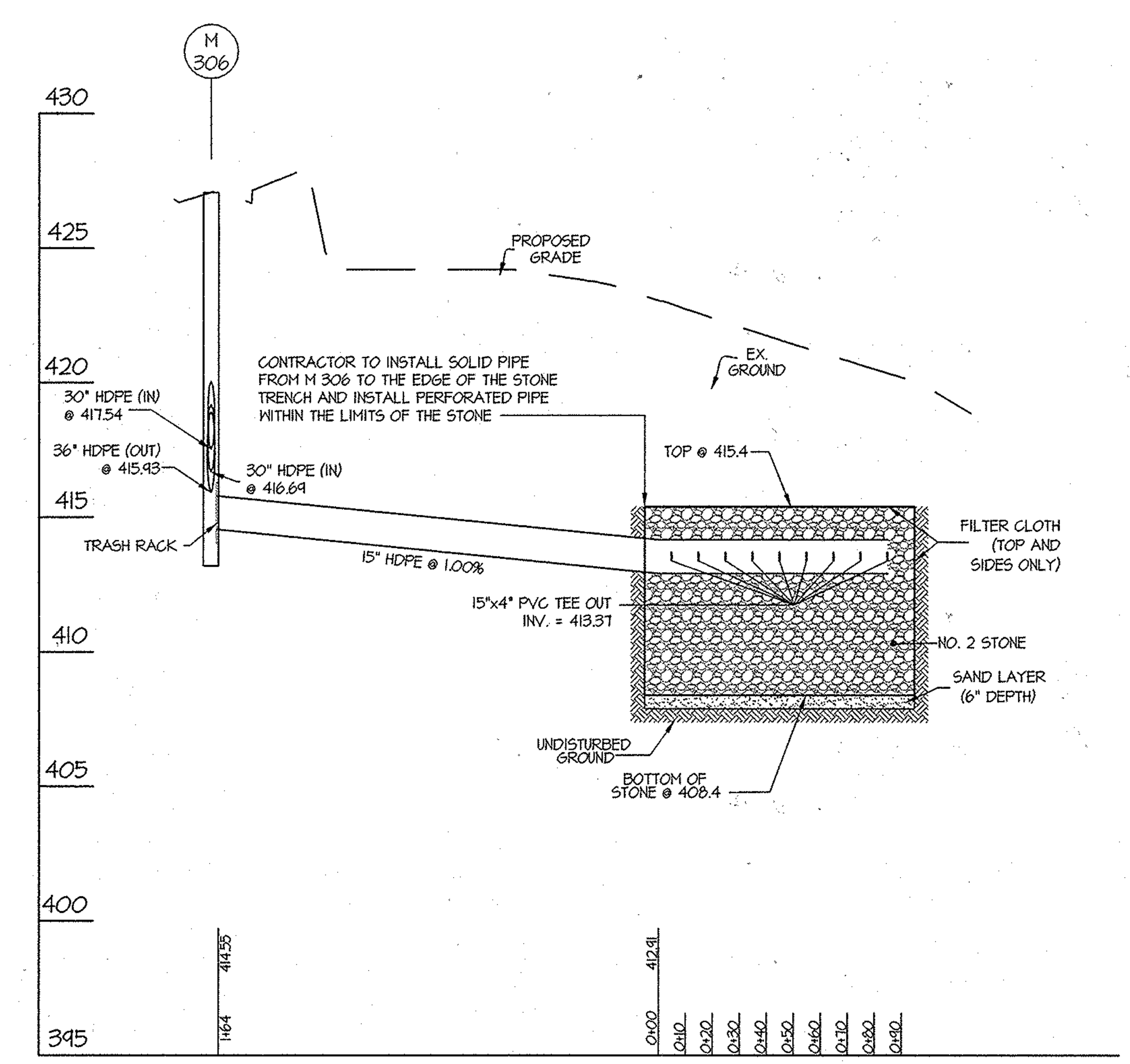

SECTION A-A
SCALE: 1" = 50' (HORZ.) 1" = 5' (VERT.)

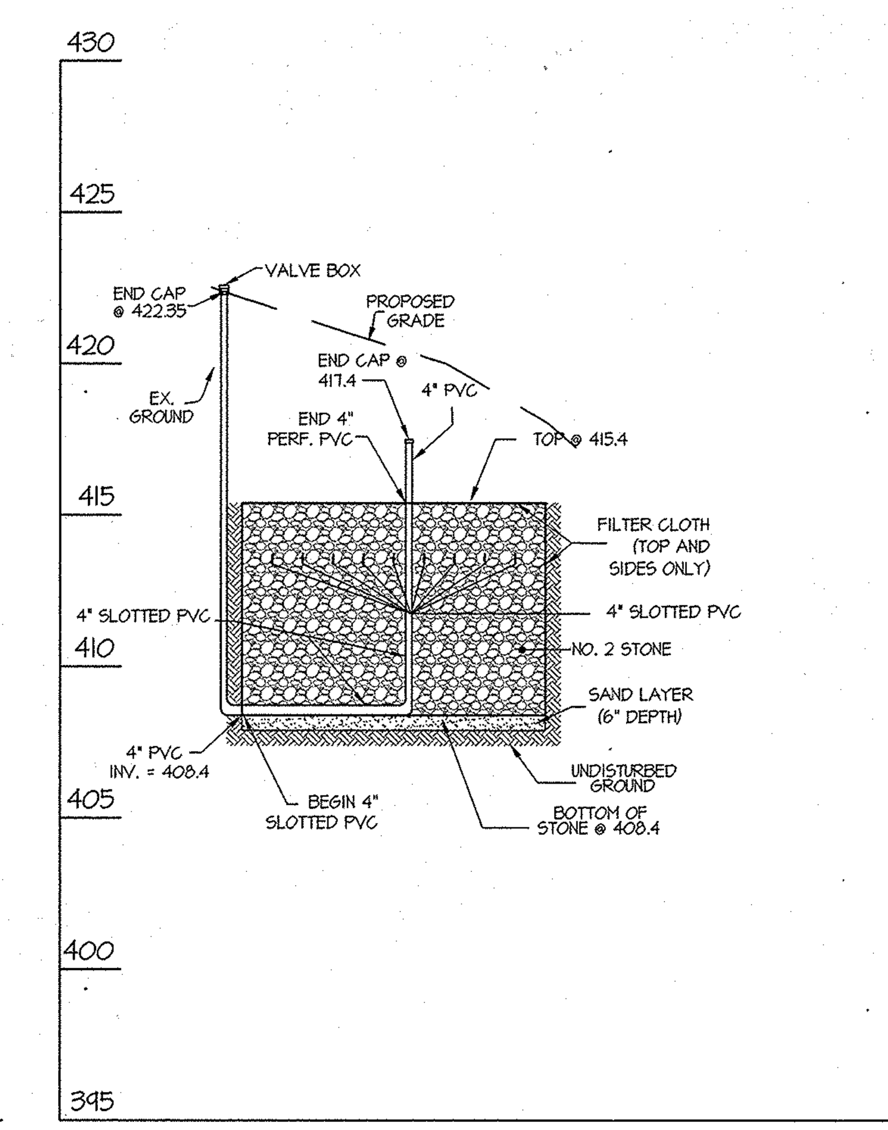

SECTION B-B
SCALE: 1" = 50' (HORZ.) 1" = 5' (VERT.)

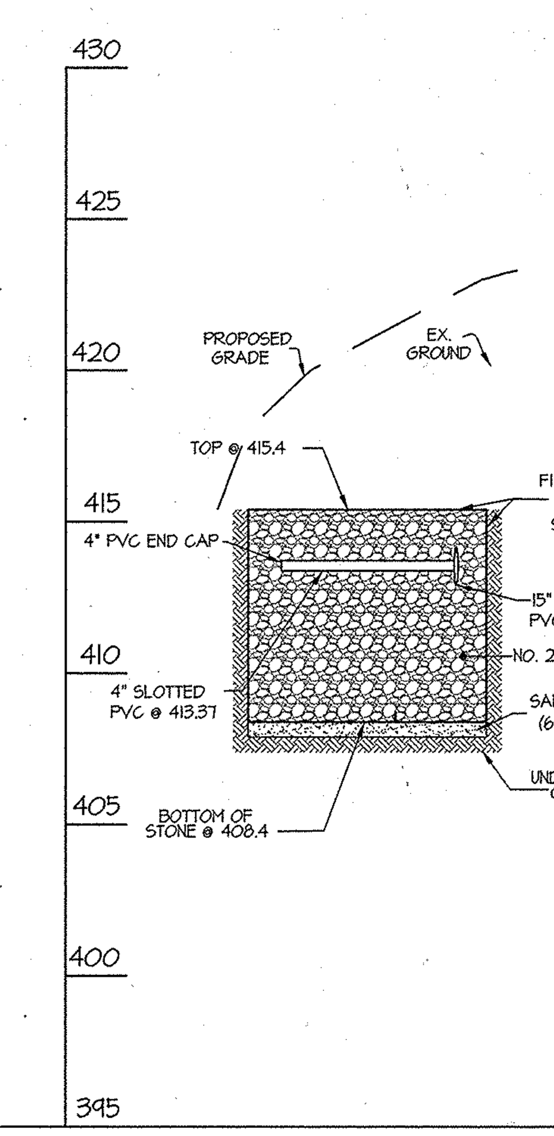

SECTION C-C
SCALE: 1" = 50' (HORZ.) 1" = 5' (VERT.)

NOTES:
1. FOR OPERATION AND MAINTENANCE SCHEDULE, SEE SHEET 34.
2. FOR TRASH RACK DETAIL, SEE SHEET 34.

S.D. PIPE SUMMARY TABLE PRIVATELY OWNED AND MAINTAINED

SIZE (INCHES)	TYPE	QUANTITY (L.F.)	REMARKS
4	SLOTTED PVC	448	SCHEDULE 40
4	PVC	23	SCHEDULE 40
15	SLOTTED PVC	85	SCHEDULE 40
15	HDPE	164	

PARTS LIST

	TYPE	QUANTITY	ADS PART #
①	15" PVC CONVERTER	1	XXX
②	15" X 4" ELBOW	1	XXX
③	15" x 4" TEE	8	XXX
④	4" END CAP	9	XXX

APPROVED: HOWARD COUNTY DEPARTMENT OF PUBLIC WORKS
Chief, Bureau of Highways — Date 5-7-14

APPROVED: HOWARD COUNTY DEPARTMENT OF PLANNING & ZONING
Chief, Division of Land Development — Date 5-21-14
Chief, Development Engineering Division — Date 5-20-14

GLW GUTSCHICK LITTLE & WEBER, P.A.
CIVIL ENGINEERS, LAND SURVEYORS, LAND PLANNERS, LANDSCAPE ARCHITECTS
3909 NATIONAL DRIVE - SUITE 250 - BURTONSVILLE OFFICE PARK
BURTONSVILLE, MARYLAND 20866
TEL: 301-421-4024 BALT: 410-880-1820 DC/VA: 301-989-2524 FAX: 301-421-4186

L:\CADD\DRAWINGS\12001\PLANS BY GLW\FINALS\12001 34-35_RECHARGE.dwg | DES. DEV | DRN. JRD | CHK. DEV

DATE	REVISION	BY	APP'R.

PREPARED FOR:
MAPLE LAWN FARMS I, LLC
SUITE 300 WOODHOLME CENTER
1829 REISTERSTOWN ROAD
BALTIMORE, MD 21208
ATTN: MARK BENNETT
410-484-8400

PROFESSIONAL CERTIFICATION
I HEREBY CERTIFY THAT THESE PLANS WERE PREPARED OR APPROVED BY ME, AND THAT I AM A DULY LICENSED PROFESSIONAL ENGINEER UNDER THE LAWS OF THE STATE OF MARYLAND, LICENSE NO. 12975, EXPIRATION DATE: May 26, 2016 4/24/14

RECHARGE FACILITY NOTES and DETAILS

MAPLE LAWN FARMS

GARDEN DISTRICT - AREA 1
LOTS 1 thru 98, OPEN SPACE LOTS 99 thru 110,
COMMON OPEN AREA LOTS 111 thru 114
and NON-BUILDABLE BULK PARCELS 'X' thru 'Z'

ELECTION DISTRICT No. 5 — HOWARD COUNTY, MARYLAND

SCALE	ZONING	G. L. W. FILE No.
AS SHOWN	MXD-3	12001
DATE	TAX MAP - GRID	SHEET
APRIL, 2014	41-21/46-3	35 OF 36

L:\CADD\DRAWINGS\12001\PLANS BY GLW\FINALS\12001 34-35_RECHARGE.dwg, PLOTTED: 4/22/2014 11:53 AM, LAST SAVED: 4/18/2014 11:24 AM, PLOTTED BY: Doug Vande Ryt
©GLW 2014

RESIDENTIAL LANDSCAPE PERIMETER REQUIREMENTS SCHEDULE

RESIDENTIAL LOT LINE	LENGTH OF SIDE PERIMETER	REQUIRED LANDSCAPING
R1	117'	
R2	126'	
R3	105'	
R4	121'	
R5	105'	
R6	105'	THE REQUIRED LOT LANDSCAPING PER THE MLF LANDSCAPE DESIGN GRITERIA (5-06-16, SHEET 13 OF 15) SHALL BE PROVIDED AT SDP STAGE
R7	40'	
R8	113'	
R9	105'	
R10	105'	
R11	105'	
R12	105'	
R13	105'	

SOILS CHART

Soil Type	Soil Name	Hydrologic Soils Group	Hydric Soils	Possible Hydric Inclusions
Ba	Baile Silt Loam	D	X	
CgB2*	Chester gravelly silt loam, 3-8%	B		
ChC2	Chester silt loam, 8-15% slope, moderate erosion	B		
ChC3	Chester silt loam, 8-15% slope, severely eroded	B		
Co	Codorus silt loam,	C		X
CuB*	Comus silt loam	C		
Cs	Comus silt loam	B		
DeA	Delanco silt loam, 0-3% slope	C		X
ElB2*	Elliock silt loam, 3-8% slope, moderately eroded	C		
ErB2*	Elsinboro loam, 3-8% slopes, moderately eroded	B		
GnA	Glenville silt loam, 0-3%	C		X
GrB2*	Glenville silt loam, 3-8% slopes, moderately eroded	C		X
GlC2*	Glenelg loam, 3-8% slopes, moderately eroded	B		
Ha	Hatboro silt loam	D	X	X
MlB2*	Manor loam, 3-8%, moderately eroded	B		
MlC2	Manor loam, 8-15%, moderately eroded	B		
MlD3*	Manor loam, 15-25%, severely eroded	B		

* Soils with a moderate to high propensity towards erosion.

LANDSCAPE LEGEND

- 400 — EXISTING CONTOUR
- EXISTING TREELINE
- BOTTOM OF STREAM
- CENTERLINE OF STREAM
- SB — STREAM BUFFER
- LIMIT OF WETLAND
- WETLAND AREA
- WB — WETLAND BUFFER
- FCE — FCE — 30J — EXISTING FOREST CONSERVATION EASEMENT
- LIMIT OF PROPOSED SUBDIVISION
- EASEMENT
- STEEP SLOPES - 15% TO 25%
- STEEP SLOPES - 25% AND GREATER
- BUFFER PLANTING PER F-13-008

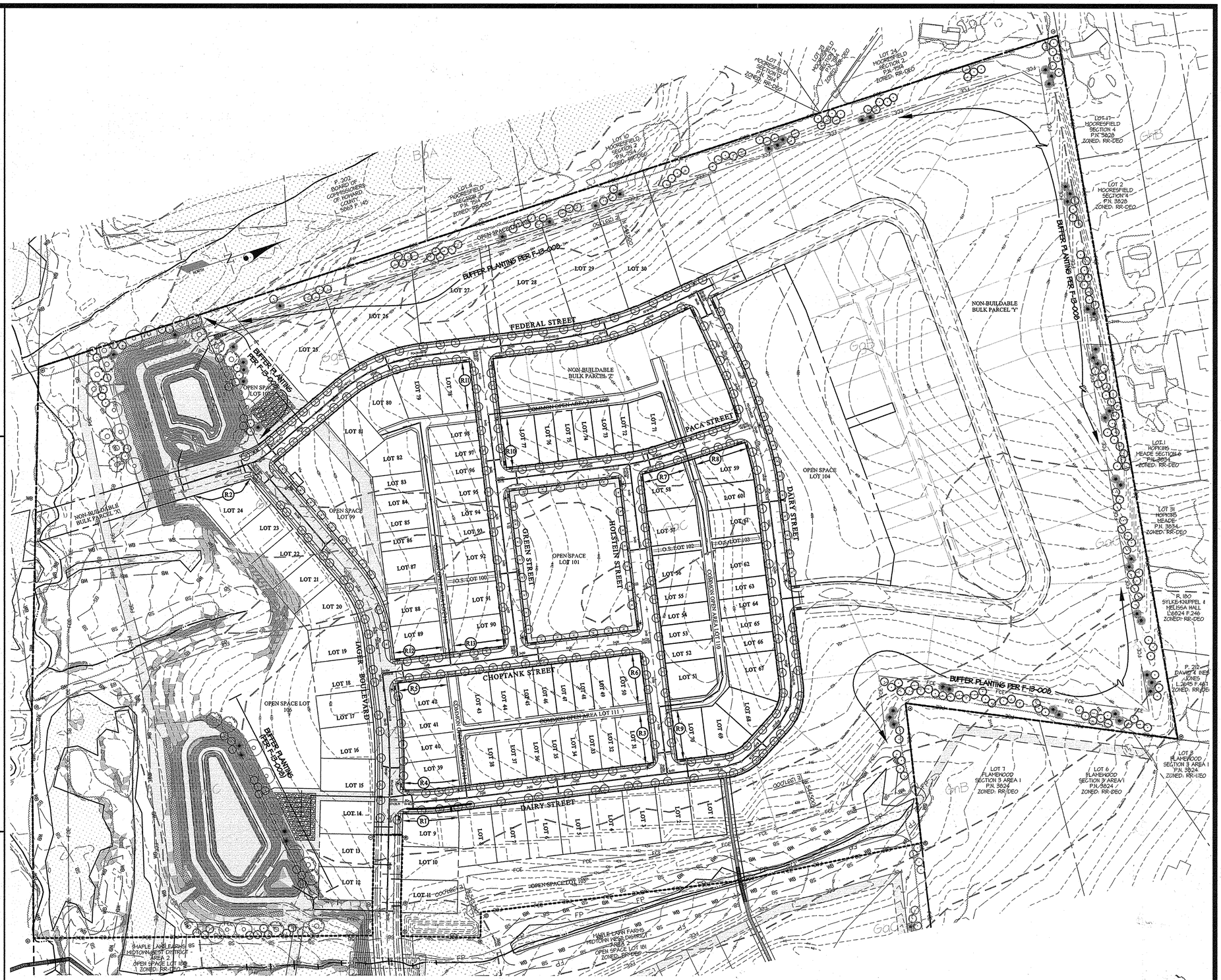

GRAPHIC SCALE

0 50 100 200

APPROVED: HOWARD COUNTY DEPARTMENT OF PUBLIC WORKS

Chief, Bureau of Highways — Date 5-7-14

APPROVED: HOWARD COUNTY DEPARTMENT OF PLANNING & ZONING

Chief, Division of Land Development — Date 5-21-14

Chief, Development Engineering Division — Date 5.20.14

LANDSCAPING NOTES:

1. SEE SHEETS 14 AND 15 FOR STREET TREE REQUIREMENTS AND QUANTITIES.
2. LOT PLANTING WILL BE PROVIDED WITH THE SITE DEVELOPMENT PLANS.
3. UNLESS NOTED, ALL STEEP SLOPES AREAS WITHIN THE LIMITS OF SUBMISSION ARE LESS THAN 5,000 S.F.
4. SEE F-13-008 FOR BUFFER PLANTING ALONG THE SWM AND EXTERNAL PERIMETERS.
5. NO LANDSCAPE SURETY IS REQUIRED WITH THIS PLAN (F-14-033).

GLW GUTSCHICK LITTLE & WEBER, P.A.

CIVIL ENGINEERS, LAND SURVEYORS, LAND PLANNERS, LANDSCAPE ARCHITECTS
3909 NATIONAL DRIVE – SUITE 250 – BURTONSVILLE OFFICE PARK
BURTONSVILLE, MARYLAND 20866
TEL: 301-421-4024 BALT: 410-880-1820 DC/VA: 301-989-2524 FAX: 301-421-4186

L:\CADD\DRAWINGS\12001\PLANS BY GLW\FINALS\12001 36_LS.dwg | DES. DEV | DRN. KLP | CHK. CKG

DATE	REVISION	BY	APP'R.

PREPARED FOR:

MAPLE LAWN FARMS I, LLC
SUITE 300 WOODHOLME CENTER
1829 REISTERSTOWN ROAD
BALTIMORE, MD 21208
ATTN: MARK BENNETT
410-484-8400

PROFESSIONAL CERTIFICATION

I HEREBY CERTIFY THAT THESE PLANS WERE PREPARED OR APPROVED BY ME, AND THAT I AM A DULY LICENSED PROFESSIONAL ENGINEER UNDER THE LAWS OF THE STATE OF MARYLAND, LICENSE NO.12975. EXPIRATION DATE: MAY 26, 2016.

4/24/14

STATE OF MARYLAND — KEVIN W. BULLOCK — No. 12975 — PROFESSIONAL ENGINEER

LANDSCAPE PLAN

MAPLE LAWN FARMS

GARDEN DISTRICT - AREA I
LOTS 1 thru 98, OPEN SPACE LOTS 99 thru 110,
COMMON OPEN AREA LOTS 111 thru 114
and NON-BUILDABLE BULK PARCELS 'X' thru 'Z'

ELECTION DISTRICT No. 5 — HOWARD COUNTY, MARYLAND

SCALE	ZONING	G. L. W. FILE No.
1" = 100'	MXD-3	12001
DATE	TAX MAP - GRID	SHEET
APRIL, 2014	41-21/46-3	36 OF 36

© GLW 2014

F-14-033