ROAD CONSTRUCTION PLANS

EMERSON

SECTION 3 – AREA 7 – PARCEL A

Howard County, Maryland

GENERAL NOTES

1. All construction shall be in accordance with the latest standards and specifications of Howard County plus MSHA standards and specifications if applicable.

2. Location of existing topography, including treelines, streams, structures, etc. are derived from aerial survey provided by Air Survey Corporation dated 1998, supplemented with field run information performed by Daft McCune Walker, Inc. dated 2010.

3. Water and sewer extentions for this project will be public, Contract #24-4696-D

4. Existing utilities shown are taken from record drawings obtained from Howard County, water and sewer Contract #24-4120 and #528-S.

5. Boundary shown hereon is a result of a field run monumented boundary survey performed on or about June 25, 1999 by Daft McCune Walker, Inc.

6. A wetland report was prepared by Daft McCune Walker, Inc. and approved in April 2001.

7. APFO Traffic Analysis approved under S-99-12.

8. A Noise Study was approved in July 1999, under S-99-12.

9. There are no known cemeteries or grave sites located within Parcel A.

10. Stormwater Management Quality and Quantity is provided by two (2) P-3 Wet Extended Detention Facilities (wetponds). Recharge to be provided at the time of development. The facilities are to be privately owned and maintained by the property owner.

11. This proposal is subject to the Fifth Edition of the Subdivision and Land Development Regulation and compliance with County Council Bill 50-2001, which amends portions of the zoning regulations.

12. The phase of the Emerson Project complies with Section 16.1200 of the Howard County Code for Forest Conservation by retaining 1.351± acres of existing forest and providing 4.592± acres of reforestation. When evaluated cumulatively with previous phases of the project, 84.57± acres of forest have been cleared, 57.59± acres have been retained, and 26.28± acres have been reforested. The cumulative reforestation obligation is 24.71± acres.

13. The subject property is zoned MXD-3 per the February 2, 2004 Comprehensive Zoning Plan, the July 28, 2006 Comprehensive Lite Zoning Regulation Amendments and per Case ZB-979M approved on September 3, 1998.

14. Phasing for this project is in accordance with the decision and order for Zoning Case ZB-979M and decision order for PB-339 and PB-359 (comprehensive sketch plan, S-99-12).

15. On September 3, 1998, the Zoning Board granted approval of ZB-979M for the Preliminary Development Plan and development criteria to establish the PEC-MXD-3 zoning district for this project.

16. The minimum building setback restrictions from property and public road right-of-way lines are to be in accordance with the development criteria approved with S-99-12 and the desision and order for PB-339 and PB-359.

17. The stream delineation for this project was prepared by Daft McCune Walker, Inc. dated June 2006.

18. No grading, removal of vegetative cover or trees, paving and/or new structures shall be permitted within the wetlands, streams or their required buffers, forest conservation easements and/or 100 year floodplain.

19. The development and construction on this property must comply with setback and buffer regulations in effect at the time of submission of the Site Development Plan, Wavier Petition, or Building and Grading Permits.

20. There are no existing structures, including historic structures, located within the limits of this plan.

21. The Division of Land Development has determined that the two (2) proposed stream/floodplain crossings for the Eternal Rings Drive extension are considered necessary or essential stream/floodplain crossings for this subdivision because the ultimate road alignment was shown and approved under Comprehensive Sketch Plans, S-99-12 and cases PB-339 and PB-359 and in accordance with Sections 16.115(c) and 16.116(c) of the Subdivision and Land Development Regulations.

22. The coordinates shown hereon are based upon the Howard County Geodetic Control, which is based upon the Maryland State Plane Coordinate System. Howard County monument numbers 47DA, 47E4 and 47G2.

23. The 100-Year Floodplain Study for this project was prepared by Daft McCune Walker, Inc. dated June 2003 and approved under F-04-053.

24. The geotechnical report for this project was prepared by the Balter Company, dated December 17, 2007.

25. The contractor shall notify "Miss Utility" at 1-800-257-7777 at least 48 hours prior to any excavation work being done.

26. Any damage to the County or State right-of-way shall be corrected at the developer's expense.

27. Trench bedding for storm drainage structures shall be in accordance with Howard County Standard G2.01.

28. Department of Planning and Zoning reference file numbers: S-99-12, PB-339, PB-359, ZB-979M, F-08-104, WP-08-24, P-08-008 and F-04-053.

29. All inlets shall be constructed in accordance with Howard County or MSHA Standards as specified on the structure schedule.

30. All materials and construction are to be in accordance with the latest edition of Howard County Design Manual, Volume IV.

31. All curb radii are five foot unless otherwise labled.

32. The 100 year floodplain has been delineated on this plan.

33. This property is located within the Metropolitan District.

34. There are ±0.415 ac. of slopes greater that 25% located on site.

35. All plan dimensions are to face of curb unless otherwise noted.

36. This plan has been prepared in accordance with the provisions of Section 16.124 of the Howard County Code and the Emerson Landscape Design Criteria. Financial surety for the required street tree landscaping in the amount of $19,500.00 (52 shade trees @ $375.00 must be posted as part of the Developer's Agreement. DED shall include the public stree trees in their cost estimate for road construction. Financial surety for the required landscaping (stormwater management and perimeter landscaping) shall be posted as part of the developer's agreement in the amount of $63,000.00 for 136 shade trees and 148 evergreen trees.

37. The Forest Conservation Easement has been established to fulfill the requirements of Section 16.1200 of the Howard County Code and the Forest Conservation Manual. No clearing, grading or construction is permitted within the Forest Conservation Easement, however, forest management practices as defined in the Deed of Forest Conservation Easement are allowed.

38. Concrete structural components to be standard as designed and supplied be the precast manufacturer.

39. The 65dBa Noise line is within the building cartilage of the parcel and since no residential use is proposed, mitigation has not been provided, however, in case residential use is proposed in the future, mitigation shall be required.

40. All construction shall be in accordance with the latest standards and specifications of Howard County plus MSHA standards and specifications, if applicable.

41. The contractor shall notify the Department of Public Works/ Bureau of Engineering / Construction Inspection Division at (410) 313-1880 at least five (5) working days prior to the start of work.

42. Traffic control devices, markings and signing shall be in accordance with the latest edition of the Manual of Uniform Traffic Control Devices (MUTCD). All street and regulatory signs shall be in place prior to the placement of any paving.

43. All compaction in fill areas shall achieve a minimum 95% density in accordance with AASHTO T-180.

44. Street lighting placement and the type of fixtures and poles shall be in accordance with the Howard County Design Manual, Volume III (2006), section 5.5.A. A minimum of 20' shall be maintained between any street light and any tree.

45. All sign posts used for traffic control signs installed in the County Right -of-Way shall be mounted on a 2" galvanized steel, perforated, square tube post (14 gauge) inserted into a 2 1/2" galvanized steel, perforated, square tube sleeve (12 gauge) - 3' long. A galvanized steel pole cap shall be mounted on top of each post.

46. No structures exist on the subject property.

47. A surety in the amount of $80,804.00 is required for reforestation (3.710 acres* @ $0.50/s.f.). The total Forest Conservation surety amount provided with the Developer's Agreement is equal to $80,804.00. (* Reflects deduction for landscape trees.)

48. The BGE setback is shown as a 45' wide area based on BGE's "planting Zone Guide". The first 20 feet is shown as NON-credited no planting zone. The next 25 feet is shown as a NON- Credited Retention area with Credited Reforestation with trees that are less then 25 feet in height at maturity.

49. MDE/COE Permit No. 08-NT-3249/200863320

SITE ANALYSIS DATA CHART

1. GENERAL SITE DATA
   - A. PRESENT ZONING: PEC-MXD-3
   - B. APPLICABLE DPZ FILE REFERENCES: SDP-06-113, SDP-06-112, PLAT NOS. 17669 & 17366 S-99-12, PB-339, PB-359, F-04-53, AND ZB-979M, P-08-008 PLAT NO. 23639-23643, F-16-055, PLAT NO. 23639-23643
   - C. PROPOSED USE OF SITE OR STRUCTURE(S): COMMERCIAL
   - PROPOSED WATER AND SEWER SYSTEMS: PUBLIC PRIVATE
   - ANY OTHER INFORMATION WHICH MAY BE RELEVANT:
2. AREA TABULATION
   - A. TOTAL AREA OF SITE: 45.127 ACRES (THIS PHASE).
   - B. APPROXIMATE AREA OF 100 YEAR FLOODPLAIN: 1.669± ACRES.
   - C. APPROXIMATE AREA OF STEEP SLOPES (25% OR GREATER): 0.415± ac.
   - D. NET AREA OF SITE: 43.043± ACRES.
   - E. AREA OF PROPOSED BUILDING LOTS: 43.112 ACRES. (2)
   - F. AREA OF PROPOSED OPEN SPACE LOTS: 0 ACRES.
   - G. AREA OF PROPOSED PRESERVATION PARCELS: N/A
   - H. AREA OF BULK PARCEL A-1 43.112 ACRES.
   - I. AREA OF PROPOSED PUBLIC ROADS: 2.015± ACRES.
   - J. AREA OF PROPOSED PRIVATE ROADS: N/A ACRES.
3. UNIT/LOT TABULATION
   - A. TOTAL NUMBER OF RESIDENTIAL UNITS/LOTS ALLOWED FOR PROJECT BY RIGHT: N/A
   - B. TOTAL NUMBER OF RESIDENTIAL UNITS/LOTS PROPOSED ON THIS SUBMISSION: N/A
   - C. DENSITY OF PROJECT PER GROSS ACRE: N/A
   - D. TOTAL NUMBER OF PRESERVATION PARCELS PROPOSED N/A
   - E. TOTAL NUMBER OF OPEN SPACE LOTS PROPOSED N/A
   - F. TOTAL NUMBER OF NON - BUILDABLE BULK PARCELS PROPOSED: N/A
   - G. TOTAL NUMBER OF LOTS/ PARCELS PROPOSED: 1
4. OPEN SPACE DATA
   - A. MINIMUM RESIDENTIAL LOT SIZE SELECTED: N/A
   - B. OPEN SPACE REQUIRED: N/A
   - C. TOTAL OPEN SPACE PROVIDED ON THIS SUBMISSION: ACRES
   - D. AREA OF RECREATION OPEN SPACE REQUIRED: N/A
   - E. AREA OF REC. OPEN SPACE PROVIDED ON THIS SUBMISSION: N/A

Administrative Waiver for SWM

An administrative waiver for stormwater management was granted for this parcel by Howard County Development Engineering Division on January 18, 2011. The request was approved subject to the bonding of SWM under F-11-036 prior to the signature approval of F-11-036 plats. This administrative waiver shall not apply to the plans that do not receive final approval by May 4, 2013. This administrative waiver will expire if construction is not completed before May 4, 2017.

The storm drain pipe and structures located outside the right of way between M-9 & M1 shall be privately maintained. (2)

(1) REVISION NO. 1 PURPOSE STATEMENT:

1. THIS ROAD CONSTRUCTION PLAN WAS REVISED TO: INCORPORATE PHASE 1 & PHASE 2 STAGING (1 & 2) TO INITIALLY CONSTRUCT ETERNAL RINGS DRIVE PUBLIC ROAD EXTENSIONS, PRIOR TO THE OVERALL ONSITE MASS GRADING AND BASIN CONSTRUCTION.
2. TO PROVIDE A BORROW AREA MASS GRADING PLAN ON EMERSON SECTION 3, AREA 6 FOR FILL MATERIAL FOR PUBLIC ROAD CONSTRUCTION.
3. TO PROVIDE AND CONSTRUCT TEMPORARY STORMWATER MANAGEMENT ESD'S FOR ETERNAL RINGS DRIVE (NORTH) ROAD EXTENSION ON EMERSON SECTION 3, AREA 6.
4. TO SHOW NEW OWNERSHIP OF BOTH EMERSON SECTION 3, AREAS 6 & 7.

FOR REVISION NO. 2 ONLY

5/16/16 DATE

STATE OF MARYLAND — ROBERT LYNN HURINITZ — PROFESSIONAL ENGINEER

PROFESSIONAL ENGINEER NO. 18868

CENTURY ENGINEERING INC.

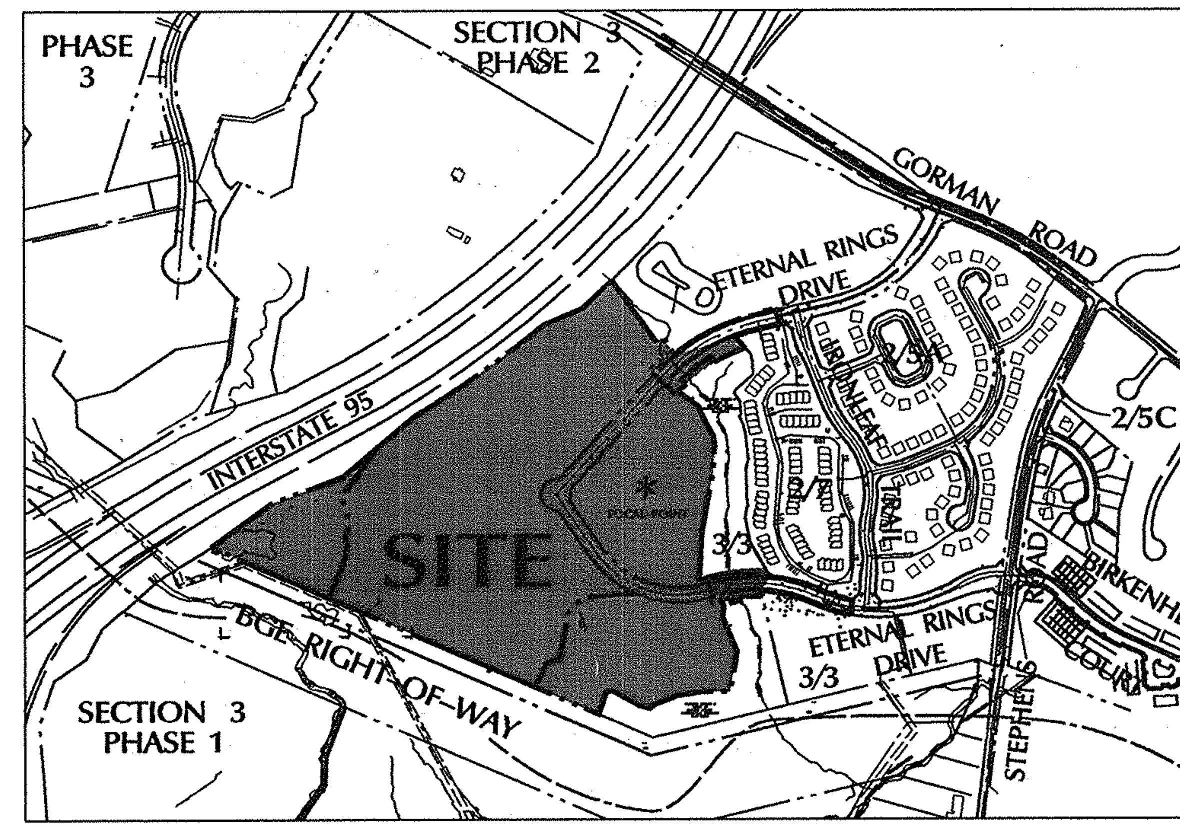

LOCATION MAP

Scale: 1"=600'

NORTH

DEVELOPMENT TRACKING CHART

Section and Phase	File Reference Number	Gross Acreage	SFD Ac. (%) (A)	Other Res. Ac. (%)	Employment Ac. (%)	Open Space Ac. (%)	SFD Units	SFD Density	Other Res. Units (SFA/Apt/Condo)	Other Res. Density (D)
2/1A	F-01-136	8.4	3.6 (43%)	0	0	4.8 (57%)				
2/1B	F-01-137	97.8	49.7 (50.8%)	8.0 (8.2%)	0	40.1 (41%)	160	3.2 D.U./Ac.	80 SFA	10 D.W./Ac.
2/2	F-01-145	12.7	0	12.7 (100%)	0	0			120 SFA	9.4 D.W./Ac.
2/3	F-02-55	18.5	0	12.0 (64.9%)	0	6.5 (35.1%)			120 SFA	10 D.W./Ac.
3/1	F-02-131	69.5	0	0	22.1 (31.8%)	47.4 (68.2%)				
3/2	F-02-178	12.3	0	0	8.9 (72.4%)	3.4 (27.6%)				
2/4	F-03-13	44.5	27.4 (61.5%)	0	0	17.1 (38.5%)	120	4.4 D.U./Ac.		
2/5C	F-03-175	3.0	0.7 (23.3%)	0	0.2 (6.7%)	2.1 (70%)				
2/6A (F)	F-04-68	10.4	0	9.4 (90.4%)	0	1.0 (9.6%)			100 SFA	10.6 D.W./Ac.
2/5A & 3/3	F-04-53	29.2	22.7 (77.7%)	0	3.9 (13.4%)	2.6 (8.9%)	87	3.9 D.U./Ac.		
2/5B & 3/4	F-04-127	23.9	0	2.9 (12.1%)	14.1 (59%)	6.9 (28.9%)			60 Apt (EMP) 33 SFA (OR)	11.4 D.W./Ac.
2/6B	F-05-89	6.2	4.9 (79.0%)	0	0	1.3 (21.0%)	20	4.1 D.U./Ac.		
2/7	F-05-93	8.5	0	8.5 (100%)	0	0			73 Apt 47 SFA	14.1 D.W./Ac.
2/8A (G)	F-07-128	0.0	0	0	0	0	3			
2/8B & 3/5	F-07-141	28.8	0	8.2 (28.5%)	12.9 (44.8%)	7.7 (26.7%)			117 Apt	14.3 D.W./Ac.
2/9	F-08-82	52.4	0	0	0	52.4 (100%)				
3/6	F-08-104 (SDP-08-54)	13.08	0	0	13.08 (100%)					
3/7	F-11-036	45.13	0	0	45.13 (100%)	0				
Total		484.31	109 (22.5%)	61.7 (12.7%)	120.31 (24.8%)	193.3 (39.91%)	390	3.6 D.U./Ac.	250 Apt 500 SFA	12.1 D.W./Ac.

						Max. Res. Units Proposed		Max. Res. Units Allowed	
Overall Density Tabs	(E) Proposed	(B) Allowed	Land Use Acreages	Proposed	Allowed			ZB 979 M	S-99-12
Overall SFD Density	3.6	3.8	SFD	109	117	390	SFD	450 (37.5%)	395 (34.5%)
Overall OR Density	12.1	12.1	OR	61.7	62	250	Aptmt (OR)	250 (20.8%)	250 (21.8%)
Overall Project Density	2.3	2.32	EMP	120.31	154.9	500	SFA (OR)	500 (41.7%)	500 (43.7%)
			Open Space	193.3	183			1200	1145
			TOTAL	484.31	516.9	1140	TOTAL		

(2)
(A) SFD and OR acreages includes Common Open Areas (COA Lots).
(B) Overall allowed density based on maximum number of units allowed per ZB 979 M and Max. Allowed Land Use Acreages.
(C) Max. density for any individual SFD area is 5.0 units/acre.
(D) Max. density for an individual OR area is 20.0 units/acre.
(E) Proposed density tabulations are shown for informational purposes only The proposed density tabs are based on proposed land use acreages. Those tabulations will be reconciled against the maximum density tabs with the last plat/phase.
(F) Re-subdivided by F-06-25 to create 1.0 acres of credited Open Space.
(G) This is a re-subdivision of SFD Land Use recorded with F-03-13.

Note: This chart reflects the current information for this project at the time of recordation of this plat or approval of this plan. For current information, refer to the most recent recorded plat or approved plan.

Professional Certification. I hereby certify that these documents were prepared or approved by me, and that I am a duly licensed professional engineer under the laws of the State of Maryland. License No. 26569, Expiration Date: 7-18-15

FOR REVISION NO.1 ONLY

3/25/14 DATE

STATE OF MARYLAND — GERALD DOUGLAS TURNBAUGH — NO. 26569 — PROFESSIONAL ENGINEER

PROF ENGR. NO. 26569

(2) *Professional Certification. I hereby certify that these documents were prepared or approved by me, and that I am a duly licensed professional engineer under the laws of the State of Maryland, License No. 18868, Expiration Date 10-8-16 "

ADDRESS CHART

LOT/PARCEL #	STREET ADDRESS
#837 PARCEL A	9951 ETERNAL RINGS DRIVE

SHEET INDEX

SHEET	DESCRIPTION
1	COVER SHEET
2	SOUTH ETERNAL RINGS ROAD PLAN & PROFILE
3	NORTH ETERNAL ROAD PLAN & PROFILE
4	GRADING & STORM DRAIN DRAINAGE AREA MAP
5	STORM DRAIN DETAILS & PROFILES
6	NORTH CULVERT PLAN & PROFILE
7	SOUTH CULVERT PLAN & PROFILE
8	SEDIMENT AND EROSION CONTROL PHASE 1 PLAN
9	GRADING, SEDIMENT AND EROSION CONTROL PHASE 2 PLAN
10	GRADING, SEDIMENT AND EROSION CONTROL PLAN FACILITY NO.1 (50 SCALE)
11	GRADING, SEDIMENT AND EROSION CONTROL PLAN FACILITY NO.2 (50 SCALE)
12	CULVERT DETAILS
13	SEDIMENT AND EROSION CONTROL DETAILS
14	SEDIMENT AND EROSION CONTROL NOTES
15	OVERALL STORMWATER MANAGEMENT PLAN
16	STORMWATER EXISTING CONDITIONS DRAINAGE AREA MAP
17	STORMWATER PROPOSED CONDITIONS DRAINAGE AREA MAP
18	STORMWATER MANAGEMENT PLAN FACILITY NO.1 (50 SCALE)
19	STORMWATER MANAGEMENT NO.1 PROFILES
20	STORMWATER MANAGEMENT NO.1 DETAILS
21	STORMWATER MANAGEMENT NO.1 DETAILS
22	STORMWATER MANAGEMENT PLAN FACILITY NO.2 (50 SCALE)
23	STORMWATER MANAGEMENT NO.2 PROFILES
24	STORMWATER MANAGEMENT NO.2 DETAILS
25	STORMWATER MANAGEMENT NO.2 DETAILS
26	STORMWATER SPECIFICATIONS & SOIL BORING LOGS
27	LANDSCAPE PLAN
28	LANDSCAPE DETAILS
29	FOREST CONSERVATION PLAN AND SOILS MAP
30	FOREST CONSERVATION DETAILS
8a	GRADING, SEDIMENT AND EROSION CONTROL PHASE 1 STAGE 1
17a	TEMPORARY SWM ESD PLAN & SPECS, PHASE 1 STAGE 1
17b	TEMPORARY SWM ESD PLANTING PLAN & D.A. MAP PH. 1 ST. 1

LEGEND

EX. CURB & GUTTER	
EX. MAJOR CONTOURS	400
EX. MINOR CONTOURS	402
EX. STORM DRAIN	EX. 21" RCP
EX. SEWER	EX. 8" S.
EX. WATER	EX. 8" W.
EXISTING TREE LINE	
EXISTING WETLAND LIMIT	
PROPERTY LINE	
ROADWAY RIGHT-OF-WAY	
PROPOSED LOT LINE	
PROPOSED EASEMENT	
PROPOSED CURB & GUTTER	
PROPOSED SIDEWALK	
PROP. STORM DRAIN	15" RCCP
PROP. SEWER	6" S.
PROP. WATER	4" W.
PROP. MAJOR CONTOURS	400
PROP. MINOR CONTOURS	402
SOIL BORING	B-4
NON WOODY VEGETATION ZONE	
LIMIT OF DISTURBANCE	

PROFESSIONAL CERTIFICATION

I HEREBY CERTIFY THAT THESE DOCUMENTS WERE PREPARED OR APPROVED BY ME, AND THAT I AM A DULY LICENSED PROFESSIONAL ENGINEER UNDER THE LAWS OF THE STATE OF MARYLAND. LICENSE NO. 16928, EXPIRATION DATE: 5/13/12

1/5/12 Date

STATE OF MARYLAND — PROFESSIONAL ENGINEER

Professional Engr. No. 16928

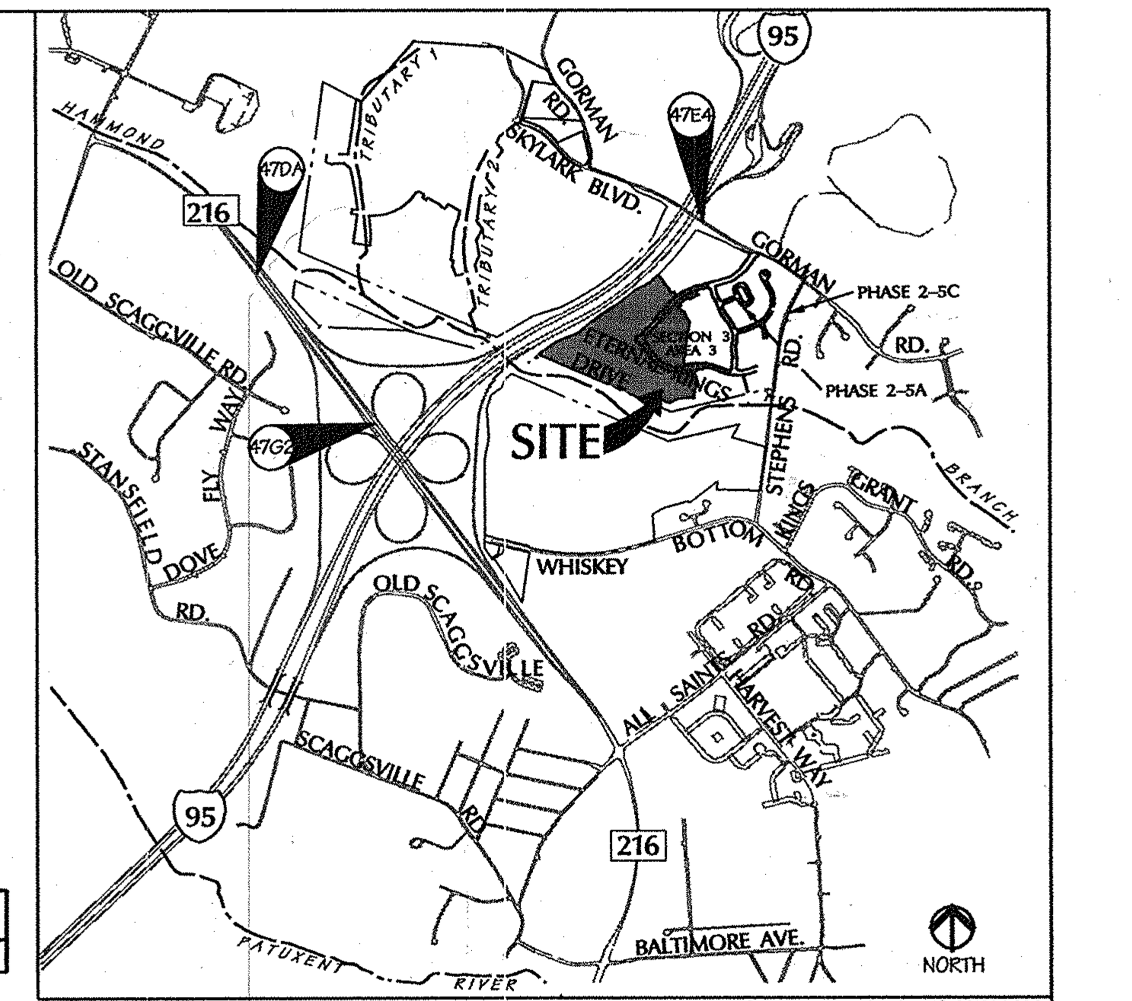

COPYRIGHT THE ADC MAP PEOPLE PERMITTED USE NO. 201298626

VICINITY MAP

SCALE: 1"=2000'

HOWARD COUNTY ADC MAP COORDINATES: MAP 5053-E9

BENCHMARK

COORDINATES IN MARYLAND NAD83(91) (HORIZONTAL) AND NGVD29 (VERTICAL) DATUMS.

47DA NORTHING: 163191.9104
EASTING: 411286.5759
ELEVATION: 315.905 ft.
.5 MILES EAST OF LEISHEAR ROAD, 19.6' SOUTH OF INLET ON RT. 216

47E4 NORTHING: 163326.2295
EASTING: 413136.2550
ELEVATION: 338.909ft.
CONC. MONUMENT 1'N. EDGE
CONC. WK. 21' EAST OF NORTH
EAST COR. BRIDGE .2' BELOW SURFACE
.6' OFF EDGE OF CONC. WALK ALONG GORMAN ROAD

47G2 NORTHING: 162440.1212
EASTING: 411853.9279
ELEVATION: 364.210ft.

DATA SOURCES

Existing topography shown hereon is a result of an aerial survey provided by Air Survey Corporation dated, 1998 supplemented with field run information performed by Daft McCune Walker, Inc. dated, 2010.

Property boundary shown hereon is a result of field run monumented boundary survey performed on or about June 25, 1999 by Daft McCune Walker, Inc.

Soils if shown provided by Soil Data Mart dated 2005 published by Natural Resources Conservation Services (NRCS)

Zoning information shown hereon provided by Howard County Department of Planning and Zoning, adapted by Howard County Council February 2, 2004.

Wetland and stream limits shown hereon were originally approved by Maryland Department of the Environment and the US Corps of Engineers in April 2001 and re-verified by these agencies in October 2009.

APPROVED: HOWARD COUNTY DEPT. OF PUBLIC WORKS

CHIEF, BUREAU OF HIGHWAYS — DATE 2-23-12

APPROVED: HOWARD COUNTY DEPT. OF PLANNING AND ZONING

CHIEF, DIVISION OF LAND DEVELOPMENT — DATE 3/01/12

CHIEF, DEVELOPMENT ENGINEERING DIVISION — DATE 2/28/12

Date	No.	Revision Description
5-16-16	2	REVISED TRACKING CHART AND NOTES
2-10-14	1	SHOW NEW PHASING/STAGING & NEW OWNERSHIP ALL SHEETS

EMERSON

SECTION 3 – AREA 7 – PARCEL A

"Future Employment Use"

OWNER/DEVELOPER:

(1) EMERSON DEVELOPMENT IX LLC
ONE TEXAS STATION COURT, SUITE 200
TIMONIUM, MD 21093 (443) 689-8000

DMW
Daft-McCune-Walker, Inc.
200 East Pennsylvania Avenue
Towson, Maryland 21286
(410) 296-3333
Fax 296-4705

A Team of Land Planners, Landscape Architects, Engineers, Surveyors & Environmental Professionals

SUBDIVISION NAME: EMERSON	SECTION/AREA: SEC.3 AREA 7	LOT/PARCEL #: Part of 837	
PLAT # OR L/F: 5289/ 330	GRID #: 15	ZONE: MDX-3	TAX/ZONE MAP: 47
ELECT. DISTRICT: 6TH	CENSUS TRACT: 6069.03	WATER CODE: E-15	SEWER CODE: 7520000

TITLE

FINAL PLAN
COVER SHEET

Des By	TJC	Scale	AS SHOWN	Proj. No.	95054.W
Drn By	JSS	Date	11/17/11	1 of 30	
Chk By	JDF	Approved			

F-11-036

n:\95054\95054.W\Final Plans\95054W01.CVR

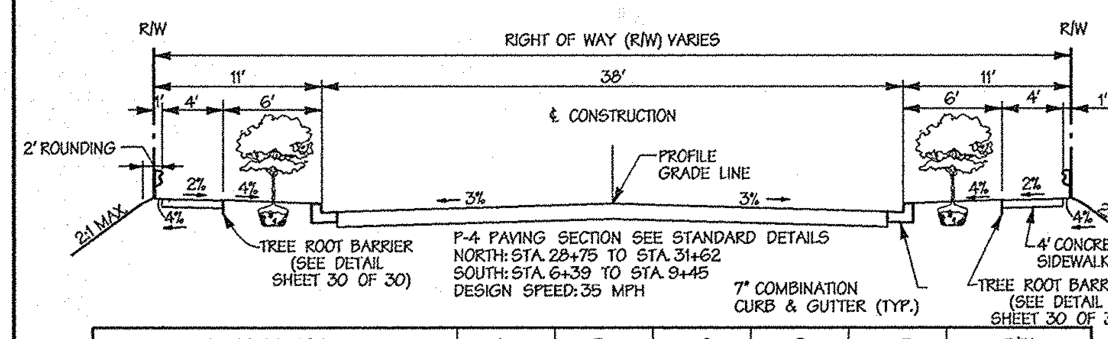

CLASSIFICATION		A	B	C	D	E	R/W
MINOR COLLECTOR STREET	500 ADT	38'	6'	4'	11'	0	60'

(ETERNAL RINGS DRIVE)

TYPICAL SECTION ETERNAL RINGS DRIVE @ GUARD RAIL
(STA. 9+45 TO 11+75
STA. 26+50 TO 28+75)

NO SCALE

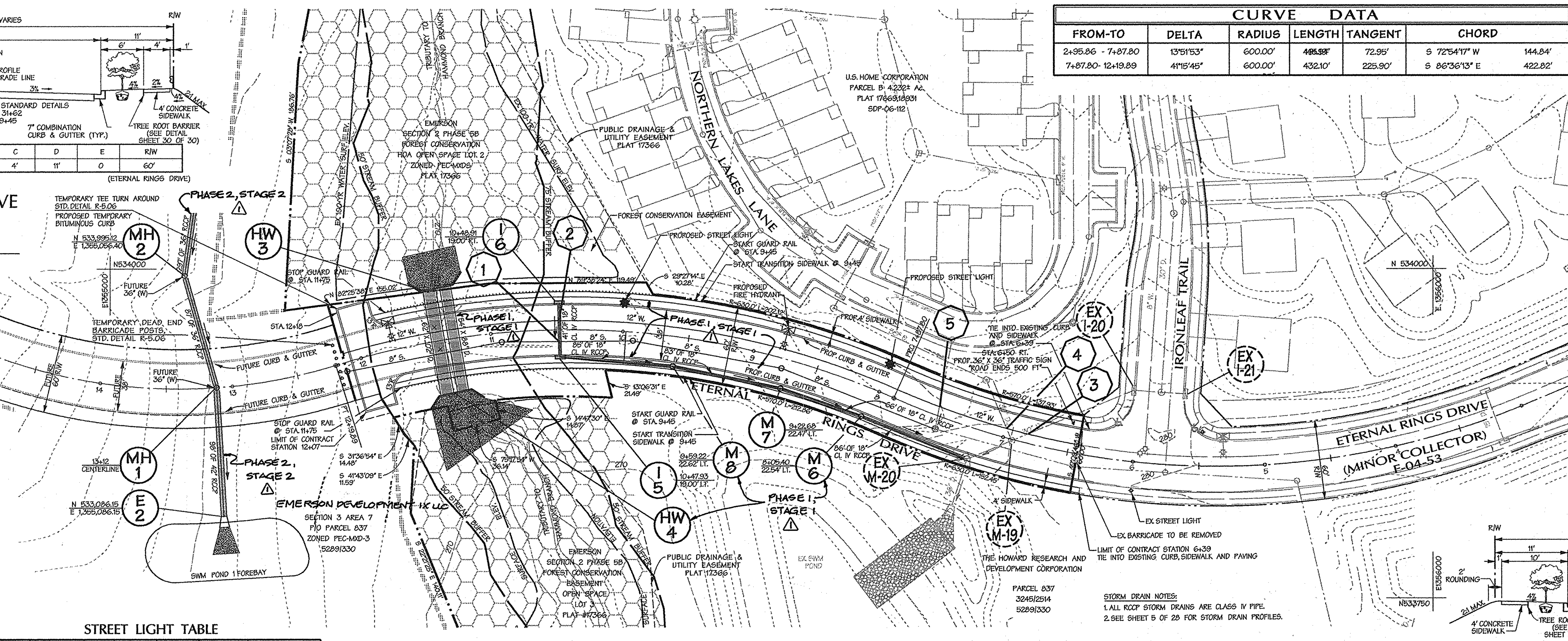

CURVE DATA					
FROM-TO	DELTA	RADIUS	LENGTH	TANGENT	CHORD
2+95.86 - 7+87.80	13°51'53"	600.00'	145.33'	72.95'	S 72°54'17" W 144.84'
7+87.80 - 12+19.89	41°15'45"	600.00'	432.10'	225.90'	S 86°36'13" E 422.82'

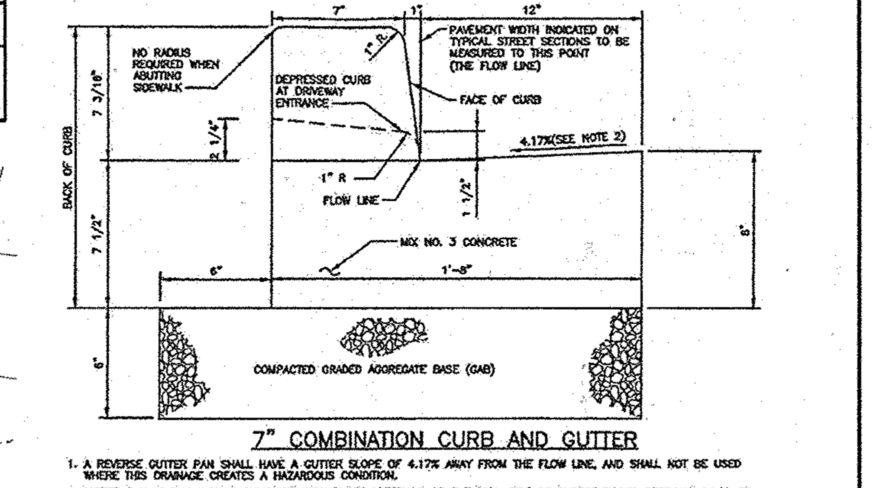

7" COMBINATION CURB AND GUTTER

1. A REVERSE GUTTER PAN SHALL HAVE A GUTTER SLOPE OF 4.17% AWAY FROM THE FLOW LINE, AND SHALL NOT BE USED WHERE THIS DRAINAGE CREATES A HAZARDOUS CONDITION.
2. GUTTER PAN AT THE MEDIAN EDGE OF INTERMEDIATE ARTERIALS OR THE HIGH SIDE OF SUPERELEVATED SECTIONS SHALL BE SLOPED AT THE SAME RATE AND IN THE SAME DIRECTION AS THE PAVEMENT. MATCH PAVEMENT CROSS SLOPE WHEN CURB IS LOCATED ON THE LOW SIDE OF SUPERELEVATED SECTION AND THE RATE OF SUPERELEVATION IS GREATER THAN 3% FOR MODIFIED CURB & GUTTER.
3. A MINIMUM OF TWO (2) FEET OF COMPACTED STABILIZED EARTH, OR EQUIVALENT, SHALL SUPPORT THE ENTIRE BACK OF CURB.
4. POSITIVE DRAINAGE SHALL BE PROVIDED BOTH BEHIND THE CURB AND ALONG THE GUTTER AND FLOW LINE.

NOTE: REFER TO HOWARD COUNTY DETAIL R-3.01

7" CURB AND GUTTER
NO SCALE

Legend

- EX. CURB & GUTTER
- EX. MAJOR CONTOURS
- EX. MINOR CONTOURS
- EX. STORM DRAIN
- EX. SEWER
- EX. WATER
- EXISTING TREE LINE
- EXISTING WETLAND LIMIT
- PROPERTY LINE
- ROADWAY RIGHT-OF-WAY
- PROPOSED EASEMENT
- PROP. STORM DRAIN
- PROP. SEWER
- PROP. WATER
- SOILS LINE
- UTILITY CROSSINGS
- EX. FOREST CONSERVATION EASEMENT

STORM DRAIN NOTES:
1. ALL RCCP STORM DRAINS ARE CLASS IV PIPE.
2. SEE SHEET 5 OF 28 FOR STORM DRAIN PROFILES.

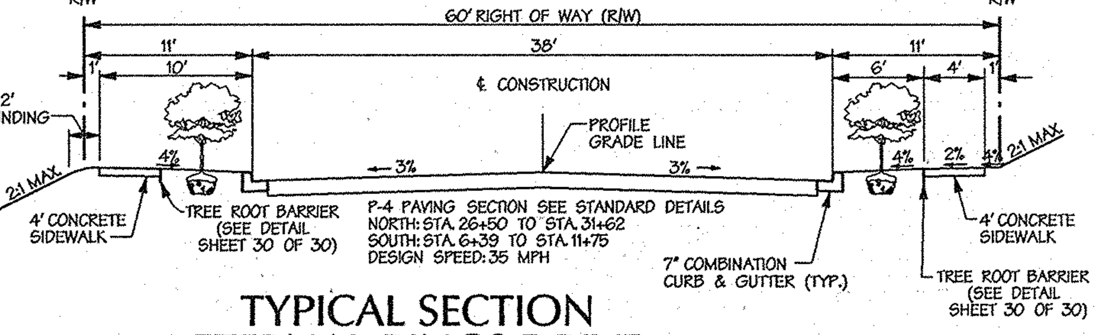

TYPICAL SECTION ETERNAL RINGS DRIVE
NO SCALE

STREET LIGHT TABLE

DWG. No.	STREET NAME	STATION	OFF-SET	FIXTURE / POLE TYPE	COMMENTS
	ETERNAL RINGS DR.	8+00 10+00	22' RT. 22' RT.	✸	

STREET LIGHT LEGEND

✸ 150 WATT HIGH PRESSURE SODIUM (HPS) VAPOR, PREMIER
NOTE:
CONDUIT FOR STREET LIGHTING TO BE INSTALLED BY CONTRACTOR (3" PVC)

NOTE: SEE SHEET 7 OF 28 FOR CULVERT PROFILES.

NOTE: FOR UTILITY CROSSING DETAIL SEE SHEET 5 OF 28.

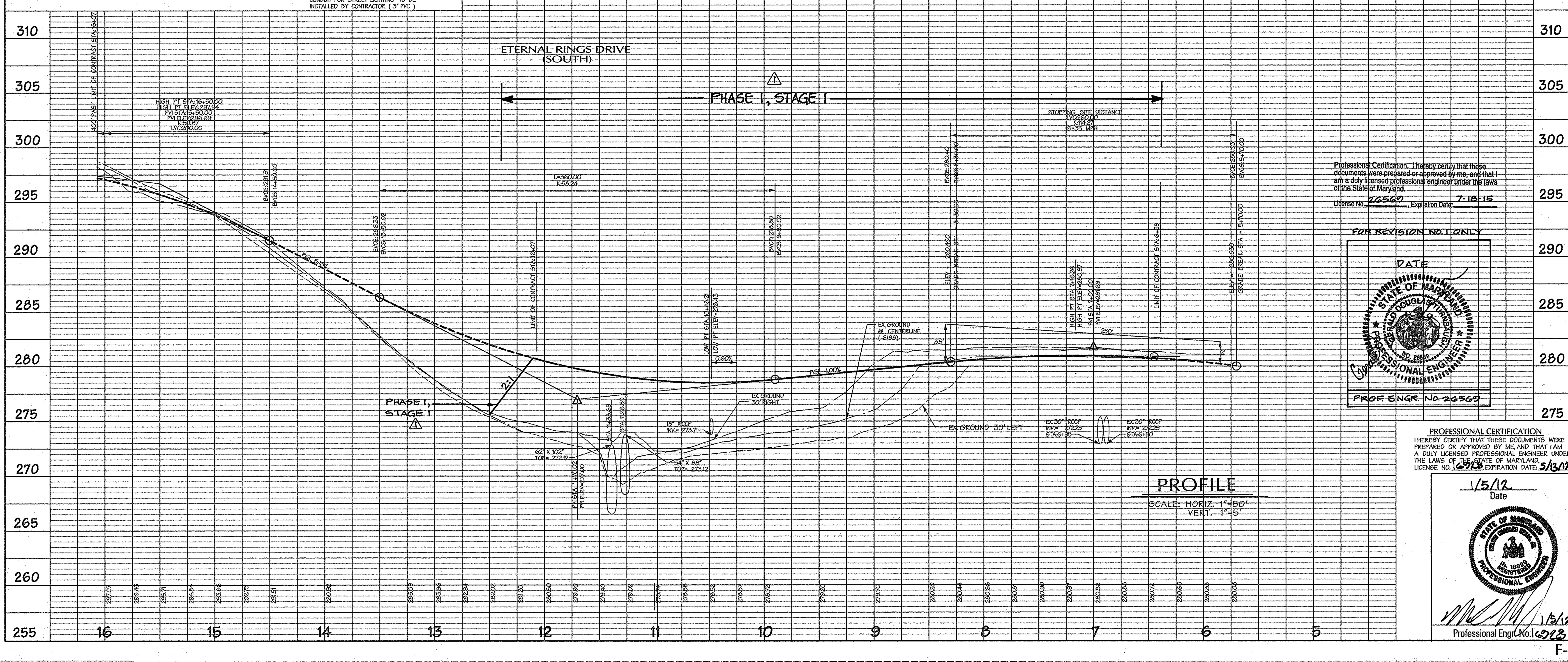

DATA SOURCES

Existing topography shown hereon is a result of an aerial survey provided by Air Survey Corporation dated, 1998 supplemented with field run information performed by Daft McCune Walker, Inc. dated, 2010.

Property boundary shown hereon is a result of field run monumented boundary survey performed on or about June 25, 1999 by Daft McCune Walker, Inc.

Soils if shown provided by Soil Data Mart dated 2005 published by Natural Resources Conservation Services (NRCS)

Zoning information shown hereon provided by Howard County Department of Planning and Zoning, adapted by Howard County Council February 2, 2004.

Wetland and stream limits shown hereon were originally approved by Maryland Department of the Environment and the US Corps of Engineers in April 2001 and re-verified by these agencies in October 2009.

Professional Certification. I hereby certify that these documents were prepared or approved by me, and that I am a duly licensed professional engineer under the laws of the State of Maryland.
License No. 26569, Expiration Date: 7-18-15

FOR REVISION NO. 1 ONLY

DATE

PROF. ENGR. NO. 26569

APPROVED: HOWARD COUNTY DEPT. OF PUBLIC WORKS

CHIEF, BUREAU OF HIGHWAYS — DATE 2-23-12

APPROVED: HOWARD COUNTY DEPT. OF PLANNING AND ZONING

CHIEF, DIVISION OF LAND DEVELOPMENT — DATE 3/01/12

CHIEF, DEVELOPMENT ENGINEERING DIVISION — DATE 2/28/12

Date	No.	Revision Description
2-10-14	⚠	SHOW PHASING/STAGING LIMITS & NEW OWNER

EMERSON

SECTION 3 – AREA 7 – PARCEL A

"Future Employment Use"

OWNER/DEVELOPER:
⚠ EMERSON DEVELOPMENT IX LLC
ONE TEXAS STATION COURT, SUITE 200
TIMONIUM, MD 21093 (443) 689-8000

PROFESSIONAL CERTIFICATION
I HEREBY CERTIFY THAT THESE DOCUMENTS WERE PREPARED OR APPROVED BY ME, AND THAT I AM A DULY LICENSED PROFESSIONAL ENGINEER UNDER THE LAWS OF THE STATE OF MARYLAND, LICENSE NO. 16928, EXPIRATION DATE: 5/13/12

1/5/12
Date

Professional Engr. No. 16928 1/5/12

DMW
Daft·McCune·Walker, Inc.
200 East Pennsylvania Avenue
Towson, Maryland 21286
(410) 296-3333
Fax 296-4705

A Team of Land Planners, Landscape Architects, Engineers, Surveyors & Environmental Professionals

SUBDIVISION NAME	SECTION/AREA	LOT/PARCEL #
EMERSON	SEC. 3 AREA 7	P/O 837

PLAT# OR L/F	GRID #	ZONE	TAX/ZONE MAP	ELECT. DISTRICT	CENSUS TRACT
5289/330	15	MXD-3	47	6TH	6069.03

WATER CODE	SEWER CODE
E-15	7520000

TITLE
ROAD CONSTRUCTION PLAN ETERNAL RINGS DRIVE SOUTH ROAD PLAN AND PROFILE

Des By	TJC	Scale	1"=50'	Proj. No.	95054.W2
Drn By	JSS	Date	11/17/11		2 of 30
Chk By	JDF	Approved			

F-11-036

n:\95054\95054.W\Final Plans\95054W0202.dwg Jan 04 14:45:34 2012

CURVE DATA						
FROM-TO	DELTA	RADIUS	LENGTH	TANGENT	CHORD	
30+66.77 - 26+06.78	35°08'37"	750.00'	460.03'	237.51	S 59°33'34" E	452.85'

Legend

EX. CURB & GUTTER
EX. MAJOR CONTOURS 400
EX. MINOR CONTOURS 402
EX. STORM DRAIN EX. 21" RCP
EX. SEWER EX. 8" S.
EX. WATER EX. 12" W.
EXISTING TREE LINE
EXISTING WETLAND LIMIT
PROPERTY LINE
ROADWAY RIGHT-OF-WAY
PROPOSED EASEMENT
PROP. STORM DRAIN 15" RCCP
PROP. SEWER 8" S.
PROP. WATER 4" W.
UTILITY CROSSING 6
EX. FOREST CONSERVATION EASEMENT

THE HOWARD RESEARCH AND DEVELOPMENT CORPORATION
SECTION 3 AREA 7
PARCEL 837
ZONED: MXD-3
5289/330
12/18/00

THE HOWARD RESEARCH AND DEVELOPMENT CORPORATION
13.075 AC.±
PARCEL 837
3245/2514
5289/330
PARCEL A

EMERSON SECTION 3 AREA 6
F-05-104
SDP-06-54

EMERSON
SECTION 2, PHASE 5B
FOREST CONSERVATION
HOA OPEN SPACE LOT 2
ZONED: MXD-3
PLAT 17366

COLUMBIA BUILDERS INC.
PARCEL A 4.3253± Ac.
PLAT 17669
SDP-06-113

EMERSON
2154
SINGLE FAMILY
RESIDENTIAL
PARCEL 837
PLAT 5721/430

25' STATE WETLAND BUFFER
PUBLIC DRAINAGE & UTILITY EASEMENT PLAT 17366
TRIBUTARY TO HAMMOND BRANCH
50' STREAM BUFFER
100 YR. FLOODPLAIN DRAINAGE UTILITY EASEMENT
PUBLIC DRAINAGE & UTILITY EASEMENT PLAT 17366

FUTURE ETERNAL RINGS DRIVE
FUTURE CURB & GUTTER
ETERNAL RINGS DRIVE (MINOR COLLECTOR) F-04-53
ETERNAL RINGS DRIVE (SOUTH)
YOUNG RIVERS COURT

START GUARD RAIL @ STA. 26+50
TEMPORARY TEE TURN AROUND STD. DETAIL R-5.08
PROPOSED TEMPORARY BITUMINOUS CURB
STA. 26+03
TEMPORARY DEAD END BARRICADE POSTS, STD. DETAIL R-5.06
LIMIT OF CONTRACT STATION 26+15
TEMP. ESD PRACTICE
STOP GUARD RAIL @ STA. 28+75
START TRANSITION SIDEWALK @ 28+80
STOP GUARD RAIL @ STA. 28+75
START TRANSITION SIDEWALK @ 28+50
STA: 31+50 LT. PROP. 36" X 36" TRAFFIC SIGN "ROAD ENDS 500 FT"
LIMIT OF CONTRACT STATION 31+62 TIE INTO EXISTING CURB, SIDEWALK AND PAVING
EX. RIP RAP AREA
TIE INTO EXISTING CURB @ STA. 31+62
EX. STREET LIGHT
PROP. STREET LIGHT
PROP. CURB & GUTTER
PROP. 4' SIDEWALK
PROP. 12" W.
EX. 12" WATER CONT. # 24-1920-D
EX. 8" WATER CONT. # 24-1920-D
EX. 8" SEWER CONT. # 24-1920-D
EX. 18" RCP
EX. 24" RCP
EX. 36" RCP
EX. 48" RCP
EX. GROUND 30' LEFT
EX. GROUND 30' RIGHT
EX. GROUND @ CENTERLINE (-6198)
18" RCCP TOP= 297.55
12" RCCP TOP= 293.15
60" RCCP TOP= 293.07
PROP. 18" RCCP CL. III
PROP. 15" RCCP CL. IV
PROP. 30" RCCP CL. IV
PROP. 12" RCP CL. IV
PROP. 15" RCCP CL. IV
PROP. 30" RCCP CL. IV
PROP. 18" RCCP CL. III
PROP. 15" RCCP CL. IV
PROP. 12" RCP CL. IV
PROP. 15" RCCP CL. IV
PROP. 30" RCCP CL. IV
PROP. 18" RCCP CL. III
PROP. 15" RCCP CL. IV
PROP. 12" RCP CL. IV
PROP. 15" RCCP CL. IV
PROP. 30" RCCP CL. IV
PHASE 1, STAGE 1
PHASE 2, STAGE 2
PHASE 2, STAGE 2.
FUTURE 15" (W)
HW 1
HW 2
M 5
M 9
M 10
M 11
I 1
I 2
I 3
I 3A
I 4
I 4A
E 4
6

STREET LIGHT TABLE

DWG. No.	STREET NAME	STATION	OFF-SET	FIXTURE / POLE TYPE	COMMENTS
	ETERNAL RINGS DR.	27+80	22' LT.	✱	
	ETERNAL RINGS DR.	29+80	22' LT.	✱	

STREET LIGHT LEGEND

✱ 150 WATT HIGH PRESSURE SODIUM (HPS) VAPOR, PREMIER

NOTE:
CONDUIT FOR STREET LIGHTING TO BE INSTALLED BY CONTRACTOR (3" PVC)

N 534,607.36
E 1,399,078.16

PROFESSIONAL CERTIFICATION
I HEREBY CERTIFY THAT THESE DRUMENTS WERE PREPARED OR APPROVED BY ME, AND THAT I AM A DULY LICENSED PROFESSIONAL ENGINEER UNDER THE LAWS OF THE STATE OF MARYLAND
LICENSE NO. 18068 EXPIRATION DATE: 10-8-16

FOR REVISION NO.2 ONLY
5/16/16
DATE
STATE OF MARYLAND — ROBERT LYNN CENTOLA — No. 18068 — PROFESSIONAL ENGINEER
PROFESSIONAL ENGR. NO. 18068
CENTURY ENGINEERING INC.

PLAN

EXPANSION JOINT WHEN NEXT TO WALL OR CURB
CONTROL JOINTS
¼" RADIUS ALONG EDGE
HEAVY BROOM FINISH PERPENDICULAR TO TRAFFIC FLOW
½" EXPANSION JOINT
4'-0"
2'
2'
4'

PLAN

CONTROL JOINTS, 1" DEEP, 3/8" RADIUS
½" PREMOLDED EXPANSION JOINT (@ 15' MAX)
6" x 6" x W2.0 x W2.0 MESH
COMPACTED SUBGRADE
6"
2"

SECTION

Road.cel/ALCWKD

Concrete Walk

Scale: 3/8" = 1'-0"

STORM DRAIN NOTES:
1. ALL RCCP STORM DRAINS ARE CLASS IV PIPE.
2. SEE SHEET 5 OF 28 FOR STORM DRAIN PROFILES.

NOTES:
1. SEE SHEET 6 OF 28 FOR CULVERT PROFILES
2. FOR UTILITY CROSSING DETAIL SEE SHEET 5 OF 28

DATA SOURCES

Existing topography shown hereon is a result of an aerial survey provided by Air Survey Corporation dated, 1998 supplemented with field run information performed by Daft McCune Walker, Inc. dated, 2010.

Property boundary shown hereon is a result of field run monumented boundary survey performed on or about June 25, 1999 by Daft McCune Walker, Inc.

Soils if shown provided by Soil Data Mart dated 2005 published by Natural Resources Conservation Services (NRCS)

Zoning information shown hereon provided by Howard County Department of Planning and Zoning, adopted by Howard County Council February 2, 2004.

Wetland and stream limits shown hereon were originally approved by Maryland Department of the Environment and the US Corps of Engineers in April 2001 and re-verified by these agencies in October 2009.

PROFILE

SCALE: HORIZ. 1"=50'
VERT. 1"=5'

HIGH PT STA 32+90.00
HIGH PT ELEV=308.50
PVI STA=31+70.00
PVI ELEV=307.10
K=50.00
LVC=240.00

ETERNAL RINGS DRIVE (SOUTH)
PHASE 1, STAGE 1

LVC=300.00
L=64.91

PVC STA 30+50.00 ELEV=303.50
PVC STA 30+50.00 ELEV=303.50
PVT STA 30+50.00 ELEV=303.50
PVT STA 32+50.00 ELEV=309.50
GRADE BREAK STA.= 32+90.00 ELEV.= 309.500

STA. 31+62 LIMIT OF EX. PAVING, CURB & GUTTER

LOW PT STA 28+57.00
LOW PT ELEV=300.00

PVC STA 28+15.00 ELEV=297.50
PVT STA 28+35.00 ELEV=298.50
PVC STA 28+45.00 ELEV=303.82
PVC STA 28+55.00 ELEV=304.00
PVT STA 28+65.00 ELEV=303.82
PVC STA 28+75.00 ELEV=303.82

STA. 26+15 LIMIT OF PAVING, CURB & GUTTER THIS PHASE

STOPPING SIGHT DISTANCE LVC=300.00 L=207.69 S=305 MPH

HIGH PT STA 24+34.66 HIGH PT ELEV.= 307.22

PVC STA 24+25.00 ELEV=304.89
PVT STA 24+25.00 ELEV=305.00

LOWEST LIMIT OF CONTRACT STA 23+15

FGL -1.25%
FGL -3.66%
FGL +3.00%
2.1%
3.5'
2%
0.667'

PHASE 1, STAGE 1

Professional Certification. I hereby certify that these documents were prepared or approved by me, and that I am a duly licensed professional engineer under the laws of the State of Maryland. License No. 26569, Expiration Date: 7-18-15

FOR REVISION NO. ONLY
3/25/14
DATE
STATE OF MARYLAND — DOUGLAS STEPHEN PROCTOR — No. 26569 — PROFESSIONAL ENGINEER
PROF. ENGR. NO. 26569

PROFESSIONAL CERTIFICATION
I HEREBY CERTIFY THAT THESE DOCUMENTS WERE PREPARED OR APPROVED BY ME, AND THAT I AM A DULY LICENSED PROFESSIONAL ENGINEER UNDER THE LAWS OF THE STATE OF MARYLAND, LICENSE NO. 16928, EXPIRATION DATE: 6/13/12

1/5/12
Date
STATE OF MARYLAND — MARK DAVID SNYDER — No. 16928 — PROFESSIONAL ENGINEER
Professional Engr. No. 16928

APPROVED: HOWARD COUNTY DEPT. OF PUBLIC WORKS
CHIEF, BUREAU OF HIGHWAYS — DATE 2-23-12

APPROVED: HOWARD COUNTY DEPT. OF PLANNING AND ZONING
CHIEF, DIVISION OF LAND DEVELOPMENT — DATE 3/01/12
CHIEF, DEVELOPMENT ENGINEERING DIVISION — DATE 2/29/12

Date	No.	Revision Description
5-16-16	⚠	REVISED SD AND PHASING LIMITS
2-10-14	⚠	SHOW PHASING/STAGING LIMITS & NEW OWNER

EMERSON

SECTION 3 – AREA 7 – PARCEL A
"Future Employment Use"

OWNER/DEVELOPER:
⚠ EMERSON DEVELOPMENT IX LLC
ONE TEXAS STATION COURT, SUITE 200
TIMONIUM, MD. 21093 (443) 689-8000

DMW
Daft-McCune-Walker, Inc.
200 East Pennsylvania Avenue
Towson, Maryland 21286
(410) 296-3333
Fax 296-4705

A Team of Land Planners, Landscape Architects, Engineers, Surveyors & Environmental Professionals

SUBDIVISION NAME: EMERSON		SECTION/AREA: SEC.3 AREA 7	LOT/PARCEL #: P/O 837
PLAT# OR L/F/ GRID #: 5289/330 / 15	ZONE: MXD-3	TAX/ZONE MAP: 47	ELECT. DISTRICT: 6TH
			CENSUS TRACT: 6069.03
WATER CODE: E-15		SEWER CODE: 7520000	

TITLE
ROAD CONSTRUCTION PLAN ETERNAL RINGS DRIVE NORTH ROAD PLAN AND PROFILE

Des By	TJC	Scale	1"=50'	Proj. No.	95054.W
Drn By	JSS	Date	11/17/11		3 of 30
Chk By	JDF	Approved			

F-11-036

n:\95054\95054-W\Final Plans\95054W03.R02

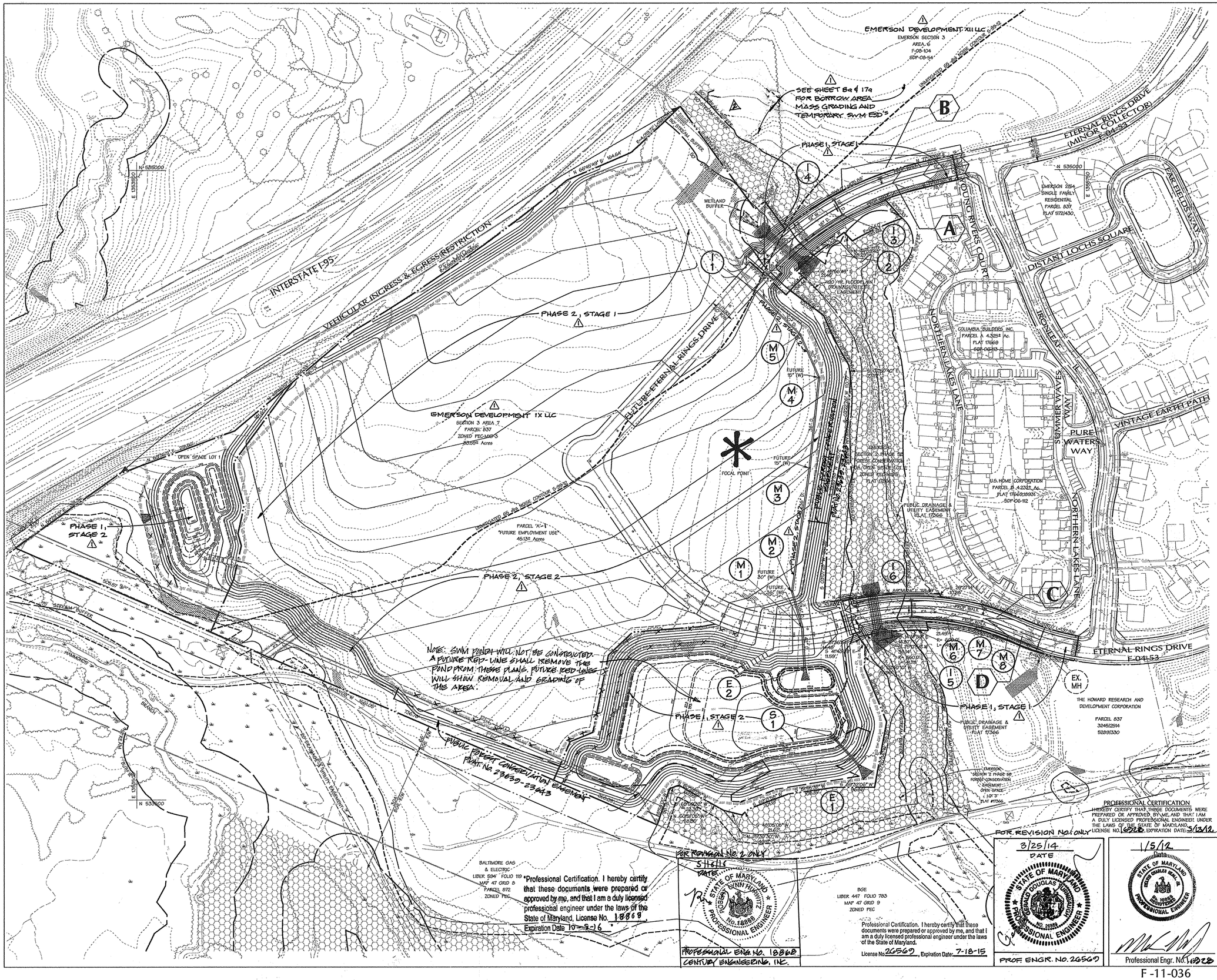

A=0.39 Ac. C=0.83 — A — PEC-MXD-3 85% IMP.

A=0.58 Ac. C=0.83 — B — PEC-MXD-3 85% IMP.

A=0.25 Ac. C=0.83 — C — PEC-MXD-3 85% IMP.

A=0.25 Ac. C=0.83 — D — PEC-MXD-3 85% IMP.

Legend

- EX. CURB & GUTTER
- EX. MAJOR CONTOURS 400
- EX. MINOR CONTOURS 402
- EX. STORM DRAIN EX. 21" RCP
- EX. SEWER EX. 8" S
- EX. WATER EX. 12" W
- EXISTING TREE LINE
- EXISTING WETLAND LIMIT WL
- PROPERTY LINE
- ROADWAY RIGHT-OF-WAY
- EX. FOREST CONSERVATION EASEMENT
- PROP. FOREST CONSERVATION EASEMENT
- 45' BGE SETBACK FOR CREDITED FOREST RETENTION AREAS
- 65 dBA NOISE LINE
- STEEP SLOPES 25% OR GREATER

DATA SOURCES

Existing topography shown hereon is a result of an aerial survey provided by Air Survey Corporation dated, 1998 supplemented with field run information performed by Daft McCune Walker, Inc. dated, 2010.

Property boundary shown hereon is a result of field run monumented boundary survey performed on or about June 25, 1999 by Daft McCune Walker, Inc.

Soils if shown provided by Soil Data Mart dated 2005 published by Natural Resources Conservation Services (NRCS)

Zoning information shown hereon provided by Howard County Department of Planning and Zoning, adopted by Howard County Council February 2, 2004.

Wetland and stream limits shown hereon were originally approved by Maryland Department of the Environment and the US Corps of Engineers in April 2001 and re-verified by these agencies in October 2009.

APPROVED: HOWARD COUNTY DEPT. OF PUBLIC WORKS

CHIEF, BUREAU OF HIGHWAYS — DATE 2-23-12

HOWARD COUNTY DEPT. OF PLANNING & ZONING

CHIEF, DEVELOPMENT ENGINEERING DIVISION — DATE 2/28/12

CHIEF, DIVISION OF LAND DEVELOPMENT — DATE 3/01/12

Date	No.	Revision Description
5-6-16	2	REVISED FOREST CONSERVATION AREAS
2-10-14	1	SHOW PHASING/STAGING LIMITS & NEW OWNER

EMERSON

SECTION 3 – AREA 7 – PARCEL A

"Future Employment Use"

OWNER/DEVELOPER:

EMERSON DEVELOPMENT IX LLC
ONE TEXAS STATION COURT, SUITE 200
TIMONIUM, MD. 21093 (443)680-8000

PROFESSIONAL CERTIFICATION

I HEREBY CERTIFY THAT THESE DOCUMENTS WERE PREPARED OR APPROVED BY ME, AND THAT I AM A DULY LICENSED PROFESSIONAL ENGINEER UNDER THE LAWS OF THE STATE OF MARYLAND, LICENSE NO. 6922, EXPIRATION DATE: 3/13/12

*Professional Certification. I hereby certify that these documents were prepared or approved by me, and that I am a duly licensed professional engineer under the laws of the State of Maryland, License No. 18869 Expiration Date 10-5-16.

FOR REVISION No.1 ONLY — 3/25/14 DATE — PROF ENGR. NO. 26560

FOR REVISION No.2 ONLY — 5-16-16 DATE — PROFESSIONAL ENG. NO. 18862 CENTURY ENGINEERING, INC.

Professional Certification. I hereby certify that these documents were prepared or approved by me, and that I am a duly licensed professional engineer under the laws of the State of Maryland. License No. 26560, Expiration Date: 7-18-15

1/5/12 Date — Professional Engr. No. 19828

Daft·McCune·Walker, Inc.
200 East Pennsylvania Avenue
Towson, Maryland 21286
(410) 296-3333
Fax 296-4705

A Team of Land Planners, Landscape Architects, Engineers, Surveyors & Environmental Professionals

SUBDIVISION NAME		SECTION/AREA		LOT/PARCEL #
EMERSON		SEC.3 AREA 7		P/O 837
PLAT# OR L/F	GRID #	ZONE	TAX/ZONE MAP	ELECT. DISTRICT	CENSUS TRACT
	15	MXD-3	47	6TH	6069.03
WATER CODE		SEWER CODE		

TITLE

FINAL PLAN
GRADING & STORMDRAIN DRAINAGE AREA MAP

Des By	TJC	Scale	1"=100'	Proj. No.	95054.W2
Drn By	JSS	Date	11/17/11	4 of 30	
Chk By	JDF	Approved			

F-11-036

n:\95054\95054-W\Final Plans\95054W04-SD01

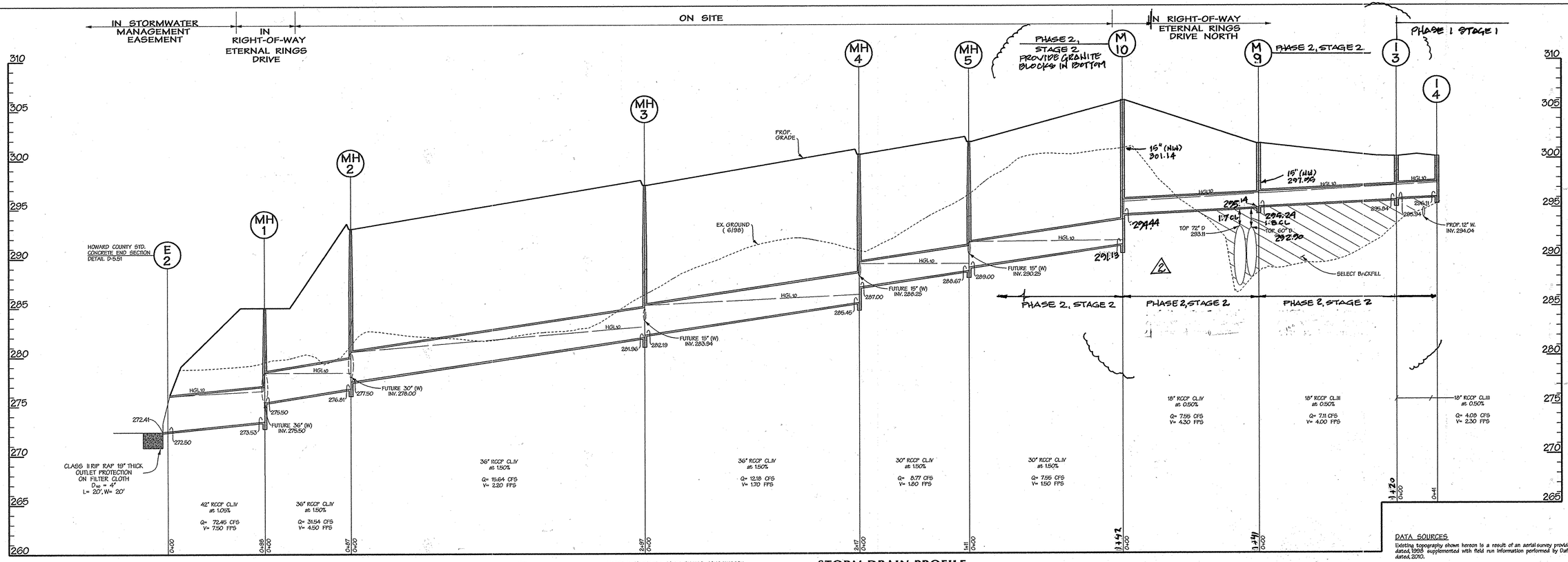

MAINTAIN 2' MINIMUM COVER DURING CONSTRUCTION

STORM DRAIN PROFILE

SCALE: 1"=50' HORIZ.
1"=5' VERT.

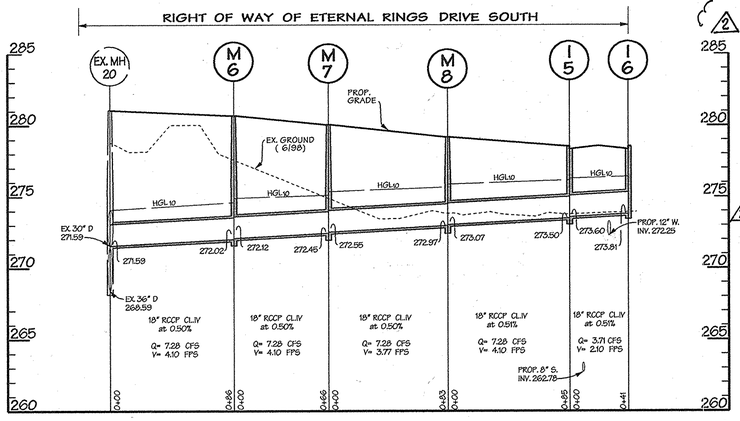

STORM DRAIN PROFILE

SCALE: 1"=50' HORIZ.
1"=5' VERT.

M-9	HC 48" PRECAST MANHOLE G-5.12	296.84 297.55	295.14	302.0±			ETERNAL RINGS DR. STA. 27+13.73 15' LT
M-10	SHA 60" PRECAST MANHOLE	299.44, 301.14	291.13	305.0±	SEE NOTE		ETERNAL RINGS DR. STA. 29+70.4 34' RT

STRUCTURE SCHEDULE

NO.	TYPE	INV. IN	INV. OUT	TOP ELEV.	REMARKS	LOCATION
M-1	SHA 84" PRECAST MANHOLE	275.50	275.53	285.00	SEE NOTE	ETERNAL RINGS DRIVE STA. 13+12
M-2	SHA 72" PRECAST MANHOLE	277.50	276.81	293.00	SEE NOTE	N 533,895.12, E 1,355,056.40
M-3	SHA 60" PRECAST MANHOLE	282.19	281.96	297.40	SEE NOTE	N 534,289.35, E 1,355,098.10
M-4	SHA 60" PRECAST MANHOLE	287.00	285.45	300.50	SEE NOTE	N 534,504.15, E 1,355,120.50
M-5	SHA 60" PRECAST MANHOLE	289.00	288.67	301.70	SEE NOTE	N 534,607.36, E 1,355,076.16
M-6	SHA 60" PRECAST MANHOLE	272.12	272.02	280.69		ETERNAL RINGS DRIVE STA. 9+59.22
M-7	SHA 60" PRECAST MANHOLE	272.45	272.55	280.05		ETERNAL RINGS DRIVE STA. 9+22.68
M-8	SHA 60" PRECAST MANHOLE	273.07	272.97	279.19		ETERNAL RINGS DRIVE STA. 8+05.40
I-1	A-5 INLET	-	301.40	305.90		ETERNAL RINGS DRIVE STA. 25+70.42
I-2	A-5 INLET	-	297.85	302.33		ETERNAL RINGS DRIVE STA. 27+04.59
I-3	A-10 INLET	295.94	295.84	300.46		ETERNAL RINGS DRIVE STA. 28+46.00
I-4	A-10 INLET	-	296.11	300.46		ETERNAL RINGS DRIVE STA. 28+50.00
I-5	A-10 INLET	293.60	273.50	278.45		ETERNAL RINGS DRIVE STA. 10+47.93
I-6	A-10 INLET	-	273.81	278.45		ETERNAL RINGS DRIVE STA. 10+47.93

NOTE:
STORM SEWER MANHOLES 1-5 SHALL HAVE A BEEHIVE GRATE IN LIEU OF A STANDARD LID, NEENAH R2561 OR EQUIVALENT.

PIPE SCHEDULE

SIZE	TYPE	LENGTH
18"	RCCP, CL. IV	663 LF
30"	RCCP, CL IV	253 LF
36"	RCCP, CL IV	601 LF
42"	RCCP, CL IV	98 LF
15"	RCCP CL IV	27 LF

R-2561
Inlet Frame, Beehive Grate

CATALOG NUMBER	GRATE TYPE	SQ. FT. OPEN	WEIR PERIMETER LINEAL FEET
R-2561	Beehive	2.0	6.7

Available Lid: R-1733

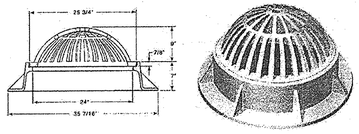

INLET FRAME, BEEHIVE GRATE

NOT TO SCALE

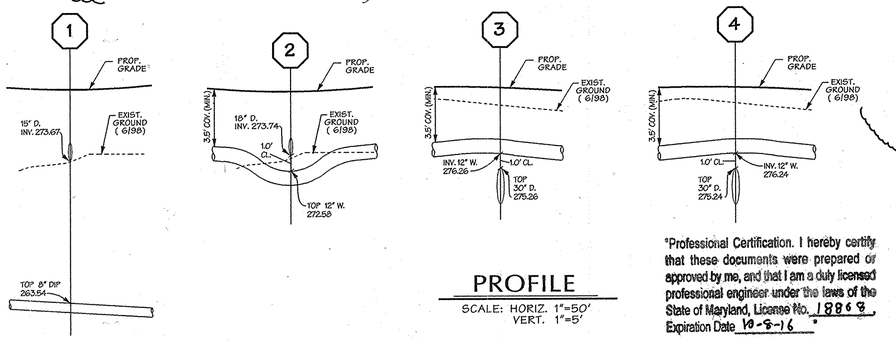

PROFILE

SCALE: HORIZ. 1"=50'
VERT. 1"=5'

*Professional Certification. I hereby certify that these documents were prepared or approved by me, and that I am a duly licensed professional engineer under the laws of the State of Maryland, License No. 18868 Expiration Date 10-8-16 *

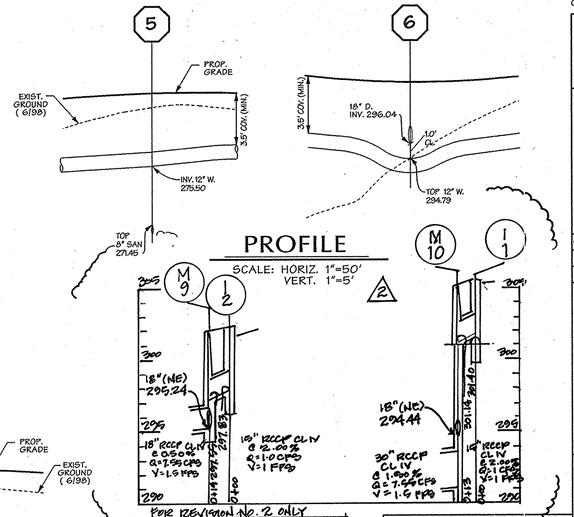

PER REVISION No. 2 ONLY
5/16/16
Date

PROFESSIONAL CERTIFICATION
I HEREBY CERTIFY THAT THESE DOCUMENTS WERE PREPARED OR APPROVED BY ME, AND THAT I AM A DULY LICENSED PROFESSIONAL ENGINEER UNDER THE LAWS OF THE STATE OF MARYLAND, LICENSE NO. 16222, EXPIRATION DATE: 5/13/12.

Professional Engr. No. 18868

1/5/12
Date

Professional Engr. No. 16222

DATA SOURCES

Existing topography shown hereon is a result of an aerial survey provided by Air Survey Corporation dated, 1998 supplemented with field run information performed by Daft McCune Walker, Inc. dated, 2010.

Property boundary shown hereon is a result of field run monumented boundary survey performed on or about June 25, 1999 by Daft McCune Walker, Inc.

Soils if shown provided by Soil Data Mart dated 2005 published by Natural Resources Conservation Services (NRCS)

Zoning information shown hereon provided by Howard County Department of Planning and Zoning, adopted by Howard County Council February 2, 2004.

Wetland and stream limits shown hereon were originally approved by Maryland Departments of the Environment and the US Corps of Engineers in April 2001 and re-verified by these agencies in October 2009.

APPROVED: HOWARD COUNTY DEPT. OF PUBLIC WORKS

CHIEF, BUREAU OF HIGHWAYS — DATE 2-23-12

HOWARD COUNTY DEPT. OF PLANNING & ZONING

CHIEF, DEVELOPMENT ENGINEERING DIVISION — DATE 2/28/12

CHIEF, DIVISION OF LAND DEVELOPMENT — DATE 3/01/12

Date	No.	Revision Description
2/16/16	2	REVISED SD PROFILE BETWEEN I-3 & I-1
2-10-14	1	SHOW NEW OWNER/DEVELOPER.

EMERSON

SECTION 3 – AREA 7 – PARCEL A

"Future Employment Use"

OWNER/DEVELOPER:
EMERSON DEVELOPMENT IX LLC
ONE TEXAS STATION COURT, SUITE 200
TIMONIUM, MD. 21093 (443) 689-8000

DMW
Daft-McCune-Walker, Inc.
200 East Pennsylvania Avenue
Towson, Maryland 21286
(410) 296-3333
Fax 296-4705

A Team of Land Planners, Landscape Architects, Engineers, Surveyors & Environmental Professionals

SUBDIVISION NAME		SECTION/AREA		LOT/PARCEL #
EMERSON		SEC.3 AREA 7		PART OF 837
PLAT# OR L/F	GRID #	ZONE	TAX/ZONE MAP	ELEC. DISTRICT	CENSUS TRACT
5289/330	15	MXD-3	47	6TH	6069.03
WATER CODE		SEWER CODE		
E-15		7520000		

TITLE

FINAL PLAN
STORM DRAIN PROFILES & DETAIL

Des By	TJC	Scale	1"=50'	Proj. No.	95054.W2
Drn By	JSS	Date	10/19/11	5 of 30	
Chk By	JDF	Approved			

F-11-036

n:\95054\95054-W1\Final Plans\95054W05.SD02

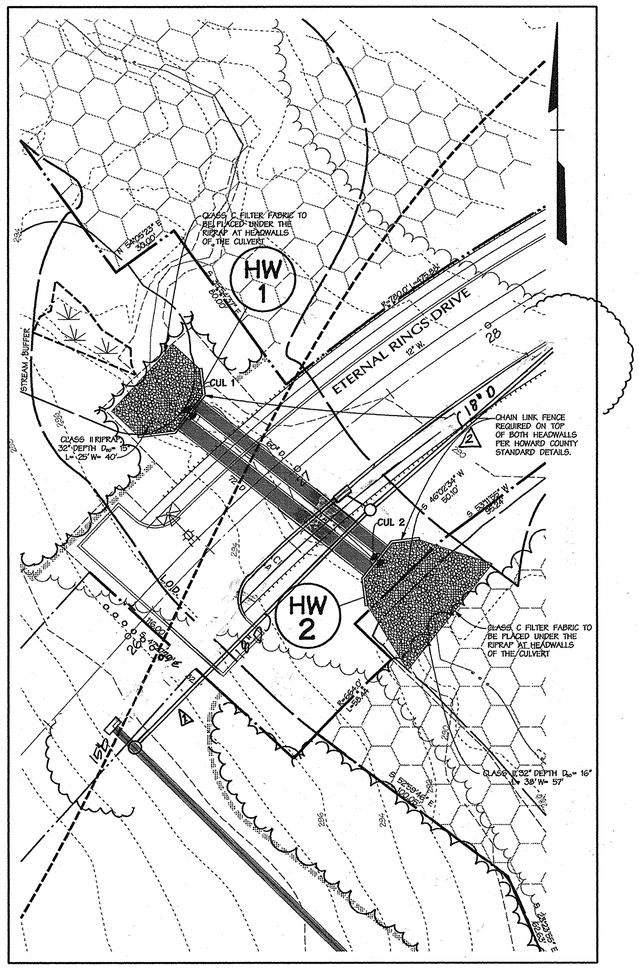

NORTH CULVERT

SCALE: 1"=30'

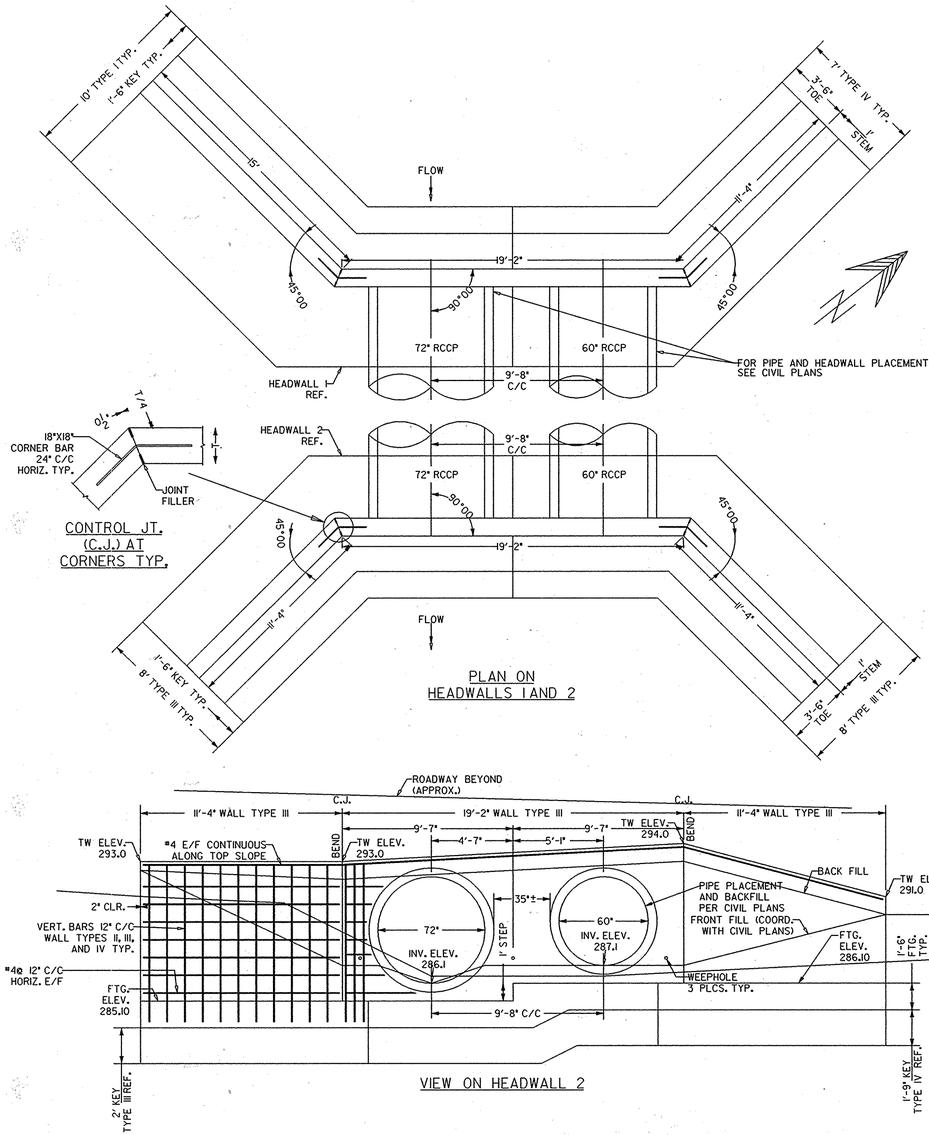

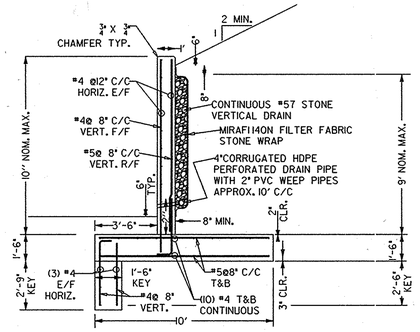

WALL TYPE I AND TYP. DRAIN

WALL TYPE II

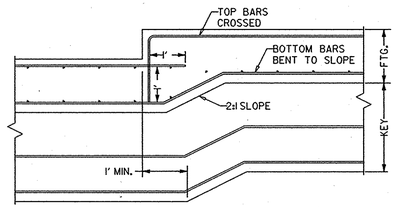

FOOTING (AND KEY) STEP (TYPICAL)

PROFESSIONAL CERTIFICATION

I HEREBY CERTIFY THAT THESE DOCUMENTS WERE PREPARED OR APPROVED BY ME, AND THAT I AM A DULY LICENSED PROFESSIONAL ENGINEER UNDER THE LAWS OF THE STATE OF MARYLAND

LICENSE NO.: 19868 EXPIRATION DATE: 10-9-16

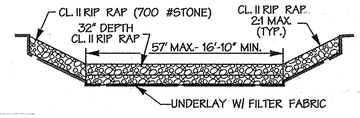

RIP RAP OUTFALL PROTECTION

N.T.S.

FOR REVISION NO. 2 ONLY

5/16/16

DATE

STATE OF MARYLAND ROBERT LYNN HURLEY No. 19868 PROFESSIONAL ENGINEER

PROFESSIONAL ENGR. NO. 19868

CENTURY ENGINEERING INC.

DATA SOURCES

Existing topography shown hereon is a result of an aerial survey provided by Air Survey Corporation dated, 1998 supplemented with field run information performed by Daft McCune Walker, Inc. dated, 2010.

Property boundary shown hereon is a result of field run monumented boundary survey performed on or about June 25, 1999 by Daft McCune Walker, Inc.

Soils if shown provided by Soil Data Mart dated 2005 published by Natural Resources Conservation Services (NRCS)

Zoning information shown hereon provided by Howard County Department of Planning and Zoning, adopted by Howard County Council February 2, 2004.

Wetland and stream limits shown hereon were originally approved by Maryland Departments of the Environment and the US Corps of Engineers in April 2001 and re-verified by these agencies in October 2009.

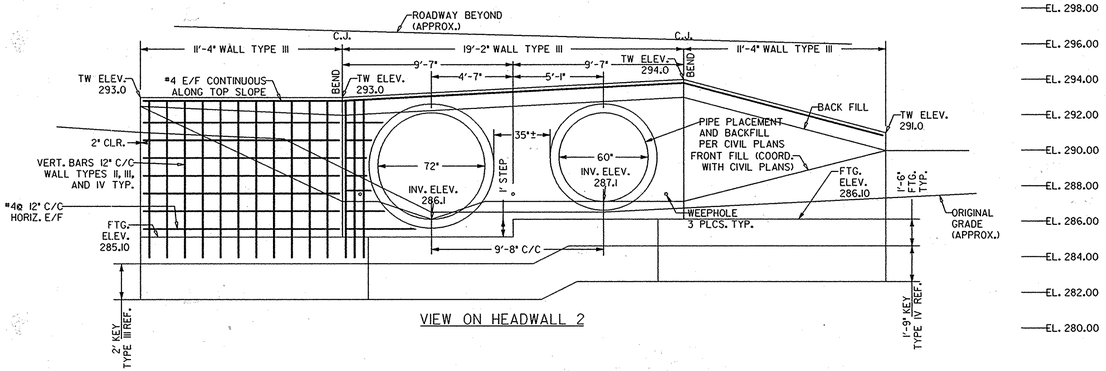

VIEW ON HEADWALL 2

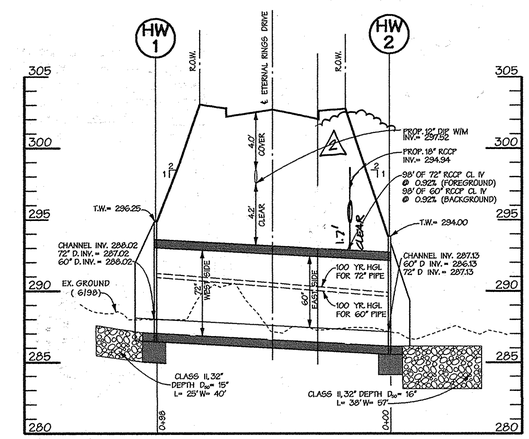

CULVERT 2 PROFILE

SCALE: 1"=30' HORIZ.
1"=5' VERT.

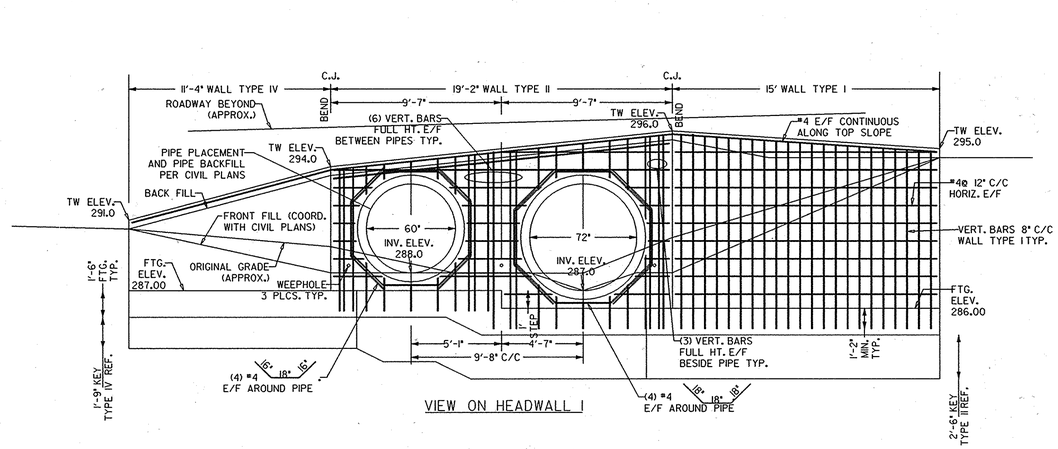

VIEW ON HEADWALL 1

PROFESSIONAL CERTIFICATION

I HEREBY CERTIFY THAT THESE PLANS WERE PREPARED OR APPROVED BY ME, AND THAT I AM A DULY LICENSED PROFESSIONAL ENGINEER UNDER THE LAWS OF THE STATE OF MARYLAND, LICENSE NO. 0028925 EXPIRATION DATE: 1/15/2012

FOR REINFORCEMENT DESIGN ONLY

PROFESSIONAL CERTIFICATION

I HEREBY CERTIFY THAT THESE DOCUMENTS WERE PREPARED OR APPROVED BY ME, AND THAT I AM A DULY LICENSED PROFESSIONAL ENGINEER UNDER THE LAWS OF THE STATE OF MARYLAND, LICENSE NO. 16228, EXPIRATION DATE: 5-17-12

1/5/12

Date

STATE OF MARYLAND JASON DAVID SMITH No. 16228 PROFESSIONAL ENGINEER

Professional Engr. No. 16228

APPROVED: HOWARD COUNTY DEPT. OF PUBLIC WORKS

CHIEF, BUREAU OF HIGHWAYS — DATE 2-23-12

HOWARD COUNTY DEPT. OF PLANNING & ZONING

CHIEF, DEVELOPMENT ENGINEERING DIVISION — DATE 2/20/12

CHIEF, DIVISION OF LAND DEVELOPMENT — DATE 3/01/12

Date	No.	Revision Description
5-16-16	2	REVISED SD IN PLAN VIEW & CROSSING
2-10-14	1	SHOW NEW OWNER/DEVELOPER

EMERSON

SECTION 3 – AREA 7 – PARCEL A

"Future Employment Use"

OWNER/DEVELOPER:
EMERSON DEVELOPMENT IX LLC
ONE TEXAS STATION COURT, SUITE 200
TIMONIUM, MD. 21093 (443) 687-8000

DMW
Daft McCune Walker, Inc.
200 East Pennsylvania Avenue
Towson, Maryland 21286
(410) 296-3333
Fax 296-4705

A Team of Land Planners, Landscape Architects, Engineers, Surveyors & Environmental Professionals

SUBDIVISION NAME: EMERSON		SECTION/AREA: SEC.3 AREA 7	LOT/PARCEL #: PART OF 837
PLAT # OR L/F: 5289/330	GRID #: 15	ZONE: MXD-3	TAX/ZONE MAP: 47
ELECT. DISTRICT: 6TH	CENSUS TRACT: 6069.03		
WATER CODE: E-15	SEWER CODE: 7520000		

TITLE: PHASE I, STAGE I

FINAL PLAN
NORTH CULVERT PLAN & PROFILE

Des By	TJC	Scale	AS SHOWN	Proj. No.	95054.W2
Drn By	JSS	Date	11/17/11	Sheet	6 of 30
Chk By	JDF	Approved			

F-11-036

n:\95054\95054.W\Final Plans\95054W06.DWG

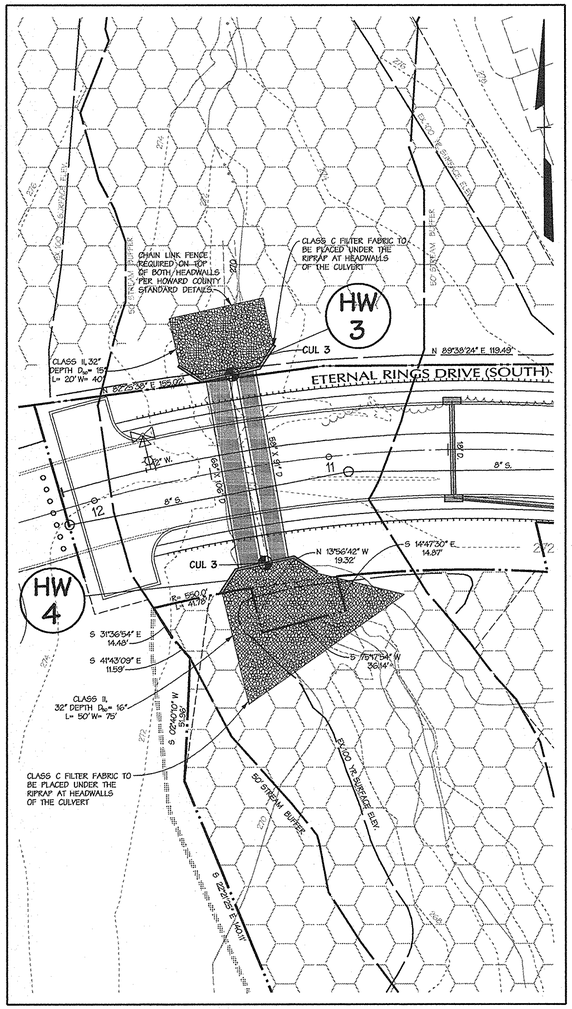

SOUTH CULVERT

SCALE: 1"=30'

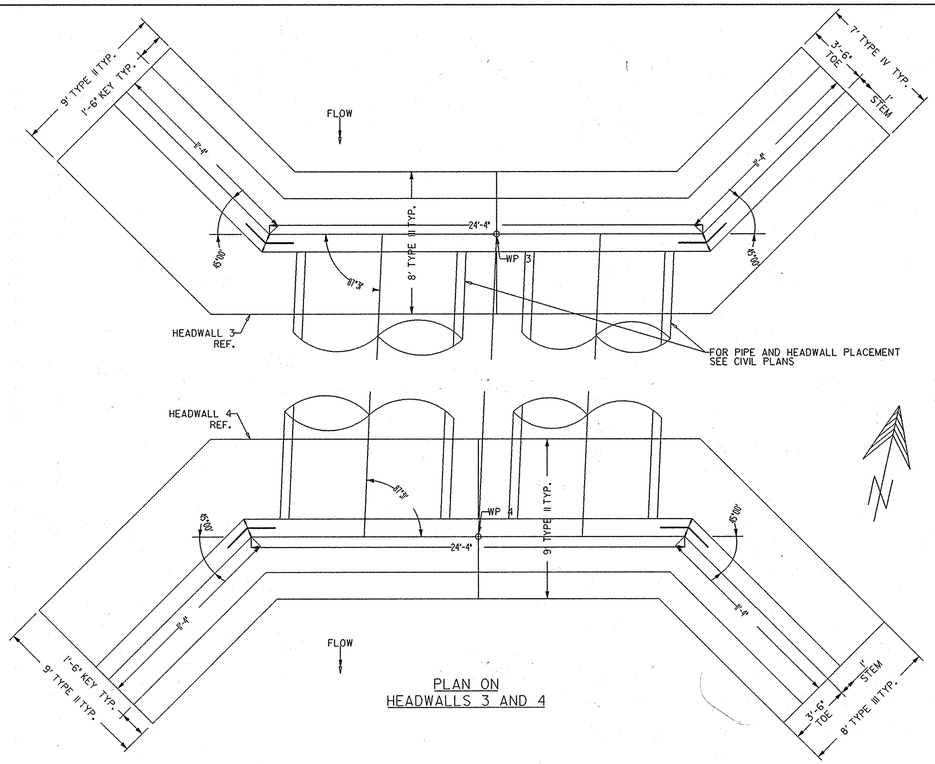

PLAN ON
HEADWALLS 3 AND 4

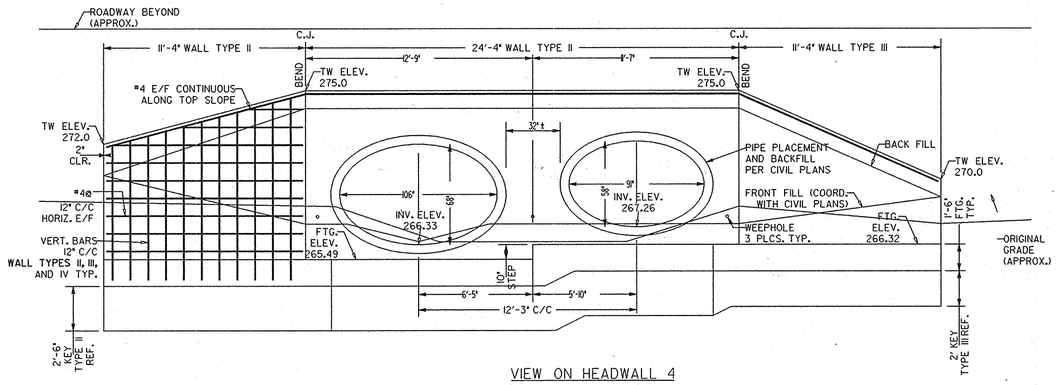

VIEW ON HEADWALL 4

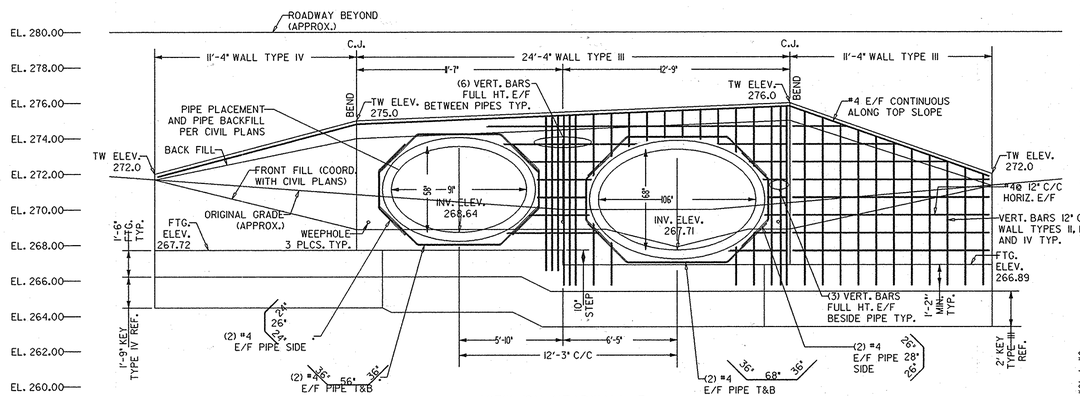

VIEW ON HEADWALL 3

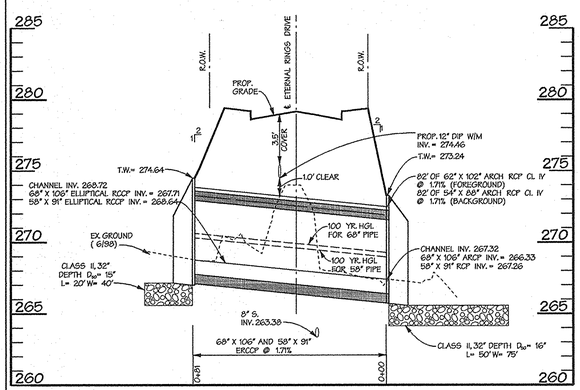

CULVERT 1 PROFILE

SCALE: HORIZ. 1"=30'
VERT. 1"=5'

GENERAL STRUCTURAL NOTES

1. THE FOUNDATION DESIGN FOR THIS STRUCTURE HAS BEEN BASED ON AN ASSUMED 2500 PSF NET SOIL BEARING CAPACITY AT THE BOTTOM OF FOOTINGS ELEVATION. SUB-GRADE PREPARATION AND FOOTING CONSTRUCTION SHALL BE DONE IN A MANNER SO AS TO ASSURE AVAILABILITY OF THIS MINIMUM BEARING CAPACITY.

2. THE CONTRACTOR SHALL ENGAGE AN INDEPENDENT GEOTECHNICAL ENGINEER TO INSPECT ALL FOOTING EXCAVATIONS, AND FIELD VERIFY THE SOIL CAPACITY AT THE BEARING STRATA IMMEDIATELY PRIOR TO PLACING FOOTING CONCRETE. SHOULD THE CAPACITY BE FOUND TO BE LESS THAN THAT INDICATED, THE CONTRACTOR SHALL STOP WORK IN THE REGION IN QUESTION, AND SHALL IMMEDIATELY NOTIFY THE ENGINEER. COPIES OF THE FIELD INSPECTION REPORTS SHALL BE FORWARDED TO THE ENGINEER WITHIN 48 HOURS AFTER TESTING.

3. BOTTOM OF ALL FOOTINGS SHALL BE THE ELEVATION INDICATED, OR 12" BELOW VIRGIN SOIL (REFER TO CIVIL DRAWINGS), OR (FOR EXTERNAL FOOTINGS) 3'-0" BELOW FINISHED GRADE, WHICHEVER IS DEEPER. UNDER NO CIRCUMSTANCES SHALL FOOTINGS BE PLACED ON FILL. PROVIDE FOOTING STEPS AS REQUIRED (REFER TO TYPICAL STEPPED FOOTING DETAIL).

4. ALL CONCRETE INDICATED ON THIS DRAWING SHALL BE 3000 PSI PORTLAND CEMENT NORMAL WEIGHT CONCRETE MEETING THE REQUIREMENTS OF MDOT MIX #2.

5. CONCRETE COVER OVER REINFORCEMENT SHALL BE THE FOLLOWING MINIMUM CLEAR DISTANCE:

FOOTINGS	3"
WALLS & PIERS BELOW GRADE	2"
SLABS ON GRADE (TOP)	2"
SLABS ON GRADE (BOTTOM)	2"
WALLS NOT BACK FILLED	¾"

6. DEFORMED STEEL REINFORCING BARS SHALL CONFORM TO ASTM A-615, GRADE 60. LAP ALL SPLICES 30 BAR DIAMETERS, MIN. (UNO).

7. PROVIDE CHAIRS AND BOLSTERS AS REQUIRED TO SECURELY HOLD REINFORCING BARS AND WIRE MESH IN PLACE UNTIL CONCRETE HAS CURED.

8. MOIST CURE ALL FRESH CONCRETE FOR AT LEAST 7 DAYS AFTER PLACING.

9. UNLESS NOTED OTHERWISE, CHAMFER ALL EXPOSED EDGES ¾".

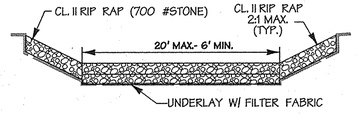

RIP RAP DETAIL
N.T.S.

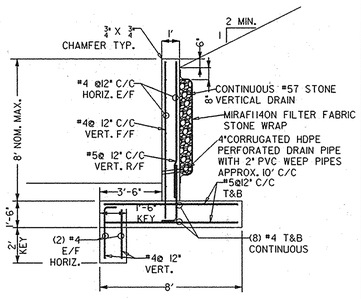

WALL TYPE III

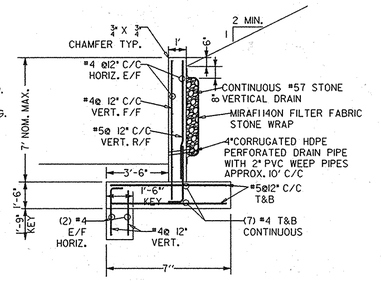

WALL TYPE IV

EL. 280.00
EL. 278.00
EL. 276.00
EL. 274.00
EL. 272.00
EL. 270.00
EL. 268.00

DATA SOURCES

Existing topography shown hereon is a result of an aerial survey provided by Air Survey Corporation dated 1998, supplemented with field run information performed by Daft McCune Walker, Inc. dated 2010.

Property boundary shown hereon is a result of field run monumented boundary survey performed on or about June 25, 1999 by Daft McCune Walker, Inc.

Soils if shown provided by Soil Data Mart dated 2005 published by Natural Resources Conservation Services (NRCS)

Zoning information shown hereon provided by Howard County Department of Planning and Zoning, adopted by Howard County Council February 2, 2004.

Wetland and stream limits shown hereon were originally approved by Maryland Department of the Environment and the US Corps of Engineers in April 2001 and re-verified by these agencies in October 2009.

APPROVED: HOWARD COUNTY DEPT. OF PUBLIC WORKS

CHIEF, BUREAU OF HIGHWAYS — DATE 2-23-12

HOWARD COUNTY DEPT. OF PLANNING & ZONING

CHIEF, DEVELOPMENT ENGINEERING DIVISION — DATE 2/28/12

CHIEF, DIVISION OF LAND DEVELOPMENT — DATE 3/6/12

STATE OF MARYLAND — JOSEPH D. REICHERT — No. 0028925 — PROFESSIONAL ENGINEER

PROFESSIONAL CERTIFICATION

I HEREBY CERTIFY THAT THESE PLANS WERE PREPARED OR APPROVED BY ME, AND THAT I AM A DULY LICENSED PROFESSIONAL ENGINEER UNDER THE LAWS OF THE STATE OF MARYLAND, LICENSE NO. 0028925 EXPIRATION DATE: 1/15/2012.

FOR REINFORCEMENT DESIGN ONLY

Date	No.	Revision Description
2-10-14	⚠	SHOW NEW OWNER/DEVELOPER

EMERSON

SECTION 3 – AREA 7 – PARCEL A

"Future Employment Use"

OWNER/DEVELOPER:
⚠ EMERSON DEVELOPMENT IX LLC
ONE TEXAS STATION COURT, SUITE 200
TIMONIUM, MD 21093 (443) 682-8000

PROFESSIONAL CERTIFICATION

I HEREBY CERTIFY THAT THESE DOCUMENTS WERE PREPARED OR APPROVED BY ME, AND THAT I AM A DULY LICENSED PROFESSIONAL ENGINEER UNDER THE LAWS OF THE STATE OF MARYLAND, LICENSE NO. 6928, EXPIRATION DATE: 5/13/12.

1/5/12
Date

STATE OF MARYLAND — JOHN D. FOSTER — No. 6928 — PROFESSIONAL ENGINEER

Professional Engr. No. 6928

SEE DRAWING 2 OF 4 FOR GENERAL (STRUCTURE) NOTES

SEE DRAWING 3 OF 4 FOR WALL TYPES I-4 AND MISC. DETAILS

DMW
Daft-McCune-Walker, Inc.
200 East Pennsylvania Avenue
Towson, Maryland 21286
(410) 296-3333
Fax 296-4705

A Team of Land Planners, Landscape Architects, Engineers, Surveyors & Environmental Professionals

SUBDIVISION NAME: EMERSON	SECTION/AREA: SEC.3 AREA 7	LOT/PARCEL #: PART OF 837	
PLAT # OR L/F: 9239/0330	GRID #: 15	ZONE: MXD-3	TAX/ZONE MAP: 47
ELECT. DISTRICT: 6TH	CENSUS TRACT: 6069.03		
WATER CODE: E-15	SEWER CODE: 7520000		

TITLE
PHASE I, STAGE I
FINAL PLAN
SOUTH CULVERT PLAN & PROFILE

Des By	TJC	Scale	1"=30'	Proj. No.	95054.W2
Drn By	JSS	Date	11/17/11	7 of 30	
Chk By	JDF	Approved			

F-11-036

n:\95054\95054.W\Final Plans\95054W07.SDO4

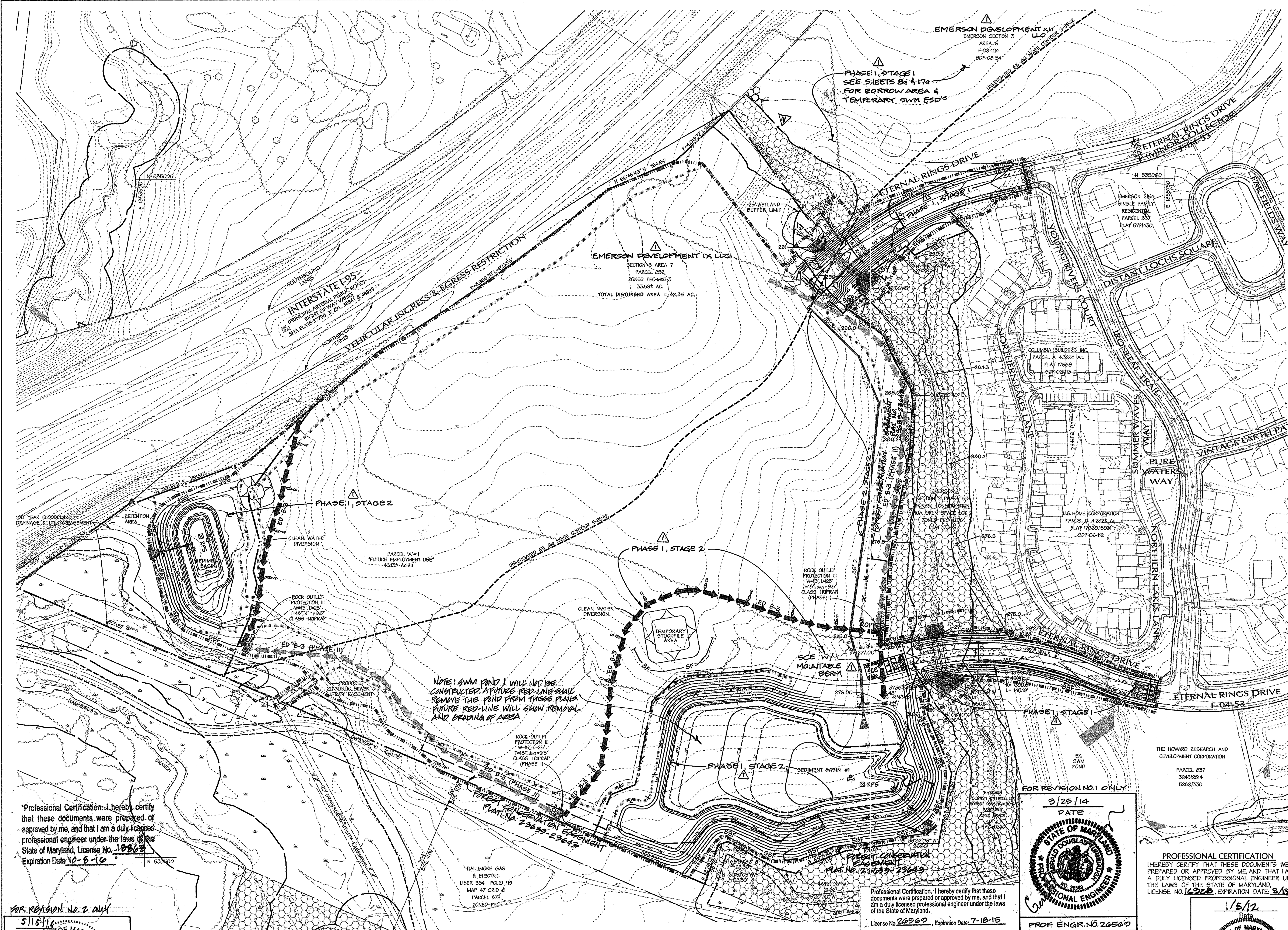

Legend

EX. CURB & GUTTER	
EX. MAJOR CONTOURS	400
EX. MINOR CONTOURS	402
EX. STORM DRAIN	EX. 21" RCP
EX. SEWER	EX. 8" S.
EX. WATER	EX. 8" W.
EXISTING TREE LINE	
EXISTING WETLAND LIMIT	
PROPERTY LINE	
ROADWAY RIGHT-OF-WAY	
PROPOSED LOT LINE	
PROPOSED EASEMENT	
PROPOSED CURB & GUTTER	
PROPOSED SIDEWALK	
PROP. STORM DRAIN	15" RCCP
PROP. SEWER	6" S.
PROP. WATER	4" W.
PROP. MAJOR CONTOURS	400
PROP. MINOR CONTOURS	402
SILT FENCE	SF — SF
LIMIT OF DISTURBANCE	
STABILIZED CONSTRUCTION ENTRANCE	SCE
MOUNTABLE BERM	
PROPOSED TREELINE	
FLOODPLAIN	
STREAM BUFFER	
REMOVABLE PUMPING STATION	⊠ RPS
STONE CHECK DAM	CD
EX. FOREST CONSERVATION EASEMENT	
PROP. FOREST CONSERVATION EASEMENT	
45' BGE SETBACK FOR CREDITED FOREST RETENTION AREAS	
EARTH DIKE - PHASE I (CLEAN WATER DIVERSION)	
EARTH DIKE - PHASE II	
UNMITIGATED 65 dba NOISE CONTOUR S-99-12	
WETLANDS	
FLOODPLAIN ELEVATION	280.7

NOTE

Earth dikes labeled for Phase II shall not be constructed until Phase I work is complete and all disturbed areas are stabilized.

DATA SOURCES

Existing topography shown hereon is a result of an aerial survey provided by Air Survey Corporation dated, 1998 supplemented with field run information performed by Daft McCune Walker, Inc. dated, 2010.

Property boundary shown hereon is a result of field run monumented boundary survey performed on or about June 25, 1999 by Daft McCune Walker, Inc.

Soils if shown provided by Soil Data Mart dated 2005 published by Natural Resources Conservation Services (NRCS)

Zoning information shown hereon provided by Howard County Department of Planning and Zoning, adapted by Howard County Council February 2, 2004.

Wetland and stream limits shown hereon were originally approved by Maryland Department of the Environment and the US Corps of Engineers in April 2001 and re-verified by these agencies in October 2009.

LIMIT OF DISTURBANCE: 1,854,511.82 SF.± / 42.57 AC.±

APPROVED: HOWARD COUNTY DEPT. OF PUBLIC WORKS

CHIEF, BUREAU OF HIGHWAYS — DATE 2-23-12

APPROVED: HOWARD COUNTY DEPT. OF PLANNING & ZONING

CHIEF, DEVELOPMENT ENGINEERING DIVISION — DATE 2/28/12

CHIEF, DIVISION OF LAND DEVELOPMENT — DATE 3/01/12

Date	No.	Revision Description
5-16-16	2	REVISED FOREST CONSERVATION AREAS
2-10-14	1	SHOW STAGING LIMITS & NEW OWNER/DEV.

EMERSON

SECTION 3 – AREA 7 – PARCEL A
"Future Employment Use"

OWNER/DEVELOPER:
EMERSON DEVELOPMENT IX LLC
ONE TEXAS STATION COURT, SUITE 200
TIMONIUM, MD. 21093 (443) 689-8000

DMW
Daft·McCune·Walker, Inc.
200 East Pennsylvania Avenue
Towson, Maryland 21286
(410) 296-3333
Fax 296-4705

A Team of Land Planners, Landscape Architects, Engineers, Surveyors & Environmental Professionals

SUBDIVISION NAME	SECTION/AREA	LOT/PARCEL #
EMERSON	SEC.3 AREA 7	PART OF 837

PLAT# OR L/F	GRID #	ZONE	TAX/ZONE MAP	ELECT. DISTRICT	CENSUS TRACT
5289/330	15	MXD-3	47	6TH	6069.03

WATER CODE	SEWER CODE
E-15	7520000

TITLE

FINAL PLAN
GRADING AND SEDIMENT CONTROL PLAN
PHASE 1, STAGE 2

Des. By	TJC	Scale	1"=100'	Proj. No. 95054.W2
Drn By	JSS	Date	11/17/11	8 of 30
Chk By	JDF	Approved		

n:\95054\95054.W\Final Plans\95054W08.G01

"Professional Certification. I hereby certify that these documents were prepared or approved by me, and that I am a duly licensed professional engineer under the laws of the State of Maryland, License No. 18868 Expiration Date 10-8-16

FOR REVISION NO. 2 ONLY
5/16/16
DATE
STATE OF MARYLAND · ROBERT LYNN HURWITZ · No. 18868 · PROFESSIONAL ENGINEER
PROFESSIONAL ENG. NO. 18868
CENTURY ENGINEERING INC.

THESE PLANS FOR SMALL POND CONSTRUCTION, SOIL EROSION AND SEDIMENT CONTROL MEET THE REQUIREMENTS OF THE HOWARD SOIL CONSERVATION DISTRICT.

HOWARD SOIL CONSERVATION DISTRICT — DATE 2/8/12

Professional Certification. I hereby certify that these documents were prepared or approved by me, and that I am a duly licensed professional engineer under the laws of the State of Maryland.
License No. 26569, Expiration Date: 7-18-15

FOR REVISION NO. 1 ONLY
3/25/14
DATE
STATE OF MARYLAND · GERALD DOUGLAS URINBAUGH · NO. 26569 · PROFESSIONAL ENGINEER
PROF. ENGR. NO. 26569

PROFESSIONAL CERTIFICATION
I HEREBY CERTIFY THAT THESE DOCUMENTS WERE PREPARED OR APPROVED BY ME, AND THAT I AM A DULY LICENSED PROFESSIONAL ENGINEER UNDER THE LAWS OF THE STATE OF MARYLAND, LICENSE NO. 16928, EXPIRATION DATE: 5/13/12

1/5/12
Date
STATE OF MARYLAND · MELVIN CHARLES BEALL JR. · No. 16928 · REGISTERED PROFESSIONAL ENGINEER
Professional Engr. No. 16928

DEVELOPERS CERTIFICATE:

I/WE CERTIFY THAT ALL DEVELOPMENT AND/OR CONSTRUCTION WILL BE DONE ACCORDING TO THESE PLANS AND THAT ANY RESPONSIBLE PERSONNEL INVOLVED IN THE CONSTRUCTION PROJECT WILL HAVE A CERTIFICATE OF ATTENDANCE AT A DEPARTMENT OF ENVIRONMENT APPROVED TRAINING PROGRAM FOR THE CONTROL OF SEDIMENT AND EROSION BEFORE BEGINNING THE PROJECT. I SHALL ENGAGE A REGISTERED PROFESSIONAL ENGINEER TO SUPERVISE POND CONSTRUCTION AND PROVIDE THE HOWARD SOIL CONSERVATION DISTRICT WITH AN "AS-BUILT" PLAN OF THE POND WITHIN 30 DAYS OF COMPLETION. I ALSO AUTHORIZE PERIODIC ON-SITE INSPECTIONS BY THE HOWARD SOIL CONSERVATION DISTRICT.

SIGNATURE OF DEVELOPER — DATE 1/5/12
PRINT NAME BELOW SIGNATURE
Robert Jenkins

ENGINEERS CERTIFICATE:

I CERTIFY THAT THIS PLAN FOR POND CONSTRUCTION, EROSION AND SEDIMENT CONTROL REPRESENTS A PRACTICAL AND WORKABLE PLAN BASED ON MY PERSONAL KNOWLEDGE OF THE SITE CONDITIONS. THIS PLAN WAS PREPARED IN ACCORDANCE WITH THE REQUIREMENTS OF THE HOWARD SOIL CONSERVATION DISTRICT. I HAVE NOTIFIED THE DEVELOPER THAT HE/SHE MUST ENGAGE A REGISTERED PROFESSIONAL ENGINEER TO SUPERVISE POND CONSTRUCTION AND PROVIDE THE HOWARD SOIL CONSERVATION DISTRICT WITH AN "AS-BUILT" PLAN OF THE POND WITHIN 30 DAYS OF COMPLETION.

SIGNATURE OF ENGINEER — DATE 1/5/12
PRINT NAME BELOW SIGNATURE
Melvin C. Beall, Jr.

F-11-036

FINAL PLAN

SCALE: 1"=100'

MCS

LEGEND

- SSF — SUPER SILT FENCE CHECK DAM
- DF — DIVERSION FENCE
- SF — SILT FENCE
- SSF — SUPER SILT FENCE
- LIMIT OF DISTRUBANCE
- TSSMC — TEMPORARY SOIL STABILIZATION MATTING CHANNEL APPLICATION
- CIP — CURB INLET PROTECTION
- MB — MOUNTABLE BERM
- RO III — ROCK OUTLET PROTECTION III

*Professional Certification. I hereby certify that these documents were prepared or approved by me, and that I am a duly licensed professional engineer under the laws of the State of Maryland, License No. 10868, Expiration Date 10-8-16.

FOR REVISION NO. 2 ONLY
5/16/16
Date

STATE OF MARYLAND — LYNN HUPFER — No. 10868 — PROFESSIONAL ENGINEER

PROFESSIONAL ENG NO. 10868
CENTURY ENGINEERING INC.

THESE PLANS FOR SMALL POND CONSTRUCTION, SOIL EROSION AND SEDIMENT CONTROL MEET THE REQUIREMENTS OF THE HOWARD SOIL CONSERVATION DISTRICT.

John K Robertson — 3/27/14
HOWARD SOIL CONSERVATION DISTRICT — DATE

DEVELOPERS CERTIFICATE:

I/WE CERTIFY THAT ALL DEVELOPMENT AND/OR CONSTRUCTION WILL BE DONE ACCORDING TO THESE PLANS AND THAT ANY RESPONSIBLE PERSONNEL INVOLVED IN THE CONSTRUCTION PROJECT WILL HAVE A CERTIFICATE OF ATTENDANCE AT A DEPARTMENT OF ENVIRONMENT APPROVED TRAINING PROGRAM FOR THE CONTROL OF SEDIMENT AND EROSION BEFORE BEGINNING THIS PROJECT. I SHALL ENGAGE A REGISTERED PROFESSIONAL ENGINEER TO SUPERVISE POND CONSTRUCTION AND PROVIDE THE HOWARD SOIL CONSERVATION DISTRICT WITH AN "AS-BUILT" PLAN OF THE POND WITHIN 30 DAYS OF COMPLETION. I ALSO AUTHORIZE PERIODIC ON-SITE INSPECTIONS BY THE HOWARD SOIL CONSERVATION DISTRICT.

James F. Knott Jr. — 3/24/14
SIGNATURE OF DEVELOPER — DATE
PRINT NAME BELOW SIGNATURE
James F. Knott Jr.

ENGINEERS CERTIFICATE:

I CERTIFY THAT THIS PLAN FOR POND CONSTRUCTION, EROSION AND SEDIMENT CONTROL REPRESENTS A PRACTICAL AND WORKABLE PLAN BASED ON MY PERSONAL KNOWLEDGE OF THE SITE CONDITIONS. THIS PLAN WAS PREPARED IN ACCORDANCE WITH THE REQUIREMENTS OF THE HOWARD SOIL CONSERVATION DISTRICT. I HAVE NOTIFIED THE DEVELOPER THAT HE/SHE MUST ENGAGE A REGISTERED PROFESSIONAL ENGINEER TO SUPERVISE POND CONSTRUCTION AND PROVIDE THE HOWARD SOIL CONSERVATION DISTRICT WITH AN "AS-BUILT" PLAN OF THE POND WITHIN 30 DAYS OF COMPLETION.

Gerald D. Turnbaugh — 3/25/14
SIGNATURE OF ENGINEER — DATE
PRINT NAME BELOW SIGNATURE
Gerald D. TURNBAUGH

PROFESSIONAL CERTIFICATION

I HEREBY CERTIFY THAT THESE DOCUMENTS WERE PREPARED OR APPROVED BY ME, AND THAT I AM A DULY LICENSED PROFESSIONAL ENGINEER UNDER THE LAWS OF THE STATE OF MARYLAND, LICENSE NO. 26569, EXPIRATION DATE 7-18-15

FOR REVISION NO. 1 ONLY
3-25-14
Date

GERALD DOUGLAS TURNBAUGH — No. 26569 — PROFESSIONAL ENGINEER

Professional Engr. No.

APPROVED: HOWARD COUNTY DEPT. OF PUBLIC WORKS

CHIEF, BUREAU OF HIGHWAYS — DATE 4-10-14

APPROVED: HOWARD COUNTY DEPT. OF PLANNING AND ZONING

CHIEF, DIVISION OF LAND DEVELOPMENT — DATE 4-16-14

CHIEF, DEVELOPMENT ENGINEERING DIVISION — DATE 4.1.14

Date	No.	Revision Description
5/16/16	2	REVISED SWM, ESD, ESC
2/10/14	1	SHOW PHASE 1, STAGE 1, S.E.C. CONTROLS (NEW SHEET)

EMERSON

SECTION 3 - AREA 7 - PARCEL A

"FUTURE EMPLOYMENT USE"

OWNER/DEVELOPER:

EMERSON DEVELOPMENT IX LLC
ONE TEXAS STATION CT. SUITE 200
TIMONIUM, MD 21093
(443) 689-8000

DMW
DAFT McCUNE WALKER INC
200 EAST PENNSYLVANIA TOWSON, MD 21286
P: 410 296 3333 F: 410 296 4705 WWW.DMW.COM
A TEAM OF LAND PLANNERS, LANDSCAPE ARCHITECTS, ENGINEERS, SURVEYORS & ENVIRONMENTAL PROFESSIONALS

SUBDIVISION NAME		SECT/AREA #		LOT/PARCEL #	
EMERSON		SEC. 3 AREA 7		PART OF 837	
PLAT # OR L/F	LOT #	ZONE	TAX MAP #	GRID #	PARCEL SQ FT/AC
5289/330	15	MDX-3	47	6th	6069.03
WATER CODE		SEWER CODE			
E-15		7520000			

TITLE

FINAL PLAN
GRADING, AND SEDIMENT CONTROL PLAN
PHASE 1, STAGE 1

Des. By	GDT	Scale	AS SHOWN
Drn. By	RC/GO	Date	3/24/14
Chk. By		Approved	

Proj. No. 95054.81

8a of 30

F -11-036

A:\95054\95054.81\ENGR\CAD FILES\SHEET FILES\95054.81_SEC1.DWG Mon, Mar 24, 2014

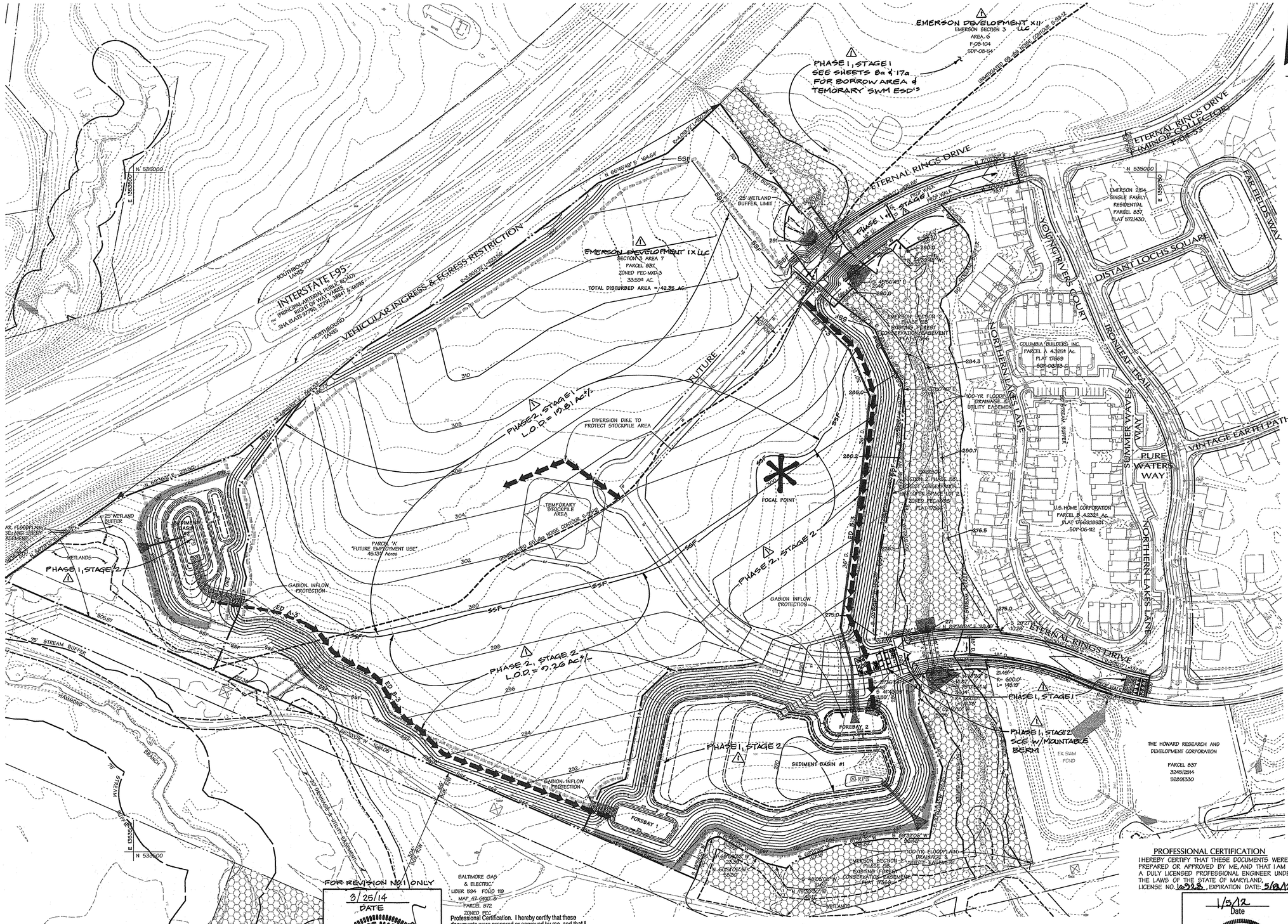

Legend

EX. CURB & GUTTER
EX. MAJOR CONTOURS 408
EX. MINOR CONTOURS 402
EX. STORM DRAIN 18" RCP
EX. SEWER 8" S.
EX. WATER 8" W.
EXISTING TREE LINE
EXISTING WETLAND LIMIT
PROPERTY LINE
ROADWAY RIGHT-OF-WAY
PROPOSED LOT LINE
PROPOSED EASEMENT
PROPOSED CURB & GUTTER
PROPOSED SIDEWALK
PROP. STORM DRAIN 15" RCP
PROP. SEWER 8" S.
PROP. WATER 4" W.
PROP. MAJOR CONTOURS 400
PROP. MINOR CONTOURS 402
SILT FENCE SF SF
SUPER SILT FENCE SSF SSF
LIMIT OF DISTURBANCE
STABILIZED CONSTRUCTION ENTRANCE SCE
MOUNTABLE BERM
PROPOSED TREELINE
FLOODPLAIN
STREAM BUFFER
REMOVABLE PUMPING STATION RPS
STONE CHECK DAM
EX. FOREST CONSERVATION EASEMENT
PROP. FOREST CONSERVATION EASEMENT
45' BGE SETBACK FOR CREDITED FOREST RETENTION AREAS
EARTH DIKE
FLOODPLAIN ELEVATION 280.7

NOTE
THE CONTRACTOR SHALL ONLY USE THE SOUTH EXTENSION OF ETERNAL RINGS DRIVE FOR CONSTRUCTION TRAFFIC.

DATA SOURCES
Existing topography shown hereon is a result of an aerial survey provided by Air Survey Corporation dated 1998 supplemented with field run information performed by Daft McCune Walker, Inc. dated 2010.

Property boundary shown hereon is a result of field run monumented boundary survey performed on or about June 25, 1999 by Daft McCune Walker, Inc.

Soils if shown provided by Soil Data Mart dated 2009 published by Natural Resources Conservation Services (NRCS)

Zoning information shown hereon provided by Howard County Department of Planning and Zoning, adapted by Howard County Council February 2, 2004.

Wetland and stream limits shown hereon were originally approved by Maryland Department of the Environment and the US Corps of Engineers in April 2001 and re-verified by these agencies in October 2008.

LIMIT OF DISTURBANCE: 1,854,511.82 SF.± / 42.57 AC.±

APPROVED: HOWARD COUNTY DEPT. OF PUBLIC WORKS

CHIEF, BUREAU OF HIGHWAYS — DATE 2-23-12

APPROVED: HOWARD COUNTY DEPT. OF PLANNING & ZONING

CHIEF, DEVELOPMENT ENGINEERING DIVISION — DATE 2/28/12

CHIEF, DIVISION OF LAND DEVELOPMENT — DATE 3/21/12

Date	No.	Revision Description
2-10-16	1	SHOW PHASING/STAGING & NEW OWNER/DEV.

EMERSON

SECTION 3 – AREA 7 – PARCEL A
"Future Employment Use"

OWNER/DEVELOPER:
EMERSON DEVELOPMENT IX LLC
ONE TEXAS STATION COURT, SUITE 200
TIMONIUM, MD 21093 (443)687-8000

DMW
Daft-McCune-Walker, Inc.
200 East Pennsylvania Avenue
Towson, Maryland 21286
(410) 296-3333
Fax 296-4705

A Team of Land Planners, Landscape Architects, Engineers, Surveyors & Environmental Professionals

PROFESSIONAL CERTIFICATION
I HEREBY CERTIFY THAT THESE DOCUMENTS WERE PREPARED OR APPROVED BY ME, AND THAT I AM A DULY LICENSED PROFESSIONAL ENGINEER UNDER THE LAWS OF THE STATE OF MARYLAND, LICENSE NO. 16928, EXPIRATION DATE: 5/8/12

1/5/12
Date

STATE OF MARYLAND — MELVIN C. BAAFI, JR. — No. 16928 — PROFESSIONAL ENGINEER

Professional Engr. No. 16928

FOR REVISION NO. 1 ONLY

3/25/14
DATE

STATE OF MARYLAND — RICHARD DOUGLAS THOMPSON — NO. 26560 — PROFESSIONAL ENGINEER

PROF. ENGR. NO. 26560

Professional Certification. I hereby certify that these documents were prepared or approved by me, and that I am a duly licensed professional engineer under the laws of the State of Maryland.
License No. 26560, Expiration Date: 7-18-15

THESE PLANS FOR SMALL POND CONSTRUCTION, SOIL EROSION AND SEDIMENT CONTROL MEET THE REQUIREMENTS OF THE HOWARD SOIL CONSERVATION DISTRICT.

HOWARD SOIL CONSERVATION DISTRICT — DATE 2/28/12

DEVELOPERS CERTIFICATE:
I/WE CERTIFY THAT ALL DEVELOPMENT AND/OR CONSTRUCTION WILL BE DONE ACCORDING TO THESE PLANS AND THAT ANY RESPONSIBLE PERSONNEL INVOLVED IN THE CONSTRUCTION PROJECT WILL HAVE A CERTIFICATE OF ATTENDANCE AT A DEPARTMENT OF ENVIRONMENT APPROVED TRAINING PROGRAM FOR THE CONTROL OF SEDIMENT AND EROSION BEFORE BEGINNING THE PROJECT. I SHALL ENGAGE A REGISTERED PROFESSIONAL ENGINEER TO SUPERVISE POND CONSTRUCTION AND PROVIDE THE HOWARD SOIL CONSERVATION DISTRICT WITH AN "AS-BUILT" PLAN OF THE POND WITHIN 30 DAYS OF COMPLETION. I ALSO AUTHORIZE PERIODIC ON-SITE INSPECTIONS BY THE HOWARD SOIL CONSERVATION DISTRICT.

SIGNATURE OF DEVELOPER — DATE 1/5/12
PRINT NAME BELOW SIGNATURE
Robert Jenkins

ENGINEERS CERTIFICATE:
I CERTIFY THAT THIS PLAN FOR POND CONSTRUCTION, EROSION AND SEDIMENT CONTROL REPRESENTS A PRACTICAL AND WORKABLE PLAN BASED ON MY PERSONAL KNOWLEDGE OF THE SITE CONDITIONS. THIS PLAN WAS PREPARED IN ACCORDANCE WITH THE REQUIREMENTS OF THE HOWARD SOIL CONSERVATION DISTRICT. I HAVE NOTIFIED THE DEVELOPER THAT HE/SHE MUST ENGAGE A REGISTERED PROFESSIONAL ENGINEER TO SUPERVISE POND CONSTRUCTION AND PROVIDE THE HOWARD SOIL CONSERVATION DISTRICT WITH AN "AS-BUILT" PLAN OF THE POND WITHIN 30 DAYS OF COMPLETION.

SIGNATURE OF ENGINEER — DATE 1/5/12
PRINT NAME BELOW SIGNATURE
Melvin C. Baafi, Jr.

SUBDIVISION NAME	EMERSON
SECTION/AREA	SEC.3 AREA 7
LOT/PARCEL #	PART OF 837
PLAT# OR L/F	
GRID #	15
ZONE	MXD-3
TAX/ZONE MAP	47
ELECT. DISTRICT	6TH
CENSUS TRACT	6069.03
WATER CODE	
SEWER CODE	

TITLE
FINAL PLAN
GRADING AND SEDIMENT CONTROL PLAN
PHASE 2, STAGES 1 & 2

Des By	TJC	Scale	1"=100'	Proj. No.	95054.W2
Drn By	JSS	Date	11/17/11	9	of 30
Chk By	JDF	Approved			

F-11-036

n:\95054\95054-W\Final Plans\95054W09.DGN

FINAL PLAN

SCALE: 1"=100'

LEGEND

- SSF — SUPER SILT FENCE
- J SSF — CHECK DAM
- DF — DIVERSION FENCE
- SF — SILT FENCE
- SSF — SUPER SILT FENCE
- LIMIT OF DISTRUBANCE
- TSSMC — TEMPORARY SOIL STABILIZATION MATTING CHANNEL APPLICATION
- CIP — CURB INLET PROTECTION
- MB — MOUNTABLE BERM
- RO — ROCK OUTLET PROTECTION III

THESE PLANS FOR SMALL POND CONSTRUCTION, SOIL EROSION AND SEDIMENT CONTROL MEET THE REQUIREMENTS OF THE HOWARD SOIL CONSERVATION DISTRICT

John R. Robertson — HOWARD SOIL CONSERVATION DISTRICT — 3/27/14 DATE

DEVELOPERS CERTIFICATE:

I/WE CERTIFY THAT ALL DEVELOPMENT AND/OR CONSTRUCTION WILL BE DONE ACCORDING TO THESE PLANS AND THAT ANY RESPONSIBLE PERSONNEL INVOLVED IN THE CONSTRUCTION PROJECT WILL HAVE A CERTIFICATE OF ATTENDANCE AT A DEPARTMENT OF ENVIRONMENT APPROVED TRAINING PROGRAM FOR THE CONTROL OF SEDIMENT AND EROSION BEFORE BEGINNING THE PROJECT. I SHALL ENGAGE A REGISTERED PROFESSIONAL ENGINEER TO SUPERVISE POND CONSTRUCTION AND PROVIDE THE HOWARD SOIL CONSERVATION DISTRICT WITH AN "AS-BUILT" PLAN OF THE POND WITHIN 30 DAYS OF COMPLETION. I ALSO AUTHORIZE PERIODIC ON-SITE INSPECTIONS BY THE HOWARD SOIL CONSERVATION DISTRICT.

SIGNATURE OF DEVELOPER — 3/24/14 DATE
PRINT NAME BELOW SIGNATURE
James F. Knotts, Jr.

ENGINEERS CERTIFICATE:

I CERTIFY THAT THIS PLAN FOR POND CONSTRUCTION, EROSION AND SEDIMENT CONTROL REPRESENTS A PRACTICAL AND WORKABLE PLAN BASED ON MY PERSONAL KNOWLEDGE OF THE SITE CONDITIONS. THIS PLAN WAS PREPARED IN ACCORDANCE WITH THE REQUIREMENTS OF THE HOWARD SOIL CONSERVATION DISTRICT. I HAVE NOTIFIED THE DEVELOPER THAT HE/SHE MUST ENGAGE A REGISTERED PROFESSIONAL ENGINEER TO SUPERVISE POND CONSTRUCTION AND PROVIDE THE HOWARD SOIL CONSERVATION DISTRICT WITH AN "AS-BUILT" PLAN OF THE POND WITHIN 30 DAYS OF COMPLETION.

SIGNATURE OF ENGINEER — 3/25/14 DATE
PRINT NAME BELOW SIGNATURE
Gerald D. Turnbaugh

PROFESSIONAL CERTIFICATION

I HEREBY CERTIFY THAT THESE DOCUMENTS WERE PREPARED OR APPROVED BY ME, AND THAT I AM A DULY LICENSED PROFESSIONAL ENGINEER UNDER THE LAWS OF THE STATE OF MARYLAND, LICENSE NO. 26569, EXPIRATION DATE 7-18-15

FOR REVISION NO. 1 ONLY
3-25-14 Date

STATE OF MARYLAND — GERALD DOUGLAS TURNBAUGH — NO. 26569 — PROFESSIONAL ENGINEER

Professional Engr. No. F -11-036

APPROVED: HOWARD COUNTY DEPT. OF PUBLIC WORKS

CHIEF, BUREAU OF HIGHWAYS — 4-10-14 DATE

APPROVED: HOWARD COUNTY DEPT. OF PLANNING AND ZONING

CHIEF, DIVISION OF LAND DEVELOPMENT — 4-16-14 DATE

CHIEF, DEVELOPMENT ENGINEERING DIVISION — 4/1/14 DATE

Date	No.	Revision Description
2/10/14	1	SHOW PHASE 1, STAGE 1, S.E.C. CONTROLS (NEW SHEET)

EMERSON

SECTION 3 - AREA 7 - PARCEL A

"FUTURE EMPLOYMENT USE"

OWNER/DEVELOPER:

EMERSON DEVELOPMENT IX LLC
ONE TEXAS STATION CT. SUITE 200
TIMONIUM, MD 21093
(443) 689-8000

DMW
DAFT McCUNE WALKER INC
200 EAST PENNSYLVANIA TOWSON, MD 21286
P: 410 296 3333 F: 410 296 4705 WWW.DMW.COM
A TEAM OF LAND PLANNERS, LANDSCAPE ARCHITECTS, ENGINEERS, SURVEYORS & ENVIRONMENTAL PROFESSIONALS

SUBDIVISION NAME			SECTION/AREA		LOT/PARCEL #	
EMERSON			SEC. 3 AREA 7		PART OF 837	
PLAT # OR L.F.	FOLIO	ZONE	TAX MAP/GRID/ PARCEL	TAX DIST.	CENSUS TRACT	
5289/330	15	MDX-3	47	6th	6069.03	
WATER CODE		SEWER CODE				
E-15					7520000	

TITLE
FINAL PLAN
GRADING, AND SEDIMENT CONTROL PLAN
PHASE 1, STAGE 1

Des. By GDT	Scale AS SHOWN	Proj. No. 95054.81	8a of 30
Drn. By RC/GO	Date 3/24/14		
Chk. By	Approved		

A:\95054\95054-81\ENGR\CAD FILES\SHEET FILES\95054-81_SEC1.DWG Mon, Mar 24, 2014

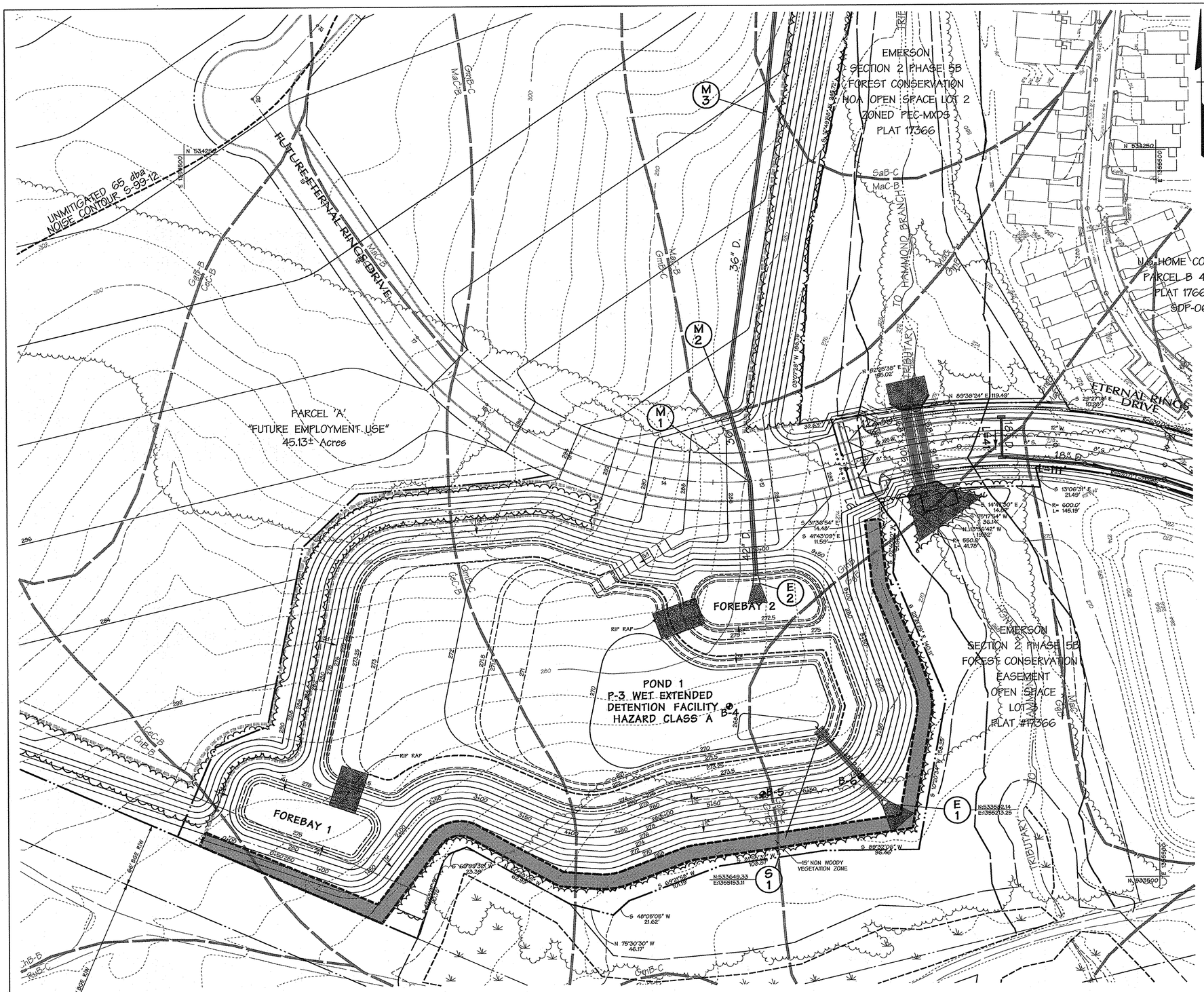

PLAN
1"=50'

Legend

EX. CURB & GUTTER	
EX. MAJOR CONTOURS	400
EX. MINOR CONTOURS	402
EX. STORM DRAIN	EX. 21" RCP
EX. SEWER	EX. 8" S.
EX. WATER	EX. 8" W.
EXISTING TREE LINE	
EXISTING WETLAND LIMIT	WL
PROPERTY LINE	
ROADWAY RIGHT-OF-WAY	
PROPOSED LOT LINE	
PROPOSED EASEMENT	
PROPOSED CURB & GUTTER	
PROPOSED SIDEWALK	
PROP. STORM DRAIN	15" RCP
PROP. SEWER	8" S.
PROP. WATER	4" W.
PROP. MAJOR CONTOURS	400
PROP. MINOR CONTOURS	402
SOIL BORING	B-4
NON WOODY VEGETATION ZONE	

BASIN 1 TABLE

BASIN NUMBER		1
EXISTING DRAINAGE AREA: ACRES		31.28
PROPOSED DRAINAGE AREA: ACRES		31.28
STORAGE REQUIRED: CUBIC FEET	CLEAN OUT	28,152
	WET	28,152
	DRY	56,304
	TOTAL	112,608
STORAGE PROVIDED: CUBIC FEET	CLEAN OUT	28,152
	WET	51,117
	DRY	220,544
	TOTAL	299,823
EXISTING GROUND ELEVATION		272.0
TOP EMBANKMENT ELEVATION		280.0
EMERGENCY SPILLWAY CREST ELEVATION		N/A
RISER CREST ELEVATION		274.50
WET STORAGE ELEVATION		272.00
CLEANOUT ELEVATION		270.95
BOTTOM ELEVATION		268.00
Q INTO BASIN (C.F.S.) 10 YR		152.80
Q OUT BARREL (C.F.S.) 10 YR		28.60
Q OUT EMERGENCY SPILLWAY		N/A
BASIN DEPTH	WET	2.00'
	DRY	2.50'
	TOTAL	4.50'
DESIGN HIGHWATER	100 YR	274.84'
FREEBOARD PROVIDED	100 YR	5.16'
BARREL DIAMETER		48"
RISER DIAMETER		8' X 8'
EMERGENCY SPILLWAY WIDTH		N/A
WET STORAGE ZONE		268.00-272.00
DRY STORAGE ZONE		272.00-274.50
BOTTOM DIMENSIONS (AVERAGE)		170' X 90'

DATA SOURCES

Existing topography shown hereon is a result of an aerial survey provided by Air Survey Corporation dated, 1998 supplemented with field run information performed by Daft-McCune Walker, Inc. dated, 2010.

Property boundary shown hereon is a result of field run monumented boundary survey performed on or about June 25, 1999 by Daft McCune Walker, Inc.

Soils if shown provided by Soil Data Mart dated 2005 published by Natural Resources Conservation Services (NRCS).

Zoning information shown hereon provided by Howard County Department of Planning and Zoning, adopted by Howard County Council February 2, 2004.

Wetland and stream limits shown hereon were originally approved by Maryland Department of the Environment and the US Corps of Engineers in April 2001 and re-verified by these agencies in October 2009.

LIMIT OF DISTURBANCE: 1,854,511.82 SF.± / 42.57 AC.±

APPROVED: HOWARD COUNTY DEPT. OF PUBLIC WORKS

CHIEF, BUREAU OF HIGHWAYS — DATE 2-23-12

HOWARD COUNTY DEPT. OF PLANNING & ZONING

CHIEF, DEVELOPMENT ENGINEERING DIVISION — DATE 2/28/12

CHIEF, DIVISION OF LAND DEVELOPMENT — DATE 3/01/12

Date	No.	Revision Description
2-10-14	⚠1	UPDATE OWNER/DEVELOPER INFO.

EMERSON

SECTION 3 – AREA 7 – PARCEL A
"Future Employment Use"

OWNER/DEVELOPER:
⚠1 EMERSON DEVELOPMENT IX LLC
ONE TEXAS STATION COURT, SUITE 200
TIMONIUM, MD 21093 (443)689-8000

OPERATION, MAINTENANCE AND INSPECTION

INSPECTION OF THE PONDS SHOWN HEREON SHALL BE PERFORMED AT LEAST ANNUALLY, IN ACCORDANCE WITH THE CHECKLIST AND REQUIREMENT CONTAINED WITHIN USDA, SCS "STANDARDS AND SPECIFICATIONS FOR PONDS" (MD-378). THE POND OWNER(S) AND ANY HEIRS, SUCCESSORS, OR ASSIGNS SHALL BE RESPONSIBLE FOR THE SAFETY OF THE POND AND THE CONTINUED OPERATION, SURVEILLANCE, INSPECTION, AND MAINTENANCE THEREOF. THE POND OWNER(S) SHALL PROMPTLY NOTIFY THE SOIL CONSERVATION DISTRICT OF ANY UNUSUAL OBSERVATIONS THAT MAY BE INDICATIONS OF DISTRESS SUCH AS EXCESSIVE SEEPAGE, TURBID SEEPAGE, SLIDING OR SLUMPING.

PROFESSIONAL CERTIFICATION

I HEREBY CERTIFY THAT THESE DOCUMENTS WERE PREPARED OR APPROVED BY ME, AND THAT I AM A DULY LICENSED PROFESSIONAL ENGINEER UNDER THE LAWS OF THE STATE OF MARYLAND, LICENSE NO. 16924, EXPIRATION DATE: 5/12/12

DMW
Daft-McCune-Walker, Inc.
200 East Pennsylvania Avenue
Towson, Maryland 21286
(410) 296-3333
Fax 296-4705

A Team of Land Planners, Landscape Architects, Engineers, Surveyors & Environmental Professionals

1/5/12
Date

STATE OF MARYLAND — MELVIN CHARLES BASIL JR. — No. 16924 — REGISTERED PROFESSIONAL ENGINEER

Professional Engr. No. 16924

THESE PLANS FOR SMALL POND CONSTRUCTION, SOIL EROSION AND SEDIMENT CONTROL MEET THE REQUIREMENTS OF THE HOWARD SOIL CONSERVATION DISTRICT.

HOWARD SOIL CONSERVATION DISTRICT — DATE 2/9/12

DEVELOPERS CERTIFICATE:

I/WE CERTIFY THAT ALL DEVELOPMENT AND/OR CONSTRUCTION WILL BE DONE ACCORDING TO THESE PLANS AND THAT ANY RESPONSIBLE PERSONNEL INVOLVED IN THE CONSTRUCTION PROJECT WILL HAVE A CERTIFICATE OF ATTENDANCE AT A DEPARTMENT OF ENVIRONMENT APPROVED TRAINING PROGRAM FOR THE CONTROL OF SEDIMENT AND EROSION BEFORE BEGINNING THE PROJECT. I SHALL ENGAGE A REGISTERED PROFESSIONAL ENGINEER TO SUPERVISE POND CONSTRUCTION AND PROVIDE THE HOWARD SOIL CONSERVATION DISTRICT WITH AN "AS-BUILT" PLAN OF THE POND WITHIN 30 DAYS OF COMPLETION. I ALSO AUTHORIZE PERIODIC ON-SITE INSPECTIONS BY THE HOWARD SOIL CONSERVATION DISTRICT.

SIGNATURE OF DEVELOPER — DATE 1/5/12
PRINT NAME BELOW SIGNATURE
Robert Jenkins

ENGINEERS CERTIFICATE:

I CERTIFY THAT THIS PLAN FOR POND CONSTRUCTION, EROSION AND SEDIMENT CONTROL REPRESENTS A PRACTICAL AND WORKABLE PLAN BASED ON MY PERSONAL KNOWLEDGE OF THE SITE CONDITIONS. THIS PLAN WAS PREPARED IN ACCORDANCE WITH THE REQUIREMENTS OF THE HOWARD SOIL CONSERVATION DISTRICT. I HAVE NOTIFIED THE DEVELOPER THAT HE/SHE MUST ENGAGE A REGISTERED PROFESSIONAL ENGINEER TO SUPERVISE POND CONSTRUCTION AND PROVIDE THE HOWARD SOIL CONSERVATION DISTRICT WITH AN "AS-BUILT" PLAN OF THE POND WITHIN 30 DAYS OF COMPLETION.

SIGNATURE OF ENGINEER — DATE 1/5/12
PRINT NAME BELOW SIGNATURE
Melvin C. Basil Jr.

SUBDIVISION NAME: EMERSON		SECTION/AREA: SEC.3 AREA 7	LOT/PARCEL #: PART OF 837
PLAT# OR L/F: 9289/330	GRID #: 15	ZONE: MXD-3	TAX/ZONE MAP: 47
ELECT. DISTRICT: 6TH	CENSUS TRACT: 6069.03		
WATER CODE: E-15	SEWER CODE: 7520000		

TITLE
FINAL PLAN
GRADING AND SEDIMENT CONTROL PLAN
FACILITY NO.1

Des By	TJC	Scale	1"=50'	Proj. No. 95054.W2
Drn By	JSS	Date	11/17/11	10 of 30
Chk By	JDF	Approved		

n:\95054\95054.AT\Final Plans\95054WTO.SC01

F-11-036

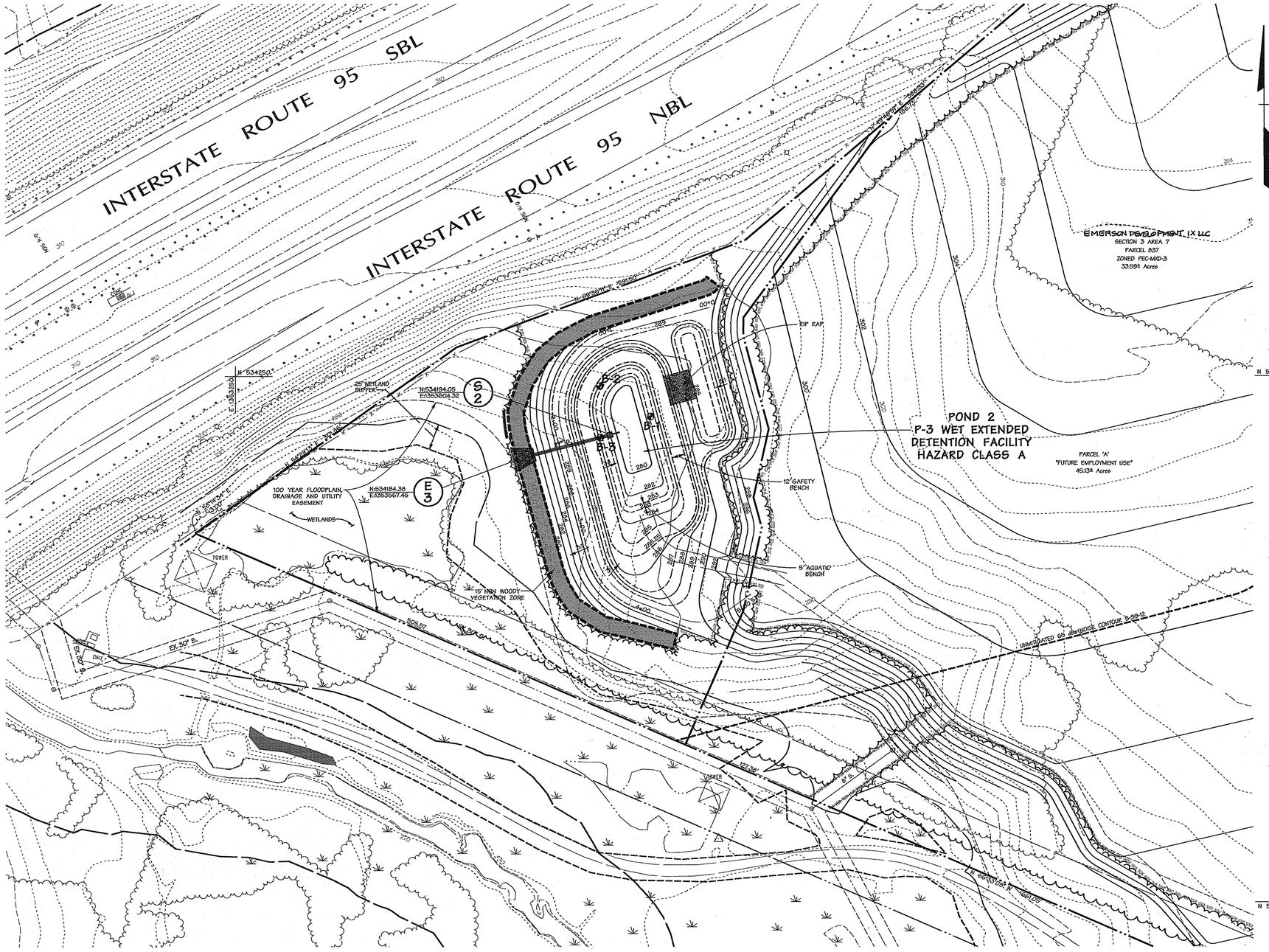

PLAN

1"=50'

Legend

- EX. CURB & GUTTER
- EX. MAJOR CONTOURS 400
- EX. MINOR CONTOURS 402
- EX. STORM DRAIN 1'X 2'I.P.
- EX. SEWER EX. 6" S.
- EX. WATER EX. 8" W.
- EXISTING TREE LINE
- EXISTING WETLAND LIMIT
- PROPERTY LINE
- ROADWAY RIGHT-OF-WAY
- PROPOSED LOT LINE
- PROPOSED EASEMENT
- PROPOSED CURB & GUTTER
- PROPOSED SIDEWALK
- PROP. STORM DRAIN 18" RCP
- PROP. SEWER 6" S.
- PROP. WATER 4" W.
- PROP. MAJOR CONTOURS 400
- PROP. MINOR CONTOURS 402
- SOIL BORING B-4
- NON WOODY VEGETATION ZONE
- 45' BGE SETBACK FOR CREDITED FOREST RETENTION AREAS

BASIN 2 TABLE

BASIN NUMBER		2
EXISTING DRAINAGE AREA: ACRES		5.52
PROPOSED DRAINAGE AREA: ACRES		6.75
STORAGE REQUIRED: CUBIC FEET	CLEAN OUT	6,075
	WET	12,150
	DRY	12,150
	TOTAL	24,300
STORAGE PROVIDED: CUBIC FEET	CLEAN OUT	4,400
	WET	13,721
	DRY	22,216
	TOTAL	35,937
EXISTING GROUND ELEVATION		286.00
TOP EMBANKMENT ELEVATION		289.00
EMERGENCY SPILLWAY CREST ELEVATION		N/A
RISER CREST ELEVATION		286.25
WET STORAGE ELEVATION		284.25
CLEANOUT ELEVATION		283.00
BOTTOM ELEVATION		280.00
Q INTO BASIN (C.F.S.) 10 YR		32.3
Q OUT BARREL (C.F.S.) 10 YR		25.5
Q OUT EMERGENCY SPILLWAY		N/A
BASIN DEPTH	WET	2.25'
	DRY	1.25'
	TOTAL	4.0'
DESIGN HIGHWATER		286.61'
FREEBOARD PROVIDED		2.39'
BARREL DIAMETER		27"
RISER DIAMETER		4' X 4'
EMERGENCY SPILLWAY WIDTH		N/A
WET STORAGE ZONE		280.00-284.25
DRY STORAGE ZONE		284.25-286.00
BOTTOM DIMENSIONS		105' X 36'

DATA SOURCES

Existing topography shown hereon is a result of an aerial survey provided by Air Survey Corporation dated, 1993 supplemented with field run information performed by Daft McCune Walker, Inc. dated, 2010.

Property boundary shown hereon is a result of field run monumented boundary survey performed on or about June 25, 1999 by Daft McCune Walker, Inc.

Soils if shown provided by Soil Data Mart dated 2005 published by Natural Resources Conservation Services (NRCS)

Zoning information shown hereon provided by Howard County Department of Planning and Zoning, adopted by Howard County Council February 2, 2004.

Wetland and stream limits shown hereon were originally approved by Maryland Department of the Environment and the US Corps of Engineers in April 2001 and re-verified by these agencies in October 2009.

LIMIT OF DISTURBANCE: 1,036,880.08 SF.± / 42.17 AC.±

APPROVED: HOWARD COUNTY DEPT. OF PUBLIC WORKS

CHIEF, BUREAU OF HIGHWAYS — DATE 2-23-12

HOWARD COUNTY DEPT. OF PLANNING & ZONING

CHIEF, DEVELOPMENT ENGINEERING DIVISION — DATE 2/28/12

CHIEF, DIVISION OF LAND DEVELOPMENT — DATE 3/01/12

Date	No.	Revision Description
2-10-14	⚠	UPDATE OWNER/DEVELOPER INFO.

EMERSON

SECTION 3 – AREA 7 – PARCEL A

"Future Employment Use"

OWNER/DEVELOPER:

⚠ EMERSON DEVELOPMENT IX LLC
ONE TEXAS STATION COURT, SUITE 200
TIMONIUM, MD. 21093 (443) 689-8000

OPERATION, MAINTENANCE AND INSPECTION

INSPECTION OF THE PONDS SHOWN HEREON SHALL BE PERFORMED AT LEAST ANNUALLY, IN ACCORDANCE WITH THE CHECKLIST AND REQUIREMENT CONTAINED WITHIN USDA, SCS "STANDARDS AND SPECIFICATIONS FOR PONDS" (MD-378). THE POND OWNER(S) AND ANY HEIRS, SUCCESSORS, OR ASSIGNS SHALL BE RESPONSIBLE FOR THE SAFETY OF THE POND AND THE CONTINUED OPERATION, SURVEILLANCE, INSPECTION, AND MAINTENANCE THEREOF. THE POND OWNER(S) SHALL PROMPTLY NOTIFY THE SOIL CONSERVATION DISTRICT OF ANY UNUSUAL OBSERVATIONS THAT MAY BE INDICATIONS OF DISTRESS SUCH AS EXCESSIVE SEEPAGE, TURBID SEEPAGE, SLIDING OR SLUMPING.

PROFESSIONAL CERTIFICATION

I HEREBY CERTIFY THAT THESE DOCUMENTS WERE PREPARED OR APPROVED BY ME, AND THAT I AM A DULY LICENSED PROFESSIONAL ENGINEER UNDER THE LAWS OF THE STATE OF MARYLAND, LICENSE NO. 16928, EXPIRATION DATE: 5/13/12.

1/3/12
Date

STATE OF MARYLAND — ROBERT JOSEPH JENKINS — No. 16928 — PROFESSIONAL ENGINEER

Professional Engr. No. 16928

THESE PLANS FOR SMALL POND CONSTRUCTION, SOIL EROSION AND SEDIMENT CONTROL MEET THE REQUIREMENTS OF THE HOWARD SOIL CONSERVATION DISTRICT.

HOWARD SOIL CONSERVATION DISTRICT — DATE 2/6/12

DEVELOPERS CERTIFICATE:

I/WE CERTIFY THAT ALL DEVELOPMENT AND/OR CONSTRUCTION WILL BE DONE ACCORDING TO THESE PLANS AND THAT ANY RESPONSIBLE PERSONNEL INVOLVED IN THE CONSTRUCTION PROJECT WILL HAVE A CERTIFICATE OF ATTENDANCE AT A DEPARTMENT OF ENVIRONMENT APPROVED TRAINING PROGRAM FOR THE CONTROL OF SEDIMENT AND EROSION BEFORE BEGINNING THE PROJECT. I SHALL ENGAGE A REGISTERED PROFESSIONAL ENGINEER TO SUPERVISE POND CONSTRUCTION AND PROVIDE THE HOWARD SOIL CONSERVATION DISTRICT WITH AN "AS-BUILT" PLAN OF THE POND WITHIN 30 DAYS OF COMPLETION. I ALSO AUTHORIZE PERIODIC ON-SITE INSPECTIONS BY THE HOWARD SOIL CONSERVATION DISTRICT.

SIGNATURE OF DEVELOPER — DATE 1/5/12
PRINT NAME BELOW SIGNATURE
Robert Jenkins

ENGINEERS CERTIFICATE:

I CERTIFY THAT THIS PLAN FOR POND CONSTRUCTION, EROSION AND SEDIMENT CONTROL REPRESENTS A PRACTICAL AND WORKABLE PLAN BASED ON MY PERSONAL KNOWLEDGE OF THE SITE CONDITIONS. THIS PLAN WAS PREPARED IN ACCORDANCE WITH THE REQUIREMENTS OF THE HOWARD SOIL CONSERVATION DISTRICT. I HAVE NOTIFIED THE DEVELOPER THAT HE/SHE MUST ENGAGE A REGISTERED PROFESSIONAL ENGINEER TO SUPERVISE POND CONSTRUCTION AND PROVIDE THE HOWARD SOIL CONSERVATION DISTRICT WITH AN "AS-BUILT" PLAN OF THE POND WITHIN 30 DAYS OF COMPLETION.

SIGNATURE OF ENGINEER — DATE 1/3/12
PRINT NAME BELOW SIGNATURE

DMW
Daft-McCune-Walker, Inc.
200 East Pennsylvania Avenue
Towson, Maryland 21286
(410) 296-3333
Fax 296-4705

A Team of Land Planners, Landscape Architects, Engineers, Surveyors & Environmental Professionals

SUBDIVISION NAME: EMERSON		SECTION/AREA: SEC 3 AREA 7	LOT/PARCEL #: PART OF 837
PLAT# OR L/F	5288/330	ZONE: MXD-3	TAX/ZONE MAP: 47
ELEC. DISTRICT: 6TH	CENSUS TRACT: 6069.03		
WATER CODE: E-15	SEWER CODE: 7520000		

TITLE

FINAL PLAN
GRADING AND SEDIMENT CONTROL PLAN
FACILITY NO. 2

Des By	TJC	Scale	1"=50'	Proj. No.	95054.W2
Drn By	JSS	Date	11/17/11	11 of 30	
Chk By	JDF	Approved			

F-11-036

n:\95054\95054-W1\Final Plans\95054W1.SHT2

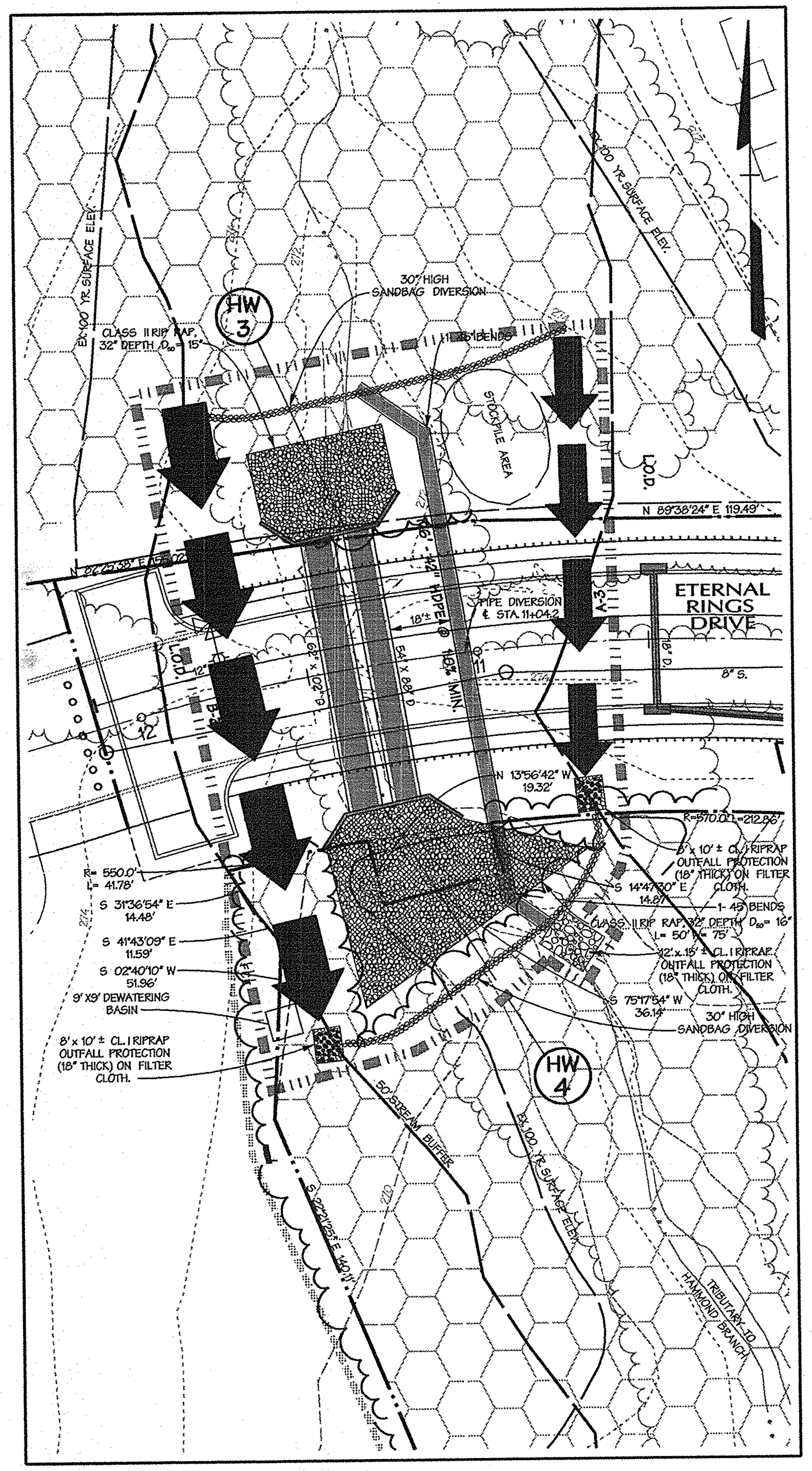

SOUTH CULVERT

1"=30

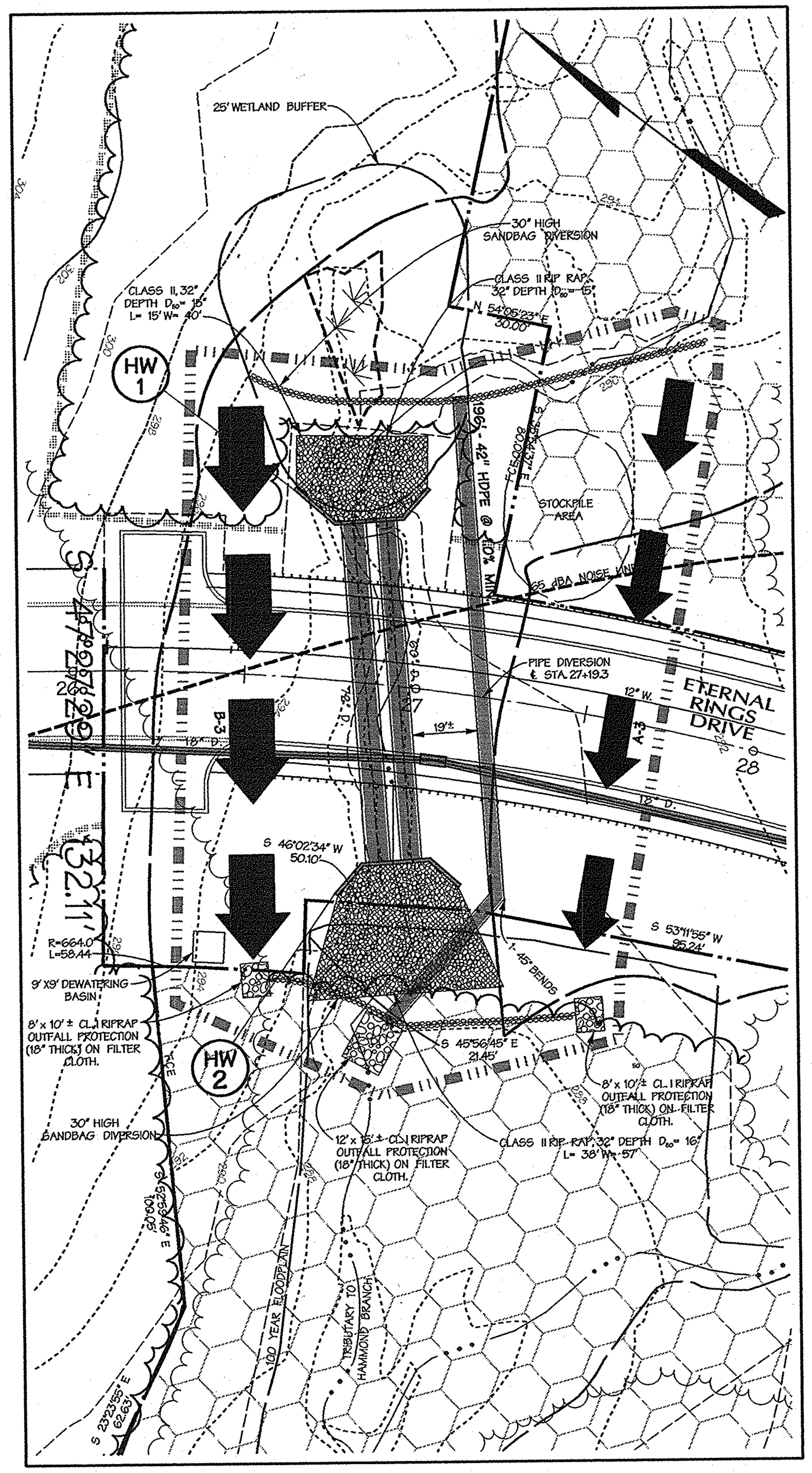

NORTH CULVERT

1"=30'

Maryland's Guidelines To Waterway Construction
DETAIL 4.3: CULVERT INSTALLATION–STAGES 1&2

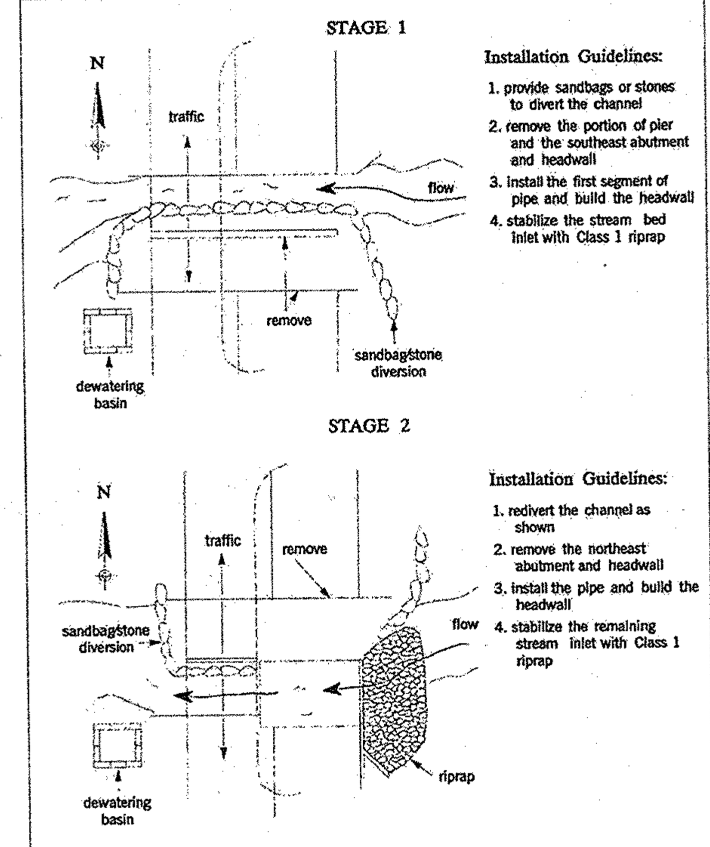

STREAM CROSSINGS	PAGE 4.3 - 2	MARYLAND DEPARTMENT OF THE ENVIRONMENT WATER MANAGEMENT ADMINISTRATION

Maryland's Guidelines To Waterway Construction
DETAIL 4.5: DEPRESSED CULVERTS

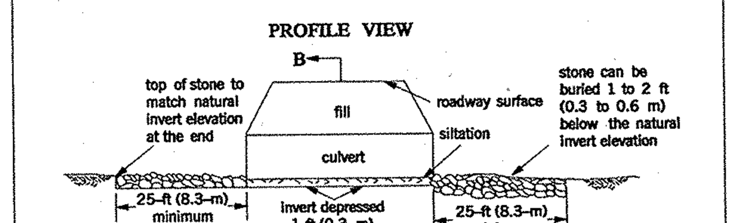

STREAM CROSSINGS	PAGE 4.5 - 2	MARYLAND DEPARTMENT OF THE ENVIRONMENT WATER MANAGEMENT ADMINISTRATION

DEVELOPERS CERTIFICATION:

"I/WE CERTIFY THAT ALL DEVELOPMENT AND CONSTRUCTION WILL BE DONE ACCORDING TO THIS PLAN, AND THAT ANY RESPONSIBLE PERSONNEL INVOLVED IN THE CONSTRUCTION PROJECT WILL HAVE A CERTIFICATE OF ATTENDANCE AT A DEPARTMENT OF THE ENVIRONMENT APPROVED TRAINING PROGRAM FOR THE CONTROL OF SEDIMENT AND EROSION BEFORE BEGINNING THE PROJECT. I ALSO AUTHORIZE PERIODIC ON-SITE INSPECTION BY THE HOWARD SOIL CONSERVATION DISTRICT.

[signature] 1/5/12
SIGNATURE OF DEVELOPER DATE
PRINT NAME BELOW SIGNATURE
Robert Jenkins

ENGINEER'S CERTIFICATION:

"I CERTIFY THAT THIS PLAN FOR EROSION AND SEDIMENT CONTROL REPRESENTS A PRACTICAL AND WORKABLE PLAN BASED ON MY PERSONAL KNOWLEDGE OF THE SITE CONDITIONS AND THAT IT WAS PREPARED IN ACCORDANCE WITH THE REQUIREMENTS OF THE HOWARD SOIL CONSERVATION DISTRICT."

[signature] 1/3/12
SIGNATURE OF ENGINEER
PRINT NAME BELOW SIGNATURE Melvin C. Beall, Jr.

THESE PLANS FOR SMALL POND CONSTRUCTION, SOIL EROSION AND SEDIMENT CONTROL MEET THE REQUIREMENTS OF THE HOWARD SOIL CONSERVATION DISTRICT.

John R Robertson 2/8/12
HOWARD SOIL CONSERVATION DISTRICT DATE

Maryland's Guidelines To Waterway Construction
DETAIL 4.3: CULVERT INSTALLATION–STAGES 3&4

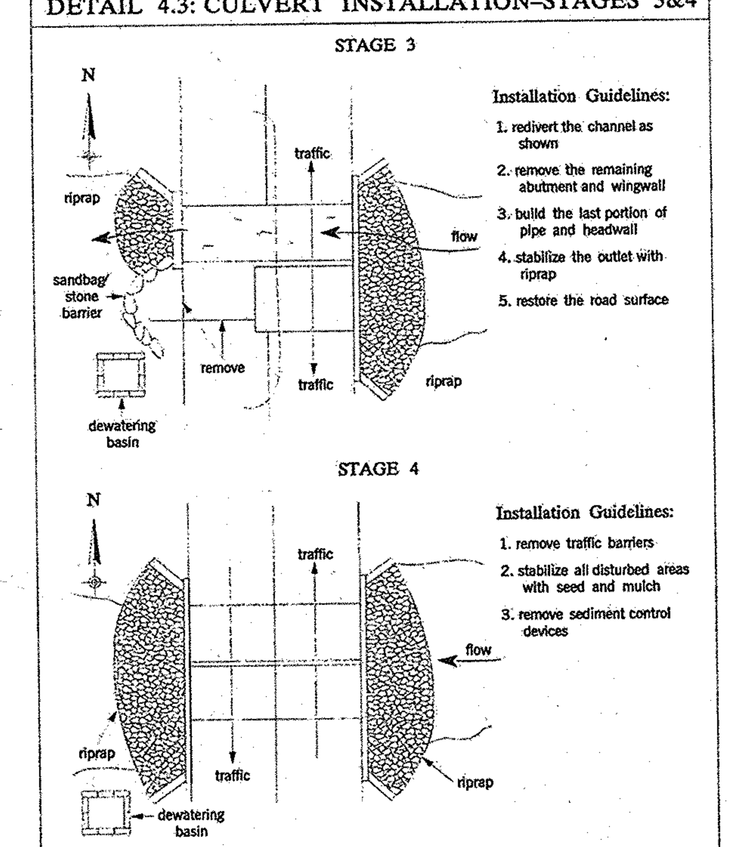

STREAM CROSSINGS	PAGE 4.3 - 3	MARYLAND DEPARTMENT OF THE ENVIRONMENT WATER MANAGEMENT ADMINISTRATION

Maryland's Guidelines To Waterway Construction
DETAIL 1.5: SANDBAG/STONE DIVERSION

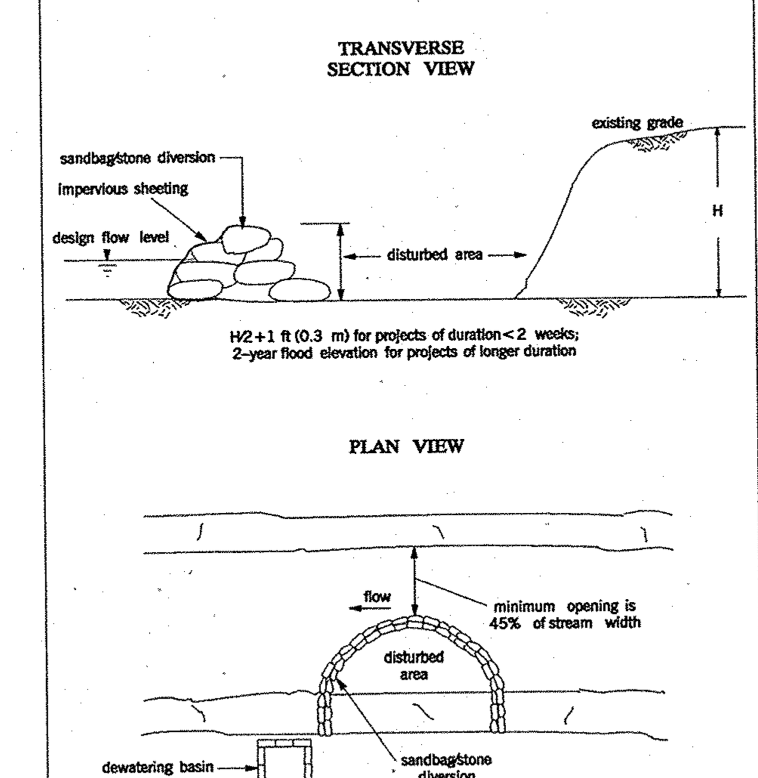

TEMPORARY INSTREAM CONSTRUCTION MEASURES	REVISED NOVEMBER 2000 PAGE 1.5 - 3	MARYLAND DEPARTMENT OF THE ENVIRONMENT WATER MANAGEMENT ADMINISTRATION

NOTE:
CONTRACTOR SHALL USE EXTREME CAUTION TO PREVENT SEDIMENT FROM ENTERING THE STREAM AREA.
ALL EROSION/SEDIMENT CONTROL MEASURES SHALL BE MAINTAINED AND REPAIRED AT THE END OF EACH WORK DAY, AS REQUIRED.
ALL DISTURBED AREAS OUTSIDE OF THE LOD SHALL BE PROTECTED WITH OTHER E.S.C. DEVICES AND MEASURES AND/OR STABILIZED WITH TEMPORARY/PERMANENT SEEDING SPECIFICATIONS AT THE END OF EACH WORKING DAY, AS DIRECTED AND APPROVED BY SEDIMENT CONTROL INSPECTOR.

DATA SOURCES

Existing topography shown hereon is a result of an aerial survey provided by Air Survey Corporation dated, 1998 supplemented with field run information performed by Daft McCune Walker, Inc. dated, 2010.

Property boundary shown hereon is a result of field run monumented boundary survey performed on or about June 25, 1999 by Daft McCune Walker, Inc.

Soils if shown provided by Soil Data Mart dated 2005 published by Natural Resources Conservation Services (NRCS)

Zoning information shown hereon provided by Howard County Department of Planning and Zoning, adapted by Howard County Council February 2, 2004.

Wetland and stream limits shown hereon were originally approved by Maryland Department of the Environment and the US Corps of Engineers in April 2001 and re-verified by these agencies in October 2009.

LIMIT OF DISTURBANCE: 1,854,511.82 SF.± / 42.57 AC.±

APPROVED: HOWARD COUNTY DEPT. OF PUBLIC WORKS

[signature] 2-23-12
CHIEF, BUREAU OF HIGHWAYS DATE

HOWARD COUNTY DEPT. OF PLANNING & ZONING

[signature] 2/20/12
CHIEF, DEVELOPMENT ENGINEERING DIVISION DATE

[signature] 3/01/12
CHIEF, DIVISION OF LAND DEVELOPMENT DATE

Maryland's Guidelines To Waterway Construction
DETAIL 1.1: DEWATERING BASINS

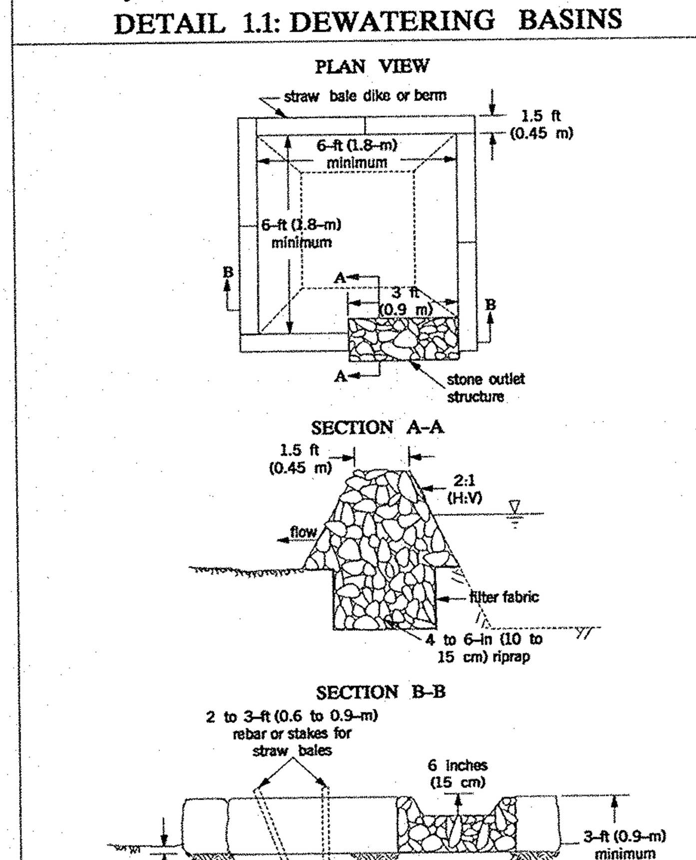

TEMPORARY INSTREAM CONSTRUCTION MEASURES	REVISED NOVEMBER 2000 PAGE 1.1 - 2	MARYLAND DEPARTMENT OF THE ENVIRONMENT WATER MANAGEMENT ADMINISTRATION

Maryland's Guidelines To Waterway Construction
DETAIL 1.3: CULVERT PIPE W/ACCESS ROAD

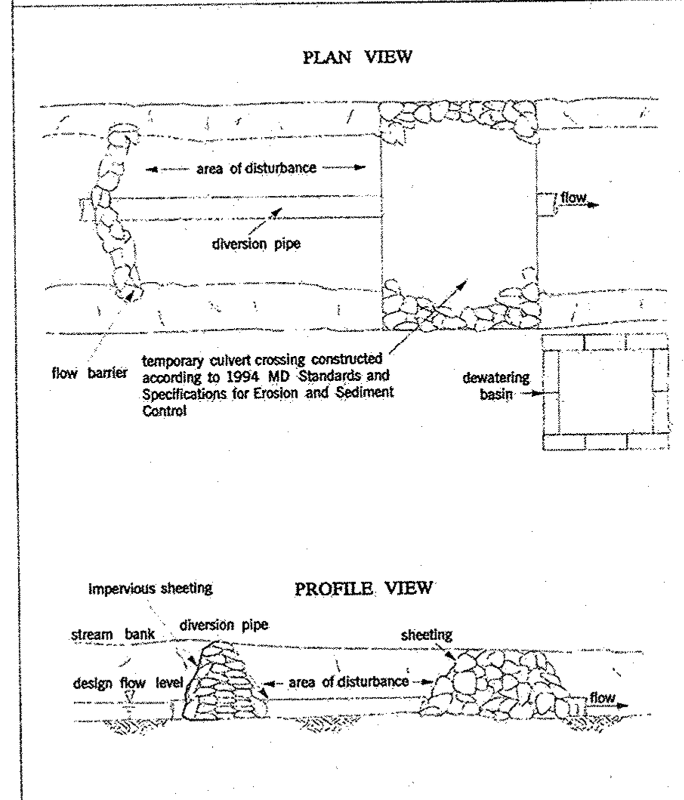

TEMPORARY INSTREAM CONSTRUCTION MEASURES	REVISED NOVEMBER 2000 PAGE 1.3 - 3	MARYLAND DEPARTMENT OF THE ENVIRONMENT WATER MANAGEMENT ADMINISTRATION

Maryland's Guidelines To Waterway Construction
DETAIL 4.2(a): UTILITY CROSSING

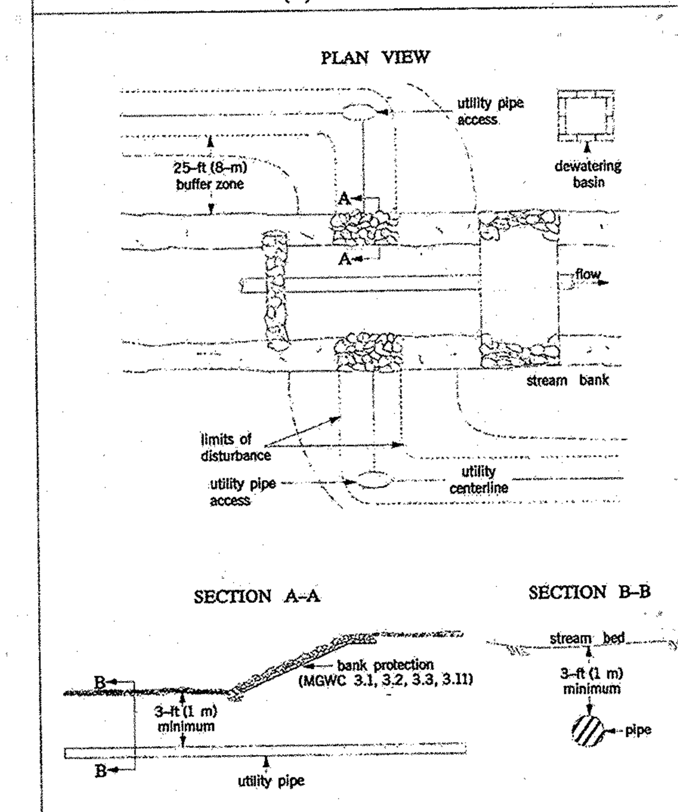

STREAM CROSSINGS	PAGE 4.2 - 2	MARYLAND DEPARTMENT OF THE ENVIRONMENT WATER MANAGEMENT ADMINISTRATION

Maryland's Guidelines To Waterway Construction
DETAIL 1.4: DIVERSION PIPE

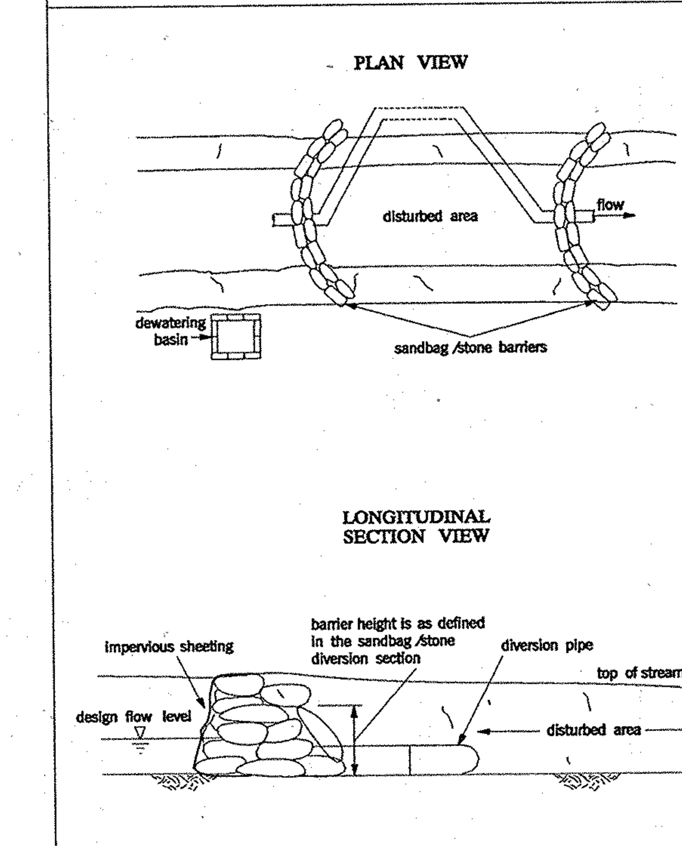

TEMPORARY INSTREAM CONSTRUCTION MEASURES	REVISED NOVEMBER 2000 PAGE 1.4 - 2	MARYLAND DEPARTMENT OF THE ENVIRONMENT WATER MANAGEMENT ADMINISTRATION

LEGEND

Symbol	Description
— — · · —	PROPERTY LINE
360 / 362 (dashed)	EXISTING CONTOUR
360 / 362 (solid)	PROPOSED CONTOUR
L.O.D.	LIMIT OF DISTURBANCE
—SF—SF—	SILT FENCE - SEE DETAIL, SHT. 15 OF 27
—SSF—SSF—	SUPER SILT FENCE - SEE DETAIL, SHT. 15 OF 27
═══	EARTH DIKE - SEE DETAIL, SHT. 15 OF 27
☐ RFB	REMOVABLE FILTER BAG STATION
S.O.S.	STONE OUTLET STRUCTURE
➡➡➡	EARTH DIKE
—— ——o	SUMP PUMP & HOSE
(symbol)	WETLANDS

PROFESSIONAL CERTIFICATION
I HEREBY CERTIFY THAT THESE DOCUMENTS WERE PREPARED OR APPROVED BY ME, AND THAT I AM A DULY LICENSED PROFESSIONAL ENGINEER UNDER THE LAWS OF THE STATE OF MARYLAND, LICENSE NO. 16928, EXPIRATION DATE: 5/13/12.

1/5/12
Date

STATE OF MARYLAND — MELVIN CHARLES BEALL JR. — No. 16928 — REGISTERED PROFESSIONAL ENGINEER

Professional Engr. No. 16928

2-10-14	⚠	UPDATE OWNER/DEVELOPER INFO.
Date	No.	Revision Description

EMERSON

SECTION 3 – AREA 7 – PARCEL A
"Future Employment Use"

OWNER/DEVELOPER:
⚠ EMERSON DEVELOPMENT IX LLC
ONE TEXAS STATION COURT, SUITE 200
TIMONIUM, MD. 21093 (443) 687-8000

DMW
Daft·McCune·Walker, Inc.
200 East Pennsylvania Avenue
Towson, Maryland 21286
(410) 296-3333
Fax 296-4705

A Team of Land Planners, Landscape Architects, Engineers, Surveyors & Environmental Professionals

SUBDIVISION NAME: EMERSON			SECTION/AREA: SEC.3 AREA 7		LOT/PARCEL #: PART OF 837
PLAT# OR L/F: 5289/330	GRID #: 15	ZONE: MXD-3	TAX/ZONE MAP: 47	ELECT. DISTRICT: 6TH	CENSUS TRACT: 6069.03
WATER CODE: E-15			SEWER CODE: 7520000		

TITLE
FINAL PLAN
GRADING AND SEDIMENT CONTROL PLAN
CULVERT BLOW-UPS

Des By	TJC	Scale	1"=30'	Proj. No.	95054.W2
Drn By	JSS	Date	11/17/11	12 of 30	
Chk By	JDF	Approved			

F -11-036

n:\95054\95054.W\Final Plans\95054W12.SC03

STANDARDS AND SPECIFICATIONS FOR VEGETATIVE STABILIZATION

(B-4-1) SECTION 1 - INCREMENTAL STABILIZATION

A. INCREMENTAL STABILIZATION - CUT SLOPES

1. EXCAVATE AND STABILIZE CUT SLOPES IN INCREMENTS NOT TO EXCEED 15 FEET IN HEIGHT. PREPARE SEEDBED AND APPLY SEED AND MULCH ON ALL CUT SLOPES AS THE WORK PROGRESSES.

2. CONSTRUCTION SEQUENCE EXAMPLE (REFER TO FIGURE B.1):

a. CONSTRUCT AND STABILIZE ALL TEMPORARY SWALES OR DIKES THAT WILL BE USED TO CONVEY RUNOFF AROUND THE EXCAVATION.

b. PERFORM PHASE 1 EXCAVATION, PREPARE SEEDBED, AND STABILIZE.

c. PERFORM PHASE 2 EXCAVATION, PREPARE SEEDBED, AND STABILIZE. OVERSEED PHASE 1 AREAS AS NECESSARY.

d. PERFORM FINAL PHASE EXCAVATION, PREPARE SEEDBED, AND STABILIZE. OVERSEED PREVIOUSLY SEEDED AREAS AS NECESSARY.

NOTE: ONCE EXCAVATION HAS BEGUN THE OPERATION SHOULD BE CONTINUOUS FROM GRUBBING THROUGH THE COMPLETION OF GRADING AND PLACEMENT OF TOPSOIL (IF REQUIRED) AND PERMANENT SEED AND MULCH. ANY INTERRUPTIONS IN THE OPERATION OR COMPLETING THE OPERATION OUT OF THE SEEDING SEASON WILL NECESSITATE THE APPLICATION OF TEMPORARY STABILIZATION.

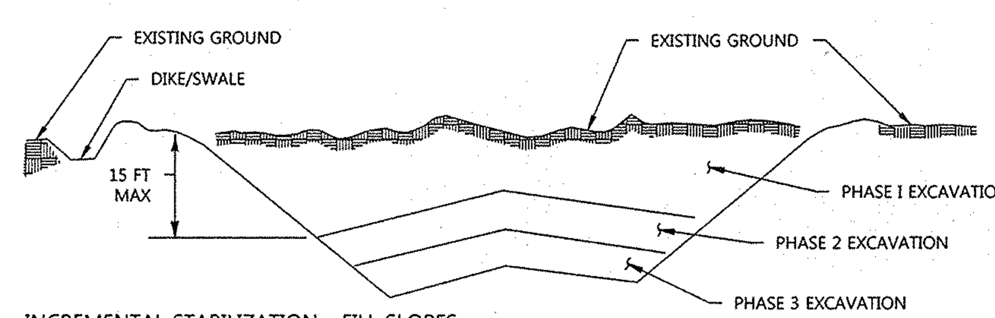

B. INCREMENTAL STABILIZATION - FILL SLOPES

1. CONSTRUCT AND STABILIZE FILL SLOPES IN INCREMENTS NOT TO EXCEED 15 FEET IN HEIGHT. PREPARE SEEDBED AND APPLY SEED AND MULCH ON ALL SLOPES AS THE WORK PROGRESSES.

2. STABILIZE SLOPES IMMEDIATELY WHEN THE VERTICAL HEIGHT OF A LIFT REACHES 15 FEET, OR WHEN THE GRADING OPERATION CEASES AS PRESCRIBED IN THE PLANS.

3. AT THE END OF EACH DAY, INSTALL TEMPORARY WATER CONVEYANCE PRACTICE(S), AS NECESSARY, TO INTERCEPT SURFACE RUNOFF AND CONVEY IT DOWN THE SLOPE IN A NON-EROSIVE MANNER.

4. CONSTRUCTION SEQUENCE EXAMPLE (REFER TO FIGURE B.2):

a. CONSTRUCT AND STABILIZE ALL TEMPORARY SWALES OR DIKES THAT WILL BE USED TO DIVERT RUNOFF AROUND THE FILL. CONSTRUCT SILT FENCE ON LOW SIDE OF FILL UNLESS OTHER METHODS SHOWN ON THE PLANS ADDRESS THIS AREA.

b. AT THE END OF EACH DAY, INSTALL TEMPORARY WATER CONVEYANCE PRACTICE(S), AS NECESSARY, TO INTERCEPT SURFACE RUNOFF AND CONVEY IT DOWN THE SLOPE IN A NON-EROSIVE MANNER.

c. PLACE PHASE 1 FILL, PREPARE SEEDBED, AND STABILIZE.

d. PLACE PHASE 2 FILL, PREPARE SEEDBED, AND STABILIZE.

e. PLACE FINAL PHASE FILL, PREPARE SEEDBED, AND STABILIZE. OVERSEED PREVIOUSLY SEEDED AREAS AS NECESSARY.

NOTE: ONCE THE PLACEMENT OF FILL HAS BEGUN THE OPERATION SHOULD BE CONTINUOUS FROM GRUBBING THROUGH THE COMPLETION OF GRADING AND PLACEMENT OF TOPSOIL (IF REQUIRED) AND PERMANENT SEED AND MULCH. ANY INTERRUPTIONS IN THE OPERATION OR COMPLETING THE OPERATION OUT OF THE SEEDING SEASON WILL NECESSITATE THE APPLICATION OF TEMPORARY STABILIZATION.

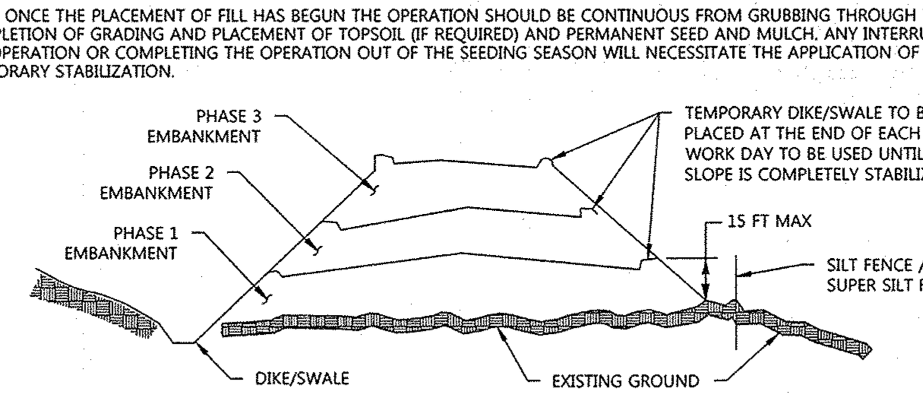

(B-4-2) SECTION 2 - SOIL PREPARATION, TOPSOILING, AND SOIL AMENDMENTS

A. SOIL PREPARATION

1. TEMPORARY STABILIZATION

a. SEEDBED PREPARATION CONSISTS OF LOOSENING SOIL TO A DEPTH OF 3 TO 5 INCHES BY MEANS OF SUITABLE AGRICULTURAL OR CONSTRUCTION EQUIPMENT, SUCH AS DISC HARROWS OR CHISEL PLOWS OR RIPPERS MOUNTED ON CONSTRUCTION EQUIPMENT. AFTER THE SOIL IS LOOSENED, IT MUST NOT BE ROLLED OR DRAGGED SMOOTH BUT LEFT IN THE ROUGHENED CONDITION. SLOPES 3:1 OR FLATTER ARE TO BE TRACKED WITH RIDGES RUNNING PARALLEL TO THE CONTOUR OF THE SLOPE.

b. APPLY FERTILIZER AND LIME AS PRESCRIBED ON THE PLANS.

c. INCORPORATE LIME AND FERTILIZER INTO THE TOP 3 TO 5 INCHES OF SOIL BY DISKING OR OTHER SUITABLE MEANS.

2. PERMANENT STABILIZATION

a. A SOIL TEST IS REQUIRED FOR ANY EARTH DISTURBANCE OF 5 ACRES OR MORE. THE MINIMUM SOIL CONDITIONS REQUIRED FOR PERMANENT VEGETATIVE ESTABLISHMENT ARE:

i. SOIL PH BETWEEN 6.0 AND 7.0.

ii. SOLUBLE SALTS LESS THAN 500 PARTS PER MILLION (PPM).

iii. SOIL CONTAINS LESS THAN 40 PERCENT CLAY BUT ENOUGH FINE GRAINED MATERIAL (GREATER THAN 30 PERCENT SILT PLUS CLAY) TO PROVIDE THE CAPACITY TO HOLD A MODERATE AMOUNT OF MOISTURE. AN EXCEPTION: IF LOVEGRASS WILL BE PLANTED, THEN A SANDY SOIL (LESS THAN 30 PERCENT SILT PLUS CLAY) WOULD BE ACCEPTABLE.

iv. SOIL CONTAINS 1.5 PERCENT MINIMUM ORGANIC MATTER BY WEIGHT.

v. SOIL CONTAINS SUFFICIENT PORE SPACE TO PERMIT ADEQUATE ROOT PENETRATION.

b. APPLICATION OF AMENDMENTS OR TOPSOIL IS REQUIRED IF ON-SITE SOILS DO NOT MEET THE ABOVE CONDITIONS.

c. GRADED AREAS MUST BE MAINTAINED IN A TRUE AND EVEN GRADE AS SPECIFIED ON THE APPROVED PLAN, THEN SCARIFIED OR OTHERWISE LOOSENED TO A DEPTH OF 3 TO 5 INCHES.

d. APPLY SOIL AMENDMENTS AS SPECIFIED ON THE APPROVED PLAN OR AS INDICATED BY THE RESULTS OF A SOIL TEST.

e. MIX SOIL AMENDMENTS INTO THE TOP 3 TO 5 INCHES OF SOIL BY DISKING OR OTHER SUITABLE MEANS. RAKE LAWN AREAS TO SMOOTH THE SURFACE, REMOVE LARGE OBJECTS LIKE STONES AND BRANCHES, AND READY THE AREA FOR SEED APPLICATION. LOOSEN SURFACE SOIL BY DRAGGING WITH A HEAVY CHAIN OR OTHER EQUIPMENT TO ROUGHEN THE SURFACE WHERE SITE CONDITIONS WILL NOT PERMIT NORMAL SEEDBED PREPARATION. TRACK SLOPES 3:1 OR FLATTER WITH TRACKED EQUIPMENT LEAVING THE SOIL IN AN IRREGULAR CONDITION WITH RIDGES RUNNING PARALLEL TO THE CONTOUR OF THE SLOPE. LEAVE THE TOP 1 TO 3 INCHES OF SOIL LOOSE AND FRIABLE. SEEDBED LOOSENING MAY BE UNNECESSARY ON NEWLY DISTURBED AREAS.

B. TOPSOILING

1. TOPSOIL IS PLACED OVER PREPARED SUBSOIL PRIOR TO ESTABLISHMENT OF PERMANENT VEGETATION. THE PURPOSE IS TO PROVIDE A SUITABLE SOIL MEDIUM FOR VEGETATIVE GROWTH. SOILS OF CONCERN HAVE LOW MOISTURE CONTENT, LOW NUTRIENT LEVELS, LOW PH, MATERIALS TOXIC TO PLANTS, AND/OR UNACCEPTABLE SOIL GRADATION.

2. TOPSOIL SALVAGED FROM AN EXISTING SITE MAY BE USED PROVIDED IT MEETS THE STANDARDS AS SET FORTH IN THESE SPECIFICATIONS. TYPICALLY, THE DEPTH OF TOPSOIL TO BE SALVAGED FOR A GIVEN SOIL TYPE CAN BE FOUND IN THE REPRESENTATIVE SOIL PROFILE SECTION IN THE SOIL SURVEY PUBLISHED BY USDA-NRCS.

3. TOPSOILING IS LIMITED TO AREAS HAVING 2:1 OR FLATTER SLOPES WHERE:

a. THE TEXTURE OF THE EXPOSED SUBSOIL/PARENT MATERIAL IS NOT ADEQUATE TO PRODUCE VEGETATIVE GROWTH.

b. THE SOIL MATERIAL IS SO SHALLOW THAT THE ROOTING ZONE IS NOT DEEP ENOUGH TO SUPPORT PLANTS OR FURNISH CONTINUING SUPPLIES OF MOISTURE AND PLANT NUTRIENTS.

c. THE ORIGINAL SOIL TO BE VEGETATED CONTAINS MATERIAL TOXIC TO PLANT GROWTH.

d. THE SOIL IS SO ACIDIC THAT TREATMENT WITH LIMESTONE IS NOT FEASIBLE.

4. AREAS HAVING SLOPES STEEPER THAN 2:1 REQUIRE SPECIAL CONSIDERATION AND DESIGN.

5. TOPSOIL SPECIFICATIONS: SOIL TO BE USED AS TOPSOIL MUST MEET THE FOLLOWING CRITERIA:

a. TOPSOIL MUST BE A LOAM, SANDY LOAM, CLAY LOAM, SILT LOAM, SANDY CLAY LOAM, OR LOAMY SAND. OTHER SOILS MAY BE USED IF RECOMMENDED BY AN AGRONOMIST OR SOIL SCIENTIST AND APPROVED BY THE APPROPRIATE APPROVAL AUTHORITY. TOPSOIL MUST NOT BE A MIXTURE OF CONTRASTING TEXTURED SUBSOILS AND MUST CONTAIN LESS THAN 5 PERCENT BY VOLUME OF CINDERS, STONES, SLAG, COARSE FRAGMENTS, GRAVEL, STICKS, ROOTS, TRASH, OR OTHER MATERIALS LARGER THAN 1 1/2 INCHES IN DIAMETER.

b. TOPSOIL MUST BE FREE OF NOXIOUS PLANTS OR PLANT PARTS SUCH AS BERMUDA GRASS, QUACK GRASS, JOHNSON GRASS, NUT SEDGE, POISON IVY, THISTLE, OR OTHERS AS SPECIFIED.

c. TOPSOIL SUBSTITUTES OR AMENDMENTS, AS RECOMMENDED BY A QUALIFIED AGRONOMIST OR SOIL SCIENTIST AND APPROVED BY THE APPROPRIATE APPROVAL AUTHORITY, MAY BE USED IN LIEU OF NATURAL TOPSOIL.

6. TOPSOIL APPLICATION

a. EROSION AND SEDIMENT CONTROL PRACTICES MUST BE MAINTAINED WHEN APPLYING TOPSOIL.

b. UNIFORMLY DISTRIBUTE TOPSOIL IN A 5 TO 8 INCH LAYER AND LIGHTLY COMPACT TO A MINIMUM THICKNESS OF 4 INCHES. SPREADING IS TO BE PERFORMED IN SUCH A MANNER THAT SODDING OR SEEDING CAN PROCEED WITH A MINIMUM OF ADDITIONAL SOIL PREPARATION AND TILLAGE. ANY IRREGULARITIES IN THE SURFACE RESULTING FROM TOPSOILING OR OTHER OPERATIONS MUST BE CORRECTED IN ORDER TO PREVENT THE FORMATION OF DEPRESSIONS OR WATER POCKETS.

c. TOPSOIL MUST NOT BE PLACED IF THE TOPSOIL OR SUBSOIL IS IN A FROZEN OR MUDDY CONDITION, WHEN THE SUBSOIL IS EXCESSIVELY WET OR IN A CONDITION THAT MAY OTHERWISE BE DETRIMENTAL TO PROPER GRADING AND SEEDBED PREPARATION.

C. SOIL ADMENMENTS (FERTILIZER AND LIME SPECIFICATIONS)

1. SOIL TESTS MUST BE PERFORMED TO DETERMINE THE EXACT RATIOS AND APPLICATION RATES FOR BOTH LIME AND FERTILIZER ON SITES HAVING DISTURBED AREAS OF 5 ACRES OR MORE. SOIL ANALYSIS MAY BE PERFORMED BY A RECOGNIZED PRIVATE OR COMMERCIAL LABORATORY. SOIL SAMPLES TAKEN FOR ENGINEERING PURPOSES MAY ALSO BE USED FOR CHEMICAL ANALYSES.

2. FERTILIZERS MUST BE UNIFORM IN COMPOSITION, FREE FLOWING AND SUITABLE FOR ACCURATE APPLICATION BY APPROPRIATE EQUIPMENT. MANURE MAY BE SUBSTITUTED FOR FERTILIZER WITH PRIOR APPROVAL FROM THE APPROPRIATE APPROVAL AUTHORITY. FERTILIZERS MUST ALL BE DELIVERED TO THE SITE FULLY LABELED ACCORDING TO THE APPLICABLE LAWS AND MUST BEAR THE NAME, TRADE NAME OR TRADEMARK AND WARRANTY OF THE PRODUCER.

3. LIME MATERIALS MUST BE GROUND LIMESTONE (HYDRATED OR BURNT LIME MAY BE SUBSTITUTED EXCEPT WHEN HYDROSEEDING) WHICH CONTAINS AT LEAST 50 PERCENT TOTAL OXIDES (CALCIUM OXIDE PLUS MAGNESIUM OXIDE). LIMESTONE MUST BE GROUND TO SUCH FINENESS THAT AT LEAST 50 PERCENT WILL PASS THROUGH A #100 MESH SIEVE AND 98 TO 100 PERCENT WILL PASS THROUGH A #20 MESH SIEVE.

4. LIME AND FERTILIZER ARE TO BE EVENLY DISTRIBUTED AND INCORPORATED INTO THE TOP 3 TO 5 INCHES OF SOIL BY DISKING OR OTHER SUITABLE MEANS.

5. WHERE THE SUBSOIL IS EITHER HIGHLY ACIDIC OR COMPOSED OF HEAVY CLAYS, SPREAD GROUND LIMESTONE AT THE RATE OF 4 TO 8 TONS/ACRE 200-400 POUNDS PER 1,000 SQUARE FEET) PRIOR TO THE PLACEMENT OF TOPSOIL.

(B-4-3) SECTION 3 - SEEDING AND MULCHING

A. SEEDING

1. SPECIFICATIONS

a. ALL SEED MUST MEET THE REQUIREMENTS OF THE MARYLAND STATE SEED LAW. ALL SEED MUST BE SUBJECT TO RE-TESTING BY A RECOGNIZED SEED LABORATORY. ALL SEED USED MUST HAVE BEEN TESTED WITHIN THE 6 MONTHS IMMEDIATELY PRECEDING THE DATE OF SOWING SUCH MATERIAL ON ANY PROJECT. REFER TO TABLE B.4 REGARDING THE QUALITY OF SEED. SEED TAGS MUST BE AVAILABLE UPON REQUEST TO THE INSPECTOR TO VERIFY TYPE OF SEED AND SEEDING RATE.

b. MULCH ALONE MAY BE APPLIED BETWEEN THE FALL AND SPRING SEEDING DATES ONLY IF THE GROUND IS FROZEN. THE APPROPRIATE SEEDING MIXTURE MUST BE APPLIED WHEN THE GROUND THAWS.

c. INOCULANTS: THE INOCULANT FOR TREATING LEGUME SEED IN THE SEED MIXTURES MUST BE A PURE CULTURE OF NITROGEN FIXING BACTERIA PREPARED SPECIFICALLY FOR THE SPECIES. INOCULANTS MUST NOT BE USED LATER THAN THE DATE INDICATED ON THE CONTAINER. ADD FRESH INOCULANTS AS DIRECTED ON THE PACKAGE. USE FOUR TIMES THE RECOMMENDED RATE WHEN HYDROSEEDING.

NOTE: IT IS VERY IMPORTANT TO KEEP INOCULANT AS COOL AS POSSIBLE UNTIL USED. TEMPERATURES ABOVE 75 TO 80 DEGREES FAHRENHEIT CAN WEAKEN BACTERIA AND MAKE THE INOCULANT LESS EFFECTIVE.

d. SOD OR SEED MUST NOT BE PLACED ON SOIL WHICH HAS BEEN TREATED WITH SOIL STERILANTS OR CHEMICALS USED FOR WEED CONTROL UNTIL SUFFICIENT TIME HAS ELAPSED (14 DAYS MIN.) TO PERMIT DISSIPATION OF PHYTO-TOXIC MATERIALS.

2. APPLICATION

a. DRY SEEDING: THIS INCLUDES USE OF CONVENTIONAL DROP OR BROADCAST SPREADERS.

i. INCORPORATE SEED INTO THE SUBSOIL AT THE RATES PRESCRIBED ON TEMPORARY SEEDING TABLE B.1, PERMANENT SEEDING TABLE B.3, OR SITE-SPECIFIC SEEDING SUMMARIES.

ii. APPLY SEED IN TWO DIRECTIONS, PERPENDICULAR TO EACH OTHER. APPLY HALF THE SEEDING RATE IN EACH DIRECTION ROLL THE SEEDED AREA WITH A WEIGHTED ROLLER TO PROVIDE GOOD SEED TO SOIL CONTACT.

b. DRILL OR CULTIPACKER SEEDING: MECHANIZED SEEDERS THAT APPLY AND COVER SEED WITH SOIL.

i. CULTIPACKING SEEDERS ARE REQUIRED TO BURY THE SEED IN SUCH A FASHION AS TO PROVIDE AT LEAST 1/4 INCH OF SOIL COVERING. SEEDBED MUST BE FIRM AFTER PLANTING.

ii. APPLY SEED IN TWO DIRECTIONS, PERPENDICULAR TO EACH OTHER. APPLY HALF THE SEEDING RATE IN EACH DIRECTION.

c. HYDROSEEDING: APPLY SEED UNIFORMLY WITH HYDROSEEDER (SLURRY INCLUDES SEED AND FERTILIZER).

i. IF FERTILIZER IS BEING APPLIED AT THE TIME OF SEEDING, THE APPLICATION RATES SHOULD NOT EXCEED THE FOLLOWING: NITROGEN, 100 POUNDS PER ACRE TOTAL OF SOLUBLE NITROGEN; P2O5 (PHOSPHOROUS), 200 POUNDS PER ACRE; K2O (POTASSIUM), 200 POUNDS PER ACRE.

ii. LIME: USE ONLY GROUND AGRICULTURAL LIMESTONE (UP TO 3 TONS PER ACRE MAY BE APPLIED BY HYDROSEEDING). NORMALLY, NOT MORE THAN 2 TONS ARE APPLIED BY HYDROSEEDING AT ANY ONE TIME. DO NOT USE BURNT OR HYDRATED LIME WHEN HYDROSEEDING.

iii. MIX SEED AND FERTILIZER ON SITE AND SEED IMMEDIATELY AND WITHOUT INTERRUPTION.

iv. WHEN HYDROSEEDING DO NOT INCORPORATE SEED INTO THE SOIL.

B. MULCHING

1. MULCH MATERIALS (IN ORDER OF PREFERENCE)

a. STRAW CONSISTING OF THOROUGHLY THRESHED WHEAT, RYE, OAT, OR BARLEY AND REASONABLY BRIGHT IN COLOR. STRAW IS TO BE FREE OF NOXIOUS WEED SEEDS AS SPECIFIED IN THE MARYLAND SEED LAW AND NOT MUSTY, MOLDY, CAKED, DECAYED, OR EXCESSIVELY DUSTY. NOTE: USE ONLY STERILE STRAW MULCH IN AREAS WHERE ONE SPECIES OF GRASS IS DESIRED.

b. WOOD CELLULOSE FIBER MULCH (WCFM) CONSISTING OF SPECIALLY PREPARED WOOD CELLULOSE PROCESSED INTO A UNIFORM FIBROUS PHYSICAL STATE.

i. WCFM IS TO BE DYED GREEN OR CONTAIN A GREEN DYE IN THE PACKAGE THAT WILL PROVIDE AN APPROPRIATE COLOR TO FACILITATE VISUAL INSPECTION OF THE UNIFORMLY SPREAD SLURRY.

ii. WCFM, INCLUDING DYE, MUST CONTAIN NO GERMINATION OR GROWTH INHIBITING FACTORS.

iii. WCFM MATERIALS ARE TO BE MANUFACTURED AND PROCESSED IN SUCH A MANNER THAT THE WOOD CELLULOSE FIBER MULCH WILL REMAIN IN UNIFORM SUSPENSION IN WATER UNDER AGITATION AND WILL BLEND WITH SEED, FERTILIZER AND OTHER ADDITIVES TO FORM A HOMOGENEOUS SLURRY. THE MULCH MATERIAL MUST FORM A BLOTTER-LIKE GROUND COVER, ON APPLICATION, HAVING MOISTURE ABSORPTION AND PERCOLATION PROPERTIES AND MUST COVER AND HOLD GRASS SEED IN CONTACT WITH THE SOIL WITHOUT INHIBITING THE GROWTH OF THE GRASS SEEDLINGS.

iv. WCFM MATERIAL MUST NOT CONTAIN ELEMENTS OR COMPOUNDS AT CONCENTRATION LEVELS THAT WILL BE PHYTO-TOXIC.

v. WCFM MUST CONFORM TO THE FOLLOWING PHYSICAL REQUIREMENTS: FIBER LENGTH OF APPROXIMATELY 10 MILLIMETERS, DIAMETER APPROXIMATELY 1 MILLIMETER, PH RANGE OF 4.0 TO 8.5, ASH CONTENT OF 1.6 PERCENT MAXIMUM AND WATER HOLDING CAPACITY OF 90 PERCENT MINIMUM.

2. APPLICATION

a. APPLY MULCH TO ALL SEEDED AREAS IMMEDIATELY AFTER SEEDING.

b. WHEN STRAW MULCH IS USED, SPREAD IT OVER ALL SEEDED AREAS AT THE RATE OF 2 TONS PER ACRE TO A UNIFORM LOOSE DEPTH OF 1 TO 2 INCHES. APPLY MULCH TO ACHIEVE A UNIFORM DISTRIBUTION AND DEPTH SO THAT THE SOIL SURFACE IS NOT EXPOSED. WHEN USING A MULCH ANCHORING TOOL, INCREASE THE APPLICATION RATE TO 2.5 TONS PER ACRE.

c. WOOD CELLULOSE FIBER USED AS MULCH MUST BE APPLIED AT A NET DRY WEIGHT OF 1500 POUNDS PER ACRE. MIX THE WOOD CELLULOSE FIBER WITH WATER TO ATTAIN A MIXTURE WITH A MAXIMUM OF 50 POUNDS OF WOOD CELLULOSE FIBER PER 100 GALLONS OF WATER.

3. ANCHORING

a. PERFORM MULCH ANCHORING IMMEDIATELY FOLLOWING APPLICATION OF MULCH TO MINIMIZE LOSS BY WIND OR WATER. THIS MAY BE DONE BY ONE OF THE FOLLOWING METHODS (LISTED BY PREFERENCE), DEPENDING UPON THE SIZE OF THE AREA AND EROSION HAZARD:

i. A MULCH ANCHORING TOOL IS A TRACTOR DRAWN IMPLEMENT DESIGNED TO PUNCH AND ANCHOR MULCH INTO THE SOIL SURFACE A MINIMUM OF 2 INCHES. THIS PRACTICE IS MOST EFFECTIVE ON LARGE AREAS, BUT IS LIMITED TO FLATTER SLOPES WHERE EQUIPMENT CAN OPERATE SAFELY. IF USED ON SLOPING LAND, THIS PRACTICE SHOULD FOLLOW THE CONTOUR.

ii. WOOD CELLULOSE FIBER MAY BE USED FOR ANCHORING STRAW. APPLY THE FIBER BINDER AT A NET DRY WEIGHT OF 750 POUNDS PER ACRE. MIX THE WOOD CELLULOSE FIBER WITH WATER AT A MAXIMUM OF 50 POUNDS OF WOOD CELLULOSE FIBER PER 100 GALLONS OF WATER.

iii. SYNTHETIC BINDERS SUCH AS ACRYLIC DLR (AGRO-TACK), DCA-70, PETROSET, TERRA TAX II, TERRA TACK AR OR OTHER APPROVED EQUAL MAY BE USED. FOLLOW APPLICATION RATES AS SPECIFIED BY THE MANUFACTURER. APPLICATION OF LIQUID BINDERS NEEDS TO BE HEAVIER AT THE EDGES WHERE WIND CATCHES MULCH, SUCH AS IN VALLEYS AND ON CRESTS OF BANKS. USE OF ASPHALT BINDERS IS STRICTLY PROHIBITED.

iv. LIGHTWEIGHT PLASTIC NETTING MAY BE STAPLED OVER THE MULCH ACCORDING TO MANUFACTURER RECOMMENDATIONS. NETTING IS USUALLY AVAILABLE IN ROLLS 4 TO 15 FEET WIDE AND 300 TO 3,000 FEET LONG.

(B-4-4) SECTION 4 - TEMPORARY STABILIZATION

EXPOSED SOILS WHERE GROUND COVER IS NEEDED FOR A PERIOD OF 6 MONTHS OR LESS. FOR LONGER DURATION OF TIME, PERMANENT STABILIZATION PRACTICES ARE REQUIRED.

CRITERIA:

1. SELECT ONE OR MORE OF THE SPECIES OR SEED MIXTURES LISTED IN TABLE B.1 FOR THE APPROPRIATE PLANT HARDINESS ZONE (FROM FIGURE B.3), AND ENTER THEM IN THE TEMPORARY SEEDING SUMMARY BELOW ALONG WITH APPLICATION RATES, SEEDING DATES AND SEEDING DEPTHS. IF THIS SUMMARY IS NOT PUT ON THE PLAN AND COMPLETED, THEN TABLE B.1 PLUS FERTILIZER AND LIME RATES MUST BE PUT ON THE PLAN.

2. FOR SITES HAVING SOIL TESTS PERFORMED, USE AND SHOW THE RECOMMENDED RATES BY THE TESTING AGENCY. SOIL TESTS ARE NOT REQUIRED FOR TEMPORARY SEEDING.

3. WHEN STABILIZATION IS REQUIRED OUTSIDE OF A SEEDING SEASON, APPLY SEED AND MULCH OR STRAW MULCH ALONE AS PRESCRIBED IN SECTION B-4-3.A.1.B AND MAINTAIN UNTIL THE NEXT SEEDING SEASON.

Seed Mixture (Hardiness Zone 7A)					Fertilizer Rate (10-20-20)	Lime Rate
Season	Species	Application[1] Rate (Lb./Ac.)	Seeding[2] Dates	Seeding[3] Depths		
Cool	Annual Ryegrass	40	2/15-4/30 8/15-11/30	1/2"	436 Lbs./Ac. (10 Lbs./ 1000 Sq.Ft.)	2 Tons/Ac. (90 Lbs./ 1000 Sq.Ft.)
Warm	Foxtail Millet	30	5/1-8/14	1/2"		

1. SEEDING RATES FOR THE WARM-SEASON GRASSES ARE IN POUNDS OF PURE LIVE SEED (PLS). ACTUAL PLANTING RATES SHALL BE ADJUSTED TO REFLECT PERCENT SEED GERMINATION AND PURITY, AS TESTED. ADJUSTMENTS ARE USUALLY NOT NEEDED FOR THE COOL-SEASON GRASSES.

SEEDING RATES LISTED ABOVE ARE FOR TEMPORARY SEEDINGS, WHEN PLANTED ALONE. WHEN PLANTED AS A NURSE CROP WITH PERMANENT SEED MIXES, USE 1/3 OF THE SEEDING RATE LISTED ABOVE FOR BARLEY, OATS, AND WHEAT. FOR SMALLER-SEEDED GRASSES (ANNUAL RYEGRASS, PEARL MILLET, FOXTAIL MILLET), DO NOT EXCEED MORE THAN 5% (BY WEIGHT) OF THE OVERALL PERMANENT SEEDING MIX. CEREAL RYE GENERALLY SHOULD NOT BE USED AS A NURSE CROP, UNLESS PLANTING WILL OCCUR IN VERY LATE FALL BEYOND THE SEEDING DATES FOR OTHER TEMPORARY SEEDINGS. CEREAL RYE HAS ALLELOPATHIC PROPERTIES THAT INHIBIT THE GERMINATION AND GROWTH OF OTHER PLANTS. IF IT MUST BE USED AS A NURSE CROP, SEED AT 1/3 OF THE RATE LISTED ABOVE.

OATS ARE THE RECOMMENDED NURSE CROP FOR WARM-SEASON GRASSES.

2. FOR SANDY SOILS, PLANT SEEDS AT TWICE THE DEPTH LISTED ABOVE.

3. THE PLANTING DATES LISTED ARE AVERAGES FOR EACH ZONE AND MAY REQUIRE ADJUSTMENT TO REFLECT LOCAL CONDITIONS, ESPECIALLY NEAR THE BOUNDARIES OF THE ZONE.

THESE PLANS FOR SMALL POND CONSTRUCTION, SOIL EROSION AND SEDIMENT CONTROL MEET THE REQUIREMENTS OF THE HOWARD SOIL CONSERVATION DISTRICT.

John R Robertson 3/27/14
HOWARD SOIL CONSERVATION DISTRICT DATE

(B-4-5) SECTION 5 - PERMANENT STABILIZATION

EXPOSED SOILS WHERE GROUND COVER IS NEEDED FOR 6 MONTHS OR MORE.

A. SEED MIXTURES

1. GENERAL USE

a. SELECT ONE OR MORE OF THE SPECIES OR MIXTURES LISTED IN TABLE B.3 FOR THE APPROPRIATE PLANT HARDINESS ZONE (FROM FIGURE B.3) AND BASED ON THE SITE CONDITION OR PURPOSE FOUND ON TABLE B.2. ENTER SELECTED MIXTURE(S), APPLICATION RATES, AND SEEDING DATES IN THE PERMANENT SEEDING SUMMARY. THE SUMMARY IS TO BE PLACED ON THE PLAN.

b. ADDITIONAL PLANTING SPECIFICATIONS FOR EXCEPTIONAL SITES SUCH AS SHORELINES, STREAM BANKS, OR DUNES OR FOR SPECIAL PURPOSES SUCH AS WILDLIFE OR AESTHETIC TREATMENT MAY BE FOUND IN USDA-NRCS TECHNICAL FIELD OFFICE GUIDE, SECTION 342 - CRITICAL AREA PLANTING.

c. FOR SITES HAVING DISTURBED AREA OVER 5 ACRES, USE AND SHOW THE RATES RECOMMENDED BY THE SOIL TESTING AGENCY.

d. FOR AREAS RECEIVING LOW MAINTENANCE, APPLY UREA FORM FERTILIZER (46-0-0) AT 3 1/2 POUNDS PER 1000 SQUARE FEET (150 POUNDS PER ACRE) AT THE TIME OF SEEDING IN ADDITION TO THE SOIL AMENDMENTS SHOWN IN THE PERMANENT SEEDING SUMMARY.

2. TURFGRASS MIXTURES

a. AREAS WHERE TURFGRASS MAY BE DESIRED INCLUDE LAWNS, PARKS, PLAYGROUNDS, AND COMMERCIAL SITES WHICH WILL RECEIVE A MEDIUM TO HIGH LEVEL OF MAINTENANCE.

b. SELECT ONE OR MORE OF THE SPECIES OR MIXTURES LISTED BELOW BASED ON THE SITE CONDITIONS OR PURPOSE. ENTER SELECTED MIXTURE(S), APPLICATION RATES, AND SEEDING DATES IN THE PERMANENT SEEDING SUMMARY. THE SUMMARY IS TO BE PLACED ON THE PLAN.

i. KENTUCKY BLUEGRASS: FULL SUN MIXTURE: FOR USE IN AREAS THAT RECEIVE INTENSIVE MANAGEMENT. IRRIGATION REQUIRED IN THE AREAS OF CENTRAL MARYLAND AND EASTERN SHORE. RECOMMENDED CERTIFIED KENTUCKY BLUEGRASS CULTIVARS SEEDING RATE: 1.5 TO 2.0 POUNDS PER 1000 SQUARE FEET. CHOOSE A MINIMUM OF THREE KENTUCKY BLUEGRASS CULTIVARS WITH EACH RANGING FROM 10 TO 35 PERCENT OF THE TOTAL MIXTURE BY WEIGHT.

ii. KENTUCKY BLUEGRASS/PERENNIAL RYE: FULL SUN MIXTURE: FOR USE IN FULL SUN AREAS WHERE RAPID ESTABLISHMENT IS NECESSARY AND WHEN TURF WILL RECEIVE MEDIUM TO INTENSIVE MANAGEMENT. CERTIFIED PERENNIAL RYEGRASS CULTIVARS/CERTIFIED KENTUCKY BLUEGRASS SEEDING RATE: 2 POUNDS MIXTURE PER 1000 SQUARE FEET. CHOOSE A MINIMUM OF THREE KENTUCKY BLUEGRASS CULTIVARS WITH EACH RANGING FROM 10 TO 35 PERCENT OF THE TOTAL MIXTURE BY WEIGHT.

iii. TALL FESCUE/KENTUCKY BLUEGRASS: FULL SUN MIXTURE: FOR USE IN DROUGHT PRONE AREAS AND/OR FOR AREAS RECEIVING LOW TO MEDIUM MANAGEMENT IN FULL SUN TO MEDIUM SHADE. RECOMMENDED MIXTURE INCLUDES; CERTIFIED TALL FESCUE CULTIVARS 95 TO 100 PERCENT, CERTIFIED KENTUCKY BLUEGRASS CULTIVARS 0 TO 5 PERCENT. SEEDING RATE: 5 TO 8 POUNDS PER 1000 SQUARE FEET. ONE OR MORE CULTIVARS MAY BE BLENDED.

iv. KENTUCKY BLUEGRASS/FINE FESCUE: SHADE MIXTURE: FOR USE IN AREAS WITH SHADE IN BLUEGRASS LAWNS. FOR ESTABLISHMENT IN HIGH QUALITY, INTENSIVELY MANAGED TURF AREA. MIXTURE INCLUDES; CERTIFIED KENTUCKY BLUEGRASS CULTIVARS 30 TO 40 PERCENT AND CERTIFIED FINE FESCUE AND 60 TO 70 PERCENT. SEEDING RATE: 1 1/2 TO 3 POUNDS PER 1000 SQUARE FEET.

NOTES: SELECT TURFGRASS VARIETIES FROM THOSE LISTED IN THE MOST CURRENT UNIVERSITY OF MARYLAND PUBLICATION, AGRONOMY MEMO #77, "TURFGRASS CULTIVAR RECOMMENDATIONS FOR MARYLAND" CHOOSE CERTIFIED MATERIAL. CERTIFIED MATERIAL IS THE BEST GUARANTEE OF CULTIVAR PURITY. THE CERTIFICATION PROGRAM OF THE MARYLAND DEPARTMENT OF AGRICULTURE, TURF AND SEED SECTION, PROVIDES A RELIABLE MEANS OF CONSUMER PROTECTION AND ASSURES A PURE GENETIC LINE

c. IDEAL TIMES OF SEEDING FOR TURF GRASS MIXTURES

WESTERN MD: MARCH 15 TO JUNE 1, AUGUST 1 TO OCTOBER 1 (HARDINESS ZONES: 5B, 6A)

CENTRAL MD: MARCH 1 TO MAY 15, AUGUST 15 TO OCTOBER 15 (HARDINESS ZONE: 6B)

SOUTHERN MD, EASTERN SHORE: MARCH 1 TO MAY 15, AUGUST 15 TO OCTOBER 15 (HARDINESS ZONES: 7A, 7B)

d. TILL AREAS TO RECEIVE SEED BY DISKING OR OTHER APPROVED METHODS TO A DEPTH OF 2 TO 4 INCHES, LEVEL AND RAKE THE AREAS TO PREPARE A PROPER SEEDBED. REMOVE STONES AND DEBRIS OVER 1 1/2 INCHES IN DIAMETER. THE RESULTING SEEDBED MUST BE IN SUCH CONDITION THAT FUTURE MOWING OF GRASSES WILL POSE NO DIFFICULTY.

e. IF SOIL MOISTURE IS DEFICIENT, SUPPLY NEW SEEDINGS WITH ADEQUATE WATER FOR PLANT GROWTH (1/2 TO 1 INCH EVERY 3 TO 4 DAYS DEPENDING ON SOIL TEXTURE) UNTIL THEY ARE FIRMLY ESTABLISHED. THIS IS ESPECIALLY TRUE WHEN SEEDINGS ARE MADE LATE IN THE PLANTING SEASON, IN ABNORMALLY DRY OR HOT SEASONS, OR ON ADVERSE SITES.

Seed Mixture No. 9 (Hardiness Zone 7A)					** Fertilizer Rate (10-20-20)			**Lime Rate
No.	Species	Application Rate (Lb./Ac.)	Seeding Dates***	Seeding Depths	N	P_2O_5	K_2O	
9	*Tall Fescue	60	2/15 - 4/30 8/15 - 10/31	1/4"-1/2"	45 Lb./Ac. (1 Lb./ 1000 Sq.Ft.)	90 Lb./Ac. (2 Lb./ 1000 Sq.Ft.)	90 Lb./Ac. (2 Lb./ 1000 Sq.Ft.)	2 Tons/Ac. (90 Lb./ 1000 Sq.Ft.)
	*Kentucky Bluegrass	40						
	Pennfine Perennial Ryegrass	20						

* BLEND 3 CULTIVARS OF ANY CULTIVAR LISTED ON PAGE B.32 OF THE 2011 MARYLAND STANDARDS AND SPECIFICATIONS FOR SOIL EROSION AND SEDIMENT CONTROL.

** AT TIME OF FINE GRADING, FERTILIZER AND LIME RATES WILL BE BASED ON SOIL TEST RESULTS; (SEE SECTION 2.C). COPY OF RECOMMENDED RATES TO BE SUPPLIED TO THE SEDIMENT CONTROL INSPECTOR.

*** FOR SEEDING DATES 5/1-8/14 ADD 6 LB/AC OF EITHER FOXTAIL MILLET OR PEARL MILLET TO PERMANENT SEED MIXTURE #9 ABOVE.

NOTE: ALL SEED MUST COMPLY WITH THE MARYLAND STATE SEED LAW. SEED MUST BE FREE OF PROHIBITED OR RESTRICTED NOXIOUS WEEDS, AS CURRENTLY LISTED BY THE MARYLAND DEPARTMENT OF AGRICULTURE, TURF AND SEED SECTION.

B. SOD: TO PROVIDE QUICK COVER ON DISTURBED AREAS (2:1 GRADE OR FLATTER).

1. GENERAL SPECIFICATIONS

a. CLASS OF TURFGRASS SOD MUST BE MARYLAND STATE CERTIFIED. SOD LABELS MUST BE MADE AVAILABLE TO THE JOB FOREMAN AND INSPECTOR.

b. SOD MUST BE MACHINE CUT AT A UNIFORM SOIL THICKNESS OF 3/4 INCH, PLUS OR MINUS 1/4 INCH, AT THE TIME OF CUTTING. MEASUREMENT FOR THICKNESS MUST EXCLUDE TOP GROWTH AND THATCH. BROKEN PADS AND TORN OR UNEVEN ENDS WILL NOT BE ACCEPTABLE.

c. STANDARD SIZE SECTIONS OF SOD MUST BE STRONG ENOUGH TO SUPPORT THEIR OWN WEIGHT AND RETAIN THEIR SIZE AND SHAPE WHEN SUSPENDED VERTICALLY WITH A FIRM GRASP ON THE UPPER 10 PERCENT OF THE SECTION.

d. SOD MUST NOT BE HARVESTED OR TRANSPLANTED WHEN MOISTURE CONTENT (EXCESSIVELY DRY OR WET) MAY ADVERSELY AFFECT ITS SURVIVAL.

e. SOD MUST BE HARVESTED, DELIVERED, AND INSTALLED WITHIN A PERIOD OF 36 HOURS. SOD NOT TRANSPLANTED WITHIN THIS PERIOD MUST BE APPROVED BY AN AGRONOMIST OR SOIL SCIENTIST PRIOR TO ITS INSTALLATION.

2. SOD INSTALLATION

a. DURING PERIODS OF EXCESSIVELY HIGH TEMPERATURE OR IN AREAS HAVING DRY SUBSOIL, LIGHTLY IRRIGATE THE SUBSOIL IMMEDIATELY PRIOR TO LAYING THE SOD.

b. LAY THE FIRST ROW OF SOD IN A STRAIGHT LINE WITH SUBSEQUENT ROWS PLACED PARALLEL TO IT AND TIGHTLY WEDGED AGAINST EACH OTHER. STAGGER LATERAL JOINTS TO PROMOTE MORE UNIFORM GROWTH AND STRENGTH. ENSURE THAT SOD IS NOT STRETCHED OR OVERLAPPED AND THAT ALL JOINTS ARE BUTTED TIGHT IN ORDER TO PREVENT VOIDS WHICH WOULD CAUSE AIR DRYING OF THE ROOTS.

c. WHEREVER POSSIBLE, LAY SOD WITH THE LONG EDGES PARALLEL TO THE CONTOUR AND WITH STAGGERING JOINTS. ROLL AND TAMP, PEG OR OTHERWISE SECURE THE SOD TO PREVENT SLIPPAGE ON SLOPES. ENSURE SOLID CONTACT EXISTS BETWEEN SOD ROOTS AND THE UNDERLYING SOIL SURFACE.

d. WATER THE SOD IMMEDIATELY FOLLOWING ROLLING AND TAMPING UNTIL THE UNDERSIDE OF THE NEW SOD PAD AND SOIL SURFACE BELOW THE SOD ARE THOROUGHLY WET. COMPLETE THE OPERATIONS OF LAYING, TAMPING AND IRRIGATING FOR ANY PIECE OF SOD WITHIN EIGHT HOURS.

3. SOD MAINTENANCE

a. IN THE ABSENCE OF ADEQUATE RAINFALL, WATER DAILY DURING THE FIRST WEEK OR AS OFTEN AND SUFFICIENTLY AS NECESSARY TO MAINTAIN MOIST SOIL TO A DEPTH OF 4 INCHES. WATER SOD DURING THE HEAT OF THE DAY TO PREVENT WILTING.

b. AFTER THE FIRST WEEK, SOD WATERING IS REQUIRED AS NECESSARY TO MAINTAIN ADEQUATE MOISTURE CONTENT.

c. DO NOT MOW UNTIL THE SOD IS FIRMLY ROOTED. NO MORE THAN 1/3 OF THE GRASS LEAF MUST BE REMOVED BY THE INITIAL CUTTING OR SUBSEQUENT CUTTINGS. MAINTAIN A GRASS HEIGHT OF AT LEAST 3 INCHES UNLESS OTHERWISE SPECIFIED.

DEVELOPERS CERTIFICATE:

I/WE CERTIFY THAT ALL DEVELOPMENT AND/OR CONSTRUCTION WILL BE DONE ACCORDING TO THESE PLANS AND THAT ANY RESPONSIBLE PERSONNEL INVOLVED IN THE CONSTRUCTION PROJECT WILL HAVE A CERTIFICATE OF ATTENDANCE AT A DEPARTMENT OF ENVIRONMENT APPROVED TRAINING PROGRAM FOR THE CONTROL OF SEDIMENT AND EROSION BEFORE BEGINNING THE PROJECT. I SHALL ENGAGE A REGISTERED PROFESSIONAL ENGINEER TO SUPERVISE POND CONSTRUCTION AND PROVIDE THE HOWARD SOIL CONSERVATION DISTRICT WITH AN "AS-BUILT" PLAN OF THE POND WITHIN 30 DAYS OF COMPLETION. I ALSO AUTHORIZE PERIODIC ON-SITE INSPECTIONS BY THE HOWARD SOIL CONSERVATION DISTRICT.

James F. Knott, Jr. 3/24/14
SIGNATURE OF DEVELOPER DATE
PRINT NAME BELOW SIGNATURE
James F. Knott, Jr.

(H-1) STANDARDS AND SPECIFICATIONS FOR MATERIALS

TABLE H.1: GEOTEXTILE FABRICS

PROPERTY	TEST METHOD	WOVEN SLIT FILM GEOTEXTILE MD	WOVEN SLIT FILM GEOTEXTILE CD	WOVEN MONOFILAMENT GEOTEXTILE MD	WOVEN MONOFILAMENT GEOTEXTILE CD	NONWOVEN GEOTEXTILE MD	NONWOVEN GEOTEXTILE CD
		MINIMUM AVERAGE ROLL VALUE[1]					
Grab Tensile Strength	ASTM D-4632	200 lb	200 lb	370 lb	250 lb	200 lb	200 lb
Grab Tensile Elongation	ASTM D-4632	15%	10%	15%	15%	50%	50%
Trapezoidal Tear Strength	ASTM D-4533	75 lb	75 lb	100 lb	60 lb	80 lb	80 lb
Puncture Strength	ASTM D-6241	450 lb		900 lb		450 lb	
Apparent Opening Size[2]	ASTM D-4751	U.S. Sieve 30 (0.59 mm)		U.S. Sieve 70 (0.21 mm)		U.S. Sieve 70 (0.21 mm)	
Permittivity	ASTM D-4491	0.05 sec -1		0.28 sec -1		1.1 sec -1	
Ultraviolet Resistance Retained at 500 hours	ASTM D-4355	70% strength		70% strength		70% strength	

1. ALL NUMERIC VALUES EXCEPT APPARENT OPENING SIZE (AOS) REPRESENT MINIMUM AVERAGE ROLL VALUES (MARV). MARV IS CALCULATED AS THE TYPICAL MINUS TWO STANDARD DEVIATIONS. MD IS MACHINE DIRECTION; CD IS CROSS DIRECTION.

2. VALUES FOR AOS REPRESENT THE AVERAGE MAXIMUM OPENING.

GEOTEXTILES MUST BE EVALUATED BY THE NATIONAL TRANSPORTATION PRODUCT EVALUATION PROGRAM (NTPEP) AND CONFORM TO THE VALUES IN TABLE H.1.

THE GEOTEXTILE MUST BE INERT TO COMMONLY ENCOUNTERED CHEMICALS AND HYDROCARBONS AND MUST BE ROT AND MILDEW RESISTANT. THE GEOTEXTILE MUST BE MANUFACTURED FROM FIBERS CONSISTING OF LONG CHAIN SYNTHETIC POLYMERS AND COMPOSED OF A MINIMUM OF 95 PERCENT BY WEIGHT OF POLYOLEFINS OR POLYESTERS, AND FORMED INTO A STABLE NETWORK SO THE FILAMENTS OR YARNS RETAIN THEIR DIMENSIONAL STABILITY RELATIVE TO EACH OTHER, INCLUDING SELVAGES.

WHEN MORE THAN ONE SECTION OF GEOTEXTILE IS NECESSARY, OVERLAP THE SECTIONS BY AT LEAST ONE FOOT. THE GEOTEXTILE MUST BE PULLED TAUT OVER THE APPLIED SURFACE. EQUIPMENT MUST NOT RUN OVER EXPOSED FABRIC. WHEN PLACING RIPRAP ON GEOTEXTILE, DO NOT EXCEED A ONE FOOT DROP HEIGHT.

TABLE H.2: STONE SIZES

	SIZE RANGE	d50	d100	AASHTO	MIDSIZE WEIGHT[3]
NUMBER 57[1]	3/8 to 1 1/2 in	1/2 in	1 1/2 in	M-43	N/A
NUMBER 1	2 to 3 in	2 1/2 in	3 in	M-43	N/A
RIPRAP[2] (CLASS 0)	4 to 7 in	5 1/2 in	7 in	N/A	N/A
CLASS I	N/A	9 1/2 in	15 in	N/A	40 lb
CLASS II	N/A	16 in	24 in	N/A	200 lb
CLASS III	N/A	23 in	34 in	N/A	600 lb

1. THIS CLASSIFICATION IS TO BE USED ON THE UPSTREAM FACE OF STONE OUTLETS AND CHECK DAMS.

2. THIS CLASSIFICATION IS TO BE USED FOR GABIONS.

3. OPTIMUM GRADATION IS 50 PERCENT OF THE STONE BEING ABOVE AND 50 PERCENT BELOW THE MIDSIZE.

STONE MUST BE COMPOSED OF A WELL GRADED MIXTURE OF STONE SIZED SO THAT FIFTY (50) PERCENT OF THE PIECES BY WEIGHT ARE LARGER THAN THE SIZE DETERMINED BY USING THE CHARTS. A WELL GRADED MIXTURE, AS USED HEREIN, IS DEFINED AS A MIXTURE COMPOSED PRIMARILY OF LARGER STONE SIZES BUT WITH A SUFFICIENT MIXTURE OF OTHER SIZES TO FILL THE SMALLER VOIDS BETWEEN THE STONES. THE DIAMETER OF THE LARGEST STONE IN SUCH A MIXTURE MUST NOT EXCEED THE RESPECTIVE D100 SELECTED FROM TABLE H.2. THE D50 REFERS TO THE MEDIAN DIAMETER OF THE STONE. THIS IS THE SIZE FOR WHICH 50 PERCENT, BY WEIGHT, WILL BE SMALLER AND 50 PERCENT WILL BE LARGER.

NOTE: RECYCLED CONCRETE EQUIVALENT MAY BE SUBSTITUTED FOR ALL STONE CLASSIFICATIONS FOR TEMPORARY CONTROL MEASURES ONLY. CONCRETE BROKEN INTO THE SIZES MEETING THE APPROPRIATE CLASSIFICATION, CONTAINING NO STEEL REINFORCEMENT, AND HAVING A MINIMUM DENSITY OF 150 POUNDS PER CUBIC FOOT MAY BE USED AS AN EQUIVALENT.

TABLE H.3: COMPOST

PARAMETERS[1]	ACCEPTABLE RANGE
pH	5.0 - 8.5
Moisture content	30% - 60%, wet weight basis
Organic matter content	25% - 65%, dry weight basis
Particle size	% passing a selected mesh size, dry weight basis 3 in (75 mm), 100% passing 1 in (25 mm), 90 - 100% passing 0.75 in (19 mm), 70 - 100% passing 0.25 in (6.4 mm), 30 - 60% passing 0.04 in (1 mm), 30% min. passing
Physical contaminants (manmade inerts)	<1% dry weight basis

ADAPTED FROM AASHTO STANDARDS SPECS FOR COMPOST FILTER SOCKS AND EPA EXAMPLE COMPOST FILTER PARAMETERS.

1. RECOMMENDED TEST METHODOLOGIES ARE PROVIDED IN TEST METHODS FOR THE EXAMINATION OF COMPOSTING AND COMPOST (TMEC, THE U.S COMPOSTING COUNCIL).

SEDIMENT CONTROL GENERAL NOTES

1. A MINIMUM OF 48 HOURS NOTICE MUST BE GIVEN TO THE HOWARD COUNTY DEPARTMENT OF INSPECTIONS, LICENSES AND PERMITS, SEDIMENT CONTROL DIVISION PRIOR TO THE START OF ANY CONSTRUCTION (313-1855).
2. ALL VEGETATIVE AND STRUCTURAL PRACTICES ARE TO BE INSTALLED ACCORDING TO THE PROVISIONS OF THIS PLAN AND ARE TO BE IN CONFORMANCE WITH THE MOST CURRENT MARYLAND STANDARDS AND SPECIFICATIONS FOR SOIL EROSION AND SEDIMENT CONTROL AND REVISIONS THERETO.
3. FOLLOWING INITIAL SOIL DISTURBANCE OR RE-DISTURBANCE, PERMANENT OR TEMPORARY STABILIZATION SHALL BE COMPLETED WITHIN: A) 3 CALENDAR DAYS FOR ALL PERIMETER SEDIMENT CONTROL STRUCTURES, DIKES, PERIMETER SLOPES AND ALL SLOPES GREATER THAN 3:1, B) 7 DAYS AS TO ALL OTHER DISTURBED OR GRADED AREAS ON THE PROJECT SITE.
4. ALL DISTURBED AREAS MUST BE STABILIZED WITHIN THE TIME PERIOD SPECIFIED ABOVE IN ACCORDANCE WITH THE 2011 MARYLAND STANDARDS AND SPECIFICATIONS FOR SOIL EROSION AND SEDIMENT CONTROL FOR PERMANENT SEEDING (SEC. B-4-5), TEMPORARY SEEDING (SEC. B-4-4) AND MULCHING (SEC. B-4-3). TEMPORARY STABILIZATION WITH MULCH ALONE CAN ONLY BE DONE WHEN RECOMMENDED SEEDING DATES DO NOT ALLOW FOR PROPER GERMINATION AND ESTABLISHMENT OF GRASSES.
5. ALL SEDIMENT CONTROL STRUCTURES ARE TO REMAIN IN PLACE AND ARE TO BE MAINTAINED IN OPERATIVE CONDITION UNTIL PERMISSION FOR THEIR REMOVAL HAS BEEN OBTAINED FROM THE HOWARD COUNTY SEDIMENT CONTROL INSPECTOR.
6. SITE ANALYSIS:

TOTAL AREA OF SITE	45.13 ACRES±
AREA DISTURBED (PLUS BORROW AREA & TEMP. ESD)	42.57 + 7.93 = 50.5 ACRES±
PHASE 1, STAGE 1 LOD	10.64 ACRES±
AREA TO BE ROOFED OR PAVED	1.15 ACRES±
AREA TO BE VEGETATIVELY STABILIZED (PLUS SEC. 3, 6)	41.09 + 7.93 = 49.02 ACRES±
TOTAL CUT* (PLUS BORROW AREA & TEMP. ESD)	182,000 + 19,000 = 201,000 CU./YDS.
TOTAL FILL*	176,7000 CU./YDS.

OFF-SITE WASTE/BORROW AREA LOCATION TO BE A SITE WITH AN ACTIVE GRADING PERMIT, APPROVED BY THE SEDIMENT CONTROL INSPECTOR

7. ANY SEDIMENT CONTROL PRACTICE THAT IS DISTURBED BY GRADING ACTIVITY FOR PLACEMENT OF UTILITIES MUST BE REPAIRED ON THE SAME DAY OF DISTURBANCE.
8. ADDITIONAL SEDIMENT CONTROL MUST BE PROVIDED, IF DEEMED NECESSARY BY THE HOWARD COUNTY SEDIMENT CONTROL INSPECTOR.
9. ON ALL SITES WITH DISTURBED AREAS IN EXCESS OF2 ACRES, APPROVAL OF THE INSPECTION AGENCY SHALL BE REQUESTED UPON COMPLETION OF INSTALLATION OF PERIMETER EROSION AND SEDIMENT CONTROLS, BUT BEFORE PROCEEDING WITH ANY OTHER EARTH DISTURBANCE OR GRADING. OTHER BUILDING OR GRADING INSPECTION APPROVALS MAY NOT BE AUTHORIZED UNTIL THIS INITIAL APPROVAL BY THE INSPECTION AGENCY IS MADE.
10. TRENCHES FOR THE CONSTRUCTION OF UTILITIES IS LIMITED TO THREE PIPE LENGTHS OR THAT WHICH SHALL BE BACK-FILLED AND STABILIZED BY THE END OF EACH WORKDAY, WHICHEVER IS SHORTER.
11. ANY CHANGES OR REVISIONS TO THE SEQUENCE OF CONSTRUCTION MUST BE REVIEWED AND APPROVED BY THE PLAN APPROVAL AUTHORITY PRIOR TO PROCEEDING WITH CONSTRUCTION.
12. A PROJECT IS TO BE SEQUENCED SO THAT GRADING ACTIVITIES BEGIN ON ONE GRADING UNIT (MAXIMUM ACREAGE OF 20 AC. PER GRADING UNIT) AT A TIME. WORK MAY PROCEED TO A SUBSEQUENT GRADING UNIT WHEN AT LEAST 50 PERCENT OF THE DISTURBED AREA IN THE PRECEDING GRADING UNIT HAS BE STABILIZED AND APPROVED BY THE ENFORCEMENT AUTHORITY. UNLESS OTHERWISE SPECIFIED AND APPROVED BY THE APPROVAL AUTHORITY, NO MORE THAN 30 ACRES CUMULATIVELY MAY BE DISTURBED AT A GIVEN TIME.

PROFESSIONAL CERTIFICATION

I HEREBY CERTIFY THAT THESE DOCUMENTS WERE PREPARED OR APPROVED BY ME, AND THAT I AM A DULY LICENSED PROFESSIONAL ENGINEER UNDER THE LAWS OF THE STATE OF MARYLAND, LICENSE NO. 26569, EXPIRATION DATE: 7-18-15

ENGINEERS CERTIFICATE:

I CERTIFY THAT THIS PLAN FOR POND CONSTRUCTION, EROSION AND SEDIMENT CONTROL REPRESENTS A PRACTICAL AND WORKABLE PLAN BASED ON MY PERSONAL KNOWLEDGE OF THE SITE CONDITIONS. THIS PLAN WAS PREPARED IN ACCORDANCE WITH THE REQUIREMENTS OF THE HOWARD SOIL CONSERVATION DISTRICT. I HAVE NOTIFIED THE DEVELOPER THAT HE/SHE MUST ENGAGE A REGISTERED PROFESSIONAL ENGINEER TO SUPERVISE POND CONSTRUCTION AND PROVIDE THE HOWARD SOIL CONSERVATION DISTRICT WITH AN "AS-BUILT" PLAN OF THE POND WITHIN 30 DAYS OF COMPLETION.

Gerald D. Turnbaugh 3-25-14
SIGNATURE OF ENGINEER DATE
PRINT NAME BELOW SIGNATURE
Gerald D. Turnbaugh

FOR REVISION NO. 1 ONLY

3-25-14
Date

STATE OF MARYLAND
GERALD DOUGLAS TURNBAUGH
NO. 26569
PROFESSIONAL ENGINEER

Professional Engr. No.

DETAIL C-8 MOUNTABLE BERM

STANDARD SYMBOL
MB

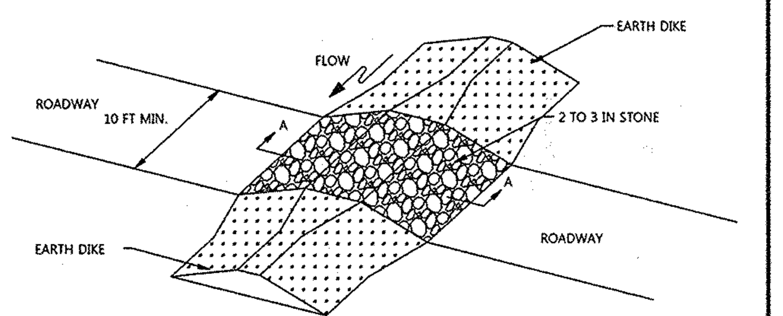

ISOMETRIC VIEW

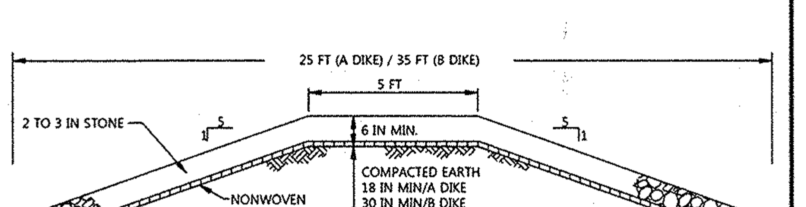

SECTION A-A

CONSTRUCTION SPECIFICATIONS

1. USE MINIMUM WIDTH OF 10 FEET TO ALLOW FOR VEHICULAR PASSAGE.
2. PLACE NONWOVEN GEOTEXTILE, AS SPECIFIED IN SECTION H-1 MATERIALS, OVER THE EARTH MOUND PRIOR TO PLACING STONE.
3. PLACE 2 TO 3 INCH STONE OR EQUIVALENT RECYCLED CONCRETE AT LEAST 6 INCHES DEEP OVER THE LENGTH AND WIDTH OF THE MOUNTABLE BERM.
4. MAINTAIN LINE, GRADE, AND CROSS SECTION. ADD STONE OR MAKE OTHER REPAIRS AS CONDITIONS DEMAND TO MAINTAIN SPECIFIED DIMENSIONS. REMOVE ACCUMULATED SEDIMENT AND DEBRIS. MAINTAIN POSITIVE DRAINAGE.

MARYLAND STANDARDS AND SPECIFICATIONS FOR SOIL EROSION AND SEDIMENT CONTROL

U.S. DEPARTMENT OF AGRICULTURE NATURAL RESOURCES CONSERVATION SERVICE	2011	MARYLAND DEPARTMENT OF ENVIRONMENT WATER MANAGEMENT ADMINISTRATION

DATA SOURCES

Existing topography shown hereon is a result of an aerial survey provided by Air Survey Corporation dated, 1998 supplemented with field run information performed by Daft McCune Walker, Inc. dated, 2010.

Property boundary shown hereon is a result of field run monumented boundary survey performed on or about June 25, 1999 by Daft McCune Walker, Inc.

Soils if shown provided by Soil Data Mart dated 2005 published by Natural Resources Conservation Services (NRCS)

Zoning information shown hereon provided by Howard County Department of Planning and Zoning, adapted by Howard County Council February 2, 2004.

Wetland and stream limits shown hereon were originally approved by Maryland Department of the Environment and the US Corps of Engineers in April 2001 and re-verified by these agencies in October 2009.

APPROVED: HOWARD COUNTY DEPT. OF PUBLIC WORKS

CHIEF, BUREAU OF HIGHWAYS — 4-10-14 DATE

APPROVED: HOWARD COUNTY DEPT. OF PLANNING AND ZONING

CHIEF, DIVISION OF LAND DEVELOPMENT — 4-16-14 DATE

CHIEF, DEVELOPMENT ENGINEERING DIVISION — 4/1/14 DATE

Date	No.	Revision Description
2/10/14	1	UPDATE 2011 MD. STD. DTLS. & SPECS.

EMERSON

SECTION 3 - AREA 7 - PARCEL A

"FUTURE EMPLOYMENT USE"

OWNER/DEVELOPER:

EMERSON DEVELOPMENT IX LLC.
ONE TEXAS STATION CT. SUITE 200
TIMONIUM, MD 21093
(443) 689-8000

DMW

DAFT McCUNE WALKER INC

200 EAST PENNSYLVANIA TOWSON, MD 21286
P: 410 296 3333 F: 410 296 4705 WWW.DMW.COM

A TEAM OF LAND PLANNERS, LANDSCAPE ARCHITECTS, ENGINEERS, SURVEYORS & ENVIRONMENTAL PROFESSIONALS

EMERSON	SEC. 3 AREA 7	PART OF 837	
5289/330	15	MDX-3	47 / 6th / 6069.03
E-15	7520000		

TITLE: FINAL PLAN
SEDIMENT AND EROSION CONTROL
SPECIFICATIONS, DETAILS & NOTES

Des. By GDT	Scale AS SHOWN	Proj. No. 95054.81
Drn. By RC/GO	Date 3/24/14	14 of 30
Chk. By	Approved	

F -11-036

A:\95054\95054.81\ENGR\CAD FILES\SHEET FILES\95054.81_SEC14.DWG Mon, Mar 24, 2014

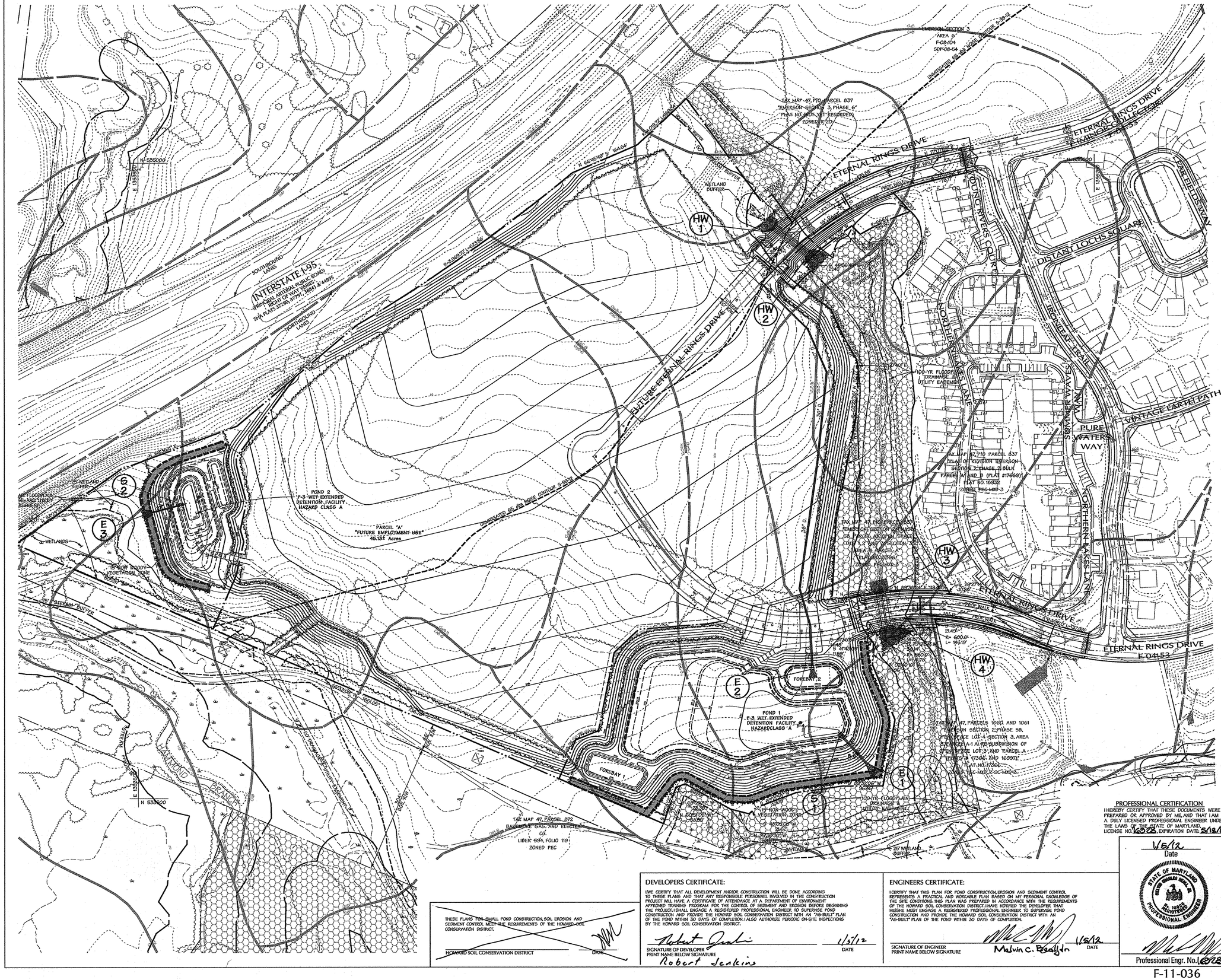

NOTES

1. TREES, SHRUBS AND OTHER WOODY VEGETATION NOT ALLOWED WITHIN TWENTY-FIVE (25) FEET OF THE RISER STRUCTURE AND NOT ALLOWED WITHIN FIFTEEN (15) FEET OF ANY PORTION OF THE EMBANKMENT
2. SWM FACILITY SHALL BE PRIVATELY OWNED BY THE PROPERTY OWNER. THE OWNER SHALL PERFORM MOWING/TRASH REMOVAL MAINTENANCE.
3. ACTUAL LENGTH AND DEPTH OF CUT-OFF TRENCH SHALL BE DETERMINED BY THE GEOTECHNICAL ENGINEER IN THE FIELD. FILL MATERIAL FOR THE CUT-OFF TRENCH / CLAY CORE SHALL CONFORM TO UNIFIED SOIL CLASSIFICATION CL, GL, CH, OR SC. CONSIDERATION MAY BE GIVEN TO THE USE OF OTHER MATERIALS IN THE EMBANKMENT IF DESIGN AND CONSTRUCTION ARE SUPERVISED BY A GEOTECHNICAL ENGINEER.
4. SEE SHEET 20 & 30 FOR RIPRAP OUTLET DETAILS.
5. FOR BORING LOGS SEE SHEET 24.

Legend

- EX. CURB & GUTTER
- EX. MAJOR CONTOURS — 400
- EX. MINOR CONTOURS — 402
- EX. STORM DRAIN — EX. 21" RCP
- EX. SEWER — EX. 8" S.
- EX. WATER — EX. 4" W.
- EXISTING TREE LINE
- EXISTING WETLAND LIMIT — W
- PROPERTY LINE
- ROADWAY RIGHT-OF-WAY
- PROPOSED LOT LINE
- PROPOSED EASEMENT
- PROPOSED CURB & GUTTER
- PROPOSED SIDEWALK
- PROP. STORM DRAIN — 15" RCCP
- PROP. SEWER — 6" S.
- PROP. WATER — 4" W.
- PROP. MAJOR CONTOURS
- PROP. MINOR CONTOURS
- SOIL BORING — B-4
- NON WOODY VEGETATION ZONE
- 45' BGE SETBACK FOR CREDITED FOREST AREAS
- 65 dba NOISE LINE
- EX. FOREST CONSERVATION EASEMENT

OPERATION, MAINTENANCE AND INSPECTION

INSPECTION OF THE PONDS SHOWN HEREON SHALL BE PERFORMED AT LEAST ANNUALLY IN ACCORDANCE WITH THE CHECKLIST AND REQUIREMENT CONTAINED WITHIN USDA, SCS "STANDARDS AND SPECIFICATIONS FOR PONDS" (MD-378). THE POND OWNER(S) AND ANY HEIRS, SUCCESSORS, OR ASSIGNS SHALL BE RESPONSIBLE FOR THE SAFETY OF THE POND AND THE CONTINUED OPERATION, SURVEILLANCE, INSPECTION, AND MAINTANCE THEREOF. THE POND OWNER(S) SHALL PROMPTLY NOTIFY THE SOIL CONSERVATION DISTRICT OF ANY UNUSUAL OBSERVATIONS THAT MAY BE INDICATIONS OF DISTRESS SUCH AS EXCESSIVE SEEPAGE, TURBID SEEPAGE, SLIDING OR SLUMPING.

DATA SOURCES

Existing topography shown hereon is a results of an aerial survey provided by Air Survey Corporation dated, 1996 supplemented with field run information performed by Daft McCune Walker, Inc. dated, 2010.

Property boundary shown hereon is a result of field run monumented boundary survey performed on or about June 25, 1999 by Daft McCune Walker, Inc.

Soils if shown provided by Soil Data Mart dated 2005 published by Natural Resources Conservation Services (NRCS)

Zoning information shown hereon provided by Howard County Department of Planning and Zoning, adopted by Howard County Council February 2, 2004.

Wetland and stream limits shown hereon were originally approved by Maryland Department of the Environment and the US Corps of Engineers in April 2001 and re-verified by these agencies in October 2009.

APPROVED: HOWARD COUNTY DEPT. OF PUBLIC WORKS

CHIEF, BUREAU OF HIGHWAYS — DATE 2-23-12

HOWARD COUNTY DEPT. OF PLANNING & ZONING

CHIEF, DEVELOPMENT ENGINEERING DIVISION — DATE 2/28/12

CHIEF, DIVISION OF LAND DEVELOPMENT — DATE 3/01/12

Date	No.	Revision Description
1-10-14	1	UPDATE OWNER/DEVELOPER INFO.

EMERSON

SECTION 3 – AREA 7 – PARCEL A

"Future Employment Use"

OWNER/DEVELOPER:
EMERSON DEVELOPMENT IX LLC
ONE TEXAS STATION COURT, SUITE 200
TIMONIUM, MD. 21093 (443) 680-8000

PROFESSIONAL CERTIFICATION

I HEREBY CERTIFY THAT THESE DOCUMENTS WERE PREPARED OR APPROVED BY ME, AND THAT I AM A DULY LICENSED PROFESSIONAL ENGINEER UNDER THE LAWS OF THE STATE OF MARYLAND, LICENSE NO. 16028, EXPIRATION DATE: 5/18/12

1/6/12
Date

STATE OF MARYLAND — MELVIN CHARLES PEASLEE — NO. 16028 — PROFESSIONAL ENGINEER

Professional Engr. No. 16028

DMW
Daft-McCune-Walker, Inc.
200 East Pennsylvania Avenue
Towson, Maryland 21286
(410) 296-3333
Fax 296-4705

A Team of Land Planners, Landscape Architects, Engineers, Surveyors & Environmental Professionals

DEVELOPERS CERTIFICATE:

I/WE CERTIFY THAT ALL DEVELOPMENT AND/OR CONSTRUCTION WILL BE DONE ACCORDING TO THESE PLANS AND THAT ANY RESPONSIBLE PERSONNEL INVOLVED IN THE CONSTRUCTION PROJECT WILL HAVE A CERTIFICATE OF ATTENDANCE AT A DEPARTMENT OF ENVIRONMENT APPROVED TRAINING PROGRAM FOR THE CONTROL OF SEDIMENT AND EROSION BEFORE BEGINNING THE PROJECT. I SHALL ENGAGE A REGISTERED PROFESSIONAL ENGINEER TO SUPERVISE POND CONSTRUCTION AND PROVIDE THE HOWARD SOIL CONSERVATION DISTRICT WITH AN "AS-BUILT" PLAN OF THE POND WITHIN 30 DAYS OF COMPLETION. I ALSO AUTHORIZE PERIODIC ON-SITE INSPECTIONS BY THE HOWARD SOIL CONSERVATION DISTRICT.

SIGNATURE OF DEVELOPER — DATE 1/5/12
PRINT NAME BELOW SIGNATURE
Robert Jenkins

ENGINEERS CERTIFICATE:

I CERTIFY THAT THIS PLAN FOR POND CONSTRUCTION, EROSION AND SEDIMENT CONTROL REPRESENTS A PRACTICAL AND WORKABLE PLAN BASED ON MY PERSONAL KNOWLEDGE OF THE SITE CONDITIONS. THIS PLAN WAS PREPARED IN ACCORDANCE WITH THE REQUIREMENTS OF THE HOWARD SOIL CONSERVATION DISTRICT. I HAVE NOTIFIED THE DEVELOPER THAT HE/SHE MUST ENGAGE A REGISTERED PROFESSIONAL ENGINEER TO SUPERVISE POND CONSTRUCTION AND PROVIDE THE HOWARD SOIL CONSERVATION DISTRICT WITH AN "AS-BUILT" PLAN OF THE POND WITHIN 30 DAYS OF COMPLETION.

SIGNATURE OF ENGINEER — DATE 1/5/12
PRINT NAME BELOW SIGNATURE
Melvin C. Peaslee

THESE PLANS FOR SMALL POND CONSTRUCTION, SOIL EROSION AND SEDIMENT CONTROL MEET THE REQUIREMENTS OF THE HOWARD SOIL CONSERVATION DISTRICT.

HOWARD SOIL CONSERVATION DISTRICT — DATE

SUBDIVISION NAME	EMERSON	SECTION/AREA	SEC.3 AREA 7
LOT/PARCEL #	PART OF 837	PLAT # OR L/F	5289/330
GRID #	15	ZONE	MXD-3
TAX/ZONE MAP	47	ELECT. DISTRICT	6TH
CENSUS TRACT	6069.03	WATER CODE	E-15
SEWER CODE	7520000		

TITLE

FINAL PLAN
OVERALL STORMWATER MANAGEMENT PLAN

Des By	TJC	Scale	1"=100'	Proj. No.	95054.W2
Drn By	JSS	Date	11/17/11	15 of 30	
Chk By	JDF	Approved			

F-11-036

n:\95054\95054.W1\Final Plans\95054W1S.MO1

DA=37.85 Ac. / 0.0591 SQ.MI. — 1 — RCN=61 / Tc=0.23 HRS.

DA=5.52 Ac. / 0.0086 SQ.MI. — 2 — RCN=65 / Tc=0.22 HRS.

Legend

- EX. CURB & GUTTER
- EX. MAJOR CONTOURS — 400
- EX. MINOR CONTOURS — 402
- EX. STORM DRAIN — EX. 21" RCP
- EX. SEWER — EX. 8" S.
- EX. WATER — EX. 8" W.
- EXISTING TREE LINE
- EXISTING WETLAND LIMIT — W
- PROPERTY LINE
- ROADWAY RIGHT-OF-WAY
- EXISTING DRAINAGE AREA
- EXISTING Tc PATH
- SOILS LIMITS — GsB, MSC
- 65 dba NOISE LINE

OPERATION, MAINTENANCE AND INSPECTION

INSPECTION OF THE PONDS SHOWN HEREON SHALL BE PERFORMED AT LEASY ANNUALLY, IN ACCORDANCE WITH THE CHECKLIST AND REQUIREMENT CONTAINED WITHIN USDA SCS "STANDARDS AND SPECIFICATIONS FOR PONDS" (MD-378). THE POND OWNER(S) AND ANY HEIRS, SUCCESSORS, OR ASSIGNS SHALL BE RESPONSIBLE FOR THE SAFETY OF THE POND AND THE CONTINUED OPERATION, SURVEILLANCE, INSPECTION, AND MAINTENANCE THEREOF. THE POND OWNER(S) SHALL PROMPTLY NOTIFY THE SOIL CONSERVATION DISTRICT OF ANY UNUSUAL OBSERVATIONS THAT MAY BE INDICATIONS OF DISTRESS SUCH AS EXCESSIVE SEEPAGE, TURBID SEEPAGE, SLIDING OR SLUMPING.

DATA SOURCES

Existing topography shown hereon is a result of an aerial survey provided by Air Survey Corporation dated, 1998 supplemented with field run information performed by Daft McCune Walker, Inc. dated, 2010.

Property boundary shown hereon is a result of field run monumented boundary survey performed on or about June 25, 1999 by Daft McCune Walker, Inc.

Soils if shown provided by Soil Data Mart dated 2005 published by Natural Resources Conservation Services (NRCS).

Zoning information shown hereon provided by Howard County Department of Planning and Zoning, adopted by Howard County Council February 2, 2004.

Wetland and stream limits shown hereon were originally approved by Maryland Department of the Environment and the US Corps of Engineers in April 2001 and re-verified by these agencies in October 2009.

THESE PLANS FOR SMALL POND CONSTRUCTION, SOIL EROSION AND SEDIMENT CONTROL MEET THE REQUIREMENTS OF THE HOWARD SOIL CONSERVATION DISTRICT.

John R. Robertson — HOWARD SOIL CONSERVATION DISTRICT — 2/8/12 DATE

APPROVED: HOWARD COUNTY DEPT. OF PUBLIC WORKS

CHIEF, BUREAU OF HIGHWAYS — 2-23-12 DATE

APPROVED: HOWARD COUNTY DEPT. OF PLANNING & ZONING

CHIEF, DEVELOPMENT ENGINEERING DIVISION — 2/28/12 DATE

CHIEF, DIVISION OF LAND DEVELOPMENT — 3/01/12 DATE

Date	No.	Revision Description
2-10-12	1	UPDATE OWNER/DEVELOPER INFO.

EMERSON

SECTION 3 – AREA 7 – PARCEL A

"Future Employment Use"

OWNER/DEVELOPER:
EMERSON DEVELOPMENT IX LLC
ONE TEXAS STATION COURT, SUITE 200
TIMONIUM, MD 21093 (443) 687-8000

PROFESSIONAL CERTIFICATION

I HEREBY CERTIFY THAT THESE DOCUMENTS WERE PREPARED OR APPROVED BY ME, AND THAT I AM A DULY LICENSED PROFESSIONAL ENGINEER UNDER THE LAWS OF THE STATE OF MARYLAND, LICENSE NO. 16928, EXPIRATION DATE: 8/12/12

1/6/12 Date

STATE OF MARYLAND — JOHN DOUGLAS FRANCE — No. 16928 — REGISTERED PROFESSIONAL ENGINEER

Professional Engr. No. 16928

F-11-036

DMW
Daft-McCune-Walker, Inc.
200 East Pennsylvania Avenue
Towson, Maryland 21286
(410) 296-3333
Fax 296-4705

A Team of Land Planners, Landscape Architects, Engineers, Surveyors & Environmental Professionals

SUBDIVISION NAME: EMERSON		SECTION/AREA: SEC 3 AREA 7	LOT/PARCEL #: PART OF 837
PLAT# OR LIBER/FOLIO: 5289/330	GRID #: 15	ZONE: MXD-3	TAX/ZONE MAP: 47
ELECT. DISTRICT: 6TH	CENSUS TRACT: 6069.03		
WATER CODE: E-15	SEWER CODE: 7520000		

TITLE

FINAL PLAN
EXISTING CONDITIONS
DRAINAGE AREA MAP

Des By	TJC	Scale	1"=100'	Proj. No.	95054.W2
Drn By	JSS	Date	10/19/11	16 of 30	
Chk By	JDF	Approved			

n:\95054\95054.W\Final Plans\95054W6.DA1

DA=31.28 Ac. | 0.0489 SQ.MI. | 1 | RCN=91 | Tc=0.24 HRS.

DA=6.75 Ac. | 0.0105 SQ.MI. | 2 | RCN=85 | Tc=0.25 HRS.

DA=0.92 Ac. | 0.0014 SQ.MI. | 3 | RCN=98 | Tc=0.10 HRS.

DA=3.86 Ac. | 0.0060 SQ.MI. | BP1 | RCN=74 | Tc=0.30 HRS.

DA=0.56 Ac. | 0.0009 SQ.MI. | BP2 | RCN=74 | Tc=0.10 HRS.

Legend

EX CURB & GUTTER
EX MAJOR CONTOURS 400
EX MINOR CONTOURS 402
EX STORM DRAIN 15" RCP
EX SEWER 6" S.
EX WATER 4" W.
EXISTING TREE LINE
EXISTING WETLAND LIMIT
PROPERTY LINE
ROADWAY RIGHT-OF-WAY
PROPOSED LOT LINE
PROPOSED EASEMENT
PROPOSED CURB & GUTTER
PROPOSED SIDEWALK
PROP. STORM DRAIN 15" RCP
PROP. SEWER 6" S.
PROP. WATER 4" W.
PROP. MAJOR CONTOURS 400
PROP. MINOR CONTOURS 402
PROPOSED DRAINAGE AREA
PROPOSED 16' PATH
SOIL IDENTIFIER & HSG SwC
65 dba NOISE LINE
EX FOREST CONSERVATION EASEMENT

DATA SOURCES

Existing topography shown hereon is a result of an aerial survey provided by Air Survey Corporation dated, 1999 supplemented with field run information performed by Daft McCune Walker, Inc. dated, 2010.

Property boundary shown hereon is a result of field run monumented boundary survey performed on or about June 25, 1999 by Daft McCune Walker, Inc.

Soils if shown provided by Soil Data Mart dated 2005 published by Natural Resources Conservation Services (NRCS)

Zoning information shown hereon provided by Howard County Department of Planning and Zoning, adopted by Howard County Council February 2, 2004.

Wetland and stream limits shown hereon were originally approved by Maryland Department of the Environment and the US Corps of Engineers in April 2001 and re-verified by these agencies in October 2009.

THESE PLANS FOR SMALL POND CONSTRUCTION, SOIL EROSION AND SEDIMENT CONTROL MEET THE REQUIREMENTS OF THE HOWARD SOIL CONSERVATION DISTRICT.

HOWARD SOIL CONSERVATION DISTRICT — 2/8/12 DATE

APPROVED: HOWARD COUNTY DEPT. OF PUBLIC WORKS

CHIEF, BUREAU OF HIGHWAYS — 2-23-12 DATE

APPROVED: HOWARD COUNTY DEPT. OF PLANNING & ZONING

CHIEF, DEVELOPMENT ENGINEERING DIVISION — 2/28/12 DATE

CHIEF, DIVISION OF LAND DEVELOPMENT — 3/01/12 DATE

Date	No.	Revision Description
2-16-16	2	REVISED FOREST CONSERVATION AREAS
2-10-14	1	UPDATE OWNER/DEVELOPER INFO

EMERSON

SECTION 3 – AREA 7 – PARCEL A

"Future Employment Use"

OWNER/DEVELOPER:
EMERSON DEVELOPMENT IX LLC
ONE TEXAS STATION COURT, SUITE 200
TIMONIUM, MD 21093 (443) 689-8000

DMW
Daft McCune Walker, Inc.
200 East Pennsylvania Avenue
Towson, Maryland 21286
(410) 296-3333
Fax 296-4705

A Team of Land Planners, Landscape Architects, Engineers, Surveyors & Environmental Professionals

SUBDIVISION NAME: EMERSON		SECTION/AREA: SEC.3 AREA 7	LOT/PARCEL #: PART OF 837
PLAT # OR L/F: 5289/330	GRID #: 15	ZONE: MXD-3	TAX/ZONE MAP: 47
ELECT. DISTRICT: 6TH	CENSUS TRACT: 6069.03	WATER CODE: E-15	SEWER CODE: 7520000

TITLE

FINAL PLAN
PROPOSED CONDITIONS DRAINAGE AREA MAP

Des By	TJC	Scale	1"=100'	Proj. No.	95054.W
Drn By	JSS	Date	11/17/11	17 of 30	
Chk By	JDF	Approved			

PROFESSIONAL CERTIFICATION

I HEREBY CERTIFY THAT THESE DOCUMENTS WERE PREPARED OR APPROVED BY ME, AND THAT I AM A DULY LICENSED PROFESSIONAL ENGINEER UNDER THE LAWS OF THE STATE OF MARYLAND LICENSE NO. 16528, EXPIRATION DATE: 5/13/12

1/5/12 Date

STATE OF MARYLAND — JOHN DAVID FRANK — No. 16528 — PROFESSIONAL ENGINEER

Professional Engr. No. 16528

PROFESSIONAL CERTIFICATION

I HEREBY CERTIFY THAT THESE DOCUMENTS WERE PREPARED OR APPROVED BY ME, AND THAT I AM A DULY LICENSED PROFESSIONAL ENGINEER UNDER THE LAWS OF THE STATE OF MARYLAND LICENSE NO: 18868 EXPIRATION DATE: 10-2-16

5/16/16 Date

STATE OF MARYLAND — TIMOTHY JOSEPH CENTNER — No. 18868 — PROFESSIONAL ENGINEER

PROFESSIONAL ENG. NO. 18868
CENTURY ENGINEERING, INC.

OPERATION, MAINTENANCE AND INSPECTION

INSPECTION OF THE PONDS SHOWN HEREON SHALL BE PROFORMED AT LEAST ANNUALLY, IN ACCORDANCE WITH THE CHECKLIST AND REQUIREMENT CONTAINED WITHIN USDA, SCS "STANDARDS AND SPECIFICATIONS FOR PONDS" (MD-378). THE POND OWNER(S) AND ANY HEIRS, SUCCESSORS, OR ASSIGNS SHALL BE RESPONSIBLE FOR THE SAFETY OF THE POND AND THE CONTINUED OPERATION, SURVEILLANCE, INSPECTION, AND MAINTENANCE THEREOF. THE POND OWNER(S) SHALL PROMPTLY NOTIFY THE SOIL CONSERVATION DISTRICT OF ANY UNUSUAL OBSERVATIONS THAT MAY BE INDICATIONS OF DISTRESS SUCH AS EXCESSIVE SEEPAGE, TURBID SEEPAGE, SLIDING OR SLUMPING.

F-11-036

n:\95054\95054.W\Final Plans\95054W17.DAE

OPERATION AND MAINTENANCE SCHEDULE FOR LANDSCAPE INFILTRATION (M-3) MICRO-BIORETENTION (M-6), RAIN GARDENS (M-7), BIORETENTION SWALE (M-8), ENHANCED FILTERS (M-9)

a. THE OWNER SHALL MAINTAIN THE PLANT MATERIAL, MULCH LAYER AND SOIL LAYER ANNUALLY. MAINTENANCE OF MULCH AND SOIL IS LIMITED TO CORRECTING AREAS OF EROSION OR WASH OUT. ANY MULCH REPLACEMENT SHALL BE DONE IN THE SPRING. PLANT MATERIAL SHALL BE CHECKED FOR DISEASE AND INSECT INFESTATION AND MAINTENANCE WILL ADDRESS DEAD MATERIAL AND PRUNING. ACCEPTABLE REPLACEMENT PLANT MATERIAL IS LIMITED TO THE FOLLOWING: 2000 MARYLAND STORMWATER DESIGN MANUAL VOLUME II, TABLE A.4.1 AND 2.

b. THE OWNER SHALL PERFORM A PLANT IN THE SPRING AND IN THE FALL OF EACH YEAR. DURING THE INSPECTION, THE OWNER SHALL REMOVE DEAD AND DISEASED VEGETATION CONSIDERED BEYOND TREATMENT, REPLACE DEAD PLANT MATERIAL WITH ACCEPTABLE REPLACEMENT PLANT MATERIAL, TREAT DISEASED TREES AND SHRUBS, AND REPLACE ALL DEFICIENT STAKES AND WIRES.

c. THE OWNER SHALL INSPECT THE MULCH EACH SPRING. THE MULCH SHALL BE REPLACED EVERY TWO TO THREE YEARS. THE PREVIOUS MULCH LAYER SHALL BE REMOVED BEFORE THE NEW LAYER IS APPLIED.

d. THE OWNER SHALL CORRECT SOIL EROSION ON AN AS NEEDED BASIS, WITH A MINIMUM OF ONCE PER MONTH AND AFTER EACH HEAVY STORM.

e. Howard County shall only be responsible for gabion baskets all other maintenance is the responsibility of H.O.A.

MICRO-BIORETENTION SEQUENCE OF CONSTRUCTION

BEGIN CONSTRUCTION OF THE PHASE 1, STAGE 1 SWM FACILITY IN THE FOLLOWING ORDER:

1. EXCAVATE SUBGRADE.
2. ONCE VERIFIED SUB-GRADES HAVE BEEN ESTABLISHED, EXCAVATE FOR AND INSTALL 6" UNDERDRAIN OUTFALL PIPE AND BACKFILL OUTFALL TRENCH. PLACE 3" OF THE 10' GRAVEL JACKET OF NO. 57 OR NO. 6 AGGREGATE IN THE BOTTOM OF EXCAVATION.
3. PLACE 3' WIDE STRIPS OF FILTER FABRIC DOWN ON 3" GRAVEL LAYER TO SUPPORT 4" UNDERDRAIN SYSTEM. PLACE UNDERDRAINS IN CENTER OF FABRIC & CHECK FOR LEVELNESS.
4. PLACE REMAINDER (7") OF THE 10" GRAVEL JACKET. CHECK FOR LEVELNESS.
5. PLACE 2" PEA GRAVEL LAYER OVER GRAVEL JACKET.
6. BACKFILL TOPSOIL FILTER MEDIA IN LIFTS OF 12" TO 18". DO NOT COMPACT. INSTALL GABION PARTITION BASKETS.
7. INSTALL LANDSCAPE PLANTINGS. INSTALL RIPRAP OUTLET PROTECTION AT OVERFLOW WEIR.
8. SEED OR SOD 3:1 SIDE SLOPES. ADD 3" MULCH LAYER.

TABLE B.4.1 MATERIALS SPECIFICATIONS FOR MICRO-BIORENTENTION, RAIN GARDENS & LANDSCAPE INFILTRATION

MATERIAL	SPECIFICATION	SIZE	NOTES
PLANTINGS	SEE APPENDIX A, TABLE A.4	N/A	PLANTINGS ARE SITE-SPECIFIC
PLANTING SOIL [2' TO 4" DEEP]	LOAMY SAND (60 - 65%) & COMPOST (35 – 40%) OR SANDY LOAM (30%), COARSE SAND (30%) & COMPOST (40%)	N/A	
ORGANIC CONTENT	MIN. 10% BY DRY WEIGHT (ASTM D 2974)		
MULCH	SHREDDED HARDWOOD		AGED 6 MONTHS, MINIMUM; NO PINE OR WOOD CHIPS
PEA GRAVEL DIAPHRAGM	PEA GRAVEL: ASTM-D-448	NO. 8 OR NO. 9 (1/8" TO 3/8")	
CURTAIN DRAIN	ORNAMENTAL STONE: WASHED COBBLES	STONE: 2" TO 5"	
GEOTEXTILE		N/A	PE TYPE 1 NONWOVEN
GRAVEL (UNDERDRAINS AND INFILTRATION BERMS)	AASHTO M-43	NO. 57 OR NO. 6 AGGREGATE (3/8" TO 3/4")	
UNDERDRAIN PIPING	F 758, TYPE PS 28 OR AASHTO M-278	4" TO 6" RIGID SCHEDULE 40 PVC OR SDR35	SLOTTED OR PERFORATED PIPE; 3/8" PERF. @ 6" ON CENTER, 4 HOLES PER ROW; MINIMUM OF 3" OF GRAVEL OVER PIPES; NOT NECESSARY UNDERNEATH PIPES. PERFORATED PIPE SHALL BE WRAPPED WITH ¼-INCH GALVANIZED HARDWARE CLOTH
POURED IN PLACE CONCRETE (IF REQUIRED)	MSHA MIX NO. 3; F'c = 3500 PSI @ 28 DAYS, NORMAL WEIGHT, AIR-ENTRAINED; REINFORCING TO MEET ASTM-615-60	N/A	ON-SITE TESTING OF POURED-IN-PLACE CONCRETE REQUIRED: 28 DAY STRENGTH AND SLUMP TEST; ALL CONCRETE DESIGN (CAST-IN-PLACE OR PRE-CAST) NOT USING PREVIOUSLY APPROVED STATE OR LOCAL STANDARDS REQUIRES DESIGN DRAWINGS SEALED AND APPROVED BY A PROFESSIONAL STRUCTURAL ENGINEER LICENSED IN THE STATE OF MARYLAND - DESIGN TO INCLUDE MEETING ACI CODE 350.R/89; VERTICAL LOADING [H-10 OR H-20]; ALLOWABLE HORIZONTAL LOADING (BASED ON SOIL PRESSURES); AND ANALYSIS OF POTENTIAL CRACKING
SAND	AASHTO-M-6 OR ASTM-C-33	0.02" TO 0.04"	SAND SUBSTITUTIONS SUCH AS DIABASE AND GRAYSTONE (AASHTO) #10 ARE NOT ACCEPTABLE. NO CALCIUM CARBONATED OR DOLOMITIC SAND SUBSTITUTIONS ARE ACCEPTABLE. NO "ROCK DUST" CAN BE USED FOR SAND.

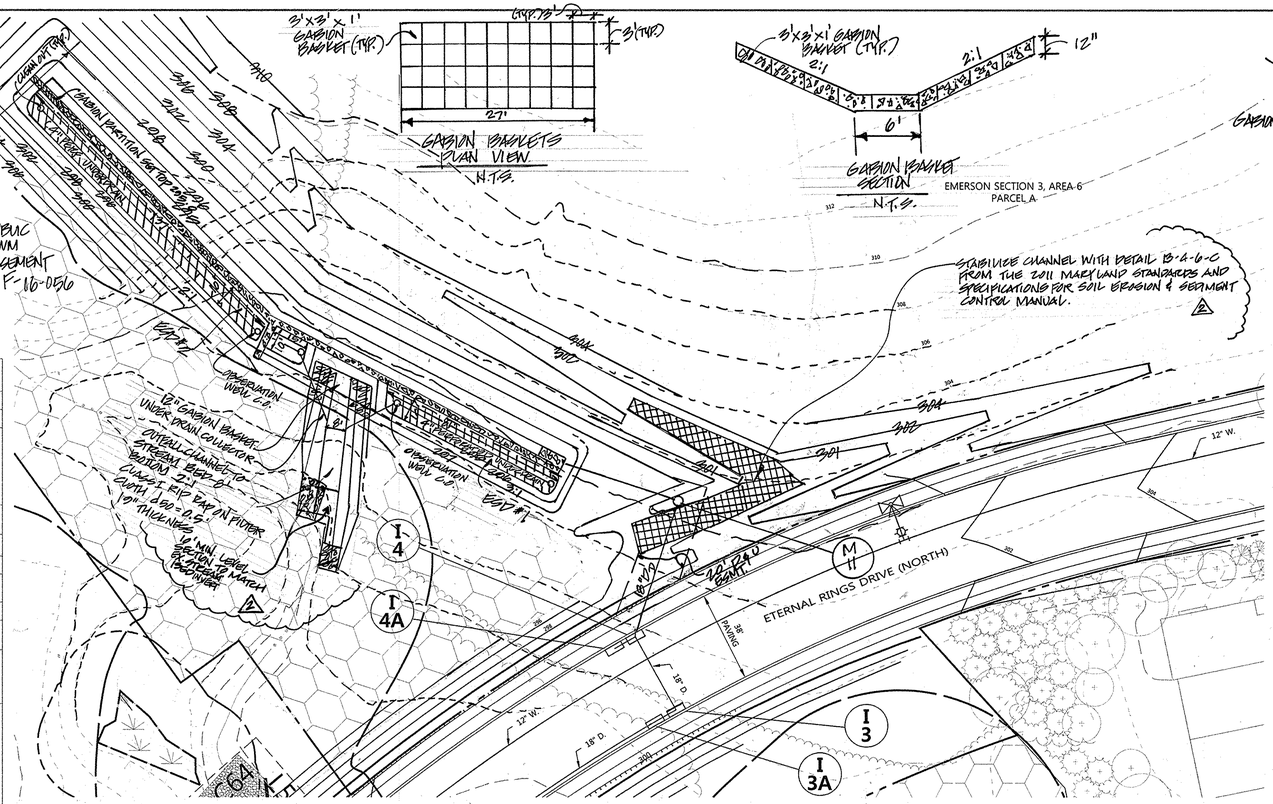

MAINTENANCE CRITERIA

1. PERIODICALLY REMOVE TRASH & DEBRIS AS IT ACCUMULATES.
2. REMOVE AND REPLACE TOP FEW INCHES OF FILTER MEDIA WHEN WATER PONDS FOR MORE THAN 48 HRS.
3. PRUNE AND REPLACE DEAD VEGETATION AS NECESSARY.
4. WATER VEGETATION DURING DRY PERIODS

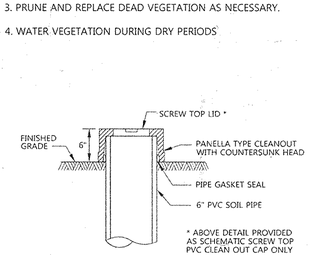

EACH CLEANOUT SHALL INCLUDE THE FOLLOWING

1. FOR AN UNDERGROUND FLUSH MOUNTED CLEANOUT, PROVIDE A TUBE MADE OF NON-CORROSIVE MATERIAL SCHEDULE 40 OR EQUAL AT LEAST 3-FEET LONG WITH AN INSIDE DIAMETER OF AT LEAST 6-INCHES.
2. THE TUBE SHALL HAVE A FACTORY ATTACHED CAST IRON OR HIGH IMPACT PLASTIC COLLAR WITH RIBS TO PREVENT ROTATION WHEN REMOVING SCREW TOP LID. THE SCREW TOP LID SHALL BE CAST IRON OR HIGH IMPACT PLASTIC THAT WILL WITHSTAND ULTRA-VIOLET RAYS.

CLEAN OUT DETAIL

NOT TO SCALE

MICRO-BIORETENTION PLAN

30 0 30 60 90

SCALE: 1"=30'

LEGEND

FILTER MEDIA AREA ESD#1 & ESD#2

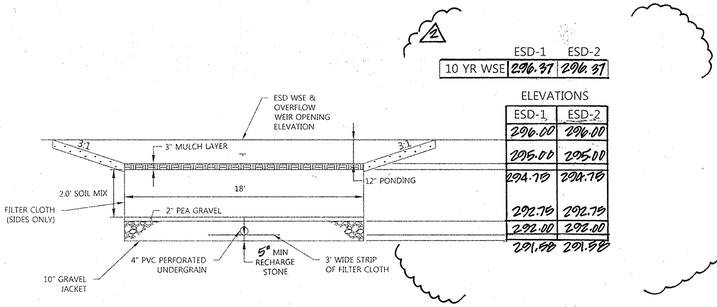

	ESD-1	ESD-2
10 YR WSE	296.37	296.37

ELEVATIONS

ESD-1	ESD-2
296.00	296.00
295.00	295.00
294.70	294.70
292.70	292.70
292.00	292.00
291.50	291.50

TYPICAL CROSS-SECTION OF MICRO-BIORETENTION

SCALE: 1"=3'

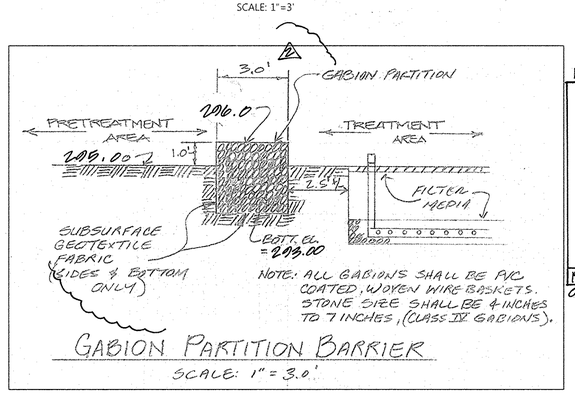

GABION PARTITION BARRIER

SCALE: 1" = 3.0'

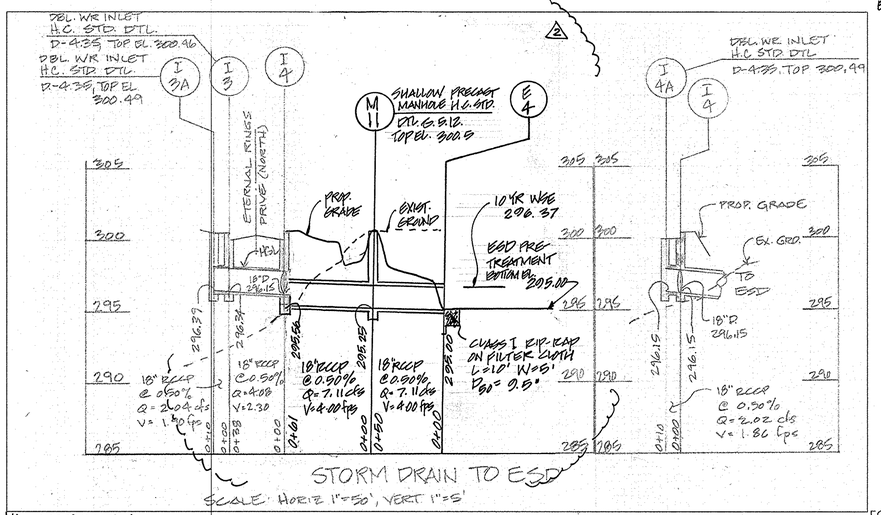

STORM DRAIN TO ESD

SCALE: HORIZ 1"=50', VERT. 1"=5'

FOR REVISION NO. 2 ONLY

5/16/16
Date

STATE OF MARYLAND — ROBERT LYNN WILLIAMS — No. 18866 — PROFESSIONAL ENGINEER

PROFESSIONAL ENG. NO. 18866

CENTURY ENGINEERING INC.

PROFESSIONAL CERTIFICATION

I HEREBY CERTIFY THAT THESE DOCUMENTS WERE PREPARED OR APPROVED BY ME, AND THAT I AM A DULY LICENSED PROFESSIONAL ENGINEER UNDER THE LAWS OF THE STATE OF MARYLAND.

LICENSE NO. 18866 EXPIRATION DATE: 10-9-16

PROFESSIONAL CERTIFICATION

I HEREBY CERTIFY THAT THESE DOCUMENTS WERE PREPARED OR APPROVED BY ME, AND THAT I AM A DULY LICENSED PROFESSIONAL ENGINEER UNDER THE LAWS OF THE STATE OF MARYLAND, LICENSE NO. 26569, EXPIRATION DATE: 7-18-15

FOR REVISION NO. 1 ONLY

3-25-14
Date

STATE OF MARYLAND — DONALD DOUGLAS TURNBAUGH — No. 26569 — PROFESSIONAL ENGINEER

Professional Engr. No.

THESE PLANS FOR SMALL POND CONSTRUCTION, SOIL EROSION AND SEDIMENT CONTROL MEET THE REQUIREMENTS OF THE HOWARD SOIL CONSERVATION DISTRICT

John R Robertson — HOWARD SOIL CONSERVATION DISTRICT — 3/27/14 DATE

DEVELOPERS CERTIFICATE:

I/WE CERTIFY THAT ALL DEVELOPMENT AND/OR CONSTRUCTION WILL BE DONE ACCORDING TO THESE PLANS AND THAT ANY RESPONSIBLE PERSONNEL INVOLVED IN THE CONSTRUCTION PROJECT WILL HAVE A CERTIFICATE OF ATTENDANCE AT A DEPARTMENT OF ENVIRONMENT APPROVED TRAINING PROGRAM FOR THE CONTROL OF SEDIMENT AND EROSION BEFORE BEGINNING THE PROJECT. I SHALL ENGAGE A REGISTERED PROFESSIONAL ENGINEER TO SUPERVISE POND CONSTRUCTION AND PROVIDE THE HOWARD SOIL CONSERVATION DISTRICT WITH AN "AS-BUILT" PLAN OF THE POND WITHIN 30 DAYS OF COMPLETION. I ALSO AUTHORIZE PERIODIC ON-SITE INSPECTIONS BY THE HOWARD SOIL CONSERVATION DISTRICT.

SIGNATURE OF DEVELOPER — PRINT NAME BELOW SIGNATURE: James F. Knott Jr. — 3/24/14 DATE

ENGINEERS CERTIFICATE:

I CERTIFY THAT THIS PLAN FOR POND CONSTRUCTION, EROSION AND SEDIMENT CONTROL REPRESENTS A PRACTICAL AND WORKABLE PLAN BASED ON MY PERSONAL KNOWLEDGE OF THE SITE CONDITIONS. THIS PLAN WAS PREPARED IN ACCORDANCE WITH THE REQUIREMENTS OF THE HOWARD SOIL CONSERVATION DISTRICT. I HAVE NOTIFIED THE DEVELOPER THAT HE/SHE MUST ENGAGE A REGISTERED PROFESSIONAL ENGINEER TO SUPERVISE POND CONSTRUCTION AND PROVIDE THE HOWARD SOIL CONSERVATION DISTRICT WITH AN "AS-BUILT" PLAN OF THE POND WITHIN 30 DAYS OF COMPLETION.

SIGNATURE OF ENGINEER — PRINT NAME BELOW SIGNATURE: Gerald D. Turnbaugh — 3-25-14 DATE

APPROVED: HOWARD COUNTY DEPT. OF PUBLIC WORKS

CHIEF, BUREAU OF HIGHWAYS — 4-10-14 DATE

APPROVED: HOWARD COUNTY DEPT. OF PLANNING AND ZONING

CHIEF, DIVISION OF LAND DEVELOPMENT — 4-16-14 DATE

CHIEF, DEVELOPMENT ENGINEERING DIVISION — 4.1.14 DATE

Date	No.	Revision Description
5/16/16	2	REVISED SWM ESD AND SET 0 ESD
2/10/14	1	TEMPORARY SWM ESD (NEW SHEET)

EMERSON

SECTION 3 - AREA 7 - PARCEL A

"FUTURE EMPLOYMENT USE"

OWNER/DEVELOPER:

EMERSON DEVELOPMENT IX LLC
ONE TEXAS STATION CT. SUITE 200
TIMONIUM, MD 21093
(443) 689-8000

DMW
DAFT McCUNE WALKER INC
200 EAST PENNSYLVANIA TOWSON, MD 21286
P: 410 296 3333 F: 410 296 4705 WWW.DMW.COM
A TEAM OF LAND PLANNERS, LANDSCAPE ARCHITECTS, ENGINEERS, SURVEYORS & ENVIRONMENTAL PROFESSIONALS

SUBDIVISION NAME			SECT/AREA			PARCEL/LOT #	
EMERSON			SEC. 3 AREA 7			PART OF 837	
PLAT # OR L/F	FOLIO	ZONE	TAX MAP/ GRID	PARCEL	BLOCK	CENSUS TRACT	
5289/330	15	MDX-3	47	6th		6069.03	
ZIP CODE			CENSUS TRACT				
E-15			7520000				

TITLE

PHASE 1, STAGE 1
STORMWATER MANAGEMENT
ESD & SPECIFICATIONS

Des. By	GDT	Scale	AS SHOWN
Drn. By	RC/GO	Date	3/24/14
Chk. By		Approved	

Proj. No. 95054.81

F -11-036

A:\95054\95054.81\ENGR\CAD FILES\SHEET FILES\95054.81_SWM1.DWG Mon, Mar 24, 2014

B.4.C SPECIFICATIONS FOR MICRO-BIORETENTION, RAIN GARDENS, LANDSCAPE INFILTRATION & INFILTRATION BERMS

1. MATERIAL SPECIFICATIONS

THE ALLOWABLE MATERIALS TO BE USED IN THESE PRACTICES ARE DETAILED IN TABLE B.4.1. SHOWN ON SHEET 17a OF 30.

2. FILTERING MEDIA OR PLANTING SOIL

THE SOIL SHALL BE A UNIFORM MIX, FREE OF STONES, STUMPS, ROOTS OR OTHER SIMILAR OBJECTS LARGER THAN TWO INCHES. NO OTHER MATERIALS OR SUBSTANCES SHALL BE MIXED OR DUMPED WITHIN THE MICRO-BIORETENTION PRACTICE THAT MAY BE HARMFUL TO PLANT GROWTH, OR PROVE A HINDRANCE TO THE PLANTING OR MAINTENANCE OPERATIONS. THE PLANTING SOIL SHALL BE FREE OF BERMUDA GRASS, QUACKGRASS, JOHNSON GRASS, OR OTHER NOXIOUS WEEDS AS SPECIFIED UNDER COMAR 15.08.01.05.

THE PLANTING SOIL SHALL BE TESTED AND SHALL MEET THE FOLLOWING CRITERIA:

- SOIL COMPONENT - LOAMY SAND OR SANDY LOAM (USDA SOIL TEXTURAL CLASSIFICATION)
- ORGANIC CONTENT - MINIMUM 10% BY DRY WEIGHT (ASTM D 2974). IN GENERAL, THIS CAN BE MET WITH A MIXTURE OF LOAMY SAND (60%-65%) AND COMPOST (35% TO 40%) OR SANDY LOAM (30%), COARSE SAND (30%), AND COMPOST (40%).
- CLAY CONTENT - MEDIA SHALL HAVE A CLAY CONTENT OF LESS THAN 5%.
- PH RANGE - SHOULD BE BETWEEN 5.5 - 7.0. AMENDMENTS (E.G., LIME, IRON SULFATE PLUS SULFUR) MAY BE MIXED INTO THE SOIL TO INCREASE OR DECREASE PH.

THERE SHALL BE AT LEAST ONE SOIL TEST PER PROJECT. EACH TEST SHALL CONSIST OF BOTH THE STANDARD SOIL TEST FOR PH, AND ADDITIONAL TESTS OF ORGANIC MATTER, AND SOLUBLE SALTS. A TEXTURAL ANALYSIS IS REQUIRED FROM THE SITE STOCKPILED TOPSOIL. IF TOPSOIL IS IMPORTED, THEN A TEXTURE ANALYSIS SHALL BE PERFORMED FOR EACH LOCATION WHERE THE TOPSOIL WAS EXCAVATED.

PRETREATMENT AREA SEED MIX SHALL BE:

PERMANENT SEED MIX 6, FROM TABLE B.2

- TALL FESCUE: LOLIUM ARUNDINACEUM
- PERENNIAL RYEGRASS: LOLIUM PERENNE
- LEGUME: LOTUS CORNICULATUS

- SEEDING RATE AS SPECIFIED
- MARYLAND DEPARTMENT OF THE ENVIRONMENT
- STANDARDS & SPECIFICATIONS FOR SOIL EROSION & SEDIMENT CONTROL
- B-4-5 FOR PERMANENT STABILIZATION

3. COMPACTION

IT IS VERY IMPORTANT TO MINIMIZE COMPACTION OF BOTH THE BASE OF BIORETENTION PRACTICES AND THE REQUIRED BACKFILL. WHEN POSSIBLE, USE EXCAVATION HOES TO REMOVE ORIGINAL SOIL. IF PRACTICES ARE EXCAVATED USING A LOADER, THE CONTRACTOR SHOULD USE WIDE TRACK OR MARSH TRACK EQUIPMENT, OR LIGHT EQUIPMENT WITH TURF TYPE TIRES. USE OF EQUIPMENT WITH NARROW TRACKS OR NARROW TIRES, RUBBER TIRES WITH LARGE LUGS, OR HIGH-PRESSURE TIRES WILL CAUSE EXCESSIVE COMPACTION RESULTING IN REDUCED INFILTRATION RATES AND IS NOT ACCEPTABLE. COMPACTION WILL SIGNIFICANTLY CONTRIBUTE TO DESIGN FAILURE.

COMPACTION CAN BE ALLEVIATED AT THE BASE OF THE BIORETENTION FACILITY BY USING A PRIMARY TILLING OPERATION SUCH AS A CHISEL PLOW, RIPPER, OR SUBSOILER. THESE TILLING OPERATIONS ARE TO REFRACTURE THE SOIL PROFILE THROUGH THE 12 INCH COMPACTION ZONE. SUBSTITUTE METHODS MUST BE APPROVED BY THE ENGINEER. ROTOTILLERS TYPICALLY DO NOT TILL DEEP ENOUGH TO REDUCE THE EFFECTS OF COMPACTION FROM HEAVY EQUIPMENT.

ROTOTILL 2 TO 3 INCHES OF SAND INTO THE BASE OF THE BIORETENTION FACILITY BEFORE BACKFILLING THE OPTIONAL SAND LAYER. PUMP ANY PONDED WATER BEFORE PREPARING (ROTOTILLING) BASE.

WHEN BACKFILLING THE TOPSOIL OVER THE SAND LAYER, FIRST PLACE 3 TO 4 INCHES OF TOPSOIL OVER THE SAND, THEN ROTOTILL THE SAND/TOPSOIL TO CREATE A GRADATION ZONE. BACKFILL THE REMAINDER OF THE TOPSOIL TO FINAL GRADE.
WHEN BACKFILLING THE BIORETENTION FACILITY, PLACE SOIL IN LIFTS 12" TO 18". DO NOT USE HEAVY EQUIPMENT WITHIN THE BIORETENTION BASIN. HEAVY EQUIPMENT CAN BE USED AROUND THE PERIMETER OF THE BASIN TO SUPPLY SOILS AND SAND. GRADE BIORETENTION MATERIALS WITH LIGHT EQUIPMENT SUCH AS A COMPACT LOADER OR A DOZER/LOADER WITH MARSH TRACKS.

4. PLANT MATERIAL

SEE THIS SHEET FOR REQUIRED PLANTINGS.

5. PLANT INSTALLATION

COMPOST IS A BETTER ORGANIC MATERIAL SOURCE, IS LESS LIKELY TO FLOAT, AND SHOULD BE PLACED IN THE INVERT AND OTHER LOW AREAS. MULCH SHOULD BE PLACED IN SURROUNDING TO A UNIFORM THICKNESS OF 2" TO 3". SHREDDED OR CHIPPED HARDWOOD MULCH IS THE ONLY ACCEPTED MULCH. PINE MULCH AND WOOD CHIPS WILL FLOAT AND MOVE TO THE PERIMETER OF THE BIORETENTION AREA DURING A STORM EVENT AND ARE NOT ACCEPTABLE. SHREDDED MULCH MUST BE WELL AGED (6 TO 12 MONTHS) FOR ACCEPTANCE.

ROOTSTOCK OF THE PLANT MATERIAL SHALL BE KEPT MOIST DURING TRANSPORT AND ON-SITE STORAGE. THE PLANT ROOT BALL SHOULD BE PLANTED SO 1/8TH OF THE BALL IS ABOVE FINAL GRADE SURFACE. THE DIAMETER OF THE PLANTING PIT SHALL BE AT LEAST SIX INCHES LARGER THAN THE DIAMETER OF THE PLANTING BALL. SET AND MAINTAIN THE PLANT STRAIGHT DURING THE ENTIRE PLANTING PROCESS. THOROUGHLY WATER GROUND BED COVER AFTER INSTALLATION.
TREES SHALL BE BRACED USING 2" BY 2" STAKES ONLY AS NECESSARY AND FOR THE FIRST GROWING SEASON ONLY. STAKES ARE TO BE EQUALLY SPACED ON THE OUTSIDE OF THE TREE BALL.

GRASSES AND LEGUME SEED SHOULD BE DRILLED INTO THE SOIL TO A DEPTH OF AT LEAST ONE INCH. GRASS AND LEGUME PLUGS SHALL BE PLANTED FOLLOWING THE NON-GRASS GROUND COVER PLANTING SPECIFICATIONS.
THE TOPSOIL SPECIFICATIONS PROVIDE ENOUGH ORGANIC MATERIAL TO ADEQUATELY SUPPLY NUTRIENTS FROM NATURAL CYCLING. THE PRIMARY FUNCTION OF THE BIORETENTION STRUCTURE IS TO IMPROVE WATER QUALITY. ADDING FERTILIZERS DEFEATS, OR AT A MINIMUM, IMPEDES THIS GOAL. ONLY ADD FERTILIZER IF WOOD CHIPS OR MULCH ARE USED TO AMEND THE SOIL. ROTOTILL UREA FERTILIZER AT A RATE OF 2 POUNDS PER 1000 SQUARE FEET.

6. UNDERDRAINS

UNDERDRAINS SHOULD MEET THE FOLLOWING CRITERIA:

- PIPE- SHOULD BE 4" TO 6" DIAMETER, SLOTTED OR PERFORATED RIGID PLASTIC PIPE (ASTMF 758, TYPE PS 28, OR AASHTO-M-278) IN A GRAVEL LAYER. THE PREFERRED MATERIAL IS SLOTTED, 4" RIGID PIPE (E.G., PVC OR HDPE).
- PERFORATIONS - IF PERFORATED PIPE IS USED, PERFORATIONS SHOULD BE ⅜" DIAMETER LOCATED 6" ON CENTER WITH A MINIMUM OF FOUR HOLES PER ROW. PIPE SHALL BE WRAPPED WITH A ¼" (NO. 4 OR 4X4) GALVANIZED HARDWARE CLOTH.
- GRAVEL - THE GRAVEL LAYER (NO. 57 STONE PREFERRED) SHALL BE AT LEAST 3" THICK ABOVE AND BELOW THE UNDERDRAIN.
- THE MAIN COLLECTOR PIPE SHALL BE AT A MINIMUM 0.5% SLOPE.
- A RIGID, NON-PERFORATED OBSERVATION WELL MUST BE PROVIDED (ONE PER EVERY 1,0000 SQUARE FEET) TO PROVIDE A CLEAN-OUT PORT AND MONITOR PERFORMANCE OF THE FILTER.
- A 4" LAYER OF PEA GRAVEL (⅛" TO ⅜" STONE) SHALL BE LOCATED BETWEEN THE FILTER MEDIA AND UNDERDRAIN TO PREVENT MIGRATION OF FINES INTO THE UNDERDRAIN. THIS LAYER MAY BE CONSIDERED PART OF THE FILTER BED WHEN BED THICKNESS EXCEEDS 24".

THE MAIN COLLECTOR PIPE FOR UNDERDRAIN SYSTEMS SHALL BE CONSTRUCTED AT A MINIMUM SLOPE OF 0.5%. OBSERVATION WELLS AND/OR CLEAN-OUT PIPES MUST BE PROVIDED (ONE MINIMUM PER EVERY 1000 SQUARE FEET OF SURFACE AREA).

7. MISCELLANEOUS

THESE PRACTICES MAY NOT BE CONSTRUCTED UNTIL ALL CONTRIBUTING DRAINAGE AREA HAS BEEN STABILIZED

Microbioretention Plant Schedule

KEY	QTY	BOTANICAL NAME	COMMON NAME	SIZE	REMARKS
TREES -ORNAMENTAL					
QP	5	Quercus phellos	Willow Oak	2"-2.5" cal. 14' ht.	B&B , Full
SHRUBS					
DECIDUOUS					
IV	80	Itea virginica	Virginia Sweetspire	18-24" ht	Full , 30" o.c.
RA	67	Rhus aromatica 'Gro-low'	Fragrant Sumac	18-24" ht	Full , 30" o.c.
GROUNDCOVERS/PERENNIALS/GRASSES					
IB	273	Iris versicolor	Blue Flag Iris	1 gal. container	24" o.c.
IF	294	Iris fulva 'Lois Yellow'	Copper Iris	1 gal. container	24" o.c.

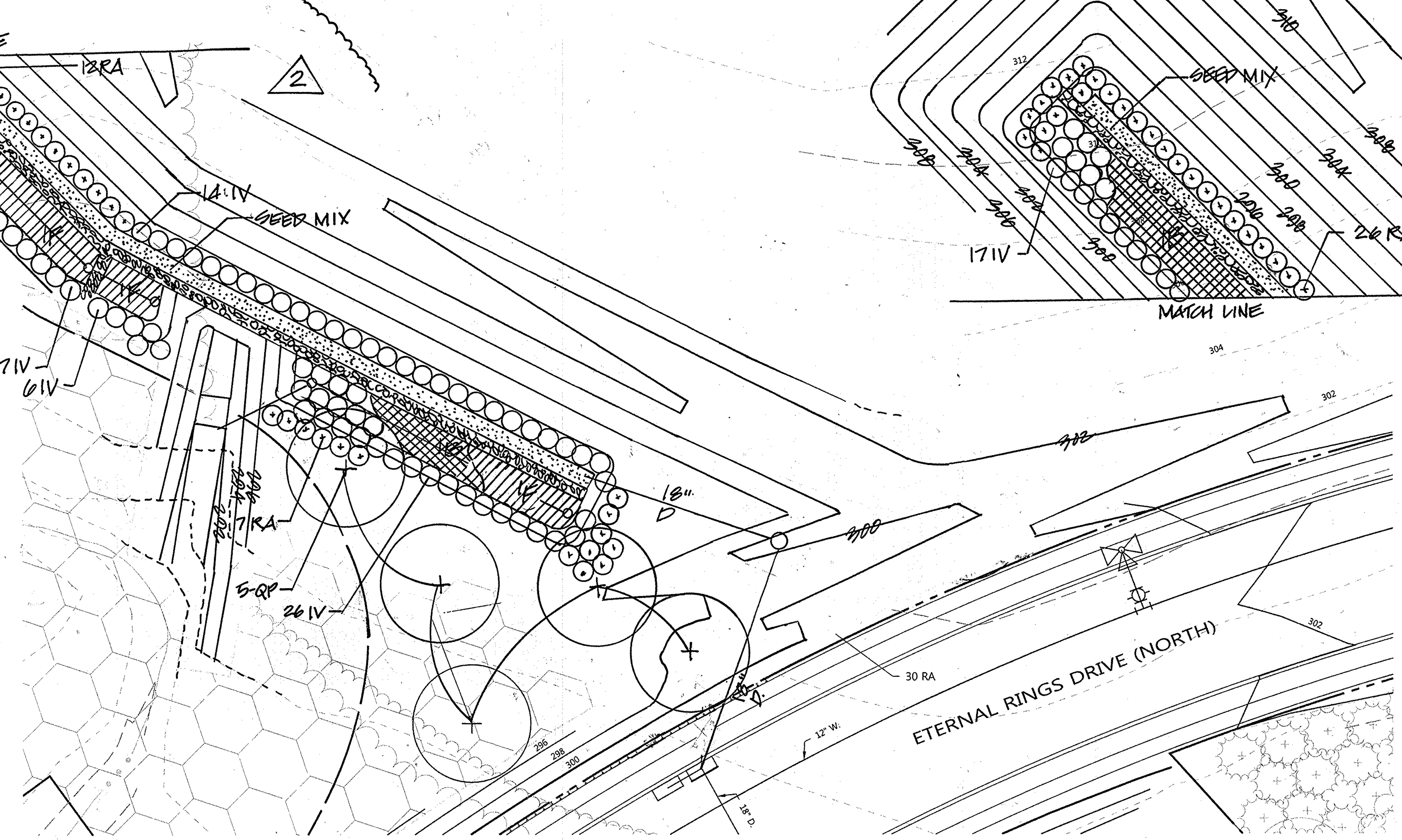

MICRO-BIORETENTION PLANTING PLAN

20 0 20 40 60
SCALE: 1"=20'

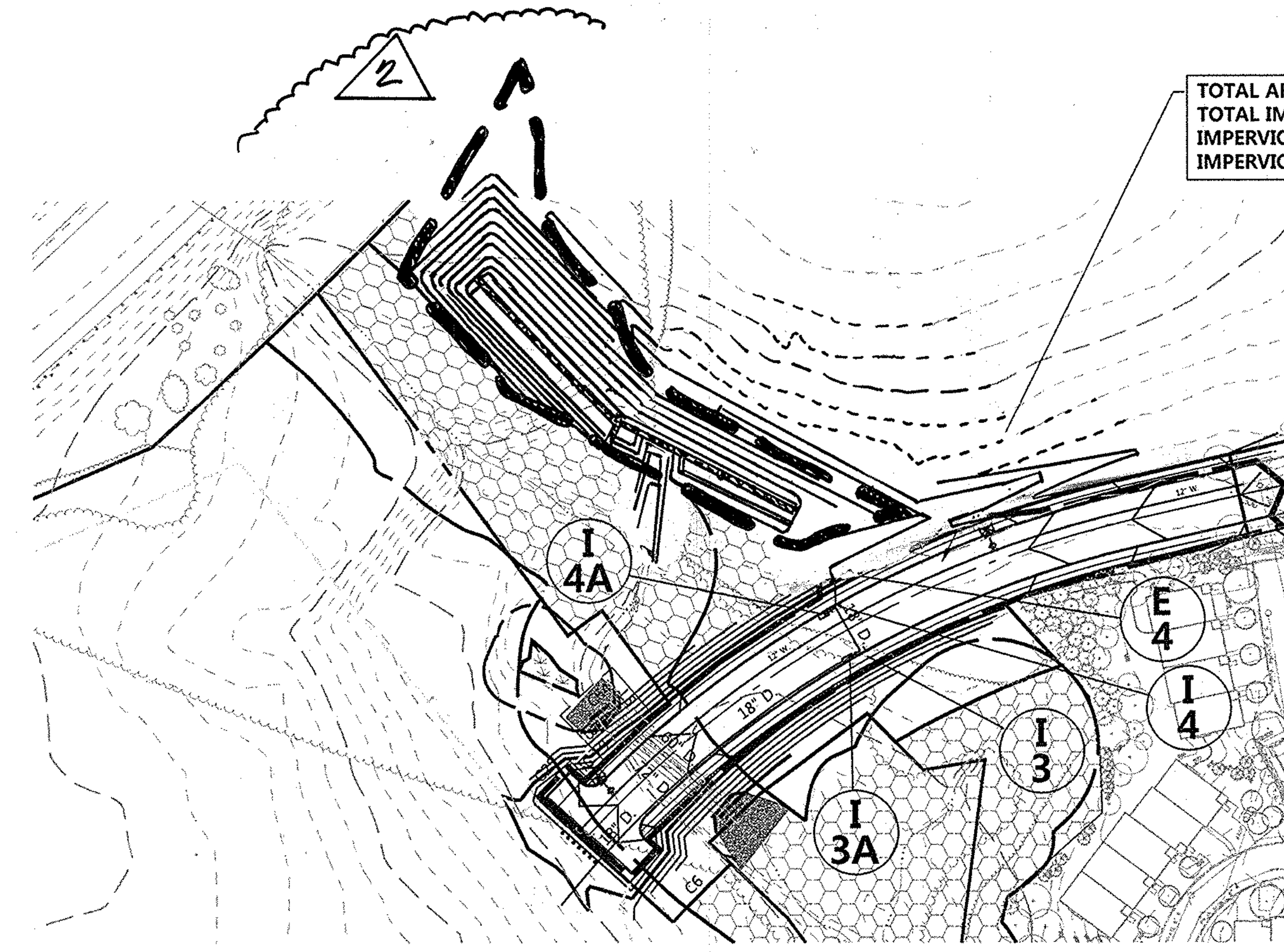

DRAINAGE AREA MAP

100 0 100 200 300
SCALE: 1"=100'

TOTAL AREA TO TEMPORARY SWM = 54,663 SF
TOTAL IMPERVIOUS = 24,382 S.F.
IMPERVIOUS AREA TO TREAT ESD 1 = 12,200 S.F.
IMPERVIOUS AREA TO TREAT ESD 2 = 12,200 S.F.

PROFESSIONAL CERTIFICATION

I HEREBY CERTIFY THAT THESE DOCUMENTS WERE PREPARED OR APPROVED BY ME, AND THAT I AM A DULY LICENSED PROFESSIONAL ENGINEER UNDER THE LAWS OF THE STATE OF MARYLAND

LICENSE No. 18868
EXPIRATION DATE: 10-8-16

FOR REVISION NO. 2 ONLY
5/16/16
DATE
STATE OF MARYLAND · ROBERT LYNN HURWITZ · No. 18868 · PROFESSIONAL ENGINEER
PROFESSIONAL ENGR. NO.
CENTURY ENGINEERING INC.

FOR REVISION NO. 1 ONLY

PROFESSIONAL CERTIFICATION

I HEREBY CERTIFY THAT THESE DOCUMENTS WERE PREPARED OR APPROVED BY ME, AND THAT I AM A DULY LICENSED PROFESSIONAL ENGINEER UNDER THE LAWS OF THE STATE OF MARYLAND, LICENSE NO. 26569, EXPIRATION DATE: 7-18-15

3-25-14
Date
STATE OF MARYLAND · GERALD DOUGLAS TURNBAUGH · NO. 26569 · PROFESSIONAL ENGINEER
Professional Engr. No.

THESE PLANS FOR SMALL POND CONSTRUCTION, SOIL EROSION AND SEDIMENT CONTROL MEET THE REQUIREMENTS OF THE HOWARD SOIL CONSERVATION DISTRICT.

HOWARD SOIL CONSERVATION DISTRICT — 3/27/14 DATE

DEVELOPERS CERTIFICATE:

I/WE CERTIFY THAT ALL DEVELOPMENT AND/OR CONSTRUCTION WILL BE DONE ACCORDING TO THESE PLANS AND THAT ANY RESPONSIBLE PERSONNEL INVOLVED IN THE CONSTRUCTION PROJECT WILL HAVE A CERTIFICATE OF ATTENDANCE AT A DEPARTMENT OF ENVIRONMENT APPROVED TRAINING PROGRAM FOR THE CONTROL OF SEDIMENT AND EROSION BEFORE BEGINNING THE PROJECT. I SHALL ENGAGE A REGISTERED PROFESSIONAL ENGINEER TO SUPERVISE POND CONSTRUCTION AND PROVIDE THE HOWARD SOIL CONSERVATION DISTRICT WITH AN "AS-BUILT" PLAN OF THE POND WITHIN 30 DAYS OF COMPLETION. I ALSO AUTHORIZE PERIODIC ON-SITE INSPECTIONS BY THE HOWARD SOIL CONSERVATION DISTRICT.

SIGNATURE OF DEVELOPER — 3/24/14 DATE
PRINT NAME BELOW SIGNATURE
James F. Knott, Jr.

ENGINEERS CERTIFICATE:

I CERTIFY THAT THIS PLAN FOR POND CONSTRUCTION, EROSION AND SEDIMENT CONTROL REPRESENTS A PRACTICAL AND WORKABLE PLAN BASED ON MY PERSONAL KNOWLEDGE OF THE SITE CONDITIONS. THIS PLAN WAS PREPARED IN ACCORDANCE WITH THE REQUIREMENTS OF THE HOWARD SOIL CONSERVATION DISTRICT. I HAVE NOTIFIED THE DEVELOPER THAT HE/SHE MUST ENGAGE A REGISTERED PROFESSIONAL ENGINEER TO SUPERVISE POND CONSTRUCTION AND PROVIDE THE HOWARD SOIL CONSERVATION DISTRICT WITH AN "AS-BUILT" PLAN OF THE POND WITHIN 30 DAYS OF COMPLETION.

SIGNATURE OF ENGINEER — 3/25/14 DATE
PRINT NAME BELOW SIGNATURE
Gerald D. Turnbaugh

APPROVED: HOWARD COUNTY DEPT. OF PUBLIC WORKS

CHIEF, BUREAU OF HIGHWAYS — 4-10-14 DATE

APPROVED: HOWARD COUNTY DEPT. OF PLANNING AND ZONING

CHIEF, DIVISION OF LAND DEVELOPMENT — 4-16-14 DATE

CHIEF, DEVELOPMENT ENGINEERING DIVISION — 4.1.14 DATE

Date	No.	Revision Description
5/16/16	2	REVISED ESD
2/10/14	1	TEMPORARY SWM ESD (NEW SHEET)

EMERSON

SECTION 3 - AREA 7 - PARCEL A

"FUTURE EMPLOYMENT USE"

OWNER/DEVELOPER:

EMERSON DEVELOPMENT IX LLC
ONE TEXAS STATION CT. SUITE 200
TIMONIUM, MD 21093
(443) 689-8000

DMW
DAFT McCUNE WALKER INC
200 EAST PENNSYLVANIA TOWSON, MD 21286
P: 410 296 3333 F: 410 296 4705 WWW.DMW.COM
A TEAM OF LAND PLANNERS, LANDSCAPE ARCHITECTS, ENGINEERS, SURVEYORS & ENVIRONMENTAL PROFESSIONALS

EMERSON	SEC. 3 AREA 7		PART OF 837
5289/330	15 MDX-3	47 6th	6069.03
E-15			7520000

TITLE
PHASE 1, STAGE 1
SWM ESD PLANTING PLAN, SPECIFICATIONS & D.A. MAP

Des. By GDT	Scale AS SHOWN	Proj. No. 95054.81	
Drn. By RC/GO	Date 3/24/14	17b of 30	
Chk. By	Approved		

F -11-036

A:\95054\95054.81\ENGR\CAD FILES\SHEET FILES\95054.81_SWM2.DWG Mon, Mar 24, 2014

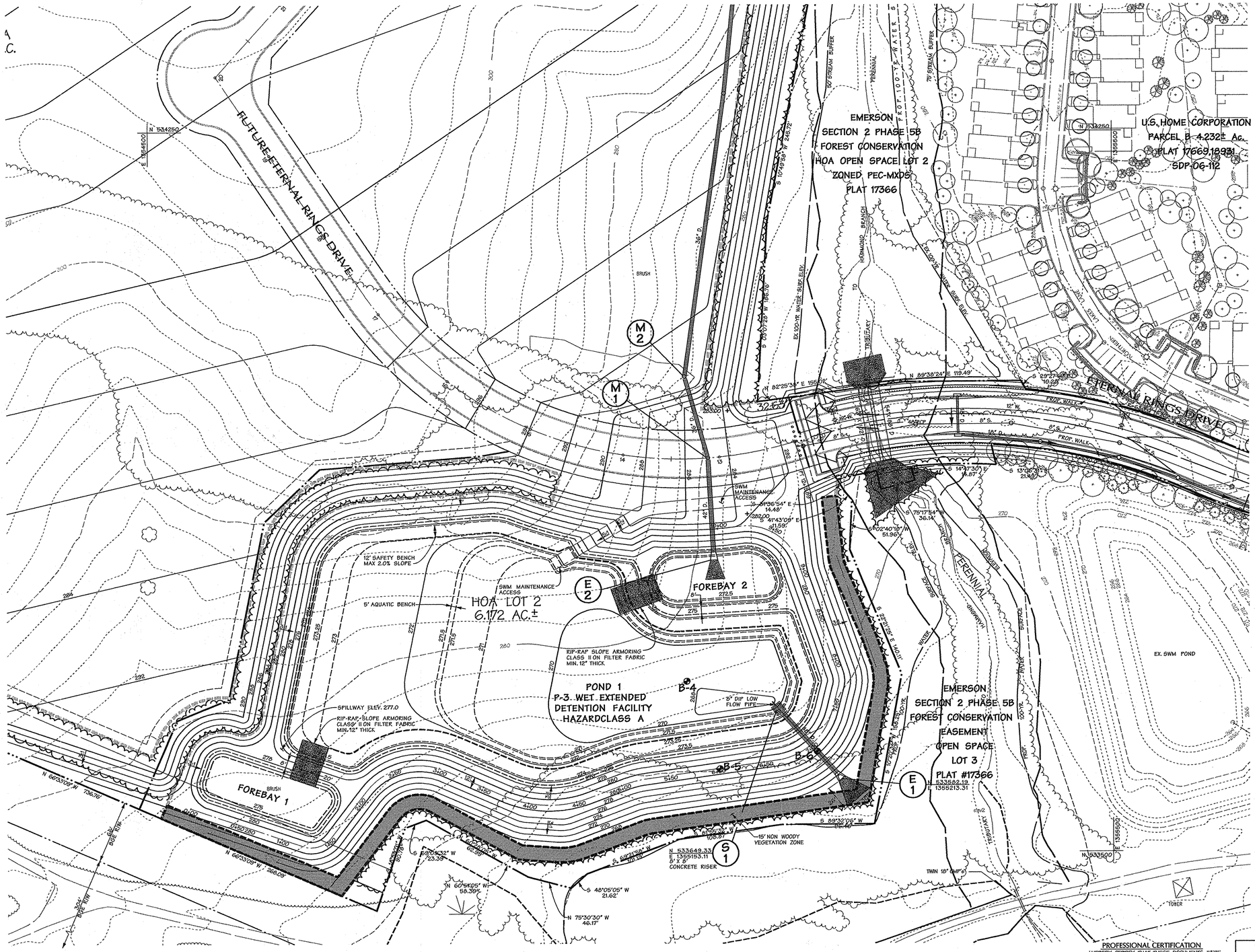

PLAN

1"=50'

SWM MANAGEMENT FACILITY NO.1

POND DESIGN FLOW SUMMARY PROPOSED CONDITIONS

STRUCTURE TYPE	EXTENDED DETENTION (P-3)
WATER QUALITY TYPE	WET POOL
STRUCTURE CLASSIFICATION	"A"
WATERSHED AREA TO FACILITY (SWM)	0.0469 SQ.MI.
LEVEL OF MANAGEMENT REQUIRED	1-YR.
LEVEL OF MANAGEMENT PROVIDED	1-YR.
TOP WIDTH PROVIDED	12'
MAXIMUM HEIGHT OF FILL	14.1'
FREEBOARD REQUIRED	2.0'
FREEBOARD PROVIDED	4.1'
WATER QUALITY VOL. WQv REQUIRED (Ac-ft)	1.80
WATER QUALITY VOL. WQv PROVIDED (Ac-ft)*	2.37
RECHARGE REQUIRED (% AREA METHOD, Rev) (Ac)	N/A
RECHARGE PROVIDED (Ac)**	N/A
CHANNEL PROTECTION VOL. Cpv REQUIRED (Ac-ft)	2.82
CHANNEL PROTECTION VOL. Cpv PROVIDED (Ac-ft)*	3.23
EXISTING 1-YR. STORM Q AT DESIGN POINT (cfs)	5.40
PROPOSED 1-YR. STORM Q AT DESIGN POINT (cfs)	3.60
EXISTING 10-YR. STORM Q AT DESIGN POINT (cfs)	65.40
PROPOSED 10-YR. STORM Q AT DESIGN POINT (cfs)	33.10
EXISTING 100-YR. STORM Q AT DESIGN POINT (cfs)	156.10
PROPOSED 100-YR. STORM Q AT DESIGN POINT (cfs)	107.50
WQv WATER SURFACE ELEV.= NORMAL POOL	272.00
Cpv WATER SURFACE ELEV.	273.75
10 YR. WATER SURFACE ELEV.	274.87
100-YR. WATER SURFACE ELEV.	275.54
RISER CREST ELEV.	274.50
100 YR. CLOGGED WATER SURFACE ELEV.	275.89
POND VOLUME BELOW 100 YR. CLOGGED WSE (Ac-ft)***	11.132
FOREBAY VOLUME REQUIRED (Ac-ft)	0.45
FOREBAY VOLUME PROVIDED (Ac-ft)	0.55

* WQv IS PROVIDED IN THE WET-POND PORTION OF THE FACILITY. Cpv IS PROVIDED IN THE FACILITY (AS MANAGEMENT OF THE 1-YEAR STORM) ABOVE THE WQv STORAGE VOLUME. THE 10-YEAR AND 100-YR. STORMS ARE MANAGED BY THE FACILITY

** RECHARGE TO BE PROVIDED AT TIME OF FUTURE DEVELPOMENT

*** ABOVE WET POOL ELEVATION

SEE SHEETS 19-20 FOR POND 1 DETAILS

Legend

EX. CURB & GUTTER
EX. MAJOR CONTOURS 400
EX. MINOR CONTOURS 402
EX. STORM DRAIN EX. 21" RCP
EX. SEWER EX. 8" S.
EX. WATER EX. 8" W.
EXISTING TREE LINE
EXISTING WETLAND LIMIT W
PROPERTY LINE
ROADWAY RIGHT-OF-WAY
PROPOSED LOT LINE
PROPOSED EASEMENT
PROPOSED CURB & GUTTER
PROPOSED SIDEWALK
PROP. STORM DRAIN 12" RCP, 6" S.
PROP. SEWER 4" W.
PROP. WATER
PROP. MAJOR CONTOURS 400
PROP. MINOR CONTOURS 402
SOIL BORING B-4
NON WOODY VEGETATION ZONE

DATA SOURCES

Existing topography shown hereon is a result of an aerial survey provided by Air Survey Corporation dated, 1998 supplemented with field run information performed by Daft McCune Walker, Inc. dated, 2010.

Property boundary shown hereon is a result of field run monumented boundary survey performed on or about June 25, 1999 by Daft McCune Walker, Inc.

Soils if shown provided by Soil Data Mart dated 2005 published by Natural Resources Conservation Services (NRCS)

Zoning information shown hereon provided by Howard County Department of Planning and Zoning, adapted by Howard County Council February 2, 2004.

Wetland and stream limits shown hereon were originally approved by Maryland Department of the Environment and the US Corps of Engineers in April 2001 and re-verified by these agencies in October 2009.

APPROVED: HOWARD COUNTY DEPT. OF PUBLIC WORKS

CHIEF, BUREAU OF HIGHWAYS — DATE 2-23-12

HOWARD COUNTY DEPT. OF PLANNING & ZONING

CHIEF, DEVELOPMENT ENGINEERING DIVISION — DATE 2/28/12

CHIEF, DIVISION OF LAND DEVELOPMENT — DATE 3/01/12

Date	No.	Revision Description
2-10-14	⚠	UPDATE OWNER/DEVELOPER INFO.

EMERSON

SECTION 3 – AREA 7 – PARCEL A

"Future Employment Use"

OWNER/DEVELOPER:

⚠ EMERSON DEVELOPMENT IX LLC
ONE TEXAS STATION COURT, SUITE 200
TIMONIUM, MD 21093 (443)687-8000

DMW
Daft-McCune-Walker, Inc.
200 East Pennsylvania Avenue
Towson, Maryland 21286
(410) 296-3333
Fax 296-4705

A Team of Land Planners, Landscape Architects, Engineers, Surveyors & Environmental Professionals

SUBDIVISION NAME: EMERSON		SECTION/AREA: SEC.3 AREA 7	LOT/PARCEL #: PART OF 837
PLAT# OR L/F: 5289/330	GRID #: 15	ZONE: MXD-3	TAX/ZONE MAP: 47
ELEC. DISTRICT: 6TH	CENSUS TRACT: 6069.03	WATER CODE: E-15	SEWER CODE: 7520000

TITLE

FINAL PLAN STORMWATER MANAGEMENT PLAN FACILITY NO.1

Des By	TJC	Scale	1"=50'	Proj. No.	95054.W2
Drn By	JSS	Date	11/17/11		18 of 30
Chk By	JDF	Approved			

OPERATION, MAINTENANCE, AND INSPECTION

INSPECTION OF THE PONDS SHOWN HEREON SHALL BE PERFORMED AT LEAST ANNUALLY, IN ACCORDANCE WITH THE CHECKLIST AND REQUIREMENT CONTAINED WITHIN USDA, SCS "STANDARDS AND SPECIFICATIONS FOR PONDS" (MD-378). THE POND OWNER(S) AND ANY HEIRS, SUCCESSORS, OR ASSIGNS SHALL BE RESPONSIBLE FOR THE SAFETY OF THE POND AND THE CONTINUED OPERATION, SURVEILLANCE, INSPECTION, AND MAINTENANCE THEREOF. THE POND OWNER(S) SHALL PROMPTLY NOTIFY THE SOIL CONSERVATION DISTRICT OF ANY UNUSUAL OBSERVATIONS THAT MAY BE INDICATIONS OF DISTRESS SUCH AS EXCESSIVE SEEPAGE, TURBID SEEPAGE, SLIDING OR SLUMPING.

THESE PLANS FOR SMALL POND CONSTRUCTION, SOIL EROSION AND SEDIMENT CONTROL MEET THE REQUIREMENTS OF THE HOWARD SOIL CONSERVATION DISTRICT.

HOWARD SOIL CONSERVATION DISTRICT — DATE 2/16/12

DEVELOPERS CERTIFICATE:

I/WE CERTIFY THAT ALL DEVELOPMENT AND/OR CONSTRUCTION WILL BE DONE ACCORDING TO THESE PLANS AND THAT ANY RESPONSIBLE PERSONNEL INVOLVED IN THE CONSTRUCTION PROJECT WILL HAVE A CERTIFICATE OF ATTENDANCE AT A DEPARTMENT OF ENVIRONMENT APPROVED TRAINING PROGRAM FOR THE CONTROL OF SEDIMENT AND EROSION BEFORE BEGINNING THE PROJECT. I SHALL ENGAGE A REGISTERED PROFESSIONAL ENGINEER TO SUPERVISE POND CONSTRUCTION AND PROVIDE THE HOWARD SOIL CONSERVATION DISTRICT WITH AN "AS-BUILT" PLAN OF THE POND WITHIN 30 DAYS OF COMPLETION. I ALSO AUTHORIZE PERIODIC ON-SITE INSPECTIONS BY THE HOWARD SOIL CONSERVATION DISTRICT.

SIGNATURE OF DEVELOPER — DATE 1/31/12
PRINT NAME BELOW SIGNATURE
Robert Jenkins

ENGINEERS CERTIFICATE:

I CERTIFY THAT THIS PLAN FOR POND CONSTRUCTION, EROSION AND SEDIMENT CONTROL REPRESENTS A PRACTICAL AND WORKABLE PLAN BASED ON MY PERSONAL KNOWLEDGE OF THE SITE CONDITIONS. THIS PLAN WAS PREPARED IN ACCORDANCE WITH THE REQUIREMENTS OF THE HOWARD SOIL CONSERVATION DISTRICT. I HAVE NOTIFIED THE DEVELOPER THAT HE/SHE MUST ENGAGE A REGISTERED PROFESSIONAL ENGINEER TO SUPERVISE POND CONSTRUCTION AND PROVIDE THE HOWARD SOIL CONSERVATION DISTRICT WITH AN "AS-BUILT" PLAN OF THE POND WITHIN 30 DAYS OF COMPLETION.

SIGNATURE OF ENGINEER — DATE 1/31/12
PRINT NAME BELOW SIGNATURE
Melvin C. Beall Jr.

PROFESSIONAL CERTIFICATION

I HEREBY CERTIFY THAT THESE DOCUMENTS WERE PREPARED OR APPROVED BY ME, AND THAT I AM A DULY LICENSED PROFESSIONAL ENGINEER UNDER THE LAWS OF THE STATE OF MARYLAND, LICENSE NO. 16828, EXPIRATION DATE: 5/15/12.

1/5/12
Date

STATE OF MARYLAND — MELVIN CHARLES BEALL JR. — 16828 — REGISTERED PROFESSIONAL ENGINEER

Professional Engr. No. 16828

F-11-036

m:\95054\95054.HYP\final Plans\95054W18.MOD

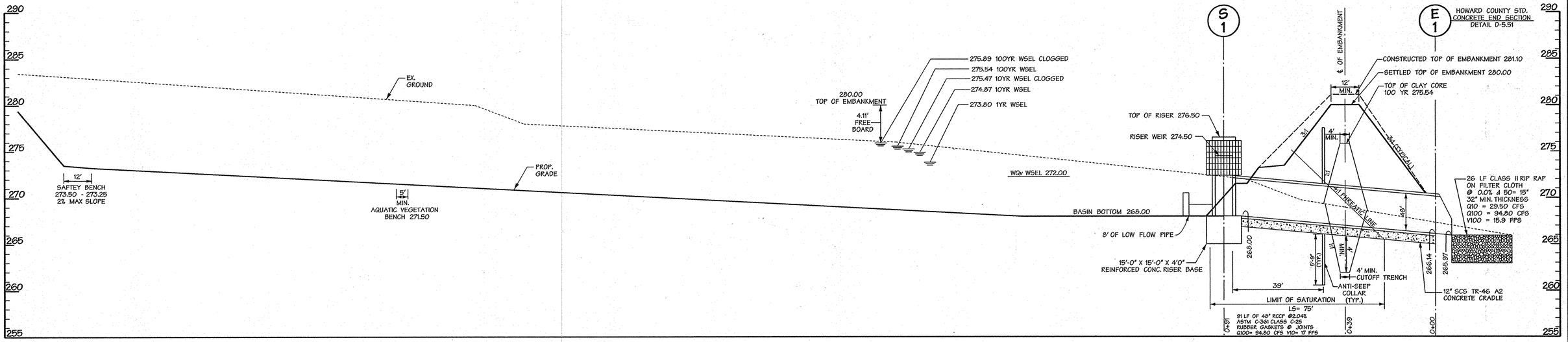

PROFILE THROUGH RISER AND PRINCIPLE SPILLWAY

SCALE: HORZ. 1" = 20'
VERT. 1" = 5'

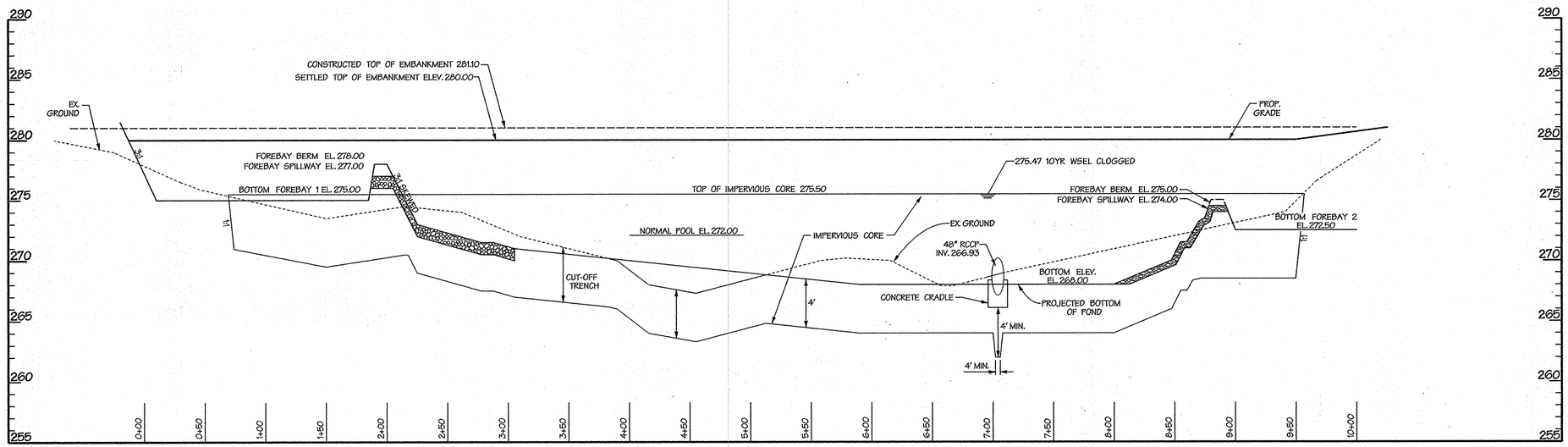

PROFILE ALONG CENTERLINE OF EMBANKMENT

SCALE: HORZ. 1" = 50'
VERT. 1" = 5'

DATA SOURCES

Existing topography shown hereon is a result of an aerial survey provided by Air Survey Corporation dated, 1998 supplemented with field run information performed by Daft McCune Walker, Inc. dated, 2010.

Property boundary shown hereon is a result of field run monumented boundary survey performed on or about June 25, 1999 by Daft McCune Walker, Inc.

Soils if shown provided by Soil Data Mart dated 2005 published by Natural Resources Conservation Services (NRCS)

Zoning information shown hereon provided by Howard County Department of Planning and Zoning, adopted by Howard County Council February 2, 2004.

Wetland and stream limits shown hereon were originally approved by Maryland Department of the Environment and the US Corps of Engineers in April 2001 and re-verified by these agencies in October 2009.

APPROVED: HOWARD COUNTY DEPT. OF PUBLIC WORKS

CHIEF, BUREAU OF HIGHWAYS — DATE 2-23-12

HOWARD COUNTY DEPT. OF PLANNING & ZONING

CHIEF, DEVELOPMENT ENGINEERING DIVISION — DATE 2/28/12

CHIEF, DIVISION OF LAND DEVELOPMENT — DATE 3/01/12

Date	No.	Revision Description
2-10-14	⚠	UPDATE OWNER/DEVELOPER INFO.

EMERSON

SECTION 3 – AREA 7 – PARCEL A

"Future Employment Use"

OWNER/DEVELOPER:
⚠ EMERSON DEVELOPMENT IX LLC
ONE TEXAS STATION COURT, SUITE 200
TIMONIUM, MD 21093 (443) 689-8000

PROFESSIONAL CERTIFICATION

I HEREBY CERTIFY THAT THESE DOCUMENTS WERE PREPARED OR APPROVED BY ME, AND THAT I AM A DULY LICENSED PROFESSIONAL ENGINEER UNDER THE LAWS OF THE STATE OF MARYLAND, LICENSE NO. 16228, EXPIRATION DATE: 5/13/12.

1/5/12 Date

STATE OF MARYLAND — JOHN DAVID FOSTER — No. 16228 — REGISTERED PROFESSIONAL ENGINEER

Professional Engr. No. 16228

THESE PLANS FOR SMALL POND CONSTRUCTION, SOIL EROSION AND SEDIMENT CONTROL MEET THE REQUIREMENTS OF THE HOWARD SOIL CONSERVATION DISTRICT.

HOWARD SOIL CONSERVATION DISTRICT — DATE 2/8/12

DEVELOPERS CERTIFICATE:

I/WE CERTIFY THAT ALL DEVELOPMENT AND/OR CONSTRUCTION WILL BE DONE ACCORDING TO THESE PLANS AND THAT ANY RESPONSIBLE PERSONNEL INVOLVED IN THE CONSTRUCTION PROJECT WILL HAVE A CERTIFICATE OF ATTENDANCE AT A DEPARTMENT OF ENVIRONMENT APPROVED TRAINING PROGRAM FOR THE CONTROL OF SEDIMENT AND EROSION BEFORE BEGINNING THE PROJECT. I SHALL ENGAGE A REGISTERED PROFESSIONAL ENGINEER TO SUPERVISE POND CONSTRUCTION AND PROVIDE THE HOWARD SOIL CONSERVATION DISTRICT WITH AN "AS-BUILT" PLAN OF THE POND WITHIN 30 DAYS OF COMPLETION. I ALSO AUTHORIZE PERIODIC ON-SITE INSPECTIONS BY THE HOWARD SOIL CONSERVATION DISTRICT.

SIGNATURE OF DEVELOPER — DATE 1/5/12
PRINT NAME BELOW SIGNATURE
Robert Jenkins

ENGINEERS CERTIFICATE:

I CERTIFY THAT THIS PLAN FOR POND CONSTRUCTION, EROSION AND SEDIMENT CONTROL REPRESENTS A PRACTICAL AND WORKABLE PLAN BASED ON MY PERSONAL KNOWLEDGE OF THE SITE CONDITIONS. THIS PLAN WAS PREPARED IN ACCORDANCE WITH THE REQUIREMENTS OF THE HOWARD SOIL CONSERVATION DISTRICT. I HAVE NOTIFIED THE DEVELOPER THAT HE/SHE MUST ENGAGE A REGISTERED PROFESSIONAL ENGINEER TO SUPERVISE POND CONSTRUCTION AND PROVIDE THE HOWARD SOIL CONSERVATION DISTRICT WITH AN "AS-BUILT" PLAN OF THE POND WITHIN 30 DAYS OF COMPLETION.

SIGNATURE OF ENGINEER — DATE 1/5/12
PRINT NAME BELOW SIGNATURE
Melvin C. Bradley Jr.

DMW
Daft-McCune-Walker, Inc.
200 East Pennsylvania Avenue
Towson, Maryland 21286
(410) 296-3333
Fax 296-4705

A Team of Land Planners, Landscape Architects, Engineers, Surveyors & Environmental Professionals

SUBDIVISION NAME: EMERSON	SECTION/AREA: SEC.3 AREA 7	LOT/PARCEL #: PART OF 837	
PLAT# OR L/F: 5289/330	BND #: 15	ZONE: MXD-3	TAX/ZONE MAP: 47
ELECT. DISTRICT: 6TH	CENSUS TRACT: 6069.03	WATER CODE: E-15	SEWER CODE: 7520000

TITLE

FINAL PLAN STORMWATER MANAGEMENT PROFILES FOR SWM FACILITY NO.1

Des By	TJC	Scale	As Noted	Proj. No.	95054.W
Drn By	JSS	Date	11/17/11	19 of 30	
Chk By	JDF	Approved			

F-11-036

H:\95054\95054-WP\Final Plans\95054WP19.MOD

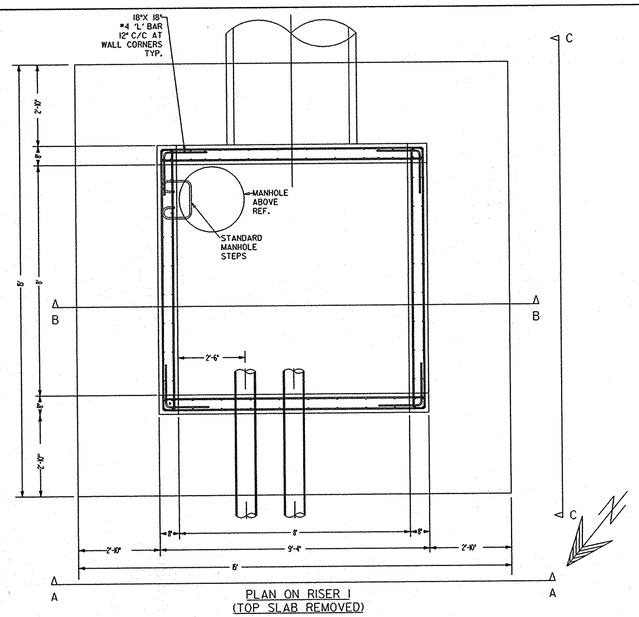

PLAN ON RISER 1
(TOP SLAB REMOVED)

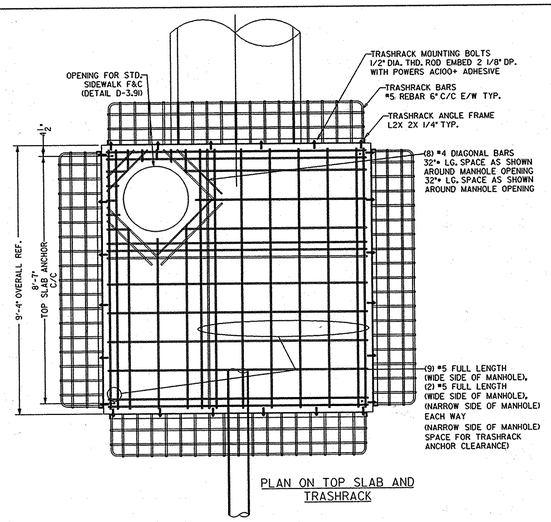

PLAN ON TOP SLAB AND TRASHRACK

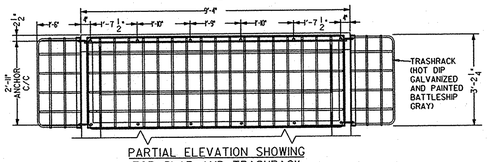

PARTIAL ELEVATION SHOWING TOP SLAB AND TRASHRACK

VARIABLE	FOREBAY 1	FOREBAY 2
B	275.00	278.00
C	274.50	277.00
D	20'	20'

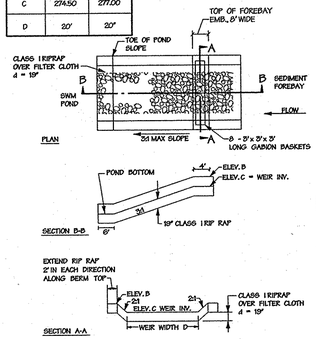

SWM FOREBAY EMBANKMENT ARMORING DETAIL

NOT TO SCALE

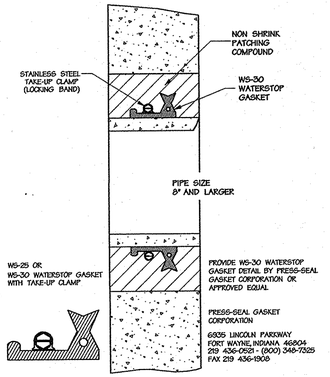

PIPE WATER STOP DETAIL

NOT TO SCALE

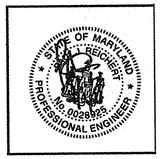

PROFESSIONAL CERTIFICATION

I HEREBY CERTIFY THAT THESE PLANS WERE PREPARED OR APPROVED BY ME, AND THAT I AM A DULY LICENSED PROFESSIONAL ENGINEER UNDER THE LAWS OF THE STATE OF MARYLAND, LICENSE NO. 0028525, EXPIRATION DATE: 1/15/2012

FOR REINFORCMENT DESIGN ONLY

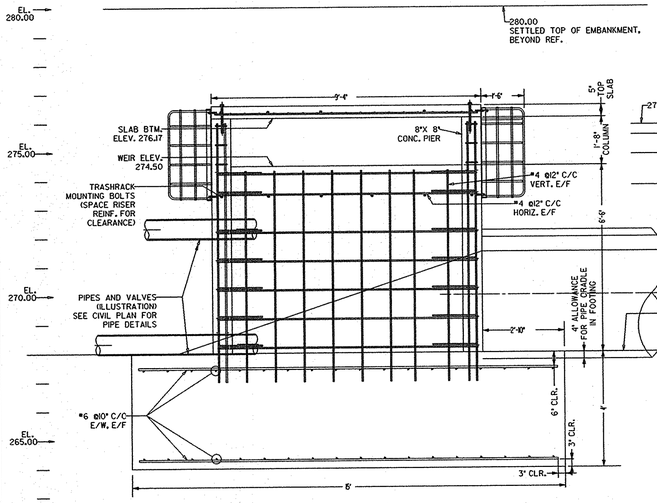

SECTION CC

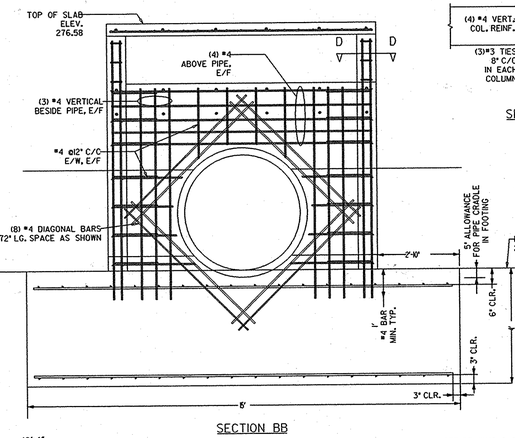

SECTION BB

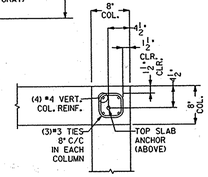

SECTION DD

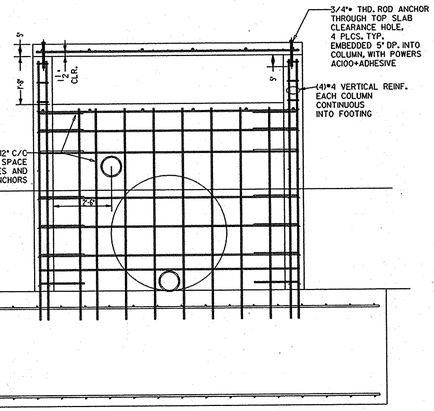

VIEW AA

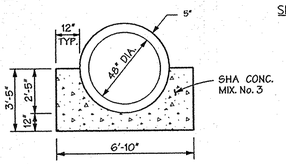

CONCRETE CRADLE

NOT TO SCALE

OPERATION AND MAINTENANCE SCHEDULE FOR PRIVATELY OWNED AND MAINTANINED STORMWATER PONDS (P-1 THROUGH P-5)

1. Facility shall be inspected annually and after major storms. Inspections shall be performed during wet weather to determine if the pond is functioning properly.
2. Top and side slopes of the embankment shall be mowed a minimum of two (2) times per year, once in June and once in September. Other side slopes and maintenance access shall be mowed as needed.
3. Debris and litter shall be removed during regular operations and as needed.
4. Visible signs of erosion in the pond as well as the rip rap or gabion outlet area shall be repaired as soon as it is noticed.

Non-Routine Maintenance :

1. Structural components of the pond such as the dam, the riser, and the pipes shall be repaired upon detection of any damage. The components shall be inspected during routine maintenance operations.
2. Sediment shall be removed from the pond, and forebay, no later than when the capacity of the pond, or forebay, is half full of sediment, or, when deemed necessary for aesthetic reasons, upon approval from the Department of Public Works.

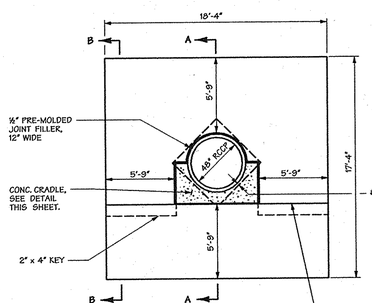

FINISH COLLAR SURFACE TRUE AND SMOOTH. ONE LAYER OF HEAVY, SMOOTH SURFACE, ASPHALT TREATED ROOFING FELT, APPROX. WEIGHT 55 LBS. PER SQUARE.

DETAIL SHOWN FOR EARTH FOUNDATION, FOR ROCK FOUNDATION, FORM BOTTOM OF CRADLE ON ROCK LINE AND KEY COLLAR 6" INTO ROCK.

ANTI SEEP COLLAR

CAST IN PLACE

NOT TO SCALE

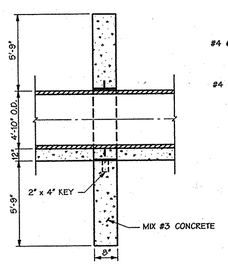

SECTION A-A

ANTI SEEP COLLARS SHALL BE PLACED NO CLOSER THAN 2'-0" FROM ANY PIPE JOINT.

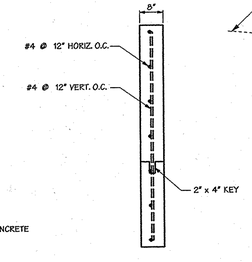

SECTION B-B

(SHOWING STEEL)

SEE DRAWING 2 OF 4 FOR GENERAL (STRUCTURE) NOTES

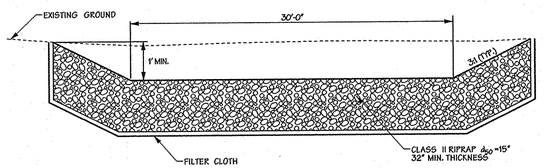

RIPRAP OUTLET DETAIL, POND 1
26' X 30' OUTLET

NOT TO SCALE

PROFESSIONAL CERTIFICATION

I HEREBY CERTIFY THAT THESE DOCUMENTS WERE PREPARED OR APPROVED BY ME, AND THAT I AM A DULY LICENSED PROFESSIONAL ENGINEER UNDER THE LAWS OF THE STATE OF MARYLAND, LICENSE NO. 20028, EXPIRATION DATE: 5/13/12

1/5/12

Professional Engr. No. 16928

DATA SOURCES

Existing topography shown hereon is a result of an aerial survey provided by Air Survey Corporation dated, 1998 supplemented with field run information performed by Daft McCune Walker, Inc. dated, 2010.

Property boundary shown hereon is a result of field run monumented boundary survey performed on or about June 25, 1999 by Daft McCune Walker, Inc.

Soils if shown provided by Soil Data Mart dated 2005 published by Natural Resources Conservation Services (NRCS)

Zoning information shown hereon provided by Howard County Department of Planning and Zoning, adopted by Howard County Council February 2, 2004.

Wetland and stream limits shown hereon were originally approved by Maryland Department of the Environment and the US Corps of Engineers in April 2001 and re-verified by these agencies in October 2009.

APPROVED: HOWARD COUNTY DEPT. OF PUBLIC WORKS

CHIEF, BUREAU OF HIGHWAYS — DATE 2-23-12

HOWARD COUNTY DEPT. OF PLANNING & ZONING

CHIEF, DEVELOPMENT ENGINEERING DIVISION — DATE 2/28/12

CHIEF, DIVISION OF LAND DEVELOPMENT — DATE 3/01/12

DATE	NO.	Revision Description
2-10-14	1	UPDATE OWNER/DEVELOPER INFO.

EMERSON

SECTION 3 – AREA 7 – PARCEL A

"Future Employment Use"

OWNER/DEVELOPER:
EMERSON DEVELOPMENT IX LLC
ONE TEXAS STATION COURT, SUITE 200
TIMONIUM, MD. 21093 (443) 680-8000

DMW
Daft-McCune-Walker, Inc.
200 East Pennsylvania Avenue
Towson, Maryland 21286
(410) 296-3333
Fax 296-4705

A Team of Land Planners, Landscape Architects, Engineers, Surveyors & Environmental Professionals

SUBDIVISION NAME		SECTION/AREA		LOT/PARCEL #	
EMERSON		SEC.3 AREA 7		PART OF 837	
PLAT# OR L/F	ZONE	TAX/ZONE MAP	ELEC. DISTRICT	CENSUS TRACT	
15	MXD-3	47	6TH	6069.03	
WATER CODE		SEWER CODE			

TITLE

FINAL PLAN STORMWATER MANAGEMENT DETAILS FOR SWM FACILITY NO. 1

Des By	TJC	Scale	AS NOTED	Proj. No.	95054.W2
Drn By	JSS	Date	10/19/11	20 of 30	
Chk By		Approved			

THESE PLANS FOR SMALL POND CONSTRUCTION, SOIL EROSION AND SEDIMENT CONTROL MEET THE REQUIREMENTS OF THE HOWARD SOIL CONSERVATION DISTRICT.

HOWARD SOIL CONSERVATION DISTRICT — DATE 2/8/12

DEVELOPERS CERTIFICATE:

I/WE CERTIFY THAT ALL DEVELOPMENT AND/OR CONSTRUCTION WILL BE DONE ACCORDING TO THESE PLANS AND THAT ANY RESPONSIBLE PERSONNEL INVOLVED IN THE CONSTRUCTION PROJECT WILL HAVE A CERTIFICATE OF ATTENDANCE AT A DEPARTMENT OF ENVIRONMENT APPROVED TRAINING PROGRAM FOR THE CONTROL OF SEDIMENT AND EROSION BEFORE BEGINNING THE PROJECT. I SHALL ENGAGE A REGISTERED PROFESSIONAL ENGINEER TO SUPERVISE POND CONSTRUCTION AND PROVIDE THE HOWARD SOIL CONSERVATION DISTRICT WITH AN "AS-BUILT" PLAN OF THE POND WITHIN 30 DAYS OF COMPLETION. I ALSO AUTHORIZE PERIODIC ON-SITE INSPECTIONS BY THE HOWARD SOIL CONSERVATION DISTRICT.

SIGNATURE OF DEVELOPER — DATE 1/5/12
PRINT NAME BELOW SIGNATURE
Robert Jenkins

ENGINEERS CERTIFICATE:

I CERTIFY THAT THIS PLAN FOR POND CONSTRUCTION, EROSION AND SEDIMENT CONTROL REPRESENTS A PRACTICAL AND WORKABLE PLAN BASED ON MY PERSONAL KNOWLEDGE OF THE SITE CONDITIONS. THIS PLAN WAS PREPARED IN ACCORDANCE WITH THE REQUIREMENTS OF THE HOWARD SOIL CONSERVATION DISTRICT. I HAVE NOTIFIED THE DEVELOPER THAT HE/SHE MUST ENGAGE A REGISTERED PROFESSIONAL ENGINEER TO SUPERVISE POND CONSTRUCTION AND PROVIDE THE HOWARD SOIL CONSERVATION DISTRICT WITH AN "AS-BUILT" PLAN OF THE POND WITHIN 30 DAYS OF COMPLETION.

SIGNATURE OF ENGINEER — DATE 1/5/12
PRINT NAME BELOW SIGNATURE
Malvin C. Bagley Jr.

F-11-036

n:\95054\95054.W\Final Plans\95054W20.M02

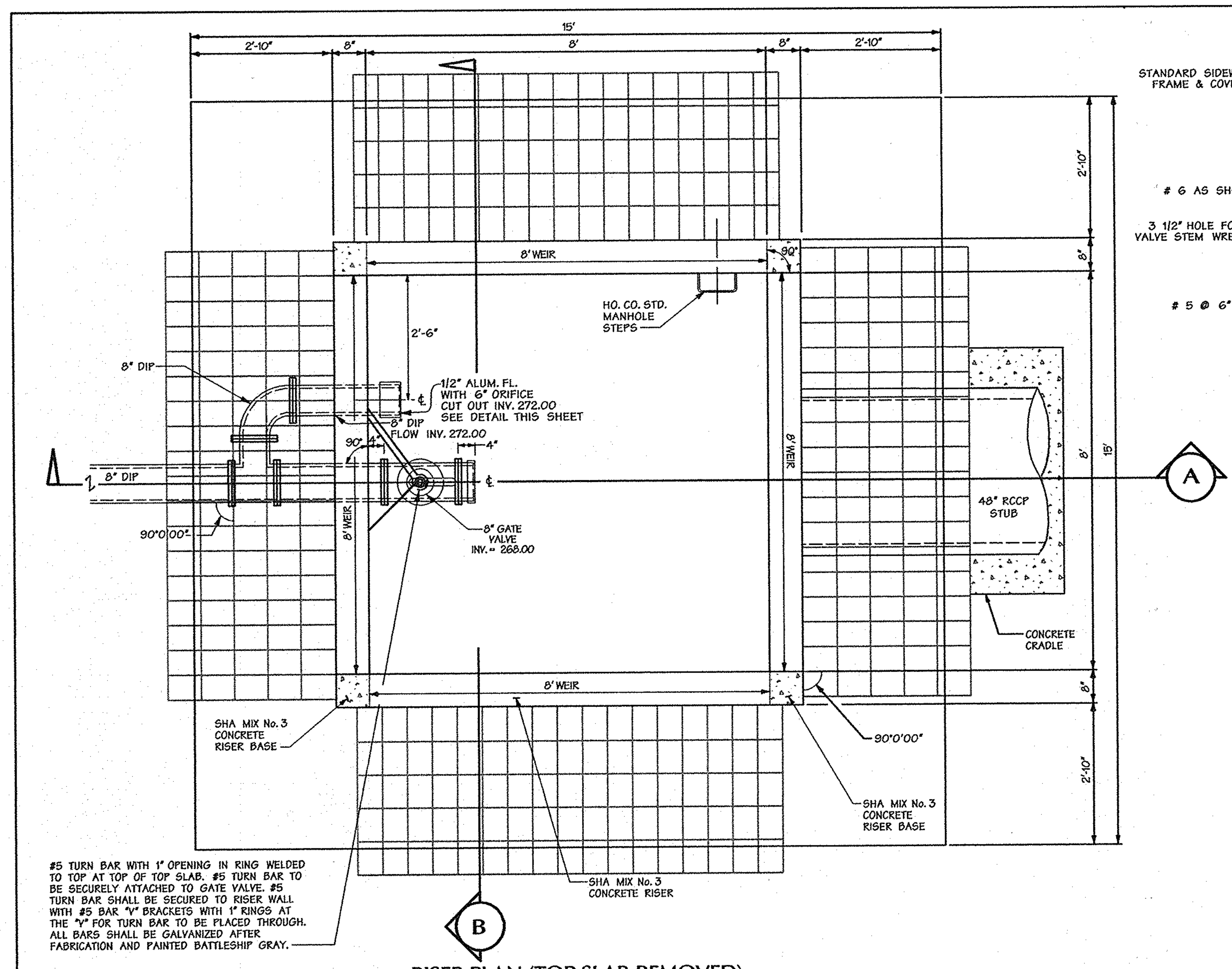

RISER PLAN (TOP SLAB REMOVED)

SCALE: 1"=2'

NOTE: DIP SHALL HAVE FLANGE JOINTS

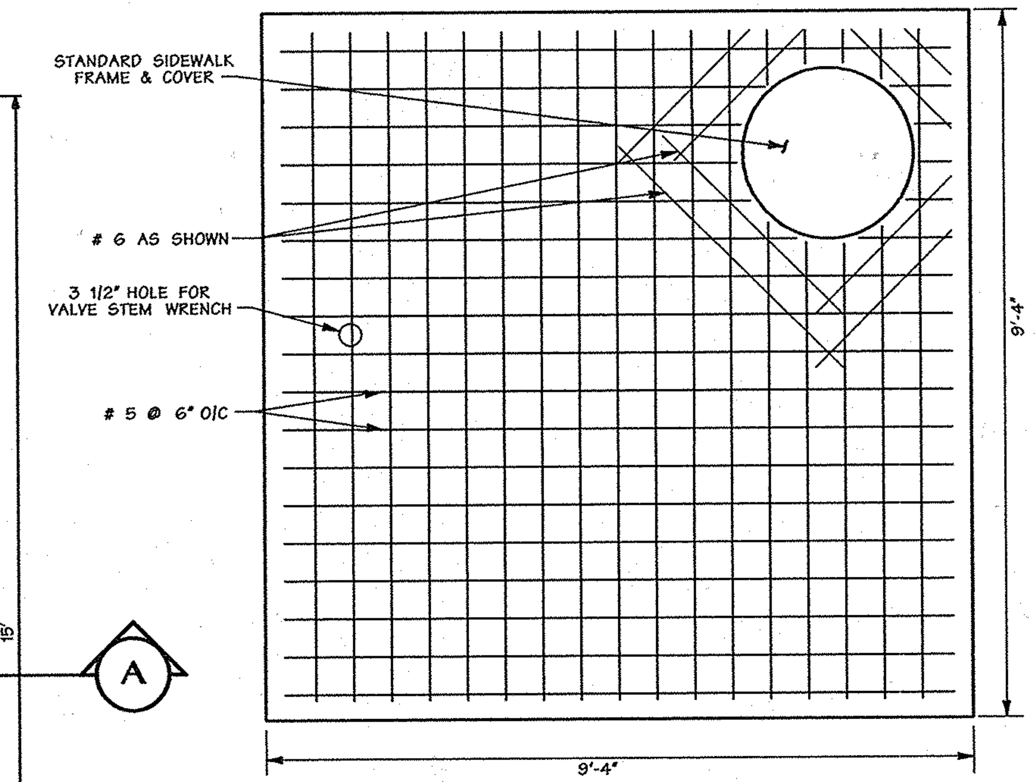

NOTES:

1. BOLT TOP SLAB TO RISER WITH (4) ½" x 6" LG. HEX. HEAD GALVANIZED BOLTS.
2. THE SIDE OF THE SLAB CLOSEST TO THE FRAME AND COVER WILL LINE UP WITH THE SIDE OF THE RISER WITH STANDARD MANHOLE STEPS.

TOP SLAB

SCALE: 1"=2'
CAST IN PLACE

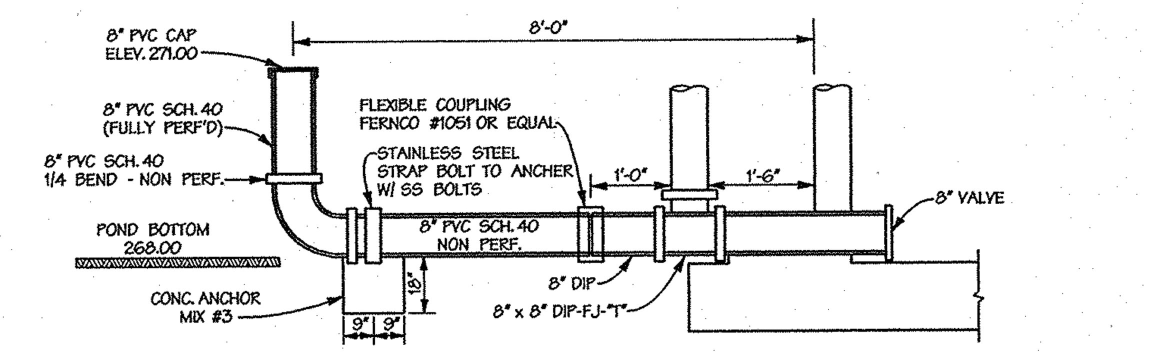

LOW FLOW PIPE DETAIL (TYP.)

NOT TO SCALE

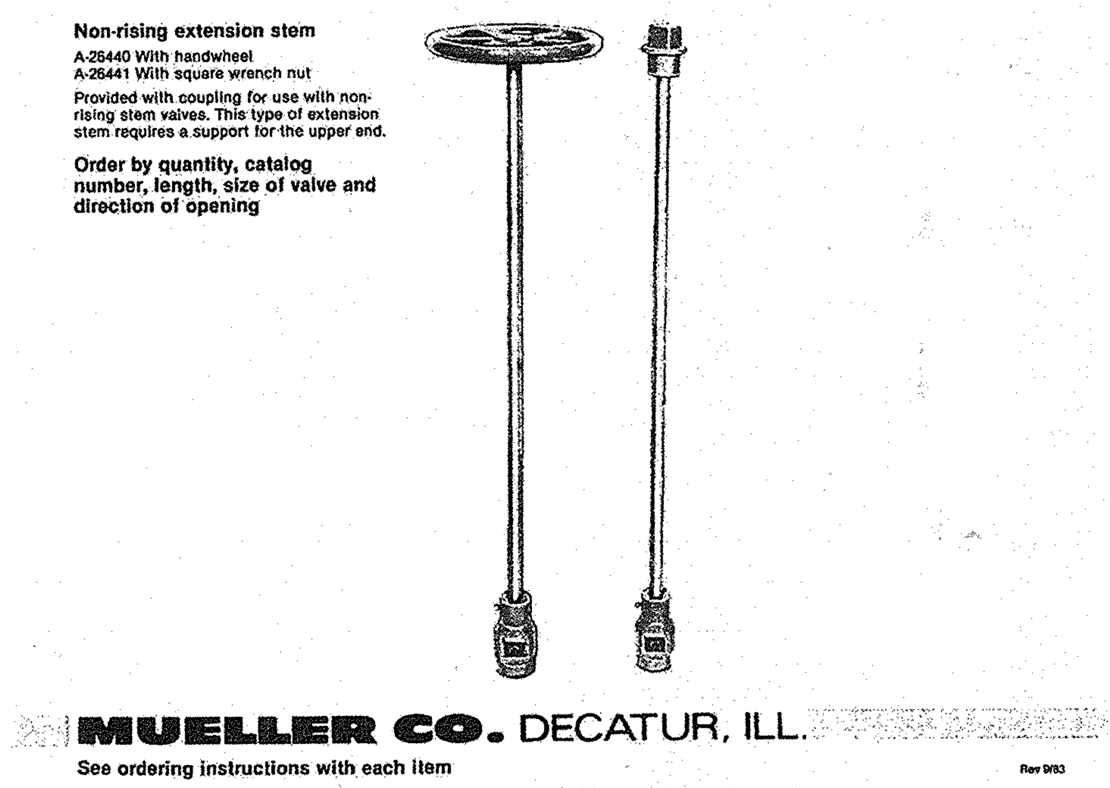

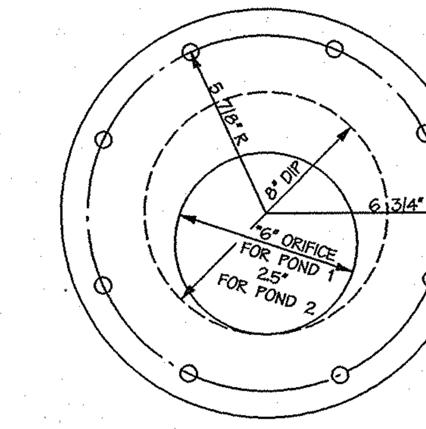

NOTES:

1. 1/2" THICK ALUMINUM ORIFICE PLATE BOLT TO FLANGED INFLOW PIPE WITH 8" FLANGE. PLATE CAN BE SQUARE OR ROUND
2. 8-7/8" HOLES TO MATCH 8" DIP BOLT CIRCLE
3. INVERT OF ORIFICE TO MATCH INVERT OF 8" DIP

* FOR POND 2, ORIFICE IS 2.5"

ORIFICE PLATE

NOT TO SCALE

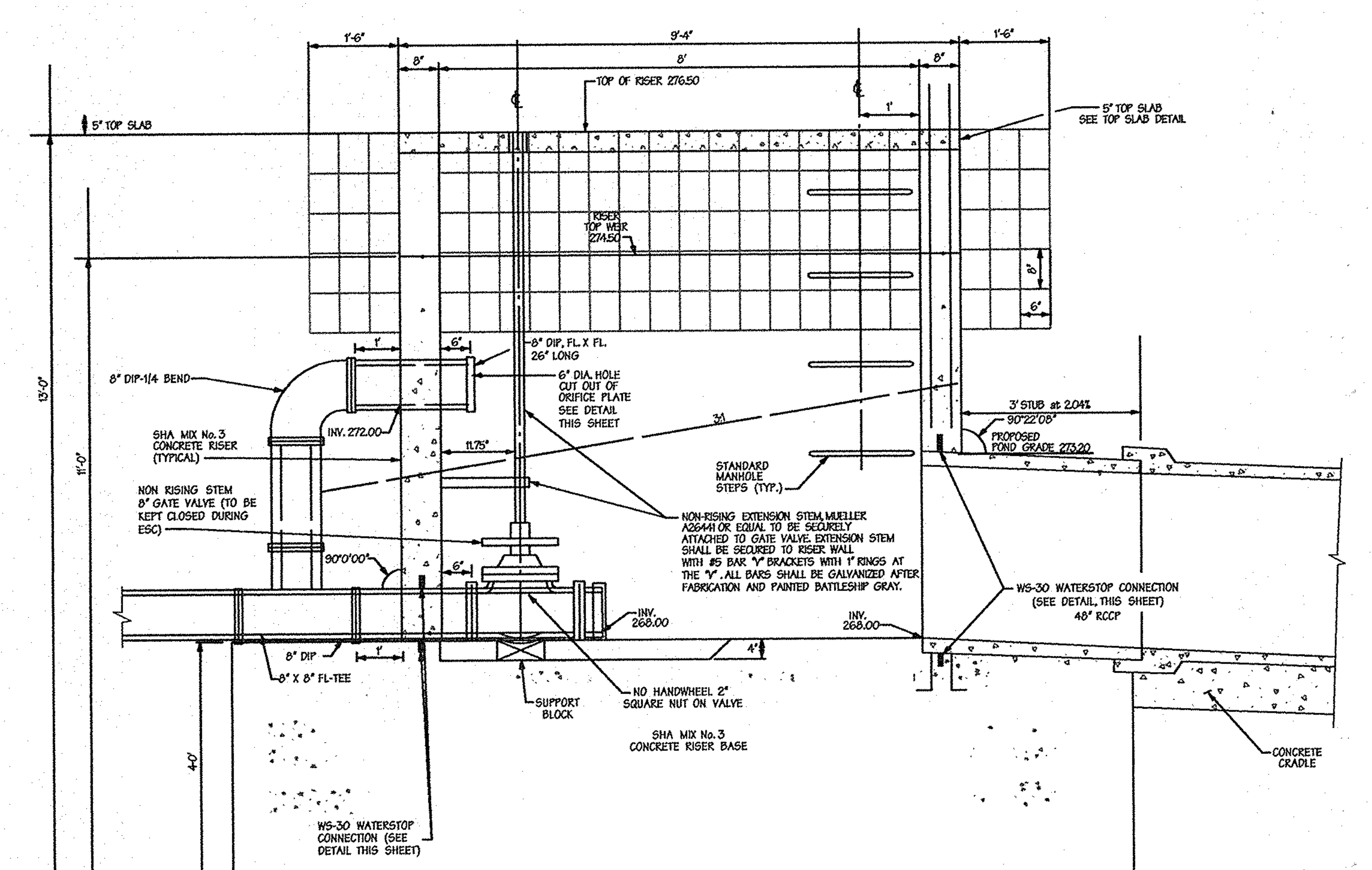

SECTION A

SCALE: 1"=2'

RISER DETAIL

SCALE: 1"=2'
CAST IN PLACE

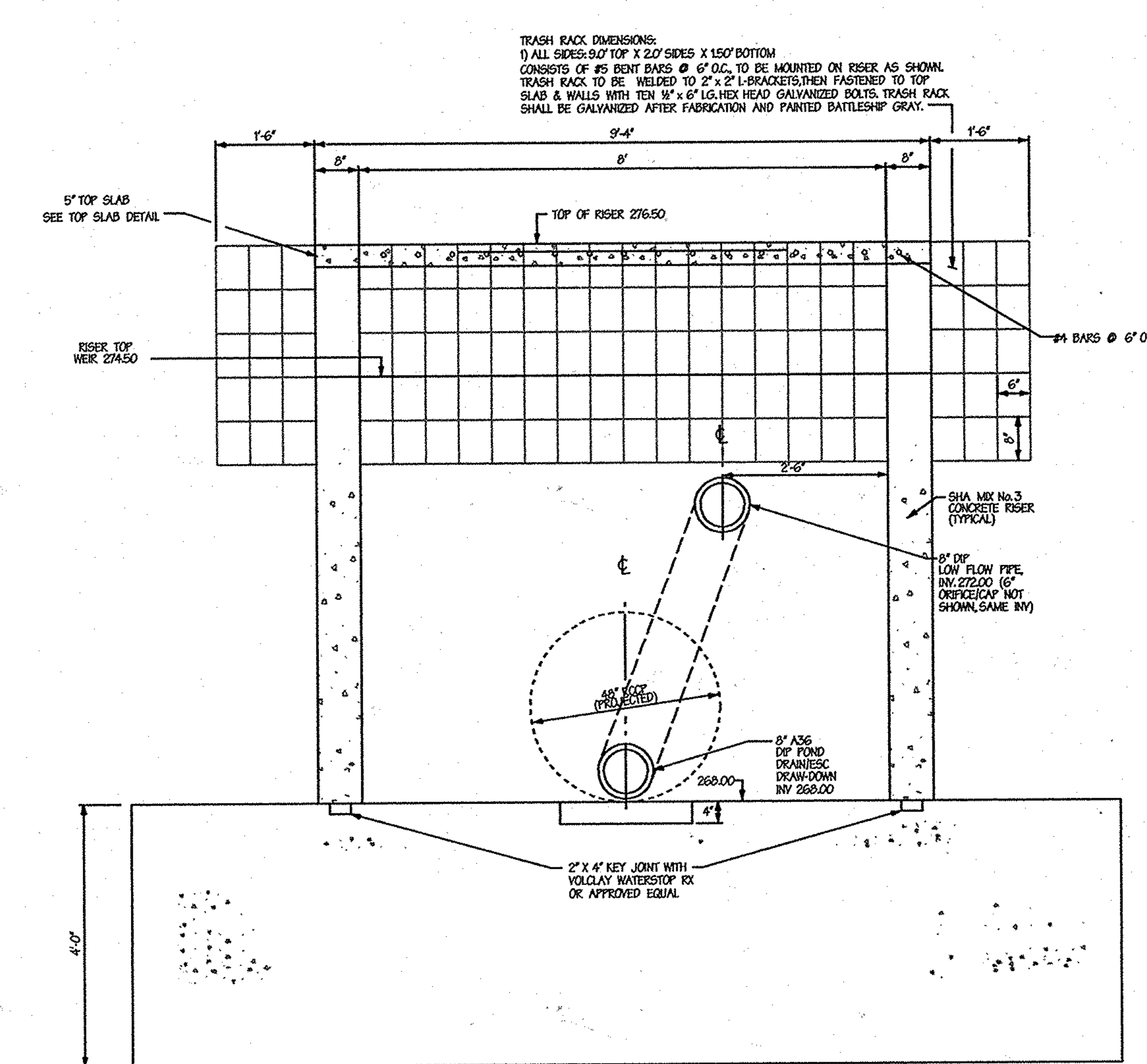

SECTION B

SCALE: 1"=2'

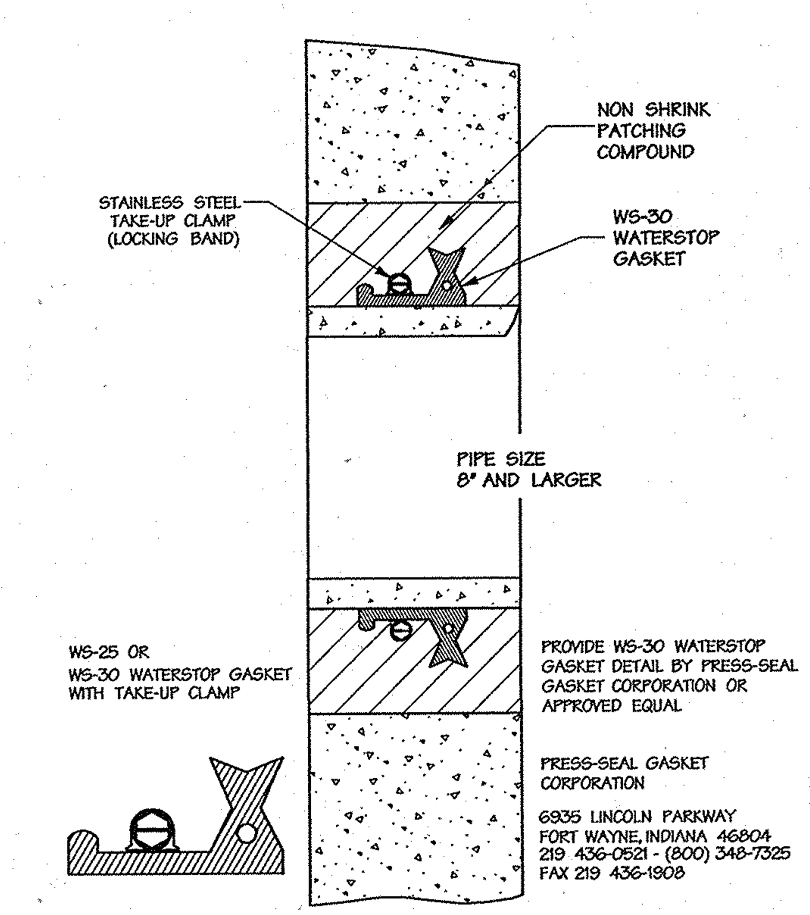

PIPE WATER STOP DETAIL

NOT TO SCALE

DATA SOURCES

Existing topography shown hereon is a result of an aerial survey provided by Air Survey Corporation dated, 1998 supplemented with field run information performed by Daft McCune Walker, Inc. dated, 2010.

Property boundary shown hereon is a result of field run monumented boundary survey performed on or about June 25, 1999 by Daft McCune Walker, Inc.

Soils if shown provided by Soil Data Mart dated 2005 published by Natural Resources Conservation Services (NRCS)

Zoning information shown hereon provided by Howard County Department of Planning and Zoning, adapted by Howard County Council February 2, 2004.

Wetland and stream limits shown hereon were originally approved by Maryland Department of the Environment and the US Corps of Engineers in April 2001 and re-verified by these agencies in October 2009.

OPERATION AND MAINTENANCE SCHEDULE FOR PRIVATELY OWNED AND MAINTAINED STORMWATER PONDS (P-1 THROUGH P-5)

1. Facility shall be inspected annually and after major storms. Inspections shall be performed during wet weather to determine if the pond is functioning properly.
2. Top and side slopes of the embankment shall be mowed a minimum of two (2) times per year, once in June and once in September. Other side slopes and maintenance access shall be mowed as needed.
3. Debris and litter shall be removed during regular operations and as needed.
4. Visible signs of erosion in the pond as well as the rip rap or gabion outlet area shall be repaired as soon as it is noticed.

Non-Routine Mantenance :

1. Structural components of the pond such as the dam, the riser, and the pipes shall be repaired upon detection of any damage. The components shall be inspected during routine maintenance operations.
2. Sediment shall be removed from the pond, and forebay, no later than when the capacity of the pond, or forebay, is half full of sediment, or, when deemed necessary for aesthetic reasons, upon approval from the Department of Public Works.

THESE PLANS FOR SMALL POND CONSTRUCTION, SOIL EROSION AND SEDIMENT CONTROL MEET THE REQUIREMENTS OF THE HOWARD SOIL CONSERVATION DISTRICT.

John R Robertson 2/8/12
HOWARD SOIL CONSERVATION DISTRICT DATE

DEVELOPERS CERTIFICATE:

I/WE CERTIFY THAT ALL DEVELOPMENT AND/OR CONSTRUCTION WILL BE DONE ACCORDING TO THESE PLANS AND THAT ANY RESPONSIBLE PERSONNEL INVOLVED IN THE CONSTRUCTION PROJECT WILL HAVE A CERTIFICATE OF ATTENDANCE AT A DEPARTMENT OF ENVIRONMENT APPROVED TRAINING PROGRAM FOR THE CONTROL OF SEDIMENT AND EROSION BEFORE BEGINNING THE PROJECT. I SHALL ENGAGE A REGISTERED PROFESSIONAL ENGINEER TO SUPERVISE POND CONSTRUCTION AND PROVIDE THE HOWARD SOIL CONSERVATION DISTRICT WITH AN "AS-BUILT" PLAN OF THE POND WITHIN 30 DAYS OF COMPLETION. I ALSO AUTHORIZE PERIODIC ON-SITE INSPECTIONS BY THE HOWARD SOIL CONSERVATION DISTRICT.

Robert Jenkins 1/5/12
SIGNATURE OF DEVELOPER DATE
PRINT NAME BELOW SIGNATURE
Robert Jenkins

ENGINEERS CERTIFICATE:

I CERTIFY THAT THIS PLAN FOR POND CONSTRUCTION, EROSION AND SEDIMENT CONTROL REPRESENTS A PRACTICAL AND WORKABLE PLAN BASED ON MY PERSONAL KNOWLEDGE OF THE SITE CONDITIONS. THIS PLAN WAS PREPARED IN ACCORDANCE WITH THE REQUIREMENTS OF THE HOWARD SOIL CONSERVATION DISTRICT. I HAVE NOTIFIED THE DEVELOPER THAT HE/SHE MUST ENGAGE A REGISTERED PROFESSIONAL ENGINEER TO SUPERVISE POND CONSTRUCTION AND PROVIDE THE HOWARD SOIL CONSERVATION DISTRICT WITH AN "AS-BUILT" PLAN OF THE POND WITHIN 30 DAYS OF COMPLETION.

1/5/12
SIGNATURE OF ENGINEER DATE
PRINT NAME BELOW SIGNATURE

PROFESSIONAL CERTIFICATION
I HEREBY CERTIFY THAT THESE DOCUMENTS WERE PREPARED OR APPROVED BY ME, AND THAT I AM A DULY LICENSED PROFESSIONAL ENGINEER UNDER THE LAWS OF THE STATE OF MARYLAND, LICENSE NO. 16928, EXPIRATION DATE: 1/5/12.

1/5/12
Date

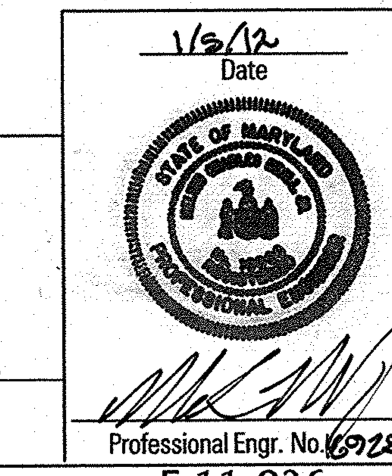

Professional Engr. No. 16928

F-11-036

APPROVED: HOWARD COUNTY DEPT. OF PUBLIC WORKS

CHIEF, BUREAU OF HIGHWAYS	2-23-12 DATE

HOWARD COUNTY DEPT. OF PLANNING & ZONING

CHIEF, DEVELOPMENT ENGINEERING DIVISION	2/28/12 DATE
CHIEF, DIVISION OF LAND DEVELOPMENT	3/01/12 DATE

Date	No.	Revision Description
2-10-14	⚠	UPDATE OWNER/DEVELOPER INFO.

EMERSON

SECTION 3 – AREA 7 – PARCEL A
"Future Employment Use"

OWNER/DEVELOPER:
⚠ EMERSON DEVELOPMENT IX LLC
ONE TEXAS STATION COURT, SUITE 200
TIMONIUM, MD 21093 (443) 689-8000

DMW
Daft-McCune-Walker, Inc.
200 East Pennsylvania Avenue
Towson, Maryland 21286
(410) 296-3333
Fax 296-4705

A Team of Land Planners, Landscape Architects, Engineers, Surveyors & Environmental Professionals

SUBDIVISION NAME			SECTION/AREA		LOT/PARCEL #
EMERSON			SEC.3 AREA 7		PART OF 837
PLAT# OR L/F	GRID #	ZONE	TAX/ZONE MAP	ELECT. DISTRICT	CENSUS TRACT
	15	MXD-3	47	6TH	6069.03
WATER CODE			SEWER CODE		

TITLE
FINAL PLAN
STORMWATER MANAGEMENT
DETAILS FOR SWM FACILITY NO. 1

Des By	TJC	Scale	AS NOTED	Proj. No. 95054.W2
Drn By	JSS	Date	11/17/11	21 of 30
Chk By		Approved		

n:\95054\95054.W\Final Plans\95054W21.M02

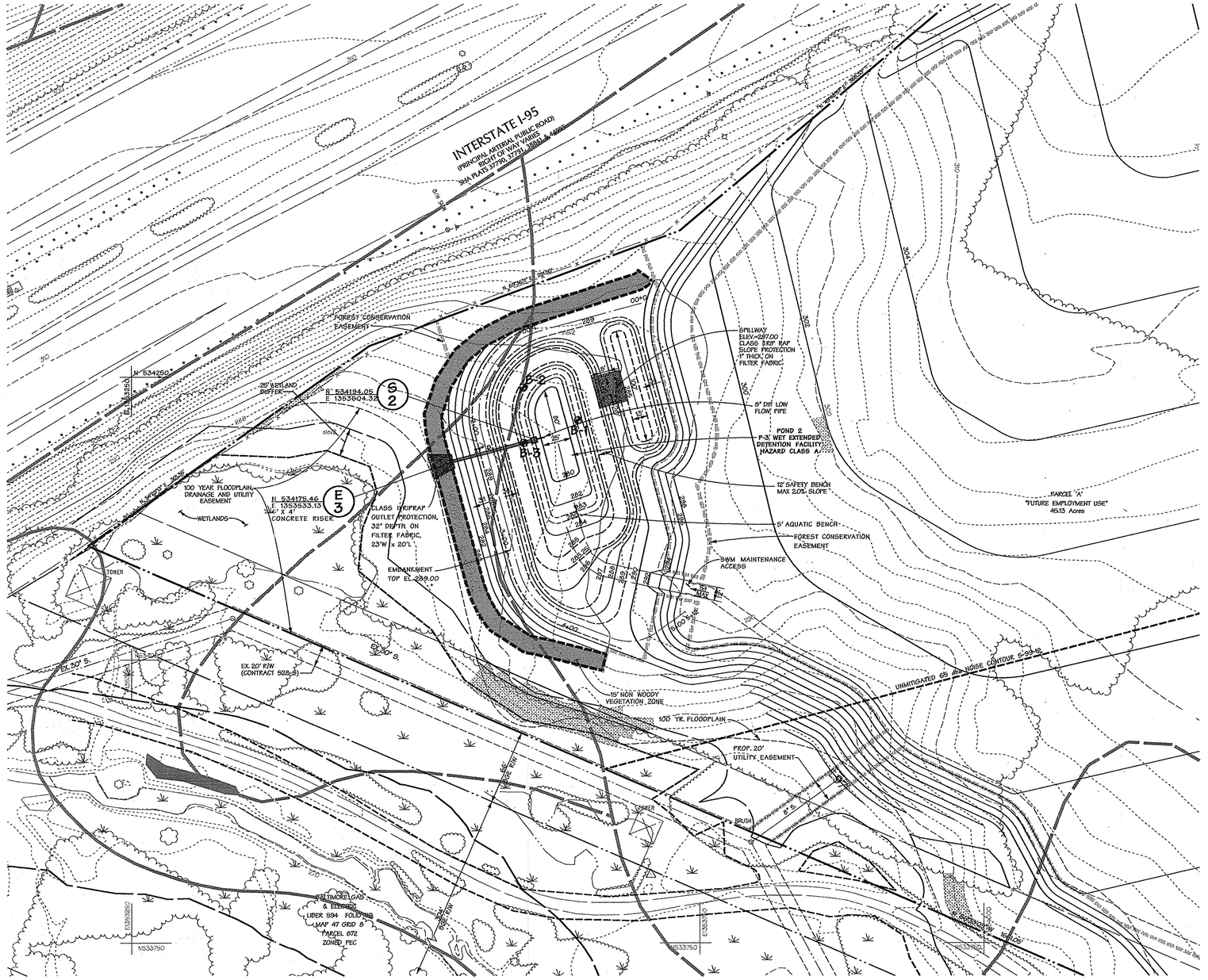

PLAN

1"=50'

SWM MANAGEMENT FACILITY NO. 2
POND DESIGN FLOW SUMMARY PROPOSED CONDITIONS

STRUCTURE TYPE	EXTENDED DETENTION (P-3)
WATER QUALITY TYPE	WET POOL
STRUCTURE CLASSIFICATION	"A"
WATERSHED AREA TO FACILITY (SWM)	0.0075 SQ. MI.
LEVEL OF MANAGEMENT REQUIRED	1-YR.
LEVEL OF MANAGEMENT PROVIDED	1-YR.
TOP WIDTH PROVIDED	12'
MAXIMUM HEIGHT OF FILL	11.2'
FREEBOARD REQUIRED	2.0'
FREEBOARD PROVIDED	2.0'
WATER QUALITY VOL. WQv REQUIRED (Ac-ft)	0.275
WATER QUALITY VOL. WQv PROVIDED (Ac-ft)*	0.40
RECHARGE REQUIRED (% AREA METHOD, Rev) (Ac)	N/A
RECHARGE PROVIDED (Ac)**	N/A
CHANNEL PROTECTION VOL. Cpv REQUIRED (Ac-ft)	0.467
CHANNEL PROTECTION VOL. Cpv PROVIDED (Ac-ft)*	0.958
EXISTING 1-YR. STORM Q AT DESIGN POINT (cfs)	1.70
PROPOSED 1-YR. STORM Q AT DESIGN POINT (cfs)	0.70
EXISTING 10-YR. STORM Q AT DESIGN POINT (cfs)	11.30
PROPOSED 10-YR. STORM Q AT DESIGN POINT (cfs)	16.70
EXISTING 100-YR. STORM Q AT DESIGN POINT (cfs)	23.20
PROPOSED 100-YR. STORM Q AT DESIGN POINT (cfs)	35.80
WQv WATER SURFACE ELEV.= NORMAL POOL	294.00
Cpv WATER SURFACE ELEV.	296.00
10 YR. WATER SURFACE ELEV.	296.60
100-YR. WATER SURFACE ELEV.	297.00
RISER CREST ELEV.	296.25
100 YR. CLOGGED WATER SURFACE ELEV.	297.75
POND VOLUME BELOW 100 YR. CLOGGED WSE (Ac-ft)***	1.912
FOREBAY VOLUME REQUIRED (Ac-ft)	0.069
FOREBAY VOLUME PROVIDED (Ac-ft)	0.092

* WQv IS PROVIDED IN THE WET-POND PORTION OF THE FACILITY. Cpv IS PROVIDED IN THE FACILITY (AS MANAGEMENT OF THE 1-YEAR STORM) ABOVE THE WQv STORAGE VOLUME. THE 10-YEAR AND 100-YR. STORMS ARE PASSED THROUGH THE FACILITY.
** RECHARGE TO BE PROVIDED AT TIME OF FUTURE DEVELPOMENT
*** ABOVE WET POOL ELEVATION

EMERSON DEVELOPMENT IX LLC
SECTION 3 AREA 7
PARCEL 837
ZONED PEC-MXD-3

Legend

EX. CURB & GUTTER
EX. MAJOR CONTOURS 400
EX. MINOR CONTOURS 402
EX. STORM DRAIN EX. 21" RCP
EX. SEWER EX. 8" S.
EX. WATER EX. 6" W.
EXISTING TREE LINE
EXISTING WETLAND LIMIT
PROPERTY LINE
ROADWAY RIGHT-OF-WAY
PROPOSED LOT LINE
PROPOSED EASEMENT
PROPOSED CURB & GUTTER
PROPOSED SIDEWALK
PROP. STORM DRAIN 15" RCP, 6" S.
PROP. SEWER 4" W.
PROP. WATER
PROP. MAJOR CONTOURS 400
PROP. MINOR CONTOURS 402
SOIL BORING B-4
NON WOODY VEGETATION ZONE
45' BGE SETBACK FOR CREDITED FOREST AREAS
UNMITIGATED 65 dba NOISE CONTOUR S-93-12

OPERATION, MAINTENANCE AND INSPECTION

INSPECTION OF THE PONDS SHOWN HEREON SHALL BE PERFORMED AT LEAST ANNUALLY, IN ACCORDANCE WITH THE CHECKLIST AND REQUIREMENT CONTAINED WITHIN USDA SCS "STANDARDS AND SPECIFICATIONS FOR PONDS" (MD-378). THE POND OWNER(S) AND ANY HEIRS, SUCCESSORS, OR ASSIGNS SHALL BE RESPONSIBLE FOR THE SAFETY OF THE POND AND THE CONTINUED OPERATION, SURVEILLANCE, INSPECTION, AND MAINTENANCE THEREOF. THE POND OWNER(S) SHALL PROMPTLY NOTIFY THE SOIL CONSERVATION DISTRICT OF ANY UNUSUAL OBSERVATIONS THAT MAY BE INDICATIONS OF DISTRESS SUCH AS EXCESSIVE SEEPAGE, TURBID SEEPAGE, SLIDING OR SLUMPING.

DATA SOURCES

Existing topography shown hereon is a result of an aerial survey provided by Air Survey Corporation dated, 1998 supplemented with field run information performed by Daft McCune Walker, Inc. dated, 2010.

Property boundary shown hereon is a result of field run monumented boundary survey performed on or about June 25, 1999 by Daft McCune Walker, Inc.

Soils if shown provided by Soil Data Mart dated 2005 published by Natural Resources Conservation Services (NRCS)

Zoning information shown hereon provided by Howard County Department of Planning and Zoning, adopted by Howard County Council February 2, 2004.

Wetland and stream limits shown hereon were originally approved by Maryland Department of the Environment and the US Corps of Engineers in April 2001 and re-verified by these agencies in October 2009.

APPROVED: HOWARD COUNTY DEPT. OF PUBLIC WORKS

CHIEF, BUREAU OF HIGHWAYS — DATE 2-23-12

HOWARD COUNTY DEPT. OF PLANNING & ZONING

CHIEF, DEVELOPMENT ENGINEERING DIVISION — DATE 2/28/12

CHIEF, DIVISION OF LAND DEVELOPMENT — DATE 3/01/12

Date	No.	Revision Description
2-10-14	⚠	UPDATE OWNER/DEVELOPER INFO.

EMERSON
SECTION 3 – AREA 7 – PARCEL A
"Future Employment Use"

OWNER/DEVELOPER:
⚠ EMERSON DEVELOPMENT IX LLC
ONE TEXAS STATION COURT, SUITE 200
TIMONIUM, MD. 21093 (443) 680-8000

DMW
Daft-McCune-Walker, Inc.
200 East Pennsylvania Avenue
Towson, Maryland 21286
(410) 296-3333
Fax 296-4705

A Team of Land Planners, Landscape Architects, Engineers, Surveyors & Environmental Professionals

PROFESSIONAL CERTIFICATION

I HEREBY CERTIFY THAT THESE DOCUMENTS WERE PREPARED OR APPROVED BY ME, AND THAT I AM A DULY LICENSED PROFESSIONAL ENGINEER UNDER THE LAWS OF THE STATE OF MARYLAND, LICENSE NO. 16028, EXPIRATION DATE: 5/13/12

1/5/12
Date

Professional Engr. No. 16028

THESE PLANS FOR SMALL POND CONSTRUCTION, SOIL EROSION AND SEDIMENT CONTROL MEET THE REQUIREMENTS OF THE HOWARD SOIL CONSERVATION DISTRICT.

HOWARD SOIL CONSERVATION DISTRICT — DATE 2/6/12

DEVELOPERS CERTIFICATE:

I/WE CERTIFY THAT ALL DEVELOPMENT AND/OR CONSTRUCTION WILL BE DONE ACCORDING TO THESE PLANS AND THAT ANY RESPONSIBLE PERSONNEL INVOLVED IN THE CONSTRUCTION PROJECT WILL HAVE A CERTIFICATE OF ATTENDANCE AT A DEPARTMENT OF ENVIRONMENT APPROVED TRAINING PROGRAM FOR THE CONTROL OF SEDIMENT AND EROSION BEFORE BEGINNING THE PROJECT. I SHALL ENGAGE A REGISTERED PROFESSIONAL ENGINEER TO SUPERVISE POND CONSTRUCTION AND PROVIDE THE HOWARD SOIL CONSERVATION DISTRICT WITH AN "AS-BUILT" PLAN OF THE POND WITHIN 30 DAYS OF COMPLETION. I ALSO AUTHORIZE PERIODIC ON-SITE INSPECTIONS BY THE HOWARD SOIL CONSERVATION DISTRICT.

SIGNATURE OF DEVELOPER — DATE 1/5/12
PRINT NAME BELOW SIGNATURE
Robert Jenkins

ENGINEERS CERTIFICATE:

I CERTIFY THAT THIS PLAN FOR POND CONSTRUCTION, EROSION AND SEDIMENT CONTROL REPRESENTS A PRACTICAL AND WORKABLE PLAN BASED ON MY PERSONAL KNOWLEDGE OF THE SITE CONDITIONS. THIS PLAN WAS PREPARED IN ACCORDANCE WITH THE REQUIREMENTS OF THE HOWARD SOIL CONSERVATION DISTRICT. I HAVE NOTIFIED THE DEVELOPER THAT HE/SHE MUST ENGAGE A REGISTERED PROFESSIONAL ENGINEER TO SUPERVISE POND CONSTRUCTION AND PROVIDE THE HOWARD SOIL CONSERVATION DISTRICT WITH AN "AS-BUILT" PLAN OF THE POND WITHIN 30 DAYS OF COMPLETION.

SIGNATURE OF ENGINEER — DATE 1/5/12
PRINT NAME BELOW SIGNATURE

SUBDIVISION NAME: EMERSON	SECTION / AREA: SEC. 3 AREA 7	LOT / PARCEL #: PART OF 837	
PLAT OR L/F: 5289/330	GRID #: 15	ZONE: MXD-3	TAX / ZONE MAP: 47
ELEC. DISTRICT: 6TH	CENSUS TRACT: 6069.03		
WATER CODE: E-15	SEWER CODE: 7520000		

TITLE
STORMWATER MANAGEMENT PLAN
FACILITY NO. 2

Des By	TJC	Scale	1"=50'	Proj. No.	95054.W2
Drn By	JSS	Date	11/17/11	22 of 30	
Chk By	JDF	Approved			

F-11-036

n:\95054\95054-WF\Final Plans\95054W22.MOT

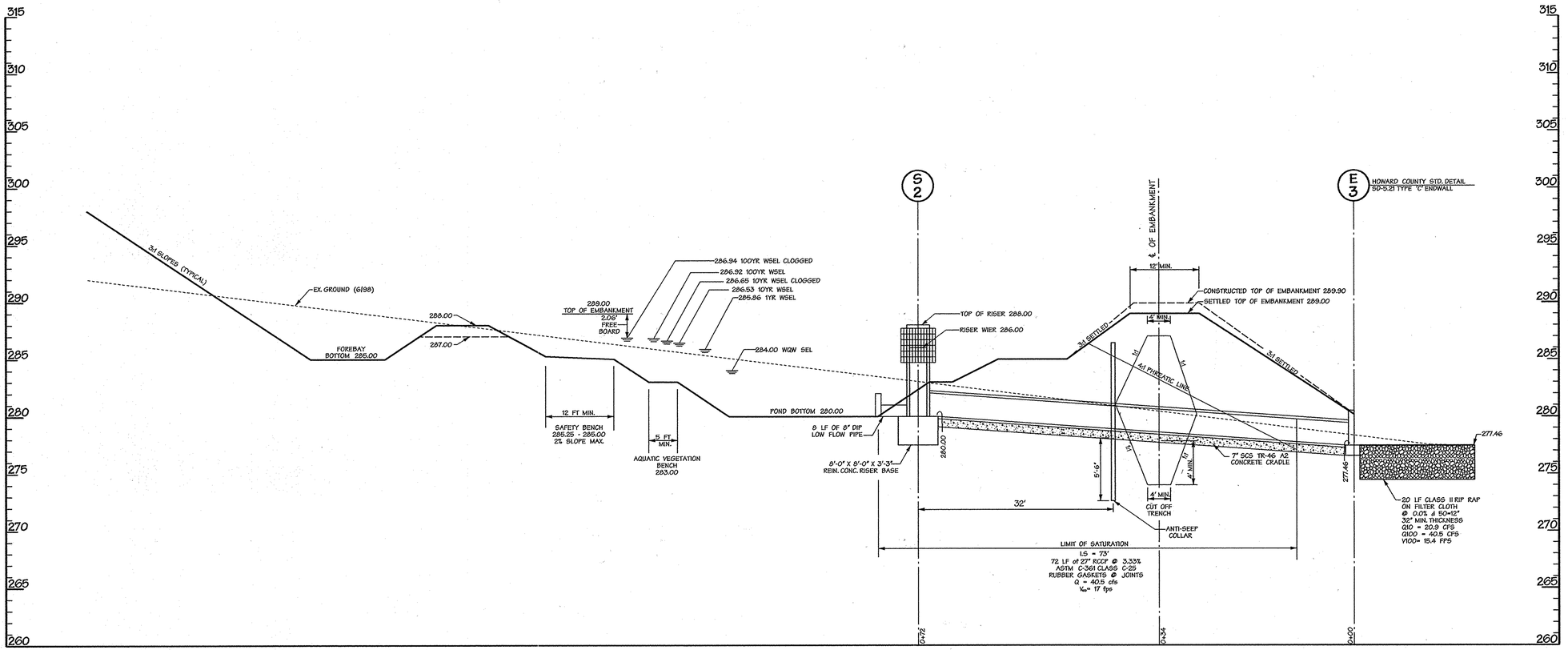

PROFILE THROUGH RISER AND PRINCIPLE SPILLWAY SWM FACILITY NO. 2

SCALE: HORZ. 1" = 10'
VERT. 1" = 5'

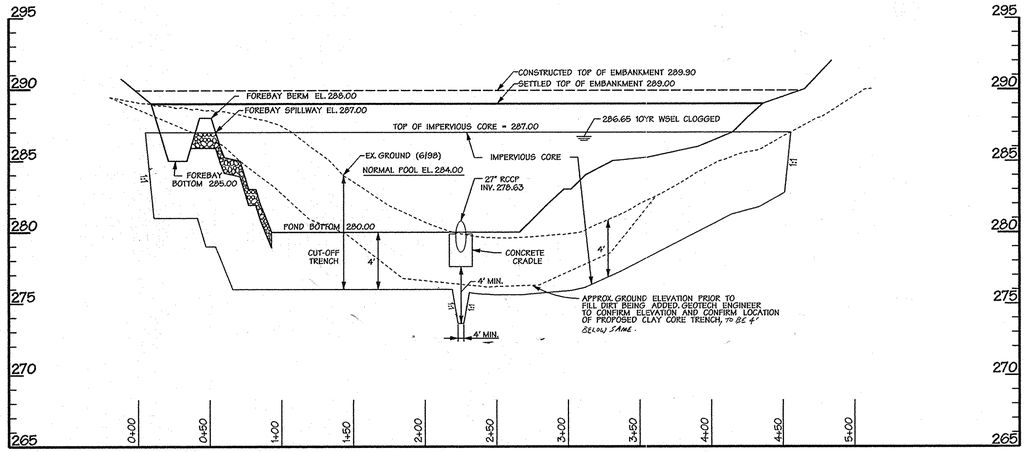

PROFILE ALONG CENTERLINE OF EMBANKMENT

SCALE: HORZ. 1" = 50'
VERT. 1" = 5'

THESE PLANS FOR SMALL POND CONSTRUCTION, SOIL EROSION AND SEDIMENT CONTROL MEET THE REQUIREMENTS OF THE HOWARD SOIL CONSERVATION DISTRICT.

HOWARD SOIL CONSERVATION DISTRICT — DATE 2/6/12

DEVELOPERS CERTIFICATE:

I/WE CERTIFY THAT ALL DEVELOPMENT AND/OR CONSTRUCTION WILL BE DONE ACCORDING TO THESE PLANS AND THAT ANY RESPONSIBLE PERSONNEL INVOLVED IN THE CONSTRUCTION PROJECT WILL HAVE A CERTIFICATE OF ATTENDANCE AT A DEPARTMENT OF ENVIRONMENT APPROVED TRAINING PROGRAM FOR THE CONTROL OF SEDIMENT AND EROSION BEFORE BEGINNING THE PROJECT. I SHALL ENGAGE A REGISTERED PROFESSIONAL ENGINEER TO SUPERVISE POND CONSTRUCTION AND PROVIDE THE HOWARD SOIL CONSERVATION DISTRICT WITH AN "AS-BUILT" PLAN OF THE POND WITHIN 30 DAYS OF COMPLETION. I ALSO AUTHORIZE PERIODIC ON-SITE INSPECTIONS BY THE HOWARD SOIL CONSERVATION DISTRICT.

SIGNATURE OF DEVELOPER — DATE 11/5/12
PRINT NAME BELOW SIGNATURE
Robert Jenkins

ENGINEERS CERTIFICATE:

I CERTIFY THAT THIS PLAN FOR POND CONSTRUCTION, EROSION AND SEDIMENT CONTROL REPRESENTS A PRACTICAL AND WORKABLE PLAN BASED ON MY PERSONAL KNOWLEDGE OF THE SITE CONDITIONS. THIS PLAN WAS PREPARED IN ACCORDANCE WITH THE REQUIREMENTS OF THE HOWARD SOIL CONSERVATION DISTRICT. I HAVE NOTIFIED THE DEVELOPER THAT HE/SHE MUST ENGAGE A REGISTERED PROFESSIONAL ENGINEER TO SUPERVISE POND CONSTRUCTION AND PROVIDE THE HOWARD SOIL CONSERVATION DISTRICT WITH AN "AS-BUILT" PLAN OF THE POND WITHIN 30 DAYS OF COMPLETION.

SIGNATURE OF ENGINEER — DATE 1/6/12
PRINT NAME BELOW SIGNATURE
Melvin C. Beatty Jr.

PROFESSIONAL CERTIFICATION.

I HEREBY CERTIFY THAT THESE DOCUMENTS WERE PREPARED OR APPROVED BY ME, AND THAT I AM A DULY LICENSED PROFESSIONAL ENGINEER UNDER THE LAWS OF THE STATE OF MARYLAND, LICENSE NO. 16928 EXPIRATION DATE: 5/12/13

1/6/12
Date

STATE OF MARYLAND — MELVIN CHARLES BEATTY JR. — 16928 — PROFESSIONAL ENGINEER

Professional Engr. No. 16928

F-11-036

DATA SOURCES

Existing topography shown hereon is a result of an aerial survey provided by Air Survey Corporation dated, 1998 supplemented with field run information performed by Daft McCune Walker, Inc. dated, 2010.

Property boundary shown hereon is a result of field run monumented boundary survey performed on or about June 25, 1999 by Daft McCune Walker, Inc.

Soils if shown provided by Soil Data Mart dated 2005 published by Natural Resources Conservation Services (NRCS)

Zoning information shown hereon provided by Howard County Department of Planning and Zoning, adapted by Howard County Council February 2, 2004.

Wetland and stream limits shown hereon were originally approved by Maryland Department of the Environment and the US Corps of Engineers in April 2001 and re-verified by these agencies in October 2009.

APPROVED: HOWARD COUNTY DEPT. OF PUBLIC WORKS

CHIEF, BUREAU OF HIGHWAYS — DATE 2-23-12

HOWARD COUNTY DEPT. OF PLANNING & ZONING

CHIEF, DEVELOPMENT ENGINEERING DIVISION — DATE 2/28/12

CHIEF, DIVISION OF LAND DEVELOPMENT — DATE 3/01/12

Date	No.	Revision Description
2-10-14	⚠	UPDATE OWNER/DEVELOPER INFO.

EMERSON

SECTION 3 – AREA 7 – PARCEL A

"Future Employment Use"

OWNER/DEVELOPER:
⚠ EMERSON DEVELOPMENT IX LLC
ONE TEXAS STATION COURT, SUITE 200
TIMONIUM, MD. 21093 (443)607-8000

DMW
Daft-McCune-Walker, Inc.
200 East Pennsylvania Avenue
Towson, Maryland 21286
(410) 296-3333
Fax 296-4705

A Team of Land Planners, Landscape Architects, Engineers, Surveyors & Environmental Professionals

SUBDIVISION NAME: EMERSON		SECTION / AREA: SEC.3 AREA 7	LOT/PARCEL #: PART OF 837
PLAT # OR L/F: 5289/330	GRID #: 15	ZONE: MXD-3	TAX/ZONE MAP: 47
ELECT. DISTRICT: 6TH	CENSUS TRACT: 6069.03	WATER CODE: E-15	SEWER CODE: 7520000

TITLE

FINAL PLAN STORMWATER MANAGEMENT PROFILES SWM FACILITY NO.2

Des By	TJC	Scale	As Noted	Proj. No.	95054.W
Drn By	JSS	Date	11/17/11	23 of 30	
Chk By		Approved			

H:\95054\95054.MP\Final Plans\95054MP28.MO4

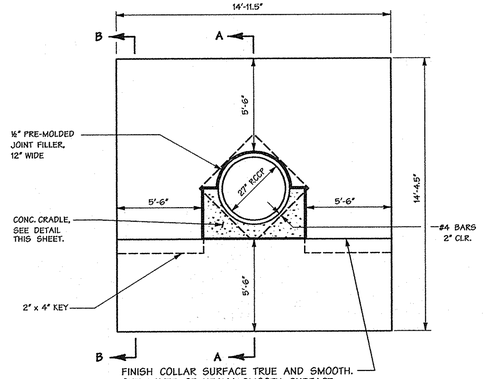

DETAIL SHOWN FOR EARTH FOUNDATION, FOR ROCK FOUNDATION, FORM BOTTOM OF CRADLE ON ROCK LINE AND KEY COLLAR 6" INTO ROCK.

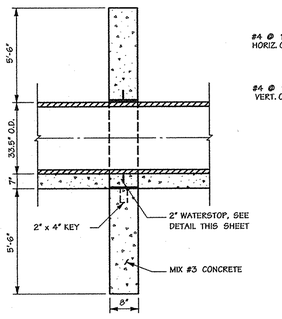

SECTION A-A

ANTI SEEP COLLARS SHALL BE PLACED NO CLOSER THAN 2'-0" FROM ANY PIPE JOINT.

ANTI SEEP COLLAR

CAST IN PLACE
NOT TO SCALE

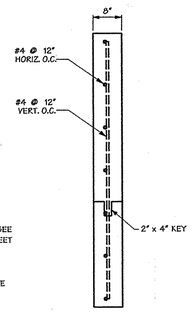

SECTION B-B
(SHOWING STEEL)

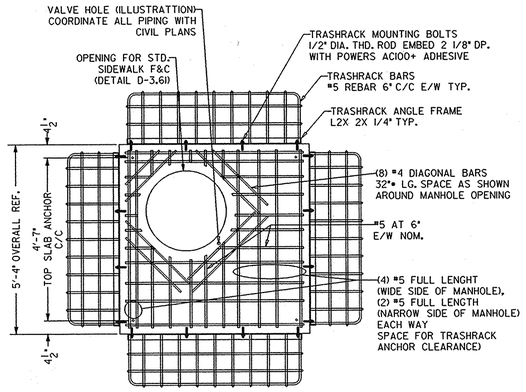

PLAN ON TOP SLAB AND TRASHRACK

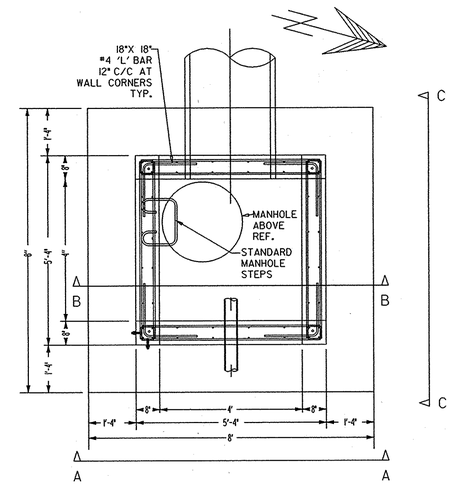

PLAN ON RISER 2
(TOP SLAB REMOVED)

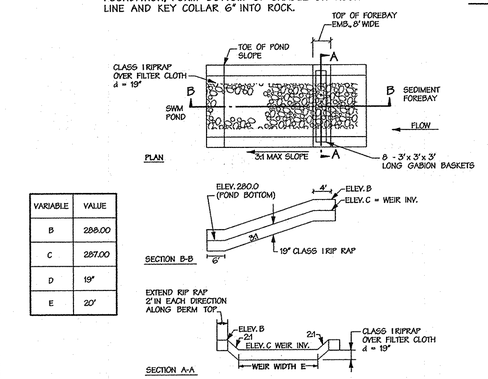

VARIABLE	VALUE
B	288.00
C	287.00
D	19"
E	20'

SWM FOREBAY EMBANKMENT ARMORING DETAIL

NOT TO SCALE

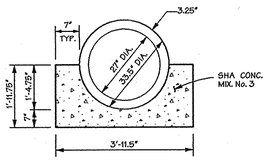

CONCRETE CRADLE

NOT TO SCALE

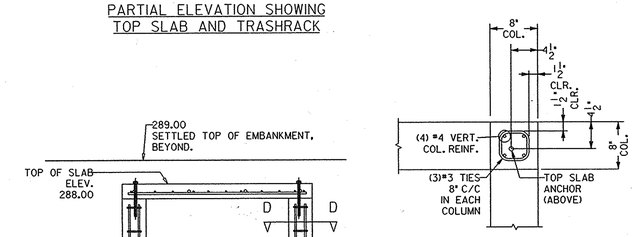

PARTIAL ELEVATION SHOWING TOP SLAB AND TRASHRACK

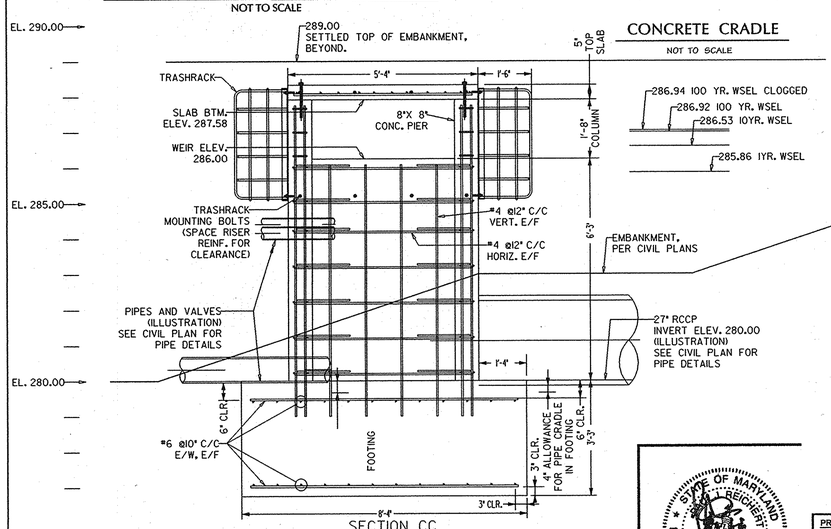

SECTION CC

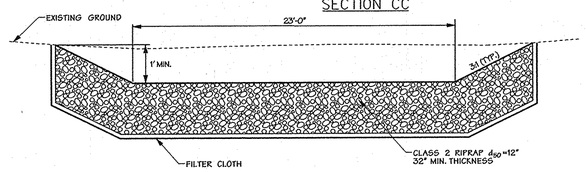

RIPPAP OUTLET PROTECTION DETAIL 20' X 23' OUTLET FROM SWM POND 2

NOT TO SCALE

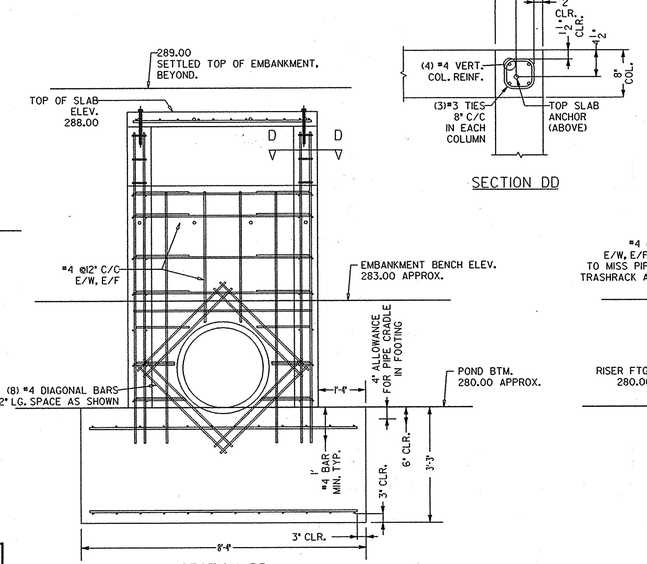

SECTION BB

SECTION DD

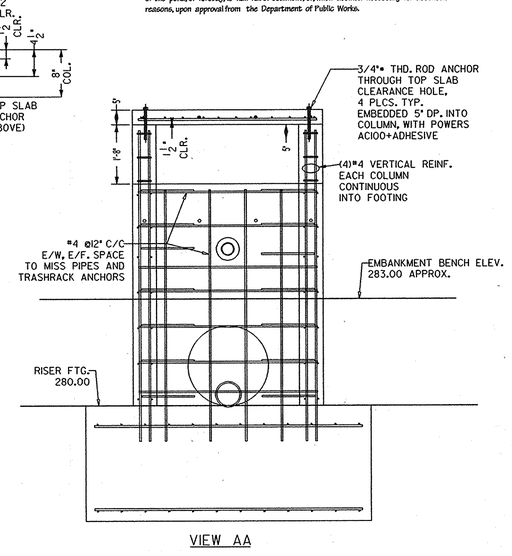

VIEW AA

FOR REINFORCMENT DESIGN ONLY

PROFESSIONAL CERTIFICATION

I HEREBY CERTIFY THAT THESE PLANS WERE PREPARED OR APPROVED BY ME, AND THAT I AM A DULY LICENSED PROFESSIONAL ENGINEER UNDER THE LAWS OF THE STATE OF MARYLAND, LICENSE NO. 0028925 EXPIRATION DATE: 1/15/2012

PROFESSIONAL CERTIFICATION

I HEREBY CERTIFY THAT THESE DOCUMENTS WERE PREPARED OR APPROVED BY ME, AND THAT I AM A DULY LICENSED PROFESSIONAL ENGINEER UNDER THE LAWS OF THE STATE OF MARYLAND, LICENSE NO. 6828, EXPIRATION DATE: 5/13/12

1/5/12
Date

Professional Engr. No. 6828

DEVELOPERS CERTIFICATE:

I/WE CERTIFY THAT ALL DEVELOPMENT AND/OR CONSTRUCTION WILL BE DONE ACCORDING TO THESE PLANS AND THAT ANY RESPONSIBLE PERSONNEL INVOLVED IN THE CONSTRUCTION PROJECT WILL HAVE A CERTIFICATE OF ATTENDANCE AT A DEPARTMENT OF ENVIRONMENT APPROVED TRAINING PROGRAM FOR THE CONTROL OF SEDIMENT AND EROSION BEFORE BEGINNING THE PROJECT. I SHALL ENGAGE A REGISTERED PROFESSIONAL ENGINEER TO SUPERVISE POND CONSTRUCTION AND PROVIDE THE HOWARD SOIL CONSERVATION DISTRICT WITH AN "AS-BUILT" PLAN OF THE POND WITHIN 30 DAYS OF COMPLETION. I ALSO AUTHORIZE PERIODIC ON-SITE INSPECTIONS BY THE HOWARD SOIL CONSERVATION DISTRICT.

SIGNATURE OF DEVELOPER
PRINT NAME BELOW SIGNATURE
Robert Jenkins

1/5/12
DATE

ENGINEERS CERTIFICATE:

I CERTIFY THAT THIS PLAN FOR POND CONSTRUCTION, EROSION AND SEDIMENT CONTROL REPRESENTS A PRACTICAL AND WORKABLE PLAN BASED ON MY PERSONAL KNOWLEDGE OF THE SITE CONDITIONS. THIS PLAN WAS PREPARED IN ACCORDANCE WITH THE REQUIREMENTS OF THE HOWARD SOIL CONSERVATION DISTRICT. I HAVE NOTIFIED THE DEVELOPER THAT HE/SHE MUST ENGAGE A REGISTERED PROFESSIONAL ENGINEER TO SUPERVISE POND CONSTRUCTION AND PROVIDE THE HOWARD SOIL CONSERVATION DISTRICT WITH AN "AS-BUILT" PLAN OF THE POND WITHIN 30 DAYS OF COMPLETION.

SIGNATURE OF ENGINEER
PRINT NAME BELOW SIGNATURE
Melvin C. Bartlett

1/5/12
DATE

THESE PLANS FOR SMALL POND CONSTRUCTION, SOIL EROSION AND SEDIMENT CONTROL MEET THE REQUIREMENTS OF THE HOWARD SOIL CONSERVATION DISTRICT.

HOWARD SOIL CONSERVATION DISTRICT

2/6/12
DATE

OPERATION AND MAINTENANCE SCHEDULE FOR PRIVATELY OWNED AND MAINTAINED STORMWATER PONDS (P-1 THROUGH P-5)

1. Facility shall be inspected annually and after major storms. Inspections shall be performed during wet weather to determine if the pond is functioning properly.
2. Top and side slopes of the embankment shall be mowed a minimum of two (2) times per year, once in June and once in September. Other side slopes and maintenance access shall be mowed as needed.
3. Debris and litter shall be removed during regular operations and as needed.
4. Visible signs of erosion in the pond as well as the rip rap or gabion outlets area shall be repaired as soon as it is noticed.

Non-Routine Maintenance :

1. Structural components of the pond such as the dam, the riser, and the pipes shall be repaired upon detection of any damage. The components shall be inspected during routine maintenance operations.
2. Sediment shall be removed from the pond, and forebay, no later than when the capacity of the pond, or forebay, is half full of sediment, or, when deemed necessary for aesthetic reasons, upon approval from the Department of Public Works.

RISER AND HEADWALL NOTES:

1. CONSTRUCTION TO COMPLY WITH CURRENT IBC AND LOCAL CODES AND ALL PROJECT REQUIREMENTS. WORK SHALL BE COMPLETED IN A MANNER CONSISTENT WITH GOOD CONSTRUCTION PRACTICE.
2. GEOMETRY SHOWN IS BASED ON INFORMATION PROVIDED BY OTHERS. VERIFY CRITICAL DIMENSIONS. RESOLVE ANY DISCREPANCY BEFORE PROCEEDING WITH THE WORK. COORDINATE PIPING AND SITEWORK WITH CIVIL PLANS.
3. MINIMUM DESIGN LOADS PER IRC/IBC: DEAD, (COMPONENT WEIGHT) LIVE, 100 PSF. SURCHARGE (YARDS AND TERRACES) GROUND SNOW LOAD 25 PSF.
4. WIND DESIGN CRITERIA ARE AS FOLLOWS: BASIC WIND SPEED = 90 MPH IMPORTANCE FACTOR = 0.9 WIND EXPOSURE = C
5. SEISMIC DESIGN CRITERIA ARE AS FOLLOWS: SEISMIC IMPORTANCE FACTOR, IE=0.9 SEISMIC USE GROUP = CATEGORY I. MAPPED SPECTRAL RESPONSE ACCELERATIONS SS = 0.16, S1 = 0.05 SITE CLASS = D SPECTRAL RESPONSE COEFFICIENTS SDS = 0.27, SD1 = 0.08 SEISMIC DESIGN CATEGORY = CATEGORY B BASIC SEISMIC FORCE RESISTING SYSTEM = ORDINARY REINF. CONCRETE SHEAR WALL. SEISMIC RESPONSE COEFFICIENT, CS = 0.04 RESPONSE MODIFICATION FACTOR, R = 4 DESIGN BASE SHEAR = 0.04 X W = 0.0.04W LBS. ANALYSIS = EQUIVALENT LATERAL FORCE.
6. MATERIALS:
   - SOILS: FOUNDATIONS ARE TO BE 1FT MIN. INTO SUITABLE NATURAL SOILS, OR ENGINEERED CONTROLLED FILL. STRUCTURES ARE DESIGNED FOR BEARING PRESSURE: RISERS, 1500 PSF. MIN. HEADWALLS, 2000 PSF. MIN. TO BE VERIFIED AT TIME OF CONSTRUCTION
   - BACKFILL: PHI 32 DEG. WT 125, COMPACTED TO MIN. 95% OF MAXIMUM DRY DENSITY.
   - CONCRETE: TOP SLAB AND VERTICAL WALLS: f'c 4000 PSI. MIN, AIR ENTRAINED. FOOTINGS AND BASE SLABS: f'c 3000 PSI. MIN. NO CHLORIDES IN CONCRETE. CHAMFER EXPOSED EDGES $\frac{3}{4}$" X $\frac{3}{4}$" TYP.
   - REINF. STEEL: ASTM A615 GR 60 SPLICE 35 BAR DIAMETERS MIN.
   - ANCHOR ADHESIVE: POWERS FASTENERS AC100+ INSTALLED PER MANUFACTURER'S INSTALLATION INSTRUCTIONS.
7. LAP SPLICES 40 BAR DIAMETERS TYP. U.N.O.
8. BEST PRACTICES CONCRETE CONSTRUCTION TO INCLUDE:
   - CENTRALIZERS FOR BAR PLACEMENT IN STEM,
   - VIBRATION FOR CONCRETE CONSOLIDATION,
   - CORRECT MOISTURE AND TEMPERATURE FOR CURING.

DATA SOURCES

Existing topography shown hereon is a result of an aerial survey provided by Air Survey Corporation dated, 1998 supplemented with field run information performed by Daft McCune Walker, Inc. dated, 2010.

Property boundary shown hereon is a result of field run monumented boundary survey performed on or about June 25, 1999 by Daft McCune Walker, Inc.

Soils: If shown provided by Soil Data Mart dated 2005 published by Natural Resources Conservation Services (NRCS)

Zoning information shown hereon provided by Howard County Department of Planning and Zoning, adopted by Howard County Council February 2, 2004.

Wetland and stream limits shown hereon were originally approved by Maryland Department of the Environment and the US Corps of Engineers in April 2001 and re-verified by these agencies in October 2009.

APPROVED: HOWARD COUNTY DEPT. OF PUBLIC WORKS

CHIEF, BUREAU OF HIGHWAYS — DATE 2-27-12

HOWARD COUNTY DEPT. OF PLANNING & ZONING

CHIEF, DEVELOPMENT ENGINEERING DIVISION — DATE 2/28/12

CHIEF, DIVISION OF LAND DEVELOPMENT — DATE 3/01/12

Date	No.	Revision Description
2-10-14	1	UPDATE OWNER/DEVELOPER INFO.

EMERSON

SECTION 3 – AREA 7 – PARCEL A

"Future Employment Use"

OWNER/DEVELOPER:
1 EMERSON DEVELOPMENT IX LLC
ONE TEXAS STATION COURT, SUITE 200
TIMONIUM, MD 21093 (443) 687-8000

DMW
Daft-McCune-Walker, Inc.
200 East Pennsylvania Avenue
Towson, Maryland 21286
(410) 296-3333
Fax 296-4705

A Team of Land Planners, Landscape Architects, Engineers, Surveyors & Environmental Professionals

SUBDIVISION NAME		SECTION/AREA		LOT/PARCEL #
EMERSON		SEC.3 AREA 7		PART OF 837
PLAT OR L/F	GRID # / ZONE	TAX/ZONE MAP	ELECT. DISTRICT	CENSUS TRACT
5289/330	19 MXD-3	47	6TH	6069.03
WATER CODE		SEWER CODE		
E-15		7520000		

TITLE

FINAL PLAN STORMWATER MANAGEMENT PLAN DETAILS FOR SWM FACILITY NO. 2

Des By	TJC	Scale	AS NOTED	Proj. No.	95054.W2
Drn By	JSS	Date	10/19/11	24 of 30	
Chk By	JDF	Approved			

F-11-036

n:\95054\95054.W\Final Plans\95054W24.MOS

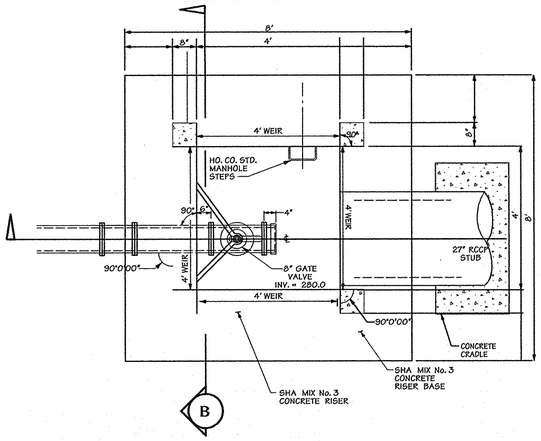

RISER PLAN (TOP SLAB REMOVED)

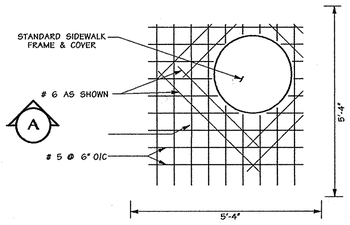

NOTES:

1. BOLT TOP SLAB TO RISER WITH (4) ½" x 6" LG. HEX. HEAD GALVANIZED BOLTS.
2. THE SIDE OF THE SLAB CLOSEST TO THE FRAME AND COVER WILL LINE UP WITH THE SIDE OF THE RISER WITH STANDARD MANHOLE STEPS.

TOP SLAB

SCALE: N.T.S.
CAST IN PLACE

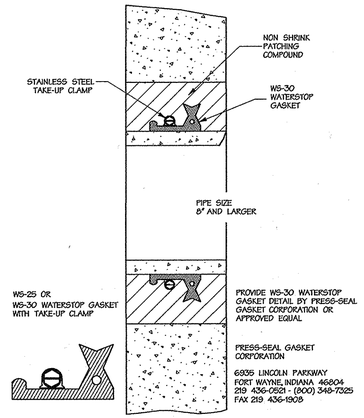

WS-30 PIPE WATER STOP DETAIL

NOT TO SCALE

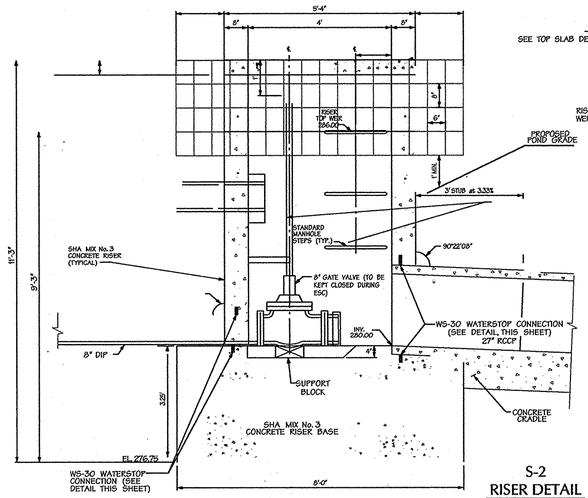

SECTION A

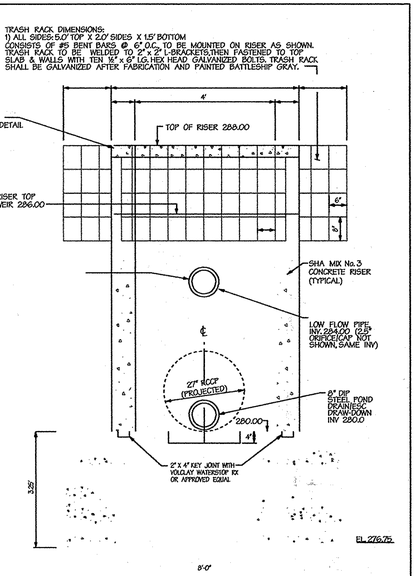

SECTION B

S-2
RISER DETAIL

CAST IN PLACE

DATA SOURCES

Existing topography shown hereon is a result of an aerial survey provided by Air Survey Corporation dated, 1998 supplemented with field run information performed by Daft McCune Walker, Inc. dated, 2010.

Property boundary shown hereon is a result of field run monumented boundary survey performed on or about June 25, 1999 by Daft McCune Walker, Inc.

Soils if shown provided by Soil Data Mart dated 2005 published by Natural Resources Conservation Services (NRCS)

Zoning information shown hereon provided by Howard County Department of Planning and Zoning, adopted by Howard County Council February 2, 2004.

Wetland and stream limits shown hereon were originally approved by Maryland Department of the Environment and the US Corps of Engineers in April 2001 and re-verified by these agencies in October 2009.

APPROVED: HOWARD COUNTY DEPT. OF PUBLIC WORKS

CHIEF, BUREAU OF HIGHWAYS — DATE 2-23-12

HOWARD COUNTY DEPT. OF PLANNING & ZONING

CHIEF, DEVELOPMENT ENGINEERING DIVISION — DATE 2/28/12

CHIEF, DIVISION OF LAND DEVELOPMENT — DATE 3/01/12

Date	No.	Revision Description
2-10-14	⚠	UPDATE OWNER/DEVELOPER INFO.

EMERSON

SECTION 3 – AREA 7 – PARCEL A

"Future Employment Use"

OWNER/DEVELOPER:
⚠ EMERSON DEVELOPMENT IX LLC
ONE TEXAS STATION COURT, SUITE 200
TIMONIUM, MD. 21093 (443) 680-8000

PROFESSIONAL CERTIFICATION

I HEREBY CERTIFY THAT THESE DOCUMENTS WERE PREPARED OR APPROVED BY ME, AND THAT I AM A DULY LICENSED PROFESSIONAL ENGINEER UNDER THE LAWS OF THE STATE OF MARYLAND, LICENSE NO. 16928 EXPIRATION DATE: 2/13/12

1/5/12
Date

STATE OF MARYLAND — JOHN D. FOSTER — No. 16928 — PROFESSIONAL ENGINEER

Professional Engr. No. 16928

THESE PLANS FOR SMALL POND CONSTRUCTION, SOIL EROSION AND SEDIMENT CONTROL MEET THE REQUIREMENTS OF THE HOWARD SOIL CONSERVATION DISTRICT.

HOWARD SOIL CONSERVATION DISTRICT — DATE 2/6/12

DEVELOPERS CERTIFICATE:

I/WE CERTIFY THAT ALL DEVELOPMENT AND/OR CONSTRUCTION WILL BE DONE ACCORDING TO THESE PLANS AND THAT ANY RESPONSIBLE PERSONNEL INVOLVED IN THE CONSTRUCTION PROJECT WILL HAVE A CERTIFICATE OF ATTENDANCE AT A DEPARTMENT OF ENVIRONMENT APPROVED TRAINING PROGRAM FOR THE CONTROL OF SEDIMENT AND EROSION BEFORE BEGINNING THE PROJECT. I SHALL ENGAGE A REGISTERED PROFESSIONAL ENGINEER TO SUPERVISE POND CONSTRUCTION AND PROVIDE THE HOWARD SOIL CONSERVATION DISTRICT WITH AN "AS-BUILT" PLAN OF THE POND WITHIN 30 DAYS OF COMPLETION. I ALSO AUTHORIZE PERIODIC ON-SITE INSPECTIONS BY THE HOWARD SOIL CONSERVATION DISTRICT.

SIGNATURE OF DEVELOPER — DATE 1/5/12
PRINT NAME BELOW SIGNATURE
Robert Jenkins

ENGINEERS CERTIFICATE:

I CERTIFY THAT THIS PLAN FOR POND CONSTRUCTION, EROSION AND SEDIMENT CONTROL REPRESENTS A PRACTICAL AND WORKABLE PLAN BASED ON MY PERSONAL KNOWLEDGE OF THE SITE CONDITIONS. THIS PLAN WAS PREPARED IN ACCORDANCE WITH THE REQUIREMENTS OF THE HOWARD SOIL CONSERVATION DISTRICT. I HAVE NOTIFIED THE DEVELOPER THAT HE/SHE MUST ENGAGE A REGISTERED PROFESSIONAL ENGINEER TO SUPERVISE POND CONSTRUCTION AND PROVIDE THE HOWARD SOIL CONSERVATION DISTRICT WITH AN "AS-BUILT" PLAN OF THE POND WITHIN 30 DAYS OF COMPLETION.

SIGNATURE OF ENGINEER — DATE 1/5/12
PRINT NAME BELOW SIGNATURE
Melvin C. Black Jr.

DMW
Daft-McCune-Walker, Inc.
200 East Pennsylvania Avenue
Towson, Maryland 21286
(410) 296-3333
Fax 296-4705

A Team of Land Planners, Landscape Architects, Engineers, Surveyors & Environmental Professionals

SUBDIVISION NAME: EMERSON		SECTION/AREA: SEC.3 AREA 7	LOT/PARCEL #: PART OF 837
PLAT# OR L/F: 5329/0330	GRID #: 15	ZONE:	TAX/ZONE MAP: 47
ELECT. DISTRICT: 6TH	CENSUS TRACT: 6069.03		
WATER CODE: E-15	SEWER CODE: 7520000		

TITLE

FINAL PLAN
STORMWATER MANAGEMENT PLAN
DETAILS FOR SWM FACILITY NO. 2

Des By	TJC	Scale	AS NOTED	Proj. No.	95054.W2
Drn By	JSS	Date	10/19/11	25 of 30	
Chk By	JDF	Approved			

F-11-036

n:\95054\95054.W2\Final Plans\95054W25.MOS

STORMWATER MANAGEMENT POND
GENERAL CONSTRUCTION SPECIFICATIONS

1. GENERAL
All stormwater management facilities shall be constructed in accordance with Baltimore County's "Standard Specifications and Details for Construction", (1985) and the N.R.C.S. Maryland "Standards and Specifications for Ponds", (MD-378, 2000).

These specifications are appropriate to all ponds within the scope of the standard practice MD-378. All references to ASTM and AASHTO specifications apply to the most recent version.

2. SITE PREPARATION
Areas designated for borrow areas, embankment, and structural works shall be cleared, grubbed and stripped of topsoil. All trees, vegetation, roots, and other objectionable material shall be removed. Channel banks and sharp breaks shall be sloped to no steeper than 1:1. All trees shall be cleared and grubbed within 15 feet of the toe of the embankment.

Areas to be covered by the reservoir will be cleared of all trees, brush, logs, fences, rubbish and other objectionable material unless otherwise designated on the plans. Trees, brush and stumps shall be cut approximately level with the ground surface. For dry stormwater management ponds, a minimum of a 25-foot radius around the inlet structure shall be cleared.

All cleared and grubbed material shall be disposed of outside and below the limits of the dam and reservoir as directed by the owner or his representative. When specified, a sufficient quantity of topsoil will be stockpiled in a suitable location for use on the embankment and other designated areas.

3. EARTH FILL
MATERIAL - The fill material shall be taken from approved designated borrow areas. It shall be free of roots,, stumps, wood, rubbish, stones greater than 6", frozen or other objectionable materials. Fill material for the center of the embankment and cut off trench shall conform to Unified Soil Classification GC, SC, CH, or CL and must have at least 30% passing the #200 sieve. Consideration may be given to the use of other materials in the embankment if designed by a geotechnical engineer. Such special designs must have construction supervised by a geotechnical engineer.

Materials used in the outer shell of the embankment must have the capability to support vegetation of the quality required to prevent erosion of the embankment.

PLACEMENT - Areas on which fill is to be placed shall be scarified prior to placement of fill. Fill materials shall be placed in maximum 8 inch thick (before compaction) layers which are to be continuous over the entire length of the fill. The most permeable borrow material shall be placed in the downstream portions of the embankment. The principal spillway must be installed concurrently with fill placement and not excavated into the embankment.

COMPACTION - Control the movement of the hauling equipment over the fill so that the entire surface of each lift is compacted to 95% of AASHTO Specification T-99 (or equivalent ASTM Specifications). Fill material must contain enough moisture to yield the required degree of compaction with the equipment used.

When required by the reviewing agency the minimum required density shall not be less than 95% of the maximum dry density with a moisture content within +/- 2% of the optimum. Each layer of fill shall be compacted as necessary to obtain that density, and is to be certified by the engineer at the time of construction. All compaction is to be determined by AASHTO Method T-99 (Standard Proctor).

CUT OFF TRENCH - The cut off trench shall be excavated into impervious material along or parallel to the centerline of the embankment as shown on the plans. The bottom width of the trench shall be governed by the equipment used for excavation, with the minimum width being four feet. The depth shall be at least four feet below existing grade or as shown on the plans. The side slopes of the trench shall be 1 to 1 or flatter. The backfill shall be compacted with construction equipment, rollers, or hand tampers to assure maximum density and minimum permeability.

EMBANKMENT CORE - The core shall be parallel to the centerline of the embankment as shown on the plans. The top width of the core shall be a minimum of four feet. The height shall extend up to at least the 10 year water elevation or as shown on the plans. The side slopes shall be 1 to 1 or flatter. The core shall be compacted with construction equipment, rollers, or hand tampers to assure maximum density and minimum permeability. In addition, the core shall be placed concurrently with the outer shell of the embankment.

4. STRUCTURE BACKFILL
Backfill adjacent to pipes or structures shall be of the type and quality conforming to that specified for the adjoining fill material. The fill shall be placed in horizontal layers not to exceed 4 inches in thickness and compacted by hand tampers or other manually directed compaction equipment. The material needs to fill completely all spaces under and adjacent to the pipe. At no time during the backfilling operation shall driven equipment be allowed to operate closer than 4 feet, measured horizontally, to any part of a structure. Under no circumstances shall equipment be driven over any part of a concrete structure or pipe, unless there is a compacted fill of 24" or greater over the structure or pipe.

Structure backfill may be flowable fill meeting the requirements of Maryland Department of Transportation, State Highway Administration Standard Specifications for Construction and Materials, Section 313 as modified. The mixture shall have a 100-200 psi; 28 day unconfined compressive strength. The flowable fill shall have a minimum ph of 4.0 and a minimum resistivity of 2,000 ohm-cm. Material shall be placed such that a minimum of 6" (measured perpendicular to the outside of the pipe) of flowable fill shall be under (bedding), over and, on the sides of the pipe. It only needs to extend up to the spring line for rigid conduits. Average slump of the fill shall be 7" to assure flowability of the material. Adequate measures shall be taken (sand bags, etc.) to prevent floating the pipe. When using flowable fill, all metal pipe shall be bituminous coated. Any adjoining soil fill shall be placed in horizontal layers not to exceed four inches in thickness and compacted by hand tampers or other manually directed compaction equipment. The material shall completely fill all voids adjacent to the flowable fill zone. At no time during the backfilling operation shall driven equipment be allowed to operate closer than four feet, measured horizontally, to any part of a structure. Under no circumstances shall equipment be driven over any part of a structure or pipe unless there is a compacted fill of 24: or greater over the structure or pipe. Backfill material outside the structural backfill (flowable fill) zone shall be of the type and quality conforming to that specified for the core of the embankment or other embankment materials.

5. REMOVAL AND REPLACEMENT OF DEFECTIVE FILL
Fill placed at densities lower than specified minimum density or at moisture contents outside the specified acceptable range of moisture content or otherwise not conforming to the requirements of the specifications shall be reworked to meet the requirements or removed and replaced by acceptable fill. The bottoms of such excavations shall be finished flat or gently curving and at the sides of such excavations the adjacent sound fill shall be trimmed to a slope not steeper than 3 feet horizontally to 1 foot vertically extending from the bottom of the excavation to the fill surface.

6. PIPE CONDUITS
All pipes shall be circular in cross section. All perforated pipes shall have a minimum of 3.31 square inches of opening per square foot of pipe surface (ex. 30 3/8-inch holes per square foot). Perforations are to be uniformly spaced around the full periphery of the pipe. Any holes blocked or partially blocked by bituminous coating shall be opened prior to installation.

REINFORCED CONCRETE PIPE - All of the following criteria shall apply for reinforced concrete pipe:

1. Materials - Reinforced concrete pipe shall have bell and spigot joints with rubber gaskets and shall equal or exceed ASTM C-361.
2. Bedding - Reinforced concrete pipe conduits shall be laid in a concrete bedding/cradle for their entire length. This bedding/cradle shall consist of high slump concrete placed under the pipe and up the sides of the pipe at least 50% of its outside diameter with a minimum thickness of 6 inches. Where a concrete cradle is not needed for structural purposes, flowable fill may be used as described in the "Structure Backfill" section of this standard. Gravel bedding is not permitted.
3. Laying Pipe - Bell and spigot pipe shall be placed with the bell end upstream. Joints shall be made in accordance with recommendations of the manufacturer of the material. After joints are sealed for the entire line, the bedding shall be placed so that all spaces under the pipe are filled. Care shall be exercised to prevent any deviation from the original line and grade of the pipe. The first joint must be located within 4 feet from the riser.
4. Backfilling shall conform to "Structure Backfill".
5. Connections - All connections (to anti-seep collars, riser, etc.) shall be watertight.
6. Other details (anti-seep collars, valves, etc.) shall be as shown on the drawings.

PLASTIC PIPE - All of the following criteria shall apply for plastic pipe:

1. Materials - PVC pipe shall be PVC-1120 or PVC-1220 conforming to ASTM D-1785 or ASTM D-2241. Corrugated high density polyethylene (HDPE) pipe, couplings and fittings shall conform to following: 4" - 10" inch pipe shall meet the requirements of AASHTO M252 Type S, and 12" through 24" inch shall meet the requirements of AASHTO M294 Type S.
2. Joints and connections to anti-seep collars shall be completely watertight.
3. Bedding - The pipe shall be firmly and uniformly bedded throughout its entire length. Where rock or soft, spongy or other unstable soil is encountered, all such material shall be removed and replaced with suitable earth compacted to provide adequate support.
4. Backfilling shall conform to "Structure Backfill".
5. Other details (anti-seep collars, valves, etc.) shall be as shown on the drawings.

7. CONCRETE
Concrete must meet minimum requirements set forth in Maryland State Highway Administration Standard Specifications for Construction and Materials, Section 902 (Portland Cement Concrete Mixtures), Mix Number 3. Reinforcing steel must be ASTM A615, Grade 60. Steel angles and anchor bars must be ASTM A36.

8. ROCK RIP-RAP
Rock rip-rap shall meet the requirements of the Maryland Department of Transportation, State Highway Administration Standard Specifications for Construction and Materials, Section 311.

Geotextile shall be placed under all rip-rap and shall meet the requirements of the Maryland Department of Transportation, State Highway Administration Standard Specifications for Construction and Materials, Section 921.09, Class SE Non-woven.

The rip-rap shall be placed to the required thickness in one operation. The rock shall be delivered and placed in a manner that will insure the rip-rap in place shall be reasonably homogeneous with the larger rocks uniformly distributed and firmly in contact one to another with the smaller rocks filling the voids between the larger rocks.

9. CARE OF WATER DURING CONSTRUCTION
All work on permanent structures shall be carried out in areas free from water. The contractor shall construct and maintain all temporary dikes, levees, cofferdams, drainage channels, and stream diversions necessary to protect the areas to be occupied by the permanent works, the contractor shall also furnish, install, operate, and maintain all necessary pumping and other equipment required for removal of water from the various parts of the work and for maintaining the excavations, foundation, and other parts of the work free from water as required or directed by the engineer for constructing each part of the work. After having served their purpose, all temporary protective works shall be removed or leveled and graded to the extent required to prevent obstruction in any degree whatsoever of the flow of water to the spillway or outlet works and so as not to interfere in any way with the operation of maintenance of the structure. Stream diversions shall be maintained until the full flow can be passed through the permanent works. The removal of water from the required excavation and the foundation shall be accomplished in a manner and to the extent that will maintain stability of the excavated slopes and bottom of required excavations and will allow satisfactory performance of all construction operations. During the placing and compacting of material in required excavations, the water level at the locations being refilled shall be maintained below the bottom of the excavation at such locations which may require draining the water to sumps from which the water shall be pumped.

10. STABILIZATION
All borrow areas shall be graded to provide proper drainage and left in a sightly condition. All exposed surfaces of the embankment, spillway, spoil and borrow areas, and berms shall be stabilized by seeding, liming, fertilizing and mulching in accordance with the Natural Resources Conservation Service Standards and Specifications for Critical Area Planting (MD-342) or as shown on the accompanying drawings.

11. EROSION AND SEDIMENT CONTROL
Construction operations will be carried out in such a manner that erosion will be controlled and water and air pollution minimized. State and local laws concerning pollution abatement will be followed. Construction plans shall detail erosion and sediment control measures to be employed during the construction process.

All disturbed areas shall be controlled by an erosion and sediment control plan which has been approved by the Baltimore County Soil Conservation District (B.C.S.C.D.).

12. SEEDING
Seeding, fertilizing and mulching shall be as follows:

Seed Mix: 50% Kenblue Kentucky Bluegrass
40% Pennlawn Creeping Red Fescue
10% Streaker Redtop
Applied at a rate of 150 pounds per acre.
(or)
Rebel II Tall Fescue (125 pounds per acre)
Pennfine Perennial Ryegrass (15 pounds per acre)
Kenblue Kentucky Bluegrass (10 pounds per acre)
(or)
Pennlawn Creeping Red Fescue (70 pounds per acre)
Aurora Hard Fescue (50 pounds per acre)
Common White Clover (6 pounds per acre)
Winter Rye (45 pounds per acre)

Lime: 2 tons per acre Dolomitic Limestone.

Fertilizer: 600 pounds per acre 10-10-10 fertilizer before seeding.
400 pounds per acre 30-0-0- Ureaform Fertilizer at time of seeding.

Mulch: Straw at 4,000 pounds per acre.

Anchoring: Mulching tool or wood cellulose fiber binder at a net dry binder rate of 750 pounds per acre. The wood cellulose fiber shall be mixed with water and the mixture shall contain a maximum of 50 pounds of wood cellulose fiber per 100 gallons of water or at rates recommended by the manufacturer.

13. FILTER CLOTH
All filter cloth shall conform to the 1994 Maryland Standards and Specifications for soil erosion and sediment control, or the latest edition.

14. GABIONS
All gabions shall be PVC coated woven wire baskets. Stone size shall be 4 inches to 7 inches, (Class IV gabions)

15. FENCE
Split rail fencing:

Fencing shall be constructed in accordance with the details on these plans. The split rail fence shall be constructed of locust post and spruce rails, round side out, with post spaced 10 feet on center. The wire fabric shall be 4" x 2", 14 gauge, black vinyl coated welded wire mesh attached to the outside of the fence with stainless steel electrical staples 12 inches on center, each rail, and shall extend 6 inches below finished grade.

Chain link fencing:

Construct fencing in accordance with the State Highway Administration Standard details 690.01 and 690.02. Use specifications for a 6-foot fence, substituting 42" fabric and 6'-8" line posts. Construct the gate in accordance with SHA Standard Detail 692.01 with 42" fabric. The fabric used for the fence and gate must conform to AASHTO Designation M181-74.

16. CONSTRUCTION INSPECTION BY DESIGNATED ENGINEERS
The construction of the pond and embankment, and certification that the pond and embankment have been built in accordance with the plans shall be under the supervision of a Registered Professional Engineer. The engineer shall be notified sufficiently in advance of construction in order that arrangements can be made for (1) Inspection of pipe trench and bedding, (2) Inspection of riser and anti-seep collars and, (3) Supervision of embankment construction and compaction testing. The engineer shall direct the handling of water during construction, minor changes not affecting the integrity of the dam in order to compensate for unusual soil conditions, and the removal and replacement of defective fill.

BORING LOG — BORING B-1 (PAGE 1 OF 1)
The Robert B. Balter Company, Geotechnical and Environmental Engineers, Materials and Construction Inspection and Testing, Telephone No. (410) 363-1555, www.balterco.com

CLIENT General Growth Properties, Inc. — PROJECT NAME Emerson Section 3, Area 7
PROJECT LOCATION Howard County, Maryland — PROJECT NUMBER 14988-0: MD
RIG ATV Tracked CME 850 — METHOD Hollow Stem Auger — SAMPLER: 2-in OD SS — HAMMER: 140# — FALL: 30" — AUTO? Yes
DATE STARTED 11/19/07 — COMPLETED 11/19/07 — DRILLER Maurice Hardy — HELPER Zack Cherr — REVIEWED BY Kristopher Crist — SITE DELAYS — LOCATION As Staked — BULK SAMPLES 0-5'

Date	Time	Elapsed Hours	Casing Depth (ft)	Hole Depth (ft)	Water Depth (ft)	Water Elev (ft)
11/19/07		0		7.8	Dry	
11/20/07		24		7.1	Dry	

SURFACE EL = 284.7

Depth (ft)	Sample	SPT Blows/6"	N Value	Stratum Change Depth/El	USCS	Material Description	PP (tsf)	NMC %	-#200	PL	LL	PI	Remarks
				0.4 / 284.3		Topsoil							
	S1	3-4-5-6	9	2.0 / 282.7	ML	Moist, Medium Stiff, Dark Brown Sandy SILT (Possible Fill) [Silty Clay]		20					(1)
	S2	5-6-9-11	15		CL	Moist, Very Stiff, Brown CLAY with Sand [Clay Loam]		18					
5	S3	5-7-9-9	16	6.0 / 278.7				17	72				
	S4	15-12-8-10	20		ML	Moist, Very Stiff, Brown, Micaceous Sandy SILT, relic rock structure		19					
10	S5	10-7-7-10	14	10.0 / 274.7				20					

Terminated at 10.0 feet.

REMARKS: (1)Bottom of Pond #2 = EL 292

BORING LOG — BORING B-2 (PAGE 1 OF 1)
The Robert B. Balter Company, Geotechnical and Environmental Engineers, Materials and Construction Inspection and Testing, Telephone No. (410) 363-1555, www.balterco.com

CLIENT General Growth Properties, Inc. — PROJECT NAME Emerson Section 3, Area 7
PROJECT LOCATION Howard County, Maryland — PROJECT NUMBER 14988-0: MD
RIG ATV Tracked CME 850 — METHOD Hollow Stem Auger — SAMPLER: 2-in OD SS — HAMMER: 140# — FALL: 30" — AUTO? Yes
DATE STARTED 11/19/07 — COMPLETED 11/19/07 — DRILLER Maurice Hardy — HELPER Zack Cherr — REVIEWED BY Kristopher Crist — SITE DELAYS — LOCATION As Staked — BULK SAMPLES 5-10'

Date	Time	Elapsed Hours	Casing Depth (ft)	Hole Depth (ft)	Water Depth (ft)	Water Elev (ft)
11/19/07		0		8.1	Dry	
11/20/07		24		6.7	Dry	

SURFACE EL = 283.6

Depth (ft)	Sample	SPT Blows/6"	N Value	Stratum Change Depth/El	USCS	Material Description	PP (tsf)	NMC %	-#200	PL	LL	PI	Remarks
				0.5 / 283.1		Topsoil							
	S1	3-4-4-5	8	2.0 / 281.6	ML	Moist, Medium Stiff, Brown SILT, little sand [Silty Clay]		24	88				(1) (2)
	S2	7-10-13-15	23		ML	Moist, Very Stiff, Brown, Micaceous Sandy SILT		11					
5	S3	5-7-9-13	16	6.0 / 277.6				10 13	42	25	33	8	
	S4	7-9-11-32	20		SM	Moist, Medium Dense, Brown Micaceous Silty SAND, relic rock structure		10	23	NP	NP	NP	
10	S5	12-12-14-18	26	10.0 / 273.6				14					

Terminated at 10.0 feet.

REMARKS: (1)Bottom of Pond #2 = EL 292 (2)Top of Embankment = EL 300

BORING LOG — BORING B-3 (PAGE 1 OF 1)
The Robert B. Balter Company, Geotechnical and Environmental Engineers, Materials and Construction Inspection and Testing, Telephone No. (410) 363-1555, www.balterco.com

CLIENT General Growth Properties, Inc. — PROJECT NAME Emerson Section 3, Area 7
PROJECT LOCATION Howard County, Maryland — PROJECT NUMBER 14988-0: MD
RIG ATV Tracked CME 850 — METHOD Hollow Stem Auger — SAMPLER: 2-in OD SS — HAMMER: 140# — FALL: 30" — AUTO? Yes
DATE STARTED 11/19/07 — COMPLETED 11/19/07 — DRILLER Maurice Hardy — HELPER Zack Cherr — REVIEWED BY Kristopher Crist — SITE DELAYS — LOCATION As Staked — BULK SAMPLES 0-5'

Date	Time	Elapsed Hours	Casing Depth (ft)	Hole Depth (ft)	Water Depth (ft)	Water Elev (ft)
11/19/07		0		8.3	Dry	
11/20/07		24		7.2	Dry	

SURFACE EL = 282.1

Depth (ft)	Sample	SPT Blows/6"	N Value	Stratum Change Depth/El	USCS	Material Description	PP (tsf)	NMC %	-#200	PL	LL	PI	Remarks
				0.4 / 281.7		Topsoil							
	S1	3-2-2-3	4	2.0 / 280.1	ML	Moist, Soft, Brown SILT with Organics (Possible Fill) [Silty Clay]		24	75	28	44	16	(1) (2)
	S2	4-5-7-8	12		ML	Moist, Stiff, Brown SILT with Sand [Silty Clay]	4.4	21	81				
5	S3	4-6-7-7	13	6.0 / 276.1			3.6	21					
	S4	9-9-8-11	17	8.0 / 274.1	ML	Slightly Wet, Stiff, Brown Sandy SILT, little relic rock structure		21					
10	S5	5-6-6-6	12	10.0 / 272.1	ML	Slightly Wet, Stiff, Gray, Micaceous Sandy SILT, relic rock structure		22					

Terminated at 10.0 feet.

REMARKS: (1)Bottom of Pond #2 = EL 292 (2)Top of Embankment = EL 300

BORING LOG — BORING B-4 (PAGE 1 OF 1)
The Robert B. Balter Company, Geotechnical and Environmental Engineers, Materials and Construction Inspection and Testing, Telephone No. (410) 363-1555, www.balterco.com

CLIENT General Growth Properties, Inc. — PROJECT NAME Emerson Section 3, Area 7
PROJECT LOCATION Howard County, Maryland — PROJECT NUMBER 14988-0: MD
RIG ATV Tracked CME 850 — METHOD Hollow Stem Auger — SAMPLER: 2-in OD SS — HAMMER: 140# — FALL: 30" — AUTO? Yes
DATE STARTED 11/14/07 — COMPLETED 11/14/07 — DRILLER Maurice Hardy — HELPER Zack Cherr — REVIEWED BY Kristopher Crist — SITE DELAYS — LOCATION As Staked — BULK SAMPLES 0-5'

Date	Time	Elapsed Hours	Casing Depth (ft)	Hole Depth (ft)	Water Depth (ft)	Water Elev (ft)
11/14/07		0		8.3	Dry	
11/19/07		120		6.1	Dry	

SURFACE EL = 275.8

Depth (ft)	Sample	SPT Blows/6"	N Value	Stratum Change Depth/El	USCS	Material Description	PP (tsf)	NMC %	-#200	PL	LL	PI	Remarks
				0.3 / 275.5		Topsoil							
	S1	2-3-4-6	7	2.0 / 273.8	CL	Moist, Medium Stiff, Reddish Brown Sandy Lean CLAY	3.1	19 12	58	21	42	21	
	S2	12-12-17-19	29	4.0 / 271.8	CL	Moist, Very Stiff, Reddish Brown Sandy Lean CLAY, trace rock fragments, slightly micaceous		13	61	21	38	17	
5	S3	19-17-9-5	26	6.0 / 269.8	SM	Moist, Medium Dense, Gray Silty SAND with Rock Fragments [Sandy Loam]		4	15				(1)
	S4	5-7-10-10	17		ML	Moist, Very Stiff, Brown, Micaceous Sandy SILT, relic rock structure		19					
10	S5	13-11-12-13	23	10.0 / 265.8				19					

Terminated at 10.0 feet.

REMARKS: (1)Pond #1 bottom elevation = EL 272.0

BORING LOG — BORING B-5 (PAGE 1 OF 1)
The Robert B. Balter Company, Geotechnical and Environmental Engineers, Materials and Construction Inspection and Testing, Telephone No. (410) 363-1555, www.balterco.com

CLIENT General Growth Properties, Inc. — PROJECT NAME Emerson Section 3, Area 7
PROJECT LOCATION Howard County, Maryland — PROJECT NUMBER 14988-0: MD
RIG ATV Tracked CME 850 — METHOD Hollow Stem Auger — SAMPLER: 2-in OD SS — HAMMER: 140# — FALL: 30" — AUTO? Yes
DATE STARTED 11/14/07 — COMPLETED 11/14/07 — DRILLER Maurice Hardy — HELPER Zack Cherr — REVIEWED BY Kristopher Crist — SITE DELAYS — LOCATION As Staked — BULK SAMPLES 5-10'

Date	Time	Elapsed Hours	Casing Depth (ft)	Hole Depth (ft)	Water Depth (ft)	Water Elev (ft)
11/14/07		0		8.4	Dry	
11/19/07		120		7.0	Dry	

SURFACE EL = 270.3

Depth (ft)	Sample	SPT Blows/6"	N Value	Stratum Change Depth/El	USCS	Material Description	PP (tsf)	NMC %	-#200	PL	LL	PI	Remarks
				0.4 / 269.9		Topsoil							
	S1	1-2-2-2	4	2.0 / 268.3	ML	Slightly Wet, Soft, Dark Brown SILT with Sand [Silty Loam]	2.0	20	77				(1) (2)
	S2	2-3-4-11	7	4.0 / 266.3	ML	Slightly Wet, Medium Stiff, Brown Clayey SILT, little sand [Silty Loam]	2.8	21					
5	S3	7-12-10-10	22	6.0 / 264.3	ML	Moist, Very Stiff, Brown Clayey SILT with Gravel		12					
	S4	10-15-9-9	24	8.0 / 262.3	SM	Moist, Medium Dense, Reddish Brown Silty SAND, little gravel		11					
10	S5	4-4-5-7	9	10.0 / 260.3	ML	Moist, Medium Stiff, Brown Sandy SILT		22					

Terminated at 10.0 feet.

REMARKS: (1)Pond #1 bottom = EL 272 (2)Top of Embankment = EL 280

BORING LOG — BORING B-6 (PAGE 1 OF 1)
The Robert B. Balter Company, Geotechnical and Environmental Engineers, Materials and Construction Inspection and Testing, Telephone No. (410) 363-1555, www.balterco.com

CLIENT General Growth Properties, Inc. — PROJECT NAME Emerson Section 3, Area 7
PROJECT LOCATION Howard County, Maryland — PROJECT NUMBER 14988-0: MD
RIG ATV Tracked CME 850 — METHOD Hollow Stem Auger — SAMPLER: 2-in OD SS — HAMMER: 140# — FALL: 30" — AUTO? Yes
DATE STARTED 11/14/07 — COMPLETED 11/14/07 — DRILLER Maurice Hardy — HELPER Zack Cherr — REVIEWED BY Kristopher Crist — SITE DELAYS — LOCATION As Staked — BULK SAMPLES 0-5'

Date	Time	Elapsed Hours	Casing Depth (ft)	Hole Depth (ft)	Water Depth (ft)	Water Elev (ft)
11/14/07		0		7.8	Dry	
11/19/07		120		6.3	Dry	

SURFACE EL = 268.3

Depth (ft)	Sample	SPT Blows/6"	N Value	Stratum Change Depth/El	USCS	Material Description	PP (tsf)	NMC %	-#200	PL	LL	PI	Remarks
				0.3 / 268.0		Topsoil							
	S1	2-2-7-8	9	2.0 / 266.3	MH	Moist, Medium Stiff, Brown Sandy Elastic SILT, little gravel	2.0	13 31	52	30	51	21	(1) (2)
	S2	5-4-4-7	8		MH	Moist, Medium Stiff to Very Stiff, Brown, Micaceous Sandy Elastic SILT, relic rock structure [Clay Loam]	2.5	27	58				
5	S3	2-3-4-4	7										
	S4	3-7-8-8	15										
10	S5	3-5-9-11	14	10.0 / 258.3									

Terminated at 10.0 feet.

REMARKS: (1)Pond #1 bottom = EL 272 (2)Top of Embankment = EL 280

DATA SOURCES

Existing topography shown hereon is a result of an aerial survey provided by Air Survey Corporation dated, 1998 supplemented with field run information performed by Daft McCune Walker, Inc. dated, 2010.

Property boundary shown hereon is a result of field run monumented boundary survey performed on or about June 25, 1999 by Daft McCune Walker, Inc.

Soils if shown provided by Soil Data Mart dated 2005 published by Natural Resources Conservation Services (NRCS)

Zoning information shown hereon provided by Howard County Department of Planning and Zoning, adapted by Howard County Council February 2, 2004.

Wetland and stream limits shown hereon were originally approved by Maryland Department of the Environment and the US Corps of Engineers in April 2001 and re-verified by these agencies in October 2009.

THESE PLANS FOR SMALL POND CONSTRUCTION, SOIL EROSION AND SEDIMENT CONTROL MEET THE REQUIREMENTS OF THE HOWARD SOIL CONSERVATION DISTRICT.

HOWARD SOIL CONSERVATION DISTRICT — DATE 2/8/12

DEVELOPERS CERTIFICATE:

I/WE CERTIFY THAT ALL DEVELOPMENT AND/OR CONSTRUCTION WILL BE DONE ACCORDING TO THESE PLANS AND THAT ANY RESPONSIBLE PERSONNEL INVOLVED IN THE CONSTRUCTION PROJECT WILL HAVE A CERTIFICATE OF ATTENDANCE AT A DEPARTMENT OF ENVIRONMENT APPROVED TRAINING PROGRAM FOR THE CONTROL OF SEDIMENT AND EROSION BEFORE BEGINNING THE PROJECT. I SHALL ENGAGE A REGISTERED PROFESSIONAL ENGINEER TO SUPERVISE POND CONSTRUCTION AND PROVIDE THE HOWARD SOIL CONSERVATION DISTRICT WITH AN "AS-BUILT" PLAN OF THE POND WITHIN 30 DAYS OF COMPLETION. I ALSO AUTHORIZE PERIODIC ON-SITE INSPECTIONS BY THE HOWARD SOIL CONSERVATION DISTRICT.

SIGNATURE OF DEVELOPER — DATE 1/5/12
PRINT NAME BELOW SIGNATURE
Robert Jenkins

ENGINEERS CERTIFICATE:

I CERTIFY THAT THIS PLAN FOR POND CONSTRUCTION, EROSION AND SEDIMENT CONTROL REPRESENTS A PRACTICAL AND WORKABLE PLAN BASED ON MY PERSONAL KNOWLEDGE OF THE SITE CONDITIONS. THIS PLAN WAS PREPARED IN ACCORDANCE WITH THE REQUIREMENTS OF THE HOWARD SOIL CONSERVATION DISTRICT. I HAVE NOTIFIED THE DEVELOPER THAT HE/SHE MUST ENGAGE A REGISTERED PROFESSIONAL ENGINEER TO SUPERVISE POND CONSTRUCTION AND PROVIDE THE HOWARD SOIL CONSERVATION DISTRICT WITH AN "AS-BUILT" PLAN OF THE POND WITHIN 30 DAYS OF COMPLETION.

SIGNATURE OF ENGINEER — DATE 1/5/12
PRINT NAME BELOW SIGNATURE
Melvin C. Beall Jr.

PROFESSIONAL CERTIFICATION

I HEREBY CERTIFY THAT THESE DOCUMENTS WERE PREPARED OR APPROVED BY ME, AND THAT I AM A DULY LICENSED PROFESSIONAL ENGINEER UNDER THE LAWS OF THE STATE OF MARYLAND, LICENSE NO. 16928, EXPIRATION DATE: 5/13/12.

1/5/12
Date

STATE OF MARYLAND — PROFESSIONAL ENGINEER

Professional Engr. No. 16928

APPROVED: HOWARD COUNTY DEPT. OF PUBLIC WORKS

CHIEF, BUREAU OF HIGHWAYS — DATE 2-23-12

HOWARD COUNTY DEPT. OF PLANNING & ZONING

CHIEF, DEVELOPMENT ENGINEERING DIVISION — DATE 2/28/12

CHIEF, DIVISION OF LAND DEVELOPMENT — DATE 3/01/12

Date	No.	Revision Description
2-10-14	1	UPDATE OWNER/DEVELOPER INFO.

EMERSON
SECTION 3 – AREA 7 – PARCEL A
"Future Employment Use"

OWNER/DEVELOPER:
EMERSON DEVELOPMENT IX LLC
ONE TEXAS STATION COURT, SUITE 200
TIMONIUM, MD 21093 (443)687-8000

DMW
Daft·McCune·Walker, Inc.
200 East Pennsylvania Avenue
Towson, Maryland 21286
(410) 296-3333
Fax 296-4705

A Team of Land Planners, Landscape Architects, Engineers, Surveyors & Environmental Professionals

SUBDIVISION NAME: EMERSON	SECTION/AREA: SEC.3 AREA 7	LOT/PARCEL #: PART OF 837	
PLAT# OR L/F: 5289/330	GRID #: 15	ZONE: MXD-3	TAX/ZONE MAP: 47
ELECT. DISTRICT: 6TH	CENSUS TRACT: 6069.03	WATER CODE: E-15	SEWER CODE: 7520000

TITLE: FINAL PLAN — STORMWATER MANAGEMENT — BORING LOGS

Des By	TJC	Scale	As Noted	Proj. No.	95054.W
Drn By	JSS	Date	10/19/11		26 of 30
Chk By	JDF	Approved			

F-11-036

n:\95054\95054.W\Final Plans\95054W26.M08

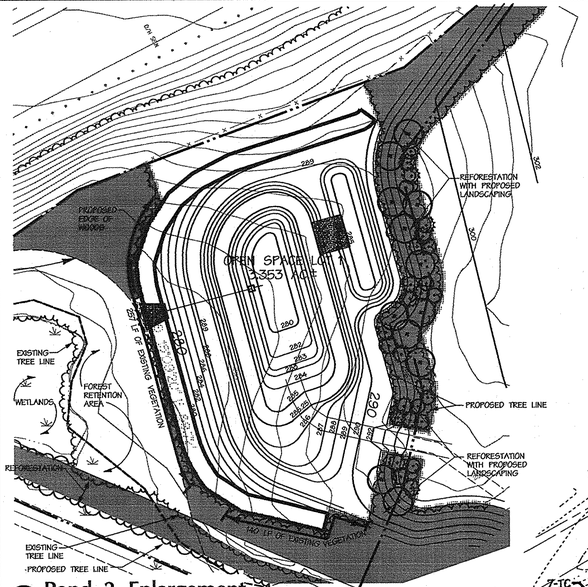

1 Pond 2 Enlargement

Scale = 1" = 60'

(SEE SHEET 28 FOR POND 1 ENLARGEMENT)

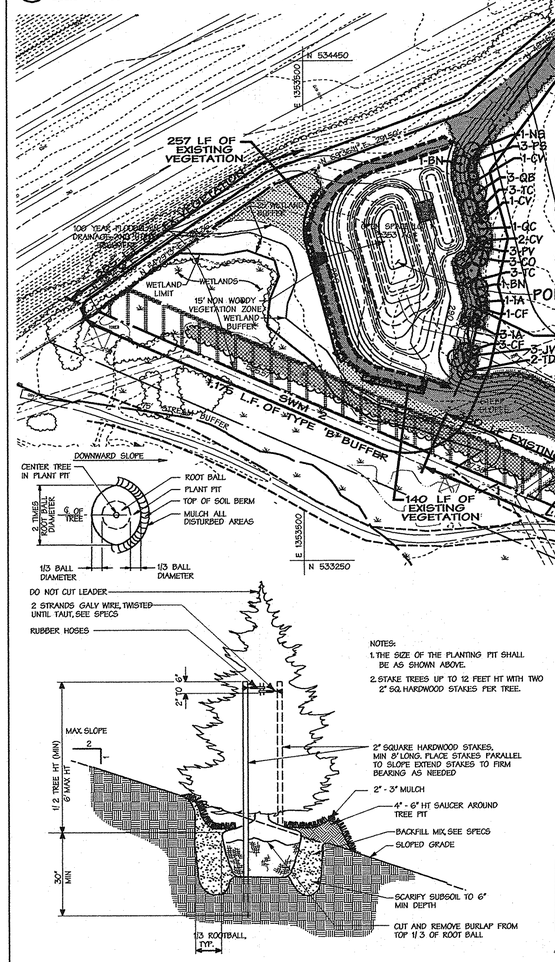

2 Evergreen Tree Planting on Slope

Not To Scale

NOTES:
1. THE SIZE OF THE PLANTING PIT SHALL BE AS SHOWN ABOVE.
2. STAKE TREES UP TO 12 FEET HT WITH TWO 2" SQ. HARDWOOD STAKES PER TREE.

ADDITIONAL LANDSCAPE REQUIREMENTS

(BASED UPON EMERSON CORPORATE COMMONS DESIGN AND DEVELOPMENT STANDARDS, 16 MAY 2005)

GROSS SITE ACREAGE	REQUIRED SHADE TREES PER AC.	REQUIRED SHADE TREES	(MINUS COUNTY REQUIRED SHADE TREE VALUE*)	NET SHADE TREES REQUIRED
45± AC.	28 SHADE TREES	1,260 SHADE TREES	-(261)	999 SHADE TREES

NOTES:
*1. "COUNTY REQUIRED SHADE TREE VALUE" IS BASED UPON SCHEDULES A,D AND THE REQUIRED STREET TREE OBLIGATION (SEE SHEET 28). TWO EVERGREEN TREES ARE COUNTED AS ONE SHADE TREE AS DESCRIBED IN THE EMERSON CORP. COMMONS DESIGN & DEV. STANDARDS. FUTURE CACULATIONS MAY INCLUDE PARKING LOT REQUIRED SHADE TREES AND OTHER REQUIRED SHADE TREE OBLIGATIONS NOT KNOWN AT THIS TIME.
2. INTERNAL LANDSCAPING TO BE PROVIDED AT THE SDP PLAN STAGE.

General Notes:

THIS PLAN HAS BEEN PREPARED IN ACCORDANCE WITH SECTION 16.124 OF THE HOWARD COUNTY CODE, THE LANDSCAPE MANUAL AND THE APPROVED EMERSON LANDSCAPE DESIGN CRITERIA.

Legend

- EX. CURB & GUTTER
- EX. MAJOR CONTOURS 400
- EX. MINOR CONTOURS 402
- EX. STORM DRAIN EX. 21" RCP
- EX. SEWER EX. 8" S.
- EX. WATER EX. 6" W.
- EXISTING TREE LINE
- EXISTING WETLAND LIMIT
- PROPERTY LINE
- ROADWAY RIGHT-OF-WAY
- PROPOSED LOT LINE
- PROPOSED EASEMENT
- PROPOSED CURB & GUTTER
- PROPOSED SIDEWALK
- PROP. STORM DRAIN 15" RCP 6" S.
- PROP. SEWER 4" W.
- PROP. WATER
- PROP. MAJOR CONTOURS 400
- PROP. MINOR CONTOURS 402
- PROP. TREELINE
- PROPOSED SHADE TREE
- FOREST CON EASEMENT 50'
- REFORESTATION AREA
- RETENTION AREA
- NON WOODY VEGETATION ZONE 15'
- 45' BGE RESTRICTED AREA

DEVELOPERS CERTIFICATE:

I/WE CERTIFY THAT THE LANDSCAPING SHOWN ON THIS PLAN WILL BE DONE ACCORDING TO THE FINAL SECTION 16.124 OF THE HOWARD COUNTY LANDSCAPE MANUAL AND THE EMERSON LANDSCAPE DESIGN CRITERIA. I/WE FURTHER CERTIFY THAT UPON COMPLETION A LETTER OF LANDSCAPE INSTALLATION, ACCOMPANIED BY AN EXECUTED ONE-YEAR GUARANTEE OF PLANT MATERIALS, WILL BE SUBMITTED TO THE DEPARTMENT OF PLANNING AND ZONING.

Robert Jenkins — 1/5/12

SIGNATURE OF DEVELOPER — DATE

PRINT NAME BELOW SIGNATURE
Robert Jenkins

DATA SOURCES

Existing topography shown hereon is a result of an aerial survey provided by Air Survey Corporation dated, 1993 supplemented with field run information performed by Daft McCune Walker, Inc. dated, 2010.

Property boundary shown hereon is a result of field run monumented boundary survey performed on or about June 25, 1999 by Daft McCune Walker, Inc.

Soils if shown provided by Soil Data Mart dated 2005 published by Natural Resources Conservation Services (NRCS)

Zoning information shown hereon provided by Howard County Department of Planning and Zoning, adopted by Howard County Council February 2, 2004.

Wetland and stream limits shown hereon were originally approved by Maryland Department of the Environment and the US Corps of Engineers in April 2001 and re-verified by those agencies in October 2009.

APPROVED: HOWARD COUNTY DEPT. OF PUBLIC WORKS

CHIEF, BUREAU OF HIGHWAYS — DATE 2-23-12

APPROVED: HOWARD COUNTY DEPT. OF PLANNING & ZONING

CHIEF, DEVELOPMENT ENGINEERING DIVISION — DATE 2/28/12

CHIEF, DIVISION OF LAND DEVELOPMENT — DATE 3/01/12

Date	No.	Revision Description
2-10-14	⚠	UPDATE OWNER/DEVELOPER INFO.

EMERSON

SECTION 3 – AREA 7 – PARCEL A

"Future Employment Use"

OWNER/DEVELOPER:
⚠ EMERSON DEVELOPMENT IX LLC
ONE TEXAS STATION COURT, SUITE 200
TIMONIUM, MD 21093 (443) 689-8000

DMW
Daft-McCune-Walker, Inc.
200 East Pennsylvania Avenue
Towson, Maryland 21286
(410) 296-3333
Fax 296-4705

A Team of Land Planners, Landscape Architects, Engineers, Surveyors & Environmental Professionals

1/5/12
Date

STATE OF MARYLAND — BENJAMIN B. ALIGER — No. 505 — REGISTERED LANDSCAPE ARCHITECT

Landscape Architect No.

SUBDIVISION NAME: EMERSON	SECTION/AREA: SEC.3 AREA 7	LOT/PARCEL #: PART OF 837	
PLAT # OR L/F	GRID # 19	ZONE MXD-3	TAX/ZONE MAP 47
ELECT. DISTRICT 6TH	CENSUS TRACT 6069.03		
WATER CODE E-15	SEWER CODE 7520000		

TITLE

FINAL PLAN LANDSCAPE & STREET TREE PLAN

Des By LET	Scale 1"=100'	Proj. No. 95054.W	27 of 30
Drn By LET/JSS	Date 11/17/11		
Chk By	Approved		

F-11-036

n:\95054\95054-W\Final Plans\95054W27.101

Landscape Notes

1. Contractor shall notify Miss Utility 72 hours prior to construction.

2. If utility lines are encountered in excavation of tree pits, other locations for trees shall be made by the contractor without additional compensation. No changes of location shall be made without approval of the landscape architect.

3. Every possible safeguard shall be taken to protect building surfaces, equipment, and furnishing. The contractor shall be responsible for any damage or injury to person or property which may occur as a result of his negligence in the execution of the work.

4. All equipment and tools shall be placed so as not to interfere or hinder the pedestrian and vehicular traffic flow. See Seasonal Plant List for planting times of bulbs and seasonal plants.

5. The contractor shall review architectural/engineering plans to become thoroughly familiar with grading and surface utilities.

6. The contractor is advised of the existence of underground utilities on the site. Their exact location shall be verified in the field with the owner or general contractor prior to the commencement of any digging operations. In the event they are uncovered, the contractor shall be held responsible for all damage to utilities and such damage shall not result in any additional expenses to the owner.

7. The contractor shall dispose of stumps and major roots of all plants to be removed. Any depressions caused by removal operations shall be refilled with fertile, friable soil placed and compacted so as to reestablish proper grade for new planting and/or lawn areas.

8. Landscape Contractor shall coordinate plant bed filling operations and plant material installation with General Contractor and Utilities Contractor. At the time of final inspection with acceptance, all electric, water, drainage, and fountain utilities, as well as all plant materials, shall remain undamaged. Likewise, Landscape Contractor and Utilities Contractor shall coordinate efforts to ensure that surface utilities are at the proper elevation relative to final grades.

9. The contractor shall coordinate with lighting and irrigation contractors regarding timing of installation of plant material.

10. The contractor shall insure that his work does not interrupt established or projected drainage patterns.

11. The contractor is responsible for testing project soils. The contractor is to provide a certified soils report to the owner. The contractor shall verify that the soils on site are acceptable for the proper growth of the proposed plant material. Should the contractor find poor soil conditions, the contractor shall be required to provide soil amendments as necessary. These amendments shall include, but not be limited to, fertilizers, lime, and topsoil. Proper planting soils must be verified prior to planting of materials.

12. Landscape Contractor to follow landscape specification guidelines for Baltimore Washington Metro area approved by LCAMW.

13. Plants shall conform to current "American Standards for Nursery Stock" by American Association of Nurserymen (AAN), particularly with regard to size, growth, size of ball, and density of branch structure. Plant material shall be tagged at the source by the landscape architect unless this requirement is specifically waived.

14. The contractor shall stake all material located on the site for review and/or adjustment by the landscape architect prior to planting. All locations are to be approved by the landscape architect before excavation.

15. All plants (B&B or container) shall be properly identified by weather-proof labels securely attached thereto before delivery to project site. Labels shall identify plants by name, species, and size. Labels shall not be removed until the final inspection by the landscape architect or agent in charge.

16. Any material and/or work may be rejected by the landscape architect if it does not meet the requirements of the specifications. All rejected materials shall be removed from the site by the contractor.

17. No substitutions shall be made without written consent of the owner or landscape architect.

18. The landscape architect or owner shall have the right, at any stage of the operations, to reject any and all work and material which, in his opinion, does not meet the requirements of these plans and specifications.

19. During planting operations, excess waste materials shall be promptly and frequently removed from the site.

20. In the event of variation between quantities shown on the plant list and the plans, the plans shall control. The contractor is responsible for verifying all plant quantities prior to the commencement of work. Sod quantity take-offs are the responsibility of the contractor. All discrepancies shall be reported to the landscape architect for clarification prior to bidding. The contractor shall furnish plant material in sizes as specified in plant list.

21. Maintain positive drainage out of planting beds at a minimum 2% slope. All grades, dimensions, and existing conditions shall be verified by the contractor on site before construction begins. Any discrepancies shall be brought to the attention of the landscape architect or owner.

22. All planting beds adjacent to lawn, sod, or seeded areas shall be spade edged.

23. All proposed trees to be installed either entirely in or entirely out of planting beds. Planting bed lines are not to be obstructed. All shrubs and ground cover areas shall be planted in continuous prepared bed and top dressed with 3-inch shredded hardwood mulch. Mulch shall have been shredded within the last six months.

24. The contractor shall be wholly responsible for stability and conditions of all trees and shrubs and shall be legally liable for any damage caused by instability of any plant materials.

25. Maintenance shall begin after each plant has been installed and shall continue until 90 days after final acceptance by the architect or owner representative. Maintenance includes mowing of turf, watering, pruning, weeding, fertilizing, mulching, replacement of sick or dead plants, and any other care necessary for the proper growth of the plant material. The contractor must be able to provide continued maintenance if requested by the owner.

26. Upon completion of all landscaping, an acceptance of the work shall be held. The contractor shall notify the landscape architect or owner for scheduling the inspection at least seven (7) days prior to the anticipated inspection date.

27. All trees shall be guaranteed for 12 months from the date of acceptance. All shrubs and ground covers shall be guaranteed for 12 months from the date of acceptance.

28. All disturbed areas on the site not planted with shrubs or ground cover shall be fine graded and seeded or sodded as noted on landscape plan.

29. All sod shall be obtained from areas having growing conditions familiar to areas to be covered. Areas to be sodded shall be raked of stones and debris. Debris and stones over 1 inch in diameter shall be removed from the site. All damaged sod will be rejected. All sod must be placed with staggered joints, tightly butted, with no inequalities in grade. Place all sod in rows at right angles to slopes (where applicable).

30. All planting procedures shall conform to Daft McCune Walker Inc. specifications.

31. PLANTING MIX:
a. Planting mix shall be prepared at approved on-site staging area using approved on-site existing soil. Mix minimum quantities of 20 cubic yards or sufficient mix for entire job if less than 20 cubic yards is required.

b. Thoroughly mixed in the following proportions for tree and shrub planting mix:
.5 cy existing soil
.2 cy sharp sand
.3 cy wood residuals
4.5 lbs treble superphosphate
5 lbs dolomite limestone (eliminate for acid loving plants)

c. For bed planting, shrubs and groundcover spaces 24 inches or closer, incorporate the following ingredients per 20 sf and incorporate into top 8 inches of existing soils by rototilling or similar method of incorporation.
.2 cy sharp sand
.3 cy organic material
4.5 lbs treble superphosphate
5 lbs dolomite limestone (eliminate for acid loving plants)

32. The owner, tenant, and/or their agents shall be responsible for maintenance of the required landscaping, including both plant materials and berms, fences and walls. All plant materials shall be maintained in good growing condition, and when necessary, replaced with new materials to ensure continued compliance with applicable regulations. All other required landscaping shall be permanently maintained in good condition, and when necessary, repaired or replaced.

33. At the time of plant installation, all shrubs and trees listed and approved on the Landscape Plan, shall comply with the proper height requirement in accordance with the Howard County Landscape Manual. In addition, no substitutions or relocations of the required plantings may be made without prior review and approval from the Department of Planning and Zoning. Any deviation from the approved Landscape Plan may results in denial or delay in the release of landscape surety until such time as all required materials are planted and/or revisions are made to the applicable plans.

PLANT LIST: STREET TREES*

QTY.	SYM.	SCIENTIFIC NAME	COMMON NAME	SIZE	CONDITION	REMARKS
7	LR	LIQUIDAMBAR STYRACIFLUA 'ROTUNDILOBA'	SEEDLESS SWEETGUM	2 1/2" - 3" CAL.	B & B	FULL CROWN
8	QC	QUERCUS COCCINEA	SCARLET OAK	2 1/2" - 3" CAL.	B & B	FULL CROWN
11	QR	QUERCUS RUBRA	RED OAK	2 1/2" - 3" CAL.	B & B	FULL CROWN
10	TA	TILIA AMERICANA 'REDMOND'	REDMOND AMERICAN LINDEN	2 1/2" - 3" CAL.	B & B	FULL CROWN
7	TG	TILIA CORDATA 'GREENSPIRE'	GREENSPIRE LITTLELEAF LINDEN	2 1/2" - 3" CAL.	B & B	FULL CROWN
12	UA	ULMUS AMERICANA 'VALLEY FORGE'	VALLEY FORGE AMERICAN ELM	2 1/2" - 3" CAL.	B & B	FULL CROWN

* CONTRACTOR TO INSTALL ROOT BARRIER ALONG ALL STREET TREES SEE DETAIL ON SHEET 30 OF 30.

PLANT LIST: OTHER LANDSCAPE

QTY.	SYM.	SCIENTIFIC NAME	COMMON NAME	SIZE	CONDITION	REMARKS
4	AR	ACER RUBRUM 'OCTOBER GLORY'	OCTOBER GLORY RED MAPLE	2 1/2" - 3" CAL.	B & B	FULL CROWN
5	BN	BETULA NIGRA	RIVER BIRCH	10' HT.	B & B	FULL CROWN, MULTI STEM
6	CC	CARPINUS CAROLINIANA	AMERICAN HORNBEAM	1 1/2" - 2" CAL.	B & B	FULL CROWN
12	CF	CORNUS FLORIDA 'CHEROKEE BRAVE'	CHEROKEE BRAVE DOGWOOD	8' HT.	B & B	FULL CROWN
8	CO	CELTIS OCCIDENTALIS	HACKBERRY	2 1/2" - 3" CAL.	B & B	FULL CROWN
10	CV	CHIONANTHUS VIRGINICUS	FRINGETREE	1 1/2" - 2" CAL.	B & B	FULL CROWN
5	FG	FAGUS GRANDIFOLIA	AMERICAN BEECH	2 1/2" - 3" CAL.	B & B	FULL CROWN, SINGLE STEM
31	IA	ILEX OPACA	AMERICAN HOLLY	5'-6' HT.	B & B	SINGLE LEADER, 1 MALE/10 FEMALE
25	JV	JUNIPERUS VIRGINIANA	EASTERN RED CEDAR	5'-6' HT.	B & B	FULL CROWN, SINGLE STEM
9	LS	LIQUIDAMBAR STYRACIFLUA	SWEET GUM	2 1/2" - 3" CAL.	B & B	FULL CROWN
10	LT	LIRIODENDRON TULIPIFERA	YELLOW POPLAR	2 1/2" - 3" CAL.	B & B	FULL CROWN
10	NS	NYSSA SYLVATICA	BLACK GUM	2 1/2" - 3" CAL.	B & B	FULL CROWN, SINGLE LEADER
7	PO	PLATANUS OCCIDENTALIS	SYCAMORE	2 1/2" - 3" CAL.	B & B	FULL CROWN, SINGLE LEADER
37	PS	PINUS STROBUS	EASTERN WHITE PINE	6'-8' HT.	B & B	FULL CROWN
17	PV	PINUS VIRGINIANA	VIRGINIA PINE	6'-8' HT.	B & B	FULL CROWN
11	QA	QUERCUS ALBA	WHITE OAK	2 1/2" - 3" CAL.	B & B	FULL CROWN
8	QB	QUERCUS BICOLOR	SWAMP WHITE OAK	2 1/2" - 3" CAL.	B & B	FULL CROWN
17	QC	QUERCUS COCCINEA	SCARLET OAK	2 1/2" - 3" CAL.	B & B	FULL CROWN
9	QR	QUERCUS RUBRA	RED OAK	2 1/2" - 3" CAL.	B & B	FULL CROWN
11	TA	TILIA AMERICANA 'REDMOND'	REDMOND AMERICAN LINDEN	2 1/2" - 3" CAL.	B & B	FULL CROWN
38	TC	TSUGA CANADENSIS	CANADIAN HEMLOCK	5'-6' HT.	B & B	FULL CROWN, SINGLE STEM
9	TD	TAXODIUM DISTICHUM	BALD CYPRESS	6'-8' HT.	B & B	FULL CROWN

SCHEDULE A
PERIMETER LANDSCAPE EDGE

CATEGORY	ADJACENT to ROADWAYS	ADJACENT to PERIMETER PROP.						
PERIMETER	P 7	P 1	P 2	P 3	P 4	P 5	P 6	P 8
LANDSCAPE TYPE "A"			YES		YES	YES	YES	
LINEAR FEET OF PERIMETER			1480 LF.		20 LF.	170 LF.	933 LF.	412 LF.
LANDSCAPE TYPE "B"								
LINEAR FEET OF PERIMETER								
LANDSCAPE TYPE "C"	YES	YES		YES				
LINEAR FEET OF PERIMETER	1909 LF.	60 LF.		10 LF.				
CREDIT FOR EXISTING VEGETATION (DESCRIBE BELOW IF NEEDED)	520 LF.	N/A	N/A	N/A	N/A	N/A	360 LF.	412 LF.
CREDIT FOR BERM (DESCRIBE BELOW IF NEEDED)	N/A	N/A	N/A	N/A	N/A	N/A	N/A	N/A
NUMBER OF PLANTS REQUIRED SHADE TREES EVERGREEN TREES SHRUBS	 35 69 0	 2 3 0	 25 0 0	 0 1 0	 0 0 0	 3 0 0	 10 0 0	 0 0 0
NUMBER OF PLANTS PROVIDED SHADE TREES EVERGREEN TREES OTHER TREES (2 : 1 SUBSTITUTION) (DESCRIBE PLANT SUBSTITUTION CREDITS BELOW IF NEEDED)	 35 69 0	 2 3 0	 25 0 0	 0 1 0	 0 0 0	 3 0 0	 0 0 20	 0 0 0

NOTES:
1. SURETY AMOUNT FOR THE REQUIRED 75 SHADE TREES, 73 EVERGREEN TREES IS $33,450

SCHEDULE D:
STORMWATER MANAGEMENT AREA LANDSCAPING

POND #	1	2	
LINEAR FT OF PERIMETER (TYPE "B")	2,237 LF.	1,175 LF.	
NUMBER OF TREES REQUIRED SHADE TREES @ 1/50 L.F. EVERGREEN TREES @ 1/40 L.F.	 45 56	 24 29	
CREDIT FOR EXISTING VEGETATION	N/A	397 L.F.	
CREDIT FOR FOREST CONSERVATION	N/A	N/A	TOTAL
NUMBER OF TREES REQUIRED SHADE TREES EVERGREEN TREES	 45 56	 16 19	 61 75
NUMBER OF TREES PROVIDED SHADE TREES EVERGREEN TREES OTHER TREES (2:1)	 45 56 0	 12 19 8	 57 75 8

NOTES:
1. SURETY AMOUNT FOR THE REQUIRED 61 SHADE TREES, 75 EVERGREEN TREES IS $29,550.00.

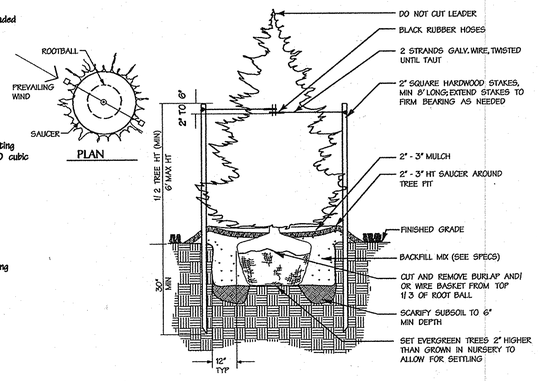

4 Evergreen Tree Planting
Not To Scale

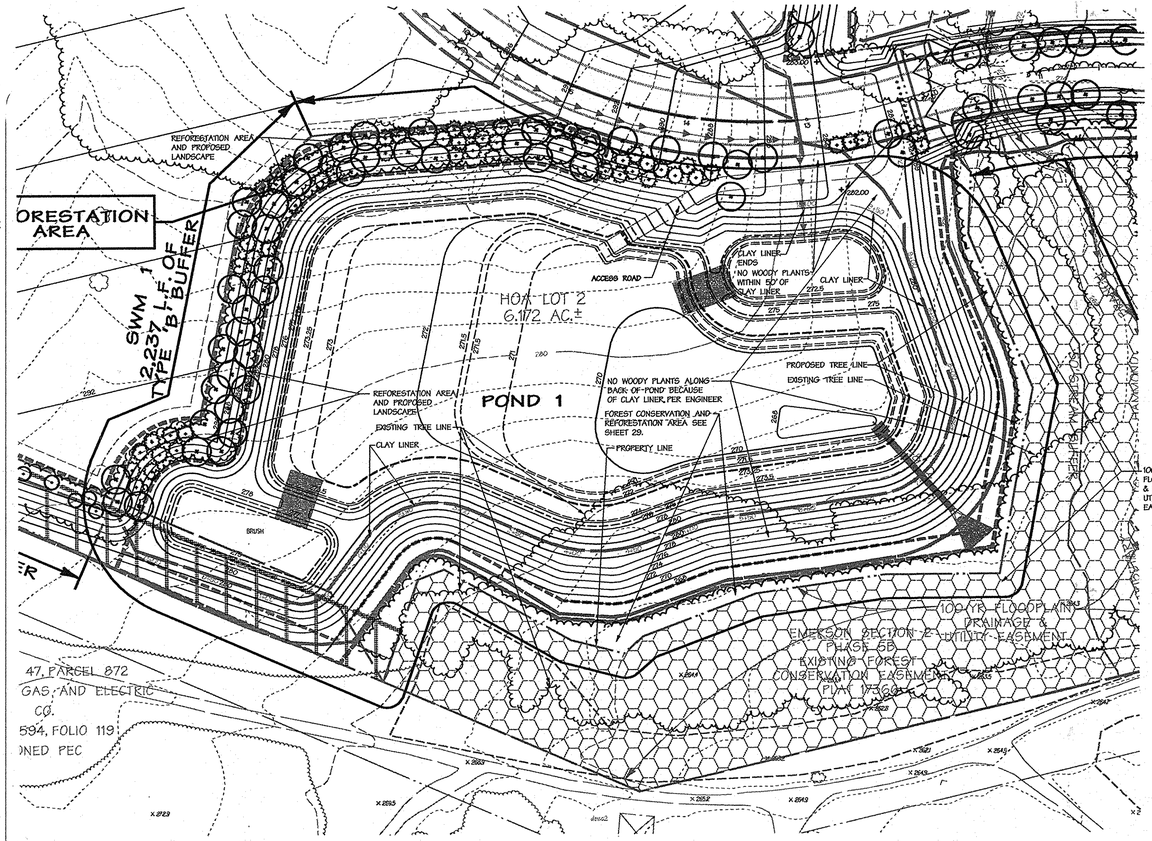

1 Pond 1 Enlargement
Scale = 1" = 60'

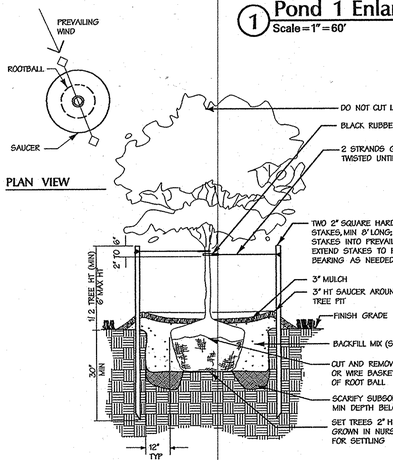

2 Less Than 3" Cal. Tree Planting
Not To Scale

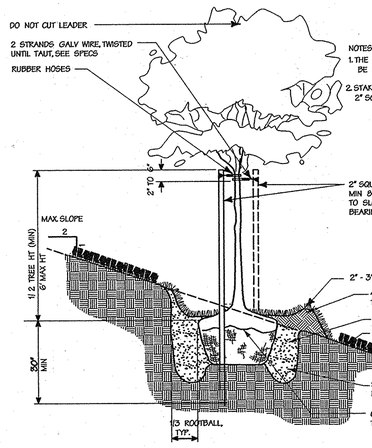

3 Tree Planting on Slope
Not To Scale

STREET TREE SCHEDULE

ROAD NAME	LENGTH OF ROAD (BOTH SIDES)	CREDIT FOR EXISTING VEGETATION	# OF TREES REQUIRED (1 PER 40 L.F.)	# OF TREES PROVIDED
ETERNAL RINGS ROAD	2,068	N/A	51.7	55

NOTES:
1. STREET TREES FOR REMAINING PORTIONS OF ETERNAL RINGS DRIVE WILL BE PROVIDED AT TIME OF DEVELOPMENT @ 1/40 L.F. STREET TREE LOCATIONS SHALL COMPLY WITH SECTION IX OF THE DEVELOPMENT CRITERIA.
2. SURETY AMOUNT FOR 52 REQUIRED STREET TREES IS $19,500.00 SHALL INCLUDE THE PUBLIC STREET TREES IN THEIR COST ESTIMATE FOR ROAD CONSTRUCTION.

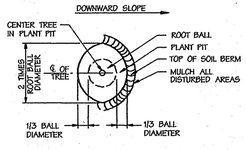

4 Rootball on Slope
Not To Scale

1/5/12
Date

STATE OF MARYLAND
HENRY M. ALT
No. 505
REGISTERED LANDSCAPE ARCHITECT

Landscape Architect No. 505

APPROVED: HOWARD COUNTY DEPT. OF PUBLIC WORKS

CHIEF, BUREAU OF HIGHWAYS — DATE 2-23-12

HOWARD COUNTY DEPT. OF PLANNING & ZONING

CHIEF, DEVELOPMENT ENGINEERING DIVISION — DATE 2/28/12

CHIEF, DIVISION OF LAND DEVELOPMENT — DATE 3/01/12

Date	No.	Revision Description
2-10-14	1	UPDATE OWNER/DEVELOPER INFO.

EMERSON

SECTION 3 – AREA 7 – PARCEL A
"Future Employment Use"

OWNER/DEVELOPER:
1 EMERSON DEVELOPMENT IX LLC
ONE TEXAS STATION COURT, SUITE 200
TIMONIUM, MD 21093 (443) 680-8000

DMW
Daft-McCune-Walker, Inc.
200 East Pennsylvania Avenue
Towson, Maryland 21286
(410) 296-3333
Fax 296-4705

A Team of Land Planners, Landscape Architects, Engineers, Surveyors & Environmental Professionals

SUBDIVISION NAME: EMERSON	SECTION/AREA: SEC.3 AREA 7	LOT/PARCEL #: PART OF 837	
PLAT# OR L/F: 5269/1330	GRID #: 15	ZONE: MXD-3	TAX/ZONE MAP: 47
ELECT. DISTRICT: 6TH	CENSUS TRACT: 6069.03		
WATER CODE: E-15	SEWER CODE: 7520000		

TITLE

FINAL PLAN
LANDSCAPE SCHEDULES

Des By	LET	Scale	NO SCALE	Proj. No.	95054.W
Drn By	LET/JSS	Date	10/19/11	28 of 30	
Chk By		Approved			

F-11-036

m:\95054\95054.W\Final Plans\95054W26.L02

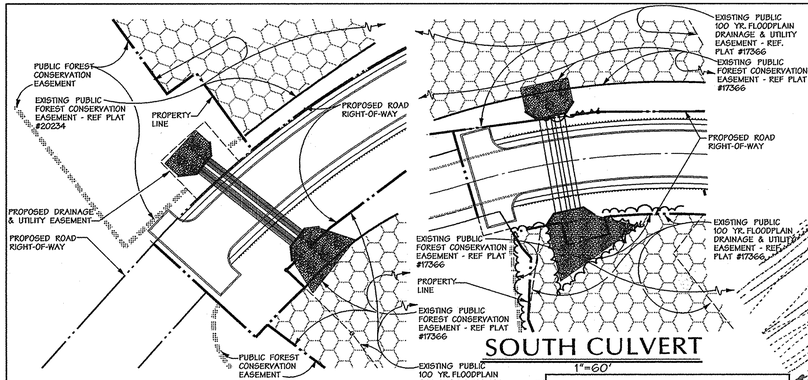

NORTH CULVERT

1"=60'

SOUTH CULVERT

1"=60'

FOREST CONSERVATION EASEMENT 'A'

±2.36 AC. TOTAL
±1.258 AC. NON-CREDITED (INSIDE FLOODPLAIN / BGE SETBACK)
±0.429 AC. RETENTION (OUTSIDE FLOODPLAIN / BGE SETBACK)
±0.673 AC. TOTAL REFORESTATION
±0.402 AC. OUTSIDE FLOODPLAIN / BGE SETBACK
±0.271 AC. INSIDE FLOODPLAIN/BGE SETBACK (CREDITED)

FOREST CONSERVATION EASEMENT 'E'

±2.455 AC. TOTAL
±0.00 AC. TOTAL FLOODPLAIN
±0.867 AC. RETENTION (OUTSIDE FLOODPLAIN)
±1.588 AC. REFORESTATION (OUTSIDE FLOODPLAIN)

FOREST TO BE CLEARED ±0.810 AC.

RETENTION AREA ±0.867 AC. (FCE 'E' ONLY)

REFORESTATION AREA PLANTING ZONE 'B' ±0.112 AC. (FCE 'E' ONLY)

FOREST TO BE CLEARED ±0.853 AC.

REFORESTATION AREA PLANTING ZONE 'B' ±1.474 AC. (FCE 'E' ONLY)

FOREST TO BE CLEARED ±9.979 AC.

REFORESTATION AREA PLANTING ZONE 'B' ±0.976 AC. (FCE 'D' ONLY)

FOREST CONSERVATION EASEMENT 'D'

±0.791 AC. TOTAL
±0.00 AC. TOTAL FLOODPLAIN
±0.00 AC. RETENTION (OUTSIDE FLOODPLAIN)
±0.791 AC. REFORESTATION (OUTSIDE FLOODPLAIN)

POND 2

RETENTION AREA ±0.162 AC. (FCE 'A' ONLY)

REFORESTATION AREA PLANTING ZONE 'B' ±0.006 AC. (FCE 'A' ONLY)

±1.669 AC. 100-YEAR FLOODPLAIN INCLUDES ±0.722 AC. BGE SETBACK

RETENTION AREA ±0.123 AC. (FCE 'A' ONLY)

REFORESTATION AREA PLANTING ZONE 'B' ±0.402 AC. (FCE 'A' ONLY)

REFORESTATION AREA PLANTING ZONE 'A' ±0.265 AC. (FCE 'A' ONLY)

RETENTION AREA ±0.034 AC. (FCE 'B' ONLY)

REFORESTATION AREA PLANTING ZONE 'A' ±0.378 AC. (FCE 'B' ONLY)

REFORESTATION AREA PLANTING ZONE 'A' ±0.029 AC. (FCE 'B' ONLY)

REFORESTATION AREA PLANTING ZONE 'B' ±0.827 AC. (FCE 'B' ONLY)

NOTE: SWM POND 1 WILL NOT BE CONSTRUCTED. A FUTURE RED-LINE SHALL REMOVE THIS POND FROM THESE PLANS. FUTURE RED-LINE WILL SHOW RETENTION AND REFORESTATION IN THIS AREA.

±1,700 AC. BGE SETBACK INCLUDES ±0.722 AC. 100-YEAR FLOODPLAIN

FOREST CONSERVATION EASEMENT 'B'

±1.682 AC. TOTAL
±0.414 AC. NON-CREDITED (INSIDE FLOODPLAIN / BGE SETBACK)
±0.034 AC. RETENTION (OUTSIDE FLOODPLAIN / BGE SETBACK)
±1.234 AC. TOTAL REFORESTATION
±0.827 AC. OUTSIDE FLOODPLAIN / BGE SETBACK
±0.407 AC. INSIDE FLOODPLAIN / BGE SETBACK (CREDITED)

REFORESTATION AREA PLANTING ZONE 'B' ±0.036 AC. (FCE 'C' ONLY)

REFORESTATION AREA PLANTING ZONE 'A' ±0.017 AC. (FCE 'C' ONLY)

RETENTION AREA (FCE 'C' ONLY)

FOREST CONSERVATION EASEMENT 'C'

±0.883 AC. TOTAL
±0.017 AC. NON-CREDITED (BGE SETBACK ONLY)
±0.161 AC. RETENTION (OUTSIDE BGE SETBACK)
±0.983 AC. TOTAL REFORESTATION
±0.106 AC. OUTSIDE BGE SETBACK
±0.017 AC. INSIDE BGE SETBACK (CREDITED)
* NO FLOODPLAIN WITHIN EASEMENT

SOILS CHART

Map Units Symbol	Map Units Name	Slope	K-Factor Rating	Comments
CeC	Chillum loam	5-10%	.37	
Chb	Chillum-Russett loams	2-5%	.37	
ChC	Chillum-Russetts loams	5-10%	.37	
GgB	Glenelg loam	3-8%	.20	
GmB	Glenville silt loam	3-8%	.37	Baile Inclusions
Ha	Hatboro-Codorus silt loams	0-3%	.37	hydric
MaC	Manor loam	8-15%	.24	
RsC	Russett fine sandy loam	5-10%	.24	
RuB	Russetts and Beltsville soils	2-5%	.37	
UaF	Udorthents, Highway	0-65%	--	

NOTES:

1. FOR FOREST STAND INFORMATION SEE THE APPROVED "COMPREHENSIVE SKETCH PLAN FOR KEY PROPERTY" SHEET 3 OF 5 PREPARED BY DMW, INC. DATED 7-15-99.
2. THE BGE SETBACK IS SHOWN AS A 45' WIDE AREA BASED ON BGE'S "PLANTING ZONE GUIDE". THE FIRST 20 FEET IS SHOWN AS A NON-CREDITED NO PLANTING ZONE. THE NEXT 25 FEET IS SHOWN AS A NON-CREDITED RETENTION AREA WITH CREDITED REFORESTATION WITH TREES THAT ARE LESS THEN 25' IN HEIGHT AT MATURITY.
3. THERE ARE NO KNOWN HISTORIC STRUCTURES OR OTHER HISTORIC RESOURCES, INCLUDING TREES AND CEMETERIES, LOCATED ON SITE.
4. THERE ARE NO KNOWN RARE, THREATENED, OR ENDANGERED SPECIES LOCATED ON SITE.
5. THERE ARE NO SPECIMEN TREES LOCATED ON SITE.

LEGEND

- PROPERTY LINE
- ADJACENT PROPERTY LINE
- EXISTING ROAD EDGE
- EXISTING SHRUB LINE
- EXISTING WOODS EDGE
- 310 — EXISTING MAJOR CONTOURS
- EXISTING MINOR CONTOURS
- CnB2 — SOILS LINE
- STREAM BUFFER
- LIMIT OF DISTURBANCE
- 25' STATE WETLAND BUFFER
- WETLAND LIMIT
- 300 — PROPOSED CONTOURS
- 100-YEAR FLOODPLAIN DRAINAGE & UTILITY EASEMENT-±1.665 AC. (INCLUDES ±0.722 AC. BGE SETBACK)
- STREAM CENTER LINE
- PROPOSED WOODS EDGE
- REFORESTATION AREA PLANTING ZONE 'B' - ±3.897 AC.
- RETENTION AREA - ±1.347 AC.
- 45' BGE SETBACK - ±1.700 AC. (INCLUDES ±0.722 AC. 100-YR FLOODPLAIN)
- 25' REFORESTATION AREA PLANTING ZONE 'A' - ±0.695 AC. WITHIN BGE SETBACK (SHORT MATURE HEIGHT)
- FOREST TO BE CLEARED - ±12.608 AC.
- NON-CREDITED AREA 100-YEAR FLOODPLAIN & BGE SETBACK - ±1.669 AC
- FOREST CONSERVATION EASEMENT (FCE)
- PERMANANT FOREST PROTECTIVE SIGNAGE
- TRANSMISSION TOWERS
- TEMPORARY FOREST PROTECTIVE SIGNAGE
- EXISTING OFF-SITE FOREST CONSERVATION AREAS
- STEEP SLOPES 25% AND GREATER (±0.415 AC.)
- TEMPORARY FOREST PROTECTIVE SIGNAGE

DATA SOURCES

Existing topography shown hereon is a result of an aerial survey provided by Air Survey Corporation dated, 1998 supplemented with field run information performed by Daft McCune Walker, Inc. dated, 2010.

Property boundary shown hereon is a result of field run monumented boundary survey performed on or about June 25, 1999 by Daft McCune Walker, Inc.

Soils if shown provided by Soil Data Mart dated 2005 published by Natural Resources Conservation Services (NRCS)

Zoning information shown hereon provided by Howard County Department of Planning and Zoning, adopted by Howard County Council February 2, 2004.

Wetland and stream limits shown hereon were originally approved by Maryland Department of the Environment and the US Corps of Engineers in April 2001 and re-verified by these agencies in October 2009.

APPROVED: HOWARD COUNTY DEPT. OF PUBLIC WORKS

CHIEF, BUREAU OF HIGHWAYS — DATE 2-23-12

APPROVED: HOWARD COUNTY DEPT. OF PLANNING & ZONING

CHIEF, DEVELOPMENT ENGINEERING DIVISION — DATE 2/22/11

CHIEF, DIVISION OF LAND DEVELOPMENT — DATE 3/01/12

Date	No.	Revision Description
5-16-16	3	REVISED FOREST CONSERVATION AREAS
2-10-14	1	UPDATE OWNER/DEVELOPER INFO.

EMERSON

SECTION 3 – AREA 7 – PARCEL A

"Future Employment Use"

OWNER/DEVELOPER:
EMERSON DEVELOPMENT IX LLC
ONE TEXAS STATION COURT, SUITE 200
TIMONIUM, MD. 21093 (443) 689-8000

DMW
Daft-McCune-Walker, Inc.
200 East Pennsylvania Avenue
Towson, Maryland 21286
(410) 296-3333
Fax 296-4705

A Team of Land Planners, Landscape Architects, Engineers, Surveyors & Environmental Professionals

SUBDIVISION NAME: EMERSON		SECTION/AREA: SEC.3 AREA 7	LOT/PARCEL #: PART OF 837
PLAT# OR LOT/LIBER # / FOLIO: 5289/330	ZONE: MXD-3	TAX/ZONE MAP: 47	ELECT. DISTRICT: 6TH
		CENSUS TRACT: 6069.03	
WATER CODE: E-15		SEWER CODE: 7520000	

1/5/12 Date

FOR REVISION NO. 2 ONLY

DATE

STATE OF MARYLAND — HENRY M. ALT — REGISTERED LANDSCAPE ARCHITECT — NO. 509

PROFESSIONAL LA NO. 1008
CENTURY ENGINEERING

Professional LA. No. 509

TITLE

FINAL PLAN FOREST CONSERVATION PLAN & SOILS MAP

Des By	CRH	Scale	1"=100'	Proj. No.	95054.W2
Drn By	CRH	Date	11/17/11	29 of 30	
Chk By		Approved			

F-11-036

n:\95054\95054-W2\Final Plans\95054W2D.FCP1

PART 2 PRODUCTS

2.01 PLANTS

A. Sound, healthy, vigorous, free from plant diseases, insect pests or their eggs.

B. Plants cut back from larger sizes or pruned prior to delivery will not be accepted.

C. It is anticipated that these plants will need to be obtained from a nursery source. These plant species are normally unavailable from standard landscape nursery sources.

D. Shape and Form: Plant materials shall be symmetrical and typical for the variety and species.

E. Container: The soil/root masses shall be thoroughly moist upon delivery to the job site. Any dry and light weight plants shall be rejected. If not planted immediately after being delivered to the job site, the plants shall be stored out of direct exposure to the sun and wind and their root masses maintained moist, through periodic watering, until the time of planting.

Until the removal of the plants from the containers, the soil/root masses shall be the size of the specified container size. If the soil/root masses are substantially smaller than the specified container size and loose soil exists on the bottom of the containers, the plants will be rejected since they have not been grown sufficiently long in the containers to root into the soils contained therein.

The plants shall appear healthy with no leaf spots, leaf damage, leaf discolorations, leaf wilting, or evidence of insects on the leaves.

The container size shall be at least as large as indicated in the specifications or shown in the plant tables/lists. Plants shall not be rejected if supplied in containers larger than specified.

F. Fiber or Peat Pot: If not planted immediately after being delivered to the job site, the plants shall be stored out of direct exposure to the sun and wind and their pots and associated root masses maintained moist, through periodic watering, until the time of planting.

The plants shall be well-rooted through the sides and bottoms of the pots and firmly contained therein.

Should the plants be removed from the pots by holding them from their tops and gently pulling on the pots, the plants shall be rejected.

If growing, the plants shall appear healthy with no foliar spots, discolorations, wilting, or other evidence of the presence of disease or insects.

The pot size shall be at least as large as indicated in the specifications or shown in the plant tables/lists. Plants shall not be rejected if supplied in pots larger than specified.

The number of plants, stems, or culms per pot as specified or shown in the plant tables/lists at least shall be present, on the average, or the plants shall be rejected.

G. Dormant Propagule (Herbaceous): If not planted immediately after being delivered to the job site, the dormant propagules shall be stored out of the direct exposure to the sun and wind, and they shall be protected by covering with straw, peat moss, compost, or other suitable materials and shall be maintained moist, through periodic watering, until the time of planting.

The bodies and shoots associated with the propagules shall have turgor or be rigid to the touch. If the bodies and/or shoots associated with the propagules are soft or mushy or appear rotten or decomposed, the plant materials shall be rejected.

Rhizome (stolon) sections shall provide a minimum of two shoots per section or Rhizome (stolon) sections containing at least a terminal shoot shall be a minimum of four inches in length (in order to ensure sufficient stored energy to support the new growth). Rhizome sections containing shoots that are soft or mushy or otherwise appear rotten shall not be accepted.

Suckers shall contain a terminal shoot and be a minimum of four inches in length (in order to ensure sufficient stored energy to support the new growth).

Growing Bare Root Plant (Herbaceous): The plants shall contain new roots that are clean and white in coloration.

If not planted immediately after delivery to the job site, the plants shall be stored out of direct exposure to the sun and wind and the new roots shall be protected by the use of straw, peat moss, compost, or other suitable materials and shall be maintained moist, through periodic watering, until the time of planting.

The plants shall appear healthy with no foliar spots, discolorations, wilting, or other evidence of the presence of disease or of insects.

2.02 FERTILIZER

A. Plant Fertilizer: Slow release fertilizer such as Osmocote 19-6-12 analysis (3-4 month release) or equal approved by the Landscape Architect.

B. Slow release fertilizer shall be applied at the time of planting and at the following rate:

All emergent plant material - planting pit application of 1 oz. per container or bare root plant.

C. Pesticides, herbicides and fungicides will not be used unless judged necessary by the wetland landscaper. If applied, quantities recommended by the Department of Agriculture shall not be exceeded.

D. Fertilizer shall be delivered to the site in the original unopened containers with formulas attached.

PART 3 EXECUTION

3.01 PREPARATION

A. Plant Locations: As shown on the Drawings, to dimensions if shown, to scale if not dimensioned. Locations subject to review by the Landscape Architect before starting excavation.

B. No plant material shall be installed until the Landscape Architect has approved the finish grade of the planted areas.

3.02 PLANTING PROCEDURES

A. Set plants straight and plumb.

B. Plant material shall be planted in existing soil with each planting pit excavated to size sufficient to contain the entire root stock or root mass without cramping.

C. Where water is not available on-site, the Contractor shall furnish sufficient quantities to complete the Work at no additional cost to the Owner.

3.04 CLEAN-UP

A. During planting operations, excess and waste materials including discarded containers, shall be removed from the site on a daily basis.

B. Repair turf areas and other existing conditions damaged during planting operations, including regrading, seed, mulch and fertilization to the satisfaction of the Owner.

Maintenance by the Contractor

A. A 2-year Contractor's Maintenance and Monitoring Period shall be at mobilization. Seventy-five percent survivorship must be guaranteed for this period. The Site Shall be inspected at the end of the two year period to ascertain survivorship and provide for replacement if necessary.

B. The Contractor's maintenance of new planting shall consist of watering, cultivating, weeding (and spot spraying with an approved herbicide as needed to control multiflora rose), mulching, and removing invasive vegetation as necessary to insure survival. The Contractor shall maintain and protect plantings from herbivory using Ropel or other approved herbivore deterrent as necessary to ensure survival.

C. Protect planting area and plants at all times against damage of all kinds for duration of maintenance period. Maintenance includes temporary protection barriers and signs as required for protection. If any plants become damaged or injured, because sufficient protection was not provided, treat or replace as directed by Landscape Architect at no additional cost to Owner.

GUARANTEE: A MINIMUM SURVIVAL RATE OF 75% IS TO BE GUARANTEED BY THE CONTRACTOR AT THE END OF THE TWO YEAR MAINTENANCE PERIOD.

FOR REVISION No. 2 ONLY

2.16.16
date

Professional L.A. No. 1008
Century Engineering Inc.

11" MIN.

15" MIN.

Forest
Conservation Area

AFFORESTATION/
REFORESTATION
PROJECT

Trees for Your Future

1. SIGNS TO BE PLACED ON METAL POSTS 5'± ABOVE FINISH GRADE PRIOR TO PLANTING. PLACE SIGNS EVERY 100' AROUND PERIMETER OF FOREST CONSERVATION AREA.

2. SIGNS SHALL BE IN PLACE FOR PERPETUITY

Permanent Signage

Not To Scale

11" MINIMUM

15" MINIMUM

FOREST
RETENTION
AREA

MACHINERY, DUMPING, OR STORAGE OF ANY MATERIALS
PROHIBITED

VIOLATORS ARE SUBJECT TO FINES AS IMPOSED BY THE MARYLAND FOREST CONSERVATION ACT OF 1991

1. SIGNS TO BE PLACED ON METAL POSTS 5'± ABOVE FINISH GRADE PRIOR TO PLANTING. PLACE SIGNS EVERY 100' AROUND PERIMETER OF FOREST RETENTION AREA.

2. SIGNS SHALL BE IN PLACE FOR PERPETUITY

Forest Retention Signage

Not To Scale

CONSTRUCTION PERIOD/POST CONSTRUCTION PERIOD PROTECTION AND MANAGEMENT NOTES

Prior to construction activities, all temporary forest protection devices (fences and signs) will be installed as depicted on this plan.

During construction, there shall be no parking of vehicles or equipment, or storage of construction materials of any kind within the forest protection areas.

There shall be no open burning within 100 feet of forest protection areas.

There shall be no concrete wash-out in any forest protection areas OR designated reforestation area.

Temporary forest protection devices shall be inspected and maintained throughout the duration of the construction project and shall remain in place until removal of perimeter sediment controls.

Following removal of perimeter sediment controls, temporary forest protection devices are to be carefully removed to avoid disturbance to the adjacent forests.

Permanent forest protection signs are to be installed as designated hereon immediately following installation of any reforestation trees.

FOREST CONSERVATION GOALS AND OBJECTIVES

The goals and objectives of this Forest Conservation Plan are to account for the clearing of approximately 12.609 acres, the retention of approximately 1.351 acres, and the reforestation of approximately 4.592 acres. Reforestation species will be chosen to reflect and enhance the existing forest communities.

When calculated cumulatively with previous phases of this project, a total of 84.57 acres of forest will be cleared and 57.59 acres will be retained. The total reforestation obligation is 24.71 acres, and 26.28 acres of reforestation have been provided.

A surety in the amount of $80,804.00 is required for reforestation (3.710 acres* @ $0.50/s.f.). The total Forest Conservation surety amount provided with the Developer's Agreement is equal to $80,804.00 (* Reflects deduction for landscape trees)

The forest conservation easement has been established to fulfill the requirements of Section 16.1200 of the Howard County Code and the Forest Conservation Manual. No clearing, grading or construction is permitted within the forest conservation easement, however, forest management practices as defined in the Deed of Forest Conservation Easement are allowed.

CUMULATIVE FOREST CONSERVATION CALCULATIONS

BASIC SITE DATA	ACRES (1/100)
GROSS SITE AREA	484.42
AREA WITHIN 100 YEAR FLOODPLAIN	85.55
AREA WITHIN AGRICULTURAL USE OR PRESERVATION PARCEL (IF APPLICABLE)	N/A
AREA WITHIN BGE RESTRICTED AREA (OUTSIDE 100-YEAR FLOODPLAIN)	1.36
NET TRACT AREA	397.51
LAND USE CATEGORY	CAI

INFORMATION FOR CALCULATIONS	
A. NET TRACT AREA	397.51
B. REFORESTATION THRESHOLD (15% x A)	59.63
C. AFFORESTATION MINIMUM (15% x A)	59.63
D. EXISTING FOREST ON NET TRACT AREA	142.16
E. FOREST AREAS TO BE CLEARED	84.64
F. FOREST AREAS TO BE RETAINED	57.52

REFORESTATION CALCULATIONS (2)

A. NET TRACT AREA	397.51
B. REFORESTATION THRESHOLD (15% x A)	59.63
C. EXISTING FOREST ON NET TRACT AREA	142.16
D. FOREST AREAS TO BE CLEARED	84.64
E. FOREST AREAS TO BE RETAINED	57.52
F. FOREST AREAS CLEARED ABOVE REFORESTATION THRESHOLD	82.53
G. FOREST AREAS CLEARED BELOW REFORESTATION THRESHOLD	2.04
H. FOREST AREAS RETAINED ABOVE REFORESTATION THRESHOLD	0.00

CLEARING ABOVE THE THRESHOLD

IF FOREST AREAS TO BE RETAINED ARE LESS THAN THE REFORESTATION THRESHOLD (IF F IS GREATER THAN B), THE FOLLOWING CALCULATIONS APPLY:

REFORESTATION FOR CLEARING ABOVE THRESHOLD Fx1/4	20.63
REFORESTATION FOR CLEARING BELOW THRESHOLD Gx2	4.08
TOTAL REFORESTATION REQUIRED (Fx1/4) + (Gx2)	24.71
	26.35
CREDIT FOR RETENTION ABOVE CONSERVATION THRESHOLD	0.00
REFORESTATION REQUIRED	24.71 ACRES
REFORESTATION PROVIDED	26.35 ACRES

Planting Zone A - mesic moisture regime / Plants required - 244 (350 whips/acre x 0.695 acres)

Species name	Common name	Size	Spacing	Quantity	Tolerance	Indicator status
Amelanchier arborea	common serviceberry	18"-24" height/cont. grown	11' x 11'	50	full sun	FACOBL
Carpinus caroliniana	American hornbeam	18"-24" height/cont. grown	11' x 11'	50	full sun	FAC
Crataegus viridis	green hawthorne	18"-24" height/cont. grown	11' x 11'	50	full sun	FACW
Cercis canadensis	red bud	18"-24" height/cont. grown	11' x 11'	58	full sun to part shade	FACU
TOTALS				208*		

* With landscape credit for 20 flowering trees (Perimeter 6) the number of plants required is based on 0.592 acres (20trees x 225 s.f.= 0.103 ac. credit) therefore, 208 whips required.

Planting Zone B - upland / Plants required - 1,364 (350 whips/acre x 3.897acres)

Species name	Common name	Size	Spacing	Quantity	Tolerance	Indicator status
Acer rubrum	red maple	18"-24" height/cont. grown	11' x 11'	230	full sun to part shade	FAC
Liquidambar styraciflua	sweet gum	18"-24" height/cont. grown	11' x 11'	227	full sun	FAC
Liriodendron tulipifera	tulip poplar	18"-24" height/cont. grown	11' x 11'	215	full sun	FACU
Quercus alba	white oak	18"-24" height/cont. grown	11' x 11'	210	full sun	FACU
Quercus rubra	Northern red oak	18"-24" height/cont. grown	11' x 11'	210	full sun to part shade	FACU
TOTALS				1,092**		

Tree shelters shall be used.

Whip plantings should be installed in a curvilinear pattern to facilitate maintenance but avoid a grid appearance.

** Credit for perimeter landscape trees in Perimeters 2 & 7 exceeds the maximum allowable amount of 20% (60 - 2" cal. trees x 400 SF = 0.551 AC; 69 - 1" cal. trees x 225 SF = 0.356 AC for a total of 0.91 +/- AC) Maximum allowable landscape credit = 20% or 0.779 AC; therefore the number of plants required is based on 3.118 AC (3.897 AC - 0.779 AC = 3.118 AC).

NOTE: FENCE POST SPACING SHALL NOT EXCEED 10' CENTER TO CENTER.

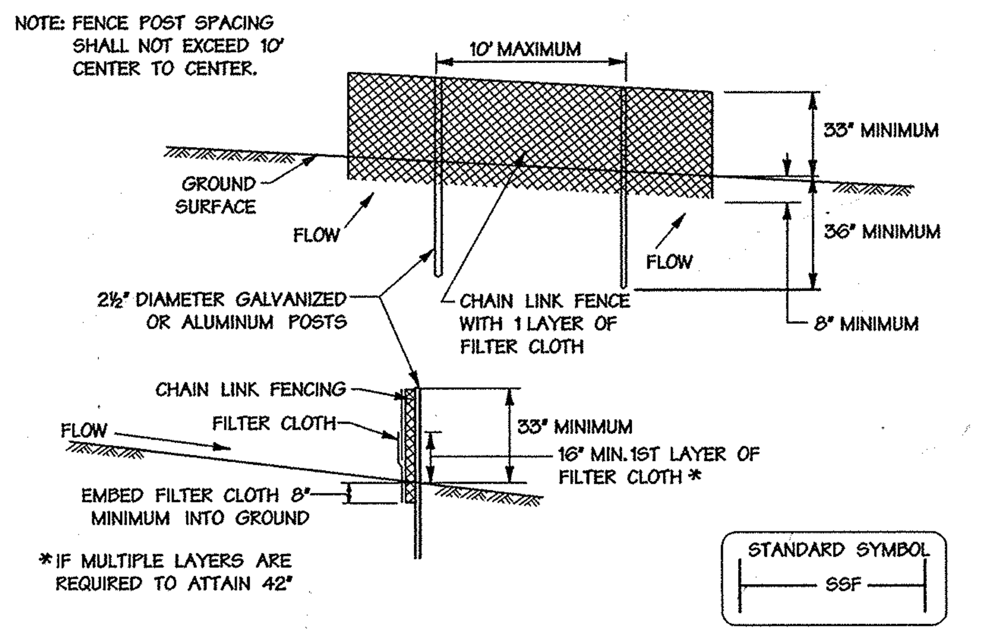

CONSTRUCTION SPECIFICATIONS

1. FENCING SHALL BE 42 INCHES IN HEIGHT AND CONSTRUCTED IN ACCORDANCE WITH THE LATEST MARYLAND STATE HIGHWAY (SHA) DETAILS FOR CHAIN LINK FENCING. THE SPECIFICATION FOR A 6' FENCE SHALL BE USED, SUBSTITUTING 42" FABRIC AND 6' LENGTH POSTS.
2. THE POSTS DO NOT NEED TO BE SET IN CONCRETE.
3. CHAIN LINK FENCE SHALL BE FASTENED SECURELY TO THE FENCE POSTS WITH WIRE TIES OR STAPLES. THE LOWER TENSION WIRE, BRACE AND TRUSS RODS, DRIVE ANCHORS AND POST CAPS ARE NOT REQUIRED EXCEPT ON THE ENDS OF THE FENCE. THE CHAIN LINK FENCING SHALL BE SIX (6) GAUGE OR HEAVIER.
4. FILTER CLOTH SHALL BE FASTENED SECURELY TO THE CHAIN LINK FENCE WITH TIES SPACED EVERY 24" AT THE TOP AND MID SECTION.
5. FILTER CLOTH SHALL BE EMBEDDED A MINIMUM OF 8" INTO THE GROUND.
6. WHEN TWO SECTIONS OF FILTER CLOTH ADJOIN EACH OTHER, THEY SHALL BE OVERLAPPED BY 6" AND FOLDED.
7. MAINTENANCE SHALL BE PERFORMED AS NEEDED AND SILT BUILDUPS REMOVED WHEN "BULGES" DEVELOP IN THE SILT FENCE, OR WHEN SILT REACHES 50% OF FENCE HEIGHT.

U.S. DEPARTMENT OF AGRICULTURE SOIL CONSERVATION SERVICE — *H - 26 - 3* — *MARYLAND DEPARTMENT OF ENVIRONMENT WATER MANAGEMENT ADMINISTRATION*

Super Silt Fence

Not To Scale

NOTE: SSF MUST BE USED IN LIEU OF FOREST PROTECTION FENCING WHERE THE LIMIT OF DISTURBANCE FALLS WITHIN 50' OR LESS OF A FOREST RETENTION AREA.

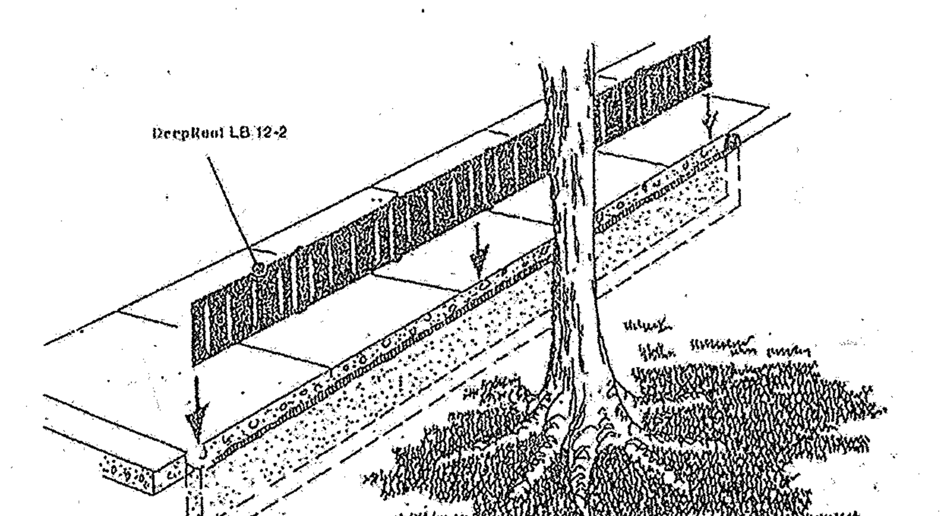

The barrier can be trimmed to a depth of eight (8) inches as part of the concrete form and shall be extended to a minimum of four (4) feet in each direction pass the tree. The barrier shall be left in place even with the ground or sidewalk after backfilling. Follow manufacture recommendation for installation. Material information: 1-800-458-7668.

TREE ROOT BARRIER LB 12-2

FOREST CONSERVATION TRACKING CHART (2)

DPZ FILE Number	Section/ Phase Number	Gross Area	Floodplain	Net Tract Area	Ex. Forest Area	Forest Cleared	Forest Retained	Reforest./Affor. Required	Reforest./Affor. Provided	Excess Reforest./Affor.	Future Forest Clearing	Future Refor./Affor.	Comments
F-01-137	2 1A/1B	106.20	3.50	102.70	24.70	7.93	16.77	0.61	5.00	4.39	4.48	3.41	See Note K
F-01-145	2/2	118.90	3.50	115.40	24.80	8.03	16.77	2.95	5.00	2.05	3.28	3.41	See Note A
F-02-55	2/3	137.35	4.00	133.35	34.40	12.53	21.87	1.27	5.00	3.73	2.18	3.91	See Note B
F-02-131	3/1	206.85	21.19	185.66	85.30	39.47	45.83	0.00	5.00	5.00	2.18	3.91	
F-02-178	3/2	220.27	21.27	199.00	87.50	41.67	45.83	0.00	5.00	5.00	2.18	3.91	See Note C
F-03-13	2 /4	264.81	26.57	238.24	98.18	47.15	51.03	0.00	5.00	5.00	2.49	5.24	
F-03-175	2/5/C	267.84	27.40	240.44	98.62	47.59	51.03	0.00	5.74	5.74	2.49	5.24	
F-04-68	2/6/A	277.75	27.40	250.35	98.62	47.59	51.03	0.00	5.74	5.74	2.49	5.24	See Note D
F-04-131	2/4	277.75	27.40	250.35	98.62	47.59	51.03	0.00	8.52	8.52	2.49	3.91	See Note E
F-04-53	2/5/A	306.93	27.51	279.42	98.66	47.63	51.03	2.79	8.71	5.92	2.49	3.91	
F-04-127	2/5/B	332.63	32.43	300.20	115.66	63.31	52.35	8.51	11.48	2.93	2.49	3.91	See Note F
F-05-49	2/1/B	332.63	32.43	300.20	115.66	61.73	53.93	6.53	13.26	6.73	0.49	1.84	See Note G
F-05-93	2/7	341.19	32.43	308.76	115.66	61.73	53.93	7.81	13.26	5.45	0.49	1.84	
F-05-89	2/6/B	347.46	32.43	315.03	121.26	67.33	53.93	10.15	13.49	3.34	0.49	1.84	
SDP-05-124	"FARM POND"	347.46	32.43	315.03	121.26	67.33	53.93	10.15	15.46	5.31	0.49	1.84	
F-07-141	2/8/B	373.80	32.75	341.05	125.82	71.14	54.68	14.27	16.03	1.76	0.49	1.84	See Note H
F-08-82	2/9	426.21	83.88	341.95	126.72	71.14	55.58	13.50	20.53	7.03	0.49	1.84	See Note I
SDP-08-54	3/6	439.29	83.88	355.03	128.20	72.03	56.17	15.00	21.63	5.87	0.49	1.84	See Note J
F-11-036	3/7	484.42	85.55	397.51	142.16	84.64	57.52	24.71	26.35	0.81	0.49	1.84	See Note L

A. 1.20+/- ACRES OF FUTURE FOREST CLEARING SHOWN ON F-01-137 WAS CLEARED FOR SWM ON OPEN SPACE LOT 174.

B. 1.10+/- ACRES OF FUTURE FOREST CLEARING SHOWN ON F-01-137 WAS CLEARED FOR SWM ON OPEN SPACE LOT 176.

C. GROSS AREA INCLUDES 1.07+/- ACRES FOR SANITARY SEWER EXTENSION AND CONTAINS 0.08+/- ACRES OF FLOODPLAIN.

D. GROSS AREA EXCLUDES 0.38 ACRES FOR THE SANITARY SEWER SHOWN ON F-02-178. GROSS AREA ALSO EXCLUDES 0.07 ACRES FOR AREA PREVIOUSLY ACCOUNTED FOR UNDER P-03-16.

E. THIS LINE ITEM ACCOUNTS FOR REFORESTATION PROVIDED RETROSPECTIVELY ON A PHASE THAT PREVIOUSLY ADDRESSED FOREST CONSERVATION. APPROXIMATELY 1.33 ACRES OF FUTURE REFORESTATION AREA WILL BE USED UNDER THIS REFORESTATION PLAN.

F. GROSS AREA EXCLUDES 0.52± ACRES FOR SANITARY SEWER SHOWN ON F-02-178, A GROSS AREA INCLUDES 2.37 ACRES FOR THE WETLAND MITIGATION SITE. FLOODPLAIN INCLUDES 1.2 ACRES FOR THE MITIGATION AREA FLOODPLAIN.

G. APPROXIMATELY 0.42 ACRES OF FUTURE CLEARING/FUTURE REFORESTATION IS BEING CLEARED AND IS NOT BEING REFORESTED. APPROXIMATELY 1.58 ACRES OF FUTURE CLEARING/FUTURE REFORESTATION IS BEING RETAINED. APPROXIMATELY 0.13 ACRES OF FUTURE REFORESTATION IS BEING REFORESTED.

H. GROSS AREA EXCLUDES 0.13 AC FOR SEWER SHOWN ON F-02-178. GROSS AREA ALSO EXCLUDES 2.37 AC FOR WETLAND MITIGATION AREA COUNTED UNDER F-04-127. FLOODPLAIN EXCLUDES 1.20 AC FOR MITIGATION AREA FLOOD PLAIN COUNTED UNDER F-04-127.

I. NET TRACT AREA EXCLUDES 0.38 ACRES OUTSIDE THE FLOODPLAIN WITHIN THE BGE SETBACK.

J. 0.76 ACRES OF EXCESS REFORESTATION/ AFFORESTATION ARE ALLOCATED TO SATISFY A PORTION OF THE REFORESTATION REQUIREMENT FOR F-01-204. ACREAGES SHOWN FOR "FOREST CLEARED, FOREST RETAINED, REFOREST./AFFOR. REQUIRED, AND REFOREST./AFFOR. PROVIDED" HAVE BEEN REVISED TO REFLECT REDLINE FOREST CONSERVATION CHANGES THAT WERE MADE TO ACCOUNT FOR ADDITIONAL FOREST CLEARING NECESSARY FOR CONSTRUCTION OF THE NORTHERN STREAM CROSSING ON F-11-036.

K. APPROXIMATELY 0.03 ACRES OF FCE AREA "I" WAS ABANDONED FOR F-01-137.

L. NET TRACT AREA EXCLUDES 0.98 ACRES OUTSIDE THE FLOODPLAIN WITHIN THE BGE SETBACK. THE AMOUNT OF "REFOREST./AFFOR. PROVIDED" SHOWN REFLECTS ADDITIONAL REFORESTATION ACREAGE (0.13± AC.) RESULTING FROM REDLINE FOREST CONSERVATION PLAN CHANGES THAT WERE MADE ON F-04-127 TO ACCOUNT FOR ADDITIONAL FOREST CLEARING NECESSARY FOR CONSTRUCTION OF THE STREAM CROSSINGS ON F-11-036.

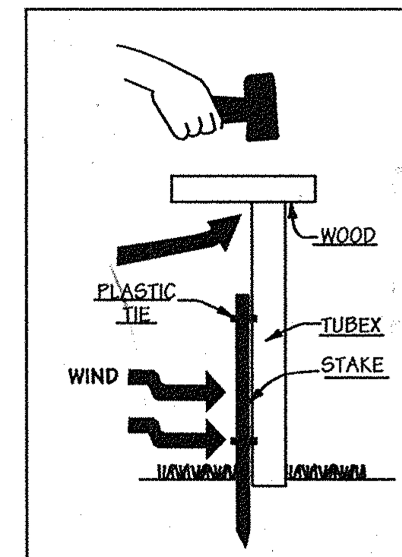

Tubex Installation
NOT TO SCALE

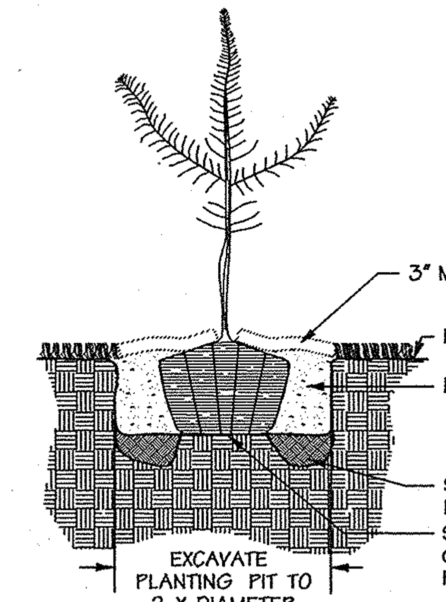

Typical Tree Planting
(For container grown whips)

Not To Scale

PLANTING PROCEDURES FOR ALL CONTAINER GROWN TREES AND SHRUBS:

1. REMOVE THE PLANT EITHER BY CUTTING OR INVERTING THE CONTAINER

2. GENTLY LOOSEN ROOTS FROM SOILS. ROOTS MAY NOT BE CUT OR TRIMMED ON SITE

3. PLANT SHRUB OR TREE 1 TO 2 INCHES ABOVE THE EXISTING GRADE

4. APPLY 2 TO 3 INCH THICK LAYER OF SHREDDED HARDWOOD MULCH

1/5/12
Date

Professional LA. No. 505

APPROVED: HOWARD COUNTY DEPT. OF PUBLIC WORKS

CHIEF, BUREAU OF HIGHWAYS — DATE 2-23-12

APPROVED: HOWARD COUNTY DEPT. OF PLANNING & ZONING

CHIEF, DEVELOPMENT ENGINEERING DIVISION — DATE 2/28/12

CHIEF, DIVISION OF LAND DEVELOPMENT — DATE 3/01/12

Date	No.	Revision Description
2-16-16	2	REVISE FOREST CONSERVATION CHART
2-10-14	1	UPDATE OWNER/DEVELOPER INFO.

EMERSON

SECTION 3 - AREA 7 - PARCEL A
"Future Employment Use"

OWNER/DEVELOPER:
(1) EMERSON DEVELOPMENT IX LLC
ONE TEXAS STATION COURT, SUITE 200
TIMONIUM, MD. 21093 (443)689-8000

DMW
Daft·McCune·Walker, Inc.
200 East Pennsylvania Avenue
Towson, Maryland 21286
(410) 296-3333
Fax 296-4705

A Team of Land Planners, Landscape Architects, Engineers, Surveyors & Environmental Professionals

SUBDIVISION NAME	SECTION/AREA	LOT/PARCEL #
EMERSON	SEC.3 AREA 7	PART OF 837

PLAT# OR L/F	GRID #	ZONE	TAX/ZONE MAP	ELECT. DISTRICT	CENSUS TRACT
5289/330	15	MXD-3	47	6TH	6069.03

WATER CODE	SEWER CODE
E-15	7520000

TITLE

FINAL PLAN
FOREST CONSERVATION DETAILS

Des By	CRH	Scale	1"=100'
Drn By	CRH	Date	11/17/11
Chk By		Approved	

Proj. No. 95054.W

F-11-036

n:\95054\95054.W\Final Plans\95054W30.FCP2