FINAL ROAD CONSTRUCTION PLAN
THE GLENS AT GUILFORD
LOTS 1-10 & OPEN SPACE LOTS 11-13
A RESUBDIVISION OF LOTS 1 & 2-A, (P.46 & P.815), BLOCK E-3
NORDAU SUBDIVISION
HOWARD COUNTY, MARYLAND

GENERAL NOTES

1. THE CONTRACTOR SHALL NOTIFY "MISS UTILITY" AT 1-800-257-7777 AT LEAST 48 HOURS PRIOR TO ANY EXCAVATION WORK.
2. THE CONTRACTOR IS TO NOTIFY THE FOLLOWING UTILITIES OR AGENCIES AT LEAST FIVE DAYS BEFORE STARTING WORK ON THESE DRAWINGS:

MISS UTILITY:	1-800-257-7777
VERIZON TELEPHONE COMPANY:	410-954-6281
HOWARD COUNTY BUREAU OF UTILITIES:	410-313-2366
AT&T CABLE LOCATION DIVISION:	410-393-3553
B.G.&E. CO. CONTRACTOR SERVICES:	410-850-4620
B.G.&E. CO. UNDERGROUND DAMAGE CONTROL:	410-787-4620
STATE HIGHWAY ADMINISTRATION:	410-531-5533

3. THE CONTRACTOR SHALL NOTIFY THE DEPARTMENT OF PUBLIC WORKS/BUREAU OF ENGINEERING/CONSTRUCTION INSPECTION DIVISION AT (410) 313-1880 AT LEAST FIVE (5) WORKING DAYS PRIOR TO START OF WORK.
4. ANY DAMAGE TO PUBLIC RIGHTS-OF-WAY, PAVING, OR EXISTING UTILITIES WILL BE CORRECTED AT THE CONTRACTOR'S EXPENSE.
5. ALL CONSTRUCTION SHALL BE IN ACCORDANCE WITH THE LATEST STANDARDS AND SPECIFICATIONS OF HOWARD COUNTY PLUS MSHA STANDARDS AND SPECIFICATIONS IF APPLICABLE.
6. TRAFFIC CONTROL DEVICES, MARKINGS AND SIGNING SHALL BE IN ACCORDANCE WITH THE LATEST EDITION OF THE MANUAL ON UNIFORM TRAFFIC CONTROL DEVICES (MUTCD).
7. IN ACCORDANCE WITH SECTION 128 OF THE HOWARD COUNTY ZONING REGULATIONS, BAY WINDOWS, CHIMNEYS, OR EXTERIOR STAIRWAYS NOT MORE THAN 16 FEET IN WIDTH MAY PROJECT NOT MORE THAN 4 FEET INTO ANY SETBACKS. PORCHES OR DECKS, OPEN OR ENCLOSED MAY PROJECT NOT MORE THAN 10 FEET INTO THE FRONT FRONT OR REAR YARD SETBACK.
8. DRIVEWAYS SHALL BE PROVIDED PRIOR TO RESIDENTIAL OCCUPANCY TO INSURE SAFE ACCESS FOR FIRE AND EMERGENCY VEHICLES PER THE FOLLOWING MINIMUM REQUIREMENTS:
   A) WIDTH - 12 FEET (16 FEET IF SERVING MORE THAN ONE RESIDENCE)
   B) SURFACE - 7 INCHES OF PERMEABLE CONCRETE WITH 12 INCHES ASTM C-33 3/4" TO 2" STONE SUB-BASE
   C) GEOMETRY - MAXIMUM 14% GRADE, MAXIMUM 10% GRADE CHANGE, AND MINIMUM 45 FOOT TURNING RADIUS
   D) STRUCTURES (CULVERTS/BRIDGES) - MUST SUPPORT 25 GROSS TON LOADING (H25 LOADING)
   E) DRAINAGE ELEMENTS - CAPABLE OF SAFELY PASSING 100 YEAR FLOOD EVENTS WITH NO MORE THAN 1 FOOT DEPTH OVER DRIVEWAY SURFACE
   F) STRUCTURE CLEARANCES - MINIMUM 12 FEET
   G) MAINTENANCE - SUFFICIENT TO INSURE ALL WEATHER USE
9. SEE DETAIL R-6.01 OF THE HOWARD COUNTY VOLUME IV DESIGN MANUAL FOR THE DRIVEWAY ENTRANCE ON GLENROBBIN PLACE.
10. DEED REFERENCE: L.5125/F.672 .
11. THE PROJECT BOUNDARY AND TOPOGRAPHY IS TAKEN FROM FIELD SURVEY WITH TWO FOOT CONTOUR INTERVALS PREPARED BY CLARK, FINEFROCK, & SACKET, AUGUST 2002 OF PARCEL 46 AND 815.
12. THIS SUBDIVISION IS SUBJECT TO SECTION 18.122B OF THE HOWARD COUNTY CODE. PUBLIC WATER AND/OR SEWER SERVICE HAS BEEN GRANTED UNDER THE TERMS AND PROVISIONS.
13. STORM WATER MANAGEMENT (CPv, REv AND WQv) TO BE PROVIDED FOR THIS DEVELOPMENT BY ENVIRONMENTAL SITE DESIGN UTILIZING 6 MICRO-BIORETENTION, RAIN BARRELS, PERVIOUS DRIVEWAYS AND SIDEWALKS. MICRO-BIORETENTION FACILITIES TO BE MAINTAINED BY THE HOA.
14. THE OFFSITE 100-YR FLOODPLAIN INDICATED IS TAKEN FROM HOWARD COUNTY FEMA PANELS #240044-0039 AND #240044-0043. THERE ARE NO FLOODPLAINS ON THIS SITE.
15. FOREST STAND DELINEATION PLAN AND WETLAND REPORT PREPARED BY ENVIRONMENTAL SYSTEMS ANALYSIS, DATED DECEMBER, 2002. THERE ARE NO WETLANDS ON THIS SITE.
16. THE FOREST CONSERVATION REQUIREMENTS PER SECTION 16.200 OF THE HOWARD COUNTY CODE; FOREST CONSERVATION ACT FOR THIS SUBDIVISION HAVE BEEN FULFILLED BY 0.17 AC. OF RETENTION AND 0.28 AC. OF REFORESTATION PROVIDED ONSITE. THE REMAINING 0.89 AC. IS PROVIDED IN AN OFFSITE EASEMENT. A SURETY IN THE AMOUNT OF $30,044.00 IS TO BE POSTED AS PART OF THE DEVELOPER'S AGREEMENT. POSTED AS PART OF THE DEVELOPER'S AGREEMENT.
    RETENTION - 0.17 AC. (7,405.20 X .20 = $ 1,482.00)
    REFORESTATION ONSITE- 0.28AC. (12,197 SF x .50 = $7,581.00)
    RETENTION OFFSITE- 3.51 AC. (152,895.60SF x .20 = $30,574.12)
    RETENTION OFFSITE- NORDAU SUBDIVISION, LOTS 8 & 9, PLAT BOOK: 3, PAGE: 51
17. APFO TRAFFIC STUDY PREPARED BY STREET TRAFFIC STUDIES, LTD., DATED DECEMBER, 2002 AND APPROVED BY SKETCH PLAN 4/28/03.
18. TO THE BEST OF THE OWNERS KNOWLEDGE, THERE ARE NO BURIAL/CEMETERY LOCATIONS ON SITE.
19. NOISE STUDY IS NOT REQUIRED BASED ON DESIGN MANUAL, SECTION 5.2.F GUIDELINES. 5.2.F GUIDELINES.
20. THE SUBJECT PROPERTY IS ZONED "R-12" IN ACCORDANCE WITH THE 2/2/04 COMPREHENSIVE ZONING PLAN AND THE COMP. LITE ZONING REGULATIONS EFFECTIVE ON 7/28/06, AND IS SUBJECT TO THE SUBDIVISION AND LAND DEVELOPMENT REGULATIONS EFFECTIVE 10/2/03 PER COUNCIL BILL 75-2003.
21. ALL SIGN POST USED FOR TRAFFIC CONTROL SIGNS INSTALLED IN THE COUNTY RIGHT-OF-WAY SHALL BE MOUNTED ON A 2" GALVANIZED STEEL, PERFORATED, SQUARE TUBE POST (14 GAUGE) INSERTED INTO A 2-1/2" GALVANIZED STEEL, PERFORATED, SQUARE RUBE SLEEVE (12 GUAGE-3' LONG. A GALVANIZED STEEL POLE CAP SHALL BE MOUNTED ON TOP OF EACH POST.
22. DPZ REFERENCE: P-07-15, S-03-011, WP-10-059.
23. MARY LANE IS A LOCAL PUBLIC ROAD.
24. ALL EXISTING WELLS AND SEPTIC AREAS WITHIN 100' OF THE SITE HAVE BEEN SHOWN TO THE BEST OF OUR KNOWLEDGE. THE EXISTING WELL ON OPEN SPACE LOT 12 TO BE ABANDONED.
25. THE FINAL PAVING SECTION TO BE CONFIRMED BY HOWARD COUNTY CONSTRUCTION INSPECTION DESIGN.
26. STREET LIGHT PLACEMENT AND THE TYPE OF FIXTURES AND POLES SHALL BE IN ACCORDANCE WITH THE HOWARD COUNTY DESIGN MANUAL, VOLUME III (2006) SECTION 5.5.A. A MINIMUM SPACING OF 20' SHALL BE MAINTAINED BETWEEN ANY STREET LIGHT AND ANY TREE.
27. THE COORDINATES SHOWN HEREON ARE BASED UPON THE HOWARD COUNTY GEODETIC CONTROL WHICH IS BASED UPON THE MARYLAND STATE PLANE COORDINATE SYSTEM. HOWARD COUNTY MONUMENT NOS. 0080 AND 421A WERE USED FOR THIS PROJECT.
28. THE PROJECT IS IN CONFORMANCE WITH THE 5TH EDITION OF THE HOWARD COUNTY SUBDIVISION REGULATIONS.
29. SOILS INFORMATION WAS TAKEN FROM THE USDA WEB SOIL SURVEY.
30. ALL LOTS TO BE SERVED BY THE PRIVATE ACCESS PLACE. (GLENROBBIN PLACE)
31. FOR FLAG OR PIPESTEM LOT, REFUSE COLLECTION, SNOW REMOVAL AND ROAD MAINTENANCE ARE PROVIDED TO THE JUNCTION OF THE PRIVATE FLAG OR PIPESTEM AND THE PUBLIC ROAD RIGHT-OF-WAY, AND NOT ONTO THE FLAG OR PIPESTEM LOT DRIVEWAY.
32. THE OPEN SPACE LOTS (11-13) WILL BE OWNED AND MAINTAINED BY A HOMEOWNERS ASSOCIATION.
33. THERE ARE NO SLOPES IN EXCESS OF 15% ON THE PROPERTY.
34. THE SITE IS LOCATED IN THE METROPOLITAN DISTRICT.
35. THE GEOTECHNICAL REPORT FOR THIS PROJECT WAS PREPARED BY HILLES-CARNES, DATED NOVEMBER 3, 2006
36. THIS 4'X10' CONCRETE TRASH PAD (6 INCHES IN DEPTH) WILL BE MAINTAINED BY THE OWNERS OF LOTS 1-10 PURSUANT TO THE DECLARATION OF RIGHT OF ACCESS AND MAINTENANCE OBLIGATIONS RECORDED AMONG THE LAND RECORDS OF HOWARD COUNTY.
37. THE SIDEWALK ADJACENT TO MARY LANE WILL SERVE AS A CHILD STANDING PAD IN ACCORDANCE WITH THE APPROVAL OF THE BOARD OF EDUCATION.
38. A PRIVATE ROAD STREET NAME SIGN (SNS) THAT NEEDS TO BE INSTALLED AT THE INTERSECTION OF THE PRIVATE ROAD WITH A PUBLIC ROAD, SHALL BE FABRICATED AND INSTALLED BY HOWARD COUNTY BUREAU OF HIGHWAYS AT THE DEVELOPERS EXPENSE. CONTACT HOWARD COUNTY TRAFFIC DIVISION AT 410-313-5752 FOR DETAILS AND COST ESTIMATES.
39. THERE ARE NO STREAMS AND WETLANDS LOCATED WITHIN THE PROPERTY.
40. STREET TREES ARE REQUIRED FOR THIS SUBDIVISION IN ACCORDANCE WITH SECTION 16.124(e)(1) OF THE SUBDIVISION REGULATIONS AND THE LANDSCAPE MANUAL. A MINIMUM OF 20' SHALL BE MAINTAINED BETWEEN STREET LIGHTS AND TREES.
41. EXISTING UTILITY LOCATIONS SHOWN ARE TAKEN FROM AVAILABLE RECORDS.
42. THIS PLAN IS SUBJECT WP-10-059 APPROVED NOVEMBER 18, 2009 TO WAIVE SECTION 16.121(a)(3)(III) - PARKING LOT ISLANDS, DRIVEWAY EASEMENTS SERVING NON-OPEN SPACE USES, OVERHEAD UTILITY TRANSMISSION LINES, AND NARROW STRIPS UNDER 35 FEET WIDE MAY NOT COUNT TOWARDS MINIMUM OPEN SPACE REQUIREMENTS TO PROVIDE CREDITED OPEN SPACE AREAS LESS THEN 35' IN WIDTH SUBJECT TO THE OPEN SPACE LOTS MUST BE DEDICATED TO THE HOMEOWNERS ASSOCIATION.
43. LANDSCAPING IS BEING PROVIDED IN ACCORDANCE WITH SECTION 16.124(e)(1) OF THE SUBDIVISION REGULATIONS AND THE LANDSCAPE MANUAL. SURETY IN THE AMOUNT OF $15,450.00 (36 STREET TREES X $300.00 EACH = $10,800) + (14 SHADE TREES X $300.00 EACH = $4,200) + (3 EVERGREEN TREES X $150.00 = $450.00).
44. OFFSITE FOREST CONSERVATION EASEMENT PLAN TOPOGRAPHY BASED ON A SURVEY PREPARED BY PATTON, HARRIS, RUST & ASSOCIATES. BOUNDARY BASED ON PLAT BOOK 3, PAGE 51.
45. *ROOF DRAINS FOR CARPORTS TO BE OUTLET INTO THIS PERVIOUS DRIVEWAY. SUB-BASE TO INFILTRATE OVERFLOW PIPES TO BE INSTALLED IN CASE OF CLOGGING OR SATURATION. GUTTER SCREENS TO BE UTILIZED AS PRETREATMENT MEASURE.*

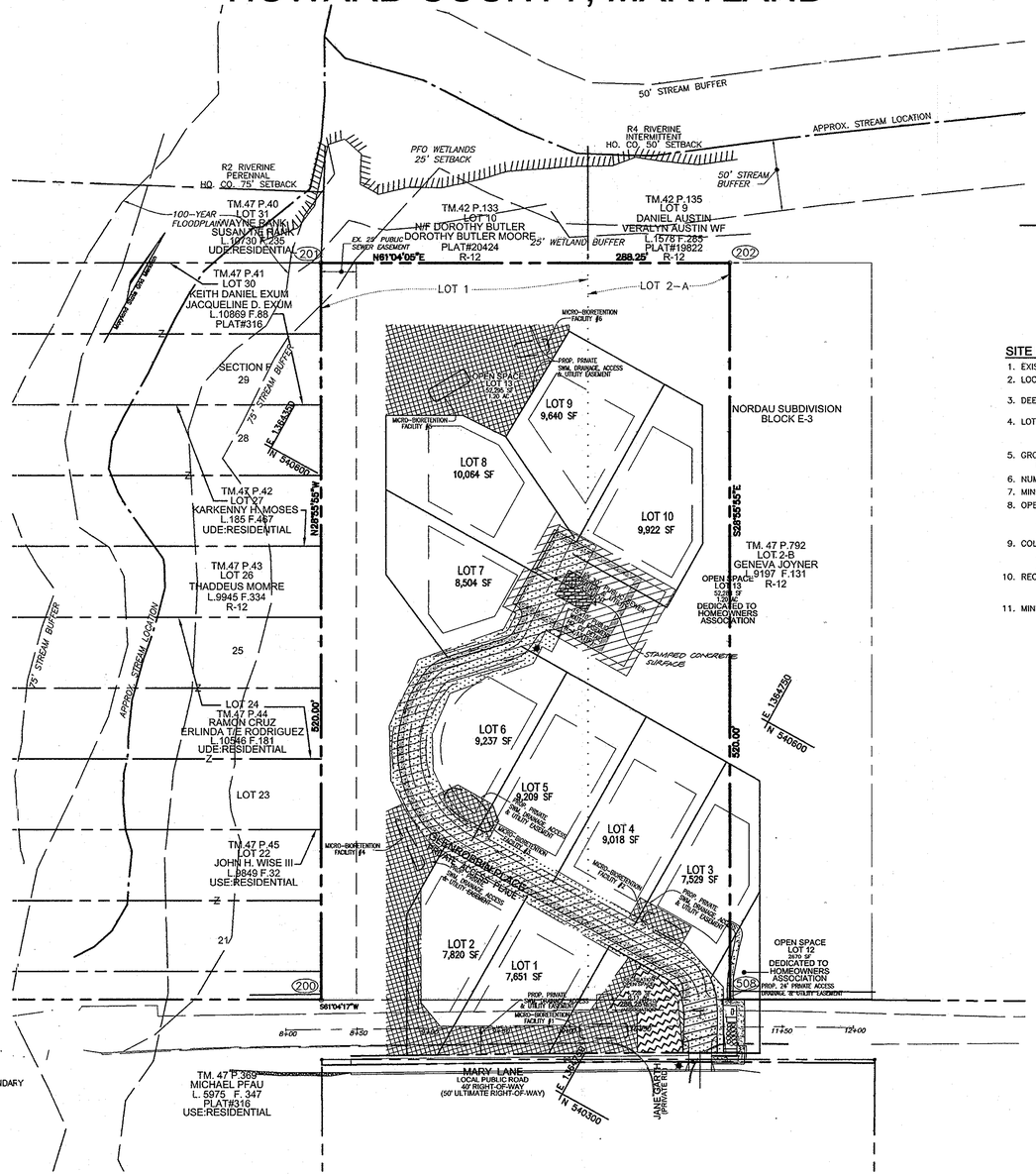

LEGEND

- EXISTING CONTOUR ---------- 382
- PROPOSED CONTOUR 82
- EXISTING SPOT ELEVATION +382.56
- PROPOSED SPOT ELEVATION +82.53
- DIRECTION OF FLOW
- EXISTING TREES TO REMAIN
- LIGHT POLES
- LIMIT OF WETLAND
- WETLAND BUFFER
- 100YR FLOOD PLAIN
- PUBLIC SEWER, WATER AND UTILITY EASEMENT
- EXISTING PARCEL/LOT DIVIDE LINE
- MICRO-BIO RETENTION FACILITY
- RECREATION OPEN SPACE
- PRIVATE ACCESS DRAINAGE AND UTILITY EASEMENT
- 4' PAINTED SIDEWALK

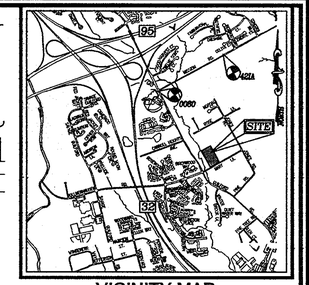

VICINITY MAP
SCALE : 1"=2000'
ADC COORDINATE: 5053 K6

MARY LANE
LOCAL PUBLIC ROAD
40' RIGHT-OF-WAY
(50' ULTIMATE RIGHT-OF-WAY)
LOT FRONTAGE DETAIL
SCALE=1"=20'

SITE DATA

1. EXISTING ZONING R-12
2. LOCATION: TAX MAP 42, GRID 24, TAX MAP 47, GRID 6, 6TH ELECTION DISTRICT
3. DEED REFERENCE LOT 1 & 2A (P.46 & P.815) L.6243, F.570
4. LOT AREA
   LOT 1 PLAT BOOK 3, FOLIO 51 2.25 ACRES
   LOT 2A PLAT BOOK 10, FOLIO 76 1.19 ACRES
5. GROSS TRACT AREA 3.44 ACRES
   MARY LANE RIGHT OF WAY DEDICATION 0.03 ACRES
6. NUMBER OF LOTS PROPOSED 10
7. MINIMUM LOT SIZE 7,400 S.F.
8. OPEN SPACE
   MINIMUM LOT SIZE OPTION 7,200 S.F. 40% REQUIRED
   GROSS TRACT AREA x 40% 1.37 ACRES
   OPEN SPACE PROVIDED(LOTS 11, 12 & 13) 1.37 ACRES
9. COLLECTIVE LOT AREAS
   AREA OF PROPOSED BUILDABLE LOTS 2.02 AC.
   AREA OF OPEN SPACE LOTS 11, 12, & 13 1.37 AC.
10. RECREATION OPEN SPACE REQUIRED
    10 LOTS @ 200 S.F. / LOT 2,000 S.F.
    REC. OPEN SPACE PROVIDED(LOT 11) 2,000 S.F.
11. MINIMUM SETBACKS
    FRONT 20'
    SIDE 7.5'
    REAR 30'

BENCHMARKS

NO.	NORTHING	EASTING	ELEVATION	TYPE
421A	N 543390.409	E 1364912.625	311.956	CONC. MONUMENT
0080	N 542366.913	E 1363075.951	282.350	CONC. MONUMENT

MINIMUM LOT SIZE CHART

LOT NO.	GROSS AREA	PIPE STEM AREA	MINIMUM LOT SIZE
1	7,651 SF	250 SF	7,401 SF
2	7,820 SF	418 SF	7,402 SF
3	7,529 SF	126 SF	7,403 SF
4	9,018 SF	279 SF	8,739 SF
5	9,209 SF	429 SF	8,780 SF
6	9,237 SF	576 SF	8,661 SF
7	8,504 SF	954 SF	7,550 SF
8	10,064 SF	1,180 SF	8,884 SF
9	9,640 SF	1,261 SF	8,379 SF
10	9,922 SF	1,232 SF	8,690 SF

SHEET INDEX

DESCRIPTION	SHEET NO.
COVER SHEET	1 OF 9
FINAL ROAD CONSTRUCTION PLAN, PROFILE, CROSS SECTIONS & DETAILS	2 OF 9
GRADING, SEDIMENT & EROSION CONTROL PLAN	3 OF 9
SEDIMENT & EROSION CONTROL DETAILS	4 OF 9
STORMDRAIN DRAINAGE AREA MAP & SOILS MAP	5 OF 9
STORM DRAIN PROFILES	6 OF 9
LANDSCAPE AND FOREST CONSERVATION PLAN	7 OF 9
FOREST CONSERVATION DETAILS	8 OF 9
OFFSITE FOREST CONSERVATION EASEMENT PLAN	9 OF 9

COORDINATE LIST

NO.	NORTHING	EASTING
200	540275.8447	1364569.1698
201	540730.9603	1364317.6350
202	540870.3928	1364569.9179
508	540415.2772	1364821.4527

OWNER/DEVELOPER

HOWARD COUNTY HOUSING COMMISSION
6751 COLUMBIA GATEWAY DRIVE
3RD FLOOR, GATEWAY BUILDING
COLUMBIA, MARYLAND 21044
410-313-6316

NO.	REVISION	DATE
1	ADD MAIL/TRASH ENCLOSURE	11/22/10

APPROVED: DEPARTMENT OF PUBLIC WORKS

CHIEF, BUREAU OF HIGHWAYS — DATE 6-7-10

APPROVED: HOWARD COUNTY DEPARTMENT OF PLANNING AND ZONING

CHIEF, DEVELOPMENT ENGINEERING DIVISION — DATE 6/11/10

CHIEF, DIVISION OF LAND DEVELOPMENT — DATE 6/17/10

FINAL ROAD CONSTRUCTION PLANS
COVER SHEET
THE GLENS AT GUILFORD
LOTS 1-10 & OPEN SPACE LOTS 11-13
A RESUBDIVISION OF LOTS 1 & 2-A, (P.46 & P.815), BLOCK E-3
NORDAU SUBDIVISION
TAX MAP #47 GRID 6 & 24 PARCELS 46 & 815
6TH ELECTION DISTRICT HOWARD COUNTY, MARYLAND

ROBERT H. VOGEL ENGINEERING, INC.
ENGINEERS • SURVEYORS • PLANNERS
8407 MAIN STREET ELLICOTT CITY, MD 21043
TEL: 410.461.7666 FAX: 410.461.8961

STATE OF MARYLAND — ROBERT HARRIS VOGEL — No. 16193 — PROFESSIONAL ENGINEER
ROBERT H. VOGEL, P.E. 16193

DESIGN BY: JCO
DRAWN BY: KG
CHECKED BY: RHV
DATE: APRIL 2010
SCALE: 1"=50'
W.O. NO.: 08-35

PROFESSIONAL CERTIFICATE
I HEREBY CERTIFY THAT THESE DOCUMENTS WERE PREPARED OR APPROVED BY ME, AND THAT I AM A DULY LICENSED PROFESSIONAL ENGINEER UNDER THE LAWS OF THE STATE OF MARYLAND, LICENSE NO. 16193 EXPIRATION DATE: 09-27-2010

SHEET 1 OF 9

F-09-112

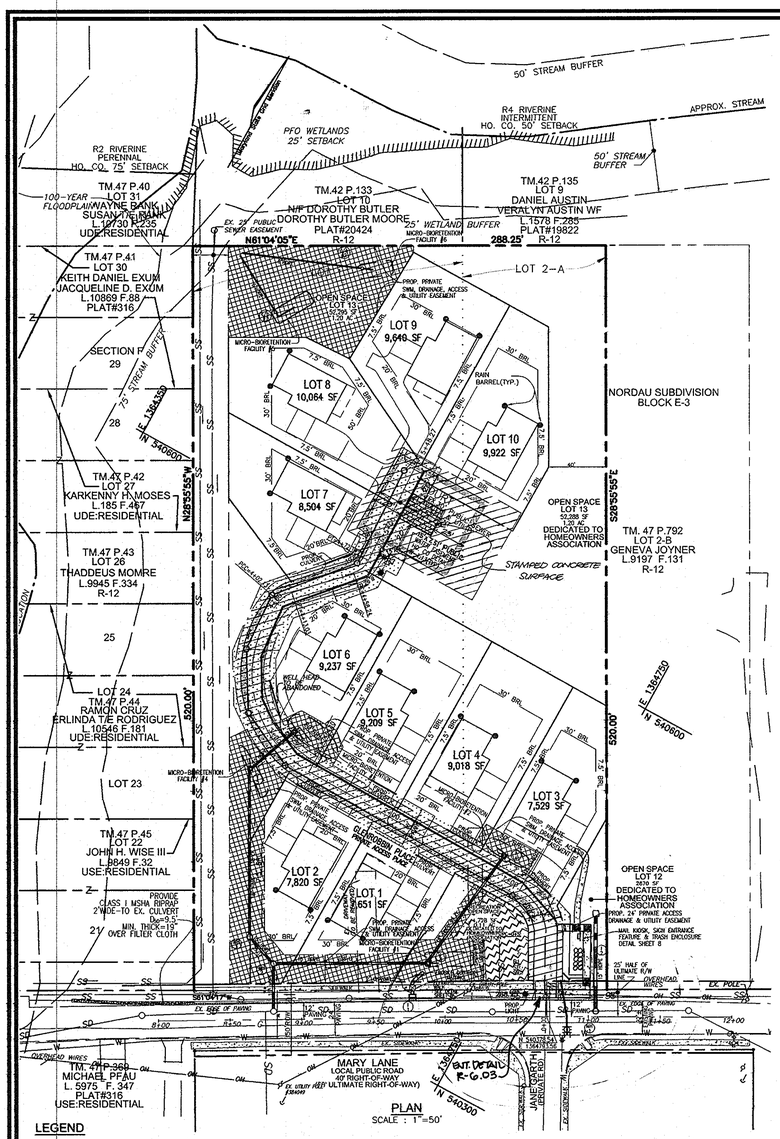

STREET LIGHT CHART

QUANTITY	SYMBOL	FIXTURE/POLE TYPE
1	✸	GREENWAY SERIES 130 WATT LED MOUNTED ON 4" I.D. SCH 40 STRAIGHT ALUMINUM POLE–20' DIRECT BURIAL. (MARY LANE) STA. 0+15.96, LT. 15.83'
1	✸	GREENWAY SERIES 130 WATT LED MOUNTED ON 4" I.D. SCH 40 STRAIGHT ALUMINUM POLE–20' DIRECT BURIAL. (GLENROBBIN PLACE) STA. 4+69.86, RT. 12.10'

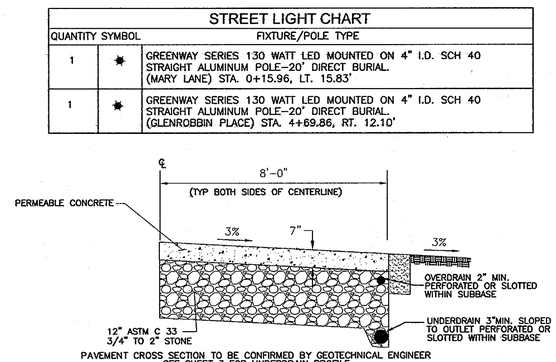

PAVEMENT CROSS SECTION TO BE CONFIRMED BY GEOTECHNICAL ENGINEER SEE SHEET 3 FOR UNDERDRAIN PROFILE

DETAIL - PERMEABLE CONCRETE GLENROBBIN PLACE

NOT TO SCALE

ALL PERMEABLE CONCRETE THICKNESS, MIX AND SUB-BASE TO BE DETERMINED BY GEOTECHNICAL ENGINEER ONSITE.

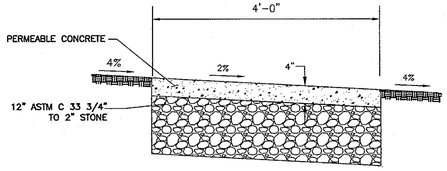

MARY LANE

DETAIL - PERMEABLE CONCRETE SIDEWALK

NOT TO SCALE

ALL PERMEABLE CONCRETE THICKNESS, MIX AND SUB-BASE TO BE DETERMINED BY GEOTECHNICAL ENGINEER ONSITE.

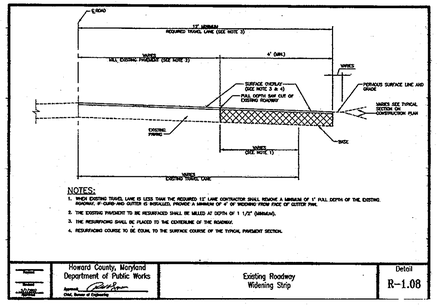

NOTES:

1. WHEN EXISTING TRAVEL LANE IS LESS THAN THE REQUIRED 12' LANE CONTRUCTION SHALL REMOVE A MINIMUM OF 1" FULL DEPTH OF THE EXISTING ROADWAY, 4" CURB AND GUTTER IS INSTALLED, PROVIDE A MINIMUM OF 4" OF WIDENING FROM FACE OF GUTTER PAN.
2. THE EXISTING PAVEMENT TO BE RESURFACED SHALL BE MILLED AT DEPTH OF 1 1/2" (MINIMUM).
3. THE RESURFACING SHALL BE PLACED TO THE CENTERLINE OF THE ROADWAY.
4. RESURFACING COURSE TO BE EQUAL TO THE SURFACE COURSE OF THE TYPICAL PAVEMENT SECTION.

Howard County, Maryland Department of Public Works	Existing Roadway Widening Strip	Detail R-1.08

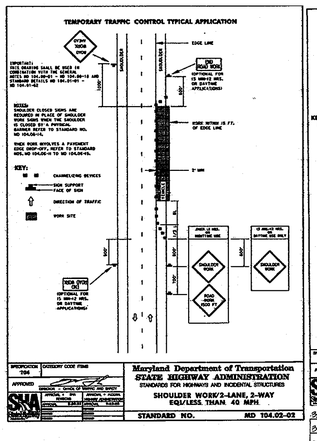

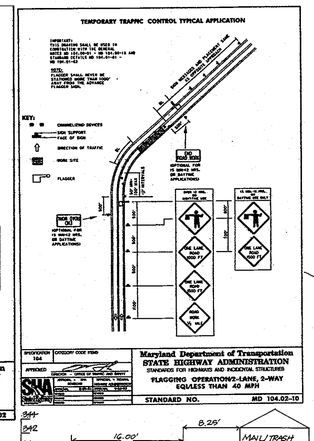

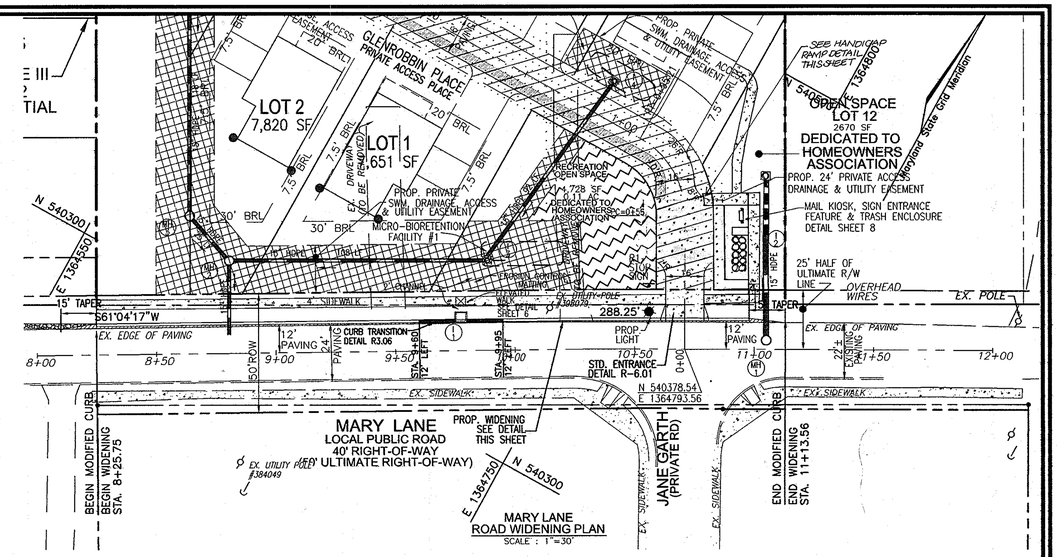

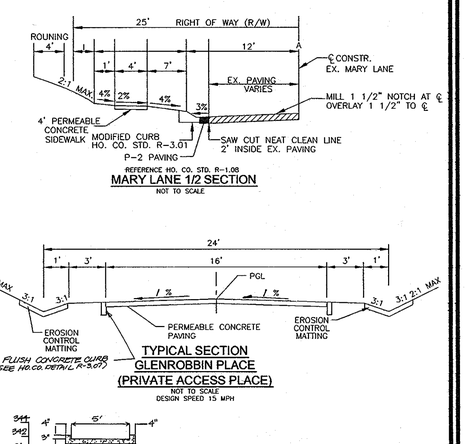

REFERENCE HO. CO. STD. R-1.08

MARY LANE 1/2 SECTION

NOT TO SCALE

FLUSH CONCRETE CURB (SEE HA.CO. DETAIL R-3.07)

TYPICAL SECTION GLENROBBIN PLACE (PRIVATE ACCESS PLACE)

NOT TO SCALE

DESIGN SPEED 15 MPH

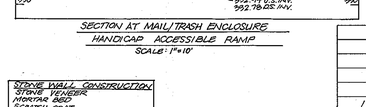

SECTION AT MAIL/TRASH ENCLOSURE

HANDICAP ACCESSIBLE RAMP

SCALE: 1"=10'

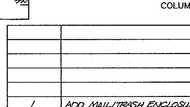

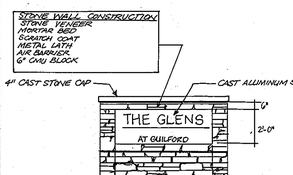

ENTRY SIGN DETAIL

NOT TO SCALE

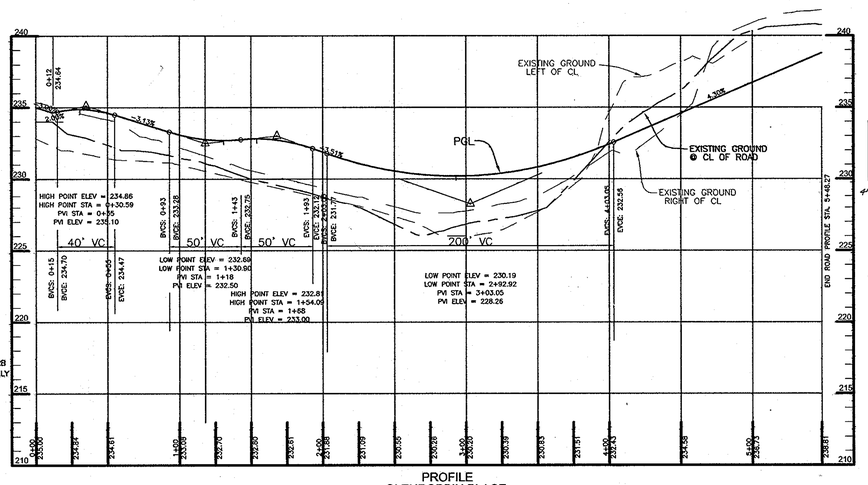

PROFILE
GLENROBBIN PLACE
PRIVATE ACCESS PLACE
DESIGN SPEED : 15 MPH
SCALE: HOR. 1"=50'
VERT. 1"=5'

SIGNAGE LOCATION CHART

STREET NAME	STATION	OFFSET	FIXTURE/POLE TYPE
GLENROBBIN PLACE	0+26.51	15' LEFT	R1-1 STOP SIGN

DRIVEWAY CULVERT CHART

LOT NO.	LENGTH	SIZE	TYPE
1	20'	12"	HDPE
2	20'	12"	HDPE
3	22'	12"	HDPE
4	22'	12"	HDPE
5	20'	12"	HDPE
6	29'	12"	HDPE
7	22'	12"	HDPE

LEGEND

- BOUNDARY LINE
- PROP. STREET LIGHT
- PROP. STREET SIGNS
- RECREATIONAL OPEN SPACE
- 4' SIDEWALK
- REFORESTATION AREA
- RETENTION AREA
- NEW PAVING AREA
- PRIVATE ACCESS DRAINAGE AND UTILITY EASEMENT
- PRIVATE SWM EASEMENT
- PUBLIC SEWER, WATER AND UTILITY EASEMENT

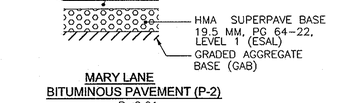

MARY LANE

BITUMINOUS PAVEMENT (P-2)

P-2.01

NOT TO SCALE

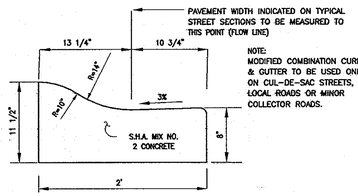

NOTE: MODIFIED COMBINATION CURB & GUTTER TO BE USED ONLY ON CUL-DE-SAC STREETS, LOCAL ROADS OR MINOR COLLECTOR ROADS.

MODIFIED CURB & GUTTER

HOWARD COUNTY STANDARD R3.01

NOT TO SCALE

APPROVED: DEPARTMENT OF PUBLIC WORKS

CHIEF, BUREAU OF HIGHWAYS — DATE 6-7-10

APPROVED: HOWARD COUNTY DEPARTMENT OF PLANNING AND ZONING

CHIEF, DEVELOPMENT ENGINEERING DIVISION — DATE 6/11/10

CHIEF, DIVISION OF LAND DEVELOPMENT — DATE 6/7/10

NO.	REVISION	DATE
1	ADD MAIL/TRASH ENCLOSURE	11-22-10

FINAL ROAD CONSTRUCTION PLANS

FINAL ROAD CONSTRUCTION PLAN, PROFILE, CROSS SECTIONS & DETAILS

THE GLENS AT GUILFORD

LOTS 1-10 & OPEN SPACE LOTS 11-13

A RESUBDIVISION OF LOTS 1 & 2-A, (P.46 & P.815), BLOCK E-3

NORDAU SUBDIVISION

TAX MAP #47 GRID 6 & 24 PARCELS 46 & 815

6TH ELECTION DISTRICT HOWARD COUNTY, MARYLAND

OWNER/DEVELOPER

HOWARD COUNTY HOUSING COMMISSION
6751 COLUMBIA GATEWAY DRIVE
3RD FLOOR, GATEWAY BUILDING
COLUMBIA, MARYLAND 21044
410-313-6316

ROBERT H. VOGEL ENGINEERING, INC.
ENGINEERS • SURVEYORS • PLANNERS
8407 MAIN STREET TEL: 410.461.7666
ELLICOTT CITY, MD 21043 FAX: 410.461.8961

STATE OF MARYLAND — ROBERT HARRIS VOGEL — No. 16193 — PROFESSIONAL ENGINEER

ROBERT H. VOGEL, P.E. 16193

PROFESSIONAL CERTIFICATE

I HEREBY CERTIFY THAT THESE DOCUMENTS WERE PREPARED OR APPROVED BY ME, AND THAT I AM A DULY LICENSED PROFESSIONAL ENGINEER UNDER THE LAWS OF THE STATE OF MARYLAND, LICENSE NO. 16193 EXPIRATION DATE: 09-27-2010

DESIGN BY:	JCO
DRAWN BY:	KG
CHECKED BY:	RHV
DATE:	APRIL 2010
SCALE:	AS SHOWN
W.O. NO.:	08-35

SHEET 2 OF 9

F-09-112

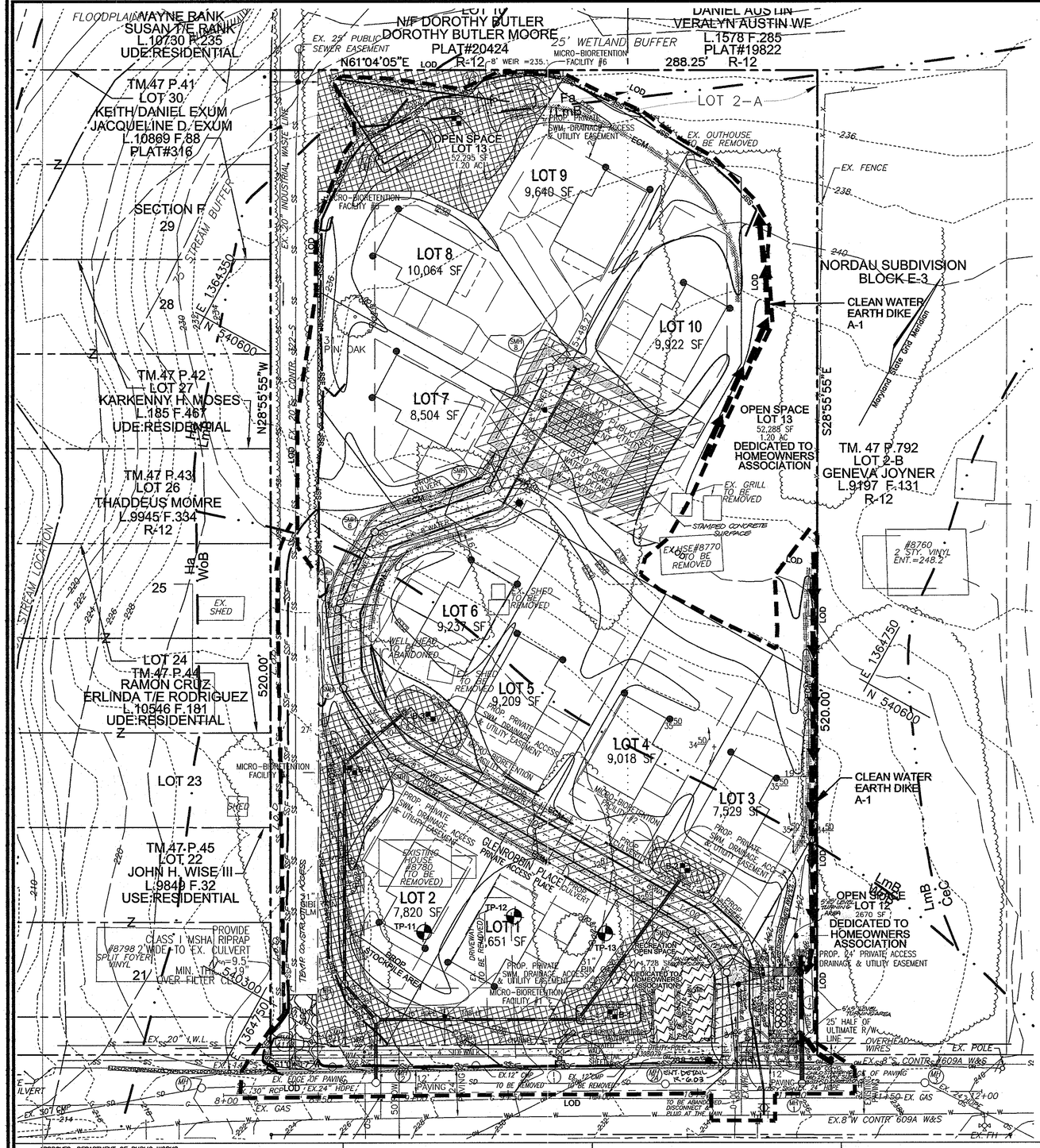

SOILS LEGEND		
SYMBOL	DESCRIPTION	TYPE
CeC	CHILLUM LOAM, 5 TO 10 PERCENT SLOPES	B
CrD	CROOM AND EVESBORO SOILS, 10 TO 15 PERCENT SLOPES	C
Fa	FALLSINGTON SANDY LOAM, 0 TO 2 PERCENT SLOPES	D
Ha	HATBORO-CORDORUS SILT LOAMS, MO TO 3 PERCENT SLOPES	D
LeC	LEGORE SILT LOAM, 8 TO 15 PERCENT SLOPES, STONY	B
LmB	LEGORE-MONTALTO SILT LOAMS, 3 TO 8 PERCENT SLOPES	B
UcB	URBAN LAND-CHILLUM-BELTSVILLE COMPLEX, 0 TO 5 PERCENT SLOPES	B
UcD	URBAN LAND-CHILLUM-BELTSVILLE COMPLEX, 5 TO 15 PERCENT SLOPES	B
WoB	WOODSTOWN SANDY LOAM, 2 TO 5 PERCENT SLOPES MODERATELY ERODED	C

NOTES:
1. SOILS INFORMATION WAS TAKEN FROM THE USDA WEB SOIL SURVEY, WWW.WEBSOILSURVEY.NRCS.USDA.GOV.
2. THERE ARE NO SLOPES IN EXCESS OF 15% ON THE PROPERTY.

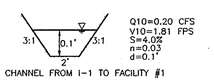

Q10=0.20 CFS
V10=1.81 FPS
S=4.05
n=0.03
d=0.1'

CHANNEL FROM I-1 TO FACILITY #1

CHANNEL DETAIL

NOT TO SCALE

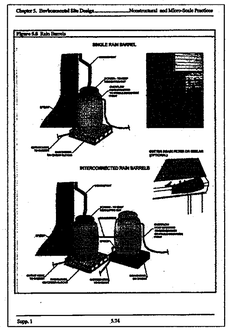

NOTES:
RAIN BARREL SIZE TO BE 55 GALLONS.
EACH HOUSE TO HAVE 4 RAIN BARRELS. LOCATIONS TO BE DETERMINED AT SITE PLAN.

RAIN BARREL DETAIL

NOT TO SCALE

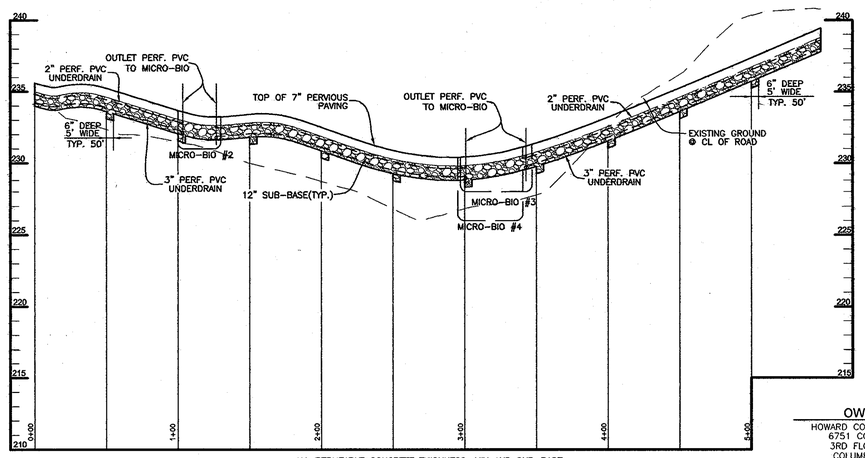

ALL PERMEABLE CONCRETE THICKNESS, MIX AND SUB-BASE TO BE DETERMINED BY GEOTECHNICAL ENGINEER ONSITE.

SUB-BASE UNDERDRAIN PROFILE

SCALE: HOR. 1"=50' VERT. 1"=5'

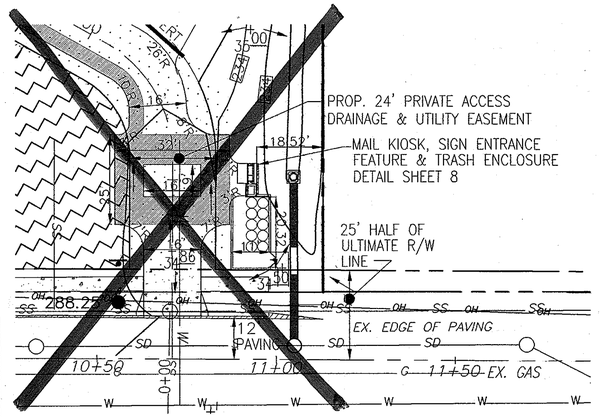

~~MAIL/TRASH ENCLOSURE DETAIL~~

SCALE 1"=20'

LEGEND:

- EXISTING CONTOUR
- PROPOSED CONTOUR
- PROPOSED SPOT ELEVATION
- EXISTING SPOT ELEVATION
- EXISTING CURB AND GUTTER
- PROPOSED CURB AND GUTTER
- EXISTING UTILITY POLE
- EXISTING LIGHT POLE
- EXISTING MAILBOX
- EXISTING SIGN
- EXISTING SANITARY MANHOLE
- EXISTING SANITARY LINE
- EXISTING CLEANOUT
- EXISTING FIRE HYDRANT
- EXISTING WATER LINE
- PROPOSED STORM DRAIN
- PROPOSED STORM DRAIN INLET
- EXISTING TREELINE
- EXISTING FENCE
- PROPERTY LINE
- RIGHT-OF-WAY LINE
- SOILS BOUNDARY
- PROPOSED SIDEWALK
- SUPER SILT FENCE
- LIMIT OF DISTURBANCE
- CURB INLET PROTECTION
- STABILIZED CONSTRUCTION ENTRANCE
- EROSION CONTROL MATTING
- FOREST CONSERVATION EASEMENT
- STREET LIGHT
- EXISTING PARCEL/LOT DMDE LINE
- WETLAND
- 100 YEAR FLOODPLAIN
- 75' STREAM BUFFER
- WETLANDS
- EXIST. TREE TO REMAIN
- EXIST. TREE TO BE REMOVED
- NEW PAVING AREA
- PRIVATE ACCESS DRAINAGE AND UTILITY EASEMENT
- PRIVATE SWM EASEMENT
- PUBLIC SEWER, WATER AND UTILITY EASEMENT

OWNER/DEVELOPER

HOWARD COUNTY HOUSING COMMISSION
6751 COLUMBIA GATEWAY DRIVE
3RD FLOOR, GATEWAY BUILDING
COLUMBIA, MARYLAND 21044
410-313-6316

NO.	REVISION	DATE
1	ADD MAIL/TRASH ENCLOSURE	11-22-10

APPROVED: DEPARTMENT OF PUBLIC WORKS

CHIEF, BUREAU OF HIGHWAYS — DATE 6-7-10

APPROVED: HOWARD COUNTY DEPARTMENT OF PLANNING AND ZONING

CHIEF, DEVELOPMENT ENGINEERING DIVISION — DATE 6/4/10

CHIEF, DIVISION OF LAND DEVELOPMENT — DATE 6/17/10

THIS DEVELOPMENT PLAN IS APPROVED FOR SOIL EROSION AND SEDIMENT CONTROL BY THE HOWARD SOIL CONSERVATION DISTRICT.

HOWARD S.C.D. — DATE 5/20/10

ENGINEER'S CERTIFICATE:

"I HEREBY CERTIFY THAT THIS PLAN FOR SEDIMENT AND EROSION CONTROL REPRESENTS A PRACTICAL AND WORKABLE PLAN BASED ON MY PERSONAL KNOWLEDGE OF THE SITE CONDITIONS AND THAT IT WAS PREPARED IN ACCORDANCE WITH THE REQUIREMENTS OF THE HOWARD SOIL CONSERVATION DISTRICT."

SIGNATURE OF ENGINEER — DATE 5/16/10

DEVELOPER'S CERTIFICATE:

"I/WE CERTIFY THAT ALL DEVELOPMENT AND CONSTRUCTION WILL BE DONE IN ACCORDANCE TO THIS PLAN OF DEVELOPMENT FOR SEDIMENT CONTROL, AND THAT ALL RESPONSIBLE PERSONNEL INVOLVED IN THE CONSTRUCTION PROJECT WILL HAVE A CERTIFICATE OF ATTENDANCE AT A DEPARTMENT OF ENVIRONMENT APPROVED TRAINING PROGRAM FOR THE CONTROL OF SEDIMENT AND EROSION BEFORE BEGINNING THE PROJECT. I ALSO AUTHORIZE PERIODIC ON-SITE INSPECTIONS BY THE HOWARD SOIL CONSERVATION DISTRICT.

SIGNATURE OF DEVELOPER — DATE May 13, 2010

FINAL ROAD CONSTRUCTION PLANS
GRADING, SEDIMENT & EROSION CONTROL PLAN
THE GLENS AT GUILFORD

LOTS 1-10 & OPEN SPACE LOTS 11-13
A RESUBDIVISION OF LOTS 1 & 2-A, (P.46 & P.815), BLOCK E-3
NORDAU SUBDIVISION

TAX MAP #47 GRID 6 & 24 — PARCELS 46 & 815
6TH ELECTION DISTRICT — HOWARD COUNTY, MARYLAND

ROBERT H. VOGEL ENGINEERING, INC.
ENGINEERS • SURVEYORS • PLANNERS
8407 MAIN STREET
ELLICOTT CITY, MD 21043
TEL: 410.461.7666
FAX: 410.461.8961

STATE OF MARYLAND — ROBERT HARRIS VOGEL — No. 16193 — PROFESSIONAL ENGINEER
ROBERT H. VOGEL, P.E. 16193

DESIGN BY:	JCO
DRAWN BY:	KG
CHECKED BY:	RHV
DATE:	APRIL 2010
SCALE:	1"=30'
W.O. NO.:	08-35

PROFESSIONAL CERTIFICATE

I HEREBY CERTIFY THAT THESE DOCUMENTS WERE PREPARED OR APPROVED BY ME, AND THAT I AM A DULY LICENSED PROFESSIONAL ENGINEER UNDER THE LAWS OF THE STATE OF MARYLAND, LICENSE NO. 16193 EXPIRATION DATE: 09-27-2010

SHEET 3 OF 9

F-09-112

DETAIL 33 - SUPER SILT FENCE

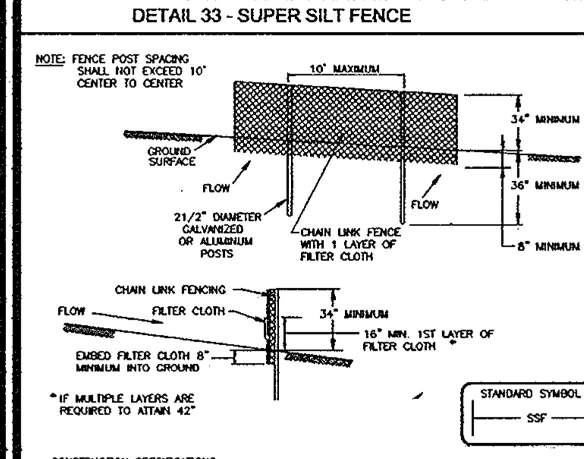

CONSTRUCTION SPECIFICATIONS

1. FENCING SHALL BE 42" IN HEIGHT AND CONSTRUCTED IN ACCORDANCE WITH THE LATEST MARYLAND STATE HIGHWAY DETAILS FOR CHAIN LINK FENCING. THE SPECIFICATION FOR A 6' FENCE SHALL BE USED, SUBSTITUTING 42" FABRIC AND 6' LENGTH POSTS.
2. CHAIN LINK FENCE SHALL BE FASTENED SECURELY TO THE FENCE POSTS WITH WIRE TIES. THE LOWER TENSION WIRE, BRACE AND TRUSS RODS, DRIVE ANCHORS AND POST CAPS ARE NOT REQUIRED EXCEPT ON THE ENDS OF THE FENCE.
3. FILTER CLOTH SHALL BE FASTENED SECURELY TO THE CHAIN LINK FENCE WITH TIES SPACED EVERY 24" AT THE TOP AND MID SECTION.
4. FILTER CLOTH SHALL BE EMBEDDED A MINIMUM OF 8" INTO THE GROUND.
5. WHEN TWO SECTIONS OF FILTER CLOTH ADJOIN EACH OTHER, THEY SHALL BE OVERLAPPED BY 6" AND FOLDED.
6. MAINTENANCE SHALL BE PERFORMED AS NEEDED AND SILT BUILDUPS REMOVED WHEN "BULGES" DEVELOP IN THE SILT FENCE, OR WHEN SILT REACHES 50% OF FENCE HEIGHT.
7. FILTER CLOTH SHALL BE FASTENED SECURELY TO EACH FENCE POST WITH WIRE TIES OR STAPLES AT TOP AND MID SECTION AND SHALL MEET THE FOLLOWING REQUIREMENTS FOR GEOTEXTILE CLASS F:

TENSILE STRENGTH	50 LBS/IN (MIN.)	TEST: MSMT 509
TENSILE MODULUS	20 LBS/IN (MIN.)	TEST: MSMT 509
FLOW RATE	0.3 GAL/FT /MINUTE (MAX.)	TEST: MSMT 322
FILTERING EFFICIENCY	75% (MIN.)	TEST: MSMT 322

U.S. DEPARTMENT OF AGRICULTURE SOIL CONSERVATION SERVICE	PAGE H - 26 - 3	MARYLAND DEPARTMENT OF ENVIRONMENT WATER MANAGEMENT ADMINISTRATION

DETAIL 1 - EARTH DIKE

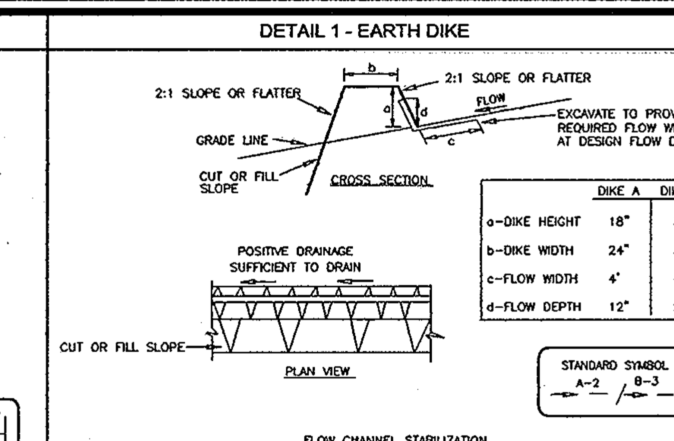

	DIKE A	DIKE B
a-DIKE HEIGHT	18"	30"
b-DIKE WIDTH	24"	36"
c-FLOW WIDTH	4'	6'
d-FLOW DEPTH	12"	24"

FLOW CHANNEL STABILIZATION
GRADE 0.5% MIN. 10% MAX.

1. SEED AND COVER WITH STRAW MULCH.
2. SEED AND COVER WITH EROSION CONTROL MATTING OR LINE WITH SOD.
3. 4" – 7" STONE OR RECYCLED CONCRETE EQUIVALENT PRESSED INTO THE SOIL 7" MINIMUM

CONSTRUCTION SPECIFICATIONS

1. ALL TEMPORARY EARTH DIKES SHALL HAVE UNINTERRUPTED POSITIVE GRADE TO AN OUTLET. SPOT ELEVATIONS MAY BE NECESSARY FOR GRADES LESS THAN 1%.
2. RUNOFF DIVERTED FROM A DISTURBED AREA SHALL BE CONVEYED TO A SEDIMENT TRAPPING DEVICE.
3. RUNOFF DIVERTED FROM AN UNDISTURBED AREA SHALL OUTLET DIRECTLY INTO AN UNDISTURBED, STABILIZED AREA AT A NON-EROSIVE VELOCITY.
4. ALL TREES, BRUSH, STUMPS, OBSTRUCTIONS, AND OTHER OBJECTIONAL MATERIAL SHALL BE REMOVED AND DISPOSED OF SO AS NOT TO INTERFERE WITH THE PROPER FUNCTIONING OF THE DIKE.
5. THE DIKE SHALL BE EXCAVATED OR SHAPED TO LINE, GRADE AND CROSS SECTION AS REQUIRED TO MEET THE CRITERIA SPECIFIED HEREIN AND BE FREE OF BANK PROJECTIONS OR OTHER IRREGULARITIES WHICH WILL IMPEDE NORMAL FLOW.
6. FILL SHALL BE COMPACTED BY EARTH MOVING EQUIPMENT.
7. ALL EARTH REMOVED AND NOT NEEDED FOR CONSTRUCTION SHALL BE PLACED SO THAT IT WILL NOT INTERFERE WITH THE FUNCTIONING OF THE DIKE.
8. INSPECTION AND MAINTENANCE MUST BE PROVIDED PERIODICALLY AND AFTER EACH RAIN EVENT.

U.S. DEPARTMENT OF AGRICULTURE SOIL CONSERVATION SERVICE	PAGE A - 1 - 6	MARYLAND DEPARTMENT OF ENVIRONMENT WATER MANAGEMENT ADMINISTRATION

DETAIL 30 - EROSION CONTROL MATTING

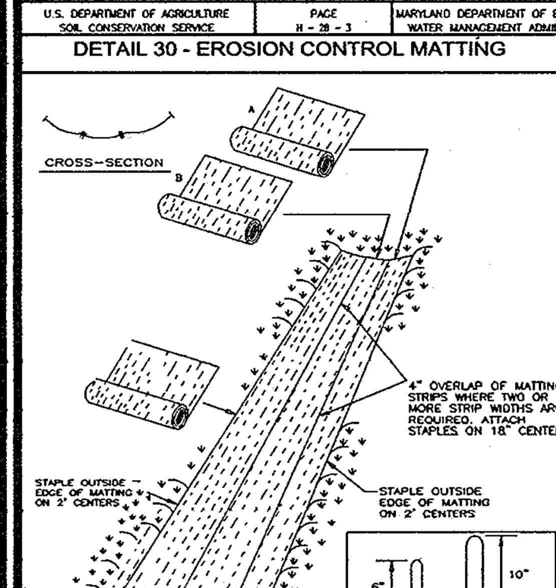

U.S. DEPARTMENT OF AGRICULTURE SOIL CONSERVATION SERVICE	PAGE G - 22 - 2	MARYLAND DEPARTMENT OF ENVIRONMENT WATER MANAGEMENT ADMINISTRATION

EROSION CONTROL MATTING

CONSTRUCTION SPECIFICATIONS

1. KEY-IN THE MATTING BY PLACING THE TOP ENDS OF THE MATTING IN A NARROW TRENCH, 6" IN DEPTH. BACKFILL THE TRENCH AND TAMP FIRMLY TO CONFORM TO THE CHANNEL CROSS-SECTION. SECURE WITH A ROW OF STAPLES ABOUT 4" DOWN SLOPE FROM THE TRENCH. SPACING BETWEEN STAPLES IS 6".
2. STAPLE THE 4" OVERLAP IN THE CHANNEL CENTER USING AN 18" SPACING BETWEEN STAPLES.
3. BEFORE STAPLING THE OUTER EDGES OF THE MATTING, MAKE SURE THE MATTING IS SMOOTH AND IN FIRM CONTACT WITH THE SOIL.
4. STAPLES SHALL BE PLACED 2' APART WITH 4 ROWS FOR EACH STRIP, 2 OUTER ROWS, AND 2 ALTERNATING ROWS DOWN THE CENTER.
5. WHERE ONE ROLL OF MATTING ENDS AND ANOTHER BEGINS, THE END OF THE TOP STRIP SHALL OVERLAP THE UPPER END OF THE LOWER STRIP BY 4", SHIPLAP FASHION. REINFORCE THE OVERLAP WITH A DOUBLE ROW OF STAPLES SPACED 6" APART IN A STAGGERED PATTERN ON EITHER SIDE.
6. THE DISCHARGE END OF THE MATTING LINER SHOULD BE SIMILARLY SECURED WITH 2 DOUBLE ROWS OF STAPLES.

NOTE: IF FLOW WILL ENTER FROM THE EDGE OF THE MATTING THEN THE AREA EFFECTED BY THE FLOW MUST BE KEYED-IN.

U.S. DEPARTMENT OF AGRICULTURE SOIL CONSERVATION SERVICE	PAGE G - 22 - 2A	MARYLAND DEPARTMENT OF ENVIRONMENT WATER MANAGEMENT ADMINISTRATION

DETAIL 24 - STABILIZED CONSTRUCTION ENTRANCE

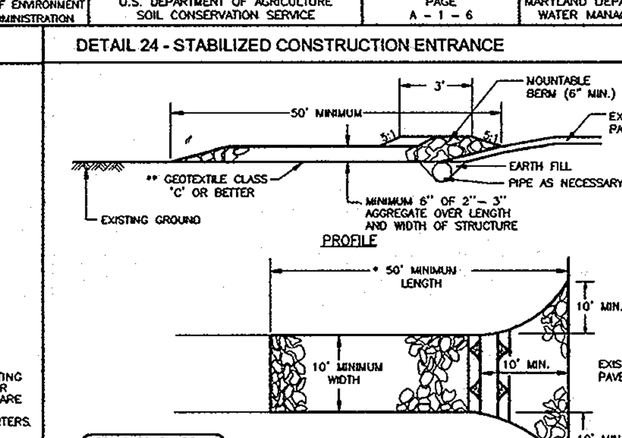

CONSTRUCTION SPECIFICATION

1. LENGTH – MINIMUM OF 50' (* 30' FOR A SINGLE RESIDENCE LOT).
2. WIDTH – 10' MINIMUM, SHOULD BE FLARED AT THE EXISTING ROAD TO PROVIDE A TURNING RADIUS.
3. GEOTEXTILE FABRIC (FILTER CLOTH) SHALL BE PLACED OVER THE EXISTING GROUND PRIOR TO PLACING STONE. ** THE PLAN APPROVAL AUTHORITY MAY NOT REQUIRE SINGLE FAMILY RESIDENCES TO USE GEOTEXTILE.
4. STONE – CRUSHED AGGREGATE (2" TO 3") OR RECLAIMED OR RECYCLED CONCRETE THE ENTRANCE.
5. SURFACE WATER – ALL SURFACE WATER FLOWING TO OR DIVERTED TOWARD CONSTRUCTION ENTRANCES SHALL BE PIPED THROUGH THE ENTRANCE, MAINTAINING POSITIVE DRAINAGE. PIPE INSTALLED THROUGH THE STABILIZED CONSTRUCTION ENTRANCE SHALL BE PROTECTED WITH A MOUNTABLE BERM WITH 5:1 SLOPES AND A MINIMUM OF 6" OF STONE OVER THE PIPE. PIPE HAS TO BE SIZED ACCORDING TO THE DRAINAGE. WHEN THE SCE IS LOCATED AT A HIGH SPOT AND HAS NO DRAINAGE TO CONVEY, A PIPE WILL NOT BE NECESSARY. PIPE SHOULD BE SIZED ACCORDING TO THE AMOUNT OF RUNOFF TO BE CONVEYED. A 6" MINIMUM WILL BE REQUIRED.
6. LOCATION – A STABILIZED CONSTRUCTION ENTRANCE SHALL BE LOCATED AT EVERY POINT WHERE CONSTRUCTION TRAFFIC ENTERS OR LEAVES A CONSTRUCTION SITE. VEHICLES LEAVING THE SITE MUST TRAVEL OVER THE ENTIRE LENGTH OF THE STABILIZED CONSTRUCTION ENTRANCE.

U.S. DEPARTMENT OF AGRICULTURE SOIL CONSERVATION SERVICE	PAGE F - 17 - 3	MARYLAND DEPARTMENT OF ENVIRONMENT WATER MANAGEMENT ADMINISTRATION

SEQUENCE OF CONSTRUCTION

SEQUENCE OF CONSTRUCTION	DURATION
1. OBTAIN GRADING PERMIT.	
2. NOTIFY HOWARD COUNTY BUREAU OF INSPECTIONS AND PERMITS (313-1880) AT LEAST 24 HOURS BEFORE STARTING ANY WORK.	
3. CONSTRUCT STABILIZED CONSTRUCTION ENTRANCE.	1 DAY
4. INSTALL SUPER SILT FENCE AND PERIMETER CLEAN WATER DIKES.	1 DAY
5. AFTER OBTAINING PERMISSION FROM SEDIMENT CONTROL INSPECTOR TO PROCEED. INSTALL STORM DRAIN I-5, M-2 AND TIE EX. M-2A FOR CLEAN WATER BYPASS.	3 DAYS
6. MASS GRADE SITE AND BEGIN SEWER, WATER AND REMAINING STORM DRAIN. BLOCK INLETS, EXCEPT I-5.	3 WEEKS
7. CONSTRUCT SWM FACILITIES 1, 2, AND 3.	3 WEEKS
8. GRADE ROAD TO SUB-BASE AND BEGIN INSTALLATION OF FLUSH CURB AND PAVE ROAD. INSTALL CURB & GUTTER AND SIDEWALK ALONG MARY LANE.	1 MONTH
9. FINALIZE SITE GRADING IN CONFORMANCE WITH THIS PLAN, AND STABILIZE.	2 DAYS
10. WITH INSPECTOR APPROVAL AND FINAL ROAD PAVING COMPLETE STABILIZE ANY REMAINING DISTURBED AREAS AND REMOVE INLET BLOCKING.	3 DAYS
11. INSTALL STREET TREES, PERIMETER LANDSCAPING AND BIORETENTION PLANTINGS.	1 WEEK
12. WITH SEDIMENT CONTROL INSPECTORS APPROVAL REMOVE ALL SEDIMENT CONTROL DEVICES.	3 DAYS

NOTES

DURING GRADING AND AFTER EACH RAINFALL, THE CONTRACTOR SHALL INSPECT AND PROVIDE THE NECESSARY MAINTENANCE ON THE SEDIMENT AND EROSION CONTROL MEASURES SHOWN HEREON.

FOLLOWING INITIAL SOIL DISTURBANCE OR REDISTURBANCE PERMANENT OR TEMPORARY STABILIZATION SHALL BE COMPLIED WITH:

A. 7 CALENDAR DAYS FOR ALL PERIMETER SEDIMENT CONTROL STRUCTURES, DIKES, SWALES, DITCH PERIMETER SLOPES SLOPES AND ALL SLOPES GREATER THAN 3:1.
B. 14 CALENDAR DAYS FOR ALL OTHER DISTURBED AREAS.

MARYLAND 378 STORMWATER MANAGEMENT POND CONSTRUCTION SPECIFICATIONS

CONSTRUCTION SPECIFICATIONS

These specifications are appropriate to all ponds within the scope of the Standard for practice MD-378. All references to ASTM and AASHTO specifications apply to the most recent version.

Site Preparation

Areas designated for borrow areas, embankment, and structural works shall be cleared, grubbed and stripped of topsoil. All trees, vegetation, roots and other objectionable material shall be removed. Channel banks and sharp breaks shall be sloped to no steeper than 1:1. All trees shall be cleared and grubbed within 15 feet of the toe of the embankment.

Areas to be covered by the reservoir will be cleared of all trees, brush, logs, fences, rubbish and other objectionable material unless otherwise designated on the plans. Trees, brush, and stumps shall be cut approximately level with the ground surface. For dry stormwater management ponds, a minimum of a 25-foot radius around the inlet structure shall be cleared.

All cleared and grubbed material shall be disposed of outside and below the limits of the dam and reservoir as directed by the owner or his representative. When specified, a sufficient quantity of topsoil will be stockpiled in a suitable location for use on the embankment and other designated areas.

Earth Fill

Material – The fill material shall be taken from approved designated borrow areas. It shall be free of roots, stumps, wood, rubbish, stones greater than 6", frozen or other objectionable materials. Fill material for the center of the embankment, and cut off trench shall conform to Unified Soil Classification GC, SC, CH, or CL and must have at least 30% passing the #200 sieve. Consideration may be given to the use of other materials in the embankment if designed by a geotechnical engineer. Such special designs must have construction supervised by a geotechnical engineer. Materials used in the outer shell of the embankment must have the capability to support vegetation of the quality required to prevent erosion of the embankment.

Placement – Areas on which fill is to be placed shall be scarified prior to placement of fill. Fill materials shall be placed in maximum 8 inch thick (before compaction) layers which are to be continuous over the entire length of the fill. The most permeable borrow material shall be placed in the downstream portions of the embankment. The principal spillway must be installed concurrently with fill placement and not excavated into the embankment.

Compaction – The movement of the hauling and spreading equipment over the fill shall be controlled so that the entire surface of each lift shall be traversed by not less than one tread track of heavy equipment or compaction shall be achieved by a minimum of four complete passes of a sheepsfoot, rubber tired or vibratory roller. Fill material shall contain sufficient moisture such that the required degree of compaction will be obtained with the equipment used. The fill material shall contain sufficient moisture so that if formed into a ball it will not crumble, yet not be so wet that water can be squeezed out.

When required by the reviewing agency the minimum required density shall not be less than 95% of maximum dry density with a moisture content within +\-2% of the optimum. Each layer of fill shall be compacted as necessary to obtain that density, and is to be certified by the Engineer at the time of construction. All compaction is to be determined by AASHTO Method T-99 (Standard Proctor).

Cut Off Trench – The cutoff trench shall be excavated into impervious material along or parallel to the centerline of the embankment as shown on the plans. The bottom width of the trench shall be governed by the equipment used for excavation, with the minimum width being four feet. The depth shall be at least four feet below existing grade or as shown on the plans. The side slopes of the trench shall be 1 to 1 or flatter. The backfill shall be compacted with construction equipment, rollers, or hand tampers to assure maximum density and minimum permeability.

Embankment Core – The core shall be parallel to the centerline of the embankment as shown on the plans. The top width of the core shall be a minimum of four feet. The height shall extend up to at least the 10 year water elevation or as shown on the plans. The side slopes shall be 1 to 1 or flatter. The core shall be compacted with construction equipment, rollers, or hand tampers to assure maximum density and minimum permeability. In addition, the core shall be placed concurrently with the outer shell of the embankment.

Structure Backfill

Backfill adjacent to pipes or structures shall be of the type and quality conforming to that specified for the adjoining fill material. The fill shall be placed in horizontal layers not to exceed four inches in thickness and compacted by hand tampers or other manually directed compaction equipment. The material needs to fill completely all spaces under and adjacent to the pipe. At no time during the backfilling operation shall driven equipment be allowed to operate closer than four feet, measured horizontally, to any part of a structure. Under no circumstances shall equipment be driven over any part of a concrete structure or pipe, unless there is a compacted fill of 24" or greater over the structure or pipe.

Structure backfill may be flowable fill meeting the requirements of Maryland Department of Transportation, State Highway Administration Standard Specifications for Construction and Materials, Section 313 as modified. The mixture shall have a 100-200 psi; 28 day unconfined compressive strength. The flowable fill shall have a minimum pH of 4.0 and a minimum resistivity of 2,000 ohm-cm. Material shall be placed such that minimum of 6" (measured perpendicular to the outside of the pipe) of flowable fill shall be under (bedding), over and, on the sides of the pipe. It only needs to extend up to the spring line for rigid conduits. Average slump of the fill shall be 7" to assure flowability of the material. Adequate measures shall be taken (sand bags, etc.) to prevent floating the pipe. When using flowable fill, all metal pipe shall be bituminous coated. Any adjoining soil fill shall be placed in horizontal layers not to exceed four inches in thickness and compacted by hand tampers or other manually directed compaction equipment. The material shall completely fill all voids adjacent to the flowable fill zone. At no time during the backfilling operation shall driven equipment be allowed to operate closer than four feet, measured horizontally, to any part of a structure. Under no circumstances shall equipment be driven over any part of a structure or pipe unless there is a compacted fill of 24" or greater over the structure or pipe. Backfill (flowable fill)zone shall be of the type and quality conforming to that specified for the core of the embankment or other embankment materials.

Pipe Conduits

All pipes shall be circular in cross section.

Corrugated Metal Pipe – All of the following criteria shall apply for corrugated metal pipe:

1. Materials – (Polymer Coated steel pipe)– Steel pipes with polymeric coating shall have a minimum coating thickness of 0.01 inch (10 mil) on both sides of the pipe. This pipe and its appurtenances shall conform to the requirements of AASHTO Specifications M-245 & M-246 with watertight coupling bands or flanges.

Materials – (Aluminum Coated Steel Pipe) – This pipe and its appurtenances shall conform to the requirements of AASHTO Specification M-274 with watertight coupling bands or flanges. Aluminum Coated Steel Pipe, when used with flowable fill or when soil and/or water conditions warrant the need for increased durability, shall be fully bituminous coated per requirements of AASHTO Specification M-190 Type A. Any aluminum coating damaged or otherwise removed shall be replaced with cold applied bituminous coating compound. Aluminum surfaces that are to be in contact with concrete shall be painted with one coat of zinc chromate primer or two coats of asphalt.

Materials – (Aluminum Pipe) – This pipe and its appurtenances shall conform to the requirements of AASHTO Specification M-196 or M-211 with watertight coupling bands or flanges. Aluminum Pipe, when used with flowable fill or when soil and/or water conditions warrant for increased durability, shall be fully bituminous coated per requirements of AASHTO Specification M-190 Type A. Aluminum surfaces that are to be in contact with concrete shall be painted with one coat of zinc chromate primer or two coats of asphalt. Hot dip galvanized bolts may be used for connections. The pH of the surrounding soils shall be between 4 and 9.

2. Coupling, bands, anti-seep collars, end sections, etc., must be composed of the same material and coatings as the pipe. Metals must be insulated from dissimilar materials with use of rubber or plastic insulating materials at least 24 mils in thickness.

3. Connections – All connections with pipes must be completely watertight. The drain pipe or barrel connection to the riser shall be welded all around when the pipe and riser are metal. Anti-seep collars shall be connected to the pipe in such a manner as to be completely watertight. Dimple bands are not considered to be watertight.

All connections shall use a rubber or neoprene gasket when joining pipe sections. The end of each pipe shall be re-rolled an adequate number of corrugations to accommodate the bandwidth. The following type connections are acceptable for pipes less than 24 inches diameter: flanges on both ends of the pipe with a circular 3/8 inch closed cell neoprene gasket; Pre- Punched to the flange bolt circle sandwich between sdjacent flanges; a 12 inch wide standard lap type band with 12 inch wide by 3/8 inch thickclosedcell circularneoprene gasket; and a 12-inch wide hugger type band with o-ring gaskets having a minimum diameter of 1/2 inch greater than the corrugation depth. Pipes 24 inches in diameter and larger shall be connected by a 24 inch long annular corrugated band using a minimum of 4 (four) rods and lugs, 2 on each connecting pipe end. A 24-inch wide by 3/8-inch thick closed cell circular neoprene gasket will be installed with 12 inches on the end of each pipe. Flanged joints with 3/8'inch closed cell gaskets the full width of the flange is also acceptable.

Helically corrugated pipe shall have either continuously welded seams or have lock seams with internal caulking or a neoprene bead.

4. Bedding – The pipe shall be firmly and uniformly bedded throughout its entire length. Where rock or soft, spongy or other unstable soil is encountered, all such material shall be removed and replaced with suitable earth compacted to provide adequate support.

5. Backfilling shall conform to "Structure Backfill."
6. Other details (anti-seep collars, valves, etc.) shall be as shown on the drawings.

Reinforced Concrete Pipe – All of the following criteria shall apply for reinforced concrete pipe:

1. Materials – Reinforced concrete pipe shall have bell and spigot joints with rubber gaskets and shall equal or exceed ASTM C-361.
2. Bedding – Reinforced concrete pipe conduits shall be laid in a concrete bedding/cradle for their entire length. This bedding/cradle shall consist of high slump concrete placed under the pipe and up the sides of the pipe at least 50% of its outside diameter with a minimum thickness of 6 inches. Where a concrete cradle is not needed for structural reasons, flowable fill may be used as described in the "Structure Backfill" section of this standard. Gravel bedding is not permitted.
3. Laying pipe – Bell and spigot pipe shall be placed with the bell end upstream. Joints shall be made in accordance with recommendations of the manufacturer of the material. After the joints are sealed for the entire line, the bedding shall be placed so that all spaces under the pipe are filled. Care shall be exercised to prevent any deviation from the original line and grade of the pipe. The first joint must be located within 4 feet from the riser.
4. Backfilling shall conform to "Structure Backfill."
5. Other details (anti-seep collars, valves, etc.) shall be shown on the drawings.

Plastic Pipe – The following criteria shall apply for plastic pipe:

1. Materials – PVC pipe shall be PVC-1120 or PVC-1220 conforming to ASTM D-1785 or ASTM D-2241. Corrugated High Density Polyethylene (HDPE) pipe, couplings and fittings shall conform to the following: 4" -10" inch pipe shall meet the requirements of AASHTO M252 Type S, and 12" through 24" inch shall meet the requirements of AASHTO M294 Type S.
2. Joints and connections to anti-seep collars shall be completely watertight.
3. Bedding – The pipe shall be firmly and uniformly bedded throughout its entire length. Where rock or soft, spongy or other unstable soil is encountered, all such material shall be removed and replaced with suitable earth compacted to provide adequate support.
4. Backfilling shall conform to "Structure Backfill."
5. Other details (anti-seep collars, valves, etc.) shall be as shown on the drawings.

Drainage Diaphragms – When a drainage diaphragm is used, a registered professional engineer will supervise the design and construction inspection.

Concrete

Concrete shall meet the requirements of Maryland Department of Transportation, State Highway Administration Standard Specifications for Construction and Materials, Section 414, Mix No. 3.

Rock Riprap

Rock riprap shall meet the requirements of Maryland Department of Transportation, State Highway Administration Standard Specifications for Construction Materials, Section 311.

Geotextile shall be placed under all riprap and shall meet requirements of Maryland Department of Transportation, State Highway Administration Standard Specifications for Construction and Materials, Section 921.09, Class C.

Care of Water during Construction

All work on permanent structures shall be carried out in areas free from water. The Contractor shall construct and maintain all temporary dikes, levees, cofferdams, drainage channels, and stream diversions necessary to protect the areas to be occupied by the permanent works. The contractor shall also furnish, install, operate, and maintain all necessary pumping and other equipment required for removal of water from various parts of the work and for maintaining the excavations, foundation, and other parts of the work free from water as required or directed by the engineer for constructing each part of the work. After having served their purpose, all temporary protective works shall be removed or leveled and graded to the extent required to prevent obstruction in any degree whatsoever of the flow of water to the spillway or outlet works and so as not to interfere in any way with the operation or maintenance of the structure. Stream diversions shall be maintained until the full flow can be passed through the permanent works. The removal of water from the required excavation and the foundation shall be accomplished in a manner and to the extent that will maintain stability of the excavated slopes and bottom required excavations and will allow satisfactory performance of all construction operations. During the placing and compacting of material in required excavations, the water level at the locations being refilled shall be maintained below the bottom of the excavation at such locations which may require draining the water sumps from which the water shall be pumped.

Stabilization

All borrow areas shall be graded to provide proper drainage and left in a sightly condition. All exposed surfaces of the embankment, spillway, spoil and borrow areas, and berms shall be stabilized by seeding, liming, fertilizing and mulching in accordance with the Natural Resources Conservation Service Standards and Specifications for Critical Area Planting (MD-342) or as shown on the accompanying drawings.

Erosion and Sediment Control

Construction operations will be carried out in such a manner that erosion will be controlled and water and air pollution minimized. State and local laws concerning pollution abatement will be followed. Construction plans shall detail erosion and sediment control measures.

21.0 STANDARDS AND SPECIFICATIONS FOR TOPSOIL

III. FOR SITES HAVING DISTURBED AREAS OVER 5 ACRES:

I. ON SOIL MEETING TOPSOIL SPECIFICATIONS, OBTAIN TEST RESULTS DICTATING FERTILIZER AND LIME AMENDMENTS REQUIRED TO BRING THE SOIL INTO COMPLIANCE WITH THE FOLLOWING:

A. PH FOR TOPSOIL SHALL BE BETWEEN 6.0 AND 7.5. IF THE TESTED SOIL DEMONSTRATES A PH OF LESS THAN 6.0, SUFFICIENT LIME SHALL BE PRESCRIBED TO RAISE THE PH TO 6.5 OR HIGHER.
B. ORGANIC CONTENT OF TOPSOIL SHALL BE NOT LESS THAN 1.5 PERCENT BY WEIGHT.
C. TOPSOIL HAVING SOLUBLE SALT CONTENT GREATER THAN 500 PARTS PER MILLION SHALL NOT BE USED.
D. NO SOD OR SEED SHALL BE PLACED ON SOIL SOIL WHICH HAS BEEN TREATED WITH SOIL STERILANTS OR CHEMICALS USED FOR WEED CONTROL UNTIL SUFFICIENT TIME HAS ELAPSED (14 DAYS MIN.) TO PERMIT DISSIPATION OF PHYTO-TOXIC MATERIALS.

NOTE: TOPSOIL SUBSTITUTES OR AMENDMENTS, AS RECOMMENDED BY A QUALIFIED AGRONOMIST OR SOIL SCIENTIST AND APPROVED BY THE APPROPRIATE APPROVAL AUTHORITY, MAY BE USED IN LIEU OF NATURAL TOPSOIL.

II. PLACE TOPSOIL (IF REQUIRED) AND APPLY SOIL AMMENDMENTS SPECIFIED IN 20.0 VEGETATIVE STABILIZATION-SECTION I-VEGETATIVE STABILIZATION METHODS AND MATERIALS.

V. TOPSOIL APPLICATION

I. WHEN TOPSOILING, MAINTAIN NEEDED EROSION AND SEDIMENT CONTROL PRACTICES SUCH AS DIVERSIONS, GRADE STABILIZATION STRUCTURES, EARTH DIKES, SLOPE SILT FENCE AND SEDIMENT TRAPS AND BASINS.

II. GRADES ON THE AREAS TO BE TOPSOILED, WHICH HAVE BEEN PREVIOUSLY ESTABLISHED, SHALL BE MAINTAINED, ALBEIT 4" – 8" HIGHER IN ELEVATION.

III. TOPSOIL SHALL BE UNIFORMLY DISTRIBUTED IN A 4" – 8" LAYER AND LIGHTLY COMPACTED TO A MINIMUM THICKNESS OF 4". SPREADING SHALL BE PERFORMED IN SUCH A MANNER THAT SODDING OR SEEDING CAN PROCEED WITH A MINIMUM OF ADDITIONAL SOIL PREPARATION AND TILLAGE. ANY IRREGULARITIES IN THE SURFACE RESULTING FROM TOPSOILING OR OTHER OPERATIONS SHALL BE CORRECTED IN ORDER TO PREVENT THE FORMATION OF DEPRESSIONS OR WATER POCKETS.

IV. TOPSOIL SHALL NOT BE PLACE WHILE THE TOPSOIL OR SUBSOIL IS IN A FROZEN OR MUDDY CONDITION, WHEN THE SUBSOIL IS EXCESSIVELY WET OR IN A CONDITION THAT MAY OTHERWISE BE DETRIMENTAL TO PROPER GRADING AND SEEDBED PREPARATION.

SOIL PROTECTION ZONE NOTES

1. THE SOIL PROTECTION ZONE INCLUDE ALL AREAS CONTAINED INSIDE THE LIMIT OF DISTURBANCE.
2. WHERE POSSIBLE, THE SOIL PROTECTION ZONE SHALL EXTEND TO THE DRIP LINE OF SPECIMEN TREES. FOR OTHER GROUPS OF TREES, THE ZONE SHALL BE THE DRIP LINE OF 40% OF THE HEIGHT OF THE TREE, WHICHEVER IS GREATER.
3. NO CONSTRUCTION ACTIVITY IS PERMITTED WITHIN THE SOIL PROTECTION ZONE.
4. IF SOIL HAS BEEN COMPACTED OR GRADING HAS TAKEN PLACE IN THE VICINITY OF THE SOIL PROTECTION ZONE, ROOT PRUNING SHALL BE IMPLEMENTED PER ROOT PRUNING DETAIL, SHOWN ON THIS PLAN.
5. ROOT PRUNING SHALL OCCUR PRIOR TO THE BEGINNING OF CONSTRUCTION.
6. WHERE THE SOIL PROTECTION ZONE MUST ENCROACH INSIDE THE CRITICAL ROOT ZONE OF A TREE, SOIL DISTURBANCE SHALL BE MITIGATED WITH VERTICAL MULCHING, OR RADIAL TRENCHING.
7. PRIOR TO CONSTRUCTION, THE LIMITS OF DISTURBANCE SHALL BE MARKED AND THE DETERMINE WHICH TREES WILL NEED PREVENTATIVE TREATMENT OF REMOVAL.
8. TREE MAINTENANCE AND REMOVAL SHALL BE UNDERTAKEN BY A QUALIFIED MD TREE EXPERT TO ENSURE DAMAGE TO SURROUNDING TREES IS MINIMIZED.
9. BRUSH AND LIMBS REMOVED FOR CONSTRUCTION SHALL BE CHIPPED AND SPREAD AT THE EDGE OF THE SOIL PROTECTION ZONE TO A DEPTH OF 6 INCHES. THIS SHALL OCCUR OUTSIDE THE SOIL PROTECTION ZONE WHERE COMPACTION COULD IMPACT OTHERWISE UNPROTECTED CRITICAL ROOT ZONE.

DEFINITION

PLACEMENT OF TOPSOIL OVER A PREPARED SUBSOIL PRIOR TO ESTABLISHMENT OF PERMANENT VEGETATION.

PURPOSE

TO PROVIDE A SUITABLE SOIL MEDIUM FOR VEGETABLE GROWTH. SOILS OF CONCERN HAVE LOW MOISTURE CONTENT, LOW NUTRIENT LEVELS, LOW PH, MATERIALS TOXIC TO PLANTS, AND/OR UNACCEPTABLE SOIL GRADATION.

CONDITIONS WHERE PRACTICE APPLIES

I. THIS PRACTICE IS LIMITED TO AREAS HAVING 2:1 OR FLATTER SLOPES WHERE:

A. THE TEXTURE OF THE EXPOSED SUBSOIL/PARENT MATERIAL IS NOT ADEQUATE TO PRODUCE VEGETATIVE GROWTH.

B. THE SOIL MATERIAL IS SO SHALLOW THAT THE ROOTING ZONE IS NOT DEEP ENOUGH TO SUPPORT PLANTS OR FURNISH CONTINUING SUPPLIES OF MOISTURE AND PLANT NUTRIENTS.

C. THE ORIGINAL SOIL TO BE VEGETATED CONTAINS MATERIAL TOXIC TO PLANT GROWTH.

D. THE SOIL IS SO ACIDIC THAT TREATMENT WITH LIMESTONE IS NOT FEASIBLE.

II. FOR THE PURPOSE OF THESE STANDARDS AND SPECIFICATIONS, AREAS HAVING SLOPES STEEPER THAN 2:1 REQUIRE SPECIAL CONSIDERATION AND DESIGN FOR ADEQUATE STABILIZATION. AREAS HAVING SLOPES STEEPER THAN 2:1 SHALL HAVE THE APPROPRIATE STABILIZATION SHOWN ON THE PLANS.

SEDIMENT CONTROL NOTES

1. A MINIMUM OF 48 HOURS NOTICE MUST BE GIVEN TO THE HOWARD COUNTY DEPT. OF INSPECTION, LICENSE AND PERMITS SEDIMENT CONTROL DIVISION PRIOR TO THE START OF ANY CONSTRUCTION (313-1855).
2. ALL VEGETATION AND STRUCTURAL PRACTICES ARE TO BE INSTALLED ACCORDING TO THE PROVISIONS OF THIS PLAN AND ARE TO BE IN CONFORMANCE WITH THE 1994 MARYLAND STANDARDS AND SPECIFICATIONS FOR SOIL EROSION AND SEDIMENT CONTROL. AND REVISIONS THERETO.
3. FOLLOWING INITIAL SOIL DISTURBANCE OR REDISTURBANCE, PERMANENT OR TEMPORARY STABILIZATION SHALL BE COMPLETED WITHIN: (A) 7 CALENDAR DAYS FOR ALL PERIMETER SEDIMENT CONTROL STRUCTURES, DIKES, PERIMETER SLOPES, AND ALL SLOPES GREATER THAN 3:1, (B) 14 DAYS AS TO ALL OTHER DISTURBED OR GRADED AREAS ON THE PROJECT SITE.
4. ALL SEDIMENT TRAPS/BASINS SHOWN MUST BE FENCED AND WARNING SIGNS POSTED AROUND THEIR PERIMETER IN ACCORDANCE WITH VOL. 1, CHAPTER 7, HOWARD COUNTY DESIGN MANUAL, STORM DRAINAGE.
5. ALL DISTURBED AREAS MUST BE STABILIZED WITHIN THE TIME PERIOD SPECIFIED ABOVE IN ACCORDANCE WITH THE 1994 MARYLAND STANDARDS AND SPECIFICATIONS FOR SOIL EROSION AND SEDIMENT CONTROL FOR PERMANENT SEEDING, SOD, TEMPORARY SEEDING, AND MULCHING (SEC. G). TEMPORARY STABILIZATION WITH MULCH ALONE SHALL BE DONE WHEN RECOMMENDED SEEDING DATES DO NOT ALLOW FOR PROPER GERMINATION AND ESTABLISHMENT OF GRASSES.
6. ALL SEDIMENT CONTROL STRUCTURES ARE TO REMAIN IN PLACE AND ARE TO BE MAINTAINED IN OPERATIVE CONDITION UNTIL PERMISSION FOR THEIR REMOVAL HAS BEEN OBTAINED FROM THE HOWARD COUNTY SEDIMENT CONTROL INSPECTOR.
7. SITE ANALYSIS :

TOTAL AREA	3.44 AC.
AREA DISTURBED	2.97 AC.
AREA TO BE ROOFED OR PAVED	0.75 AC.
AREA TO BE VEGETATIVELY STABILIZED	2.69 AC.
TOTAL CUT	4300CY
TOTAL FILL	4300CY
OFFSITE WASTE/BORROW AREA LOCATION	*

8. ANY SEDIMENT CONTROL PRACTICE WHICH IS DISTURBED BY GRADING ACTIVITY FOR PLACEMENT OF UTILITIES MUST BE REPAIRED ON THE SAME DAY OF DISTURBANCE.
9. ADDITIONAL SEDIMENT CONTROLS MUST BE PROVIDED, IF DEEMED NECESSARY BY THE HOWARD COUNTY SEDIMENT CONTROL INSPECTOR.
10. ON ALL SITES WITH DISTURBED AREAS IN EXCESS OF 2 ACRES, APPROVAL OF THE INSPECTION AGENCY SHALL BE REQUESTED UPON COMPLETION OF INSTALLATION OF PERIMETER EROSION AND SEDIMENT CONTROLS, BUT BEFORE PROCEEDING WITH ANY OTHER EARTH DISTURBANCE OR GRADING. OTHER BUILDING OR GRADING INSPECTION APPROVALS MAY NOT BE AUTHORIZED UNTIL THIS INITIAL APPROVAL BY THE INSPECTION AGENCY IS MADE.
11. TRENCHES FOR THE CONSTRUCTION OF UTILITIES IS LIMITED TO THREE PIPE LENGTHS OR THAT WHICH SHALL BE BACK-FILLED AND STABILIZED WITHIN ONE WORKING DAY, WHICHEVER IS SHORTER.

* TO BE DETERMINED BY CONTRACTOR, WITH PRE-APPROVAL OF THE SEDIMENT CONTROL INSPECTOR WITH AN APPROVED AND ACTIVE GRADING PERMIT

PERMANENT SEEDING NOTES

APPLY TO GRADED OR CLEARED AREAS NOT SUBJECT TO IMMEDIATE FURTHER DISTURBANCE WHERE A PERMANENT LONG-LIVED VEGETATIVE COVER IS NEEDED.

SEEDBED PREPARATION: LOOSEN UPPER THREE INCHES OF SOIL BY RAKING, DISCING OR OTHER ACCEPTABLE MEANS BEFORE SEEDING, IF NOT PREVIOUSLY LOOSENED.

SOIL AMENDMENTS: IN LIEU OF SOIL TEST RECOMMENDATIONS, USE ONE OF THE FOLLOWING SCHEDULES:

1) PREFERRED-APPLY 2 TONS PER ACRE DOLOMITIC LIMESTONE (92 LBS/100 SQ.FT.) AND 600 LBS PER ACRE 10-10-10 FERTILIZER (14 LBS./1000 SQ.FT.) BEFORE SEEDING. HARROW OR DISC INTO UPPER THREE INCHES OF SOIL. AT THE TIME OF SEEDING, APPLY 400 LBS. PER ACRE 30-0-0 UREAFORM FERTILIZER (9 LBS/1000 SQ.FT.)
2) ACCEPTABLE-APPLY 2 TONS PER ACRE DOLOMATIC LIMESTONE (92 LBS/1000 SQ.FT.) AND APPLY 1000 LBS. PER ACRE 10-10-10- FERTILIZER (23 LBS./1000 SQ.FT.) BEFORE SEEDING. HARROW OR DISC INTO UPPER THREE INCHES OF SOIL.

SEEDING: FOR THE PERIODS MARCH 1 THRU APRIL 30, AND AUGUST 1 THRU OCTOBER 15, SEED WITH 60 LBS. PER ACRE (1.4 LBS/1000 SQ.FT.) OF KENTUCKY 31 TALL FESCUE. FOR THE PERIOD MAY 1 THRU JULY 31, SEED WITH 60 LBS. KENTUCKY 31 TALL FESCUE PER ACRE AND 2 LBS. PER ACRE (.05 LBS./1000 SQ.FT.) OF WEEPING LOVEGRASS. DURING THE PERIOD OF OCTOBER 16 THRU FEBRUARY 28, PROTECT SITE BY: OPTION (1) 2 TONS PER ACRE WELL ANCHORED STRAW MULCH AND SEED AS SOON AS POSSIBLE IN THE SPRING. OPTION (2) USE SOD. OPTION (3) SEED WITH 60 LBS/ACRE KENTUCKY 31 TALL FESCUE AND MULCH WITH 2 TONS/ACRE WELL ANCHORED STRAW.

MULCHING: APPLY 1 1/2 TO 2 TONS PER ACRE (70 TO 90 LBS/1000 SQ. FT.) OF UNROTTED SMALL GRAIN STRAW IMMEDIATELY AFTER SEEDING. ANCHOR MULCH IMMEDIATELY AFTER APPLICATION USING MULCH ANCHORING TOOL OR 218 GALLONS PER ACRE (5 GAL/1000 SQ.FT.) OF EMULSIFIED ASPHALT ON FLAT AREAS. ON SLOPES 8 FEET OR HIGHER, USE 348 GALLONS PER ACRE (8 GAL/1000 SQ.FT.) FOR ANCHORING.

MAINTENANCE: INSPECT ALL SEEDED AREAS AND MAKE NEEDED REPAIRS, REPLACEMENTS AND RESEEDINGS.

TEMPORARY SEEDING NOTES

SEEDBED PREPARATION: LOOSEN UPPER THREE INCHES OF SOIL BY RAKING, DISCING OR OTHER ACCEPTABLE MEANS BEFORE SEEDING, IF NOT PREVIOUSLY LOOSENED.

SOIL AMENDMENTS: APPLY 600 LBS. PER ACRE 10-10-10 FERTILIZER (14 LBS./1000 SQ.FT).

SEEDING: FOR PERIODS MARCH 1 THRU APRIL 30 AND FROM AUGUST 15 THRU NOVEMBER 15, SEED WITH 2 1/2 BUSHEL PER ACRE OF ANNUAL RYE (3.2 LBS./1000 SQ.FT.) FOR THE PERIOD MAY 1 THRU AUGUST 14, SEED WITH 3 LBS. PER ACRE OF WEEPING LOVEGRASS (.07 LBS./1000 SQ.FT.). FOR THE PERIOD NOVEMBER 1 THRU FEBRUARY 28, PROTECT SITE BY APPLYING 2 TONS PER ACRE OF WELL ANCHORED STRAW MULCH AND SEED AS SOON AS POSSIBLE IN THE SPRING, OR USE SOD.

MULCHING: APPLY 1 1/2 TO 2 TONS PER ACRE (70 TO 90 LBS./1000 SQ.FT.) OF UNROTTED SMALL GRAIN STRAW IMMEDIATELY AFTER SEEDING. ANCHOR MULCH IMMEDIATELY AFTER APPLICATION USING MULCH ANCHORING TOOL OR 218 GALLONS PER ACRE (5 GAL/1000 SQ.FT.) OF EMULSIFIED ASPHALT ON FLAT AREAS. ON SLOPES 8 FEET OR HIGHER, USE 348 GALLONS PER ACRE (8 GAL/1000 SQ.FT.) FOR ANCHORING.

REFER TO THE 1994 MARYLAND STANDARDS AND SPECIFICATIONS FOR SOIL EROSION AND SEDIMENT CONTROL FOR RATE AND METHODS NOT

CONSTRUCTION AND MATERIAL SPECIFICATIONS

I. TOPSOIL SALVAGED FROM THE EXISTING SITE MAY BE USED PROVIDED THAT IT MEETS THE STANDARDS AS SET FORTH IN THESE SPECIFICATIONS. TYPICALLY, THE DEPTH OF TOPSOIL TO BE SALVAGED FOR A GIVEN SOIL TYPE CAN BE FOUND IN THE REPRESENTATIVE SOIL PROFILE SECTION IN THE SOIL SURVEY PUBLISHED BY USDA-SCS IN COOPERATION WITH MARYLAND AGRICULTURAL EXPERIMENTAL STATION.

II. TOPSOIL SPECIFICATIONS – SOIL TO BE USED AS TOPSOIL MUST MEET THE FOLLOWING:

I. TOPSOIL SHALL BE A LOAM, SANDY LOAM, CLAY LOAM, SILT LOAM, SANDY CLAY LOAM, LOAMY SAND. OTHER SOILS MAY BE USED IF RECOMMENDED BY AN AGRONOMIST OR A SOIL SCIENTIST AND APPROVED BY THE APPROPRIATE APPROVAL AUTHORITY. REGARDLESS, TOPSOIL SHALL NOT BE A MIXTURE OF CONTRASTING TEXTURED SUBSOILS AND SHALL CONTAIN LESS THAN 5% BY VOLUME OF CINDERS, STONES, SLAG, COARSE FRAGMENTS, GRAVEL, STICKS, ROOTS, TRASH, OR OTHER MATERIALS LARGER THAT 1 AND 1/2" IN DIAMETER.

II. TOPSOIL MUST BE FREE OF PLANTS OR PLANT PARTS SUCH AS BERMUDA GRASS, QUACKGRASS, JOHNSONGRASS, NUTSEDGE, POISON IVY, THISTLE, OR OTHERS AS SPECIFIED.

III. WHERE THE SUBSOIL IS EITHER HIGHLY ACIDIC OR COMPOSED OF HEAVY CLAYS, GROUND LIMESTONE SHALL BE SPREAD AT THE RATE OF 4-8 TONS/ACRE (200-400 POUNDS PER 1,000 SQUARE FEET) PRIOR TO THE PLACEMENT OF TOPSOIL. LIME SHALL BE DISTRIBUTED UNIFORMLY OVER DESIGNATED AREAS AND WORKED INTO THE SOIL IN CONJUNCTION WITH TILLAGE OPERATIONS AS DESCRIBED IN THE FOLLOWING PROCEDURES.

II. FOR SITES HAVING DISTURBED AREAS UNDER 5 ACRES:

I. PLACE TOPSOIL (IF REQUIRED) AND APPLY SOIL AMENDMENTS AS SPECIFIED IN 20.0 VEGETATIVE STABILIZATION – SECTION I – VEGETATIVE STABILIZATION METHODS AND MATERIALS.

OWNER/DEVELOPER
HOWARD COUNTY HOUSING COMMISSION
6751 COLUMBIA GATEWAY DRIVE
3RD FLOOR, GATEWAY BUILDING
COLUMBIA, MARYLAND 21044
410-313-6316

NO.	REVISION	DATE

APPROVED: DEPARTMENT OF PUBLIC WORKS

CHIEF, BUREAU OF HIGHWAYS — DATE 6-7-10

APPROVED: HOWARD COUNTY DEPARTMENT OF PLANNING AND ZONING

CHIEF, DEVELOPMENT ENGINEERING DIVISION — DATE 6/11/10

CHIEF, DIVISION OF LAND DEVELOPMENT — DATE 6/17/10

THIS DEVELOPMENT PLAN IS APPROVED FOR SOIL EROSION AND SEDIMENT CONTROL BY THE HOWARD SOIL CONSERVATION DISTRICT.

HOWARD S.C.D. — DATE 5/20/10

ENGINEER'S CERTIFICATE:

"I HEREBY CERTIFY THAT THIS PLAN FOR SEDIMENT AND EROSION CONTROL REPRESENTS A PRACTICAL AND WORKABLE PLAN BASED ON MY PERSONAL KNOWLEDGE OF THE SITE CONDITIONS AND THAT IT WAS PREPARED IN ACCORDANCE WITH THE REQUIREMENTS OF THE HOWARD SOIL CONSERVATION DISTRICT."

SIGNATURE OF ENGINEER — DATE 5/6/10

DEVELOPER'S CERTIFICATE:

"I/WE CERTIFY THAT ALL DEVELOPMENT AND CONSTRUCTION WILL BE DONE IN ACCORDANCE TO THIS PLAN OF DEVELOPMENT FOR SEDIMENT CONTROL, AND THAT ALL RESPONSIBLE PERSONNEL INVOLVED IN THE CONSTRUCTION PROJECT WILL HAVE A CERTIFICATE OF ATTENDANCE AT A DEPARTMENT OF ENVIRONMENT APPROVED TRAINING PROGRAM FOR THE CONTROL OF SEDIMENT AND EROSION BEFORE BEGINNING THE PROJECT. I ALSO AUTHORIZE PERIODIC ON-SITE INSPECTIONS BY THE HOWARD SOIL CONSERVATION DISTRICT.

SIGNATURE OF DEVELOPER — DATE May 13 2010

FINAL ROAD CONSTRUCTION PLANS

SEDIMENT & EROSION CONTROL DETAILS

THE GLENS AT GUILFORD

LOTS 1-10 & OPEN SPACE LOTS 11-13
A RESUBDIVISION OF LOTS 1 & 2-A, (P.46 & P.815), BLOCK E-3
NORDAU SUBDIVISION

TAX MAP #47 GRID 6 & 24 — PARCELS 46 & 815
6TH ELECTION DISTRICT — HOWARD COUNTY, MARYLAND

ROBERT H. VOGEL ENGINEERING, INC.
ENGINEERS • SURVEYORS • PLANNERS
8407 MAIN STREET
ELLICOTT CITY, MD 21043
TEL: 410.461.7666
FAX: 410.461.8961

STATE OF MARYLAND — ROBERT HARRIS VOGEL — No. 16193 — PROFESSIONAL ENGINEER
ROBERT H. VOGEL, P.E. 16193

DESIGN BY:	JCO
DRAWN BY:	KG
CHECKED BY:	RHV
DATE:	APRIL 2010
SCALE:	AS SHOWN
W.O. NO.:	08-35

PROFESSIONAL CERTIFICATE

I HEREBY CERTIFY THAT THESE DOCUMENTS WERE PREPARED OR APPROVED BY ME, AND THAT I AM A DULY LICENSED PROFESSIONAL ENGINEER UNDER THE LAWS OF THE STATE OF MARYLAND, LICENSE NO. 16193 EXPIRATION DATE: 09-27-2010

F-09-112

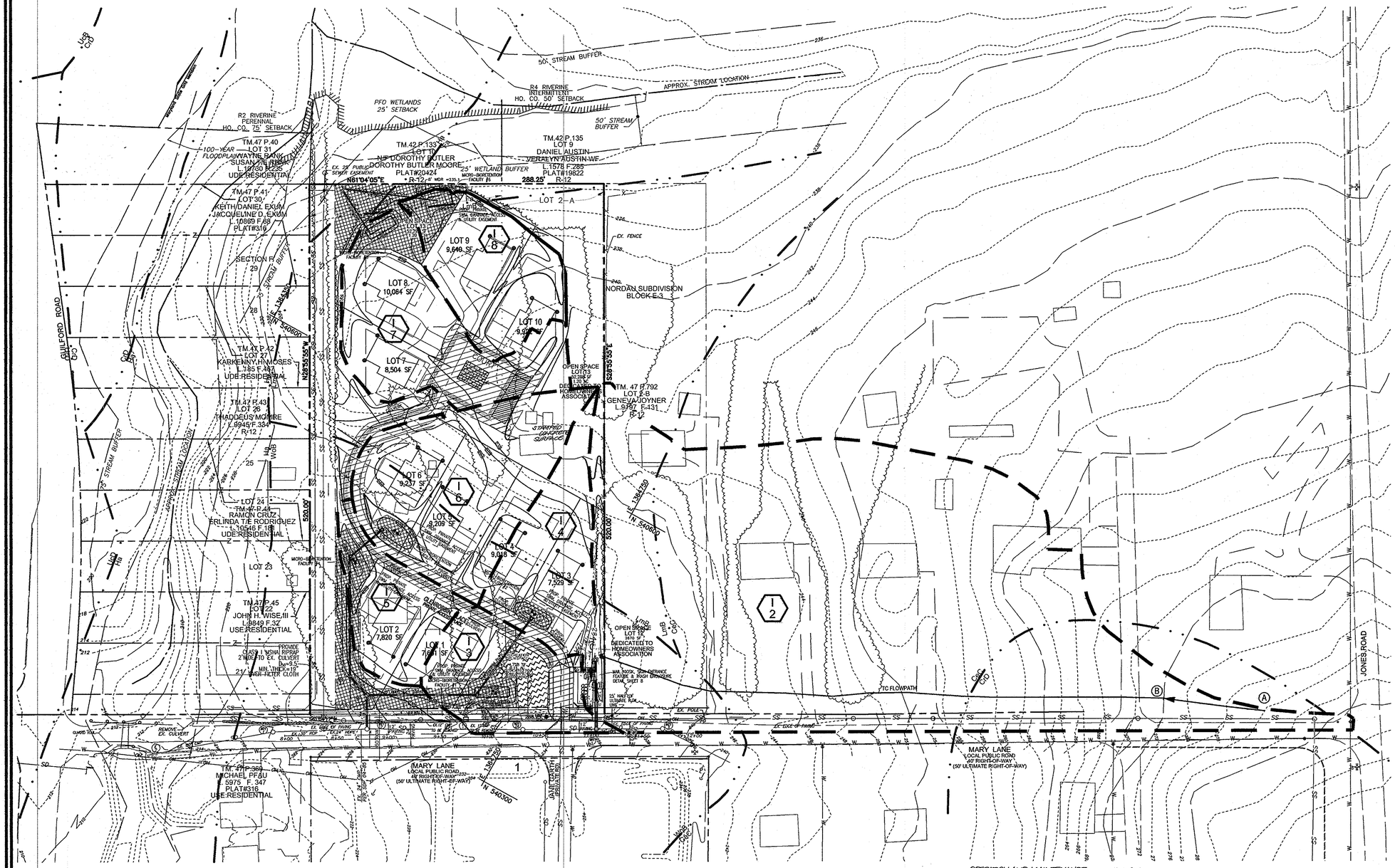

LEGEND:

- EXISTING CONTOUR
- PROPOSED CONTOUR
- EXISTING CURB AND GUTTER
- PROPOSED CURB AND GUTTER
- EXISTING UTILITY POLE
- EXISTING LIGHT POLE
- EXISTING MAILBOX
- EXISTING SIGN
- EXISTING SANITARY MANHOLE
- EXISTING SANITARY LINE
- EXISTING CLEANOUT
- EXISTING FIRE HYDRANT
- EXISTING WATER LINE
- PROPOSED STORM DRAIN
- PROPOSED STORM DRAIN INLET
- EXISTING TREELINE
- EXISTING FENCE
- PROPERTY LINE
- RIGHT-OF-WAY LINE
- SOILS BOUNDARY (M1B2 / M1D3)
- 4" SIDEWALK
- FOREST CONSERVATION EASEMENT
- STREET LIGHT
- EXISTING PARCEL/LOT DIVIDE LINE
- WETLAND
- 100 YEAR FLOODPLAIN
- 75' STREAM BUFFER
- WETLANDS
- PROPOSED DRAINAGE DIVIDE

DRAINAGE AREA TABULATION

NO.	AREA	'C'	% IMP.	SOIL	ZONE
I-2	3.30 AC	0.29	38	B & C	R-12
I-3	0.34 AC	0.31	38	C	R-12
I-4	0.35 AC	0.30	38	B & C	R-12
I-5	0.26 AC	0.31	38	C	R-12
I-6	0.66 AC	0.29	38	B & C	R-12
I-7	0.59 AC	0.29	38	B	R-12
I-8	0.34 AC	0.29	38	B	R-12

SOILS LEGEND

SYMBOL	DESCRIPTION	TYPE
CeC	CHILLUM LOAM, 5 TO 10 PERCENT SLOPES	B
CrD	CROOM AND EVESBORO SOILS, 10 TO 15 PERCENT SLOPES	C
Fa	FALLSINGTON SANDY LOAM, 0 TO 2 PERCENT SLOPES	D
Ha	HATBORO-CORDORUS SILT LOAMS, MO TO 3 PERCENT SLOPES	D
LeC	LEGORE SILT LOAM, 8 TO 15 PERCENT SLOPES, STONY	B
LrnB	LEGORE-MONTALTO SILT LOAMS, 3 TO 8 PERCENT SLOPES	B
UcB	URBAN LAND-CHILLUM-BELTSVILLE COMPLEX, 0 TO 5 PERCENT SLOPES	B
UcD	URBAN LAND-CHILLUM-BELTSVILLE COMPLEX, 5 TO 15 PERCENT SLOPES	B
WoB	WOODSTOWN SANDY LOAM, 2 TO 5 PERCENT SLOPES MODERATELY ERODED	C

NOTES:

1. SOILS INFORMATION WAS TAKEN FROM THE USDA WEB SOIL SURVEY, WWW.WEBSOILSURVEY.NRCS.USDA.GOV.
2. THERE ARE NO SLOPES IN EXCESS OF 15% ON THE PROPERTY.

OWNER/DEVELOPER

HOWARD COUNTY HOUSING COMMISSION
6751 COLUMBIA GATEWAY DRIVE
3RD FLOOR, GATEWAY BUILDING
COLUMBIA, MARYLAND 21044
410-313-6316

NO.	REVISION	DATE
1	ADD MAIL/TRASH ENCLOSURE	11/22/10

OPERATION AND MAINTENANCE SCHEDULE FOR LANDSCAPE INFILTRATION (M-8) MICROBIORETENTION (M-9) RAIN GARDENS (M-7), BIO RETENTION SWALE (M-9) ENHANCED FILTERS (M-9)

1. ANNUAL MAINTENANCE OF PLANT MATERIAL. MULCH LAYER AND SOIL LAYER IS REQUIRED. MAINTENANCE OF MULCH AND SOIL IS LIMITED TO CORRECTING AREAS OF EROSION OR WASH OUT. ANY MULCH REPLACEMENT SHALL BE DONE IN THE SPRING. PLANT MATERIAL SHALL BE CHECKED FOR DISEASE AND INSECT INFESTATION AND MAINTENANCE WILL ADDRESS DEAD MATERIAL AND PRUNING. *ACCEPTABLE REPLACEMENT PLANT MATERIAL IS LIMITED TO THE FOLLOWING: SOD, SEED AND STEM-WISE. DESIGN MANUAL VOLUME II, TABLE A.4:1 AND 2.*
2. SCHEDULE OF PLANT INSPECTION WILL BE TWICE A YEAR IN SPRING AND FALL. THIS INSPECTION WILL INCLUDE REMOVAL OF DEAD AND DISEASED VEGETATION CONSIDERED BEYOND TREATMENT, TREATMENT OF ALL *DISEASED TREES AND SHRUBS AND REPLACEMENT OF ALL DEFICIENT STANDS AND WIRES.*
3. MULCH SHALL BE INSPECTED EACH SPRING. REMOVE PREVIOUS MULCH LAYER BEFORE APPLYING NEW LAYER ONCE EVERY 2 TO 3 YEARS.
4. SOIL EROSION TO BE ADDRESSED ON AN AS NEEDED WITH A MINIMUM OF ONCE PER MONTH AND AFTER HEAVY STORM EVENTS.

OPERATION AND MAINTENANCE SCHEDULE FOR PRIVATELY OWNED AND MAINTAINED RAINWATER HARVESTING (M-1)

1. EMPTY BARRELS ON A MONTHLY BASIS AND CLEAN BARREL WITH HOSE.
2. VERIFY INTEGRITY OF LEAF SCREENS, GUTTERS, DOWNSPOUTS, SPIGOTS, AND AND MOSQUITO SCREENS. CLEAN AND REMOVE DEBRIS.
3. DAMAGED COMPONENTS SHALL BE REPLACED AS NEEDED.
4. TO AVOID FREEZING, BARREL SHOULD BE EITHER DISCONNECTED OR ALLOWED TO DRAIN BY BOTTOM SPIGOT DURING THE WINTER SEASON.

OPERATION AND MAINTENANCE SCHEDULE FOR PRIVATELY OWNED AND MAINTAINED PERMEABLE PAVEMENT (A-2)

1. PAVEMENT SURFACES SHOULD BE SWEPT AND VACUUMED (IF POROUS CONCRETE) TO REDUCE SEDIMENT ACCUMULATION AND ENSURE CONTINUED SURFACE POROSITY. SWEEPING SHOULD BE PERFORMED AT LEAST TWICE ANNUALLY WITH A COMMERCIAL CLEANING UNIT. WASHING OR COMPRESSED AIR UNITS SHOULD NOT BE USED TO PERFORM SURFACE CLEANING.
2. DRAINAGE PIPES, INLETS, STONE EDGE DRAINS AND OTHER STRUCTURES WITHIN OR DRAINING TO THE SUBBASE SHOULD BE CLEANED OUT AT REGULAR INTERVALS.
3. DEICERS SHOULD BE USED IN MODERATION. DEICERS SHOULD BE NON-TOXIC AND BE APPLIED EITHER AS CALCIUM MAGNESIUM ACETATE, OR AS PRETREATED SALT. SNOW PLOWING SHOULD BE DONE CAREFULLY, WITH BLADES SET ONE-INCH ABOVE THE SURFACE. PLOWED SNOW PILES AND SNOWMELT SHOULD NOT BE DIRECTED TO PERMEABLE PAVEMENT.

OPERATION AND MAINTENANCE SCHEDULE FOR PRIVATELY OWNED AND MAINTAINED GREEN ROOF (A-1)

THE FOLLOWING OPERATION AND MAINTENANCE SCHEDULE SHALL BE IMPLEMENTED TO THE FUNCTION OF THE GREEN ROOF SYSTEM IN ACCORDANCE WITH THE RECOMMENDATIONS OF THE "GREEN ROOF SYSTEM DISTRIBUTOR":

WEED - ON AN ANNUAL BASIS REMOVE UNWANTED PLANT MATERIAL.
REPLACE - REPLACE FAILED PLANT MATERIAL WHEN THE FAILED PLANT AREA EXCEEDS FIVE PERCENT (5%) OF THE ROOF AREA
IRRIGATE - A NEWLY INSTALLED ROOF SHOULD BE IRRIGATED DURING THE FIRST GROWING SEASON. SATURATE THE GREEN ROOF AT LEAST ONCE A WEEK DURING THE FIRST GROWING SEASON. AFTER VEGETATION IS ESTABLISHED, IRRIGATION MAY BE REQUIRED PERIODICALLY DURING DRY PERIODS.
NUTRIENT - THE APPLICATION OF A SLOW RELEASE FERTILIZER IN THE SPRING IS RECOMMENDED ON AN ANNUAL BASIS.
INSPECT FOR DRAINAGE - AFTER EACH SIGNIFICANT RAINFALL INSPECT DOWNSPOUTS OR DRAINAGE CHANNELS/COURSES FOR CLOGS.
INSPECT FOR LEAKS - AFTER EACH SIGNIFICANT RAINFALL INSPECT THE GREEN ROOF FOR LEAKS.

NOTE: ALL SITE DISCHARGE FLOW TO AN UNNAMED TRIBUTARY OF THE LITTLE PATUXENT RIVER. STREAM USE 1-P

APPROVED: DEPARTMENT OF PUBLIC WORKS

CHIEF, BUREAU OF HIGHWAYS — DATE 6-7-10

APPROVED: HOWARD COUNTY DEPARTMENT OF PLANNING AND ZONING

CHIEF, DEVELOPMENT ENGINEERING DIVISION — DATE 6/4/10

CHIEF, DIVISION OF LAND DEVELOPMENT — DATE 6/7/10

FINAL ROAD CONSTRUCTION PLANS
STORM DRAIN DRAINAGE AREA MAP & SOILS MAP
THE GLENS AT GUILFORD

LOTS 1-10 & OPEN SPACE LOTS 11-13
A RESUBDIVISION OF LOTS 1 & 2-A, (P.46 & P.815), BLOCK E-3
NORDAU SUBDIVISION

TAX MAP #47 GRID 6 & 24 PARCELS 46 & 815
6TH ELECTION DISTRICT HOWARD COUNTY, MARYLAND

ROBERT H. VOGEL ENGINEERING, INC.
ENGINEERS • SURVEYORS • PLANNERS
8407 MAIN STREET ELLICOTT CITY, MD 21043
TEL: 410.461.7666 FAX: 410.461.8961

PROFESSIONAL CERTIFICATE

I HEREBY CERTIFY THAT THESE DOCUMENTS WERE PREPARED OR APPROVED BY ME, AND THAT I AM A DULY LICENSED PROFESSIONAL ENGINEER UNDER THE LAWS OF THE STATE OF MARYLAND, LICENSE NO. 16193 EXPIRATION DATE: 09-27-2010

STATE OF MARYLAND — ROBERT HARRIS VOGEL — No. 16193 — PROFESSIONAL ENGINEER
ROBERT H. VOGEL P.E. 16193

DESIGN BY:	JCO
DRAWN BY:	KG
CHECKED BY:	RHV
DATE:	APRIL 2010
SCALE:	1"=50'
W.O. NO.:	08-35

SHEET 5 OF 9

F-09-112

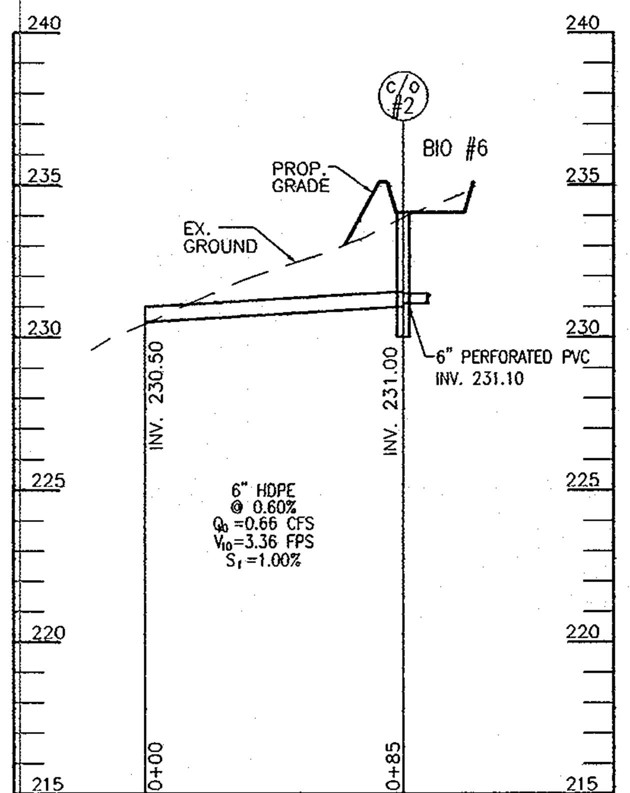

PRIVATE STORM DRAIN PROFILE
SCALE : HORIZONTAL – 1"=50'
VERTICAL – 1"=5'

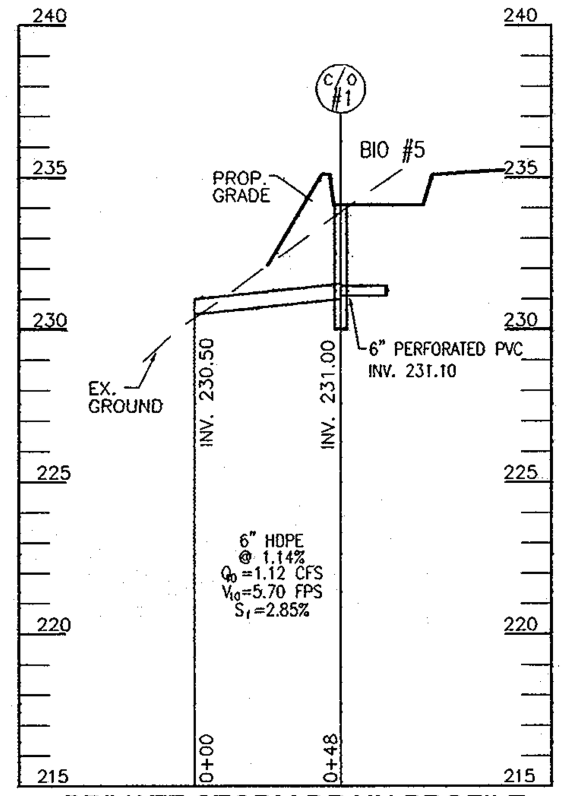

PRIVATE STORM DRAIN PROFILE
SCALE : HORIZONTAL – 1"=50'
VERTICAL – 1"=5'

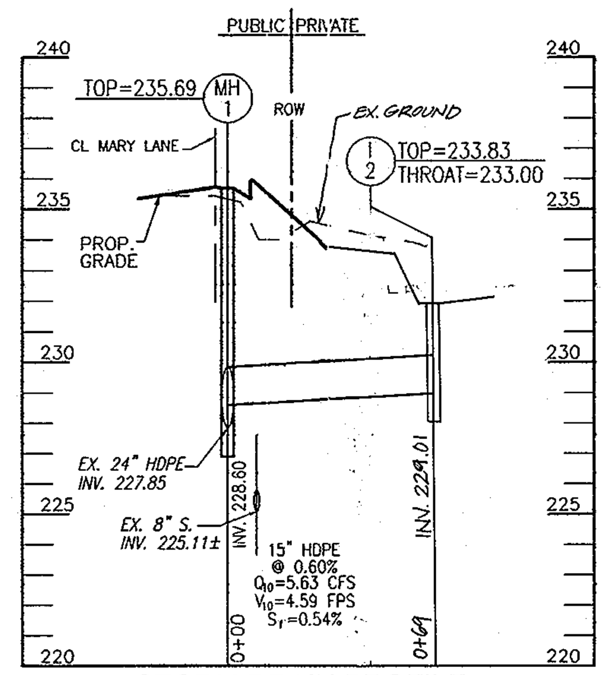

STORM DRAIN PROFILE
SCALE : HORIZONTAL – 1"=50'
VERTICAL – 1"=5'

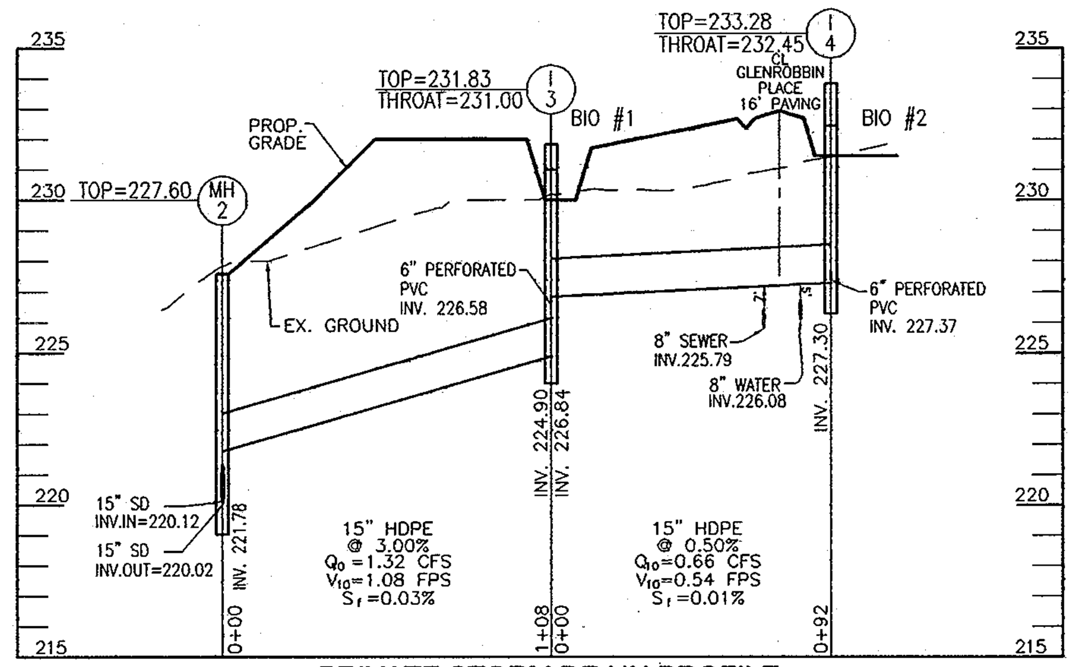

PRIVATE STORM DRAIN PROFILE
SCALE : HORIZONTAL – 1"=50'
VERTICAL – 1"=5'

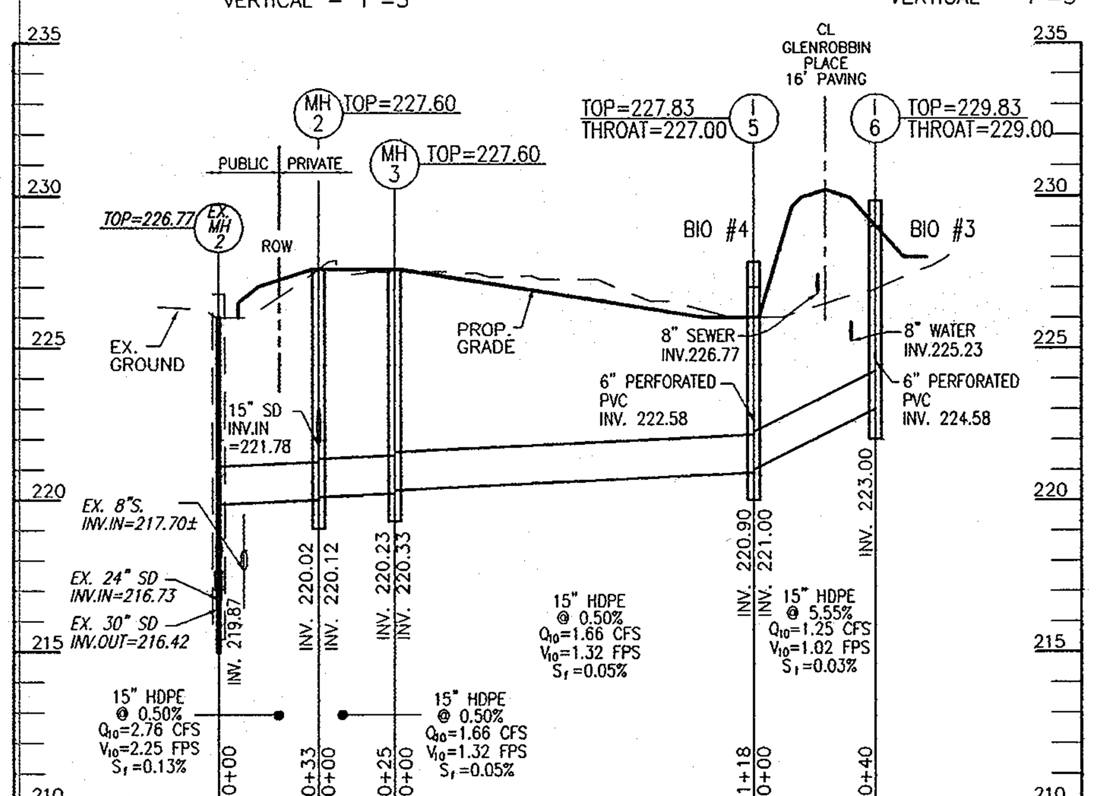

STORM DRAIN PROFILE
SCALE : HORIZONTAL – 1"=50'
VERTICAL – 1"=5'

STRUCTURE SCHEDULE

NO.	TYPE	LOCATION NORTHING	LOCATION EASTING	TOP ELEV.	INV. IN	INV. OUT	REMARKS	REMARKS
I–1	STD. SHA PRECAST 5' COG THROUGH STRUCTURE	MARY LANE STA. 9+77.5, 12' LT		224.16	–	–	SHA MD 374.68	
I–2	TYPE 'D' INLET, THROAT ELEV.233.00	N 540458.66	E 1364787.94	233.83	–	229.01	D–4.10	PRIVATE
I–3	TYPE 'D' INLET, THROAT ELEV.231.00	N 540371.37	E 1364703.24	231.83	225.00	224.90	D–4.10	PRIVATE
I–4	TYPE 'D' INLET, THROAT ELEV.232.45	N 540462.63	E 1364713.47	233.28	–	226.78	D–4.10	PRIVATE
I–5	TYPE 'D' INLET, THROAT ELEV.227.00	N 540430.65	E 1364528.91	227.83	221.00	220.90	D–4.10	PRIVATE
I–6	TYPE 'D' INLET, THROAT ELEV.229.00	N 540268.31	E 136454.55	229.83	–	223.00	D–4.10	PRIVATE
c/o #1	CLEANOUT	N 540718.45	E 1364390.54	234.10	–	231.00	–	PRIVATE
c/o #2	CLEANOUT	N 540774.45	E 1364428.65	234.10	–	231.00	–	PRIVATE
M–1	STANDARD 4' PRECAST MANHOLE	N 540395.92	E 1364817.26	235.69	228.64	227.89	G–5.11	PUBLIC
M–2	STANDARD 4' PRECAST MANHOLE	N 540319.13	E 1364608.73	227.60	220.12	220.02	G–5.11	PRIVATE
M–3	STANDARD 4' PRECAST MANHOLE	N 54327.47	E 1364585.18	227.60	220.33	220.23	G–5.11	PRIVATE

NOTE: TOP OF TYPE 'D' INLET IS TOP OF SLAB. TOP OF SHA STRUCTURE IS CENTER TOP OF SLAB AT FACE OF CURB.

PIPE SCHEDULE

PIPE SIZE	TYPE	TOTAL LENGTH
6"	HDPE	PRIVATE 133 LF
15"	HDPE	PRIVATE 291 LF PUBLIC 40 LF

Appendix B.4. Construction Specifications for Environmental Site Design Practices

B.4.A Green Roof Specifications

1. Material Specifications

Because there is significant variation in green roof assemblies and methods, providing comprehensive specifications is not feasible. Material specifications for green roofs will vary based on each roofing system and specific information should be obtained from the appropriate manufacturer or retailer. The following information and specifications, which include acceptable materials for generic applications, is not exclusive or limiting.

2. Planting Media

Planting media should be a soil-like mixture with an organic content of 15% or less. The grain size distribution is necessary for to attain proper moisture content, permeability, nutrient management and non-capillary porosity, and soil structure. Grain size guidelines vary for single and dual media green roof assemblies.

The planting media shall be tested and meet the following criteria:

- Non-Capillary Pore Space at Field Capacity, 0.333 bar (TMECC 03.01, A) ≥ 15% (volume)
- Moisture Content at Field Capacity (TMECC 03.01, A) ≥ 12% (volume)
- Maximum Media Water Retention (FLL) ≥ 30% (volume)
- Alkalinity, CaCO3 equivalents (MSA) ≤ 2.5%
- Total Organic Matter by Wet Combustion (MSA) ≤ 3–15% (dry wt.)
- pH (RCSTP) 6.5 – 8.0
- Soluble Salts (DTPA saturated media extraction – RCSTP) ≤ 6 mmhos/cm
- Cation Exchange Capacity (MSA) ≥ 10 meq/100 g
- Saturated Hydraulic Conductivity (FLL):
  - Single Media Assemblies ≥ 0.05 in/min
  - Dual Media Assemblies ≥ 0.30 in/min
- Mineral Fraction Grain Size Distribution (ASTM D422):

	Single Media	Dual Media
Clay Fraction (2 micron)	0	0
% Passing #200 Sieve	≤ 5%	5 – 15%
% Passing # 60 Sieve	≤ 10%	10 – 25%
% Passing #18 Sieve	5 – 50%	20 – 50%
% Passing ⅛ inch Sieve	20 – 70%	55 – 90%
% Passing ⅜ inch Sieve	75 – 100%	90 – 100%

B.4.1 Supp. 1

Appendix B.4. Construction Specifications for Environmental Site Design Practices

3. Green Roof Layers

Root Barriers – should be thermoplastic membranes with minimum thickness of 30 mils. Membranes certified for use as root barriers are recommended. However, only FLL currently offers a recognized certification test. Many FLL-certified materials are locally available.

Granular Drainage Media – should be a non-carbonate mineral aggregate meeting the following specifications:

- Saturated Hydraulic Conductivity ≥ 25 inches/minute
- Total Organic Matter (by wet combustion) ≤ 1%
- Abrasion Resistance (ASTM C131-96) ≤ 25% loss
- Soundness (ASTM C88 or T103 or T103-91) ≤ 5% loss
- Porosity (ASTM C29) ≥ 25%
- Alkalinity, CaCO3 equivalents (MSA) ≤ 1%
- Grain Size Distribution (ASTM C136)
  - Percent Passing #18 Sieve ≤ 1%
  - Percent Passing ¼ inch Sieve ≤ 30%
  - Percent Passing 3/8 inch Sieve ≤ 80%

Separation Fabric – should be a lightweight, non-woven geotextile that is easily penetrated by roots while providing a durable separation between drainage and growth media layers. Separation fabrics should meet the following:

- Unit Weight (ASTM D3776) ≤ 4.25 ounces per square yard
- Grab Tensile Strength (ASTM D4632) ≤ 90 lbs.
- Mullen Burst Strength (ASTM D4632) ≥ 135 lbs/inch
- Permittivity (ASTM D4491) ≥ 2 sec-1

Supp. 1 B.4.2

Appendix B.4. Construction Specifications for Environmental Site Design Practices

B.4.B Specifications for Permeable Pavements & Reinforced Turf

These specifications include information on acceptable materials for typical applications and are not exclusive or limiting. The designer is responsible for developing detailed specifications for individual projects and specific conditions.

1. Pervious Concrete Specifications

Design Thickness – Pervious concrete applications shall be designed so that the thickness of the concrete slab shall support the traffic and vehicle types that will be carried. Applications may be designed using either standard pavement procedures (e.g., AASHTO, ACI 325.9R, ACI 330R) or using structural values derived from flexible pavement design procedures.

Mix & Installation – Traditional Portland cements (ASTM C 150, C 1157) may be used in pervious concrete applications. Phosphorus admixtures may also be used. Materials should be tested (e.g., trial batching) prior to construction so that critical properties (e.g., settling time, rate of strength development, porosity, permeability) can be determined.

Aggregate – Pervious concrete contains a limited fine aggregate content. Commonly used gradations include ASTM C 33 No. 67 (¾ in. to No. 4), No. 8 (⅜ in. to No. 16) and No. 89 (⅜ in. to No. 50) sieves. Single-sized aggregate (up to 1 inch) may also be used.

Water Content – Water-to-cement ratios between 0.27 and 0.30 are used routinely with proper inclusion of chemical admixtures. Water quality should meet ACI 30a. As a general rule, potable water should be used although recycled concrete production water meeting ASTM C 94 or AASHTO M 157 may also be used.

Admixtures – Chemical admixtures (e.g., retarders or hydration-stabilizers) are used to obtain special properties in pervious concrete. Use of admixtures should meet ASTM C 494 (chemical admixtures) and ASTM C 260 (air entraining admixtures) and closely follow manufacturer's recommendations.

Base Course – The base course shall be AASHTO No. 3 or 4 course aggregate with an assumed open pore space of 30% (n = 0.30).

2. Permeable Interlocking Concrete Pavements (PICP)

Paver Blocks – Blocks should be either 3⅛ in. or 4 in. thick, and meet ASTM C 936 or CSA A231.2 requirements. Applications should have 20% or more (40% preferred) of the surface area open. Installation should follow manufacturer's instructions, except that infill and base course materials and dimensions specified in this Appendix shall be followed.

Infill Materials and Leveling Course – Openings shall be filled with ASTM C-33 graded sand or sandy loam. PICP blocks shall be placed on a one-inch thick leveling course of ASTM C-33 sand.

B.4.3 Supp. 1

Appendix B.4. Construction Specifications for Environmental Site Design Practices

Plantings	see Appendix A, Table A.4	n/a	plantings are site-specific
Planting soil (2' to 4' deep)	loamy sand (60 – 65%) & compost (35 – 40%) or sandy loam (30%), coarse sand (30%) & compost (40%)	n/a	USDA soil types loamy sand or sandy loam; clay content < 5%
Organic content	Min. 10% by dry weight (ASTM D 2974)		
Mulch	shredded hardwood		aged 6 months, minimum; no pine or wood chips
Pea gravel diaphragm	pea gravel: ASTM-D-448	NO. 8 OR NO. 9 (1/8" TO 3/8")	
Curtain drain	ornamental stone: washed cobbles	stone: 2" to 5"	
Geotextile		n/a	PE Type 1 nonwoven
Gravel (underdrains and infiltration berms)	AASHTO M-43	NO. 57 OR NO. 6 AGGREGATE (3/8" to 3/4")	
Underdrain piping	F 758, Type PS 28 or AASHTO M-278	4" to 6" rigid schedule 40 PVC or SDR35	Slotted or perforated pipe; 3/8" perf. @ 6" on center, 4 holes per row; minimum of 3" of gravel over pipes; not necessary underneath pipes. Perforated pipe shall be wrapped with ¼-inch galvanized hardware cloth
Poured in place concrete (if required)	MSHA Mix No. 3; f'c = 3500 psi @ 28 days, normal weight, air-entrained; reinforcing to meet ASTM-615-60	n/a	on-site testing of poured-in-place concrete required: 28 day strength and slump test; all concrete design (cast-in-place or pre-cast) not using previously approved State or local standards requires design drawings sealed and approved by a professional structural engineer licensed in the State of Maryland – design to include meeting ACI Code 350.R/89; vertical loading [H-10 or H-20]; allowable horizontal loading (based on soil pressures); and analysis of potential cracking
Sand	AASHTO-M-6 or ASTM-C-33	0.02" to 0.04"	Sand substitutions such as Diabase and Graystone (AASHTO) #10 are not acceptable. No calcium carbonated or dolomitic sand substitutions are acceptable. No "rock dust" can be used for sand.

B.4.7 Supp. 1

Appendix B.4. Construction Specifications for Environmental Site Design Practices

Base Course – The base course shall be AASHTO No. 3 or 4 course aggregate with an assumed open pore space of 30% (n = 0.30).

3. Reinforced Turf

Reinforced Grass Pavement (RGP) – Whether used with grass or gravel, the RGP thickness shall be at least 1½" thick with a load capacity capable of supporting the traffic and vehicle types that will be carried.

B.4.C Specifications for Micro-Bioretention, Rain Gardens, Landscape Infiltration & Infiltration Berms

1. Material Specifications

The allowable materials to be used in these practices are detailed in Table B.4.1.

2. Filtering Media or Planting Soil

The soil shall be a uniform mix, free of stones, stumps, roots or other similar objects larger than two inches. No other materials or substances shall be mixed or dumped within the micro-bioretention practice that may be harmful to plant growth, or prove a hindrance to the planting or maintenance operations. The planting soil shall be free of Bermuda grass, Quackgrass, Johnson grass, or other noxious weeds as specified under COMAR 15.08.01.05.

The planting soil shall be tested and shall meet the following criteria:

- Soil Component - Loamy Sand or Sandy Loam (USDA Soil Textural Classification)
- Organic Content - Minimum 10% by dry weight (ASTM D 2974). In general, this can be met with a mixture of loamy sand (60%-65%) and compost (35% to 40%) or sandy loam (30%), coarse sand (30%), and compost (40%).
- Clay Content - Media shall have a clay content of less than 5%.
- pH Range – Should be between 5.5 - 7.0. Amendments (e.g., lime, iron sulfate plus sulfur) may be mixed into the soil to increase or decrease pH.

There shall be at least one soil test per project. Each test shall consist of both the standard soil test for pH, and additional tests of organic matter, and soluble salts. A textural analysis is required from the site stockpiled topsoil. If topsoil is imported, then a texture analysis shall be performed for each location where the topsoil was excavated.

3. Compaction

It is very important to minimize compaction of both the base of bioretention practices and the required backfill. When possible, use excavation hoes to remove original soil. If practices are

Supp. 1 B.4.4

Appendix B.4. Construction Specifications for Environmental Site Design Practices

excavated using a loader, the contractor should use wide track or marsh track equipment, or light equipment with turf type tires. Use of equipment with narrow tracks or narrow tires, rubber tires with large lugs, or high-pressure tires will cause excessive compaction resulting in reduced infiltration rates and is not acceptable. Compaction will significantly contribute to design failure.

Compaction can be alleviated at the base of the bioretention facility by using a primary tilling operation such as a chisel plow, ripper, or subsoiler. These tilling operations are to refracture the soil profile through the 12 inch compaction zone. Substitute methods must be approved by the engineer. Rototillers typically do not till deep enough to reduce the effects of compaction from heavy equipment.

Rototill 2 to 3 inches of sand into the base of the bioretention facility before backfilling the optional sand layer. Pump any ponded water before preparing (rototilling) base.

When backfilling the topsoil over the sand layer, first place 3 to 4 inches of topsoil over the sand, then rototill the sand/topsoil to create a gradation zone. Backfill the remainder of the topsoil to final grade.

When backfilling the bioretention facility, place soil in lifts 12" to 18". Do not use heavy equipment within the bioretention basin. Heavy equipment can be used around the perimeter of the basin to supply soils and sand. Grade bioretention materials with light equipment such as a compact loader or a dozer/loader with marsh tracks.

4. Plant Material

Recommended plant material for micro-bioretention practices can be found in Appendix A, Section A.2.3.

5. Plant Installation

Compost is a better organic material source, is less likely to float, and should be placed in the invert and other low areas. Mulch should be placed in surrounding to a uniform thickness of 2" to 3". Shredded or chipped hardwood mulch is the only accepted mulch. Pine mulch and wood chips will float and move to the perimeter of the bioretention area during a storm event and are not acceptable. Shredded mulch must be well aged (6 to 12 months) for acceptance.

Rootstock of the plant material shall be kept moist during transport and on-site storage. The plant root ball should be planted so 1/8" of the ball is above final grade surface. The diameter of the planting pit shall be at least six inches larger than the diameter of the planting ball. Set and maintain the plant straight during the entire planting process. Thoroughly water ground bed cover after installation.

B.4.5 Supp. 1

Appendix B.4. Construction Specifications for Environmental Site Design Practices

Trees shall be braced using 2" by 2" stakes only as necessary and for the first growing season only. Stakes are to be equally spaced on the outside of the tree ball.

Grasses and legume seed should be drilled into the soil to a depth of at least one inch. Grass and legume plugs shall be planted following the non-grass ground cover planting specifications.

The topsoil specifications provide enough organic material to adequately supply nutrients from natural cycling. The primary function of the bioretention structure is to improve water quality. Adding fertilizers defeats, or at a minimum, impedes this goal. Only add fertilizer if wood chips or mulch are used to amend the soil. Rototill urea fertilizer at a rate of 2 pounds per 1000 square feet.

6. Underdrains

Underdrains should meet the following criteria:

- Pipe- Should be 4" to 6" diameter, slotted or perforated rigid plastic pipe (ASTMF 758, Type PS 28, or AASHTO-M-278) in a gravel layer. The preferred material is slotted, 4" rigid pipe (e.g., PVC or HDPE).
- Perforations - If perforated pipe is used, perforations should be ⅜" diameter located 6" on center with a minimum of four holes per row. Pipe shall be wrapped with a ¼" (No. 4 or 4x4) galvanized hardware cloth.
- Gravel - The gravel layer (No. 57 stone preferred) shall be at least 3" thick above and below the underdrain.
- The main collector pipe shall be at a minimum 0.5% slope.
- A rigid, non-perforated observation well must be provided (one per every 1,000 square feet) to provide a clean-out port and monitor performance of the filter.
- A 4" layer of pea gravel (⅛" to ⅜" stone) shall be located between the filter media and underdrain to prevent migration of fines into the underdrain. This layer may be considered part of the filter bed when bed thickness exceeds 24".

The main collector pipe for underdrain systems shall be constructed at a minimum slope of 0.5%. Observation wells and/or clean-out pipes must be provided (one minimum per every 1000 square feet of surface area).

7. Miscellaneous

These practices may not be constructed until all contributing drainage area has been stabilized

Supp. 1 B.4.6

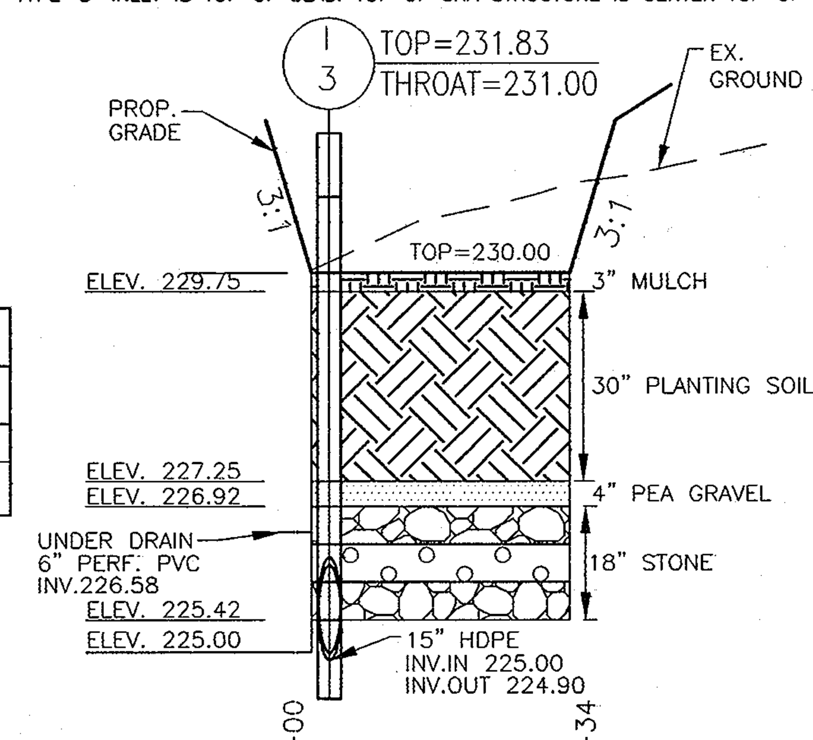

SECTION A–A
BIO RETENTION #1
SCALE: 1'=20"

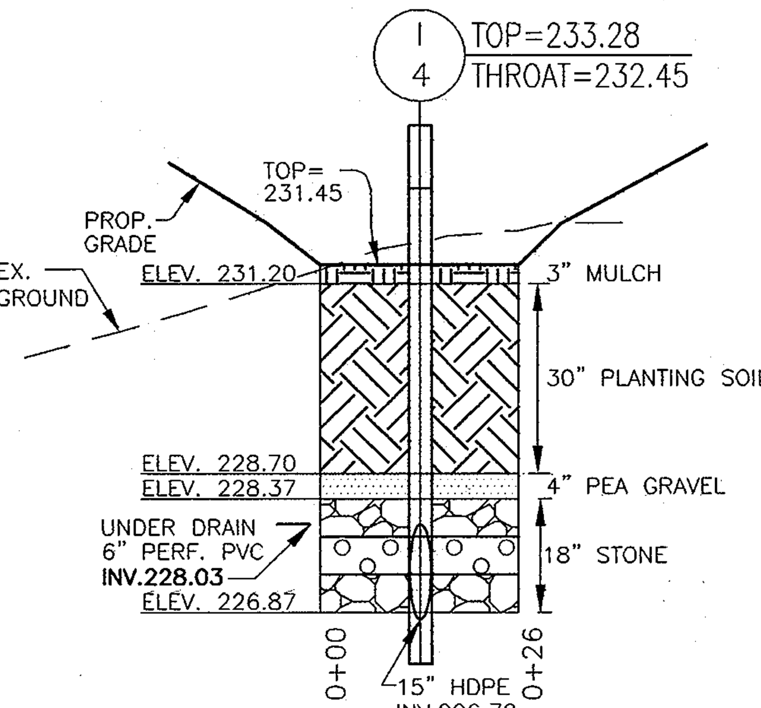

SECTION B–B
BIO RETENTION #2
SCALE: 1'=20"

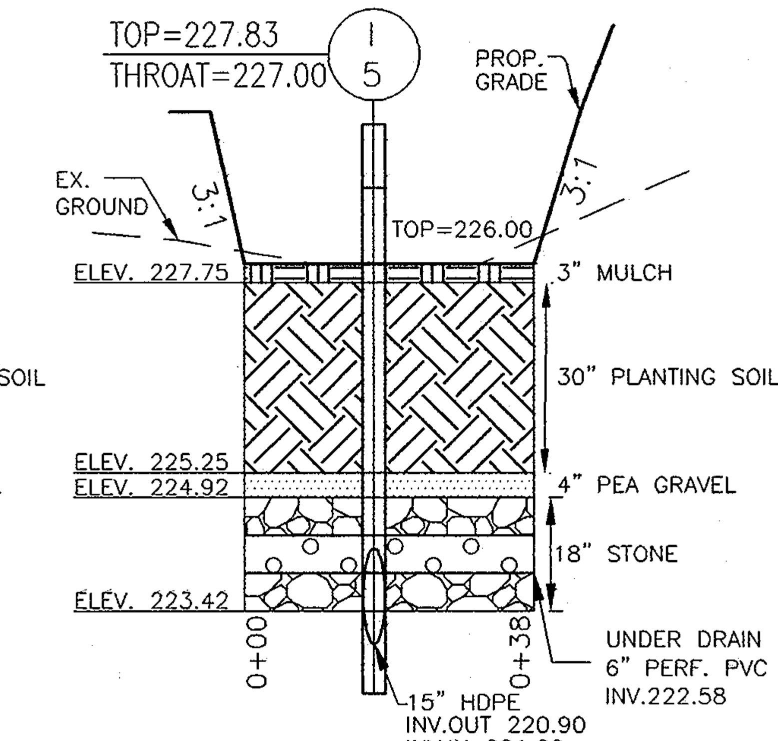

SECTION C–C
BIO RETENTION #4
SCALE: 1'=20"

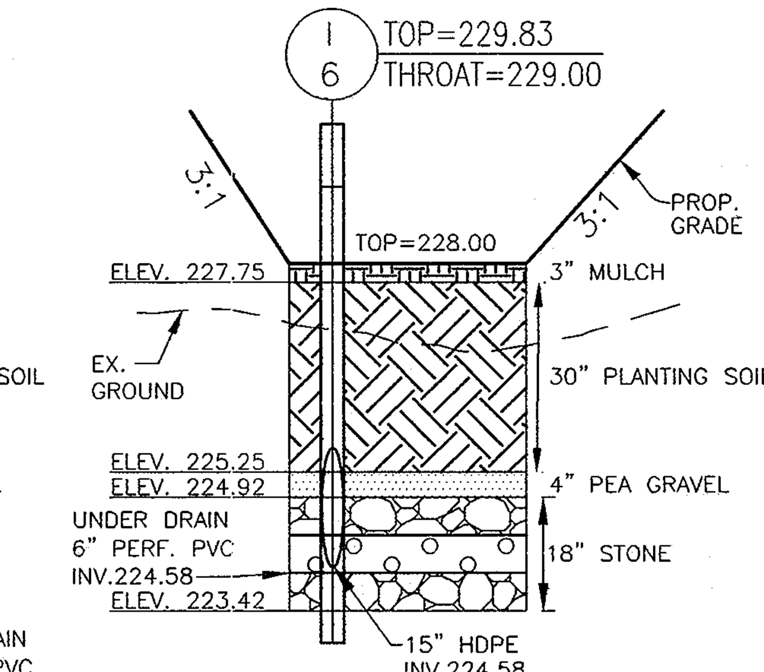

SECTION D–D
BIO RETENTION #3
SCALE: 1'=20"

OWNER/DEVELOPER
HOWARD COUNTY HOUSING COMMISSION
6751 COLUMBIA GATEWAY DRIVE
3RD FLOOR, GATEWAY BUILDING
COLUMBIA, MARYLAND 21044
410-313-6316

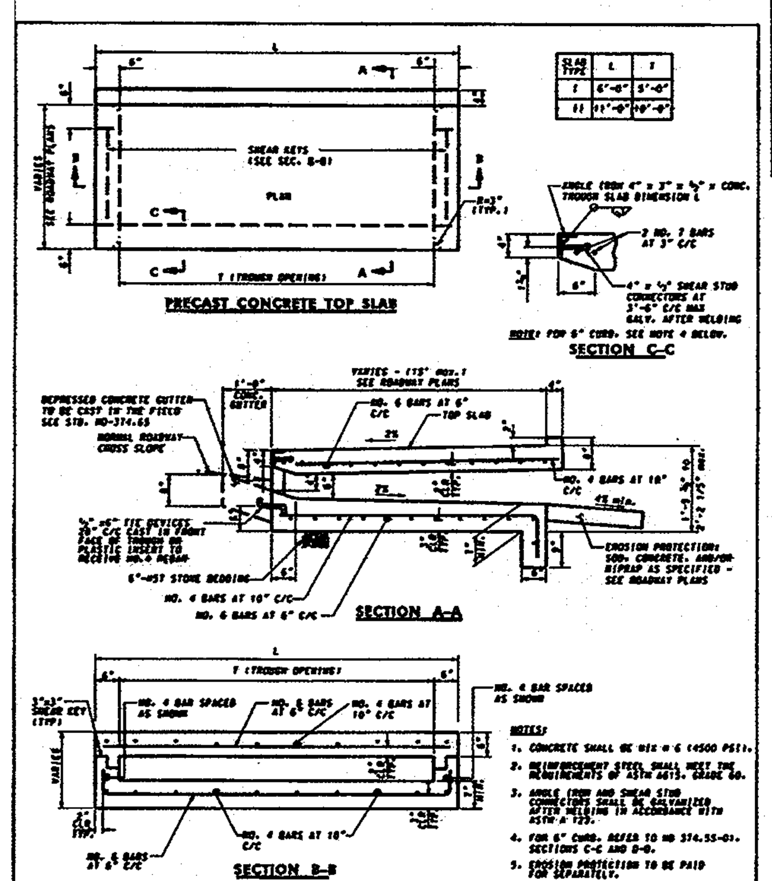

SPECIFICATION 305	CATEGORY CODE ITEMS	Maryland Department of Transportation STATE HIGHWAY ADMINISTRATION STANDARDS FOR HIGHWAYS AND INCIDENTAL STRUCTURES
APPROVED	DIRECTOR – OFFICE OF HIGHWAY DEVELOPMENT	PRECAST OR CAST-IN-PLACE COG /COS OPENING FOR 8" CURB 5' OR 10' ONLY
		STANDARD NO. MD 374.68

INLET I-1 DETAIL
NTS

DEVELOPER'S CERTIFICATE:

"I/WE CERTIFY THAT ALL DEVELOPMENT AND CONSTRUCTION WILL BE DONE IN ACCORDANCE TO THIS PLAN OF DEVELOPMENT FOR SEDIMENT CONTROL, AND THAT ALL RESPONSIBLE PERSONNEL INVOLVED IN THE CONSTRUCTION PROJECT WILL HAVE A CERTIFICATE OF ATTENDANCE AT A DEPARTMENT OF ENVIRONMENT APPROVED TRAINING PROGRAM FOR THE CONTROL OF SEDIMENT AND EROSION BEFORE BEGINNING THE PROJECT. I ALSO AUTHORIZE PERIODIC ON-SITE INSPECTIONS BY THE HOWARD SOIL CONSERVATION DISTRICT.

SIGNATURE OF DEVELOPER — May 13, 2010 DATE

ENGINEER'S CERTIFICATE:

"I HEREBY CERTIFY THAT THIS PLAN FOR SEDIMENT AND EROSION CONTROL REPRESENTS A PRACTICAL AND WORKABLE PLAN BASED ON MY PERSONAL KNOWLEDGE OF THE SITE CONDITIONS AND THAT IT WAS PREPARED IN ACCORDANCE WITH THE REQUIREMENTS OF THE HOWARD SOIL CONSERVATION DISTRICT."

SIGNATURE OF ENGINEER — 5/16/10 DATE

APPROVED: DEPARTMENT OF PUBLIC WORKS

CHIEF, BUREAU OF HIGHWAYS — 6-7-10 DATE

APPROVED: HOWARD COUNTY DEPARTMENT OF PLANNING AND ZONING

CHIEF, DEVELOPMENT ENGINEERING DIVISION — 6/11/10 DATE

CHIEF, DIVISION OF LAND DEVELOPMENT — 6/17/10 DATE

THIS DEVELOPMENT PLAN IS APPROVED FOR SOIL EROSION AND SEDIMENT CONTROL BY THE HOWARD SOIL CONSERVATION DISTRICT.

HOWARD S.C.D. — DATE

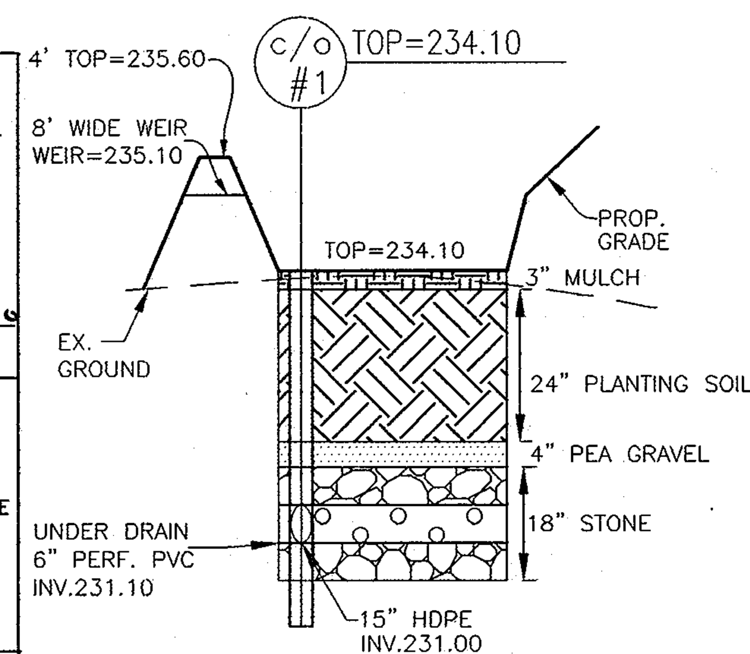

SECTION E–E
BIO RETENTION #5
SCALE: 1'=20"

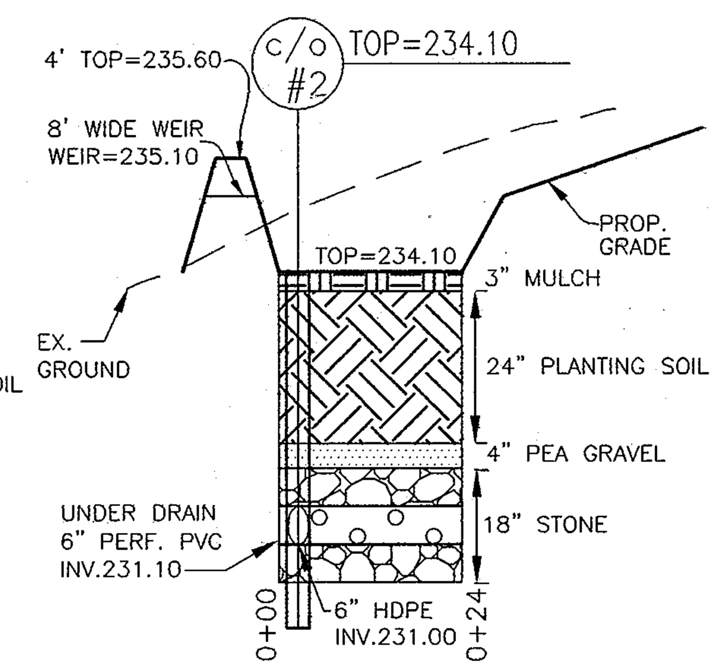

SECTION F–F
BIO RETENTION #6
SCALE: 1'=20"

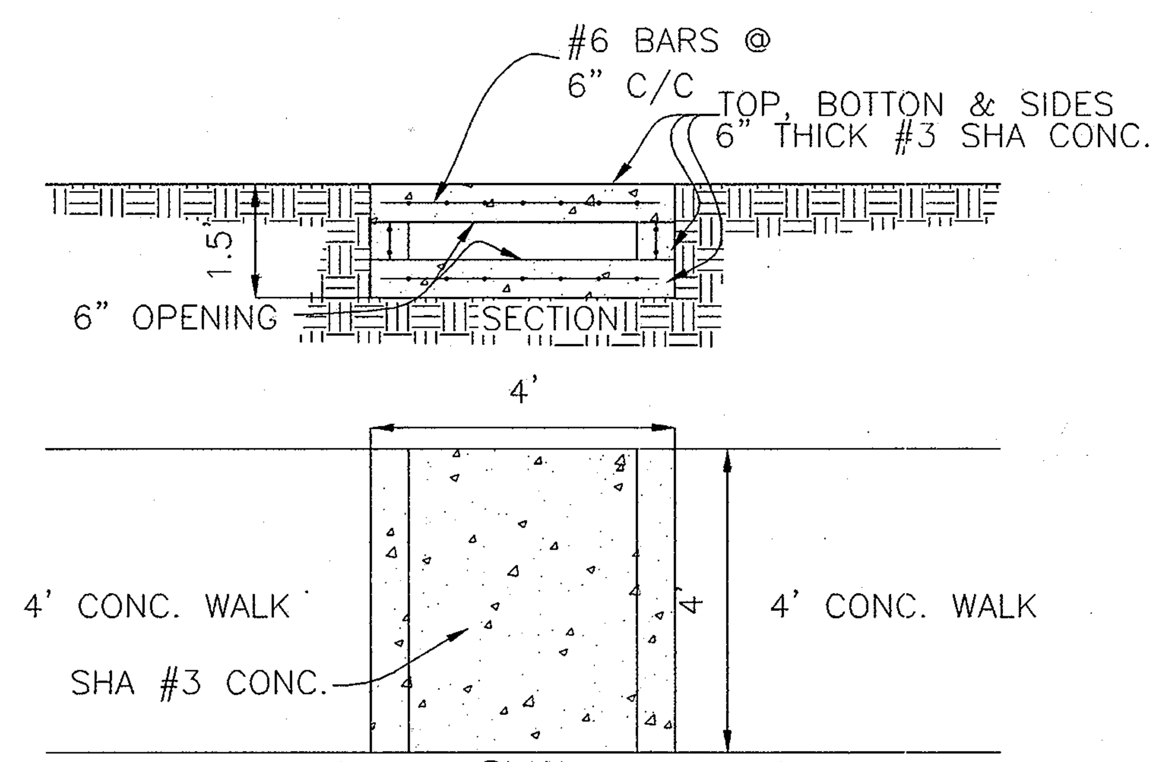

ALL CONCRETE AND REBAR PER MINIMUM HOWARD COUNTY STANDARDS
PROVIDE STAMP ON STRUCTURE"NO DUMPING: CHESAPEAKE BAY DRAINAGE"

ELEVATED WALK
SCALE: 1"=2'

NO.	REVISION	DATE
1	ADD MAIL/TRASH ENCLOSURE	11-22-10

FINAL ROAD CONSTRUCTION PLANS

STORM DRAIN PROFILES

THE GLENS AT GUILFORD

LOTS 1-10 & OPEN SPACE LOTS 11-13
A RESUBDIVISION OF LOTS 1 & 2-A, (P.46 & P.815), BLOCK E-3
NORDAU SUBDIVISION

TAX MAP #47 GRID 6 & 24 — PARCELS 46 & 815
6TH ELECTION DISTRICT — HOWARD COUNTY, MARYLAND

ROBERT H. VOGEL ENGINEERING, INC.
ENGINEERS • SURVEYORS • PLANNERS
8407 MAIN STREET ELLICOTT CITY, MD 21043
TEL: 410.461.7666
FAX: 410.461.8961

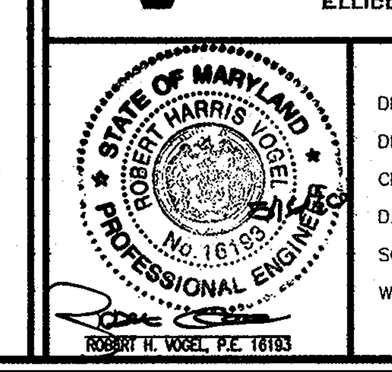

DESIGN BY:	JCO
DRAWN BY:	KG
CHECKED BY:	RHV
DATE:	APRIL 2010
SCALE:	AS SHOWN
W.O. NO.:	08–35

PROFESSIONAL CERTIFICATE
I HEREBY CERTIFY THAT THESE DOCUMENTS WERE PREPARED OR APPROVED BY ME, AND THAT I AM A DULY LICENSED PROFESSIONAL ENGINEER UNDER THE LAWS OF THE STATE OF MARYLAND, LICENSE NO. 16193 EXPIRATION DATE: 09-27-2010

F-09-112

STREET TREES

ROAD NAME	LENGTH	QTY. REQUIRED	QTY. PROVIDED
MARY LANE	288 LF	7	7
GLENROBBIN PLACE	1096 LF	27	29

NOTE: A MINIMUM SPACING OF 20' SHALL BE MAINTAINED BETWEEN ANY STREET LIGHT AND ANY TREE.

PLANT SCHEDULE FOR STREET TREES

TYPES	QUANTITY	BOTANIC NAME	COMMON NAME	SIZE/AMOUNT	CONDITION	SPACING
	8	ACER GINALLA	AMUR MAPLE	2-1/2" CAL MIN.	B & B/CONT.	40' O.C. ±
	9	ACER RIBRUM 'OCTOBER GLORY'	FEMALE OCTOBER GLORY RED MAPLE	2-1/2" CAL MIN.	B & B/CONT.	40' O.C. ±
	9	GLEDITSIA TRIACANTHOS INERMIS	FEMALE HONEY LOCUST	2-1/2" CAL MIN.	B & B/CONT.	40' O.C. ±
	10	ACER SACCARUM 'GREEN MOUNTAIR MAPLE'	GREEN MOUNTAIN SUGAR	2-1/2" CAL MIN.	B & B/CONT.	40' O.C. ±

LANDSCAPE NOTES

1. A MINIMUM SPACING OF 20' SHALL BE MAINTAINED BETWEEN ANY STREET LIGHT AND ANY TREE.
2. AT THE TIME OF PLANT INSTALLATION, ALL SHRUBS AND TREES LISTED AND APPROVED FOR THIS SITE BE OF THE PROPER HEIGHT REQUIREMENT IN ACCORDANCE WITH THE HOWARD COUNTY LANDSCAPE MANUAL. IN ADDITION, NO SUBSTITUTIONS OR RELOCATION OF THE REQUIRED PLANTING MAY BE MADE WITHOUT PRIOR REVIEW AND APPROVAL FROM THE DEPARTMENT OF PLANNING AND ZONING. ANY DEVIATION FROM THE APPROVED LANDSCAPE PLAN MAY RESULT IN DENIAL OR DELAY IN THE RELEASE OF LANDSCAPE SURIETY UNTIL SUCH TIME AS ALL REQUIRED MATERIALS ARE PLANTED AND/OR REVISIONS ARE MADE TO THE APPLICABLE PLANS.
3. THE OWNER, TENANTS AND/OR THEIR AGENTS SHALL BE RESPONSIBLE FOR MAINTENANCE OF THE REQUIRED LANDSCAPING INCLUDING BOTH PLANT MATERIALS AND BERMS, FENCES AND WALLS. ALL PLANT MATERIALS SHALL BE MAINTAINED IN GOOD GROWING CONDITION AND WHEN NECESSARY, REPLACED WITH NEW MATERIALS TO ENSURE CONTINUED COMPLIANCE WITH APPLICABLE REGULATIONS. ALL OTHER REQUIRED LANDSCAPING SHALL BE PERMANENTLY MAINTAINED IN GOOD CONDITION, AND WHEN NECESSARY, REPAIRED OR REPLACED.
4. THIS PLAN HAS BEEN PREPARED IN ACCORDANCE WITH SECTION 16.124 OF THE HOWARD COUNTY CODE AND THE LANDSCAPE MANUAL. SURETY IN THE AMOUNT OF $15,450.00 (36 STREET TREES X $300.00 EACH = $8,700) + (14 SHADE TREES X $300.00 EACH = $4,200) + (3 EVERGREEN TREES X $150.00 EACH = $450) WILL BE POSTED WITH THE DEVELOPERS AGREEMENT
5. NO CLEARING OF EXISTING VEGETATION IS PERMITTED WITHIN THE LANDSCAPE EDGE FOR WHICH CREDIT IS BEING TAKEN; HOWEVER, LANDSCAPE MAINTENANCE IS AUTHORIZED.
6. CONTRACTOR SHALL CERTIFY LOCATION OF ALL UNDERGROUND UTILITIES PRIOR TO DIGGING.
7. FINAL LOCATION OF PLAN MATERIAL MAY NEED TO VARY TO MEET FINAL FIELD CONDITIONS. TREES SHALL NOT BE PLANTED IN THE BOTTOM OF DRAINAGE SWALES.

B G & E NOTES:

1. THE LANDSCAPING ON WIREZONE (40' FROM BGE POLES) IS IN ACCORDANCE WITH BGE LIST OF TREES AND PLANTS.
2. BGE RESERVES THE RIGHT TO TRIM, TOP OR CUT DOWN ANY TREE IN PROXIMITY TO THE LINE THAT IN THE OPINION OF BGE SHALL BE DEEMED A HAZARD TO THE SAFE AND RELIABLE DELIVERY OF ELECTRICITY.
3. THE DEPARTMENT OF PLANNING AND ZONING MAY AUTHORIZE THE TRIMMING OR REMOVAL OF TREES OR VEGETATION IMMEDIATELY ADJACENT TO THE BGE R/W OR EASEMENT, IF BGE DETERMINES THE TREES ARE COMPROMISING THE SAFETY OR A TRANSMISSION LINE LOCATED WITHIN THEIR UTILITY R/W OR EASEMENT. IF BGE

DEVELOPER'S AGREEMENT

STREET TREES ARE PROVIDED FOR THIS PROJECT IN ACCORDANCE WITH SECTION 16.124(e)(1) OF THE SUBDIVISION REGULATIONS AND THE LANDSCAPE MANUAL. SURETY IN THE AMOUNT OF $15,450.00 WILL BE POSTED WITH THE DEVELOPER'S AGREEMENT.

SCHEDULE A PERIMETER LANDSCAPE EDGE

CATEGORY	ADJACENT TO ROADWAYS	ADJACENT TO PERIMETER PROPERTIES		
PERIMETER/FRONTAGE DESIGNATION LANDSCAPE TYPE	4 B	1 A	2 A	3 A
LINEAR FEET OF ROADWAY FRONTAGE/PERIMETER	100'	520'	288'	520'
CREDIT FOR EXISTING VEGETATION (YES, NO, LINEAR FEET) (DESCRIBE BELOW IF NEEDED)	NO	YES* 130'	YES* 170'	YES* 321'
CREDIT FOR WALL, FENCE OR BERM (YES, NO, LINEAR FEET) (DESCRIBE BELOW IF NEEDED)	NO –	NO –	NO –	NO –
NUMBER OF PLANTS REQUIRED (LF REMAINING) SHADE TREES EVERGREEN TREES SHRUBS	100' 1:50/2 1:40/3	390' 1:60/7 –	118' 1:60/2 –	199' 1:60/3 –
NUMBER OF PLANTS PROVIDED SHADE TREES EVERGREEN TREES OTHER TREES (2:1 SUBSTITUTION) SHRUBS (10:1 SUBSTITUTION) (DESCRIBE PLANT SUBSTITUTION CREDITS BELOW IF NEEDED)	2 3 – – –	7 – – – –	2 – – – –	3 – – – –

* EXISITING WOODS TO REMAIN

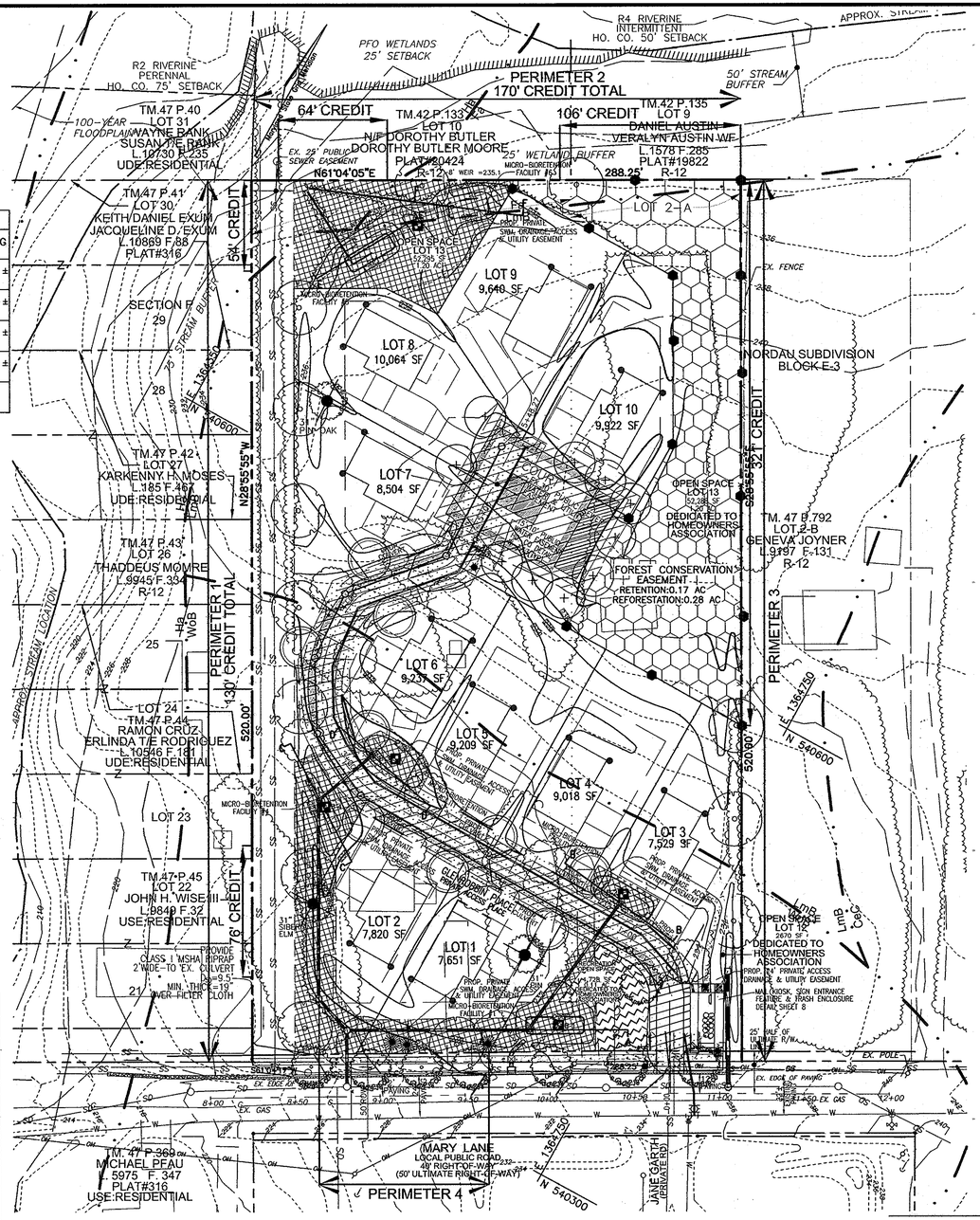

J. CHRIS OSLE
DNR QUALIFIED PROFESSIONAL

APPROVED: DEPARTMENT OF PUBLIC WORKS

CHIEF, BUREAU OF HIGHWAYS — DATE 6-7-10

APPROVED: HOWARD COUNTY DEPARTMENT OF PLANNING AND ZONING

CHIEF, DEVELOPMENT ENGINEERING DIVISION — DATE 6/1/10

CHIEF, DIVISION OF LAND DEVELOPMENT — DATE 6/7/10

DEVELOPER'S/BUILDER'S CERTIFICATE

I/WE CERTIFY THAT THE LANDSCAPING SHOWN ON THIS PLAN WILL BE DONE ACCORDING TO THE PLAN, SECTION 16.124 OF THE HOWARD COUNTY CODE AND THE HOWARD COUNTY LANDSCAPE MANUAL. I/WE FURTHER CERTIFY THAT UPON COMPLETION, A CERTIFICATION OF LANDSCAPE INSTALLATION, ACCOMPANIED BY AN EXECUTED ONE (1) YEAR GUARANTEE OF PLANT MATERIALS, WILL BE SUBMITTED TO THE DEPARTMENT OF PLANNING AND ZONING.

SIGNATURE OF DEVELOPER — DATE May 13, 2010

STREET LIGHT CHART

QUANTITY	SYMBOL	FIXTURE/POLE TYPE
1	✸	GREENWAY SERIES 130 WATT LED MOUNTED ON 4" I.D. SCH 40 STRAIGHT ALUMINUM POLE–20' DIRECT BURIAL. (MARY LANE) STA. 0+15.96, LT. 15.83'
1	✸	GREENWAY SERIES 130 WATT LED MOUNTED ON 4" I.D. SCH 40 STRAIGHT ALUMINUM POLE–20' DIRECT BURIAL. (GLENROBBIN PLACE) STA. 4+69.86, RT. 12.10'

PLANT SCHEDULE FOR PERIMETERS

KEY	QUAN.	PLANT NAME	SIZE	REMARK
	14	NYSSA SYLVATICA FEMALE TUPELO (SHADE TREE)	2–1/2" – 3" CAL.	B&B
	3	PICEA ABIES NORWAY SPRUCE (EVERGREEN TREES)	6'–8' HT.	B&B

1. ALL PLANT MATERIALS SHALL BE FULL AND HEAVY, BE WELL FORMED AND SYMMETRICAL, CONFORM TO THE MOST CURRENT AAN SPECIFICATIONS AND BE INSTALLED IN ACCORDANCE WITH LCAMW PLANTING SPECIFICATIONS.
2. CONTRACTOR SHALL VERIFY LOCATION OF ALL UNDERGROUND UTILITIES PRIOR TO DIGGING.
3. FINAL LOCATION OF PLANT MATERIAL MAY NEED TO VARY TO MEET FINAL CONDITIONS.TREES SHALL NOT BE PLANTED IN THE BOTTOM OF DRAINAGE SWALES.
4. CONTRACTOR SHALL VERIFY PLANT QUANTITIES PRIOR TO BIDDING. IF PLAN DIFFERS FROM LANDSCAPE SCHEDULE, THE PLAN SHALL GOVERN.

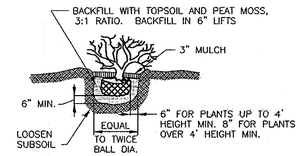

SHRUB PLANTING DETAIL
NOT TO SCALE

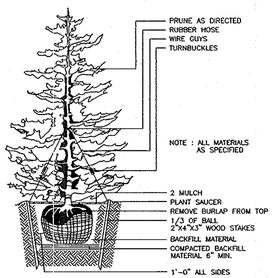

TYPICAL EVERGREEN TREE PLANTING DETAIL
NOT TO SCALE

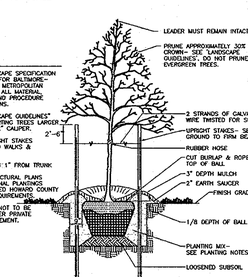

TREE PLANTING AND STAKING
NOT TO SCALE

OWNER/DEVELOPER

HOWARD COUNTY HOUSING COMMISSION
6751 COLUMBIA GATEWAY DRIVE
3RD FLOOR, GATEWAY BUILDING
COLUMBIA, MARYLAND 21044
410-313-6316

NO.	REVISION	DATE
1	ADD MAIL/TRASH ENCLOSURE	11-22-10

LEGEND

EXISTING CONTOUR
PROPOSED CONTOUR
EXISTING CURB AND GUTTER
PROPOSED CURB AND GUTTER
EXISTING UTILITY POLE
EXISTING LIGHT POLE
EXISTING MAILBOX
EXISTING SIGN
EXISTING SANITARY MANHOLE
EXISTING SANITARY LINE
EXISTING CLEANOUT
EXISTING FIRE HYDRANT
EXISTING WATER LINE
EXISTING FENCE
PROPERTY LINE
RIGHT-OF-WAY LINE
LANDSCAPE PERIMETER
EXISTING PARCEL/LOT DIVIDE LINE
WETLAND
SOILS BOUNDARY
PROPOSED STORM DRAIN
PROPOSED STORM DRAIN INLET
4' SIDEWALK
PROPOSED TREE
EXIST. TREE TO BE REMOVED
100 YEAR FLOODPLAIN
75' STREAM BUFFER
WETLANDS
STREET LIGHT
FOREST CONSERVATION EASEMENT
FOREST CONSERVATION SIGN LOCATION

FINAL ROAD CONSTRUCTION PLANS
LANDSCAPE AND FOREST CONSERVATION PLAN
THE GLENS AT GUILFORD

LOTS 1-10 & OPEN SPACE LOTS 11-13
A RESUBDIVISION OF LOTS 1 & 2-A, (P.46 & P.815), BLOCK E-3
NORDAU SUBDIVISION

TAX MAP #47 GRID 6 & 24 — PARCELS 46 & 815
6TH ELECTION DISTRICT — HOWARD COUNTY, MARYLAND

ROBERT H. VOGEL ENGINEERING, INC.
ENGINEERS • SURVEYORS • PLANNERS
8407 MAIN STREET, ELLICOTT CITY, MD 21043
TEL: 410.461.7666 FAX: 410.461.8961

STATE OF MARYLAND — ROBERT HARRIS VOGEL — No. 16193 — PROFESSIONAL ENGINEER
ROBERT H. VOGEL, P.E. 16193

DESIGN BY:	JCO
DRAWN BY:	KG
CHECKED BY:	RHV
DATE:	APRIL 2010
SCALE:	1"=40'
W.O. NO.:	08-35

PROFESSIONAL CERTIFICATE

I HEREBY CERTIFY THAT THESE DOCUMENTS WERE PREPARED OR APPROVED BY ME, AND THAT I AM A DULY LICENSED PROFESSIONAL ENGINEER UNDER THE LAWS OF THE STATE OF MARYLAND, LICENSE NO. 16193 EXPIRATION DATE: 09-27-2010

SHEET 7 OF 9

F-09-112

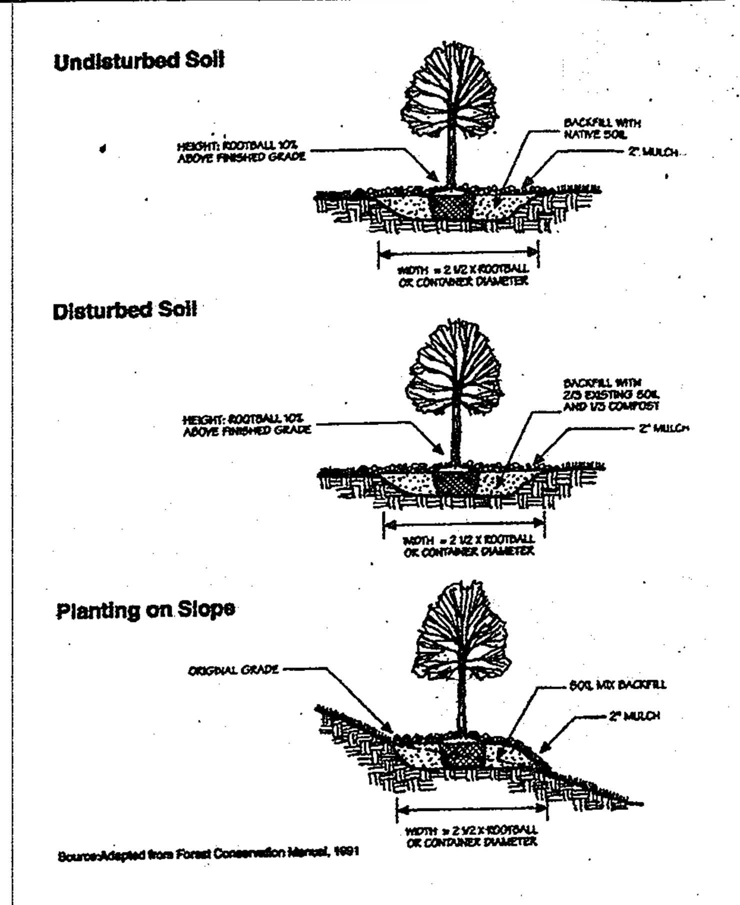

Container Grown and B&B Planting Techniques — Figure D:16

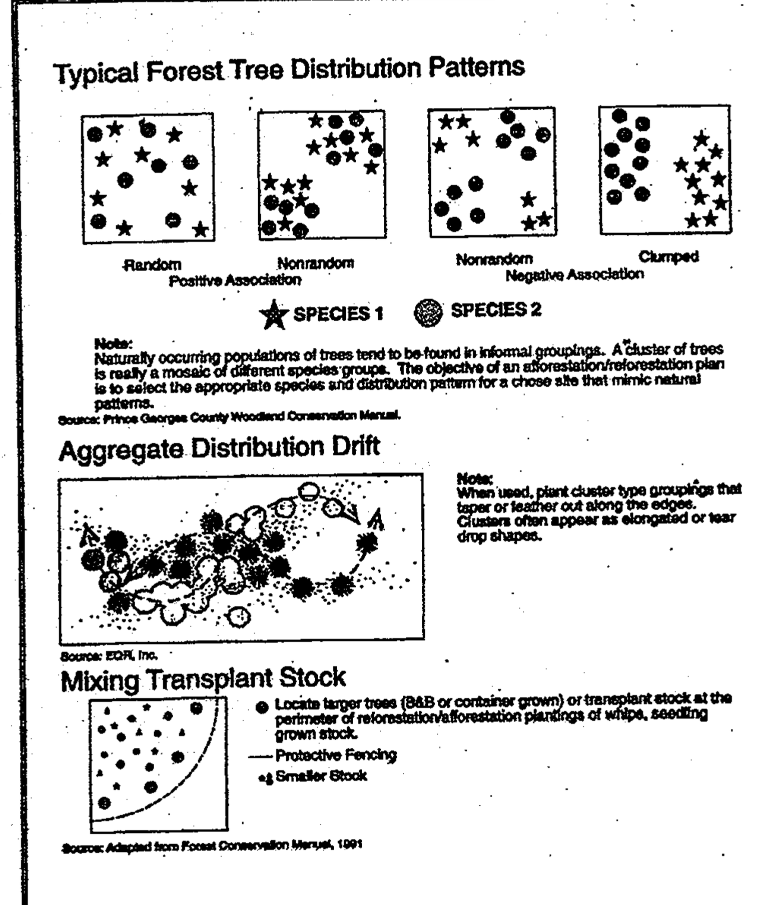

Planting Distribution Patterns — Figure A:19

Size	Number Required per Acre	Approximate Spacing feet on center	Survivability Requirement At the end of the second growing season	
Bare Root Seedlings or Whips	700	8 x 8	55%	385
Container Grown Seedling Tubes (Minimum Cavity Width 1.5")	450	10 x 10	65%	290
Container Grown 1, 2, 3 Gallon	350	12 x 12	75%	260
Container Grown 5, 7 Gallon or 1" Caliper B & B	200	15 x 15	85%	170
Container Grown 15, 25 Gallon or 1.5 - 2" Caliper B & B	100	20 x 20	100%	100

Notes:
1. These stocking and survival requirements are the minimum numbers estimated to meet the definition of forest from bare land.
2. In certain circumstances, any combination of the above mentioned stocking options, dry seeding, tree shelters, transplants, and/or natural regeneration may be appropriate strategies to fulfill the requirements of an approved FCD. They will be evaluated on a case-by-case basis by the approving authority.
3. Spacing does not imply that trees or shrubs must be planted in a grid pattern.

Site Stocking — Figure A:18

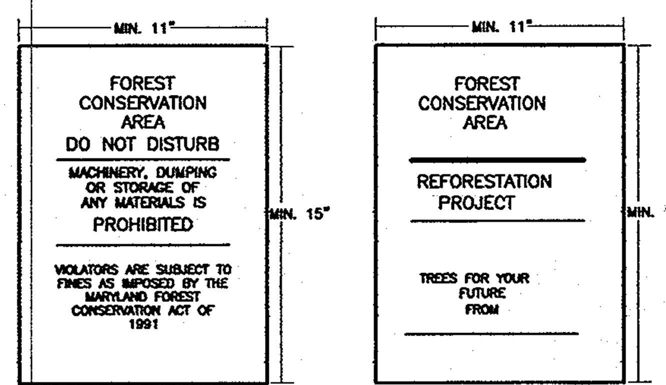

NOTE:
1. BOTTOM OF SIGNS TO BE HIGHER THAN TOP OF TREE PROTECTION FENCE.
2. SIGNS TO BE PLACED AT A MAXIMUM SPACING OF 50–100 FEET. CONDITIONS ON-SITE AFFECTING VISIBILITY MAY WARRANT PLACING SIGNS CLOSER OR FARTHER APART.
3. ATTACHMENT OF SIGNS TO TREES IS PROHIBITED.
4. ● FOREST CONSERVATION SINAGE LOCATION.

SIGNAGE DETAIL
NOT TO SCALE

J. CHRIS OGLE
DNR QUALIFIED FOREST PROFESSIONAL

APPROVED: DEPARTMENT OF PUBLIC WORKS

CHIEF, BUREAU OF HIGHWAYS — DATE 6-7-10

APPROVED: HOWARD COUNTY DEPARTMENT OF PLANNING AND ZONING

CHIEF, DEVELOPMENT ENGINEERING DIVISION — DATE 6/11/10

CHIEF, DIVISION OF LAND DEVELOPMENT — DATE 6/17/10

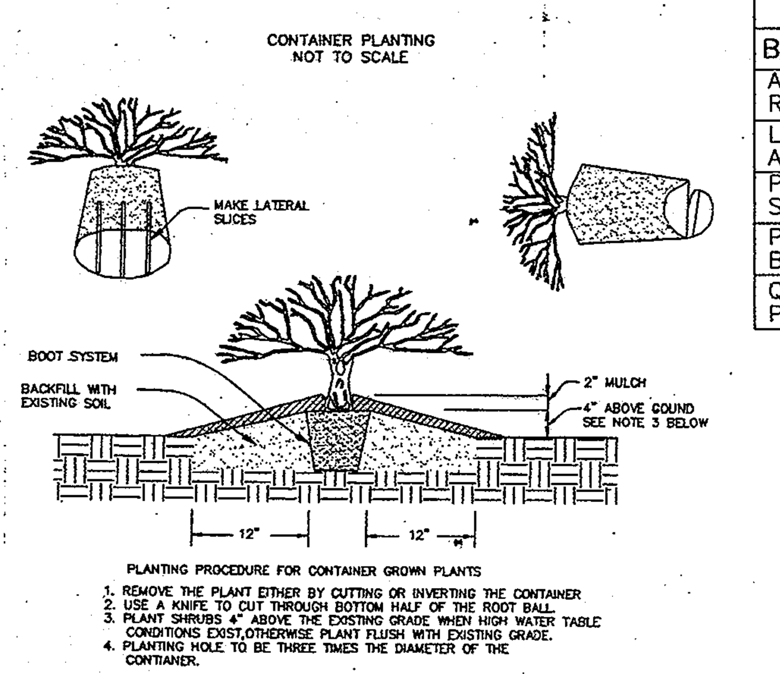

PLANTING PROCEDURE FOR CONTAINER GROWN PLANTS
1. REMOVE THE PLANT EITHER BY CUTTING OR INVERTING THE CONTAINER
2. USE A KNIFE TO CUT THROUGH BOTTOM HALF OF THE ROOT BALL.
3. PLANT SHRUBS 4" ABOVE THE EXISTING GRADE WHEN HIGH WATER TABLE CONDITIONS EXIST,OTHERWISE PLANT FLUSH WITH EXISTING GRADE.
4. PLANTING HOLE TO BE THREE TIMES THE DIAMETER OF THE CONTIANER.

REFORESTATION AREA MONITORING NOTES

1. MONTHLY VISITS DURING THE FIRST GROWING SEASON ARE TO ASSESS THE SUCCESS OF THE PLANTINGS AND TO DETERMINE IF SUPPLEMENTAL WATERING, PEST CONTROL OR OTHER ACTIONS ARE NECESSARY. EARLY SPRING VISITS WILL DOCUMENT WINTER KILL AND AUTUMN VISITS WILL DOCUMENT SUMMER KILL.
2. THE MINIMUM SURVIVAL RATE SHALL BE 75% NUMBER OF TREES PLANTED PER ACRE AT THE END OF THE TWO YEAR MAINTENANCE PERIOD.
3. SURVIVAL WILL BE DETERMINED BY A STRATIFIED RANDOM SAMPLING OF THE PLANTINGS. THE SPECIES COMPOSITION OF THE SAMPLE POPULATION SHOULD BE PROPORTIONATE TO THE AMOUNT OF EACH SPECIES IN THE ENTIRE PLANTING TO BE SAMPLED.
4. EFFECTIVE MONITORING WILL ASSESS PLANT SURVIVABILITY DURING THE FIRST GROWING SEASON AND MAKE RECOMMENDATIONS FOR REINFORCEMENT PLANTINGS IF REQUIRED AT THAT TIME.

SEQUENCE OF CONTRUCTION–FOREST CONSERVATION

1. PRECONSTRUCTION MEETING /SITE WALK WITH CONTRACTORS AND OTHER RESPONSIBLE PARTIES TO DEFINE PROTECTION MEASURES TO BE UTILIZED AND TO POINT OUT PARTICULAR TREES TO BE SAVED.
2. STAKE OUT LIMITS OF DISTURBANCE AND TREE PROTECTION FENCING LOCATIONS.
3. INSTALL TREE PROTECTION FENCING: FENCING TO BE INSPECTED BY THE PROJECT ENGINEER OR THE PROJECT ECOLOGIST AND HOWARD COUNTY PLANNING AND ZONING.
4. PROCEED WITH TREE REMOVAL AND SITE IMPROVEMENTS AS PER APPROVED SEDIMENT CONTROL PLAN – TO BE INSPECTED BY HOWARD COUNTY PLANNING AND ZONING.
5. TEMPORARY TREE PROTECTION DEVICES SHALL BE REMOVED AFTER ALL FINISHED GRADING AND UTILITY CONSTRUCTION HAS OCCURED AND WITH APPROVAL FROM THE HOWARD COUNTY OFFICE OF PLANNING AND ZONING.

HOWARD COUNTY FOREST CONSERVATION WORKSHEET

NET TRACT AREA:

A. TOTAL TRACT AREA	3.44 AC
B. AREA WITHIN 100 YEAR FLOODPLAIN	0.00 AC
C. AREA TO REMAIN IN AGRICULTURAL PRODUCTION	0.00 AC
D. NET TRACT AREA	3.44 AC

LAND USE CATEGORY

INPUT THE NUMBER "1" UNDER THE APPROPIATE LAND USE ZONING, AND LIMIT TO ONLY ONE ENTRY.

ARA	MDR	IDA	HDR	MPD	CIA
0	0	0	1	0	0

E. AFFOREST THRESHOLD	15% X D =	0.52 AC
F. CONSERVATION THRESHOLD	20% X D =	0.69 AC
EXISTING FOREST COVER:		
G. EXISTING FOREST COVER (EXCLUDING FLOODPLAIN)		1.22 AC
H. AREA OF FOREST ABOVE AFFORESTATION THRESHOLD		0.70 AC.
I. AREA OF FOREST ABOVE CONSERVATION THRESHOLD		0.53 AC.
BREAK EVEN POINT:		
J. BREAK EVEN POINT		0.79 AC
K. CLEARING PERMITTED WITHOUT MITIGATION		0.43 AC
PROPOSED FOREST CLEARING:		
L. TOTAL AREA OF FOREST TO BE CLEARED		1.05 AC
M. TOTAL AREA OF FOREST TO BE RETAINED		0.17 AC
PLANTING REQUIREMENTS:		
N. REFORESTATION FOR CLEARING ABOVE CONSERVATION THRESHOLD		0.13 AC
P. REFORESTATION FOR CLEARING BELOW CONSERVATION THRESHOLD		1.04 AC
Q. CREDIT FOR RETENTION ABOVE CONSERVATION THRESHOLD		0.00 AC
R. TOTAL REFORESTATION REQUIRED (N+P–Q)		1.17 AC
S. TOTAL AFFORESTATION REQUIRED		0.00 AC
T. TOTAL REFORESTATION AND AFFORESTATION REQUIRED		1.17 AC

TOTAL FOREST RETENTION: 0.17 AC.

FOREST CONSERVATION EASEMENT HAVE BEEN ESTABLISHED TO FULFILL THE REQUIREMENTS OF SECTION 16.1200 OF THE HOWARD COUNTY FOREST CONSERVATION MANUAL, NO CLEARING, GRADING OR CONSTRUCTION IS PERMITTED WITHIN THE FOREST CONSERVATION EASEMENT, HOWEVER, FOREST MANAGEMENT PRACTICES AS DEFINED IN THE DEED OF FOREST CONSERVATION EASEMENT ARE ALLOWED.

TOTAL FOREST CONSERVATION OBLIGATION THE PROJECT TO BE FULFILLED BY ON SITE RETENTION OF 0.17 ACRES & REFORESTATION OF 0.28 ACRES. THE REMAINING 0.89 ACRES OF REFORESTATION WILL BE PROVIDED BY AN OFF-SITE FOREST RETENTION EASEMENT LOCATED ON TAX MAP 42, PARCEL 136, LOTS 8 & 9.

RETENTION – 0.17 AC. (7,405.20 X .20 = $ 1,482.00)
REFORESTATION ONSITE– 0.28AC. (12,197 SF x .50 = $7,581.00)
RETENTION OFFSITE– 3.51 AC. (152,895.60SF x .20 = $30,579.12)

FINANCIAL SURETY FOR ON SITE FOREST OBLIGATION IN THE AMOUNT OF $39,643.00 WILL BE POSTED WITH THE DEVELOPER'S AGREEMENT.

PLANT SCHEDULE
QUANTITIES FOR REFORESTATION AREA

BOTANICAL NAME	QUANTITY	SIZE	SPACING (FT)
Acer rubrum Red Maple	10	1" Cal.	15 X 15
Liquidambar straciflua American Sweetgum	12	1" Cal.	15 X 15
Platanus occidentalis Sycamore	12	1" Cal.	15 X 15
Prunus serotina Black Cherry	12	1" Cal.	15 X 15
Quercus palustris Pin Oak	10	1" Cal.	15 X 15

REFORESTATION PROVIDED

0.28 ACRES
1" CALIPER TREES
56 TREES @ 200 TREES PER ACRE

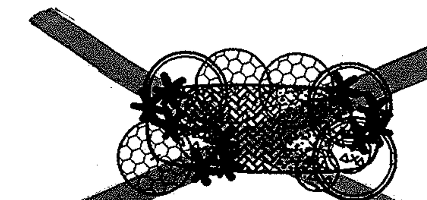

TYPICAL BIORETENTION PLANTING PLAN
SCALE: 1"=20'

BIORETENTION PLANTING SCHEDULE

FACILITY	NO.	BOTANICAL/COMMON NAME	SIZE	REMARKS
1	36	CORNUS SERICEA/ REDOSIER DOGWOOD	#5, CONT.	5' O.C.
2	20	ARONIA ARBUTIFOLIA/ RED CHOKECHERRY	#5, CONT.	3' O.C. TRIANGULAR SPACING
3	45	ARONIA ARBUTIFOLIA/ RED CHOKECHERRY	#5, CONT.	3' O.C. TRIANGULAR SPACING
4	40	CORNUS SERICEA/ REDOSIER DOGWOOD	#5, CONT.	5' O.C.
	2	ACER REBRUM/ OCTOBER GLORY RED MAPLE	1-1/2" CAL MIN. CONT. 7'	5' O.C.
5	10	SOUTHERN BAYBERRY	#1, CONT.	RANDOM
	15	ILEX DECIDUA/ FEMALE DECIDUOUS HOLLY	#5, CONT.	RANDOM
	1	ACER NEGUNDO/ BOX ELDER	1-1/2" CAL MIN B&B/CONT.	5' O.C.
6	8	MYRICA SERIFERA/ SOUTHERN BAYBERRY	#1, CONT.	RANDOM
	12	ILEX DECIDUA/ FEMALE DECIDUOUS HOLLY	#5, CONT.	RANDOM
	1	ACER NEGUNDO/ BOX ELDER	1-1/2" CAL MIN. B&B/ CONT.	5' O.C.

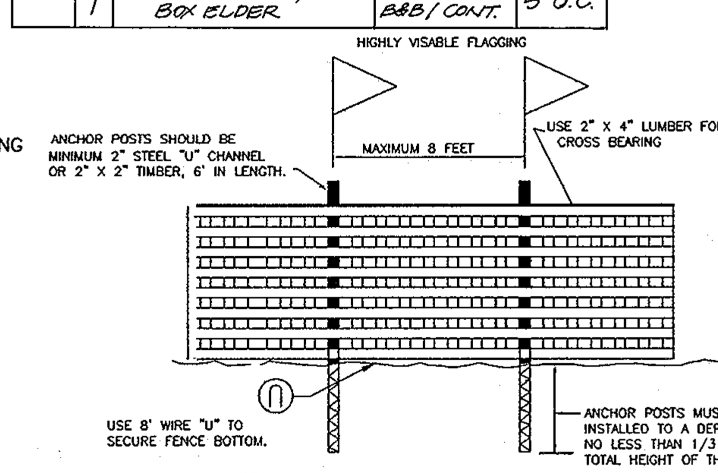

NOTES:
1. Forest protection device only.
2. Retention area will be set as part of the review process.
3. Boundaries of retention area should be staked and flagged prior to installing device.
4. Roof damage should be avoided.
5. Protection signage should be used.
6. Device should be maintained throughout construction.

BLAZE ORANGE PLASTIC MESH
TYPICAL TREE PROTECTION FENCE DETAIL
NO SCALE

DEVELOPER'S/BUILDER'S CERTIFICATE

I/WE CERTIFY THAT THE LANDSCAPING SHOWN ON THIS PLAN WILL BE DONE ACCORDING TO THE PLAN, SECTION 16.124 OF THE HOWARD COUNTY CODE AND THE HOWARD COUNTY LANDSCAPE MANUAL. I/WE FURTHER CERTIFY THAT UPON COMPLETION, A CERTIFICATION OF LANDSCAPE INSTALLATION, ACCOMPANIED BY AN EXECUTED ONE (1) YEAR GUARANTEE OF PLANT MATERIALS, WILL BE SUBMITTED TO THE DEPARTMENT OF PLANNING AND ZONING.

SIGNATURE OF DEVELOPER — DATE May 13, 2010

SCHEDULE D: BIO-RETENTION FACILITIES (TOTAL) AREA LANDSCAPING-TYPE 'B' BUFFER

	BIO-RETENTION FACILITY#1	BIO-RETENTION FACILITY#2	BIO-RETENTION FACILITY#3	BIO-RETENTION FACILITY#4	BIO-RETENTION FACILITY#5	BIO-RETENTION FACILITY#6	TOTAL
LINEAR FEET OF PERIMETER	85'	72'	97'	211'	293'	231'	
CREDIT FOR EXISTING VEGETATION (NO, YES AND LINEAR FEET)	NO	NO	NO	NO	NO	NO	
CREDIT FOR OTHER LANDSCAPING (NO, YES AND %)	NO	NO	NO	NO	NO	NO	
NUMBER OF TREES REQUIRED SHADE TREES 1:50 EVERGREEN TREES 1:40	1 2	1 2	1 2	2 4	3 6	2 4	10 20
NUMBER OF TREES PROVIDED SHADE TREES SHRUBS	1 2	1 2	1 2	2 4	3 6	2 4	10 20

* FACILITIES ARE TO BE PLANTED THEREFORE NO PERIMETER PLANTING IS REQUIRED.

BIORETENTION PLANTING SCHEDULE

KEY	NO.	BOTANICAL NAME/COMMON NAME	SIZE	REMARKS
	3	ACER RUBRUM RED MAPLE	1" – 1-1/2" CAL	B & B
	3	JUNIPER VIGINIANA EASTERN RED CEDAR	5' – 6' HT.	B & B
	5	VACCINIUM CORYMBOSUM HIGHBUSH BLUEBERRY	3 GALLON	CONT
	10	LINDERA BENZOIN SPICE BUSH	3 GALLON	CONT
	65	ANDROPOGOU VIRGINIOUS BROOM SEDGE	2" POT	CONT
	65	PANICUM VIRGATUM SWITCH GRASS	2" POT	1' O.C.

REFORESTATION PLANTING NOTES

1. REFORESTATION AREAS MAY BE PLANTED AS SOON AS REASONABLE TO DO SO. LATE WINTER-EARLY SPRING PLANTINGS ARE PREFERRED. EARLIEST PLANTING DATES WILL VARY FROM YEAR TO YEAR BUT PLANTING MAY GENERALLY BEGIN AS SOON AS THE GROUND IS NO LONGER FROZEN. ALTERNATE PLANTING DATES MAY BE CONSIDERED AS CONDITION WARRANTS.
2. SOIL AMENDMENTS AND FERTILIZATION RECOMMENDATIONS WILL BE MADE BASED UPON THE RESULTS OF SOIL ANALYSIS FOR NITROGEN, PHOSPHORUS, POTASSIUM, ORGANIC MATTER CONTENT AND pH. IF REQUIRED, FERTILIZER WILL BE PROVIDED USING A SLOW RELEASE, SOLUBLE 16–8–16 ANALYSIS DESIGNED TO LAST 5–8 YEARS CONTAINED IN POLYETHYLENE PERFORATED BAGS SUCH AS MANUFACTURED BY ADCO WORKS, P.O. BOX 310 HOLLINS, N.Y. 11423 OR APPROVED EQUAL.
3. PLANT MATERIALS WILL BE PLANTED IN ACCORDANCE WITH THE PLANTING DETAILS AND PLANT SCHEDULE.
4. PLANT MATERIAL SHALL BE NURSERY GROWN AND INSPECTED PRIOR TO PLANTING. PLANTS NOT CONFORMING TO THE AMERICAN STANDARD FOR NURSERY STOCK SPECIFICATIONS FOR SIZE, FORM, VIGOR, OR ROOTS, OR DUE TO TRUNK WOUNDS, BREAKAGE, DESICCATION, INSECT OR DISEASE MUST BE REPLACED.
5. PLANTING STOCK MUST BE PROTECTED FROM DESICCATION AT ALL TIMES PRIOR TO PLANTING. MATERIALS HELD FOR PLANTING SHALL BE MOISTENED AND PLACED IN COOL SHADED AREAS UNTIL READY FOR PLACEMENT.
6. NEWLY PLANTED TREES MAY REQUIRE WATERING AT LEAST ONCE PER WEEK DURING THE FIRST GROWING SEASON DEPENDING ON RAINFALL IN ORDER TO GET ESTABLISHED. THE INITIAL PLANTING OPERATION SHOULD ALLOW FOR WATERING DURING INSTALLATION TO COMPLETELY SOAK BACKFILL MATERIAL.
7. MULCH SHALL BE APPLIED IN ACCORDANCE WITH THE DIAGRAM PROVIDED AND SHALL CONSIST OF COMPOSTED, SHREDDED HARDWOOD BARK MULCH, FREE OF WOOD ALCOHOL.
8. ALL NURSERY STOCK TO BE SPRAYED WITH DEER REPELLENT CONTAINING BITREX, SUCH AS REPELLEX. ALL NURSERY STOCK TO BE GROWN WITH DEER REPELLENT TABLETS IN GROWING MEDIUM, SUCH AS REPELLEX TABLETS.

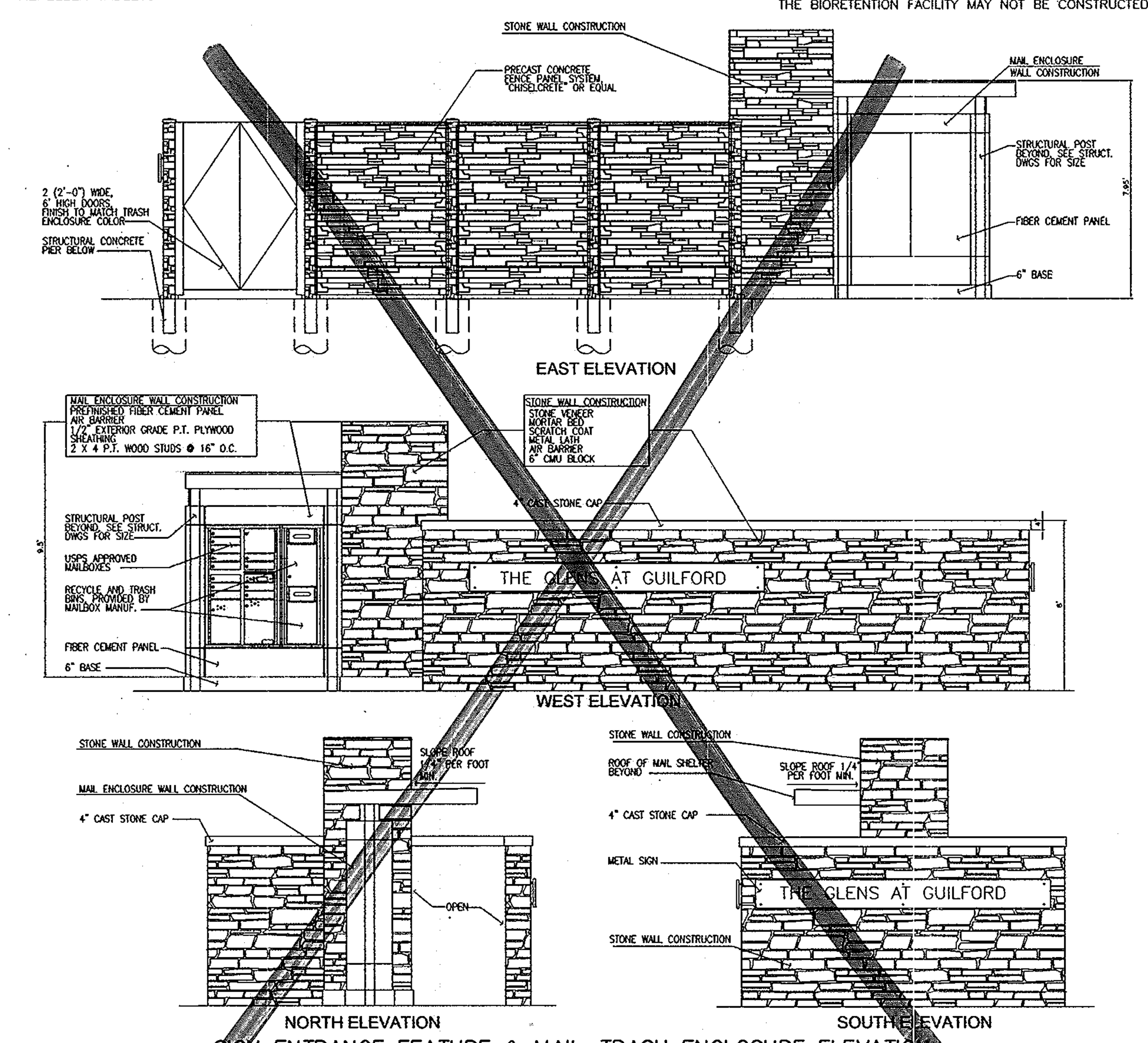

SIGN ENTRANCE FEATURE & MAIL–TRASH ENCLOSURE ELEVATION
SCALE= 1:=50'

MATERIALS SPECIFICATIONS FOR BIO-RETENTION

MATERIAL	SPECIFICATION	SIZE	NOTES
PLANTINGS	SPECIFICATION	N/A	PLANTINGS ARE SITE-SPECIFIC
PLANTING SOIL (2.5' TO 4' DEEP)	20-30% TOPSOIL 20-30% LEAF COMPOSITE 50% COURSE GRAIN CONSTRUCTION SAND	N/A	USDA SOIL TYPES LOAMY SAND, SANDY LOAM OR LOAM
MULCH	SHREDDED HARDWOOD		AGED 6 MONTHS, MINIMUM
PEA GRAVEL DIAPHRAGM AND CURTAIN DRAIN	PEA GRAVEL: ASTM-D-448 ORNAMENTAL STONE: WASHED COBBLES	PEA GRAVEL NO. 6 STONE: 2" TO 5"	
GEOTEXTILE	CLASS "C"-APPARENT OPENING SIZE (ASTM-D-4751), GRAB TENSILE STRENGTH (ASTM-D-4632), PUNCTURE RESISTACE (ASTM-D-4833)	N/A	FOR USE AS NECESSARY BENEATH UNDERDRAINS ONLY
UNDERDRAIN GRAVEL	AASHTO M-43	0.375" TO 0.75"	
UNDERDRAIN PIPING	F 758, TYPE PS 28 OOR AASHTO M-278	4" TO 6" RIGID SCHEDULE 40 PVC OR SDR35	3/8" PERF. @ 6" O.C., 4 HOLES PER ROW: MIN. OF 3" OF GRAVEL OVER PIPES; NOT NECESSARY UNDERNEATH PIPES
POURED IN PLACE CONCRETE (IF REQUIRED)	MSHA MIX NO. 3; fc=3500 PSI @ 28 DAYS, NORMAL WEIGHT, AIR-ENTRAINED; REINFORCING TO MEET ASTM-615-60	N/A	ON-SITE TESTING OF POURED-IN-PLACE CONCRETE REQUIRED: 28 DAY STRENGTH AND SLUMP TEST; ALL CONCRETE DESIGN (CAST-IN-PLACE OR PRE-CAST) NOT USING PREVIOUSLY APPROVED STATE OR LOCAL STANDARDS REQUIRES DESIGN DRAWINGS SEALED AND APPROVED BY A PROFESSIONAL STRUCTURAL ENGINEER LICENSED IN THE STATE OF MARYLAND - DESIGN TO INCLUDE MEETING ACI CODE 350.R/89; VERTICAL LOADING (H-10 OR H-20); ALLOWABLE HORIZONTAL LOADING (BASED ON SOIL PRESSURES); AND ANALYSIS OF POTENTIAL CRACKING
SAND (1' DEEP)	AASHTO-M-6 OR ASTM-C-33	0.02" TO 0.04"	SAND SUBSTITUTIONS SUCH AS DIABASE AND GRAYSTONE #10 ARE NOT ACCEPTABLE. NO CALCIUM CARBONATED OR DOLOMITIC SAND SUBSTITUTIONS ARE ACCEPTABLE. NO "ROCK DUST" CAN BE USED FOR SAND

APPENDIX B.3. CONSTRUCTION SPECIFICATIONS FOR SAND FILTERS, BIORETENTION AND OPEN CHANNELS

SPECIFICATIONS FOR BIORETENTION

1. MATERIAL SPECIFICATIONS

THE ALLOWABLE MATERIALS TO BE USED IN BIORETENTION AREA ARE DETAILED IN TABLE B.3.2.

2. PLANTING SOIL

THE SOIL SHALL BE A UNIFORM MIX, FREE OF STONES, STUMPS, ROOTS OR OTHER SIMILAR OBJECTS LARGER THAN TWO INCHES. NO OTHER MATERIALS OR SUBSTANCES SHALL BE MIXED OR DUMPED WITHIN THE BIORETENTION AREA THAT MAY BE HARMFUL TO PLANT GROWTH, OR PROVE A HINDRANCE TO THE PLANTING OR MAINTENANCE OPERATIONS. THE PLANTING SOIL SHALL BE FREE OF BERMUDA GRASS, QUACKGRASS, JOHNSON GRASS, OR OTHER NOXIOUS WEEDS AS SPECIFIED UNDER COMAR 15.08.01.05.

THE PLANTING SOIL SHALL BE TESTED AND SHALL MEET THE FOLLOWING CRITERIA:

PH RANGE 5.2 – 7.0
ORGANIC MATTER 1.5 – 4% (BY WEIGHT)
MAGNESIUM 35 LB./AC
PHOSPHORUS (PHOSPHATE – P025) 75 LB./AC
POTASSIUM (POTASH – K20) 85 LB./AC
SOLUBLE SALTS NIT TO EXCEED 500 PPM

ALL BIORETENTION AREAS SHALL HAVE A MINIMUM OF ONE TEST. EACH TEST SHALL CONSIST OF BOTH THE STANDARD SOIL TEST FOR PH, PHOSPHORUS, AND POTASSIUM AND ADDITIONAL TEST OF ORGANIC MATTER, AND SOLUBLE SALTS. A TEXTURAL ANALYSIS SHALL BE PERFORMED FOR EACH LOCATION WHERE THE TOP SOIL WAS EXCAVATED.

SINCE DIFFERENT LAB CALIBRATE THEIR TESTING EQUIPMENT DIFFERENTLY, ALL TESTING RESULTS SHALL COME FROM THE SAME TESTING FACILITY.
SHOULD THE PH FALL OUT OF THE ACCEPTABLE RANGE, IT MAY BE MODIFIED (HIGHER) WITH LIME OR (LOWER) WITH IRON SULFATE PLUS SULFUR.

3. COMPACTION

IT IS VERY IMPORTANT TO MINIMIZE COMPACTION OF BOTH THE BASE OF THE BIORETENTION AREA AND THE REQUIRED BACKFILL. WHEN POSSIBLE, USE HOES TO REMOVE ORIGINAL SOIL. IF BIORETENTION AREAS ARE EXCAVATED USING LOADER, THE CONTRACTOR SHOULD USE WIDE TRACK OR MARSH TRACK EQUIPMENT, OR LIGHT EQUIPMENT WITH TURF TYPE TIRE. USE OF EQUIPMENT WITH NARROW TRACKS OR NARROW TIRES, RUBBER TIRES WITH LARGE LUGS, OR HIGH PRESSURE TIRES WILL CAUSE EXCESSIVE COMPACTION RESULTING IN REDUCED INFILTRATION RATES AND IS NOT ACCEPTABLE. COMPACTION WILL SIGNIFICANTLY CONTRIBUTE TO DESIGN FAILURE.
COMPACTION CAN BE ALLEVIATED AT THE BASE OF THE BIORETENTION FACILITY BY USING A PRIMARY TILLING OPERATION SUCH AS CHISEL PLOW, RIPPER, OR SUBSOILER. THESE TILLING OPERATIONS ARE TO REFRACTURE THE SOIL PROFILE THROUGH THE 12 INCH COMPACTION ZONE. SUBSTITUTE METHODS MUST BE APPROVED BY THE ENGINEER. ROTOTILLERS TYPICALLY DO NOT TILL DEEP ENOUGH TO REDUCE THE EFFECTS OF COMPACTION FROM HEAVY EQUIPMENT.

ROTOTILL 2 TO 3 INCHES OF SAND INTO THE BASE OF THE BIORETENION FACILITY BEFORE BACKFILLING THE REQUIRED SAND LAYER. PUMP ANY PONDED WATER BEFORE PREPARING (ROTOTILLING) BASE.

WHEN BACKFILLING THE TOPSOIL OVER THE SAND LAYER, FIRST PLACE 3 TO 4 INCHES OF TOPSOIL OVER THE SAND, THEN ROTOTILL THE SAND/TOPSOIL TO CREATE A GRADATION ZONE. BACKFILL THE REMAINDER OF THE TOPSOIL TO FINAL GRADE.

WHEN BACKFILLING THE BIORETENTION FACILITY, PLACE SOIL IN LIFTS 12" TO 18". DO NOT USE HEAVY EQUIPMENT WITHIN THE BIORETENTION BASIN. HEAVY EQUIPMENT CAN BE USED AROUND THE PERIMETER OF THE BASIN TO SUPPLY SOILS AND SAND. GRADE BIORETENTION MATERIALS WITH LIGHT EQUIPMENT SUCH AS A COMPACT LOADER OR A DOZER/LOADER WITH MARSH TRACKS.

4. PLANT MATERIAL

RECOMMENDED PLANT MATERIAL FOR BIORETENTION AREAS CAN BE FOUND IN APPENDIX A, SECTION A.2.3. OF THE 2000 MARYLAND STORMWATER DESIGN MANUAL.

5. PLANT INSTALLATION

MULCH SHOULD BE PLACED TO A UNIFORM THICKNESS OF 2" TO 3". SHREDDED HARDWOOD MUCH IS THE ONLY ACCEPTED MULCH. PINE MULCH AND WOOD CHIPS WILL FLOAT AND MOVE TO THE PERIMETER OF THE BIORETENTION AREA DURING A STORM EVENT AND ARE NOT ACCEPTABLE. SHREDDED MULCH MUST BE WELL AGED (6 TO 12 MONTHS) FOR ACCEPTANCE.

ROOT STOCK OF THE PLANT MATERIAL SHALL BE KEPT MOIST DURING TRANSPORT AND ON-SITE STORAGE. THE PLANT ROOT BALL SHOULD BE PLANTED SO 1/8TH OF THE BALL IS ABOVE FINAL GRADE SURFACE. THE DIAMETER OF THE PLANTING PIT SHALL BE AT LEAST SIX INCHES LARGER THAN THE DIAMETER OF THE PLANTING BALL. SET AND MAINTAIN THE PLANT STRAIGHT DURING THE ENTIRE PLANTING PROCESS.

TREES SHALL BE BRACED USING 2" BY 2" STAKES ONLY AS NECESSARY AND FOR THE FIRST GROWING SEASON ONLY. STAKES ARE TO BE EQUALLY SPACED ON THE OUTSIDE OF THE TREE BALL.

GRASSES AND LEGUME SEED SHOULD BE DRILLED INTO THE SOIL TO A DEPTH OF AT LEAST ONE INCH. GRASS AND LEGUME PLUGS SHALL BE PLANTED FOLLOWING THE NON-GRASS GROUND COVER PLANTING SPECIFICATIONS.

THE TOPSOIL SPECIFICATIONS PROVIDE ENOUGH ORGANIC MATERIAL TO ADEQUATELY SUPPLY NUTRIENTS FROM NATURAL CYCLING. THE PRIMARY FUNCTION OF THE BIORETENTION STRUCTURE IS TO IMPROVE WATER QUALITY. ADDING FERTILIZERS DEFEATS, OR AT A MINIMUM, IMPEDES THIS GOAL. ONLY ADD FERTILIZER IF WOOD CHIPS OR MULCH ARE USED TO AMEND THE SOIL. ROTOTILL UREA FERTILIZER AT A RATE OF 2 POUNDS OF NITROGEN PER 1000 SQUARE FEET.

6. UNDERDRAINS

UNDERDRAINS ARE TO BE PLACED ON A 3'–0" WIDE SECTION FILTER CLOTH. PIPE IS PLACED NEXT, FOLLOWED BY THE GRAVEL BEDDING. THE ENDS OF UNDERDRAIN PIPES NOT TERMINATING IN AN OBSERVATION WELL SHALL BE CAPPED.
THE MAIN COLLECTOR PIPE FOR UNDERDRAIN SYSTEMS SHALL BE CONSTRUCTED AT A MINIMUM SLOPE OF 0.5%. OBSERVATION WELL AND/OR CLEAN-OUT PIPES MUST BE PROVIDED (ONE MINIMUM PER EVERY 1000 SQUARE FEET OF SURFACE AREA).

7. MISCELLANEOUS

THE BIORETENTION FACILITY MAY NOT BE CONSTRUCTED UNTIL ALL CONTRIBUTING DRAINAGE AREA HAS BEEN STABILIZED.

OWNER/DEVELOPER
HOWARD COUNTY HOUSING COMMISSION
6751 COLUMBIA GATEWAY DRIVE
3RD FLOOR, GATEWAY BUILDING
COLUMBIA, MARYLAND 21044
410-313-6316

NO.	REVISION	DATE
1	ADD MAIL/TRASH ENCLOSURE	11-22-10

FINAL ROAD CONSTRUCTION PLANS
FOREST CONSERVATION DETAILS
THE GLENS AT GUILFORD
LOTS 1-10 & OPEN SPACE LOTS 11-13
A RESUBDIVISION OF LOTS 1 & 2-A, (P.46 & P.815), BLOCK E-3
NORDAU SUBDIVISION
TAX MAP #47 GRID 6 & 24 — PARCELS 46 & 815
6TH ELECTION DISTRICT — HOWARD COUNTY, MARYLAND

ROBERT H. VOGEL ENGINEERING, INC.
ENGINEERS • SURVEYORS • PLANNERS
8407 MAIN STREET
ELLICOTT CITY, MD 21043
TEL: 410.461.7666
FAX: 410.461.8961

STATE OF MARYLAND — ROBERT HARRIS VOGEL — No. 16193 — PROFESSIONAL ENGINEER
ROBERT H. VOGEL, P.E. 16193

DESIGN BY: JCO
DRAWN BY: KG
CHECKED BY: RHV
DATE: APRIL 2010
SCALE: AS SHOWN
W.O. NO.: 08-35

PROFESSIONAL CERTIFICATE
I HEREBY CERTIFY THAT THESE DOCUMENTS WERE PREPARED OR APPROVED BY ME, AND THAT I AM A DULY LICENSED PROFESSIONAL ENGINEER UNDER THE LAWS OF THE STATE OF MARYLAND, LICENSE NO. 16193 EXPIRATION DATE: 09-27-2010

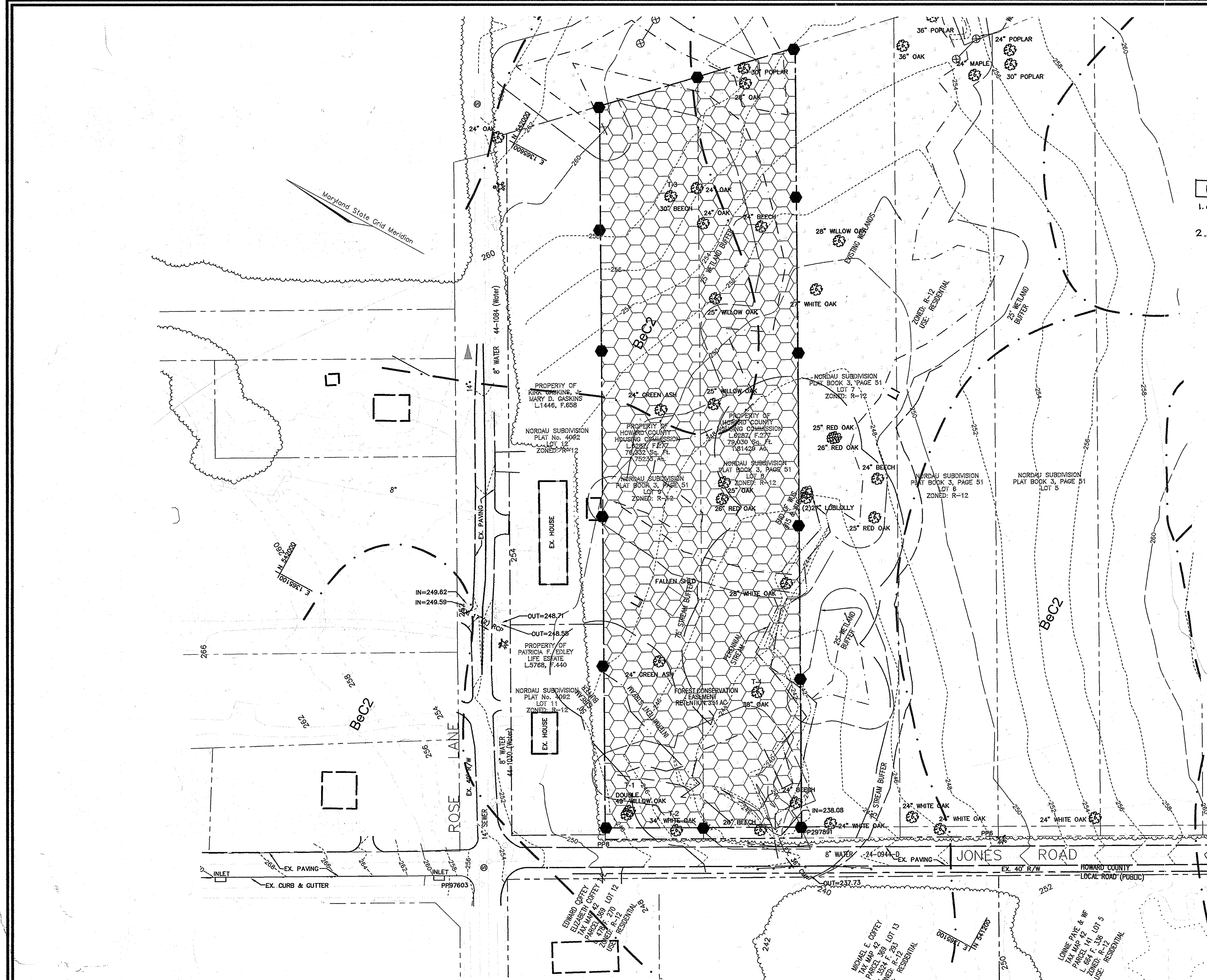

FOREST BANK 3.51 Ac. PLAT # 21417

1. GLENS OF GUILFORD (THIS PLAN) - 1.78 Ac.
AVAILABLE BALANCE: 1.73 Ac.
2. AVANTI-HASLUP PROPERTY PARCELS B-1, B-2 AND B-3 (F-15-015) - 0.74 Ac.
AVAILABLE BALANCE: 0.99 Ac.

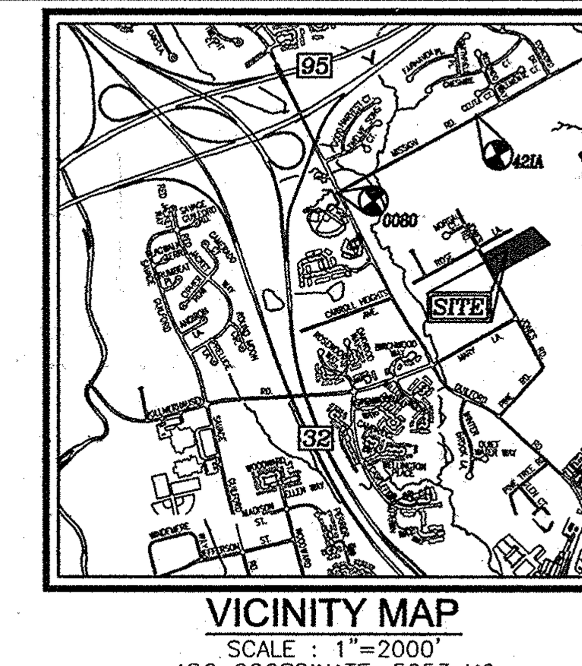

VICINITY MAP

SCALE : 1"=2000'
ADC COORDINATE: 5053 K6

LEGEND:

- EXISTING CONTOUR
- EXISTING CURB AND GUTTER
- EXISTING UTILITY POLE
- EXISTING LIGHT POLE
- EXISTING MAILBOX
- EXISTING SIGN
- EXISTING SANITARY MANHOLE
- EXISTING SANITARY LINE
- EXISTING CLEANOUT
- EXISTING FIRE HYDRANT
- EXISTING WATER LINE
- EXISTING TREELINE
- EXISTING FENCE
- PROPERTY LINE
- RIGHT-OF-WAY LINE
- M1B2 / M1D3 SOILS BOUNDARY
- FOREST CONSERVATION EASEMENT
- EXISTING PARCEL/LOT DIVIDE LINE
- LIMIT OF WETLAND
- STREAM
- WETLANDS BUFFER
- STREAM BUFFER
- WETLANDS
- FOREST CONSERVATION SIGNAGE LOCATION

PLAN

SCALE : 1"=50'

FOREST STAND ANALYSIS TABLE

KEY	A. TYPE OF COMMUNITY	B. AREA	C. SOILS INFORMATION 1. SOILS TYPES	C. 2. TYPICAL FOREST COVER FOR SOILS TYPE	C. 3. WOODLAND SUITABILITY INDEX	D. EXISTING VEGETATION	E. STAND CHARACTERISTICS 1. SIZE (DIA)	E. 2. AGE (YRS)	E. 3. GENERAL CONDITION	F. SEN. ENV AREA IN FOREST	G. HABITAT
F-1	TREES, WETLANDS, STREAMS	3.5 Ac	BeC2 Li	MIXED HARDWOODS	16 11	OAK, BEECH FEW LOBLOLLY PINES	N/A	N/A	N/A	0.8 Ac WETLANDS	F

SPECIMEN TREE CHART

NO.	SIZE	TYPE	CONDITION
T1	49" DBH	DOUBLE WILLOW OAK	GOOD
T2	34" DBH	WHITE OAK	GOOD
T3	30" DBH	BEECH	GOOD
T4	38" DBH	OAK	FAIR

APPROVED: DEPARTMENT OF PUBLIC WORKS

[signature] 6-7-10
CHIEF, BUREAU OF HIGHWAYS — DATE

APPROVED: HOWARD COUNTY DEPARTMENT OF PLANNING AND ZONING

[signature] 6/11/10
CHIEF, DEVELOPMENT ENGINEERING DIVISION — DATE

[signature] 6/17/10
CHIEF, DIVISION OF LAND DEVELOPMENT — DATE

[signature]
J. CHRIS OGLE
DNR QUALIFIED FOREST PROFESSIONAL

OWNER/DEVELOPER
HOWARD COUNTY HOUSING COMMISSION
6751 COLUMBIA GATEWAY DRIVE
3RD FLOOR, GATEWAY BUILDING
COLUMBIA, MARYLAND 21044
410-313-6316

NO.	REVISION	DATE
1	REVISE FOREST BANK INFORMATION	9/25/15

FINAL ROAD CONSTRUCTION PLANS
OFFSITE FOREST CONSERVATION PLAN
NORDAU SUBDIVISION LOTS 8-9 PLAT BOOK 3 PAGE 51

THE GLENS AT GUILFORD
LOTS 1-10 & OPEN SPACE LOTS 11-13
A RESUBDIVISION OF LOTS 1 & 2-A, (P.46 & P.815), BLOCK E-3
NORDAU SUBDIVISION

TAX MAP #47 GRID 6 & 24 — PARCELS 46 & 815
6TH ELECTION DISTRICT — HOWARD COUNTY, MARYLAND

ROBERT H. VOGEL ENGINEERING, INC.
ENGINEERS • SURVEYORS • PLANNERS
8407 MAIN STREET
ELLICOTT CITY, MD 21043
TEL: 410.461.7666
FAX: 410.461.8961

STATE OF MARYLAND — ROBERT HARRIS VOGEL — No. 16193 — PROFESSIONAL ENGINEER
ROBERT H. VOGEL, P.E. 16193

DESIGN BY: JCO
DRAWN BY: KG
CHECKED BY: RHV
DATE: APRIL 2010
SCALE: AS SHOWN
W.O. NO.: 08-35

PROFESSIONAL CERTIFICATE
I HEREBY CERTIFY THAT THESE DOCUMENTS WERE PREPARED OR APPROVED BY ME, AND THAT I AM A DULY LICENSED PROFESSIONAL ENGINEER UNDER THE LAWS OF THE STATE OF MARYLAND, LICENSE NO. 16193 EXPIRATION DATE: 09-27-2010

F-09-112