FINAL ROAD CONSTRUCTION PLANS
DEBRA COURT
LOTS 1-12
2ND ELECTION DISTRICT
HOWARD COUNTY, MARYLAND

SHEET INDEX	
SHEET	TITLE
1	TITLE SHEET
2	ROADS – PLAN & PROFILE
3	ROADS – DETAILS
4	GRADING AND SEDIMENT CONTROL PLAN
5	SEDIMENT CONTROL DETAILS AND SPECIFICATIONS
6	SEDIMENT CONTROL NOTES AND DETAILS
7	STORM DRAIN DRAINAGE AREA MAP & COMPUTATIONS
8	STORM DRAIN PROFILES & DETAILS
9	STORMWATER MANAGEMENT PLAN
10	STORMWATER MANAGEMENT DETAILS
11	STORMWATER MANAGEMENT DETAILS & SPECIFICATIONS
12	RETAINING WALL – STRUCTURAL DRAWINGS
13	RETAINING WALL – STRUCTURAL DRAWINGS
14	RETAINING WALL – DETAILS & SPECIFICATIONS
15	LANDSCAPE PLAN
16	LANDSCAPE PLAN DETAILS AND SPECIFICATIONS
17	FOREST CONSERVATION PLAN & SOILS MAP
18	FOREST CONSERVATION NOTES & DETAILS

GENERAL NOTES

1. THE PROJECT IS IN CONFORMANCE WITH THE LATEST HOWARD COUNTY STANDARDS UNLESS WAIVERS HAVE BEEN APPROVED.
2. THE SUBJECT PROPERTY IS ZONED R–20 PER THE FEBRUARY 2, 2004 COMPREHENSIVE ZONING PLAN AND THE "COMP LITE" ZONING AMENDMENTS EFFECTIVE 7/28/2006.
3. PROJECT BACKGROUND:
   LOCATION: TAX MAP 24, GRID 2, PARCEL 812; GRID 3, PARCELS 918 & 1119
   ZONING: R–20
   ELECTION DISTRICT: 2ND
   SITE AREA: 6.838 AC.
   SKETCH PLAN APPROVAL DATE (S–04–02): JANUARY 31, 2005
   PRELIM. PLAN APPROVAL DATE (P–08–003): SEPTEMBER 18, 2008
4. AREA OF PROPOSED LOTS: 6.256 AC.
   AREA OF PROPOSED ROADS: 0.582 AC. (DEBRA COURT)
5. NUMBER OF LOTS: 11 (BUILDABLE LOTS); 1 (OPEN SPACE LOT 12)
6. OPEN SPACE REQUIRED: 14,000 S.F. (MIN LOT SIZE) IS 30%x6.838= 2.05 AC.
   OPEN SPACE PROVIDED: 2.18 AC.
7. RECREATIONAL OPEN SPACE REQ'D (200 S.F./UNIT): 2200 SF.
   RECREATIONAL OPEN SPACE PROVIDED: 2200 SF.
8. ~~THE OPEN SPACE SHOWN HEREON IS HEREBY DEDICATED TO A PROPERTY OWNERS ASSOCIATION FOR THE RESIDENTS OF THIS SUBDIVISION. THE ARTICLES OF INCORPORATION FOR THE HOMEOWNER'S ASSOCIATION WERE FILED WITH THE MARYLAND STATE DEPARTMENT OF ASSESSMENTS AND TAXATION ON ; RECEIPT NO.~~
9. THE EXISTING ONSITE TOPOGRAPHY AND ADJOINING FEATURES WERE DERIVED FROM FIELD SURVEYS BY LITTLE & ASSOCIATES, INC IN MAY, 2002 AND SEPTEMBER, 2007. TOPOGRAPHY BEYOND THESE LIMITS WAS DERIVED FROM HOWARD COUNTY GIS TOPOGRAPHY DATED 1998.
10. PROPERTY BOUNDARY SHOWN IS BASED ON BOUNDARY SURVEY PERFORMED BY LITTLE & ASSOCIATES, INC. IN MAY, 2002.
11. PUBLIC WATER AND SEWER EXISTS IN DEBRA COURT FOR USE BY THE SITE CONTRACT NOS. 186–S AND 316–W. THE SITE IS WITHIN THE METROPOLITAN DISTRICT OF HO. CO., MD.
12. EXISTING UTILITIES ARE BASED ON FIELD INVESTIGATION AND THE BEST AVAILABLE INFORMATION FROM HOWARD COUNTY, MD. LITTLE & ASSOCIATES, INC. DOES NOT GUARANTEE THE COMPLETENESS OR ACCURACY OF THE UTILITY INFORMATION SHOWN.
13. THERE ARE NO 100–YEAR FLOODPLAINS LOCATED ON THE SUBJECT SITE. FLOODPLAIN LIMITS AS SHOWN FROM FEMA MAP OF HOWARD COUNTY – 240044 023 B.
14. THERE ARE NO KNOWN GRAVESITES, CEMETERIES, HISTORIC SITES OR STRUCTURES LOCATED ON THE SITE.
15. THERE ARE NO KNOWN RARE, THREATENED OR ENDANGERED SPECIES ON THE SUBJECT SITE.
16. THERE ARE NO WETLANDS, STREAMS, FLOODPLAINS OR BUFFERS PRESENT ON THE SUBJECT SITE.
17. SOIL LINES AND TYPES SHOWN ARE TAKEN FROM HOWARD COUNTY USDA SOILS MAP NO. 15.
18. OTHER HOWARD COUNTY REFERENCE FILES FOR THE SITE: F80–81 (PLAT 4567), BA 02–039C, S–04–02, PLAT 8/92, P–08–003.
19. NO GRADING, REMOVAL OF VEGETATIVE COVER OR TREES, PAVING, AND NEW STRUCTURES SHALL BE PERMITTED WITHIN THE LIMITS OF WETLANDS, STREAMS, WETLAND OR STREAM BUFFERS, FLOODPLAIN AND FOREST CONSERVATION EASEMENT AREAS.
20. DEBRA COURT IS TO BE PUBLIC AND IS TO BE DEDICATED TO HOWARD COUNTY, MARYLAND AT NO COST TO THE COUNTY. DEBRA COURT WAS ORIGINALLY SHOWN ON A PLAT OF GLENBROOK SECTION 3, RECORDED IN 1962 (PLAT 8/92). THE OWNERS DEDICATION INDICATED THAT THE OWNERS "RESERVE THE FEE SIMPLE TITLE TO THE BEDS OF THE STREETS AND/OR ROADS SHOWN HEREON". THE NOTE ALSO INCLUDED STANDARD LANGUAGE THAT THE OWNERS GRANTED UNTO THE BOARD OF COUNTY COMMISSIONERS OF HOWARD COUNTY THE RIGHT AND OPTION TO ACQUIRE FEE SIMPLE TITLE TO THE BEDS OF THE STREETS. THIS WAS ALSO THE CASE ON PLAT # 4567, A RESUBDIVISION OF LOTS 73 THRU 78, RECORDED IN 1980 (F–80–81). THE COUNTY HAD INCORRECTLY SHOWN DEBRA COURT AS A PUBLIC ROAD ON COUNTY RECORDS, ALTHOUGH THERE IS NO RECORD THAT THE COUNTY EXERCISED ITS OPTION AND ACQUIRED THE BEDS TO THE STREET. THIS HAS BEEN CORRECTED AS INDICATED IN DEED 6637/254.
21. STORMWATER MANAGEMENT MICROPOOL EXTENDED DETENTION POND (P–1) IS TO BE OWNED BY A HOMEOWNERS ASSOCIATION. THE HOMEOWNERS ASSOCIATION SHALL TAKE RESPONSIBILITY FOR ROUTINE STORMWATER MANAGEMENT POND MAINTENANCE. HOWARD COUNTY WILL TAKE RESPONSIBILITY FOR NON–ROUTINE SWM POND MAINTENANCE.
22. THE COORDINATES SHOWN HEREON ARE BASED UPON THE HOWARD COUNTY GEODETIC CONTROL WHICH IS BASED UPON THE MARYLAND STATE PLANE COORDINATE SYSTEM. HOWARD COUNTY MONUMENTS NOS. 24AA AND 24B5 WERE USED FOR THIS PROJECT.
23. ALL EXISTING STRUCTURES ON SITE WERE CONSTRUCTED CIRCA 1963 AND ARE TO BE REMOVED.
24. THIS PROJECT IS SUBJECT TO COUNCIL BILL 45–2003, WHICH AMENDED THE 5TH EDITION SUBDIVISION AND LAND DEVELOPMENT REGULATIONS, EFFECTIVE OCTOBER 2, 2003, AND THE APRIL 13, 2004 ZONING REGULATIONS.
25. THIS PROJECT, WITH ELEVEN (11) LOTS PROPOSED IS NOT SUBJECT TO THE REQUIREMENTS / RESTRICTIONS OF AMENDED SECTION 16.12 (A), AND THEREFORE MAY PROPOSE THE R–20 OPTIONAL LOT SIZE WITH H.O.A. OWNED OPEN SPACE. IF, HOWEVER A RESIDENTIAL LOT IS DELETED, COMPLIANCE WITH AMENDED SECTION 16.121(A) WILL BE REQUIRED.
26. THIS PROJECT IS A RESUBDIVISION OF LOT 80 (F–80–81), GLEN BROOK SECTION 3 (PLAT #4567) AND A SUBDIVISION OF PARCELS 812 & 1119.
27. A WAIVER FROM THE DESIGN MANUAL REGULATIONS ON INTERSECTION SPACING WAS APPLIED FOR IN A LETTER DATED JANUARY 8, 2004 ADDRESSED TO CHARLES DAMMERS AND APPROVED ON JANUARY 29, 2004.
28. A WAIVER FROM THE SUBDIVISION AND LAND DEVELOPMENT REGULATIONS WAS APPROVED ON DECEMBER 23, 2004 REGARDING SECTIONS 16.121(e)(1) FOR RELIEF FROM OPEN SPACE FRONTAGE AND 16.120(b)(4)(iv) TO ALLOW AN ACCESS EASEMENT FOR THE STORMWATER MANAGEMENT FACILITY ON RESIDENTIAL LOTS AND TO ALLOW ACCESS TO THE PRIVATE RECHARGE (Rev) FACILITY BEHIND LOT 9 (WP–04–117). CONDITIONS FOR APPROVAL WERE:
   A) THE DEVELOPER SHALL DEED OPEN SPACE LOT 12 TO THE HOMEOWNERS ASSOCIATION FOR THIS PROPERTY.
   B) THE DEVELOPER SHALL PROVIDE A 14' WIDE (MIN) ACCESS EASEMENT FOR PEDESTRIAN AND VEHICULAR ACCESS TO OPEN SPACE LOT 12 WHICH SHALL EXTEND FROM DEBRA COURT NORTHWARD TO OPEN SPACE LOT 12. THIS EASEMENT SHALL BE WITHIN THE PROPOSED USE–IN–COMMON DRIVEWAY EASEMENT SERVING LOTS 5,6,7,8&12 ACROSS LOTS 6,7,&8 AND BEYOND THAT TO THE SOUTHERN BOUNDARY OF OPEN SPACE LOT 12.
   C) A MAINTENANCE AGREEMENT FOR THE SHARED DRIVEWAY WITHIN A 24' WIDE EASEMENT SHALL BE RECORDED WITH THE CORRESPONDING SUBDIVISION PLAT. PER THE REQUIREMENT OF DEVELOPMENT ENGINEERING DIVISION, THE ACCESS EASEMENT LANGUAGE SHALL STATE THAT THE COUNTY IS HELD HARMLESS FOR ANY PROPERTY DAMAGE THAT MIGHT OCCUR DUE TO FUTURE MAINTENANCE ACTIVITY FOR THE STORMWATER MANAGEMENT POND BY HOWARD COUNTY. THE DEVELOPER SHALL BE RESPONSIBLE FOR PREPARING THE MAINTENANCE AGREEMENT, AND THE COUNTY WILL RECORD THE AGREEMENT WITH THE FINAL PLAT.
   D) THE 24' WIDE USE–IN–COMMON ACCESS EASEMENT SERVING RESIDENTIAL LOTS SHALL ALSO BE LABELED AS SERVING OPEN SPACE LOT 12.
   E) THE DEVELOPER SHALL PROVIDE A 12' WIDE (MIN) ACCESS EASEMENT FOR VEHICULAR ACCESS TO OPEN SPACE LOT 12 ACROSS LOTS 9&10 FOR THE PURPOSE OF MAINTENANCE OF THE PRIVATE HOA OWNED AND MAINTAINED DRYWELL RECHARGE FACILITY LOCATED BEHIND LOT 9. THE EASEMENT SHALL BE MAINTAINED AS GRASS OR OTHER APPROPRIATE GROUNDCOVER, BUT NOT PAVING.
   F) THE EASEMENT SHALL NOT BE FOR PEDESTRIAN ACCESS TO OPEN SPACE LOT 12 AND SHALL NOT BE FOR ACCESS FOR MAINTENANCE OF THE FOREST CONSERVATION EASEMENT.
   G) THE SIDE SETBACKS ADJACENT TO THE EASEMENT ON LOTS 9&10 SHALL BE INCREASED BY 10' ON EACH LOT.
29. THE UNMITIGATED 65dba LINE FOR FREDERICK ROAD IS AS SHOWN IN A REPORT PREPARED BY STAIANO ENGINEERING, INC. DATED DECEMBER 26, 2007. NO MITIGATION IS REQUIRED.
30. A LEFT TURN POCKET ALONG FREDERICK ROAD FOR EAST BOUND TRAFFIC WAS DETERMINED UNFEASIBLE THROUGH DISCUSSIONS WITH HOWARD COUNTY TRAFFIC ENGINEERING. THE CURB RADII FOR DEBRA COURT AT FREDERICK ROAD HAS BEEN INCREASED TO 40'R TO AID INGRESS/EGRESS. THE TRAFFIC STUDY FOR THIS PROJECT WAS PREPARED BY THE TRAFFIC GROUP, INC., DATED JULY 2, 2002.
31. THE GEOTECHNICAL REPORT FOR THIS PROJECT WAS PREPARED BY HERBST/BENSON AND ASSOCIATES, DATED JUNE 16, 2004 AND WAS APPROVED ON JANUARY 31, 2005.
32. RETAINING WALL COMPUTATIONS HAVE BEEN PROVIDED AS PART OF THE FINAL PLAN SET.
33. THE EXISTING 100' SHA EASEMENT ALONG THE PROPERTY FRONTAGE ON US 40 "GRANTS TO THE STATE THE PERPETUAL RIGHT TO ERECT AND MAINTAIN BETWEEN OCTOBER 1ST AND APRIL 1ST OF EACH AND EVERY YEAR, SNOW FENCES WITHIN ONE HUNDRED FEET OF THE LAND HEREBY GRANTED IN FEE SIMPLE, PROVIDED THAT SAID SNOW FENCE SHALL NOT INTERFERE WITH THE CONSTRUCTION AND USE OF BUILDINGS NOW ERECTED OR HEREAFTER ERECTED OR WITH GROWING CROPS.
34. THE LOTS CREATED BY THIS SUBDIVISION ARE SUBJECT TO A FEE OR ASSESSMENT TO COVER OR DEFRAY ALL OR PART OF THE DEVELOPER'S COST OF INSTALLATION OF WATER AND SEWER FACILITIES, PURSUANT TO THE HOWARD COUNTY CODE. THIS FEE OR ASSESSMENT, WHICH RUNS WITH THE LAND, IS A CONTRACTUAL OBLIGATION BETWEEN THE DEVELOPER AND EACH OWNER OF THIS PROPERTY AND IS NOT IN ANY WAY A FEE OR ASSESSMENT OF HOWARD COUNTY.
35. A WAIVER FROM THE SUBDIVISION AND LAND DEVELOPMENT REGULATIONS REGARDING SECTIONS 16.116(b)&(c) WAS APPROVED ON JULY 24, 2008 TO ALLOW MINIMAL DISTURBANCE TO STEEP SLOPES ONSITE (WP–08–088). THE FOLLOWING CONDITIONS WERE APPLIED TO THE APPROVAL:
    A. LIMITS OF DISTURBANCE WILL BE THE MINIMUM NECESSARY TO INSTALL THE IMPROVEMENTS AND SHALL NOT EXCEED THE DISTURBANCE SHOWN ON THE WAIVER PETITION EXHIBIT SUBMITTED JUNE 20, 2008. DISTURBANCE RELATED TO THE STORMWATER MANAGEMENT POND IS LIMITED TO 1000 S.F. OF STEEP SLOPES DISTURBANCE. DISTURBANCE RELATED TO LOT 7 IS LIMITED TO 800 S.F. OF STEEP SLOPE DISTURBANCE.
    B. SUPER SILT FENCING SHALL BE INSTALLED ALONG THE ENTIRE LOD PRIOR TO THE COMMENCEMENT OF ANY CONSTRUCTION OR GRADING ACTIVITY AND SHALL REMAIN IN PLACE FOR THE DURATION OF CONSTRUCTION.
36. A WAIVER FROM THE SUBDIVISION AND LAND DEVELOPMENT REGULATIONS WAS APPROVED ON JUNE 24, 2008 REGARDING SECTIONS 16.134.(C)(1) & 16.132(a)(3)ii.c.2 TO PAY A FEE–IN–LIEU OF PROVIDING ROAD IMPROVEMENTS ALONG FREDERICK ROAD (WP–08–115).

    THE FEE–IN–LIEU OF $196,230.00 FOR THE ROAD FRONTAGE IMPROVEMENTS WILL BE USED FOR CAPITAL PROJECT D–1158 AND SHOULD BE DEPOSITED IN ACCOUNT #814–99D–1158–900D. THE DEVELOPER AGREEMENT FOR THE ROAD FRONTAGE IMPROVEMENTS SHALL BE EXECUTED BEFORE THE RECORD PLAT CAN BE ACCEPTED FOR SIGNATURE.
37. ALL CONSTRUCTION SHALL BE IN ACCORDANCE WITH THE LATEST STANDARDS AND SPECIFICTIONS OF HOWARD COUNTY PLUS MSHA STANDARDS AND SPECIFICATIONS, IF APPLICABLE.
38. THE CONTRACTOR SHALL NOTIFY THE DEPARTMENT OF PUBLIC WORKS/BUREAU OF ENGINEERING/CONSTRUCTION INSPECTION DIVISION AT (410) 313–1880 AT LEAST FIVE (5) WORKING DAYS PRIOR TO THE START OF WORK.
39. THE CONTRACTOR SHALL NOTIFY "MISS UTILITY" AT 1–800–257–7777 AT LEAST 48 HOURS PRIOR TO ANY EXCAVATION WORK BEING DONE.
40. TRAFFIC CONTROL DEVICES, MARKINGS, AND SIGNING SHALL BE IN ACCORDANCE WITH THE LATEST EDITION OF THE MANUAL OF UNIFORM TRAFFIC CONTROL DEVICES (MUTCD).
41. STREET LIGHT PLACEMENT AND THE TYPE OF FIXTURE AND POLE SHALL BE IN ACCORDANCE WITH THE HOWARD COUNTY DESIGN MANUAL, VOLUME III (1993) AND AS MODIFIED BY "GUIDELINES FOR STREET LIGHTS IN RESIDENTIAL DEVELOPMENTS (JUNE 1993)". A MINIMUM SPACING OF 20' SHALL BE MAINTAINED BETWEEN ANY STREET LIGHT AND ANY TREE.
42. ALL SIGN POSTS USED FOR TRAFFIC CONTROL SIGNS INSTALLED IN THE COUNTY RIGHT–OF–WAY SHALL BE MOUNTED ON A 2" GALVANIZED STEEL, PERFORATED, SQUARE TUBE POST (14 GAUGE) INSERTED INTO A 2–½" GALVANIZED STEEL, PERFORATED, SQUARE TUBE SLEEVE (12 GAUGE) – 3' LONG. A GALVANIZED STEEL POLE CAP SHALL BE MOUNTED ON TOP OF EACH POST.
43. THE TRAFFIC STUDY FOR THIS PROJECT WAS PREPARED BY THE TRAFFIC GROUP, INC. IN A REPORT DATED OCTOBER 15, 2003, AND WAS APPROVED UNDER P–08–003.
44. THE FOREST STAND DELINEATION (FSD) FOR THIS PROJECT (DATED JUNE, 2008) WAS APPROVED UNDER P–08–003.
45. ALL FILLED AREAS SHALL REQUIRE 95% COMPACTION IN ACCORDANCE WITH ASSHTO T–180 STANDARDS.
46. THE BUILDING RESTRICTION LINES (BRL'S) SHOWN ON LOTS 1 AND 11 ARE ESTABLISHED 10 FEET FROM THE FACE OF THE RETAINING WALL AS REQUIRED IN THE DESIGN MANUAL.
47. THE SIDE BUILDING RESTRICTION LINES (BRL'S) SHOWN ON LOTS 5–9 ARE ESTABLISHED 10 FEET FROM THE UTILITY EASEMENT AS REQUIRED IN THE DESIGN MANUAL.

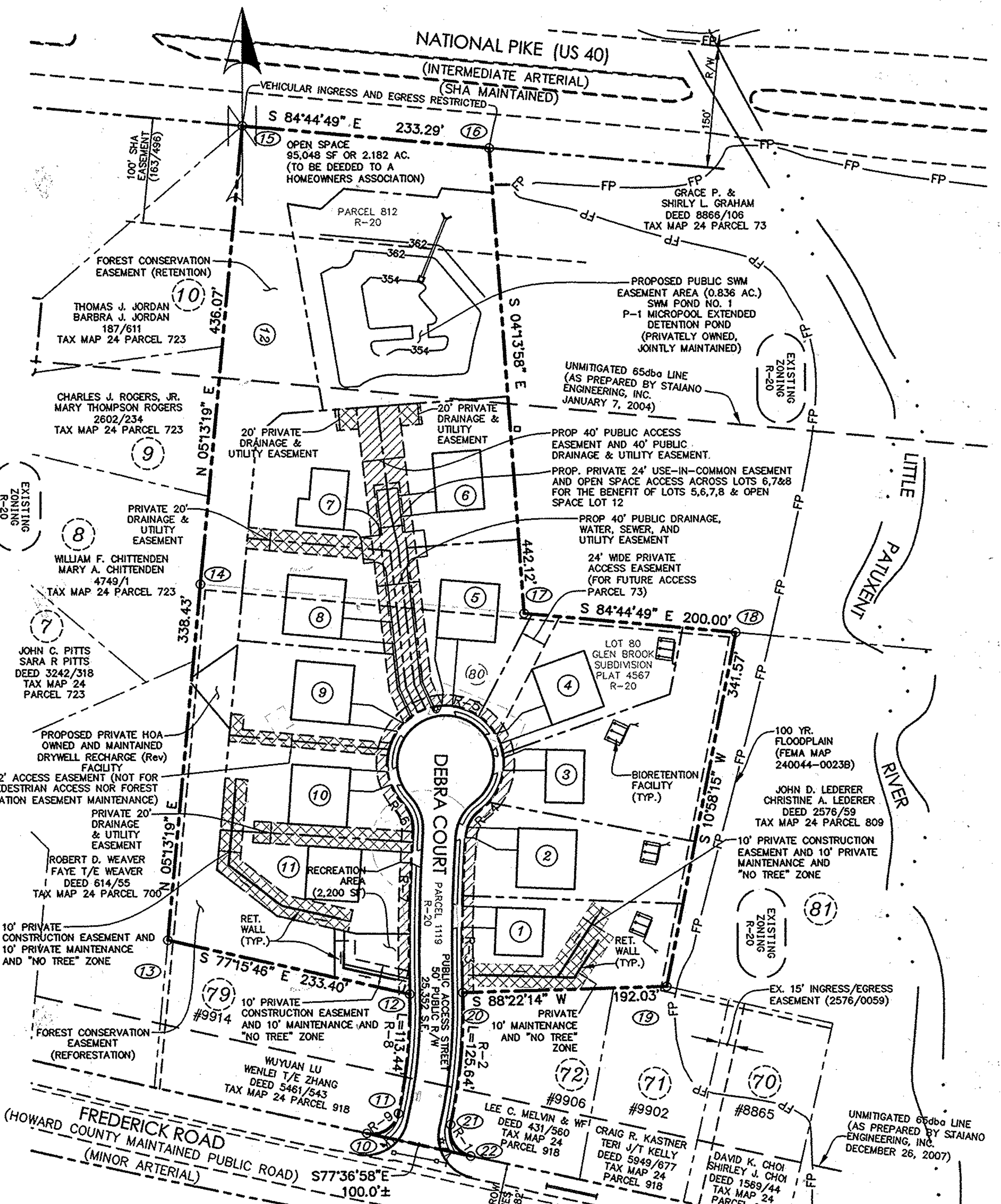

SCALE:
1"=100'

COORDINATE TABLE		
POINT	NORTH	EAST
10	N 586217.6749	E 1353565.4755
11	N 586236.7253	E 1353595.2540
12	N 586349.3855	E 1353605.8695
13	N 586400.8470	E 1353378.2084
14	N 586737.8733	E 1353409.0102
15	N 587172.1381	E 1353448.6989
16	N 587150.7792	E 1353681.0091
17	N 586709.8651	E 1353713.6414
18	N 586691.5542	E 1353912.8014
19	N 586356.2276	E 1353847.7981
20	N 586350.7676	E 1353655.8505
21	N 586225.9896	E 1353644.0878
22	N 586196.2351	E 1353663.1192

RIGHT–OF–WAY TABLE – DEBRA COURT					
CURVE	RADIUS	DELTA	LENGTH	TANGENT	CHORD BEARING
R–1	25.00'	89°53'12"	39.22'	24.95'	S32°36'13"E 35.32'
R–2	513.22'	14°01'37"	125.64'	63.14'	N05°23'07"E 125.33'
R–3	1578.61'	5°21'31"	147.64'	73.87'	S01°03'04"W 147.59'
R–4	35.00'	49°25'22"	30.19'	16.11'	S28°26'31"W 29.26'
R–5	55.00'	276°21'25"	265.28'	49.21'	N85°01'31"W 73.35'
R–6	35.00'	47°01'26"	28.73'	15.23'	N19°41'30"W 27.93'
R–7	1628.61'	5°26'49"	154.83'	77.47'	S01°05'48"W 154.77'
R–8	463.22'	14°01'54"	113.44'	57.01'	N05°22'58"E 113.16'
R–9	25.00'	89°59'07"	39.26'	24.99'	N57°23'29"E 35.35'

MINIMUM LOT SIZE CHART			
LOT NO.	GROSS AREA	PIPESTEM AREA	MIN. LOT SIZE
1	17,080 S.F.	–	17,080 S.F.
2	15,863 S.F.	–	15,863 S.F.
3	22,786 S.F.	–	22,786 S.F.
4	15,983 S.F.	–	15,983 S.F.
5	14,203 S.F.		14,203 S.F.
6	17,527 S.F.	1,232 S.F.	16,295 S.F.
7	16,994 S.F.	1,231 S.F.	15,763 S.F.
8	14,559 S.F.	475 S.F.	14,084 S.F.
9	14,016 S.F.	–	14,016 S.F.
10	14,447 S.F.	–	14,447 S.F.
11	14,025 S.F.	–	14,025 S.F.
12	95,030 S.F.	–	95,030 S.F.

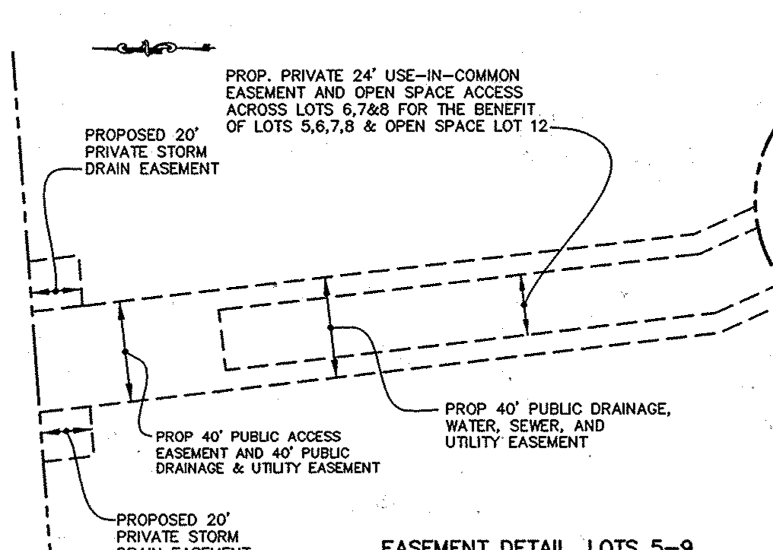

EASEMENT DETAIL, LOTS 5–9
SCALE: 1"=60'

LEGEND

EXISTING CONTOUR	— 136 —
PROPOSED CONTOUR	—160—
EXISTING CURB	
PROPOSED CURB	
PROPOSED SIDEWALK	
EXISTING WOODS	
UNMITIGATED 65 dba LINE	
TO BE REMOVED	(TBR)
EXISTING WATER VALVE	WV
EXISTING FIRE HYDRANT	
PROPOSED WATER VALVE	
PROPOSED FIRE HYDRANT	
EXISTING SEWER MANHOLE	Ⓢ
EXISTING UTILITY POLE	
SOIL BORING	
PRIVATE EASEMENT	
PUBLIC EASEMENT	
SLOPES GREATER THAN 25%	
FOREST CONSERVATION EASEMENT	
FOREST CONSERVATION AND SWM CREDIT & UTILITY EASEMENT	
SOILS DELINEATION	G1C2
PROPOSED WOODS LINE	
NO WOODY VEGETATION LINE	— WB — WB —
100 YEAR FLOODPLAIN LIMITS (FEMA)	— FP — FP —
OVERHEAD WIRES	— OW — OW —
DRAINAGE AREA	
Tc PATH	B — A
LIMIT OF DISTURBANCE	
STABILIZED CONSTRUCTION ENTRANCE (SCE)	SCE
SUPER SILT FENCE	— SSF —
SUPER FENCE DIVERSION	— SFD —
MOUNTABLE BERM	
EARTH DIKE	
TEMPORARY SWALE	A–2
INLET PROTECTION	
WALK OUT BASEMENT	WO

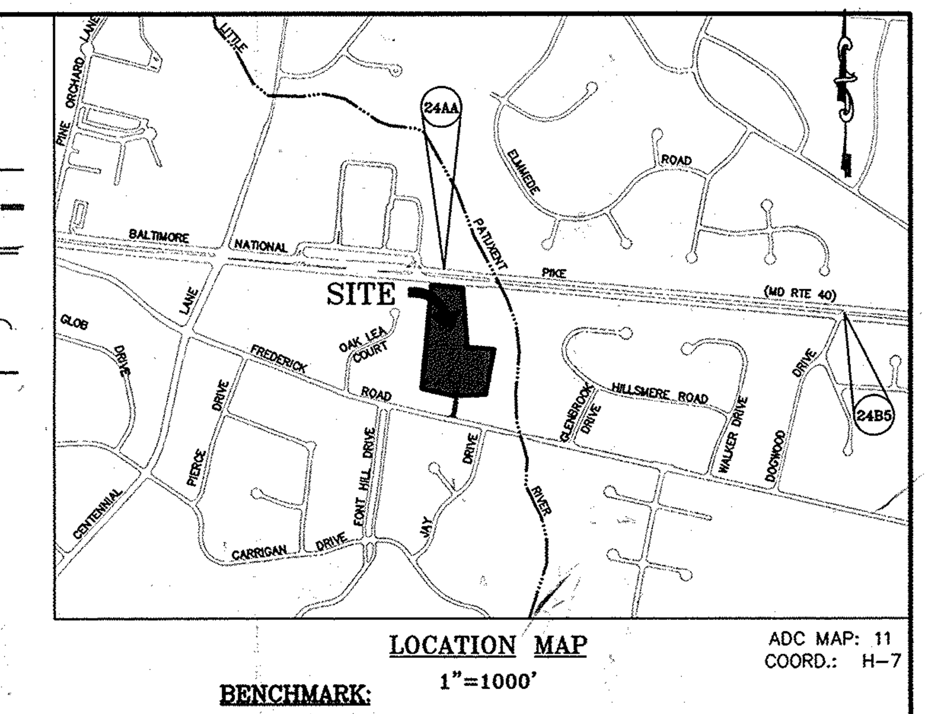

LOCATION MAP
1"=1000'

ADC MAP: 11
COORD.: H–7

BENCHMARK:
GEODETIC CONTROL 24AA: STANDARD HOWARD COUNTY STAMPED DISC NEAR THE ENTRANCE TO THE ENCHANTED FOREST SHOPPING CENTER

N 587,380.458 E 1,352,603.488
ELEV. 386.37 (NAVD 88)

GEODETIC CONTROL 24B5: STANDARD HOWARD COUNTY STAMPED DISC LOCATED AT THE INTERSECTION OF MD RTE 40 AND DOGWOOD DR.

N 586,956.233 E 1,356,570.840
ELEV. 390.04 (NAVD 88)

SITE DATA TABULATION

1) GENERAL SITE DATA	
A. PRESENT ZONING: R–20	
B. LOCATION: TAX MAP 24 GRID 2,3 PARCEL 918/812/1119	
C. APPLICABLE DPZ FILE REFERENCES: S–04–02, F–80–81, P–08–003	
D. DEED REFERENCE: L8918 / F276	
E. PROPOSED USE: 11 SFD HOMES	
F. PROPOSED WATER AND SEWER SYSTEMS: PUBLIC	
2) AREA TABULATION	
A. TOTAL AREA OF SITE:	6.838 AC±
B. AREA OF 100 YEAR FLOODPLAIN (APPROX.)	N/A
C. AREA OF STEEP SLOPES (25% OR GREATER)	0.824 AC±
D. NET AREA OF SITE	6.014 AC.±
E. AREA OF THIS PLAN SUBMISSION	6.838 AC.±
F. LIMIT OF DISTURBANCE (APPROX.)	5.4 AC.±
G. AREA OF PROPOSED BUILDABLE LOTS	4.074 AC.±
H. AREA OF OPEN SPACE LOTS	2.182 AC.±
I. AREA OF PROPOSED PUBLIC R/W DEDICATION	0.582 AC.±
3) LOT TABULATION	
A. NET AREA OF SITE	6.014 AC.±
B. ALLOWABLE RESIDENTIAL LOT YIELD	12
C. TOTAL NUMBER OF RESIDENTIAL LOTS PROPOSED ON THIS SUBMISSION	11
D. TOTAL NUMBER OF OPEN SPACE LOTS PROPOSED ON THIS SUBMISSION	1
4) OPEN SPACE DATA	
A. MINIMUM RESIDENTIAL LOT SIZE	14,000 S.F.
B. OPEN SPACE REQUIRED FOR TOTAL AREA OF SITE	2.051 AC.
C. TOTAL AREA OF PROPOSED OPEN SPACE LOTS PROVIDED WITH SUBDIVISION	2.182 AC.
1) OPEN SPACE AREAS LESS THAN 35' IN WIDTH (NON–CREDITED)	0.00 AC.
2) TOTAL AREA OF OPEN SPACE MEETING MIN. OPEN SPACE REQUIREMENTS (CREDITED)	2.182 AC.
D. AREA OF RECREATIONAL OPEN SPACE REQUIRED (200 S.F./UNIT x 11 = 2200 S.F.)	0.05 AC.
1) TOTAL AREA OF RECREATIONAL OPEN SPACE PROVIDED	0.05 AC.

FOREST CONSERVATION SURETY INFORMATION

0.90 AC. RETENTION x $0.20 SQ. FT.	=	$7,840.80
0.40 AC. REFORESTATION x $0.50 SQ. FT.	=	$8,712.00
TOTAL	=	$16,552.80

DEBRA COURT – STREET LIGHT SCHEDULE (PUBLIC)				
#	SYMBOL	DESCRIPTION	LOCATION	PUBLIC/PRIVATE
①		150 WATT HPS PREMIERE POST–TOP FIXTURE MOUNTED ON A 14' BLACK FIBERGLASS POLE	STA. 0+48 OFFSET 20' RT.	PUBLIC
②		100 WATT HPS PREMIERE POST–TOP FIXTURE MOUNTED ON A 14' BLACK FIBERGLASS POLE	L.P. STA. 1+59	PUBLIC

SEE SHEET 2 FOR PLAN VIEW AND LOCATIONS

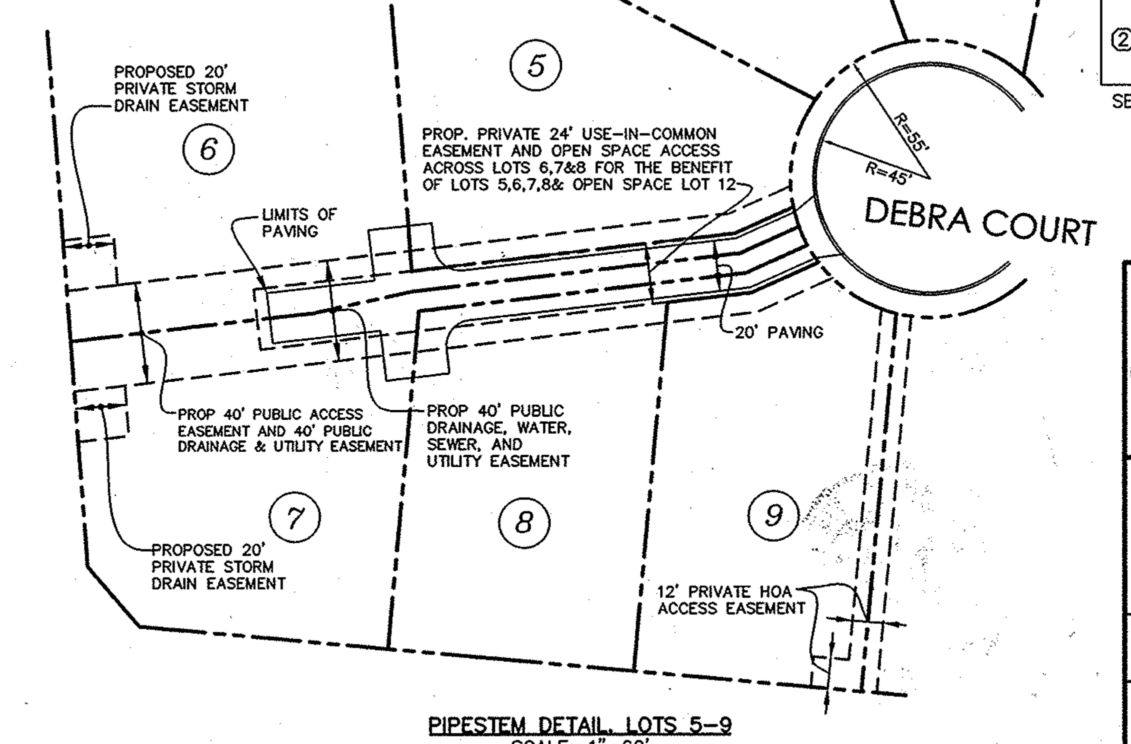

PIPESTEM DETAIL, LOTS 5–9
SCALE: 1"=60'

NO AS-BUILT INFO THIS SHEET

DEPARTMENT OF PUBLIC WORKS HOWARD COUNTY, MARYLAND	
[signature] 11-9-09	
CHIEF, BUREAU OF HIGHWAYS	DATE
DEPARTMENT OF PLANNING & ZONING HOWARD COUNTY, MARYLAND	
[signature] 11-16-09	
CHIEF, DIVISION OF LAND DEVELOPMENT	DATE
[signature] 11/13/09	
CHIEF, DEVELOPMENT ENGINEERING DIVISION	DATE

PROFESSIONAL CERTIFICATION
I HEREBY CERTIFY THAT THESE DOCUMENTS WERE PREPARED OR APPROVED BY ME, AND THAT I AM A DULY LICENSED PROFESSIONAL ENGINEER UNDER THE LAWS OF THE STATE OF MARYLAND, LICENSE NO. 16019 , EXPIRATION DATE: 5/8/2010.

LITTLE & ASSOCIATES, INC.
ENGINEERS~~LAND PLANNERS~~SURVEYORS
1055 TAYLOR AVENUE, SUITE 307
TOWSON, MARYLAND 21286
PHONE: (410)296–1636 FAX: (410)296–1639

OWNER/DEVELOPER:
KIMBERLY HOMES
ELLICOTT PROPERTIES, LLC.
P.O. BOX 6194
BALTIMORE, MARYLAND, 21231
(410) 522–4987

	BY	NO.	REVISION	DATE
DES: AMK				
DRN: PFS				
CHK: AMK				
DATE: 5/8/09				

FINAL ROAD CONSTRUCTION PLANS
TITLE SHEET
F–09–070
DEBRA COURT
LOTS 1 – 12
A RESUBDIVISION OF LOT 80, SECT. 3 GLEN BROOK (P 918); AND SUBDIVISION OF PARCELS 812 & 1119

ELECTION DISTRICT 2
SCALE: AS SHOWN
PRIOR PLANS: P–08–003, S–04–02, PLAT 8/92 & 4567

HOWARD COUNTY, MD
M 24 G 2,3 P 918,812,1119
OCTOBER 15, 2009

Y:\BARAHONA 01571A\dwg\FINAL PLANS\FINAL ROADS - SHEET 1 - COVER SHEET.dwg, 10/19/2009 2:34:22 PM, DesignJet 500+HPGL2 (C7770B).pc3, Arch D - 24 x 36 in. (landscape), 1:100

DEBRA COURT – STREET LIGHT SCHEDULE (PUBLIC)				
#	SYMBOL	DESCRIPTION	LOCATION	PUBLIC/PRIVATE
①	✹	150 WATT HPS PREMIERE POST-TOP FIXTURE MOUNTED ON A 14' BLACK FIBERGLASS POLE	STA. 0+48 OFFSET 20' RT.	PUBLIC
②	☼	100 WATT HPS PREMIERE POST-TOP FIXTURE MOUNTED ON A 14' BLACK FIBERGLASS POLE	L.P. STA. 1+59	PUBLIC

CURVE TABLE – DEBRA COURT						
CURVE	RADIUS	LENGTH	TANGENT	CHORD	BEARING	DELTA
C-1	488.22'	119.86'	60.23'	119.56'	N05°24'18"E	14°04'00"
C-2	1603.61'	218.36'	109.35'	218.19'	S02°16'22"W	7°48'06"

CENTERLINE TABLE–DEBRA COURT		
LINE	LENGTH	BEARING
L-1	64.65	N12°23'02"E

LEGEND

TO BE REMOVED	(TBR)
PROPOSED 150 WATT STREETLIGHT	✹
PROPOSED 100 WATT STREETLIGHT	☼
PROPOSED PAVING	(shaded)
PROPOSED FEATHERING AND OVERLAY	(crosshatched)
PUBLIC STREET TREES	(circle)

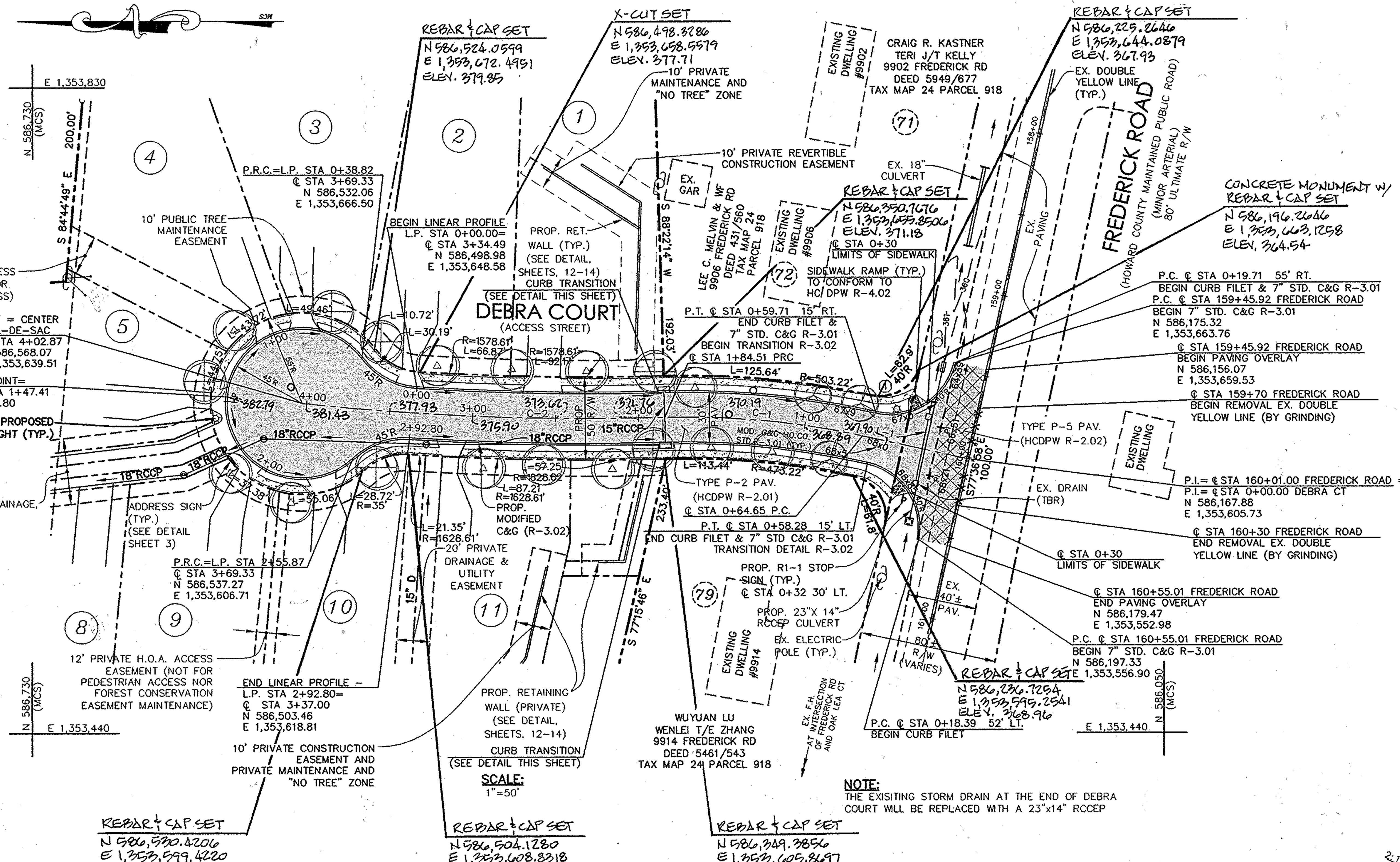

NOTE:
THE EXISITING STORM DRAIN AT THE END OF DEBRA COURT WILL BE REPLACED WITH A 23"x14" RCCEP

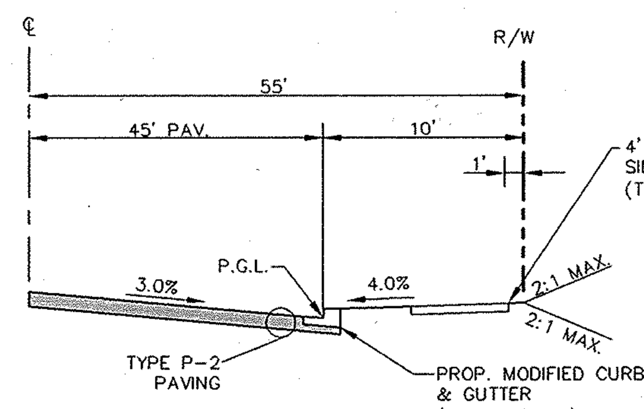

TYPICAL HALF SECTION – DEBRA CUL-DE-SAC
NOT TO SCALE

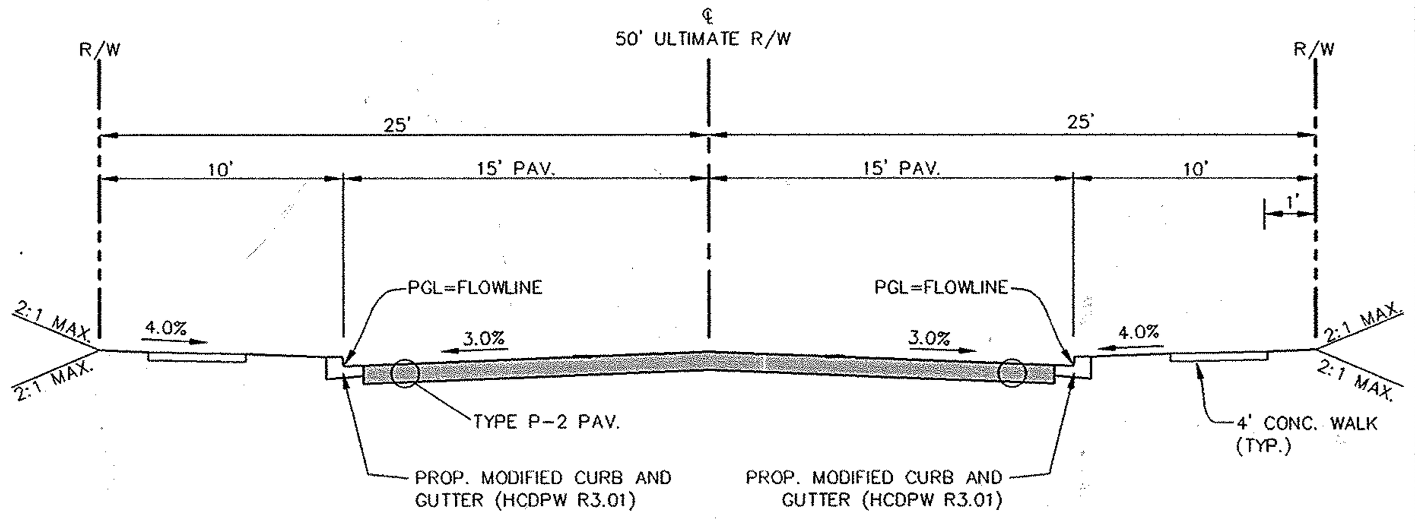

TYPICAL SECTION – DEBRA COURT
N.T.S.

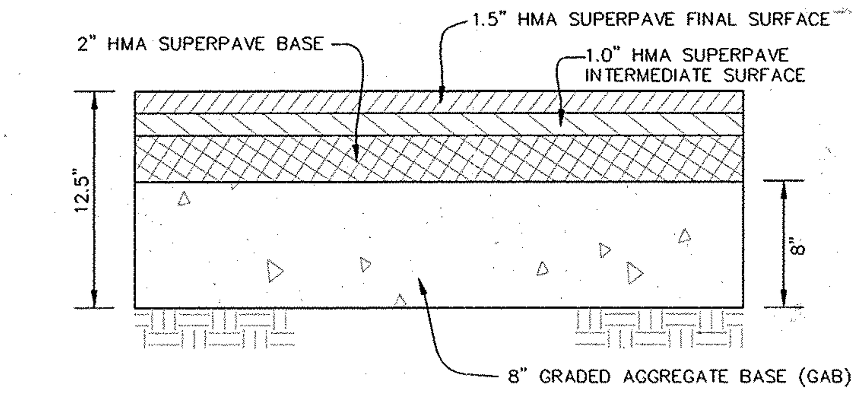

SUBGRADE MEETING COMPACTION REQUIREMENTS (AS PER SOIL REPORT) AND STABLE AS VERIFIED BY PROOF ROLLING.

TYPICAL PAVING SECTION TYPE P-2 – DEBRA COURT (HCDPW R-2.01)
N.T.S.

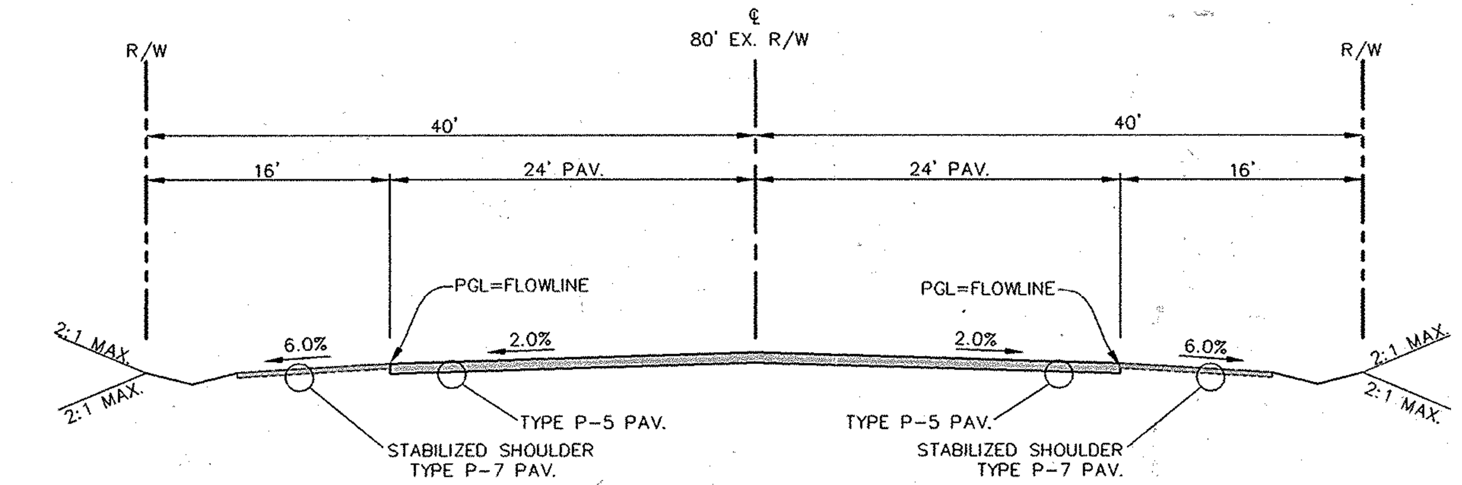

TYPICAL SECTION – FREDERICK ROAD
HCDPW R-1.04*
N.T.S.

*** SEE GENERAL NOTE 36 ON SHEET 1 REGARDING PAYING A FEE-IN-LIEU OF PROVIDING ROAD IMPROVEMENTS ALONG FREDERICK ROAD (WP-08-115).**

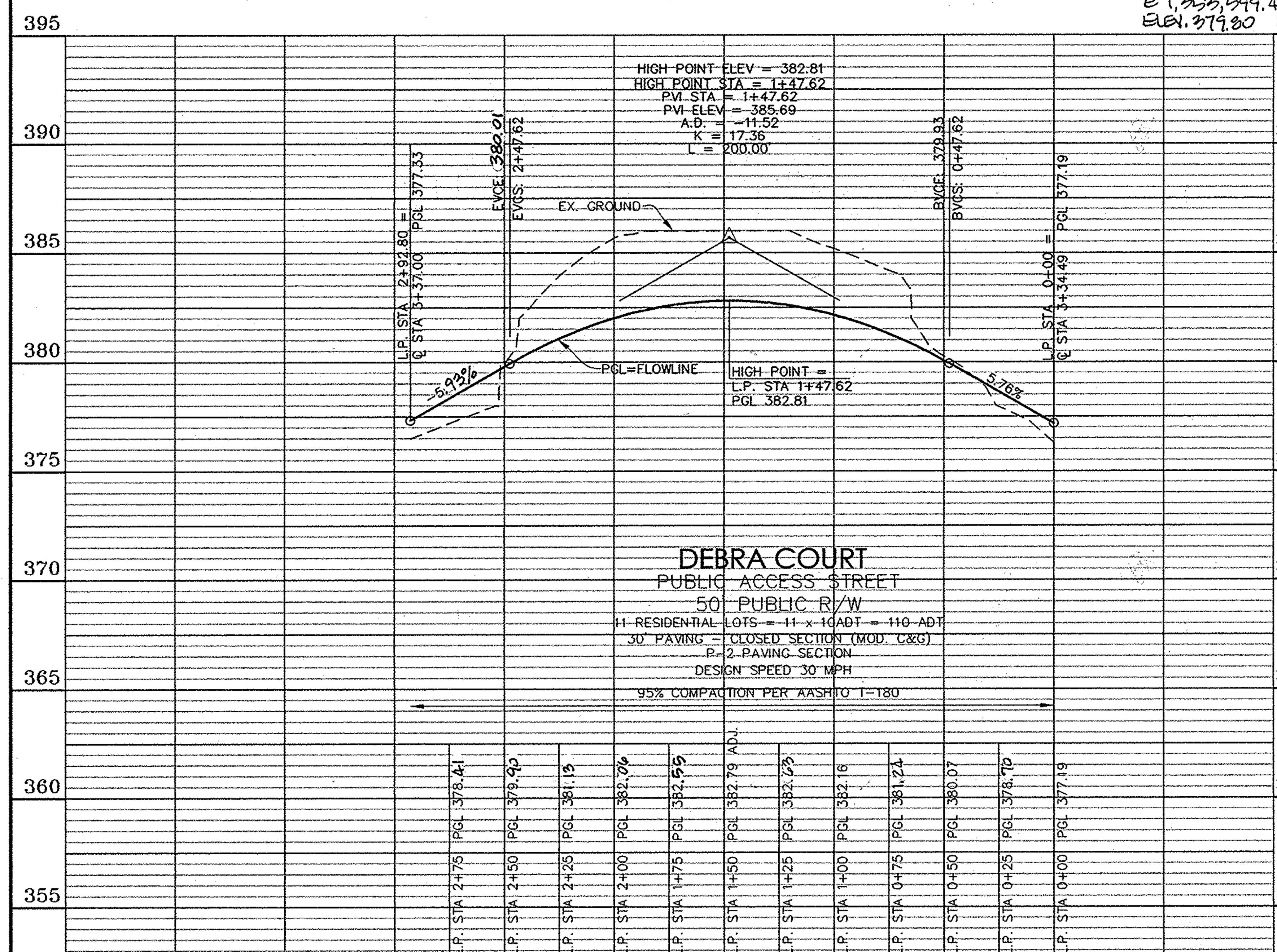

SCALE:
HORIZ: 1"=50'
VERT: 1"=5'

LINEAR PROFILE – DEBRA COURT

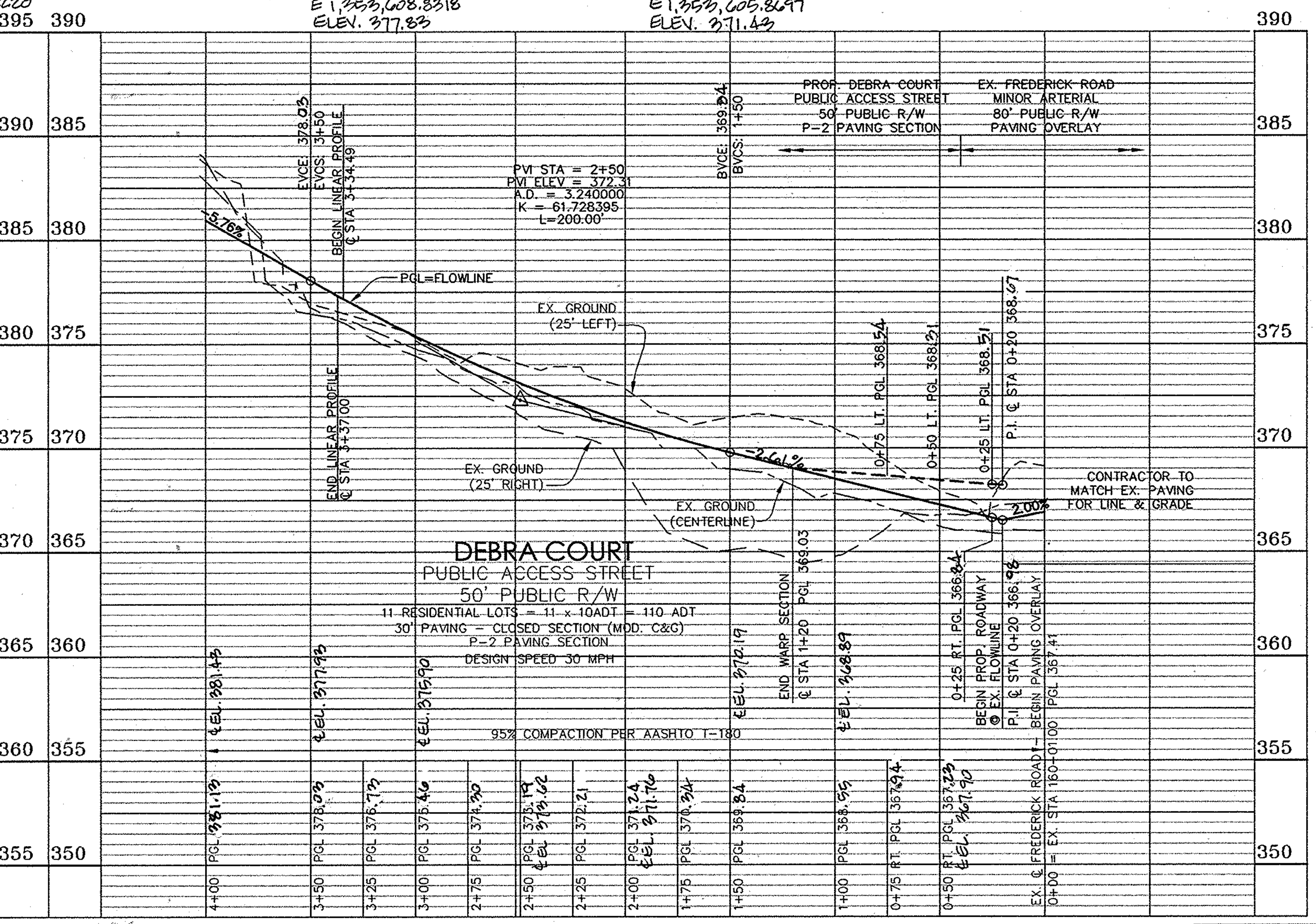

SCALE:
HORIZ: 1"=50'
VERT: 1"=5'

PROFILE – DEBRA COURT

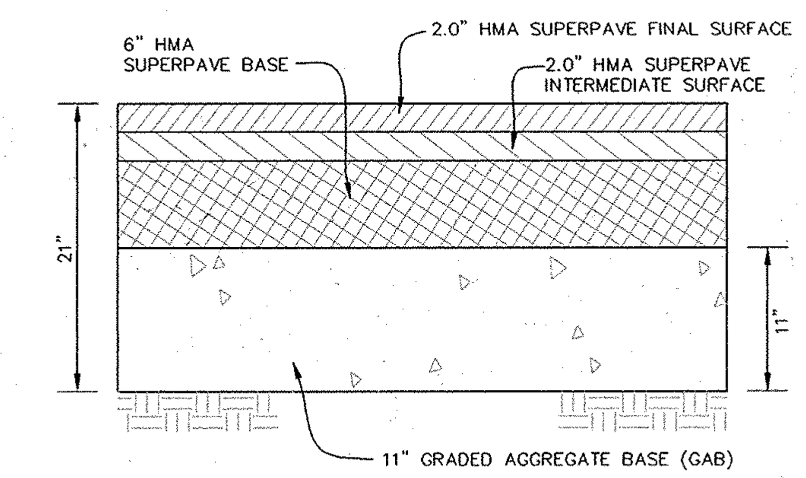

SUBGRADE MEETING COMPACTION REQUIREMENTS (AS PER SOIL REPORT) AND STABLE AS VERIFIED BY PROOF ROLLING.

TYPICAL PAVING SECTION TYPE P-5 – FREDERICK ROAD (HCDPW R-2.02)
N.T.S.

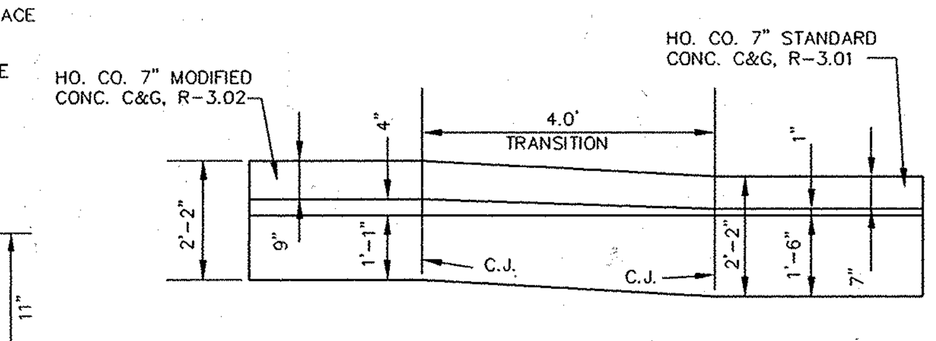

TYPICAL CURB TRANSITION DETAIL
NOT TO SCALE

I HEREBY CERTIFY, BY MY SEAL, THAT THE FACILITIES SHOWN ON THIS PLAN WERE CONSTRUCTED AS SHOWN ON THIS 'AS-BUILT' PLAN AND MEET THE APPROVED PLANS AND SPECIFICATIONS.

STATE OF MARYLAND – G. DWIGHT LITTLE JR. – NO. 16019 – REGISTERED PROFESSIONAL ENGINEER
11/19/15
P.E. 16019

DEPARTMENT OF PUBLIC WORKS
HOWARD COUNTY, MARYLAND

11-9-09
CHIEF, BUREAU OF HIGHWAYS — DATE

DEPARTMENT OF PLANNING & ZONING
HOWARD COUNTY, MARYLAND

11-16-09
CHIEF, DIVISION OF LAND DEVELOPMENT — DATE

11/13/09
CHIEF, DEVELOPMENT ENGINEERING DIVISION — DATE

PROFESSIONAL CERTIFICATION
I HEREBY CERTIFY THAT THESE DOCUMENTS WERE PREPARED OR APPROVED BY ME, AND THAT I AM A DULY LICENSED PROFESSIONAL ENGINEER UNDER THE LAWS OF THE STATE OF MARYLAND, LICENSE NO. 16019, EXPIRATION DATE: 5/8/2010.

STATE OF MARYLAND – G. DWIGHT LITTLE JR. – NO. 16019 – REGISTERED PROFESSIONAL ENGINEER

LITTLE & ASSOCIATES, INC.
ENGINEERS~~LAND PLANNERS~~SURVEYORS
1055 TAYLOR AVENUE, SUITE 307
TOWSON, MARYLAND 21286
PHONE: (410)296-1636 FAX: (410)296-1639

OWNER/DEVELOPER:
KIMBERLY HOMES
ELLICOTT PROPERTIES, LLC.
P.O. BOX 6194
BALTIMORE, MARYLAND, 21231
(410) 522-4987

	BY	NO.	REVISION	DATE
DES: AMK				
DRN: PFS				
CHK: AMK				
DATE: 1/23/09				

FINAL ROAD CONSTRUCTION PLANS
FINAL ROAD CONSTRUCTION PLAN & PROFILE
F-09-070
DEBRA COURT
LOTS 1 – 12
A RESUBDIVISION OF LOT 80, SECT. 3 GLEN BROOK (P 918); AND SUBDIVISION OF PARCELS 812 & 1119

ELECTION DISTRICT 2
SCALE: AS SHOWN
PRIOR PLANS: P-08-003, S-04-02, PLAT 8/92 & 4567

HOWARD COUNTY, MD
M 24 G 2,3 P 918,812,1119
OCTOBER 15, 2009
SHEET 2 OF 18

"AS-BUILT"
F-09-070

Y:\BARAHONA 01571A\dwg\FINAL PLANS\FINAL ROADS - SHEET 2 - ROAD.dwg, 10/19/2009 2:37:33 PM, DesignJet 500+HPGL2 (C7770B) (DRAFT MODE).pc3, Arch D - 24 x 36 in. (landscape), 1:50

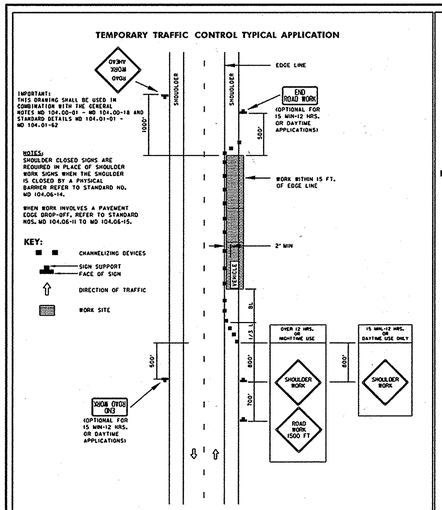

SPECIFICATION 104	CATEGORY CODE ITEMS
APPROVED	DIRECTOR - OFFICE OF TRAFFIC AND SAFETY

Maryland Department of Transportation
STATE HIGHWAY ADMINISTRATION
STANDARDS FOR HIGHWAYS AND INCIDENTAL STRUCTURES

SHOULDER WORK/2-LANE, 2-WAY EQL/LESS THAN 40 MPH

STANDARD NO. MD 104.02-02

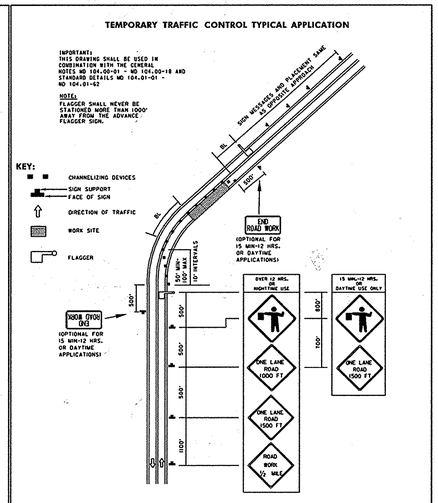

SPECIFICATION 104	CATEGORY CODE ITEMS
APPROVED	DIRECTOR - OFFICE OF TRAFFIC AND SAFETY

Maryland Department of Transportation
STATE HIGHWAY ADMINISTRATION
STANDARDS FOR HIGHWAYS AND INCIDENTAL STRUCTURES

FLAGGING OPERATION/2-LANE, 2-WAY EQL/LESS THAN 40 MPH

STANDARD NO. MD 104.02-10

MAINTENANCE OF TRAFFIC DETAILS

ALL TRAFFIC CONTROL STANDARDS TO BE PER MDSHA STANDARDS

ALL HANDICAP RAMPS TO HAVE DETECTABLE WARNING TRUNCATED DOMES SEE DETAIL HCDPW R-4.07

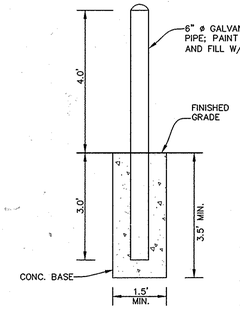

SWM BOLLARD DETAIL
SCALE: 1"=2'

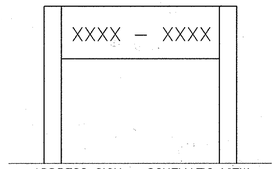

ADDRESS SIGN - SCHEMATIC VIEW

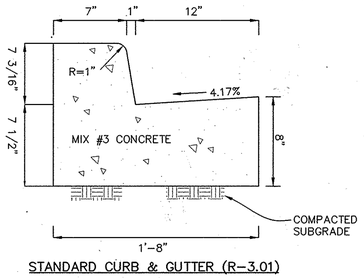

STANDARD CURB & GUTTER (R-3.01)
N.T.S.

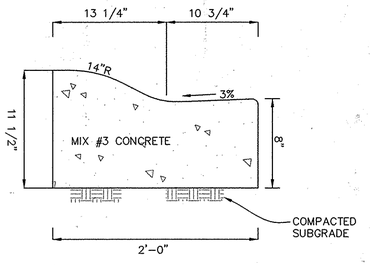

MODIFIED CURB & GUTTER (R-3.01)
N.T.S.

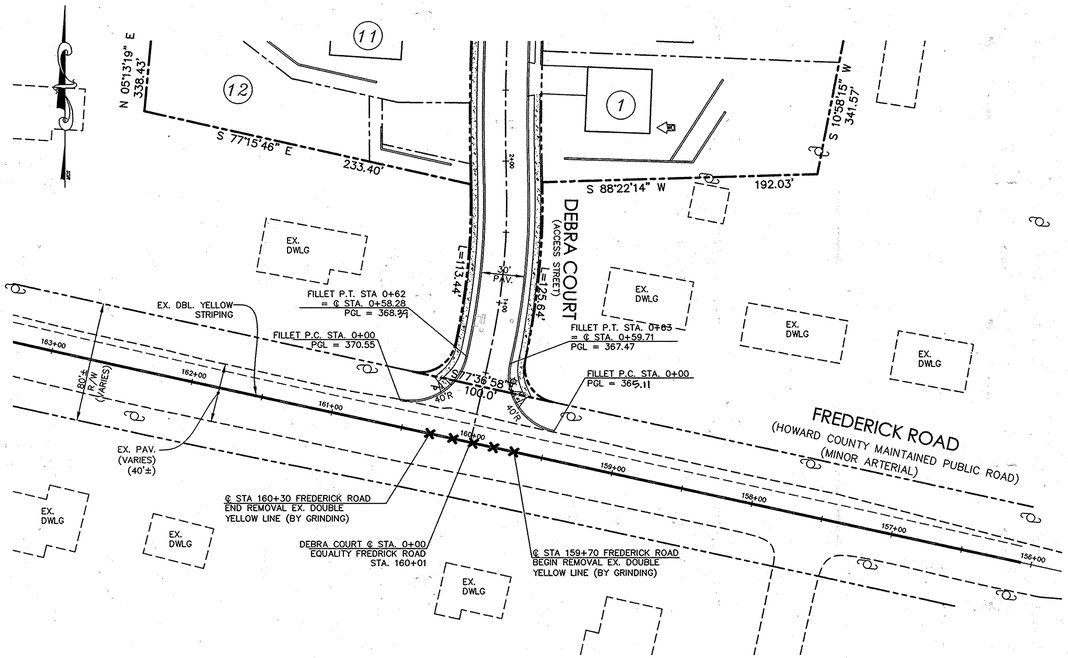

STRIPING PLAN
SCALE: 1"=50'

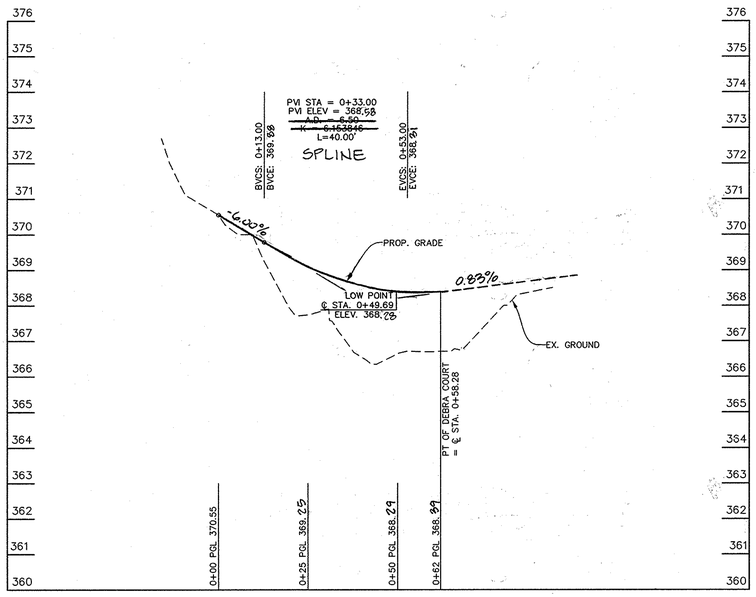

INTERSECTION FILLET PROFILE WEST OF ℄ DEBRA COURT

SCALE: 1"=20' (HORZ.)
1"= 2' (VERT.)

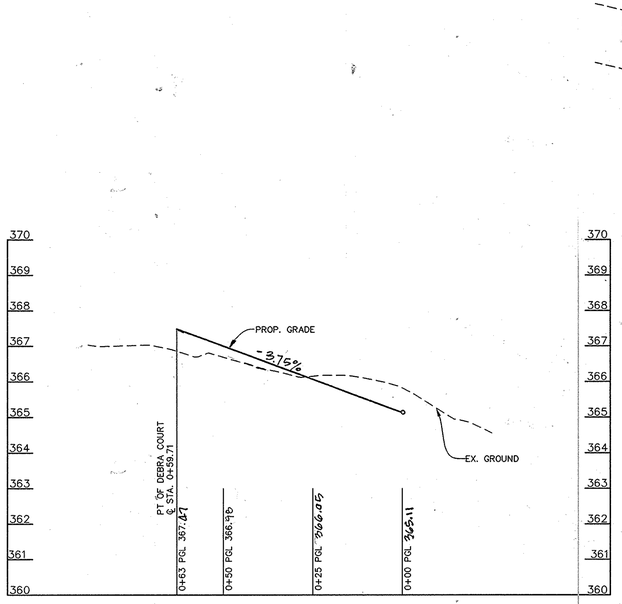

INTERSECTION FILLET PROFILE EAST OF ℄ DEBRA COURT

SCALE: 1"=20' (HORZ.)
1"= 2' (VERT.)

I HEREBY CERTIFY, BY MY SEAL, THAT THE FACILITIES SHOWN ON THIS PLAN WERE CONSTRUCTED AS SHOWN ON THIS "AS-BUILT" PLAN AND MEET THE APPROVED PLANS AND SPECIFICATIONS

STATE OF MARYLAND — PAUL F. SCHWARZ — 16019 — REGISTERED PROFESSIONAL ENGINEER — 12/8/15

LITTLE & ASSOCIATES, INC.
ENGINEERS~~LAND PLANNERS~~SURVEYORS
1055 TAYLOR AVENUE, SUITE 307
TOWSON, MARYLAND 21286
PHONE: (410)296-1636 FAX: (410)296-1639

OWNER/DEVELOPER:
KIMBERLY HOMES
ELLICOTT PROPERTIES, LLC.
P.O. BOX 6194
BALTIMORE, MARYLAND, 21231
(410) 522-4987

DES: AMK				
DRN: PFS				
CHK: AMK				
DATE: 1/23/09	BY	NO.	REVISION	DATE

DEPARTMENT OF PUBLIC WORKS
HOWARD COUNTY, MARYLAND
CHIEF, BUREAU OF HIGHWAYS — DATE 11-9-09

DEPARTMENT OF PLANNING & ZONING
HOWARD COUNTY, MARYLAND
CHIEF, DIVISION OF LAND DEVELOPMENT — DATE 11-6-09
CHIEF, DEVELOPMENT ENGINEERING DIVISION — DATE 11/13/09

PROFESSIONAL CERTIFICATION
I HEREBY CERTIFY THAT THESE DOCUMENTS WERE PREPARED OR APPROVED BY ME, AND THAT I AM A DULY LICENSED PROFESSIONAL ENGINEER UNDER THE LAWS OF THE STATE OF MARYLAND, LICENSE NO. 16019 , EXPIRATION DATE: 5/8/2010.

STATE OF MARYLAND — G. LEWIS LITTLE JR. — 16019 — REGISTERED PROFESSIONAL ENGINEER

FINAL ROAD CONSTRUCTION PLANS

ROAD DETAILS, MOT AND STRIPING PLAN

F-09-070

DEBRA COURT

LOTS 1 - 12

A RESUBDIVISION OF LOT 80, SECT. 3 GLEN BROOK (P 918); AND SUBDIVISION OF PARCELS 812 & 1119

ELECTION DISTRICT 2
SCALE: AS SHOWN
PRIOR PLANS: P-08-003, S-04-02, PLAT 8/92 & 4567

HOWARD COUNTY, MD
M 24 G 2,3 P 918,812,1119
OCTOBER 15, 2009
SHEET 3 OF 18

"AS BUILT"

F-09-070

Y:\BARHONA 01571A\dwg\FINAL PLANS\FINAL ROADS - SHEET 3 - ROAD DETAILS.dwg, 10/19/2009 2:38:51 PM, Designjet 500+HP(c2 (C7779B).pc3, Arch D - 24 x 36 in. (landscape), 1:59

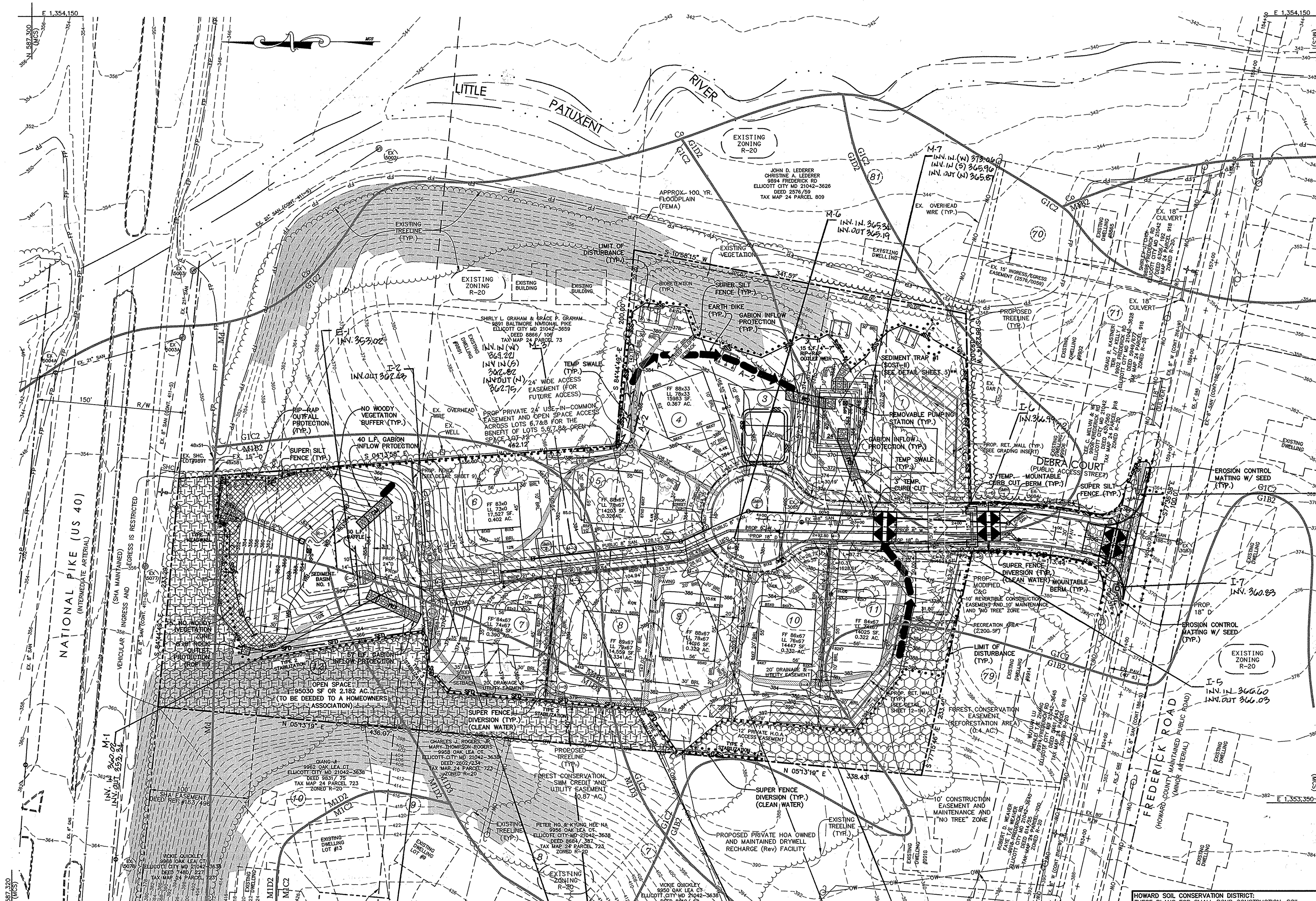

LIMIT OF DISTURBANCE AND PROPOSED WOODS SYMBOLS ALONG PROPERTY LINES OR BUFFER LIMIT AS SHOWN ARE FOR CLARITY. ACTUAL LOCATION WILL BE AT THE PROPERTY LINE OR BUFFER LIMIT. THERE SHALL BE NO GRADING BEYOND THESE LIMITS.

UNMITIGATED 65dba LINE (AS PREPARED BY STAIANO ENGINEERING, INC. JANUARY 7, 2004)

**NOTE: SEE GRADING INSETS ON SHEETS 5 & 6

SCALE: 1"=50'

UNMITIGATED 65dba LINE (AS PREPARED BY STAIANO ENGINEERING, INC. DECEMBER 26, 2007)

LIMIT OF DISTURBANCE
233,955± SF (5.4± AC)

BASIN TABLE

BASIN TYPE		BASIN
EXISITING DRAINAGE AREA (ACRES):		2.65
INTERIM DRAINAGE AREA (ACRES):		2.05
PROPOSED DRAINAGE AREA (ACRES):		4.46
STORAGE REQUIRED (CUBIC FEET)	C/O	4,077
	WET	8,154
	DRY	8,154
	TOTAL	16,308
STORAGE PROVIDED (CUBIC FEET)	C/O	3,954
	WET	9,550
	DRY	21,631
	TOTAL	31,181
EXISTING GROUND ELEVATION		353.0±
TOP EMBANKMENT ELEVATION		362.00
WEIR CREST ELEVATION		358.00 (SC)
DRY STORAGE ELEVATION		358.00
WET STORAGE ELEVATION		355.00
CLEANOUT ELEVATION		354.00
BOTTOM ELEVATION		353.00
DEPTH OF CHANNEL		N/A
OUTLET WIDTH		N/A
BOTTOM DIMENSION		N/A
BASIN SIDE SLOPES		3:1
BASIN DEPTH	WET	2.00'
	DRY	5.00'
	TOTAL	7.00'
BARREL DIAMETER		27"
RISER DIMENSIONS (PER SIDE)		4'
WET STORAGE ZONE ELEVATION		353.00-355.00
DRY STORAGE ZONE ELEVATION		355.00-358.00
1-YR DISCHARGE (EX. CONDITION)		1.2 CFS
1-YR DISCHARGE (INT. CONDITION)		0.2 CFS
1-YR DISCHARGE (PROP. CONDITION)		0.3 CFS

LEGEND

- EXISTING CONTOUR — 136
- PROPOSED CONTOUR — 400
- EXISTING CURB
- PROPOSED CURB
- PROPOSED STORM DRAINS
- EXISTING WOODS
- UNMITIGATED 65 dba LINE
- TO BE REMOVED — (TBR)
- EXISTING WATER VALVE — WV
- EXISTING FIRE HYDRANT
- PROPOSED WATER VALVE
- PROPOSED FIRE HYDRANT
- EXISTING SEWER MANHOLE
- EXISTING UTILITY POLE
- SOILS DELINEATION — G1C2
- PROPOSED WOODS LINE
- 15' NO WOODY VEGETATION LINE — WB — WB
- 100 YEAR FLOODPLAIN LIMITS (FEMA) — FP — FP
- OVERHEAD WIRES — OW — OW
- DRAINAGE AREA
- Tc PATH — B — A
- LIMIT OF DISTURBANCE
- STABILIZED CONSTRUCTION ENTRANCE (SCE) — SCE
- SUPER SILT FENCE — SSF
- SUPER FENCE DIVERSION — SFD
- BUILDING RESTRICTION LINE
- MOUNTABLE BERM
- INLET PROTECTION
- EARTH DIKE — A-2
- TEMPORARY SWALE — A-2
- REMOVABLE PUMPING STATION — RPS
- GABION INFLOW PROTECTION — GM
- RIP-RAP OUTFALL PROTECTION
- EROSION CONTROL MATTING (ECM)/SEED OR SOD

OWNER'S/ DEVELOPER'S CERTIFICATION:

"I/WE CERTIFY THAT ALL DEVELOPMENT AND/OR CONSTRUCTION WILL BE DONE ACCORDING TO THESE PLANS, AND THAT ANY RESPONSIBLE PERSONNEL INVOLVED IN THE CONSTRUCTION PROJECT WILL HAVE A CERTIFICATE OF ATTENDANCE AT A DEPARTMENT OF THE ENVIRONMENT APPROVED TRAINING PROGRAM FOR THE CONTROL OF SEDIMENT AND EROSION BEFORE BEGINNING THE PROJECT. I SHALL ENGAGE A PROFESSIONAL ENGINEER TO SUPERVISE POND CONSTRUCTION AND PROVIDE THE HOWARD SOIL CONSERVATION DISTRICT WITH AN "AS-BUILT" PLAN OF THE POND WITHIN 30 DAYS OF COMPLETION. I ALSO AUTHORIZE PERIODIC ON-SITE INSPECTION BY THE HOWARD SOIL CONSERVATION DISTRICT."

Scott P Wade — 10-21-2009
SIGNATURE OF OWNER/ DEVELOPER — DATE

KIMBERLY HOMES ELLICOTT PROPERTIES LLC c/o SCOTT WADE
PRINT NAME

CONSULTANTS CERTIFICATION

"I CERTIFY THAT THIS PLAN FOR POND CONSTRUCTION, EROSION AND SEDIMENT CONTROL REPRESENTS A PRACTICAL AND WORKABLE PLAN BASED ON MY PERSONAL KNOWLEDGE OF THE SITE CONDITIONS. THIS PLAN WAS PREPARED IN ACCORDANCE WITH THE REQUIREMENTS OF THE HOWARD SOIL CONSERVATION DISTRICT. I HAVE NOTIFIED THE DEVELOPER THE HE/SHE MUST ENGAGE A REGISTERED PROFESSIONAL ENGINEER TO SUPERVISE POND CONSTRUCTION AND PROVIDE THE HOWARD SOIL CONSERVATION DISTRICT WITH AN "AS-BUILT" PLAN OF THE POND WITHIN 30 DAYS OF COMPLETION."

[signature] — 10/21/09
SIGNATURE — DATE

G DWIGHT LITTLE, JR. — 16019
PRINT NAME — MD. LICENSE NO.

I HEREBY CERTIFY, BY MY SEAL, THAT THE FACILITIES SHOWN ON THIS PLAN WERE CONSTRUCTED AS SHOWN ON THIS 'AS-BUILT' PLAN AND MEET THE APPROVED PLANS AND SPECIFICATIONS.

STATE OF MARYLAND — G. DWIGHT LITTLE JR. — NO. 16019 — REGISTERED PROFESSIONAL ENGINEER
P.E. 16019

NOTES:

CONTRACTOR SHALL INSPECT AND MAINTAIN INLET PROTECTION DEVICES, SILT FENCE AND SUPER SILT FENCE AFTER EACH STORM EVENT. MAINTENANCE SHALL INCLUDE BUT NOT BE LIMITED TO THE REMOVAL OF ALL ACCUMULATED SEDIMENT.

FOR ALL WORK IN FREDERICK ROAD THE CONTRACTOR IS TO DISTURB ONLY THAT AREA THAT CAN BE STABILIZED AT THE END OF EACH WORKING DAY.

FOR ALL UTILITY WORK DONE OUTSIDE OF THE PERIMETER CONTROLS, THE CONTRACTOR IS TO DISTURB ONLY THAT AREA THAT CAN BE STABILIZED AT THE END OF EACH WORKING DAY.

STABILIZATION SHALL CONSTITUTE THE FOLLOWING:
1) IN AREAS TO BE PAVED —STONE BASE
2) IN AREAS TO BE VEGETATIVELY STABILIZED—
   a) EROSION CONTROL MATTING, OR SOD FOR ALL CHANNEL OR SWALE AREAS
   b) SEED AND MULCH FOR ALL OTHER AREAS REFER TO SEQUENCE OF OPERATIONS.

TRAP/BASIN FLOW DIVERSION NOTE

"TO PREVENT SLOPE EROSION, WITHIN SEDIMENT TRAPPING DEVICES, ADEQUATELY SIZED AND STABILIZED FLOW DIVERSION MEASURES (I.E., EARTH DIKE, TEMPORARY SWALE, PERIMETER DIKE/SWALE) SHALL BE INSTALLED AT THE UPSLOPE EXTENT OF TRAP, AND BASIN STORAGE AREAS TO DIVERT ALL FLOWS TO APPROPRIATE INFLOW PROTECTION DEVICES. THESE MEASURES WILL BE LOCATED BY THE CONTRACTOR AND THEREFORE NOT SHOWN ON THE PLAN VIEW."

** CONTRACTOR SHALL INSPECT AND MAINTAIN SILT FENCE AND SUPER SILT FENCE AFTER EACH STORM EVENT. MAINTENANCE SHALL INCLUDE BUT NOT BE LIMITED TO THE REMOVAL OF ALL ACCUMULATED SEDIMENT.

WOODY VEGETATION NOTE:

TREES, SHRUBS, OR OTHER WOODY VEGETATION WILL NOT BE ALLOWED WITHIN 25' OF THE INLET STRUCTURE IN THE POOL AREA, AND NOT ALLOWED ON, OR WITHIN 15' OF ANY PORTION OF THE EMBANKMENT.

STANDARD DISTURBANCE NOTE:

THERE SHALL BE NO CLEARING, GRADING, CONSTRUCTION OR DISTURBANCE OF VEGETATION IN THE FOREST BUFFER EASEMENT AND FOREST CONSERVATION EASEMENTS.

SOIL DESIGNATION	SOIL TYPES	SOIL CHARACTERISTICS		SOIL GROUP
Co°	CODORUS SILT LOAM			C
GIB2#	GLENELG WAM	3-8%	MODERATELY ERODED	B
GIC2#	GLENELG WAM	8-15%	MODERATELY ERODED	B
GID2	GLENELG WAM	15-25%	MODERATELY ERODED	B
Md	MADE LAND			D
MIB2#	MANOR LOAM	3-8%	MODERATELY ERODED	B
MIC2#	MANOR LOAM	8-15%	MODERATELY ERODED	B
MIC3#	MANOR LOAM	8-15%	MODERATELY ERODED	B
MID2	MANOR LOAM	15-25%	MODERATELY ERODED	B
MID3	MANOR LOAM	15-25%	MODERATELY ERODED	B

SOIL LINES AND TYPES SHOWN ARE TAKEN FROM HOWARD COUNTY USDA SOILS MAP NO. 15.

° INDICATES A HYDRIC SOIL

# INDICATES A SOIL WITH SLOPES LESS THAN 15% AND SIGNIFICANT EROSION POTENTIAL

HOWARD SOIL CONSERVATION DISTRICT:
THESE PLANS FOR SMALL POND CONSTRUCTION, SOIL EROSION AND SEDIMENT CONTROL MEET THE REQUIREMENTS OF THE HOWARD SOIL CONSERVATION DISTRICT.
[signature] 11/2/09
HOWARD SCD — DATE

DEPARTMENT OF PUBLIC WORKS
HOWARD COUNTY, MARYLAND
[signature] 11-9-09
CHIEF, BUREAU OF HIGHWAYS — DATE

DEPARTMENT OF PLANNING & ZONING
HOWARD COUNTY, MARYLAND
Kent Sheubrooks 11-16-09
CHIEF, DIVISION OF LAND DEVELOPMENT — DATE

[signature] 11/13/09
CHIEF, DEVELOPMENT ENGINEERING DIVISION — DATE

PROFESSIONAL CERTIFICATION
I HEREBY CERTIFY THAT THESE DOCUMENTS WERE PREPARED OR APPROVED BY ME, AND THAT I AM A DULY LICENSED PROFESSIONAL ENGINEER UNDER THE LAWS OF THE STATE OF MARYLAND, LICENSE NO. 16019 , EXPIRATION DATE: 5/8/2010.

STATE OF MARYLAND — G. DWIGHT LITTLE JR. — NO. 16019 — REGISTERED PROFESSIONAL ENGINEER

LITTLE & ASSOCIATES, INC.
ENGINEERS~~LAND PLANNERS~~SURVEYORS
1055 TAYLOR AVENUE, SUITE 307
TOWSON, MARYLAND 21286
PHONE: (410)296-1636 FAX: (410)296-1639

OWNER/DEVELOPER:
KIMBERLY HOMES
ELLICOTT PROPERTIES, LLC.
P.O. BOX 6194
BALTIMORE, MARYLAND, 21231
(410) 522-4987

	BY	NO.	REVISION	DATE
DES: AMK				
DRN: PFS				
CHK: AMK				
DATE: 1/23/09				

FINAL ROAD CONSTRUCTION PLANS

GRADING AND SEDIMENT CONTROL PLAN

F-09-070

DEBRA COURT

LOTS 1 - 12

A RESUBDIVISION OF LOT 80, SECT. 3 GLEN BROOK (P 918); AND SUBDIVISION OF PARCELS 812 & 1119

ELECTION DISTRICT 2
SCALE: AS SHOWN
PRIOR PLANS: P-08-003, S-04-02,
PLAT 8/92 & 4567

HOWARD COUNTY, MD
M 24 G 2,3 P 918,812,1119
OCTOBER 15, 2009

"AS-BUILT"

F-09-070

SEDIMENT CONTROL SPECIFICATIONS

SECTION I – VEGETATION STABILIZATION METHODS AND MATERIALS

A. SITE PREPARATION

I. INSTALL EROSION AND SEDIMENT CONTROL STRUCTURES (EITHER TEMPORARY OR PERMANENT) SUCH AS DIVERSIONS, GRADE STABILIZATION STRUCTURES, BERMS, WATERWAY, OR SEDIMENT CONTROL BASINS.

II. PERFORM ALL GRADING OPERATIONS AT RIGHT ANGLES TO THE SLOPE. FINAL GRADING AND SHAPING IS NOT USUALLY NECESSARY FOR TEMPORARY SEEDING.

III. SCHEDULE REQUIRED SOIL TESTS TO DETERMINE SOIL AMENDMENT COMPOSITION AND APPLICATION RATES FOR SITES HAVING DISTURBED AREA OVER 5 ACRES.

B. SOIL AMENDMENTS (FERTILIZER AND LIME SPECIFICATIONS)

I. SOIL TESTS MUST BE PERFORMED TO DETERMINE THE EXACT RATIOS AND APPLICATION RATES FOR BOTH LIME AND FERTILIZER ON SITES HAVING DISTURBED AREAS OVER 5 ACRES. SOIL ANALYSIS MAY BE PERFORMED BY THE UNIVERSITY OF MARYLAND OR A RECOGNIZED COMMERCIAL LABORATORY. SOIL SAMPLES TAKEN FOR ENGINEERING PURPOSES MAY ALSO BE USED FOR CHEMICAL ANALYSES.

II. FERTILIZERS SHALL BE UNIFORM IN COMPOSITION, FREE FLOWING AND SUITABLE FOR ACCURATE APPLICATION BY APPROVED EQUIPMENT. MANURE MAY BE SUBSTITUTED FOR FERTILIZER WITH PRIOR APPROVAL FROM THE APPROPRIATE APPROVAL AUTHORITY. FERTILIZERS SHALL ALL BE DELIVERED TO THE SITE FULLY LABELED ACCORDING TO THE APPLICABLE STATE FERTILIZER LAWS AND SHALL BEAR THE NAME, TRADE NAME OR TRADEMARK AND WARRANTEE OF THE PRODUCER.

III. LIME MATERIALS SHALL BE GROUND LIMESTONE (HYDRATED OR BURNT LIME MAY BE SUBSTITUTED)WHICH CONTAINS AT LEAST 50% TOTAL OXIDES (CALCIUM OXIDE PLUS MAGNESIUM OXIDE). LIMESTONE SHALL BE GROUND TO SUCH FINENESS THAT AT LEAST 50% WILL PASS THROUGH A #100 MESH SIEVE AND 98–100% WILL PASS THROUGH A #20 MESH SIEVE.

IV. INCORPORATE LIME AND FERTILIZER INTO THE TOP 3–5" OF SOIL BY DISKING OR OTHER SUITABLE MEANS.

C. SEEDBED PREPARATION

I. TEMPORARY SEEDING

a. SEEDBED PREPARATION SHALL CONSIST OF LOOSENING SOIL TO A DEPTH OF 3" TO 5" BY MEANS OF SUITABLE AGRICULTURE OR CONSTRUCTION EQUIPMENT, SUCH AS DISC HARROWS OR CHISEL PLOWS OR RIPPERS MOUNTED ON CONSTRUCTION EQUIPMENT. AFTER THE SOIL IS LOOSENED IT SHOULD NOT BE ROLLED OR DRAGGED SMOOTH BUT LEFT IN THE ROUGHENED CONDITION. SLOPED AREAS (GREATER THAT 3:1) SHOULD BE TRACKED LEAVING THE SURFACE IN AN IRREGULAR CONDITION WITH RIDGES RUNNING PARALLEL TO THE CONTOUR OF THE SLOPE.

b. APPLY FERTILIZER AND LIME AS PRESCRIBED ON THE PLANS.

c. INCORPORATE LIME AND FERTILIZER INTO THE TOP 3–5" OF SOIL BY DISKING OR OTHER SUITABLE MEANS.

II. PERMANENT SEEDING

a. MINIMUM SOIL CONDITIONS REQUIRED FOR PERMANENT VEGETATIVE ESTABLISHMENT:
1. SOIL PH SHALL BE BETWEEN 6.0 AND 7.0
2. SOLUBLE SALTS SHALL BE LESS THAN 500 PARTS PER MILLION (PPM).
3. THE SOIL SHALL CONTAIN LESS THAN 40% CLAY BUT ENOUGH FINE GRAINED MATERIAL (>30% SILT PLUS CLAY) TO PROVIDE THE CAPACITY TO HOLD A MODERATE AMOUNT OF MOISTURE. AN EXCEPTION IS IF LOVEGRASS OR SERECIA LESPEDEZA IS TO BE PLANTED, THEN A SANDY SOIL (<30% SILT PLUS CLAY) WOULD BE ACCEPTABLE.
4. SOIL SHALL CONTAIN 1.5% MINIMUM ORGANIC MATTER BY WEIGHT.
5. SOIL MUST CONTAIN SUFFICIENT PORE SPACE TO PERMIT ADEQUATE ROOT PENETRATION.
6. IF THESE CONDITIONS CANNOT BE MET BY SOILS ON SITE, ADDITION OF TOPSOIL IS REQUIRED IN ACCORDANCE WITH SECTION 21 STANDARD AND SPECIFICATION FOR TOPSOIL.

b. AREAS PREVIOUSLY GRADED IN CONFORMANCE WITH THE DRAWINGS SHALL BE MAINTAINED IN A TRUE AND EVEN GRADE, THEN SCARIFIED OR OTHERWISE LOOSENED TO A DEPTH OF 3–5" TO PERMIT BONDING OF THE TOPSOIL TO THE SURFACE AREA AND TO CREATE HORIZONTAL EROSION CHECK SLOTS TO PREVENT TOPSOIL FROM SLIDING DOWN A SLOPE.

c. APPLY SOIL AMENDMENTS AS PER SOIL TEST OR AS INCLUDED ON THE PLANS.

d. MIX SOIL AMENDMENTS INTO THE TOPSOIL BY DISKING OR OTHER SUITABLE MEANS. LAWN AREAS SHOULD BE RAKED TO SMOOTH THE SURFACE, REMOVE LARGE OBJECTS LIKE STONES AND BRANCHES, AND READY THE AREA FOR SEED APPLICATION. WHERE SITE CONDITIONS WILL NOT PERMIT NORMAL SEEDBED PREPARATION, LOOSEN SURFACE SOIL BY DRAGGING WITH A HEAVY CHAIN OR OTHER EQUIPMENT TO ROUGHEN THE SURFACE. STEEP SLOPES (STEEPER THAN 3:1) SHOULD BE TRACKED BY A DOZER LEAVING THE SOIL IN AN IRREGULAR CONDITION WITH RIDGES RUNNING PARALLEL TO THE CONTOUR OF THE SLOPE.THE TOP 1–3" OF SOIL SHOULD BE LOOSE AND FRIABLE. SEEDBED LOOSENING MAY NOT BE NECESSARY ON NEWLY DISTURBED AREAS.

D. SEED SPECIFICATIONS

I. ALL SEED MUST MEET THE REQUIREMENTS OF THE MARYLAND STATE SEED LAW. ALL SEED SHALL BE SUBJECT TO RE-TESTING BY A RECOGNIZED SEED LABORATORY. ALL SEED USED SHALL HAVE BEEN TESTED WITHIN THE 6 MONTHS IMMEDIATELY PRECEDING THE DATE OF SOWING SUCH MATERIAL ON THIS JOB. NOTE: SEED TAGS SHALL BE MADE AVAILABLE TO THE INSPECTOR TO VERIFY TYPE AND RATE OF SEED USED.

II. INOCULANT – THE INOCULANT FOR TREATING LEGUME SEED IN THE SEED MIXTURES SHALL BE A PURE CULTURE OF NITROGEN-FIXING BACTERIA PREPARED SPECIFICALLY FOR THE SPECIES. INOCULANTS SHALL NOT BE USED LATER THAN THE DATE INDICATED ON THE CONTAINER. ADD FRESH INOCULANT AS DIRECTED ON PACKAGE. USE FOUR TIMES THE RECOMMENDED RATE WHEN HYDROSEEDING. NOTE: IT IS VERY IMPORTANT TO KEEP INOCULANT AS COOL AS POSSIBLE UNTIL USED. TEMPERATURES ABOVE 75–80°F CAN WEAKEN BACTERIA AND MAKE THE INOCULANT LESS EFFECTIVE.

E. METHODS OF SEEDING

I. HYDROSEEDING: APPLY SEED UNIFORMLY WITH HYDROSEEDER (SLURRY INCLUDES SEED AND FERTILIZER), BROADCAST OR DROP SEEDER, OR A CULTIPACKER SEEDER.

a. IF FERTILIZER IS BEING APPLIED AT THE TIME OF SEEDING, THE APPLICATION RATES AMOUNTS WILL NOT EXCEED THE FOLLOWING: NITROGEN; MAXIMUM OF 100 LBS. PER ACRE TOTAL OF SOLUBLE NITROGEN; P205 (PHOSPHOROUS): 200 LBS/AC; K20 (POTASSIUM): 200 LBS/AC.

b. LIME – USE ONLY GROUND AGRICULTURAL LIMESTONE, (UP TO 3 TONS PER ACRE MAY BE APPLIED BY HYDROSEEDING). NORMALLY, NOT MORE THAN 2 TONS ARE APPLIED BY HYDROSEEDING AT ANY ONE TIME. DO NOT USE BURNT OR HYDRATED LIME WHEN HYDROSEEDING.

c. SEED AND FERTILIZER SHALL BE MIXED ON SITE AND SEEDING SHALL BE DONE IMMEDIATELY AND WITHOUT INTERRUPTION.

II. DRY SEEDING: THIS INCLUDES USE OF CONVENTIONAL DROP OR BROADCAST SPREADERS.

a. SEED SPREAD DRY SHALL BE INCORPORATED INTO THE SUBSOIL AT THE RATES PRESCRIBED ON THE TEMPORARY OR PERMANENT SEEDING SUMMARIES OR TABLES 25 OR 26. THE SEEDED AREA SHALL THEN BE ROLLED WITH A WEIGHTED ROLLER TO PROVIDE GOOD SEED TO SOIL CONTACT.

b. WHERE PRACTICAL, SEED SHOULD BE APPLIED IN TWO DIRECTIONS PERPENDICULAR TO EACH OTHER. APPLY HALF THE SEEDING RATE IN EACH DIRECTION.

III. DRILL OR CULTIPACKER SEEDING: MECHANIZED SEEDERS THAT APPLY AND COVER SEED WITH SOIL.

a. CULTIPACKING SEEDERS ARE REQUIRED TO BURY THE SEED IN SUCH A FASHION AS TO PROVIDE AT LEAST 1/4" INCH OF SOIL COVERING. SEEDBED MUST BE FIRM AFTER PLANTING.

b. WHERE PRACTICAL, SEED SHOULD BE APPLIED IN TWO DIRECTIONS PERPENDICULAR TO EACH OTHER. APPLY HALF THE SEEDING RATE IN EACH DIRECTION.

F. MULCH SPECIFICATIONS (IN ORDER OF PREFERENCE)

I. STRAW SHALL CONSIST OF THOROUGHLY THRESHED WHEAT, RYE OR OAT STRAW, REASONABLY BRIGHT IN COLOR, AND SHALL NOT BE MUSTY, MOLDY, CAKED, DECAYED, OR EXCESSIVELY DUSTY AND SHALL BE FREE OF NOXIOUS WEED SEEDS AS SPECIFIED IN THE MARYLAND SEED LAW.

II. WOOD CELLULOSE FIBER MULCH (WCFM)

a. WCFM SHALL CONSIST OF SPECIALLY PREPARED WOOD CELLULOSE PROCESSED INTO A UNIFORM FIBROUS PHYSICAL STATE.

b. WCFM SHALL BE DYED GREEN OR CONTAIN A GREEN DYE IN THE PACKAGE THAT WILL PROVIDE AN APPROPRIATE COLOR TO FACILITATE VISUAL INSPECTION OF THE UNIFORMLY SPREAD SLURRY.

c. WCFM, INCLUDING DYE, SHALL CONTAIN NO GERMINATION OR GROWTH INHIBITING FACTORS.

d. WCFM MATERIALS SHALL BE MANUFACTURED AND PROCESSED IN SUCH A MANNER THAT THE WOOD CELLULOSE FIBER MULCH WILL REMAIN IN UNIFORM SUSPENSION IN WATER UNDER AGITATION AND WILL BLEND WITH SEED, FERTILIZER AND OTHER ADDITIVES TO FORM A HOMOGENEOUS SLURRY. THE MULCH MATERIAL SHALL FORM A BLOTTER-LIKE GROUND COVER, ON APPLICATION, HAVING MOISTURE ABSORPTION AND PERCOLATION PROPERTIES AND SHALL COVER AND HOLD GRASS SEED IN CONTACT WITH THE SOIL WITHOUT INHIBITING THE GROWTH OF THE GRASS SEEDLINGS.

e. WCFM MATERIAL SHALL CONTAIN NO ELEMENTS OR COMPOUNDS AT CONCENTRATION LEVELS THAT WILL BE PHYTO-TOXIC.

f. WCFM MUST CONFORM TO THE FOLLOWING PHYSICAL REQUIREMENTS: FIBER LENGTH TO APPROXIMATELY 10 MM., DIAMETER APPROXIMATELY 1 MM., PH RANGE OF 4.0 TO 8.5, ASH CONTENT OF 1.6% MAXIMUM AND WATER HOLDING CAPACITY OF 90% MINIMUM.

NOTE: ONLY STERILE STRAW MULCH SHOULD BE USED IN AREAS WHERE ONE SPECIES OF GRASS IS DESIRED.

G. MULCHING SEEDED AREAS – MULCH SHALL BE APPLIED TO ALL SEEDED AREAS IMMEDIATELY AFTER SEEDING.

I. IF GRADING IS COMPLETED OUTSIDE OF THE SEEDING SEASON, MULCH ALONE SHALL BE APPLIED AS PRESCRIBED IN THIS SECTION AND MAINTAINED UNTIL THE SEEDING SEASON RETURNS AND SEEDING CAN BE PERFORMED IN ACCORDANCE WITH THESE SPECIFICATIONS.

II. WHEN STRAW MULCH IS USED, IT SHALL BE SPREAD OVER ALL SEEDED AREAS AT THE RATE OF 2 TONS/ACRE. MULCH SHALL BE APPLIED TO A UNIFORM LOOSE DEPTH OF BETWEEN 1" AND 2". MULCH APPLIED SHALL ACHIEVE A UNIFORM DISTRIBUTION AND DEPTH SO THAT THE SOIL SURFACE IS NOT EXPOSED. IF A MULCH ANCHORING TOOL IS TO BE USED, THE RATE SHOULD BE INCREASED TO 2.5 TONS/ACRE.

III. WOOD CELLULOSE FIBER USED AS A MULCH SHALL BE APPLIED AT A NET DRY WEIGHT OF 1,500 LBS. PER ACRE. THE WOOD CELLULOSE FIBER SHALL BE MIXED WITH WATER, AND THE MIXTURE SHALL CONTAIN A MAXIMUM OF 50 LBS. OF WOOD CELLULOSE FIBER PER 100 GALLONS OF WATER.

H. SECURING STRAW MULCH (MULCH ANCHORING): MULCH ANCHORING SHALL BE PERFORMED IMMEDIATELY FOLLOWING MULCH APPLICATION TO MINIMIZE LOSS BY WIND OR WATER. THIS MAY BE DONE BY ONE OF THE FOLLOWING METHODS (LISTED BY PREFERENCE), DEPENDING UPON SIZE OF AREA AND EROSION HAZARD:

I. A MULCH ANCHORING TOOL IS A TRACTOR DRAWN IMPLEMENT DESIGNED TO PUNCH AND ANCHOR MULCH INTO THE SOIL SURFACE A MINIMUM OF TWO (2) INCHES. THIS PRACTICE IS MOST EFFECTIVE ON LARGE AREAS, BUT IS LIMITED TO FLATTER SLOPES WHERE EQUIPMENT CAN OPERATE SAFELY. IF USED ON SLOPING LAND, THIS PRACTICE SHOULD BE USED ON THE CONTOUR IF POSSIBLE.

II. WOOD CELLULOSE FIBER MAY BE USED FOR ANCHORING STRAW. THE FIBER BINDER SHALL BE APPLIED AT A NET DRY WEIGHT OF 750 POUNDS/ACRE. THE WOOD CELLULOSE FIBER SHALL BE MIXED WITH WATER AND THE MIXTURE SHALL BE MIXED WITH WATER AND THE MIXTURE SHALL CONTAIN A MAXIMUM OF 50 POUNDS OF WOOD CELLULOSE FIBER PER 100 GALLONS OF WATER.

III. APPLICATION OF LIQUID BINDERS SHOULD BE HEAVIER AT THE EDGES WHERE WIND CATCHES MULCH, SUCH AS IN VALLEYS AND ON CRESTS OF BANKS. THE REMAINDER OF AREA SHOULD APPEAR UNIFORM AFTER BINDER APPLICATION. SYNTHETIC BINDERS – SUCH AS ACRYLIC DLR (AGRO-TACK), DCA-70, PETROSET, TERRA TAX II, TERRA TACK AR OR OTHER APPROVED EQUAL MAY BE USED AT RATES RECOMMENDED BY THE MANUFACTURER TO ANCHOR MULCH.

IV. LIGHTWEIGHT PLASTIC NETTING MAY BE STAPLED OVER THE MULCH ACCORDING TO MANUFACTURER'S RECOMMENDATIONS. NETTING IS USUALLY AVAILABLE IN ROLLS 4' TO 15' FEET WIDE AND 300 TO 3,000 FEET LONG.

SECTION II – TEMPORARY SEEDING

VEGETATION – ANNUAL GRASS OR GRAIN USED TO PROVIDE COVER ON DISTURBED AREAS FOR UP TO 12 MONTHS. FOR LONGER DURATION OR VEGETATIVE COVER, PERMANENT SEEDING IS REQUIRED.

A. SEED MIXTURES – TEMPORARY SEEDING

I. SELECT ONE OR MORE OF THE SPECIES OR MIXTURES LISTED IN TABLE 26 FOR THE APPROPRIATE PLANT HARDINESS ZONE (FROM FIGURE 5) AND ENTER THEM IN THE TEMPORARY SEEDING SUMMARY BELOW, ALONG WITH APPLICATION RATES, SEEDING DATES AND SEEDING DEPTHS. IF THIS SUMMARY IS NOT PUT ON THE PLANS AND COMPLETED, THEN TABLE 26 MUST BE PUT ON THE PLANS.

II. FOR SITE HAVING SOIL TESTS PERFORMED, THE RATES SHOWN ON THIS TABLE SHALL BE DELETED AND THE RATES RECOMMENDED BY THE TESTING AGENCY SHALL BE WRITTEN IN. SOIL TESTS ARE NOT REQUIRED FOR TEMPORARY SEEDING.

Temporary Seeding Summary

Seed Mixture (Hardiness Zone 6b) From Table 26					Fertilizer Rate (10–10–10)	Lime Rate
No.	Species	Application Rate (lb/ac)	Seeding Dates	Seeding Depths		
	Rye	140Lbs/Ac	3/1–4/30	1"–2"		
	Weeping Lovegrass	4Lbs/Ac	5/1–8/14	1/4"–1/2"	600 lb/ac (15 lb/1000 sf)	2 tons/ac (100 lb/1000 sf)
	Rye	140Lbs/Ac	8/15–11/15	1"–2"		

SECTION III: PERMANENT SEEDING

SEEDING GRASS AND LEGUMES TO ESTABLISH GROUND COVER FOR A MINIMUM PERIOD OF ONE YEAR ON DISTURBED AREAS GENERALLY RECEIVING LOW MAINTENANCE.

A. SEED MIXTURES – PERMANENT SEEDING

I. SELECT ONE OR MORE OF THE SPECIES OR MIXTURES LISTED IN TABLE 25 FOR THE APPROPRIATE PLANT HARDINESS ZONE (FROM FIGURE 5) AND ENTER THEM IN THE PERMANENT SEEDING SUMMARY BELOW, ALONG WITH APPLICATION RATES AND SEEDING DATES. SEEDING DEPTHS CAN BE ESTIMATED USING TABLE 26. IF THIS SUMMARY IS NOT PUT ON THE CONSTRUCTION PLANS AND COMPLETED, THEN TABLE 25 MUST BE PUT ON THE PLANS. ADDITIONAL PLANTING SPECIFICATIONS FOR EXCEPTIONAL SITES SUCH AS SHORELINES, STREAMBANKS, OR DUNES OR FOR SPECIAL PURPOSES SUCH AS WILDLIFE OR AESTHETIC TREATMENT MAY BE FOUND IN USDA-SCS TECHNICAL FIELD OFFICE GUIDE, SECTION 342-CRITICAL AREA PLANTING. FOR SPECIAL LAWN MAINTENANCE AREAS, SEE SECTIONS IV SOD AND V TURFGRASS.
II. FOR SITE HAVING DISTURBED AREA OVER 5 ACRES, THE RATES SHOWN ON THIS TABLE SHALL BE DELETED AND THE RATES RECOMMENDED BY THE SOIL TESTING AGENCY SHALL BE WRITTEN IN.
III. FOR AREAS RECEIVING LOW MAINTENANCE, APPLY UREAFORM FERTILIZER (46–0–0) AT 3 1/2LBS/1000 SQ.FT. (150 LBS/AC), IN ADDITION TO THE ABOVE SOIL AMENDMENTS SHOWN IN THE TABLE BELOW, TO BE PERFORMED AT THE TIME OF SEEDING.

Permanent Seeding Summary

Seed Mixture (For Hardiness Zone 6b) (From Table 25)					Fertilizer Rate (10–20–20)			Lime Rate
No.	Species	Application Rate (lb/ac)	Seeding Dates	Seeding Depths	N	P205	K20	
3	Tall Fescue Per Ryegrass Ky. Bluegrass	85%–125 10%–15 5%–10	3/1–5/15 8/15–10/15	1/2"–1"				
7	Tall Fescue Weeping Lovegrass Serecia Lespedeza	83%–110 2%–3 15%–20	3/1–10/15	1/4"–1/2"	90 lb/ac (2.0lb/ 1000 sf)	175 lb/ac (4 lb/ 1000 sf)	175 lb/ac (4 lb/ 1000 sf)	2 tons/ac (100 lb/ 1000 sf)
10	Tall Fescue Hard Fescue	80%–120 20%–30	3/1–5/15 8/15–10/15	1/2"–1"				

SECTION IV – SOD: TO PROVIDE QUICK COVER ON DISTURBED AREAS (2:1 GRADE OR FLATTER).

A. GENERAL SPECIFICATIONS

I. CLASS OF TURFGRASS SOD SHALL BE MARYLAND OR VIRGINIA STATE CERTIFIED OR APPROVED. SOD LABELS SHALL BE MADE AVAILABLE TO THE JOB FOREMAN AND INSPECTOR.

II. SOD SHALL BE MACHINE CUT AT A UNIFORM SOIL THICKNESS OF 3/4", PLUS OR MINUS 1/4", AT THE TIME OF CUTTING. MEASUREMENT FOR THICKNESS SHALL EXCLUDE TOP GROWTH AND THATCH. INDIVIDUAL PIECES OF SOD SHALL BE CUT TO THE SUPPLIERS WIDTH AND LENGTH. MAXIMUM ALLOWABLE DEVIATION FROM STANDARD WIDTHS AND LENGTHS SHALL BE 5 PERCENT. BROKEN PADS AND TORN OR UNEVEN ENDS WILL NOT BE ACCEPTABLE.

III. STANDARD SIZE SECTIONS OF SOD SHALL BE STRONG ENOUGH TO SUPPORT THEIR OWN WEIGHT AND RETAIN THEIR SIZE AND SHAPE WHEN SUSPENDED VERTICALLY WITH A FIRM GRASP ON THE UPPER 10 PERCENT OF THE SECTION.

IV. SOD SHALL NOT BE HARVESTED OR TRANSPLANTED WHEN MOISTURE CONTENT (EXCESSIVELY DRY OR WET) MAY ADVERSELY AFFECT ITS SURVIVAL.

V. SOD SHALL BE HARVESTED, DELIVERED, AND INSTALLED WITHIN A PERIOD OF 36 HOURS. SOD NOT TRANSPLANTED WITHIN THIS PERIOD SHALL BE APPROVED BY AN AGRONOMIST OR SOIL SCIENTIST PRIOR TO ITS INSTALLATION.

B. SOD INSTALLATION

I. DURING PERIODS OF EXCESSIVELY HIGH TEMPERATURE OR IN AREAS HAVING DRY SUBSOIL, THE SUBSOIL SHALL BE LIGHTLY IRRIGATED IMMEDIATELY PRIOR TO LAYING THE SOD.

II. THE FIRST ROW OF SOD SHALL BE LAID IN A STRAIGHT LINE WITH SUBSEQUENT ROWS PLACED PARALLEL TO AND TIGHTLY WEDGED AGAINST EACH OTHER. LATERAL JOINTS SHALL BE STAGGERED TO PROMOTE MORE UNIFORM GROWTH AND STRENGTH. ENSURE THAT SOD IS NOT STRETCHED OR OVERLAPPED AND THAT ALL JOINTS ARE BUTTED TIGHT IN ORDER TO PREVENT VOIDS WHICH WOULD CAUSE AIR DRYING OF THE ROOTS.

III. WHEREVER POSSIBLE, SOD SHALL BE LAID WITH THE LONG EDGES PARALLEL TO THE CONTOUR AND WITH STAGGERING JOINTS. SOD SHALL BE ROLLED AND TAMPED, PEGGED OR OTHERWISE SECURED TO PREVENT SLIPPAGE ON SLOPES AND TO ENSURE SOLID CONTACT BETWEEN SOD ROOTS AND THE UNDERLYING SOIL SURFACE.

IV. SOD SHALL BE WATERED IMMEDIATELY FOLLOWING ROLLING OR TAMPING UNTIL THE UNDERSIDE OF THE NEW SOD PAD AND SOIL SURFACE BELOW THE SOD ARE THOROUGHLY WET. THE OPERATIONS OF LAYING, TAMPING AND IRRIGATING FOR ANY PIECE OF SOD SHALL BE COMPLETED WITHIN EIGHT HOURS.

C. SOD MAINTENANCE

I. IN THE ABSENCE OF ADEQUATE RAINFALL, WATERING SHALL BE PERFORMED DAILY OR AS OFTEN AS NECESSARY DURING THE FIRST WEEK AND IN SUFFICIENT QUANTITIES TO MAINTAIN MOIST SOIL TO A DEPTH OF 4". WATERING SHOULD BE DONE DURING THE HEAT OF THE DAY TO PREVENT WILTING.

II. AFTER THE FIRST WEEK, SOD WATERING IS REQUIRED AS NECESSARY TO MAINTAIN ADEQUATE MOISTURE CONTENT.

III. THE FIRST MOWING OF SOD SHOULD NOT BE ATTEMPTED UNTIL THE SOD IS FIRMLY ROOTED. NO MORE THAN 1/3 OF THE GRASS LEAF SHALL BE REMOVED BY THE INITIAL CUTTING OR SUBSEQUENT CUTTINGS. GRASS HEIGHT SHALL BE MAINTAINED BETWEEN 2" AND 3" UNLESS OTHERWISE SPECIFIED.

24.0 MATERIALS SPECIFICATIONS
Table 27 Geotextile Fabrics

CLASS	APPARENT OPENING SIZE MM. MAX.	GRAB TENSILE STRENGTH LB. MIN.	BURST STRENGTH PSI. MIN.
A	0.30 * *	250	500
B	0.60	200	320
C	0.30	200	320
D	0.60	90	145
E	0.30	90	145
F (SILT FENCE)	0.40–0.80*	90	190

* US Std Sieve CW-02215   * * 0.5 MM Max. For Super Silt Fence

THE PROPERTIES SHALL BE DETERMINED IN ACCORDANCE WITH THE FOLLOWING PROPERTIES:
–APPARENT OPENING SIZE MSMT 323

–GRAB TENSILE STRENGTH ASTM D 1682: 4X8" SPECIMEN, 1X2" CLAMPS, 12"/MIN. STRAIN RATE IN BOTH PRINCIPAL DIRECTIONS OF GEOTEXTILE FABRIC.

–BURST STRENGTH ASTM D 3786

THE FABRIC SHALL BE INERT TO COMMONLY ENCOUNTERED CHEMICALS AND HYROCARBONS, AND WILL BE ROT AND MILDEW RESISTANT. IT SHALL BE MANUFACTURED FROM FIBERS CONSISTING OF LONG CHAIN SYNTHETIC POLYMERS, AND COMPOSED OF A MINIMUM OF 85% BY WEIGHT OF POLYOLEPHINS, POLYESTERS, OR POLYAMIDES. THE GEOTEXTILE FABRIC SHALL RESIST DETERIORATION FROM ULTRAVIOLET EXPOSURE.

IN ADDITION, CLASSES A THROUGH E SHALL HAVE A 0.01 CM./SEC. MINIMUM PERMEABILITY WHEN TESTED IN ACCORDANCE WITH MSMT 507, AND AN APPARENT MINIMUM ELONGATION OF 20 PERCENT (20%) WHEN TESTED IN ACCORDANCE WITH THE GRAB TENSILE STRENGTH REQUIREMENTS LISTED ABOVE.

SILT FENCE

CLASS F GEOTEXTILE FABRICS FOR SILT FENCE SHALL HAVE A 50 LB./IN. MINIMUM TENSILE STRENGTH AND A 20 LB./IN. MINIMUM TENSILE MODULES WHEN TESTED IN ACCORDANCE WITH MSMT 509. THE MATERIAL SHALL ALSO HAVE A 0.3 GAL./FT./MIN. FLOW RATE AND SEVENTY-FIVE PERCENT (75%) MINIMUM FILTERING EFFICIENCY WHEN TESTED IN ACCORDANCE WITH MSMT 322.

GEOTEXTILE FABRICS USED IN THE CONSTRUCTION OF SILT FENCE SHALL RESIST DETERIORATION FROM ULTRAVIOLET EXPOSURE. THE FABRIC SHALL CONTAIN SUFFICIENT AMOUNTS OF ULTRAVIOLET RAY INHIBITORS AND STABILIZERS TO PROVIDE A MINIMUM OF 12 MONTHS OF EXPECTED USABLE CONSTRUCTION LIFE AT A TEMPERATURE RANGE OF 0 TO 120 DEGREES F.

STANDARD SEDIMENT CONTROL NOTES

1) A minimum of 48 hours notice must be given to the Howard County Department of Inspections, Licenses and Permits, Sediment Control Division prior to the start of any construction, (313-1850).

2) All vegetative and structural practices are to be installed according to the provisions of this plan and are to be in conformance with the most current "Maryland Standards and Specifications for Soil Erosion and Sediment Control", and revisions thereto.

3) Following initial soil disturbance or redisturbance, permanent or temporary stabilization shall be completed within: a) 7 calendar days for all perimeter sediment control structures, dikes, perimeter slopes and all slopes greater than 3:1, b) 14 days as to all other disturbed or graded areas on the project site.

4) All sediment traps/basins shown must be fenced and warning signs posted around their perimeter in accordance with Vol. 1, Chapter 12, of the Howard County Design Manual, Storm Drainage.

5) All disturbed areas must be stabilized within the time period specified above in accordance with the 1994 Maryland Standards and Specifications for Soil Erosion and Sediment Control for vegetative stabilization (Section 20.0). Temporary stabilization with mulch alone can only be done when recommended seeding dates do not allow for proper germination and establishment of grasses.

6) All sediment control structures are to remain in place and are to be maintained in operative condition until permission or their removal has been obtained from the Howard County Sediment Control Inspector.

7) Site Analysis:

Total Area of Site	6.8	Acres
Area Disturbed	5.4	Acres
Area to be roofed or paved	1.8	Acres
Area to be vegetatively stabilized	3.6	Acres
Total Cut	13,156	Cu. Yds.
Total Fill	18,131	Cu. Yds.

Offsite waste/borrow area location: Location to be determined. Areas will have active grading permits and approved erosion control plans.

8.) Any sediment control practice which is disturbed by grading activity for placement of utilities must be repaired on the same day of disturbance.

9.) Additional sediment control must be provided, if deemed necessary by the Howard County Sediment Control Inspector.

10.) On all sites with disturbed areas in excess of 2 acres, approval of the inspection agency shall be requested upon completion of installation of perimeter erosion and sediment controls, but before proceeding with any other earth disturbance or grading. Other building or grading inspection approvals may not be authorized until this initial approval by the inspection agency is made.

11.) Trenches for the construction of utilities is limited to three pipe lengths or that which can be backfilled and stabilized within one working day, whichever is shorter.

HOWARD SOIL CONSERVATION DISTRICT:
THESE PLANS FOR SMALL POND CONSTRUCTION, SOIL EROSION AND SEDIMENT CONTROL MEET THE REQUIREMENTS OF THE HOWARD SOIL CONSERVATION DISTRICT.

HOWARD SCD   11/2/09   DATE

SEQUENCE OF CONSTRUCTION

1. OBTAIN PROPER PERMITS, INCLUDING GRADING PERMIT.
2. NOTIFY "MISS UTILITY" AT LEAST 48 HOURS BEFORE BEGINNING ANY WORK AT 1-800-257-7777. NOTIFY THE HOWARD COUNTY OFFICE OF CONSTRUCTION /INSPECTION DIVISION AT 410-313-1870 AT LEAST 48 HOURS BEFORE STARTING ANY WORK.
3. INSTALL 23"x14" RCCEP DRAIN AND INLET STRUCTURE UNDER THE ENTRANCE TO DEBRA COURT AS SHOWN ON THE PLANS, WITH SUPER SILT FENCE PLACED AT THE DOWNSTREAM END. THE UPSTREAM AND DOWNSTREAM SWALES ARE TO BE COMPLETELY STABILIZED WITH SEED AND EROSION CONTROL MATTING.
4. INSTALL STABILIZED CONSTRUCTION ENTRANCE WITH MOUNTABLE BERM OVER FILTER CLOTH, AND TIE SUPER SILT FENCE INTO MOUNTABLE BERM. (1 DAY)
5. INSTALL PERIMETER CLEANWATER DIKES, SUPER SILT FENCE AND SUPER FENCE DIVERSION AND CONSTRUCT SEDIMENT CONTROL BASIN AND SEDIMENT TRAP. (2 WEEKS)
6. WITH SEDIMENT CONTROL DEVICES INSTALLED AND WITH INSPECTORS APPROVAL, CLEAR & GRADE SITE. RAZE EXISTING STRUCTURE ON SITE. (1 WEEK)
7. FINE GRADE AREA FOR THE NEW ROAD AND INSTALL WATER, SEWER & STORMDRAINS. STORM DRAINS SHALL BE FLUSHED AND BASIN AND TRAP CLEANED OUT FOLLOWING EACH STORM EVENT. (4 WEEKS)
8. BEGIN INSTALLATION OF CURB & GUTTER. (1 WEEK)
9. MASS GRADE SITE AS REQUIRED. BEGIN CONSTRUCTION OF RETAINING WALLS ON LOTS 10, 11 AND OPEN SPACE AREA. IMMEDIATELY STABILIZE DISTURBED AREA AROUND WALLS UPON COMPLETION. (2 WEEKS)
10. WITH CURB & GUTTER IN PLACE, BASE PAVE ROAD AND INSTALL SIDEWALKS. (2 WEEKS)
11. WITH PROPER PERMITS, HOUSE CONSTRUCTION MAY BEGIN EXCEPT FOR LOTS 1, 2 & 3. FINE GRADE SITE UPON COMPLETION AND IMMEDIATELY STABILIZE ALL DISTURBED AREAS WITH PERMANENT SEEDING.
12. WITH LOT 9 STABILIZED, INSTALL PRIVATE DRYWELL RECHARGE TRENCH. (1 WEEK)
13. WITH STORM DRAIN SYSTEM FUNCTIONING TO BASIN #1 AND PERMISSION OF SEDIMENT CONTROL INSPECTOR, BLOCK CURB CUT AT LOT #2. CONTRACTOR IS TO DOUBLE THE SUPER SILT FENCE ON LOT 2 AS SHOWN IN THE GRADING INSET (SHEET 6), THEN REMOVE SEDIMENT TRAP #1 AND EARTH DIKE. BEGIN TO GRADE LOTS 1, 2 & 3 AND INSTALL RETAINING WALLS ON LOT #1. CONSTRUCTION MAY BEGIN ON LOT 3 WHEN STOCKPILE IS REMOVED. (2 WEEKS)
14. UPON COMPLETION OF RETAINING WALLS ON LOT #1, CONSTRUCTION MAY BEGIN ON LOTS 1 & 2.
15. UPON ESTABLISHMENT OF PERMANENT SEEDING ON LOTS 1–4, INSTALL BIORETENTION FACILITIES WHERE SHOWN. (2 WEEKS)
16. WITH ALL DISTURBED AREAS STABILIZED AND WITH THE INSPECTORS APPROVAL, REMOVE REMAINING SEDIMENT CONTROL DEVICES EXCEPT FOR BASIN #1 AND SUPER SILT FENCE BELOW BASIN. (1 WEEK)
17. FLUSH STORMDRAIN SYSTEM. COVERT SEDIMENT BASIN TO STORMWATER MANAGEMENT POND PER APPROVED PLANS. WITH PERMISSION OF THE SEDIMENT CONTROL INSPECTOR, REMOVE SUPER SILT FENCE BELOW POND #1 AND STABILIZE ANY DISTURBED AREAS. (4 WEEKS)
18. INSTALL SITE LANDSCAPING & STREET TREES. (2 WEEKS)
19. NOTIFY HOWARD COUNTY OFFICE OF INSPECTIONS AND PERMITS FOR A FINAL INSPECTION OF THE COMPLETED SITE. (2 DAYS)

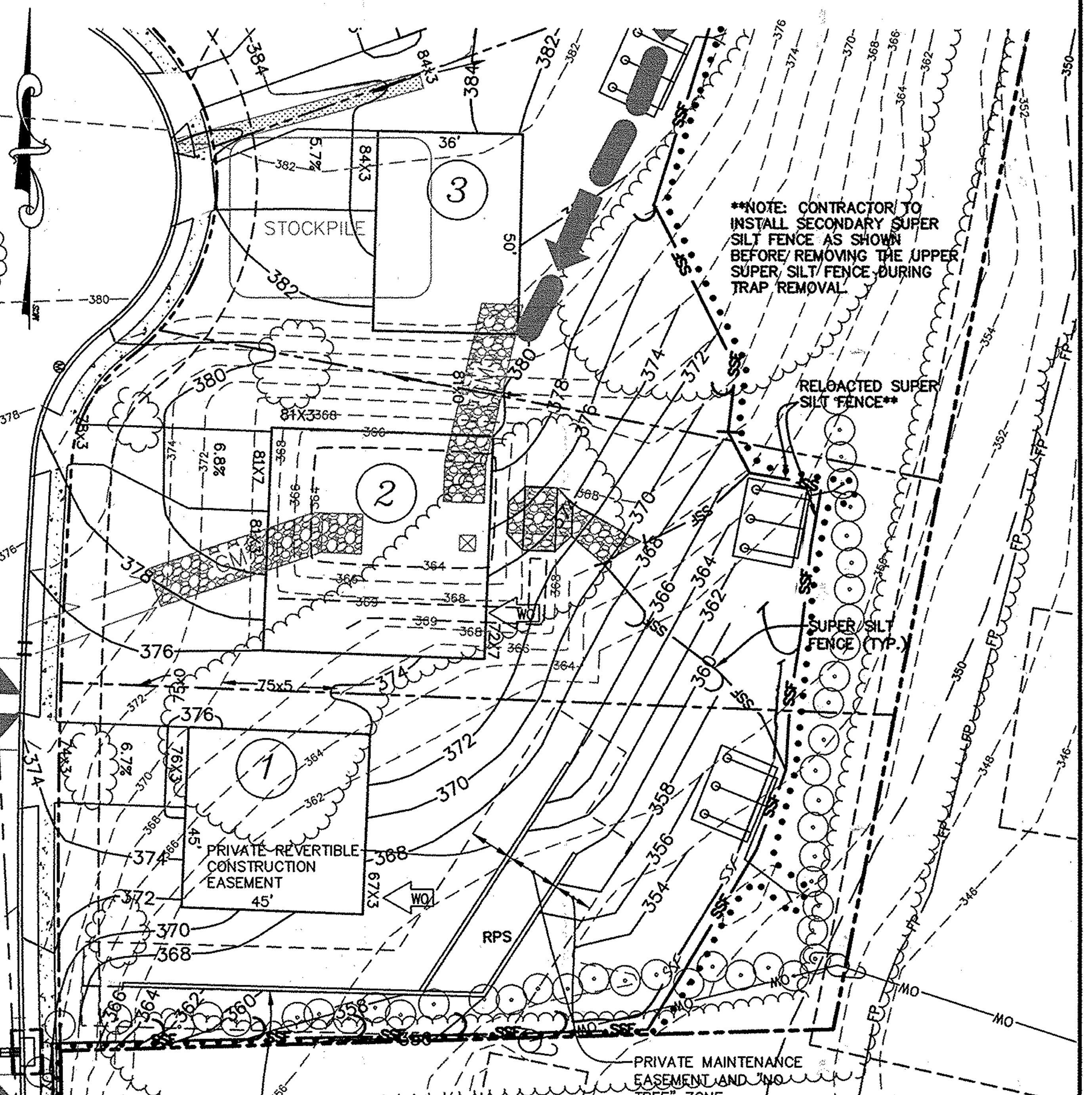

GRADING INSET – REMOVAL OF SEDIMENT TRAP #1 AND FINAL GRADING LOTS #1, 2 & 3
SCALE: 1"=30'

GENERAL NOTES

1. REFER TO "1994 MARYLAND STANDARDS AND SPECIFICATIONS FOR SOIL EROSION AND SEDIMENT CONTROL" FOR STANDARD DETAILS AND DETAILED SPECIFICATIONS OF EACH PRACTICE SPECIFIED HEREIN.

2. WITH THE APPROVAL OF THE SEDIMENT CONTROL INSPECTOR, MINOR FIELD ADJUSTMENTS CAN AND WILL BE MADE TO INSURE THE CONTROL OF ANY SEDIMENT. CHANGES IN SEDIMENT CONTROL PRACTICES REQUIRE PRIOR APPROVAL OF THE SEDIMENT CONTROL INSPECTOR AND THE BALTIMORE COUNTY SOIL CONSERVATION DISTRICT.

3. AT THE END OF EACH WORKING DAY, ALL SEDIMENT CONTROL PRACTICES WILL BE INSPECTED AND LEFT IN OPERATIONAL CONDITION.

4. FOLLOWING INITIAL SOIL DISTURBANCE OR REDISTURBANCE, PERMANENT OR TEMPORARY STABILIZATION SHALL BE COMPLETED WITHIN: A) SEVEN CALENDAR DAYS AS TO THE SURFACE OF ALL PERIMETER CONTROLS, DIKES, SWALES, DITCHES, PERIMETER SLOPES, AND ALL SLOPES GREATER THAN THREE HORIZONTAL TO ONE VERTICAL (3:1), AND B) FOURTEEN DAYS AS TO ALL OTHER DISTURBED OR GRADED AREAS ON THE PROJECT SITE WHICH WILL REMAIN IDLE OVER FOURTEEN DAYS.

5. ANY CHANGE TO THE GRADING PROPOSED ON THIS PLAN REQUIRES RE-SUBMISSION TO BALTIMORE COUNTY SOIL CONSERVATION DISTRICT FOR APPROVAL.

6. DUST CONTROL WILL BE PROVIDED FOR ALL DISTURBED AREAS. REFER TO "1994 MARYLAND STANDARDS AND SPECIFICATIONS FOR SOIL EROSION AND SEDIMENT CONTROL", PG. H-30-1 FOR ACCEPTABLE METHODS AND SPECIFICATIONS FOR DUST CONTROL.

7. ANY VARIATIONS FROM THE SEQUENCE OF OPERATIONS STATED ON THIS PLAN REQUIRES THE APPROVAL OF THE SEDIMENT CONTROL INSPECTOR AND THE BALTIMORE COUNTY SOIL CONSERVATION DISTRICT PRIOR TO THE INITIATION OF THE CHANGE.

8. EXCESS CUT OR BORROW MATERIALS SHALL GO TO, OR COME FROM, RESPECTIVELY, A SITE WITH ON OPEN GRADING PERMIT.

9. REFER TO "MARYLAND'S GUIDELINES TO WATERWAY CONSTRUCTION" BY THE WATER MANAGEMENT ADMINISTRATION OF THE MARYLAND DEPARTMENT OF THE ENVIRONMENT, REVISED NOVEMBER, 2000, FOR STANDARD DETAILS AND DETAILED SPECIFICTAIONS OF EACH PRACTICE SPECIFIED HEREIN FOR WATERWAY CONSTRUCTION.

PERMANENT SEEDING NOTES

Seedbed Preparation: Loosen upper 3 inches of soil by raking, discing or other acceptable means before seeding.

Soil Amendments: Use one of the following schedules:

1.) Preferred – Apply 2 tons per acre dolomitic limestone (92 lbs./1000 square ft.) and 600 lbs. per acre 10-10-10 fertilizer (14 lbs./1000 sq. ft.) before seeding. Harrow or disc into upper three inches of soil. At time of seeding, apply 400 lbs. per acre 30-0-0 ureaform fertilizer (9 lbs./1000 sq. ft.).

2.) Acceptable – Apply 2 tons per acre dolomitic limestone (92 lbs./1000 square ft.) and 1000 lbs. per acre 10-10-10 fertilizer (23 lbs./1000 sq. ft.) before seeding. Harrow or disc into upper three inches of soil.

Seeding – For the periods March 1 thru April 30, and August 1 thru October 15, seed with 60 lbs. per acre (1.4 lbs./1000 sq. ft.) of Kentucky 31 Tall Fescue. For the period May 1 thru July 31, seed with 60 lbs. Kentucky 31 Tall Fescue per acre and 2 lbs. per acre (.05 lbs./1000 sq. ft.) of weeping lovegrass. During the period of October 16 thru February 28, protect site by: Option (1) 2 tons per acre of well anchored straw mulch and seed as soon as possible in the spring. Option (2) Use sod. Option (3) Seed with 60 lbs./acre Kentucky 31 Tall Fescue and mulch with 2 tons/acre well anchored straw.

Mulching – Apply 11/2 to 2 tons per acre (70 to 90 lbs./1000 sq. ft.) of unrotted small grain straw immediately after seeding. Anchor mulch immediately after application using mulch anchoring tool or 218 gallons per acre (5 gal./1000 sq. ft.) of emulsified asphalt on flat areas. On slopes 8 feet or higher, use 348 gallons per acre (8 gal./1000 sq. ft.) for anchoring.

Maintenance – Inspect all seeded areas and make needed repairs, replacements and reseedings.

TEMPORARY SEEDING NOTES

Seedbed Preparation: Loosen upper 3 inches of soil by raking, discing or other acceptable means before seeding.

Soil Amendments: Apply 600 lbs. per acre 10-10-10 fertilizer (14 lbs./1000 sq. ft.)

Seeding – For the periods March 1 thru April 30, and August 15 thru November 15, seed with 21/2 bu. per acre of annual rye (3.2 lbs./1000 sq. ft.). For the period May 1 thru August 14, seed with 3 lbs. per acre of weeping lovegrass (.07 lbs/ 1000 sq. ft.). For the period November 16 thru February 28, protect site by applying 2 tons per acre of weel anchored straw mulch and seed as soon as possible in the spring, or use sod.

Mulching – Apply 11/2 to 2 tons per acre (70 to 90 lbs./1000 sq. ft.) of unrotted small grain straw immediately after seeding. Anchor mulch immediately after application using mulch anchoring tool or 218 gallons per acre (5 gal./1000 sq. ft.) of emulsified asphalt on flat areas. On slopes 8 feet or higher, use 348 gallons per acre (8 gal./1000 sq. ft.) for anchoring.

Table 27 – Geotextile Fabrics

Class	Apparent Openning Size MM. MAX.	Grab Tensile Stength LB. MIN.	Burst Strength PSI. MIN.
A	0.30**	250	500
B	0.60	200	320
C	0.30	200	320
D	0.60	90	145
E	0.30	90	145
F (SILT FENCE)	0.40–0.80*	90	190

* US Std. Sieve CW-02215   **.5 mm max. for Super Silt Fence

The property shall be determined in accordance with the following procedures:
– Apparent opening size MSMT 323
– Grab tensile strength ASTM D 1682: 4x8" specimen, 1x2" clamps, 12"/min. strain rate in both principal directions of geotextile fabric.
– Burst strength ASTM D 3786

The fabric shall be inert to commonly encountered chemicals and hydrocarbons, and will be rot and mildew resistant. It shall be manufactured from fibers consisting of long chain synthetic polymers, and composed of a minimum of 85% by weight of polyolephins, polyesters, or polyamides. The geotextile fabric shall resist deterioration from ultraviolet exposure.

In addition, Classes A through E shall have a 0.01 cm./sec. minimum permeability when tested in accordance with MSMT 507, and an apparent minimum elongation of 20 percent (20%) when tested in accordance with the grab tensile strength requirements listed above.

Silt Fence
Class F geotextile fabrics for silt fence shall have a 50 lb./in. minimum tensile strength and a 20 lb./in. minimum tensile modules when tested in accordance with MSMT 509. The material shall also have a 0.3 gal./ft2/min. flow rate and seventy-five percent (75%) minimum filtering efficiency when tested in accordance with MSMT 322.

Geotextile fabric used in the construction of silt fence shall resist deterioration from ultraviolet exposure. The fabric shall contain sufficient amounts of ultraviolet ray inhibitors and stabilizers to provide a minimum of 12 months of expected usable construction life at a temperature range of 0 to 120 degrees F.

NO AS-BUILT INFO THIS SHEET

~~AS-BUILT CERTIFICATION~~

~~I HEREBY CERTIFY THAT THE FACILITY SHOWN ON THIS PLAN WAS CONSTRUCTED AS SHOWN ON THE "AS-BUILT" PLANS AND MEETS THE APPROVED PLANS AND SPECIFICATIONS.~~

~~SIGNATURE P.E. NO. DATE~~

DEPARTMENT OF PUBLIC WORKS
HOWARD COUNTY, MARYLAND
11-9-09
CHIEF, BUREAU OF HIGHWAYS   DATE

DEPARTMENT OF PLANNING & ZONING
HOWARD COUNTY, MARYLAND
11-16-09
CHIEF, DIVISION OF LAND DEVELOPMENT   DATE

11/13/09
CHIEF, DEVELOPMENT ENGINEERING DIVISION   DATE

PROFESSIONAL CERTIFICATION
I HEREBY CERTIFY THAT THESE DOCUMENTS WERE PREPARED OR APPROVED BY ME, AND THAT I AM A DULY LICENSED PROFESSIONAL ENGINEER UNDER THE LAWS OF THE STATE OF MARYLAND, LICENSE NO. 16019 , EXPIRATION DATE: 5/8/2010.

STATE OF MARYLAND – G. DWIGHT LITTLE, JR. – NO. 16019 – REGISTERED PROFESSIONAL ENGINEER

LITTLE & ASSOCIATES, INC.
ENGINEERS~~LAND PLANNERS~~SURVEYORS
1055 TAYLOR AVENUE, SUITE 307
TOWSON, MARYLAND 21286
PHONE: (410)296-1636 FAX: (410)296-1639

OWNER/DEVELOPER:
KIMBERLY HOMES
ELLICOTT PROPERTIES, LLC.
P.O. BOX 6194
BALTIMORE, MARYLAND, 21231
(410) 522-4987

	BY	NO.	REVISION	DATE
DES: AMK				
DRN: PFS				
CHK: AMK				
DATE: 1/23/09				

FINAL ROAD CONSTRUCTION PLANS
SEDIMENT CONTROL NOTES AND DETAILS
F-09-070
DEBRA COURT
LOTS 1 – 12
A RESUBDIVISION OF LOT 80, SECT. 3 GLEN BROOK (P 918); AND SUBDIVISION OF PARCELS 812 & 1119

ELECTION DISTRICT 2   HOWARD COUNTY, MD
SCALE: AS SHOWN   M 24 G 2,3 P 918,812,1119
PRIOR PLANS: P-08-003, S-04-02,   OCTOBER 15, 2009
PLAT 8/92 & 4567   SHEET 6 OF 18

DETAIL 24 - STABILIZED CONSTRUCTION ENTRANCE

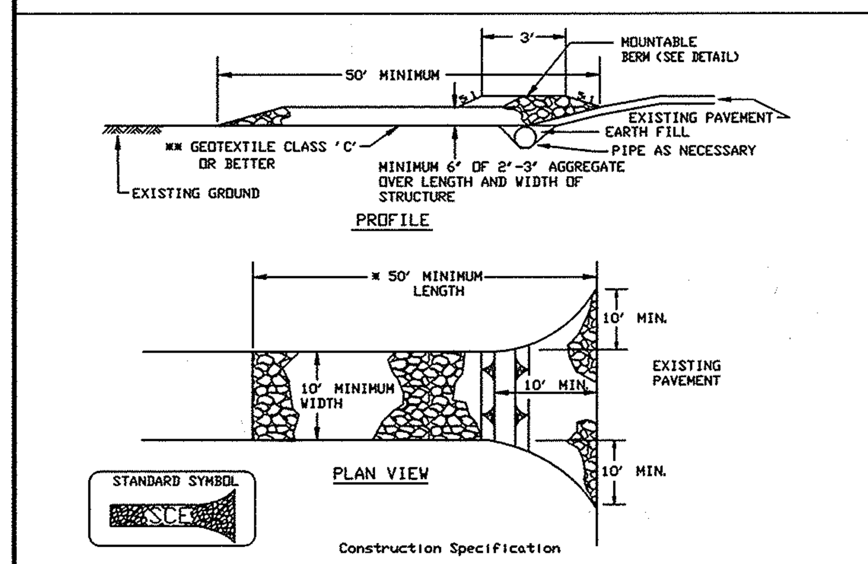

Construction Specification

1. Length - minimum of 50' (*30' for single residence lot).

2. Width - 10' minimum, should be flared at the existing road to provide a turning radius.

3. Geotextile fabric (filter cloth) shall be placed over the existing ground prior to placing stone. **The plan approval authority may not require single family residences to use geotextile.

4. Stone - crushed aggregate (2" to 3") or reclaimed or recycled concrete equivalent shall be placed at least 6" deep over the length and width of the entrance.

5. Surface Water - all surface water flowing to or diverted toward construction entrances shall be piped through the entrance, maintaining positive drainage. Pipe installed through the stabilized construction entrance shall be protected with a mountable berm with 5:1 slopes and a minimum of 6" of stone over the pipe. Pipe has to be sized according to the drainage. When the SCE is located at a high spot and has no drainage to convey a pipe will not be necessary. Pipe should be sized according to the amount of runoff to be conveyed. A 6" minimum will be required.

6. Location - A stabilized construction entrance shall be located at every point where construction traffic enters or leaves a construction site. Vehicles leaving the site must travel over the entire length of the stabilized construction entrance.

U.S. DEPARTMENT OF AGRICULTURE SOIL CONSERVATION SERVICE	PAGE F - 17 - 3	MARYLAND DEPARTMENT OF ENVIRONMENT WATER MANAGEMENT ADMINISTRATION

DETAIL 33 - SUPER SILT FENCE

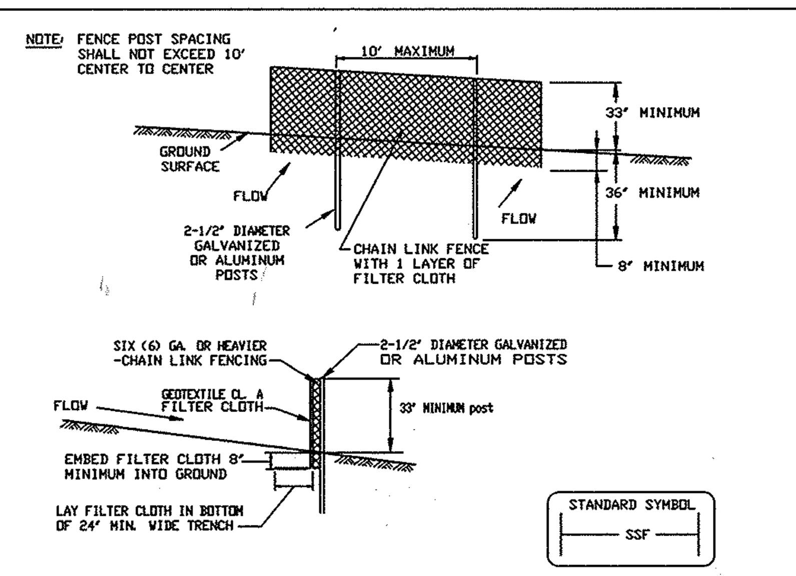

Construction Specifications

1. Fencing shall be 42" in height and constructed in accordance with the latest Maryland State Highway Details for Chain Link Fencing. The SHA specification for a 6' fence shall be used, substituting 42" fabric and 6' length posts.

2. The Posts do not need to be set in concrete.

3. Chain link fence shall be fastened securely to the fence posts with wire ties. or staples. The lower tension wire, brace and truss rods, drive anchors and post caps are not required except on the ends of the fence. The Chain Link Fencing shall be Six (6) gauge or heavier.

4. Filter cloth shall be fastened securely to the chain link fence with ties spaced every 24" at the top and mid section.

5. Filter cloth shall be embedded a minimum of 8" into the ground.

6. When two sections of geotextile fabric adjoin each other, they shall be overlapped by 6" and folded.

7. Maintenance shall be performed as needed and silt buildups removed when "bulges" develop in the silt fence, or when silt reaches 50% of fence height

U.S. DEPARTMENT OF AGRICULTURE SOIL CONSERVATION SERVICE	MODIFIED	MARYLAND DEPARTMENT OF ENVIRONMENT WATER MANAGEMENT ADMINISTRATION

DETAIL - SUPER FENCE DIVERSION

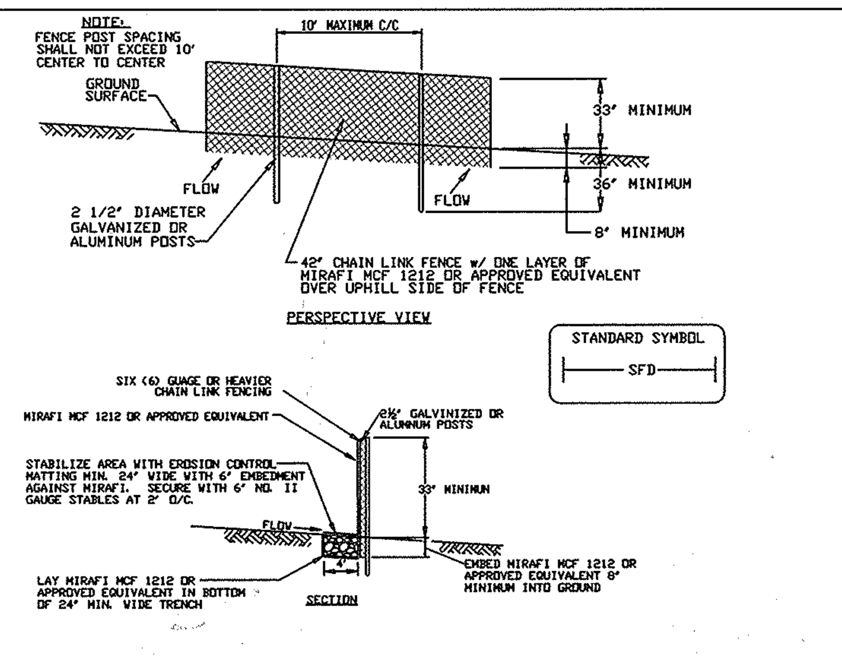

Construction Specifications

1. FENCING SHALL BE 42 INCHES IN HEIGHT AND CONSTRUCTED IN ACCORDANCE WITH THE LATEST MARYLAND STATE HIGHWAY (SHA) DETAILS FOR CHAIN LINK FENCING. THE SPECIFICATION FOR A 6' FENCE SHALL BE USED, SUBSTITUTING 42" FABRIC AND 6' LENGTH POSTS

2. THE POSTS DO NOT NEED TO BE SET IN CONCRETE

3. CHAIN LINK FENCE SHALL BE FASTENED SECURELY TO THE FENCE POSTS WITH WIRE TIES OR STAPLES. THE LOWER TENSION WIRE, BRACE AND TRUSS RODS, DRIVE ANCHORS AND POST CAPS ARE NOT REQUIRED EXCEPT ON THE ENDS OF THE FENCE. THE CHAIN LINK FENCING SHALL BE (6) GAUGE OR HEAVIER.

4. MIRAFI MCF 1212 OR APPROVED EQUIVALENT SHALL BE FASTENED SECURELY TO THE CHAIN LINK FENCE WITH TIES SPACED EVERY 24" AT THE TOP AND MID SECTION.

5. MIRAFI MCF 1212 OR APPROVED EQUIVALENT SHALL BE EMBEDDED A MINIMUM OF 8" INTO THE GROUND.

6. WHEN TWO SECTIONS OF MIRAFI MCI 1212 OR APPROVED EQUIVALENT ADJOIN EACH OTHER, THEY SHALL BE OVERLAPPED BY 6" AND FOLDED.

7. MAINTENANCE SHALL BE PERFORMED AS NEEDED.

8. MAXIMUM FLOW SLOPE 10.0%

9. MAXIMUM DRAINAGE AREA 5 ACRES.

U.S. DEPARTMENT OF AGRICULTURE SOIL CONSERVATION SERVICE	PAGE MODIFIED	MARYLAND DEPARTMENT OF ENVIRONMENT WATER MANAGEMENT ADMINISTRATION

DETAIL 27 - ROCK OUTLET PROTECTION III

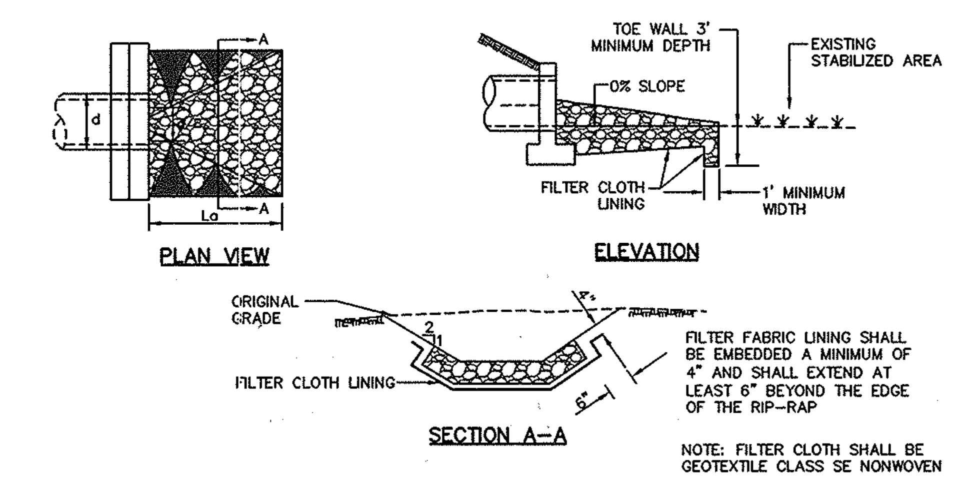

CONSTRUCTION SPECIFICATIONS

1. THE SUBGRADE FOR THE FILTER, RIP-RAP, OR GABION SHALL BE PREPARED TO THE REQUIRED LINES AND GRADES. ANY FILL REQUIRED IN THE SUBGRADE SHALL BE COMPACTED TO A DENSITY OF APPROXIMATELY THAT OF THE SURROUNDING UNDISTURBED MATERIAL.

2. THE ROCK OR GRAVEL SHALL CONFORM TO THE SPECIFIED GRADING LIMITS WHEN INSTALLED RESPECTIVELY IN THE RIP-RAP OR FILTER.

3. GEOTEXTILE SHALL BE PROTECTED FROM PUNCHING, CUTTING, OR TEARING. ANY DAMAGE OTHER THAN AN OCCASIONAL SMALL HOLE SHALL BE REPAIRED BY PLACING ANOTHER PIECE OF GEOTEXTILE OVER THE DAMAGED PART OR BY COMPLETELY REPLACING THE GEOTEXTILE. ALL OVERLAPS WHETHER FOR REPAIRS OR FOR JOINING TWO PIECES OF GEOTEXTILE SHALL BE A MINIMUM OF ONE FOOT.

4. STONE FOR THE RIP-RAP OR GABION OUTLETS MAY BE PLACED BY EQUIPMENT. THEY SHALL BE CONSTRUCTED TO THE FULL COURSE THICKNESS IN ONE OPERATION AND IN SUCH A MANNER AS TO AVOID DISPLACEMENT OF UNDERLYING MATERIALS. THE STONE FOR RIP-RAP OR GABION OUTLETS SHALL BE DELIVERED AND PLACED IN A MANNER THAT WILL ENSURE THAT IT IS REASONABLY HOMOGENEOUS WITH THE SMALLER STONES AND SPALLS FILLING THE VOIDS BETWEEN THE LARGER STONES. RIP-RAP SHALL BE PLACED IN A MANNER TO PREVENT DAMAGE TO THE FILTER BLANKET OR GEOTEXTILE. HAND PLACEMENT WILL BE REQUIRED TO THE EXTENT NECESSARY TO PREVENT DAMAGE TO THE PERMANENT WORKS.

5. THE STONE SHALL BE PLACED SO THAT IT BLENDS IN WITH THE EXISTING GROUND. IF THE STONE IS PLACED TOO HIGH THEN THE FLOW WILL BE FORCED OUT OF THE CHANNEL AND SCOUR ADJACENT TO THE STONE WILL OCCUR.

U.S. DEPARTMENT OF AGRICULTURE SOIL CONSERVATION SERVICE	PAGE F - 18 - 10	MARYLAND DEPARTMENT OF ENVIRONMENT WATER MANAGEMENT ADMINISTRATION

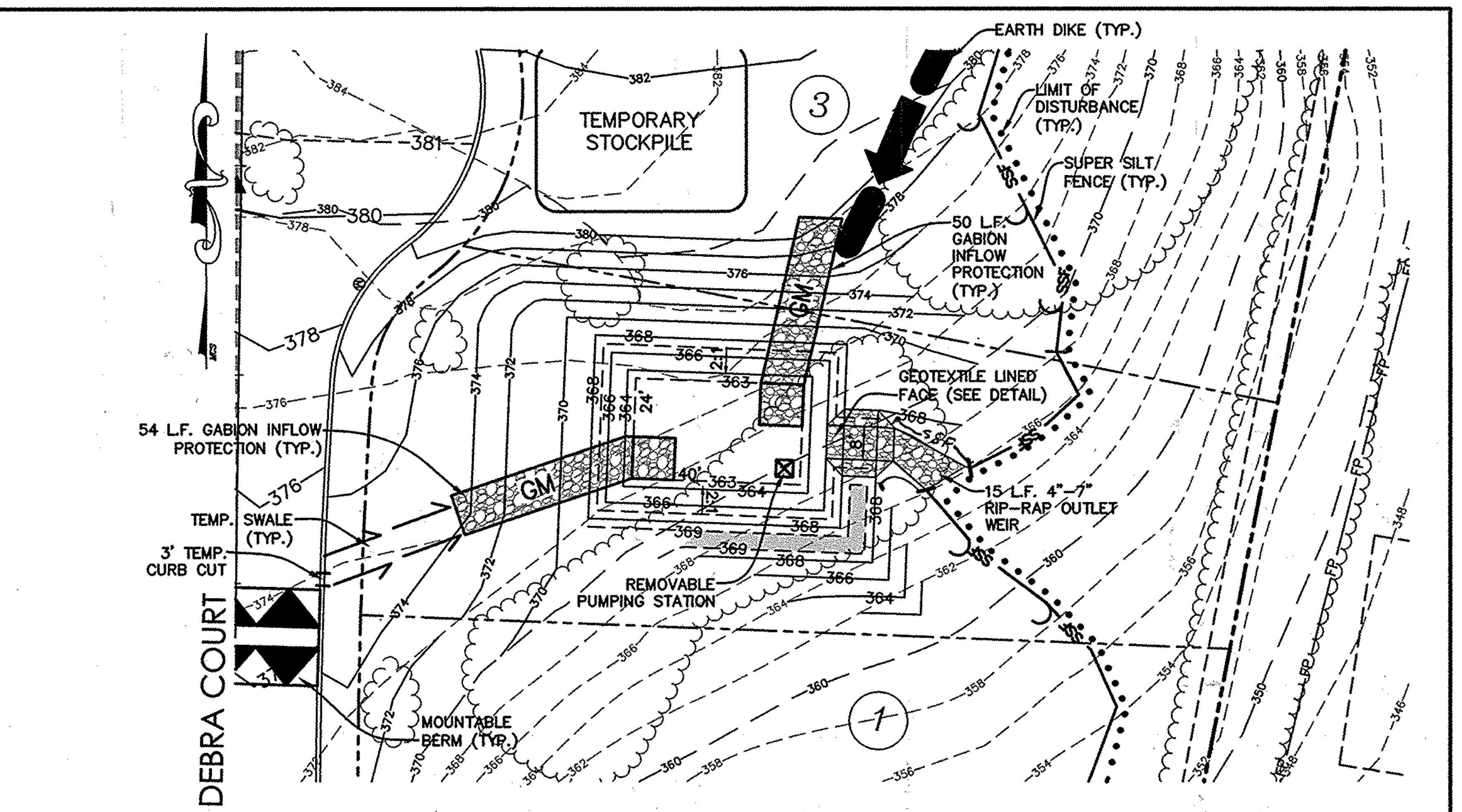

SEDIMENT TRAP #1 (S.O.S.T.-II) GRADING DETAIL
SCALE: 1"=30'

DETAIL 23A - STANDARD INLET PROTECTION

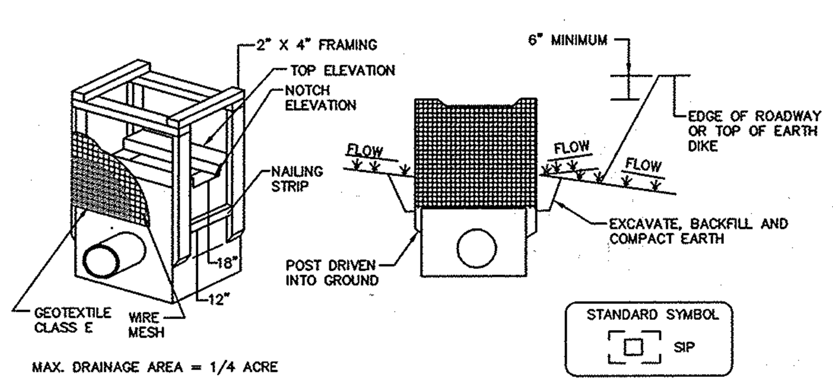

MAX. DRAINAGE AREA = 1/4 ACRE

CONSTRUCTION SPECIFICATIONS

1. EXCAVATE COMPLETELY AROUND THE INLET TO A DEPTH OF 18" BELOW THE NOTCH ELEVATION.

2. DRIVE THE 2" X 4" CONSTRUCTION GRADE LUMBER POSTS 1' INTO THE GROUND AT EACH CORNER OF THE INLET. PLACE NAIL STRIPS BETWEEN THE POSTS ON THE ENDS OF THE INLET. ASSEMBLE THE TOP PORTION OF THE 2" X 4" FRAME USING THE OVERLAP JOINT SHOWN ON DETAIL 23A. THE TOP OF THE FRAME (WEIR) MUST BE 6" BELOW ADJACENT ROADWAYS WHERE FLOODING AND SAFETY ISSUES MAY ARISE.

3. STRETCH THE 1/2" X 1/2" WIRE MESH TIGHTLY AROUND THE FRAME AND FASTEN SECURELY. THE ENDS MUST MEET AND OVERLAP AT A POST.

4. STRETCH THE GEOTEXTILE CLASS E TIGHTLY OVER THE WIRE MESH WITH THE GEOTEXTILE EXTENDING FROM THE TOP OF THE FRAME TO 18" BELOW THE INLET NOTCH ELEVATION. FASTEN THE GEOTEXTILE FIRMLY TO THE FRAME. THE ENDS OF THE GEOTEXTILE MUST MEET AT A POST, BE OVERLAPPED AND FOLDED, THEN FASTENED DOWN.

5. BACKFILL AROUND THE INLET IN COMPACTED 6" LAYERS UNTIL THE LAYER OF EARTH IS LEVEL WITH THE NOTCH ELEVATION ON THE ENDS AND TOP ELEVATION ON THE SIDES.

6. IF THE INLET IS NOT IN A SUMP, CONSTRUCT A COMPACTED EARTH DIKE ACROSS THE DITCH LINE DIRECTLY BELOW IT. THE TOP OF THE EARTH DIKE SHOULD BE AT LEAST 6" HIGHER THAN THE TOP OF THE FRAME.

7. THE STRUCTURE MUST BE INSPECTED PERIODICALLY AND AFTER EACH RAIN AND THE GEOTEXTILE REPLACED WHEN IT BECOMES CLOGGED.

U.S. DEPARTMENT OF AGRICULTURE SOIL CONSERVATION SERVICE	PAGE E-16-5	MARYLAND DEPARTMENT OF ENVIRONMENT WATER MANAGEMENT ADMINISTRATION

DETAIL 23B - AT GRADE INLET PROTECTION

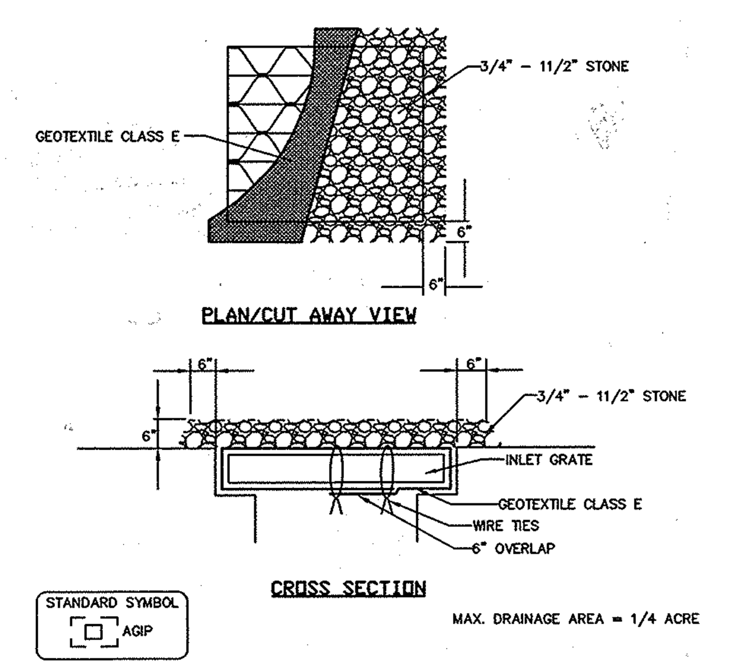

MAX. DRAINAGE AREA = 1/4 ACRE

CONSTRUCTION SPECIFICATIONS

1. LIFT GRATE AND WRAP WITH GEOTEXTILE CLASS E TO COMPLETELY COVER ALL OPENINGS, THEN SET GRATE BACK IN PLACE.

2. PLACE 3/4" TO 1 1/2" STONE, 4"-6" THICK ON THE GRATE TO SECURE THE FABRIC AND PROVIDE ADDITIONAL FILTRATION.

U.S. DEPARTMENT OF AGRICULTURE SOIL CONSERVATION SERVICE	PAGE E-16-5A	MARYLAND DEPARTMENT OF ENVIRONMENT WATER MANAGEMENT ADMINISTRATION

DETAIL 23C - CURB INLET PROTECTION (COG OR COS INLETS)

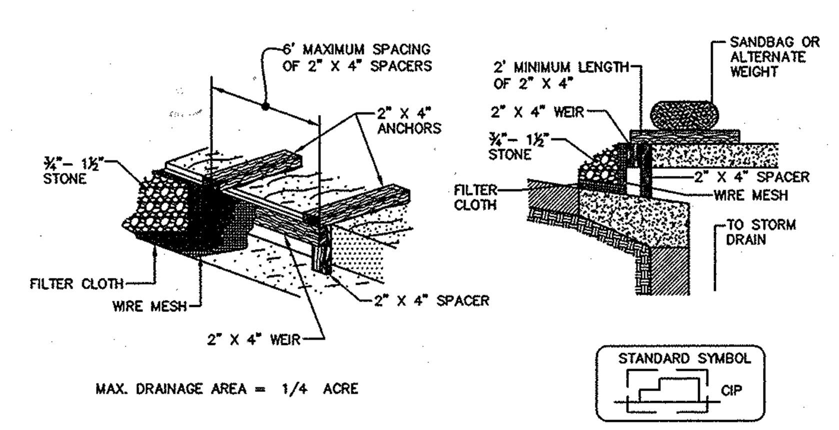

MAX. DRAINAGE AREA = 1/4 ACRE

CONSTRUCTION SPECIFICATIONS

1. ATTACH A CONTINUOUS PIECE OF WIRE MESH (30" MINIMUM WIDTH BY THROAT LENGTH PLUS 4') TO THE 2" X 4" WEIR (MEASURING THROAT LENGTH PLUS 2') AS SHOWN ON THE STANDARD DRAWING.

2. PLACE A CONTINUOUS PIECE OF GEOTEXTILE CLASS E THE SAME DIMENSIONS AS THE WIRE MESH OVER THE WIRE MESH AND SECURELY ATTACH IT TO THE 2" X 4" WEIR.

3. SECURELY NAIL THE 2" X 4" WEIR TO A 9" LONG VERTICAL SPACER TO BE LOCATED BETWEEN THE WEIR AND THE INLET FACE (MAX. 4' APART).

4. PLACE THE ASSEMBLY AGAINST THE INLET THROAT AND NAIL (MINIMUM 2' LENGTHS OF 2" X 4" TO THE TOP OF THE WEIR AT SPACER LOCATIONS). THESE 2" X 4" ANCHORS SHALL EXTEND ACROSS THE INLET TOP AND BE HELD IN PLACE BY SANDBAGS OR ALTERNATE WEIGHT.

5. THE ASSEMBLY SHALL BE PLACED SO THAT THE END SPACERS ARE A MINIMUM 1' BEYOND BOTH ENDS OF THE THROAT OPENING.

6. FORM THE 1/2" X 1/2" WIRE MESH AND THE GEOTEXTILE FABRIC TO THE CONCRETE GUTTER AND AGAINST THE FACE OF THE CURB ON BOTH SIDES OF THE INLET. PLACE CLEAN 3/4" X 1 1/2" STONE OVER THE WIRE MESH AND GEOTEXTILE IN SUCH A MANNER TO PREVENT WATER FROM ENTERING THE INLET UNDER OR AROUND THE GEOTEXTILE.

7. THIS TYPE OF PROTECTION MUST BE INSPECTED FREQUENTLY AND THE FILTER CLOTH AND STONE REPLACED WHEN CLOGGED WITH SEDIMENT.

8. ASSURE THAT STORM FLOW DOES NOT BYPASS THE INLET BY INSTALLING A TEMPORARY EARTH OR ASPHALT DIKE TO DIRECT THE FLOW TO THE INLET.

U.S. DEPARTMENT OF AGRICULTURE SOIL CONSERVATION SERVICE	PAGE E-16-5B	MARYLAND DEPARTMENT OF ENVIRONMENT WATER MANAGEMENT ADMINISTRATION

DETAIL 20A - REMOVABLE PUMPING STATION

NOTE: THIS MEASURE MUST BE LOCATED WHERE IT WILL BE READILY ACCESSIBLE TO ALLOW FOR ITS PRACTICAL USAGE.

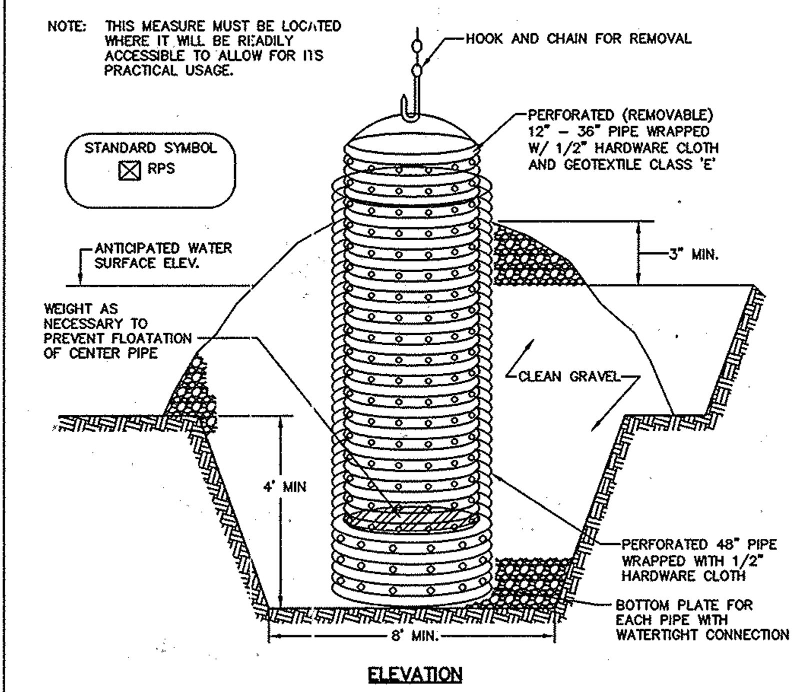

CONSTRUCTION SPECIFICATIONS

1. THE OUTER PIPE SHOULD BE 48" DIA. OR SHALL, IN ANY CASE, BE AT LEAST 4" GREATER IN DIAMETER THAN THE CENTER PIPE. THE OUTER PIPE SHALL BE WRAPPED WITH 1/2" HARDWARE CLOTH TO PREVENT BACKFILL MATERIAL FROM ENTERING THE PERFORATIONS.

2. AFTER INSTALLING THE OUTER PIPE, BACKFILL AROUND OUTER PIPE WITH 2" AGGREGATE OR CLEAN GRAVEL.

3. THE INSIDE STAND PIPE (CENTER PIPE) SHOULD BE CONSTRUCTED BY PERFORATING A CORRUGATED OR PVC PIPE BETWEEN 12" AND 36" IN DIAMETER. THE PERFORATIONS SHALL BE 1/2" X 6" SLITS OR 1" DIAMETER HOLES 6" ON CENTER. THE CENTER PIPE SHALL BE WRAPPED WITH 1/2" HARDWARE CLOTH FIRST, THEN WRAPPED AGAIN WITH GEOTEXTILE CLASS E.

4. THE CENTER PIPE SHOULD EXTEND 12" TO 18" ABOVE THE ANTICIPATED WATER SURFACE ELEVATION OR RISER CREST ELEVATION WHEN DEWATERING A BASIN.

U.S. DEPARTMENT OF AGRICULTURE SOIL CONSERVATION SERVICE	PAGE MODIFIED	MARYLAND DEPARTMENT OF ENVIRONMENT WATER MANAGEMENT ADMINISTRATION

DETAIL 1 - EARTH DIKE

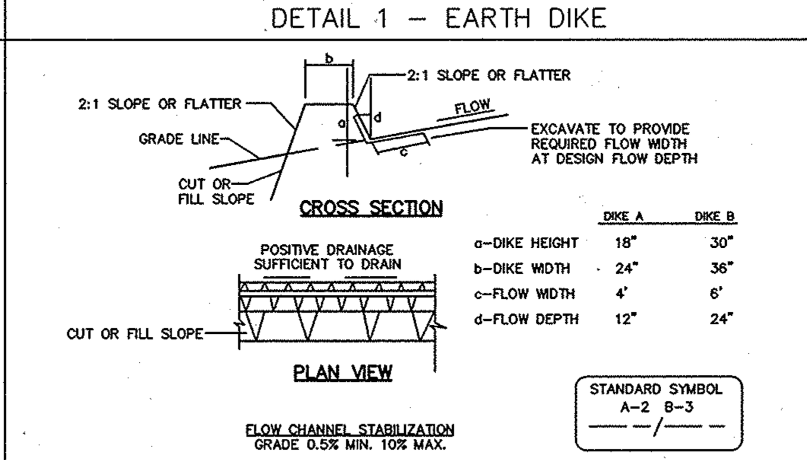

	DIKE A	DIKE B
a-DIKE HEIGHT	18"	30"
b-DIKE WIDTH	24"	36"
c-FLOW WIDTH	4'	6'
d-FLOW DEPTH	12"	24"

FLOW CHANNEL STABILIZATION
GRADE 0.5% MIN. 10% MAX.

1. SEED AND COVER WITH STRAW MULCH.
2. SEED AND COVER WITH EROSION CONTROL MATTING OR LINE WITH SOD.
3. 4" - 7" STONE OR RECYCLED CONCRETE EQUIVALENT PRESSED INTO THE SOIL 7" MINIMUM.

CONSTRUCTION SPECIFICATIONS

1. ALL TEMPORARY EARTH DIKES SHALL HAVE UNINTERRUPTED POSITIVE GRADE TO AN OUTLET. SPOT ELEVATIONS MAY BE NECESSARY FOR GRADES LESS THAN 1%.

2. RUNOFF DIVERTED FROM A DISTURBED AREA SHALL BE CONVEYED TO A SEDIMENT TRAPPING DEVICE.

3. RUNOFF DIVERTED FROM AN UNDISTURBED AREA SHALL OUTLET DIRECTLY INTO AN UNDISTURBED, STABILIZED AREA AT A NON-EROSIVE VELOCITY.

4. ALL TREES, BRUSH, STUMPS, OBSTRUCTIONS, AND OTHER OBJECTIONABLE MATERIAL SHALL BE REMOVED AND DISPOSED OF SO AS NOT TO INTERFERE WITH THE PROPER FUNCTIONING OF THE DIKE.

5. THE DIKE SHALL BE EXCAVATED OR SHAPED TO LINE, GRADE AND CROSS SECTION AS REQUIRED TO MEET THE CRITERIA SPECIFIED HEREIN AND BE FREE OF BANK PROJECTIONS OR OTHER IRREGULARITIES WHICH WILL IMPEDE NORMAL FLOW.

6. FILL SHALL BE COMPACTED BY EARTH MOVING EQUIPMENT.

7. ALL EARTH REMOVED AND NOT NEEDED FOR CONSTRUCTION SHALL BE PLACED SO THAT IT WILL NOT INTERFERE WITH THE FUNCTIONING OF THE DIKE.

8. INSPECTION AND MAINTENANCE MUST BE PROVIDED PERIODICALLY AND AFTER EACH RAIN EVENT.

U.S. DEPARTMENT OF AGRICULTURE SOIL CONSERVATION SERVICE	PAGE A - 1 - 6	MARYLAND DEPARTMENT OF ENVIRONMENT WATER MANAGEMENT ADMINISTRATION

STONE OUTLET SEDIMENT TRAP NO. 1
(S.O.S.T. II)

D.A. (EX)	1.67 AC±
D.A. (INT.)	1.91 AC±
D.A. (PROP)	0.0 AC±
STORAGE REQUIRED	6,876 C.F.
STORAGE PROVIDED	8,680 C.F.
BOTTOM DIMENSIONS	40' L x 24' W AVG.
SIDE SLOPES	2:1
WEIR LENGTH	8 FT
BOTTOM ELEVATION	363.00
WEIR CREST ELEVATION	368.00
CLEANOUT ELEVATION	364.25
EMBANKMENT ELEVATION	369.00
WET STORAGE/OUTLET ELEVATION	366.00
EX. GROUND ELEV. @ OUTLET	366.00±
WET STORAGE ZONE	363.00 - 366.00
DRY STORAGE ZONE	366.00 - 368.00

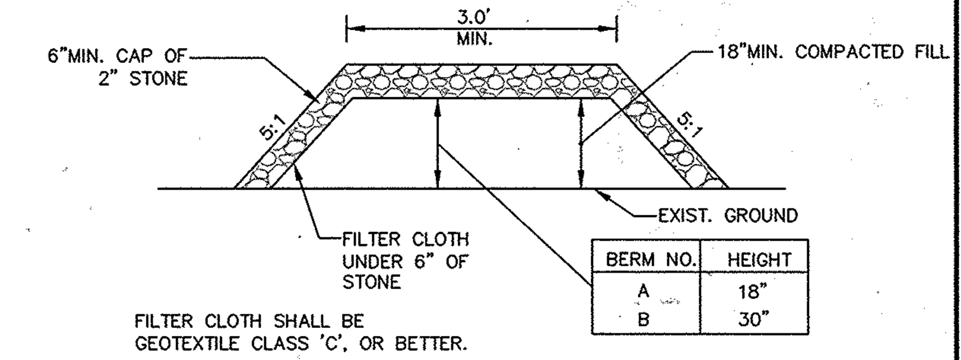

BERM NO.	HEIGHT
A	18"
B	30"

FILTER CLOTH SHALL BE GEOTEXTILE CLASS 'C', OR BETTER.

MOUNTABLE BERM DETAIL
NOT TO SCALE

DETAIL 9 - STONE OUTLET SEDIMENT TRAP - ST II

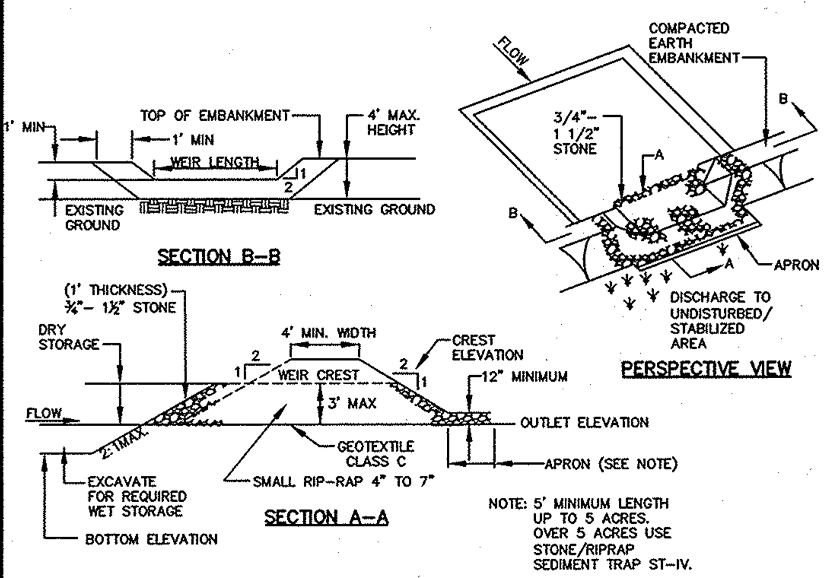

CONSTRUCTION SPECIFICATIONS

1. AREA UNDER EMBANKMENT SHALL BE CLEARED, GRUBBED AND STRIPPED OF ANY VEGETATION AND ROOT MAT. THE POOL AREA SHALL BE CLEARED.

2. THE FILL MATERIAL FOR THE EMBANKMENT SHALL BE FREE OF ROOTS AND OTHER WOODY VEGETATION AS WELL AS OVER-SIZED STONES, ROCKS, ORGANIC MATERIAL OR OTHER OBJECTIONABLE MATERIAL. THE EMBANKMENT SHALL BE COMPACTED BY TRAVERSING WITH EQUIPMENT WHILE IT IS BEING CONSTRUCTED.

3. ALL CUT AND FILL SLOPES SHALL BE 2:1 OR FLATTER.

4. THE STONE USED IN THE OUTLET SHALL BE SMALL RIP-RAP 4" TO 7" IN SIZE WITH A 1' THICK LAYER OF 3/4" TO 1 1/2" WASHED AGGREGATE PLACED ON THE UPSTREAM FACE OF THE OUTLET. STONE FACING SHALL BE AS NECESSARY TO PREVENT CLOGGING. GEOTEXTILE CLASS C MAY BE SUBSTITUTED FOR THE STONE FACING BY PLACING IT ON THE INSIDE FACE OF THE STONE OUTLET.

5. SEDIMENT SHALL BE REMOVED AND TRAP RESTORED TO ITS ORIGINAL DIMENSIONS WHEN THE SEDIMENT HAS ACCUMULATED TO ONE HALF OF THE WET STORAGE DEPTH OF THE TRAP. REMOVED SEDIMENT SHALL BE DEPOSITED IN A SUITABLE AREA AND IN SUCH A MANNER THAT IT WILL NOT ERODE.

U.S. DEPARTMENT OF AGRICULTURE SOIL CONSERVATION SERVICE	PAGE C - 9 - 10	MARYLAND DEPARTMENT OF ENVIRONMENT WATER MANAGEMENT ADMINISTRATION

STONE OUTLET SEDIMENT TRAP - ST II

6. THE STRUCTURE SHALL BE INSPECTED PERIODICALLY AND AFTER EACH RAIN AND REPAIRS MADE AS NEEDED

7. CONSTRUCTION OF TRAPS SHALL BE CARRIED OUT IN SUCH A MANNER THAT SEDIMENT POLLUTION IS ABATED. ONCE CONSTRUCTED, THE TOP AND OUTSIDE FACE OF THE EMBANKMENT SHALL BE STABILIZED WITH SEED AND MULCH. POINTS OF CONCENTRATION INFLOW SHALL BE PROTECTED IN ACCORDANCE WITH GRADE STABILIZATION STRUCTURE CRITERIA. THE REMAINDER OF THE INTERIOR SLOPES SHOULD BE STABILIZED (ONE TIME) WITH SEED AND MULCH UPON TRAP COMPLETION AND MONITORED AND MAINTAINED EROSION FREE DURING THE LIFE OF THE TRAP.

8. THE STRUCTURE SHALL BE DEWATERED BY APPROVED METHODS, REMOVED AND THE AREA STABILIZED WHEN THE DRAINAGE AREA HAS BEEN PROPERLY STABILIZED.

9. REFER TO SECTION D FOR SPECIFICATIONS CONCERNING TRAP DEWATERING.

10. MINIMUM TRAP DEPTH SHALL BE MEASURED FROM THE WEIR ELEVATION.

11. THE ELEVATION OF THE TOP OF ANY DIKE DIRECTING WATER INTO THE TRAP MUST EQUAL OR EXCEED THE ELEVATION OF THE TRAP EMBANKMENT.

12. GEOTEXTILE CLASS C SHALL BE PLACED OVER THE BOTTOM AND SIDES OF THE OUTLET CHANNEL PRIOR TO THE PLACEMENT OF STONE. SECTIONS OF FILTER CLOTH MUST OVERLAP AT LEAST 1' WITH THE SECTION NEAREST THE ENTRANCE PLACED ON TOP. THE FILTER CLOTH SHALL BE EMBEDDED AT LEAST 6" INTO EXISTING GROUND AT THE ENTRANCE OF THE OUTLET CHANNEL.

13. OUTLET - AN OUTLET SHALL BE PROVIDED. INCLUDING A MEANS OF CONVEYING THE DISCHARGE IN AN EROSION FREE MANNER TO AN EXISTING STABLE CHANNEL.

U.S. DEPARTMENT OF AGRICULTURE SOIL CONSERVATION SERVICE	PAGE C - 9 - 10A	MARYLAND DEPARTMENT OF ENVIRONMENT WATER MANAGEMENT ADMINISTRATION

DETAIL 1 - EARTH DIKE

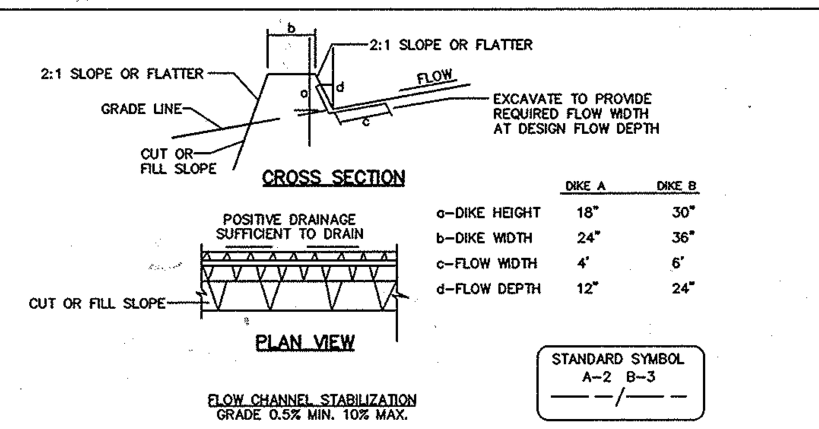

	DIKE A	DIKE B
a-DIKE HEIGHT	18"	30"
b-DIKE WIDTH	24"	36"
c-FLOW WIDTH	4'	6'
d-FLOW DEPTH	12"	24"

FLOW CHANNEL STABILIZATION
GRADE 0.5% MIN. 10% MAX.

1. SEED AND COVER WITH STRAW MULCH.
2. SEED AND COVER WITH EROSION CONTROL MATTING OR LINE WITH SOD.
3. 4" - 7" STONE OR RECYCLED CONCRETE EQUIVALENT PRESSED INTO THE SOIL 7" MINIMUM.

CONSTRUCTION SPECIFICATIONS

1. ALL TEMPORARY EARTH DIKES SHALL HAVE UNINTERRUPTED POSITIVE GRADE TO AN OUTLET. SPOT ELEVATIONS MAY BE NECESSARY FOR GRADES LESS THAN 1%.

2. RUNOFF DIVERTED FROM A DISTURBED AREA SHALL BE CONVEYED TO A SEDIMENT TRAPPING DEVICE.

3. RUNOFF DIVERTED FROM AN UNDISTURBED AREA SHALL OUTLET DIRECTLY INTO AN UNDISTURBED, STABILIZED AREA AT A NON-EROSIVE VELOCITY.

4. ALL TREES, BRUSH, STUMPS, OBSTRUCTIONS, AND OTHER OBJECTIONABLE MATERIAL SHALL BE REMOVED AND DISPOSED OF SO AS NOT TO INTERFERE WITH THE PROPER FUNCTIONING OF THE DIKE.

5. THE DIKE SHALL BE EXCAVATED OR SHAPED TO LINE, GRADE AND CROSS SECTION AS REQUIRED TO MEET THE CRITERIA SPECIFIED HEREIN AND BE FREE OF BANK PROJECTIONS OR OTHER IRREGULARITIES WHICH WILL IMPEDE NORMAL FLOW.

6. FILL SHALL BE COMPACTED BY EARTH MOVING EQUIPMENT.

7. ALL EARTH REMOVED AND NOT NEEDED FOR CONSTRUCTION SHALL BE PLACED SO THAT IT WILL NOT INTERFERE WITH THE FUNCTIONING OF THE DIKE.

8. INSPECTION AND MAINTENANCE MUST BE PROVIDED PERIODICALLY AND AFTER EACH RAIN EVENT.

U.S. DEPARTMENT OF AGRICULTURE SOIL CONSERVATION SERVICE	PAGE A - 1 - 6	MARYLAND DEPARTMENT OF ENVIRONMENT WATER MANAGEMENT ADMINISTRATION

DETAIL 2 - TEMPORARY SWALE

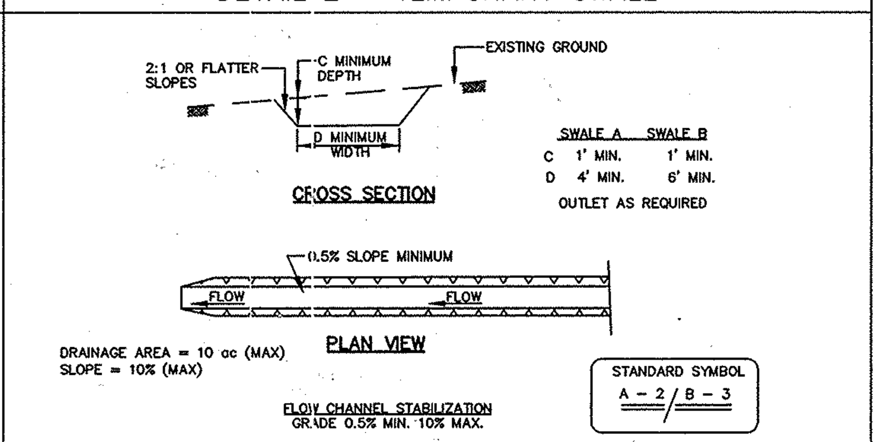

	SWALE A	SWALE B
C	1' MIN.	1' MIN.
D	4' MIN.	6' MIN.

OUTLET AS REQUIRED

DRAINAGE AREA = 10 ac (MAX)
SLOPE = 10% (MAX)

FLOW CHANNEL STABILIZATION
GRADE 0.5% MIN. 10% MAX.

1. SEED AND COVER WITH STRAW MULCH.
2. SEED AND COVER WITH EROSION CONTROL MATTING OR LINE WITH SOD.
3. 4"-7" STONE OR RECYCLED CONCRETE EQUIVALENT PRESSED INTO SOIL IN A MINIMUM 7" LAYER.

CONSTRUCTION SPECIFICATIONS

1. ALL TEMPORARY SWALES SHALL HAVE UNINTERRUPTED POSITIVE GRADE TO AN OUTLET. SPOT ELEVATIONS MAY BE NECESSARY FOR GRADES LESS THAN 1%.

2. RUNOFF DIVERTED FROM A DISTURBED AREA SHALL BE CONVEYED TO A SEDIMENT TRAPPING DEVICE.

3. RUNOFF DIVERTED FROM AN UNDISTURBED AREA SHALL OUTLET DIRECTLY INTO AN UNDISTURBED STABILIZED AREA AT A NON-EROSIVE VELOCITY.

4. ALL TREES, BRUSH, STUMPS, OBSTRUCTIONS, AND OTHER OBJECTIONABLE MATERIAL SHALL BE REMOVED AND DISPOSED OF SO AS NOT TO INTERFERE WITH THE PROPER FUNCTIONING OF THE SWALE.

5. THE SWALE SHALL BE EXCAVATED OR SHAPED TO LINE, GRADE AND CROSS SECTION AS REQUIRED TO MEET THE CRITERIA SPECIFIED HEREIN AND BE FREE OF BANK PROJECTIONS OR OTHER IRREGULARITIES WHICH WILL IMPEDE NORMAL FLOW.

6. FILL, IF NECESSARY, SHALL BE COMPACTED BY EARTH MOVING EQUIPMENT.

7. ALL EARTH REMOVED AND NOT NEEDED FOR CONSTRUCTION SHALL BE PLACED SO THAT IT WILL NOT INTERFERE WITH THE FUNCTIONING OF THE SWALE.

8. INSPECTION AND MAINTENANCE MUST BE PROVIDED PERIODICALLY AND AFTER EACH RAIN EVENT.

U.S. DEPARTMENT OF AGRICULTURE SOIL CONSERVATION SERVICE	PAGE A - 2 - 4	MARYLAND DEPARTMENT OF ENVIRONMENT WATER MANAGEMENT ADMINISTRATION

~~AS-BUILT CERTIFICATION~~
~~I HEREBY CERTIFY THAT THE FACILITY SHOWN ON THIS PLAN WAS CONSTRUCTED AS SHOWN ON THE "AS-BUILT" PLANS AND MEETS THE APPROVED PLANS AND SPECIFICATIONS.~~

~~SIGNATURE~~ ~~PE NO.~~ ~~DATE~~

HOWARD SOIL CONSERVATION DISTRICT:
THESE PLANS FOR SMALL POND CONSTRUCTION, SOIL EROSION AND SEDIMENT CONTROL MEET THE REQUIREMENTS OF THE HOWARD SOIL CONSERVATION DISTRICT.

HOWARD SCD — 11/2/09 DATE

NO AS-BUILT INFO THIS SHEET

DEPARTMENT OF PUBLIC WORKS
HOWARD COUNTY, MARYLAND

CHIEF, BUREAU OF HIGHWAYS — 11-9-09 DATE

DEPARTMENT OF PLANNING & ZONING
HOWARD COUNTY, MARYLAND

CHIEF, DIVISION OF LAND DEVELOPMENT — 11-16-09 DATE

CHIEF, DEVELOPMENT ENGINEERING DIVISION — 11/13/09 DATE

PROFESSIONAL CERTIFICATION
I HEREBY CERTIFY THAT THESE DOCUMENTS WERE PREPARED OR APPROVED BY ME, AND THAT I AM A DULY LICENSED PROFESSIONAL ENGINEER UNDER THE LAWS OF THE STATE OF MARYLAND, LICENSE NO. 16019, EXPIRATION DATE: 5/8/2010.

STATE OF MARYLAND — G. DWIGHT LITTLE JR. — No. 16019 — REGISTERED PROFESSIONAL ENGINEER

LITTLE & ASSOCIATES, INC.
ENGINEERS~~LAND PLANNERS~~SURVEYORS
1055 TAYLOR AVENUE, SUITE 307
TOWSON, MARYLAND 21286
PHONE: (410)296-1636 FAX: (410)296-1639

OWNER/DEVELOPER:
KIMBERLY HOMES
ELLICOTT PROPERTIES, LLC.
P.O. BOX 6194
BALTIMORE, MARYLAND, 21231
(410) 522-4987

	BY	NO.	REVISION	DATE
DES: AMK				
DRN: PFS				
CHK: AMK				
DATE: 1/23/09				

FINAL ROAD CONSTRUCTION PLANS
SEDIMENT CONTROL DETAILS AND SPECS
F-09-070
DEBRA COURT
LOTS 1 - 12
A RESUBDIVISION OF LOT 80, SECT. 3 GLEN BROOK (P 918); AND SUBDIVISION OF PARCELS 812 & 1119

ELECTION DISTRICT 2
SCALE: AS SHOWN
PRIOR PLANS: P-08-003, S-04-02,
PLAT 8/92 & 4567

HOWARD COUNTY, MD
M 24 G 2,3 P 918,812,1119
OCTOBER 15, 2009

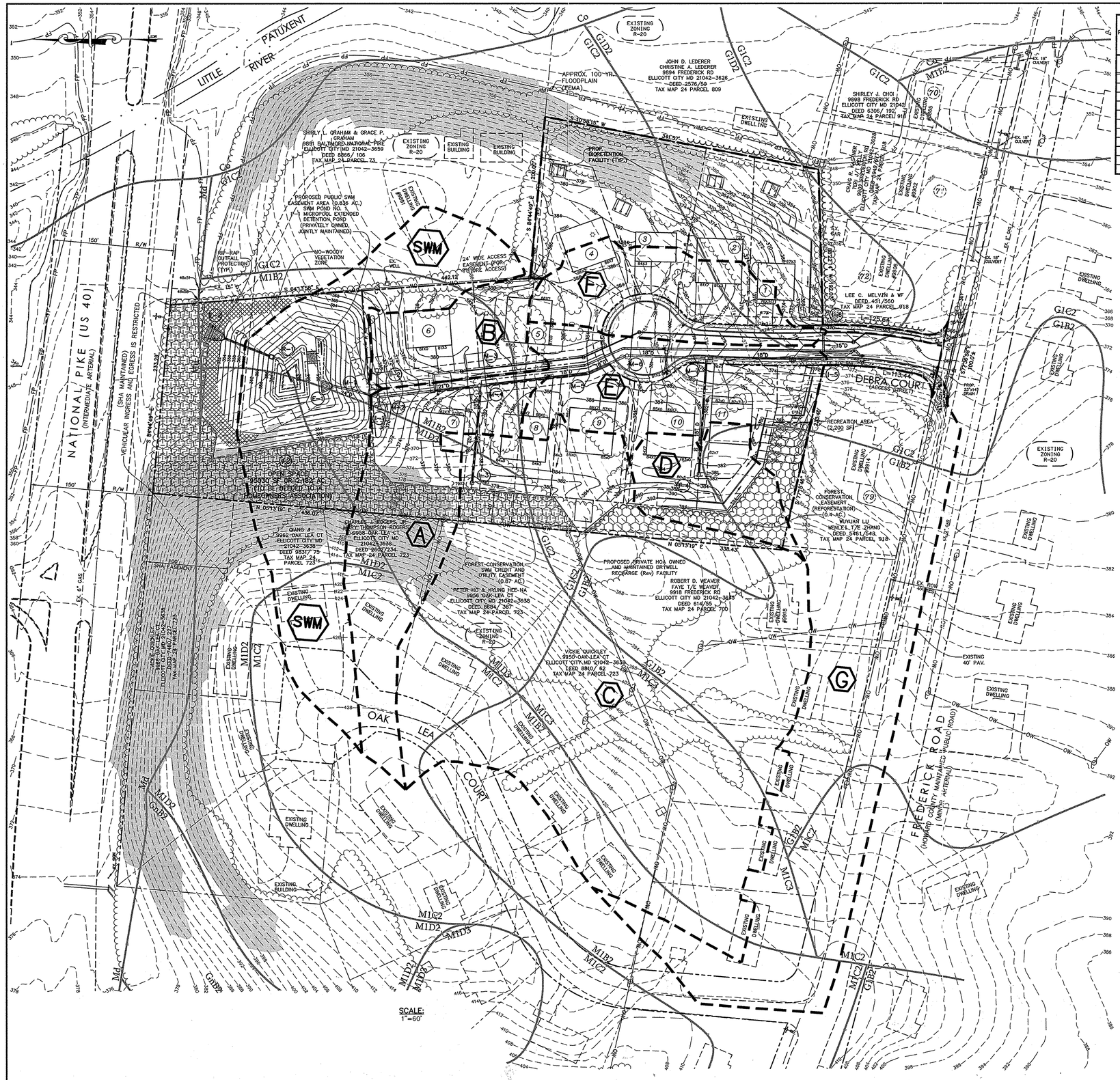

AREA AND "C" FACTOR TABULATION

PROJECT: DEBRA COURT DATE: 1/15/2009 P/N: 01571B

PHASE	INLET #	ZONING (Z)	SUBAREA (B)	AREA (AC.) (A)	"C" FACTOR < 25yrs C	"C" FACTOR >25yrs C	% IMPERVIOUS (P)
	I-1	R-20	A	1.23	0.35	0.46	30%
	I-2	R-20	B	0.42	0.34	0.43	30%
	I-3	R-20	C	4.89	0.34	0.45	30%
	I-4	R-20	D	0.47	0.34	0.45	30%
	I-5	R-20	E	0.98	0.43	0.54	30%
	I-6	R-20	F	0.74	0.43	0.54	30%
	I-7	R-20	G	2.76	0.41	0.52	30%

SOIL DESIGNATION	SOIL TYPES	SOIL CHARACTERISTICS		SOIL GROUP
Co	CODORUS SILT LOAM			C
GIB2	GLENELG WAM	3-8%	MODERATELY ERODED	B
GIC2	GLENELG WAM	8-15%	MODERATELY ERODED	B
GID2	GLENELG WAM	15-25%	MODERATELY ERODED	B
Md	MADE LAND			D
MIB2	MANOR LOAM	3-8%	MODERATELY ERODED	B
MIC2	MANOR LOAM	8-15%	MODERATELY ERODED	B
MIC3	MANOR LOAM	8-15%	MODERATELY ERODED	B
MID2	MANOR LOAM	15-25%	MODERATELY ERODED	B
MID3	MANOR LOAM	15-25%	MODERATELY ERODED	B

SOIL LINES AND TYPES SHOWN ARE TAKEN FROM HOWARD COUNTY USDA SOILS MAP NO. 15.

STORM DRAIN COMPUTATIONS

PROJECT NAME: DEBRA COURT SHEET 1 of
COMPUTED BY: AMK
DATE: 4/1/2009
CHECKED BY:
DATE:
DESIGN FREQUENCY: 10 YR.

PIPE

FROM NO.	TO NO.	INC. AREA (AC.)	TOTAL AREA (AC.)	C	C x A	SUM (C x A)	TIME (MIN.)	I (IN/HR.)	Q (CFS)	HYDRAULIC SLOPE (%)	DESIGN SLOPE (%)	DIAMETER (IN.)	VELOCITY (FT./SEC.)	LENGTH (FT.)	TIME (MIN.)	REMARKS
	I-6	0.74	0.74	0.43	0.32	-	10.00	6.60	2.11	-	-	-	-	-	-	A-10
I-6	I-5	-	0.74	-	-	0.32	10.00	6.60	2.11	0.1	1.0	15	1.7	30	0.3	
	I-5	0.98	0.98	0.43	0.42	-	10.00	6.60	2.77	-	-	-	-	-	-	A-10
I-5	M-7	-	1.72	-	-	0.74	10.30	6.51	4.82	0.2	1.0	18	2.7	140	0.9	
	I-4	0.47	0.47	0.34	0.16/0.19	-	10.00	6.60/7.50	1.25	-	-	-	-	-	-	YARD INLET
I-4	M-7	-	0.47	-	-	0.19	10.00	6.60	1.25	0.0	2.0	15	1.0	144	2.4	
M-7	M-6	-	2.19	-	-	0.93	12.70	5.88	5.47	0.3	1.0	18	3.1	98	0.5	
M-6	M-5	-	2.19	-	-	0.93	13.20	5.76	5.36	0.3	1.0	18	3.0	53	0.3	
M-5	M-3	-	2.19	-	-	0.93	13.50	5.70	5.30	0.3	1.0	18	3.0	134	0.7	
	I-3	4.89	4.89	0.34	1.66/1.92	-	15.00	5.45/5.32	10.46	-	-	-	-	-	-	YARD INLET
I-3	M-4	-	4.89	-	-	1.92	15.00	5.45	10.46	1.1	3.0	18	5.9	111	0.3	
M-4	M-3	-	4.89	-	-	1.92	15.30	5.40	10.37	1.1	3.0	18	5.8	10	0.1	
M-3	M-2	-	7.08	-	-	2.85	15.40	5.38	15.33	1.1	1.0	21	6.4	124	0.4	
	I-2	0.42	0.42	0.34	0.14/0.16	-	10.00	6.60/7.50	1.06	-	-	-	-	-	-	YARD INLET
I-2	M-2	-	0.42	-	-	0.16	10.00	6.60	1.06	0.0	2.0	15	0.9	33	0.6	
	I-1	1.23	1.23	0.35	0.43/0.49	-	10.00	6.60/7.50	3.23	-	-	-	-	-	-	YARD INLET
I-1	M-2	-	1.23	-	-	0.49	10.00	6.60	3.23	0.3	2.0	15	2.6	13	0.1	
M-2	M-1	-	8.73	-	-	3.50	15.80	5.33	18.66	0.8	1.0	24	5.9	26	0.1	
M-1	E-1	-	8.73	-	-	3.50	15.90	5.31	18.59	0.8	1.0	24	5.9	33	0.1	
	I-7	2.76	2.76	0.41	1.13/1.29	-	10.00	6.60/7.50	3.90	-	-	-	-	-	-	YARD INLET
I-7	E-2	-	2.76	-	-	1.29	10.00	6.60	3.90	0.2	1.0	18	2.2	99	0.7	

NOTE: 10 YR I / 25 YR I

NO AS-BUILT INFO THIS SHEET

DEPARTMENT OF PUBLIC WORKS
HOWARD COUNTY, MARYLAND
CHIEF, BUREAU OF HIGHWAYS — DATE 11-9-09

DEPARTMENT OF PLANNING & ZONING
HOWARD COUNTY, MARYLAND
CHIEF, DIVISION OF LAND DEVELOPMENT — DATE 11-16-09

CHIEF, DEVELOPMENT ENGINEERING DIVISION — DATE 11/13/09

PROFESSIONAL CERTIFICATION
I HEREBY CERTIFY THAT THESE DOCUMENTS WERE PREPARED OR APPROVED BY ME, AND THAT I AM A DULY LICENSED PROFESSIONAL ENGINEER UNDER THE LAWS OF THE STATE OF MARYLAND, LICENSE NO. 16019, EXPIRATION DATE: 5/8/2010.

STATE OF MARYLAND — G. DENNIS LITTLE — 16019 — REGISTERED PROFESSIONAL ENGINEER

LITTLE & ASSOCIATES, INC.
ENGINEERS~~LAND PLANNERS~~SURVEYORS
1055 TAYLOR AVENUE, SUITE 307
TOWSON, MARYLAND 21286
PHONE: (410)296-1636 FAX: (410)296-1639

OWNER/DEVELOPER:
KIMBERLY HOMES
ELLICOTT PROPERTIES, LLC.
P.O. BOX 6194
BALTIMORE, MARYLAND, 21231
(410) 522-4987

DES: AMK				
DRN: PFS				
CHK: AMK				
DATE: 01/23/2009	BY	NO.	REVISION	DATE

FINAL ROAD CONSTRUCTION PLANS

STORM DRAIN DRAINAGE AREA MAP

F-09-070

DEBRA COURT

LOTS 1 - 12

A RESUBDIVISION OF LOT 80, SECT. 3 GLEN BROOK (P 918); AND SUBDIVISION OF PARCELS 812 & 1119

ELECTION DISTRICT 2
SCALE: AS SHOWN
PRIOR PLANS: P-08-003, S-04-02, PLAT 8/92 & 4567

HOWARD COUNTY, MD
M 24 G 2,3 P 918,812,1119
OCTOBER 15, 2009
SHEET 7 OF 18

F-09-070

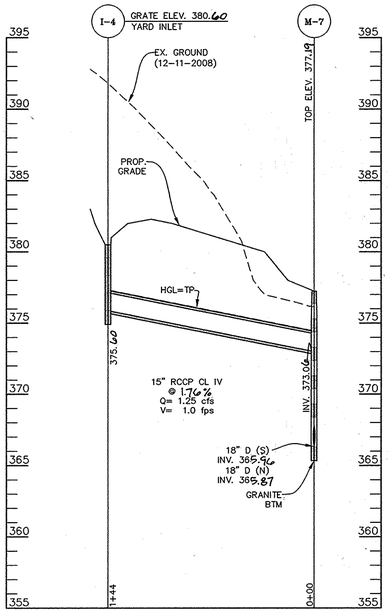

PROPOSED STORM DRAIN
SCALE: VERT. 1"=5'
HORZ. 1"=50'

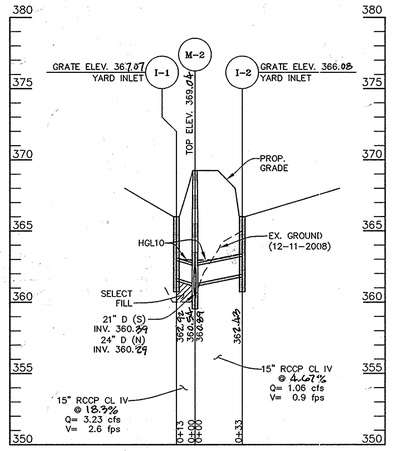

PROPOSED STORM DRAIN
SCALE: VERT. 1"=5'
HORZ. 1"=50'

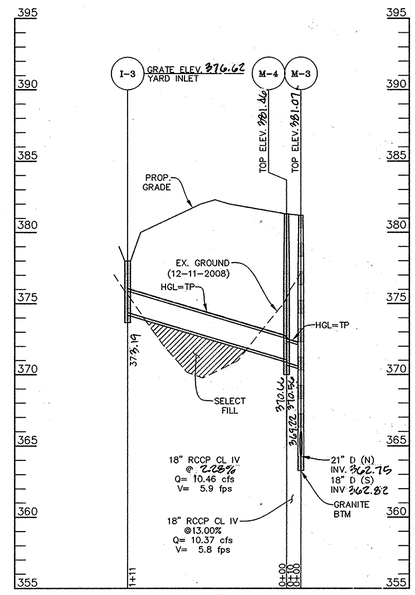

PROPOSED STORM DRAIN
SCALE: VERT. 1"=5'
HORZ. 1"=50'

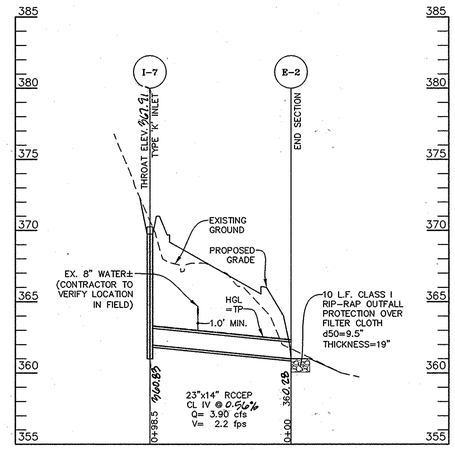

PROPOSED STORM DRAIN
SCALE: VERT. 1"=5'
HORZ. 1"=50'

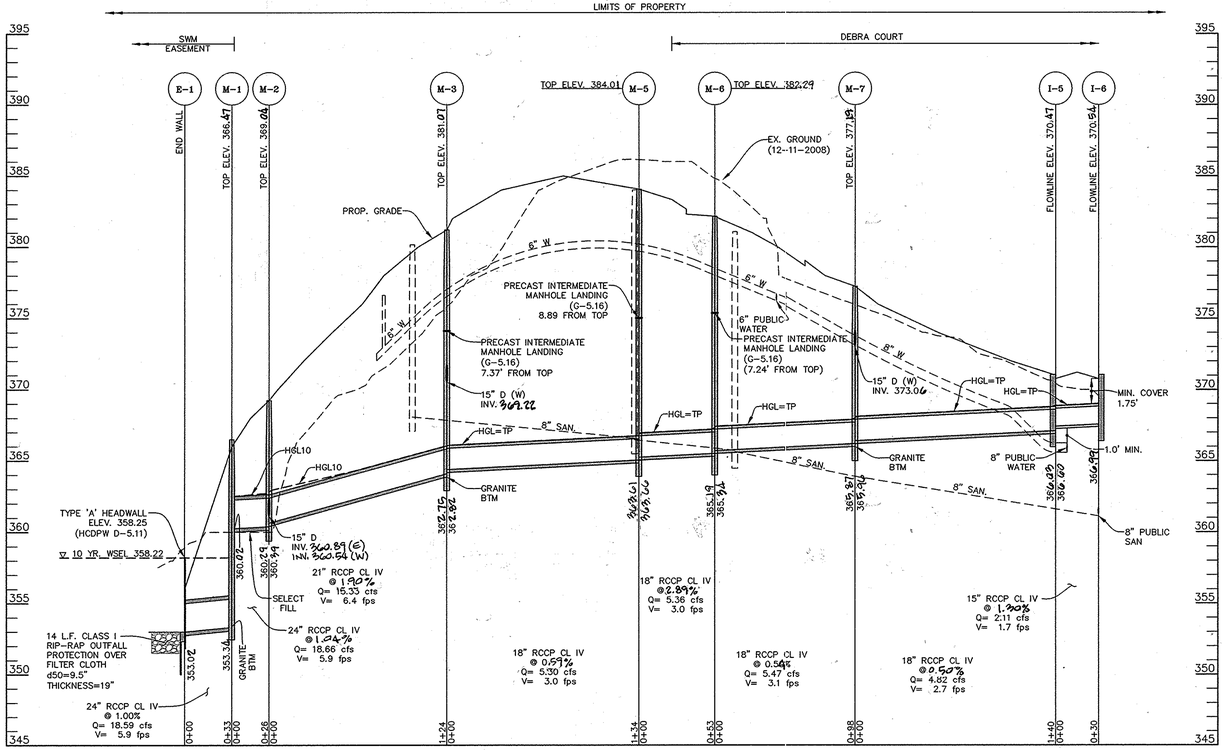

PROPOSED STORM DRAIN
SCALE: VERT. 1"=5'
HORZ. 1"=50'

NOTE:

ALL FILLED AREAS SHALL REQUIRE 95% COMPACTION IN ACCORDANCE WITH ASSHTO T-180 STANDARDS.

INLET SCHEDULE

NO.	TYPE	Q	INV. OUT	FLOW LINE ELEV.	REMARKS
I-1	YARD INLET	3.23	362.92	367.07	D-4.14
I-2	YARD INLET	1.06	362.83	366.08	D-4.14
I-3	YARD INLET	10.46	373.19	376.62	D-4.14
I-4	YARD INLET	1.25	375.60	380.60	D-4.14
I-5	A-5	2.77	366.03	370.47	D-4.01
I-6	A-5	2.11	366.99	370.84	D-4.01
I-7	K	3.90	360.83	367.91	D-4.12

MANHOLE SCHEDULE

NO.	TYPE	SIZE	INV. OUT	TOP ELEV.	REMARKS
M-1	STD	48"	359.34	366.47	G-5.12
M-2	STD	60"	360.29	369.04	G-5.13
M-3	STD	48"	362.75	381.07	G-5.12
M-4	STD	48"	370.56	381.46	G-5.12
M-5	STD	48"	363.61	384.01	G-5.12
M-6	STD	48"	365.19	382.29	G-5.12
M-7	STD	48"	365.87	377.19	G-5.12

STRUCTURE SCHEDULE

NO.	TYPE	SIZE	INV. OUT	TOP ELEV.	REMARKS
E-1	CONCRETE END WALL	24"	353.02	358.25	D-5.11
E-2	CONCRETE END SECTION	23"x14"	360.28	–	–

PUBLIC STORM DRAIN PIPE SCHEDULE

SIZE	TYPE	LINEAR FEET
15"	RCCP CL IV	220
18"	RCCP CL IV	546
21"	RCCP CL IV	124
24"	RCCP CL IV	59
23"x14"	RCCEP CL IV	99

I HEREBY CERTIFY, BY MY SEAL, THAT THE FACILITIES SHOWN ON THIS PLAN WERE CONSTRUCTED AS SHOWN ON THIS 'AS-BUILT' PLAN AND MEET THE APPROVED PLANS AND SPECIFICATIONS.

STATE OF MARYLAND — MICHAEL ANTHONY KOMOROWSKI — REGISTERED PROFESSIONAL ENGINEER — 11/4/09

PE. 16019

DEPARTMENT OF PUBLIC WORKS
HOWARD COUNTY, MARYLAND

CHIEF, BUREAU OF HIGHWAYS — 11-9-09 DATE

DEPARTMENT OF PLANNING & ZONING
HOWARD COUNTY, MARYLAND

CHIEF, DIVISION OF LAND DEVELOPMENT — 11-16-09 DATE

CHIEF, DEVELOPMENT ENGINEERING DIVISION — 11/13/09 DATE

PROFESSIONAL CERTIFICATION
I HEREBY CERTIFY THAT THESE DOCUMENTS WERE PREPARED OR APPROVED BY ME, AND THAT I AM A DULY LICENSED PROFESSIONAL ENGINEER UNDER THE LAWS OF THE STATE OF MARYLAND, LICENSE NO. 16019, EXPIRATION DATE: 5/8/2010.

STATE OF MARYLAND — G. LEWIGHT LITTLE — REGISTERED PROFESSIONAL ENGINEER

LITTLE & ASSOCIATES, INC.
ENGINEERS~~LAND PLANNERS~~SURVEYORS
1055 TAYLOR AVENUE, SUITE 307
TOWSON, MARYLAND 21286
PHONE: (410)296-1636 FAX: (410)296-1639

OWNER/DEVELOPER:
KIMBERLY HOMES
ELLICOTT PROPERTIES, LLC.
P.O. BOX 6194
BALTIMORE, MARYLAND, 21231
(410) 522-4987

	BY	NO.	REVISION	DATE
DES: AMK				
DRN: PFS				
CHK: AMK				
DATE: 1/23/2009				

FINAL ROAD CONSTRUCTION PLANS

STORM DRAIN PROFILES
F-09-070
DEBRA COURT
LOTS 1 - 12

A RESUBDIVISION OF LOT 80, SECT. 3 GLEN BROOK (P 918);
AND SUBDIVISION OF PARCELS 812 & 1119

ELECTION DISTRICT 2 — HOWARD COUNTY, MD
SCALE: AS SHOWN — M 24 G 2,3 P 918,812,1119
PRIOR PLANS: P-08-003, S-04-02, — OCTOBER 15, 2009
PLAT 8/92 & 4567 — SHEET 8 OF 18

"AS-BUILT"

F-09-070

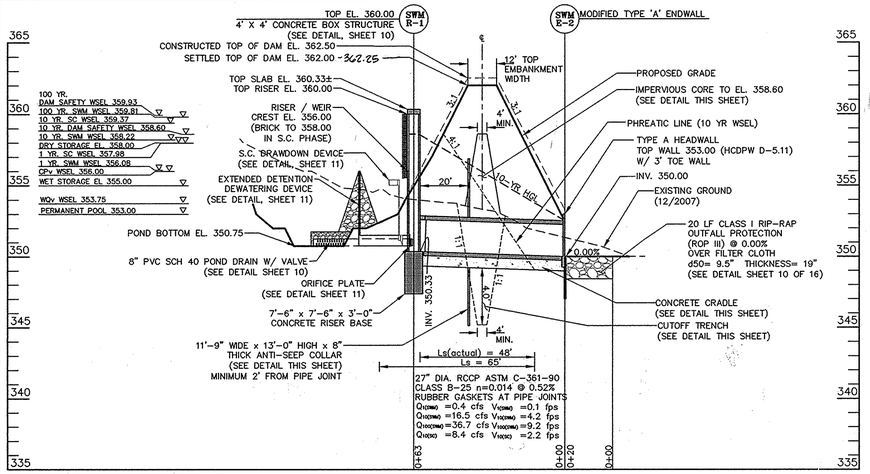

PRINCIPAL SPILLWAY PROFILE – SWM POND #1

SCALE: 1"=30' (HORZ.)
1"= 3' (VERT.)

STORMWATER MANAGEMENT RESERVATION NO. 1

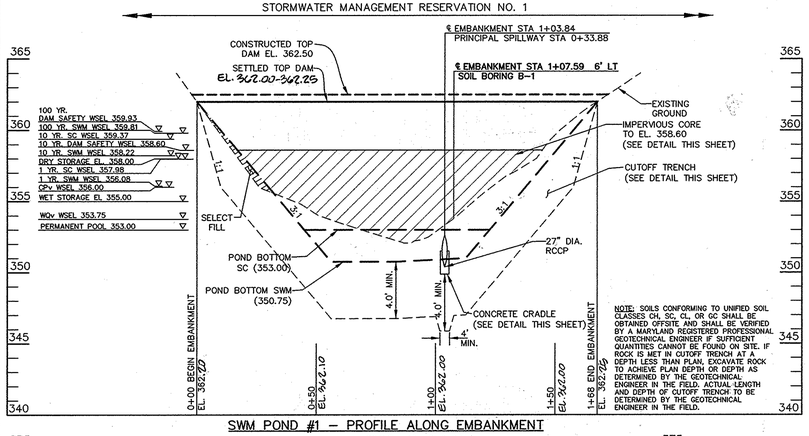

NOTE: SOILS CONFORMING TO UNIFIED SOIL CLASSES GH, SC, CL, OR GC SHALL BE OBTAINED OFFSITE AND SHALL BE VERIFIED BY A MARYLAND REGISTERED PROFESSIONAL GEOTECHNICAL ENGINEER IF SUFFICIENT QUANTITIES CANNOT BE FOUND ON SITE. IF ROCK IS MET IN CUTOFF TRENCH AT A DEPTH LESS THAN PLAN, EXCAVATE ROCK TO ACHIEVE PLAN DEPTH OR DEPTH AS DETERMINED BY THE GEOTECHNICAL ENGINEER IN THE FIELD. ACTUAL LENGTH AND DEPTH OF CUTOFF TRENCH TO BE DETERMINED BY THE GEOTECHNICAL ENGINEER IN THE FIELD.

SWM POND #1 – PROFILE ALONG EMBANKMENT

SCALE: 1"=30' (HORZ.)
1"=3' (VERT.)

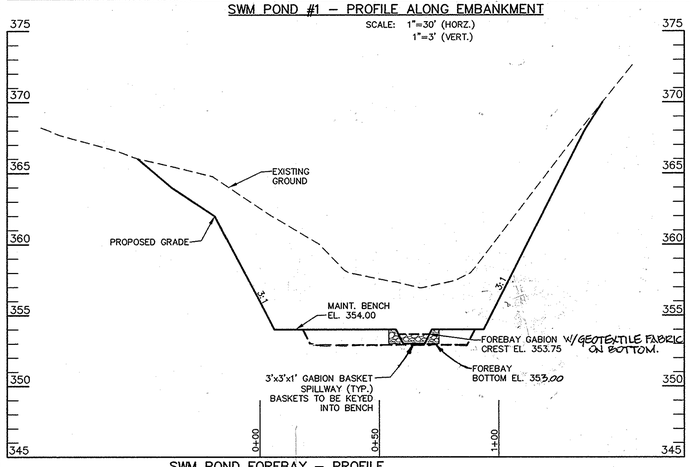

SWM POND FOREBAY – PROFILE

SCALE: 1"=30' (HORZ.)
1"=3' (VERT.)

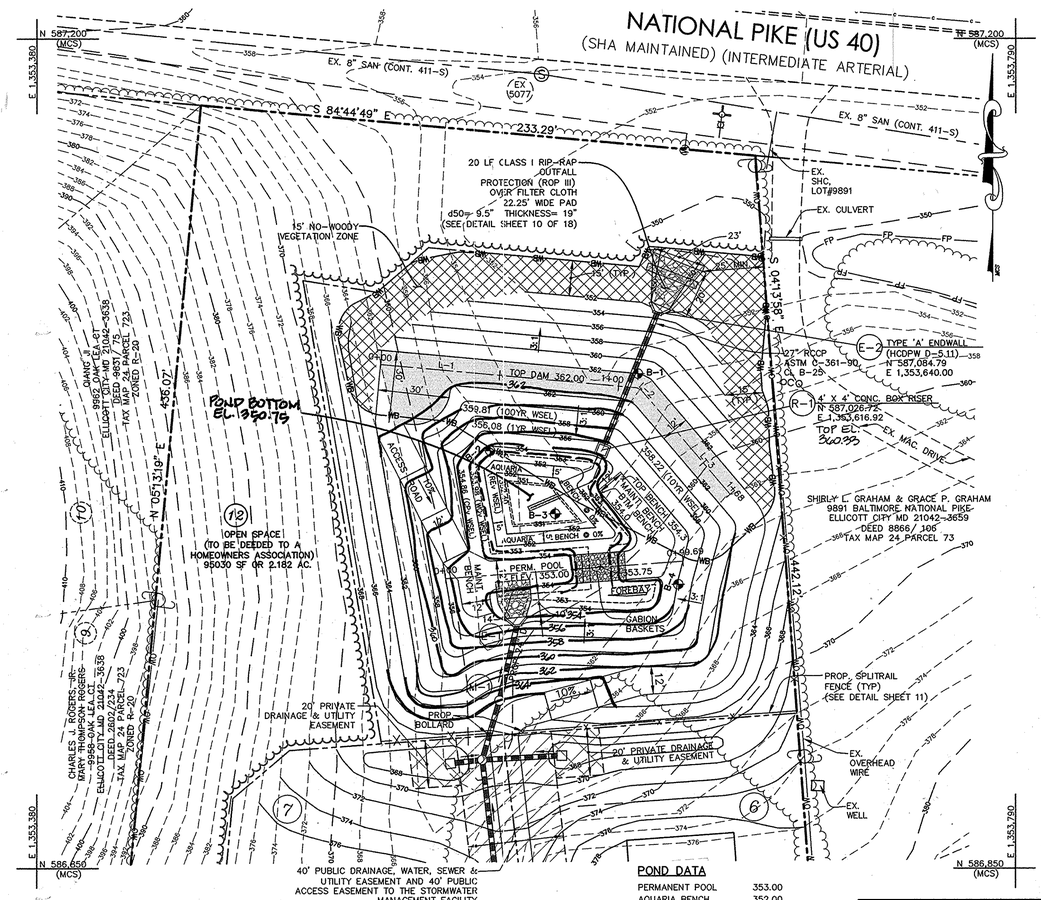

STORMWATER MANAGEMENT POND NO. 1

SCALE: 1"=30'

POND DATA

PERMANENT POOL	353.00
AQUARIA BENCH	352.00
FOREBAY STORAGE	353.00 – 353.75 (582 CF)

EMBANKMENT CENTER LINE TABLE

LINE	LENGTH	BEARING
L-1	107.70	S84°44'49"E
L-2	2.19	S62°27'00"E
L-3	57.54	S40°09'10"E

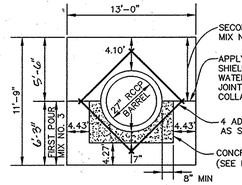

ANTI-SEEP COLLAR DETAILS – RISER NO. 1

NOT TO SCALE

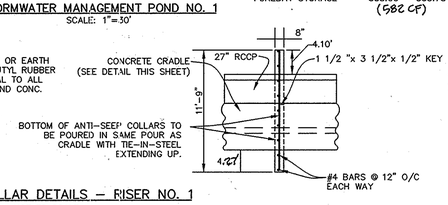

VERTICAL PROJECTION = 4.00'
MIN. SPACING = 5(V) =20.00'
MAX. SPACING =14(V) =56.00'

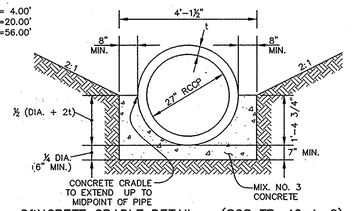

CONCRETE CRADLE DETAIL – (SCS TR-46 A-2) SWM POND NO. 1

NOT TO SCALE

MAINTENANCE SCHEDULE FOR PRIVATELY OWNED AND JOINTLY MAINTAINED STORMWATER PONDS

ROUTINE MAINTENANCE (BY HOA):

1. FACILITY SHALL BE INSPECTED ANNUALLY AND AFTER MAJOR STORMS. INSPECTIONS SHALL BE PERFORMED DURING WET WEATHER TO DETERMINE IF THE POND IS FUNCTIONING PROPERLY.
2. TOP AND SIDE SLOPES OF THE EMBANKMENT SHALL BE MOWED A MINIMUM OF TWO (2) TIMES PER YEAR, ONCE IN JUNE AND ONCE IN SEPTEMBER. OTHER SIDE SLOPES AND MAINTENANCE ACCESS SHALL BE MOWED AS NEEDED.
3. DEBRIS AND LITTER SHALL BE REMOVED DURING REGULAR MOWING OPERATIONS AND AS NEEDED.
4. VISIBLE SIGNS OF EROSION IN THE POND AS WELL AS THE RIPRAP OR GABION OUTLET AREA SHALL BE REPAIRED AS SOON AS IT IS NOTICED.

NON-ROUTINE MAINTENANCE (BY COUNTY):

1. STRUCUTRAL COMPONENTS OF THE POND SUCH AS THE DAM, THE RISER, AND THE PIPES SHALL BE REPAIRED UPON THE DETECTION OF ANY DAMAGE. THE COMPONENTS SHALL BE INSPECTED DURING ROUTINE MAINTENANCE OPERATIONS.
2. SEDIMENT SHALL BE REMOVED FROM THE POND, AND FOREBAY, NO LATER THAN WHEN THE CAPACITY OF THE POND, OR FOREBAY, IS HALF FULL OF SEDIMENT, OR, WHEN DEEMED NECESSARY FOR AESTHETIC REASONS, UPON APPROVAL FROM THE DEPARTMENT OF PUBLIC WORKS.

OPERATION, MAINTENANCE AND INSPECTION

INSPECTION OF THE POND(S) SHOWN HEREON SHALL BE PERFORMED AT LEAST ANNUALLY, IN ACCORDANCE WITH THE CHECKLIST AND REQIREMENTS CONTAINED WITHIN USDA, SCS "STANDARDS AND SPECIFICATIONS FOR PONDS" (MD-378). THE POND OWNER(S) AND ANY HEIRS, SUCCESSORS, OR ASSIGNS SHALL BE RESPONSIBLE FOR THE SAFETY OF THE POND AND THE CONTINUED OPERATION, SURVEILLANCE, INSPECTION, AND MAINTENANCE THEREOF. THE POND OWNER(S) SHALL PROMPTLY NOTIFY THE SOIL CONSERVATION DISTRICT OF ANY UNUSUAL OBSERVATIONS THAT MAY BE INDICATIONS OF DISTRESS SUCH AS EXCESSIVE SEEPAGE, TURBID SEEPAGE, SLIDING OR SLUMPING.

CONSULTANTS CERTIFICATION

"I CERTIFY THAT THIS PLAN FOR POND CONSTRUCTION, EROSION AND SEDIMENT CONTROL REPRESENTS A PRACTICAL AND WORKABLE PLAN BASED ON MY PERSONAL KNOWLEDGE OF THE SITE CONDITIONS. THIS PLAN WAS PREPARED IN ACCORDANCE WITH THE REQUIREMENTS OF THE HOWARD SOIL CONSERVATION DISTRICT. I HAVE NOTIFIED THE DEVELOPER THE HE/SHE MUST ENGAGE A REGISTERED PROFESSIONAL ENGINEER TO SUPERVISE POND CONSTRUCTION AND PROVIDE THE HOWARD SOIL CONSERVATION DISTRICT WITH AN "AS-BUILT" PLAN OF THE POND WITHIN 30 DAYS OF COMPLETION."

SIGNATURE — DATE 10/21/09

G DWIGHT LITTLE, JR. — PRINT NAME — 16019 — MD. LICENSE NO.

OWNER'S/ DEVELOPER'S CERTIFICATION:

"I/WE CERTIFY THAT ALL DEVELOPMENT AND/OR CONSTRUCTION WILL BE DONE ACCORDING TO THESE PLANS, AND THAT ANY RESPONSIBLE PERSONNEL INVOLVED IN THE CONSTRUCTION PROJECT WILL HAVE A CERTIFICATE OF ATTENDANCE AT A DEPARTMENT OF THE ENVIRONMENT APPROVED TRAINING PROGRAM FOR THE CONTROL OF SEDIMENT AND EROSION BEFORE BEGINNING THE PROJECT. I SHALL ENGAGE A PROFESSIONAL ENGINEER TO SUPERVISE POND CONSTRUCTION AND PROVIDE THE HOWARD SOIL CONSERVATION DISTRICT WITH AN "AS-BUILT" PLAN OF THE POND WITHIN 30 DAYS OF COMPLETION. I ALSO AUTHORIZE PERIODIC ON-SITE INSPECTION BY THE HOWARD SOIL CONSERVATION DISTRICT."

SIGNATURE OF OWNER/ DEVELOPER — DATE 10-21-2009

KIMBERLY HOMES ELLICOTT PROPERTIES LLC c/o SCOTT WADE — PRINT NAME

HOWARD SOIL CONSERVATION DISTRICT:

THESE PLANS FOR SMALL POND CONSTRUCTION, SOIL EROSION AND SEDIMENT CONTROL MEET THE REQUIREMENTS OF THE HOWARD SOIL CONSERVATION DISTRICT.

HOWARD SCD — DATE 11/2/09

DEPARTMENT OF PUBLIC WORKS
HOWARD COUNTY, MARYLAND

CHIEF, BUREAU OF HIGHWAYS — DATE 11-9-09

DEPARTMENT OF PLANNING & ZONING
HOWARD COUNTY, MARYLAND

CHIEF, DIVISION OF LAND DEVELOPMENT — DATE 11-6-09

CHIEF, DEVELOPMENT ENGINEERING DIVISION — DATE 11/6/09

PROFESSIONAL CERTIFICATION

I HEREBY CERTIFY THAT THESE DOCUMENTS WERE PREPARED OR APPROVED BY ME, AND THAT I AM A DULY LICENSED PROFESSIONAL ENGINEER UNDER THE LAWS OF THE STATE OF MARYLAND, LICENSE NO. 16019 , EXPIRATION DATE: 5/8/2010.

STATE OF MARYLAND — G. DWIGHT LITTLE, JR. — 16019 — REGISTERED PROFESSIONAL ENGINEER

SUMMARY OF GENERAL STORAGE REQUIREMENTS – DA #1 – 1.22 AC.

STEP	REQUIREMENTS	VOLUME REQUIRED (AC-FT)	VOLUME PROVIDED (AC-FT)	NOTES
1	WATER QUALITY VOLUME (WQv)	0.0325 (1,416 C.F.)	0.0344 (1,500 C.F.)	BIORETENTION
2	RECHARGE VOLUME (Rev)	0.0084 OR 0.0950 AC	0.0096 AC OR 0.0950 AC	UNDERGROUND STONE CHAMBER
3	CHANNEL PROTECTION VOLUME (Cpv)	N/A	N/A	NOT REQUIRED –
4	OVERBANK FLOOD PROTECTION VOLUME (Qp100)	N/A	N/A	NOT REQUIRED –
5	EXTREME FLOOD VOLUME (Qf100)	N/A	N/A	NOT REQUIRED –

BIORETENTION AREAS PROPOSED TO TREAT THE WQv AND Rev FOR DA #1

SUMMARY OF GENERAL STORAGE REQUIREMENTS – DA #2 – 5.42 AC.

STEP	REQUIREMENTS	VOLUME REQUIRED (AC-FT)	VOLUME PROVIDED (AC-FT)	NOTES
1	WATER QUALITY VOLUME (WQv)	0.1017 (4,430 C.F.)	0.1057 (4,603 C.F.)	MICROPOOL EXTENDED DETENTION POND
2	RECHARGE VOLUME (Rev)	0.0294 OR 0.3250 AC	0.0298 OR 0.3250 AC	UNDERGROUND STONE CHAMBER
3	CHANNEL PROTECTION VOLUME (Cpv)	0.2339 (10,187 C.F.)	0.2419 (10,536 C.F.)	MICROPOOL EXTENDED DETENTION POND
4	OVERBANK FLOOD PROTECTION VOLUME (Qp100)	0.5594 (24,368 C.F.)	0.5960 (25,961 C.F.)	MICROPOOL EXTENDED DETENTION POND
5	EXTREME FLOOD VOLUME (Qf100)	0.8529 (37,153 C.F.)	0.8826 (38,446 C.F.)	MICROPOOL EXTENDED DETENTION POND

THE CLASS 'A' MICROPOOL EXTENDED DETENTION POND WILL PROVIDE WQv, Rev, AND Cpv FOR DA #2, AND MANAGE THE 10 YR. & 100 YR. STORM EVENTS, THEREFORE THERE IS NO POTENTIAL FOR DETRIMENTAL EFFECTS TO DOWNSTREAM PROPERTIES.

SUMMARY OF GENERAL STORAGE REQUIREMENTS – DA #3 – 0.18 AC.

STEP	REQUIREMENTS	VOLUME REQUIRED (AC-FT)	VOLUME PROVIDED (AC-FT)	NOTES
1	WATER QUALITY VOLUME (WQv)	N/A	N/A	NOT REQUIRED –
2	RECHARGE VOLUME (Rev)	N/A	N/A	NOT REQUIRED –
3	CHANNEL PROTECTION VOLUME (Cpv)	N/A	N/A	NOT REQUIRED –
4	OVERBANK FLOOD PROTECTION VOLUME (Qp100)	N/A	N/A	NOT REQUIRED –
5	EXTREME FLOOD VOLUME (Qf100)	N/A	N/A	NOT REQUIRED –

NO PROPOSED TREATMENT FACILITIES ARE PROVIDED FOR DA #3

CONCLUSIONS AND RECOMMENDATIONS

STORMWATER MANAGEMENT FOR THIS SITE CAN BE PROVIDED BY USING: A MICROPOOL EXTENDED DETENTION POND TO PROVIDE CHANNEL PROTECTION (Cpv), WATER QUALITY (WQv) AND MANAGE THE 10 YR. AND 100 YR. STORM EVENTS; AND AN UNDERGROUND STONE CHAMBER TO PROVIDE GROUND WATER RECHARGE (Rev).

DISCHARGE SUMMARY TABLE

Design Point	Condition @ Study Point	Q1-yr (cfs)	Q10-yr (cfs)	Q100-yr (cfs)
1	EXISTING	0.48	4.43	8.80
1	DEVELOPED	1.87	5.86	9.51
2	EXISTING	6.20	30.30	55.40
2	DEVELOPED	3.30	24.50	52.00
3	EXISTING	0.55	3.39	6.62
3	DEVELOPED	0.48	1.15	1.73

FACILITY SUMMARY TABLE AREA 001

BMP No.	Type	Detention Time	1-yr WSEL	10-yr WSEL	100-yr WSEL
2	BIORETENTION AREA	N/A	N/A	N/A	N/A

FACILITY SUMMARY TABLE AREA 002

Pond No.	Type	Detention Time	1-yr WSEL	10-yr WSEL	100-yr WSEL
1	MICROPOOL EXTENDED DETENTION POND	22.29 hrs	356.08	358.22	359.81

FACILITY SUMMARY TABLE AREA 003

Pond No.	Type	Detention Time	1-yr WSEL	10-yr WSEL	100-yr WSEL
N/A	N/A	N/A	N/A	N/A	N/A

NOTE:
1. THIS STORMWATER MANAGEMENT FACILITY WILL HAVE A DAM HAZARD CLASSIFICATION OF 'A'.
2. THIS SITE IS LOCATED WITHIN THE LITTLE PATUXENT WATERSHED.

I HEREBY CERTIFY, BY MY SEAL, THAT THE FACILITIES SHOWN ON THIS PLAN WERE CONSTRUCTED AS SHOWN ON THIS "AS-BUILT" PLAN AND MEET THE APPROVED PLANS AND SPECIFICATIONS.

STATE OF MARYLAND — G. DWIGHT LITTLE, JR. — 16019 — REGISTERED PROFESSIONAL ENGINEER

P.E. 16019

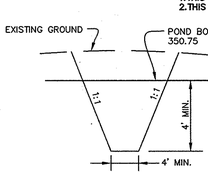

CUTOFF TRENCH DETAIL – POND NO. 1

NOT TO SCALE

IF UNSUITABLE (PERVIOUS) MATERIAL IS ENCOUNTERED AT TIME OF CUTOFF TRENCH INSTALLATION DEEPER THAN FOUR (4) FEET BELOW POND BOTTOM, IT WILL BE NECESSARY TO EXTEND THE CUTOFF TRENCH DOWN UNTIL SUITABLE MATERIAL IS ENCOUNTERED AS DETERMINED BY A GEOTECHNICAL ENGINEER. ACTUAL LENGTH, AND DEPTH OF CUTOFF TRENCH TO BE DETERMINED BY THE GEOTECHNICAL ENGINEER IN THE FIELD. FILL MATERIAL FOR THE CUTOFF TRENCH AND IMPERVIOUS CORE SHALL CONFORM TO UNIFIED SOIL CLASSIFICATION GC, SC, CH OR CL.

LITTLE & ASSOCIATES, INC.
ENGINEERS~~LAND PLANNERS~~SURVEYORS
1055 TAYLOR AVENUE, SUITE 307
TOWSON, MARYLAND 21286
PHONE: (410)296-1636 FAX: (410)296-1639

OWNER/DEVELOPER:
KIMBERLY HOMES
ELLICOTT PROPERTIES, LLC.
P.O. BOX 6194
BALTIMORE, MARYLAND, 21231
(410) 522-4987

DES: AMK					
DRN: PFS					
CHK: AMK					
DATE: 1/23/09	BY	NO.	REVISION		DATE

FINAL ROAD CONSTRUCTION PLANS

STORMWATER MANAGEMENT

F-09-070

DEBRA COURT

LOTS 1 – 12

A RESUBDIVISION OF LOT 80, SECT. 3 GLEN BROOK (P 918); AND SUBDIVISION OF PARCELS 812 & 1119

ELECTION DISTRICT 2 — HOWARD COUNTY, MD
SCALE: AS SHOWN — M 24 G 2,3 P 918,812,1119
PRIOR PLANS: F-08-003, S-04-02, — OCTOBER 15, 2009
PLAT 8/92 & 4567 — SHEET 9 OF 18

"AS-BUILT"

F-09-070

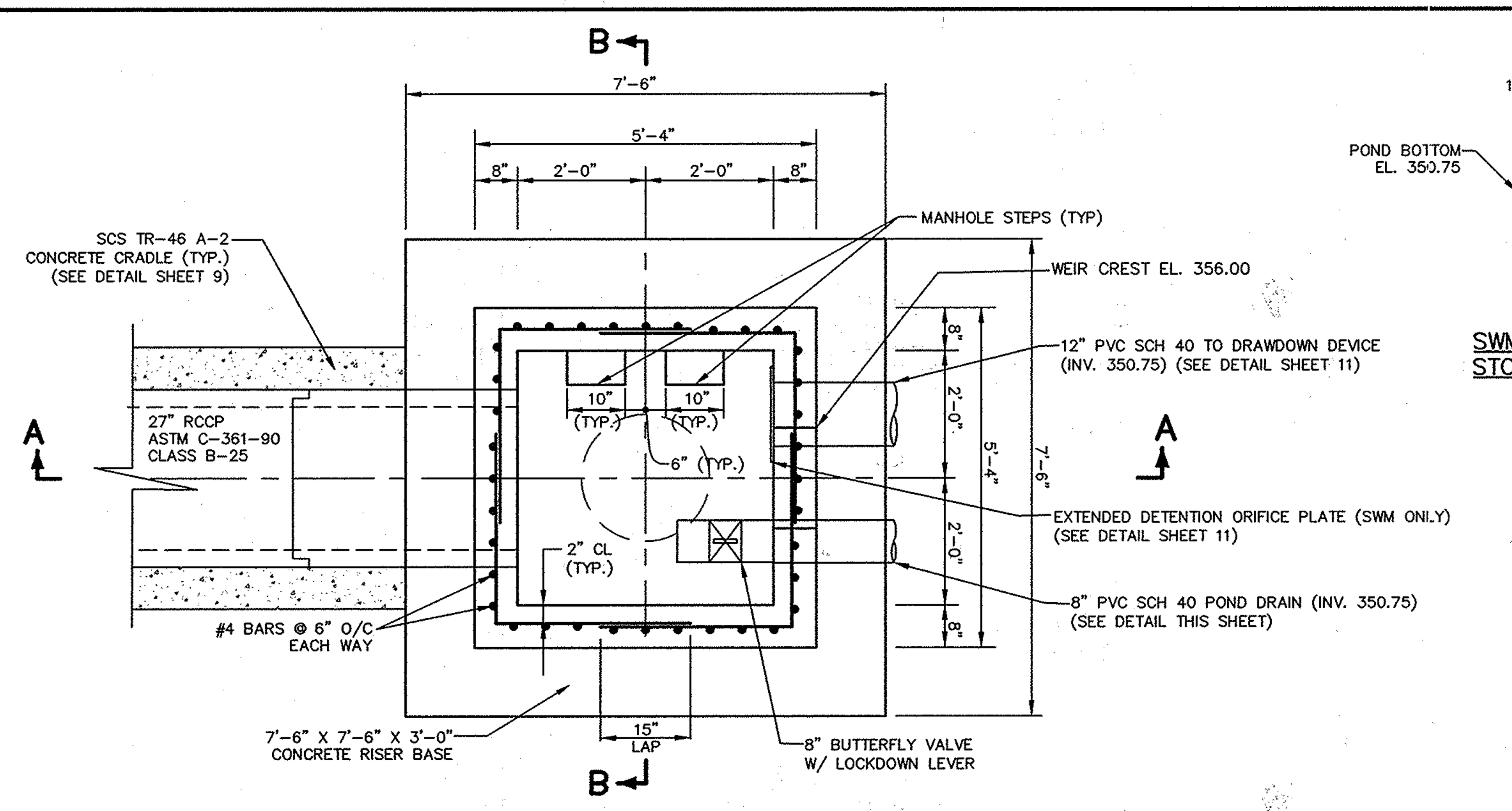

PLAN

SCALE: 1"=2'

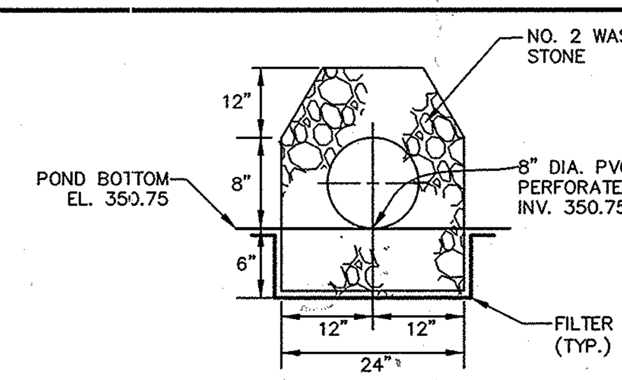

SWM POND NO. 1 POND DRAIN STONE FILTER BEDDING DETAIL

NOT TO SCALE

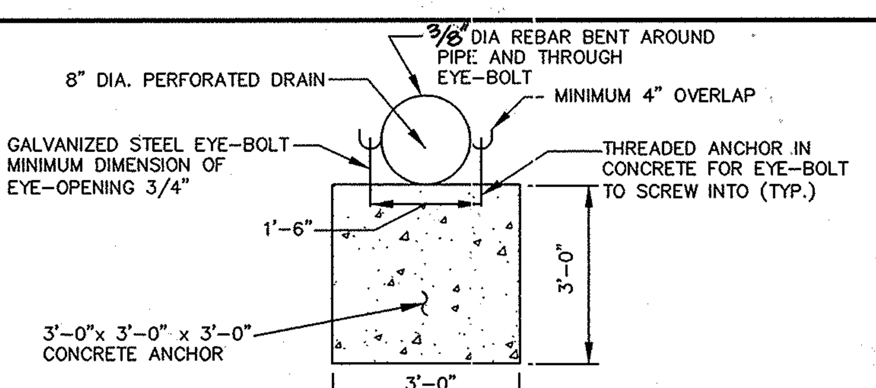

SWM POND NO. 1 CONCRETE ANCHOR FOR POND DRAIN

NOT TO SCALE

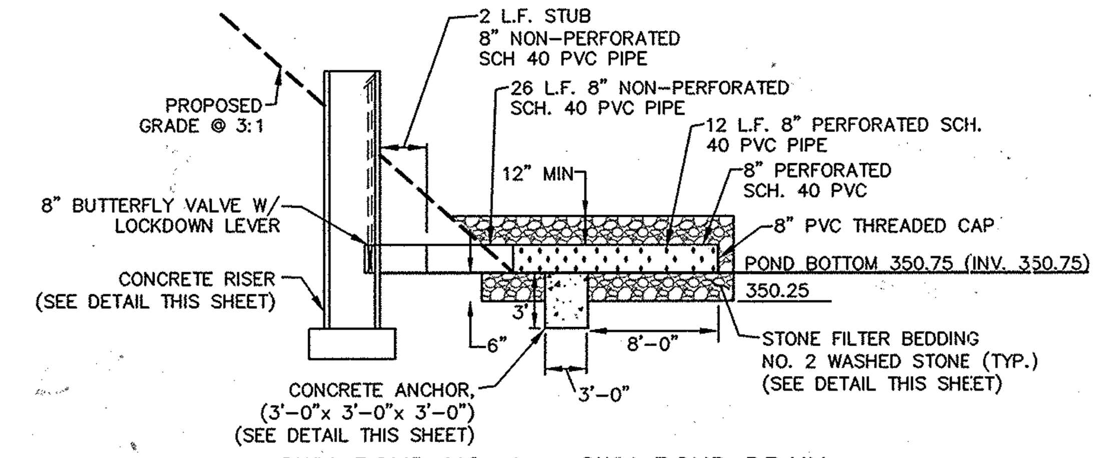

SWM POND NO. 1 - SWM POND DRAIN

NOT TO SCALE

DETAIL 27 - ROCK OUTLET PROTECTION III

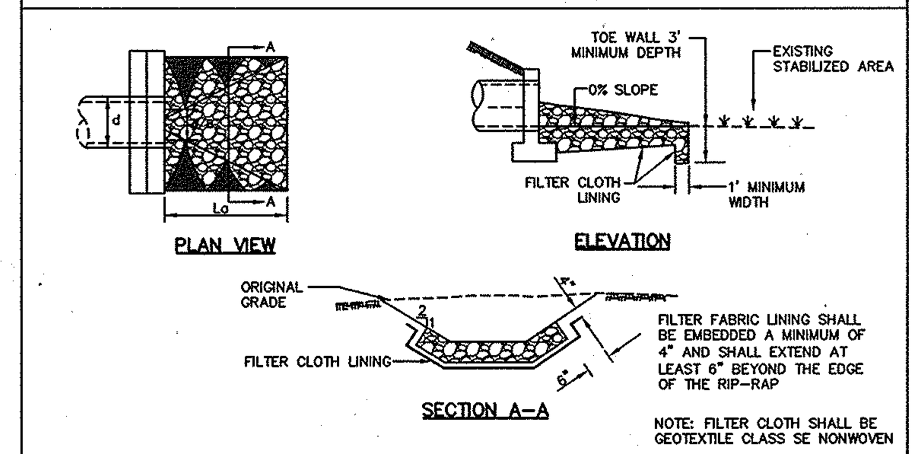

CONSTRUCTION SPECIFICATIONS

1. THE SUBGRADE FOR THE FILTER, RIP-RAP, OR GABION SHALL BE PREPARED TO THE REQUIRED LINES AND GRADES. ANY FILL REQUIRED IN THE SUBGRADE SHALL BE COMPACTED TO A DENSITY OF APPROXIMATELY THAT OF THE SURROUNDING UNDISTURBED MATERIAL.
2. THE ROCK OR GRAVEL SHALL CONFORM TO THE SPECIFIED GRADING LIMITS WHEN INSTALLED RESPECTIVELY IN THE RIP-RAP OR FILTER.
3. GEOTEXTILE SHALL BE PROTECTED FROM PUNCHING, CUTTING, OR TEARING. ANY DAMAGE OTHER THAN AN OCCASIONAL SMALL HOLE SHALL BE REPAIRED BY PLACING ANOTHER PIECE OF GEOTEXTILE OVER THE DAMAGED PART OR BY COMPLETELY REPLACING THE GEOTEXTILE. ALL OVERLAPS WHETHER FOR REPAIRS OR FOR JOINING TWO PIECES OF GEOTEXTILE SHALL BE A MINIMUM OF ONE FOOT.
4. STONE FOR THE RIP-RAP OR GABION OUTLETS MAY BE PLACED BY EQUIPMENT. THEY SHALL BE CONSTRUCTED TO THE FULL COURSE THICKNESS IN ONE OPERATION AND IN SUCH A MANNER AS TO AVOID DISPLACEMENT OF UNDERLYING MATERIALS. THE STONE FOR RIP-RAP OR GABION OUTLETS SHALL BE DELIVERED AND PLACED IN A MANNER THAT WILL ENSURE THAT IT IS REASONABLY HOMOGENEOUS WITH THE SMALLER STONES AND SPALLS FILLING THE VOIDS BETWEEN THE LARGER STONES. RIP-RAP SHALL BE PLACED IN A MANNER TO PREVENT DAMAGE TO THE FILTER BLANKET OR GEOTEXTILE. HAND PLACEMENT WILL BE REQUIRED TO THE EXTENT NECESSARY TO PREVENT DAMAGE TO THE PERMANENT WORKS.
5. THE STONE SHALL BE PLACED SO THAT IT BLENDS IN WITH THE EXISTING GROUND. IF THE STONE IS PLACED TOO HIGH THEN THE FLOW WILL BE FORCED OUT OF THE CHANNEL AND SCOUR ADJACENT TO THE STONE WILL OCCUR.

U.S. DEPARTMENT OF AGRICULTURE SOIL CONSERVATION SERVICE	PAGE F - 18 - 10	MARYLAND DEPARTMENT OF ENVIRONMENT WATER MANAGEMENT ADMINISTRATION

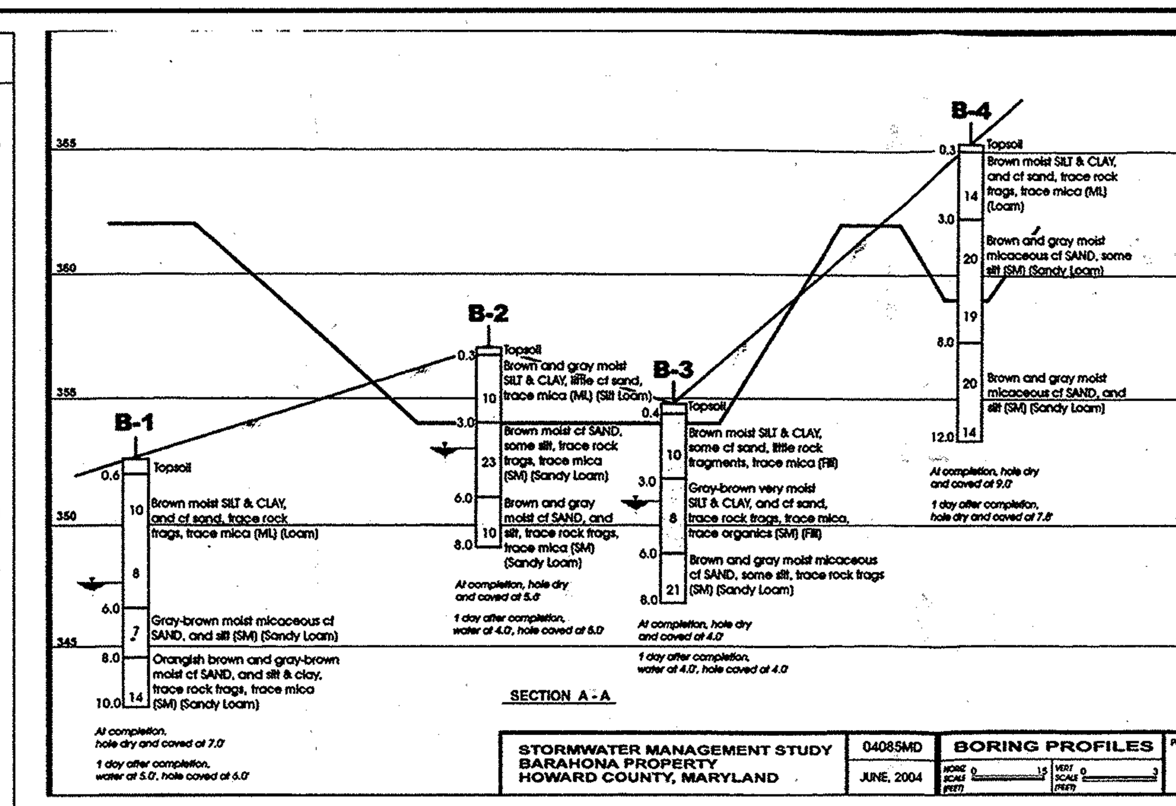

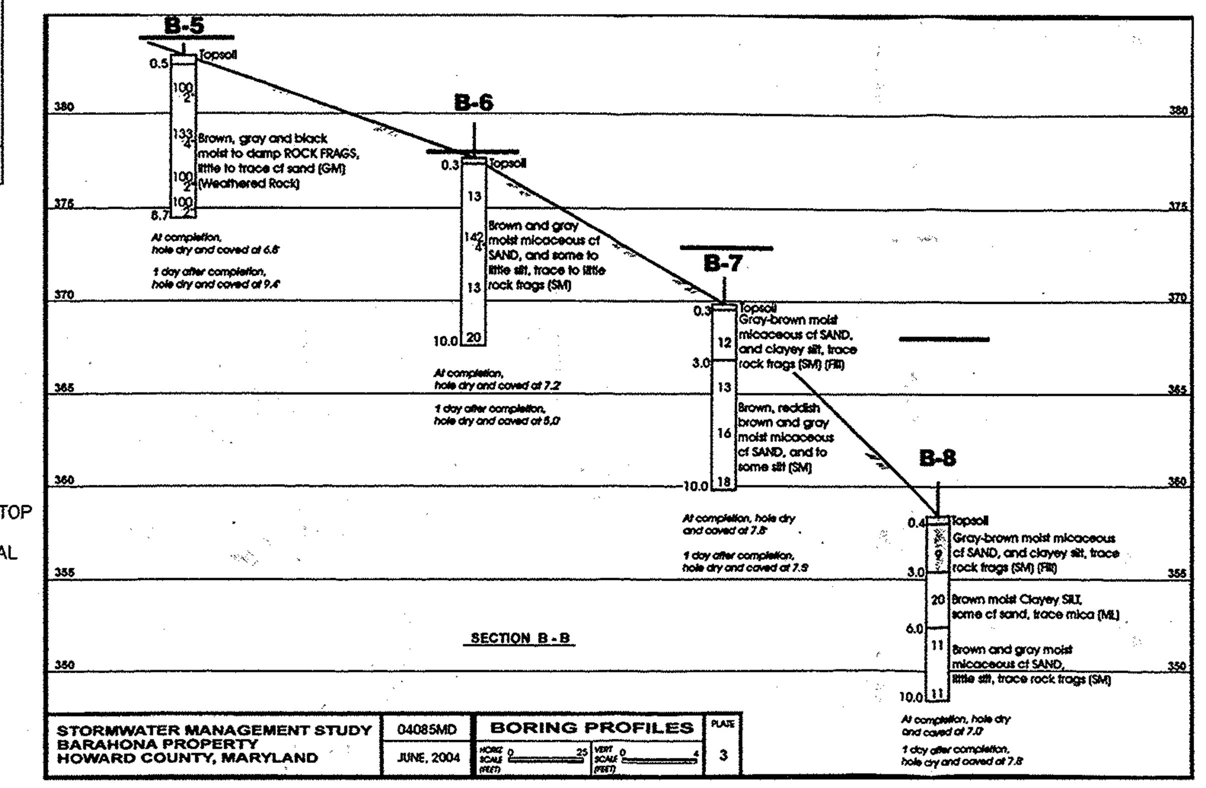

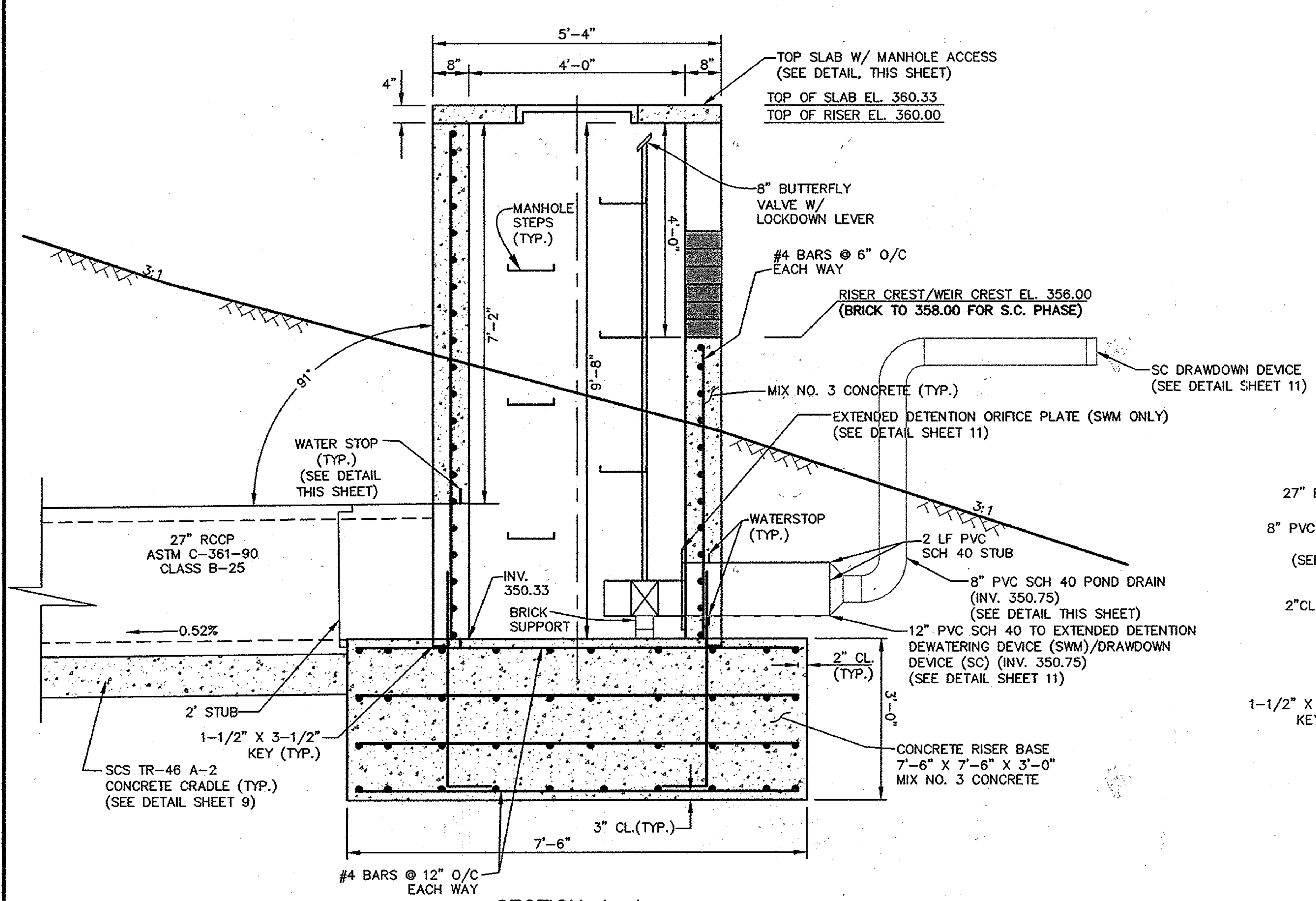

SECTION A-A

SCALE: 1"=2'

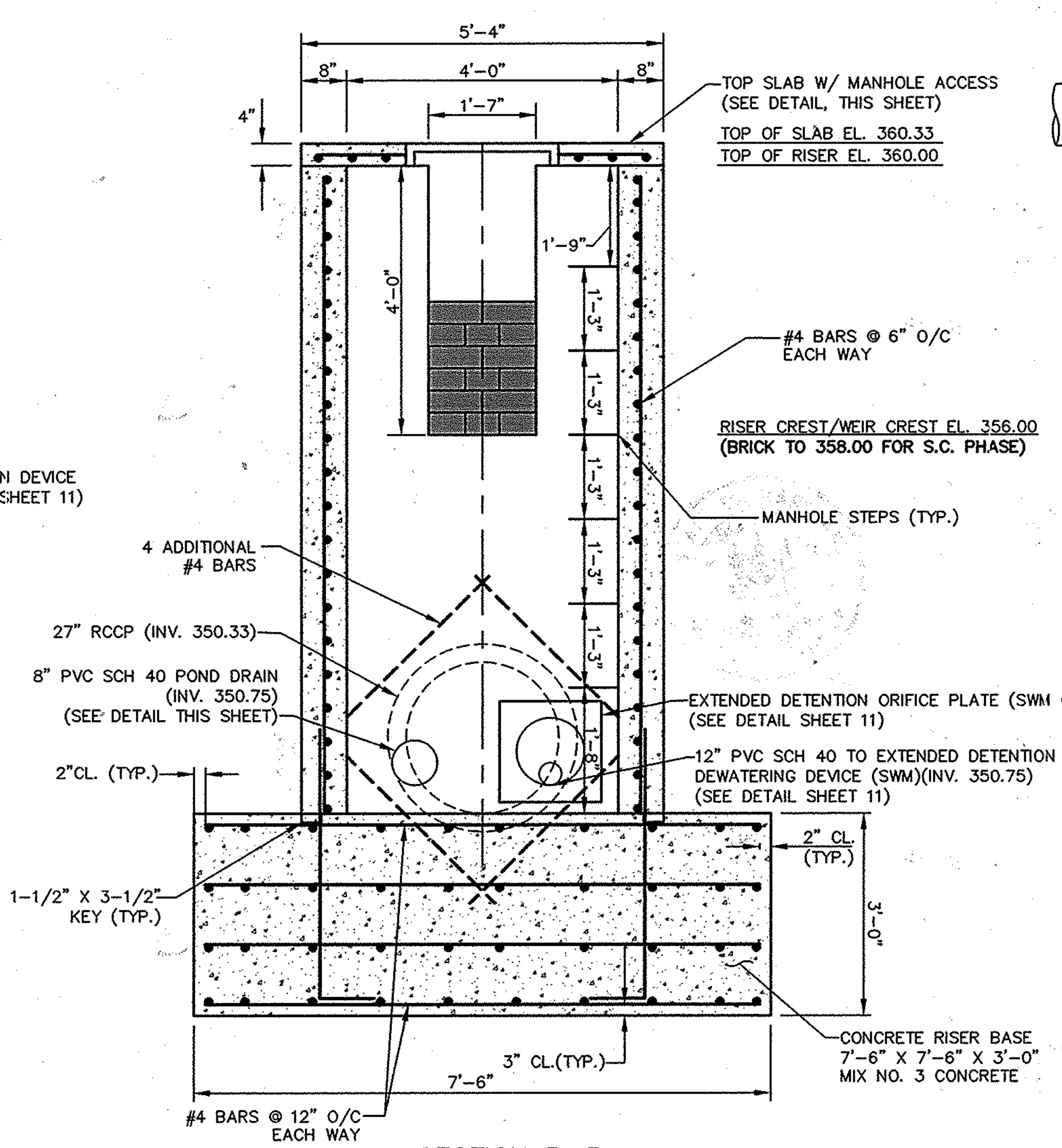

SECTION B-B

SCALE: 1"=2'

POURED-IN-PLACE CONCRETE RISER #1 STRUCTURE DETAILS

A. WATER STOPS TO BE PRESS SEAL GASKET CORPORATION TYPE WS-30 OR APPROVED EQUAL.
B. CONCRETE AND REINFORCING STEEL SHALL MEET HOWARD COUNTY STANDARD SPECIFICATIONS.
C. EXPOSED CONCRETE EDGES TO BE CHAMFERED 1"x1".

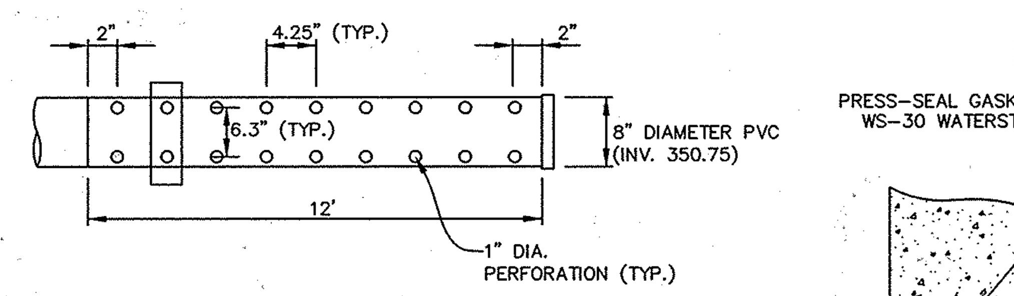

POND DRAIN PIPE PERFORATION DETAIL SWM POND #1

NOT TO SCALE

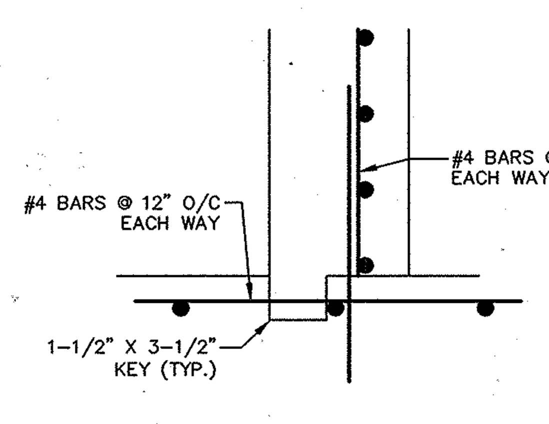

1-1/2" X 3-1/2" KEY JOINT DETAIL

NOT TO SCALE

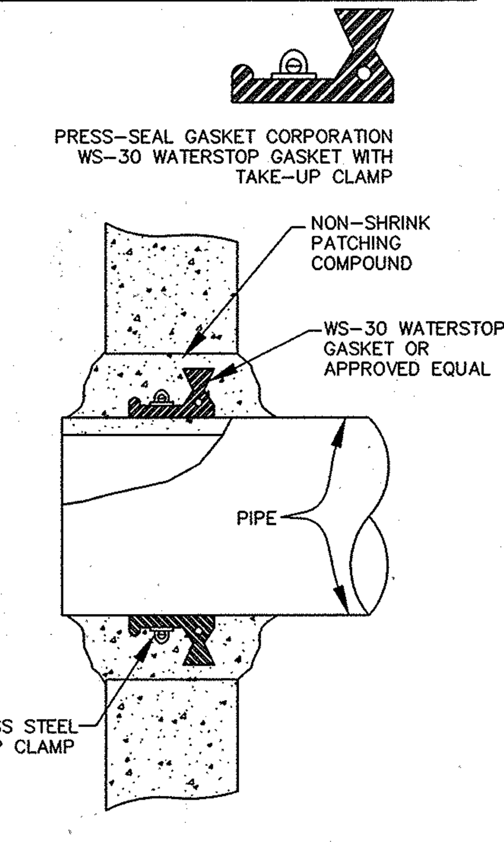

POURED-IN-PLACE WATER STOP DETAIL

NOT TO SCALE

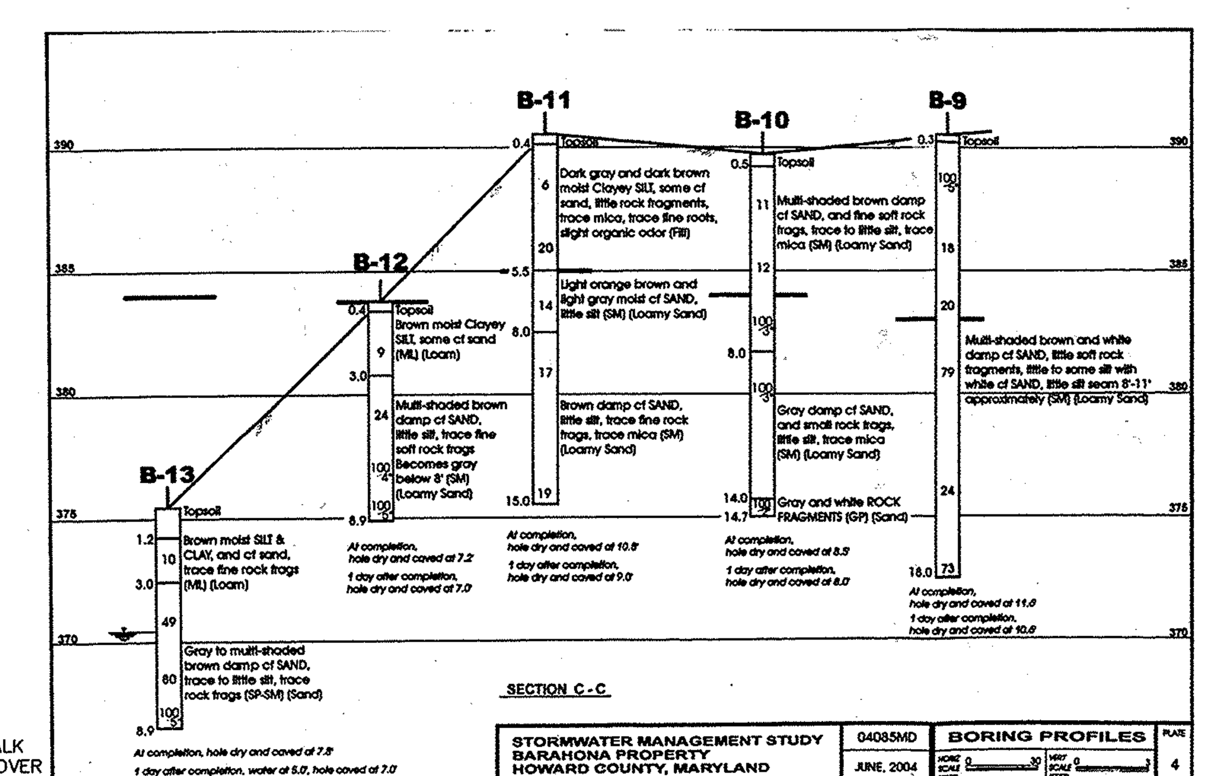

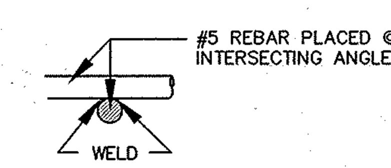

WELDING DETAIL

NOT TO SCALE

NOTES:
1. ALL WELDED CONNECTIONS TO BE SHOP FABRICATED AND HOT-DIPPED GALVANIZED.
2. NO RUST SHALL BE PERMITTED ON BARS TO BE WELDED.

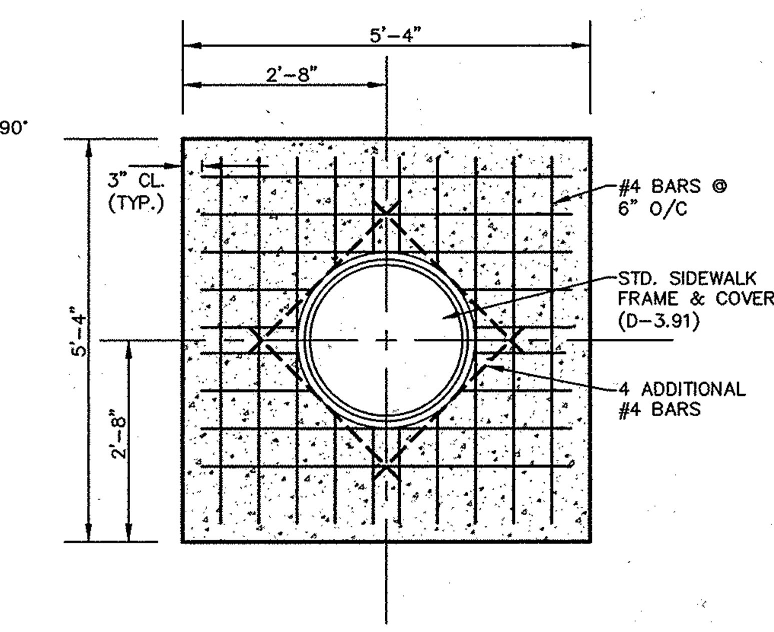

TOP SLAB W/ MANHOLE ACCESS

SCALE: 1"=2'

OPERATION, MAINTENANCE AND INSPECTION

INSPECTION OF THE POND(S) SHOWN HEREON SHALL BE PERFORMED AT LEAST ANNUALLY, IN ACCORDANCE WITH THE CHECKLIST AND REQIREMENTS CONTAINED WITHIN USDA, SCS "STANDARDS AND SPECIFICATIONS FOR PONDS" (MD-378). THE POND OWNER(S) AND ANY HEIRS, SUCCESSORS, OR ASSIGNS SHALL BE RESPONSIBLE FOR THE SAFETY OF THE POND AND THE CONTINUED OPERATION, SURVEILLANCE, INSPECTION, AND MAINTENANCE THEREOF. THE POND OWNER(S) SHALL PROMPTLY NOTIFY THE SOIL CONSERVATION DISTRICT OF ANY UNUSUAL OBSERVATIONS THAT MAY BE INDICATIONS OF DISTRESS SUCH AS EXCESSIVE SEEPAGE, TURBID SEEPAGE, SLIDING OR SLUMPING.

OWNER'S/ DEVELOPER'S CERTIFICATION:

"I/WE CERTIFY THAT ALL DEVELOPMENT AND/OR CONSTRUCTION WILL BE DONE ACCORDING TO THESE PLANS, AND THAT ANY RESPONSIBLE PERSONNEL INVOLVED IN THE CONSTRUCTION PROJECT WILL HAVE A CERTIFICATE OF ATTENDANCE AT A DEPARTMENT OF THE ENVIRONMENT APPROVED TRAINING PROGRAM FOR THE CONTROL OF SEDIMENT AND EROSION BEFORE BEGINNING THE PROJECT. I SHALL ENGAGE A PROFESSIONAL ENGINEER TO SUPERVISE POND CONSTRUCTION AND PROVIDE THE HOWARD SOIL CONSERVATION DISTRICT WITH AN "AS-BUILT" PLAN OF THE POND WITHIN 30 DAYS OF COMPLETION. I ALSO AUTHORIZE PERIODIC ON-SITE INSPECTION BY THE HOWARD SOIL CONSERVATION DISTRICT."

Scott P Wade (signature) 10-21-2009

SIGNATURE OF OWNER/ DEVELOPER DATE

KIMBERLY HOMES ELLICOTT PROPERTIES LLC c/o SCOTT WADE

PRINT NAME

CONSULTANTS CERTIFICATION

"I CERTIFY THAT THIS PLAN FOR POND CONSTRUCTION, EROSION AND SEDIMENT CONTROL REPRESENTS A PRACTICAL AND WORKABLE PLAN BASED ON MY PERSONAL KNOWLEDGE OF THE SITE CONDITIONS. THIS PLAN WAS PREPARED IN ACCORDANCE WITH THE REQUIREMENTS OF THE HOWARD SOIL CONSERVATION DISTRICT. I HAVE NOTIFIED THE DEVELOPER THE HE/SHE MUST ENGAGE A REGISTERED PROFESSIONAL ENGINEER TO SUPERVISE POND CONSTRUCTION AND PROVIDE THE HOWARD SOIL CONSERVATION DISTRICT WITH AN "AS-BUILT" PLAN OF THE POND WITHIN 30 DAYS OF COMPLETION."

(signature) 10/21/09

SIGNATURE DATE

G DWIGHT LITTLE, JR. 16019

PRINT NAME MD. LICENSE NO.

I HEREBY CERTIFY, BY MY SEAL, THAT THE FACILITIES SHOWN ON THIS PLAN WERE CONSTRUCTED AS SHOWN ON THIS 'AS-BUILT' PLAN AND MEET THE APPROVED PLANS AND SPECIFICATIONS.

STATE OF MARYLAND G. DWIGHT LITTLE JR. NO. 16019 REGISTERED PROFESSIONAL ENGINEER — P.E. 16019

MAINTENANCE SCHEDULE FOR PRIVATELY OWNED AND JOINTLY MAINTAINED STORMWATER PONDS

ROUTINE MAINTENANCE (BY HOA):

1. FACILITY SHALL BE INSPECTED ANNUALLY AND AFTER MAJOR STORMS. INSPECTIONS SHALL BE PERFORMED DURING WET WEATHER TO DETERMINE IF THE POND IS FUNCTIONING PROPERLY.
2. TOP AND SIDE SLOPES OF THE EMBANKMENT SHALL BE MOWED A MINIMUM OF TWO (2) TIMES PER YEAR, ONCE IN JUNE AND ONCE IN SEPTEMBER. OTHER SIDE SLOPES AND MAINTENANCE ACCESS SHALL BE MOWED AS NEEDED.
3. DEBRIS AND LITTER SHALL BE REMOVED DURING REGULAR MOWING OPERATIONS AND AS NEEDED.
4. VISIBLE SIGNS OF EROSION IN THE POND AS WELL AS THE RIPRAP OR GABION OUTLET AREA SHALL BE REPAIRED AS SOON AS IT IS NOTICED.

NON-ROUTINE MAINTENANCE (BY COUNTY):

1. STRUCUTRAL COMPONENTS OF THE POND SUCH AS THE DAM, THE RISER, AND THE PIPES SHALL BE REPAIRED UPON THE DETECTION OF ANY DAMAGE. THE COMPONENTS SHALL BE INSPECTED DURING ROUTINE MAINTENANCE OPERATIONS.
2. SEDIMENT SHALL BE REMOVED FROM THE POND, AND FOREBAY, NO LATER THAN WHEN THE CAPACITY OF THE POND, OR FOREBAY, IS HALF FULL OF SEDIMENT, OR, WHEN DEEMED NECESSARY FOR AESTHETIC REASONS, UPON APPROVAL FROM THE DEPARTMENT OF PUBLIC WORKS.

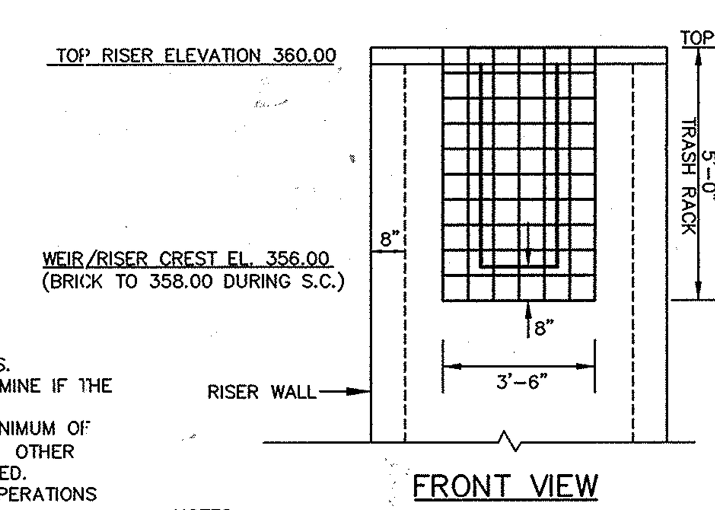

FRONT VIEW

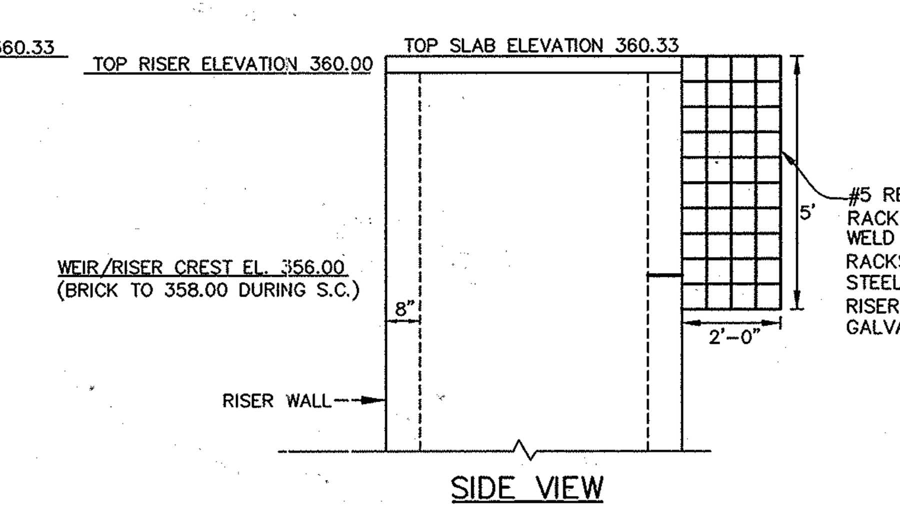

SIDE VIEW

TRASH RACK DETAILS

SCALE: 1"=3'-0"

NOTES:
1. CONTRACTOR SHALL FIELD MEASURE THE STRUCTURE DIMENSIONS FOR EXACT FITTING OF TRASH RACK.
2. HOT DIP GALVANIZE ENTIRE RACK AFTER FABRICATION.
3. PAINT ENTIRE TRASH RACK BATTLESHIP GREY
4. PROVIDE STANDARD MANHOLE STEPS (HCDPW G-5.21) ON INSIDE FACE OF WALL SPACED 1'-3" VERTICALLY.

RISER #1 DETAILS - SWM POND #1

HOWARD SOIL CONSERVATION DISTRICT:
THESE PLANS FOR SMALL POND CONSTRUCTION, SOIL EROSION AND SEDIMENT CONTROL MEET THE REQUIREMENTS OF THE HOWARD SOIL CONSERVATION DISTRICT.

(signature) 11/2/09

HOWARD SCD DATE

DEPARTMENT OF PUBLIC WORKS
HOWARD COUNTY, MARYLAND

(signature) 11-9-09

CHIEF, BUREAU OF HIGHWAYS DATE

DEPARTMENT OF PLANNING & ZONING
HOWARD COUNTY, MARYLAND

(signature) 11-16-09

CHIEF, DIVISION OF LAND DEVELOPMENT DATE

(signature) 11/13/09

CHIEF, DEVELOPMENT ENGINEERING DIVISION DATE

NOTE: DESIGN AND DRAWING BASED ON THE MARYLAND COORDINATE SYSTEM HORIZONTAL -NAD 83/91, VERTICAL-NAVD 88

PROFESSIONAL CERTIFICATION
I HEREBY CERTIFY THAT THESE DOCUMENTS WERE PREPARED OR APPROVED BY ME, AND THAT I AM A DULY LICENSED PROFESSIONAL ENGINEER UNDER THE LAWS OF THE STATE OF MARYLAND, LICENSE NO. 16019 , EXPIRATION DATE: 5/8/2010.

STATE OF MARYLAND G. DWIGHT LITTLE JR. NO. 16019 REGISTERED PROFESSIONAL ENGINEER

LITTLE & ASSOCIATES, INC.
ENGINEERS~~LAND PLANNERS~~SURVEYORS
1055 TAYLOR AVENUE, SUITE 307
TOWSON, MARYLAND 21286
PHONE: (410)296-1636 FAX: (410)296-1639

OWNER/DEVELOPER:
KIMBERLY HOMES
ELLICOTT PROPERTIES, LLC.
P.O. BOX 6194
BALTIMORE, MARYLAND, 21231
(410) 522-4987

	BY	NO.	REVISION	DATE
DES: AMK				
DRN: PFS				
CHK: AMK				
DATE: 1/23/09				

FINAL ROAD CONSTRUCTION PLANS

STORMWATER MANAGEMENT

F-09-070

DEBRA COURT

LOTS 1 - 12

A RESUBDIVISION OF LOT 80, SECT. 3 GLEN BROOK (P 918); AND SUBDIVISION OF PARCELS 812 & 1119

ELECTION DISTRICT 2
SCALE: AS SHOWN
PRIOR PLANS: P-08-003, S-04-02,
PLAT 8/92 & 4567

HOWARD COUNTY, MD
M 24 G 2,3 P 918,812,1119
OCTOBER 15, 2009

"AS-BUILT"

F-09-070

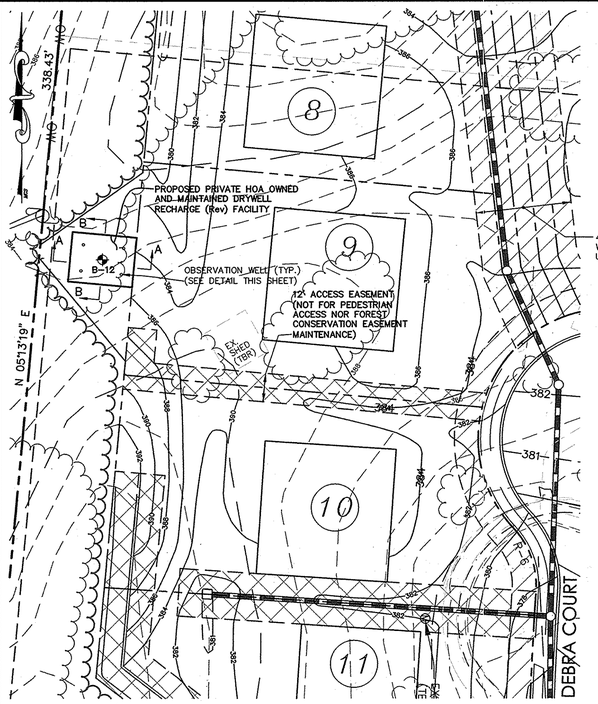

PLAN VIEW – REv RECHARGE TRENCH LOCATED BEHIND LOT 9

SCALE: 1" = 30'

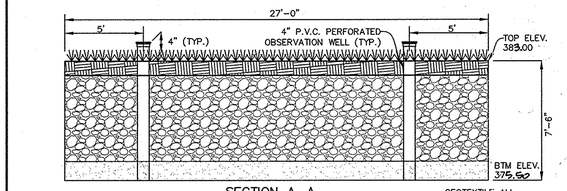

SECTION A–A

GEOTEXTILE ALL SIDES, TOP & BOTTOM, BETWEEN EACH LAYER

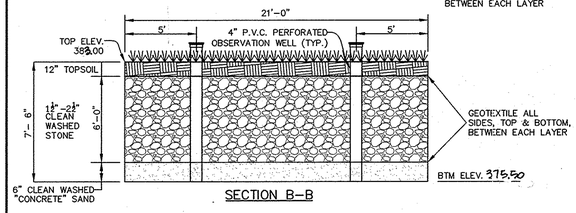

SECTION B–B

AREA 002 – REv RECHARGE TRENCH CROSS–SECTION LOCATED BEHIND LOT 9

NOT TO SCALE

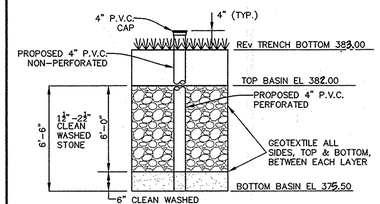

OBSERVATION WELL DETAIL

NOT TO SCALE

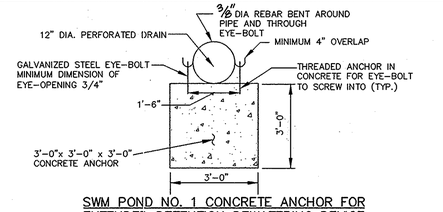

SWM POND NO. 1 CONCRETE ANCHOR FOR EXTENDED DETENTION DEWATERING DEVICE

NOT TO SCALE

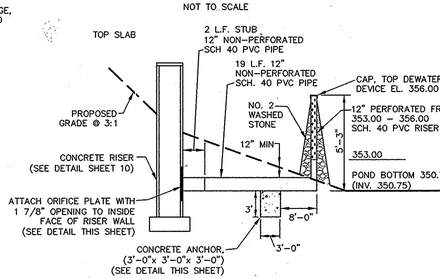

SWM POND NO. 1 – SWM EXTENDED DETENTION DEWATERING DEVICE

NOT TO SCALE

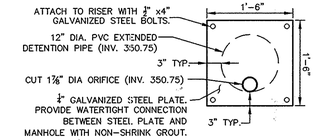

SWM POND NO. 1 – SWM ORIFICE PLATE DETAIL @ RISER #1 FOR EXTENDED DETENTION DEWATERING DEVICE

NOT TO SCALE

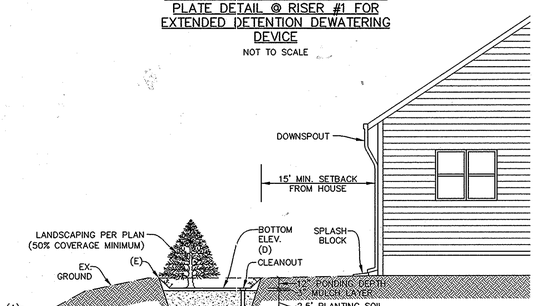

AREA 001 BMP – LOTS 1–4 BIORETENTION FACILITY TYPICAL CROSS SECTION

NOT TO SCALE

BIORETENTION FILTER DATA

BIORETENTION FILTER	A	B	C	D	E	F	G	H	I	J
LOT #1	351.3	351.3	351.3	354.7	355.7	35	1	12.5	15	20
LOT #2	357.3	357.3	357.3	360.7	361.7	22	1	12.5	15	20
LOT #3	377.2	376.2	376.2	379.6	380.6	19	1	12.5	15	20
LOT #4	377.6	378.2	378.2	381.6	382.8	13	1	12.5	15	20

I HEREBY CERTIFY, BY MY SEAL, THAT THE FACILITIES SHOWN ON THIS PLAN WERE CONSTRUCTED AS SHOWN ON THIS "AS-BUILT" PLAN AND MEET THE APPROVED PLANS AND SPECIFICATIONS.

STATE OF MARYLAND · GREGORY LITTLE · 10/20/09 · REGISTERED PROFESSIONAL ENGINEER

P.E. 16019

PRIVATELY OWNED AND JOINTLY MAINTAINED STORMWATER POND OPERATION & MAINTENANCE SCHEDULE

1. THE TOP AND SIDE SLOPES OF THE EMBANKMENT SHALL BE MOWED A MINIMUM OF TWO (2) TIMES PER YEAR, ONCE IN JUNE AND ONCE IN SEPTEMBER. OTHER SIDE SLOPES AND MAINTENANCE ACCESS SHALL BE MOWED AS NEEDED.
2. DEBRIS AND LITTER SHALL BE REMOVED DURING REGULAR MOWING OPERATIONS AND AS NEEDED.
3. WHEN DEEMED NECESSARY FOR AESTHETIC REASONS, AND UPON APPROVAL FROM THE DEPARTMENT OF PUBLIC WORKS, SEDIMENT SHALL BE REMOVED FROM THE POND.

OPERATION, MAINTENANCE AND INSPECTION

INSPECTION OF THE POND(S) SHOWN HEREON SHALL BE PERFORMED AT LEAST ANNUALLY, IN ACCORDANCE WITH THE CHECKLIST AND REQUIREMENTS CONTAINED WITH N USDA, SCS "STANDARDS AND SPECIFICATIONS FOR PONDS" (MD–378). THE POND OWNER(S) AND ANY HEIRS, SUCCESSORS, OR ASSIGNS SHALL BE RESPONSIBLE FOR THE SAFETY OF THE POND AND THE CONTINUED OPERATION, SURVEILLANCE, INSPECTION, AND MAINTENANCE THEREOF. THE POND OWNER(S) SHALL PROMPTLY NOTIFY THE SOIL CONSERVATION DISTRICT OF ANY UNUSUAL OBSERVATIONS THAT MAY BE INDICATIONS OF DISTRESS SUCH AS EXCESSIVE SEEPAGE, TURBID SEEPAGE, SLIDING OR SLUMPING.

THESE SPECIFICATIONS ARE APPROPRIATE TO ALL PONDS WITHIN THE SCOPE OF THE STANDARD FOR PRACTICE MD – 378. ALL REFERENCES TO ASTM AND AASHTO SPECIFICATIONS APPLY TO THE MOST RECENT VERSION.

SITE PREPARATION

AREAS DESIGNATED FOR BORROW AREAS, EMBANKMENT, AND STRUCTURAL WORKS SHALL BE CLEARED, GRUBBED AND STRIPPED OF TOPSOIL AND VEGETATION. TREES, ROOTS AND OTHER OBJECTIONABLE MATERIAL SHALL BE REMOVED. CHANNEL BANKS AND SHARP BREAKS SHALL BE SLOPED TO NO STEEPER THAN 1:1. ALL TREES SHALL BE CLEARED AND GRUBBED WITHIN 15 FEET OF THE TOE OF THE EMBANKMENT.

AREAS TO BE COVERED BY THE RESERVOIR WILL BE CLEARED OF ALL TREES, BRUSH, LOGS, FENCES, RUBBISH AND OTHER OBJECTIONABLE MATERIAL UNLESS OTHERWISE DESIGNATED ON THE PLANS. TREES, BRUSH AND STUMPS SHALL BE CUT APPROXIMATELY LEVEL WITH THE GROUND SURFACE. FOR DRY STORMWATER MANAGEMENT PONDS, A MINIMUM OF A 25 FOOT RADIUS AROUND THE INLET STRUCTURE SHALL BE CLEARED.

ALL CLEARED AND GRUBBED MATERIAL SHALL BE DISPOSED OF OUTSIDE AND BELOW THE LIMITS OF THE DAM AND RESERVOIR AS DIRECTED BY THE OWNER OR HIS REPRESENTATIVE. WHEN SPECIFIED, A SUFFICIENT QUANTITY OF TOPSOIL WILL BE STOCKPILED IN A SUITABLE LOCATION FOR USE ON THE EMBANKMENT AND OTHER DESIGNATED AREAS.

EARTH FILL

MATERIAL – THE FILL MATERIAL SHALL BE TAKEN FROM APPROVED DESIGNATED BORROW AREAS. IT SHALL BE FREE OF ROOTS, STUMPS, WOOD, RUBBISH, STONES GREATER THAN 6", FROZEN OR OTHER OBJECTIONABLE MATERIALS. FILL MATERIAL FOR THE CENTER OF THE EMBANKMENT AND CUT OFF TRENCH SHALL CONFORM TO THE UNIFIED SOIL CLASSIFICATION GC, SC, OH, OR CL AND MUST HAVE AT LEAST 30% PASSING THE #200 SIEVE. CONSIDERATION MAY BE GIVEN TO THE USE OF OTHER MATERIALS IN THE EMBANKMENT IF DESIGNED BY A GEOTECHNICAL ENGINEER. SUCH SPECIAL DESIGNS MUST HAVE CONSTRUCTION SUPERVISED BY A GEOTECHNICAL ENGINEER. MATERIALS USED IN THE OUTER SHELL OF THE EMBANKMENT MUST HAVE THE CAPABILITY TO SUPPORT VEGETATION OF THE QUALITY REQUIRED TO PREVENT EROSION OF THE EMBANKMENT.

PLACEMENT – AREAS ON WHICH FILL IS TO BE PLACED SHALL BE SCARIFIED PRIOR TO PLACEMENT OF FILL. FILL MATERIALS SHALL BE PLACED IN MAXIMUM 8 INCH THICK (BEFORE COMPACTION) LAYERS WHICH ARE TO BE CONTINUOUS OVER THE ENTIRE LENGTH OF THE FILL. THE MOST PERMEABLE BORROW MATERIAL SHALL BE PLACED IN THE DOWNSTREAM PORTIONS OF THE EMBANKMENT. THE PRINCIPAL SPILLWAY MUST BE INSTALLED CONCURRENTLY WITH FILL PLACEMENT AND NOT EXCAVATED INTO THE EMBANKMENT.

COMPACTION – THE MOVEMENT OF THE HAULING AND SPREADING EQUIPMENT OVER THE FILL SHALL BE CONTROLLED SO THAT THE ENTIRE SURFACE OF EACH LIFT SHALL BE TRAVERSED BY NOT LESS THAN ONE TREAD TRACK OF THE EQUIPMENT OR COMPACTION SHALL BE ACHIEVED BY A MINIMUM OF FOUR COMPLETE PASSES OF A SHEEPSFOOT ROLLER, RUBBER TIRED OR VIBRATORY ROLLER. FILL MATERIAL SHALL CONTAIN SUFFICIENT MOISTURE SUCH THAT THE REQUIRED DEGREE OF COMPACTION WILL BE OBTAINED WITH THE EQUIPMENT USED. THE FILL MATERIAL SHALL CONTAIN SUFFICIENT MOISTURE SO THAT IF FORMED INTO A BALL IT WILL NOT CRUMBLE YET NOT BE SO WET THAT WATER CAN BE SQUEEZED OUT.

THE MINIMUM REQUIRED DENSITY SHALL NOT BE LESS THAN 95% OF MAXIMUM DRY DENSITY WITH A MOISTURE CONTENT WITHIN + / – 2% OF THE OPTIMUM. EACH LAYER OF FILL SHALL BE COMPACTED AS NECESSARY TO OBTAIN THAT DENSITY, AND IS TO BE CERTIFIED BY THE ENGINEER AT THE TIME OF CONSTRUCTION. ALL COMPACTION IS TO BE DETERMINED BY AASHTO METHOD T – 99 (STANDARD PROCTOR).

CUT OFF TRENCH – THE CUTOFF TRENCH SHALL BE EXCAVATED INTO IMPERVIOUS MATERIAL ALONG OR PARALLEL TO THE CENTERLINE OF THE EMBANKMENT AS SHOWN ON THE PLANS. THE BOTTOM WIDTH OF THE TRENCH SHALL BE GOVERNED BY THE EQUIPMENT USED FOR EXCAVATION, WITH THE MINIMUM WIDTH BEING FOUR FEET. THE DEPTH SHALL BE AT LEAST FOUR FEET BELOW EXISTING GRADE OR AS SHOWN ON THE PLANS. THE SIDE SLOPES OF THE TRENCH SHALL BE 1 TO 1 OR FLATTER. THE BACKFILL SHALL BE COMPACTED WITH CONSTRUCTION EQUIPMENT, ROLLERS, OR HAND TAMPERS TO ASSURE MAXIMUM DENSITY AND MINIMUM PERMEABILITY.

EMBANKMENT CORE – THE CORE SHALL BE PARALLEL TO CENTERLINE OF THE EMBANKMENT AS SHOWN ON THE PLANS. THE TOP WIDTH OF THE CORE SHALL BE A MINIMUM OF FOUR (4) FEET. THE HEIGHT SHALL EXTEND UP TO AT LEAST THE 10 YEAR WATER ELEVATION OR AS SHOWN ON THE PLANS. THE SIDE SLOPES SHALL BE 1 TO 1 OR FLATTER. THE CORE SHALL BE COMPACTED WITH CONSTRUCTION EQUIPMENT, ROLLERS, OR HAND TAMPERS TO ASSURE MAXIMUM DENSITY AND MINIMUM PERMEABILITY. IN ADDITION, THE CORE SHALL BE PLACED CONCURRENTLY WITH THE OUTER SHELL OF THE EMBANKMENT.

STRUCTURE BACKFILL

BACKFILL ADJACENT TO PIPES OR STRUCTURES SHALL BE OF THE TYPE AND QUALITY CONFORMING TO THAT SPECIFIED FOR THE ADJOINING FILL MATERIAL. THE FILL SHALL BE PLACED IN HORIZONTAL LAYERS NOT TO EXCEED FOUR INCHES IN THICKNESS AND COMPACTED BY HAND TAMPERS OR OTHER MANUALLY DIRECTED COMPACTION EQUIPMENT. THE MATERIAL NEEDS TO FILL COMPLETELY ALL SPACES UNDER AND ADJACENT TO THE PIPE. AT NO TIME DURING THE BACKFILLING OPERATION SHALL DRIVEN EQUIPMENT BE ALLOWED TO OPERATE CLOSER THAN FOUR FEET MEASURED HORIZONTALLY, TO ANY PART OF A STRUCTURE. UNDER NO CIRCUMSTANCES SHALL EQUIPMENT BE DRIVEN OVER ANY PART OF A CONCRETE STRUCTURE OR PIPE, UNLESS THERE IS A COMPACTED FILL OF 24" OR GREATER OVER THE STRUCTURE OR PIPE. STRUCTURE BACKFILL MAY BE FLOWABLE FILL MEETING THE REQUIREMENTS OF MARYLAND DEPARTMENT OF TRANSPORTATION, STATE HIGHWAY ADMINISTRATION STANDARD SPECIFICATIONS FOR CONSTRUCTION AND MATERIALS, SECTION 313 AS MODIFIED. THE MIXTURE SHALL HAVE A 100–200 PSI; 28 DAY UNCONFINED COMPRESSIVE STRENGTH. THE FLOWABLE FILL SHALL HAVE A MINIMUM P.H. OF 4.0 AND A MINIMUM RESISTIVITY OF 2,000 OHM–CM. MATERIAL SHALL BE PLACED SUCH THAT A MINIMUM OF 6" (MEASURED PERPENDICULAR TO THE OUTSIDE OF THE PIPE) OF FLOWABLE FILL SHALL BE UNDER (BEDDING), OVER AND ON THE SIDES OF PIPE. IT ONLY NEEDS TO EXTEND UP TO THE SPRING LINE FOR RIGID CONDUITS. AVERAGE SLUMP OF THE FILL SHALL BE 7" TO ASSURE FLOWABILITY OF THE MATERIAL.

ADEQUATE MEASURES SHALL BE TAKEN (SANDBAGS, ETC..) TO PREVENT FLOATING THE PIPE. WHEN USING FLOWABLE FILL, ALL METAL PIPE SHALL BE BITUMINOUS COATED. ANY ADJOINING SOIL FILL SHALL BE PLACED IN HORIZONTAL LAYERS NOT TO EXCEED FOUR INCHES IN THICKNESS AND COMPACTED BY HAND TAMPERS OR OTHER MANUALLY DIRECTED COMPACTION EQUIPMENT. THE MATERIAL SHALL COMPLETELY FILL ALL VOIDS ADJACENT TO TO THE FLOWABLE FILL ZONE. AT NO TIME DURING THE BACKFILLING OPERATION SHALL DRIVEN EQUIPMENT BE ALLOWED TO OPERATE CLOSER THAN FOUR FEET, MEASURED HORIZONTALLY TO ANY PART OF A STRUCTURE. UNDER NO CIRCUMSTANCES SHALL EQUIPMENT BE DRIVEN OVER ANY PART OF A STRUCTURE OR PIPE UNLESS THERE IS A COMPACTED FILL OF 24" OR GREATER OVER THE STRUCTURE OR PIPE. BACKFILL MATERIAL OUTSIDE THE STRUCTURAL BACKFILL (FLOWABLE FILL) ZONE SHALL BE OF THE TYPE AND QUALITY CONFORMING TO THAT SPECIFIED FOR THE CORE OF THE EMBANKMENT OR OTHER EMBANKMENT MATERIALS.

REINFORCED CONCRETE PIPE – ALL OF THE FOLLOWING CRITERIA SHALL APPLY FOR REINFORCED CONCRETE PIPE:

1. MATERIALS – REINFORCED CONCRETE PIPE SHALL HAVE BELL AND SPIGOT JOINTS WITH RUBBER GASKETS AND SHALL EQUAL OR EXCEED ASTM DESIGNATION C – 361.

2. BEDDING – ALL REINFORCED CONCRETE PIPE CONDUITS SHALL BE LAID IN A CONCRETE BEDDING/CRADLE FOR THEIR ENTIRE LENGTH. THIS BEDDING/CRADLE SHALL CONSIST OF HIGH SLUMP CONCRETE PLACED UNDER THE PIPE AND UP THE SIDES OF THE PIPE AT LEAST 50% OF ITS OUTSIDE DIAMETER WITH A MINIMUM THICKNESS OF 6 INCHES. WHERE A CONCRETE CRADLE IS NOT NEEDED FOR STRUCTURAL REASONS, FLOWABLE FILL MAY BE USED AS DESCRIBED IN THE "STRUCTURAL BACKFILL" SECTION OF THIS STANDARD. GRAVEL BEDDING IS NOT PERMITTED.

3. LAYING PIPE – BELL AND SPIGOT PIPE SHALL BE PLACED WITH THE BELL END UPSTREAM. JOINTS SHALL BE MADE IN ACCORDANCE WITH RECOMMENDATIONS OF THE MANUFACTURER OF THE MATERIAL. AFTER THE JOINTS ARE SEALED FOR THE ENTIRE LINE, THE BEDDING SHALL BE PLACED SO THAT ALL SPACES UNDER THE PIPE ARE FILLED. CARE SHALL BE EXERCISED TO PREVENT ANY DEVIATION FROM THE ORIGINAL LINE AND GRADE OF THE PIPE. THE FIRST JOINT MUST BE LOCATED WITHIN 4 FEET FROM THE RISER.

4. BACKFILLING SHALL CONFORM TO "STRUCTURE BACKFILL"

5. OTHER DETAILS (ANTI–SEEP COLLARS, VALVES, ETC.) SHALL BE AS SHOWN ON THE DRAWINGS.

PLASTIC PIPE – THE FOLLOWING CRITERIA SHALL APPLY FOR PLASTIC PIPE.

1. MATERIALS– PVC PIPE SHALL BE PVC–1120 OR PVC–1220 CONFORMING TO ASTM D–1785 OR ASTM D–2241. CORRUGATED HIGH DENSITY POLYETHYLENE (HDPE) PIPE, COUPLINGS AND FITTINGS SHALL CONFORM TO THE FOLLOWING: 4"–10" INCH PIPE SHALL MEET THE REQUIREMENTS OF AASHTO M252 TYPE S, AND 12" THROUGH 24" INCH SHALL MEET THE REQUIREMENTS OF AASHTO M294 TYPE S.

2. JOINTS AND CONNECTIONS TO ANTI–SEEP COLLAR ARE TO BE COMPLETELY WATERTIGHT. PVC SOLVENT CEMENT FOR ANTI–SEEP COLLAR CONNECTION TO MEET REQUIREMENTS OF ASTM D2564. ELASOMERIC SEALS (GASKETS) FOR JOINING PIPE TO MEET REQUIREMENTS OF ASTM F477.

3. BEDDING– THE PIPE SHALL BE FIRMLY AND UNIFORMLY BEDDED THROUGHOUT ITS ENTIRE LENGTH. WHERE ROCK OR SOFT, SPONGY OR OTHER UNSTABLE SOIL IS ENCOUNTERED, ALL SUCH MATERIAL SHALL BE REMOVED AND REPLACED WITH SUITABLE EARTH COMPACTED TO PROVIDE ADEQUATE SUPPORT.

4. BACKFILLING SHALL CONFORM TO "STRUCTURE BACKFILL".

5. OTHER DETAILS (ANTI–SEEP COLLARS, VALVES, ETC.) SHALL BE AS SHOWN ON THE DRAWINGS.

CONCRETE

CONCRETE SHALL MEET THE REQUIREMENTS OF HOWARD COUNTY DPW AND MARYLAND DEPARTMENT OF TRANSPORTATION. STATE HIGHWAY ADMINISTRATION STANDARD SPECIFICATIONS FOR CONSTRUCTION AND MATERIALS, SECTION 902, MIX NO. 3.

ROCK RIP–RAP

ROCK RIP–RAP SHALL MEET THE REQUIREMENTS OF MARYLAND DEPARTMENT OF TRANSPORTATION, STATE HIGHWAY ADMINISTRATION STANDARD SPECIFICATIONS FOR CONSTRUCTION AND MATERIALS, SECTION 311.

GEOTEXTILE SHALL BE PLACED UNDER ALL RIP–RAP AND SHALL MEET THE REQUIREMENTS OF MARYLAND DEPARTMENT OF TRANSPORTATION, STATE HIGHWAY ADMINISTRATION STANDARD SPECIFICATIONS FOR CONSTRUCTION AND MATERIALS, SECTION 921.09, CLASS SE NON WOVEN.

CARE OF WATER DURING CONSTRUCTION

ALL WORK ON PERMANENT STRUCTURES SHALL BE CARRIED OUT IN AREAS FREE FROM WATER. THE CONTRACTOR SHALL CONSTRUCT AND MAINTAIN ALL TEMPORARY DIKES, LEVEES, COFFERDAMS, DRAINAGE CHANNELS AND STREAM DIVERSIONS NECESSARY TO PROTECT THE AREAS TO BE OCCUPIED BY THE PERMANENT WORKS. THE CONTRACTOR SHALL ALSO FURNISH, INSTALL, OPERATE, AND MAINTAIN ALL NECESSARY PUMPING AND OTHER VARIOUS PARTS OF THE WORK AND FOR MAINTAINING THE EXCAVATIONS, FOUNDATIONS AND OTHER PARTS OF THE WORK FREE FROM WATER AS REQUIRED OR DIRECTED BY THE ENGINEER FOR CONSTRUCTING EACH PART OF THE WORK. AFTER HAVING SERVED THEIR PURPOSE, ALL TEMPORARY PROTECTIVE WORKS SHALL BE REMOVED OR LEVELED AND GRADED TO THE EXTENT REQUIRED TO PREVENT OBSTRUCTION IN ANY DEGREE WHATSOEVER OF THE FLOW OF WATER TO THE SPILLWAY OR OUTLET WORKS AND SO AS NOT TO INTERFERE IN ANY WAY WITH THE OPERATION OR MAINTENANCE OF THE STRUCTURE. STREAM DIVERSIONS SHALL BE MAINTAINED UNTIL THE FULL FLOW CAN BE PASSED THROUGH THE PERMANENT WORKS. THE REMOVAL OF WATER FROM THE REQUIRED EXCAVATION AND THE FOUNDATION SHALL BE ACCOMPLISHED IN A MANNER AND TO THE EXTENT THAT WILL MAINTAIN STABILITY OF THE EXCAVATED SLOPES AND BOTTOM OF REQUIRED EXCAVATIONS AND WILL ALLOW SATISFACTORY PERFORMANCE OF ALL CONSTRUCTION OPERATIONS. DURING THE PLACING AND COMPACTING OF MATERIAL IF REQUIRED EXCAVATIONS, THE WATER LEVEL AT THE LOCATIONS BEING REFILLED SHALL BE MAINTAINED BELOW THE BOTTOM OF THE EXCAVATION AT SUCH LOCATIONS WHICH MAY REQUIRE DRAINING THE WATER TO SUMPS FROM WHICH THE WATER SHALL BE PUMPED.

STABILIZATION

ALL BORROW AREAS SHALL BE GRADED TO PROVIDE PROPER DRAINAGE AND LEFT IN A SIGHTLY CONDITION. ALL EXPOSED SURFACES OF THE EMBANKMENT, SPILLWAY, SPOIL AND BORROW AREAS, AND BERMS SHALL BE STABILIZED BY SEEDING, LIMING, FERTILIZING AND MULCHING IN ACCORDANCE WITH THE MARYLAND SOIL CONSERVATION SERVICE STANDARDS AND SPECIFICATIONS FOR CRITICAL AREA LIMING (MD – 342) OR AS SHOWN ON THE ACCOMPANY DRAWINGS.

EROSION AND SEDIMENT CONTROL

CONSTRUCTION OPERATIONS WILL BE CARRIED OUT IN SUCH A MANNER THAT EROSION WILL BE CONTROLLED AND WATER AND AIR POLLUTION MINIMIZED. STATE AND LOCAL LAWS CONCERNING POLLUTION ABATEMENT WILL BE FOLLOWED. CONSTRUCTION PLANS SHALL DETAIL EROSION AND SEDIMENT CONTROL MEASURES TO BE EMPLOYED DURING THE CONSTRUCTION PROCESS.

FILTER CLOTH

MIRAFI 180N OR EQUIVALENT.

GABIONS

ALL GABIONS TO BE CLASS IV, WIRE TO BE PVC COATED.

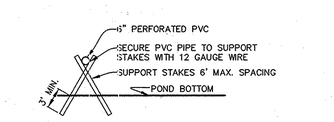

DRAWDOWN DEVICE SUPPORT STAKES DETAIL

NOT TO SCALE

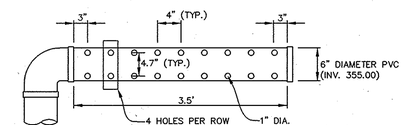

DRAWDOWN DEVICE PIPE PERFORATION DETAIL SEDIMENT BASIN #1

NOT TO SCALE

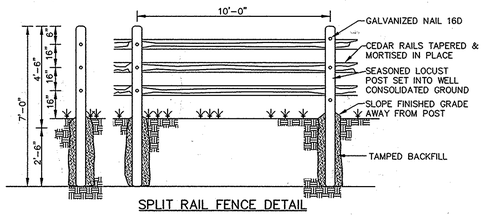

SPLIT RAIL FENCE DETAIL

NOT TO SCALE

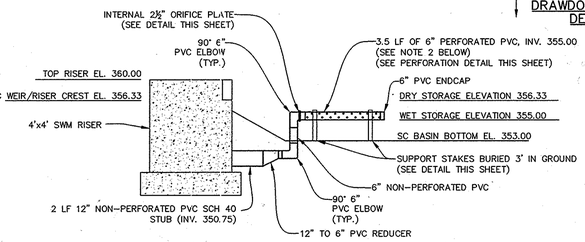

DRAWDOWN DEVICE PROFILE VIEW DETAIL – SEDIMENT BASIN #1

NOT TO SCALE

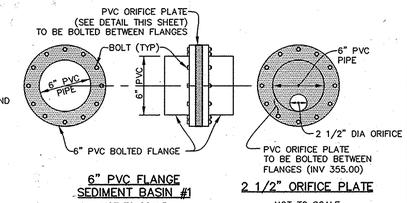

6" PVC FLANGE SEDIMENT BASIN #1

NOT TO SCALE

2 1/2" ORIFICE PLATE

NOT TO SCALE

SEDIMENT BASIN #1 DRAWDOWN DEVICE DETAILS

NOTES:
1. PERFORATED PORTION OF DRAWDOWN DEVICE SHALL BE WRAPPED WITH 1/2" HARDWARE CLOTH AND GEOTEXTILE FABRIC. FABRIC SHALL BE GEOTEXTILE CLASS E OR EQUAL.
2. PROVIDE SUPPORT OF DRAW–DOWN DEVICE TO PREVENT SAGGING AND FLOTATION. AN ACCEPTABLE PREVENTATIVE IS TO STAKE BOTH SIDES OF DRAW–DOWN DEVICE WITH 1" STEEL ANGLE OR 2" BY 2" SQUARE OR 2" ROUND WOODEN POSTS SET 3' MIN. INTO THE GROUND THEN JOINING THEM TO THE DEVICE BY WRAPPING WITH 12 GAUGE MINIMUM WIRE.

PRIVATE INFILTRATION TRENCH OPERATION & MAINTENANCE SCHEDULE

1. THE MONITORING WELLS AND STRUCTURES SHALL BE INSPECTED ON A QUARTERLY BASIS AND AFTER EVERY LARGE STORM EVENT.
2. WATER LEVELS AND SEDIMENT BUILD UP IN THE MONITORING WELLS SHALL BE RECORDED OVER A PERIOD OF SEVERAL DAYS TO INSURE TRENCH DRAINAGE.
3. A LOGBOOK SHALL BE MAINTAINED TO DETERMINE THE RATE AT WHICH THE FACILITY DRAINS.
4. WHEN THE FACILITY BECOMES CLOGGED SO THAT IT DOES NTO DRAIN DOWN WITHIN THE 72 HOUR TIME PERIOD, CORRECTIVE ACTION SHALL BE TAKEN.
5. THE MAINTENANCE LOGBOOK SHALL BE AVAILABLE TO HOWARD COUNTY FOR INSPECTION TO INSURE COMPLIANCE WITH OPERATION AND MAINTENANCE CRITERIA.
6. ONCE THE PERFORMANCE CHARACTERISTICS OF THE INFILTRATION FACILITY HAVE BEEN VERIFIED, THE MONITORING SCHEDULE CAN BE REDUCED TO AN ANNUAL BASIS UNLESS THE PERFORMANCE DATA INDICATES THAT A MORE FREQUENT SCHEDULE IS REQUIRED.

PRIVATE BIORETENTION FILTER OPERATION & MAINTENANCE SCHEDULE

1. ANNUAL MAINTENANCE OF PLANT MATERIAL, MULCH LAYER, AND SOIL LAYER IS REQUIRED. MAINTENANCE OF MULCH AND SOIL IS LIMITED TO CORRECTING AREAS OF EROSION OR WASH OUT. ANY MULCH REPLACEMENT SHALL BE DONE IN THE SPRING. PLANT MATERIAL SHALL BE CHECKED FOR DISEASE OR INSECT INFESTATION AND MAINTENANCE WILL ADDRESS DEAD MATERIAL AND PRUNING.
2. SCHEDULE OF PLANT INSPECTION WILL BE TWCE A YEAR IN SPRING AND FALL. THIS INSPECTION WILL INCLUDE REMOVAL OF DEAD AND DISEASED TREES AND SHRUBS AND REPLACEMENT OF ALL DEFICIENT STAKES AND WIRES.
3. MULCH SHALL BE INSPECTED EACH SPRING, REMOVE PREVIOUS MULCH LAYER BEFORE APPLYING NEW LAYER ONCE EVERY 2 OR 3 YEARS.
4. SOIL EROSION TO BE ADDRESSED ON AN AS NEEDED BASIS, WITH MINIMUM OF ONCE PER MONTH AND AFTER HEAVY STORM EVENTS

DEPARTMENT OF PUBLIC WORKS
HOWARD COUNTY, MARYLAND
CHIEF, BUREAU OF HIGHWAYS — DATE 11-9-09

DEPARTMENT OF PLANNING & ZONING
HOWARD COUNTY, MARYLAND
CHIEF, DIVISION OF LAND DEVELOPMENT — DATE 11-16-09
CHIEF, DEVELOPMENT ENGINEERING DIVISION — DATE 11/13/09

PROFESSIONAL CERTIFICATION

I HEREBY CERTIFY THAT THESE DOCUMENTS WERE PREPARED OR APPROVED BY ME, AND THAT I AM A DULY LICENSED PROFESSIONAL ENGINEER UNDER THE LAWS OF THE STATE OF MARYLAND, LICENSE NO. 16019 , EXPIRATION DATE: 5/8/2010.

STATE OF MARYLAND · GREGORY LITTLE · 10/20/09 · REGISTERED PROFESSIONAL ENGINEER

NOTE: DESIGN AND DRAWING BASED ON THE MARYLAND COORDINATE SYSTEM HORIZONTAL –NAD 83/91, VERTICAL–NAVD 88

LITTLE & ASSOCIATES, INC.
ENGINEERS~~LAND PLANNERS~~SURVEYORS
1055 TAYLOR AVENUE, SUITE 307
TOWSON, MARYLAND 21286
PHONE: (410)296–1636 FAX: (410)296–1639

OWNER/DEVELOPER:
KIMBERLY HOMES
ELLICOTT PROPERTIES, LLC.
P.O. BOX 6194
BALTIMORE, MARYLAND, 21231
(410) 522–4987

	BY	NO.	REVISION	DATE
DES: AMK				
DRN: PFS				
CHK: AMK				
DATE: 01/23/2009				

FINAL ROAD CONSTRUCTION PLANS

STORMWATER MANAGEMENT DETA

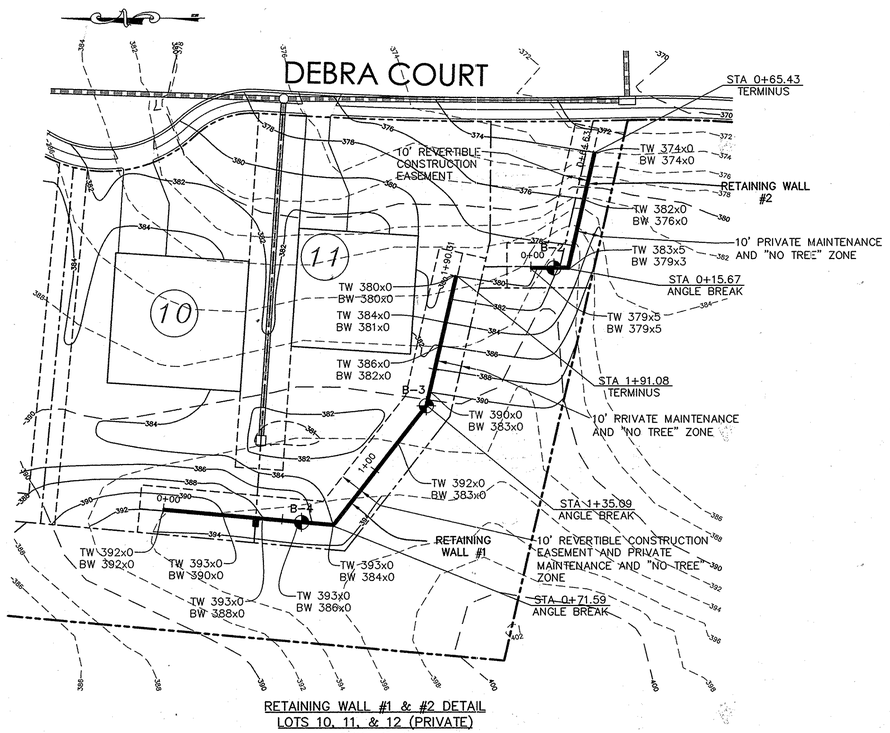

RETAINING WALL #1 & #2 DETAIL
LOTS 10, 11, & 12 (PRIVATE)
SCALE: 1"=30'

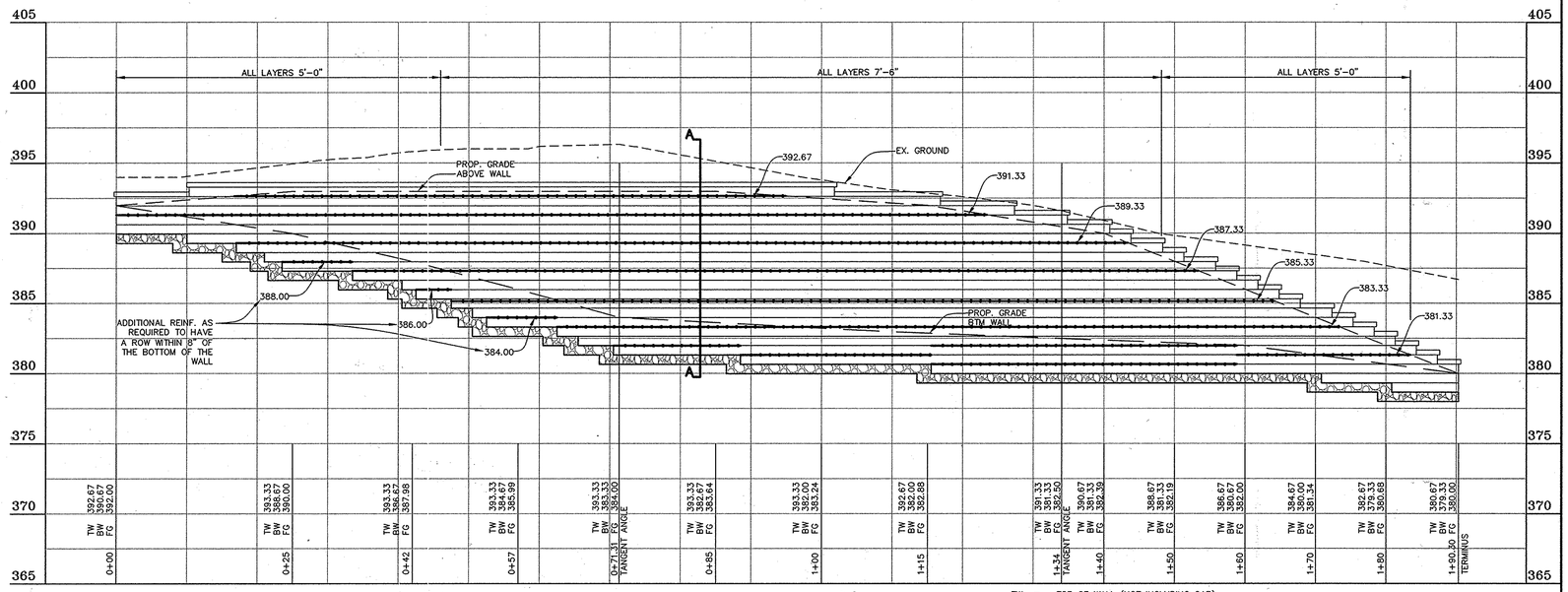

PROPOSED RETAINING WALL #1
SCALE: HORIZ: 1"=10'
VERT: 1"=5'

TW = TOP OF WALL (NOT INCLUDING CAP)
BW = BOTTOM OF BLOCK/TOP OF LEVELING PAD
FG = PROPOSED FINISHED GRADE AT BASE OF WALL
NOTE: THIS WALL NOT DESIGNED FOR SURCHARGE LOADS

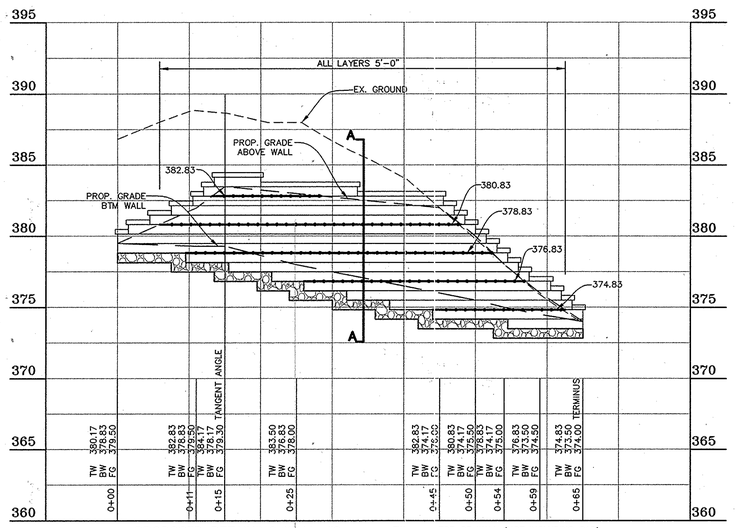

PROPOSED RETAINING WALL #2
SCALE: HORIZ: 1"=10'
VERT: 1"=5'

TW = TOP OF WALL (NOT INCLUDING CAP)
BW = BOTTOM OF BLOCK/TOP OF LEVELING PAD
FG = PROPOSED FINISHED GRADE AT BASE OF WALL
NOTE: THIS WALL NOT DESIGNED FOR SURCHARGE LOADS

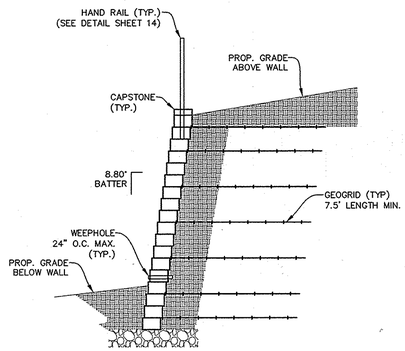

TYPICAL SECTION A-A - RETAINING WALL #1
SCALE: 1"=4'

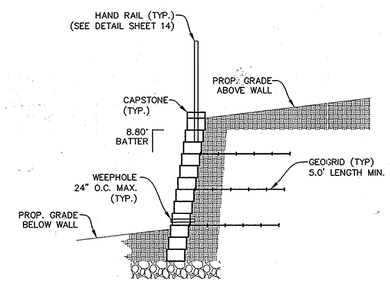

TYPICAL SECTION A-A - RETAINING WALL #2
SCALE: 1"=4'

NO AS-BUILT INFO THIS SHEET

DEPARTMENT OF PUBLIC WORKS
HOWARD COUNTY, MARYLAND
CHIEF, BUREAU OF HIGHWAYS — DATE 11-9-09

DEPARTMENT OF PLANNING & ZONING
HOWARD COUNTY, MARYLAND
CHIEF, DIVISION OF LAND DEVELOPMENT — DATE 11-16-09
CHIEF, DEVELOPMENT ENGINEERING DIVISION — DATE 11/13/09

PROFESSIONAL CERTIFICATION
I HEREBY CERTIFY THAT THESE DOCUMENTS WERE PREPARED OR APPROVED BY ME, AND THAT I AM A DULY LICENSED PROFESSIONAL ENGINEER UNDER THE LAWS OF THE STATE OF MARYLAND, LICENSE NO. 11701 EXPIRATION DATE: 11/11/10

STATE OF MARYLAND — KARL JOSEPH RICHEL — No. 11701 — PROFESSIONAL ENGINEER
10/21/09

LITTLE & ASSOCIATES, INC.
ENGINEERS~~LAND PLANNERS~~SURVEYORS
1055 TAYLOR AVENUE, SUITE 307
TOWSON, MARYLAND 21286
PHONE: (410)296-1636 FAX: (410)296-1639

OWNER/DEVELOPER:
KIMBERLY HOMES
ELLICOTT PROPERTIES, LLC.
P.O. BOX 6194
BALTIMORE, MARYLAND, 21231
(410) 522-4987

	BY	NO.	REVISION	DATE
DES: AMK				
DRN: PFS				
CHK: AMK				
DATE: 01/23/2009				

FINAL ROAD CONSTRUCTION PLANS

RETAINING WALL STRUCTURAL PLANS
F-09-070
DEBRA COURT
LOTS 1 - 12

A RESUBDIVISION OF LOT 80, SECT. 3 GLEN BROOK (P 918); AND SUBDIVISION OF PARCELS 812 & 1119

ELECTION DISTRICT 2
SCALE: AS SHOWN
PRIOR PLANS: P-08-003, S-04-02, PLAT 8/92 & 4567

HOWARD COUNTY, MD
M 24 G 2,3 P 918,812,1119
OCTOBER 15, 2009
SHEET 12 OF 18

F-09-070

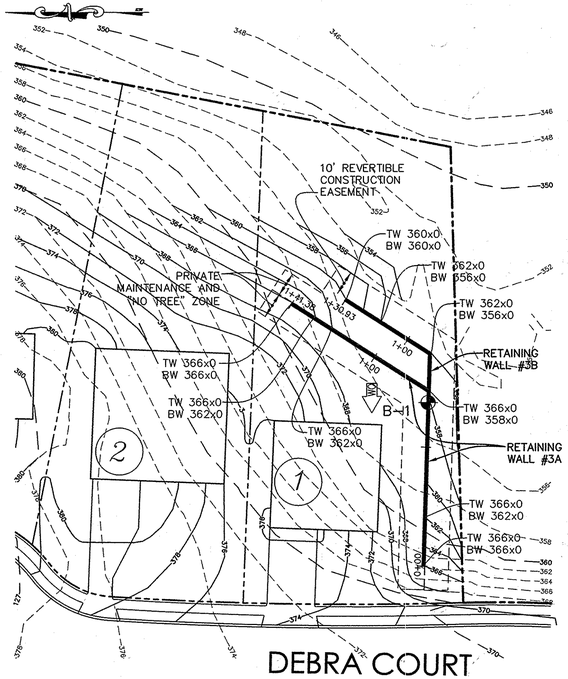

RETAINING WALL #3 DETAIL LOT 1 (PRIVATE)

SCALE: 1"=30'

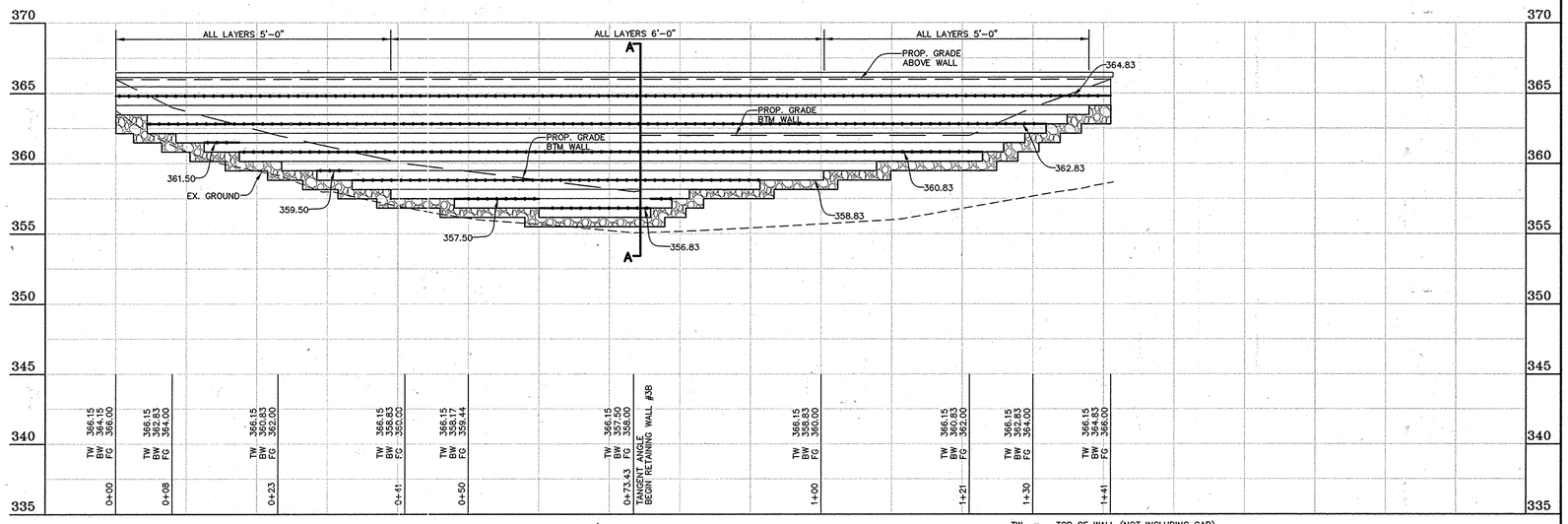

PROPOSED RETAINING WALL #3A

SCALE: HORIZ: 1"=10'
VERT: 1"=5'

TW = TOP OF WALL (NOT INCLUDING CAP)
BW = BOTTOM OF BLOCK/TOP OF LEVELING PAD
FG = PROPOSED FINISHED GRADE AT BASE OF WALL
NOTE: THIS WALL NOT DESIGNED FOR SURCHARGE LOADS

PROPOSED RETAINING WALL #3B

SCALE: HORIZ: 1"=10'
VERT: 1"=5'

TW = TOP OF WALL (NOT INCLUDING CAP)
BW = BOTTOM OF BLOCK/TOP OF LEVELING PAD
FG = PROPOSED FINISHED GRADE AT BASE OF WALL
NOTE: THIS WALL NOT DESIGNED FOR SURCHARGE LOADS

NOTE: WALL CONTRACTOR TO REMOVE THE EXISTING SEDIMENT & TOPSOIL LAYER ALONG WALLS #3A & #3B AS OUTLINED IN THE GEOTECHNICAL REPORT, A DEPTH OF APPROXIMATELY 3 FT AND 5 FT FROM BOTH SIDES OF THE WALLS.

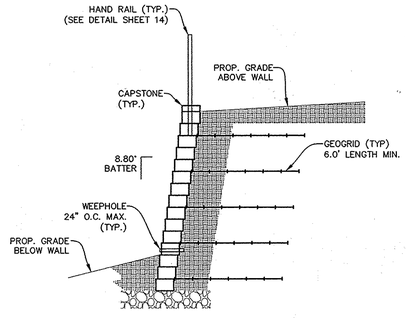

TYPICAL SECTION A-A - RETAINING WALL #3A

SCALE: 1"=4'

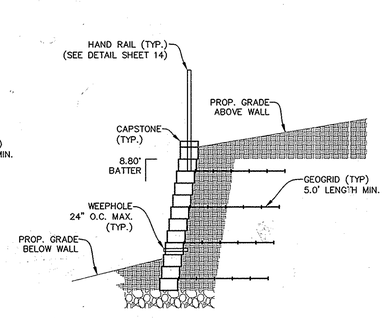

TYPICAL SECTION A-A - RETAINING WALL #3B

SCALE: 1"=4'

NO AS-BUILT INFO THIS SHEET

DEPARTMENT OF PUBLIC WORKS
HOWARD COUNTY, MARYLAND
CHIEF, BUREAU OF HIGHWAYS — DATE 11-9-09

DEPARTMENT OF PLANNING & ZONING
HOWARD COUNTY, MARYLAND
CHIEF, DIVISION OF LAND DEVELOPMENT — DATE 11-16-09
CHIEF, DEVELOPMENT ENGINEERING DIVISION — DATE 11/30/09

PROFESSIONAL CERTIFICATION
I HEREBY CERTIFY THAT THESE DOCUMENTS WERE PREPARED OR APPROVED BY ME, AND THAT I AM A DULY LICENSED PROFESSIONAL ENGINEER UNDER THE LAWS OF THE STATE OF MARYLAND, LICENSE NO. 11707 EXPIRATION DATE: 11/11/10

STATE OF MARYLAND — KARL JOSEPH ROCKET — No. 11707 — PROFESSIONAL ENGINEER

10/21/09

LITTLE & ASSOCIATES, INC.
ENGINEERS~~LAND PLANNERS~~SURVEYORS
1055 TAYLOR AVENUE, SUITE 307
TOWSON, MARYLAND 21286
PHONE: (410)296-1636 FAX: (410)296-1639

OWNER/DEVELOPER:
KIMBERLY HOMES
ELLICOTT PROPERTIES, LLC.
P.O. BOX 6194
BALTIMORE, MARYLAND, 21231
(410) 522-4987

DES: AMK				
DRN: PFS				
CHK: AMK				
DATE: 01/23/2009	BY	NO.	REVISION	DATE

FINAL ROAD CONSTRUCTION PLANS

RETAINING WALL STRUCTURAL PLANS

F-09-070

DEBRA COURT

LOTS 1 - 12

A RESUBDIVISION OF LOT 80, SECT. 3 GLEN BROOK (P 918); AND SUBDIVISION OF PARCELS 812 & 1119

ELECTION DISTRICT 2 — HOWARD COUNTY, MD
SCALE: AS SHOWN — M 24 G 2,3 P 918,812,1119
PRIOR PLANS: P-08-003, S-04-02, — OCTOBER 15, 2009
PLAT 8/92 & 4567 — SHEET 13 OF 18

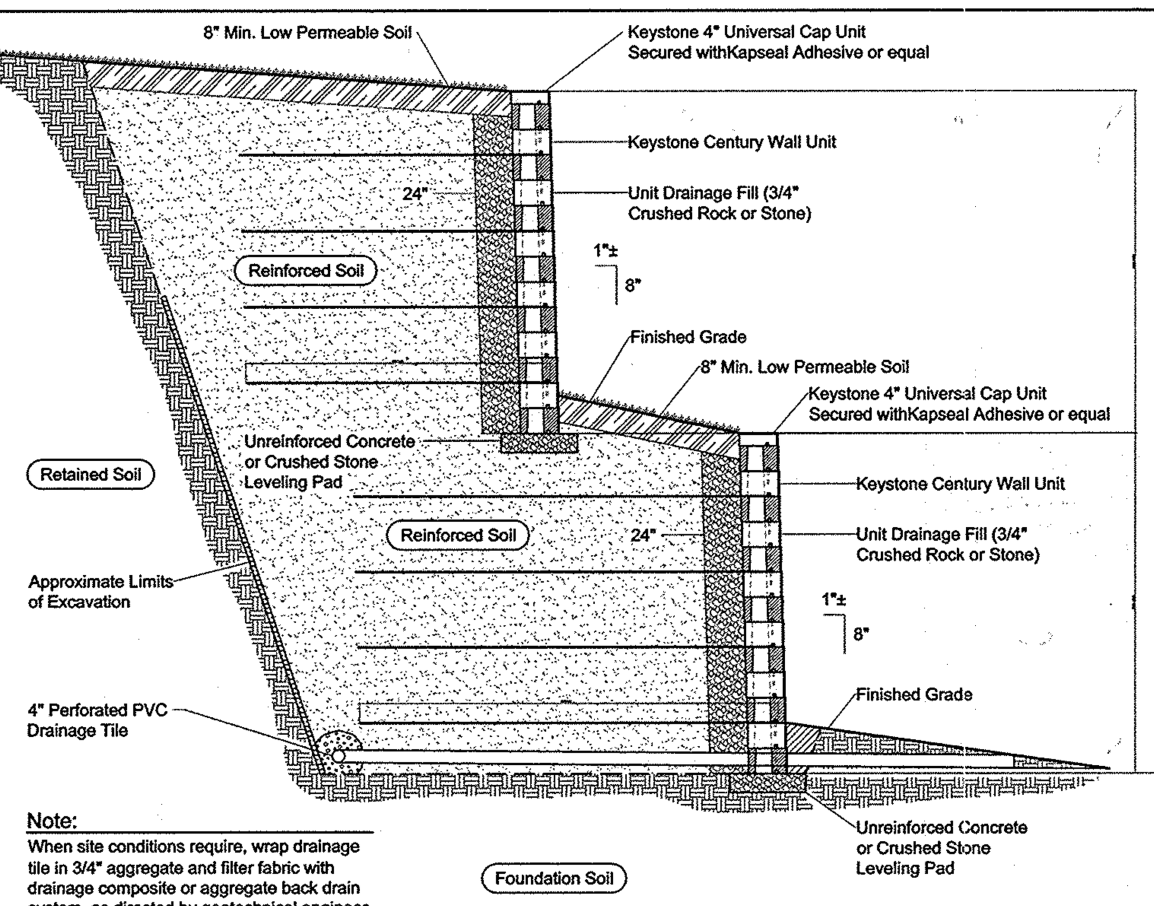

Note:
When site conditions require, wrap drainage tile in 3/4" aggregate and filter fabric with drainage composite or aggregate back drain system, as directed by geotechnical engineer.

Typical Reinforced Tiered Wall Section
Century Wall Unit - Near Vertical Setback
NOT TO SCALE
SEE RETAINING WALL SHEETS 12 AND 13
FOR SPECIFIC DESIGN

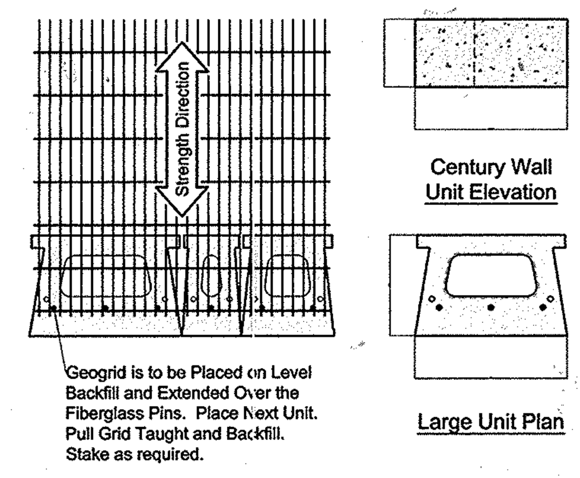

Grid & Pin Connection
NOT TO SCALE

* All dimensions are nominal and may vary by Region.
All units not available in all locations.

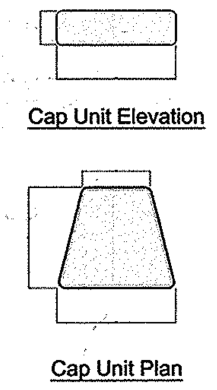

Universal Cap Unit

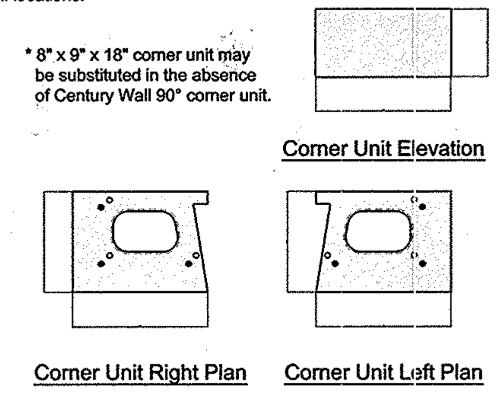

Century Wall 90° Corner Unit
NOT TO SCALE

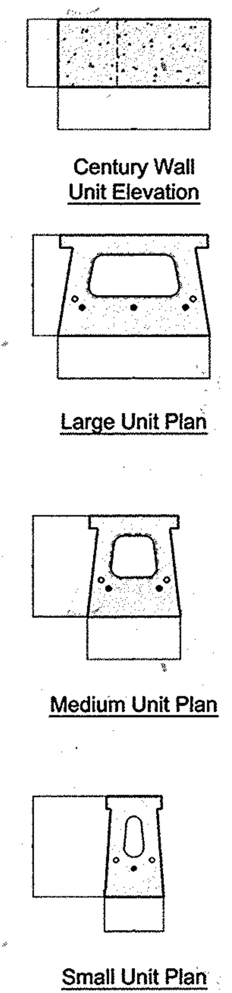

Century Wall Unit

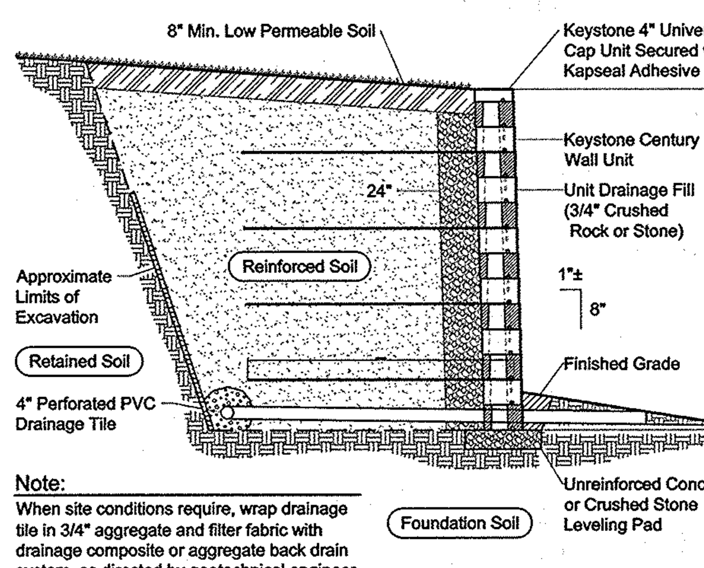

Note:
When site conditions require, wrap drainage tile in 3/4" aggregate and filter fabric with drainage composite or aggregate back drain system, as directed by geotechnical engineer.

Typical Reinforced Wall Section
Century Wall Unit - Near Vertical Setback
NOT TO SCALE
SEE RETAINING WALL SHEETS 12 AND 13
FOR SPECIFIC DESIGN

Large Unit	
Width:	18"
*Depth:	12"
Height:	8"
*Weight:	93 lbs
Medium Unit	
Width:	11"
*Depth:	12"
Height:	8"
*Weight:	58 lbs
Small Unit	
Width:	7"
*Depth:	12"
Height:	8"
*Weight:	37 lbs

Base Leveling Pad Notes:
1. The leveling pad is to be constructed of crushed stone or 2,000 psi± unreinforced concrete
2. The base foundation is to be approved by the site geotechnical engineer prior to placement of the leveling pad.

Universal Cap Unit	
Width:	14"/8"
*Depth:	12"
Height:	4"
*Weight:	30 lbs

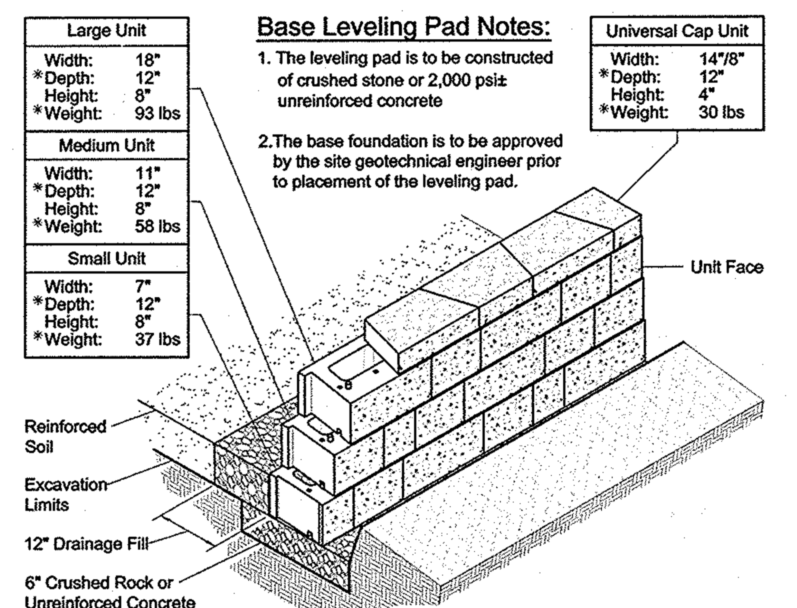

Century Wall Unit/Base Pad Isometric Section View
* Dimensions & Weight May Vary by Region
NOT TO SCALE

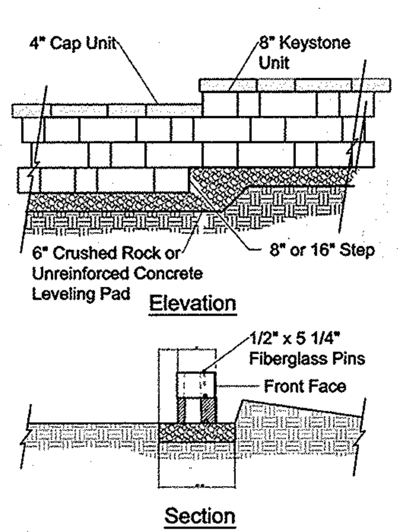

Leveling Pad and Cap Step Detail
NOT TO SCALE

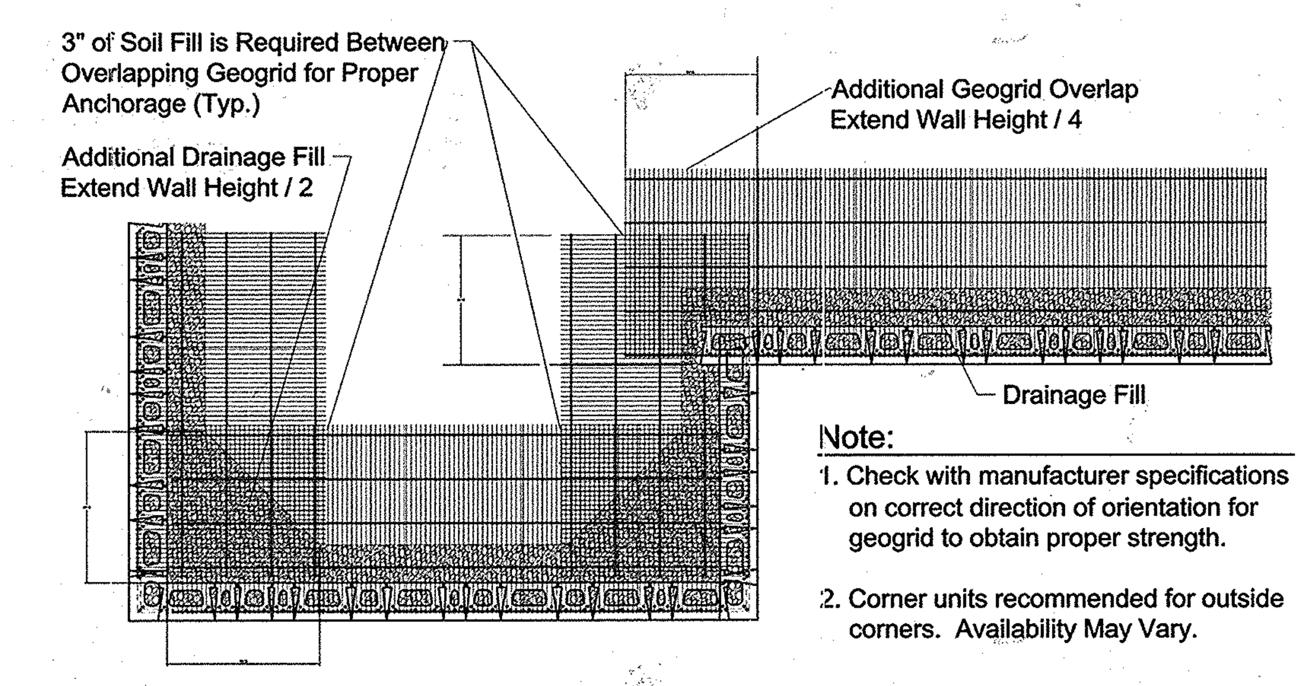

Note:
1. Check with manufacturer specifications on correct direction of orientation for geogrid to obtain proper strength.
2. Corner units recommended for outside corners. Availability May Vary.

Geogrid Installation at Corners
NOT TO SCALE

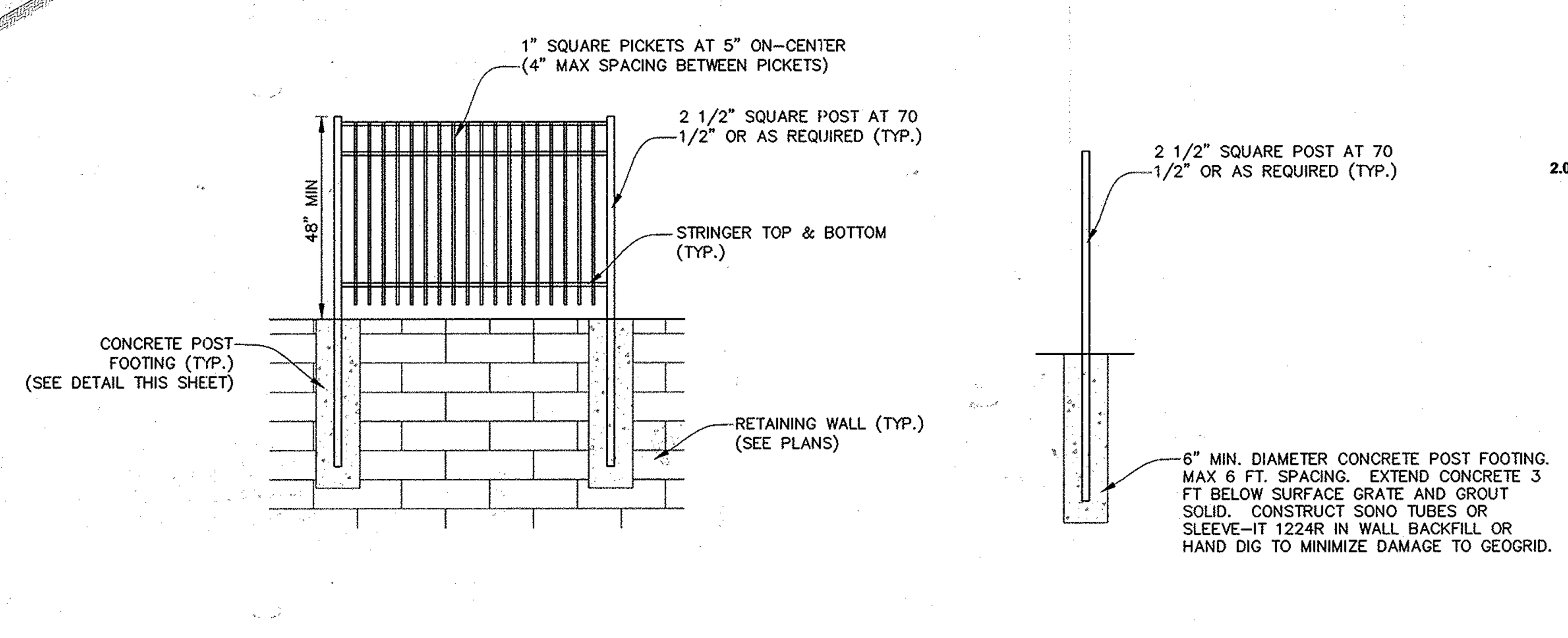

TYPICAL FENCE DETAIL
(NTS)
JERITH ORNAMENTAL FENCES OF DISTINCTION STYLE #202 OR EQUIVALENT*

*DEVELOPER MAY SUBSTITUTE FENCE STYLE AND ADD FENCE AT THE RETAINING WALL AS REQUIRED BY CODE

PART 2: PRODUCTS

2.01 DEFINITIONS

A. MODULAR UNIT - A CONCRETE RETAINING WALL ELEMENT MACHINE MADE FROM PORTLAND CEMENT, WATER, AND AGGREGATES.

B. STRUCTURAL GEOGRID - A STRUCTURAL ELEMENT FORMED BY A REGULAR NETWORK OF INTEGRALLY CONNECTED TENSILE ELEMENTS WITH APERTURES OF SUFFICIENT SIZE TO ALLOW INTERLOCKING WITH SURROUNDING SOIL, ROCK, OR EARTH AND FUNCTION PRIMARILY AS REINFORCEMENT.

C. UNIT DRAINAGE FILL - DRAINAGE AGGREGATE, WHICH IS PLACED WITHIN AND IMMEDIATELY BEHIND THE MODULAR CONCRETE UNITS.

D. REINFORCED BACKFILL - COMPACTED SOIL, WHICH IS PLACED WITHIN THE REINFORCED SOIL VOLUME AS OUTLINED ON THE PLANS.

2.02 MODULAR CONCRETE RETAINING WALL UNITS

A. MODULAR CONCRETE UNITS SHALL CONFORM TO THE FOLLOWING ARCHITECTURAL REQUIREMENTS:

1. FACE COLOR - CONCRETE GRAY. THE OWNER, AS INDICATED ON THE PLANS, MAY SPECIFY STANDARD MANUFACTURERS' COLOR OR COLOR BLEND.
2. FACE FINISH - "WEATHERED" ROCK FACE. OTHER FACE FINISHES WILL NOT BE ALLOWED WITHOUT WRITTEN APPROVAL OF OWNER.
3. BOND CONFIGURATION - RANDOMLY UTILIZE THE VARIOUS SHAPES TO AVOID REPETITION OF THE SAME UNIT SIZE. AVOID STACK BONDING OF UNIT JOINT FOR MORE THAN TWO COURSES VERTICALLY.
4. EXPOSED SURFACES OF UNITS SHALL BE FREE OF CRACKS OR MAJOR IMPERFECTIONS WHEN VIEWED FROM A DISTANCE OF 10 FEET UNDER DIFFUSED LIGHTING. CHIPS AND IMPERFECTIONS ARE EXPECTED WITH THE "WEATHERED" ROCK FACE TEXTURE AND ARE ACCEPTABLE UNLESS ADVERSELY AFFECTING INSTALLATION OR STRUCTURAL PERFORMANCE.

B. MODULAR CONCRETE MATERIALS SHALL CONFORM TO THE REQUIREMENTS OF ASTM C1372 - STANDARD SPECIFICATIONS FOR SEGMENTAL RETAINING WALL UNITS.

C. MODULAR CONCRETE UNITS SHALL CONFORM TO THE FOLLOWING STRUCTURAL AND GEOMETRIC REQUIREMENTS MEASURED IN ACCORDANCE WITH APPROPRIATE REFERENCES:

1. COMPRESSIVE STRENGTH: ≥ 3000 PSI MINIMUM (21 MPA);
2. ABSORPTION: ≤ 8% (6% IN NORTHERN STATES) FOR STANDARD WEIGHT AGGREGATES;
3. DIMENSIONAL TOLERANCES: ± 1/8" (3 MM) FROM NOMINAL UNIT DIMENSIONS NOT INCLUDING ROUGH SPLIT FACE, ±1/16" (1.5 MM) UNIT HEIGHT - TOP AND BOTTOM PLANES;
4. UNIT SIZE: 8" (203 MM)(H) X 12" (304 MM)(D) MINIMUM; WIDTH OF UNITS VARIES FROM 7" TO 18" (175 MM TO 457 MM). THREE OR FOUR UNIT SIZES ARE TYPICALLY AVAILABLE.
5. UNIT WEIGHT: 35 LBS TO 90 LBS (15 KG TO 40 KG) PER UNIT;
6. INTER-UNIT SHEAR STRENGTH: 600 PLF (8 KN/M) MINIMUM AT 2 PSI (13 KPA) NORMAL PRESSURE;
7. GEOGRID/UNIT PEAK CONNECTION STRENGTH: 500-PLF (7 KN/M) MINIMUM AT 2-PSI (13 MPA) NORMAL FORCE.

D. MODULAR CONCRETE UNITS SHALL CONFORM TO THE FOLLOWING CONSTRUCTABILITY REQUIREMENTS:

1. VERTICAL SETBACK = VERTICAL (TILT WALL BACK SLIGHTLY TO ACHIEVE POSITIVE BATTER) OR 1" (25 MM) + PER COURSE PER THE DESIGN;
2. ALIGNMENT AND GRID POSITIONING MECHANISM - FIBERGLASS PINS, ONE FOR EACH PIN PLACEMENT SERIES OR A MINIMUM OF ONE PIN PER UNIT;
3. MAXIMUM HORIZONTAL GAP BETWEEN ERECTED UNITS SHALL BE ≤ 1/2 INCH (13 MM).

2.03 SHEAR CONNECTORS

A. SHEAR CONNECTORS SHALL BE 1/2-INCH (12 MM) DIAMETER THERMOSET ISOPTHALIC POLYESTER RESIN-PULTRUDED FIBERGLASS REINFORCEMENT RODS OR EQUIVALENT TO PROVIDE CONNECTION BETWEEN VERTICALLY ADJACENT UNITS. PINS SHALL BE 5 1/4" (130 MM) LONG AND CAPPED WITH A 3/4" (19 MM) DIAMETER "SHOULDER". STRENGTH OF SHEAR CONNECTORS SHALL BE A MINIMUM OF 6400 PSI (44 MPA) PER ASTM D-4475 AND SHALL BE APPLICABLE OVER A DESIGN TEMPERATURE OF 10 DEGREES F TO + 100 DEGREES F (-10 TO 40 DEGREES C).

B. SHEAR CONNECTORS SHALL BE CAPABLE OF HOLDING THE GEOGRID IN THE PROPER DESIGN POSITION DURING GRID PRE-TENSIONING AND BACKFILLING.

2.04 BASE LEVELING PAD MATERIAL

A. MATERIAL SHALL CONSIST OF A COMPACTED CRUSHED STONE BASE OR NON-REINFORCED CONCRETE AS SHOWN ON THE CONSTRUCTION DRAWINGS.

2.05 UNIT DRAINAGE FILL

A. UNIT DRAINAGE FILL SHALL CONSIST OF CLEAN 1" (25 MM) MINUS CRUSHED STONE OR CRUSHED GRAVEL MEETING THE FOLLOWING GRADATION TESTED IN ACCORDANCE WITH ASTM D-422:

SIEVE SIZE	PERCENT PASSING
1 INCH (25 MM)	100
3/4-INCH (19 MM)	75-100
NO. 4	0 - 10
NO. 50	0 - 5

B. ONE CUBIC FOOT (0.028 M3), MINIMUM, OF DRAINAGE FILL SHALL BE USED FOR EACH SQUARE FOOT (0.093 M2) OF WALL FACE. DRAINAGE FILL SHALL BE PLACED WITHIN CORES OF, BETWEEN, AND BEHIND UNITS TO MEET THIS REQUIREMENT.

2.06 REINFORCED BACKFILL

A. REINFORCED BACKFILL SHALL BE FREE OF DEBRIS AND MEET THE FOLLOWING GRADATION TESTED IN ACCORDANCE WITH ASTM D-422:

SIEVE SIZE	PERCENT PASSING
2-INCH (50 MM)	100
3/4-INCH (19 MM)	100-75
NO. 40	0-60
NO. 200	0-35

PLASTICITY INDEX (PI) <15 AND LIQUID LIMIT <40 PER ASTM D-4318.

B. THE MAXIMUM AGGREGATE SIZE SHALL BE LIMITED TO 3/4 INCH (19 MM) UNLESS FIELD TESTS HAVE BEEN PERFORMED TO EVALUATE POTENTIAL STRENGTH REDUCTIONS TO THE GEOGRID DESIGN DUE TO DAMAGE DURING CONSTRUCTION.

C. MATERIAL CAN BE SITE-EXCAVATED SOILS WHERE THE ABOVE REQUIREMENTS CAN BE MET. UNSUITABLE SOILS FOR BACKFILL (HIGH PLASTIC CLAYS OR ORGANIC SOILS) SHALL NOT BE USED IN THE BACKFILL OR IN THE REINFORCED SOIL MASS.

D. CONTRACTOR SHALL SUBMIT REINFORCED FILL SAMPLE AND LABORATORY TEST RESULTS TO THE ARCHITECT/ENGINEER FOR APPROVAL PRIOR TO THE USE OF ANY PROPOSED REINFORCED FILL MATERIAL.

2.07 GEOGRID SOIL REINFORCEMENT

A. GEOSYNTHETIC REINFORCEMENT SHALL CONSIST OF GEOGRIDS MANUFACTURED SPECIFICALLY FOR SOIL REINFORCEMENT APPLICATIONS AND SHALL BE MANUFACTURED FROM HIGH TENACITY POLYESTER YARN. POLYESTER GEOGRID SHALL BE KNITTED FROM HIGH TENACITY POLYESTER FILAMENT YARN WITH A MOLECULAR WEIGHT EXCEEDING 25,000 G/M AND A CARBOXYL END GROUP VALUES LESS THAN 30. POLYESTER GEOGRID SHALL BE COATED WITH AN IMPREGNATED PVC COATING THAT RESISTS PEELING, CRACKING, AND STRIPPING.

B. TA, LONG TERM ALLOWABLE TENSILE DESIGN LOAD, OF THE GEOGRID MATERIAL SHALL BE DETERMINED AS FOLLOWS:

TA = TULT / (RFCR*RFD*RFID*FS)
TA SHALL BE EVALUATED BASED ON A 75-YEAR DESIGN LIFE.

1. TULT, SHORT TERM ULTIMATE TENSILE STRENGTH
TULT IS BASED ON THE MINIMUM AVERAGE ROLL VALUES (MARV)

2. RFCR, REDUCTION FACTOR FOR LONG TERM TENSION CREEP
RFCR SHALL BE DETERMINED FROM 10,000-HOUR CREEP TESTING PERFORMED IN ACCORDANCE WITH ASTM D5262. REDUCTION VALUE = 1.60 MINIMUM.

3. RFD, REDUCTION FACTOR FOR DURABILITY
RFD SHALL BE DETERMINED FROM POLYMER SPECIFIC DURABILITY TESTING COVERING THE RANGE OF EXPECTED SOIL ENVIRONMENTS. RFD = 1.10 MINIMUM.

4. RFID, REDUCTION FACTOR FOR INSTALLATION DAMAGE
RFID SHALL BE DETERMINED FROM PRODUCT SPECIFIC CONSTRUCTION DAMAGE TESTING PERFORMED IN ACCORDANCE WITH GRI-GG4. TEST RESULTS SHALL BE PROVIDED FOR EACH PRODUCT TO BE USED WITH PROJECT SPECIFIC OR MORE SEVERE SOIL TYPE. RFID = 1.05 MINIMUM.

5. FS, OVERALL DESIGN FACTOR OF SAFETY
FS SHALL BE 1.5 UNLESS OTHERWISE NOTED FOR THE MAXIMUM ALLOWABLE WORKING STRESS CALCULATION.

C. THE MAXIMUM DESIGN TENSILE LOAD OF THE GEOGRID SHALL NOT EXCEED THE LABORATORY TESTED ULTIMATE STRENGTH OF THE GEOGRID/FACING UNIT CONNECTION AS LIMITED BY THE "HINGE HEIGHT" DIVIDED BY A FACTOR OF SAFETY OF 1.5. THE CONNECTION STRENGTH TESTING AND COMPUTATION PROCEDURES SHALL BE IN ACCORDANCE WITH NCMA SRWU-1 TEST METHOD FOR DETERMINING CONNECTION STRENGTH OF SRW.

D. SOIL INTERACTION COEFFICIENT, CI
CI VALUES SHALL BE DETERMINED PER GRI:GG5 AT A MAXIMUM 0.75-INCH (19 MM) DISPLACEMENT.

E. MANUFACTURING QUALITY CONTROL
THE GEOGRID MANUFACTURER SHALL HAVE A MANUFACTURING QUALITY CONTROL PROGRAM THAT INCLUDES QC TESTING BY AN INDEPENDENT LABORATORY.
THE QC TESTING SHALL INCLUDE:
TENSILE STRENGTH TESTING
MELT FLOW INDEX (HDPE)
MOLECULAR WEIGHT (POLYESTER)

2.08 DRAINAGE PIPE

A. IF REQUIRED, THE DRAINAGE PIPE SHALL BE PERFORATED OR SLOTTED PVC PIPE MANUFACTURED IN ACCORDANCE WITH ASTM D-3034 OR CORRUGATED HDPE PIPE MANUFACTURED IN ACCORDANCE WITH ASTM D-1248.

PART 3: EXECUTION

3.01 EXCAVATION

A. CONTRACTOR SHALL EXCAVATE TO THE LINES AND GRADES SHOWN ON THE CONSTRUCTION DRAWINGS. OWNER'S REPRESENTATIVE SHALL INSPECT THE EXCAVATION AND APPROVE PRIOR TO PLACEMENT OF LEVELING MATERIAL OR FILL SOILS. PROOF ROLL FOUNDATION AREA AS DIRECTED TO DETERMINE IF REMEDIAL WORK IS REQUIRED.

B. OVER-EXCAVATION AND REPLACEMENT OF UNSUITABLE FOUNDATION SOILS AND REPLACEMENT WITH APPROVED COMPACTED FILL WILL BE COMPENSATED AS AGREED UPON WITH THE OWNER.

3.02 BASE LEVELING PAD

A. LEVELING PAD MATERIAL SHALL BE PLACED TO THE LINES AND GRADES SHOWN ON THE CONSTRUCTION DRAWINGS, TO A MINIMUM THICKNESS OF 6 INCHES (150 MM) AND EXTEND LATERALLY A MINIMUM OF 6" (150 MM) IN FRONT AND BEHIND THE MODULAR WALL UNIT.

B. SOIL LEVELING PAD MATERIALS SHALL BE COMPACTED TO A MINIMUM OF 95 % STANDARD PROCTOR DENSITY PER ASTM D-698

C. LEVELING PAD SHALL BE PREPARED TO INSURE FULL CONTACT TO THE BASE SURFACE OF THE CONCRETE UNITS.

3.03 MODULAR UNIT INSTALLATION

A. FIRST COURSE OF UNITS SHALL BE PLACED ON THE LEVELING PAD AT THE APPROPRIATE LINE AND GRADE. ALIGNMENT AND LEVEL SHALL BE CHECKED IN ALL DIRECTIONS AND INSURE THAT ALL UNITS ARE IN FULL CONTACT WITH THE BASE AND PROPERLY SEATED. IF VERTICAL UNIT ALIGNMENT IS CHOSEN, UNITS SHALL BE UNIFORMLY TILTED BACK TOWARDS THE BACKFILL SLIGHTLY TO CREATE AND MAINTAIN POSITIVE WALL BATTER.

B. PLACE THE FRONT (ANY "WEATHERED" FINISH SIDE) OF UNITS SIDE-BY-SIDE. DO NOT LEAVE GAPS BETWEEN ADJACENT UNITS ALONG THE EXPOSED FACE(S). LAYOUT OF CORNERS AND CURVES SHALL BE IN ACCORDANCE WITH MANUFACTURER'S RECOMMENDATIONS.

C. INSTALL SHEAR/CONNECTING PINS PER MANUFACTURER'S RECOMMENDATIONS.

D. PLACE AND COMPACT DRAINAGE FILL WITHIN AND BEHIND WALL UNITS. PLACE AND COMPACT BACKFILL SOIL BEHIND DRAINAGE FILL. FOLLOW WALL ERECTION AND DRAINAGE FILL CLOSELY WITH STRUCTURE BACKFILL.

E. MAXIMUM STACKED VERTICAL HEIGHT OF WALL UNITS, PRIOR TO UNIT DRAINAGE FILL AND BACKFILL PLACEMENT AND COMPACTION, SHALL NOT EXCEED TWO COURSES.

3.04 STRUCTURAL GEOGRID INSTALLATION

A. GEOGRID SHALL BE ORIENTED WITH THE HIGHEST STRENGTH AXIS PERPENDICULAR TO THE WALL ALIGNMENT.

B. GEOGRID REINFORCEMENT SHALL BE PLACED AT THE STRENGTHS, LENGTHS, AND ELEVATIONS SHOWN ON THE CONSTRUCTION DESIGN DRAWINGS OR AS DIRECTED BY THE ENGINEER.

C. THE GEOGRID SHALL BE LAID HORIZONTALLY ON COMPACTED BACKFILL AND ATTACHED TO THE MODULAR WALL UNITS. PLACE THE NEXT COURSE OF MODULAR CONCRETE UNITS OVER THE GEOGRID. THE GEOGRID SHALL BE PULLED TAUT, AND ANCHORED PRIOR TO BACKFILL PLACEMENT ON THE GEOGRID.

D. GEOGRID REINFORCEMENTS SHALL BE CONTINUOUS THROUGHOUT THEIR EMBEDMENT LENGTHS AND PLACED SIDE-BY-SIDE TO PROVIDE 100% COVERAGE AT EACH LEVEL. SPLICED CONNECTIONS BETWEEN SHORTER PIECES OF GEOGRID OR GAPS BETWEEN ADJACENT PIECES OF GEOGRID ARE NOT PERMITTED.

3.05 REINFORCED BACKFILL PLACEMENT

A. REINFORCED BACKFILL SHALL BE PLACED, SPREAD, AND COMPACTED IN SUCH A MANNER THAT MINIMIZES THE DEVELOPMENT OF SLACK IN THE GEOGRID AND INSTALLATION DAMAGE.

B. REINFORCED BACKFILL SHALL BE PLACED AND COMPACTED IN LIFTS NOT TO EXCEED 6 INCHES (150 MM) WHERE HAND COMPACTION IS USED, OR 8 - 10 INCHES (200 TO 250 MM) WHERE HEAVY COMPACTION EQUIPMENT IS USED. LIFT THICKNESS SHALL BE DECREASED TO ACHIEVE THE REQUIRED DENSITY AS REQUIRED.

C. REINFORCED BACKFILL SHALL BE COMPACTED TO 95% OF THE MAXIMUM DENSITY AS DETERMINED BY ASTM D698. THE MOISTURE CONTENT OF THE BACKFILL MATERIAL PRIOR TO AND DURING COMPACTION SHALL BE UNIFORMLY DISTRIBUTED THROUGHOUT EACH LAYER AND SHALL BE DRY OF OPTIMUM, + 0%, - 3%.

D. ONLY LIGHTWEIGHT HAND-OPERATED EQUIPMENT SHALL BE ALLOWED WITHIN 3 FEET (1M) FROM THE TAIL OF THE MODULAR CONCRETE UNIT.

E. TRACKED CONSTRUCTION EQUIPMENT SHALL NOT BE OPERATED DIRECTLY UPON THE GEOGRID REINFORCEMENT. A MINIMUM FILL THICKNESS OF 6 INCHES (150 MM) IS REQUIRED PRIOR TO OPERATION OF TRACKED VEHICLES OVER THE GEOGRID. TRACKED VEHICLE TURNING SHOULD BE KEPT TO A MINIMUM TO PREVENT TRACKS FROM DISPLACING THE FILL AND DAMAGING THE GEOGRID.

F. RUBBER TIRED EQUIPMENT MAY PASS OVER GEOGRID REINFORCEMENT AT SLOW SPEEDS, LESS THAN 10 MPH (15 KPH). SUDDEN BRAKING AND SHARP TURNING SHALL BE AVOIDED.

G. AT THE END OF EACH DAY'S OPERATION, THE CONTRACTOR SHALL SLOPE THE LAST LIFT OF REINFORCED BACKFILL AWAY FROM THE WALL UNITS TO DIRECT RUNOFF AWAY FROM WALL FACE. THE CONTRACTOR SHALL NOT ALLOW SURFACE RUNOFF FROM ADJACENT AREAS TO ENTER THE WALL CONSTRUCTION SITE.

3.06 CAP INSTALLATION

A. CAP UNITS SHALL BE GLUED TO UNDERLYING UNITS WITH AN ALL-WEATHER ADHESIVE RECOMMENDED BY THE MANUFACTURER (KEYSTONE KAPSEAL OR EQUIVALENT).

3.07 AS-BUILT CONSTRUCTION TOLERANCES

A. VERTICAL ALIGNMENT: ± 1.5" (40 MM) OVER ANY 10' (3 M) DISTANCE.

B. WALL BATTER: WITHIN 2 DEGREES OF DESIGN BATTER.

C. HORIZONTAL ALIGNMENT: ± 1.5" (40 MM) OVER ANY 10' (3 MM) DISTANCE.
CORNERS, BENDS & CURVES: ± 1 FT (300 MM) TO THEORETICAL LOCATION.

D. MAXIMUM HORIZONTAL GAP BETWEEN ERECTED UNITS SHALL BE 1/2 INCH (13 MM).

3.08 FIELD QUALITY CONTROL

A. QUALITY ASSURANCE - THE OWNER SHALL/MAY ENGAGE INSPECTION AND TESTING SERVICES, INCLUDING INDEPENDENT LABORATORIES, TO PROVIDE QUALITY ASSURANCE AND TESTING SERVICES DURING CONSTRUCTION. THIS DOES NOT RELIEVE THE CONTRACTOR FROM SECURING THE NECESSARY CONSTRUCTION QUALITY CONTROL TESTING.

B. QUALITY ASSURANCE SHOULD INCLUDE FOUNDATION SOIL INSPECTION. VERIFICATION OF GEOTECHNICAL DESIGN PARAMETERS, AND VERIFICATION THAT THE CONTRACTOR'S QUALITY CONTROL TESTING IS ADEQUATE AS A MINIMUM. QUALITY ASSURANCE SHALL ALSO INCLUDE OBSERVATION OF CONSTRUCTION FOR GENERAL COMPLIANCE WITH DESIGN DRAWINGS AND PROJECT SPECIFICATIONS. (*QUALITY ASSURANCE IS USUALLY BEST PERFORMED BY THE SITE GEOTECHNICAL ENGINEER.)*

C. QUALITY CONTROL - THE CONTRACTOR SHALL ENGAGE INSPECTION AND TESTING SERVICES TO PERFORM THE MINIMUM QUALITY CONTROL TESTING DESCRIBED IN THE RETAINING WALL DESIGN PLANS AND SPECIFICATIONS. ONLY QUALIFIED AND EXPERIENCED TECHNICIANS AND ENGINEERS SHALL PERFORM TESTING AND INSPECTION SERVICES.

D. QUALITY CONTROL TESTING SHALL INCLUDE SOIL AND BACKFILL TESTING TO VERIFY SOIL TYPES AND COMPACTION AND VERIFICATION THAT THE RETAINING WALL IS BEING CONSTRUCTED IN ACCORDANCE WITH THE DESIGN PLANS AND PROJECT SPECIFICATIONS.

GENERAL NOTES

1. RETAINING WALLS SHALL ONLY BE CONSTRUCTED UNDER THE OBSERVATION OF A REGISTERED PROFESSIONAL ENGINEER AND A (NICET, WACEL OR EQUIVALENT) CERTIFIED SOIL TECHNICIAN.

2. ALL FOOTINGS HAVE BEEN DESIGNED FOR AN ASSUMED SOIL BEARING PRESSURE OF 3000 PSF. THE REQUIRED BEARING PRESSURE BENEATH THE FOOTING OF THE WALL SHALL BE VERIFIED IN THE FIELD BY A CERTIFIED SOILS TECHNICIAN. TESTING DOCUMENTATION SHALL BE PROVIDED TO THE HOWARD COUNTY INSPECTOR PRIOR TO THE START OF CONSTRUCTION. THE REQUIRED TEST PROCEDURE SHALL BE THE DYNAMIC CONE PENETROMETER TEST ASTM STP-399.

3. THE SUITABILITY OF FILL MATERIAL SHALL BE CONFIRMED BY THE ONSITE SOILS TECHNICIAN. EACH EIGHT (8) INCH LIFT SHALL BE COMPACTED TO A MINIMUM OF 95% STANDARD PROCTER DENSITY AND THE TESTING REPORT SHALL BE MADE AVAILABLE TO THE HOWARD COUNTY INSPECTOR UPON COMPLETION OF CONSTRUCTION.

4. FOR "CRITICAL" WALLS, ONE SOIL BORING SHALL BE REQUIRED EVERY 100' ALONG THE ENTIRE LENGTH OF THE WALL. COPIES OF ALL BORING REPORTS SHALL BE PROVIDED TO THE HOWARD COUNTY INSPECTOR PRIOR TO THE START OF CONSTRUCTION.

5. THESE WALL NOT DESIGNED FOR SURCHARGE LOADS.

COMPACTED FILL NOTES

A. EMBANKMENT SHALL BE CONSTRUCTED OF APPROVED MATERIALS FROM THE EXCAVATION OR FROM OTHER SOURCES. THE MATERIAL SHALL BE FREE FROM ORGANIC MATERIALS, TRASH, MUCK, ROOTS, FROST AND OTHER DELETERIOUS SUBSTANCES.

B. BEFORE DEPOSITING FILLS, THE GORUND SURFACE SHALL BE CLEARED OF ALL REFUSE, BRUSH, GRASS, ROOTS, ICE AND FROZEN MATERIALS. ALL ORGANIC MATTER AND OTHERWISE UNSUITABLE SOILS SHALL BE REMOVED FROM THE SURFACE TO BE FILLED. THE EXPOSED SURFACE SHALL BE PLOWED OR SCARIFIED IF REQUIRED TO A DEPTH OF SIX (6) INCHES. SOILS SO SCARIFIED, OR WHICH HAVE BEEN DISTURBED BY GRUBBING AND STRIPPING OPERATIONS, SHALL BE COMPACTED TO UNDISTURBED SOIL BELOW BY DISCING, LEVELING, ROLLING, AND COMPACTING AT THE MOISTURE CONTENT AND TO THE DENSITY SPECIFIED BELOW FOR COMPACTED EMBANKMENTS.

C. WHERE FILLS ARE MADE ON HILLSIDES OR SLOPES, THE SLOPES OF THE ORIGINAL GROUND UPON WHICH THE FILL IS TO BE PLACED PLOWED OR SCARIFIED DEEPLY, OR WHERE THE SLOPE RATIO OF THE ORIGINAL GROUND IS STEEPER THAN 5 HORIZONTAL TO 1 VERTICAL, THE BANK SHALLBE STEPPED OR BENCHED, WHEN CONSIDERED NECESSARY BY THE ENGINEER, TO PERMIT PLACEMENT OF THE FILL IN HORIZONTAL LAYERS.

D. PLACING, SPREADING AND COMPACTING FILL MATERIALS:

1. THE FILL MATERIALS SHALLBE PLACED IN LAYERS WHICH, BEFORE COMPACTION SHALL NOT EXCEED 8-INCHES WITH THE EXCEPTION OF CLAY SOILS WHICH SHALL BE PLACED AND COMPACTED IN MAXIMUM 6-INCH THICK LOOSE LIFTS. EACH LAYER SHALL BE SPREAD UNFORMLY AND EVENLY AND SHALL BE THOROUGHLY BLADE MIXED DURING THE SPREADING TO INSURE UNIFORMITY OF MATERIALS IN EACH LAYER AND INDIVIDUAL ROCK PIECES OR SOIL CLUMPS NO GREATER THAN HALF THE LOOSE LIFT THICKNESS.

2. AFTER EACH LAYER HAS BEEN PLACED, MIXED AND SPREAD EVENLY, IT SHALL BE THOROUGHLY COMPACTED TO NOT LESS THAN 95% OF THE MAXIMUM DRY DENSITY AS DETERMINED BY ASTM D 698.

3. THE MOISTURE CONTENT OF THE FILL SHALL BE AS REQUIRED IN ORDER TO ATTAIN THE DEGREE OF COMPACTION SPECIFIED.

4. COMPACTION SHALL BE BY APPROVED MULTIPLE-WHEELED PNUEMATIC TIRED ROLLERS, VIBRATORY ROLLERS OR OTHER TYPES OF ACCEPTABLE ROLLERS.

5. THE FILLING OPERATION SHALL BE CONTINUED AS SPECIFIED ABOVE UNTIL THE FILL HAS BEEN BROUGHT TO THE SUBGRADE SHOWN ON THE PLANS.

6. THE FILL SHALL BE CONSTRUCTED IN SUCH A MANNER THAT THE SURFACE WILL BE SLOPED TO DRAIIN AT ALL TIMES, AND ALL FILL SHALL BE DEPOSITED TO PREVENT EXCESSIVE MOISTURE ACCUMULATION FROM RAINWATER.

7. WHEN THE WORK IS INTERRUPTED BY RAIN, FILLING SHALL NOT RESUME UNTIL TESTS INDICATE THAT THE MOISTURE CONTENT AND THE DENSITY OF THE TOP 6-INCHES OF FILL CONFORM TO THE ABOVE SPECIFICATION REQUIREMENTS.

NO AS-BUILT INFO THIS SHEET

DEPARTMENT OF PUBLIC WORKS
HOWARD COUNTY, MARYLAND
William Z. Malik 11-9-09
CHIEF, BUREAU OF HIGHWAYS DATE

DEPARTMENT OF PLANNING & ZONING
HOWARD COUNTY, MARYLAND
Kent Sheubrooks 11-16-09
CHIEF, DIVISION OF LAND DEVELOPMENT DATE

11/13/09
CHIEF, DEVELOPMENT ENGINEERING DIVISION NY DATE

PROFESSIONAL CERTIFICATION
I HEREBY CERTIFY THAT THESE DOCUMENTS WERE PREPARED OR APPROVED BY ME, AND THAT I AM A DULY LICENSED PROFESSIONAL ENGINEER UNDER THE LAWS OF THE STATE OF MARYLAND.
LICENSE NO. 11707 EXPIRATION DATE: 11/11/10

STATE OF MARYLAND — KARL JOSEPH RICKERT — No. 11707 — PROFESSIONAL ENGINEER
Karl Rickert 10/21/09

LITTLE & ASSOCIATES, INC.
ENGINEERS~~LAND PLANNERS~~SURVEYORS
1055 TAYLOR AVENUE, SUITE 307
TOWSON, MARYLAND 21286
PHONE: (410)296-1636 FAX: (410)296-1639

OWNER/DEVELOPER:
KIMBERLY HOMES
ELLICOTT PROPERTIES, LLC.
P.O. BOX 6194
BALTIMORE, MARYLAND, 21231
(410) 522-4987

	BY	NO.	REVISION	DATE
DES:				
DRN:				
CHK:				
DATE: 01/23/2009				

FINAL ROAD CONSTRUCTION PLANS
RETAINING WALL DETAILS & SPECIFICATIONS
F-09-070
DEBRA COURT
LOTS 1 - 12
A RESUBDIVISION OF LOT 80, SECT. 3 GLEN BROOK (P 918); AND SUBDIVISION OF PARCELS 812 & 1119

ELECTION DISTRICT 2
SCALE: AS SHOWN
PRIOR PLANS: P-08-003, S-04-02, PLAT 8/92 & 4567

HOWARD COUNTY, MD
M 24 G 2,3 P 918,812,1119
OCTOBER 15, 2009
SHEET 14 OF 18

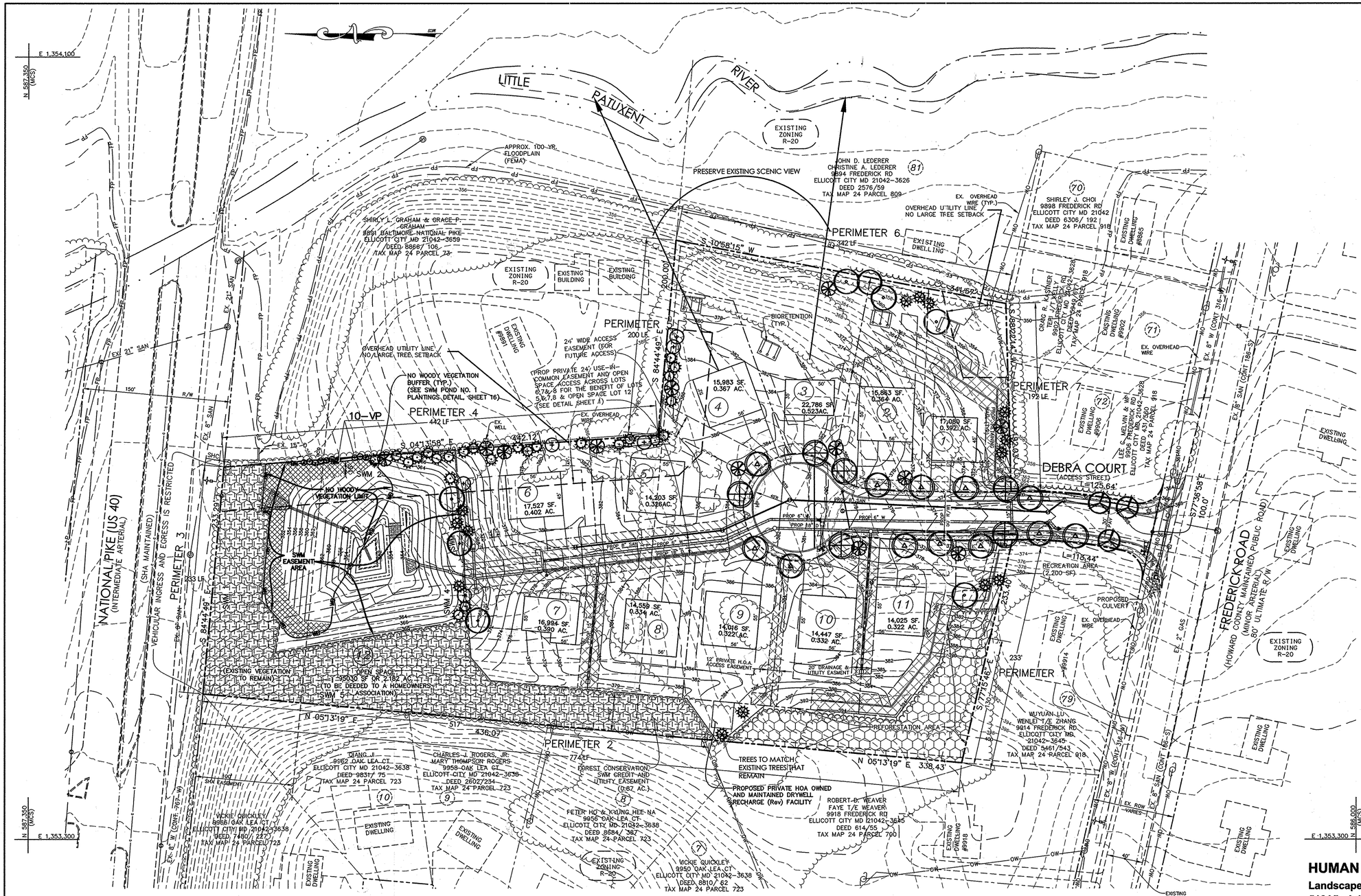

NOTE:
SEE SHEET 16 OF 18 FOR LEGEND AND DETAILS

NOTE:
THE OWNER, TENANT, AND/OR THEIR AGENTS SHALL BE RESPONSIBLE FOR MAINTENANCE OF THE REQUIRED LANDSCAPING, INCLUDING BOTH PLANT MATERIALS AND BERMS, FENCES AND WALLS. ALL PLANT MATERIALS SHALL BE MAINTAINED IN GOOD GROWING CONDITION AND WHEN NECESSARY, REPLACED WITH NEW MATERIALS TO ENSURE CONTINUED COMPLIANCE WITH APPLICABLE REGULATIONS. ALL OTHER REQUIRED LANDSCAPING SHALL BE PERMANENTLY MAINTAINED IN GOOD CONDITION, AND WHEN NECESSARY, REPAIRED OR REPLACED.

PLANTING NOTES:

1. THIS PLAN IS FOR PLANTING PURPOSES ONLY.
2. THIS PLAN HAS BEEN PREPARED IN ACCORDANCE WITH THE PROVISIONS OF SECTION 16.124 OF THE HOWARD COUNTY CODE AND THE LANDSCAPE MANUAL.
3. ALL PLANT MATERIAL SHALL BE NURSERY GROWN AND SHALL CONFORM TO AMERICAN ASSOCIATION OF NURSERYMEN LATEST STANDARDS. PLANT INSTALLATION MUST CONFORM TO THE MINIMUM STANDARDS CITED IN THE LATEST EDITION OF THE "LANDSCAPE SPECIFICATION GUIDELINES" BY THE LANDSCAPE CONTRACTOR'S ASSOCIATION.
4. CONTRACTOR IS TO NOTIFY "MISS UTILITY" A MINIMUM OF 72 HOURS PRIOR TO DIGGING. TELEPHONE: 1-800-257-7777.
5. THE LANDSCAPE ARCHITECT IS TO BE NOTIFIED 48 HOURS BEFORE PLANTING BEGINS. THE LOCATION OF ALL PLANT MATERIAL IS TO BE APPROVED IN THE FIELD BY THE LANDSCAPE ARCHITECT.
6. NO TREE OR SHRUB PLANTING PITS ARE TO BE LEFT OPEN OR UNATTENDED.
7. SHRUBS ARE TO BE GROUPED INTO MULCHED BEDS. BEDS ARE TO BE EDGED AND THE GRASS KILLED OR REMOVED PRIOR TO MULCHING.

NOTE:
SHOULD ANY TREES DESIGNATED FOR PRESERVATION FOR WHICH LANDSCAPING CREDIT IS GIVEN, DIE PRIOR TO RELEASE OF BONDS, THE OWNER WILL BE REQUIRED TO REPLACE THE TREE WITH THE EQUIVALENT SPECIES OR WITH A TREE WHICH WILL OBTAIN THE SAME HEIGHT, SPREAD AND GROWTH CHARACTERISTICS. THE REPLACEMENT TREE MUST BE A MINIMUM OF 3 INCHES IN CALIPER AND ISTALLED AS REQUIRED IN THE HOWARD COUNTY LANDSCAPE MANUAL.

NOTE:
AT THE TIME OF INSTALLMENT, ALL SHRUBS AND OTHER PLANTINGS HEREWITH LISTED AND APPROVED AT THIS SITE, SHALL BE OF THE PROPER HEIGHT REQUIREMENTS IN ACCORDANCE WITH THE HOWARD COUNTY LANDSCAPE MANUAL. IN ADDITION, NO SUBSTITUTIONS OR RELOCATIONS OF REQUIRED PLANTINGS MAY BE MADE WITHOUT PRIOR REVIEW AND APPROVAL FROM THE DEPARTMENT OF PLANNING AND ZONING. ANY DEVIATION FROM THIS APPROVED LANDSCAPE PLAN MAY RESULT IN DENIAL OR DELAY THE THE RELEASE OF LANDSCAPE SURETY UNTIL SUCH TIME AS ALL REQUIRED MATERIALS ARE PLANTED AND/ OR REVISIONS ARE MADE TO APPLICABLE PLANS AND CERTIFICATES.

NOTE:
THE DEVELOPER WILL BE RESPONSIBLE FOR LANDSCAPING AT FINAL PLAN.

PUBLIC STREET TREES WILL BE INCLUDED IN THE COST ESTIMATE GENERATED BY HOWARD COUNTY DED.

DEVELOPER'S/BUILDER'S CERTIFICATE
I/WE CERTIFY THAT THE LANDSCAPING SHOWN ON THIS PLAN WILL BE DONE ACCORDING TO THE PLAN, SECTION 16.124 OF THE HOWARD COUNTY SUBDIVISION AND LAND DEVELOPMENT REGULATIONS AND THE LANDSCAPE MANUAL. I/WE FURTHER CERTIFY THAT UPON COMPLETION A LETTER OF LANDSCAPE INSTALLATION, ACCOMPANIED BY AN EXECUTED ONE YEAR GUARANTEE OF PLANT MATERIALS, WILL BE SUBMITTED TO THE DEPARTMENT OF PLANNING AND ZONING.

Scott P Walk — 10-21-2009
NAME — DATE

LITTLE & ASSOCIATES, INC.
ENGINEERS~~LAND PLANNERS~~SURVEYORS
1055 TAYLOR AVENUE, SUITE 307
TOWSON, MARYLAND 21286
PHONE: (410)296-1636 FAX: (410)296-1639

OWNER/DEVELOPER:
KIMBERLY HOMES
ELLICOTT PROPERTIES, LLC.
P.O. BOX 6184
BALTIMORE, MARYLAND, 21231
(410) 522-4987

HUMAN & ROHDE, INC.
Landscape Architects
512 Virginia Ave.
Towson, Maryland 21286
(410) 825-3885 Phone
(410) 825-3887 Fax

NO AS-BUILT INFO THIS SHEET

DEPARTMENT OF PUBLIC WORKS
HOWARD COUNTY, MARYLAND
CHIEF, BUREAU OF HIGHWAYS — 11-9-09 DATE

DEPARTMENT OF PLANNING & ZONING
HOWARD COUNTY, MARYLAND
CHIEF, DIVISION OF LAND DEVELOPMENT — 11-16-09 DATE
CHIEF, DEVELOPMENT ENGINEERING DIVISION — 11/23/09 DATE

STATE OF MARYLAND — JOHN C. HOWARD — NO. 359 — REGISTERED LANDSCAPE ARCHITECT

DES:				
DRN:				
CHK:				
DATE: 1/23/2009	BY	NO.	REVISION	DATE

FINAL ROAD CONSTRUCTION PLANS
LANDSCAPE PLAN
F-09-070
DEBRA COURT
LOTS 1 - 12
A RESUBDIVISION OF LOT 80, SECT. 3 GLEN BROOK (P 918); AND SUBDIVISION OF PARCELS 812 & 1119

ELECTION DISTRICT 2 — HOWARD COUNTY, MD
SCALE: AS SHOWN — M 24 G 2,3 P 918,812,1119
PRIOR PLANS: P-08-003, S-04-02, — OCTOBER 15, 2009
PLAT 8/92 & 4567 — SHEET 15 OF 18

F-09-070

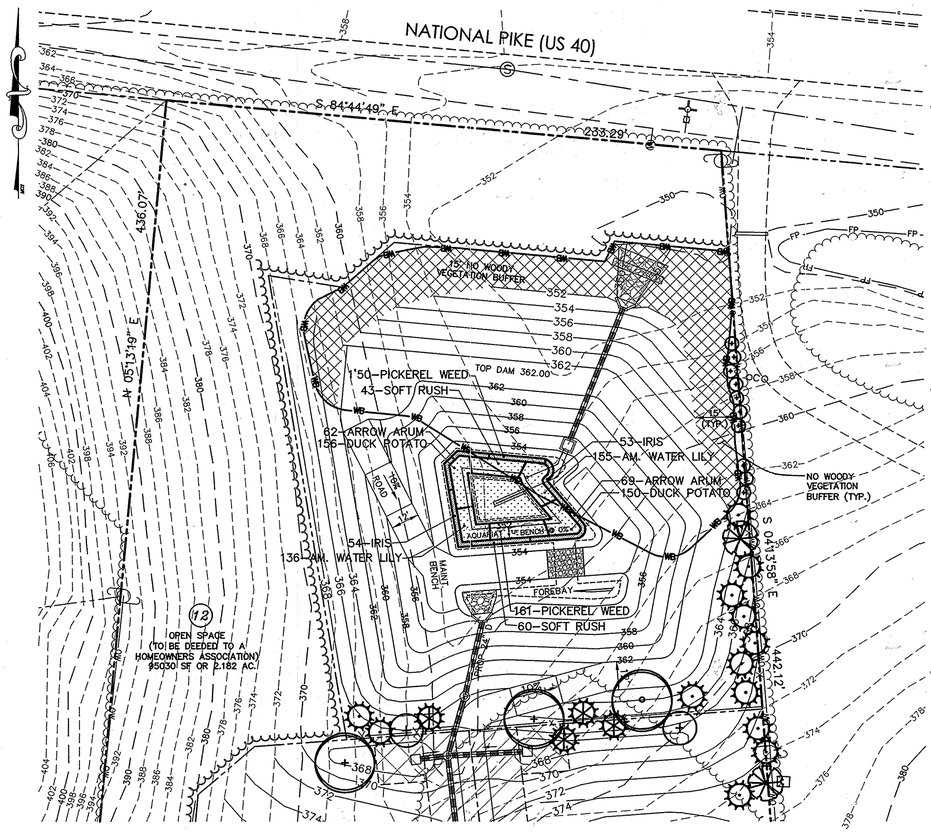

DETAIL – STORMWATER MANAGEMENT
POND NO. 1 PLANTINGS
SCALE: 1"=30'

SWM PLANT LIST

QUANTITY	BOTANICAL / COMMON NAME	ROOT	COMMENTS
107	IRIS VERSICOLOR/BLUE FLAG IRIS	PLUG	12" O.C.
103	JUNCUS EFFUSUS/SOFT RUSH	PLUG	12" O.C.
291	NYMPHAEA ODORADA/AMERICAN WATERLILY	PLUG	12" O.C.
311	PONTEDERIA CORDATA/PICKEREL WEED	PLUG	12" O.C.
131	PELTANDRA VIRGINICA/ARROW ARUM	PLUG	12" O.C.
306	SAGITTARIA LATIFOLIA/DUCK POTATO	PLUG	12" O.C.

SCHEDULE A: PERIMETER LANDSCAPE EDGE

CATEGORY	PERIMETER 1	PERIMETER 2	PERIMETER 3	PERIMETER 4	PERIMETER 5	PERIMETER 6	PERIMETER 7
LANDSCAPE TYPE	SFD TO SFD	SFD TO SFD	SWM TO ROAD	SFD TO SFD	SFD TO SFD	SFD TO SFD	SFD TO SFD
LINEAR FEET OF ROADWAY FRONTAGE/ PERIMETER	233 LF	714 LF	SEE SCHEDULE D	442 LF	200 LF	342 LF	192 LF
CREDIT FOR EXISTING VEGETATION (YES, NO, LINEAR FEET) (DESCRIBE BELOW IF NEEDED)	YES, 130 LF	YES, 694 LF		NO	NO	NO	NO
CREDIT FOR WALL, FENCE OR BERM (YES, NO, LINEAR FEET) (DESCRIBE BELOW IF NEEDED)	NO	NO		NO	NO	NO	NO
NUMBER OF PLANTS REQUIRED SHADE TREES EVERGREEN TREES SHRUBS	2 0 0	1 0 0		7 0 0	3 0 0	6 0 0	3 0 0
NUMBER OF PLANTS PROVIDED SHADE TREES EVERGREEN TREES OTHER TREES (2:1 SUBSTITUTION) SHRUBS (10:1 SUBSTITUTION) DESCRIBE PLANT SUBSTITUTION CREDITS BELOW IF NEEDED)	1 2 2 0	0 2 0 0		0 1 7 0	0 4 3 3	4 3 1 0	1 3 1 0

COMMENTS: P1: TWO EVERGREEN TREES SUBSTITUTED FOR ONE SHADE TREE
P2: TWO EVERGREEN TREES SUBSTITUTED FOR ONE SHADE TREE
P4: SEVEN EVERGREEN TREES AND 7 OTHER TREES SUBSTITUTED FOR 7 SHADE TREES
P5: FOUR EVERGREEN TREES AND 3 OTHER TREES SUBSTITUTED FOR 3 SHADE TREES
P6: THREE EVERGREEN TREES AND 1 OTHER TREE SUBSTITUTED FOR 2 SHADE TREES
P7: THREE EVERGREENS AND 1 OTHER TREE SUBSTITUTED FOR 2 SHADE TREES

PLANT LIST

KEY	QTY	BOTANICAL NAME COMMON NAME	SIZE	COND	REMARKS
+	3	ACER RUBRUM 'RED SUNSET' 'RED SUNSET' RED MAPLE	2 1/2"-3" CAL.	B & B	AS SHOWN
○	5	QUERCUS PALUSTRIS PIN OAK	2 1/2"-3" CAL.	B & B	AS SHOWN
△	12	ZELKOVA SERRATA 'GREEN VASE' ZELKOVA SERRATA 'GREEN VASE'	2 1/2"-3" CAL.	B & B	AS SHOWN
⊕	6	QUERCUS COCCINEA SCARLET OAK	2 1/2"-3" CAL.	B & B	AS SHOWN
✳	3	PRUNUS SERRULATA 'KWANZAN' 'KWANZAN' CHERRY	1 1/2"-2" CAL.	B & B	AS SHOWN
✻	12	AMELANCHIER CANADENSIS 'WHITE PILLAR' 'WHITE PILLAR' SERVICEBERRY	6-7' HT.	B & B	MULTI-STEM
⊕	6	CERCIS CANADENSIS 'FOREST PANSY' RED BUD 'FOREST PANSY'	6-7' HT.	B & B	MULTI-STEM
☉	26	THUJA OCCIDENTALIS 'EMERALD GREEN' 'EMERALD GREEN' ARBORVITAE	5 - 6' HT.	B & B	AS SHOWN
❋	14	ILEX x 'NELLIE R. STEVENS' 'NELLIE R. STEVENS' HOLLY	5 - 6' HT.	B & B	10' O.C.
VP ⊙⊙	10	VIBURNUM PRUNIFOLIUM BLACKHAW VIBURNUM	3 - 4' HT.	B & B	5' O.C.

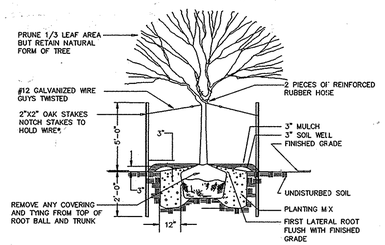

*EVERGREEN & DECIDUOUS *STAKES AND WIRE ARE TO BE REMOVED AT THE COMPLETION OF ONE FULL GROWING SEASON.

PLANTING DETAIL FOR TREES* – 1 – 4" CALIPER
NOT TO SCALE

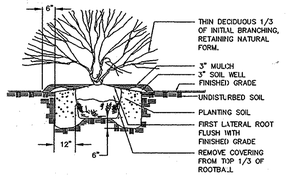

PLANTING DETAIL FOR EVERGREEN AND DECIDUOUS SHRUBS
NOT TO SCALE

NOTE:

THE OWNER, TENANT, AND/OR THEIR AGENTS SHALL BE RESPONSIBLE FOR MAINTENANCE OF THE REQUIRED LANDSCAPING, INCLUDING BOTH PLANT MATERIALS AND BERMS, FENCES AND WALLS. ALL PLANT MATERIALS SHALL BE MAINTAINED IN GOOD GROWING CONDITION AND WHEN NECESSARY, REPLACED WITH NEW MATERIALS TO ENSURE CONTINUED COMPLIANCE WITH APPLICABLE REGULATIONS. ALL OTHER REQUIRED LANDSCAPINGS SHALL BE PERMANENTLY MAINTAINED IN GOOD CONDITION, AND WHEN NECESSARY, REPAIRED OR REPLACED.

PLANTING NOTES:

1. THIS PLAN IS FOR PLANTING PURPOSES ONLY.
2. THIS PLAN HAS BEEN PREPARED IN ACCORDANCE WITH THE PROVISIONS OF SECTION 16.124 OF THE HOWARD COUNTY CODE AND THE LANDSCAPE MANUAL.
3. ALL PLANT MATERIAL SHALL BE NURSERY GROWN AND SHALL CONFORM TO AMERICAN ASSOCIATION OF NURSERYMEN LATEST STANDARDS. PLANT INSTALLATION MUST CONFORM TO THE MINIMUM STANDARDS CITED IN THE LATEST EDITION OF THE "LANDSCAPE SPECIFICATION GUIDELINES" BY THE LANDSCAPE CONTRACTOR'S ASSOCIATION.
4. CONTRACTOR IS TO NOTIFY "MISS UTILITY" A MINIMUM OF 72 HOURS PRIOR TO DIGGING. TELEPHONE: 1-800-257-7777.
5. THE LANDSCAPE ARCHITECT IS TO BE NOTIFIED 48 HOURS BEFORE PLANTING BEGINS. THE LOCATION OF ALL PLANT MATERIAL IS TO BE APPROVED IN THE FIELD BY THE LANDSCAPE ARCHITECT.
6. NO TREE OR SHRUB PLANTING PITS ARE TO BE LEFT OPEN OR UNATTENDED.
7. SHRUBS ARE TO BE GROUPED INTO MULCHED BEDS. BEDS ARE TO BE EDGED AND THE GRASS KILLED OR REMOVED PRIOR TO MULCHING.

STREET TREE SCHEDULE

DEBRA COURT	800 LF ROADWAY	@ 1 TREE / 40 LF = 20 TREES
NATIONAL PIKE	NO DEVELOPMENT ALONG ROUTE 40 PROPOSED. EXISTING VEGETATION TO REMAIN	
		TREES PROVIDED = 20 TREES

SCHEDULE D: STORMWATER MANAGEMENT AREA LANDSCAPING

TYPE B BUFFER	SWM 1	SWM 2	SWM 3	SWM 4	SWM 5
LINEAR FEET OF ROADWAY FRONTAGE/ PERIMETER	233 LF	195 LF	123 LF	30 LF	250 LF
NUMBER OF TREES REQUIRED SHADE TREES EVERGREEN TREES	N/A	4 5	2 3	1 1	N/A
CREDIT FOR EXISTING VEGETATION (YES, NO, LINEAR FEET) (DESCRIBE BELOW IF NEEDED)	YES, 233 LF	NO	NO	NO	YES 250 LF
CREDIT FOR WALL, FENCE OR BERM (YES, NO, LINEAR FEET) (DESCRIBE BELOW IF NEEDED)	NO	NO	NO	NO	NO
NUMBER OF PLANTS PROVIDED SHADE TREES EVERGREEN TREES OTHER TREES (2:1 SUBSTITUTION) SHRUBS (10:1 SUBSTITUTION	0 0 0	0 12 10	2 3 0	1 0 1	0 0 0

COMMENTS: SWM 2: SEVEN EVERGREEN TREES AND TEN SHRUBS SUBSTITUTED FOR 4 SHADE TREES

LANDSCAPE SURETY NOTE:

THIS LANDSCAPE PLAN WAS PREPARED IN ACCORDANCE WITH SUBDIVISION SECTION 16.124 AND THE NEW TOWN ALTERNATIVE PROVISIONS OF THE HO. CO. LANDSCAPE MANUAL. LANDSCAPE SURETY IN THE AMOUNT OF $10,050 HAS BEEN POSTED AS A PART OF THE DEVELOPER'S AGREEMENT.

(29) SHADE TREES @ $300 EACH = $8,700.00
(9) EVERGREEN TREES @ $150 EACH = $1,350.00
(0) SHRUBS @ $30 EACH = _____
TOTAL = $10,050.00

DEPARTMENT OF PUBLIC WORKS
HOWARD COUNTY, MARYLAND
CHIEF, BUREAU OF HIGHWAYS — DATE 11-9-09

DEPARTMENT OF PLANNING & ZONING
HOWARD COUNTY, MARYLAND
CHIEF, DIVISION OF LAND DEVELOPMENT — DATE 11-16-09
CHIEF, DEVELOPMENT ENGINEERING DIVISION — DATE 11/13/09

STATE OF MARYLAND
JOHN C. HOHENSEE
NO. 333
REGISTERED LANDSCAPE ARCHITECT

HUMAN & ROHDE, INC.
Landscape Architects
512 Virginia Ave.
Towson, Maryland 21286
(410) 825-3885 Phone
(410) 825-3887 Fax

NO AS-BUILT INFO THIS SHEET

LITTLE & ASSOCIATES, INC.
ENGINEERS~~LAND PLANNERS~~SURVEYORS
1055 TAYLOR AVENUE, SUITE 307
TOWSON, MARYLAND 21286
PHONE: (410)296-1636 FAX: (410)296-1639

OWNER/DEVELOPER:
KIMBERLY HOMES
ELLICOTT PROPERTIES, LLC.
P.O. BOX 6194
BALTIMORE, MARYLAND, 21231
(410) 522-4987

	BY	NO.	REVISION	DATE
DES:				
DRN:				
CHK:				
DATE: 1/23/2009	LAI			

FINAL ROAD CONSTRUCTION PLANS
LANDSCAPE DETAILS
F-09-070
DEBRA COURT
LOTS 1 – 12
A RESUBDIVISION OF LOT 80, SECT. 3 GLEN BROOK (P 918); AND SUBDIVISION OF PARCELS 812 & 1119

ELECTION DISTRICT 2
SCALE: AS SHOWN
PRIOR PLANS: F-08-003, S-04-02, PLAT 8/92 & 4567
HOWARD COUNTY, MD
M 24 G 2,3 P 918,812,1119
OCTOBER 15, 2009
SHEET 16 OF 18

F-09-070

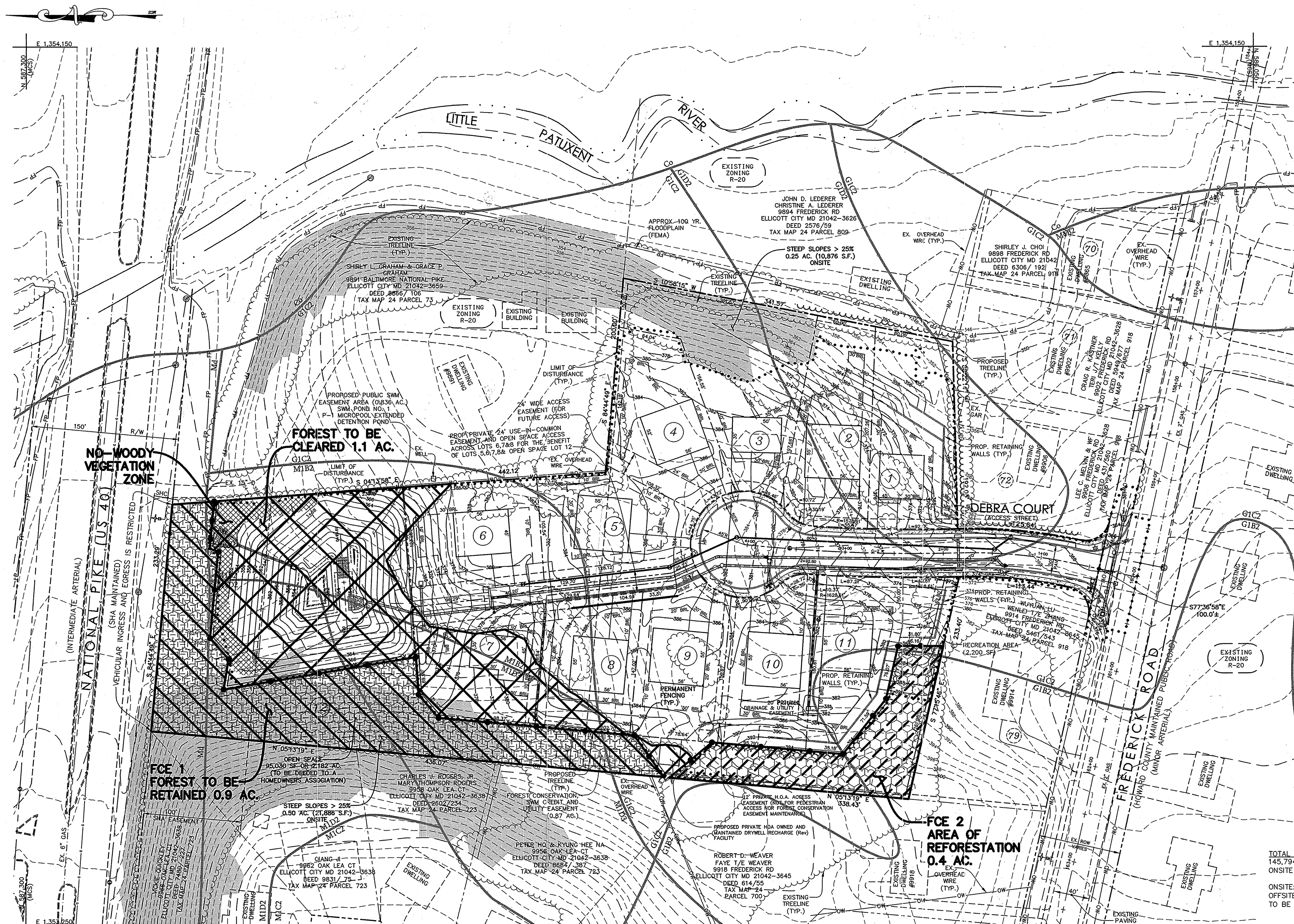

EXISTING ZONING R-20

VICKIE QUICKLEY
9950 OAK LEA CT
ELLICOTT CITY MD 21042-3638
DEED 8810/ 62
TAX MAP 24 PARCEL 723

SCALE:
1"=50'

NOTE: SEE SHEET 18 OF 18 FOR FOREST CONSERVATION DETAILS.

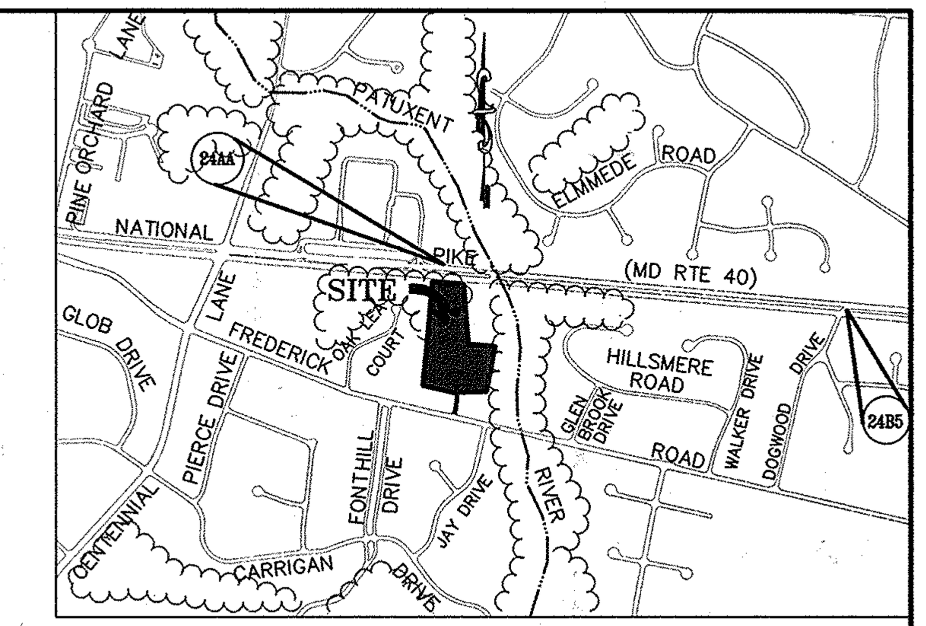

VICINITY MAP
1"=1000'

ADC MAP: 11
COORD.: H-7

SOIL DESIGNATION	SOIL TYPES	SOIL CHARACTERISTICS		SOIL GROUP
Co°	CODORUS SILT LOAM			C
GIB2#	GLENELG WAM	3-8%	MODERATELY ERODED	B
GIC2#	GLENELG WAM	8-15%	MODERATELY ERODED	B
GID2	GLENELG WAM	15-25%	MODERATELY ERODED	B
Md	MADE LAND			D
MIB2#	MANOR LOAM	3-8%	MODERATELY ERODED	B
MIC2#	MANOR LOAM	8-15%	MODERATELY ERODED	B
MIC3#	MANOR LOAM	8-15%	MODERATELY ERODED	B
MID2	MANOR LOAM	15-25%	MODERATELY ERODED	B
MID3	MANOR LOAM	15-25%	MODERATELY ERODED	B

SOIL LINES AND TYPES SHOWN ARE TAKEN FROM HOWARD COUNTY USDA SOILS MAP NO. 15.
° INDICATES A HYDRIC SOIL
# INDICATES A SOIL WITH SLOPES LESS THAN 15% AND SIGNIFICANT EROSION POTENTIAL

BENCHMARK:

GEODETIC CONTROL 24AA: STANDARD HOWARD COUNTY STAMPED DISC NEAR THE ENTRANCE TO THE ENCHANTED FOREST SHOPPING CENTER

N 587,380.458 E 1,352,603.488
ELEV. 386.37 (NAVD 88)

GEODETIC CONTROL 24B5: STANDARD HOWARD COUNTY STAMPED DISC LOCATED AT THE INTERSECTION OF MD RTE 40 AND DOGWOOD DR.

N 586,956.233 E 1,356,570.840
ELEV. 390.04 (NAVD 88)

SITE DATA

GROSS AREA (INCL. ALL PROP. LOTS)	6.838 AC±
100 YEAR FLOOD PLAIN	0.000 AC±
AREA OF STEEP SLOPES 25% OR GREATER	0.824 AC±
NET TRACT AREA (NTA)	6.014 AC±
EXISTING FOREST (NTA)	2.000 AC±
AFFORESTATION THRESHOLD	1.0 AC±
CONSERVATION THRESHOLD	1.4 AC±
BREAK EVEN POINT	1.5 AC±
FOREST TO BE CLEARED (NTA)	1.1 AC±
FOREST TO BE RETAINED IN FCE	0.9 AC±
REFORESTATION REQUIRED	1.08 AC±
REFORESTATION ON-SITE	0.4 AC±
NET REFORESTATION REQUIRED	0.68 AC±
FEE-IN-LIEU COST	$ 22,215.60

FOREST CONSERVATION WORKSHEET

NET TRACT AREA	
A. TOTAL TRACT AREA (INCL. ALL PROP. LOTS)	6.84 AC±
B. AREA WITHIN 100 YEAR FLOOD PLAIN	0.00 AC±
C. AREA WITHIN AGRICULTURAL USE OR PRESERVATION PARCEL	0.00 AC±
D. NET TRACT AREA	6.84 AC±
LAND USE CATEGORY	
ZONING = R-20	
E. AFFORESTATION THRESHOLD (15% x D =)	1.02 AC±
F. CONSERVATION THRESHOLD (20% x D =)	1.36 AC±
EXISTING FOREST COVER	
G. EXISTING FOREST COVER (EXCLUDING FLOODPLAIN)	2.00 AC±
H. AREA OF FOREST ABOVE AFFORESTATION THRESHOLD	0.98 AC±
I. AREA OF FOREST ABOVE CONSERVATION THRESHOLD	0.64 AC±
BREAK EVEN POINT	
J. FOREST RETENTION ABOVE THRESHOLD W/O MITIGATION	0.13 AC±
BREAK EVEN POINT	1.49 AC±
K. CLEARING PERMITTED WITHOUT MITIGATION	0.51 AC±
PROPOSED FOREST CLEARING	
L. TOTAL AREA OF FOREST TO BE CLEARED (CANNOT EXCEED EXIST.)	1.10 AC±
M. TOTAL AREA OF FOREST TO BE RETAINED	0.90 AC±
PLANTING REQUIREMENTS	
N. REFORESTATION FOR CLEARING ABOVE CONSERVATION THRESHOLD	0.16 AC±
P. REFORESTATION FOR CLEARING BELOW CONSERVATION THRESHOLD	0.92 AC±
Q. CREDIT FOR RETENTION ABOVE CONSERVATION THRESHOLD	0.00 AC±
R. TOTAL REFORESTATION REQUIRED	1.08 AC±
S. TOTAL AFFORESTATION REQUIRED	0.00 AC±
T. TOTAL REFORESTATION AND AFFORESTATION REQUIRED	1.08 AC±

LEGEND

- FOREST CONSERVATION EASMENT SIGNAGE (TYP.)
- LIMIT OF DISTURBANCE
- EXISTING TREELINE
- PROPOSED TREELINE
- PERMANENT FENCING
- FOREST TO BE CLEARED
- REFORESTATION
- FOREST TO BE RETAINED
- SLOPES GREATER THAN 25%

TOTAL STEEP SLOPES
145,794 S.F. CONTIGUOUS
ONSITE & OFFSITE (3.35 AC.)

ONSITE:	35,895 S.F.	(0.82 AC.)
OFFSITE:	109,899 S.F.	(2.52 AC.)
TO BE DISTURBED:	1,912 S.F.	(0.04 AC.)

NO AS-BUILT INFO THIS SHEET

LITTLE & ASSOCIATES, INC.
ENGINEERS~~LAND PLANNERS~~SURVEYORS
1055 TAYLOR AVENUE, SUITE 307
TOWSON, MARYLAND 21286
PHONE: (410)296-1636 FAX: (410)296-1639

OWNER/DEVELOPER:
KIMBERLY HOMES
ELLICOTT PROPERTIES, LLC.
P.O. BOX 6194
BALTIMORE, MARYLAND, 21231
(410) 522-4987

	BY	NO.	REVISION	DATE
DES: AMK				
DRN: PFS				
CHK: AMK				
DATE: 1/23/09				

DEPARTMENT OF PUBLIC WORKS
HOWARD COUNTY, MARYLAND
[signature] 11-9-09
CHIEF, BUREAU OF HIGHWAYS DATE

DEPARTMENT OF PLANNING & ZONING
HOWARD COUNTY, MARYLAND
[signature] 11-16-09
CHIEF, DIVISION OF LAND DEVELOPMENT DATE

[signature] 11/13/09
CHIEF, DEVELOPMENT ENGINEERING DIVISION DATE

Eco-Science Professionals, Inc.
CONSULTING ECOLOGISTS
P.O. Box 5006 Glen Arm, MD 21057 (410) 592-6752

MD DNR Qualified Professional
USACOE Wetland Delineator
Certification # WDCP93MD0610044B2
[signature]
John P. Canoles

FINAL ROAD CONSTRUCTION PLANS
FOREST CONSERVATION PLAN & SOILS MAP
F-09-070
DEBRA COURT
LOTS 1 - 12

A RESUBDIVISION OF LOT 80, SECT. 3 GLEN BROOK (P 918); AND SUBDIVISION OF PARCELS 812 & 1119

ELECTION DISTRICT 2
SCALE: AS SHOWN
PRIOR PLANS: P-08-003, S-04-02, PLAT 8/92 & 4567
HOWARD COUNTY SOIL MAP: SHEET 15

HOWARD COUNTY, MD
M 24 G 2,3 P 918,812,1119
OCTOBER 15, 2009

REFORESTATION PLAN

The reforestation area will be placed into a Forest Conservation Easement.

A. Planting Plan and Methods

Plant species selection was based on our knowledge regarding plant communities in Maryland's Piedmont Plateau and information provided in the soil survey on typical vegetation for the soil type on the planting site. Species selection was also based on our knowledge of plant availability in the nursery industry.

Reforestation will be accomplished through a mixed planting of whips and branched transplants. Container grown stock is recommended but bareroot stock may be used to help control afforestation costs. If bareroot stock is used the root systems of all plants will be dipped in an anti-desiccant gel prior to planting to improve moisture retention in the root systems.

Prior to planting the proposed Forest Conservation Easements all multiflora rose in the planting area shall be removed. Removal of the rose may be performed with mowing and herbicide treatments. Physical removal of all top growth following by a periodic herbicide treatment of stump sprouts is recommended. Native tree and shrub species occurring within the rose thickets should be retained wherever possible. Herbicides treatments shall occur on 2 month intervals during the first growing season and once each in the spring and fall for subsequent years. Herbicide used shall be made specifically to address woody plant material and shall be applied as per manufacturers specifications. Care should be taken not to spray planted trees or naturally occurring native tree/shrub seedlings. It is recommended that initiation of rose removal begin at least six months prior to planting.

B. Planting and Soil Specifications

Plant material will be installed in accordance with the Planting Detail and Planting Specifications shown on the Forest Conservation Plan.

Amendments to existing soil will be in accordance with the Planting Specifications shown on the Forest Conservation Plan. Soil disturbance will be limited to individual planting locations.

C. Maintenance of Plantings

For information regarding maintenance of the reforestation plantings, see Section VIII B.

D. Guarantee Requirements

A 90 percent survival rate of the reforestation plantings will be required after one growing season. All plant material below the 90 percent survival threshold will be replaced at the beginning of the second growing season. At the end of the second growing season, a 75 percent survival rate will be required. All plant material below the 75 percent survival threshold will be replaced by the beginning of the next growing season.

E. Security for Forest Conservation

Section 16-1209 of the Howard County Forest Conservation Act requires that a developer shall post a security (bond, letter of credit, etc.) with the County to insure that all work is done in accordance with the FCP. The security requirements are as follows-

Forest Retention:	39,204 sq.ft. @ $0.20/sq.ft.	= $	7,840.80
Reforestation:	17,424 sq.ft. @ $0.50/sq.ft.	= $	8,712.00

CONSTRUCTION PERIOD PROTECTION PROGRAM

A. Forest Protection Techniques

1. Soil Protection Area (Critical Root Zone)

The soil protection area, or critical root zone, of a tree is that portion of the soil column where most of o its roots may be found. The majority of roots responsible for water and nutrient uptake are located just below the soil surface. Temporary fencing shall be placed around the critical root zone of the forest in areas where the forest limits occur within 25 feet of the limit of disturbance.

2. Fencing and Signage

Existing forest limits occurring within 25 feet of the limits of disturbance shall be protected using temporary protective fencing. Permanent signage shall be placed around the afforestation area prior to plant installation, as shown on the plan.

B. Pre-Construction Meeting

Upon staking of limits of disturbance a pre-construction meeting will be held between the developer, contractor and appropriate County inspector. The purpose of the meeting will be to
verify that all sediment control is in order, and to notify the contractor of possible penalties for non-compliance with the FCP.

C. Storage Facilities/Equipment Cleaning

All equipment storage, parking, sanitary facilities, material stockpiling, etc. associated with construction of the project will be restricted to those areas outside of the proposed Forest Conservation Easement. Cleaning of equipment will be limited to area within the LOD of the proposed homesites. Wastewater resulting from equipment cleaning will be controlled to prevent runoff into environmentally sensitive areas.

D. Sequence of Construction

The following timetable represents the proposed timetable for development. The items outlined in the Forest Conservation Plan will be enacted within two (2) years of subdivision approval.

Below find a proposed sequence of construction.

1. Install all signage and sediment control devices.

2. Hold pre-construction meeting between developer, contractor and County inspector.

3. Build access roads, install water and sewer systems, and construct houses. Stabilize all disturbed areas accordingly.

4.Begin multiflora rose removal. Install permanent protective signage for easements and initiate plantings in accordance with Forest Conservation Plan. Plantings will be completed within two (2) years of subdivision approval.

5. Remove sediment control.

6. Hold post-construction meeting with County inspectors to assure compliance with FCP. Submit Certification of Installation.

7. Monitor and maintain plantings for 2 years.

E. Construction Monitoring

Eco-Science Professionals, or another qualified professional designated by the developer, will monitor construction of the project to ensure that all activities are in compliance with the Forest Conservation Plan.

F. Post-Construction Meeting

Upon completion of construction, Eco-Science Professionals, or another qualified professional designated by the developer, will notify the County that construction has been completed and arrange for a post-construction meeting to review the project site. The meeting will allow the County inspector to verify that afforestation plantings have been installed.

POST-CONSTRUCTION MANAGEMENT PLAN

Howard County requires a two year post-construction management plan be prepared as part of the forest conservation plan. The plan goes into effect upon acceptance of the construction certification of completion by the County. Eco-Science Professionals, or another qualified professional designated by the developer, will be responsible for implementation of the post-construction management plan.

The following items will be incorporated into the plan:

A. Fencing and Signage

Permanent signage indicating the limits of the retention/reforestation area shall be maintained.

B. General Site Inspections/Maintenance of Plantings

Site inspections will be performed a minimum of three times during the growing season. The purpose of the inspections will be to assess the health of the afforestation plantings. Appropriate measures will be taken to rectify any problems that may arise.

In addition, maintenance of the afforestation plantings will involve the following steps:

1. Watering – All plant material shall be watered twice a month during the 1st growing season, more or less frequently depending on weather conditions. During the second growing season, once a month during May-September, if needed.
2. Removal of invasive exotics and noxious weeds. Old field successional species will be retained.
3. Identification of serious plant pests and diseases, treatment with appropriate agent.
4. Pruning of dead branches.
5. After 12 and 24 months, replacement of plants, if required, in accordance with the Guarantee Requirements shown on the FCP.

C. Education

The developer will provide appropriate materials to property owners informing them of the location and purpose of the afforestation area. Materials may include site plans and information explaining the intent of the forest conservation law.

D. Final Inspection

At the end of the two year post-construction management period, Eco-Science Professionals, or another qualified professional, will submit to the administrator of the Howard County Forest Conservation Program certification that all retention/afforestation requirements have been met. Upon acceptance of this certification, the County will release the developer from all future obligations and release the developer's bond.

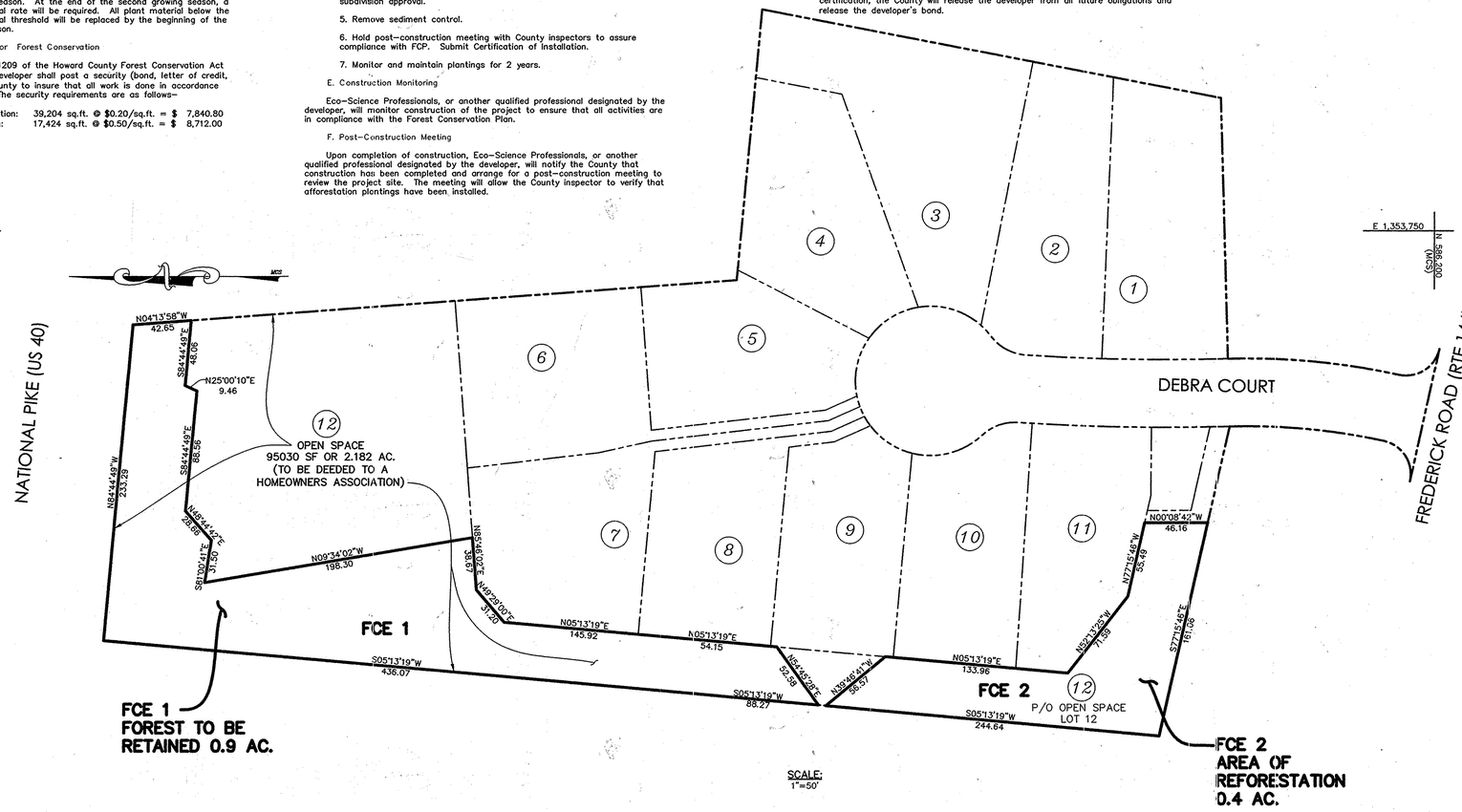

FCE 1
FOREST TO BE RETAINED 0.9 AC.

FCE 2
AREA OF REFORESTATION 0.4 AC.

SCALE:
1"=50'

N 587,300 (MCS)
E 1,353,300

Eco-Science Professionals, Inc.
CONSULTING ECOLOGISTS
P.O. Box 5006 Glen Arm, MD 21057 (410) 592-6752

MD DNR Qualified Professional
USACOE Wetland Delineator
Certification # WDCP93MD0610044112
John P. Canoles

PLANTING SCHEDULE

FCE # 2 - 0.4 acres
Planting Units Required: 280
Planting Units Provided: 280

Qty	Species	Size	Spacing	Total FCA Units
5	Acer rubrum - Red maple	1" cal.	15' o.c.	
5	Liriodendron tulipifera - Tulip poplar **	1" cal.	15' o.c.	
5	Platanus occidentalis - Sycamore	1" cal.	15' o.c.	
5	Quercus alba - White oak **	1" cal.	15' o.c.	
20	Total 1" caliper trees x 3.5 units/tree= FCA unit credit			70
15	Acer rubrum - Red maple	2-3' whip	11' o.c.	
5	Diospyros virginiana - Persimmon **	2-3' whip	11' o.c.	
20	Liriodendron tulipifera - Tulip poplar **	2-3' whip	11' o.c.	
10	Nyssa sylvatica - Black gum	2-3' whip	11' o.c.	
10	Platanus occidentalis - Sycamore	2-3' whip	11' o.c.	
10	Prunus serotina - Black cherry **	2-3' whip	11' o.c.	
10	Quercus alba - White oak	2-3' whip	11' o.c.	
10	Umus rubra - Slippery Elm	2-3' whip	11' o.c.	
15	Viburnum prunifolium - Blackhaw **	2-3' whip	11' o.c.	
105	Total whip plantings x 2 units /tree = FCA unit credit			210
			Total Unit Credit	280

Planting Notes:

- Planting density based on 700 planting units per acre. 2" caliper trees = 7 planting units, 1" caliper trees = 3.5 planting units, whips with shelter = 2 planting units.
- ** - These species should not be planted within the wetland limits.
- 1" caliper trees should be staggered along the outer perimeter of the planting area to serve as demarcation of the boundary. The trees should be no closer than 15 foot spacing.
- Planting shall be made in a curvilinear fashion along contour. The planting should avoid a grid appearance but should be spaced to facilitate maintenance
- Multiflora rose/heavy brush removal/control may be required prior to installation of planting.
- All whips are required to be installed with tree shelters per Howard County FCA requirements.

SURETY INFORMATION

0.90 AC. RETENTION x $0.20 SQ. FT.	=	$7,840.80
0.40 AC. REFORESTATION x $0.50 SQ. FT.	=	$8,712.00
TOTAL	=	$16,552.80

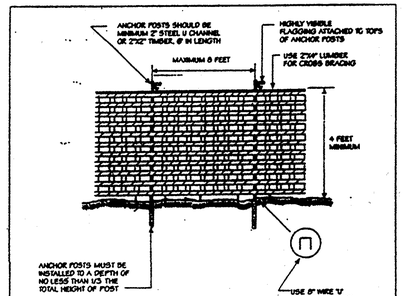

Notes:
1. Blaze orange or blue plastic mesh fence for forest protection device, only.
2. Boundaries of Retention Area will be established as part of the forest conservation plan review process.
3. Boundaries of Retention Area should be staked and flagged prior to installing device.
4. Avoid damage to critical root zone. Do not damage or sever large roots when installing posts.
5. Protection signs are required, See Figure C-4.
6. Device should be maintained throughout construction.

Source: Adapted from Prince George's County, Maryland: Woodland Conservation Manual and Forest Conservation Manual, 1991

Plastic Mesh Tree Protection Fence | Figure C-5

Vegetative Chart

Cover Type	Dominant Vegetation	Comments
Forest	Liriodendron tulipifera, Acer rubrum, Fraxinus pennsylvanica, Acer negundo, Prunus serotina, Rosa multiflora	The forest is dominated by 10-20 inch dbh canopy trees. The stand is in good condition
White Pine Screening	Pinus strobus	The screening includes trees 8-14" pines in good condition
Lawn	Lawn grasses with landscape elements	Landscaping elements include – Norway maple, Norway spruce, hemlock, azalea, and rhododendron. Some landscaping is over mature

FOREST CLEARING/REFORESTATION PLAN JUSTIFICATION –

THE GOAL OF THE DEVELOPMENT PLAN FOR THE SUBJECT PROPERTY WAS TO CREATE A RESIDENTIAL COMMUNITY WHILE RESPECTING THE ENVIRONMENTAL CONSTRAINTS OF THE PROPERTY. ONE GOAL OF THE SITE PLAN WAS TO MINIMIZE FOREST CLEARING. THE DEVELOPMENT HAS BEEN DESIGNED TO MAXIMIZE THE USE OF THE NONFORESTED AREAS ON THE SITE, LAWN AND SCREENING. DESPITE THE GOAL OF RETAINING ALL OF THE FOREST ON THE SITE SOME FOREST CLEARING IS REQUIRED. FOREST CLEARING IS REQUIRED FOR LOTS AND STORMWATER MANAGEMENT. THE LOT SIZES HAVE BEEN MINIMIZED TO REDUCE THE OVERALL FOOTPRINT OF THE DEVELOPMENT AND ARE AS SMALL AS POSSIBLE WHILE STILL MAINTAINING THE CHARACTER OF THE SURROUNDING COMMUNITY. THE USE OF TOWN HOMES OR CONDOMINIUM BUILDINGS FOR THIS DEVELOPMENT COULD REDUCE THE FOREST CLEARING BUT WOULD NOT BE COMPLEMENTARY TO THE EXISTING NEIGHBORHOOD.

THE MAJORITY OF THE FOREST CLEARING IS PROPOSED FOR THE STORMWATER MANAGEMENT IMPLEMENTATION. THE LOCATION OF THE STORMWATER MANAGEMENT FACILITY IS DRIVEN BY THE SITE TOPOGRAPHY AND CANNOT BE REASONABLY ALTERED TO REDUCE FOREST CLEARING. THE FACILITY HAS BEEN SIZED AND LOCATED TO MEET THE COUNTY AND STATE REQUIREMENTS AND REPRESENTS THE BEST MANAGEMENT PRACTICE FOR THE SITE.

THE FOREST CONSERVATION ACT REQUIREMENTS WILL BE MET THROUGH ONSITE RETENTION OF 0.9 ACRES, THE REFORESTATION OF 0.4 ACRES ON-SITE PLANTING AND 0.69 ACRES OF FEE-IN-LIEU. THE ONSITE RETENTION WILL BE LOCATED ON SLOPES AND WITHIN A NATURAL, UPLAND DRAIN IN THE NORTHERN END OF THE SITE. THE REFORESTATION OBLIGATION WILL BE MET WITH 0.4 ACRES OF ONSITE PLANTING AND A PAYMENT OF THE COUNTY'S FEE-IN-LIEU FOR THE REMAINING 0.69 ACRES. THE COST OF THE FEE-IN-LIEU PAYMENT WILL BE $22,542.30. THE ONSITE PLANTING WILL EXPAND UPON EXISTING OFFSITE TREE LINES AND WILL PROVIDE A CORRIDOR ALONG THE WESTERN EDGE OF THE SITE. THE REFORESTATION AREA WILL ALSO ACT AS A BUFFER BETWEEN EXISTING AND PROPOSED RESIDENTIAL DEVELOPMENT.

THE APPLICANT IS PROPOSING TO MEET THE OUTSTANDING REFORESTATION OBLIGATION THROUGH THE FEE-IN-LIEU BECAUSE NO PRIORITY FORESTATION IS AVAILABLE. FURTHER, THE COUNTY REQUIRES THAT FORESTATION OCCURS ON OPEN SPACE OR PRIVATE LOTS 10 ACRES OR MORE IN SIZE. THE PROPOSED PLANTING WILL BE LOCATED ON OPEN SPACE BUT ADDITIONAL OPEN SPACE OF SUFFICIENT SIZE TO ALLOW REFORESTATION CANNOT BE CREATED WITHOUT REQUIRING THE LOSS OF A LOTS.

NOTES

1. NO RARE, THREATENED OR ENDANGERED SPECIES WERE OBSERVED ON THE PROPERTY.
2. SURROUNDING LAND USE IS MEDIUM RESIDENTIAL DEVELOPMENT AND COMMERCIAL.
3. NO WETLANDS, STREAMS OR BUFFERS ARE PRESENT ON THE SUBJECT PROPERTY.

SIGNAGE DETAILS

FOREST CONSERVATION AREA
DO NOT DISTURB

FOREST BUFFER
DO NOT DISTURB

Sign Specifications

Size shall be a minimum of 6"x8", 0.40 ga. aluminum construction with green print on white background. Signs shall be mounted approximately 4 feet off the ground on metal posts with metals bolts

NOTE: THE PROTECTIVE SIGNAGE SHALL BE IN PLACE FOR PERPETUITY

KEY	COMMUNITY TYPE	ACREAGE (NTA)	DOMINANT VEGETATION	GENERAL CONDITION	PRIORITY ACREAGE
F1	POPLAR	2.0	Liriodendron tulipifera, Acer rubrum, Fraxinus pennsylvanica, Acer negundo, Prunus serotina, Rosa Multiflora	GOOD	0.824 SLOPES

SEE APPROVED FOREST STAND DELINEATION REPORT FOR COMPLETE STAND DESCRIPTIONS (P-08-003).

NO-AS BUILT INFO THIS SHEET

DEPARTMENT OF PUBLIC WORKS
HOWARD COUNTY, MARYLAND
CHIEF, BUREAU OF HIGHWAYS — DATE 11-9-09

DEPARTMENT OF PLANNING & ZONING
HOWARD COUNTY, MARYLAND
CHIEF, DIVISION OF LAND DEVELOPMENT — DATE 11-6-09
CHIEF, DEVELOPMENT ENGINEERING DIVISION — DATE 11/3/09

LITTLE & ASSOCIATES, INC.
ENGINEERS~~LAND PLANNERS~~SURVEYORS
1055 TAYLOR AVENUE, SUITE 307
TOWSON, MARYLAND 21286
PHONE: (410)296-1636 FAX: (410)296-1639

OWNER/DEVELOPER:
KIMBERLY HOMES
ELLICOTT PROPERTIES, LLC.
P.O. BOX 6194
BALTIMORE, MARYLAND, 21231
(410) 522-4987

	BY	NO.	REVISION	DATE
DES: AMK				
DRN: PFS				
CHK: AMK				
DATE: 1/23/09				

FINAL ROAD CONSTRUCTION PLANS
FOREST CONSERVATION PLAN
F-09-070
DEBRA COURT
LOTS 1 – 12
A RESUBDIVISION OF LOT 80, SECT. 3 GLEN BROOK (P 918); AND SUBDIVISION OF PARCELS 812 & 1119

ELECTION DISTRICT 2
SCALE: AS SHOWN
PRIOR PLANS: P-08-003, S-04-02,
PLAT 8/92 & 4567

HOWARD COUNTY, MD
M 24 G 2,3 P 918,812,1119
OCTOBER 15, 2009
SHEET 18 OF 18

F-09-070