SHEET INDEX

SHEET No.	SHEET
1	TITLE SHEET
2	SHEPPARD LANE WIDENING PLAN AND PROFILE
3	SHEPPARD LANE CROSS-SECTIONS
4	HAYLAND FARM WAY PLAN AND PROFILE
5	HAYLAND FARM WAY PLAN AND PROFILE
6	HONEY LOCUST COURT PLAN AND PROFILE
7	LINDERA COURT & CRAPE MYRTLE COURT PLAN AND PROFILE
8-11	STREET TREE, GRADING, AND SEDIMENT CONTROL PLAN
12	LANDSCAPE PLAN
13-15	STORM DRAIN PROFILES
16	SEDIMENT AND EROSION CONTROL NOTES AND DETAILS
17	SEDIMENT AND EROSION CONTROL NOTES AND DETAILS
18-22	FOREST CONSERVATION PLANS
23-26	STORMWATER MANAGEMENT NOTES AND DETAILS
27-28	STORM DRAIN DRAINAGE AREA MAP
29	SOIL BORINGS & FILLET PROFILES
30	TRAFFIC CONTROL PLAN & STRIPING PLAN
31	EXISTING STRUCTURE LOCATION PLAN
32	STREET TREE, GRADING, AND SEDIMENT CONTROL PLAN

FINAL ROAD CONSTRUCTION, GRADING AND STORMWATER MANAGEMENT PLAN

WALNUT CREEK

PHASE TWO

Lots 23 - 68, Non-Buildable Preservation Parcels 'C', 'G', 'I', 'J', 'K', 'L' And 'M' & Buildable Bulk Parcels 'H' And 'N'

(Being A Resubdivision Of Buildable Bulk Parcels 'F' & 'E' And a Revision To Non-Buildable Preservation Parcel 'C' - Walnut Creek, Phase One, Plat No's. 20631 Thru 20647

ZONING: RC-DEO & RR-DEO

TAX MAP NO. 28 GRID Nos. 4, 5, 10-12, 17 AND 18 PARCEL No. 49

TRAFFIC CONTROL SIGNS

ROAD NAME	CENTERLINE STA.	OFFSET	POSTED SIGN	SIGN CODE
HAYLAND FARM WAY	0+50	44'L	STOP	R1-1
HAYLAND FARM WAY	2+00	18'R	SPEED LIMIT 25	R2-1
HAYLAND FARM WAY	0+48	--	KEEP RIGHT	R4-7
HAYLAND FARM WAY	1+16	--	KEEP RIGHT	R4-7
HAYLAND FARM WAY	3+00	14'L	STOP AHEAD	W3-1
HAYLAND FARM WAY	20+20	14'R	ROAD ENDS 500 FT.	
HAYLAND FARM WAY	@ TEE TURNAROUND SEE SHEET 5	--	NO PARKING IN TEE TURNAROUND	
LINDERA COURT	@ TEE TURNAROUND SEE SHEET 7	--	NO PARKING IN TEE TURNAROUND	
LINDERA COURT	0+25	16'L	STOP	R1-1
LINDERA COURT	1+00	14'R	SPEED LIMIT 25	R2-1
CRAPE MYRTLE CT.	@ TEE TURNAROUND SEE SHEET 7	--	NO PARKING IN TEE TURNAROUND	
CRAPE MYRTLE CT.	0+25	16'L	STOP	R1-1
CRAPE MYRTLE CT.	1+00	14'R	SPEED LIMIT 25	R2-1
HONEY LOCUST COURT	0+25	16'L	STOP	R1-1
HONEY LOCUST COURT	1+50	11'R	SPEED LIMIT 25	R2-1

ROADWAY INFORMATION CHART

ROAD NAME	CLASSIFICATION	DESIGN SPEED	R/W WIDTH
HAYLAND FARM WAY	PUBLIC ACCESS STREET	30 M.P.H.	50'
LINDERA COURT	PUBLIC ACCESS STREET	30 M.P.H.	50'
CRAPE MYRTLE COURT	PUBLIC ACCESS STREET	30 M.P.H.	50'
HONEY LOCUST COURT	PUBLIC ACCESS PLACE	25 M.P.H.	50'

STREET LIGHT CHART

STREET NAME	C.L. STATION	OFFSET	FIXTURE/POLE TYPE
SHEPPARD LANE	5+48	50' L	150-WATT H.P.S. "PREMIER" PENDANT POST-TOP MOUNTED AT 30' ON A BRONZE FIBERGLASS POLE

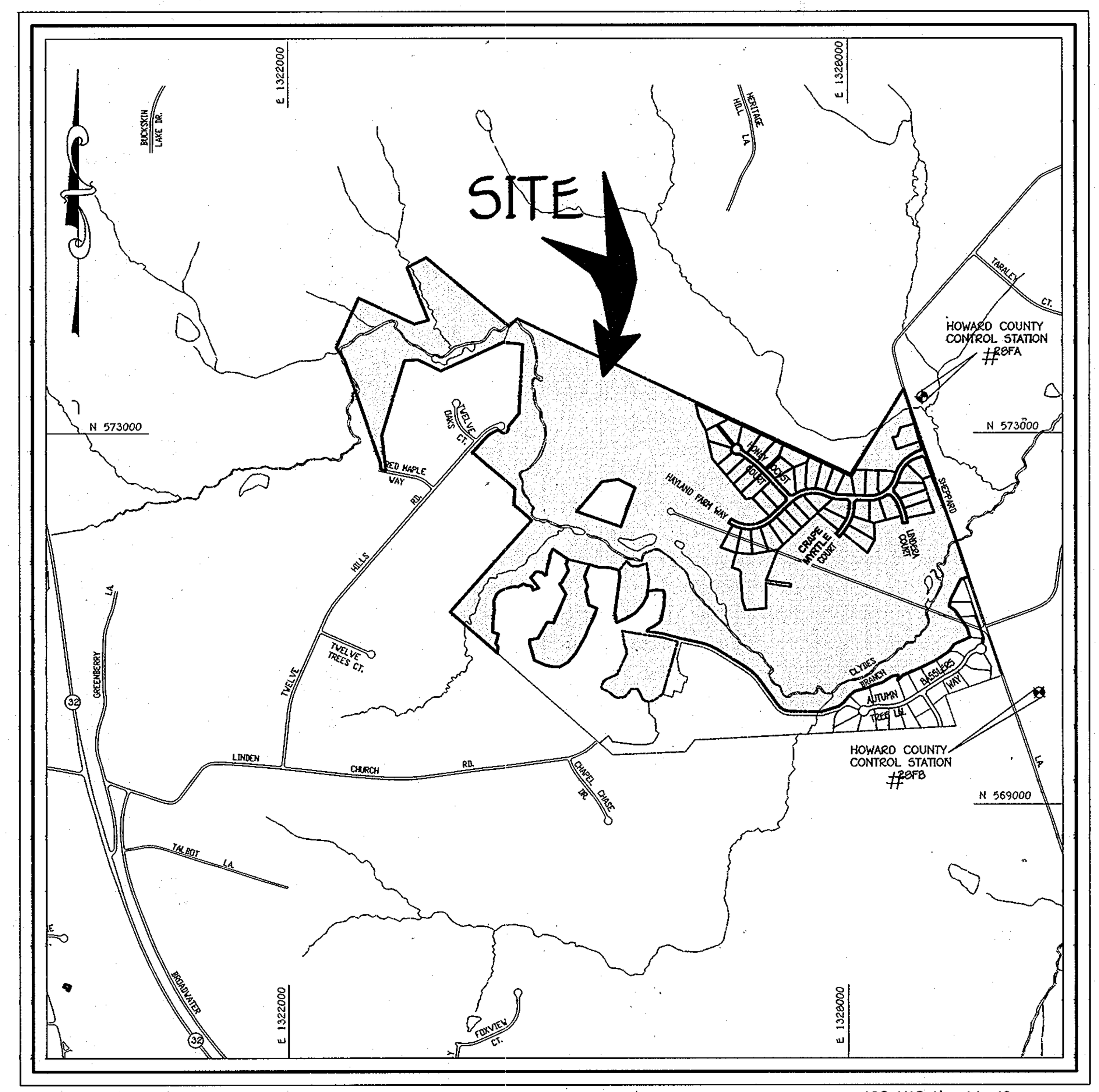

ADC MAP No. 14, E2

VICINITY MAP

SCALE: 1" = 1200'

FIFTH ELECTION DISTRICT
HOWARD COUNTY, MARYLAND

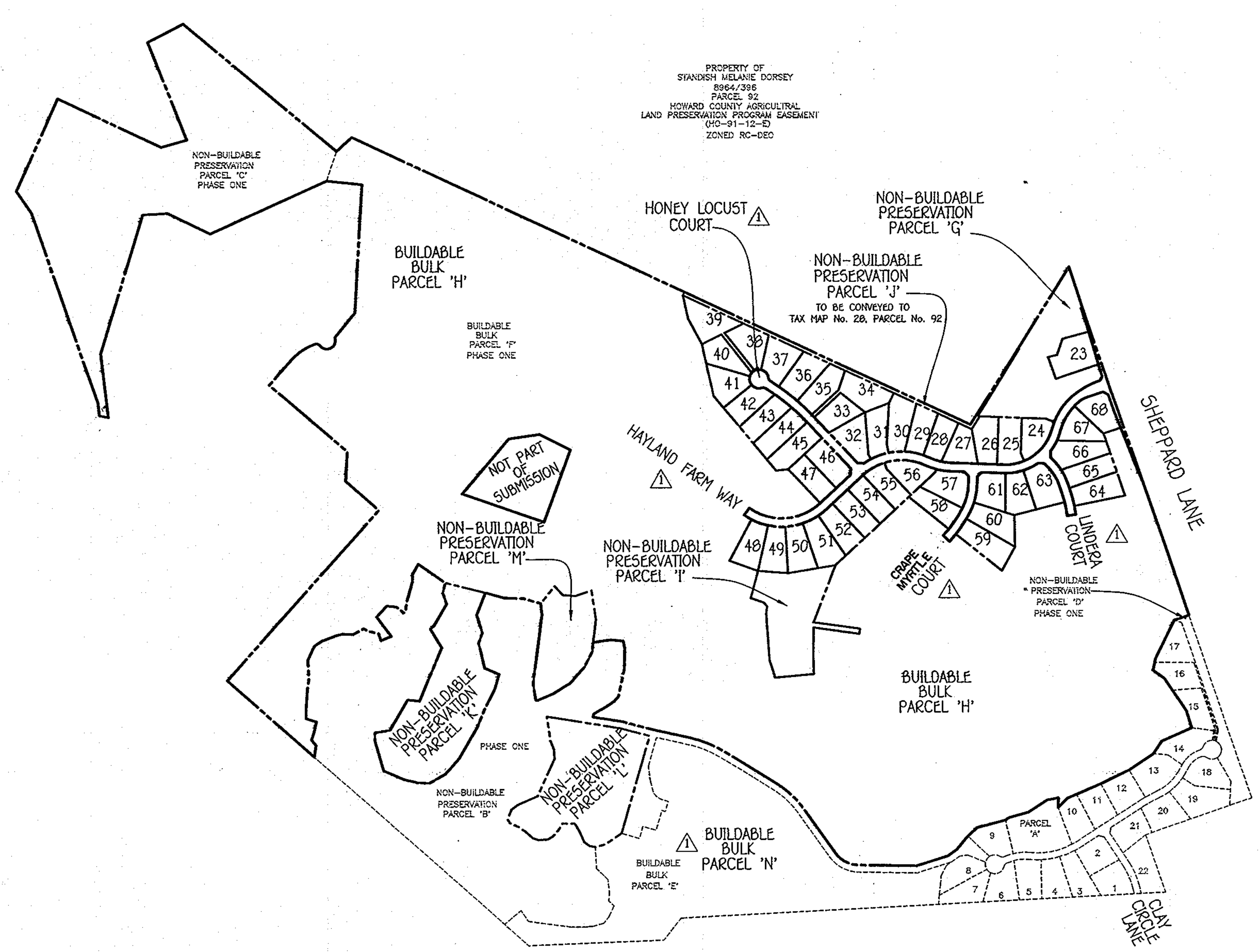

PLAN VIEW

NO SCALE

FISHER, COLLINS & CARTER, INC.
CIVIL ENGINEERING CONSULTANTS & LAND SURVEYORS
CENTENNIAL SQUARE OFFICE PARK - 10272 BALTIMORE NATIONAL PIKE
ELLICOTT CITY, MARYLAND 21042
(410) 461 - 2855

NO.	DESCRIPTION	DATE
1	REVISED PARCELS 'E' 'J', 'H' & 'G', ROAD NAMES AND TITLE BLOCK	9/25/12
REVISIONS		

OWNER
BASSLERS, INCORPORATED
c/o ALFRED S. BASSLER
4994 SHEPPARD LANE
ELLICOTT CITY, MARYLAND 21042
(410) 531-2193

DEVELOPER
HERITAGE LAND DEVELOPMENT
15950 NORTH AVE.
LISBON, MARYLAND 21765
(410) 489-7900

APPROVED: DEPARTMENT OF PUBLIC WORKS
Diane Schwarz, Acting 11/29/12
CHIEF, BUREAU OF HIGHWAYS — DATE

APPROVED: DEPARTMENT OF PLANNING AND ZONING
Kent Sheubrooks 12/05/12
CHIEF, DIVISION OF LAND DEVELOPMENT — DATE

12/3/12
CHIEF, DEVELOPMENT ENGINEERING DIVISION — DATE

GENERAL NOTES

1. ALL CONSTRUCTION SHALL BE IN ACCORDANCE WITH THE LATEST STANDARDS AND SPECIFICATIONS OF HOWARD COUNTY PLUS MSHA STANDARDS AND SPECIFICATIONS IF APPLICABLE.
2. THE CONTRACTOR SHALL NOTIFY THE DEPARTMENT OF PUBLIC WORKS / BUREAU OF ENGINEERING / CONSTRUCTION INSPECTION DIVISION AT (410) 313-1880 AT LEAST (5) WORKING DAYS PRIOR TO THE START OF WORK.
3. THE CONTRACTOR SHALL NOTIFY "MISS UTILITY" AT 1-800-257-7777 AT LEAST 48 HOURS PRIOR TO ANY EXCAVATION WORK BEING DONE.
4. TRAFFIC CONTROL DEVICES, MARKINGS AND SIGNING SHALL BE IN ACCORDANCE WITH THE LATEST EDITION OF THE MANUAL OF UNIFORM TRAFFIC CONTROL DEVICES (MUTCD). ALL STREET AND REGULATORY SIGNS SHALL BE IN PLACE PRIOR TO THE PLACEMENT OF ANY ASPHALT.
5. COORDINATES BASED ON NAD'83 MARYLAND COORDINATE SYSTEM AS PROJECTED BY HOWARD COUNTY GEODETIC CONTROL STATIONS NO. 28 FA AND NO. 28 FB
   HOWARD COUNTY MONUMENT NO. 28FA — N 572,456.665 E 1,328,957.66 — ELEV. = 348.296
   HOWARD COUNTY MONUMENT NO. 28FB — N 570,710.839 E 1,329,524.63 — ELEV. = 385.804
6. THE TRAFFIC STUDY FOR THIS PROJECT WAS PREPARED BY THE TRAFFIC GROUP, DATED SEPTEMBER, 2005 AND WAS APPROVED UNDER SP-06-07 ON MAY 31, 2006.
7. BACKGROUND INFORMATION:
   A. SUBDIVISION NAME: WALNUT CREEK
   B. TAX MAP NO.: 28
   C. PARCEL No.: 49
   D. ZONING: RC-DEO & RR-DEO
   E. ELECTION DISTRICT: FIFTH
   F. TOTAL TRACT AREA: 361.259 AC.±
   G. NO. OF BUILDABLE LOTS: 46 (PHASE TWO)
   H. NO. OF OPEN SPACE LOTS: 0
   I. NO. OF NON-BUILDABLE PRESERVATION PARCELS: 7
   J. NO. OF BUILDABLE BULK PARCELS: 2
   K. AREA OF BUILDABLE LOTS: 38.982 AC±
   L. AREA OF OPEN SPACE LOTS: 0.00 AC.±
   M. AREA OF NON-BUILDABLE PRESERVATION PARCELS: 67.179 AC.±
   N. AREA OF BUILDABLE BULK PARCELS: 249.394 AC.±
   O. TOTAL AREA OF ROADWAY TO BE DEDICATED: 5.252 AC.±
   P. PREVIOUS FILE NOS.: SP-06-007 APPROVAL DATE: 5/31/06, BA-85-52E, BA-98-33E, BA-93-49E & WP-08-007 (SEE NOTE 10 BELOW), F-07-076
8. ONE CEMETERY EXISTS WITHIN THIS SUBDIVISION. "CLARK FAMILY CEMETERY" - HO. CO. ID #28-2. THE PLANNING BOARD APPROVED THE CEMETERY ACCOMMODATION AND BOUNDARY DOCUMENTATION PLAN ON MARCH 30, 2006 SUBJECT TO THE FOLLOWING CONDITIONS.
   1. THE DEVELOPER AND/OR THE WALNUT CREEK H.O.A. SHALL UPGRADE THE EXISTING SPLIT RAIL FENCE TO FURTHER PROTECT THE EXISTING CEMETERY SITE.
   2. THE DEVELOPER AND/OR THE WALNUT CREEK H.O.A. SHALL REGULARLY MAINTAIN THE CEMETERY AREA.
   3. THE DEVELOPER AND/OR THE WALNUT CREEK H.O.A. MUST PLACE A CEMETERY MARKER AT THE ENTRANCE OF THE CEMETERY SITE.
9. ALL FILL AREAS WITHIN ROADWAYS AND UNDER STRUCTURES SHALL BE COMPACTED TO A MINIMUM OF 95% COMPACTION OF AASHTO T-180.
10. THE FOREST CONSERVATION REQUIREMENTS PER SECTION 16.1200 OF THE HOWARD COUNTY CODE AND THE FOREST CONSERVATION MANUAL FOR THE ENTIRE SUBDIVISION WILL BE FULFILLED BY PROVIDING 59.57 ACRES OF ON-SITE FOREST RETENTION AND 31.66 ACRES OF ON-SITE FOREST AFFORESTATION FOR A TOTAL OF 91.23 ACRES.
    A SURETY FOR ONSITE FOREST RETENTION @ \$0.20/SF FOR 2,594,869 SF. = \$518,974.00 AND ON-SITE AFFORESTATION @ \$0.50/SF FOR 1,379,110 SF. = \$689,555.00 IS REQUIRED. TOTAL SURETY AMOUNT FOR THE ENTIRE SUBDIVISION = \$1,208,529.00
    THE FOREST CONSERVATION PROVIDED WITH PHASE TWO ARE AS FOLLOWS:
    18.00 AC. OF FOREST CONSERVATION EASEMENT (CREDITED AND NON-CREDITED).
    CREDITED ONSITE RETENTION OF 17.13 ACRES OF FOREST AND 9.10 ACRES OF ONSITE REFORESTATION. CALCULATION USED FOR PHASE TWO FOREST REQUIREMENT:
    59.57 TOTAL RETENTION ACRES/160 TOTAL UNITS = 0.3723 (46 UNITS X 0.3723 = 17.13 AC.±)
    31.66 TOTAL PLANTING ACRES/160 TOTAL UNITS = 0.1979 (46 UNITS X 0.1979 = 9.10 AC.±)
    A SURETY FOR ONSITE FOREST RETENTION @ \$0.20/SF FOR 746,183 SF. = \$149,237.00 AND ON-SITE AFFORESTATION @ \$0.50/SF FOR 396,396 SF. = \$198,198.00 IS REQUIRED. TOTAL SURETY AMOUNT FOR THIS SUBMISSION = \$347,435.00.
    THE FOREST CONSERVATION SURETY IN THE AMOUNT OF \$347,435.00 IS BE PAID AS PART OF THE DPW DEVELOPER'S AGREEMENT.

    THIS FOREST CONSERVATION PROPOSAL IS SUBJECT TO WP-08-007, APPROVED ON AUGUST 21, 2007 TO THE FOLLOWING CONDITIONS:
    1. THE WAIVER PETITION APPROVAL APPLIES ONLY TO THE TEMPORARY DEFERRAL FOR ESTABLISHING THE FOREST CONSERVATION EASEMENTS FOR THIS SUBDIVISION BASED ON THE APFO PHASING SCHEDULE FOR THIS PROJECT. EACH SUBSEQUENT PHASE OF DEVELOPMENT MUST ESTABLISH A PROPORTIONATE AREA OF FOREST CONSERVATION EASEMENTS AND PROVIDE THE NECESSARY AREA OF FOREST RETENTION AND AFFORESTATION PLANTING AS REQUIRED BY THE FOREST CONSERVATION WORKSHEET FOR THIS PROJECT TO SATISFY ITS OBLIGATION. THE ENTIRE AREA OF FOREST CONSERVATION OBLIGATION MUST BE PROVIDED WITH THE PROCESSING AND RECORDING OF THE LAST PHASE OF DEVELOPMENT FOR THIS PROJECT.
    2. THE APPLICANT/DEVELOPER MUST CONTINUE PROCESSING THE SUBDIVISION PLANS FOR WALNUT CREEK AND MEET ALL APPLICABLE PROCESSING DEADLINE DATES IN ACCORDANCE WITH THE APPROVED APFO PHASING SCHEDULE.
11. STORMWATER MANAGEMENT FACILITIES: B.M.P. NO. 3 & B.M.P. NO. 4
    PRIVATELY OWNED BY THE HOMEOWNER'S ASSOCIATION AND
    JOINTLY MAINTAINED BY THE HOMEOWNER'S ASSOCIATION AND HOWARD COUNTY, MARYLAND
    WET EXTENDED DETENTION FACILITIES (P-3) FOR WQV & CPv

    STORMWATER MANAGEMENT WILL BE PROVIDED IN ACCORDANCE WITH HOWARD COUNTY AND MARYLAND 378 SPECIFICATIONS. RECHARGE VOLUME WILL BE PROVIDED THROUGH THE USE OF GRASS CHANNELS ALONG THE PROPOSED ROADWAYS. WATER QUALITY AND CHANNEL PROTECTION VOLUME WILL BE PROVIDED BY A MICRO-POOL (EXTENDED DETENTION) POND, ONE BIO-RETENTION FACILITY AND LEVEL SPREADERS. OVERBANK FLOOD PROTECTION VOLUME AND EXTREME FLOOD VOLUME ARE NOT REQUIRED FOR THIS SITE.
12. THE PROPOSED WATER AND SEWER SYSTEMS SHALL BE PRIVATE. SEE CONTRACT No. 50-4440-D FOR LOW PRESSURE SYSTEM.
13. THE SUBJECT PROPERTY IS LOCATED OUTSIDE OF THE METROPOLITAN DISTRICT.
14. TOPOGRAPHIC CONTOURS BASED ON HARFORD AERIAL SURVEYS, INC. DATED FEBRUARY, 2004.
15. FOR FLAG OR PIPESTEM LOTS, REFUSE COLLECTION, SNOW REMOVAL AND ROAD MAINTENANCE IS TO BE PROVIDED AT THE JUNCTION OF THE FLAG OR PIPESTEM AND THE ROAD RIGHT-OF-WAY AND NOT ONTO THE FLAG OR PIPESTEM DRIVEWAY.
16. THE GEOTECHNICAL REPORT FOR THIS PROJECT WAS PREPARED BY HERBST BENSON & ASSOCIATES, INC., DATED SEPTEMBER, 2005 AND APPROVED ON MAY 31, 2006.
17. THE FOREST STAND DELINEATION AND WETLAND DELINEATION FOR THIS PROJECT WAS PREPARED BY ECO-SCIENCE PROFESSIONALS, INC., DATED SEPTEMBER, 2005 AND APRROVED ON MAY 31, 2006.
18. THE NON-CRITICAL FLOODPLAIN STUDY FOR THIS PROJECT WAS PREPARED BY FISHER, COLLINS & CARTER, INC. DATED JULY, 2005, AND SUPPLEMENTED WITH INFORMATION OBTAINED FROM HO. CO. CAPITAL PROJECT D-1028A. THE FLOODPLAIN STUDY WAS APPROVED UNDER SP-06-007 DATED 5/31/06.
19. SOILS INFORMATION TAKEN FROM SOIL MAP NO. 18, SOIL SURVEY, HOWARD COUNTY, MARYLAND, JULY 1968 ISSUE.
20. THERE ARE STEEP SLOPES LOCATED ON THIS PROPERTY AS DEFINED BY "SLOPES THAT AVERAGE 25% OR GREATER OVER 10 VERTICAL FEET", PER SECTION 16.108(b)(55) OF THE HOWARD COUNTY SUBDIVISION AND LAND DEVELOPMENT REGULATIONS. TOTAL AREA OF 25% OR GREATER SLOPES = 8.9 AC.±
21. AS PER SECTION 104.F.4.b OF THE ZONING REGULATIONS, ONLY ONE EASEMENT HOLDER IS REQUIRED FOR PRESERVATION PARCELS DESIGNED SOLELY FOR SWM FACILITIES OR COMMUNITY SEWERAGE DISPOSAL SYSTEMS.
    A. NON-BUILDABLE PRESERVATION PARCEL 'G' OWNED: PRIVATELY EASEMENT HOLDER: HOWARD COUNTY, MARYLAND & HOA USE: S.W.M.
    B. NON-BUILDABLE PRESERVATION PARCEL 'I' OWNED: HOMEOWNER'S ASSOCIATION EASEMENT HOLDERS: HOWARD COUNTY, MARYLAND USE: S.W.M.
22. NO CLEARING, GRADING OR CONSTRUCTION IS PERMITTED WITHIN THE WETLANDS, STREAM OR THEIR REQUIRED BUFFERS
23. THE LANDSCAPE SURETY FOR THE 88 SHADE AND 108 EVERGREEN TREES IN THE AMOUNT OF \$42,600.00 FOR PERIMETER LANDSCAPE REQUIREMENTS OF SECTION 16.124 OF THE HOWARD COUNTY CODE AND LANDSCAPE MANUAL WILL BE POSTED WITH THE DEVELOPER'S AGREEMENT FOR THIS SUBDIVISION. FINANCIAL SURETY FOR THE REQUIRED 230 STREET TREES WILL BE POSTED AS PART OF THE DEVELOPER'S AGREEMENT IN THE AMOUNT OF \$69,000.00.
24. BUILDABLE BULK PARCEL 'H' RETAINS THE RIGHT TO BE FURTHER SUBDIVIDED IN ACCORDANCE WITH THE DEO CLUSTER REGULATIONS IN SECTION 106 OF THE HOWARD COUNTY ZONING REGULATIONS. THE RESUBDIVISION OF THIS BULK PARCEL INTO RESIDENTIAL LOTS WILL REQUIRE DENSITY FROM AN OFF-SITE LOCATION WITHIN THE RC-DEO DISTRICT.
25. THIS SUBDIVISION PLAN IS SUBJECT TO THE AMENDED FIFTH EDITION OF THE SUBDIVISION AND LAND DEVELOPMENT REGULATIONS AND THE 2004 ZONING REGULATIONS PER COUNCIL BILL NO. 45-2003 AND THE ZONING REGULATIONS AS AMENDED BY COUNCIL BILL NO. 75-2003 NAD THE COMP LITE ZONING REGULATION AMENDMENTS EFFECTIVE 7/28/06. DEVELOPMENT OR CONSTRUCTION ON THESE LOTS OR PARCELS MUST COMPLY WITH SETBACK AND BUFFER REGULATIONS IN EFFECT AT THE TIME OF SUBMISSION OF A BUILDING OR GRADING PERMIT APPLICATION.
26. WELLS SHALL BE DRILLED ON LOTS PRIOR TO RECORDATION OF THE FINAL RECORD PLAT.
27. LOTS 23 THRU 68 ARE TO BE SERVED BY A PUBLIC SHARED SEPTIC FACILITY LOCATED ON NON-BUILDABLE PRESERVATION PARCEL 'B' (F-07-076), WALNUT CREEK, PHASE ONE.
28. SIGN POSTS: ALL SIGN POST USED FOR TRAFFIC CONTROL SIGNS INSTALLED IN THE COUNTY RIGHT-OF-WAY SHALL BE MOUNTED ON A 2" GALVANIZED STEEL, PERFORATED, SQUARE TUBE POST (14 GAUGE) INSERTED INTO A 2-1/2" GALVANIZED STEEL, PERFORATED, SQUARE TUBE SLEEVE (12 GAUGE) - 3' LONG. A GALVANIZED STEEL POLE CAP SHALL BE MOUNTED ON TOP OF EACH POST."
29. THIS PROJECT IS SUBJECT TO WASTEWATER DISCHARGE PERMIT NUMBER 06-DP-3538 AND IS EFFECTIVE FROM AUGUST 1, 2006 UNTIL AUGUST 1, 2011 WHEN IT EXPIRES. THE SHARED SEPTIC SYSTEM CONTRACT No. IS 50-4441-D AND THE COLLECTION SYSTEM CONTRACT No. IS 50-4440-D.
30. NON-BUILDABLE PRESERVATION PARCEL 'J' TO BE CONVEYED TO TAX MAP No. 28, PARCEL No. 92 SIMULTANEOUSLY WITH THE RECORDATION OF THIS PLAT.
31. A DESIGN MANUAL WAIVER FROM SECTION 5.2.7.A.4., WHICH REQUIRES THAT A WET POND SHALL HAVE A POND DRAIN CAPABLE OF DEWATERING THE PERMANENT POOL AREA WAS SUBMITTED WITH THIS PROJECT. THIS WAIVER HAS BEEN DENIED AND A POND DRAIN HAS BEEN ADDED TO B.M.P. No. 3.

ALDO M. VITUCCI, P.E. — 10/31/12 — DATE

"Professional certification. I hereby certify that these documents were prepared by me, and that I am a duly Licensed Professional Engineer under the laws of the State of Maryland, License No. 20748, Expiration Date 2-22-13."

REVISED

WALNUT CREEK

PHASE TWO

Lots 23 - 68, Non-Buildable Preservation Parcels 'C', 'G', 'I', 'J', 'K', 'L' And 'M' & Buildable Bulk Parcels 'H' And 'N'

(Being A Resubdivision Of Buildable Bulk Parcels 'F' & 'E' And a Revision To Non-Buildable Preservation Parcel 'C' - Walnut Creek, Phase One, Plat No's. 20631 Thru 20647

ZONED: RC-DEO & RR-DEO

TAX MAP No. 28 GRID Nos. 4, 5, 10-12, 17, AND 18 PARCEL No. 49

FIFTH ELECTION DISTRICT HOWARD COUNTY, MARYLAND

DATE: SEPTEMBER, 2008

F-08-081

I:\2004\04001\dwg\PHASE TWO FINALS\PHASE TWO REDLINE 2012\04001-3001 SHEET 1 FINAL TITLESHEET MYLAR.dwg, TITLE - SHEET, 10/30/2012 8:22:13 AM, 1:1

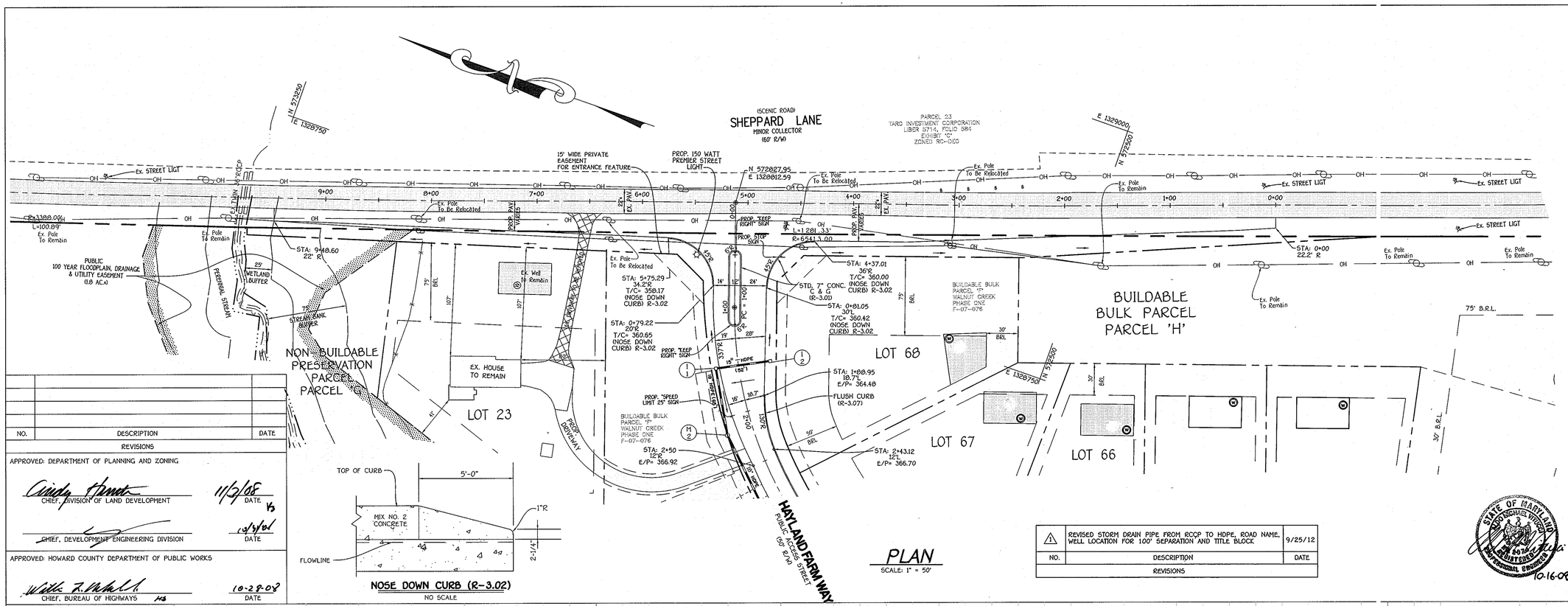

PLAN

SCALE: 1" = 50'

NOSE DOWN CURB (R-3.02)

NO SCALE

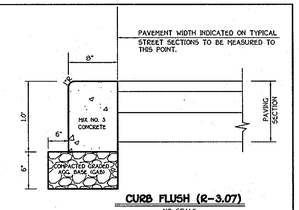

CURB FLUSH (R-3.07)

NO SCALE

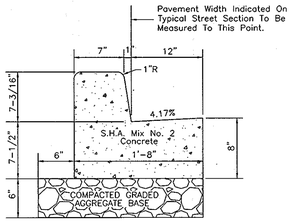

(DETAIL R-3.01)

STANDARD 7" COMB. CONC. CURB AND GUTTER

NO SCALE

NO.	DESCRIPTION	DATE
	REVISIONS	

APPROVED: DEPARTMENT OF PLANNING AND ZONING

CHIEF, DIVISION OF LAND DEVELOPMENT — DATE 11/3/08

CHIEF, DEVELOPMENT ENGINEERING DIVISION — DATE 10/3/08

APPROVED: HOWARD COUNTY DEPARTMENT OF PUBLIC WORKS

CHIEF, BUREAU OF HIGHWAYS — DATE 10-29-08

1	REVISED STORM DRAIN PIPE FROM RCCP TO HDPE, ROAD NAME, WELL LOCATION FOR 100' SEPARATION AND TITLE BLOCK	9/25/12
NO.	DESCRIPTION	DATE
	REVISIONS	

STATE OF MARYLAND — NICHOLAS V. PIRRO — No. 16676 — PROFESSIONAL ENGINEER — 10-16-08

WALNUT CREEK

PHASE TWO

Lots 23 - 68, Non-Buildable Preservation Parcels 'C', 'G', 'I', 'J', 'K', 'L' And 'M' & Buildable Bulk Parcels 'H' And 'N'

(Being A Resubdivision Of Buildable Bulk Parcels 'P' & 'E' And A Revision To Non-Buildable Preservation Parcel 'C' - Walnut Creek, Phase One, Plat No's. 20631 Thru 20647)

ZONED: RC-DEO & RR-DEO

TAX MAP No. 28 GRID Nos. 4, 5, 10-12, 17, AND 18 PARCEL No. 49

FIFTH ELECTION DISTRICT HOWARD COUNTY, MARYLAND

SHEPPARD LANE WIDENING

PLAN AND PROFILE

OWNER	DEVELOPER
BASSLERS, INCORPORATED c/o ALFRED S. BASSLER 4994 SHEPPARD LANE ELLICOTT CITY, MARYLAND 21042	HERITAGE LAND DEVELOPMENT 3060 WASHINGTON ROAD, SUITE 220 GLENWOOD, MARYLAND 21738

SCALE: AS SHOWN	DATE: SEPT., 2008	DWG. NO. 2 OF 32
DES. R.A.I.	DRN. J.C.L.	CHK. A.M.V.

FISHER, COLLINS & CARTER, INC.
CIVIL ENGINEERING CONSULTANTS & LAND SURVEYORS
CENTENNIAL SQUARE OFFICE PARK - 10272 BALTIMORE NATIONAL PIKE
ELLICOTT CITY, MARYLAND 21042
(410) 461 - 2855

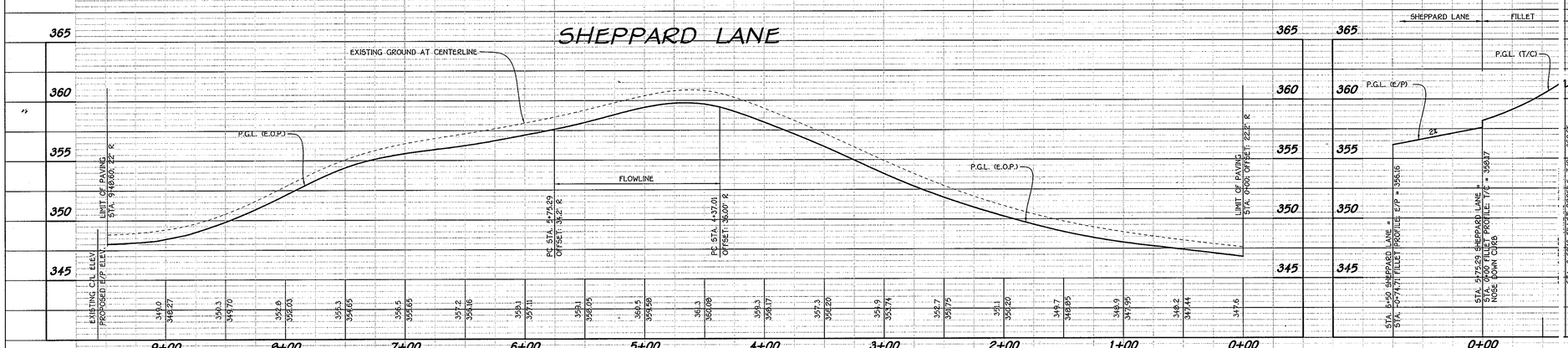

PROFILE

SCALE: HOR. : 1" = 50'
VER. : 1" = 5'

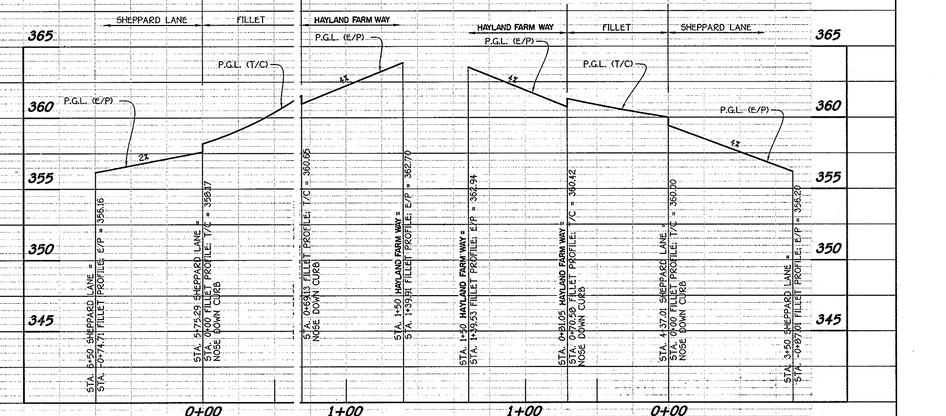

FILLET PROFILE

SCALE: HOR. : 1" = 50'
VER. : 1" = 5'

F-08-081

I:\2004\04001\dwg\PHASE TWO FINALS\04001-3001 SHEET 2 WIDENING PLAN.dwg, SHEET 2, 1:1

APPROVED: DEPARTMENT OF PUBLIC WORKS

CHIEF, BUREAU OF HIGHWAYS — DATE 10-28-08

APPROVED: DEPARTMENT OF PLANNING AND ZONING

CHIEF, DIVISION OF LAND DEVELOPMENT — DATE 11/3/08

CHIEF, DEVELOPMENT ENGINEERING DIVISION — DATE 10/31/08

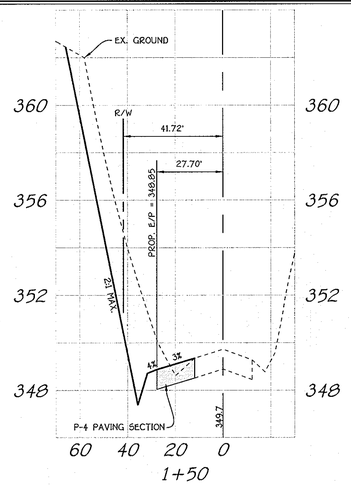

1+50

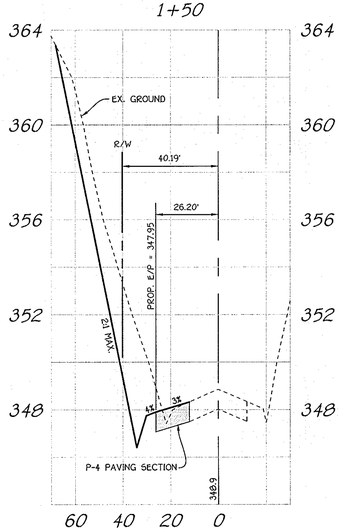

1+00

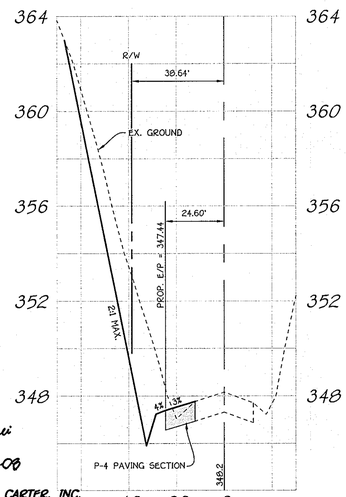

0+50

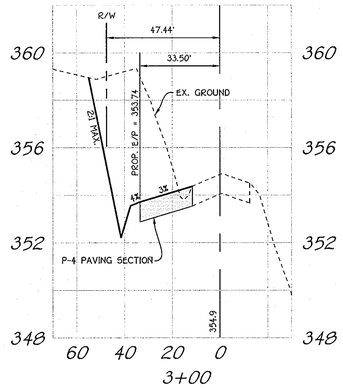

3+00

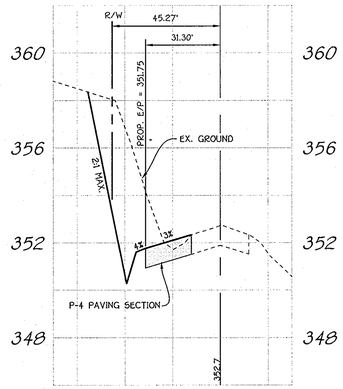

2+50

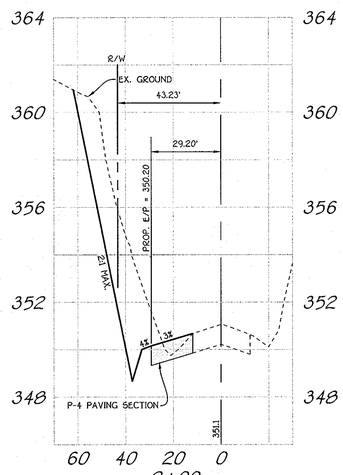

2+00

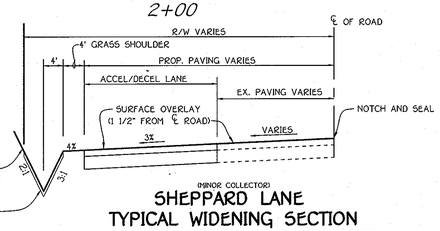

(MINOR COLLECTOR)

SHEPPARD LANE TYPICAL WIDENING SECTION

NO SCALE

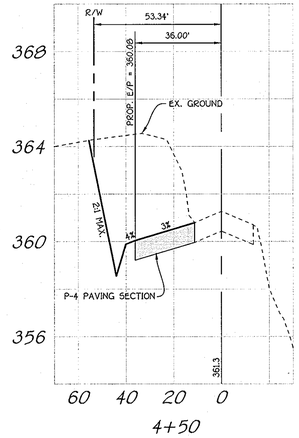

4+50

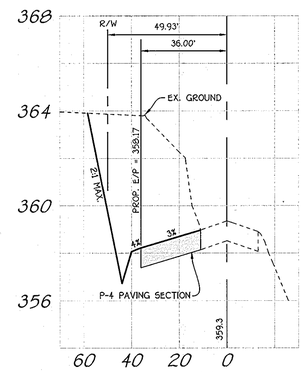

4+00

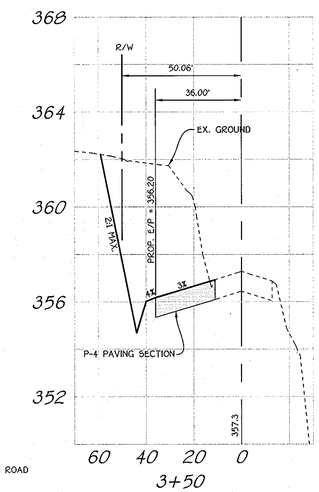

3+50

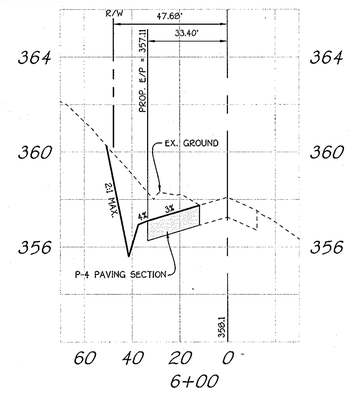

6+00

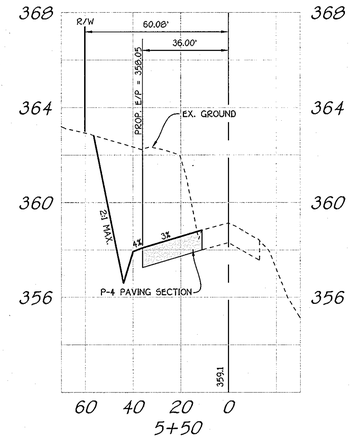

5+50

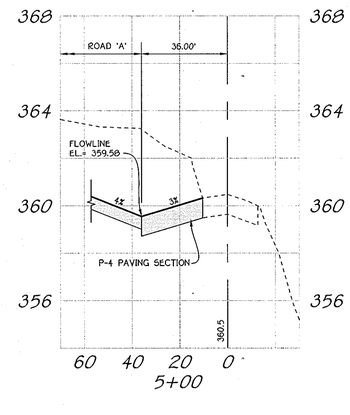

5+00

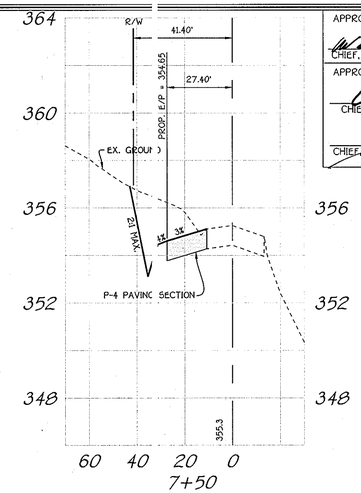

7+50

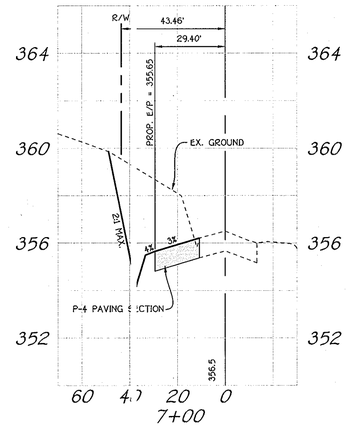

7+00

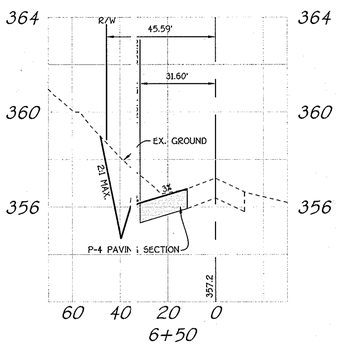

6+50

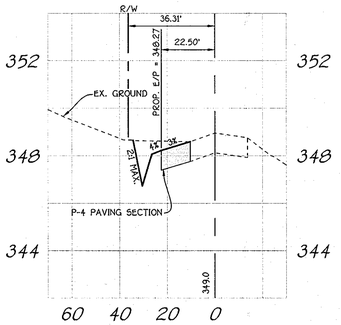

9+00

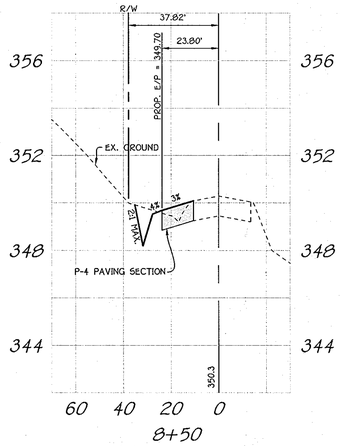

8+50

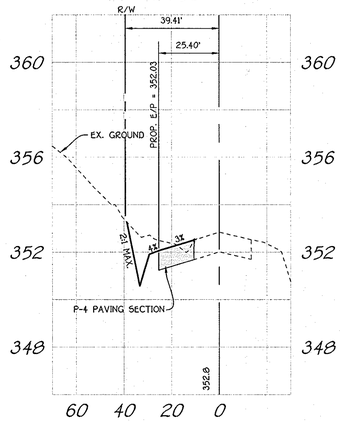

8+00

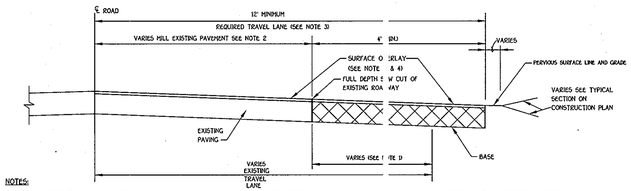

NOTES:

1. WHEN EXISTING TRAVEL LANE IS LESS THAN THE REQUIRED 12' LANE CONTRACTOR SHALL REMOVE A MINIMUM OF 1' FULL DEPTH OF THE EXISTING ROADWAY. IF CURB AND GUTTER IS INSTALLED, PROVIDE A MINIMUM OF 4' OF WIDENING FROM FACE OF GUTTER PAN.
2. THE EXISTING PAVEMENT TO BE RESURFACED SHALL BE MILLED AT DEPTH OF 1 1/2" (MINIMUM).
3. THE RESURFACING SHALL BE PLACED TO THE CENTERLINE OF THE ROADWAY.
4. RESURFACING COURSE TO BE EQUAL TO THE SURFACE COURSE OF THE TYPICAL PAVEMENT SECTION.

EXISTING ROADWAY WIDENING STRIP (R-1.08)

NO SCALE

CROSS-SECTIONS

SCALE: HORIZ.: 1" = 30'
VERT.: 1" = 3'

NO.	DESCRIPTION	DATE
1	REVISED TITLE BLOCK	9/25/12

REVISIONS

OWNER

BASSLERS, INCORPORATED
c/o ALFRED S. BASSLER
4994 SHEPPARD LANE
ELLICOTT CITY, MARYLAND 21042

DEVELOPER

HERITAGE LAND DEVELOPMENT
15950 NORTH AVE.
LISBON, MARYLAND 21765

STATE OF MARYLAND — JOHN MICHAEL PIERCE — REGISTERED PROFESSIONAL ENGINEER — COMMERCIAL PROPERTIES — 10-16-08

FISHER, COLLINS & CARTER, INC.
CIVIL ENGINEERING CONSULTANTS & LAND SURVEYORS
CENTENNIAL SQUARE OFFICE PARK - 10272 BALTIMORE NATIONAL PIKE
ELLICOTT CITY, MARYLAND 21042
(410) 461 - 2855

SHEPPARD LANE CROSS-SECTIONS
WALNUT CREEK
PHASE TWO

Lots 23 - 68, Non-Buildable Preservation Parcels 'C', 'G', 'I', 'J', 'K', 'L' And 'M' & Buildable Bulk Parcels 'H' And 'N'

(Being A Resubdivision Of Buildable Bulk Parcels 'F' & 'E' And a Revision To Non-Buildable Preservation Parcel 'C' - Walnut Creek, Phase One, Plat No's. 20631 Thru 20647)

ZONED: RC-DEO & RR-DEO

TAX MAP No. 28 GRID Nos. 4, 5, 10-12, 17, AND 18 PARCEL No. 49

FIFTH ELECTION DISTRICT HOWARD COUNTY, MARYLAND

DATE: SEPTEMBER, 2008

SHEET 3 OF 32

F-08-081

I:\2004\04001\dwg\PHASE TWO FINALS\04001-3001 SHEET 3 CROSS SECTIONS.dwg, Model, 1:30

NOTE:
WITHIN THE 30 FOOT WIDE AGRICULTURAL BUFFER EASEMENT LOCATED ALONG THE NORTHERN PROPERTY BOUNDARY, NO PRIMARY OR ACCESSORY STRUCTURES SHALL BE PERMITTED, AND WITHIN THE EASEMENT AREA, THE EXISTING HEDGEROW VEGETATION SHALL BE PRESERVED AND SUPPLEMENTED WITH A TYPE 'A' LANDSCAPING BUFFER WHERE INSUFFICIENT VEGETATION EXISTS.

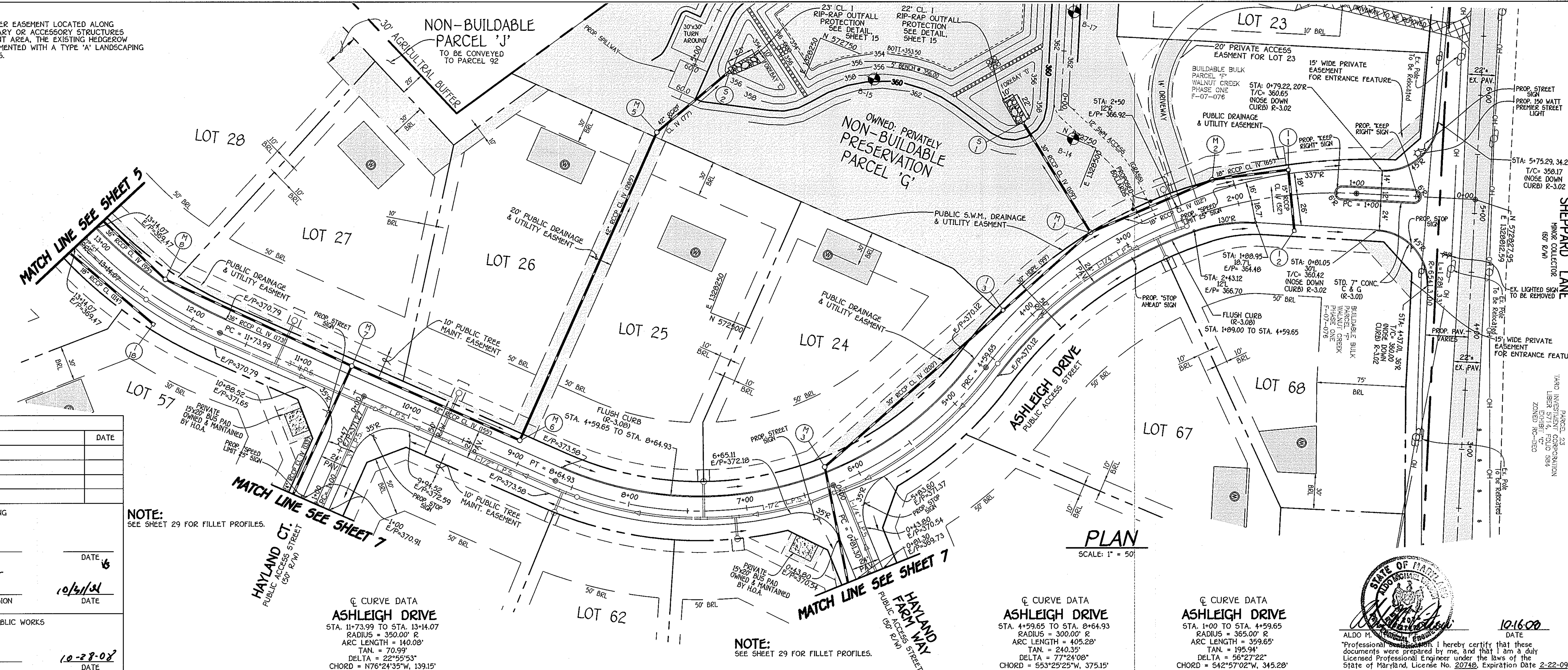

NOTE:
SEE SHEET 29 FOR FILLET PROFILES.

NOTE:
SEE SHEET 29 FOR FILLET PROFILES.

PLAN
SCALE: 1" = 50'

℄ CURVE DATA
ASHLEIGH DRIVE
STA. 11+73.99 TO STA. 13+14.07
RADIUS = 350.00' R
ARC LENGTH = 140.08'
TAN. = 70.99'
DELTA = 22°55'53"
CHORD = N76°24'35"W, 139.15'

℄ CURVE DATA
ASHLEIGH DRIVE
STA. 4+59.65 TO STA. 8+64.93
RADIUS = 300.00' R
ARC LENGTH = 405.28'
TAN. = 240.35'
DELTA = 77°24'08"
CHORD = S53°25'25"W, 375.15'

℄ CURVE DATA
ASHLEIGH DRIVE
STA. 1+00 TO STA. 4+59.65
RADIUS = 365.00' R
ARC LENGTH = 359.65'
TAN. = 195.94'
DELTA = 56°27'22"
CHORD = S42°57'02"W, 345.28'

REVISIONS		
NO.	DESCRIPTION	DATE

APPROVED: DEPARTMENT OF PLANNING AND ZONING

[signature] CHIEF, DIVISION OF LAND DEVELOPMENT — DATE

[signature] CHIEF, DEVELOPMENT ENGINEERING DIVISION — 10/31/08 DATE

APPROVED: HOWARD COUNTY DEPARTMENT OF PUBLIC WORKS

[signature] CHIEF, BUREAU OF HIGHWAYS — 10-28-08 DATE

WALNUT CREEK
PHASE TWO
Lots 23 – 68, Non-Buildable Preservation Parcels 'C', 'G', 'I', 'K', 'L' And 'M', Buildable Bulk Parcels 'E' And 'H' & Non-Buildable Parcel 'J'
(A Resubdivision Of Buildable Bulk Parcel 'F' And a Revision Plat of Buildable Bulk Parcel 'E' and Non-Buildable Preservation Parcel 'C', Walnut Creek, Phase One - Plat No's. Thru
ZONED: RC-DEO & RR-DEO
TAX MAP No. 28 GRID Nos. 4, 5, 10-12, 17, AND 18 PARCEL No. 49
FIFTH ELECTION DISTRICT HOWARD COUNTY, MARYLAND

ASHLEIGH DRIVE
PLAN AND PROFILE

OWNER	DEVELOPER
BASSLERS, INCORPORATED c/o ALFRED S. BASSLER 4994 SHEPPARD LANE ELLICOTT CITY, MARYLAND 21042	HERITAGE LAND DEVELOPMENT 3060 WASHINGTON ROAD, SUITE 220 GLENWOOD, MARYLAND 21738

SCALE: AS SHOWN	DATE: JULY, 2008	DWG. NO. 4 OF 32
DES. R.A.I.	DRN. J.C.L.	CHK. A.M.V.

FISHER, COLLINS & CARTER, INC.
CIVIL ENGINEERING CONSULTANTS & LAND SURVEYORS
CENTENNIAL SQUARE OFFICE PARK - 10272 BALTIMORE NATIONAL PIKE
ELLICOTT CITY, MARYLAND 21042
(410) 461 - 2855

[seal: STATE OF MARYLAND, ALDO MICHELE VITTORI, PROFESSIONAL ENGINEER]
[signature] 10.16.08
ALDO M. VITTORI, P.E. — DATE
"Professional Certification. I hereby certify that these documents were prepared by me, and that I am a duly Licensed Professional Engineer under the laws of the State of Maryland, License No. 20748, Expiration Date 2-22-09."

PROFILE
SCALE: HOR. : 1" = 50'
VER. : 1" = 5'

F-08-081

I:\2004\04001\dwg\PHASE TWO FINALS\04001-3001 SHEET 4-7 ROAD PLANS.dwg, SHEET 4, 1:1

℄ CURVE DATA
ASHLEIGH DRIVE
STA. 20+21.37 TO STA. 25+91.72
RADIUS = 350.00' R
ARC LENGTH = 570.35'
TAN. = 371.20'
DELTA = 93°22'05"
CHORD = N86°20'45"W, 509.31'

NOTE:
SEE SHEET 29 FOR FILLET PROFILES.

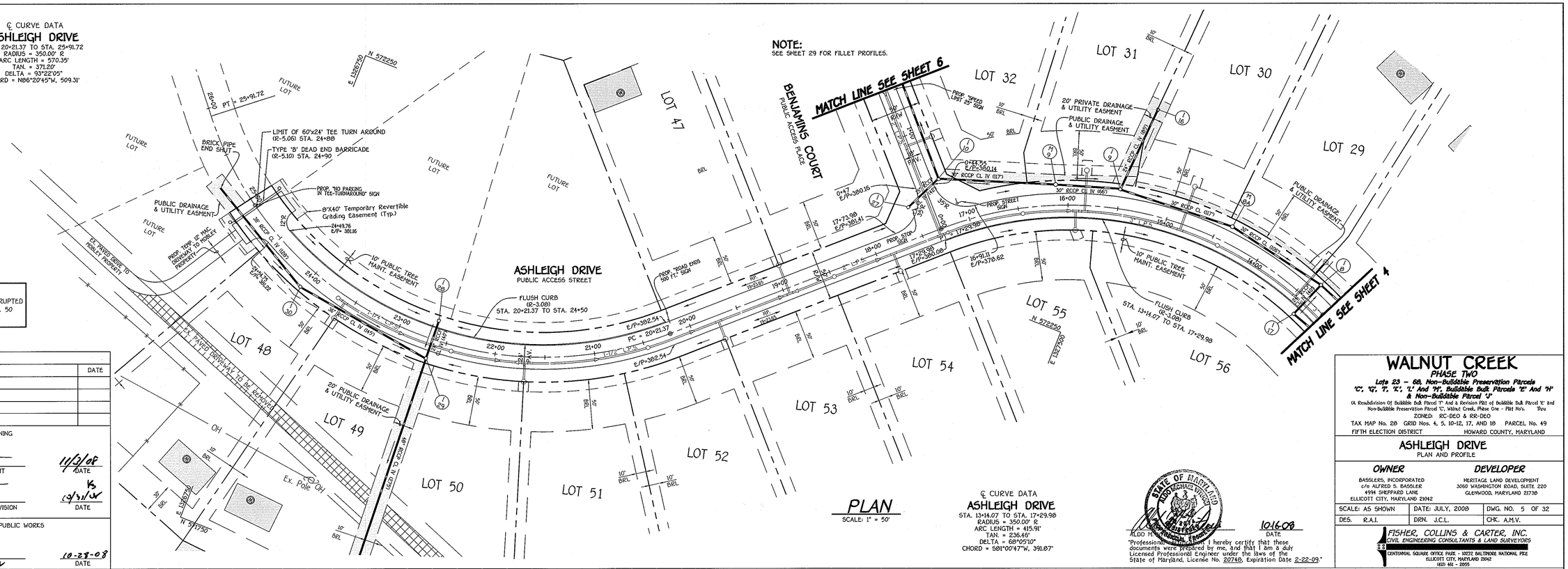

NOTE:
THE CONTRACTOR SHALL PROVIDE UNINTERRUPTED ACCESS TO MOBLEY PROPERTY, PARCEL No. 50 DURING CONSTRUCTION.

REVISIONS		
NO.	DESCRIPTION	DATE

APPROVED: DEPARTMENT OF PLANNING AND ZONING

CHIEF, DIVISION OF LAND DEVELOPMENT — DATE 11/3/08

CHIEF, DEVELOPMENT ENGINEERING DIVISION — DATE 10/31/08

APPROVED: HOWARD COUNTY DEPARTMENT OF PUBLIC WORKS

CHIEF, BUREAU OF HIGHWAYS — DATE 10-28-08

PLAN
SCALE: 1" = 50'

℄ CURVE DATA
ASHLEIGH DRIVE
STA. 13+14.07 TO STA. 17+29.98
RADIUS = 350.00' R
ARC LENGTH = 415.91'
TAN. = 236.46'
DELTA = 68°05'10"
CHORD = S81°00'47"W, 391.87'

STATE OF MARYLAND — ALDO MICHAEL TENDICO — No. 20748 — PROFESSIONAL ENGINEER

ALDO M. TENDICO — DATE 10.16.08

"Professional Certification. I hereby certify that these documents were prepared by me, and that I am a duly Licensed Professional Engineer under the laws of the State of Maryland, License No. 20748, Expiration Date 2-22-09."

WALNUT CREEK
PHASE TWO
Lots 23 – 68, Non-Buildable Preservation Parcels 'C', 'G', 'I', 'K', 'L' And 'M', Buildable Bulk Parcels 'E' And 'H' & Non-Buildable Parcel 'J'
(A Resubdivision Of Buildable Bulk Parcel 'I' And A Revision Plat of Buildable Bulk Parcel 'E' and Non-Buildable Preservation Parcel 'C', Walnut Creek, Phase One – Plat No's. Thru
ZONED: RC-DEO & RR-DEO
TAX MAP No. 28 GRID Nos. 4, 5, 10-12, 17, AND 18 PARCEL No. 49
FIFTH ELECTION DISTRICT — HOWARD COUNTY, MARYLAND

ASHLEIGH DRIVE
PLAN AND PROFILE

OWNER	DEVELOPER
BASSLERS, INCORPORATED c/o ALFRED S. BASSLER 4994 SHEPPARD LANE ELLICOTT CITY, MARYLAND 21042	HERITAGE LAND DEVELOPMENT 3060 WASHINGTON ROAD, SUITE 220 GLENWOOD, MARYLAND 21738

SCALE: AS SHOWN	DATE: JULY, 2008	DWG. NO. 5 OF 32
DES. R.A.I.	DRN. J.C.L.	CHK. A.M.V.

FISHER, COLLINS & CARTER, INC.
CIVIL ENGINEERING CONSULTANTS & LAND SURVEYORS
CENTENNIAL SQUARE OFFICE PARK – 10272 BALTIMORE NATIONAL PIKE
ELLICOTT CITY, MARYLAND 21042
(410) 461 – 2855

ASHLEIGH DRIVE
PUBLIC ACCESS STREET
DESIGN SPEED = 30 M.P.H.

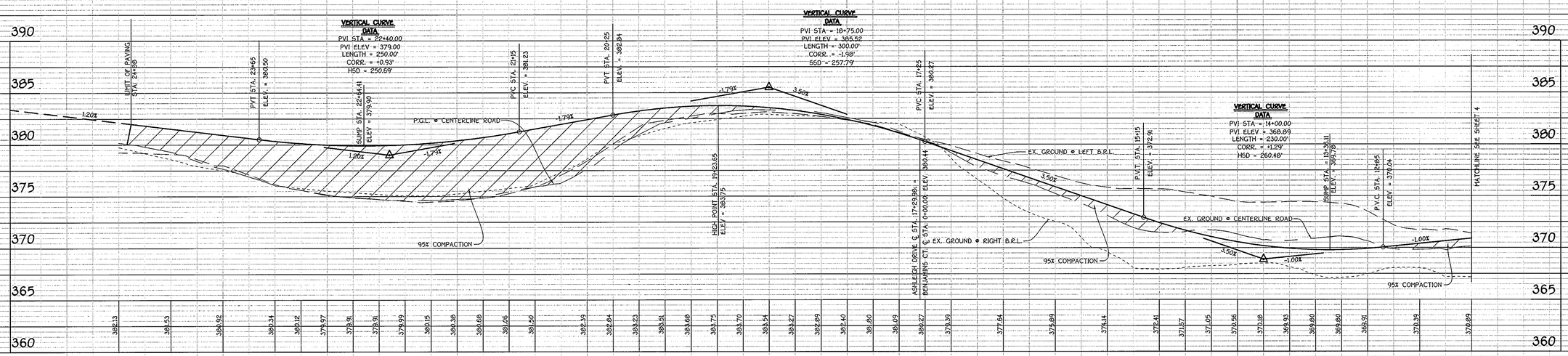

PROFILE
SCALE: HOR. : 1" = 50'
VER. : 1" = 5'

F-08-081

I:\2004\04001\dwg\PHASE TWO FINALS\04001-3901 SHEET 4-7 ROAD PLANS.dwg, SHEET 5, 1:1

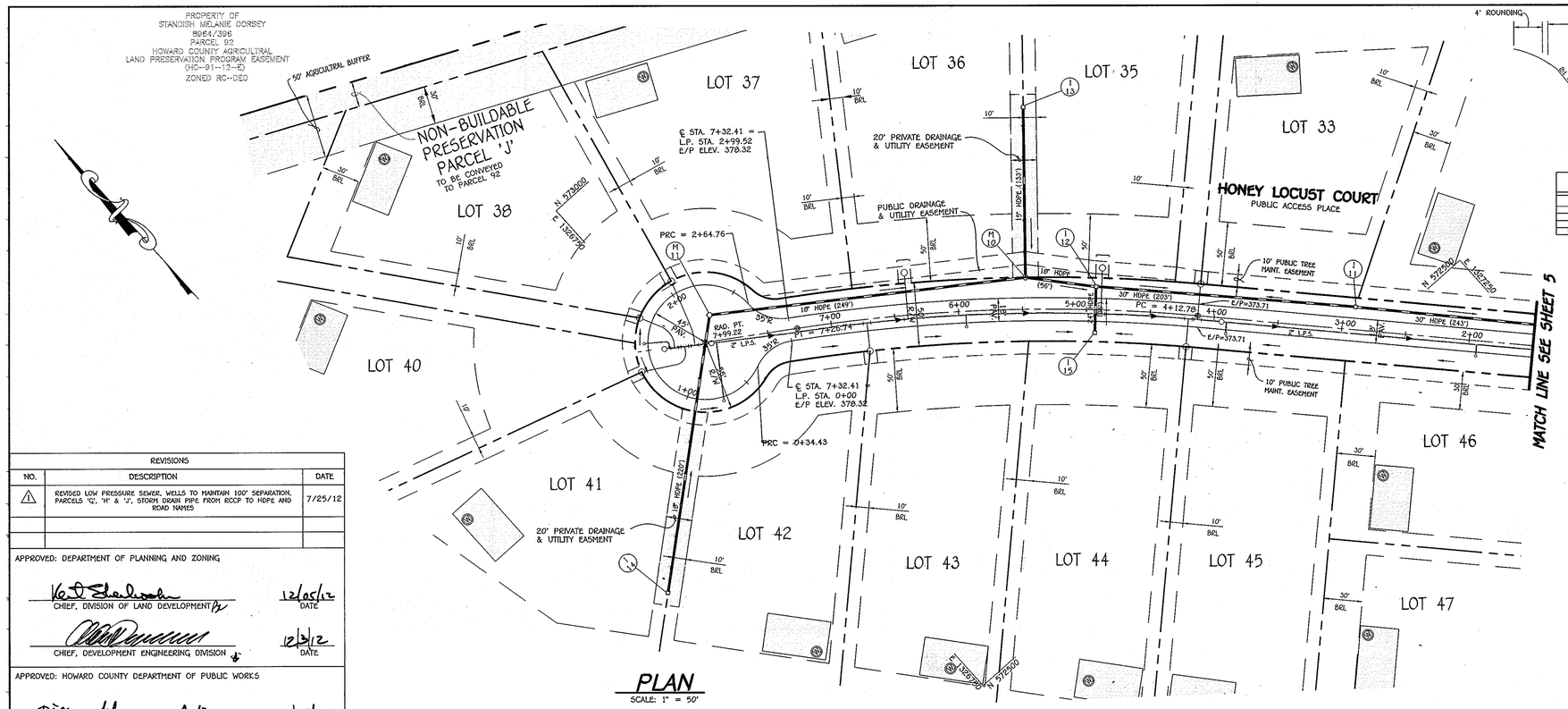

PLAN

SCALE: 1" = 50"

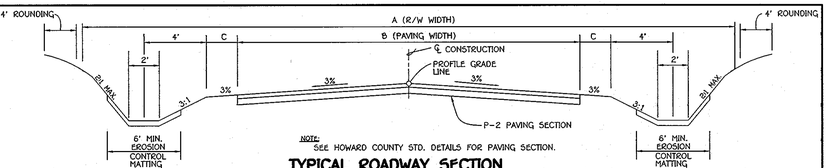

NOTE: SEE HOWARD COUNTY STD. DETAILS FOR PAVING SECTION.

TYPICAL ROADWAY SECTION

NO SCALE

ROADWAY INFORMATION CHART

ROAD NAME	CLASSIFICATION	DESIGN SPEED	ZONING	A	B	C	℄ STATION LIMITS	PAVING SECTION
HAYLAND FARM WAY	PUBLIC ACCESS STREET	30 M.P.H.	RC-DEO	50'	24'	3'	0+00 TO 24+88	P-2
LINDERA COURT	PUBLIC ACCESS STREET	30 M.P.H.	RC-DEO	50'	24'	3'	0+00 TO 3+91	P-2
CASTANEA COURT	PUBLIC ACCESS STREET	30 M.P.H.	RC-DEO	50'	24'	3'	0+00 TO 4+43	P-2
HONEY LOCUST COURT	PUBLIC ACCESS PLACE	25 M.P.H.	RC-DEO	50'	18'	4'	0+00 TO 7+99.22	P-2

REVISIONS

NO.	DESCRIPTION	DATE
1	REVISED LOW PRESSURE SEWER, WELLS TO MAINTAIN 100' SEPARATION, PARCELS 'G', 'H' & 'J', STORM DRAIN PIPE FROM RCCP TO HDPE AND ROAD NAMES	7/25/12

APPROVED: DEPARTMENT OF PLANNING AND ZONING

CHIEF, DIVISION OF LAND DEVELOPMENT	12/05/12 DATE
CHIEF, DEVELOPMENT ENGINEERING DIVISION	12/3/12 DATE

APPROVED: HOWARD COUNTY DEPARTMENT OF PUBLIC WORKS

Diane Schwarz, Acting CHIEF, BUREAU OF HIGHWAYS	11/29/12 DATE

℄ CURVE DATA

HONEY LOCUST COURT

STA. 4+12.78 TO STA. 7+26.74
RADIUS = 1300.00' R
ARC LENGTH = 313.96'
TAN. = 157.75'
DELTA = 13°50'15"
CHORD = N49°56'55"W, 313.20'

STATE OF MARYLAND — ALAN M. VERGANO — No. 22748

10/24/12
AUTHORIZED REPRESENTATIVE DATE

"Professional Certification. I hereby certify that these documents were prepared or approved by me, and that I am a duly Licensed Professional Engineer under the laws of the State of Maryland, License No. 22748, Expiration Date 2-22-13."

REVISED

WALNUT CREEK

PHASE TWO

Lots 23 – 68, Non-Buildable Preservation Parcels 'C', 'G', 'I', 'J', 'K', 'L' And 'M' & Buildable Bulk Parcels 'H' And 'N'

(Being A Resubdivision Of Buildable Bulk Parcels 'F' & 'E' And a Revision To Non-Buildable Preservation Parcel 'C' - Walnut Creek, Phase One, Plat No's. 20631 Thru 20647

ZONED: RC-DEO & RR-DEO

TAX MAP No. 28 GRID Nos. 4, 5, 10-12, 17, AND 18 PARCEL No. 49

FIFTH ELECTION DISTRICT HOWARD COUNTY, MARYLAND

HONEY LOCUST COURT

PLAN AND PROFILE

OWNER	DEVELOPER
BASSLERS, INCORPORATED c/o ALFRED S. BASSLER 4994 SHEPPARD LANE ELLICOTT CITY, MARYLAND 21042 (410) 531-2193	HERITAGE LAND DEVELOPMENT 15950 NORTH AVE. LISBON, MARYLAND 21765 (410) 489-7900

SCALE: AS SHOWN	DATE: SEPT., 2008	DWG. NO. 6 OF 32
DES. R.A.I.	DRN. J.C.L.	CHK. A.M.V.

FISHER, COLLINS & CARTER, INC.
CIVIL ENGINEERING CONSULTANTS & LAND SURVEYORS
CENTENNIAL SQUARE OFFICE PARK - 10272 BALTIMORE NATIONAL PIKE
ELLICOTT CITY, MARYLAND 21042
(410) 461 - 2855

HONEY LOCUST COURT

PUBLIC ACCESS PLACE

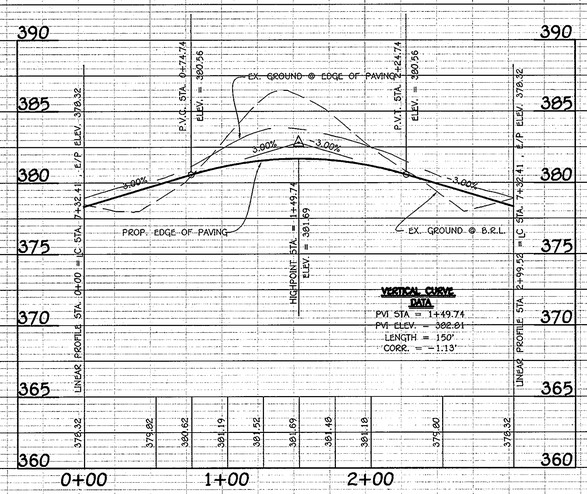

VERTICAL CURVE DATA
PVI STA = 1+49.74
PVI ELEV. = 382.01
LENGTH = 150'
CORR. = -1.13'

LINEAR PROFILE

SCALE: HOR. : 1" = 50'
VER. : 1" = 5'

HONEY LOCUST COURT

PUBLIC ACCESS PLACE
DESIGN SPEED = 25 M.P.H.

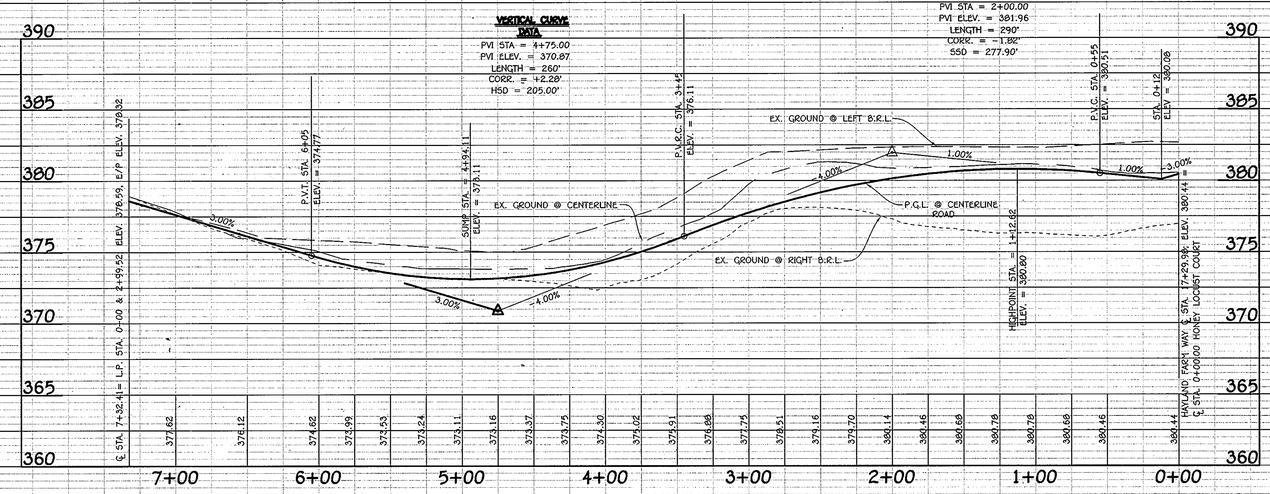

VERTICAL CURVE DATA
PVI STA = 4+75.00
PVI ELEV. = 370.87
LENGTH = 260'
CORR. = +2.28'
HSD = 205.00'

VERTICAL CURVE DATA
PVI STA = 2+00.00
PVI ELEV. = 381.96
LENGTH = 290'
CORR. = -1.82'
SSD = 277.90'

PROFILE

SCALE: HOR. : 1" = 50'
VER. : 1" = 5'

F-08-081

I:\2004\04001\dwg\PHASE TWO FINALS\PHASE TWO REDLINE 2012\04001-3001 SHEET 4-7 ROAD PLAN m\dim.dwg, SHEET 6; 10/30/2012 1:10:40 PM, 1:1

℄ CURVE DATA
CRAPE MYRTLE COURT
STA. 1+00 TO STA. 2+50.12
RADIUS = 350.00' R
ARC LENGTH = 150.12'
TAN. = 76.23'
DELTA = 24°34'32"
CHORD = S14°24'44"W, 148.97'

℄ CURVE DATA
CRAPE MYRTLE COURT
STA. 2+50.12 TO STA. 5+77.71
RADIUS = 700.00' R
ARC LENGTH = 327.59'
TAN. = 166.85'
DELTA = 26°49'49"
CHORD = S40°08'25"W, 324.61'

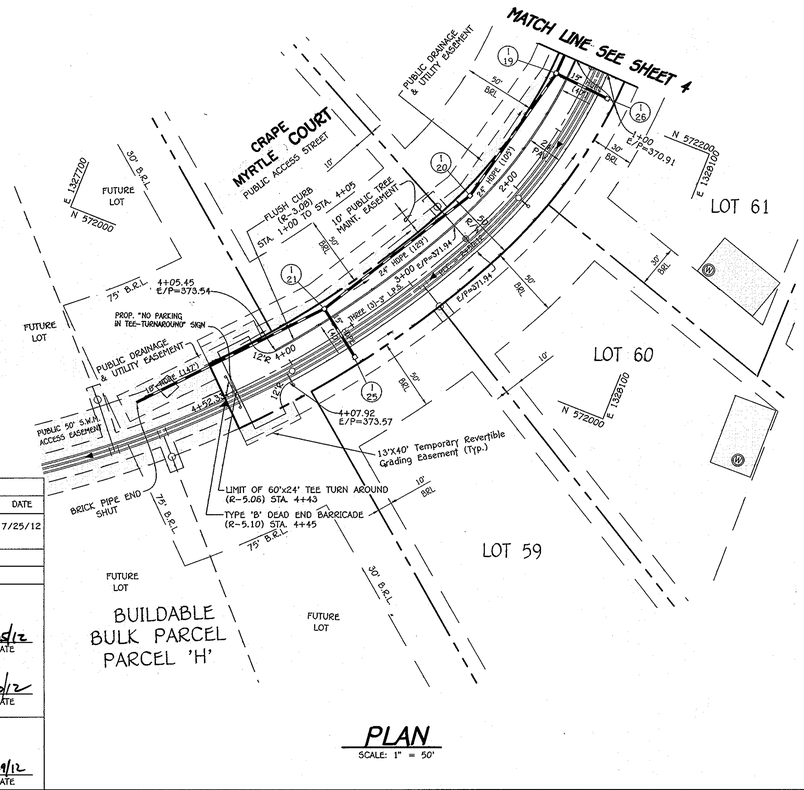

PLAN
SCALE: 1" = 50'

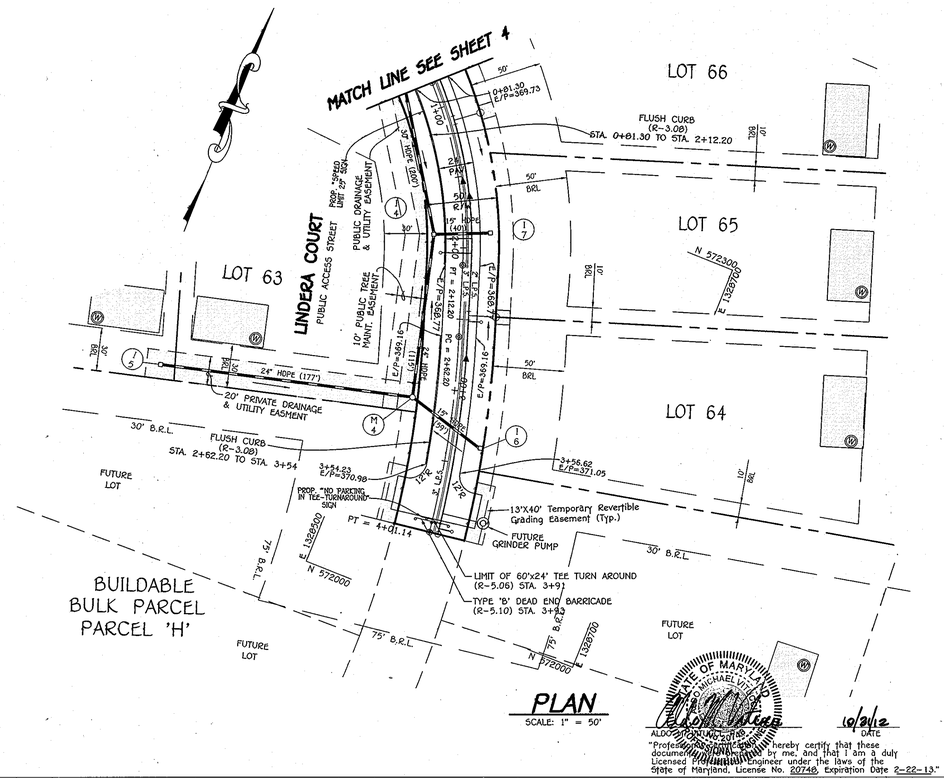

PLAN
SCALE: 1" = 50'

℄ CURVE DATA
LINDERA COURT
STA. 0+81.30 TO STA. 2+12.20
RADIUS = 300.00' R
ARC LENGTH = 130.90'
TAN. = 66.51'
DELTA = 25°07'01"
CHORD = S31°19'17"E, 129.86'

℄ CURVE DATA
LINDERA COURT
STA. 2+62.20 TO STA. 13+53.38
RADIUS = 725.00' R
ARC LENGTH = 1091.18'
TAN. = 678.86'
DELTA = 86°14'05"
CHORD = S24°17'46"W, 991.07'

REVISIONS		
NO.	DESCRIPTION	DATE
1	REVISED LOW PRESSURE SEWER, WELLS TO MAINTAIN 100' SEPARATION, PARCELS 'G', 'H' & 'J', STORM DRAIN PIPE FROM ROOF TO HDPE AND ROAD NAMES	7/25/12

APPROVED: DEPARTMENT OF PLANNING AND ZONING

CHIEF, DIVISION OF LAND DEVELOPMENT — DATE 12/06/12

CHIEF, DEVELOPMENT ENGINEERING DIVISION — DATE 12/3/12

APPROVED: HOWARD COUNTY DEPARTMENT OF PUBLIC WORKS

Diane Schwartz, Acting — CHIEF, BUREAU OF HIGHWAYS — DATE 11/29/12

REVISED

WALNUT CREEK
PHASE TWO

Lots 23 – 68, Non-Buildable Preservation Parcels 'C', 'G', 'I', 'J', 'K', 'L' And 'M' & Buildable Bulk Parcels 'H' And 'N'

(Being A Resubdivision Of Buildable Bulk Parcels 'F' & 'E' And A Revision To Non-Buildable Preservation Parcel 'C' – Walnut Creek, Phase One, Plat No's. 20631 Thru 20647

ZONED: RC-DEO & RR-DEO

TAX MAP No. 28 GRID Nos. 4, 5, 10-12, 17, AND 18 PARCEL No. 49

FIFTH ELECTION DISTRICT — HOWARD COUNTY, MARYLAND

LINDERA COURT PLAN AND PROFILE — **CRAPE MYRTLE COURT** PLAN AND PROFILE

OWNER
BASSLERS, INCORPORATED
c/o ALFRED S. BASSLER
4994 SHEPPARD LANE
ELLICOTT CITY, MARYLAND 21042
(410) 531-2193

DEVELOPER
HERITAGE LAND DEVELOPMENT
15950 NORTH AVE.
LISBON, MARYLAND 21765
(410) 489-7900

SCALE: AS SHOWN	DATE: SEPT., 2008	DWG. NO. 7 OF 32
DES. R.A.I.	DRN. J.C.L.	CHK. A.M.V.

STATE OF MARYLAND — ALDO MICHAEL VITALI — No. 20748

"Professional Engineer's Certification: I hereby certify that these documents were prepared or approved by me, and that I am a duly Licensed Professional Engineer under the laws of the State of Maryland, License No. 20748, Expiration Date 2-22-13."

10/2/12 — DATE

FISHER, COLLINS & CARTER, INC.
CIVIL ENGINEERING CONSULTANTS & LAND SURVEYORS
CENTENNIAL SQUARE OFFICE PARK – 10272 BALTIMORE NATIONAL PIKE
ELLICOTT CITY, MARYLAND 21042
(410) 461 – 2855

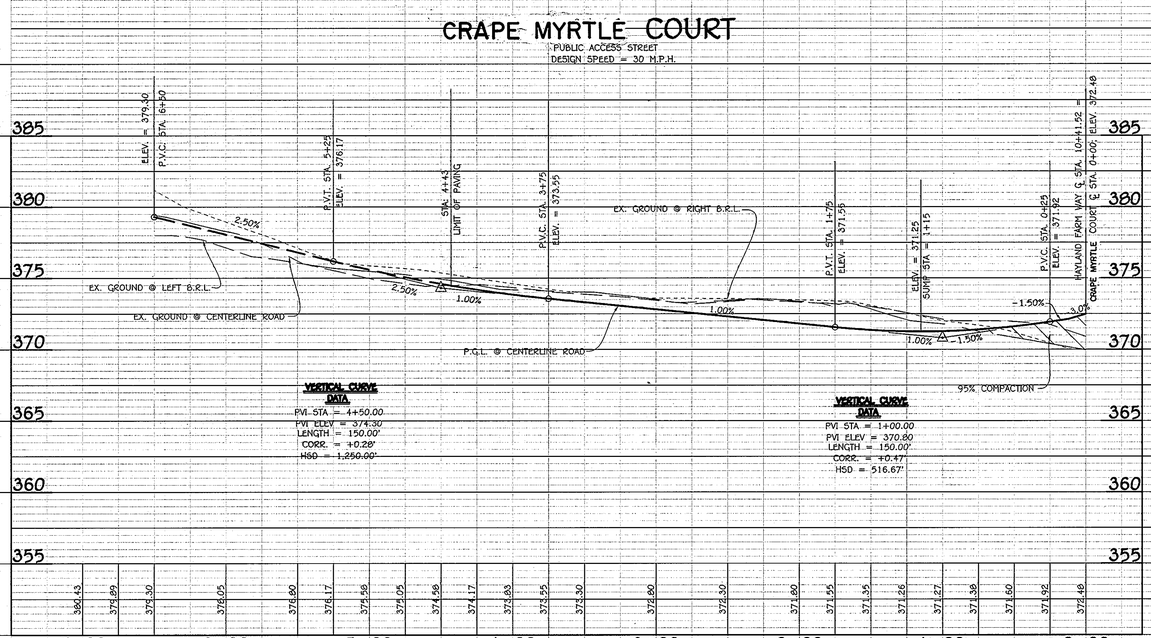

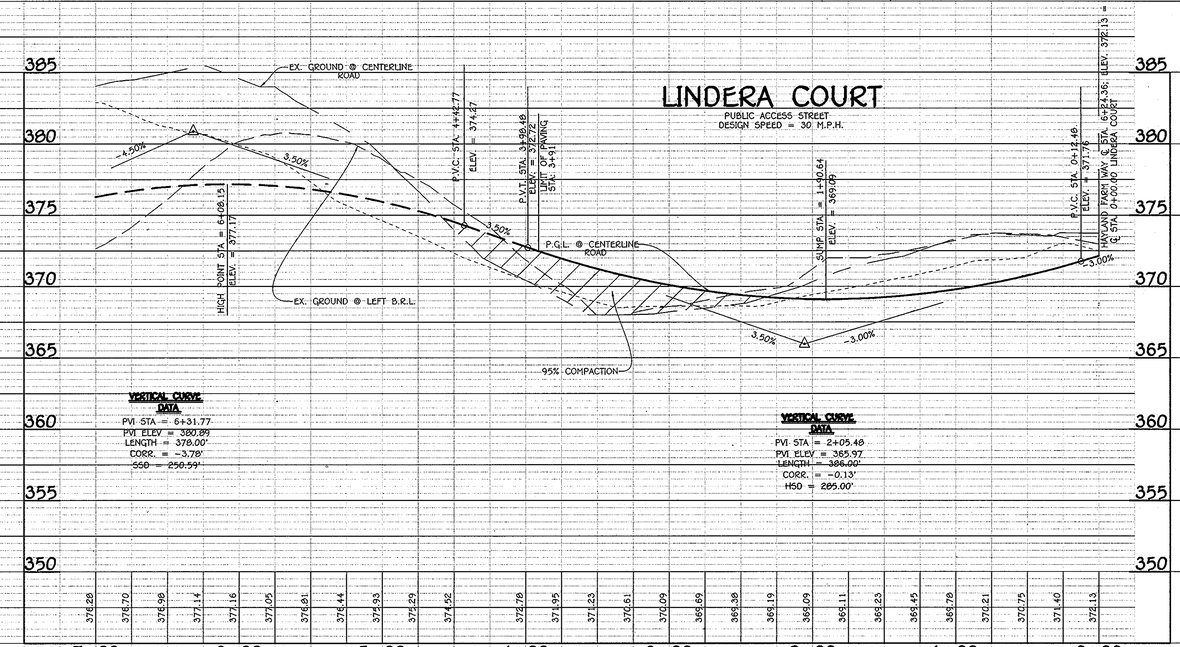

PROFILE
SCALE: HOR. : 1" = 50'
VER. : 1" = 5'

F-08-081

I:\2004\04001\dwg\PHASE TWO FINALS\PHASE TWO REDLINE 2012\04001-3001 SHEET 4-7 ROAD PLAN mylars.dwg, SHEET 7, 10/30/2012 1:14:17 PM, 1:1

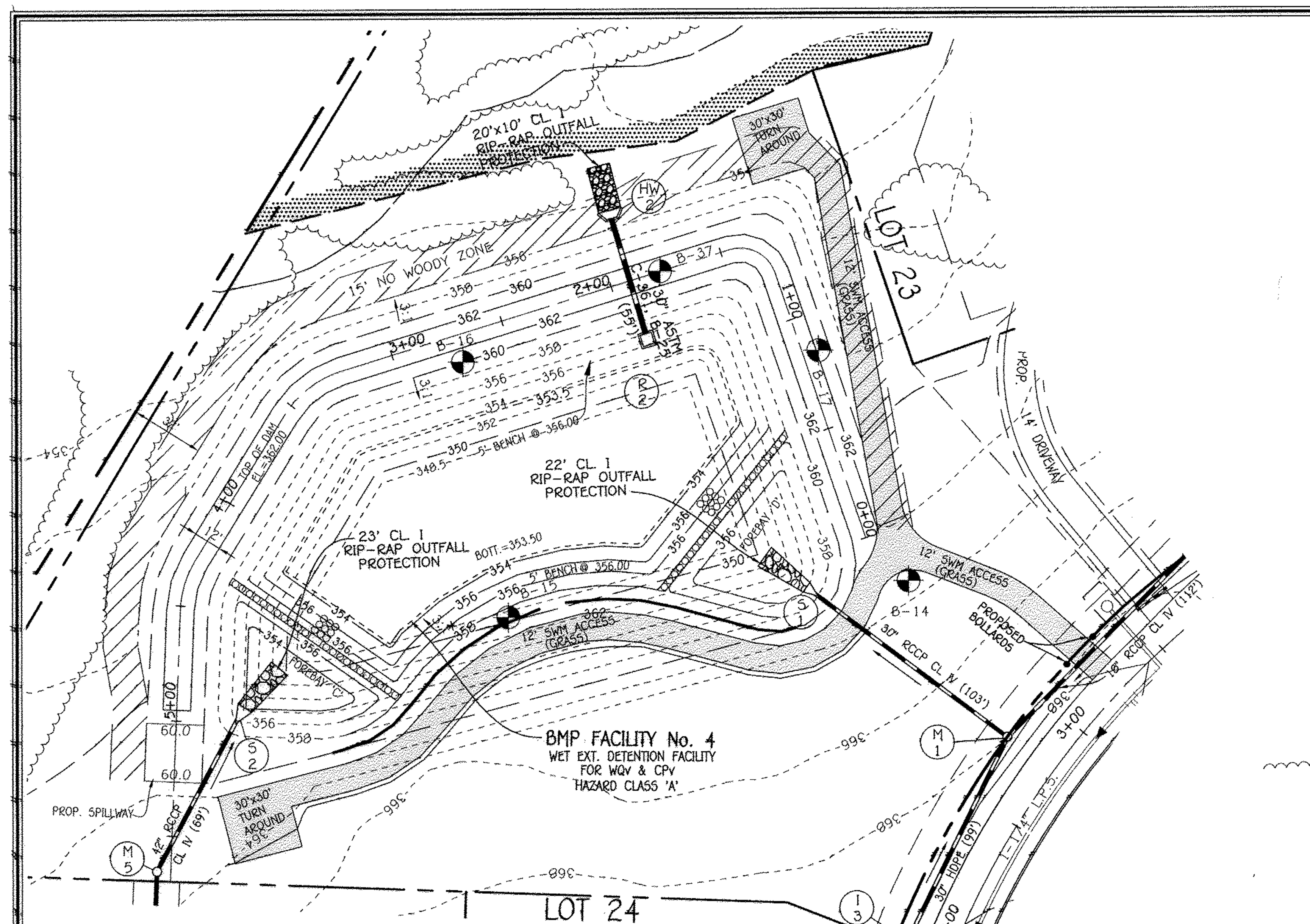

FINAL POND GRADING PLAN

SCALE: 1" = 50'

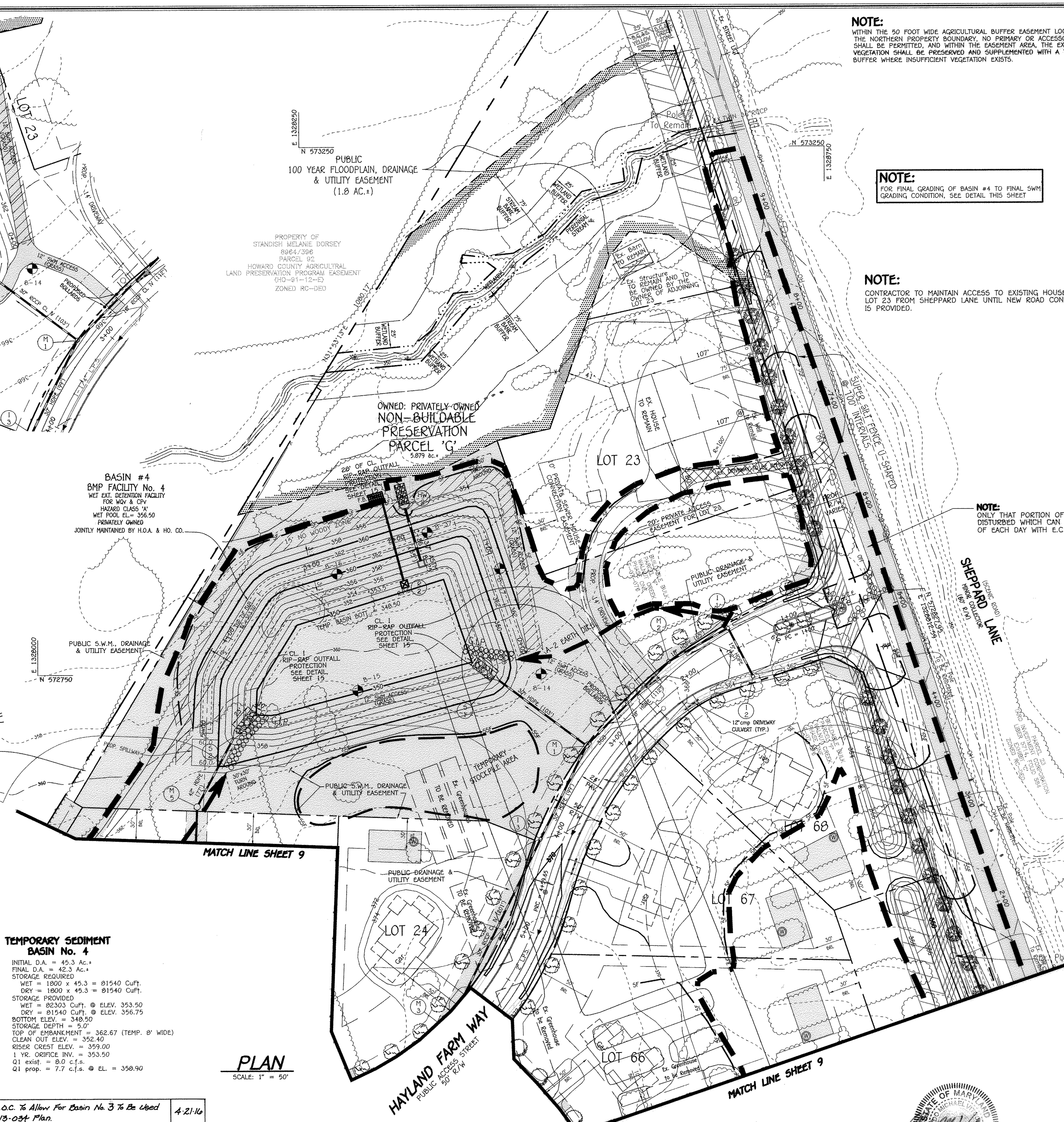

PLAN

SCALE: 1" = 50'

NOTE:
WITHIN THE 50 FOOT WIDE AGRICULTURAL BUFFER EASEMENT LOCATED ALONG THE NORTHERN PROPERTY BOUNDARY, NO PRIMARY OR ACCESSORY STRUCTURES SHALL BE PERMITTED, AND WITHIN THE EASEMENT AREA, THE EXISTING HEDGEROW VEGETATION SHALL BE PRESERVED AND SUPPLEMENTED WITH A TYPE 'A' LANDSCAPE BUFFER WHERE INSUFFICIENT VEGETATION EXISTS.

NOTE:
FOR FINAL GRADING OF BASIN #4 TO FINAL SWM GRADING CONDITION, SEE DETAIL THIS SHEET

NOTE:
CONTRACTOR TO MAINTAIN ACCESS TO EXISTING HOUSE ON LOT 23 FROM SHEPPARD LANE UNTIL NEW ROAD CONNECTION IS PROVIDED.

NOTE:
ONLY THAT PORTION OF SHEPPARD LANE WILL BE DISTURBED WHICH CAN AND SHALL BE STABILIZED BY THE END OF EACH DAY WITH E.C.M.

NOTE:
THE CONTRACTOR SHALL REMOVE ALL OLD AND NEW JUNK, TRASH, DEBRIS AND OTHER UNNATURAL ITEMS FROM THE FORESTS, FLOODPLAINS, STREAMS, WETLANDS AND BUFFER AREAS.

By The Developer:

"I/We Certify That All Development And/Or Construction Will Be Done According To These Plans, And That Any Responsible Personnel Involved In The Construction Project Will Have A Certificate Of Attendance At A Department Of The Environment Approved Training Program For The Control Of Sediment And Erosion Before Beginning The Project. I Shall Engage A Registered Professional Engineer To Supervise Pond Construction And Provide The Howard Soil Conservation District With An "As-Built" Plan Of The Pond Within 30 Days Of Completion. I Also Authorize Periodic On-Site Inspections By The Howard Soil Conservation District."

Signature Of Developer — Date 10/31/12

Printed Name Of Developer: Timothy W. Feaga

By The Engineer:

"I Certify That This Plan For Pond Construction, Erosion And Sediment Control Represents A Practical And Workable Plan Based On My Personal Knowledge Of The Site Conditions. This Plan Was Prepared In Accordance With The Requirements Of The Howard Soil Conservation District. I Have Notified The Developer That He/She Must Engage A Registered Professional Engineer To Supervise Pond Construction And Provide The Howard Soil Conservation District With An "As-Built" Plan Of The Pond Within 30 Days Of Completion."

Signature Of Engineer — Date 10/31/12

Printed Name Of Engineer

These Plans For Small Pond Construction, Soil Erosion And Sediment Control Meet The Requirements Of The Howard Soil Conservation District.

Howard Soil Conservation District — Date 11/20/12

Approved: Department Of Public Works

Chief Bureau Of Highways, Acting — Date 11/29/12

Approved: Department Of Planning And Zoning

Chief, Division Of Land Development — Date 12/05/12

Chief, Development Engineering Division — Date 12/3/12

AS-BUILT CERTIFICATION

I Hereby Certify That The Facility Shown On This Plan Was Constructed As Shown On The " As-Built" Plans And Meets The Approved Plans And Specifications.

Signature — P.E. No. — Date:

Certify Means To State Or Declare A Professional Opinion Based Upon Onsite Inspections And Material Tests Which Are Conducted During Construction. The Onsite Inspections And Material Tests Are Those Inspections And Tests Deemed Sufficient And Appropriate Commonly Accepted Engineering Standards. Certify Does Not mean Or Imply A Guarantee By The Engineer Nor Does An Engineer's Certification Relieve Any Other Party From Meeting Requirements Imposed By Contract, Employment, Or Other Means, Including Meeting Commonly Accepted Industry Practices.

LEGEND

- SSF — SUPER-SILT FENCE
- SF — SILT FENCE
- TP — TREE PROTECTION FENCE
- S.C.E. — STABILIZED CONSTRUCTION ENTRANCE
- EARTH DIKE
- L.O.D. — LIMITS OF DISTURBANCE
- R.P.S. — REMOVABLE PUMPING STATION
- F.B. — FILTER BAG
- E.C.M. — DENOTES EROSION CONTROL MATTING
- DENOTES 25% OR GREATER SLOPES
- DENOTES 15% - 24.99% SLOPES
- 2" L.P.S. — LOW PRESSURE SEWER BY OTHERS W/ GRINDER PUMPS
- G.I.P. — GABION INFLOW PROTECTION
- OH — OVERHEAD ELECTRIC
- UG — UNDERGROUND ELECTRIC

CONTRACTOR NOTE:
NO WORK MAY BEGIN UNTIL ALL BASIN STRUCTURES, PIPES, ETC. ARE ON-SITE AND PERMISSION IS GRANTED BY CID INSPECTOR TO PROCEED.

SEQUENCE OF CONSTRUCTION

PHASE ONE - BASIN/POND CONSTRUCTION

1. OBTAIN A GRADING PERMIT. (2 WEEKS)
2. NOTIFY "MISS UTILITY" AT LEAST 48 HOURS BEFORE BEGINNING ANY WORK AT 1-800-257-7777. NOTIFY THE HOWARD COUNTY OFFICE OF CONSTRUCTION/INSPECTION AT 410-313-1330 AT LEAST 24 HOURS BEFORE STARTING WORK.
3. INSTALL THE STABILIZED CONSTRUCTION ENTRANCE. INSTALL ALL TREE PROTECTION FENCE FOR TREES TO BE UNDISTURBED AS INDICATED ON THE PLANS. (1 WEEK)
4. INSTALL SILT FENCE, EARTH DIKES AND DEWATERING DEVICES IN CONJUNCTION WITH CONSTRUCTION OF THE PROPOSED SEDIMENT BASIN/SWM PONDS AND DAM EMBANKMENT. NOTE THAT NO DISTURBANCE IS ALLOWED UNTIL ALL SWM/BASIN MATERIALS FOR THE PRINCIPAL SPILLWAYS ARE ON SITE AND PERMISSION FROM THE INSPECTOR IS GRANTED IN WRITING TO PROCEED. (4 WEEKS)
5. NOTE: ALL DAM EMBANKMENT AND CORE TRENCH CONSTRUCTION SHALL BE COORDINATED WITH A PROFESSIONAL GEOTECHNICAL ENGINEER IN ACCORDANCE WITH THE RECOMMENDATIONS SHOWN ON THESE PLANS. NO BLASTING WILL BE PERMITTED FOR THE EXCAVATION OF SEDIMENT BASIN/SWM POND EMBANKMENT. WHERE NECESSARY, RIPPING AND JACK HAMMERING SHOULD BE UTILIZED IN THE EXCAVATION OF THE FACILITY.
6. UPON COMPLETION OF THE SWM PONDS/SEDIMENT BASINS CONSTRUCTION RECEIVE PERMISSION FROM THE SEDIMENT CONTROL INSPECTOR PRIOR TO PROCEEDING. (1 WEEK)

PHASE TWO

7. CLEAR AND GRUB FOR THE INSTALLATION OF THE REMAINING PERIMETER SEDIMENT CONTROL MEASURES. INSTALL TREE PROTECTION FENCE, SILT FENCE, EARTH DIKES AS SHOWN ON THESE PLANS. (1 WEEK)
8. CLEAR AND GRUB FOR THE REMAINDER OF THE SITE. (2 WEEKS)
9. GRADE SITE TO PROPOSED SUBGRADE AND INSTALL THE STORM DRAIN SYSTEMS. STABILIZE ALL SLOPES IMMEDIATELY UPON COMPLETION OF GRADING. DO NOT BLOCK INLETS AS STORM DRAIN SYSTEM WILL BE USED TO CONVEY SEDIMENT RUNOFF INTO THE BASIN. (5 WEEKS)
10. CONSTRUCT ROAD BASE COURSE FOR SUBDIVISION ROADS. (1 WEEK)
11. WHEN ALL CONTRIBUTING AREAS TO THE SEDIMENT CONTROL DEVICES AND PONDS HAVE BEEN STABILIZED AND WITH THE PERMISSION OF THE SEDIMENT CONTROL INSPECTOR, THE SEDIMENT CONTROL DEVICES MAY BE REMOVED AND/OR BACKFILLED AND THE REMAINING AREAS BROUGHT TO FINAL GRADE. STABILIZE ALL AREAS IN ACCORDANCE WITH PERMANENT SEEDING NOTES. (3 WEEKS)
12. NOTIFY HOWARD COUNTY OFFICE OF INSPECTIONS AND PERMITS FOR FINAL INSPECTION OF THE COMPLETED PROJECT. (1 WEEK)
13. PREPARE FINAL POND "AS-BUILTS" FOR APPROVAL BY SOIL CONSERVATION DISTRICT. * (2)

NOTE: THE CONTRACTOR SHALL INSPECT AND PROVIDE NECESSARY MAINTENANCE ON ALL SEDIMENT AND EROSION CONTROL STRUCTURES SHOWN HEREON, AFTER EACH RAINFALL AND ON A DAILY BASIS. REMOVE SEDIMENT FROM THE POND/BASIN WHEN THE CLEANOUT ELEVATION HAS BEEN REACHED. ALL SEDIMENT MUST BE PLACED UPSTREAM OF THE APPROVED TRAPPING DEVICE.

** Note: Sediment Basin No. 3 Shall Remain To Be Utilized By The Phase IV F-13-034 Plan.*

TEMPORARY SEDIMENT BASIN No. 4

INITIAL D.A. = 45.3 Ac.±
FINAL D.A. = 42.3 Ac.±
STORAGE REQUIRED
WET = 1800 x 45.3 = 81540 Cuft.
DRY = 1800 x 45.3 = 81540 Cuft.
STORAGE PROVIDED
WET = 82303 Cuft. @ ELEV. 353.50
DRY = 81540 Cuft. @ ELEV. 356.75
BOTTOM ELEV. = 348.50
STORAGE DEPTH = 5.0'
TOP OF EMBANKMENT = 362.67 (TEMP. 8' WIDE)
CLEAN OUT ELEV. = 352.40
RISER CREST ELEV. = 359.00
1 YR. ORIFICE INV. = 353.50
Q1 exist. = 8.0 c.f.s.
Q1 prop. = 7.7 c.f.s. @ EL. = 358.90

NO.	DESCRIPTION	DATE
2	*Revise S.O.C. To Allow For Basin No. 3 To Be Used Under F-13-034 Plan.*	4·21·16
1	REVISED LOW PRESSURE SEWER, WELLS TO MAINTAIN 100' SEPARATION, PARCELS 'G', 'H' & 'J', STORM DRAIN PIPE FROM RCCP TO HDPE AND ROAD NAMES	7/25/12
	REVISIONS	

FISHER, COLLINS & CARTER, INC.
CIVIL ENGINEERING CONSULTANTS & LAND SURVEYORS
CENTENNIAL SQUARE OFFICE PARK - 10272 BALTIMORE NATIONAL PIKE
ELLICOTT CITY, MARYLAND 21042
(410) 461 - 2855

OWNER
BASSLERS, INCORPORATED
c/o ALFRED S. BASSLER
4994 SHEPPARD LANE
ELLICOTT CITY, MARYLAND 21042
(410) 531-2193

DEVELOPER
HERITAGE LAND DEVELOPMENT
15950 NORTH AVE.
LISBON, MARYLAND 21765
(410) 489-7900

ALDO M. VITOCCO, P.E. — DATE 10/31/12
"Professional Certification. I hereby certify that these documents were prepared by me, and that I am a duly Licensed Professional Engineer under the laws of the State of Maryland, License No. 20748, Expiration Date 2-22-13."

REVISED
STREET TREE, GRADING & SEDIMENT CONTROL PLAN
WALNUT CREEK
PHASE TWO
Lots 23 - 68, Non-Buildable Preservation Parcels 'C', 'G', 'I', 'J', 'K', 'L' And 'M' & Buildable Bulk Parcels 'H' And 'N'
(Being A Resubdivision Of Buildable Bulk Parcels 'F' & 'E' And a Revision To Non-Buildable Preservation Parcel 'C' - Walnut Creek, Phase One, Plat No's. 20631 Thru 20647
ZONED: RC-DEO & RR-DEO
TAX MAP No. 28 GRID Nos. 4, 5, 10-12, 17, AND 18 PARCEL No. 49
FIFTH ELECTION DISTRICT
HOWARD COUNTY, MARYLAND
DATE: SEPTEMBER, 2008
SHEET 8 OF 32

F-08-081

I:\2004\04001\dwg\PHASE TWO FINALS\PHASE TWO REDLINE 2012\04001-3001 SHEET 8-11 GRADING PLANS.dwg, SHEET 8, 10/30/2012 1:36:30 PM, 1:1

STREET TREE SCHEDULE

SYMBOL	QTY.	BOTANICAL AND COMMON NAME	SIZE	COMMENTS
	2488' x 2 = 4976' 4976' /40 = 124.4 124 TREES	ACER RUBRUM 'OCTOBER GLORY' RED MAPLE	2 1/2-3" CAL.	40' APART ON PUBLIC R/W (HAYLAND FARM WAY)
	391' x 2 = 782' 782' /40 = 19.5 20 TREES	PLATANUS OCCIDENTALIS 'BLOODGOOD' LONDON PLANETREE	2 1/2-3" CAL.	40' APART ON PUBLIC R/W (LINDERA COURT)
	443' x 2 = 886' 886' /40 = 22.2 22 TREES	PRUNUS SARGENTII SARGENT CHERRY	2 1/2-3" CAL.	40' APART ON PUBLIC R/W (CRAPE MYRTLE COURT)
	799' x 2 = 1598' 1598' /40 = 39.9 40 TREES	CLADRASTIS LUTEA YELLOWWOOD	2 1/2-3" CAL.	40' APART ON PUBLIC R/W (HONEY LOCUST COURT)
	948' / 40 = 23.7 24 TREES	ACER GRISEUM PAPERBARK MAPLE	2 1/2-3" CAL.	40' APART ON PUBLIC R/W (SHEPPARDS LANE)

NOTE: FINANCIAL SURETY FOR THE 230 REQUIRED STREET TREES HAS BEEN POSTED AS PART OF THE DEVELOPER'S AGREEMENT IN THE AMOUNT OF $69,000.00.

LEGEND

- SS — SUPER-SILT FENCE
- SF — SILT FENCE
- TP — TREE PROTECTION FENCE
- S.C.E. — STABILIZED CONSTRUCTION ENTRANCE
- EARTH DIKE
- L.O.D. — DENOTES L.O.D. LIMITS OF DISTURBANCE
- E.C.M. — DENOTES EROSION CONTROL MATTING
- DENOTES 25% OR GREATER SLOPES
- DENOTES 15% - 24.99% SLOPES
- L.P.S. — DENOTES LOW PRESSURE SEWER BY OTHERS W/ GRINDER PUMPS
- G.I.P. — GABION INFLOW PROTECTION

By The Developer:

"I/We Certify That All Development And/Or Construction Will Be Done According To These Plans, And That Any Responsible Personnel Involved In The Construction Project Will Have A Certificate Of Attendance At A Department Of The Environment Approved Training Program For The Control Of Sediment And Erosion Before Beginning The Project. I Shall Engage A Registered Professional Engineer To Supervise Pond Construction And Provide The Howard Soil Conservation District With An "As-Built" Plan Of The Pond Within 30 Days Of Completion. I Also Authorize Periodic On-Site Inspections By The Howard Soil Conservation District."

Signature Of Developer — Date 10/31/12

Timothy W Feaga
Printed Name Of Developer

By The Engineer:

"I Certify That The Design Of This Construction, Erosion And Sediment Control Represents A Practical And Workable Plan Based On My Personal Knowledge Of The Site Conditions. This Plan Was Prepared In Accordance With The Requirements Of The Howard Soil Conservation District. I Have Been Authorized By The Developer To Have Must Engage A Registered Professional Engineer To Supervise Pond Construction And Provide The Howard Soil Conservation District With An "As-Built" Plan Of The Pond Within 30 Days Of Completion."

Signature — Date 10/31/12

Allan M. Vitale
Printed Name Of Engineer

These Plans For Construction, Soil Erosion And Sediment Control Meet The Requirements Of The Howard Soil Conservation District.

Howard Soil Conservation District — Date 11/30/12

Approved: Department Of Public Works

Chief Bureau Of Highways — Date 11/28/12

Approved: Department Of Planning And Zoning

Chief, Division Of Land Development — Date 12/05/12

Chief, Development Engineering Division — Date 12/3/12

AS-BUILT CERTIFICATION

I Hereby Certify That The Facility Shown On This Plan Was Constructed As Shown On The " As-Built" Plans And Meets The Approved Plans And Specifications.

Signature — P.E. No.

Date:

Certify Means To State Or Declare A Professional Opinion Based Upon Onsite Inspections And Material Tests Which Are Conducted During Construction. The Onsite Inspections And Material Tests Are Those Inspections And Tests Deemed Sufficient And Appropriate Commonly Accepted Engineering Standards. Certify Does Not mean Or Imply A Guarantee Or The Engineer Nor Does An Engineer's Certification Relieve Any Other Party From Meeting Requirements Imposed By Contract, Employment, Or Other Means, Including Meeting Commonly Accepted Industry Practices.

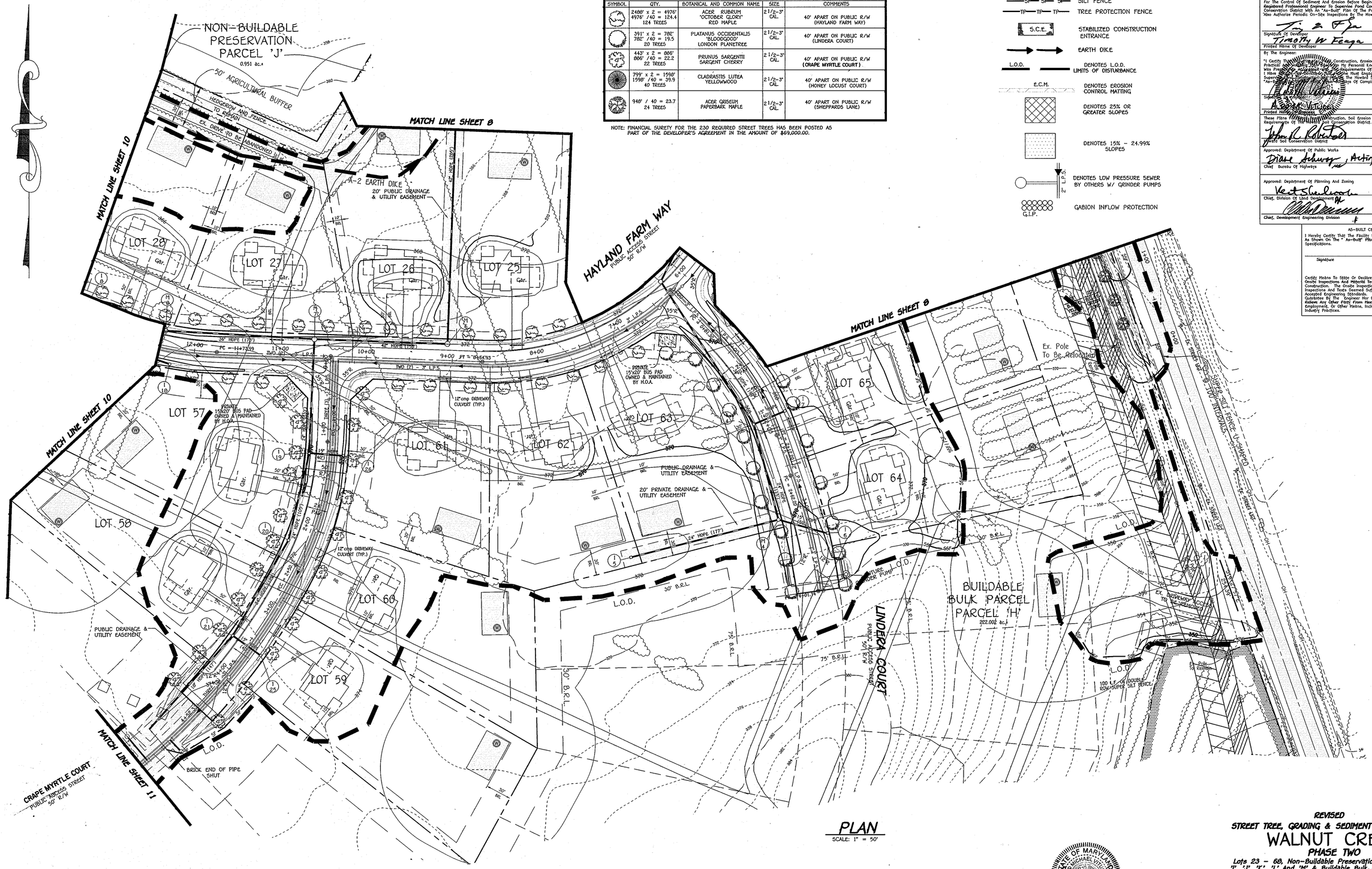

PLAN

SCALE: 1" = 50'

FISHER, COLLINS & CARTER, INC.
CIVIL ENGINEERING CONSULTANTS & LAND SURVEYORS
CENTENNIAL SQUARE OFFICE PARK - 10272 BALTIMORE NATIONAL PIKE
ELLICOTT CITY, MARYLAND 21042
(410) 461 - 2855

NO.	DESCRIPTION	DATE
2	REVISED LOW PRESSURE SEWER, WELLS TO MAINTAIN 100' SEPARATION, PARCELS 'G', 'H' & 'J', STORM DRAIN PIPE FROM RCCP TO HDPE AND ROAD NAMES	7/25/12

REVISIONS

OWNER
BASSLERS, INCORPORATED
c/o ALFRED S. BASSLER
4994 SHEPPARD LANE
ELLICOTT CITY, MARYLAND 21042
(410) 531-2193

DEVELOPER
HERITAGE LAND DEVELOPMENT
15950 NORTH AVE.
LISBON, MARYLAND 21765
(410) 489-7900

10/31/12
DATE

ALDO MICHAEL VITALE
"Professional Engineer, I hereby certify that these documents were prepared or approved by me, and that I am a duly Licensed Professional Engineer under the laws of the State of Maryland, License No. 22748, Expiration Date 2-22-13."

REVISED
STREET TREE, GRADING & SEDIMENT CONTROL PLAN
WALNUT CREEK
PHASE TWO
Lots 23 - 68, Non-Buildable Preservation Parcels 'C', 'G', 'I', 'J', 'K', 'L' And 'M' & Buildable Bulk Parcels 'H' And 'N'
(Being A Resubdivision Of Buildable Bulk Parcels 'F' & 'E' And A Revision To Non-Buildable Preservation Parcel 'C' - Walnut Creek, Phase One, Plat No's. 20531 Thru 20547
ZONED: RC-DEO & RR-DEO
TAX MAP No. 28 GRID Nos. 4, 5, 10-12, 17, AND 18 PARCEL No. 49
FIFTH ELECTION DISTRICT
HOWARD COUNTY, MARYLAND
DATE: SEPTEMBER, 2008
SHEET 9 OF 32

F-08-081

I:\32040\04001\dwg\PHASE TWO FINALS\PHASE TWO REDLINE 2012\04001-8001 SHEET 8-11 GRADING PLANS.dwg,SHEET 9, 10/30/2012 1:38:17 PM, 1:1

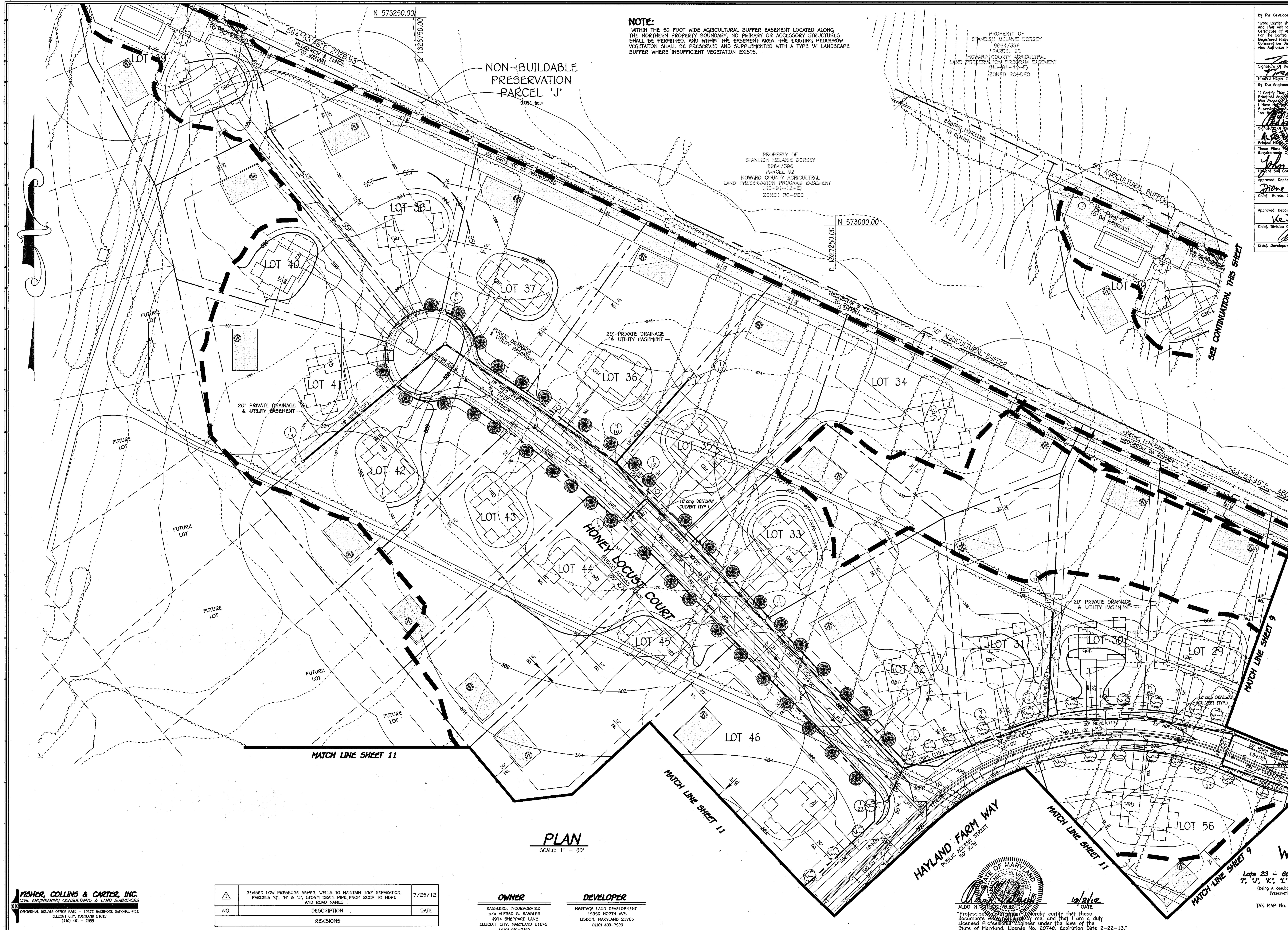

NOTE:
WITHIN THE 50 FOOT WIDE AGRICULTURAL BUFFER EASEMENT LOCATED ALONG THE NORTHERN PROPERTY BOUNDARY, NO PRIMARY OR ACCESSORY STRUCTURES SHALL BE PERMITTED, AND WITHIN THE EASEMENT AREA, THE EXISTING HEDGEROW VEGETATION SHALL BE PRESERVED AND SUPPLEMENTED WITH A TYPE 'A' LANDSCAPE BUFFER WHERE INSUFFICIENT VEGETATION EXISTS.

By The Developer:

"I/We Certify That All Development And/Or Construction Will Be Done According To These Plans, And That Any Responsible Personnel Involved In The Construction Project Will Have A Certificate Of Attendance At A Department Of The Environment Approved Training Program For The Control Of Sediment And Erosion Before Beginning The Project. I Shall Engage A Registered Professional Engineer To Supervise Pond Construction And Provide The Howard Soil Conservation District With An "As-Built" Plan Of The Pond Within 30 Days Of Completion. I Also Authorize Periodic On-Site Inspections By The Howard Soil Conservation District."

Signature Of Developer — 10/31/12 Date
Timothy W. Feaga — Printed Name Of Developer

By The Engineer:

"I Certify That This Plan For Pond Construction, Erosion And Sediment Control Represents A Practical And Workable Plan Based On My Personal Knowledge Of The Site Conditions. This Plan Was Prepared In Accordance With The Requirements Of The Howard Soil Conservation District. I Have Notified The Developer That He/She Must Engage A Registered Professional Engineer To Supervise Pond Construction And Provide The Howard Soil Conservation District With An "As-Built" Plan Of The Pond Within 30 Days Of Completion."

Signature Of Engineer — 10/31/12 Date
A. M. Vitucci — Printed Name Of Engineer

These Plans For Pond Construction, Soil Erosion And Sediment Control Meet The Requirements Of The Howard Soil Conservation District.

John R Robertson — Howard Soil Conservation District — 11/20/12 Date

Approved: Department Of Public Works
Diane Schwarz, Acting — Chief Bureau Of Highways — 11/29/12 Date

Approved: Department Of Planning And Zoning
Kent Sheubrooks — Chief, Division Of Land Development — 12/05/12 Date
Chief, Development Engineering Division — 12/3/12 Date

AS-BUILT CERTIFICATION

I Hereby Certify That The Facility Shown On This Plan Was Constructed As Shown On The " As-Built" Plans And Meets The Approved Plans And Specifications.

Signature — P.E. No.
Date:

Certify Means To State Or Declare A Professional Opinion Based Upon Onsite Inspections And Material Tests Which Are Conducted During Construction. The Onsite Inspections And Material Tests Are Those Inspections And Tests Deemed Sufficient And Appropriate Commonly Accepted Engineering Standards. Certify Does Not mean Or Imply A Guarantee By The Engineer Nor Does An Engineer's Certification Relieve Any Other Party From Meeting Requirements Imposed By Contract, Employment, Or Other Means, Including Meeting Commonly Accepted Industry Practices.

LEGEND

SSF — SSF — SSF	SUPER-SILT FENCE
SF — SF — SF	SILT FENCE
TP — TP — TP	TREE PROTECTION FENCE
S.C.E.	STABILIZED CONSTRUCTION ENTRANCE
→ →	EARTH DIKE
L.O.D.	DENOTES L.O.D. LIMITS OF DISTURBANCE
E.C.M.	DENOTES EROSION CONTROL MATTING
	DENOTES 25% OR GREATER SLOPES
	DENOTES 15% – 24.99% SLOPES
2" L.P.S.	DENOTES LOW PRESSURE SEWER BY OTHERS W/ GRINDER PUMPS
G.I.P.	GABION INFLOW PROTECTION

FISHER, COLLINS & CARTER, INC.
CIVIL ENGINEERING CONSULTANTS & LAND SURVEYORS
CENTENNIAL SQUARE OFFICE PARK – 10272 BALTIMORE NATIONAL PIKE
ELLICOTT CITY, MARYLAND 21042
(410) 461 – 2855

NO.	DESCRIPTION	DATE
⚠	REVISED LOW PRESSURE SEWER, WELLS TO MAINTAIN 100' SEPARATION, PARCELS 'G', 'H' & 'J', STORM DRAIN PIPE FROM RCCP TO HDPE AND ROAD NAMES	7/25/12
REVISIONS		

OWNER
BASSLERS, INCORPORATED
c/o ALFRED S. BASSLER
4994 SHEPPARD LANE
ELLICOTT CITY, MARYLAND 21042
(410) 531-2193

DEVELOPER
HERITAGE LAND DEVELOPMENT
15950 NORTH AVE.
LISBON, MARYLAND 21765
(410) 489-7900

ALDO M. VITUCCI — 10/31/12 DATE
"Professional Certification. I hereby certify that these documents were prepared by me, and that I am a duly Licensed Professional Engineer under the laws of the State of Maryland, License No. 20748, Expiration Date 2-22-13."

REVISED
STREET TREE, GRADING & SEDIMENT CONTROL PLAN
WALNUT CREEK
PHASE TWO
Lots 23 – 68, Non-Buildable Preservation Parcels 'C', 'G', 'I', 'J', 'K', 'L' And 'M' & Buildable Bulk Parcels 'H' And 'N'
(Being A Resubdivision Of Buildable Bulk Parcels 'F' & 'E' And A Revision To Non-Buildable Preservation Parcel 'C' – Walnut Creek, Phase One, Plat No's. 20631 Thru 20647
ZONED: RC-DEO & RR-DEO
TAX MAP No. 28 GRID Nos. 4, 5, 10-12, 17, AND 18 PARCEL No. 49
FIFTH ELECTION DISTRICT
HOWARD COUNTY, MARYLAND
DATE: SEPTEMBER, 2008
SHEET 10 OF 32

F-08-081

I:\2004\04001\dwg\PHASE TWO FINALS\PHASE TWO REDLINE 2012\04001-8001 SHEET 8-11 GRADING PLANS.dwg, SHEET 10, 10/30/2012 1:41:37 PM, 1:1

NOTE:
THE CONTRACTOR SHALL PROVIDE UNINTERRUPTED ACCESS TO MOBLEY PROPERTY, PARCEL No. 50 DURING CONSTRUCTION.

NOTE:
THE CONTRACTOR SHALL REMOVE ALL OLD AND NEW JUNK, TRASH, DEBRIS AND OTHER UNNATURAL ITEMS FROM THE FORESTS, FLOODPLAINS, STREAMS, WETLANDS AND BUFFER AREAS.

PLAN
SCALE: 1" = 50'

SUMMARY TABLE #1(Phase One and Two Only to Date)

The following is a summary of the peak discharges from each of the drainage areas and study points.

Design Point	One-Year Storm (cfs)	Ten-Year Storm (cfs)
7	223.9	1490.2
2	42.2	394.7

Drainage Area	One-Year Storm (cfs)	Ten-Year Storm (cfs)
A to BMP #1-Micro-pool-DP#1	In: 7.1 0.27@557.84	In: 49.4 Out: 20.6@558.53
A-1-Bypass Area	7.2	29.8
Total of Area "A"	1.3	50.3
B to BMP#2-Micro-pool-DP#1	In: 7.5 Out: 0.2@554.77	In: 39.5 Out: @ Phase 4 Finals
B-1 Bypass Area	1.6	40.0
Total of Area "B"	1.7	79.6 subject to Phase 4
C to BMP#3-Micro-pool-DP#1	In: 15.0 0.42@565.80	In: 76.9 Out: 17.3@570.07
C-1 Bypass Area	8.6	61.1
Total of Area "C"	8.7	63.8
D to BMP#4-Micro-pool-DP#2	In: 13.5 0.45@558.69	In: 86.4 Out: 55.8@559.90
D-1 Bypass Area	0.4	3.5
D-2 Bypass Area	1.8	11.8
D-3 Bypass Area	1.0	4.4
D-4 Bypass Area	1.2	6.1
D-5 Bypass Area	1.4	7.0
D-6 Bypass Area	0.5	3.4
D-7 Bypass Area	0.4	1.2
Total of Area "D"	6.3	67.1
S to BMP#5-Micro-pool-DP#1	In: 2.3 Out: 0.1@494.49	In: 19.4 Out: @ Phase 5 Finals
S-1 Bypass Area	2.9	52.5
Total of Area "S"	2.4	35.4 subject to Phase 5 Finals
By-Pass Area "F"	220.3	1466.5
Total @ Design Point #1	224.5	1594.8
By-Pass Area "G"	34.6	255.5
Total @ Design Point #2	37.9	282.7

**Updated February 1, 2008 for Phase Two of Finals*

LEGEND

SSF SSF SSF	SUPER-SILT FENCE
SF SF SF	SILT FENCE
TP TP TP	TREE PROTECTION FENCE
S.C.E.	STABILIZED CONSTRUCTION ENTRANCE
	EARTH DIKE
L.O.D.	DENOTES L.O.D. LIMITS OF DISTURBANCE
E.C.M.	DENOTES EROSION CONTROL MATTING
	DENOTES 25% OR GREATER SLOPES
	DENOTES 15% – 24.99% SLOPES
L.P.	DENOTES LOW PRESSURE SEWER BY OTHERS W/ GRINDER PUMPS
G.I.P.	GABION INFLOW PROTECTION
OH	DENOTES OVERHEAD ELECTRIC
UG	DENOTES UNDERGROUND ELECTRIC

By The Developer:

"I/We Certify That All Development And/Or Construction Will Be Done According To These Plans, And That Any Responsible Personnel Involved In The Construction Project Will Have A Certificate Of Attendance At A Department Of The Environment Approved Training Program For The Control Of Sediment And Erosion Before Beginning The Project. I Shall Engage A Registered Professional Engineer To Supervise Pond Construction And Provide The Howard Soil Conservation District With An "As-Built" Plan Of The Pond Within 30 Days Of Completion. I Also Authorize Periodic On-Site Inspections By The Howard Soil Conservation District."

Signature Of Developer — Date 10/31/12

Timothy W. Feaga
Printed Name Of Developer

By The Engineer:

"I Certify That The Design Of This Erosion And Sediment Control Represents A Practicable And Workable Plan Based On My Personal Knowledge Of The Site Conditions. This Plan Was Prepared In Conformance With The Requirements Of The Howard Soil Conservation District. I Have Reviewed The Site Conditions On The Next Engage A Registered Professional Engineer To Supervise Pond Construction And Provide The Howard Soil Conservation District With An "As-Built" Plan Of The Pond Within 30 Days Of Completion."

STATE OF MARYLAND — ALFRED S. BASSLER — No. 20748

Signature — Date 10/31/12

ALFRED S. BASSLER
Printed Name

These Plans For Small Pond Construction, Soil Erosion And Sediment Control Meet The Requirements Of The Howard Soil Conservation District.

Howard Soil Conservation District — Date 11/20/12

Approved: Department Of Public Works

Chief Bureau Of Highways, Acting — Date 11/29/12

Approved: Department Of Planning And Zoning

Chief, Division Of Land Development — Date 12/05/12

Chief, Development Engineering Division — Date 12/3/12

AS-BUILT CERTIFICATION

I Hereby Certify That The Facility Shown On This Plan Was Constructed As Shown On The " As-Built" Plans And Meets The Approved Plans And Specifications.

Signature — P.E. No.

Date:

Certify Means To State Or Declare A Professional Opinion Based Upon Onsite Inspections And Material Tests Which Are Conducted During Construction. The Onsite Inspections And Material Tests Are Those Inspections And Tests Deemed Sufficient And Appropriate Commonly Accepted Engineering Standards. Certify Does Not mean Or Imply A Guarantee Or The Engineer Nor Does An Engineer's Certification Relieve Any Other Party From Meeting Requirements Imposed By Contract, Employment, Or Other Means, Including Meeting Commonly Accepted Industry Practices.

SUMMARY TABLE #2 (Phase One and Two)

The following is a summary of the Re_{vol}, WQ_{vol} and CP. Requirements:

Re_{vol} (Recharge Vol. for Entire Site)	10.04 acres or 1.11 acre-feet	12.38 acres w/% Area Method
WQ_{vol} for Phase One and Two Only		
Area A – BMP#1-DP#1	0.2871 acre-feet	0.2871 ac. Ft. @ BMP Facility #1
Bypass Area A-1	0.2259 acre-feet	0.2259 ac. Ft. Via Credits
Area B – BMP#2-DP#1	0.35 acre-feet	0.35 ac. ft. @ BMP Facility #2
Bypass Area B-1	0.2653 acre-feet	0.2653 ac. ft. via credits
Area C – BMP#3-DP#1	0.74 acre-feet	0.74 ac. ft. @ BMP Facility #3
Bypass Area C-1	0.1878 acre-feet	0.1878 ac. ft. via credits
Area D – BMP#4-DP#2	0.852 acre-feet	0.852 ac. ft. @ BMP Facility #4
Bypass Area D-1	0.033 acre-feet	0.033 ac. Ft. @ Level Spreaders
Bypass Area D-2	0.091 acre-feet	0.091 ac. Ft. @ Level Spreaders
Bypass Area D-3	0.028 acre-feet	0.028 ac. Ft. @ Level Spreaders
Bypass Area D-4	0.042 acre-feet	0.042 ac. Ft. @ Level Spreaders
Bypass Area D-5	0.049 acre-feet	0.043 ac. Ft. @ Level Spreaders
Bypass Area D-6	0.026 acre-feet	0.026 ac. Ft. @ Level Spreaders
Bypass Area D-7	0.009 acre-feet	0.009 ac. Ft. @ Level Spreaders
Area E – BMP#5 – DP#1	0.085 acre-feet	0.085 ac. ft. @ BMP Facility #5
Bypass Area E-1	0.2373 acre-feet	0.2373 ac. ft. via credits
Q_{P10}		
Area A – BMP#1-DP#1	8.4718 acre-feet	8.4718 ac. Ft. @ BMP Facility #1
Area B – BMP#2-DP#1	0.4092 acre-feet	0.4092 ac. Ft. @ BMP Facility #2
Area C – BMP#3-DP#1	0.8813 acre-feet	0.8813 ac. Ft. @ BMP Facility #3
Area D – BMP#4-DP#2	1.8803 acre-feet	1.8803 ac. Ft. @ BMP Facility #4
Area E – BMP#5-DP#1	0.164 acre-feet	0.164 ac. Ft. @ BMP Facility #5

Note: Both Q_f (Overbank Flood Protection or 10-year storm) and Q_f (Extreme Flood Volume or 100-year storm) are not required for this site since this watershed area is not classified as one of the sensitive watershed areas for Howard County.

Note: All of the ponds for this subdivision will allow safe passage of the proposed condition 10-year and 100 year Q's. The ponds are adequately sized to do so and no emergency spillways are proposed.

NO.	DESCRIPTION	DATE
1	REVISED LOW PRESSURE SEWER, WELLS TO MAINTAIN 100' SEPARATION, PARCELS 'G', 'H' & 'J', STORM DRAIN PIPE FROM RCCP TO HOPE AND ROAD NAMES	7/25/12

REVISIONS

STATE OF MARYLAND — ALDO M. BASSLER — No. 20748 — PROFESSIONAL ENGINEER

"Professional Engineer I hereby certify that these documents were prepared or approved by me, and that I am a duly Licensed Professional Engineer under the laws of the State of Maryland, License No. 20748, Expiration Date 2-22-13."

10/31/12
DATE

FISHER, COLLINS & CARTER, INC.
CIVIL ENGINEERING CONSULTANTS & LAND SURVEYORS
CONTINENTAL SQUARE OFFICE PARK – 10272 BALTIMORE NATIONAL PIKE
ELLICOTT CITY, MARYLAND 21042
(410) 461 – 2855

OWNER
BASSLER, INCORPORATED
c/o ALFRED S. BASSLER
4994 SHEPPARD LANE
ELLICOTT CITY, MARYLAND 21042
(410) 531-2193

DEVELOPER
HERITAGE LAND DEVELOPMENT
15950 NORTH AVE.
LISBON, MARYLAND 21765
(410) 489-7900

REVISED
STREET TREE, GRADING & SEDIMENT CONTROL PLAN
WALNUT CREEK
PHASE TWO
Lots 23 – 60, Non-Buildable Preservation Parcels 'C', 'G', 'I', 'J', 'K', 'L' And 'M' & Buildable Bulk Parcels 'H' And 'N'

(Being A Resubdivision Of Buildable Bulk Parcels 'F' & 'E' And a Revision To Non-Buildable Preservation Parcel 'C' – Walnut Creek, Phase One, Plat No's. 20631 Thru 20647

ZONED: RC-DEO & RR-DEO

TAX MAP No. 28 GRID Nos. 4, 5, 10-12, 17, AND 18 PARCEL No. 49

FIFTH ELECTION DISTRICT
HOWARD COUNTY, MARYLAND
DATE: SEPTEMBER, 2008
SHEET 11 OF 32

F-08-081

I:\2004\04001\dwg\PHASE TWO FINALS\PHASE TWO REDLINE 2012\04001-3001 SHEET 8-11 GRADING PLANS.dwg, SHEET 11, 10/30/2012 1:43:40 PM, 1:1

SCHEDULE A PERIMETER LANDSCAPE EDGE

PERIMETER	CATEGORY (PROPERTIES/ ROADWAYS)	LANDSCAPE TYPE	LINEAR FEET OF OF ROADWAY FRONTAGE PERIMETER	CREDIT FOR EXISTING VEGETATION (YES, NO, LINEAR FEET) (DESCRIBE BELOW IF NEEDED)	CREDIT FOR WALL, FENCE OR BERM (YES, NO, LINEAR FEET) (DESCRIBE BELOW IF NEEDED)	NUMBER OF PLANTS REQUIRED & PROVIDED		
						SHADE TREES	EVERGREEN TREES	SHRUBS
P-1	FRONT TO ROADWAY	N/A	177'	NO	NO	0	0	-
P-2	ADJACENT TO PERIMETER	A	291'	YES (35')	NO	4	-	-
P-3	ADJACENT TO ROADWAY	B	262'	YES (188')	NO	1	2	-
* P-4	ADJACENT TO PERIMETER	A	1895'	YES (1347')	NO	9		-
P-5	ADJACENT TO ROADWAY	C	690'	NO	NO	17	35	-
					TOTAL	31	37	-

* NOTE: THE EXISTING HEDGEROW LOCATED ALONG PERIMETER P-4 MUST BE PRESERVED AND SUPPLEMENTED WITH A TYPE 'A' LANDSCAPING BUFFER WHERE THE EXISTING HEDGEROW IS LESS THAN 20' WIDE OR WHERE THE EXISTING HEDGEROW PROVIDES INSUFFICIENT LANDSCAPE SCREENING.

APPROVED: DEPARTMENT OF PUBLIC WORKS

Diane Schwarz, Acting 11/29/12
CHIEF, BUREAU OF HIGHWAYS — DATE

APPROVED: DEPARTMENT OF PLANNING AND ZONING

Kent Sheubrooks 12/05/12
CHIEF, DIVISION OF LAND DEVELOPMENT — DATE

12/3/12
CHIEF, DEVELOPMENT ENGINEERING DIVISION — DATE

SCHEDULE D STORMWATER MANAGEMENT AREA LANDSCAPING

	D-1	D-2
LINEAR FEET OF TYPE 'B' PERIMETER	D-1 : 1250	D-2 : 1587
NUMBER OF TREES REQUIRED & PROVIDED: SHADE TREES / EVERGREEN TREES	25 / 31	32 / 40
CREDIT FOR EXISTING VEGETATION (NO, YES AND %)	NO	NO
CREDIT FOR OTHER LANDSCAPING (NO, YES AND %)	NO	NO

PLANT LIST

SYMBOL	QTY.	BOTANICAL AND COMMON NAME	SIZE
	49	ACER RUBRUM 'OCTOBER GLORY' RED MAPLE	2 1/2 - 3" CAL.
	39	QUERCUS ACUTISSIMA SAWTOOTH OAK	2 1/2 - 3" CAL.
	73	PINUS STROBUS EASTERN WHITE PINE	6' - 8' HT.
	35	CHINESE JUNIPER ROBUSTA	5' - 6' HT.

"THIS PLAN HAS BEEN PREPARED IN ACCORDANCE WITH THE PROVISIONS OF SECTION 16.124 OF THE HOWARD COUNTY CODE AND THE LANDSCAPE MANUAL". FINANCIAL SURETY FOR THE REQUIRED 88 SHADE & 108 EVERGREEN TREES HAS BEEN POSTED AS PART OF THE DEVELOPER'S AGREEMENT IN THE AMOUNT OF $42,600.00

INTERNAL POND PLANT LIST

ZONE 5 FLOODPLAIN TERRACE — 1' - 4' ELEVATION ABOVE NORMAL POOL ELEVATION - PLANT AREA w/ SWITCH GRASS. QUANTITY - N/A SPACING - N/A

ZONE 3 SHORELINE FRINGE — 0" - 12" ELEVATION ABOVE NORMAL POOL ELEVATION - PLANT BENCH AREA w/ THE FOLLWING: INKBERRY, WITCHHAZEL & WINTERBERRY. QUANTITY - 16 EACH SPACING - 12' MAX.

ZONE 2 SHALLOW WATER BENCH — 0" - 12" ELEVATION BELOW NORMAL POOL ELEVATION - PLANT AREA w/ BULRUSH, RIVER. QUANTITY - N/A SPACING - N/A

ZONE 1 DEEPWATER POOL — 1' - 3' ELEVATION BELOW NORMAL POOL ELEVATION - PLANT AREA w/ WIDGEON-GRASS. QUANTITY - N/A SPACING - N/A

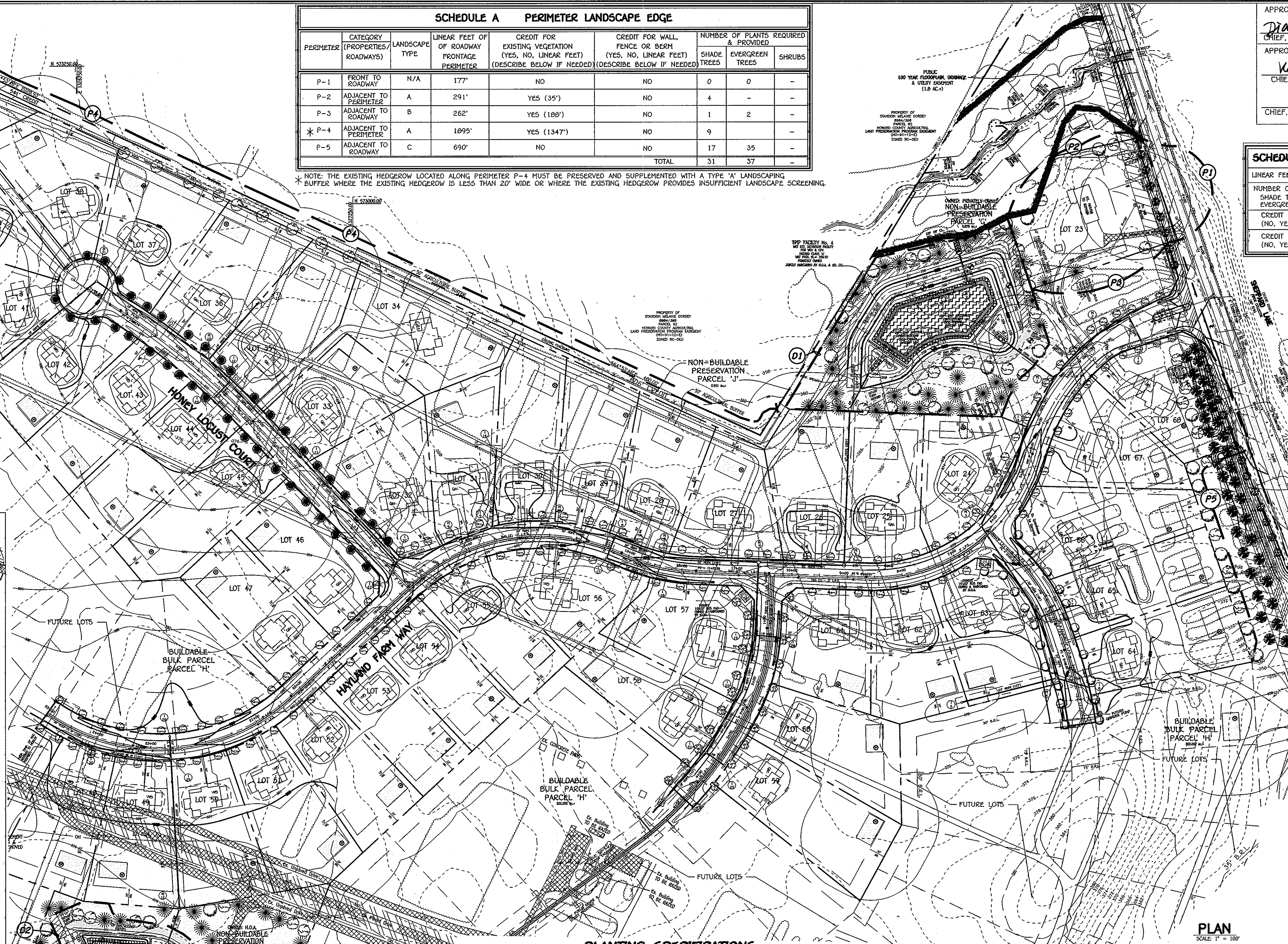

LANDSCAPE DEVELOPER'S CERTIFICATE

I/We certify that the landscaping shown on this plan will be done according to the plan, Section 16.124 of the Howard County Code and the Howard County Landscape Manual. I/We further certify that upon completion a letter of landscape installation accompanied by an executed one year guarantee of plant materials will be submitted to the Department of Planning and Zoning.

Name — Date 12/6/12

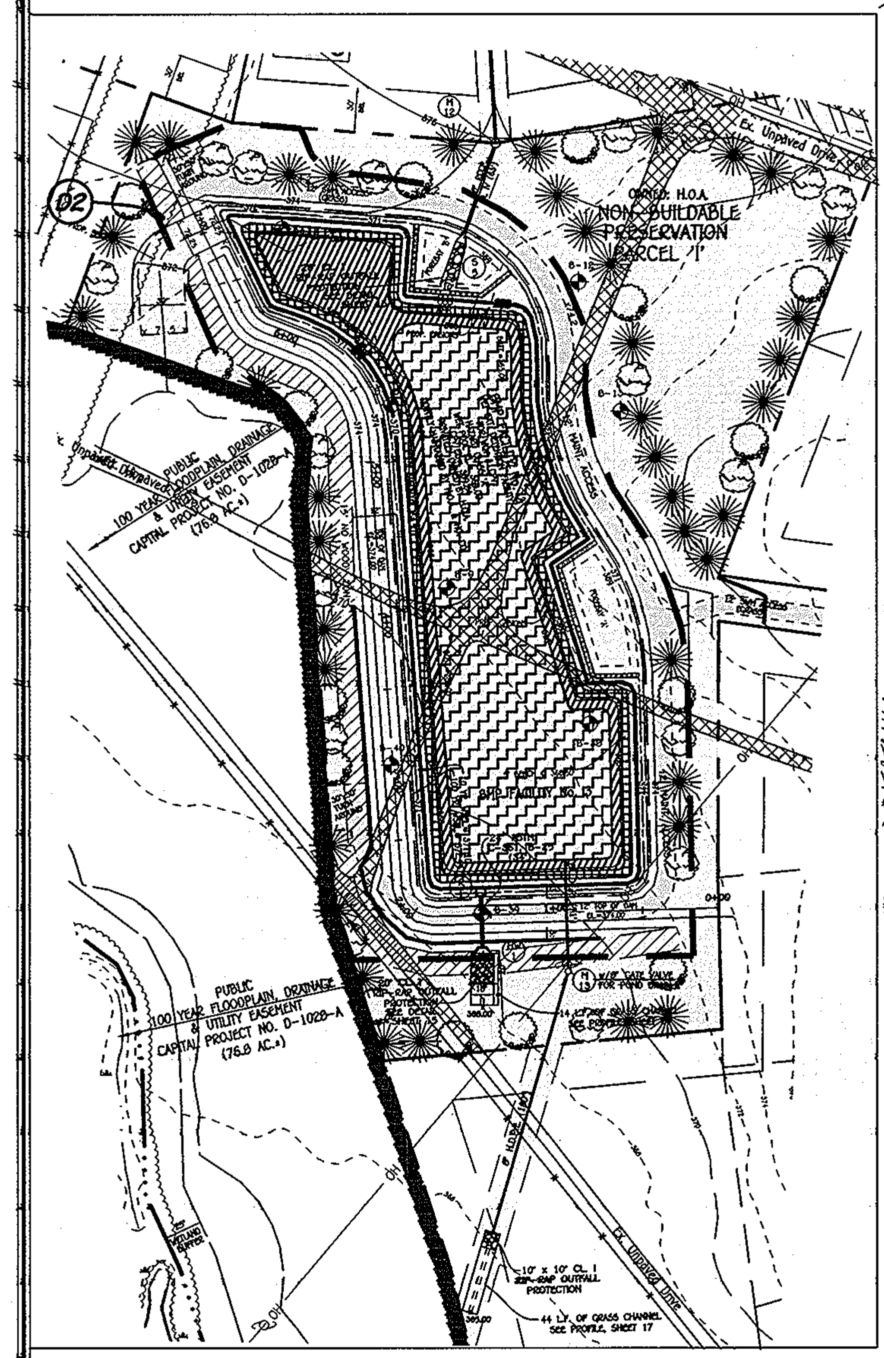

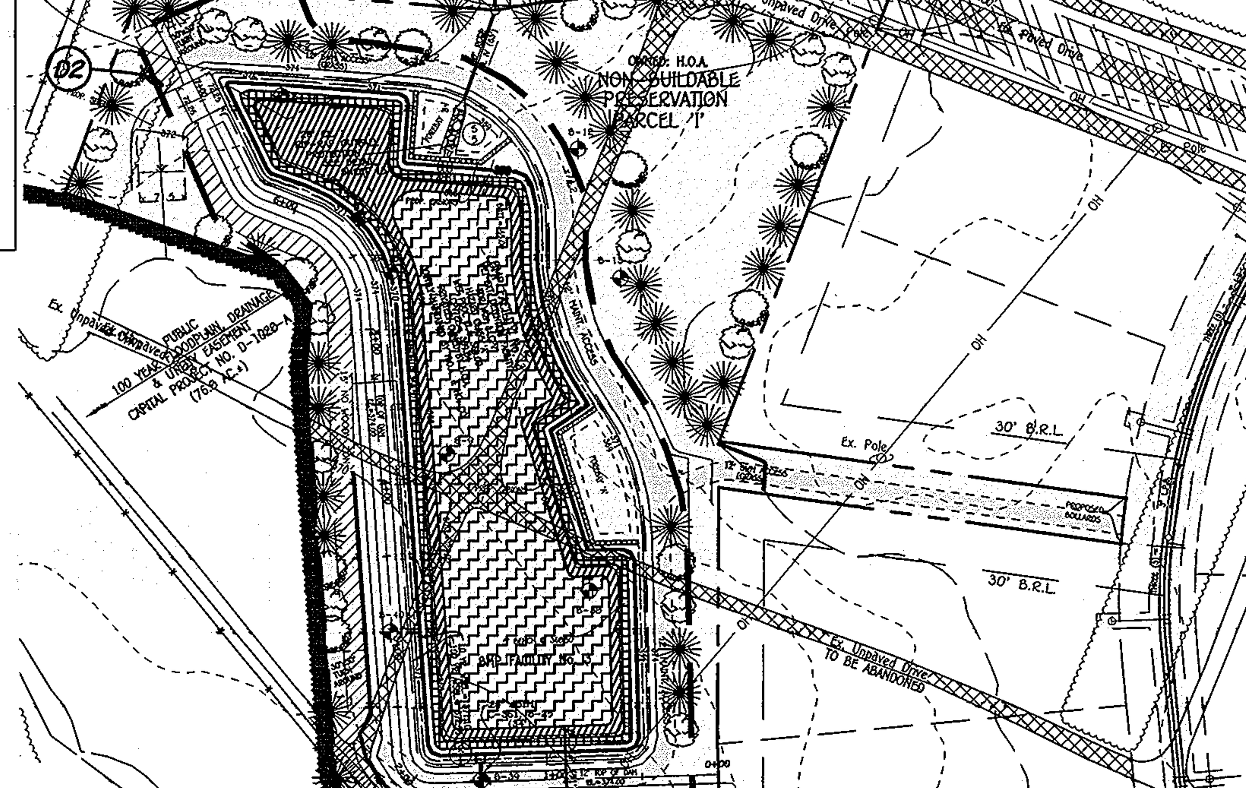

NOTES:

"At the time of plant installation, all trees listed and approved on the landscape Plan, shall comply with the proper height requirement in accordance with the Howard County Landscape Manual. In addition, no subtitutions or relocations of the required plantings may be made without prior review and approval from the Department of Planning and Zoning. Any deviations from the approved Landscape Plan may result in denial or delay in the release of landscape surety until such time as all required materials are planted and/or revisions are made to the road drawing plans".

"The Owner, tenants and/or their agents shall be responsible for maintenace of the required perimeter landscaping. All plant materials shall be maintained in good growing condition, and when necessary, replaced with new materials to ensure continued compliance with applicable regulations. All the other required landscaping shall be permanently maintained in good condition, and when necessary, repaired or replaced".

NO.	DESCRIPTION	DATE
⚠	REVISED LOW PRESSURE SEWER, WELLS TO MAINTAIN 100' SEPARATION, PARCELS 'G', 'H' & 'J' AND STORM DRAIN PIPE FROM RCCP TO HDPE	9/25/12
	REVISIONS	

FISHER, COLLINS & CARTER, INC.
CIVIL ENGINEERING CONSULTANTS & LAND SURVEYORS
CENTENNIAL SQUARE OFFICE PARK - 10272 BALTIMORE NATIONAL PIKE
ELLICOTT CITY, MARYLAND 21042
(410) 461 - 2855

PLANTING SPECIFICATIONS

Plants, related material, and operations shall meet the detailed description as given on the plans and as described herein.

All plant material, unless otherwise specified, shall be nursery grown, uniformly branched, have a vigorous root system, and shall conform to the species, size, root and shape shown on the plant list and the American Association of Nurserymen (AAN) Standards. Plant material shall be healthy, vigorous, free from defects, decay, disfiguring roots, sun scald injuries, abrasions of the bark, plant disease, insect pest eggs, borers and all forms of insect infestations or objectionable disfigurements. Plant material that is weak or which has been cut back from larger grades to meet specified requirements will be rejected. Trees with forked leaders will not be accepted. All plants shall be freshly dug; no healed-in plants from cold storage will be accepted.

Unless otherwise specified, all general conditions, planting operations, details and planting specification shall conform to "Landscape Specification Guidelines for Baltimore-Washington Metropolitan Areas", (hereinafter "Landscape Guidelines") approved by the Landscape Contractors Association of Metropolitan Washington and the Potomac Chapter of the American Society of Landscape Architect, latest edition, including all agenda.

Contractor shall be required to guarantee all plant material for a period of one year after date of acceptance in accordance with the appropriate section of the Landscape Guidelines Contractor's attention is directed to the maintenance requirements found within the one year specifications including watering and replacement of specified plant material.

Contractor shall be responsible for notifying utility companies, utility contractors and "Miss Utility" a minimum of 48 hours prior to beginning any work. Contractor may make minor adjustments in spacing and location of plant material to avoid conflicts with utilities. Damage to existing structure and utilities shall be repaired at the expense of the Contractor.

Protection of existing vegetation to remain shall be accomplished by the temporary installation of 4 foot high snow fence or blaze orange safety fence at the drip line.

Contractor id responsible for installing all material in the proper planting season for each plant type. All planting is to be completed within the growing season of completion of site construction.

Bid shall be base on actual site conditions. No extra payment shall be made for work arising from site conditions differing from those indicated on drawings and specifications

Plant quantities are provided for the convenience of the contractor only. If discrepancies exist between quantities shown on plan and those shown on the plant list, the quantities on the plan take precedence

All shrubs shall be planted in continuous trenches or prepared planting beds and mulched with composted hardwood mulch as details and specified except where noted on plans.

Positive drainage shall be maintained in planting beds 2 percent slope).

Planting mix shall be as follows: Deciduous Plants - Two parts topsoil, one part well-rotted cow or horse manure. Add 3 lbs. of standard fertilizer per cubic yard of planting mix. Evergreen Plants - two parts topsoil, one part humus or other approved organic material. Add 3 lbs. of evergreen (acidic) fertilizer per cubic yard of planting mix. Topsoil shall conform to the Landscape Guidelines.

Weed Control: Incorporate a pre-emergent herbicide into the planting bed following recommended rates on the label. Caution: Be sure to carefully check the chemical used to assure its adaptability to the specific ground cover to be treated.

All areas within contract limits disturbed during or prior to construction not designated to receive plants and mulch shall be fine graded and seeded.

This plan is intended for landscape use only. see other plan sheets for more information on grading, sediment control, layout, etc.

OWNER
BASSLERS, INCORPORATED
c/o ALFRED S. BASSLER
4994 SHEPPARD LANE
ELLICOTT CITY, MARYLAND 21042
(410) 531-2193

DEVELOPER
HERITAGE LAND DEVELOPMENT
15950 NORTH AVE.
LISBON, MARYLAND 21765
(410) 489-7900

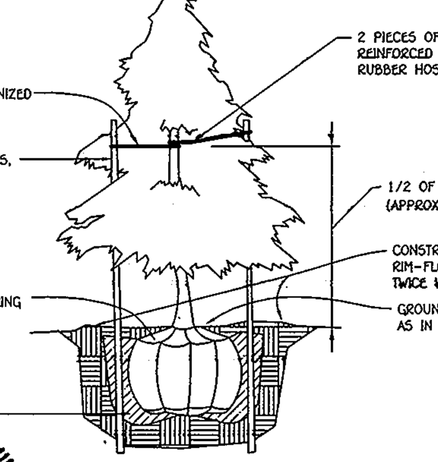

ALDO MICHAEL VITUCCI — 10/31/12 — DATE

"Professional Certification. I hereby certify that these documents were prepared by me, and that I am a duly Licensed Professional Engineer under the laws of the State of Maryland, License No. 20748, Expiration Date 2-22-13."

NOTE: CONTRACTOR TO REGRADE, SOD OR HYDROSEED AND STRAW MULCH ALL AREAS DISTURBED AS A RESULT OF THEIR WORK.

SPRAY WITH WILT-PROOF ACCORDING TO MANUFACTURERS STANDARDS

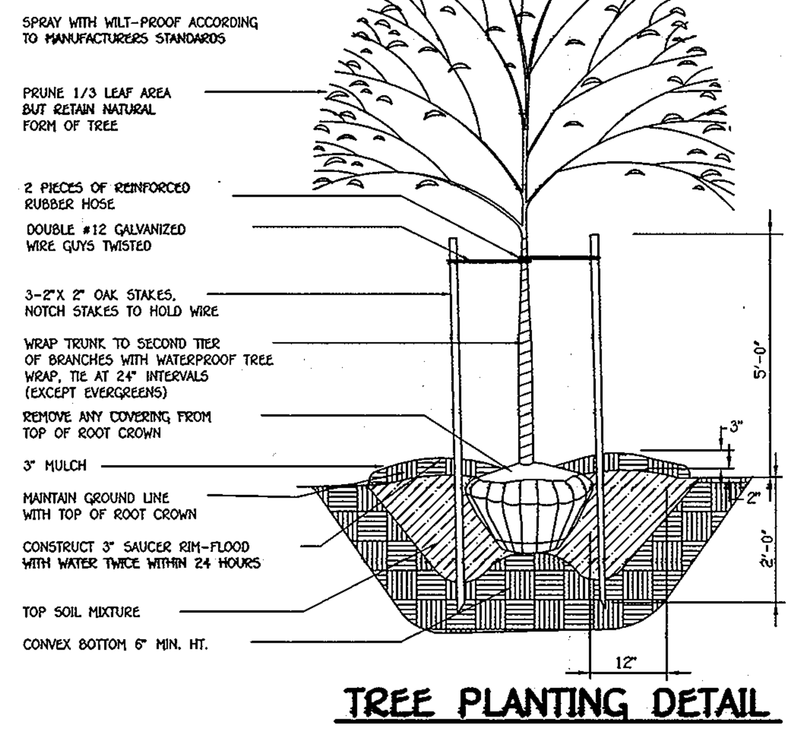

TREE PLANTING DETAIL

REVISED LANDSCAPE PLAN

WALNUT CREEK

PHASE TWO

Lots 23 - 68, Non-Buildable Preservation Parcels 'C', 'G', 'I', 'J', 'K', 'L' And 'M' & Buildable Bulk Parcels 'H' And 'N'

(Being A Resubdivision Of Buildable Bulk Parcels 'F' & 'E' And a Revision To Non-Buildable Preservation Parcel 'C' - Walnut Creek, Phase One, Plat No's. 20631 Thru 20647

ZONED: RC-DEO & RR-DEO

TAX MAP No. 28 GRID Nos. 4, 5, 10-12, 17, AND 18 PARCEL No. 49

FIFTH ELECTION DISTRICT

HOWARD COUNTY, MARYLAND

DATE: SEPTEMBER, 2008

I:\2004\04001\dwg\PHASE TWO FINALS\PHASE TWO REDLINE 2012\04001-8001 SHEET 12 LANDSCAPE PLAN.dwg, SHEET 12, 10/30/2012 1:52:36 PM, 1:1

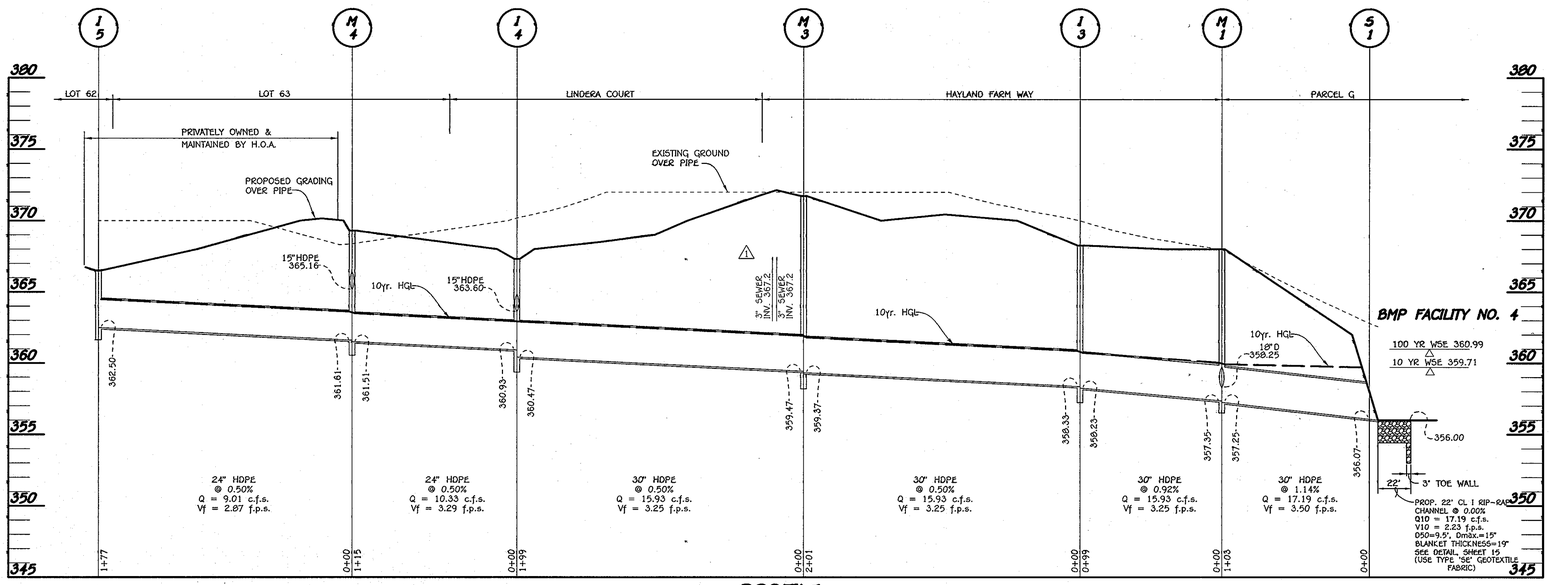

PROFILE

SCALE: HORIZ. : 1" = 50'
VERT. : 1" = 5'

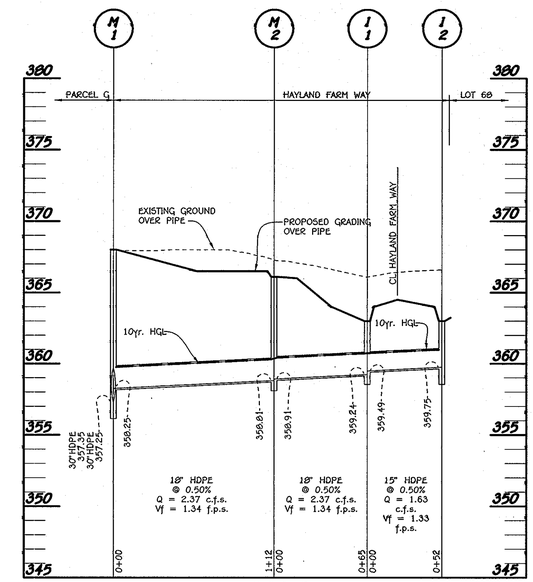

PROFILE

SCALE: HORIZ. : 1" = 50'
VERT. : 1" = 5'

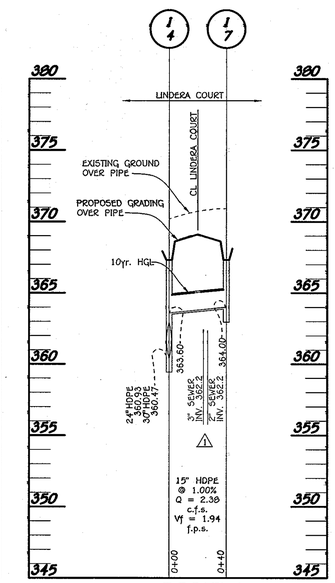

PROFILE

SCALE: HORIZ. : 1" = 50'
VERT. : 1" = 5'

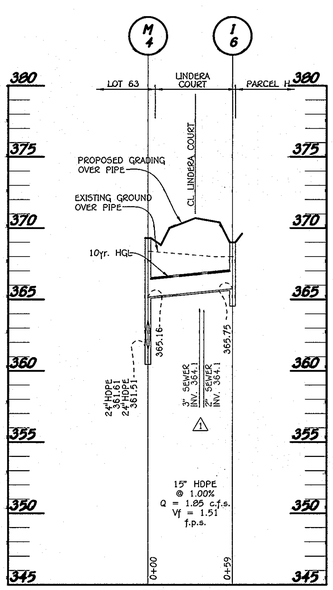

PROFILE

SCALE: HORIZ. : 1" = 50'
VERT. : 1" = 5'

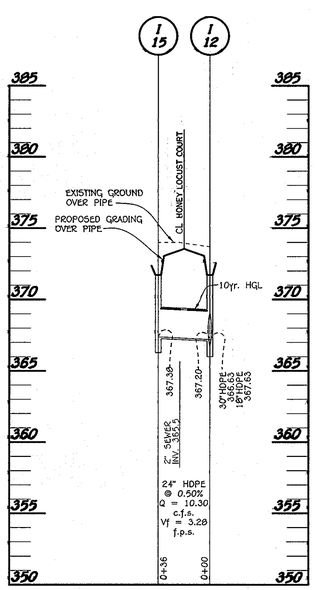

PROFILE

SCALE: HORIZ. : 1" = 50'
VERT. : 1" = 5'

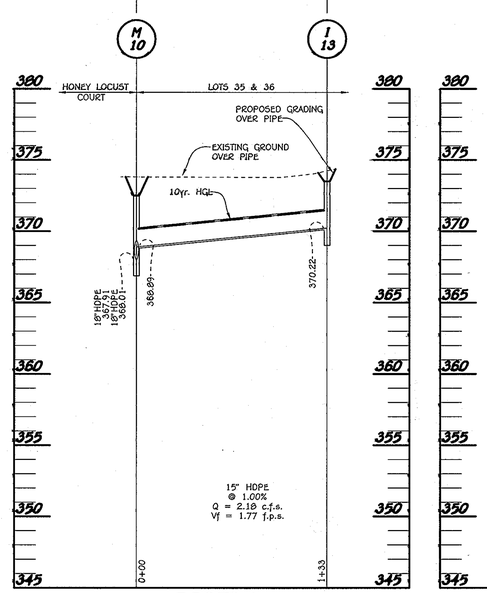

PROFILE

SCALE: HORIZ. : 1" = 50'
VERT. : 1" = 5'

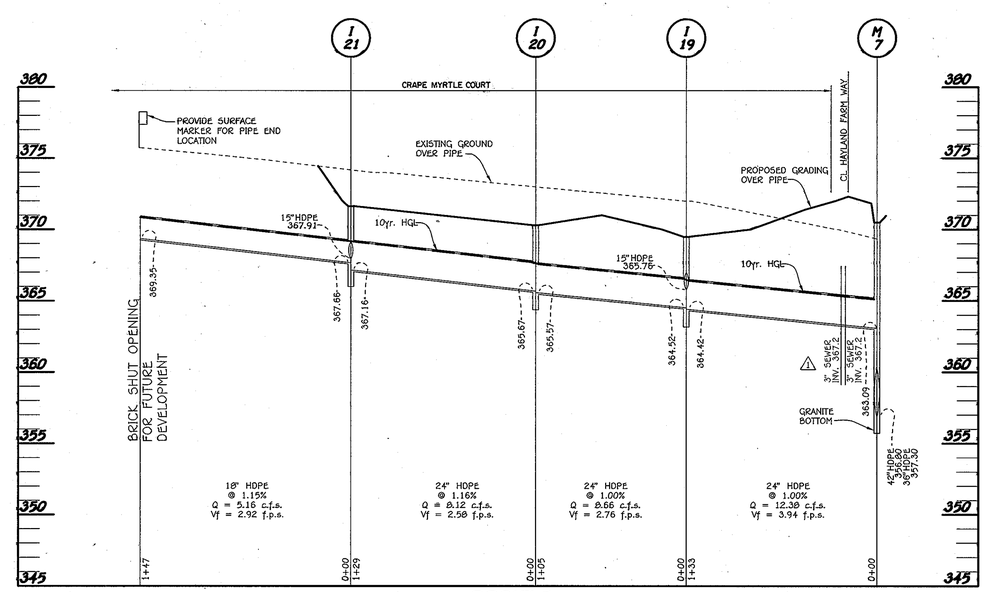

PROFILE

SCALE: HORIZ. : 1" = 50'
VERT. : 1" = 5'

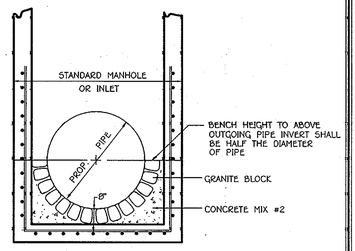

GRANITE BLOCK DETAIL

NOT TO SCALE

APPROVED: DEPARTMENT OF PUBLIC WORKS

Diane Schwarz Acting — 11/29/12
CHIEF, BUREAU OF HIGHWAYS — DATE

APPROVED: DEPARTMENT OF PLANNING AND ZONING

Kent Sheubrooks — 12/05/12
CHIEF, DIVISION OF LAND DEVELOPMENT — DATE

12/3/12
CHIEF, DEVELOPMENT ENGINEERING DIVISION — DATE

NO.	DESCRIPTION	DATE
1	REVISE LOW PRESSURE SEWER CROSSINGS & PIPE TYPE	9-25-12

REVISIONS

OWNER

BASSLER, INCORPORATED
c/o ALFRED S. BASSLER
4994 SHEPPARD LANE
ELLICOTT CITY, MARYLAND 21042

DEVELOPER

HERITAGE LAND DEVELOPMENT
15950 NORTH AVE.
LISBON, MARYLAND 21765

STATE OF MARYLAND — ALDO MICHAELI — PROFESSIONAL ENGINEER — No. 20748

10/24/12
ALDO MICHAELI — DATE

"Professional Engineer Certification: I hereby certify that these documents were prepared by me, and that I am a duly Licensed Professional Engineer under the laws of the State of Maryland, License No. 20748, Expiration Date 2-22-13."

FISHER, COLLINS & CARTER, INC.
CIVIL ENGINEERING CONSULTANTS & LAND SURVEYORS
CENTENNIAL SQUARE OFFICE PARK – 10272 BALTIMORE NATIONAL PIKE
ELLICOTT CITY, MARYLAND 21042
(410) 461 – 2855

REVISED STORM DRAIN PROFILES
WALNUT CREEK
PHASE TWO

Lots 23 – 68, Non-Buildable Preservation Parcels 'C', 'G', 'I', 'J', 'K', 'L' And 'M' & Buildable Bulk Parcels 'H' And 'N'

(Being A Resubdivision Of Buildable Bulk Parcels 'I' & 'E' And a Revision To Non-Buildable Preservation Parcel 'C' – Walnut Creek, Phase One, Plat No's. 20631 Thru 20647
ZONED: RC-DEO & RR-DEO
TAX MAP No. 28 GRID Nos. 4, 5, 10-12, 17, AND 18 PARCEL No. 49
FIFTH ELECTION DISTRICT
HOWARD COUNTY, MARYLAND
DATE: SEPTEMBER, 2008
SHEET 13 OF 32

F-08-001

I:\2004\04001\dwg\PHASE TWO FINALS\PHASE TWO REDLINE 2012\04001-2001 SHEET 13-14 STORM DRAIN PROFILES.dwg, Model, 10/30/2012 2:10:52 PM, 1:50

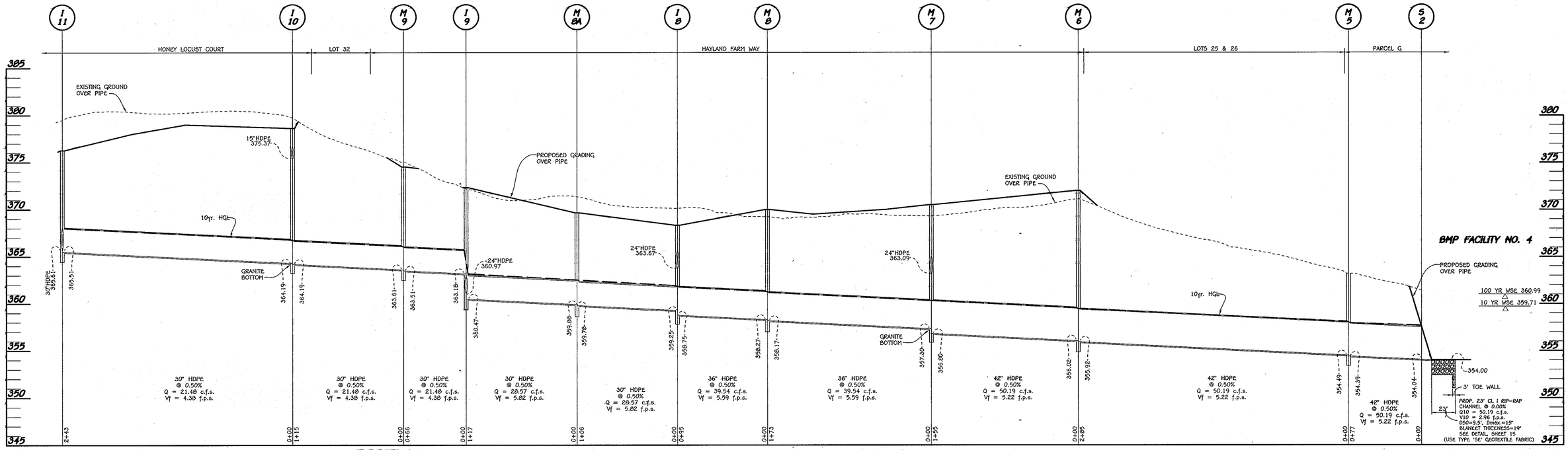

PROFILE

SCALE: HORIZ. : 1" = 50'
VERT. : 1" = 5'

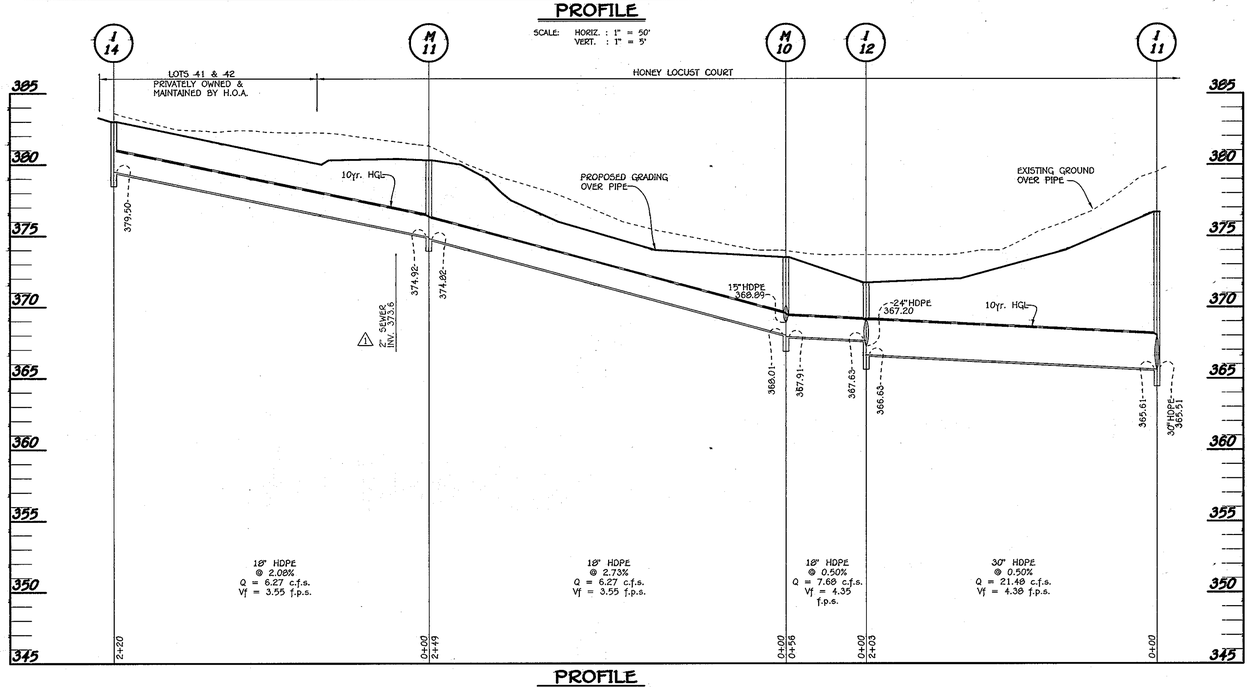

PROFILE

SCALE: HORIZ. : 1" = 50'
VERT. : 1" = 5'

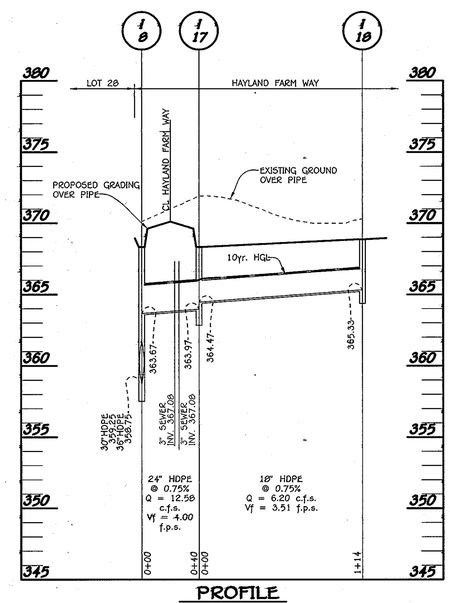

PROFILE

SCALE: HORIZ. : 1" = 50'
VERT. : 1" = 5'

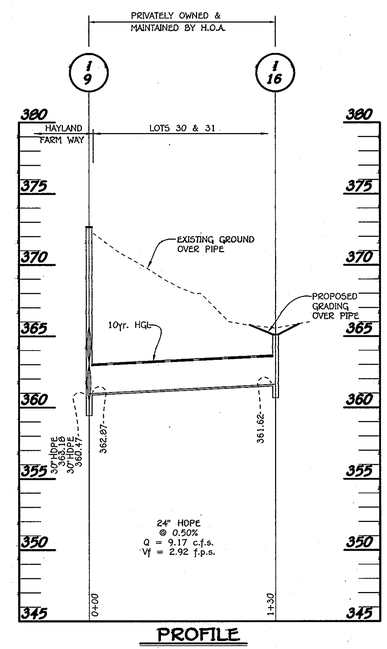

PROFILE

SCALE: HORIZ. : 1" = 50'
VERT. : 1" = 5'

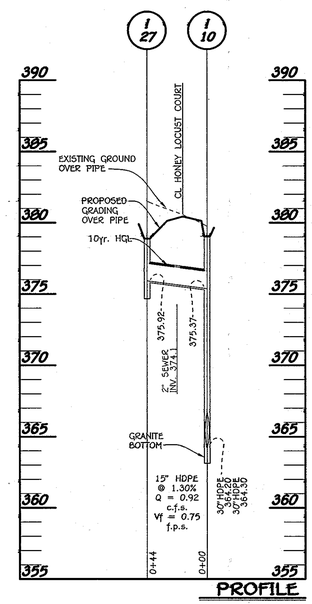

PROFILE

SCALE: HORIZ. : 1" = 50'
VERT. : 1" = 5'

APPROVED: DEPARTMENT OF PUBLIC WORKS

Dave Ashworth, Acting — 11/29/12
CHIEF, BUREAU OF HIGHWAYS — DATE

APPROVED: DEPARTMENT OF PLANNING AND ZONING

Kent Sheubrooks — 12/05/12
CHIEF, DIVISION OF LAND DEVELOPMENT — DATE

12/3/12
CHIEF, DEVELOPMENT ENGINEERING DIVISION — DATE

NO.	DESCRIPTION	DATE
1	REVISE LOW PRESSURE SEWER CROSSINGS & PIPE TYPE	9-25-12

REVISIONS

OWNER
BASSLERS, INCORPORATED
c/o ALFRED S. BASSLER
4994 SHEPPARD LANE
ELLICOTT CITY, MARYLAND 21042

DEVELOPER
HERITAGE LAND DEVELOPMENT
15950 NORTH AVE.
LISBON, MARYLAND 21765

STATE OF MARYLAND — MICHAEL VITALE

10/3/12
ALFRED CONTRACTORS — DATE

"Professional Engineer I hereby certify that these documents were prepared or approved by me, and that I am a duly Licensed Professional Engineer under the laws of the State of Maryland, License No. 20748, Expiration Date 2-22-13."

REVISED STORM DRAIN PROFILES
WALNUT CREEK
PHASE TWO

Lots 23 - 68, Non-Buildable Preservation Parcels 'C', 'G', 'I', 'J', 'K', 'L' And 'M' & Buildable Bulk Parcels 'H' And 'N'

(Being A Resubdivision Of Buildable Bulk Parcels 'F' & 'E' And a Revision To Non-Buildable Preservation Parcel 'C' - Walnut Creek, Phase One, Plat No's. 20631 Thru 20647)
ZONED: RC-DEO & RR-DEO
TAX MAP No. 28 GRID Nos. 4, 5, 10-12, 17, AND 18 PARCEL No. 49
FIFTH ELECTION DISTRICT
HOWARD COUNTY, MARYLAND
DATE: SEPTEMBER, 2008
SHEET 14 OF 32

F-08-081

FISHER, COLLINS & CARTER, INC.
CIVIL ENGINEERING CONSULTANTS & LAND SURVEYORS
CENTENNIAL SQUARE OFFICE PARK - 10272 BALTIMORE NATIONAL PIKE
ELLICOTT CITY, MARYLAND 21042
(410) 461 - 2855

I:\2004\04001\dwg\PHASE TWO FINALS\PHASE TWO REDLINE 2012\04001-3001 SHEET 13-14 STORM DRAIN PROFILES.dwg, Model, 10/30/2012 2:09:29 PM, 1:50

STRUCTURE SCHEDULE

STRUCTURE NO.	TOP ELEVATION	INV.IN	INV.OUT	LOCATION ⚠1	ROAD STA./ COORDINATE	OFFSET	TYPE AND WIDTH	REMARKS
I-1	* 362.03	359.49 (15")	359.24 (18")	HAYLAND FARM WAY	1+55.00	21.5' RT	'D' INLET - 2.5'	D - 4.10
I-2	* 361.90	-	359.75 (15")	HAYLAND FARM WAY	1+55.00	30.5' LT	'D' INLET - 2.5'	D - 4.10
I-3	* 368.58	358.33 (30")	358.23 (30")	HAYLAND FARM WAY	4+14.50	19' RT	'D' INLET - 3.5'	D - 4.10
I-4	* 367.22	363.60 (15") 360.93 (24")	360.47 (30")	LINDERA COURT	1+90.64	19' RT	'D' INLET - 3.5'	D - 4.10
I-5	* 366.50	-	362.50 (24")	LOT 62	N 572,090.42 E 1,328,354.26	-	'D' INLET (PRIVATE)-2.5'	D - 4.10
I-6	* 369.00	-	365.75 (15")	LINDERA COURT	3+37.26	23' LT	'D' INLET - 2.5'	D - 4.10
I-7	* 367.32	-	364.00 (15")	LINDERA COURT	1+90.64	19' LT	'D' INLET - 2.5'	D - 4.10
I-8	* 368.33	363.67 (24") 359.15 (30")	358.75 (36")	HAYLAND FARM WAY	13+36.11	19' RT	'D' INLET - 4.0'	D - 4.10
I-9	* 372.66	360.97 (24") 363.18 (30")	360.47 (30")	HAYLAND FARM WAY	15+49.20	19' RT	'D' INLET - 3.5'	D - 4.10
I-10	* 379.04	375.37 (15") 364.29 (30")	364.19 (30")	HONEY LOCUST COURT	0+47.40	17' RT	'D' INLET - 3.5'	D - 4.10
I-11	* 376.69	365.61 (30)	365.51 (30")	HONEY LOCUST COURT	2+90.70	17' RT	'D' INLET - 3.5'	D - 4.10
I-12	* 371.72	367.20 (24") 367.63 (18")	366.63 (30")	HONEY LOCUST COURT	4+94.11	17' RT	'D' INLET - 3.5'	D - 4.10
I-13	* 373.50	-	370.22 (15")	LOTS 35 & 36	N 572,817.08 E 1,327,075.91	-	'D' INLET (PRIVATE)-2.5'	D - 4.10
I-14	* 383.00	-	379.50 (18")	LOTS 41 & 42	N 572,718.64 E 1,326,615.43	-	'D' INLET (PRIVATE)-2.5'	D - 4.10
I-15	* 371.72	-	367.38 (24")	HONEY LOCUST COURT	4+94.11	17' LT	'D' INLET - 2.5'	D - 4.10
I-16	* 365.12	-	361.62 (24")	LOTS 30 & 31	N 572,438.57 E 1,327,509.38	-	'D' INLET (PRIVATE)-2.5'	D - 4.10
I-17	* 368.33	364.47 (18")	363.97 (24")	HAYLAND FARM WAY	13+36.11	19' LT	'D' INLET - 2.5'	D - 4.10
I-18	* 368.87	-	365.33 (18")	HAYLAND FARM WAY	12+25.50	19' LT	'D' INLET - 2.5'	D - 4.10
I-19	* 369.48	364.52 (24") 365.76 (15")	364.42 (24")	CRAPE MYRTLE COURT	1+15.00	19' RT	'D' INLET - 2.5'	D - 4.10
I-20	* 370.30	365.67 (24")	365.57 (24")	CRAPE MYRTLE COURT	2+26.60	19' RT	'D' INLET - 2.5'	D - 4.10
I-21	* 371.63	367.91 (15") 367.66 (18")	367.16 (24")	CRAPE MYRTLE COURT	3+60.00	19' RT	'D' INLET - 2.5'	D - 4.10
I-25	* 371.63	-	368.31 (15")	CRAPE MYRTLE COURT	3+60.00	19' LT	'D' INLET - 2.5'	D - 4.10
I-26	* 369.48	-	366.16 (15")	CRAPE MYRTLE COURT	1+15.00	19' LT	'D' INLET - 2.5'	D - 4.10
I-27	* 378.89	-	375.92 (15")	HONEY LOCUST COURT	0+32.20	23' LT	'D' INLET - 2.5'	D - 4.10
I-28	* 378.45	-	371.83 (24")	HAYLAND FARM WAY	22+64.41	19' RT	'D' INLET - 2.5'	D - 4.10
I-29	* 378.45	372.00 (36") 371.43 (24")	371.00 (48")	HAYLAND FARM WAY	22+64.41	19LT	'D' INLET - 5.0'	D - 4.10
I-30	* 379.50	372.90 (36")	373.00 (36")	HAYLAND FARM WAY	24+02.69	19' LT	'D' INLET - 3.5'	D - 4.10
M-1	368.00	357.35 (30") 358.25 (18")	357.25 (30")	HAYLAND FARM WAY	3+21.13	25' RT	5' DIA. MANHOLE	G - 5.13
M-2	366.10	358.91 (18")	358.81 (18")	HAYLAND FARM WAY	2+16.13	25' RT	4' DIA. MANHOLE	G - 5.12
M-3	371.73	359.47 (30")	359.37 (30")	HAYLAND FARM WAY	6+25.60	15' RT	5' DIA. MANHOLE	G - 5.13
M-4	369.30	365.16 (15") 361.61 (24)	361.51 (24")	LINDERA COURT	3+08.17	28.7' RT	4' DIA. MANHOLE	G - 5.12
M-5	363.20	354.49 (42")	354.39 (42")	FACILITY NO. 4	N 572,624.85 E 1,328,151.41	-	6' DIA. MANHOLE	G - 5.13
M-6	372.00	356.02 (42")	355.92 (42")	HAYLAND FARM WAY	9+06.30	19.3' RT	6' DIA. MANHOLE	G - 5.13
M-7	370.50	363.09 (24") 357.30 (36")	356.80 (42")	HAYLAND FARM WAY	10+61.20	19.3' RT	6' DIA. MANHOLE	G - 5.13
M-8	370.00	358.27 (36")	358.17 (36")	HAYLAND FARM WAY	12+37.82	17.2' RT	5' DIA. MANHOLE	G - 5.13
M-8A	370.00	359.88 (30")	359.78 (30")	HAYLAND FARM WAY	14+37.00	15.0' RT	5' DIA. MANHOLE	G - 5.13
M-9	374.53	363.61 (30")	363.51 (30")	HAYLAND FARM WAY	16+11.60	21.0 RT	5' DIA. MANHOLE	G - 5.13
M-10	373.50	368.01 (18") 368.89 (15")	367.91 (18")	HONEY LOCUST COURT	5+47.33	25' RT	4' DIA. MANHOLE	G - 5.12
M-11	380.30	374.92 (18")	374.82 (18")	HONEY LOCUST COURT	7+92.80	20.7' RT	4' DIA. MANHOLE	G - 5.12
M-12	376.00	369.46 (48")	369.36 (48")	FACILITY NO. 3	N 571,715.37 E 1,326,934.53	-	6' DIA. MANHOLE	G - 5.13
M-13	369.50	366.00 (8")	365.50 (8")	FACILITY NO. 3	N 571,168.24 E 1,326,982.00	-	SHALLOW MANHOLE	G - 5.12
S-1	-	-	356.00 (30")	FACILITY NO. 4	** N 572743.42 E 1328439.76	-	30" FLARED END SECTION	***
S-2	-	-	354.00 (42")	FACILITY NO. 4	** N 572685.10 E 1328183.64	-	42" FLARED END SECTION	***
S-5	-	-	369.00 (48")	FACILITY NO. 3	N 571657.20 E 1326914.33	-	48" FLARED END SECTION	***
HW-1	370.50	-	368.00 (24")	FACILITY NO. 3	N 571183.69 E 1326925.65	-	24" TYPE 'A' HEADWALL	D - 5.11
HW-2	357.00	-	353.00 (30")	FACILITY NO. 4	N 572902.53 E 1328350.36	-	30" TYPE 'A' HEADWALL	D - 5.11
R-1	373.75	369.00 (3.5" ORIFICE)	368.50 (24")	FACILITY NO. 3	N 571223.97 E 1326924.44	-	CONC. RISER	SEE SHEET 23
R-2	361.00	353.50 (12")	353.50 (30")	FACILITY NO. 4	N 572855.06 E 1328365.90	-	CONC. RISER	SEE SHEET 25

* - DENOTES THROAT ELEVATION
(PRIVATE) - DENOTES OWNED AND MAINTAINED BY H.O.A.
** - DENOTES LOCATION OF END OF PIPE/BEGINNING OF END SECTION

*** - ADS FLARED END SECTION OR EQUAL.

PIPE SCHEDULE (PUBLIC) ⚠1

SIZE	CLASS	LENGTH
15"	HDPE	275'
18"	HDPE	821'
24"	HDPE	598'
30"	HDPE	1453'
36'	HDPE	541'
42"	HDPE	517'
48"	HDPE	337'
8"	O.I.P. POND DRAIN	71'
8"	H.D.P.E. POND DRAIN	180'
12"	D.I.P. POND DRAIN	3'

NOTE: HDPE MAY BE SUBSTITUTED WITH RCCP PIPE MATERIAL.

PIPE SCHEDULE (PRIVATE) ⚠1

SIZE	CLASS	LENGTH
15"	HDPE	133'
18"	HDPE	142'
24"	HDPE	307'

NOTE: HDPE MAY BE SUBSTITUTED WITH RCCP PIPE MATERIAL.

CONSTRUCTION SPECIFICATIONS FOR RIP-RAP OUTFALLS

1. The subgrade for the filter, riprap or gabion shall be prepared to the required lines and grades. Any fill required in the subgrade shall be compacted to a density of approximately that of the surrounding undisturbed material.
2. The rock or gravel shall conform to the specified grading limits when installed respectively in the riprap or filter.
3. Filter cloth shall be protected from punching, cutting or tearing. Any damage other than an occasional shall hole shall be repaired by placing another piece of cloth over the damaged part or by completely replacing the cloth. All overlaps whether for repairs or for joining two pieces of cloth shall be a minimum of one foot.
4. Stone for the riprap or gabion outlets may be placed by equipment. Both shall each be constructed to the full course thickness in one operation and in such a manner as to avoid displacement of underlying materials. The stone for riprap or gabion outlets shall be delivered and placed in a manner that will insure that it is reasonably homogenous with the smaller stones and spalls filling the voids between the larger stones. Riprap shall be placed in a manner to prevent damage to the filter blanket or filter cloth. Hand placement will be required to the extent necessary to prevent damage to the permanent works.

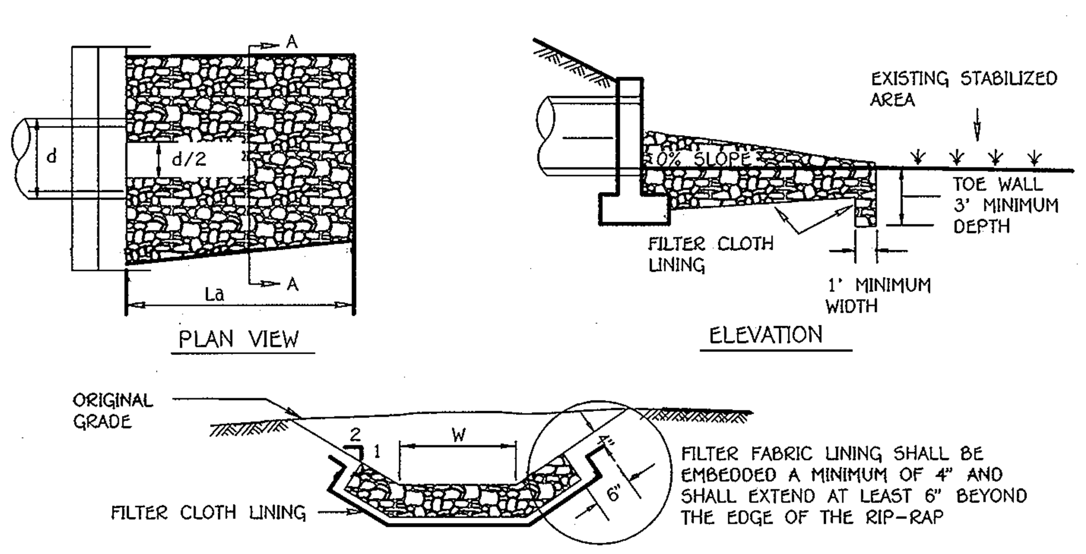

RIP-RAP CHANNEL DETAIL
NO SCALE

NOTE: FILTER CLOTH SHALL BE GEOTEXTILE CLASS C

RIP-RAP CHANNEL DESIGN DATA

STRUCTURE	AREA (S.F.)	WETTED PERIMETER	R	R 2/3	S	S 1/2	W	d	n	V (f.p.s.)	Q 100* (c.f.s.)	RIP-RAP SIZE D_{50}	RIP-RAP SIZE D_{MAX}	BLANKET THICKNESS	PIPE SIZE	La
S-1	7.69	9.81	0.7839	0.8502	0.005	0.0707	5.0'	1.08	0.04	2.23	17.19	9.5"	15"	19"	30"	22'
S-2	16.94	14.14	1.1980	1.1280	0.005	0.0707	6.5'	1.71	0.04	2.96	50.19	9.5"	15"	19"	42"	23'
S-5	19.03	15.03	1.2661	1.1704	0.005	0.0707	7.0'	1.80	0.04	3.07	58.50	9.5"	15"	19"	48"	26'
HW-1	11.98	13.19	0.9083	0.9378	0.005	0.0707	8.0'	1.16	0.04	2.46	29.50	9.5"	15"	19"	24" @ POND #3	20'
HW-2	21.73	16.54	1.3138	1.1996	0.005	0.0707	8.5'	1.80	0.04	3.15	68.50	9.5"	15"	19"	30" @ POND #4	28'

* DENOTES 100 YEAR Q USED FOR DESIGN

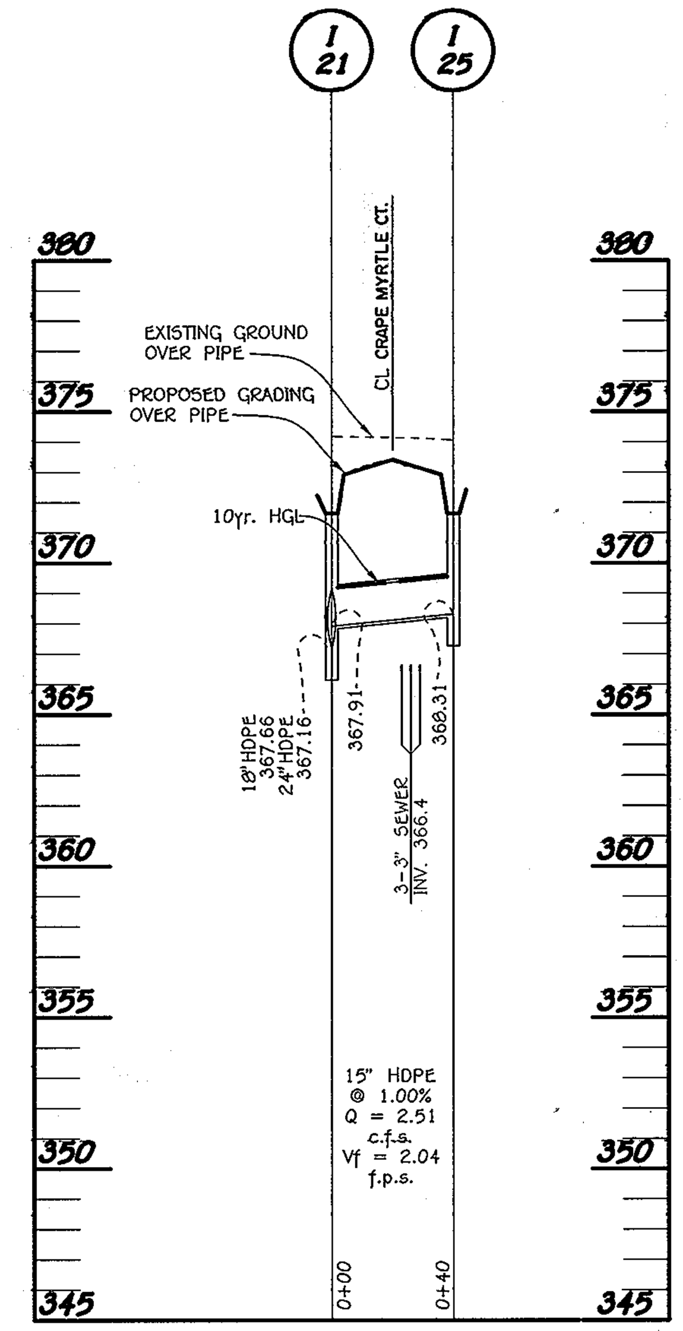

PROFILE
SCALE: HORIZ. : 1" = 50' VERT. : 1" = 5'

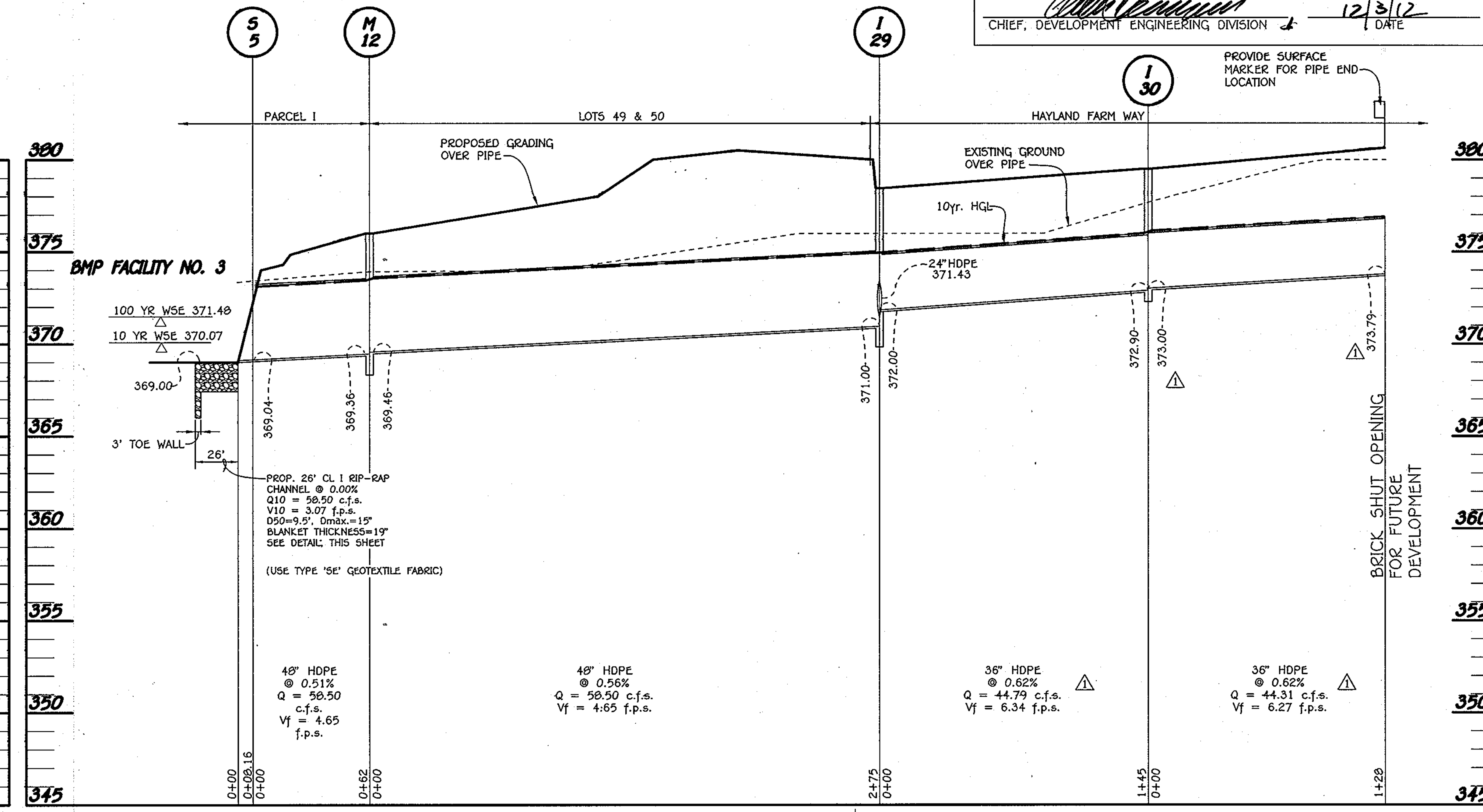

PROFILE
SCALE: HORIZ. : 1" = 50' VERT. : 1" = 5'

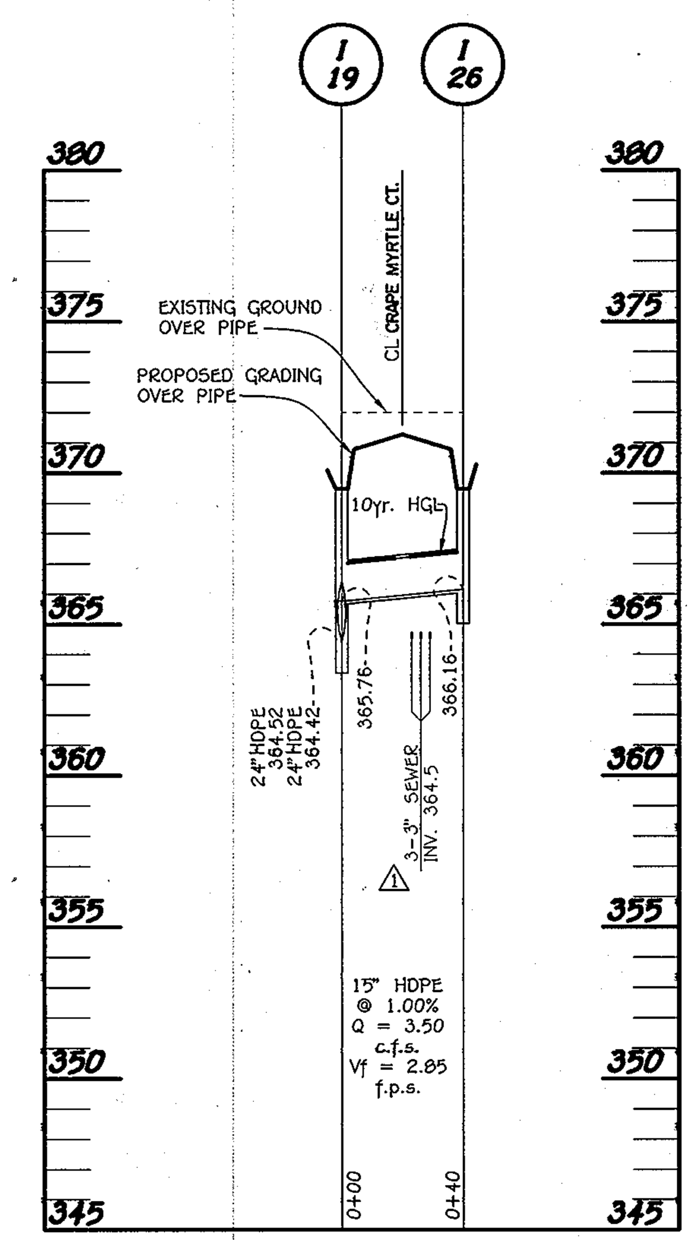

PROFILE
SCALE: HORIZ. : 1" = 50' VERT. : 1" = 5'

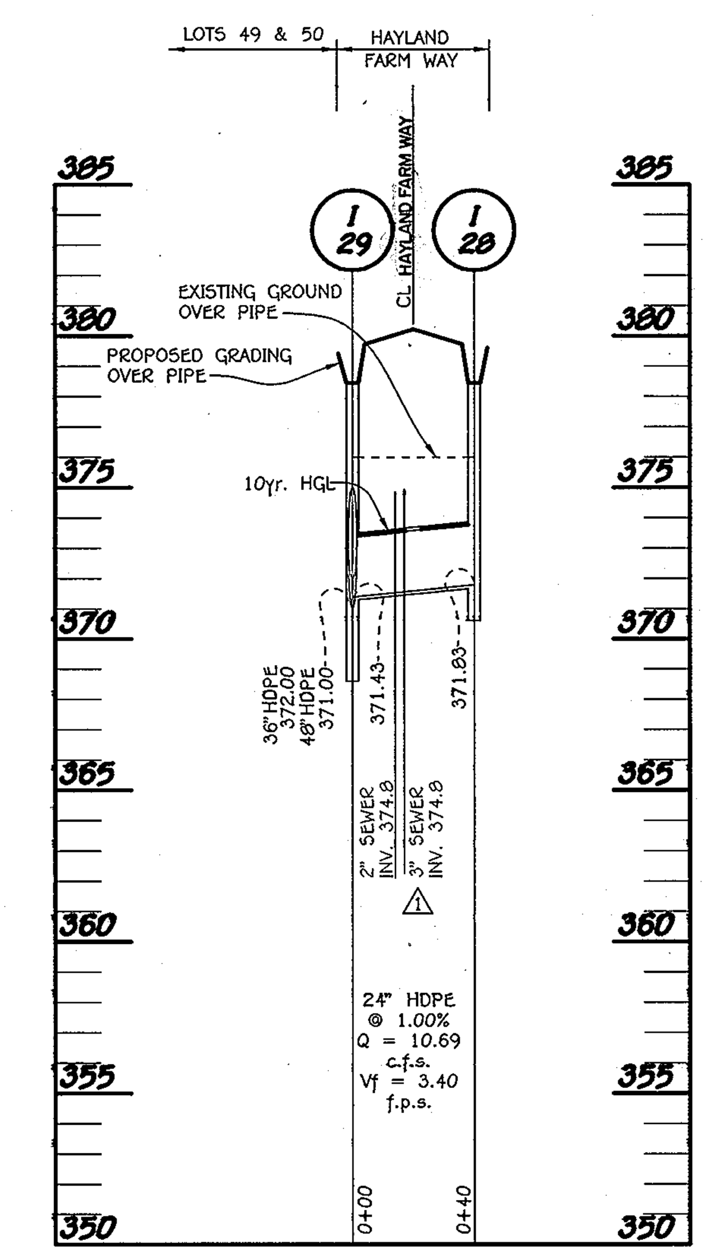

PROFILE
SCALE: HORIZ. : 1" = 50' VERT. : 1" = 5'

APPROVED: DEPARTMENT OF PUBLIC WORKS
Diane Schwarz, Acting — CHIEF, BUREAU OF HIGHWAYS — 11/29/12 DATE
APPROVED: DEPARTMENT OF PLANNING AND ZONING
Kent Sheubrooks — CHIEF, DIVISION OF LAND DEVELOPMENT — 12/05/12 DATE
CHIEF, DEVELOPMENT ENGINEERING DIVISION — 12/3/12 DATE

⚠	Changed pipe slope from I-29 to stub, low pressure sewer crossings and pipe material & Road Names	9-25-12
NO.	DESCRIPTION	DATE
	REVISIONS	

FISHER, COLLINS & CARTER, INC.
CIVIL ENGINEERING CONSULTANTS & LAND SURVEYORS
CENTENNIAL SQUARE OFFICE PARK - 10272 BALTIMORE NATIONAL PIKE
ELLICOTT CITY, MARYLAND 21042
(410) 461 - 2855

OWNER
BASSLERS, INCORPORATED
c/o ALFRED S. BASSLER
4994 SHEPPARD LANE
ELLICOTT CITY, MARYLAND 21042

DEVELOPER
HERITAGE LAND DEVELOPMENT
15950 NORTH AVE.
LISBON, MARYLAND 21765

STATE OF MARYLAND — ALDO MICHAEL VITUCCI — PROFESSIONAL ENGINEER
ALDO — 10/31/12 DATE
"Professional Certification. I hereby certify that these documents were prepared by me, and that I am a duly Licensed Professional Engineer under the laws of the State of Maryland, License No. 20748, Expiration Date 2-22-13."

REVISED
STORM DRAIN PROFILES
WALNUT CREEK
PHASE TWO

Lots 23 - 68, Non-Buildable Preservation Parcels 'C', 'G', 'I', 'J', 'K', 'L' And 'M' & Buildable Bulk Parcels 'H' And 'N'
(Being A Resubdivision Of Buildable Bulk Parcels 'F' & 'E' And a Revision To Non-Buildable Preservation Parcel 'C' - Walnut Creek, Phase One, Plat No's. 20631 Thru 20647
ZONED: RC-DEO & RR-DEO
TAX MAP No. 28 GRID Nos. 4, 5, 10-12, 17, AND 18 PARCEL No. 49
FIFTH ELECTION DISTRICT
HOWARD COUNTY, MARYLAND
DATE: SEPTEMBER, 2008
SHEET 15 OF 32

F-08-081

I:\2004\04001\dwg\PHASE TWO FINALS\PHASE TWO REDLINE 2012\04001-8001 SHEET 15 STORM DRAIN PROFILES.dwg, Model, 10/30/2012 2:26:44 PM, 1:50

ENGINEER'S CERTIFICATE

I Hereby Certify That This Plan For Erosion And Sediment Control Represents A Workable Plan Based On My Personal Knowledge Of The Site Conditions And That It Was Prepared In Accordance With The Standards And Specifications Of The Howard Soil Conservation District.

Signature — Date 10/6/08

DEVELOPER'S CERTIFICATE

"I/We Certify That All Development And Construction Will Be Done According To This Plan Of Development And Plan For Erosion And Sediment Control And That All Responsible Personnel Involved In The Construction Project Will Have A Certificate Of Attendance At A Department Of Natural Resources Approved Training Program For The Control Of Sediment And Erosion Before Beginning The Project. I Also Authorize Periodic On-Site Inspection By The Howard Soil Conservation District Or Their Authorized Agents, As Are Deemed Necessary."

Signature Of Developer — Date 10/6/08

Approved: This Development Is Approved For Erosion And Sediment Control By The Howard Soil Conservation District.

District Howard Soil Conservation Dist. — Date 10/27/08

Approved: Department Of Planning And Zoning

Chief, Division Of Land Development — Date 11/3/08

Chief, Development Engineering Division — Date 10/31/08

Approved: Howard County Department Of Public Works

Chief, Bureau Of Highways — Date 10-28-08

EROSION CONTROL MATTING

NOT TO SCALE

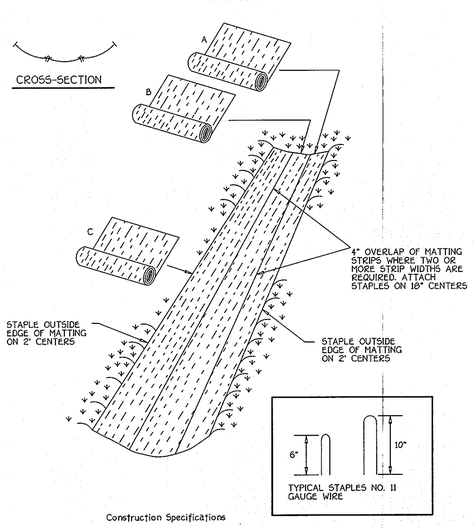

Construction Specifications

1. Key-in the matting by placing the top ends of the matting in a narrow trench, 6" in depth. Backfill the trench and tamp firmly to conform to the channel cross-section. Secure with a row of staples about 4" down slope from the trench. Spacing between staples is 6".
2. Staple the 4" overlap in the channel center using an 18" spacing between staples.
3. Before stapling the outer edges of the matting, make sure the matting is smooth and in firm contact with the soil.
4. Staples shall be placed 2' apart with 4 rows for each strip, 2 outer rows, and 2 alternating rows down the center.
5. Where one roll of matting ends and another begins, the end of the top strip shall overlap the upper end of the lower strip by 4", shiplap fashion. Reinforce the overlap with a double row of staples spaced 6" apart in a staggered pattern on either side.
6. The discharge end of the matting liner should be similarly secured with 2 double rows of staples.

Note: If flow will enter from the edge of the matting then the area effected by the flow must be keyed-in.

FISHER, COLLINS & CARTER, INC.
CIVIL ENGINEERING CONSULTANTS & LAND SURVEYORS
CENTENNIAL SQUARE OFFICE PARK - 10272 BALTIMORE NATIONAL PIKE
ELLICOTT CITY, MARYLAND 21042
(410) 461 - 2855

EARTH DIKE

NOT TO SCALE

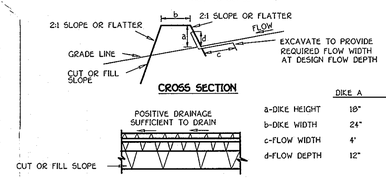

	DIKE A	DIKE B
a-DIKE HEIGHT	18"	30"
b-DIKE WIDTH	24"	36"
c-FLOW WIDTH	4'	6'
d-FLOW DEPTH	12"	24"

STANDARD SYMBOL A-2 B-3

FLOW CHANNEL STABILIZATION
GRADE 0.5% MIN. 10% MAX.

1. Seed and cover with straw mulch.
2. Seed and cover with Erosion Control Matting or line with sod.
3. 4" - 7" stone or recycled concrete equivalent pressed into the soil 7" minimum

Construction Specifications

1. All temporary earth dikes shall have uninterrupted positive grade to an outlet. Spot elevations may be necessary for grades less than 1%.
2. Runoff diverted from a disturbed area shall be conveyed to a sediment trapping device.
3. Runoff diverted from an undisturbed area shall outlet directly into an undisturbed, stabilized area at a non-erosive velocity.
4. All trees, brush, stumps, obstructions, and other objectionable material shall be removed and disposed of so as not to interfere with the proper functioning of the dike.
5. The dike shall be excavated or shaped to line, grade and cross section as required to meet the criteria specified herein and be free of lateral projections or other irregularities which will impede normal flow.
6. Fill shall be compacted by earth moving equipment.
7. All earth removed and not needed for construction shall be placed so that it will not interfere with the functioning of the dike.
8. Inspection and maintenance must be provided periodically and after each rain event.

SILT FENCE

NOT TO SCALE

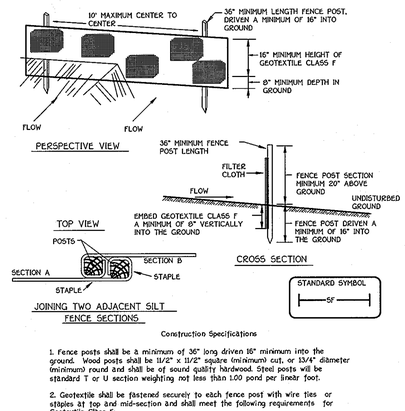

Construction Specifications

1. Fence posts shall be a minimum of 36" long driven 16" minimum into the ground. Wood posts shall be 11/2" x 11/2" square (minimum) cut, or 13/4" diameter (minimum) round and shall be of sound quality hardwood. Steel posts will be standard T or U section weighting not less than 1.00 pond per linear foot.
2. Geotextile shall be fastened securely to each fence post with wire ties or staples at top and mid-section and shall meet the following requirements for Geotextile Class F:

Tensile Strength	50 lbs/in (min)	Test: MSMT 509
Tensile Modulus	20 lbs/in (min)	Test: MSMT 509
Flow Rate	0.3 gal ft / minute (max)*	Test: MSMT 322
Filtering Efficiency	75% (min)	Test: MSMT 322

3. Where ends of geotextile fabric come together, they shall be overlapped, folded and stapled to prevent sediment bypass.
4. Silt Fence shall be inspected after each rainfall event and maintained when bulges occur or when sediment accumulation reached 50% of the fabric height.

STABILIZED CONSTRUCTION ENTRANCE

NOT TO SCALE

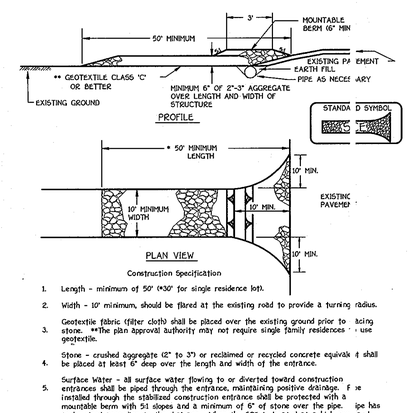

Construction Specification

1. Length - minimum of 50' (*30' for single residence lot).
2. Width - 10' minimum, should be flared at the existing road to provide a turning radius.
3. Geotextile fabric (filter cloth) shall be placed over the existing ground prior to placing stone. **The plan approval authority may not require single family residences to use geotextile.
4. Stone - crushed aggregate (2" to 3") or reclaimed or recycled concrete equivalent shall be placed at least 6" deep over the length and width of the entrance.
5. Surface Water - all surface water flowing to or diverted toward construction entrances shall be piped through the entrance, maintaining positive drainage. If pipe is installed through the stabilized construction entrance shall be protected with a mountable berm with 5:1 slopes and a minimum of 6" of stone over the pipe. The pipe has to be sized according to the drainage. When the SCE is located at a high spot and has no drainage to convey a pipe will not be necessary. Pipe should be sized according to the amount of runoff to be conveyed. A 6" minimum will be required.
6. Location - A stabilized construction entrance shall be located at every point where construction traffic enters or leaves a construction site. Vehicles leaving the site must travel over the entire length of the stabilized construction entrance.

SEDIMENT BASIN BAFFLES

PLAN VIEWS — C1028REVISED.DWG

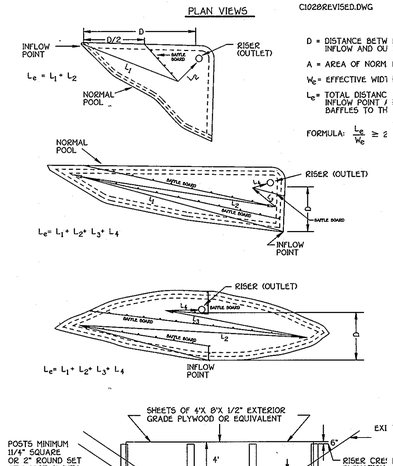

D = DISTANCE BETWEEN INFLOW AND OUTFLOW

A = AREA OF NORMAL POOL

W_e = EFFECTIVE WIDTH = A/D

L_e = TOTAL DISTANCE FROM THE INFLOW POINT AROUND THE BAFFLES TO THE RISER

FORMULA: $\frac{L_e}{W_e} \geq 2$

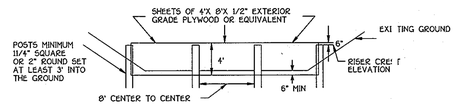

BAFFLE DETAIL

SEDIMENT CONTROL NOTES

1) A MINIMUM OF 48 HOURS NOTICE MUST BE GIVEN TO THE HOWARD COUNTY DEPARTMENT OF INSPECTIONS, LICENSES AND PERMITS, SEDIMENT CONTROL DIVISION PRIOR TO THE START OF ANY CONSTRUCTION (313-1855).
2) ALL VEGETATIVE AND STRUCTURAL PRACTICES ARE TO BE INSTALLED ACCORDING TO THE PROVISIONS OF THIS PLAN AND ARE TO BE IN CONFORMANCE WITH THE MOST CURRENT MARYLAND STANDARDS AND SPECIFICATIONS FOR SOIL EROSION AND SEDIMENT CONTROL AND REVISIONS THERETO.
3) FOLLOWING INITIAL SOIL DISTURBANCE OR RE-DISTURBANCE, PERMANENT OR TEMPORARY STABILIZATION SHALL BE COMPLETED WITHIN: a) 7 CALENDAR DAYS FOR ALL PERIMETER SEDIMENT CONTROL STRUCTURES, BERMS, PERIMETER SLOPES AND ALL SLOPES STEEPER THAN 3:1, b) 14 DAYS AS TO ALL OTHER DISTURBED OR GRADED AREAS ON THE PROJECT SITE.
4) ALL SEDIMENT TRAPS/BASINS SHOWN MUST BE FENCED AND WARNING SIGNS POSTED AROUND THEIR PERIMETER IN ACCORDANCE WITH VOL. 1, CHAPTER 12, OF THE HOWARD COUNTY DESIGN MANUAL, STORM DRAINAGE.
5) ALL DISTURBED AREAS MUST BE STABILIZED WITHIN THE TIME PERIOD SPECIFIED ABOVE IN ACCORDANCE WITH THE 1994 MARYLAND STANDARDS AND SPECIFICATIONS FOR SOIL EROSION AND SEDIMENT CONTROL. FOR PERMANENT SEEDING (SEC. 51), SOD (SEC. 54), TEMPORARY SEEDING (SEC. 50), AND MULCHING (SEC. 52). TEMPORARY STABILIZATION WITH MULCH ALONE CAN ONLY BE DONE WHEN RECOMMENDED SEEDING DATES DO NOT ALLOW FOR PROPER GERMINATION AND ESTABLISHMENT OF GRASSES.
6) ALL SEDIMENT CONTROL STRUCTURES ARE TO REMAIN IN PLACE AND ARE TO BE MAINTAINED IN OPERATIVE CONDITION UNTIL PERMISSION FOR THEIR REMOVAL HAS BEEN OBTAINED FROM THE HOWARD COUNTY SEDIMENT CONTROL INSPECTOR.
7) SITE ANALYSIS:

TOTAL AREA OF SITE	361.26	ACRES
AREA DISTURBED	44.27	ACRES
AREA TO BE ROOFED OR PAVED	5.16	ACRES
AREA TO BE VEGETATIVELY STABILIZED	39.11	ACRES
TOTAL CUT	33,500	CU. YDS.
TOTAL FILL	33,500	CU. YDS.
OFFSITE WASTE/BORROW AREA LOCATION	N/A	CU. YDS.

8) ANY SEDIMENT CONTROL PRACTICE WHICH IS DISTURBED BY GRADING ACTIVITY FOR PLACEMENT OF UTILITIES MUST BE REPAIRED ON THE SAME DAY OF DISTURBANCE.
9) ADDITIONAL SEDIMENT CONTROLS MUST BE PROVIDED, IF DEEMED NECESSARY BY THE HOWARD COUNTY SEDIMENT CONTROL INSPECTOR.
10) ON ALL SITES WITH DISTURBED AREAS IN EXCESS OF 2 ACRES, APPROVAL OF THE INSPECTION AGENCY SHALL BE REQUESTED UPON COMPLETION OF INSTALLATION OF PERIMETER EROSION AND SEDIMENT CONTROLS, BUT BEFORE PROCEEDING WITH ANY OTHER EARTH DISTURBANCE OR GRADING. OTHER BUILDING OR GRADING INSPECTION APPROVALS MAY NOT BE AUTHORIZED UNTIL THIS INITIAL APPROVAL BY THE INSPECTION AGENCY IS MADE.
11) TRENCHES FOR THE CONSTRUCTION OF UTILITIES IS LIMITED TO THREE PIPE LENGTHS OR THAT WHICH SHALL BE BACK-FILLED AND STABILIZED WITHIN ONE WORKING DAY, WHICHEVER IS SHORTER.

SUPER SILT FENCE DETAIL

NOT TO SCALE

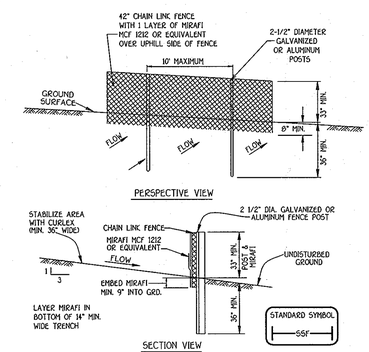

CONSTRUCTION SPECIFICATIONS

1. FENCING SHALL BE 42" HIGH CHAIN CONSTRUCTED IN ACCORDANCE WITH THE LATEST MARYLAND STATE HIGHWAY ADMINISTRATION STANDARD DETAILS 690.01 AND 690.02 FOR CHAIN LINK FENCING. THE SPECIFICATIONS FOR A 6'-0" FENCE SHALL BE USED, SUBSTITUTING 42" FABRIC AND 8' POSTS. POSTS SHALL BE PLACED WITHOUT CONCRETE EMBEDMENT.
2. CHAIN LINK FENCE SHALL BE FASTENED SECURELY TO FENCE POSTS WITH WIRE TIES OR STAPLES. THE LOWER TENSION WIRE, BRACE AND TRUSS RODS, ANCHORS AND POST CAPS ARE NOT REQUIRED EXCEPT ON THE ENDS OF THE FENCE.
3. FILTER CLOTH TO BE FASTENED SECURELY TO CHAIN LINK FENCE WITH TIES SPACED EVERY 24" AT TOP AND MID SECTION.
4. FILTER CLOTH SHALL BE IMBEDDED A MINIMUM OF 9" INTO THE GROUND.
5. WHEN TWO SECTIONS OF DIVERSION CLOTH ADJOIN EACH OTHER THEY SHALL BE OVERLAPPED BY SIX INCHES AND FOLDED.
6. MAINTENANCE SHALL BE PERFORMED AS NEEDED.

Fabric Properties	Value	Test Method
Grab Tensile Strength (lbs.)	90	ASTM D1682
Elongation at Failure (%)	50	ASTM D1682
Mullen Burst Strength (PSI)	190	ASTM D3786
Puncture Strength (lbs.)	40	ASTM D751
Slurry Flow Rate (gal/min/sf)	0.3	Virginia DOT VTM-51
Equivalent Opening Size	40-80	US Std Sieve CW-02215
Ultraviolet Radiation Stability (%)	90	ASTM G-26

Design Criteria

Slope	Slope Steepness	Slope Length (maximum)	Silt Fence Length (maximum)
0 - 10%	0 - 10:1	Unlimited	Unlimited
10 - 20%	10:1 - 5:1	400 feet	1,500 feet
20 - 33%	5:1 - 3:1	300 feet	1,000 feet
33 - 50%	3:1 - 2:1	200 feet	500 feet
50% +	2:1 +	100 feet	250 feet

VERTICAL DRAW-DOWN DEVICE

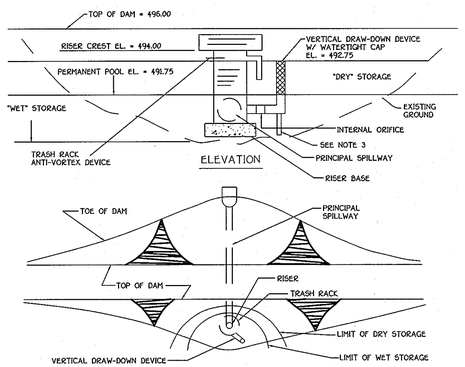

CONSTRUCTION SPECIFICATIONS

1. PERFORATIONS IN THE DRAW-DOWN DEVICE MAY NOT EXTEND INTO THE WET STORAGE.
2. THE TOTAL AREA OF THE PERFORATIONS MUST BE GREATER THAN 2 TIMES THE AREA OF THE INTERNAL ORIFICE.
3. THE PERFORATED PORTION OF THE DRAW-DOWN DEVICE SHALL BE WRAPPED WITH 1/2" HARDWARE CLOTH AND GEOTEXTILE FABRIC. THE GEOTEXTILE FABRIC SHALL MEET THE SPECIFICATIONS FOR GEOTEXTILE CLASS E.
4. PROVIDE SUPPORT OF DRAW-DOWN DEVICE TO PREVENT SAGGING AND FLOATATION. AN ACCEPTABLE PREVENTATIVE MEASURE IS TO STAKE BOTH SIDES OF DRAW-DOWN DEVICE WITH 1" STEEL ANGLE, OR 1" BY 4" SQUARE OR 2" ROUND WOODEN POSTS SET 3' MINIMUM INTO THE GROUND THEN JOINING THEM TO THE DEVICE BY WRAPPING WITH 12 GAUGE MINIMUM WIRE.

FILTER BAG DETAIL

NOT TO SCALE

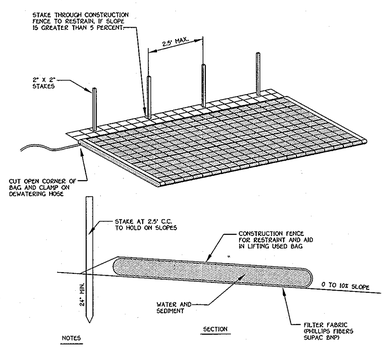

NOTES

1. FILTER BAG SHALL BE PLACED ON A SLOPING OR LEVEL, WELL GRADED VEGETATED SITE SUCH THAT WATER WILL FLOW AWAY FROM DEVICE AND ANY WORK AREAS.
2. WIDTH AND LENTH SHALL BE AS SHOWN IN THE TABLE.
3. THE FILTER BAG MUST BE STAKED IN PLACE AND SECURED TO THE PUMP DISHARGE LINE.
4. FILTER BAG SHALL NOT BE USED FOR DISCHARGE FLOWS GREATER THAN 300 GPM.
5. DEVICE SHALL BE REMOVED AND DISPOSED OF AFTER BAG IS FILLED WITH SEDIMENT.
6. SEDIMENT FROM BAG SHALL BE SPREAD IN AN UPLAND AREA.

AVAILABLE FROM:

INDIAN VALLEY INDUSTRIES, INC. P.O. BOX 810 JOHNSON CITY, NEW YORK 13790 (800) 659-5111 — OR — A.C.F. ENVIRONMENTAL 1800-A WILLIS ROAD RICHMOND, VIRGINIA 23237 TOLL FREE 1-800-448-3636 — OR — PRICE AND COMPANY, INC. 425 36TH STREET WYOMING, PA. 49548 (616) 530-8230

REMOVABLE PUMPING STATION

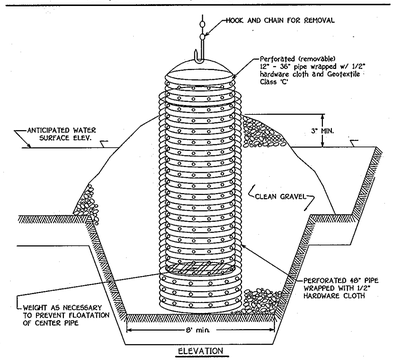

Construction Specifications

1. The outer pipe should be 48" dia. or shall, in any case, be at least 4" greater in diameter than the center pipe. The outer pipe shall be wrapped with 1/2" hardware cloth to prevent backfill material from entering the perforations.
2. After installing the outer pipe, backfill around outer pipe with 2" aggregate or clean gravel.
3. The inside stand pipe (center pipe) should be constructed by perforating a corrugated or PVC pipe between 12" and 36" in diameter. The perforations shall be 1/2" X 6" slits or 1" diameter holes 6" on center. The center pipe shall be wrapped with 1/2" hardware cloth first, then wrapped again with Geotextile Class C.
4. The center pipe should extend 12" to 18" above the anticipated water surface elevation or riser crest elevation when dewatering a basin.

NO.	DESCRIPTION	DATE
1	REVISED TITLE BLOCK	9-25-12
	REVISIONS	

OWNER
BASSLERS, INCORPORATED
c/o ALFRED S. BASSLER
4994 SHEPPARD LANE
ELLICOTT CITY, MARYLAND 21042
(410) 531-6787

DEVELOPER
HERITAGE LAND DEVELOPMENT
19950 NORTH AVE.
LISBON, MARYLAND 21765
(410) 489-7900

SEDIMENT CONTROL NOTES AND DETAILS

WALNUT CREEK

PHASE TWO

Lots 23 - 68, Non-Buildable Preservation Parcels 'C', 'G', 'I', 'J', 'K', 'L' And 'M' & Buildable Bulk Parcels 'H' And 'N'

(Being A Resubdivision Of Buildable Bulk Parcels 'F' & 'E' And A Revision To Non-Buildable Preservation Parcel 'C' - Walnut Creek, Phase One, Plat No's. 20631 Thru 20647

ZONED: RC-DEO & RR-DEO

TAX MAP No. 28 GRID Nos. 4, 5, 10-12, 17, AND 18 PARCEL No. 49

FIFTH ELECTION DISTRICT

HOWARD COUNTY, MARYLAND

DATE: SEPTEMBER, 2008

SHEET 16 OF 32

F-08-081

I:\2004\04001\dwg\PHASE TWO FINALS\04001-3001 SHEET 16 SEDIMENT CONTROL DETAILS.dwg, TITLE - SHEET, 1:1

By The Developer:

"I/We Certify That All Development And/Or Construction Will Be Done According To These Plans, And That Any Responsible Personnel Involved In The Construction Project Will Have A Certificate Of Attendance At A Department Of The Environment Approved Training Program For The Control Of Sediment And Erosion Before Beginning The Project. I Shall Engage A Registered Professional Engineer To Supervise Pond Construction And Provide The Howard Soil Conservation District With An "As-Built" Plan Of The Pond Within 30 Days Of Completion. I Also Authorize Periodic On-Site Inspections By The Howard Soil Conservation District."

Signature Of Developer — 10/16/08 Date

Timothy W. Feaga
Printed Name Of Developer

By The Engineer:

"I Certify That This Plan For Pond Construction, Erosion And Sediment Control Represents A Practical And Workable Plan Based On My Personal Knowledge Of The Site Conditions. This Plan Was Prepared In Accordance With The Requirements Of The Howard Soil Conservation District. I Have Notified The Developer That He/She Must Engage A Registered Professional Engineer To Supervise Pond Construction And Provide The Howard Soil Conservation District With An "As-Built" Plan Of The Pond Within 30 Days Of Completion."

Signature Of Engineer — 10-16-08 Date

Printed Name Of Engineer

These Plans For Small Pond Construction, Soil Erosion And Sediment Control Meet The Requirements Of The Howard Soil Conservation District.

Howard Soil Conservation District — 10/23/08 Date

Approved: Department Of Public Works

Chief Bureau Of Highways — 10-28-08 Date

Approved: Department Of Planning And Zoning

Chief, Division Of Land Development — 11/3/08 Date

Chief, Development Engineering Division — 10/31/08 Date

AS-BUILT CERTIFICATION

I Hereby Certify That The Facility Shown On This Plan Was Constructed As Shown On The " As-Built" Plans And Meets The Approved Plans And Specifications.

Signature — P.E. No.

Date:

Certify Means To State Or Declare A Professional Opinion Based Upon Onsite Inspections And Material Tests Which Are Conducted During Construction. The Onsite Inspections And Material Tests Are Those Inspections And Tests Deemed Sufficient And Appropriate Commonly Accepted Engineering Standards. Certify Does Not mean Or Imply A Guarantee By The Engineer Nor Does An Engineer's Certification Relieve Any Other Party From Meeting Requirements Imposed By Contract, Employment, Or Other Means, Including Meeting Commonly Accepted Industry Practices.

20.0 STANDARDS AND SPECIFICATIONS FOR VEGETATIVE STABILIZATION

DEFINITION

Using vegetation as cover for barren soil to protect it from forces that cause erosion.

PURPOSE

Vegetative stabilization specifications are used to promote the establishment of vegetation on exposed soil. When soil is stabilized with vegetation, the soil is less likely to erode and more likely to allow infiltration of rainfall, thereby reducing sediment loads and run-off to downstream areas, and improving wildlife habitat and visual resources.

CONDITIONS WHERE PRACTICE APPLIES

This practice shall be used on denuded areas as specified on the plans and may be used on highly erodible or critically eroding areas. This specification is divided into Temporary Seeding, to quickly establish vegetative cover for short duration (Up to one year), and Permanent Seeding, for long term vegetative cover. Examples of applicable areas for Temporary Seeding are temporary Soil Stockpiles, cleared areas being left idle between construction phases, earth dikes, etc. and for Permanent Seeding are lawns, dams, cut and fill slopes and other areas at final grade, former stockpile and staging areas, etc.

EFFECTS ON WATER QUALITY AND QUANTITY

Planting vegetation in disturbed areas will have an effect on the water budget, especially on volumes and rates of runoff, infiltration evaporation, transpiration, percolation, and groundwater recharge. Vegetation, over time, will increase organic matter content and improve the water holding capacity of the soil and subsequent plant growth.

Vegetation will help reduce the movement of sediment, nutrients, and other chemicals carried by runoff to receiving waters. Plants will also help protect groundwater supplies by assimilating those substances present within the root zone.

Sediment control devices must remain in place during grading, seedbed preparation, seeding, mulching and vegetative establishment to prevent large quantities of sediment and associated chemicals and nutrients from washing into surface waters.

SECTION 1 - VEGETATIVE STABILIZATION METHODS AND MATERIALS

A. Site Preparation
  i. Install erosion and sediment control structures (either temporary of permanent) such as diversions, grade stabilization structures, berms, waterways, or sediment control basins.
  ii. Perform all grading operations at right angles to the slope. Final grading and shaping is not usually necessary for temporary seeding.
  iii. Schedule required soil tests to determine soil amendment composition and application rates for sites having disturbed area over 5 acres.

B. Soil Amendments (Fertilizer and Lime Specifications)
  i. Soil tests must be performed to determine the exact ratios and application rates for both lime and fertilizer on sites having disturbed areas over 5 acres. Soil analysis may be performed by the University of Maryland or a recognized commercial laboratory. Soil samples taken for engineering purposes may also be used for chemical analyses.
  ii. Fertilizers shall be uniform in composition, free flowing and suitable for accurate application by approved equipment. Manure may be substituted for fertilizer with prior approval from the appropriate approval authority. Fertilizers shall all be delivered to the site fully labeled according to the applicable state fertilizer laws and shall bear the name, trade name or trademark and warrantee of the producer.
  iii. Lime materials shall be ground limestone (hydrated or burnt lime may be substituted) which contains at least 50% total oxides (calcium oxide plus magnesium oxide). Limestone shall be ground to such fineness that at least 50% will pass through a #100 mesh sieve and 98-100% will pass through a #20 mesh sieve.
  iv. Incorporate lime and fertilizer into the top 3-5" of soil by disking or other suitable means.

C. Seedbed Preparation
  i. Temporary Seeding
    a. Seedbed preparation shall consist of loosening soil to a depth of 3" to 5" by means of suitable agricultural or construction equipment, such as disc harrows or chisel plows or rippers mounted on construction equipment. After the soil is loosened it should not be rolled or dragged smooth, but left in the roughened condition. Sloped areas (greater than 3:1) should be tracked leaving the surface in an irregular condition with ridges running parallel to the contour of the slope.
    b. Apply fertilizer and lime as prescribed on the plans.
    c. In corporate lime and fertilizer into the top 3-5" of soil by disking or other suitable means.
  ii. Permanent Seeding
    a. Minimum soil conditions required for permanent vegetative establishment:
      1. Soil pH shall be between 6.0 and 7.0.
      2. Soluble salts shall be less than 500 parts per million (ppm).
      3. The soil shall contain less than 40% clay, but enough fine grained material (>30% silt plus clay) to provide the capacity to hold a moderate amount of moisture. An exception is if lovegrass or serecia lespedezas is to be planted, then a sandy soil (<30% silt plus clay) would be acceptable.
      4. Soil shall contain 1.5% minimum organic matter by weight.
      5. Soil must contain sufficient pore space to permit adequate root penetration.
      6. If these conditions cannot be met by soils on site, adding topsoil is required in accordance with Section 21 Standard and Specification for Topsoil.
    b. Areas previously graded in conformance with the drawings shall be maintained in a true and even grade, then scarified or otherwise loosened to a depth of 3-5" to permit bonding of the topsoil to the surface area and to create horizontal erosion check slots to prevent topsoil to the surface area and to create horizontal erosion check slots to prevent topsoil from sliding down a slope.
    c. Apply soil amendments as per soil test or as included on the plans.
    d. Mix soil amendments into the top 3-5" of topsoil by disking or other suitable means. Lawn areas should be raked to smooth the surface, remove large objects like stones and branches, and ready the area for seed and application. Where site conditions will not permit normal seedbed preparation, loosen surface soil by dragging with a heavy chain or other equipment to roughen the surface. Steep slopes (steeper than 3:1) should be tracked by a dozer leaving the soil in an irregular condition with ridges running parallel to the contour of the slope. The top 1-3" of soil should be loose and friable. Seedbed loosening may not be necessary on newly disturbed areas.

D. Seed Specifications
  i. All seed must meet the requirements of the Maryland State Seed Law. All seed shall be subject to re-testing by a recognized seed laboratory. All seed used shall have been tested within the 6 months immediately preceding the date of sowing such material on this job.
  Note: Seed tags shall be made available to the inspector to verify type and rate of seed used.
  ii. Inoculant - The inoculant for treating legume seed in the seed mixtures shall be a pure culture of nitrogen-fixing bacteria prepared specifically for the species. Inoculants shall not be used later than the date indicated on the container. Add fresh inoculant as directed on package. Use four times the recommended rate when hydroseeding. Note: It is very important to keep inoculant as cool as possible until used. Temperatures above 75°-80° F. can weaken bacteria and make the inoculant less effective.

E. Methods of Seeding
  i. Hydroseeding: Apply seed uniformly with hydroseeder (slurry includes seed and fertilizer), broadcast or drop seeded, or a cultipacker seeder.
    a. If fertilizer is being applied at the time of seeding, the application rates amounts will not exceed the following: nitrogen: maximum of 100 lbs. per acre total of soluble nitrogen: P205 (phosphorous): 200 lbs/ac; K20 (potassium): 200 lbs/ac.
    b. Lime - use only ground agricultural limestone, (Up to 3 tons per acre may be applied by hydroseeding). Normally, not more than 2 tons are applied by hydroseeding at any one time. Do not use burnt or hydrated lime when hydroseeding.
    c. Seed and fertilizer shall be mixed on site and seeding shall be done immediately and without interruption.
  ii. Dry Seeding: This includes use of conventional drop or broadcast spreaders.
    a. Seed spread dry shall be incorporated into the subsoil at the rates prescribed on the Temporary or Permanent Seeding Summaries or Tables 265 or 26. The seeded area shall then be rolled with a weighted roller to provide good seed to soil contact.
    b. Where practical, seed should be applied in two directions perpendicular to each other. Apply half the seeding rate in each direction.
  iii. Drill or Cultipacker Seeding: Mechanized seeders that apply and cover seed with soil.
    a. Cultipacking seeders are required to bury the seed in such a fashion as to provide at least 1/4 inch of soil covering. Seedbed must be firm after planting.
    b. Where practical, seed should be applied in two directions perpendicular to each other. Apply half the seeding rate in each direction.

F. Mulch Specifications (In order of preference)
  i. Straw shall consist of thoroughly threshed wheat, rye or oat straw, reasonable bright in color, and shall not be musty, moldy, caked, decayed, or excessively dusty and shall be free of noxious weed seeds as specified in the Maryland Seed Law.
  ii. Wood Cellulose Fiber Mulch (WCFM)
    a. WCFM shall consist of specially prepared wood cellulose processed into a uniform fibrous physical state.
    b. WCFM shall be dyed green or contain a green dye in the package that will provide an appropriate color to facilitate visual inspection of the uniformly spread slurry.
    c. WCFM, including dye, shall contain no germination or growth inhibiting factors.
    d. WCFM materials shall be manufactured and processed in such a manner that the wood cellulose fiber mulch will remain in uniform suspension in water under agitation and will blend with seed, fertilizer and other additives to form a homogeneous slurry. The mulch material shall form a blotter-like ground cover, on application, having moisture absorption and percolation properties and shall cover and hold grass seed in contact with the soil without inhibiting the growth of the grass seedlings.
    e. WCFM material shall contain no elements or compounds at concentration levels that will be phytol-toxic.
    f. WCFM must conform to the following physical requirements: fiber length to approximately 10 mm. , diameter approximately 1 mm., pH range of 4.0 to 8.5, ash content of 1.6% maximum and water holding capacity of 90% minimum.
  Note: Only sterile straw mulch should be used in areas where one species of grass is desired.

G. Mulching Seeded Areas - Mulch shall be applied to all seeded areas immediately after seeding.
  i. If grading is completed outside of the seeding season, mulch along shall be applied as prescribed in this section and maintained until the seeding season returns and seeding can be performed in accordance with these specifications.
  ii. When straw mulch is used, it shall be spread over all seeded areas at the rate of 2 tons/acre. Mulch shall be applied to a uniform loose depth of between 1" and 2". Mulch applied shall achieve a uniform distribution and depth so that the soil surface is not exposed. If a mulch anchoring tool is to be used, the rate should be increased to 2.5 tons/acre.
  iii. Wood cellulose fiber used as a mulch shall be applied at a net dry weight of 1,500 lbs. per acre. The wood cellulose fiber shall be mixed with water, and the mixture shall contain a maximum of 50 lbs. of wood cellulose fiber per 100 gallons of water.

H. Securing Straw Mulch (Mulch Anchoring): Mulch anchoring shall be performed immediately following mulch application to minimize loss by wind or water. This may be done by one of the following methods (listed by preference), depending upon size of area and erosion hazard:
  i. A mulch anchoring tool is a tractor drawn implement designed to punch and anchor mulch into the soil surface a minimum of two (2) inches. This practice is most effective on large areas, but is limited to flatter slopes where equipment can operate safely. If used on sloping land, this practice should be used on the contour if possible.
  ii. Wood cellulose fiber may be used for anchoring straw. The fiber binder shall be applied at a net dry weight of 750 pounds/acre. The wood cellulose fiber shall be mixed with water and the mixture shall contain a maximum of 50 pounds of wood cellulose fiber per 100 gallons of water.
  iii. Application of liquid binders should be heavier at the edges where wind catches mulch, such as in valleys and crest of barks. The remainder of area should be appear uniform after binder application. Synthetic binders - such as Acrylic DLR (Agro-Tack), DCA-70 Petroset, Terra Tax II, Terra Tack AR or other approved equal may be used at rates recommended by the manufacturer to anchor mulch.
  iv. Lightweight plastic netting may be stapled over the mulch according to manufacturer's recommendations. Netting is usually available in rolls 4' to 15' feet wide and 300 to 3,000 feet long.

I. Incremental Stabilization - Cut Slopes
  i. All cuts slopes shall be dressed, prepared, seeded and mulched as the work progresses. Slopes shall be excavated and stabilized in equal increments not to exceed 15'.
  ii. Construction sequence (Refer to Figure 3 below):
    a. Excavate and stabilize all temporary swales, side ditches, or berms that will be used to convey runoff from the excavation.
    b. Perform Phase 1 excavation, dress, and stabilize.
    c. Perform Phase 2 excavation, dress and stabilize. Overseed Phase 1 areas as necessary.
    d. Perform final phase excavation, dress and stabilize. Overseed previously seeded areas as necessary.

Note: Once excavation has begun the operation should be continuous from grubbing through the completion of grading and placement of topsoil (if required) and permanent seed and mulch. Any interruptions int he operation of completing the operation out of the seeding season will necessitate the application of temporary stabilization.

J. Incremental Stabilization of Embankments - Fill Slopes
  i. Embankments shall be constructed in lifts as prescribed on the plans.
  ii. Slopes shall be stabilized immediately when the vertical height of the multiple lifts reaches 15', or when the grading operation ceases as prescribed in the plans.
  iii. At the end of each day, temporary berms and pipe slope drains should be constructed along the top edge of the embankment to intercept surface runoff and convey it down the slope in a non-erosive manner to a sediment trapping device.
  iv. Construction sequence: Refer to Figure 4 (below).
    a. Excavate and stabilize all temporary swales, side ditches, or berms that will be used to divert runoff around the fill. Construct slope silt fence on low side of fill as shown in Figure 5, unless other methods shown on the plans address this area.
    b. Place Phase 1 embankment, dress and stabilize.
    c. Place Phase 2 embankment, dress and stabilize.
    d. Place final phase embankment, dress and stabilize. Overseed previously seeded areas as necessary.

Note: Once the placement of fill has begun the operation should be continuous from grubbing through the completion of and placement of topsoil (if required) grading and permanent seed and mulch. any interruptions in the operation or completing the operation out of the seeding season will necessitate the application of temporary stabilization.

FISHER, COLLINS & CARTER, INC.
CIVIL ENGINEERING CONSULTANTS & LAND SURVEYORS
CENTENNIAL SQUARE OFFICE PARK - 10272 BALTIMORE NATIONAL PIKE
ELLICOTT CITY, MARYLAND 21042
(410) 461 - 2855

10.16.08

SECTION 2 - TEMPORARY SEEDING

Vegetation - annual grass or grain used to provide cover on disturbed areas for up to 12 months. For longer duration of vegetative cover, Permanent Seeding is required.

A. Seed mixtures - Temporary Seeding

i. Select one or more of the species or mixtures listed in Table 26 for the appropriate Plant Hardiness Zone (from Figure 5) and enter them in the Temporary seeding summary below, along with application rates, seeding dates and seeding depths. If this summary is not put on the plans and completed, then Table 26 must be put on the plans.

ii. For sites having soil tests performed, the rates shown on this table shall be deleted and the rates recommended by the testing agency shall be written in. Soil tests are not required for Temporary Seeding.

Seed Mixture (Hardiness Zone ___6b___) From Table 26					Fertilizer Rate (10-10-10)	Lime Rate
No.	Species	Application Rate (lb/ac)	Seeding Dates	Seeding Depths		
1	BARLEY OATS RYE	122 96 140	3/1 - 5/15, 8/15 - 10/15	1" - 2" 1" - 2" 1" - 2"	600 lb/ac (15 lb/1000sf)	2 tons/ac (100 lb/1000sf)

SECTION 3 - PERMANENT SEEDING

Seeding grass and legumes to establish groung cover for a minimum of one year on disturbed areas generally receiving low maintenance.

A. Seed mixtures - Permanent Seeding

i. Select one or more of the species or mixtures listed in Table 25 for the appropriate Plant Hardiness Zone (from Figure 5) and enter them in the Permanent Seeding Summary below, along with application rates and seeding dates. Seeding depths can be estimated using Table 26. If this summary is not put on the construction plans and completed, then Table 25 must be put on the plans. Additional planting specifications for exceptional sites such as shorelines, streambanks, or dunes or for special purposes such as wildlife or aesthetic treatment may be found in USDA-SCS Techinical Field Office Guide, Section 342 - Critical Area Planting. For special lawn maintenance areas, see Sections IV Sod and V Turfgrass.

ii. For sites having disturbed area over 5 areas, the rates shown on this table shall be deleted and the rates recommended by the soil testing agency shall be written in.

iii. For areas receiving low maintenance, apply ureaform fertilizer (46-0-0) at 3 1/2 lbs/1000 sq. ft. (150 lbs/ac), in addition to the above soil amendments shown in the table below, to be performed at the time of seeding.

Seed Mixture (Hardiness Zone ___6b___) From Table 25					Fertilizer Rate (10-20-20)			Lime Rate
No.	Species	Application Rate (lb/ac)	Seeding Dates	Seeding Depths	N	P205	K20	
3	TALL FESCUE (85%) PERENNIAL RYE GRASS (10%) KENTUCKY BLUEGRASS (5%)	125 15 10	3/1 - 5/15, 8/15 - 10/15	1" - 2"	90 lb/ac (2.0 lb/ 1000sf)	175 lb/ac (4 lb/ 1000sf)	175 lb/ac (4 lb/ 1000sf)	2 tons/ac (100 lb/ 1000sf)
10	TALL FESCUE (80%) HARD FESCUE (20%)	120 30	3/1 - 5/15, 8/15 - 10/15	1" - 2"				

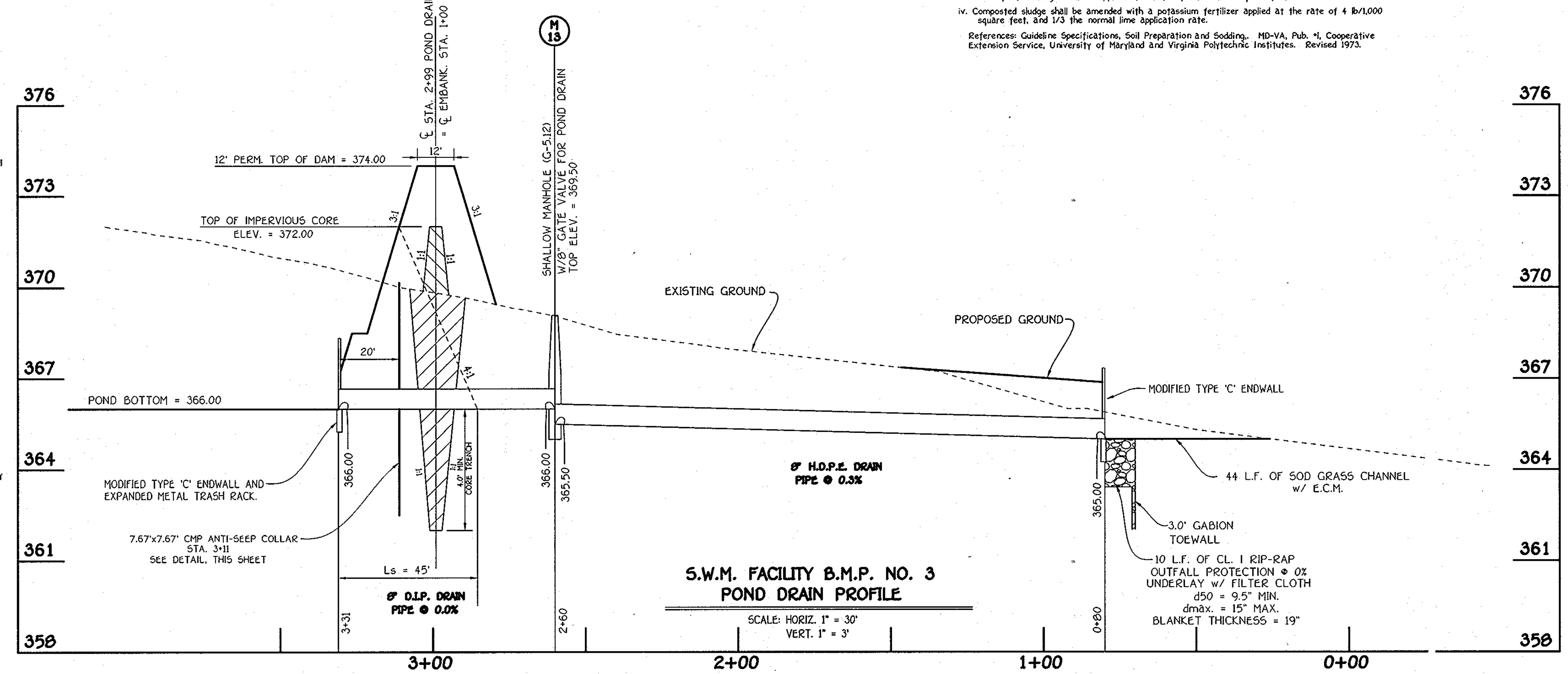

S.W.M. FACILITY B.M.P. NO. 3
POND DRAIN PROFILE
SCALE: HORIZ. 1" = 30'
VERT. 1" = 3'

NO.	DESCRIPTION	DATE
⚠	REVISED TITLE BLOCK	9/25/12

REVISIONS

OWNER
BASSLERS, INCORPORATED
c/o ALFRED S. BASSLER
4994 SHEPPARD LANE
ELLICOTT CITY, MARYLAND 21042
(410) 531-2193

DEVELOPER
HERITAGE LAND DEVELOPMENT
15950 NORTH AVE.
LISBON, MARYLAND 21765
(410) 489-7900

TOPSOIL NOTES

Definition

Placement of topsoil over a prepared subsoil prior to establishment of permanent vegetation.

Purpose

To provide a suitable soil medium for vegetative growth. Soils of concern have low moisture content, low nutrient levels, low pH, materials toxic to plants, and/or unacceptable soil gradation.

Conditions Where Practice Applies

I. This practice is limited to areas having 2:1 or flatter slopes where:
  a. The texture of the exposed subsoil/parent material is not adequate to produce vegetative growth.
  b. The soil material is so shallow that the rooting zone is not deep enough to support plants or furnish continuing supplies of moisture and plant nutrients.
  c. The original soil to be vegetated contains material toxic to plant growth.
  d. The soil is so acidic that treatment with limestone is not feasible.

II. For the purpose of these Standards and Specifications, areas having slopes steeper than 2:1 require special consideration and design for adequate stabilization. Areas having slopes steeper than 2:1 shall have the appropriate stabilization shown on the plans.

Construction and Material Specifications

I. Topsoil salvaged from the existing site may be used provided that it meets the standards as set forth in these specifications. Typically, the depth of topsoil to be salvaged for a given soil type can be found in the representative soil profile section in the Soil Survey published by USDA-SCS in cooperation with Maryland Agricultural Experimental Station.

II. Topsoil Specifications - Soil to be used as topsoil must meet the following:
  i. Topsoil shall be a loam, sandy loam, clay loam, silt loam, sandy clay loam, loamy sand. Other soils may be used if recommended by an agronomist or soil scientist and approved by the appropriate approval authority. Regardless, topsoil shall not be a mixture of contrasting textured subsoils and shall contain less than 5% by volume of cinders, stones, slag, coarse fragments, gravel, sticks, roots, trash, or other materials larger than 11/2" in diameter.
  ii. Topsoil must be free of plants or plant parts such as bermuda grass, quackgrass, Johnsongrass, nutsedge, poison ivy, thistle, or others as specified.
  iii. Where the subsoil is either highly acidic or composed of heavy clays, ground limestone shall be spread at the rate of 4-8 tons/acre (200-400 pounds per 1,000 square feet) prior to the placement of topsoil. Lime shall be distributed uniformly over designated areas and worked into the soil in conjunction with tillage operations as described in the following procedures.

II. For sites havinc, disturbed areas under 5 acres:
  i. Place topsoil (if required) and apply soil amendments as specified in 20.0 Vegetative Stabilization - Section I - Vegetative Stabilization Methods and Materials.

III For sites having disturbed areas over 5 acres:
  i. On soil meeting Topsoil specifications, obtain test results dictating fertilizer and lime amendments required to bring the soil into compliance with the following:
    a. pH for topsoil shall be between 6.0 and 7.5. If the tested soil demonstrates a pH of less than 6.0, sufficient lime shall be perscribed to raise the pH to 6.5 or higher.
    b. Organic content of topsoil shall be not less than 1.5 percent by weight.
    c. Topsoil havina soluble salt content greater than 500 parts per million shall not be used.
    d. No sod or seed shall be placed on soil which has been treated with soil sterilants or chemicals used for weed control until sufficient time has elapsed (14 days min.) to permit dissipation of phyto-toxic materials.

  Note: Topsoil substitutes or amendments, as recommended by a qualified agronomist or soil scientist and approved by the appropriate approval authority, may be used in lieu of natural topsoil.

  ii. Place topsoil (if required) and apply soil amendments as specified in 20.0 Vegetative Stabilization - Section I - Vegetative Stabilization Methods and Materials.

V. Topsoil Application
  i. When topsoiling, maintain needed erosion and sediment control practices such as diversions, Grade Stabilization Structures, Earth Dikes, Slope Silt Fence and Sediment Traps and Basins.
  ii. Grades on the areas to be topsoiled, which have been previously established, shall be maintained, albeit 4" - 8" higher in elevation.
  iii. Topsoil shall be uniformly distributed in a 4" - 8" layer and lightly compacted to a minimum thickness of 4". Spreading shall be performed in such a manner that sodding or seedine can proceed with a minimum of additional soil preparation and tillage. Any irregularities in the surface resulting from topsoiling or other operations shall be corrected in order to prevent the formation of depressions or water pockets.
  iv. Topsoil shall not be placed while the topsoil or subsoil is in a frozen or muddy condition, when the subsoil is excessively wet or in a condition that may otherwise be detrimental to proper grading and seedbed preparation.

VI. Alternative for Permanent Seeding - Instead of applying the full amounts of lime and commercial fertilizer, composted sludge and amendments may be applied as specified below:
  i. Composted Sludge Material for use as a soil conditioner for sites having disturbed areas over 5 acres shall be tested to prescribe amendments and for sites having disturbed areas under 5 acres shall conform to the following requirements:
    a. Composted sludge shall be supplied by, or originate from, a person or persons that are permitted (at the time of acquisition of the compost) by the Maryland Department of the Environment under COMAR 26.04.06.
    b. Composted sludge shall contain at least I percent nitrogen, 1.5 percent phosphorus, and 0.2 percent potassium and have a Ph of 7.0 to 8.0. If compost does not meet these requirements, the appropriate constituents must be added to meet the requirements prior to use.
    c. Composted sludge shall be applied at a rate of I ton/1,000 square feet.
  iv. Composted sludge shall be amended with a potassium fertilizer applied at the rate of 4 lb/1,000 square feet, and 1/3 the normal lime application rate.

  References: Guideline Specifications, Soil Preparation and Sodding,. MD-VA, Pub. #1, Cooperative Extension Service, University of Maryland and Virginia Polytechnic Institutes. Revised 1973.

GABION INFLOW PROTECTION

NOT TO SCALE

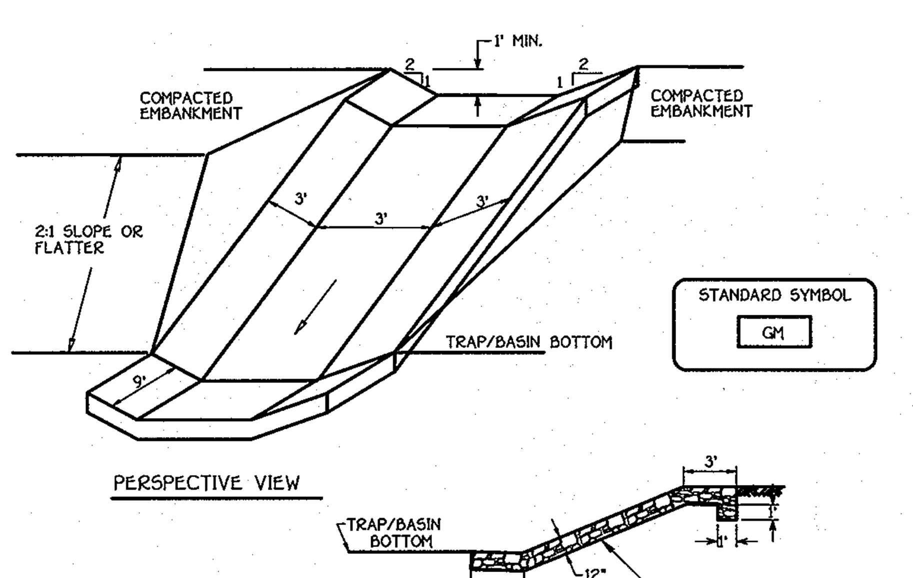

Construction Specifications

1. Gabion inflow protection shall be constructed of 9' x 3' x 9" gabion baskets forming a trapezoidal cross section 1' deep, with 2:1 side slopes, and a 3' bottom width.
2. Geotextile Class C shall be installed under all gabion baskets.
3. The stone used to fill the gabion baskets shall be 4" - 7".
4. Gabions shall be installed in accordance with manufacturers recommendations.
5. Gabion Inflow Protection shall be used where concentrated flow is present on slopes steeper than 4:1.

TYPICAL ANTI-SEEP COLLARS

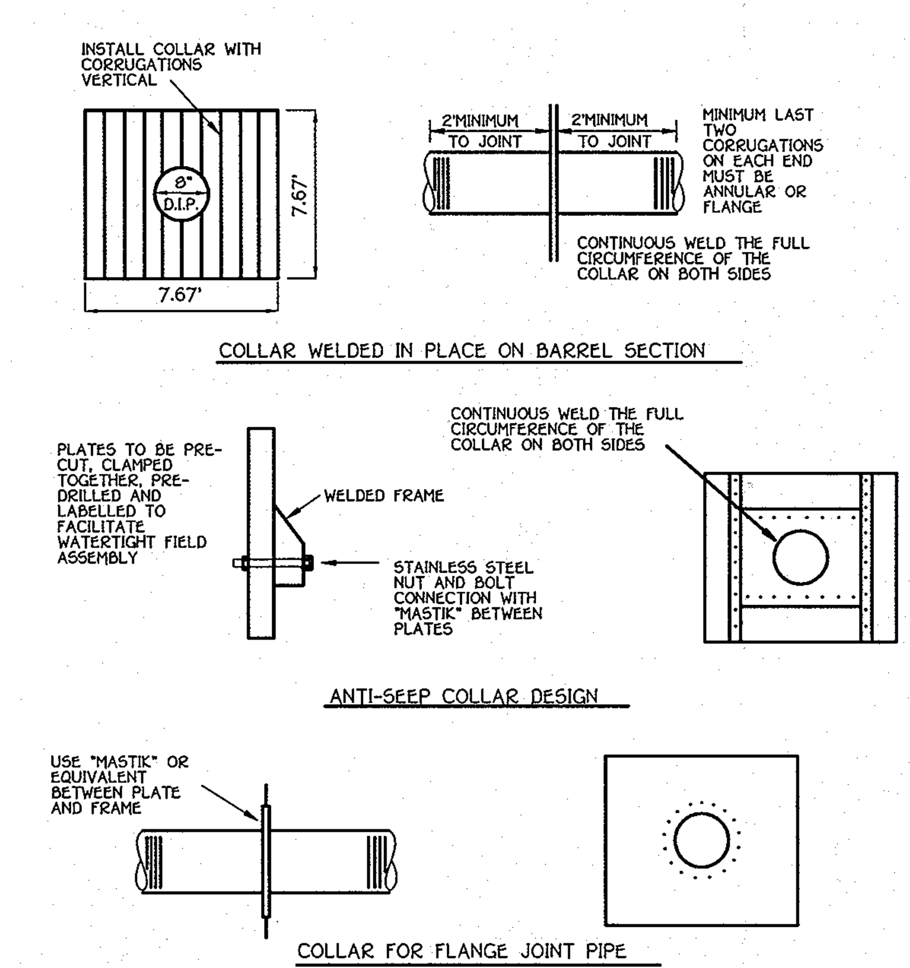

SEDIMENT AND EROSION CONTROL DETAILS

WALNUT CREEK

PHASE TWO ⚠

Lots 23 - 68, Non-Buildable Preservation Parcels 'C', 'G', 'I', 'J', 'K', 'L' And 'M' & Buildable Bulk Parcels 'H' And 'N'

(Being A Resubdivision Of Buildable Bulk Parcels 'F' & 'E' And a Revision To Non-Buildable Preservation Parcel 'C' - Walnut Creek, Phase One, Plat No's. 20631 Thru 20647

ZONED: RC-DEO & RR-DEO

TAX MAP No. 28 GRID Nos. 4, 5, 10-12, 17, AND 18 PARCEL No. 49

FIFTH ELECTION DISTRICT

HOWARD COUNTY, MARYLAND

DATE: SEPTEMBER, 2008

SHEET 17 OF 32

F-08-081

I:\2004\04001\dwg\PHASE TWO FINALS\04001-3001 SHEET 17 SEDIMENT CONTROL DETAILS.dwg, SHEET 17, 1:1

APPROVED: DEPARTMENT OF PUBLIC WORKS

Dave Anhuzy, Acting — 11/28/12
CHIEF, BUREAU OF HIGHWAYS — DATE

APPROVED: DEPARTMENT OF PLANNING AND ZONING

12/05/12
CHIEF, DIVISION OF LAND DEVELOPMENT — DATE

12/6/12
CHIEF, DEVELOPMENT ENGINEERING DIVISION — DATE

Note: THE FOREST CONSERVATION EASEMENT(S) WILL BE ESTABLISHED TO FULFILL THE REQUIREMENTS OF SECTION 16.1200 OF THE HOWARD COUNTY FOREST CONSERVATION ACT. NO CLEARING, GRADING OR CONSTRUCTION IS PERMITTED WITHIN THE FOREST CONSERVATION EASEMENT, EXCEPT AS SHOWN ON AN APPROVED ROAD CONSTRUCTION DRAWING. HOWEVER, FOREST MANAGEMENT PRACTICES AS DEFINED IN THE DEED OF FOREST CONSERVATION EASEMENT ARE ALLOWED.

Reforestation Note:

The reforestation obligation will be met within priority planting areas on the site. This includes floodplain, wetland and buffers.

MATCHLINE SEE SHEET 19

MATCHLINE SEE SHEET 20

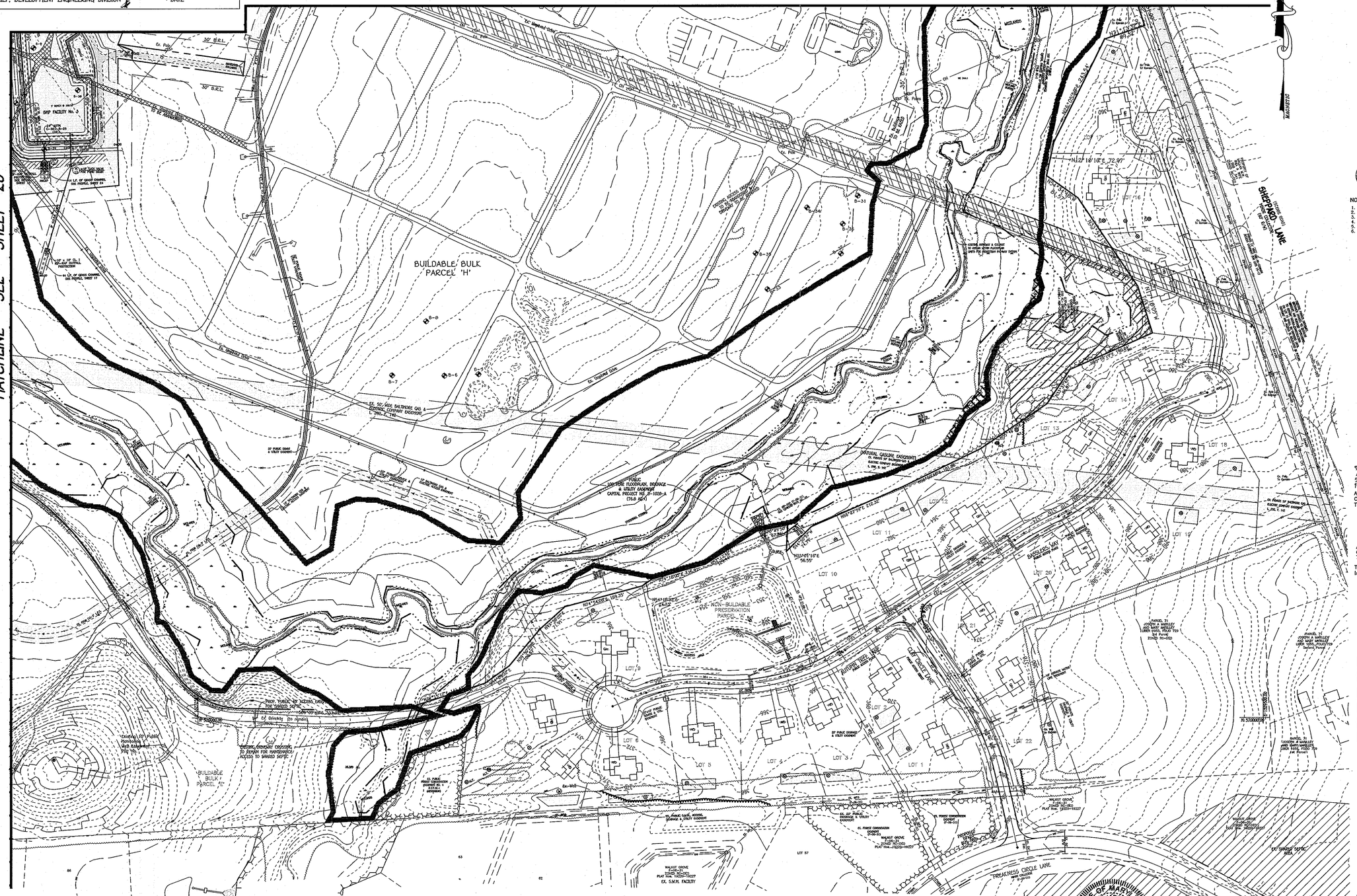

Specimen Tree Chart

Key	Species/size	Comments
A	White oak, 44 inch dbh	fair condition, some dieback, poor crown spread
B	Tulip poplar, 30 inch dbh	good condition
C	Tulip poplar, 48 inch dbh	good condition
D	Tulip poplar, 74 inch dbh	poor condition, substantial dieback and poor canopy spread

BLAZE ORANGE PLASTIC MESH

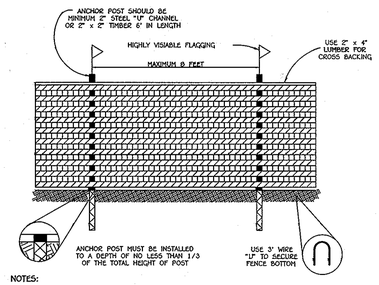

NOTES:

1. FOREST PROTECTION DEVICE ONLY.
2. RETENTION AREA WILL BE SET AS PART OF THE REVIEW PROCESS.
3. BOUNDARIES OF RETENTION AREA SHOULD BE STAKED AND FLAGGED PRIOR TO INSTALLING DEVICE.
4. ROOT DAMAGE SHOULD BE AVOIDED.
5. PROTECTIVE SIGNAGE MAY ALSO BE USED.
6. DEVICE SHOULD BE MAINTAINED THROUGHOUT CONSTRUCTION.

TREE PROTECTION DETAIL

NOT TO SCALE

FCP NOTES

1. Any Forest Conservation Easement (FCE) area shown hereon is subject to protective covenants which may be found in the Land Records of Howard County which restrict the disturbance and use of these areas.

2. Forested areas occurring outside of the FCE shall not be considered part of the FCE and shall not be subject to protective land covenants.

3. Limits of disturbance shall be restricted to areas outside the limit of temporary fencing or the FCE boundary, whichever is greater.

4. There shall be no clearing, grading, construction or disturbance of vegetation in the Forest Conservation Easement, except as permitted by Howard County DPZ.

5. No stockpiles, parking areas, equipment cleaning areas, etc. shall occur within areas designated as Forest Conservation Easements.

6. Temporary fencing shall be used to protect forest resources during construction. The fencing shall be placed along all FCE boundaries which occur within 15 feet of the proposed limits of disturbance.

7. Permanent signage shall be placed 50~100' apart along the boundaries of all areas included in Forest Conservation Easements.

8. The Forest Conservation Act requirements for the entire site will be met through the onsite retention of 59.57 acres of forest and 31.66 acres of onsite reforestation. Total Forest Conservation Obligation = 91.23 ac.

9. The forest conservation requirements per section 16.1200 of the howard county code And the forest conservation manual for the entire subdivision will be fulfilled by providing 59.57 acres of on-site forest retention and 31.66 acres of on-site forest afforestation for a total of 91.23 acres.

A surety for onsite forest retention @ $0.20/sf for 2,594,869 sf. = $518,974.00 and On-site afforestation @ $0.50/sf for 1,379,110 sf. = $689,555.00 is required.
Total surety amount for the entire subdivision = $1,208,529.00

The Forest Conservation provided with Phase Two are as follows:
35.67 AC. OF FOREST CONSERVATION EASEMENT (CREDITED AND NON-CREDITED).
Credited onsite retention of 17.13 acres of forest and 9.10 acres of onsite reforestation.
CALCULATION USED FOR PHASE TWO FOREST REQUIREMENT:
59.57 TOTAL RETENTION ACRES/160 TOTAL UNITS = 0.3723 (46 UNITS x 0.3723 = 17.13 AC.*)
31.66 TOTAL PLANTING ACRES/160 TOTAL UNITS = 0.1979 (46 UNITS x 0.1979 = 9.10 AC.*)

A SURETY FOR ONSITE FOREST RETENTION @ $0.20/SF FOR 746183 SF. = $149,237.00 AND ON-SITE AFFORESTATION @ $0.50/SF FOR 396396 SF. = $198,198.00 IS REQUIRED.
TOTAL SURETY AMOUNT FOR THIS PHASE TWO SUBMISSION = $347,435.00.

The forest conservation surety in the amount of $347435.00 is be paid as part of the dpw developer's agreement.

LEGEND

- Existing Contours
- Wetland Limits
- Wetland/Stream Buffer
- Proposed Contours
- Forest Conservation Easement (Retention Area)
- Forest Conservation Easement To Be Planted
- NON-CREDITED RETENTION Forest Conservation Easement
- Forest Conservation Signs
- TP — Tree Protection Fence
- Limits Of Floodplain
- Proposed Treeline

REVISED FOREST CONSERVATION PLAN
WALNUT CREEK
PHASE TWO

Lots 23 – 68, Non-Buildable Preservation Parcels 'C', 'G', 'I', 'J', 'K', 'L' And 'M' & Buildable Bulk Parcels 'H' And 'N'

(Being A Resubdivision Of Buildable Bulk Parcels 'F' & 'E' And a Revision To Non-Buildable Preservation Parcel 'C' – Walnut Creek, Phase One, Plat No's. 20631 Thru 20647

ZONED: RC-DEO & RR-DEO
TAX MAP No. 28 GRID Nos. 4, 5, 10~12, 17, AND 18 PARCEL No. 49
FIFTH ELECTION DISTRICT
HOWARD COUNTY, MARYLAND
DATE: SEPTEMBER, 2009
SHEET 18 OF 32

STATE OF MARYLAND — JOHN CHRISTOPHER CANOLES — No. 20748

10/31/12
DATE

ALL PLANS, MAPS, REPORTS, I hereby certify that these documents were prepared or approved by me, and that I am a duly Licensed Professional Engineer under the laws of the State of Maryland, License No. 20748, Expiration Date 2-22-13."

FISHER, COLLINS & CARTER, INC.
CIVIL ENGINEERING CONSULTANTS & LAND SURVEYORS
CENTENNIAL SQUARE OFFICE PARK – 10272 BALTIMORE NATIONAL PIKE
ELLICOTT CITY, MARYLAND 21042
(410) 461 – 2855

Eco-Science Professionals, Inc.
CONSULTING ECOLOGISTS
MD DNR Qualified Professional
USACOE Wetland Delineator
Certification # WDCP93M0061004 4B
JOHN P. CANOLES 11/5/12

NO.	DESCRIPTION	DATE
1	REVISED PARCELS 'E' 'J', 'H' & 'G', ROAD NAMES, WELLS, PROPOSED FORCEMAIN AND TITLE BLOCK.	9/25/12

REVISIONS

PLAN

SCALE: 1" = 100'

OWNER

BASSLER, INCORPORATED
c/o ALFRED S. BASSLER
4994 SHEPPARD LANE
ELLICOTT CITY, MARYLAND 21042

DEVELOPER

HERITAGE LAND DEVELOPMENT
15950 NORTH AVE.
LISBON, MARYLAND 21765

F-08-081

I:\2004\04031\dwg\PHASE TWO FINALS\PHASE TWO REDLINE 2012\04001-S001 SHEET 18-22 FINAL FOREST PLANS MYLARS.dwg, SHEET 18, 10/30/2012 3:09:10 PM, 1:1

APPROVED: DEPARTMENT OF PUBLIC WORKS		
Diane Schwarz, Acting		11/29/12
CHIEF, BUREAU OF HIGHWAYS		DATE
APPROVED: DEPARTMENT OF PLANNING AND ZONING		
Kent Sheubrooks		12/05/12
CHIEF, DIVISION OF LAND DEVELOPMENT		DATE
[signature]		12/3/12
CHIEF, DEVELOPMENT ENGINEERING DIVISION		DATE

PATTERN SPACING DIAGRAM

* * * * * * * * * * *
* * * * * * * * * * *
* * * * * * * * * * *
\# \# \# \# \# \# \# \#
\# \# \# \# \# \# \# \#

* – whip w/shelter 11' on center spacing
\# – 1" caliper tree 15' on center spacing
Species shall be randomly interspersed, rows should be planting along contours

Planting Notes:

Planting units defined by the spacing requirements established in the FCA Manual. One plant unit is defined as 1 seedling or whip without shelter.
The Manual states that 700 seedlings/whips without shelters are required per acre, or 350 whips w/shelters, or 200 1" caliper trees, or 100 2" caliper trees.
By conversion it has been determined that a seeding or whip without shelter = 1 unit, whip with shelter = 2 units, 1"caliper tree = 3.5 units and 2" caliper tree = 7 units. The use of plant units simplifies the plant density calculations when mixing stock size.

** – These species should not be planted within the wetland limits.

1" caliper trees should be staggered along the outer perimeter of the planting area to serve as demarcation of the boundary. The trees should be no closer than 15 Foot Spacing. Whip spacing to be placed on 11 foot centers, shelters will be required per Howard County policy.

Planting shall be made in a curvilinear fashion along contour. The planting should avoid a grid appearance but should be spaced to facilitate maintenance
Multiflora rose/heavy brush removal/control may be required prior to installation of planting.
All whips are required to be installed with tree shelters per Howard County FCA requirements.

Planting/Soil Specifications

1. Installation of bareroot plant stock shall take place between March 15 – April 20; b&b/container stock March 15 –May 30 or September 15 – November 15. Fall planting of B&B stock is not recommended.
2. Disturbed areas shall be seeded and stabilized as per general construction plan for project. Planting areas not impacted by site grading shall have no additional topsoil installed.
3. Bareroot plants shall be installed so that the top of root mass is level with the top of existing grade. Roots shall be dipped in an anti-desiccant gel prior to planting. Backfill in the planting pits shall consist of 3 parts existing soil to 1 part pine fines or equivalent.
4. Fertilizer shall consist of Agriform 22-8-2, or equivalent, applied as per manufacturer's specifications, for woody plants. Herbaceous plants shall be fertilized with Osmocote 8-6-12.
5. Plant material shall be transported to the site in a tarped or covered truck. Plants shall be kept moist prior to planting.
6. All non-organic debris associated with the planting operation shall be removed from the site by the contractor.

Sequence of Construction

1. Sediment control shall be installed in accordance with general construction plan for site.
2. Plants shall be installed as per Plant Schedule and the Planting/Soil Specifications for the project.
3. Upon completion of the planting, signage shall be installed as shown.
4. Plantings shall be maintained and guaranteed in accordance with the Maintenance and Guarantee requirements for project.

Maintenance of Plantings

1. Maintenance of plantings shall last for a period of 2 years.
2. Plantings must receive 2 gallons of water, either through precipitation or watering, weekly during the 1st growing season, as needed. During second growing season, once a month during May–September, if needed.
3. Invasive exotics and noxious weeds will be removed, as required, from planting areas mechanically and/or with limited herbicide application (see groundcover note where appropriate). Old field successional species will be retained.
4. Plants will be examined a minimum two times during the growing season for serious plant pests and diseases. Serious problems will be treated with the appropriate agent.
5. Dead branches will be pruned from plantings.

Guarantee Requirements

1. A 75 percent survival rate of forestation plantings will be required at the end of 2 growing seasons. All plant material below the 75 percent threshold will be replaced at the beginning of the next growing season. Wild trees arising from natural regeneration may be counted up to 50 percent towards the total survival number if they are healthy, native species at least 12 inches tall.

Surety for Forestation

1. The developer shall post a surety (bond, letter of credit) to ensure that forestation plantings are completed. SEE GENERAL NOTE 10, SHEET 1.

Planting Notes

When possible, plants shall be installed within 24 hours of delivery. If installation cannot be performed within this time frame, plant stock shall be watered and protected from dessication

Application of herbicide, Round-up or equivalent, may be used to reduce plant competition from old field successional growth at the time of installation. Mowing, re-application of herbicide, or a combination thereof, may be used to control unwanted, competing vegetation.

Planting shall be installed within one year or two growing seasons of subdivision approval. Plantings shall be installed in accordance with the time schedule included in Note 1 of the planting /Seeding Specifications.

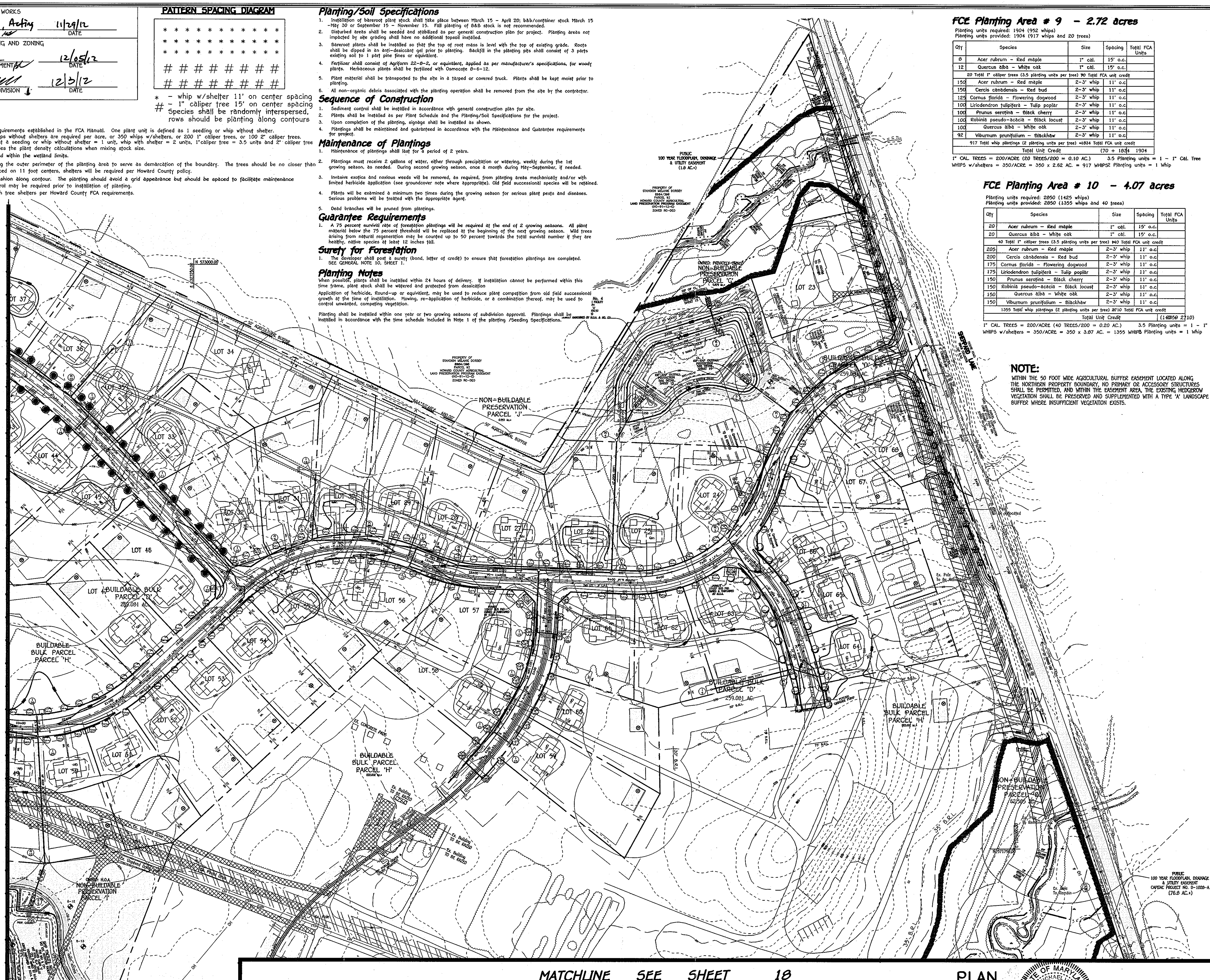

PLAN

SCALE: 1" = 100'

FCE Planting Area # 9 – 2.72 acres

Planting units required: 1904 (952 whips)
Planting units provided: 1904 (917 whips and 20 trees)

Qty	Species	Size	Spacing	Total FCA Units
8	Acer rubrum – Red maple	1" cal.	15' o.c.	
12	Quercus alba – White oak	1" cal.	15' o.c.	
20 Total 1" caliper trees (3.5 planting units per tree) 70 Total FCA unit credit				
150	Acer rubrum – Red maple	2-3' whip	11' o.c	
150	Cercis canadensis – Red bud	2-3' whip	11' o.c	
125	Cornus florida – Flowering dogwood	2-3' whip	11' o.c	
100	Liriodendron tulipifera – Tulip poplar	2-3' whip	11' o.c	
100	Prunus serotina – Black cherry	2-3' whip	11' o.c	
100	Robinia pseudo-acacia – Black locust	2-3' whip	11' o.c	
100	Quercus alba – White oak	2-3' whip	11' o.c	
92	Viburnum prunifolium – Blackhaw	2-3' whip	11' o.c	
917 Total whip plantings (2 planting units per tree) =1834 Total FCA unit credit				
Total Unit Credit		(70 + 1834		1904

1" CAL. TREES = 200/ACRE (20 TREES/200 = 0.10 AC.) 3.5 Planting units = 1 – 1" Cal. Tree
WHIPS w/shelters = 350/ACRE = 350 x 2.62 AC. = 917 WHIPS2 Planting units = 1 Whip

FCE Planting Area # 10 – 4.07 acres

Planting units required: 2850 (1425 whips)
Planting units provided: 2850 (1355 whips and 40 trees)

Qty	Species	Size	Spacing	Total FCA Units
20	Acer rubrum – Red maple	1" cal.	15' o.c.	
20	Quercus alba – White oak	1" cal.	15' o.c.	
40 Total 1" caliper trees (3.5 planting units per tree) 140 Total FCA unit credit				
205	Acer rubrum – Red maple	2-3' whip	11' o.c	
200	Cercis canadensis – Red bud	2-3' whip	11' o.c	
175	Cornus florida – Flowering dogwood	2-3' whip	11' o.c	
175	Liriodendron tulipifera – Tulip poplar	2-3' whip	11' o.c	
150	Prunus serotina – Black cherry	2-3' whip	11' o.c	
150	Robinia pseudo-acacia – Black locust	2-3' whip	11' o.c	
150	Quercus alba – White oak	2-3' whip	11' o.c	
150	Viburnum prunifolium – Blackhaw	2-3' whip	11' o.c	
1355 Total whip plantings (2 planting units per tree) 2710 Total FCA unit credit				
Total Unit Credit				(140850 2710)

1" CAL. TREES = 200/ACRE (40 TREES/200 = 0.20 AC.) 3.5 Planting units = 1 – 1" Cal. Tree
WHIPS w/shelters = 350/ACRE = 350 x 3.87 AC. = 1355 WHIPS Planting units = 1 Whip

NOTE:

WITHIN THE 50 FOOT WIDE AGRICULTURAL BUFFER EASEMENT LOCATED ALONG THE NORTHERN PROPERTY BOUNDARY, NO PRIMARY OR ACCESSORY STRUCTURES SHALL BE PERMITTED, AND WITHIN THE EASEMENT AREA, THE EXISTING HEDGEROW VEGETATION SHALL BE PRESERVED AND SUPPLEMENTED WITH A TYPE 'A' LANDSCAPE BUFFER WHERE INSUFFICIENT VEGETATION EXISTS.

FOREST CONSERVATION DATA (Phase Two)

EASEMENT NO.	CREDITED RETENTION AREA	PLANTING AREA	NON-CREDITED RETENTION AREA	TOTAL EASEMENT AREA
7	1.99 AC.	0.00 AC.	0.00 AC.	1.99 AC.
8	14.51 AC.	0.00 AC.	9.44 AC.	23.95 AC.
9	0.39 AC.	2.72 AC.	0.00 AC.	3.11 AC.
10	0.24 AC.	4.07 AC.	0.00 AC.	4.31 AC.
11	0.00 AC.	2.31 AC.	0.00 AC.	2.31 AC.
TOTAL	17.13 AC.	9.10 AC.	9.44 AC.	35.67 AC.

FCE Planting Area # 11 – 2.31 acres

Planting units required: 1618 (809 whips)
Planting units provided: 1618 (774 whips and 20 trees)

Qty	Species	Size	Spacing	Total FCA Units
8	Acer rubrum – Red maple	1" cal.	15' o.c.	
12	Quercus alba – White oak	1" cal.	15' o.c.	
20 Total 1" caliper trees (3.5 planting units per tree) 70 Total FCA unit credit				
125	Acer rubrum – Red maple	2-3' whip	11' o.c	
125	Cercis canadensis – Red bud	2-3' whip	11' o.c	
75	Cornus florida – Flowering dogwood	2-3' whip	11' o.c	
75	Liriodendron tulipifera – Tulip poplar	2-3' whip	11' o.c	
100	Prunus serotina – Black cherry	2-3' whip	11' o.c	
100	Robinia pseudo-acacia – Black locust	2-3' whip	11' o.c	
94	Quercus alba – White oak	2-3' whip	11' o.c	
80	Viburnum prunifolium – Blackhaw	2-3' whip	11' o.c	
774 Total whip plantings (2 planting units per tree) =1548 Total FCA unit credit				
Total Unit Credit		(70 + 1548)		1618

1" CAL. TREES = 200/ACRE (20 TREES/200 = 0.10 AC.) 3.5 Planting units = 1 – 1" Cal. Tree
WHIPS w/shelters = 350/ACRE = 350 x 2.21 AC. = 774 WHIPS2 Planting units = 1 Whip

FOREST CONSERVATION WORKSHEET (For the entire Walnut Creek subdivision)

NET TRACT AREA	ACRES
A. TOTAL TRACT AREA	435.8
B. DEDUCTIONS (CRITICAL AREA, AREA RESTRICTED BY LOCAL OR PROGRAM) (78.6 AC. FLOODPLAIN & 15.1 AC. UTILITY TRANSMISSION LINE EASEMENTS)	93.7
C. NET TRACT AREA – NET TRACT AREA = TOTAL TRACT (A) – DEDUCTIONS (B)	342.1
LAND USE CATEGORY: MEDIUM DENSITY RESIDENTIAL	
D. AFFORESTATION THRESHOLD (NET TRACT AREA [C] x 20%)	68.4
E. CONSERVATION THRESHOLD (NET TRACT AREA [C] x 25%)	85.5
EXISTING FOREST COVER	
F. EXISTING FOREST COVER WITHIN THE NET TRACT AREA	75.4
G. AREA OF FOREST ABOVE CONSERVATION TRESHOLD	0
IF THE EXISTING FOREST COVER (F) IS GREATER THAN THE CONSERVATION TRESHOLD (E), THEN	
G = F – E; OTHERWISE G = 0.	
BREAKEVEN POINT	
H. BREAKEVEN POINT (AMOUNT OF FOREST THAT MUST BE RETAINED SO THAT NO MITIGATION IS	n/a
REQUIRED)	
(1) IF THE AREA OF FOREST ABOVE CONSERVATION TRESHOLD (G) IS GREATER THAN 0, THEN	
H = (0.2 x THE AREA OF FOREST ABOVE CONSERVATION TRESHOLD (G) + THE	
CONSERVATION TRESHOLD (E);	
(2) IF THE AREA OF FOREST ABOVE CONSERVATION TRESHOLD (G) IS EQUAL TO 0, THEN	
H = EXISTING FOREST COVER (F)	
I. FOREST CLEARING PERMITTED WITHOUT MITIGATION	0
I = EXISTING FOREST COVER (F) – BREAKEVEN POINT (H)	
PROPOSED FOREST CLEARING	
J. TOTAL AREA OF FOREST TO BE CLEARED	15.83
K. TOTAL AREA OF FOREST TO BE RETAINED	59.57
K = EXISTING FOREST COVER (F) – FOREST TO BE CLEARED (J)	
PLANTING REQUIREMENTS	
IF THE TOTAL AREA OF FOREST TO BE RETAINED (K) IS AT OR ABOVE THE BREAKEVEN POINT (H), NO	
PLANTING IS REQUIRED, AND NO FURTHER CALCULATIONS ARE NECESSARY (L=0, M=0, N=0, P=0, Q=0,	
R=0).	
OTHERWISE, CALCULATE THE PLANTING REQUIREMENT(S) AS FOLLOWS:	
L. REFORESTATION FOR CLEARING ABOVE THE CONSERVATION TRESHOLD	0
(1) IF THE TOTAL AREA OF FOREST TO BE RETAINED (K) IS GREATER THAN THE	
CONSERVATION TRESHOLD (E), THEN L = THE AREA OF FOREST TO BE CLEARED (J) x 0.25;	
(2) IF THE FOREST TO BE RETAINED (k) IS LESS THAN OR EQUAL TO THE CONSERVATION TRESHOLD	
(E), THEN L = AREA OF FOREST ABOVE CONSERVATION TRESHOLD (G) x 0.25	
M. REFORESTATION FOR CLEARING BELOW THE CONSERVATION TRESHOLD	31.66
(1) IF EXISTING FOREST COVER (F) IS GREATER THAN THE CONSERVATION TRESHOLD (E) AND THE	
FOREST TO BE RETAINED (K) IS LESS THAN OR EQUAL TO THE CONSERVATION TRESHOLD (E),	
THEN M = 2.0 x (CONSERVATION TRESHOLD (E) – FOREST TO BE RETAINED (K)	
(2) IF EXISTING FOREST COVER (F) IS LESS THAN OR EQUAL TO THE CONSERVATION TRESHOLD (E),	
THEN M = 2.0 x FOREST TO BE CLEARED (J)	
N. CREDIT FOR RETENTION ABOVE THE CONSERVATION TRESHOLD	0
IF THE AREA OF FOREST TO BE RETAINED (K) IS GREATER THAN THE CONSERVATION TRESHOLD (E),	
THEN N = K – E; OTHERWISE N = 0	
P. TOTAL REFORESTATION REQUIRED P = L + M – N	31.66
Q. TOTAL AFFORESTATION REQUIRED	
IF EXISTING FOREST COVER (F) IS LESS THAN THE AFFORESTATION TRESHOLD (D), THEN	
Q = AFFORESTATION TRESHOLD (D) – EXISTING FOREST COVER (F)	0
R. TOTAL PLANTING REQUIREMENT R = P + Q	31.66

NOTE: THIS PROJECT IS USING "RURAL CLUSTER OPTION B" PER APPENDIX L OF THE FOREST CONSERVATION MANUAL FOR ITS FOREST REQUIREMENT CALCULATIONS WHICH INCLUDES THE AREA FOR ALL THE PRESERVATION PARCELS.

FISHER, COLLINS & CARTER, INC.
CIVIL ENGINEERING CONSULTANTS & LAND SURVEYORS
CENTENNIAL SQUARE OFFICE PARK – 10272 BALTIMORE NATIONAL PIKE
ELLICOTT CITY, MARYLAND 21042
(410) 461 – 2855

Eco-Science Professionals, Inc.
CONSULTING ECOLOGISTS

MD DNR Qualified Professional
USACOE Wetland Delineator
Certification # WDCP93MD0610044B
[signature] 11/5/12
JOHN P. CANOLES

⚠	REVISED PARCELS 'E' 'J', 'H' & 'G', ROAD NAMES, WELLS, PROPOSED FORCEMAIN AND TITLE BLOCK	9/25/12
NO.	DESCRIPTION	DATE
	REVISIONS	

OWNER
BASSLERS, INCORPORATED
c/o ALFRED S. BASSLER
4994 SHEPPARD LANE
ELLICOTT CITY, MARYLAND 21042

DEVELOPER
HERITAGE LAND DEVELOPMENT
15950 NORTH AVE.
LISBON, MARYLAND 21765

STATE OF MARYLAND – ALDO MICHAEL VITUCCI – PROFESSIONAL ENGINEER (seal)
[signature] 10/31/12
ALDO M. VITUCCI, P.E. DATE
"Professional Certification. I hereby certify that these documents were prepared by me, and that I am a duly Licensed Professional Engineer under the laws of the State of Maryland, License No. 20748, Expiration Date 2-22-13."

REVISED
FOREST CONSERVATION PLAN
WALNUT CREEK
PHASE TWO
Lots 23 – 68, Non-Buildable Preservation Parcels 'C', 'G', 'I', 'J', 'K', 'L' And 'M' & Buildable Bulk Parcels 'H' And 'N'
(Being A Resubdivision Of Buildable Bulk Parcels 'F' & 'E' And a Revision To Non-Buildable Preservation Parcel 'C' – Walnut Creek, Phase One, Plat No's. 20631 Thru 20647

ZONED: RC-DEO & RR-DEO
TAX MAP No. 28 GRID Nos. 4, 5, 10-12, 17, AND 18 PARCEL No. 49
FIFTH ELECTION DISTRICT
HOWARD COUNTY, MARYLAND
DATE: SEPTEMBER, 2008
SHEET 19 OF 32

F-08-081

I:\2004\04001\dwg\PHASE TWO FINALS\PHASE TWO REDLINE 2012\04001-8001 SHEET 18-22 FINAL FOREST PLANS MYLARS.dwg, SHEET 19, 10/30/2012 3:34:54 PM, 1:1

APPROVED: DEPARTMENT OF PUBLIC WORKS

Diane Schwartz Acting — 11/29/12
CHIEF, BUREAU OF HIGHWAYS — DATE

APPROVED: DEPARTMENT OF PLANNING AND ZONING

Kent Sheubrooks — 12/05/12
CHIEF, DIVISION OF LAND DEVELOPMENT — DATE

12/3/12
CHIEF, DEVELOPMENT ENGINEERING DIVISION — DATE

MATCHLINE SEE SHEET 21

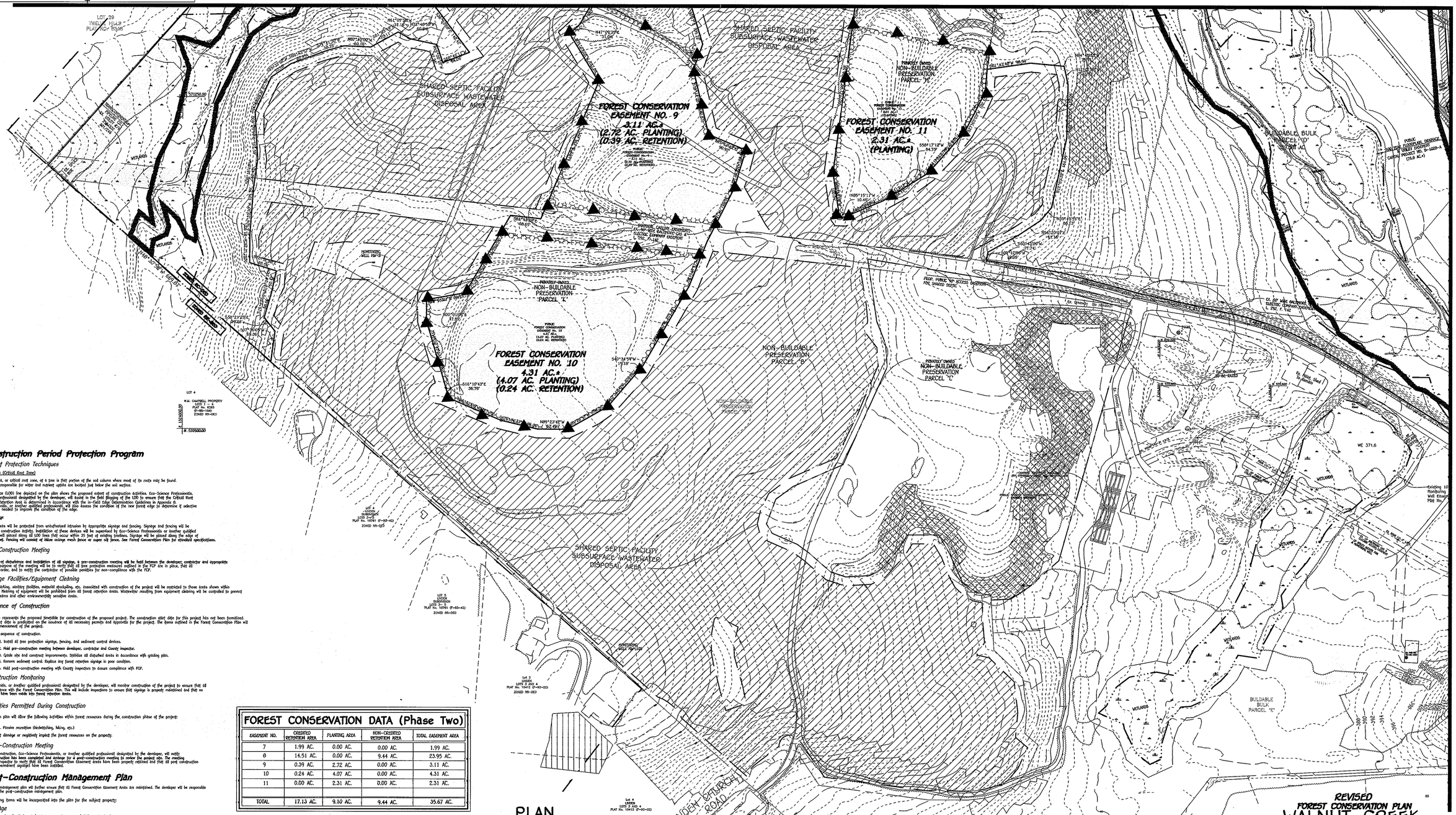

MATCHLINE SEE SHEET 18

Construction Period Protection Program

A. Forest Protection Techniques

1. Soil Protection Area (Critical Root Zone)

The soil protection area, or critical root zone, of a tree is that portion of the soil column where most of its roots may be found. The majority of roots responsible for water and nutrient uptake are located just below the soil surface.

The limit of disturbance (LOD) line depicted on the plan shows the proposed extent of construction activities. Eco-Science Professionals, or another qualified professional designated by the developer, will assist in the field flagging of the LOD to ensure that the Critical Root Zone for the Forest Retention Area is determined in accordance with the in-field Edge Determination Guidelines in Appendix B. Eco-Science Professionals, or another qualified professional, will also assess the condition of the new forest edge to determine if selective thinning or pruning is needed to improve the condition of the edge.

2. Fencing and Signage

All forest retention areas will be protected from unauthorized intrusion by appropriate signage and fencing. Signage and fencing will be installed prior to any construction activity. Installation of these devices will be supervised by Eco-Science Professionals or another qualified professional. Fencing will placed along all LOD lines that occur within 35 feet of existing treelines. Signage will be placed along the edge of the FCE every 100 feet. Fencing will consist of blaze orange mesh fence or super silt fence. See Forest Conservation Plan for standard specifications.

B. Pre-Construction Meeting

Upon staking of limits of disturbance and installation of all signage, a pre-construction meeting will be held between the developer, contractor and appropriate County inspector. The purpose of the meeting will be to verify that all tree protection measures outlined in the FCP are in place, that all sediment control is in order, and to notify the contractor of possible penalties for non-compliance with the FCP.

C. Storage Facilities/Equipment Cleaning

All equipment storage, parking, sanitary facilities, material stockpiling, etc. associated with construction of the project will be restricted to those areas shown within the limit of disturbance. Washing of equipment will be prohibited from all forest retention areas. Wastewater resulting from equipment cleaning will be controlled to prevent runoff into wetlands, streams and other environmentally sensitive areas.

D. Sequence of Construction

The following timetable represents the proposed timetable for construction of the proposed project. The construction start date for this project has not been formalized. The actual project start date is predicated on the issuance of all necessary permits and approvals for the project. The items outlined in the Forest Conservation Plan will be enacted upon commencement of the project.

Below find a sequence of construction.

1. Install all tree protection signage, fencing, and sediment control devices.
2. Hold pre-construction meeting between developer, contractor and County inspector.
3. Grade site and construct improvements. Stabilize all disturbed areas in accordance with grading plan.
4. Remove sediment control. Replace any forest retention signage in poor condition.
5. Hold post-construction meeting with County inspectors to assure compliance with FCP.

E. Construction Monitoring

Eco-Science Professionals, or another qualified professional designated by the developer, will monitor construction of the project to ensure that all activities are in compliance with the Forest Conservation Plan. This will include inspections to ensure that signage is properly maintained and that no unauthorized intrusions have been made into forest retention areas.

F. Activities Permitted During Construction

The forest conservation plan will allow the following activities within forest resources during the construction phase of the project:

1. Passive recreation (birdwatching, hiking, etc.)

These activities will not damage or negatively impact the forest resources on the property.

G. Post-Construction Meeting

Upon completion of construction, Eco-Science Professionals, or another qualified professional designated by the developer, will notify the County that construction has been completed and request a post-construction meeting to review the project site. The meeting will allow the County inspector to verify that all Forest Conservation Easement areas have been properly restored and that all post construction protection measures (permanent signage) have been installed.

Post-Construction Management Plan

The post-construction management plan will further ensure that all Forest Conservation Easement Areas are maintained. The developer will be responsible for implementation of the post-construction management plan.

The following items will be incorporated into the plan for the subject property:

A. Signage

Signage indicating the limits of the forest retention areas shall be maintained.

FOREST CONSERVATION DATA (Phase Two)

EASEMENT NO.	CREDITED RETENTION AREA	PLANTING AREA	NON-CREDITED RETENTION AREA	TOTAL EASEMENT AREA
7	1.99 AC.	0.00 AC.	0.00 AC.	1.99 AC.
8	14.51 AC.	0.00 AC.	9.44 AC.	23.95 AC.
9	0.39 AC.	2.72 AC.	0.00 AC.	3.11 AC.
10	0.24 AC.	4.07 AC.	0.00 AC.	4.31 AC.
11	0.00 AC.	2.31 AC.	0.00 AC.	2.31 AC.
TOTAL	17.13 AC.	9.10 AC.	9.44 AC.	35.67 AC.

PLAN

SCALE: 1" = 100'

FISHER, COLLINS & CARTER, INC.
CIVIL ENGINEERING CONSULTANTS & LAND SURVEYORS
CENTENNIAL SQUARE OFFICE PARK - 10272 BALTIMORE NATIONAL PIKE
ELLICOTT CITY, MARYLAND 21042
(410) 461 - 2855

Eco-Science Professionals, Inc.
CONSULTING ECOLOGISTS

MD DNR Qualified Professional
USACOE Wetland Delineator
Certification # WDCP93M0061004 4B
JOHN P. CANOLES 11/5/12

NO.	DESCRIPTION	DATE
1	REVISED PARCELS 'E' 'J', 'H' & 'Q', ROAD NAMES, WELLS, PROPOSED FORCEMAIN AND TITLE BLOCK	9/25/12

REVISIONS

OWNER
BASSLER, INCORPORATED
c/o ALFRED S. BASSLER
4994 SHEPPARD LANE
ELLICOTT CITY, MARYLAND 21042

DEVELOPER
HERITAGE LAND DEVELOPMENT
15950 NORTH AVE.
LISBON, MARYLAND 21765

STATE OF MARYLAND — ALDO MICHAEL VIOLANO — No. 20748 — PROFESSIONAL ENGINEER

ALDO MICHAEL VIOLANO — DATE 10/24/12

"Professional Engineer's Certification: I hereby certify that these documents were prepared by me, and that I am a duly Licensed Professional Engineer under the laws of the State of Maryland, License No. 20748, Expiration Date 2-22-13."

REVISED FOREST CONSERVATION PLAN
WALNUT CREEK
PHASE TWO

Lots 23 - 60, Non-Buildable Preservation Parcels 'C', 'G', 'I', 'J', 'K', 'L' And 'M' & Buildable Bulk Parcels 'H' And 'N'

(Being A Resubdivision Of Buildable Bulk Parcels 'F' & 'E' And a Revision To Non-Buildable Preservation Parcel 'C' - Walnut Creek, Phase One, Plat No's. 20631 Thru 20647

ZONED: RC-DEO & RR-DEO
TAX MAP No. 28 GRID Nos. 4, 5, 10-12, 17, AND 18 PARCEL No. 49
FIFTH ELECTION DISTRICT
HOWARD COUNTY, MARYLAND
DATE: SEPTEMBER, 2008
SHEET 20 OF 32

F-08-061

I:\2004\04001\dwg\PHASE TWO FINALS\PHASE TWO REFLINE 2012\04001-R001 SHEET 18-22 FINAL FOREST PLANS\MYLARS.dwg, SHEET 20, 10/30/2012 9:37:34 PM, 1:1

APPROVED: DEPARTMENT OF PUBLIC WORKS

Diane Schwartz, Acting — 11/29/12
CHIEF, BUREAU OF HIGHWAYS — DATE

APPROVED: DEPARTMENT OF PLANNING AND ZONING

Kent Sheubrooks — 12/05/12
CHIEF, DIVISION OF LAND DEVELOPMENT — DATE

12/3/12
CHIEF, DEVELOPMENT ENGINEERING DIVISION — DATE

NOTE:
WITHIN THE 50 FOOT WIDE AGRICULTURAL BUFFER EASEMENT LOCATED ALONG THE NORTHERN PROPERTY BOUNDARY, NO PRIMARY OR ACCESSORY STRUCTURES SHALL BE PERMITTED, AND WITHIN THE EASEMENT AREA, THE EXISTING HEDGEROW VEGETATION SHALL BE PRESERVED AND SUPPLEMENTED WITH A TYPE 'A' LANDSCAPE BUFFER WHERE INSUFFICIENT VEGETATION EXISTS.

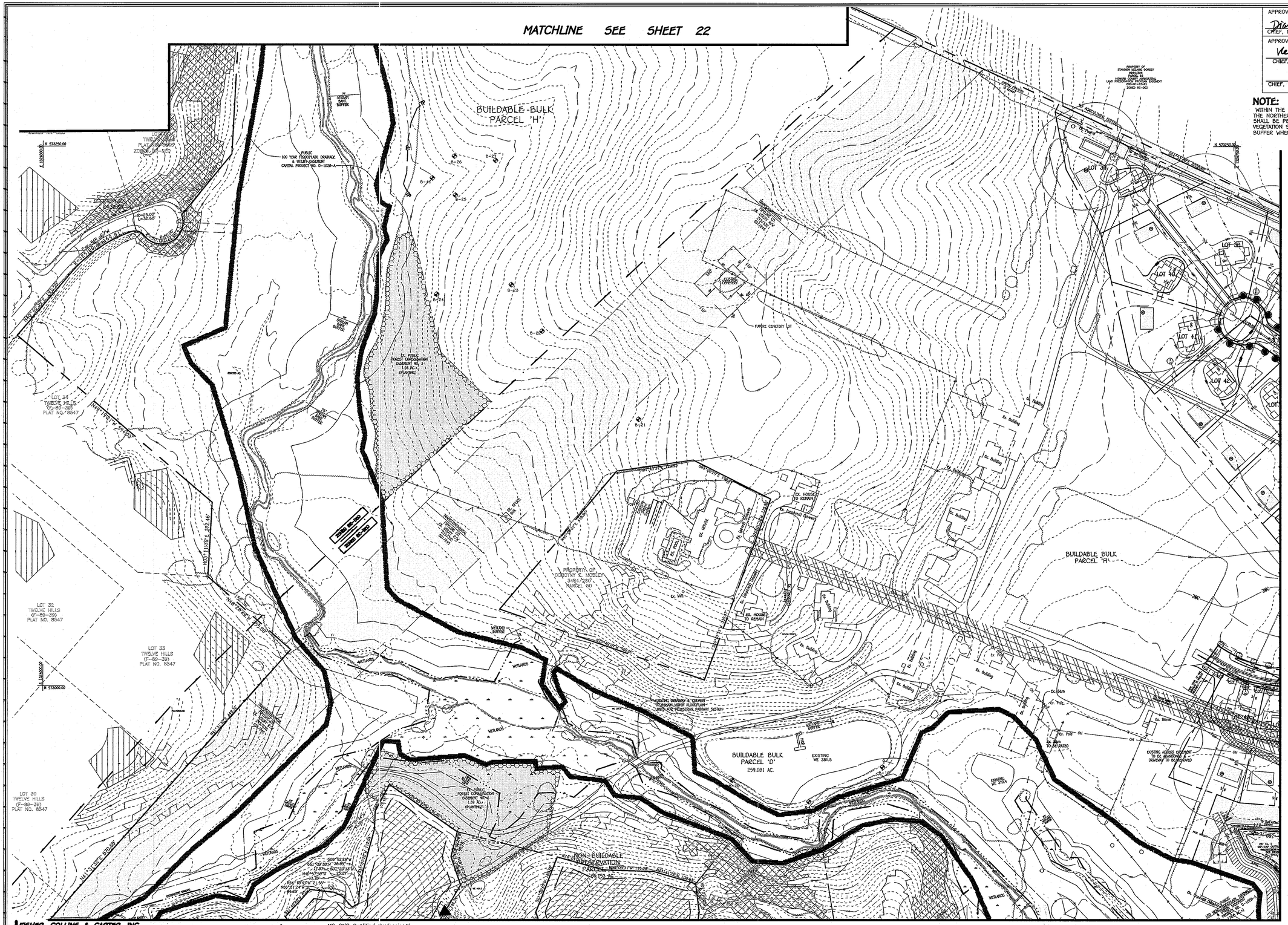

ALDO A. CANOLES, JR. — 10/31/12
"Professional Engineer's Seal, Signature: I hereby certify that these documents were prepared or approved by me, and that I am a duly Licensed Professional Engineer under the laws of the State of Maryland, License No. 20748, Expiration Date 2-22-13."

PLAN

SCALE: 1" = 100'

REVISED FOREST CONSERVATION PLAN

WALNUT CREEK

PHASE TWO

Lots 23 – 68, Non-Buildable Preservation Parcels 'C', 'G', 'I', 'J', 'K', 'L' And 'M' & Buildable Bulk Parcels 'H' And 'N'

(Being A Resubdivision Of Buildable Bulk Parcels 'F' & 'E' And a Revision To Non-Buildable Preservation Parcel 'C' – Walnut Creek, Phase One, Plat No's. 20631 Thru 20647

ZONED: RC-DEO & RR-DEO

TAX MAP No. 28 GRID Nos. 4, 5, 10-12, 17, AND 18 PARCEL No. 49

FIFTH ELECTION DISTRICT
HOWARD COUNTY, MARYLAND
DATE: SEPTEMBER, 2008
SHEET 21 OF 32

NO.	DESCRIPTION	DATE
1	REVISED PARCELS 'E' 'J', 'H' & 'G', ROAD NAMES, WELLS, PROPOSED FORCEMAIN AND TITLE BLOCK	9/25/12

REVISIONS

OWNER
BASSLERS, INCORPORATED
c/o ALFRED S. BASSLER
4994 SHEPPARD LANE
ELLICOTT CITY, MARYLAND 21042

DEVELOPER
HERITAGE LAND DEVELOPMENT
15950 NORTH AVE.
LISBON, MARYLAND 21765

FISHER, COLLINS & CARTER, INC.
CIVIL ENGINEERING CONSULTANTS & LAND SURVEYORS
CONTINENTAL SQUARE OFFICE PARK – 10272 BALTIMORE NATIONAL PIKE
ELLICOTT CITY, MARYLAND 21042
(410) 461 – 2855

Eco-Science Professionals, Inc.
CONSULTING ECOLOGISTS

MD DNR Qualified Professional
USACOE Wetland Delineator
Certification # WDCP53M1D0610044B
JOHN P. CANOLES 11/6/12

F-08-081

APPROVED: DEPARTMENT OF PUBLIC WORKS

Diane Schwarz, Acting — 11/29/12
CHIEF, BUREAU OF HIGHWAYS — DATE

APPROVED: DEPARTMENT OF PLANNING AND ZONING

Kent Sheubrooks — 12/05/12
CHIEF, DIVISION OF LAND DEVELOPMENT — DATE

12/3/12
CHIEF, DEVELOPMENT ENGINEERING DIVISION — DATE

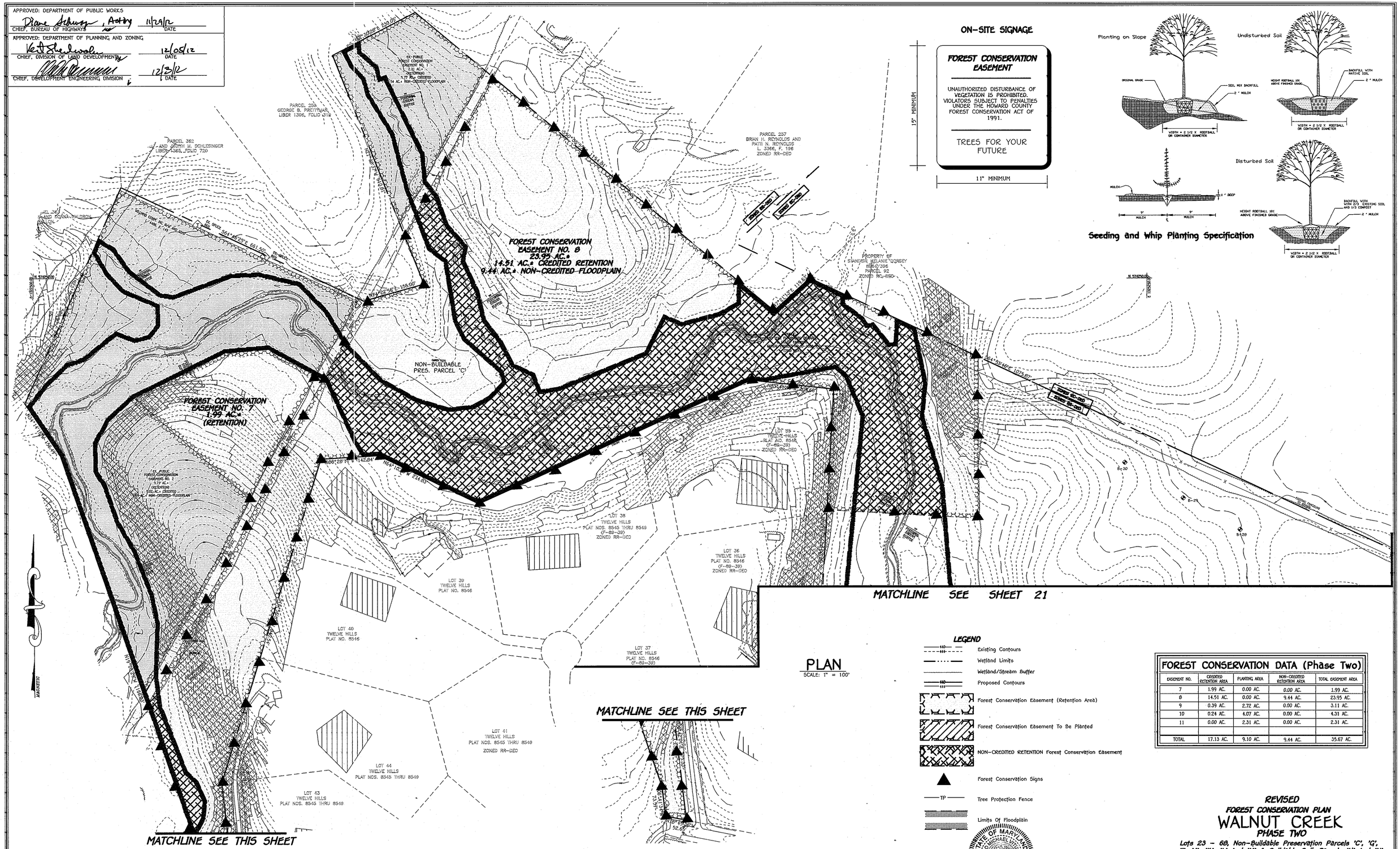

ON-SITE SIGNAGE

Seeding and Whip Planting Specification

PLAN

SCALE: 1" = 100'

LEGEND

- Existing Contours
- Wetland Limits
- Wetland/Stream Buffer
- Proposed Contours
- Forest Conservation Easement (Retention Area)
- Forest Conservation Easement To Be Planted
- NON-CREDITED RETENTION Forest Conservation Easement
- Forest Conservation Signs
- TP — Tree Protection Fence
- Limits Of Floodplain

FOREST CONSERVATION DATA (Phase Two)				
EASEMENT NO.	CREDITED RETENTION AREA	PLANTING AREA	NON-CREDITED RETENTION AREA	TOTAL EASEMENT AREA
7	1.99 AC.	0.00 AC.	0.00 AC.	1.99 AC.
8	14.51 AC.	0.00 AC.	9.44 AC.	23.95 AC.
9	0.39 AC.	2.72 AC.	0.00 AC.	3.11 AC.
10	0.24 AC.	4.07 AC.	0.00 AC.	4.31 AC.
11	0.00 AC.	2.31 AC.	0.00 AC.	2.31 AC.
TOTAL	17.13 AC.	9.10 AC.	9.44 AC.	35.67 AC.

STATE OF MARYLAND — ALDO MICHAEL TURCO — PROFESSIONAL ENGINEER

10/31/12
ALDO M. TURCO — DATE

"Professional Engineer's Seal. I hereby certify that these documents were prepared by me, and that I am a duly Licensed Professional Engineer under the laws of the State of Maryland, License No. 20746, Expiration Date 2-22-13."

REVISED
FOREST CONSERVATION PLAN
WALNUT CREEK
PHASE TWO

Lots 23 – 68, Non-Buildable Preservation Parcels 'C', 'G', 'I', 'J', 'K', 'L' And 'M' & Buildable Bulk Parcels 'H' And 'N'

(Being A Resubdivision Of Buildable Bulk Parcels 'F' & 'E' And a Revision To Non-Buildable Preservation Parcel 'C' – Walnut Creek, Phase One, Plat No's. 20631 Thru 20647

ZONED: RC-DEO & RR-DEO

TAX MAP No. 28 GRID Nos. 4, 5, 10-12, 17, AND 18 PARCEL No. 49

FIFTH ELECTION DISTRICT
HOWARD COUNTY, MARYLAND
DATE: SEPTEMBER, 2008
SHEET 22 OF 32

FISHER, COLLINS & CARTER, INC.
CIVIL ENGINEERING CONSULTANTS & LAND SURVEYORS
CONTINENTAL SQUARE OFFICE PARK – 10272 BALTIMORE NATIONAL PIKE
ELLICOTT CITY, MARYLAND 21042
(410) 461 – 2855

Eco-Science Professionals, Inc.
CONSULTING ECOLOGISTS

MD DNR Qualified Professional
USACOE Wetland Delineator
Certification # WDCP93M1006100448
John P. Canolles 11/5/12
JOHN P. CANOLES

NO.	DESCRIPTION	DATE
1	REVISED PARCELS 'E' 'J', 'H' & 'G', ROAD NAMES, WELLS, PROPOSED FORCEMAIN AND TITLE BLOCK.	9/25/12

REVISIONS

OWNER
BASSLERS, INCORPORATED
c/o ALFRED S. BASSLER
4994 SHEPPARD LANE
ELLICOTT CITY, MARYLAND 21042

DEVELOPER
HERITAGE LAND DEVELOPMENT
15950 NORTH AVE.
LISBON, MARYLAND 21765

F-08-081

I:\2004\04001\dwg\PHASE TWO FINALS\PHASE TWO FIBERLINE 2012\04001-8001 SHEET 19-22 FINAL FOREST PLANS NYLAS.dwg, SHEET 22, 10/30/2012 3:48:13 PM, 1:1

STORM WATER MANAGEMENT POND CONSTRUCTION SPECIFICATIONS

These specifications are appropriate to all ponds within the scope of the Standard for practice MD-378. All references to ASTM and AASHTO specifications apply to the most recent version.

Site Preparation

Areas designated for borrow areas, embankment, and structural works shall be cleared, grubbed and stripped of topsoil. All trees, vegetation, roots and other objectionable material shall be removed. Channel banks and sharp breaks shall be sloped to no steeper than 1:1. All trees shall be cleared and grubbed within 15 feet of the toe of the embankment.

Areas to be covered by the reservoir will be cleared of all trees, brush, logs, fences, rubbish and other objectionable material unless otherwise designated on the plans. Trees, brush, and stumps shall be cut approximately level with the ground surface. For dry stormwater management ponds, a minimum of a 25-foot radius around the inlet structure shall be cleared.

All cleared and grubbed material shall be disposed of outside and below the limits of the dam and reservoir as directed by the owner or his representative. When specified, a sufficient quantity of topsoil will be stockpiled in a suitable location for use on the embankment and other designated areas.

EARTH FILL

Material - The fill material shall be taken from approved designated borrow areas. It shall be free of roots, stumps, wood, rubbish, stones greater than 6", frozen or other objectionable materials. Fill material for the center of the embankment, and cut off trench shall conform to Unified Soil Classification GC, SC, CH, or CL and must have at least 30% passing the #200 sieve. Consideration may be given to the use of other materials in the embankment if designed by a geotechnical engineer. Such special designs must have construction supervised by a geotechnical engineer. Materials used in the outer shell of the embankment must have the capability to support vegetation of the quality required to prevent erosion of the embankment.

Placement - Areas on which fill is to be placed shall be scarified prior to placement of fill. Fill materials shall be placed in maximum 8-inch thick (before compaction) layers which are to be continuous over the entire length of the fill. The most permeable borrow material shall be placed in the downstream portions of the embankment. The principal spillway must be installed concurrently with fill placement and not excavated into the embankment.

Compaction - The movement of the hauling and spreading equipment over the fill shall be controlled so that the entire surface of each lift shall be traversed by not less than one tread track of heavy equipment or compaction shall be achieved by a minimum of four complete passes of a sheepsfoot, rubber tired or vibratory roller. Fill material shall contain sufficient moisture such that the required degree of compaction will be obtained with the equipment used. The fill material shall contain sufficient moisture so that if formed into a ball it will not crumble, yet not be so wet that water can be squeezed out.

When required by the reviewing agency the minimum required density shall not be less than 95% of maximum dry density with a moisture content within +2% of the optimum. Each layer of fill shall be compacted as necessary to obtain that density, and is to be certified by the Engineer at the time of construction. All compaction is to be determined by AASHTO Method T-99 (Standard Proctor).

Cut Off Trench - The cutoff trench shall be excavated into impervious material along or parallel to the centerline of the embankment as shown on the plans. The bottom width of the trench shall be governed by the equipment used for excavation, with the minimum width being four feet. The depth shall be at least four feet below existing grade or as shown on the plans. The side slopes of the trench shall be 1 to 1 or flatter. The backfill shall be compacted with construction equipment, rollers, or hand tampers to assure maximum density and minimum permeability.

Embankment Core - The core shall be parallel to the centerline of the embankment as shown on the plans. The top width of the core shall be a minimum of four feet. The height shall extend up to at least the 10 year water elevation or as shown on the plans. The side slopes shall be 1 to 1 or flatter. The core shall be compacted with construction equipment, rollers, or hand tampers to assure maximum density and minimum permeability. In addition, the core shall be placed concurrently with the outer shell of the embankment.

Structure Backfill

Backfill adjacent to pipes or structures shall be of the type and quality conforming to that specified for the adjoining fill material. The fill shall be placed in horizontal layers not to exceed four inches in thickness and compacted by hand tampers or other manually directed compaction equipment. The material needs to fill completely all spaces under and adjacent to the pipe. At no time during the backfilling operation shall driven equipment be allowed to operate closer than four feet, measured horizontally, to any part of a structure. Under no circumstances shall equipment be driven over any part of a concrete structure or pipe, unless there is a compacted fill of 24" or greater over the structure or pipe.

Structure backfill may be flowable fill meeting the requirements of Maryland Department of Transportation, State Highway Administration Standard Specifications for Construction and Materials, Section 313 as modified. The mixture shall have a 100-200 psi; 28 day unconfined compressive strength. The flowable fill shall have a minimum pH of 4.0 and a minimum resistivity of 2,000 ohm-cm. Material shall be placed such that a minimum of 6" (measured perpendicular to the outside of the pipe) of flowable fill shall be under (bedding), over and, on the sides of the pipe. It only needs to extend up to the spring line for rigid conduits. Average slump of the fill shall be 7" to assure flowability of the material. Adequate measures shall be taken (sand bags, etc.) to prevent floating the pipe. When using flowable fill, all metal pipe shall be bituminous coated. Any adjoining soil fill shall be placed in horizontal layers not to exceed four inches in thickness and compacted by hand tampers or other manually directed compaction equipment. The material shall completely fill all voids adjacent to the flowable fill zone. At no time during the backfilling operation shall driven equipment be allowed to operate closer than four feet, measured horizontally, to any part of a structure. Under no circumstances shall equipment be driven over any part of a structure or pipe unless there is a compacted fill of 24" or greater over the structure or pipe. Backfill material outside the structural backfill (flowable fill) zone shall be of the type and quality conforming to the specified for the core of the embankment or other embankment materials.

Pipe Conduits

All pipes shall be circular in cross section.

Corrugated Metal Pipe - All of the following criteria shall apply for corrugated metal pipe:

1. Materials - (Polymer Coated steel pipe) - Steel pipes with polymeric coatings shall have a minimum coating thickness of 0.01 inch (10 mil) on both sides of the pipe. This pipe and its appurtenances shall conform to the requirements of AASHTO Specifications M-245 & M-246 with watertight coupling bands or flanges.

Materials - (Aluminum Coated Steel Pipe) - This pipe and its appurtenances shall conform to the requirements of AASHTO Specification M-274 with watertight coupling bands or flanges. Aluminum Coated Stel Pipe, when used with flowable fill or when soil and/or water conditions warrant the need for increased durability, shall be fully bituminous coated per requirements of AASHTO Specification M-190 Type A. Any aluminum coating damaged or otherwise removed shall be replaced with cold applied bituminous coating compound. Aluminum surfaces that are to be in contact with concrete shall be painted with one coat of zinc chromate primer or two coats of asphalt.

Materials - (Aluminum Pipe) - This pipe and its appurtenances shall conform to the requirements of AASHTO Specification M-196 or M-211 with watertight coupling banks or flanges. Aluminum Pipe, when used with flowable fill or when soil and/or water conditions warrant for increased durability, shall be fully bituminous coated per requirements of AASHTO Specification M-190 Type A. Aluminum surfaces that are to be in contact with concrete shall be painted with one coat of zinc chromate primer or two coats of asphalt. Hot dip galvanized bolts may be used for connections. The pH of the surrounding soils shall be between 4 and 9.

2. Coupling bands, anti-seep collars, end sections, etc., must be composed of the same material and coatings as the pipe. Metals must be insulated from dissimilar materials with use of rubber or plastic insulating materials at least 24 mils in thickness.

3. Connections- All connections with pipes must be completely watertight. The drain pipe or barrel connection to the riser shall be welded all around when the pipe and riser are metal. Anti-seep collars shall be connected to the pipe in such a manner as to be completely watertight. Dimple bands are not considered to be watertight.

All connections shall use a rubber or neoprene gasket when joining pipe sections. The end of each pipe shall be re-rolled an adequate number of corrugations to accommodate the bandwidth. The following type connections are acceptable for pipes less than 24-inches in diameter: flanges on both ends of the pipe with a circular 3/8 inch closed cell neoprene gasket, prepunched to the flange bolt circle, sandwiched between adjacent flanges; a 12-inch wide standard lap type band with 12-inch wide by 3/8-inch thick closed cell circular neoprene gasket; and a 12-inch wide hugger type band with o-ring gaskets having a minimum diameter of 1/2-inch greater than the corrugation depth. Pipes 24-inches in diameter and larger shall be connected by a 24-inch long annular corrugated band using a minimum of 4 (four) rods and lugs, 2 on each connecting pipe end. A 24-inch wide by 3/8-inch thick closed cell circular neoprene gasket will be installed with 12-inches on the end of each pipe. Flanged joints with 3/8-inch closed cell gaskets the full width of the flange is also acceptable.

Helically corrugated pipe shall have either continuously welded seams or have lock seams with internal caulking or a neoprene bead.

4. Bedding - The pipe shall be firmly and uniformly bedded throughout its entire length. Where rock or soft, spongy or other unstable soil is encountered, all such material shall be removed and replaced with suitable earth compacted to provide adequate support.

5. Backfilling shall conform to "Structure Backfill".

6. Other details (anti-seep collars, valves, etc.) shall be as shown on the drawings.

Reinforced Concrete Pipe - All of the following criteria shall apply for reinforced concrete pipe:

1. Materials - Reinforced concrete pipe shall have bell and spigot joints with rubber gaskets and shall equal or exceed ASTM C-361.

2. Bedding - Reinforced concrete pipe conduits shall be laid in a concrete bedding/cradle for their entire length. This bedding/cradle shall consist of high slump concrete placed under the pipe and up the sides of the pipe at least 50% of its outside diameter with a minimum thickness of 6 inches. Where a concrete cradle is not needed for structural reasons, flowable fill may be used as described in the "Stucture Backfill" section of this standard. Gravel bedding is not permitted.

3. Laying pipe - Bell and spigot pipe shall be placed with the bell end upstream. Joints shall be made in accordance with recommendations of the manufacturer of the material. After the joints are sealed for the entire line, the bedding shall be placed so that all spaces under the pipe are filled. Care shall be exercised to prevent any deviation from the original line and grade of the pipe. The first joint must be located within 4 feet from the riser.

4. Backfilling shall conform to "Structure Backfill".

5. Other details (Anti-seep collars, valves, etc.) shall be as shown on the drawings.

Plastic Pipe

The following criteria shall apply for plastic pipe:

1. Materials - PVC pipe shall be PVC-1120 or PVC-1220 conforming to ASTM D-1785 or ASTM D-2241. Corrugated High Density Polyethylene (HDPE) pipe, couplings and fittings shall conform to the following: 4" - 10" inch pipe shall meet the requirement of AASHTO M252 Type S, and 12" through 24" inch shall meet the requirement of AASHTO M294 Type S.

2. Joints and connections to anti-seep collars shall be completely watertight.

3. Bedding - The pipe shall be firmly and uniformly bedded throughout its entire length. Where rock or soft, spongy or other unstable soil is encountered, all such material shall be removed and replaced with suitable earth compacted to provide adequate support.

4. Backfilling shall conform to "Structure Backfill".

5. Other details (anti-seep collars, valves, etc.) shall be as shown on the drawings.

Drainage Diaphragms - When a drainage diaphragm is used, a registered professional engineer will supervise the design and construction inspection.

Concrete

Concrete shall meet the requirements of Maryland Department of Transportation, State Highway Administration Standard Specifications for Construction and Materials, Section 414, Mix No. 3.

Rock Riprap

Rock riprap shall meet the requirements of Maryland Department of Transportation, State Highway Administration Standard Specifications for Construction and Materials, Section 311.

Geotextile shall be placed under all riprap and shall meet the requirements of Maryland Department of Transportation, State Highway Administration Standard Specifications for Construction and Materials, Section 921.09, Class C.

Care of Water during Construction

All work on permanent structures shall be carried out in areas free from water. The Contractor shall construct and maintain all temporary dikes, levees, cofferdams, drainage channels, and stream diversions necessary to protect the areas to be occupied by the permanent works. The contractor shall also furnish, install, operate, and maintain all necessary pumping and other equipment required for removal of water from various parts of the work and for maintaining the excavations, foundation, and other parts of the work free from water as required or directed by the engineer for constructing each part of the work. After having served their purpose, all temporary protective works shall be removed or leveled and graded to the extent required to prevent obstruction in any degree whatsoever of the flow of water to the spillway or outlet works and so as not to interfere in any way with the operation or maintenance of the structure. Stream diversions shall be maintained until the full flow can be passed through the permanent works. The removal of water from the required excavation and the foundation shall be accomplished in a manner and to the extent that will maintain stability of the excavated slopes and bottom required excavations and will allow satisfactory performance of all construction operations. During the placing and compacting of material in required excavations, the water level at the locations being refilled shall be maintained below the bottom of the excavation at such locations which may require draining the water sumps from which the water shall be pumped.

Stabilization

All borrow areas shall be graded to provide proper drainage and left in a sightly condition. All exposed surfaces of the embankment, spillway, spoil and borrow areas, and berms shall be stabilized by seeding, liming, fertilizing and mulching in accordance with the Natural Resources Conservation Service Standards and Specifications for Critical Area Planting (MD-342) or as shown on the accompanying drawings.

Erosion and Sediment Control

Construction operations will be carried out in such a manner that erosion will be controlled and water and air pollution minimized. State and local laws concerning pollution abatement will be followed. Construction plans shall detail erosion and sediment control measures.

OPERATION AND MAINTENANCE

An operation and maintenance plan in accordance with Local or State Regulations will be prepared for all ponds. As a minimum, the dam inspection checklist located in Appendix A shall be included as part of the operation and maintenance plan and performed at least annually. Written records of maintenance and major repairs needs to be retained in a file. The issuance of a Maintenance and Repair Permit for any repairs or maintenance that involves the modification of the dam or spillway from its original design and specifications is required. A permit is also required for any repairs or reconstruction that involve a substantial portion of the structure. All indicated repairs are to be made as soon as practical.

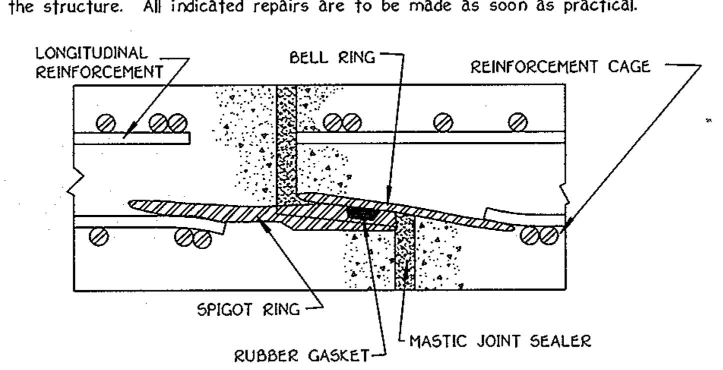

NOTE: PROVIDE MASTIC JOINT SEALER FROM OUTSIDE OF PIPE JOINTS PRIOR TO INSTALLING BARREL UNDERGROUND

ASTM DESIGNATION C361
DIAMETERS 12 THRU 168 INCH
PRESSURES TO 125 FEET OF HEAD

CONCRETE PIPE JOINT DETAIL

(NO SCALE)

FISHER, COLLINS & CARTER, INC.
CIVIL ENGINEERING CONSULTANTS & LAND SURVEYORS
CENTENNIAL SQUARE OFFICE PARK - 10272 BALTIMORE NATIONAL PIKE
ELLICOTT CITY, MARYLAND 21042
(410) 461 - 2855

⚠	REVISED PARCELS 'E' 'J', 'H' & 'G', ROAD NAMES AND TITLE BLOCK	9/25/12
NO.	DESCRIPTION	DATE
REVISIONS		

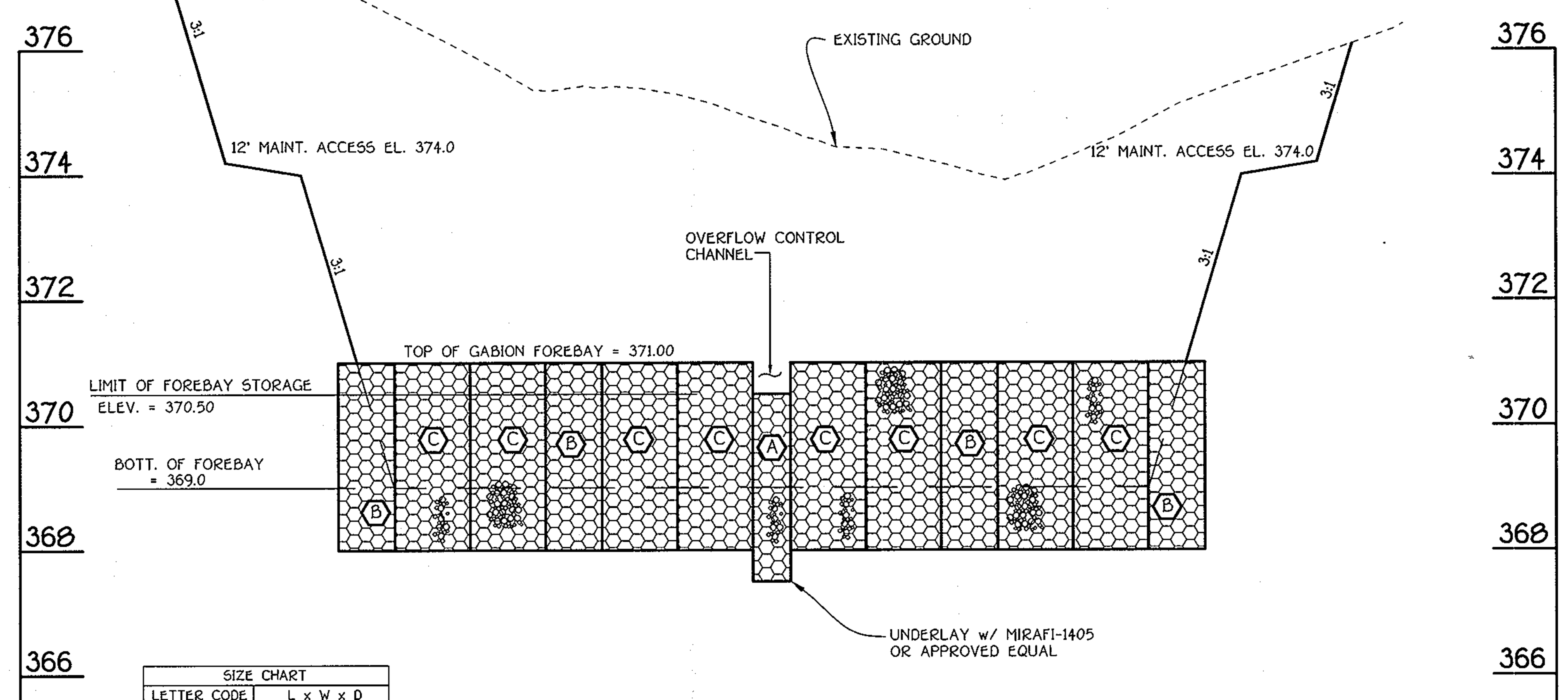

SIZE CHART	
LETTER CODE	L x W x D
A	6' x 3' x 3'
B	9' x 3' x 3'
C	12' x 3' x 3'

GABION FOREBAY 'A' PROFILE

SCALE: HORIZ. 1" = 20'
VERT. 1" = 2'

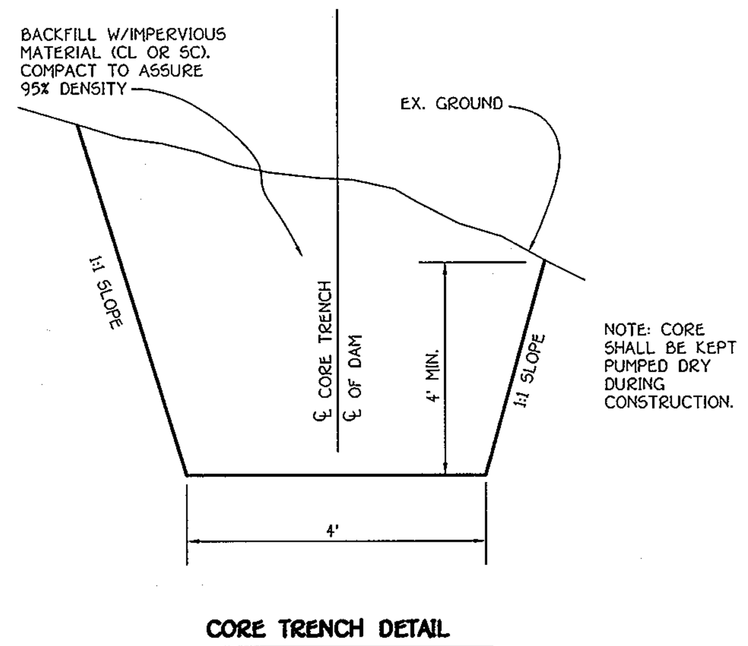

CORE TRENCH DETAIL

NOT TO SCALE

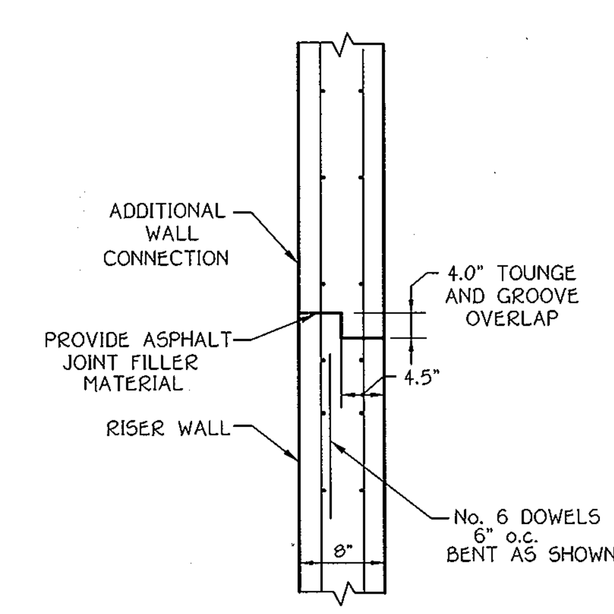

KEYED JOINT DETAIL WALL SECTION TO WALL SECTION

(NO SCALE)

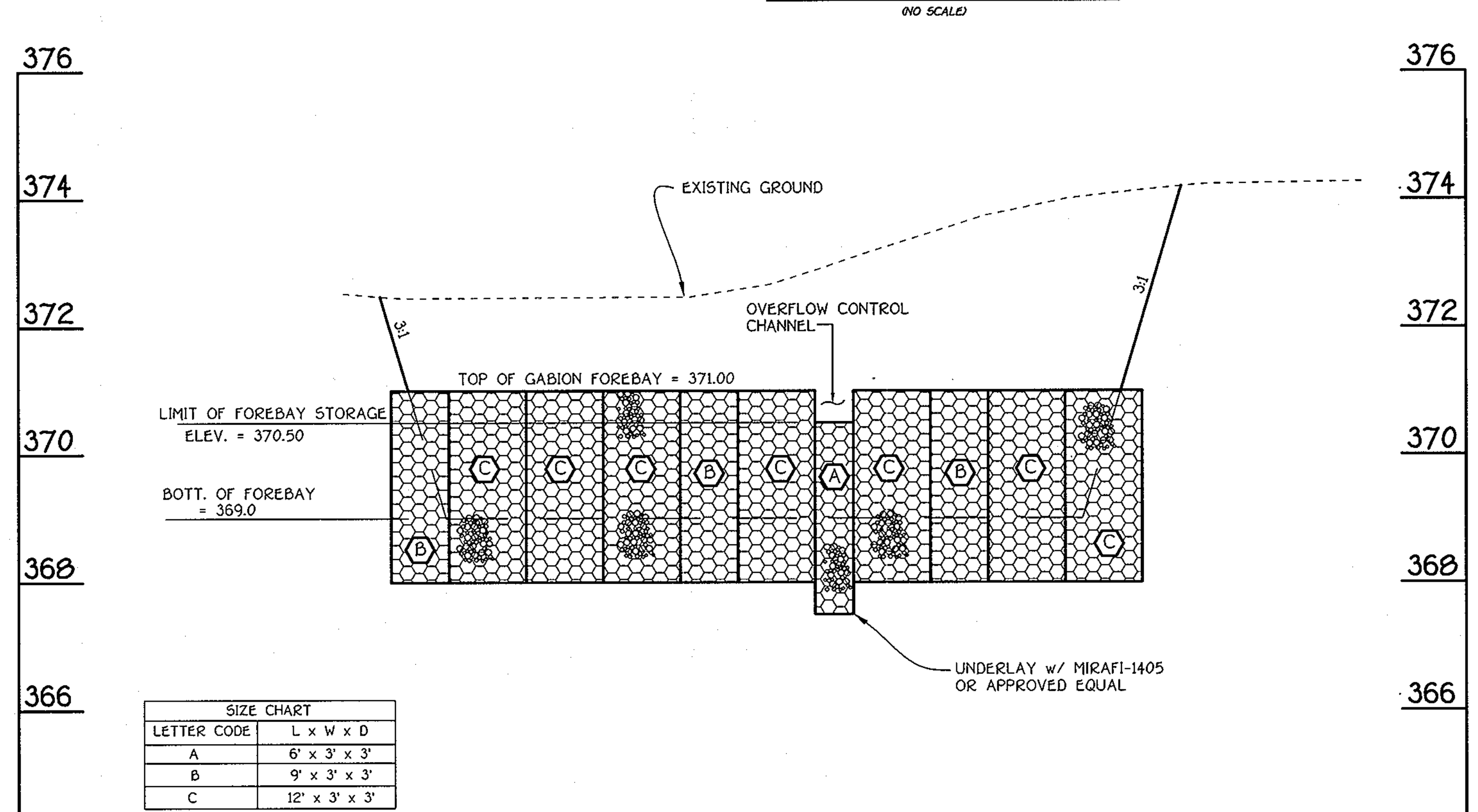

SIZE CHART	
LETTER CODE	L x W x D
A	6' x 3' x 3'
B	9' x 3' x 3'
C	12' x 3' x 3'

GABION FOREBAY 'B' PROFILE

SCALE: HORIZ. 1" = 20'
VERT. 1" = 2'

OWNER
BASSLERS, INCORPORATED
c/o ALFRED S. BASSLER
4994 SHEPPARD LANE
ELLICOTT CITY, MARYLAND 21042

DEVELOPER
HERITAGE LAND DEVELOPMENT
15950 NORTH AVE.
LISBON, MARYLAND 21765

SWM Pond Construction Recommendations

A. General Design Recommendations

It is recommended that the geotechnical aspects of the SWM pond design and construction be in accordance with MD 378 2000 specifications.

B. Principal Spillway

Variable soil conditions are present and, consequently, the bearing conditions at various elevations vary widely. It appears that the majority of the underlying native soils will be acceptable to support design bearing pressures of 2 KSF. Open footings excavated below the natural water table will be subject to disturbance by the upward flow of water and will require pumping and stabilization for acceptability.

C. Earth Slope Stability

Cut slopes located beyond the dam embankment zones shall be evaluated in the field at time of construction for conditions which may cause slope instability, including high plasticity clay soils with little sand component or groundwater seepage above the toe of slope. Remedial measures may include but not limited to any of the following:

1. Flatten the cut slopes to 4:1.
2. Provide toe and slope drains to control any groundwater. The design, location and spacing to be determined by the Geotechnical Engineer at the time of grading, as needed.
3. Undercut and replace unstable soils as directed by the Geotechnical Engineer.

The type and extent of remedial work will be addressed at the time of construction.

D. Core Trench

Core trenches shall be excavated to the typical MD 378/2000 specified dimensions below stripped existing grade or at least 2 feet into original soils below any undercut backfill, whichever depth is greater. Depending upon the design elevations, excavations below the water table may result in instabilities of the core trench walls and base requiring pumping and stabilization for acceptable installation of the core trench backfill.

E. Permanent Ground Water Control

Ground water should be anticipated in excavations carried below the water levels indicated by the borings. Also, since the boring program was performed in extended dry weather, it is likely that ground water levels will rise in the wetter seasons requiring additional ground water control. In addition to slope drains for cut soils, it may be necessary to construct pilot channels in the basins to direct seepage into low flow orifices to prevent shallow accumulation of water.

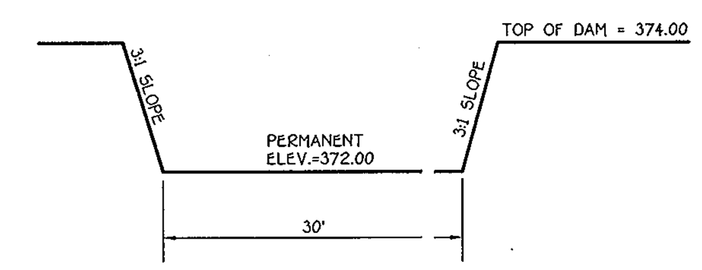

TYPICAL SECTION THRU EMERGENCY SPILLWAY

NOT TO SCALE

By The Developer:

"I/We Certify That All Development And/Or Construction Will Be Done According To These Plans, And That Any Responsible Personnel Involved In The Construction Project Will Have A Certificate Of Attendance At A Department Of The Environment Approved Training Program For The Control Of Sediment And Erosion Before Beginning The Project. I Shall Engage A Registered Professional Engineer To Supervise Pond Construction And Provide The Howard Soil Conservation District With An "As-Built" Plan Of The Pond Within 30 Days Of Completion. I Also Authorize Periodic On-Site Inspections By The Howard Soil Conservation District."

Signature Of Developer — Date 10/16/08

Timothy W Feaga
Printed Name Of Developer

By The Engineer:

"I Certify That This Plan For Pond Construction, Erosion And Sediment Control Represents A Practical And Workable Plan Based On My Personal Knowledge Of The Site Conditions. This Plan Was Prepared In Accordance With The Requirements Of The Howard Soil Conservation District. I Have Notified The Developer That He/She Must Engage A Registered Professional Engineer To Supervise Pond Construction And Provide The Howard Soil Conservation District With An "As-Built" Plan Of The Pond Within 30 Days Of Completion."

Signature Of Engineer — Date 10-16-08

Aldo M. Vitucci
Printed Name Of Engineer

These Plans For Small Pond Construction, Soil Erosion And Sediment Control Meet The Requirements Of The Howard Soil Conservation District.

Howard Soil Conservation District — Date 10/23/08

Approved: Department Of Public Works

Chief Bureau Of Highways — Date 10-28-08

Approved: Department Of Planning And Zoning

Chief, Division Of Land Development — Date 11/3/08

Chief, Development Engineering Division — Date 10/31/08

AS-BUILT CERTIFICATION

I Hereby Certify That The Facility Shown On This Plan Was Constructed As Shown On The " As-Built" Plans And Meets The Approved Plans And Specifications.

Signature — P.E. No.

Date:

Certify Means To State Or Declare A Professional Opinion Based Upon Onsite Inspections And Material Tests Which Are Conducted During Construction. The Onsite Inspections And Material Tests Are Those Inspections And Tests Deemed Sufficient And Appropriate Commonly Accepted Engineering Standards. Certify Does Not mean Or Imply A Guarantee By The Engineer Nor Does An Engineer's Certification Relieve Any Other Party From Meeting Requirements Imposed By Contract, Employment, Or Other Means, Including Meeting Commonly Accepted Industry Practices.

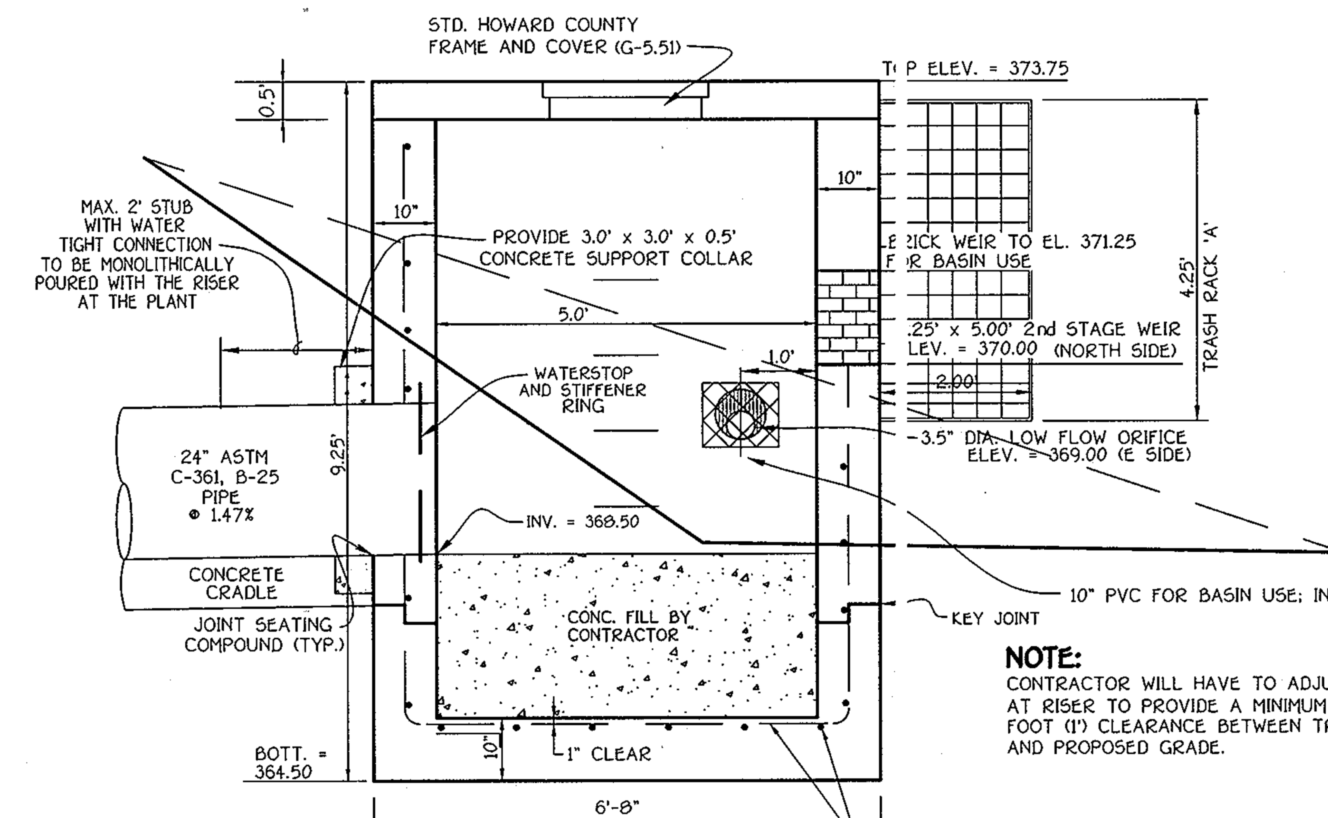

PROFILE VIEW A CONCRETE RISER DETAIL

SCALE : 1" = 2'

NOTE:
CONTRACTOR WILL HAVE TO ADJUST GRADE AT RISER TO PROVIDE A MINIMUM OF ONE FOOT (1') CLEARANCE BETWEEN TRASH RACKS AND PROPOSED GRADE.

***NOTE:**
WHEN CONVERTING SEDIMENT BASIN TO PERM. POND, CUT 10" PVC PIPE OFF AT RISER AND INSTALL A 3.5" ORIFICE PLATE AT INV. 369.00

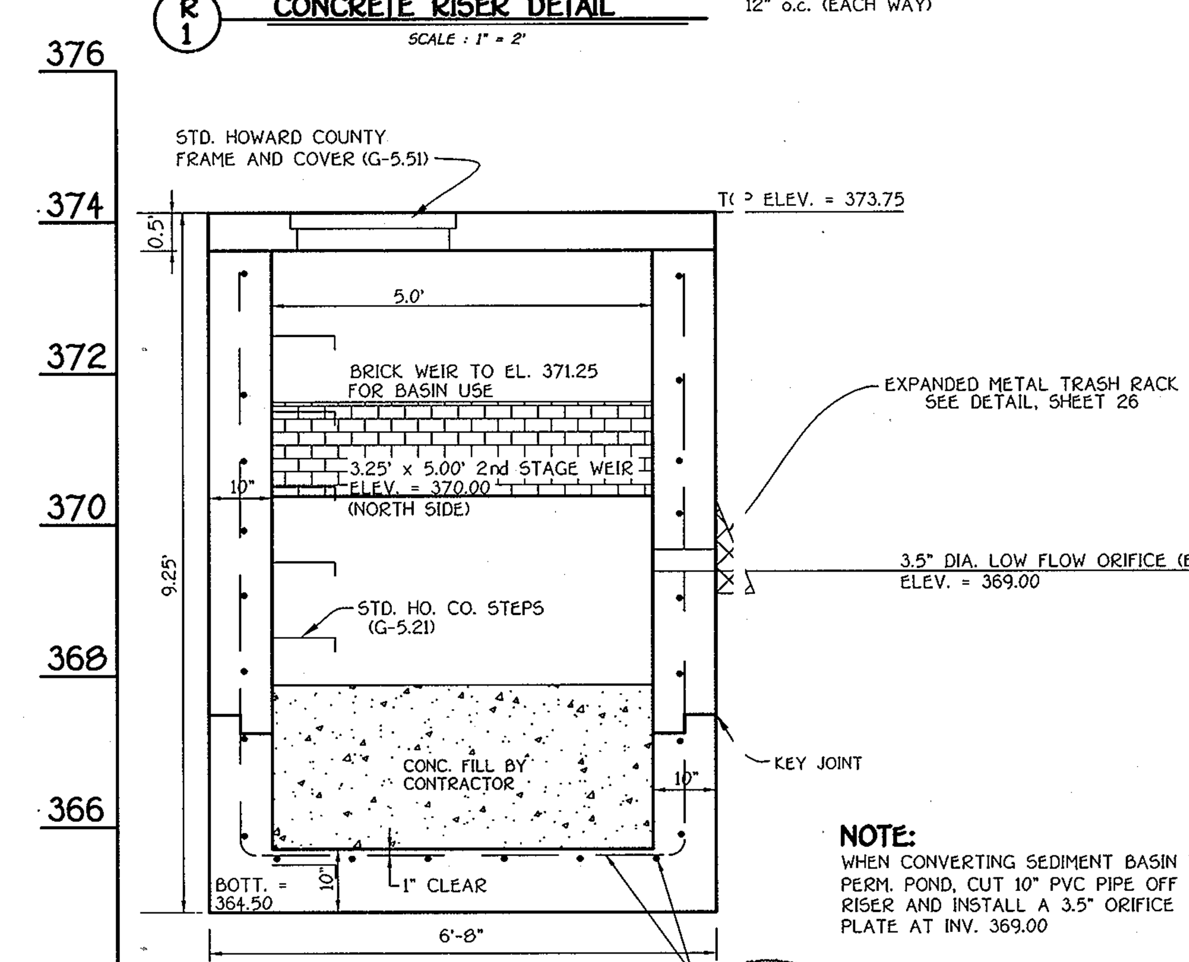

PROFILE VIEW B CONCRETE RISER DETAIL

SCALE : 1" = 2'

NOTE:
WHEN CONVERTING SEDIMENT BASIN TO PERM. POND, CUT 10" PVC PIPE OFF AT RISER AND INSTALL A 3.5" ORIFICE PLATE AT INV. 369.00

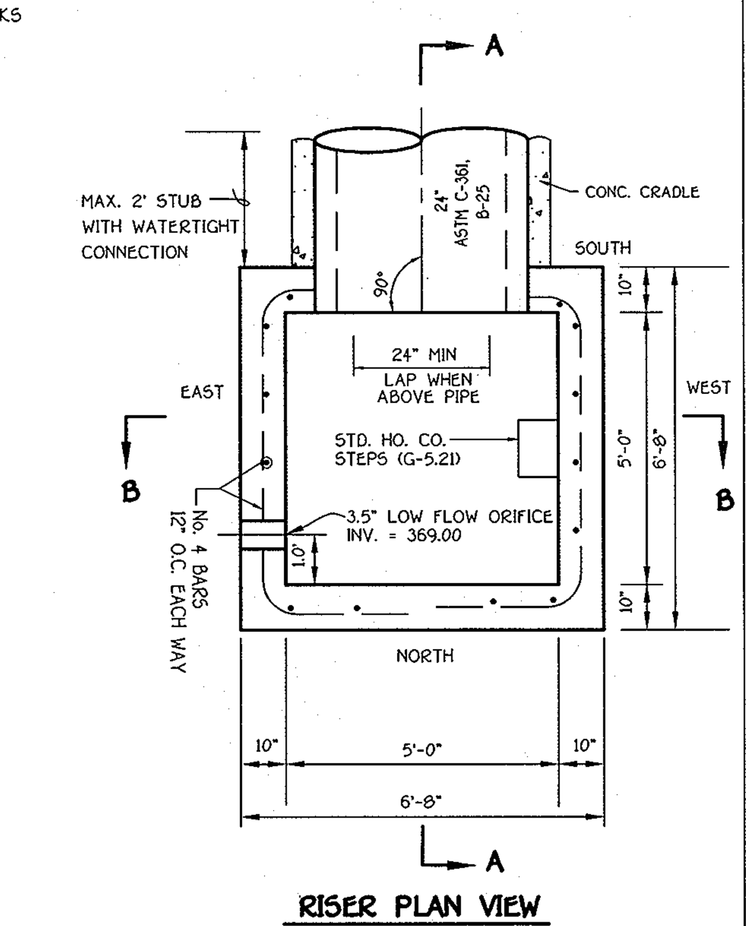

RISER PLAN VIEW

NO SCALE

ALDO M. VITUCCI, P.E. — DATE 10-16-08

"Professional Certification. I hereby certify that these documents were prepared by me, and that I am a duly Licensed Professional Engineer under the laws of the State of Maryland, License No. 20748, Expiration Date 2-22-09."

STORMWATER MANAGEMENT NOTES AND DETAILS
POND No. 3

WALNUT CREEK

⚠ PHASE TWO

Lots 23 – 68, Non-Buildable Preservation Parcels 'C', 'G', 'I', 'J', 'K', 'L' And 'M' & Buildable Bulk Parcels 'H' And 'N'

(Being A Resubdivision Of Buildable Bulk Parcels 'F' & 'E' And a Revision To Non-Buildable Preservation Parcel 'C' – Walnut Creek, Phase One, Plat No's. 20631 Thru 20647

ZONED: RC-DEO & RR-DEO
TAX MAP No. 28 GRID Nos. 4, 5, 10-12, 17, AND 18 PARCEL No. 49
FIFTH ELECTION DISTRICT
HOWARD COUNTY, MARYLAND
DATE: SEPTEMBER, 2008
SHEET 23 OF 32

F-08-081

I:\2004\04001\dwg\PHASE TWO FINALS\04001-3001 SHEET 23-24 FINAL SWM DETAILS.dwg, SHEET 23, 1:1

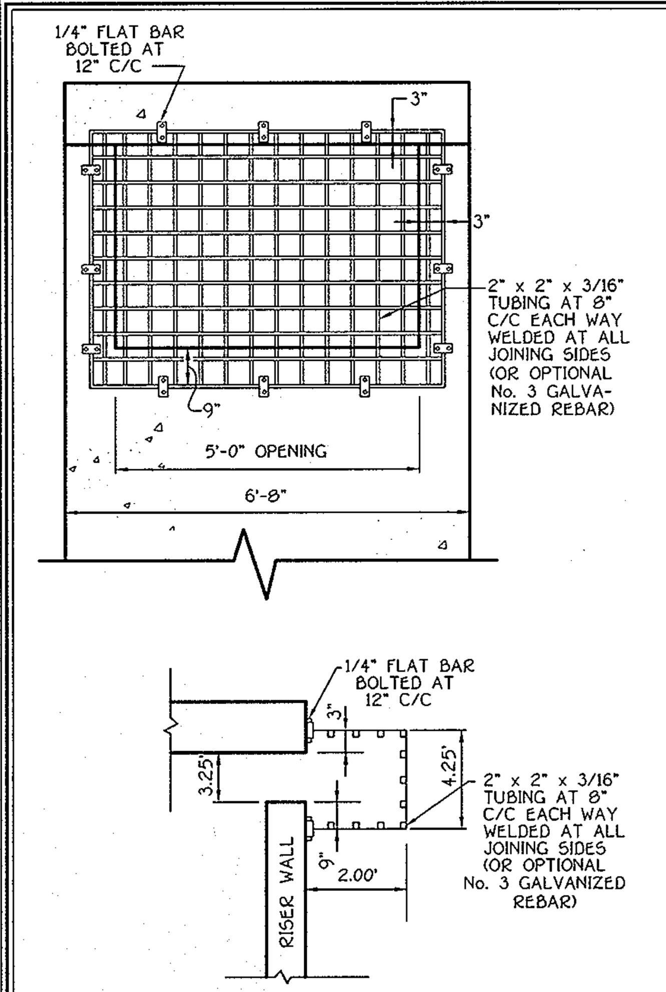

TRASH RACK 'A' DETAIL

(NO SCALE)

NOTES:
1. FIELD MEASURE THE STRUCTURE DIMENSIONS TO INSURE EXACT FIT OF TRASH RACK.
2. GALVANIZE ENTIRE TRASH RACK AFTER FABRICATION.
3. PAINT BATTLESHIP GRAY.

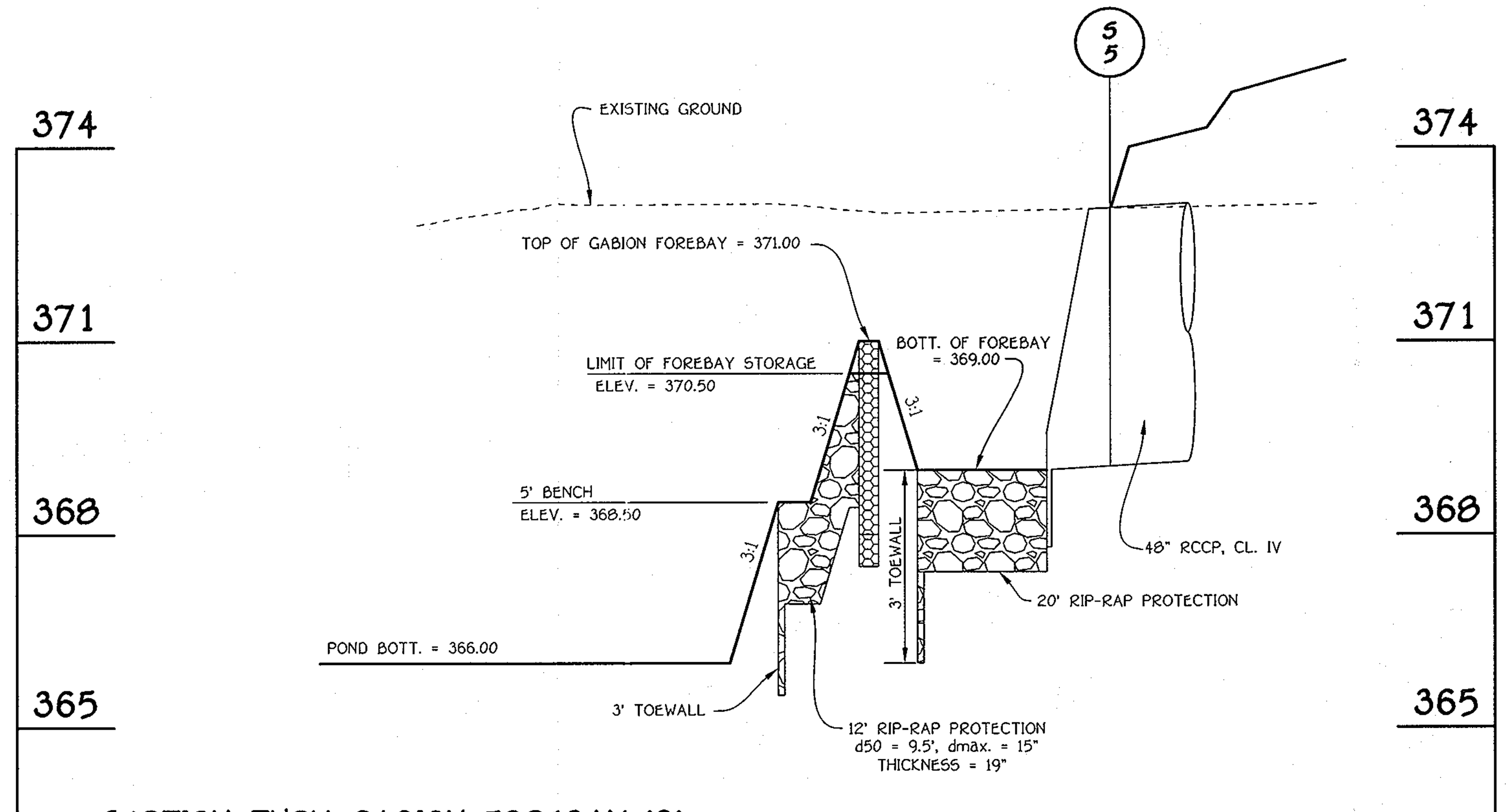

SECTION THRU GABION FOREBAY 'B'

SCALE: HORIZ. 1" = 20'
VERT. 1" = 2'

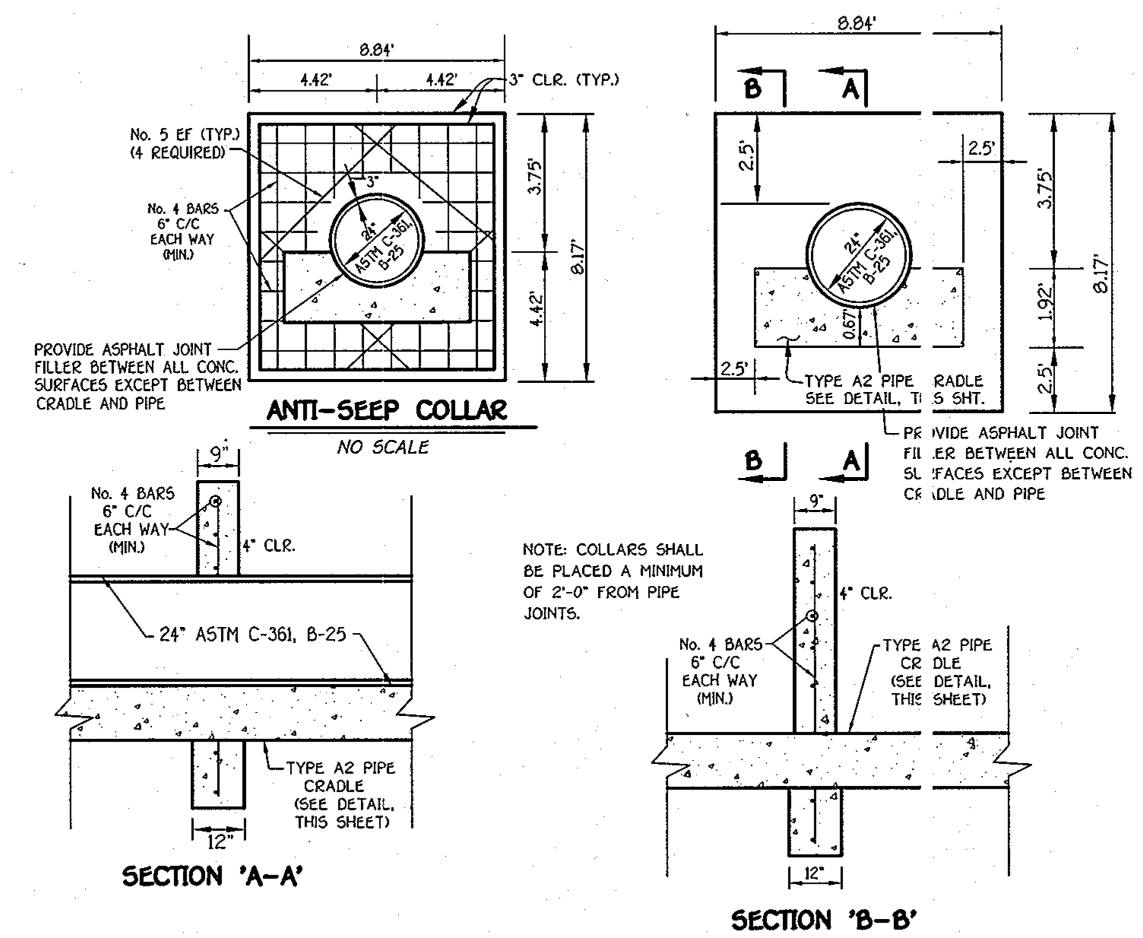

TYPICAL SECTION THROUGH BARREL, CRADLE AND ANTI-SEEP COLLAR

NO SCALE

By The Developer:

"I/We Certify That All Development And/Or Construction Will Be Done According To These Plans, And That Any Responsible Personnel Involved In The Construction Project Will Have A Certificate Of Attendance At A Department Of The Environment Approved Training Program For The Control Of Sediment And Erosion Before Beginning The Project. I Shall Engage A Registered Professional Engineer To Supervise Pond Construction And Provide The Howard Soil Conservation District With An "As-Built" Plan Of The Pond Within 30 Days Of Completion. I Also Authorize Periodic On-Site Inspections By The Howard Soil Conservation District."

Signature Of Developer — 10/16/08 Date

Printed Name Of Developer: Timothy W Feaga

By The Engineer:

"I Certify That This Plan For Pond Construction, Erosion And Sediment Control Represents A Practical And Workable Plan Based On My Personal Knowledge Of The Site Conditions. This Plan Was Prepared In Accordance With The Requirements Of The Howard Soil Conservation District. I Have Notified The Developer That He/She Must Engage A Registered Professional Engineer To Supervise Pond Construction And Provide The Howard Soil Conservation District With An "As-Built" Plan Of The Pond Within 30 Days Of Completion."

Signature Of Engineer — 10.16.08 Date

Printed Name Of Engineer: Aldo M. Vitucci

These Plans For Small Pond Construction, Soil Erosion And Sediment Control Meet The Requirements Of The Howard Soil Conservation District.

Howard Soil Conservation District — 10/23/08 Date

Approved: Department Of Public Works

Chief Bureau Of Highways — 10-28-08 Date

Approved: Department Of Planning And Zoning

Chief, Division Of Land Development — 11/3/08 Date VS

Chief, Development Engineering Division — 10/31/08 Date

AS-BUILT CERTIFICATION

I Hereby Certify That The Facility Shown On This Plan Was Constructed As Shown On The " As-Built" Plans And Meets The Approved Plans And Specifications.

Signature — P.E. No.

Date:

Certify Means To State Or Declare A Professional Opinion Based Upon Onsite Inspections And Material Tests Which Are Conducted During Construction. The Onsite Inspections And Material Tests Are Those Inspections And Tests Deemed Sufficient And Appropriate Commonly Accepted Engineering Standards. Certify Does Not mean Or Imply A Guarantee By The Engineer Nor Does An Engineer's Certification Relieve Any Other Party From Meeting Requirements Imposed By Contract, Employment, Or Other Means, Including Meeting Commonly Accepted Industry Practices.

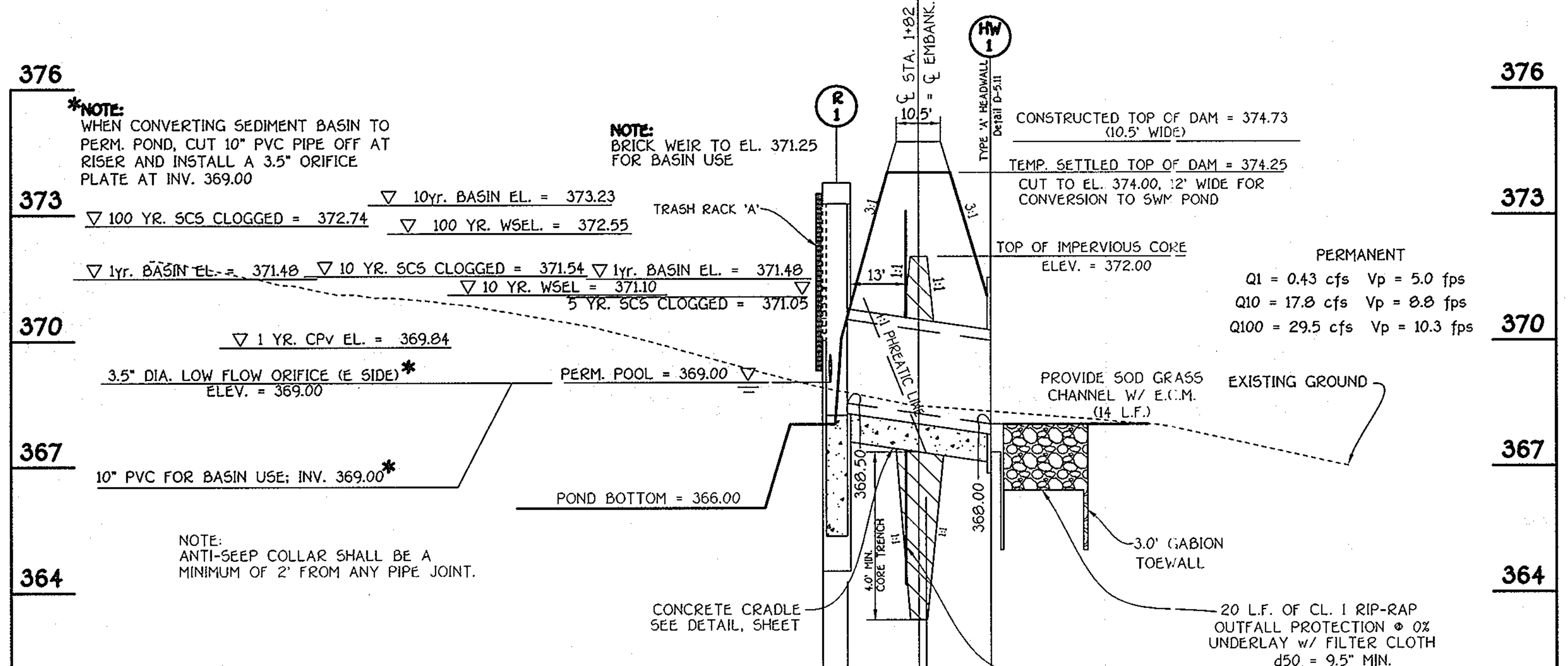

PRINCIPLE SPILLWAY PROFILE

SCALE: HOR. : 1" = 30'
VER. : 1" = 3'

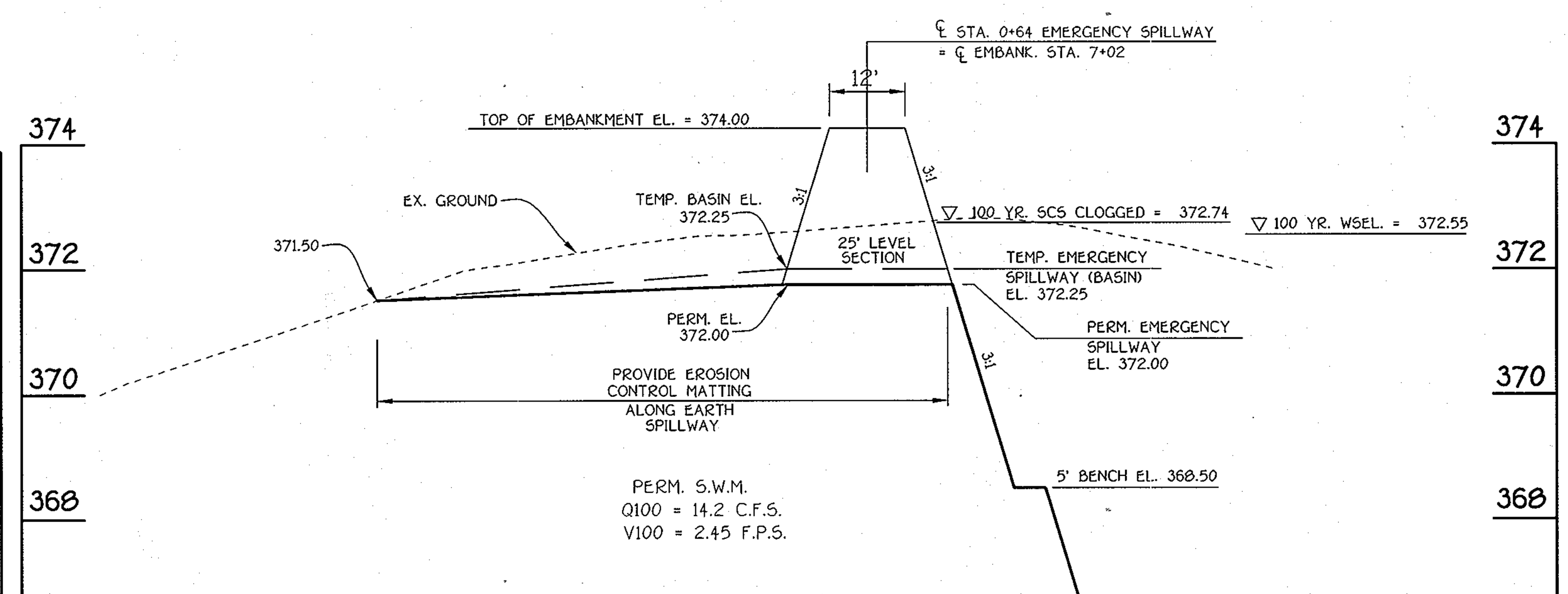

EMERGENCY SPILLWAY PROFILE

SCALE: HORIZ. 1" = 20'
VERT. 1" = 2'

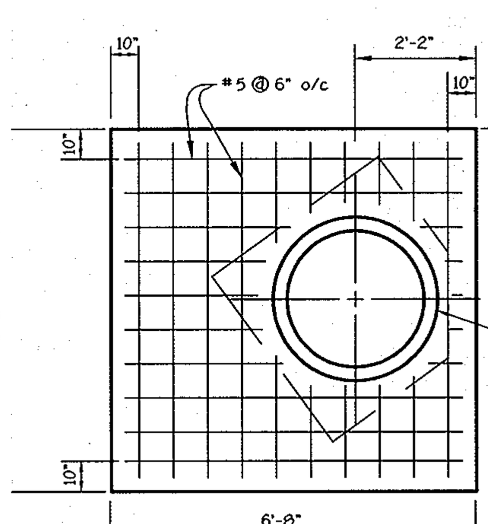

TOP SLAB DETAIL

NO SCALE

NOTES:
1. CONCRETE SHALL BE MSHA MIX No. 3 (FC > 3,500 P.S.I.)
2. REINFORCING STEEL: GRADE 60
3. FOR WALLS OF STRUCTURE SHALL UTILIZE L.M. SCOFIELD CO. T-9055 FORM LINERS (RANDOM SPLIT-FACE ROCK) OPTIONAL.
4. PROVIDE ROUGH BROOM FINISH.
5. ANCHOR BOLTS SHALL BE INSTALLED IN ACCORDANCE WITH SECTION 6.07.03.59 OF THE MSHA STANDARDS AND SPECS.
6. ALL REINFORCING SPLICES SHALL BE LAP SPLICES OF 30 BAR DIA. UNLESS OTHERWISE SHOWN.

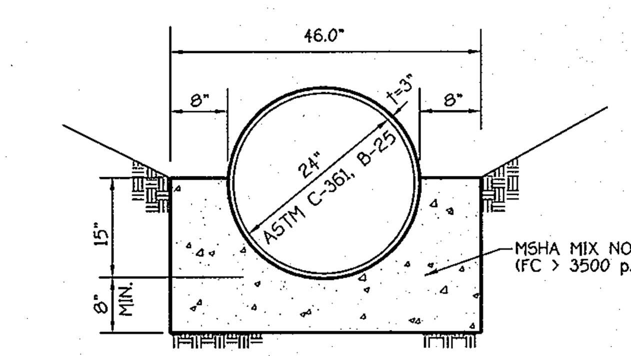

SCS TR-46 A2 CONCRETE CRADLE

NO SCALE

NOTE:
CONC. CRADLE TO BE POURED DIRECTLY AGAINST EARTH BANKS. IF BOTTOM OF TRENCH IS WIDER THAN THE CRADLE, SLOPING SIDES (FRAMED) SHALL BE USED.

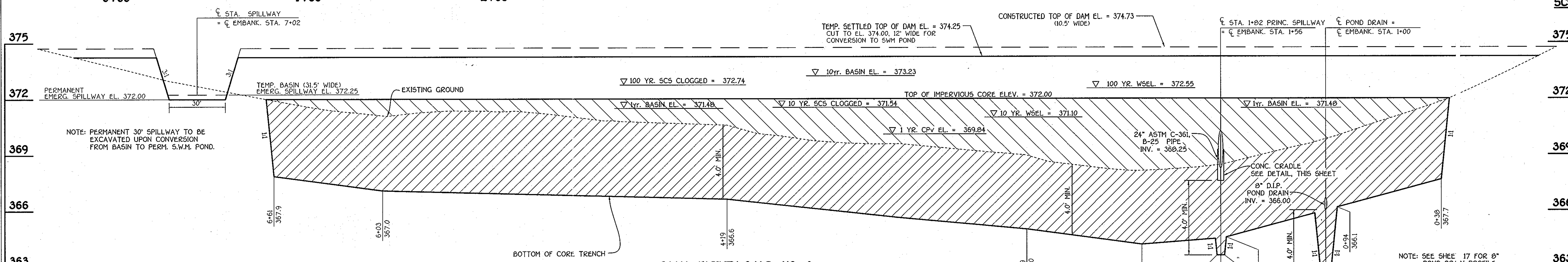

S.W.M. FACILITY B.M.P. NO. 3
PROFILE ALONG ℄ EMBANKMENT

SCALE: HORIZ. 1" = 30'
VERT. 1" = 3'

OPERATION AND MAINTENANCE SCHEDULE FOR PRIVATELY OWNED AND JOINTLY MAINTAINED STORMWATER MANAGEMENT FACILITIES

ROUTINE MAINTENANCE

1. Facility shall be inspected annually and after major storms. Inspections shall be preformed during wet weather to determine if the pond is functioning properly.
2. Top and side slopes of the embankment shall be mowed a minimum of two (2) times a year, once in June and once in September. Other side slopes and maintenance access should be mowed as needed.
3. Debris and litter shall be removed during regular mowing operations and as needed.
4. Visible signs of erosion in the pond as well as the rip-rap or gabion outlet area shall be repairer as soon as it is noticed.

NON-ROUTINE MAINTENANCE

1. Structural components of the pond such as the dam, the riser, and the pipes shall be repaired upon the detection of any damage. The components shall be inspected during routine maintenance operations.
2. Sediment shall be removed from the pond, and forebay, no later than when the capacity of the pond or forebay, is half full of sediment, or, when deemed necessary for aesthetic reasons, upon approval from the Department of Public Works.

FISHER, COLLINS & CARTER, INC.
CIVIL ENGINEERING CONSULTANTS & LAND SURVEYORS
CENTENNIAL SQUARE OFFICE PARK - 10272 BALTIMORE NATIONAL PIKE
ELLICOTT CITY, MARYLAND 21042
(410) 461 - 2855

NO.	DESCRIPTION	DATE
⚠	REVISED TITLE BLOCK	9/25/12
REVISIONS		

OWNER

BASSLERS, INCORPORATED
c/o ALFRED S. BASSLER
4994 SHEPPARD LANE
ELLICOTT CITY, MARYLAND 21042

DEVELOPER

HERITAGE LAND DEVELOPMENT
15950 NORTH AVE.
LISBON, MARYLAND 21765

ALDO M. VITUCCI — 10-16-08 DATE

"Professional Certification. I hereby certify that these documents were prepared by me, and that I am a duly Licensed Professional Engineer under the laws of the State of Maryland, License No. 20748, Expiration Date 2-22-09."

STORMWATER MANAGEMENT NOTES AND DETAILS
POND No. 3

WALNUT CREEK

PHASE TWO ⚠

Lots 23 – 68, Non-Buildable Preservation Parcels 'C', 'G', 'I', 'J', 'K', 'L' And 'M' & Buildable Bulk Parcels 'H' And 'N'

(Being A Resubdivision Of Buildable Bulk Parcels 'F' & 'E' And a Revision To Non-Buildable Preservation Parcel 'C' – Walnut Creek, Phase One, Plat No's. 20631 Thru 20647

ZONED: RC-DEO & RR-DEO
TAX MAP No. 28 GRID Nos. 4, 5, 10-12, 17, AND 18 PARCEL No. 49
FIFTH ELECTION DISTRICT
HOWARD COUNTY, MARYLAND
DATE: SEPTEMBER, 2008
SHEET 24 OF 32

F-08-081

I:\2004\04001\dwg\PHASE TWO FINALS\04001-3001 SHEET 23-24 FINAL SWM DETAILS.dwg, SHEET 24, 1:1

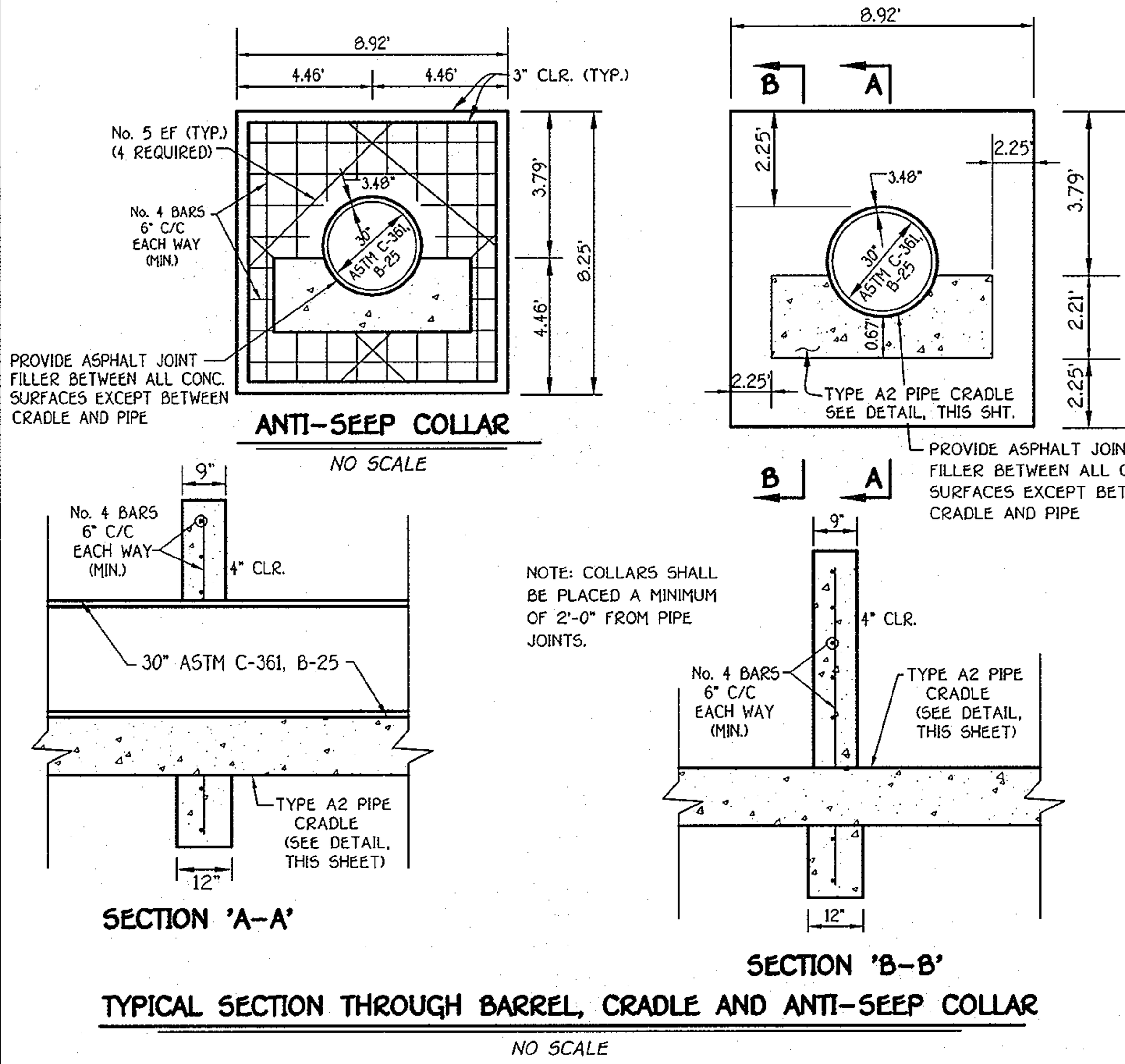

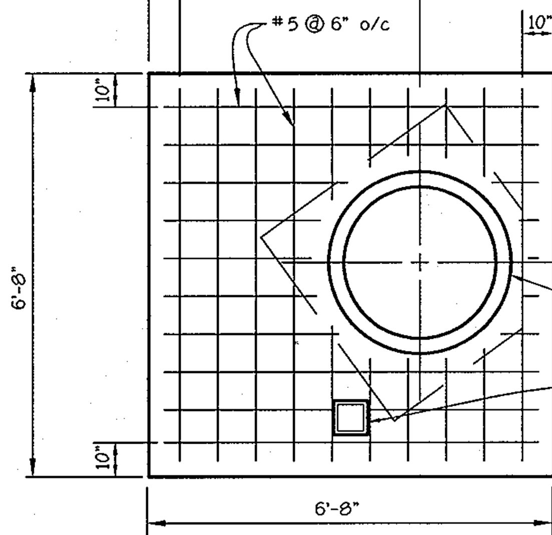

NOTES:
1. CONCRETE SHALL BE MSHA MIX No. 3 (FC > 3,500 P.S.I.)
2. REINFORCING STEEL: GRADE 60
3. FOR WALLS OF STRUCTURE SHALL UTILIZE L.M. SCOFIELD CO. T-9055 FORM LINERS (RANDOM SPLIT-FACE ROCK) OPTIONAL.
4. PROVIDE ROUGH BROOM FINISH.
5. ANCHOR BOLTS SHALL BE INSTALLED IN ACCORDANCE WITH SECTION 6.07.03.59 OF THE MSHA STANDARDS AND SPECS.
6. ALL REINFORCING SPLICES SHALL BE LAP SPLICES OF 30 BAR DIA. UNLESS OTHERWISE SHOWN.

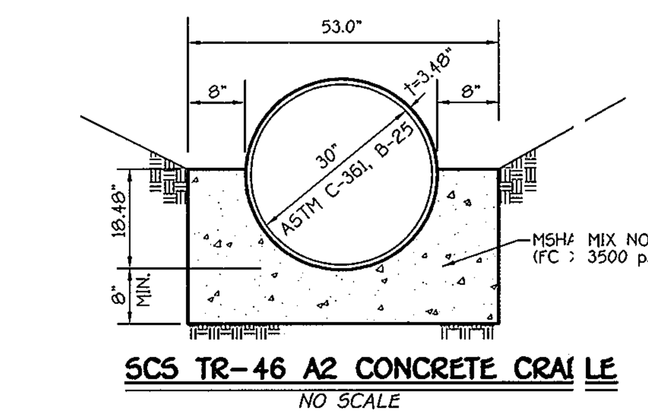

NOTE:
CONC. CRADLE TO BE POURED DIRECTLY AGAINST EARTH BANKS. IF BOTTOM OF TRENCH IS WIDER THAN THE CRADLE, SLOPING SIDES (FRAMED) SHALL BE USED.

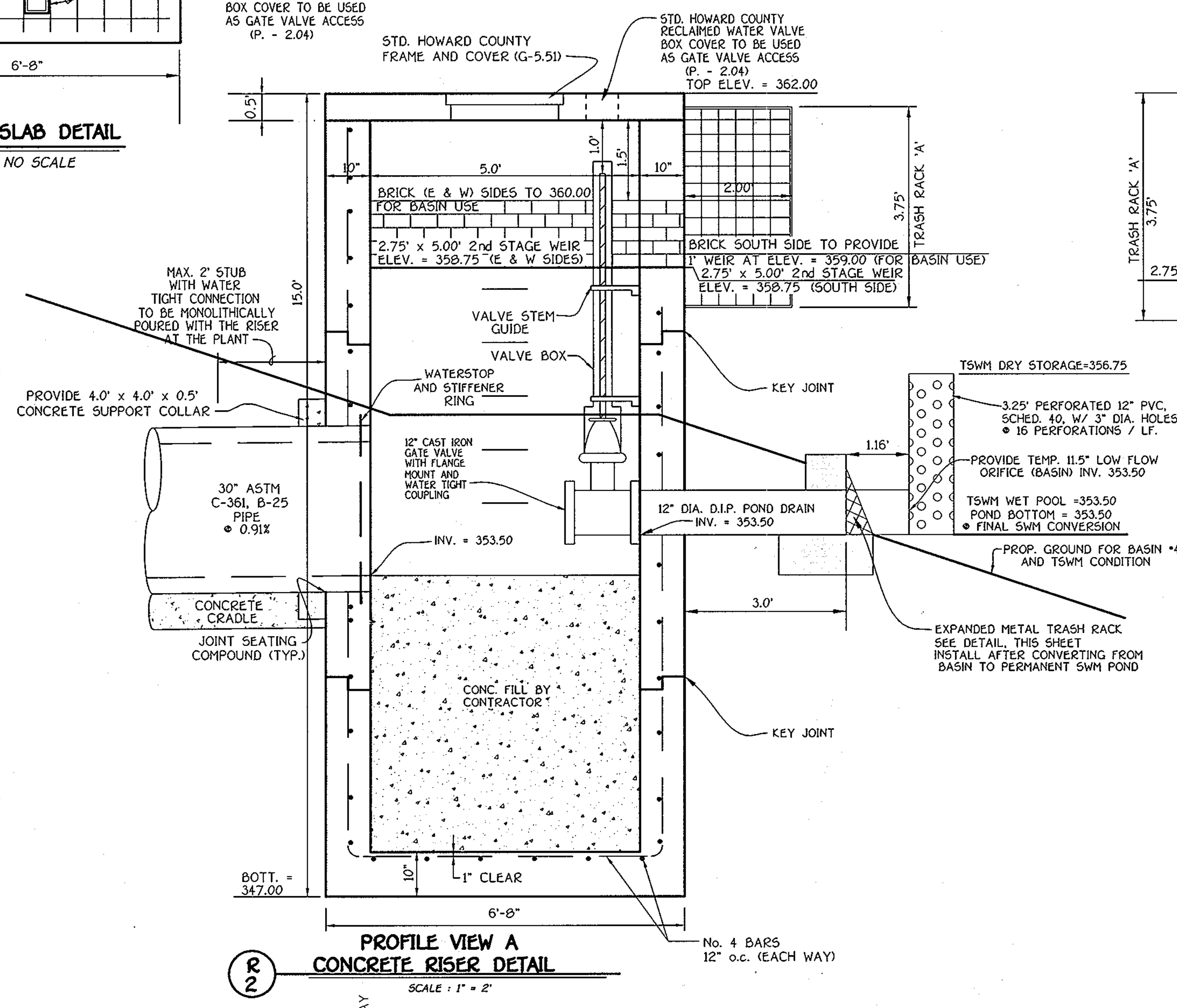

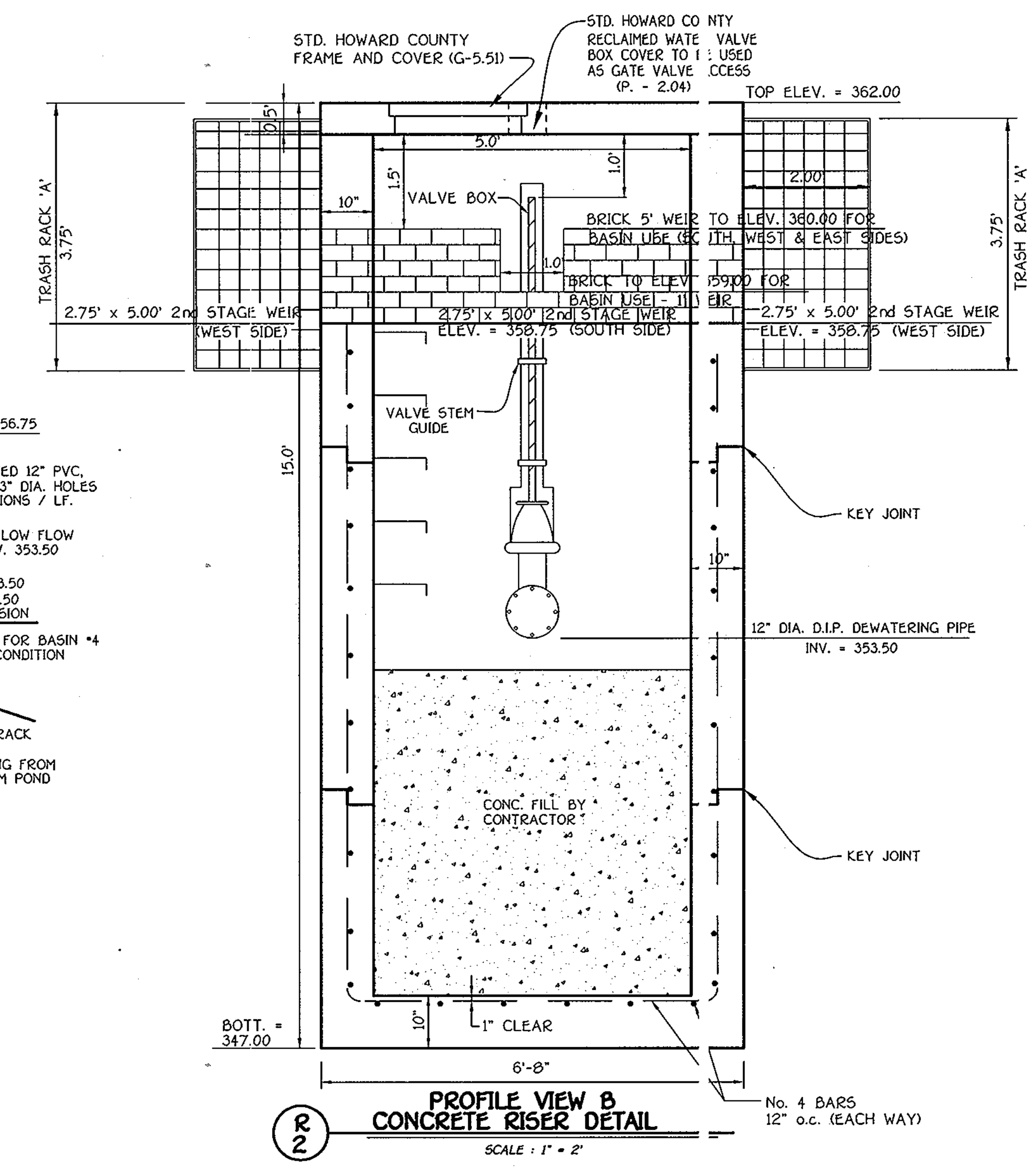

By The Developer:

"I/We Certify That All Development And/Or Construction Will Be Done According To These Plans, And That Any Responsible Personnel Involved In The Construction Project Will Have A Certificate Of Attendance At A Department Of The Environment Approved Training Program For The Control Of Sediment And Erosion Before Beginning The Project. I Shall Engage A Registered Professional Engineer To Supervise Pond Construction And Provide The Howard Soil Conservation District With An "As-Built" Plan Of The Pond Within 30 Days Of Completion. I Also Authorize Periodic On-Site Inspections By The Howard Soil Conservation District."

Signature Of Developer — Date 10/16/08

Printed Name Of Developer: Timothy W. Feaga

By The Engineer:

"I Certify That This Plan For Pond Construction, Erosion And Sediment Control Represents A Practical And Workable Plan Based On My Personal Knowledge Of The Site Conditions. This Plan Was Prepared In Accordance With The Requirements Of The Howard Soil Conservation District. I Have Notified The Developer That He/She Must Engage A Registered Professional Engineer To Supervise Pond Construction And Provide The Howard Soil Conservation District With An "As-Built" Plan Of The Pond Within 30 Days Of Completion."

Signature Of Engineer — Date 10.16.08

Printed Name: Aldo M. Vitarello

These Plans For Small Pond Construction, Soil Erosion And Sediment Control Meet The Requirements Of The Howard Soil Conservation District.

Howard Soil Conservation District — Date 10/23/08

Approved: Department Of Public Works

Chief Bureau Of Highways — Date 10-28-08

Approved: Department Of Planning And Zoning

Chief, Division Of Land Development — Date 11/3/08

Chief, Development Engineering Division — Date 10/31/08

AS-BUILT CERTIFICATION

I Hereby Certify That The Facility Shown On This Plan Was Constructed As Shown On The " As-Built" Plans And Meets The Approved Plans And Specifications.

Signature — P.E. No. — Date:

Certify Means To State Or Declare A Professional Opinion Based Upon Onsite Inspections And Material Tests Which Are Conducted During Construction. The Onsite Inspections And Material Tests Are Those Inspections And Tests Deemed Sufficient And Appropriate Commonly Accepted Engineering Standards. Certify Does Not mean Or Imply A Guarantee By The Engineer Nor Does An Engineer's Certification Relieve Any Other Party From Meeting Requirements Imposed By Contract, Employment, Or Other Means, Including Meeting Commonly Accepted Industry Practices.

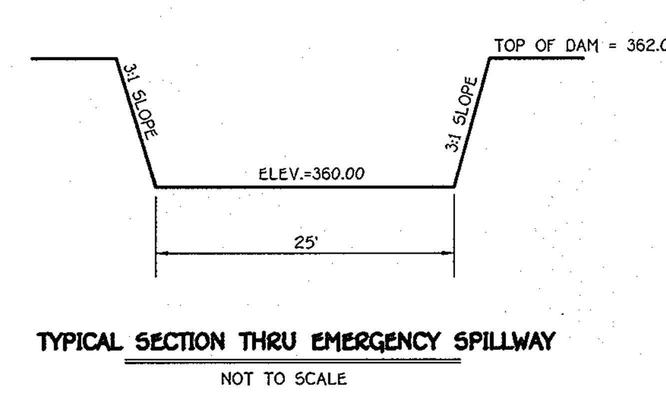

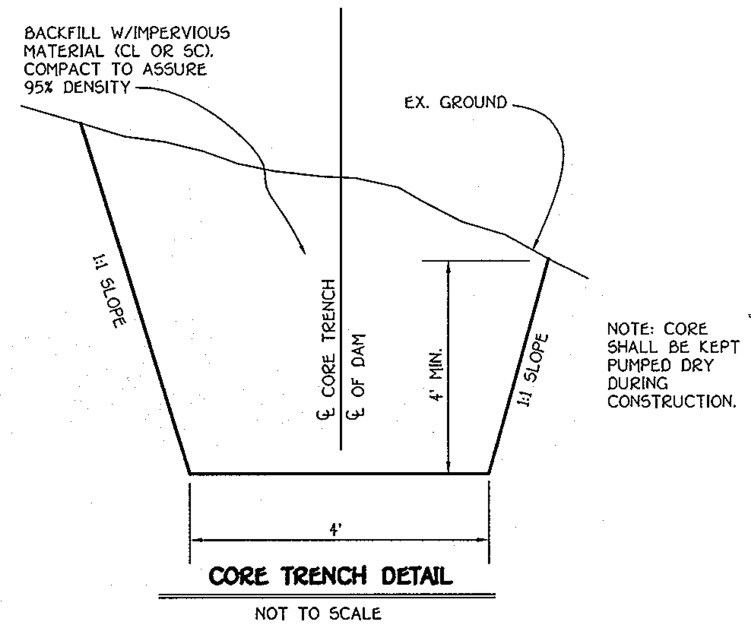

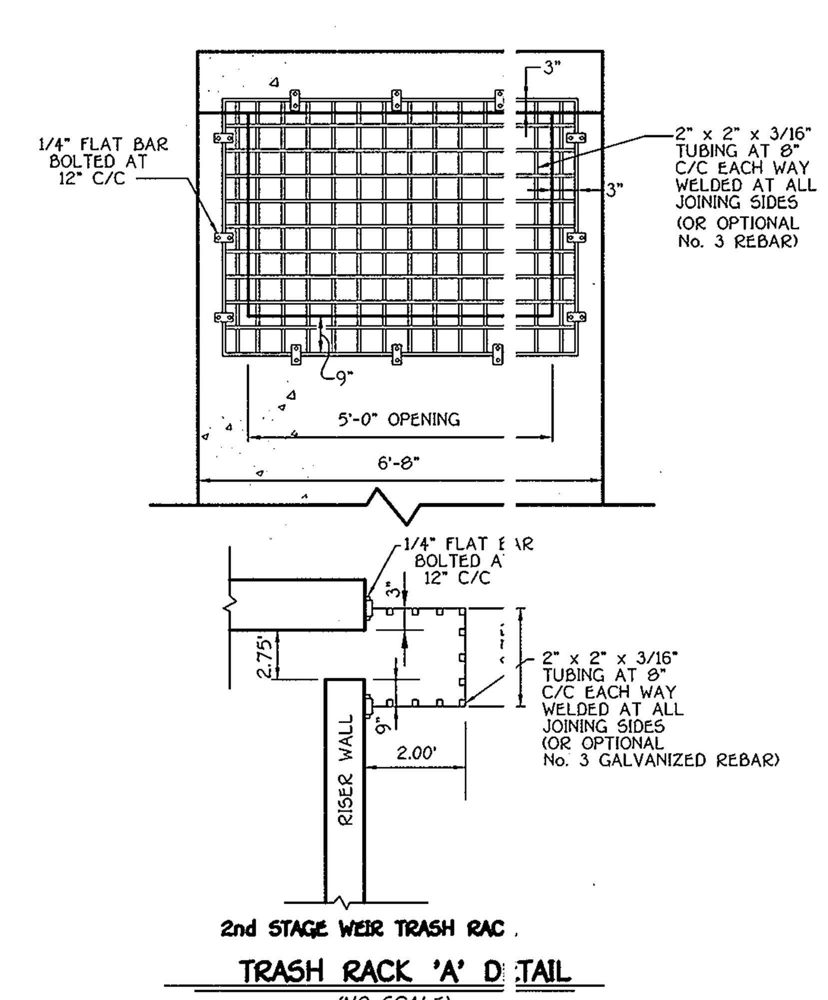

NOTES:
1. FIELD MEASURE THE STRUCTURE DIMENSIONS TO INSURE EXACT FIT OF TRASH RACK.
2. GALVANIZE ENTIRE TRASH RACK AFTER FABRICATION.
3. PAINT BATTLESHIP GRAY.

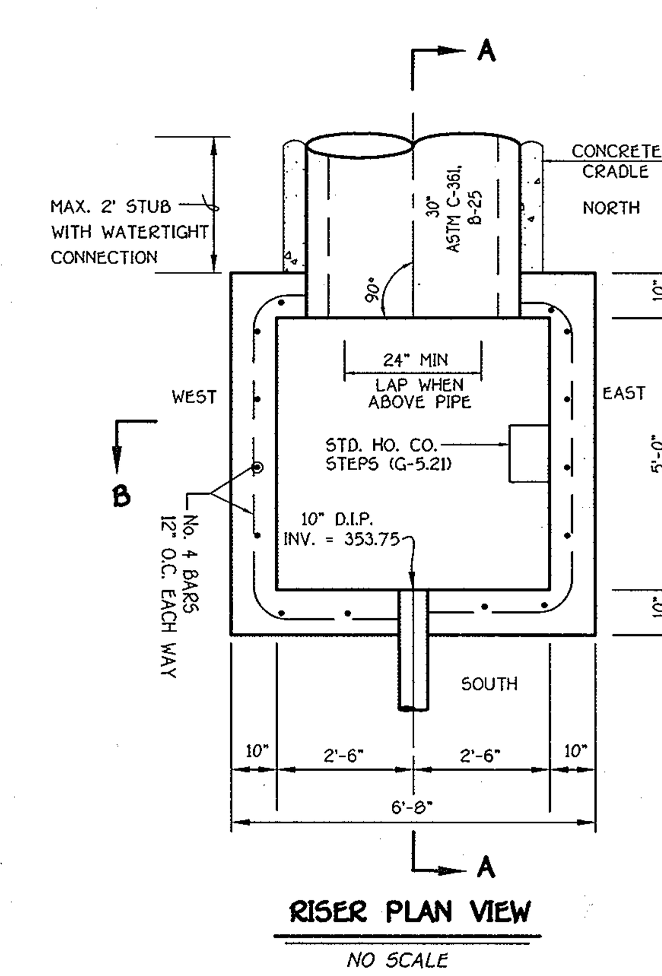

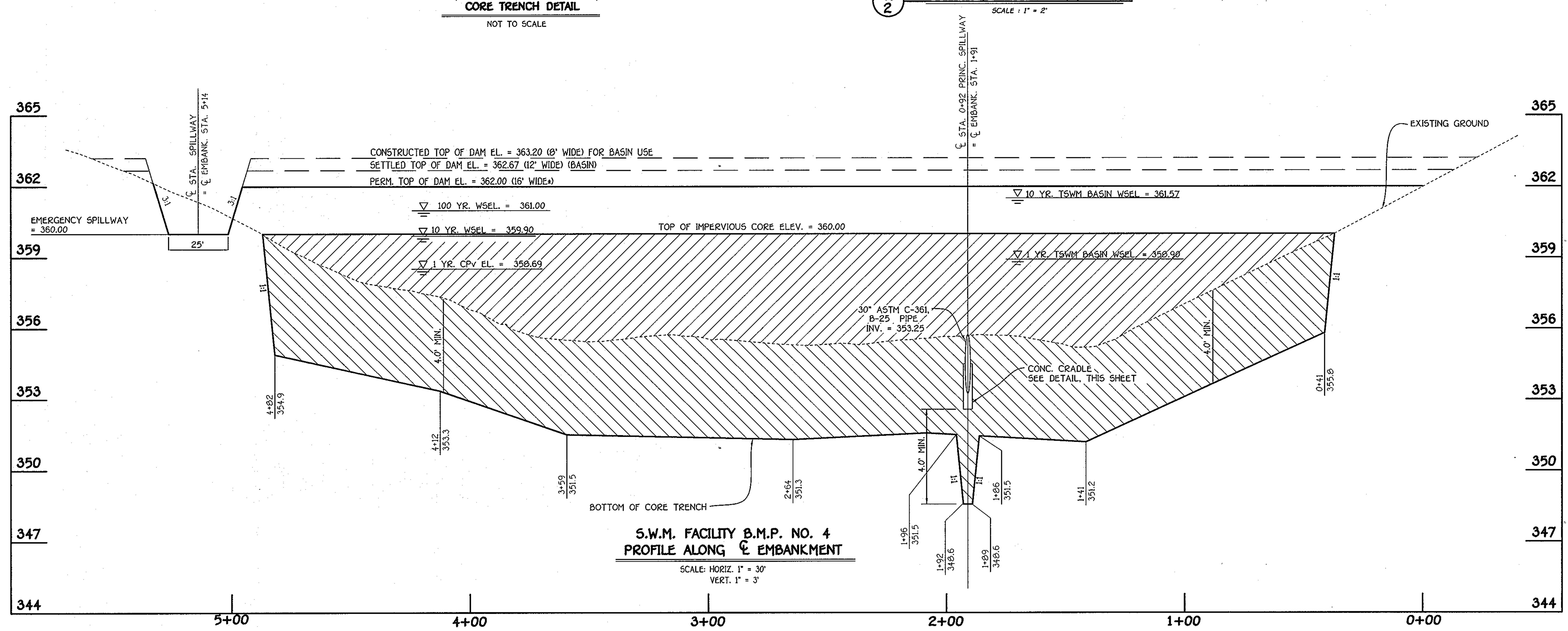

⚠	REVISED TITLE BLOCK	9/25/12
NO.	DESCRIPTION	DATE
	REVISIONS	

FISHER, COLLINS & CARTER, INC.
CIVIL ENGINEERING CONSULTANTS & LAND SURVEYORS
CENTENNIAL SQUARE OFFICE PARK - 10272 BALTIMORE NATIONAL PIKE
ELLICOTT CITY, MARYLAND 21042
(410) 461 - 2855

OWNER
BASSLERS, INCORPORATED
c/o ALFRED S. BASSLER
4994 SHEPPARD LANE
ELLICOTT CITY, MARYLAND 21042

DEVELOPER
HERITAGE LAND DEVELOPMENT
15950 NORTH AVE.
LISBON, MARYLAND 21765

ALDO M. VITARELLO — DATE 10.16.08

"Professional Certification. I hereby certify that these documents were prepared by me, and that I am a duly Licensed Professional Engineer under the laws of the State of Maryland, License No. 20748, Expiration Date 2-22-09."

STORMWATER MANAGEMENT NOTES AND DETAILS
POND No. 4

WALNUT CREEK

PHASE TWO ⚠

Lots 23 – 68, Non-Buildable Preservation Parcels 'C', 'G', 'I', 'J', 'K', 'L' And 'M' & Buildable Bulk Parcels 'H' And 'N'

(Being A Resubdivision Of Buildable Bulk Parcels 'F' & 'E' And a Revision To Non-Buildable Preservation Parcel 'C' – Walnut Creek, Phase One, Plat No's. 20631 Thru 20647
ZONED: RC-DEO & RR-DEO
TAX MAP No. 28 GRID Nos. 4, 5, 10-12, 17, AND 18 PARCEL No. 49
FIFTH ELECTION DISTRICT
HOWARD COUNTY, MARYLAND
DATE: SEPTEMBER, 2008
SHEET 25 OF 32

F-08-081

I:\2004\04001\dwg\PHASE TWO FINALS\04001-3001 SHEET 25-26 FINAL SWM DETAILS.dwg, SHEET 25, 1:1

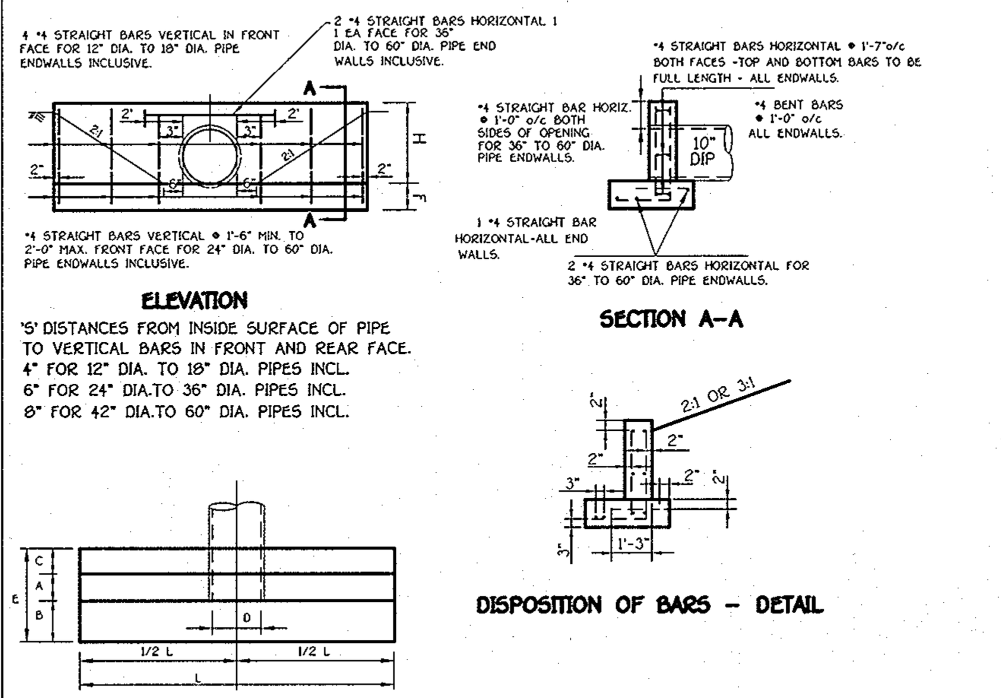

REINFORCING: DEFORMED STEEL BARS (1/2" DIA.)
CHAMFER: ALL EXPOSED EDGES 1"x 1" OR AS DIRECTED.
CONC. SHALL BE S.H.A. A. MIX No. 2.

OPENINGS		DIMENSIONS							VOLUME	STEEL
D IN.	AREA SQ.FT	A	B	C	E	F	H	L	CONC. C.Y.	LBS.
12"	0.79	9"	6"	6"	1'-9"	9"	1'-6"	5'-5"	0.61	38

MODIFIED TYPE 'C' ENDWALL

NO SCALE

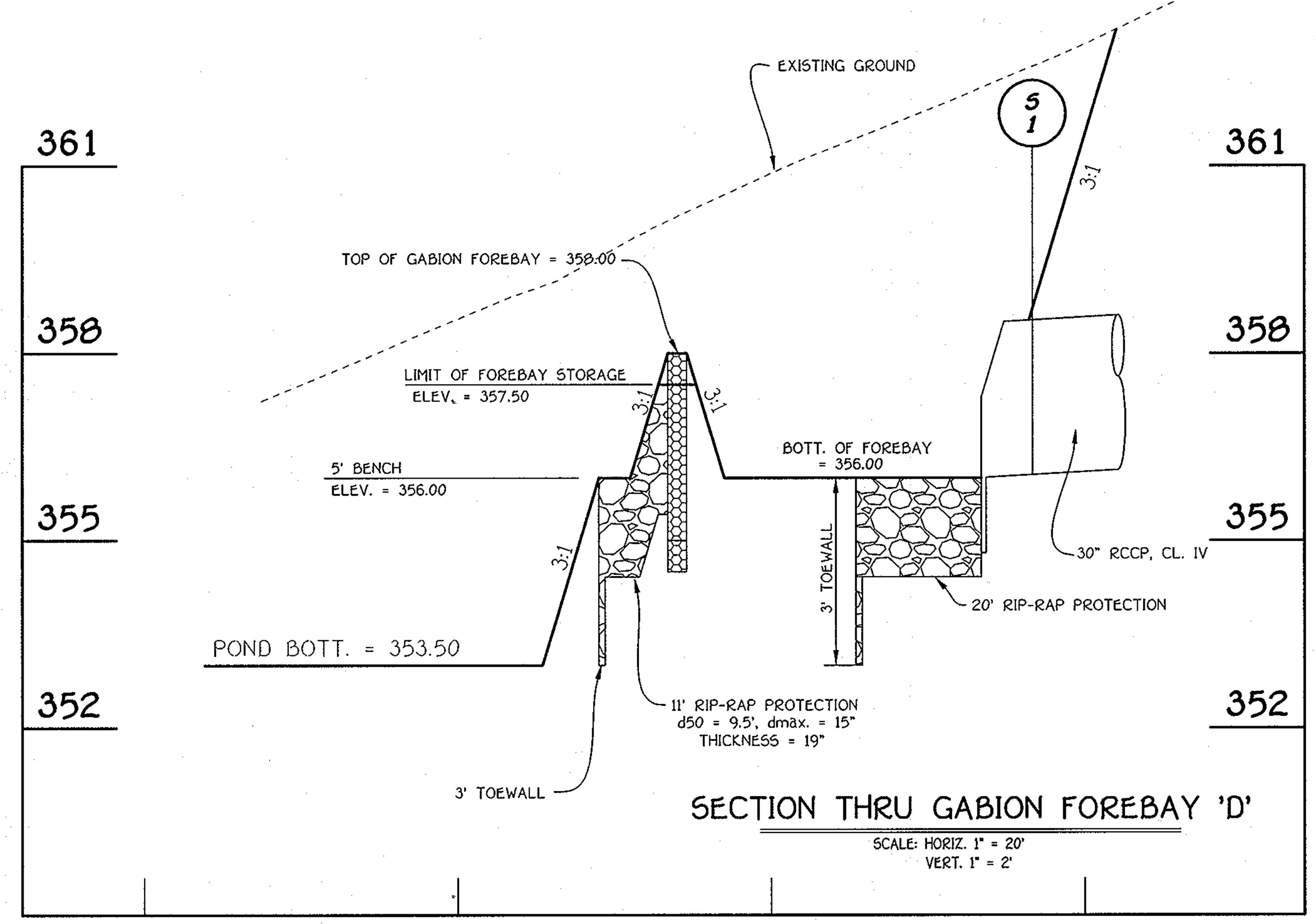

SECTION THRU GABION FOREBAY 'D'

SCALE: HORIZ. 1" = 20'
VERT. 1" = 2'

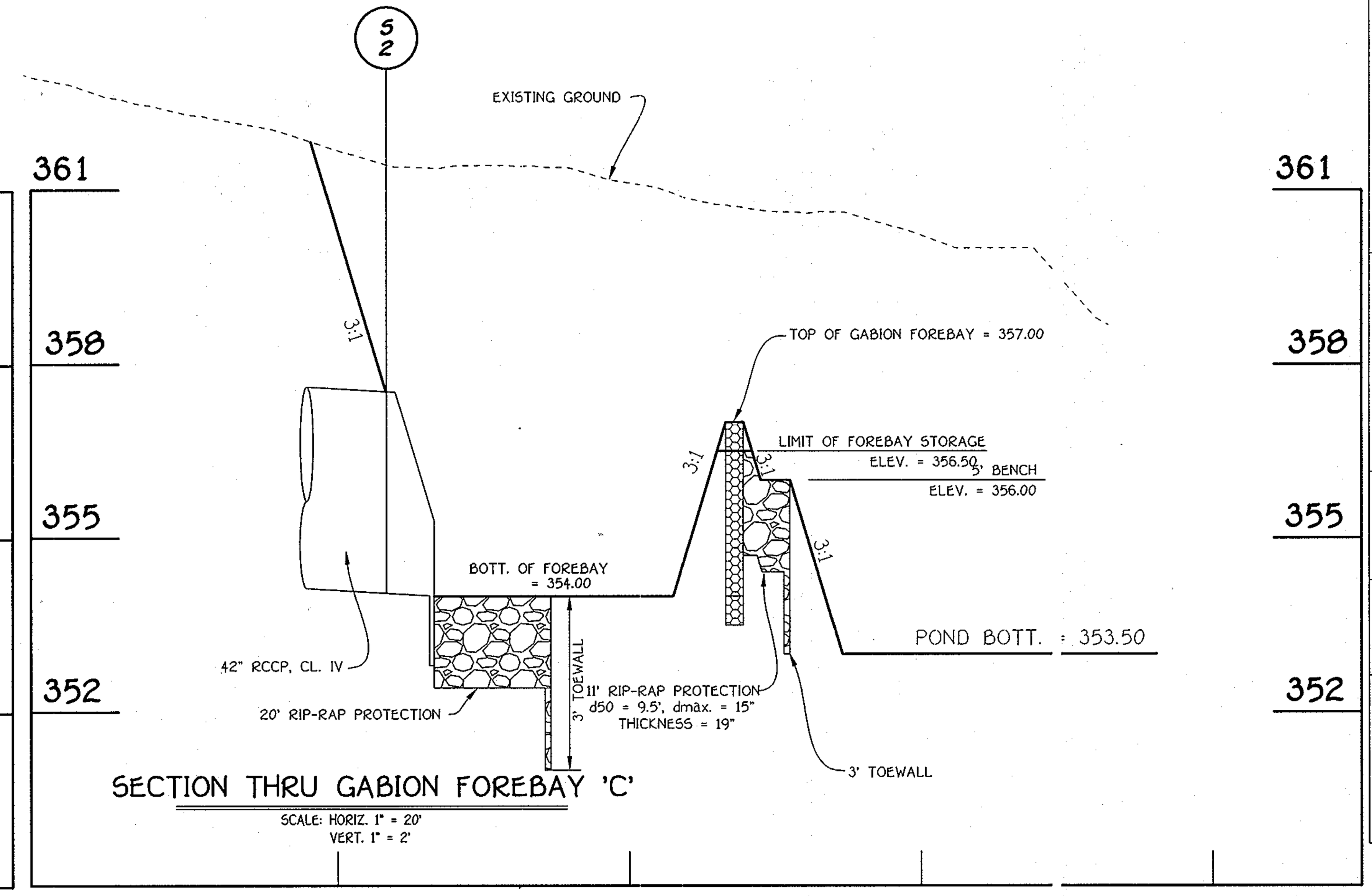

SECTION THRU GABION FOREBAY 'C'

SCALE: HORIZ. 1" = 20'
VERT. 1" = 2'

By The Developer:

"I/We Certify That All Development And/Or Construction Will Be Done According To These Plans, And That Any Responsible Personnel Involved In The Construction Project Will Have A Certificate Of Attendance At A Department Of The Environment Approved Training Program For The Control Of Sediment And Erosion Before Beginning The Project. I Shall Engage A Registered Professional Engineer To Supervise Pond Construction And Provide The Howard Soil Conservation District With An "As-Built" Plan Of The Pond Within 30 Days Of Completion. I Also Authorize Periodic On-Site Inspections By The Howard Soil Conservation District."

Signature Of Developer — Date 10/16/08

Timothy W. Feaga
Printed Name Of Developer

By The Engineer:

"I Certify That This Plan For Pond Construction, Erosion And Sediment Control Represents A Practical And Workable Plan Based On My Personal Knowledge Of The Site Conditions. This Plan Was Prepared In Accordance With The Requirements Of The Howard Soil Conservation District. I Have Notified The Developer That He/She Must Engage A Registered Professional Engineer To Supervise Pond Construction And Provide The Howard Soil Conservation District With An "As-Built" Plan Of The Pond Within 30 Days Of Completion."

Signature Of Engineer — Date 10.16.08

Printed Name Of Engineer

These Plans For Small Pond Construction, Soil Erosion And Sediment Control Meet The Requirements Of The Howard Soil Conservation District.

Howard Soil Conservation District — Date 10/23/08

Approved: Department Of Public Works

Chief Bureau Of Highways — Date 10-28-08

Approved: Department Of Planning And Zoning

Chief, Division Of Land Development — Date 11/3/08

Chief, Development Engineering Division — Date 10/31/08

AS-BUILT CERTIFICATION

I Hereby Certify That The Facility Shown On This Plan Was Constructed As Shown On The " As-Built" Plans And Meets The Approved Plans And Specifications.

Signature — P.E. No.

Date:

Certify Means To State Or Declare A Professional Opinion Based Upon Onsite Inspections And Material Tests Which Are Conducted During Construction. The Onsite Inspections And Material Tests Are Those Inspections And Tests Deemed Sufficient And Appropriate Commonly Accepted Engineering Standards. Certify Does Not mean Or Imply A Guarantee By The Engineer Nor Does An Engineer's Certification Relieve Any Other Party From Meeting Requirements Imposed By Contract, Employment, Or Other Means, Including Meeting Commonly Accepted Industry Practices.

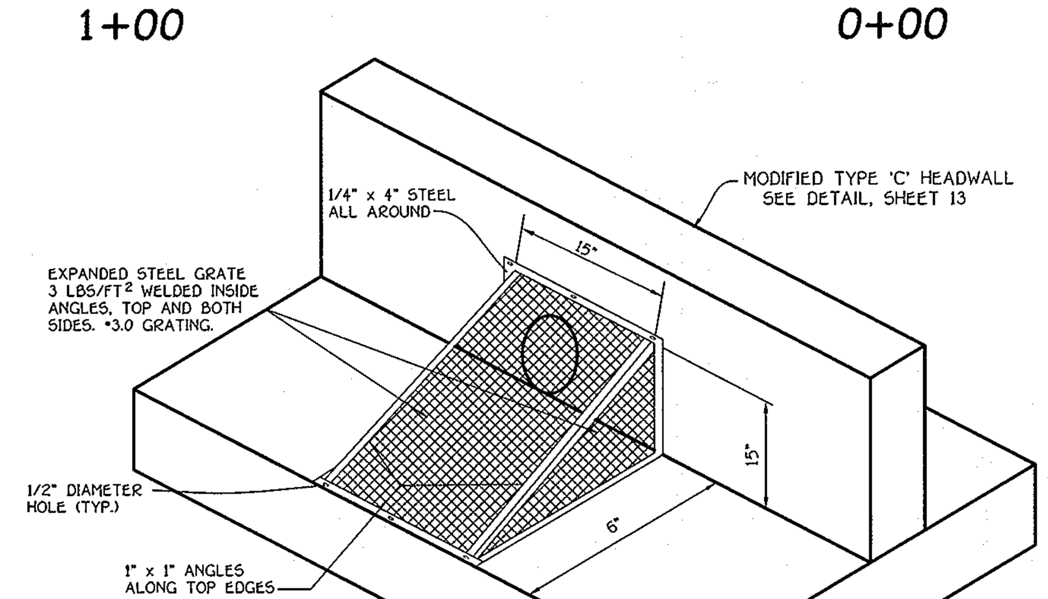

NOTES:
1. TRASH RACK TO BE CENTERED OVER OPENING .
2. STEEL TO CONFORM TO ASTM A-36.
3. ALL SURFACES TO BE COATED WITH ZRC COLD GALVANIZING COMPOUND AFTER WELDING AND PAINTED BATTLESHIP GREY.
4. TRASH RACK TO BE FASTENED TO THE WALL WITH 1/2" MASONRY ANCHORS, TRASH RACK TO BE REMOVABLE.

LOW FLOW
EXPANDED METAL TRASH RACK

NOT TO SCALE

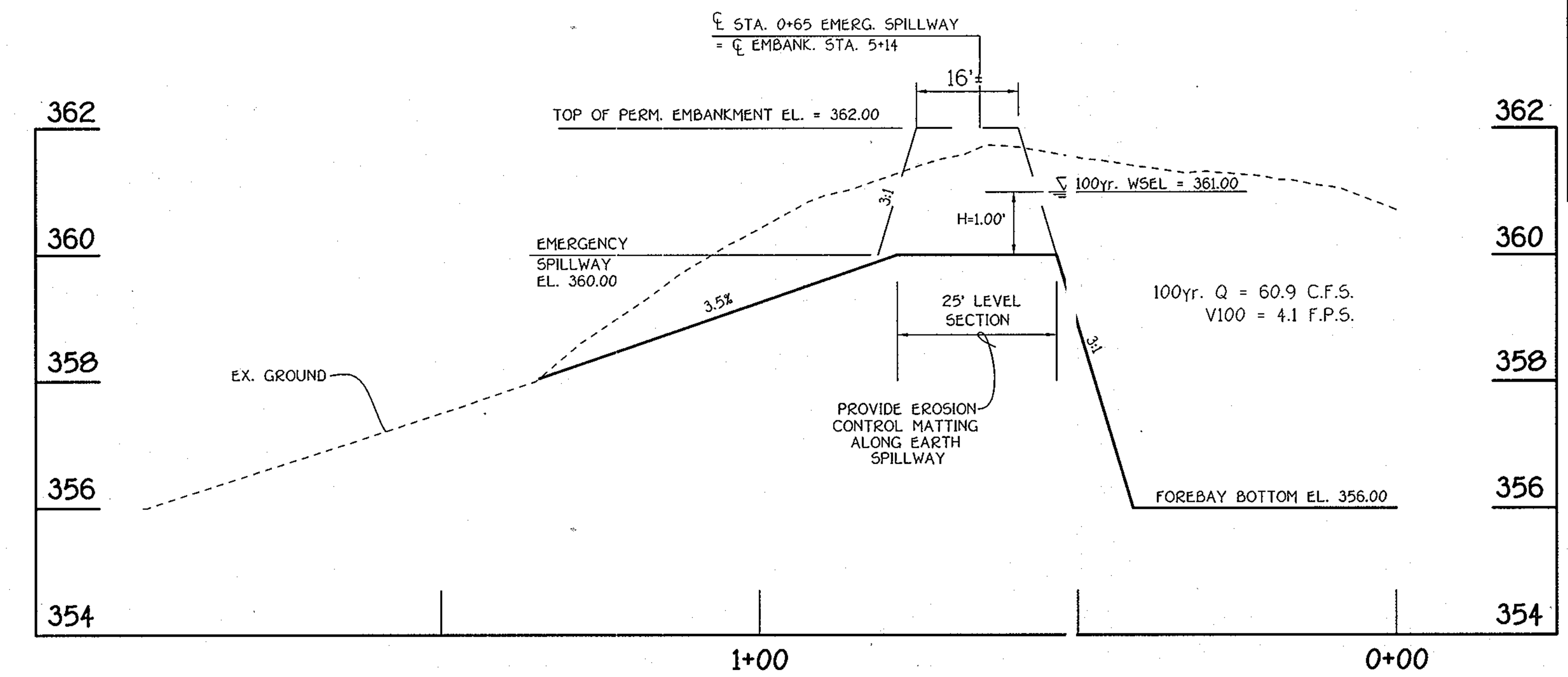

EMERGENCY SPILLWAY PROFILE

SCALE: HORIZ. 1" = 20'
VERT. 1" = 2'

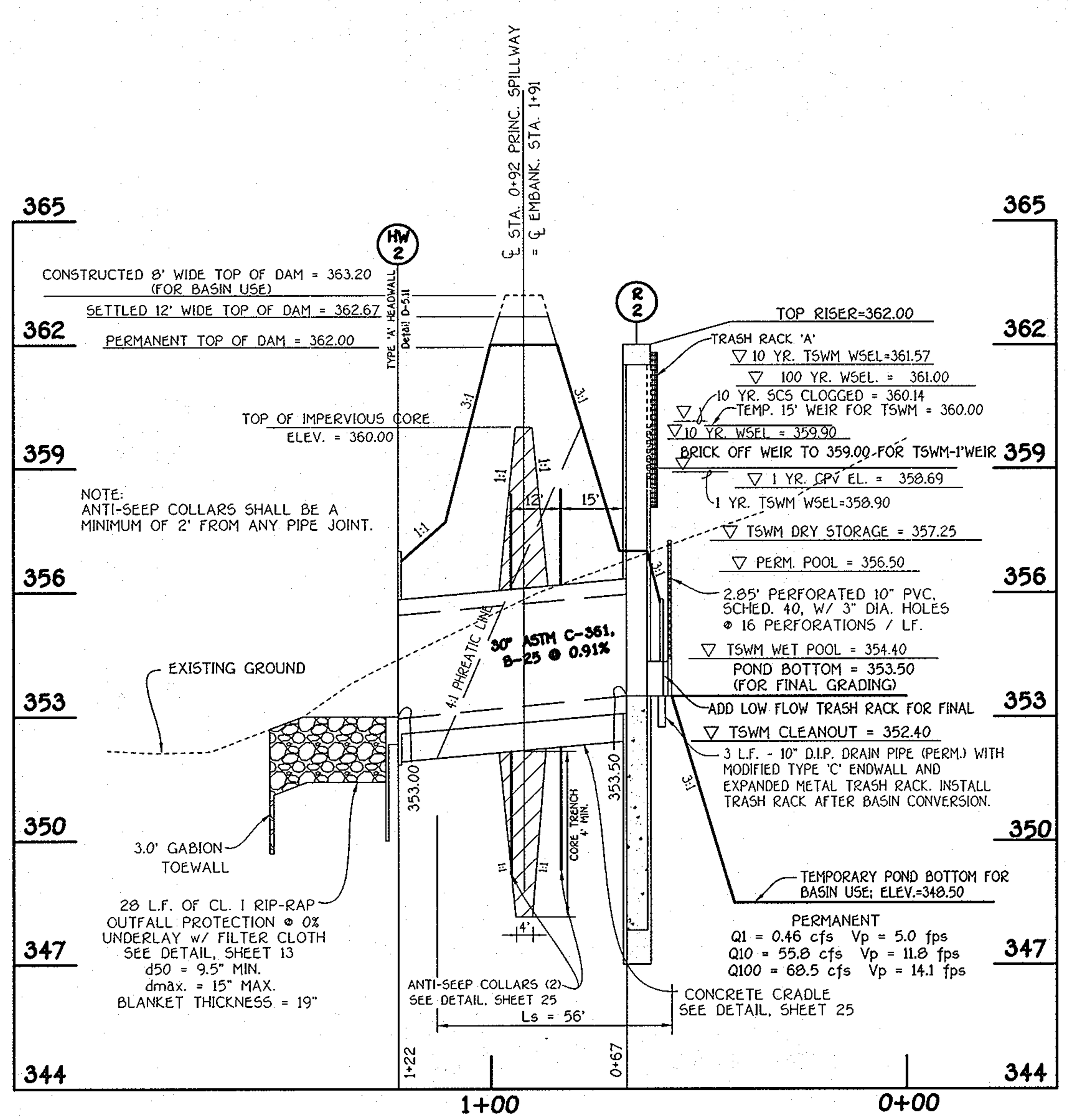

PRINCIPLE SPILLWAY PROFILE

SCALE: HOR. : 1" = 30'
VER. : 1" = 3'

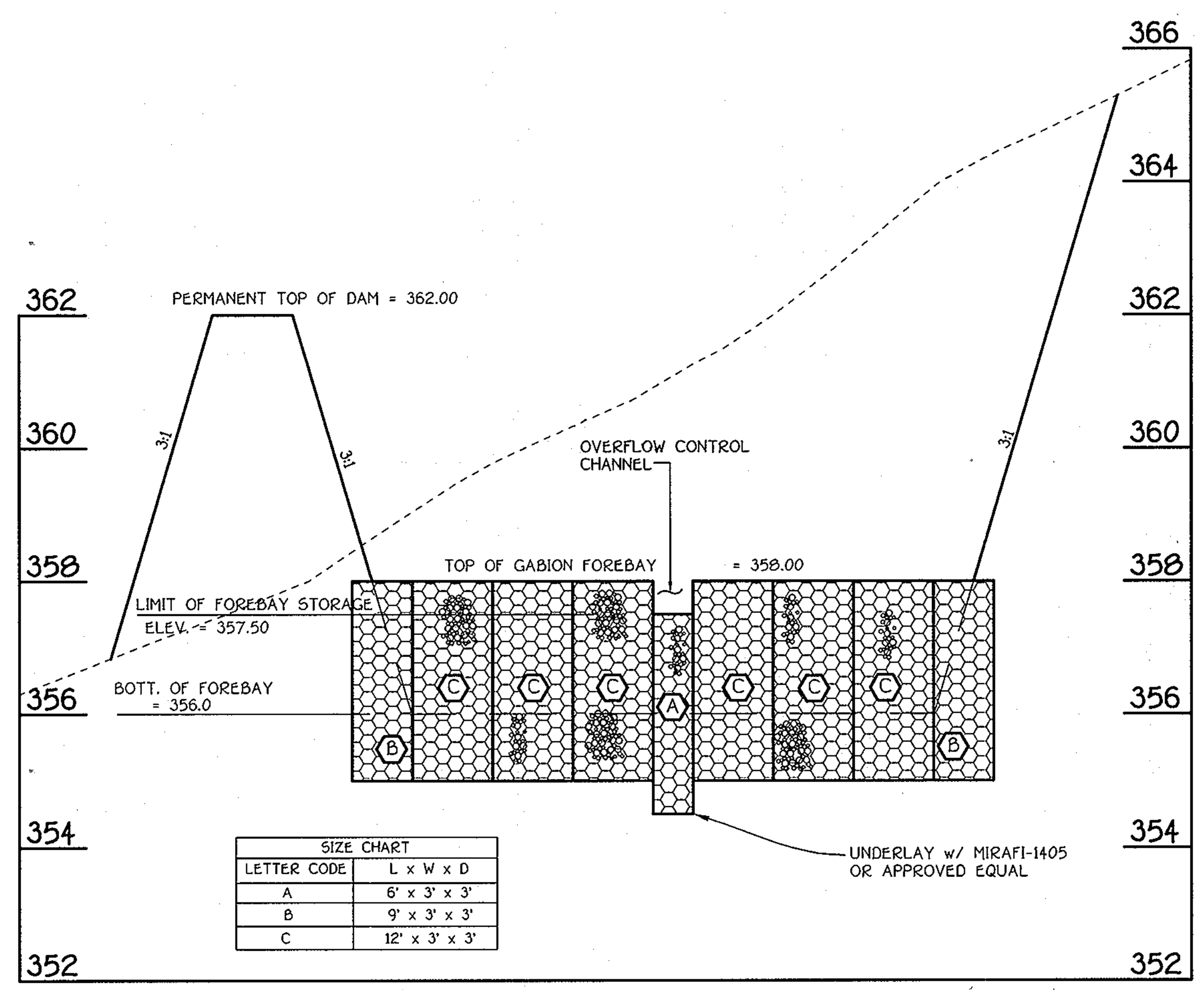

SIZE CHART	
LETTER CODE	L x W x D
A	6' x 3' x 3'
B	9' x 3' x 3'
C	12' x 3' x 3'

GABION FOREBAY 'C' PROFILE

SCALE: HORIZ. 1" = 20'
VERT. 1" = 2'

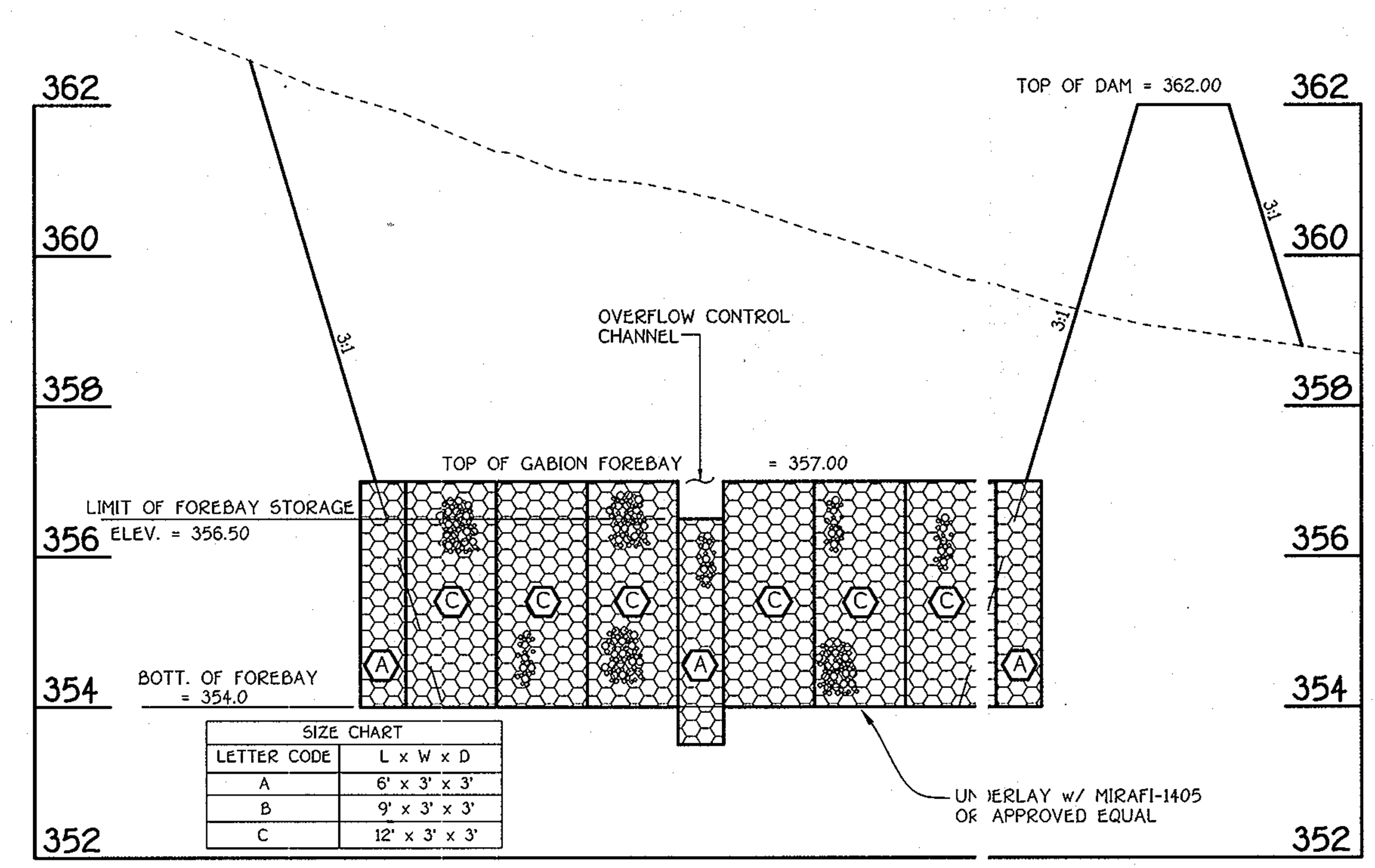

SIZE CHART	
LETTER CODE	L x W x D
A	6' x 3' x 3'
B	9' x 3' x 3'
C	12' x 3' x 3'

GABION FOREBAY 'D' PROFILE

SCALE: HORIZ. 1" = 20'
VERT. 1" = 2'

NO.	DESCRIPTION	DATE
1	REVISED TITLE BLOCK	9/25/12
REVISIONS		

ALDO M. VITUCCI — DATE 10.16.08

"Professional Certification. I hereby certify that these documents were prepared by me, and that I am a duly Licensed Professional Engineer under the laws of the State of Maryland, License No. 20748, Expiration Date 2-22-09."

FISHER, COLLINS & CARTER, INC.
CIVIL ENGINEERING CONSULTANTS & LAND SURVEYORS
CENTENNIAL SQUARE OFFICE PARK - 10272 BALTIMORE NATIONAL PIKE
ELLICOTT CITY, MARYLAND 21042
(410) 461 - 2855

OWNER
BASSLERS, INCORPORATED
c/o ALFRED S. BASSLER
4994 SHEPPARD LANE
ELLICOTT CITY, MARYLAND 21042

DEVELOPER
HERITAGE LAND DEVELOPMENT
15950 NORTH AVE.
LISBON, MARYLAND 21765

STORMWATER MANAGEMENT NOTES AND DETAILS
POND No. 4

WALNUT CREEK

PHASE TWO

Lots 23 - 68, Non-Buildable Preservation Parcels 'C', 'G', 'I', 'J', 'K', 'L' And 'M' & Buildable Bulk Parcels 'H' And 'N'

(Being A Resubdivision Of Buildable Bulk Parcels 'F' & 'E' And a Revision To Non-Buildable Preservation Parcel 'C' - Walnut Creek, Phase One, Plat No's. 20631 Thru 20647
ZONED: RC-DEO & RR-DEO
TAX MAP No. 28 GRID Nos. 4, 5, 10-12, 17, AND 18 PARCEL No. 49
FIFTH ELECTION DISTRICT
HOWARD COUNTY, MARYLAND
DATE: SEPTEMBER, 2008
SHEET 26 OF 32

F-08-081

I:\2004\04001\dwg\PHASE TWO FINALS\04001-3001 SHEET 25-26 FINAL SWM DETAILS.dwg, SHEET 26, 1:1

APPROVED: DEPARTMENT OF PUBLIC WORKS

CHIEF, BUREAU OF HIGHWAYS — DATE 10-28-08

APPROVED: DEPARTMENT OF PLANNING AND ZONING

CHIEF, DIVISION OF LAND DEVELOPMENT — DATE 11/3/08

CHIEF, DEVELOPMENT ENGINEERING DIVISION — DATE 10/31/08

NO.	DESCRIPTION	DATE
1	REVISED TITLE BLOCK	9/25/12

REVISIONS

Note: This Sheet Is For Drainage Area Information Only.

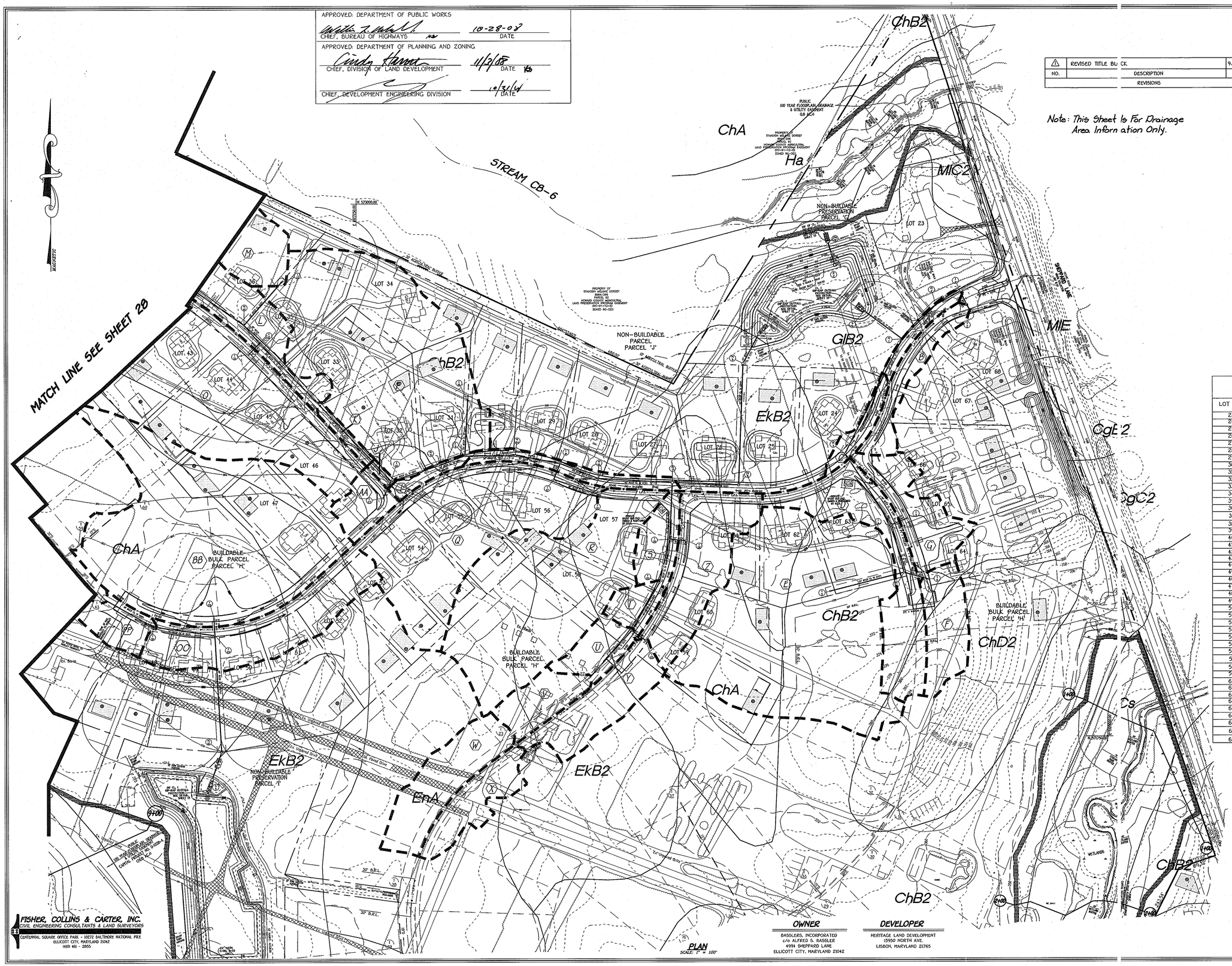

PLAN
SCALE 1" = 100'

STORM DRAIN DRAINAGE REPORT					
STRUCTURE NO.	AREA	AREA (AC)	'C'	ZONED	% IMP.
I-1	A	0.23	0.53	RC-DEO	43
I-2	B	0.55	0.45	RC-DEO	31
I-3	C	0.21	0.52	RC-DEO	43
I-4	D	1.31	0.45	RC-DEO	31
I-5	E	4.55	0.30	RC-DEO	7
I-6	F	0.61	0.46	RC-DEO	33
I-7	G	0.74	0.48	RC-DEO	36
I-8	H	0.34	0.62	RC-DEO	60
I-9	I	0.13	0.64	RC-DEO	60
I-10	J	0.04	0.63	RC-DEO	60
I-11	K	0.11	0.48	RC-DEO	36
I-12	L	1.63	0.47	RC-DEO	34
I-13	M	1.09	0.30	RC-DEO	7
I-14	N	2.88	0.33	RC-DEO	12
I-15	O	4.47	0.35	RC-DEO	15
I-16	P	3.98	0.35	RC-DEO	15
I-17	Q	2.72	0.37	RC-DEO	18
I-18	R	3.03	0.31	RC-DEO	8
I-19	S	0.39	0.46	RC-DEO	33
I-20	T	0.25	0.48	RC-DEO	36
I-21	U	0.37	0.42	RC-DEO	27
I-22	V	0.45	0.49	RC-DEO	38
I-23	W	0.89	0.45	RC-DEO	31
I-24	X	0.54	0.45	RC-DEO	31
I-25	Y	0.80	0.47	RC-DEO	34
I-26	Z	1.20	0.44	RC-DEO	30
I-27	AA	0.34	0.48	RC-DEO	35
I-28	BB	4.62	0.35	RC-DEO	14
I-29	OO	1.34	0.47	RC-DEO	43
I-30	PP	0.38	0.48	RC-DEO	50
I-43	QQ	0.23	0.50	RC-DEO	39

DRIVEWAY CULVERT SIZE ANALYSIS					
LOT NO.	PIPE SIZE	ROAD STA. & GRADE		ROAD NAME	REMARKS
23	12"	STA: 2+40	1.0%	ASHLEIGH DRIVE	
24	12"	STA: 5+94	1.0%	ASHLEIGH DRIVE	
25	12"	STA: 8+24	1.0%	ASHLEIGH DRIVE	
26	12"	STA: 9+54	1.0%	ASHLEIGH DRIVE	
27	12"	STA: 11+08	1.0%	ASHLEIGH DRIVE	
28	12"	STA: 12+80	1.0%	ASHLEIGH DRIVE	
29	12"	STA: 14+02	3.5%	ASHLEIGH DRIVE	
30	12"	STA: 15+00	3.5%	ASHLEIGH DRIVE	
31	12"	STA: 16+01	3.5%	ASHLEIGH DRIVE	
32	12"	STA: 1+07	1.0%	BENJAMINS COURT	
33	12"	STA: 3+29	4.0%	BENJAMINS COURT	
34	12"	STA: 4+25	4.0%	BENJAMINS COURT	
35	12"	STA: 4+73	4.0%	BENJAMINS COURT	
36	12"	STA: 6+25	3.0%	BENJAMINS COURT	
37	12"	L.P. 2+37	3.0%	BENJAMINS COURT	
38	12"	L.P. 1+84	3.0%	BENJAMINS COURT	
39	12"	L.P. 1+64	3.0%	BENJAMINS COURT	
40	NO PIPE	L.P. 1+49	HIGH PT.	BENJAMINS COURT	
41	12"	L.P. 1+23	3.0%	BENJAMINS COURT	
42	12"	L.P. 0+60	3.0%	BENJAMINS COURT	
43	12"	STA: 6+17	3.0%	BENJAMINS COURT	
44	12"	STA: 4+75	4.0%	BENJAMINS COURT	
45	12"	STA: 3+46	4.0%	BENJAMINS COURT	
46	12"	STA: 18+23	3.5%	ASHLEIGH DRIVE	
47	12"	STA: 19+47	2.0%	ASHLEIGH DRIVE	
48	12"	STA: 24+17	1.24%	ASHLEIGH DRIVE	
49	12"	STA: 23+03	1.24%	ASHLEIGH DRIVE	
50	12"	STA: 22+04	2.0%	ASHLEIGH DRIVE	
51	12"	STA: 21+11	2.0%	ASHLEIGH DRIVE	
52	12"	STA: 20+19	2.0%	ASHLEIGH DRIVE	
53	12"	STA: 19+22	2.0%	ASHLEIGH DRIVE	
54	12"	STA: 17+99	3.5%	ASHLEIGH DRIVE	
55	12"	STA: 16+76	3.5%	ASHLEIGH DRIVE	
56	12"	STA: 14+43	3.5%	ASHLEIGH DRIVE	
57	12"	STA: 1+62	1.0%	HAYLAND COURT	
58	12"	STA: 3+40	1.0%	HAYLAND COURT	
59	12"	STA: 3+27	1.0%	HAYLAND COURT	
60	12"	STA: 2+29	1.0%	HAYLAND COURT	
61	12"	STA: 9+08	1.0%	ASHLEIGH DRIVE	
62	12"	STA: 8+18	1.0%	ASHLEIGH DRIVE	
63	12"	STA: 7+26	1.0%	ASHLEIGH DRIVE	
64	12"	STA: 3+13	3.5%	HAYLAND FARM WAY	
65	12"	STA: 2+04	3.5%	HAYLAND FARM WAY	
66	12"	STA: 0+96	3.0%	HAYLAND FARM WAY	
67	12"	STA: 4+28	1.0%	ASHLEIGH DRIVE	
68	12"	STA: 2+24	4.0%	ASHLEIGH DRIVE	

STATE OF MARYLAND — ALDO DICHILLO — No. 20748 — PROFESSIONAL ENGINEER

ALDO — DATE 10-16-08

"Professional Engineer Certification: I hereby certify that these documents were prepared or approved by me, and that I am a duly Licensed Professional Engineer under the laws of the State of Maryland, License No. 20748, Expiration Date 2-22-09."

STORM DRAIN DRAINAGE AREA MAP

WALNUT CREEK

PHASE TWO

Lots 23 – 68, Non-Buildable Preservation Parcels 'C', 'G', 'I', 'J', 'K', 'L' And 'M' & Buildable Bulk Parcels 'H' And 'N'

(Being A Resubdivision Of Buildable Bulk Parcels 'F' & 'E' And a Revision To Non-Buildable Preservation Parcel 'C' – Walnut Creek, Phase One, Plat No's. 20631 Thru 20647.

ZONED: RC-DEO & RR-DEO

TAX MAP No. 28 GRID Nos. 4, 5, 10-12, 17, AND 18 PARCEL No. 49

FIFTH ELECTION DISTRICT

HOWARD COUNTY, MARYLAND

DATE: SEPTEMBER, 2008

SHEET 27 OF 32

OWNER

BASSLERS, INCORPORATED
c/o ALFRED S. BASSLER
4994 SHEPPARD LANE
ELLICOTT CITY, MARYLAND 21042

DEVELOPER

HERITAGE LAND DEVELOPMENT
15950 NORTH AVE.
LISBON, MARYLAND 21765

FISHER, COLLINS & CARTER, INC.
CIVIL ENGINEERING CONSULTANTS & LAND SURVEYORS
CENTENNIAL SQUARE OFFICE PARK - 10272 BALTIMORE NATIONAL PIKE
ELLICOTT CITY, MARYLAND 21042
(410) 461 - 2855

F-08-081

I:\2004\04001\dwg\PHASE TWO FINALS\04001-3001 SHEET 27-28 DRAINAGE AREA MAP.dwg, SHEET 27, 1:1

APPROVED: DEPARTMENT OF PUBLIC WORKS	
CHIEF, BUREAU OF HIGHWAYS	10-28-08 DATE
APPROVED: DEPARTMENT OF PLANNING AND ZONING	
CHIEF, DIVISION OF LAND DEVELOPMENT	11/3/08 DATE
CHIEF, DEVELOPMENT ENGINEERING DIVISION	10/31/08 DATE

SOILS LEGEND

SOIL	NAME	CLASS
CgB2	Chester gravelly silt loam, 3 to 8 percent slopes, moderately eroded	B
CgC2	Chester gravelly silt loam, 8 to 15 percent slopes, moderately eroded	B
ChA	Chester silt loam, 0 to 3 percent slopes	B
ChB2	Chester silt loam, 3 to 8 percent slopes, moderately eroded	B
ChC2	Chester silt loam, 8 to 15 percent slopes, moderately eroded	B
ChD2	Chester silt loam, 15 to 25 percent slopes, moderately eroded	B
* Cs	Cornus silt loam	B
EkA	Elioak silt loam, 0 to 3 percent slopes	B
EkB2	Elioak silt loam, 3 to 8 percent slopes, moderately eroded	B
ElD3	Elioak silty clay loam, 15 to 25 percent slopes, severely eroded	B
GlB2	Glenelg loam, 3 to 8 percent slopes, moderately eroded	B
GlD3	Glenelg loam, 15 to 25 percent slopes, severely eroded	B
* GnA	Glenville silt loam, 0 to 3 percent slopes	C
* GnB2	Glenville silt loam, 3 to 8 percent slopes, moderately eroded	C
** Ha	Hatboro silt loam	D
MgB2	Manor gravelly loam, 3 to 8 percent slopes, moderately eroded	B
MgC2	Manor gravelly loam, 8 to 15 percent slopes, moderately eroded	B
MlB2	Manor loam, 3 to 8 percent slopes, moderately eroded	B
MlD2	Manor loam, 15 to 25 percent slopes, moderately eroded	B
MlE	Manor loam, 25 to 45 percent slopes	B
MnD	Manor very stony loam, 3 to 25 percent slopes	B
MnF	Manor very stony loam, 25 to 60 percent slopes	B

NOTES:

* Hydric soils and/or contains hydric inclusions

** May contain hydric inclusions

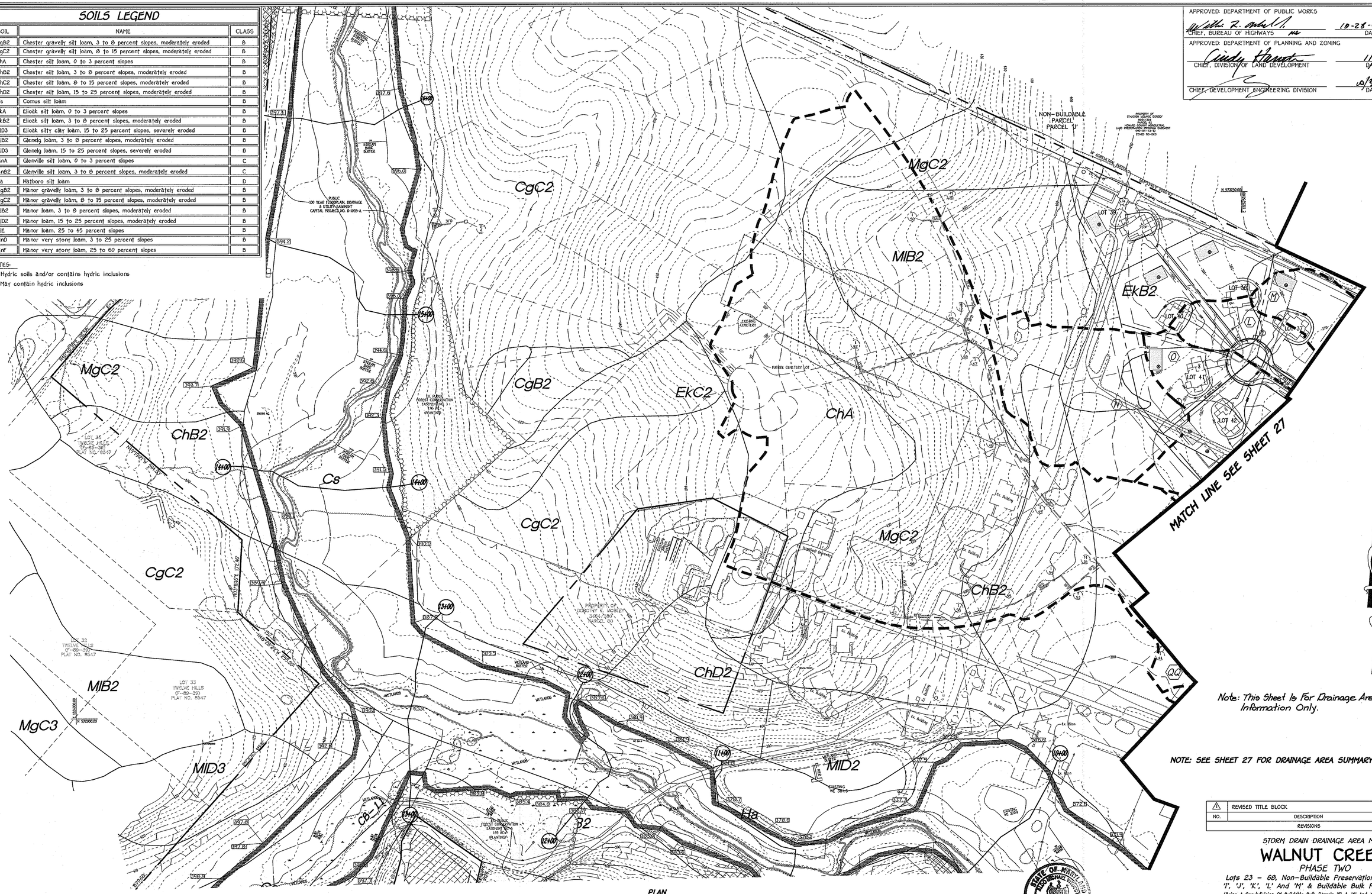

Note: This Sheet Is For Drainage Area Information Only.

NOTE: SEE SHEET 27 FOR DRAINAGE AREA SUMMARY CHART.

PLAN
SCALE: 1" = 100'

NO.	DESCRIPTION	DATE
1	REVISED TITLE BLOCK	9/25/12

REVISIONS

STORM DRAIN DRAINAGE AREA MAP

WALNUT CREEK

PHASE TWO 1

Lots 23 – 68, Non-Buildable Preservation Parcels 'C', 'G', 'I', 'J', 'K', 'L' And 'M' & Buildable Bulk Parcels 'H' And 'N'

(Being A Resubdivision Of Buildable Bulk Parcels 'I' & 'E' And a Revision To Non-Buildable Preservation Parcel 'C' - Walnut Creek, Phase One, Plat No's. 20631 Thru 20647

ZONED: RC-DEO & RR-DEO

TAX MAP No. 28 GRID Nos. 4, 5, 10-12, 17, AND 18 PARCEL No. 49

FIFTH ELECTION DISTRICT

HOWARD COUNTY, MARYLAND

DATE: SEPTEMBER, 2008

SHEET 28 OF 32

STATE OF MARYLAND
ALDO E. SCHIAVONE
No. 20748
PROFESSIONAL ENGINEER

10-16-08
DATE

"Professional Certification. I hereby certify that these documents were prepared by me, and that I am a duly Licensed Professional Engineer under the laws of the State of Maryland, License No. 20748, Expiration Date 2-22-09."

FISHER, COLLINS & CARTER, INC.
CIVIL ENGINEERING CONSULTANTS & LAND SURVEYORS
CENTENNIAL SQUARE OFFICE PARK - 10272 BALTIMORE NATIONAL PIKE
ELLICOTT CITY, MARYLAND 21042
(410) 461 - 2855

OWNER

BASSLERS, INCORPORATED
c/o ALFRED S. BASSLER
4994 SHEPPARD LANE
ELLICOTT CITY, MARYLAND 21042

DEVELOPER

HERITAGE LAND DEVELOPMENT
19950 NORTH AVE.
LISBON, MARYLAND 21765

F-08-081

I:\2004\04001\dwg\PHASE TWO FINALS\04001-3001 SHEET 27-28 DRAINAGE AREA MAP.dwg, SHEET 28, 1:1

HERST/TIBBENSON & ASSOCIATES Geotechnical Engineers

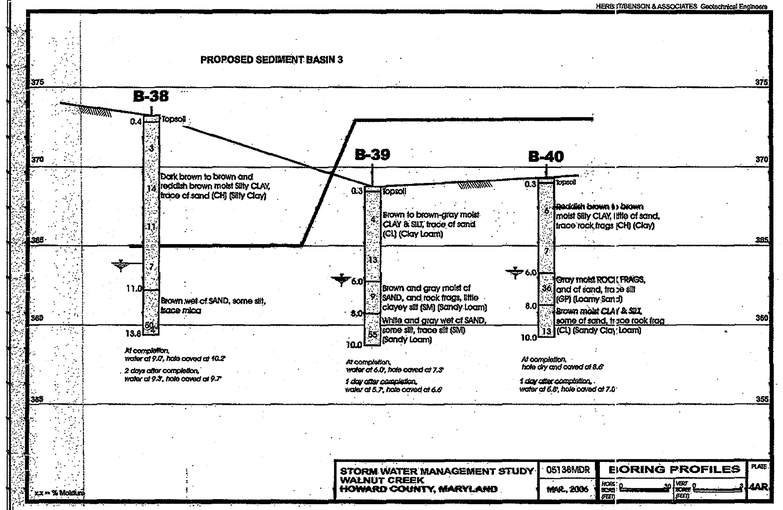

STORM WATER MANAGEMENT STUDY WALNUT CREEK HOWARD COUNTY, MARYLAND	05138MDR MAR., 2006	BORING PROFILES HORZ. SCALE 0 — 50 (FEET) VERT. SCALE 0 — 5 (FEET)	PLATE 4AR

HERST/TIBBENSON & ASSOCIATES Geotechnical Engineers

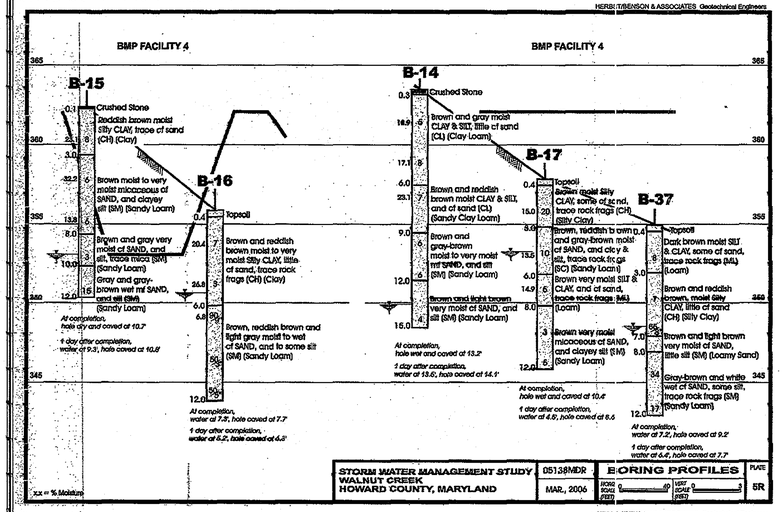

STORM WATER MANAGEMENT STUDY WALNUT CREEK HOWARD COUNTY, MARYLAND	05138MDR MAR., 2006	BORING PROFILES HORZ. SCALE 0 — 50 (FEET) VERT. SCALE 0 — 5 (FEET)	PLATE 5R

HERST/TIBBENSON & ASSOCIATES Geotechnical Engineers

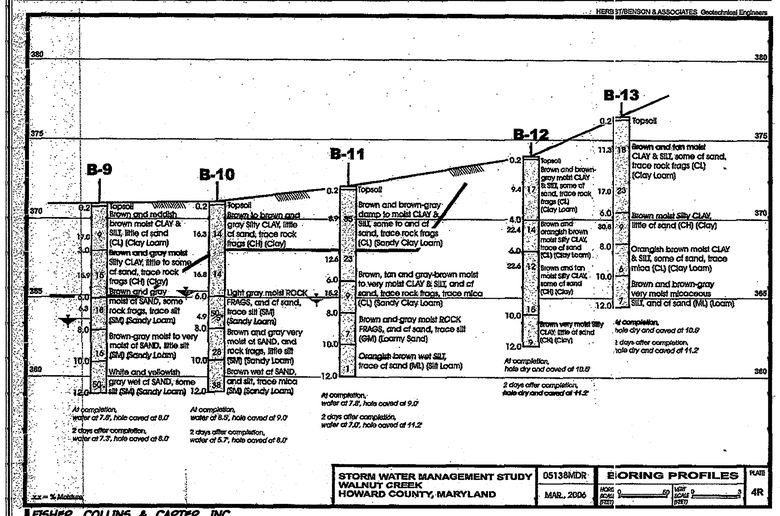

STORM WATER MANAGEMENT STUDY WALNUT CREEK HOWARD COUNTY, MARYLAND	05138MDR MAR., 2006	BORING PROFILES HORZ. SCALE 0 — 50 (FEET) VERT. SCALE 0 — 5 (FEET)	PLATE 4R

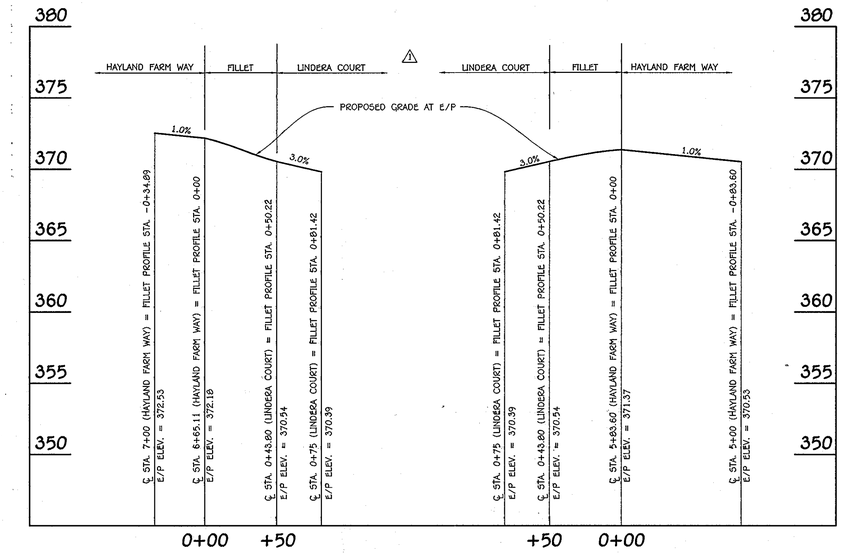

FILLET PROFILE

SCALE: HOR. : 1" = 50'
VER. : 1" = 5'

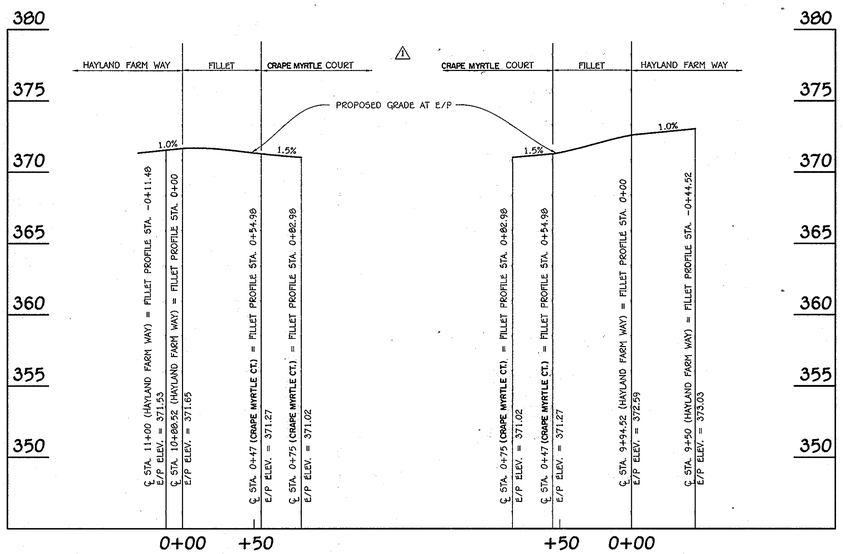

FILLET PROFILE

SCALE: HOR. : 1" = 50'
VER. : 1" = 5'

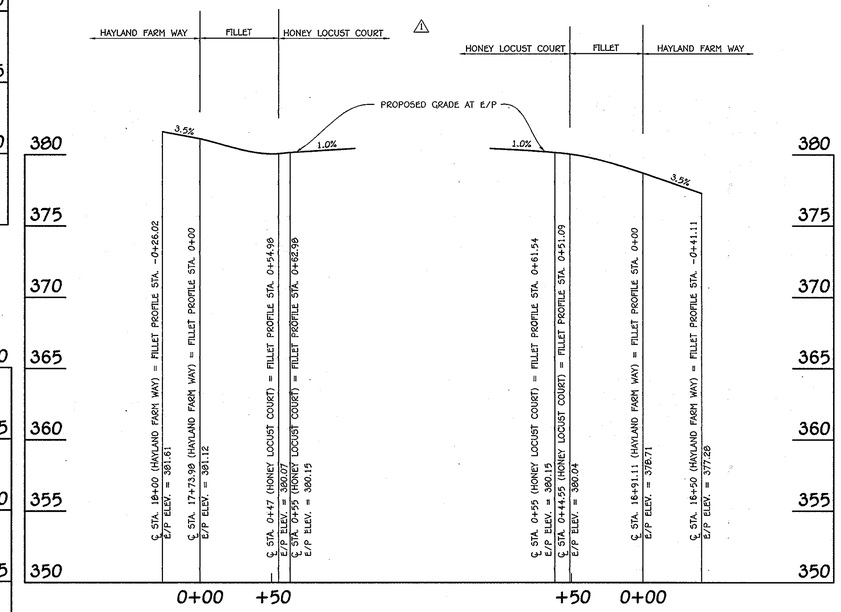

FILLET PROFILE

SCALE: HOR. : 1" = 50'
VER. : 1" = 5'

APPROVED: DEPARTMENT OF PUBLIC WORKS

Diane Ashburg, Acting — 11/29/12
CHIEF, BUREAU OF HIGHWAYS — DATE

APPROVED: DEPARTMENT OF PLANNING AND ZONING

Kent Sheubrooks — 12/05/12
CHIEF, DIVISION OF LAND DEVELOPMENT — DATE

12/3/12
CHIEF, DEVELOPMENT ENGINEERING DIVISION — DATE

NO.	DESCRIPTION	DATE
1	REVISED ROAD NAMES & TITLE BLOCK	5/25/12

REVISIONS

OWNER

BASSLERS, INCORPORATED
c/o ALFRED S. BASSLER
4994 SHEPPARD LANE
ELLICOTT CITY, MARYLAND 21042
(410) 461-2855

DEVELOPER

HERITAGE LAND DEVELOPMENT
19950 NORTH AVE.
LISBON, MARYLAND 21765
(410) 489-7900

STATE OF MARYLAND — ALDO MICHAEL VIDONI — No. 22025 — PROFESSIONAL ENGINEER

"Professional Engineer certifies that these documents were prepared by me, and that I am a duly Licensed Professional Engineer under the laws of the State of Maryland, License No. 20748, Expiration Date 2-22-13."

12/3/12
DATE

FISHER, COLLINS & CARTER, INC.
CIVIL ENGINEERING CONSULTANTS & LAND SURVEYORS
CENTENNIAL SQUARE OFFICE PARK - 10272 BALTIMORE NATIONAL PIKE
ELLICOTT CITY, MARYLAND 21042
(410) 461 - 2855

REVISED

SOIL BORINGS & FILLET PROFILES

WALNUT CREEK

PHASE TWO

△1 Lots 23 - 68, Non-Buildable Preservation Parcels 'C', 'G', 'I', 'J', 'K', 'L' And 'M' & Buildable Bulk Parcels 'H' And 'N'

(Being A Resubdivision Of Buildable Bulk Parcels 'F' & 'E' And a Revision To Non-Buildable Preservation Parcel 'C' - Walnut Creek, Phase One, Plat No's. 20631 Thru 20647
ZONED: RC-DEO & RR-DEO
TAX MAP No. 28 GRID Nos. 4, 5, 10-12, 17, AND 18 PARCEL No. 49
FIFTH ELECTION DISTRICT
HOWARD COUNTY, MARYLAND
DATE: SEPTEMBER, 2009
SHEET 29 OF 32

F-08-081

I:\2004\04001\dwg\PHASE TWO FINALS\PHASE TWO RIBLINE 2012\04001-S001 SHEET 29 SOIL BORINGS.dwg, SHEET 29 MYLAR, 10/30/2012 3:31:36 PM, 1:1

NOTES:

1. ALL LANE DESIGNATION TO BE THERMOPLASTIC LINE STRIPING.
2. EXISTING PAVEMENT MARKINGS SHALL BE REMOVED BY GRINDING.
3. ALL PAVEMENT MARKINGS SHALL BE 5" WIDE UNLESS NOTED OTHERWISE.
4. ALL RELOCATED SIGNS ARE TO BE INSTALLED ON NEW 2" GALVANIZED STEEL, PERFORATED, SQUARE TUBE POSTS (14 GAUGE) INSERTED INTO A 2-1/2" GALVANIZED STEEL, PERFORATED, SQUARE TUBE SLEEVES (12 GAUGE) 3' LONG WITH A GALVANIZED STEEL CAP ON THE TOP OF POST.
5. CONTACT HOWARD COUNTY TRAFFIC DIVISION AT (410) 313-5752 PRIOR TO LAYING-OUT AND INSTALLING ANY SIGNS AND OR PAVEMENT MARKINGS. THE TRAFFIC DIVISION WILL ALSO DETERMINE WHICH EXISTING MARKINGS WILL NEED TO BE REMOVED BY GRINDING.

APPROVED: DEPARTMENT OF PUBLIC WORKS	
CHIEF, BUREAU OF HIGHWAYS	10-28-08 DATE
APPROVED: DEPARTMENT OF PLANNING AND ZONING	
CHIEF, DIVISION OF LAND DEVELOPMENT	11/3/08 DATE
CHIEF, DEVELOPMENT ENGINEERING DIVISION	10/31/08 DATE

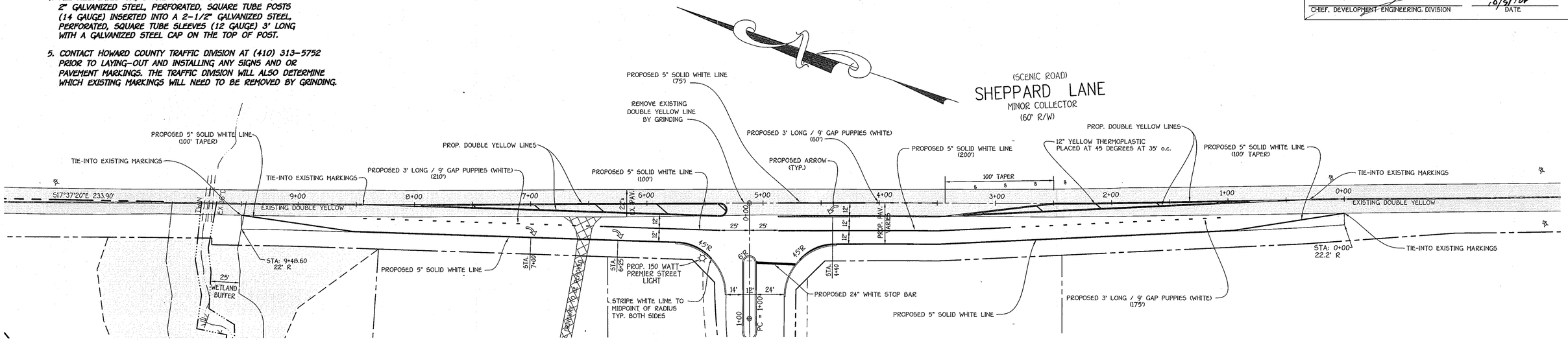

STRIPING PLAN

SCALE: 1" = 40'

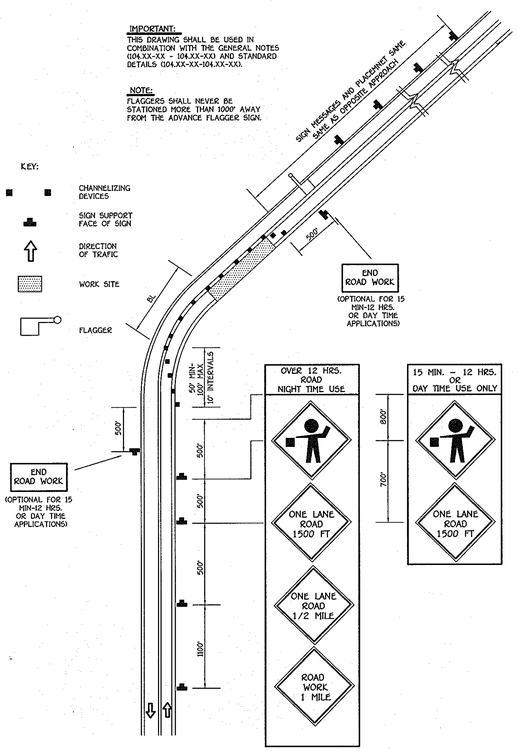

FLAGGING OPERATION /-LANE, 2-WAY EQUAL/LESS THAN 40 MPH

NO SCALE

MAINTENANCE OF TRAFFIC SPECIAL PROVISIONS

GENERAL

1. THE PURPOSE OF THIS PORTION OF THE SPECIAL PROVISION IS TO SET FOR THE TRAFFIC CONTROL REQUIREMENTS NECESSARY FOR THE SAFE AND EFFICIENT MAINTENANCE TO TRAFFIC WITHIN WORK AREAS, AND TO MINIMIZE ANY INCONVENIENCES TO THE TRAVELING PUBLIC AND THE CONTRACTOR AND/OR PERMITTEE.
2. PROPERTY TRAFFIC CONTROL THROUGH WORK AREAS IS ESSENTIAL FOR INSURING THE SAFETY AND THAT OF HIGHWAY WORKERS HAS THE HIGHEST PRIORITY OF ALL TASKS WITHIN THIS PROJECT. THE PROPERTY APPLICATION OF THE APPROVED TRAFFIC CONTROL PLAN (TCP) WILL PROVIDE THE DESIRED LEVEL OF SAFETY.
3. THROUGHOUT THESE SPECIAL PROVISIONS, ANY MENTION OF THE TCP SHALL BE IMPLIED TO INCLUDE ANY COMBINATION OF TYPICAL TRAFFIC CONTROL STANDARDS WHICH FORM THE OVERALL TCP FOR THIS PROJECT WHICH HAS BEEN APPROVED BY THE APPROPRIATE SHA TRAFFIC ENGINEER.
4. THE CONTRACTOR AND/OR PERMITTEE SHALL BE REQUIRED TO ADHERE TO THE PROVISIONS OF THE MANUAL OF UNIFORM TRAFFIC CONTROL DEVICES (MUTCD), 1988 EDITION, ESPECIALLY PART VI, AND TO SECTION 104 OF THE MARYLAND DOT STANDARD SPECIFICATIONS FOR CONSTRUCTION AND MATERIALS (JANUARY, 1982) INCLUDING ALL REVISIONS AND SUPPLEMENTS TO EACH.
5. THE CONTRACTOR AND/OR PERMITTEE SHALL BE REQUIRED TO ADHERE TO THE REQUIREMENTS SET FOR IN THE TCP AND THESE SPECIAL PROVISIONS, UNLESS OTHERWISE DIRECTED BY THE ENGINEER. ANY REQUESTS TO MAKE MINOR CHANGES TO THE TCP OR THE SPECIAL PROVISIONS WITH REGARD TO THE TRAFFIC CONTROL ITEMS SHALL BE MADE IN WRITING TO THE ENGINEER A MINIMUM OF THIRTEEN WORKING DAYS PRIOR TO THE PROPOSED SCHEDULING CHANGE. THE CONTRACTOR AND/OR PERMITTEE SHALL HAVE WRITTEN APPROVAL OF THE ENGINEER PRIOR TO THE IMPLEMENTATION OF ANY CHANGE.
6. NO WORK SHALL BEGIN ON ANY WORK ACTIVITY OR WORK PHASE UNTIL ALL REQUIRED TRAFFIC CONTROL PATTERNS AND DEVICES INDICATED ON THE TCP FOR THAT ACTIVITY OR PHASE ARE COMPLETELY AND CORRECTLY IN PLACE TO HAVE BEEN CHECKED FOR APPROVED USAGE.
7. GENERAL AND SPECIFIC WARNING SIGNS SHALL ONLY BE IN PLACE WHEN SPECIFIC WORK TASKS AND ACTIVITIES ARE ACTUALLY UNDERWAY OR CONDITIONS EXIST THAT POSE A POTENTIAL HAZARD TO THE PUBLIC, AND ANY ADDITIONAL SIGNING HAS BEEN APPROVED BY THE APPROPRIATE SHA TRAFFIC ENGINEER. NOTE: THE PRACTICE OF PLACING SIGNING AND OTHER TRAFFIC CONTROL DEVICES IN ADDITION TO THOSE INDICATED ON THE APPROVED TCP IS NOT PERMITTED.
8. THE CONTRACTOR AND/OR PERMITTEE SHALL PROVIDE, MAINTAIN IN NEW CONDITION, AND MOVE WHEN NECESSARY, OR AS DIRECTED BY THE ENGINEER, ALL TRAFFIC CONTROL DEVICES USED FOR THE GUIDANCE AND PROTECTION OF MOTORISTS, PEDESTRIANS, AND WORKERS.
9. ALL TRAFFIC CONTROL DEVICES REQUIRED BY THE TCP SHALL BE KEPT IN GOOD CONDITION, FULLY PERFORMING AS SET FORTH IN THE TCP, THE MUTCD, AND/OR SECTION 104 OF THE SPECIFICATIONS. FOR REFLECTIVE DEVICES, A PARTICULAR DEVICE IS ASSUMED TO HAVE FAILED TO MEET MINIMUM OPERATIONAL STANDARDS WHEN THE DEVICE NO LONGER HAS RETRO-REFLECTANCE CAPABILITY OF AT LEAST 60XXX OF THE SPECIFIED MINIMUM VALUE OVER AT LEAST 60XXX OF THE VISIBLE REFLECTIVE SURFACE.
10. ALL TRAFFIC CONTROL DEVICES NOT REQUIRED FOR THE SAFE CONDUCT OF TRAFFIC SHALL BE PROMPTLY REMOVED, COMPLETELY COVERED, TURNED AWAY FROM TRAFFIC, OR OTHERWISE TAKEN OUT OF SERVICE. IT IS INTENDED THAT NO TRAFFIC CONTROL DEVICE IS TO BE IN SERVICE WHEN THERE IS NO CLEAR CUT REASON FOR THE DEVICE.
11. THROUGHOUT THE PERIOD(S) OF WORK ACTIVITIES, TRAFFIC SHALL BE MAINTAINED BY IMPLEMENTING THE APPROVED TCP. IN LIEU OF THE TCP PREPARED FOR THIS PROJECT, AND/OR INDIVIDUAL TYPICAL TRAFFIC CONTROL STANDARDS, THE CONTRACTOR AND/OR PERMITTEE HAS THE OPTION OF PREPARING AND SUBMITTING A TCP, WHOLLY OR IN PART, OF HIS OWN DESIGN, FOLLOWING GUIDELINES SET FORTH IN THE MUTCD AND PRESCRIBED BY THE ADMINISTRATION. A TCP DEVELOPED BY THE CONTRACTOR AND/OR PERMITTEE SHALL NOT BE IMPLEMENTED UNTIL ADVANCE WRITTEN APPROVAL IS OBTAINED FROM THE ENGINEER. TCP'S MAY BE IMPLEMENTED WITHIN A SINGLE PROJECT OR JOINTLY BETWEEN TWO OR MORE PROJECTS. IN SITUATIONS WHERE TCP'S JOINTLY IMPLEMENTED, CARE SHALL BE EXERCISED TO PRESENT CORRECT AND NON-CONFLICTING GUIDANCE TO THE TRAVELING PUBLIC.
12. THROUGHOUT THESE SPECIAL PROVISIONS, WHERE SPEED OF TRAFFIC IS NOTED, THIS MEANS THE POSTED SPEED OR PREVAILING TRAVEL SPEED, WHICHEVER IS HIGHER, UNLESS OTHERWISE NOTED.
13. TRAFFIC SHALL BE MAINTAINED AT ALL TIMES THROUGHOUT THE ENTIRE LENGTH OF THE PROJECT, UNLESS OTHERWISE NOTED. NO TRAVEL LANE(S) OTHER THAN THOSE DESIGNATED FOR POSSIBLE CLOSURE IN THE TCP SHALL BE CLOSED WITHOUT OBTAINING PRIOR APPROVAL FROM THE ENGINEER. ALL INGRESS AND EGRESS TO THE WORK AREA BY THE CONTRACTOR AND/OR PERMITTEE SHALL BE PERFORMED WITH THE FLOW OF TRAFFIC.

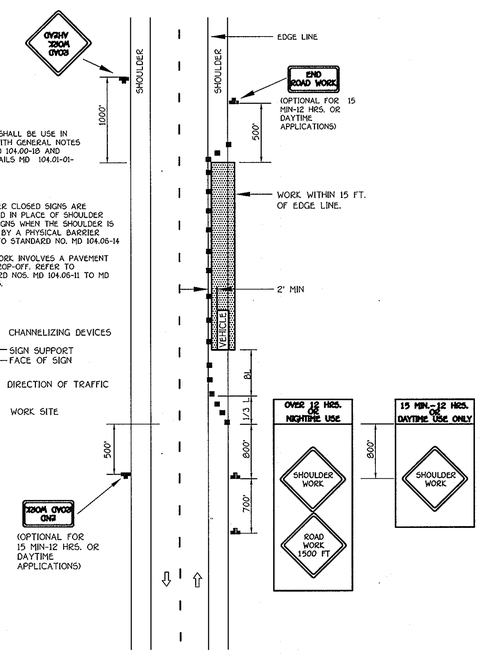

SHOULDER WORK/2-LANE, 2-WAY EQL/LESS THAN 40 MPH

NO SCALE

NO.	DESCRIPTION	DATE
1	REVISED TITLE BLOCK	9/25/12

REVISIONS

FISHER, COLLINS & CARTER, INC.
CIVIL ENGINEERING CONSULTANTS & LAND SURVEYORS
CENTENNIAL SQUARE OFFICE PARK - 10272 BALTIMORE NATIONAL PIKE
ELLICOTT CITY, MARYLAND 21042
(410) 461 - 2855

OWNER	DEVELOPER
BASSLERS, INCORPORATED c/o ALFRED S. BASSLER 4994 SHEPPARD LANE ELLICOTT CITY, MARYLAND 21042	HERITAGE LAND DEVELOPMENT 15950 NORTH AVE. LISBON, MARYLAND 21765

STATE OF MARYLAND — ALDO R. SALVATI — REGISTERED PROFESSIONAL ENGINEER

10.16.08
DATE

"Professional Engineer I hereby certify that these documents were prepared or approved by me, and that I am a duly Licensed Professional Engineer under the laws of the State of Maryland. License No. 20748, Expiration Date 2-22-09."

TRAFFIC CONTROL PLANS & STRIPING PLAN

WALNUT CREEK

PHASE TWO

Lots 23 - 68, Non-Buildable Preservation Parcels 'C', 'G', 'I', 'J', 'K', 'L' And 'M' & Buildable Bulk Parcels 'H' And 'N'

(Being A Resubdivision Of Buildable Bulk Parcels 'F' & 'E' And a Revision To Non-Buildable Preservation Parcel 'C' - Walnut Creek, Phase One, Plat No's. 20531 Thru 20547

ZONED: RC-DEO & RR-DEO

TAX MAP No. 28 GRID Nos. 4, 5, 10-12, 17, AND 18 PARCEL No. 49

FIFTH ELECTION DISTRICT

HOWARD COUNTY, MARYLAND

DATE: SEPTEMBER, 2008

SHEET 30 OF 32

F-08-081

I:\2004\04001\dwg\PHASE TWO FINALS\04001-3001 SHEET 30 STRIPING PLAN.dwg, SHEET 30, 1:1

APPROVED: DEPARTMENT OF PUBLIC WORKS

CHIEF, BUREAU OF HIGHWAYS — DATE: 10-28-08

APPROVED: DEPARTMENT OF PLANNING AND ZONING

CHIEF, DIVISION OF LAND DEVELOPMENT — DATE: 11/3/08

CHIEF, DEVELOPMENT ENGINEERING DIVISION — DATE: 10/31/08

NO.	DESCRIPTION	DATE
1	REVISED TITLE BLOCK	9/25/12

REVISIONS

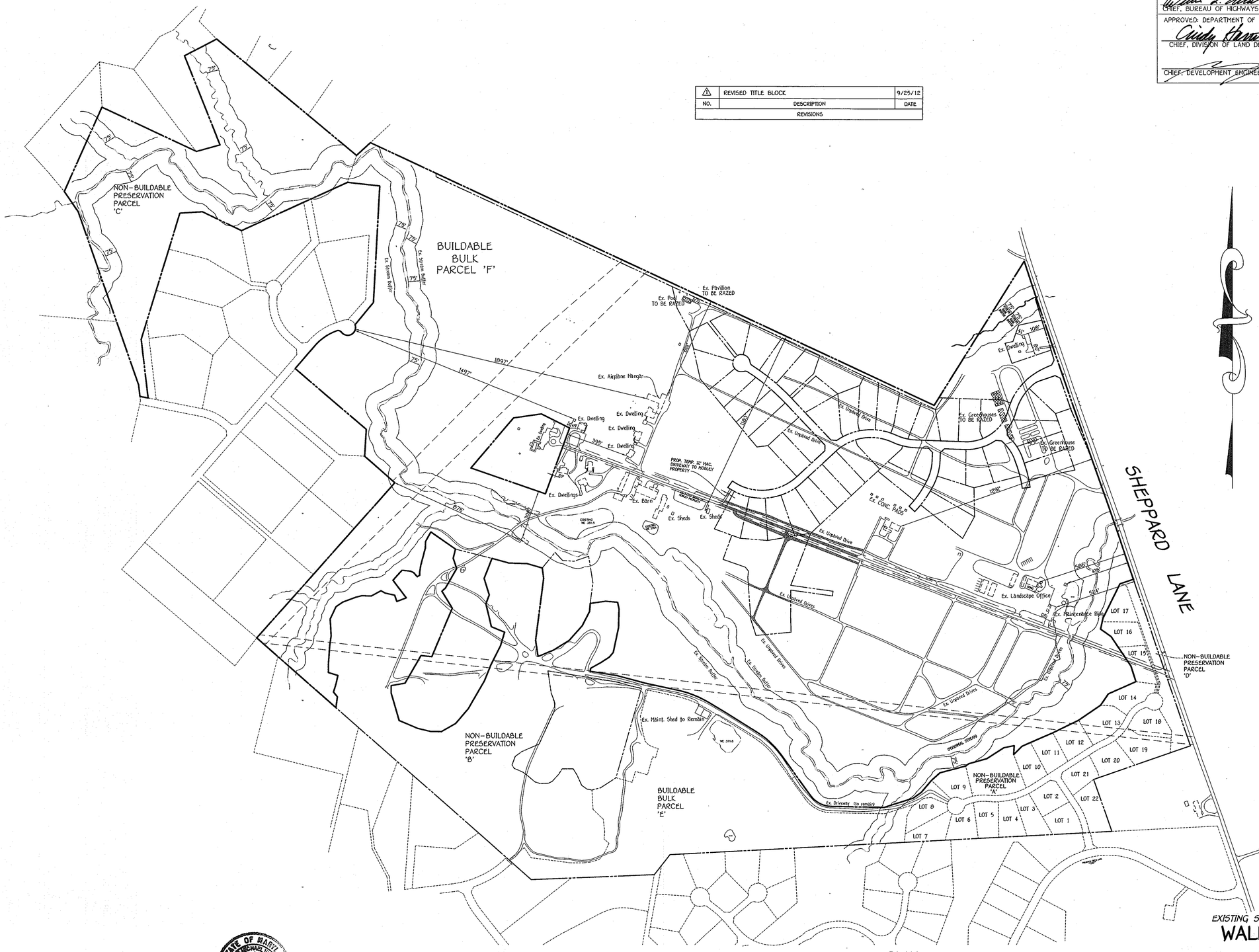

PLAN
SCALE: 1" = 300'

EXISTING STRUCTURE LOCATION PLAN

WALNUT CREEK

PHASE TWO

Lots 23 – 68, Non-Buildable Preservation Parcels 'C', 'G', 'I', 'J', 'K', 'L' And 'M' & Buildable Bulk Parcels 'H' And 'N'

(Being A Resubdivision Of Buildable Bulk Parcels 'F' & 'E' And a Revision To Non-Buildable Preservation Parcel 'C' – Walnut Creek, Phase One, Plat No's. 20631 Thru 20647

ZONED: RC-DEO & RR-DEO

TAX MAP No. 28 GRID Nos. 4, 5, 10-12, 17, AND 18 PARCEL No. 49

FIFTH ELECTION DISTRICT HOWARD COUNTY, MARYLAND

DATE: SEPTEMBER, 2008

SHEET 31 OF 32

F-08-081

FISHER, COLLINS & CARTER, INC.
CIVIL ENGINEERING CONSULTANTS & LAND SURVEYORS
CENTENNIAL SQUARE OFFICE PARK - 10272 BALTIMORE NATIONAL PIKE
ELLICOTT CITY, MARYLAND 21042
(410) 461 - 2855

ALDO M. [illegible] — DATE: 10-16-08

"Professional Certification. I hereby certify that these documents were prepared by me, and that I am a duly Licensed Professional Engineer under the laws of the State of Maryland, License No. 20748, Expiration Date 2-22-09."

OWNER
BASSLERS, INCORPORATED
c/o ALFRED S. BASSLER
4994 SHEPPARD LANE
ELLICOTT CITY, MARYLAND 21042

DEVELOPER
HERITAGE LAND DEVELOPMENT
15950 NORTH AVE.
LISBON, MARYLAND 21765

I:\2004\04001\dwg\PHASE TWO FINALS\04001-3001 SHEET 31 EXISTING STRUCTURES.dwg, SHEET 31, 1:1

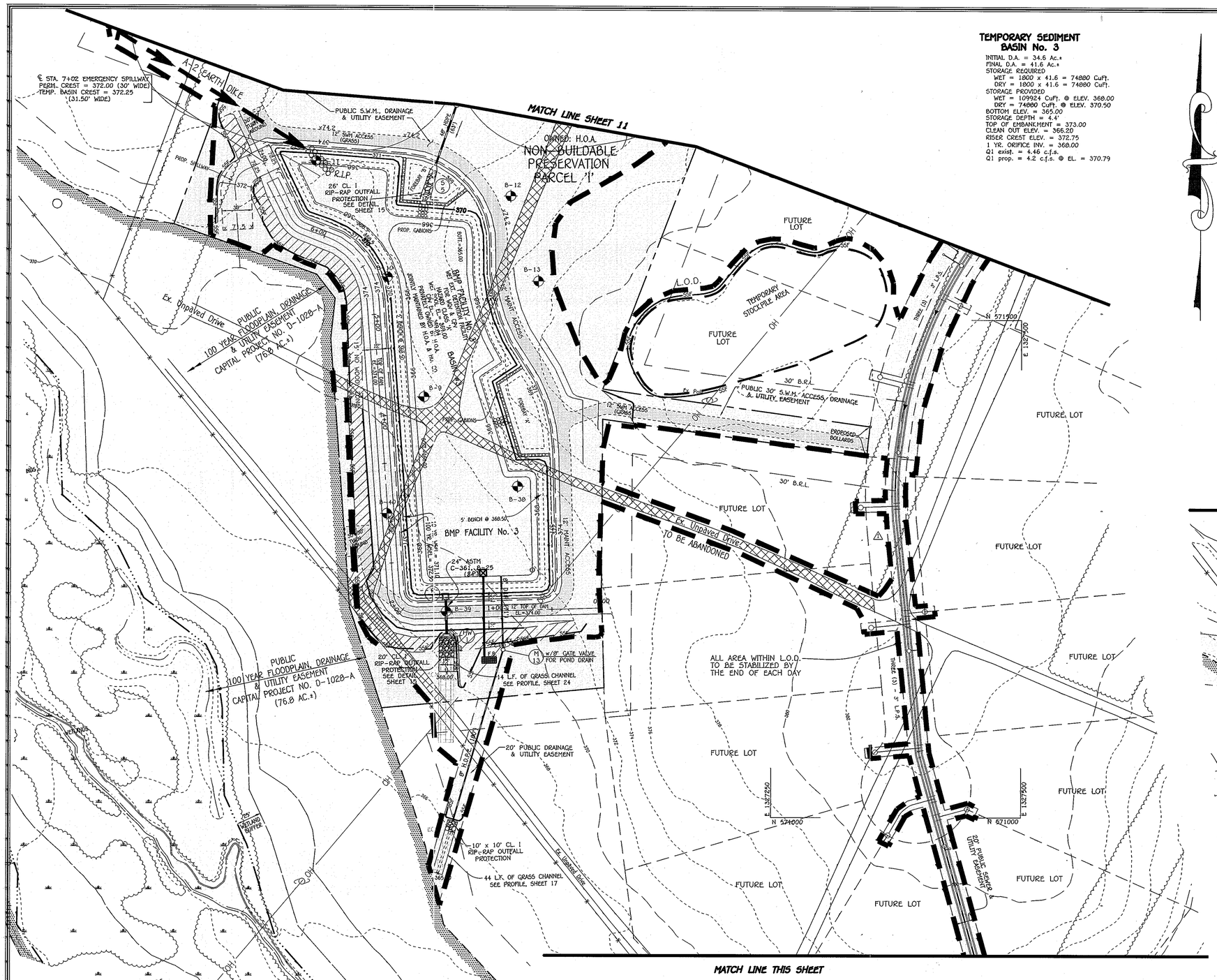

TEMPORARY SEDIMENT BASIN No. 3

INITIAL D.A. = 34.6 Ac.±
FINAL D.A. = 41.6 Ac.±
STORAGE REQUIRED
WET = 1800 x 41.6 = 74880 CuFt.
DRY = 1800 x 41.6 = 74880 CuFt.
STORAGE PROVIDED
WET = 109924 CuFt. @ ELEV. 368.00
DRY = 74880 CuFt. @ ELEV. 370.50
BOTTOM ELEV. = 365.00
STORAGE DEPTH = 4.4'
TOP OF EMBANKMENT = 373.00
CLEAN OUT ELEV. = 366.20
RISER CREST ELEV. = 372.75
1 YR. ORIFICE INV. = 368.00
Q1 exist. = 4.46 c.f.s.
Q1 prop. = 4.2 c.f.s. @ EL. = 370.79

LEGEND

SSF SSF SSF	SUPER-SILT FENCE
SF SF SF	SILT FENCE
TP TP TP	TREE PROTECTION FENCE
S.C.E.	STABILIZED CONSTRUCTION ENTRANCE
	EARTH DIKE
L.O.D.	DENOTES L.O.D. LIMITS OF DISTURBANCE
E.C.M.	DENOTES EROSION CONTROL MATTING
	DENOTES 25% OR GREATER SLOPES
	DENOTES 15% - 24.99% SLOPES
2" L.P.S.	DENOTES LOW PRESSURE SEWER BY OTHERS W/ GRINDER PUMPS
G.I.P.	GABION INFLOW PROTECTION
OH	DENOTES OVERHEAD ELECTRIC
UG	DENOTES UNDERGROUND ELECTRIC

By The Developer:
"I/We Certify That All Development And/Or Construction Will Be Done According To These Plans, And That Any Responsible Personnel Involved In The Construction Project Will Have A Certificate Of Attendance At A Department Of The Environment Approved Training Program For The Control Of Sediment And Erosion Before Beginning The Project. I Shall Engage A Registered Professional Engineer To Supervise Pond Construction And Provide The Howard Soil Conservation District With An "As-Built" Plan Of The Pond Within 30 Days Of Completion. I Also Authorize Periodic On-Site Inspections By The Howard Soil Conservation District."
Signature Of Developer — Date 11/21/12
Timothy W. Feaga
Project Name Of Developer

By The Engineer:
"I Certify That The Design Of This Pond Construction, Erosion And Sediment Control Represents A Practical And Workable Plan Based On My Personal Knowledge Of The Site Conditions. This Plan Was Designed In Accordance With The Requirements Of The Howard Soil Conservation District. I Hereby Certify The Construction Plans Shall Be Sufficient To Support The Proposed Development. I/We Must Engage A Registered Professional Engineer To Supervise Pond Construction And Provide The Howard Soil Conservation District With An "As-Built" Plan Of The Pond Within 30 Days Of Completion."
Signature — Date 10/31/12
Project Name

These Plans For Pond Construction, Soil Erosion And Sediment Control Meet The Requirements Of The Howard Soil Conservation District.
Howard Soil Conservation District — Date 11/20/12

Approved: Department Of Public Works
Chief, Bureau Of Highways — Date 11/29/12

Approved: Department Of Planning And Zoning
Chief, Division Of Land Development — Date 11/05/12
Chief, Development Engineering Division — Date 12/3/12

AS-BUILT CERTIFICATION
I Hereby Certify That The Facility Shown On This Plan Was Constructed As Shown On The " As-Built" Plans And Meets The Approved Plans And Specifications.
Signature — P.E. No.
Date:
Certify Means To State Or Declare A Professional Opinion Based Upon Onsite Inspections And Material Tests which Are Conducted During Construction. The Onsite Inspections And Material Tests Are Those Inspections And Tests Deemed Sufficient And Appropriate Commonly Accepted Engineering Standards. Certify Does Not mean Or Imply A Guarantee Or The Engineer Nor Does An Engineer's Certification Relieve Any Other Party From Meeting Requirements Imposed By Contract, Employment, Or Other Means, Including Meeting Commonly Accepted Industry Practices.

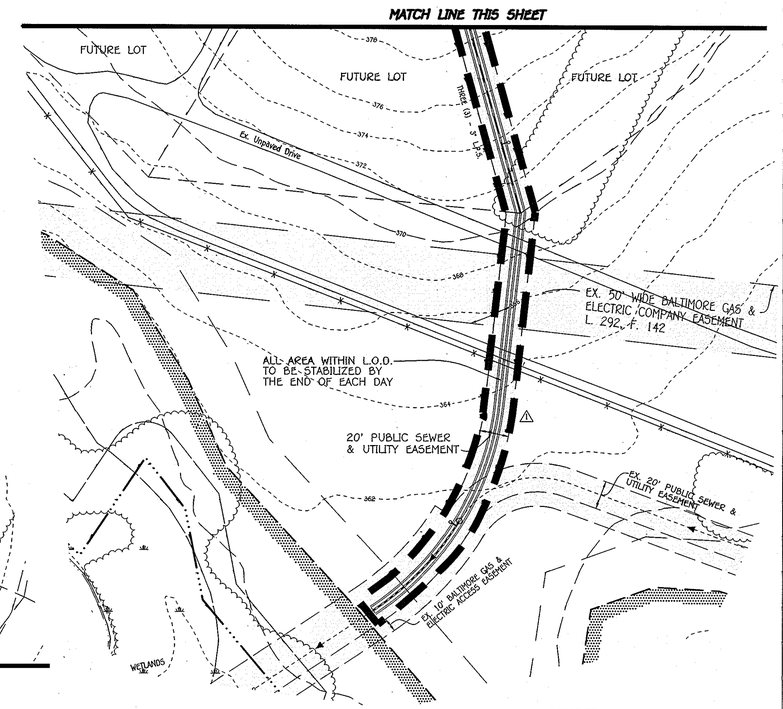

PLAN

SCALE: 1" = 50'

NOTE:
THE CONTRACTOR SHALL REMOVE ALL OLD AND NEW JUNK, TRASH, DEBRIS AND OTHER UNNATURAL ITEMS FROM THE FOREST, FLOODPLAINS, STREAMS, WETLANDS AND BUFFER AREAS.

NO.	DESCRIPTION	DATE
1	REVISED LOW PRESSURE SEWER, STORM DRAIN PIPE FROM RCCP TO HDPE AND TITLE BLOCK	9/25/12

REVISIONS

STATE OF MARYLAND — ALDO M. BASSLER, JR. — No. 20748
10/31/12
DATE
"Professional Engineer's Stamp Shall Be Affixed Thereto Or Shall Be Signed by me, and that I am a duly Licensed Professional Engineer under the laws of the State of Maryland, License No. 20748, Expiration Date 2-22-13."

OWNER
BASSLERS, INCORPORATED
c/o ALFRED S. BASSLER
4994 SHEPPARD LANE
ELLICOTT CITY, MARYLAND 21042
(410) 531-2193

DEVELOPER
HERITAGE LAND DEVELOPMENT
15950 NORTH AVE.
LISBON, MARYLAND 21765
(410) 489-7900

REVISED
STREET TREE, GRADING & SEDIMENT CONTROL PLAN
WALNUT CREEK
PHASE TWO
Lots 23 - 68, Non-Buildable Preservation Parcels 'C', 'G', 'I', 'J', 'K', 'L' And 'M' & Buildable Bulk Parcels 'H' And 'N'
(Being A Resubdivision Of Buildable Bulk Parcels 'I' & 'E' And a Revision To Non-Buildable Preservation Parcel 'C' - Walnut Creek, Phase One, Plat No's. 20631 Thru 20647
ZONED: RC-DEO & RR-DEO
TAX MAP No. 28 GRID Nos. 4, 5, 10-12, 17, AND 18 PARCEL No. 49
FIFTH ELECTION DISTRICT
HOWARD COUNTY, MARYLAND
DATE: SEPTEMBER, 2008
SHEET 32 OF 32

FISHER, COLLINS & CARTER, INC.
CIVIL ENGINEERING CONSULTANTS & LAND SURVEYORS
CENTENNIAL SQUARE OFFICE PARK - 10272 BALTIMORE NATIONAL PIKE
ELLICOTT CITY, MARYLAND 21042
(410) 461 - 2855

F-08-081

I:\2004\04031\dwg\PHASE TWO FINALS\PHASE TWO REDLINE 20\2104031-2001 SHEET 32 GRADING PLAN.dwg, SHEET 32, 10/30/2012 2:55:17 PM, 1:1