FINAL PLAN
BELMONT STATION
SELNICK ROAD EXTENTION & P/O RED CLAY FORGE
PARCELS
'A,' 'B' & 'C' & OPEN SPACE LOT 1

SITE DATA

LOCATION: TAX MAP 37; BLOCK 18; PARCELS '196, 198, & 199'
1ST ELECTION DISTRICT
EXISTING ZONING: CAC
SUBDIVISION: BELMONT STATION
DPZ REFERENCES: S-04-10, WP-04-152, P-05-17, WP-06-79; SDP-06-034
GROSS AREA OF PARCEL: 27.76610 AC
NUMBER OF PROPOSED PARCELS: 3 PARCELS; 1 OPEN SPACE LOT
AREA OF PARCEL A: 17.69706 AC.
AREA OF PARCEL B: 3.20096 AC.
AREA OF PARCEL C: 0.37216 AC.
OPEN SPACE LOT 1 (AREA OF FLOODPLAIN): 6.46392 AC±
LAND TO BE DEDICATED TO THE STATE: 0.03200
AREA OF STEEP SLOPES: 0.90 AC
NET AREA OF PROJECT: 20.40218 AC.
AREA SHA ROW FOR SELNICK DRIVE (PLAT 51095 & 51098): 4.5 AC.
APPROXIMATE LIMIT OF DISTURBANCE: 6.84 AC (297,680 SF± INCL. HAUL ROAD & TEMP. STOCKPILE)
UNITS PERMITTED: 20.40208 AC x 25 DU/AC. = 510 UNITS
MIHU REQUIRED – 15% OF PROPOSED UNITS
REQUIRED COMMERCIAL SPACE: 200 SQ FT PER RESIDENTIAL UNIT
318 UNITS x 200 SQ FT/UNIT = 63,600 SQ FT

GENERAL NOTES

1. ALL ASPECTS OF THE PROJECT ARE IN CONFORMANCE WITH THE LATEST HOWARD COUNTY STANDARDS UNLESS WAIVERS HAVE BEEN APPROVED.
2. DEED REFERENCES: 8139/504; 3103/616
3. THE PROJECT BOUNDARY IS BASED ON A BOUNDARY SURVEY PERFORMED BY DAFT McCUNE WALKER, INC. DATED FEBRUARY 2004.
4. THE TOPOGRAPHY SHOWN HEREON IS BASED ON AN AERIAL SURVEY BY VRM DATED FEBRUARY 2004.
5. COORDINATE DATUM IS BASED ON THE MARYLAND COORDINATE SYSTEM (NAD '83) AS PROJECTED BY THE FOLLOWING HO.CO. GEODETIC CONTROL STATIONS: 38D5 & 38D6
6. WATER AND SEWER FOR THIS PROJECT TO TIE TO A PUBLIC SYSTEM
   EXISTING WATER: 14-4316-D
   EXISTING SEWER: 14-4316-D
7. STORMWATER MANAGEMENT SERVING THE PROPOSED PUBLIC ROAD AND A PORTION OF PARCEL 'A' WILL BE INCLUDED IN THIS SUBMISSION.
   WQv, Cpv, Qp, AND Qf ARE PROVIDED BY THE PROPOSED POCKET POND FACILITY.
   Rev IS PROVIDED IN THE GRASS CHANNELS OF THE SELNICK ROAD OPEN ROAD SECTION.
   THIS POCKET POND IS SUBJECT TO "DEVELOPER AGREEMENT AND MEMORANDUM OF UNDERSTANDING SELNICK DRIVE EXTENDED BY AND AMONG HOUWARD COUNTY ELKRIDGE LANDING DEVELOPMENT COMPANY, INC. AND STATE HIGHWAY ADMINSTRATION." SWM FOR THE REMAINDER OF BULK PARCEL 'A' AND 'B' WILL BE DETERMINED ON THEIR RESPECTIVE SITE DEVELOPMENT PLANS, AND WILL BE IN ACCORDANCE WITH THE 2000 MARYLAND STORMWATER DESIGN MANUAL.
8. STORMWATER MANAGEMENT SOIL BORINGS FOR THIS SITE ARE BASED ON A GEOTECHNICAL ANALYSIS PROVIDED BY ECS, LTC DATED FEBRUARY 25, 2005.
9. WETLANDS DELINEATED BY ECO-SCIENCE PROFESSIONALS, INC. DATED MAY 28, 2004.
10. STEEP SLOPES ON SITE WITH A CONTIGUOUS AREA OF 20,000 SF OR GREATER ARE SHOWN.
11. FLOODPLAIN DATA TAKEN FROM HOWARD COUNTY FLOODPLAIN STUDY AND ADJUSTED PER TOPOGRAPHY.
12. FOREST STAND DELINEATION PLAN PREPARED BY ECO-SCIENCE PROFESSIONALS, INC. DATED MAY 2004.
13. APFO TRAFFIC STUDY PREPARED BY THE TRAFFIC GROUP, DATED MAY 2004. APPROVED WITH THE S-04-10, FEB. 15, 2005.
14. THE UNMITIGATED 65dBA NOISE LINE IS SHOWN ON THESE PLANS, APPROVED 8/3/05. THE MITIGATED NOISE LINE AND WALL MITIGATION FEATURES WILL BE PROVIDED WITH THE SITE DEVELOPMENT PLAN.
15. ALL LANDSCAPING REQUIREMENTS SHALL BE COMPLIED WITH AS SET FORTH IN THE HOWARD COUNTY LANDSCAPE MANUAL.
16. SEDIMENT AND EROSION CONTROL WILL BE PROVIDED FOR THIS SITE.
17. THIS PROPERTY IS WITHIN THE METROPOLITAN DISTRICT.
18. TO THE BEST OF THE OWNERS KNOWLEDGE, THERE ARE NO BURIAL/CEMETERY LOCATIONS ON SITE.
19. TRASH COLLECTION AND RECYCLING WILL BE PRIVATE.
20. AT THE SKETCH PLAN (S-04-10) STAGE OF PROCESSING THIS PROPERTY IS IN COMPLIANCE WITH THE ROUTE 1 MANUAL FOR CAC ZONING WITH THE FOLLOWING EXCEPTIONS:
    1. THE REQUIREMENT FOR THE REQUIRED COMMERCIAL SPACE HAS BEEN REDUCED FROM 300 SQ FT TO 200 SF PER RESIDENTIAL UNIT BY THE DIRECTOR OF THE DEPARTMENT OF PLANNING AND ZONING BASED UPON THE CONDITIONS OUTLINED IN SECTION 127.5.E.3.c OF THE HOWARD COUNTY ZONING REGULATIONS.
21. THE EXISTING STRUCTURES ON THE SITE ARE TO BE REMOVED.
22. RECREATIONAL OPEN SPACE IS NOT REQUIRED FOR THIS PROJECT.
23. NO ACCESS IS PERMITTED ALONG U.S. ROUTE 1 EXCEPT FOR THE COMMERCIAL PARCEL ENTRANCE. ACCESS RESTRICTIONS TO U.S. ROUTE 1 TO BE DETERMINED WITH THE SITE DEVELOPMENT PLANS. A DEDICATION OF 0.03± ACRES WILL BE REQUIRED ALONG US ROUTE 1 FRONTAGE ASSOCIATED WITH THIS DEVELOPMENT.
24. THIS PROJECT IS SUBJECT TO COMPLIANCE WITH THE AMENDED FIFTH EDITION OF THE SUBDIVISION AND LAND DEVELOPMENT REGULATIONS.
25. THE FOREST CONSERVATION OBLIGATION OF 9.83 ACRES OF RETENTION FOR THIS SUBDIVISION WILL BE MET BY PROVIDING 9.87 ACRES OF REFORESTATION FOREST CONSERVATION EASEMENTS (FCE A-E) OFFSITE ON BUILDABLE PRESERVATION PARCELS A & D, FOX CREEK. FOREST CONSERVATION SURETY IN THE AMOUNT OF $214,968.60.00 WILL BE POSTED AS PART OF THE DEVELOPER'S AGREEMENT.
26. NO CLEARING, GRADING OR CONSTRUCTION IS PERMITTED WITHIN THE FLOODPLAIN, STREAM(S) OR THEIR REQUIRED BUFFERS, AREAS OF STEEP SLOPES GREATER THAN OR EQUAL TO 20,000 SF, AND FOREST CONSERVATION EASEMENT AREAS, EXCEPT AS NOTED ON THESE PLANS, AND APPROVED UNDER WP-06-079..
27. THIS PLAN IS SUBJECT TO WP-04-152, DATED AUGUST 3, 2004, TO WAIVE SECTION 16.116.a.(1) AND SECTION 16.116.b.(1): THE WAIVER APPROVED REQUEST TO WAIVE SECTION 16.116.a.(1) WHICH WILL ALLOW DISTURBANCE TO WETLAND AREA AND THE WETLAND BUFFER; AS SHOWN ON THE SKETCH PLAN (S-04-10). APPROVAL SUBJECT TO THE FOLLOWING CONDITIONS:
    1. THE PETITIONER SHALL OBTAIN ANY NECESSARY WETLAND PERMITS FROM THE MARYLAND DEPARTMENT OF THE ENVIRONMENT.
    THE WAIVER WAS DENIED REQUEST TO WAIVE SECTION 16.116.b.(1) WHICH PROHIBITS GRADING AND CLEARING ON SLOPES OVER 25% IN GRADE, AND OVER 20,000 SF IN CONTIGUOUS AREA. DENIAL IS BASED ON THE FOLLOWING:
    1. THE LOCATION OF THE SWM POND AND THE PARKING LOT AREA CAN BE SHIFTED TO AVOID DISTURBANCE TO THE STEEP SLOPE AREA, WHICH IS PART OF A SENSITIVE ENVIRONMENTAL AREA ASSOCIATED WITH THE STREAM VALLEY SYSTEM ON THE SUBJECT SITE AND EXTENDING ONTO THE ADJOINING PROPERTY. THE JUSTIFICATION PRESENTED DOES NOT DEMONSTRATE THAT THERE IS AN UNDO HARDSHIP ON THE PETITIONER IN COMPLYING WITH THE REGULATIONS, NOR DOES IT DEMONSTRATE THAT THERE ARE NO REASONABLE ALTERNATIVES TO THE PROPOSED SITE LAYOUT.
28. LANDSCAPE BUFFERING, LANDSCAPE WALLS AND/OR EARTH BERMS WILL BE PROVIDED TO SCREEN THE RETAIL PARKING AREA ALONG ROUTE 1. THESE WILL BE DETERMINED WITH THE SITE DEVELOPMENT PLANS FOR BULK PARCELS 'A' & 'B'.
29. THE ENVIRONMENTAL DISTURBANCE ASSOCIATED WITH THE SIDEWALK/PATHWAY SYSTEM AND POND OUTFALL LOCATION ARE CONSIDERED "NECESSARY" DISTURBANCE IN ACCORDANCE WITH SECTION 16.116 OF HOWARD COUNTY SUBDIVISION AND LAND DEVELOPMENT REGULATIONS.
30. WAIVER PETITION WP-06-079, APPROVED MARCH 1, 2006, TO PERMIT CLEARING, GRADING ANDDEVELOPMENT WITHIN 75 FEET OF A PERENNIAL STREAM IN THE RESIDENTIAL LAND USE AREA (PARCEL A) OF A MIXED USE (CAC) ZONING DISTRICT. APPROVAL IS SUBJECT TO THE FOLLOWING CONDITION:
    1. THE AREA OR LIMIT OF DISTURBANCE WITHIN 75' STREAM BUFFER ON PARCEL A SHALL NOT EXCEED THE ONE SHOWN ON THE WAIVER PETITION EXHIBIT/PLAN SUBMITTED ON 2/13/06.
31. FINANCIAL SURETY FOR THE REQUIRED LANDSCAPING WILL BE POSTED AS PART OF THE DEVELOPER'S AGREEMENT IN THE AMOUNT OF $4,800.00 FOR THE REQUIRED 10 SHADE TREES AND 12 EVERGREEN TREES. FINANCIAL SURETY FOR THE REQUIRED STREET TREES WILL BE POSTED AS PART OF THE DEVELOPER'S AGREEMENT IN THE AMOUNT OF $12,900.00 FOR THE REQUIRED 43 SHADE TREES.
32. ANY 95% COMPACTION IN FILL AREAS SHALL BE IN ACCORDANCE WITH AASHTO T-180 STANDARDS.
33. TRAFFIC CONTROL DEVICES, MARKINGS AND SIGNING SHALL BE IN ACCORDANCE WITH THE LATEST EDITION OF THE MANUAL OF UNIFORM TRAFFIC CONTROL DEVICES (MUTED). ALL STREET AND REGULATORY SIGNS SHALL BE IN PLACE PRIOR TO PLACEMENT OF ANY ASPHALT.
34. STREET LIGHT PLACEMENT AND TYPE OF FIXTURE AND POLE SHALL BE IN ACCORDANCE WITH THE HOWARD COUNTY DEIGN MANUAL. VOLUME III (1993) AND AS MODIFIED BY "GUIDELINES FOR STREET LIGHTS IN RESIDENTIAL DEVELOPMENTS (JUNE 1993). A MINIMUM SPACING OF 20' SHALL BE MAINTAINED BETWEEN ANY STREET LIGHT AND ANY TREE.
35. ALL SIGN POSTS USED FOR TRAFFIC CONTROL SIGNS INSTALLED IN THE COUNTY RIGHT OF WAY SHALL BE MOUNTED ON A 2" GALVANIZED STEEL. PERFORATED, SQUARE TUBE POST (14 GAUGE) INSERTED INTO A 2-1/2" GALVANIZED STEEL, PERFORATED SQUARE TUBE SLEEVE (12 GAUGE)-3' LONG. A GALVANIZED STEEL POLE CAP SHALL BE MOUNTED ON TOP OF EACH POST.
36. THIS PLAN IS SUBJECT TO MDE APPLICATION TRACKING NO. 20046044/03-NT-0489 DATED AUGUST 15, 2006. THIS MDE APPLICATION COVERS FILLING OF THE WETLANDS IN THE MIDDLE OF BULK PARCEL 'A', THE STREAM CROSSING FOR THE SEWER CONNECTION, THE REMOVAL OF THE STREAM CULVERT, AND THE RECREATION TRAIL.

APPROVED: HOWARD COUNTY DEPARTMENT OF PUBLIC WORKS

[signature] 10-19-06
CHIEF, BUREAU OF HIGHWAYS — DATE

APPROVED: HOWARD COUNTY DEPARTMENT OF PLANNING AND ZONING

[signature] 10/23/06
CHIEF, DEVELOPMENT ENGINEERING DIVISION — DATE

[signature] 10/24/06
CHIEF, DIVISION OF LAND DEVELOPMENT — DATE

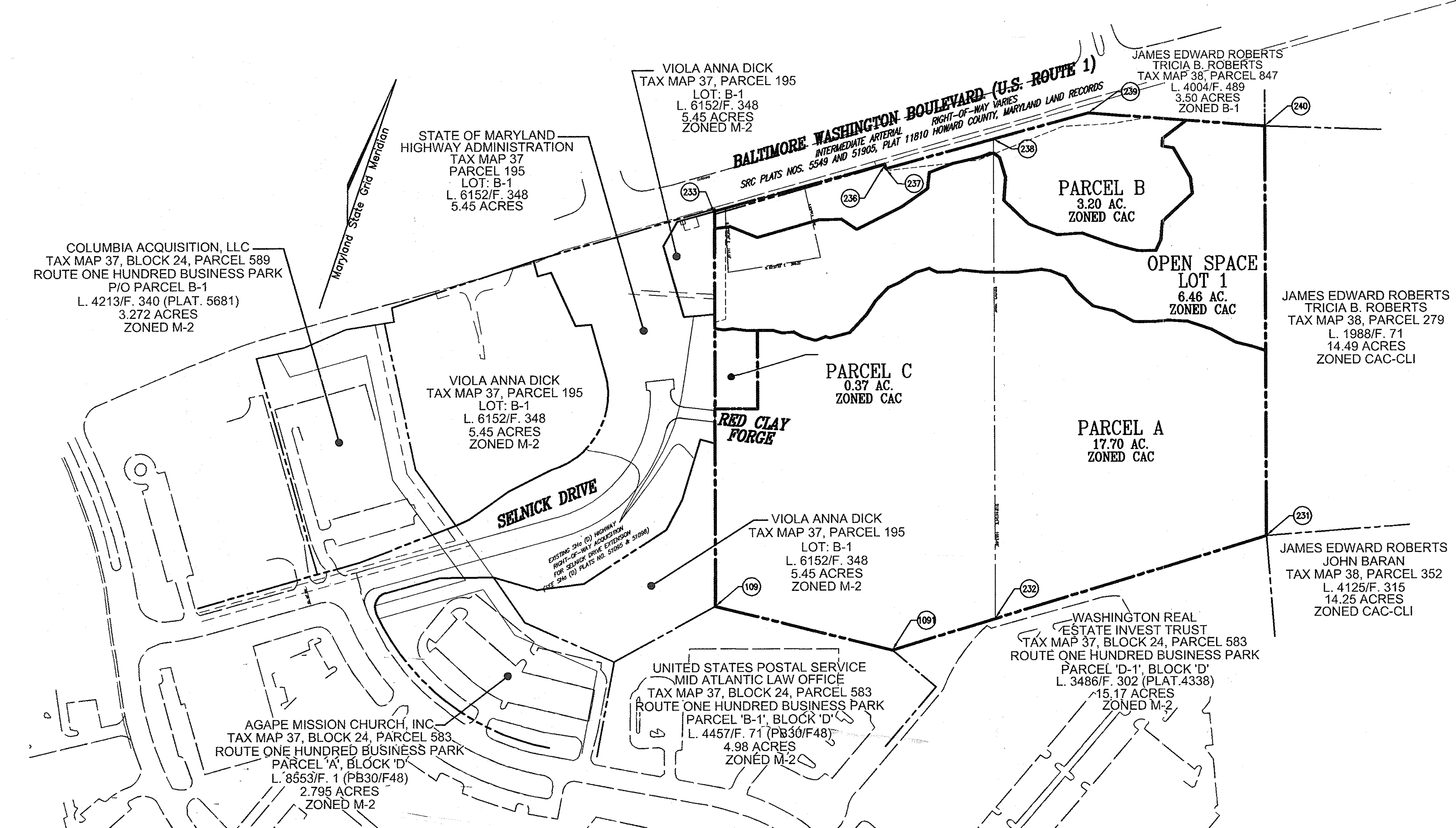

LOCATION MAP
SCALE: 1"=100'

BENCHMARKS

HOWARD COUNTY BENCHMARK 38D5
N 558,378.575 E 1,386,524.158 ELEV.: 193.726'
HOWARD COUNTY BENCHMARK 38D6
N 557,155.459 E 1,384,992.262 ELEV.: 175.228'

LEGEND

Existing Contour
Proposed Contour — 82
Existing Spot Elevation
Proposed Spot Elevation +82.53
Direction of Flow
Existing Trees to Remain
Light Poles — Single Overhead — Double Overhead
Concrete

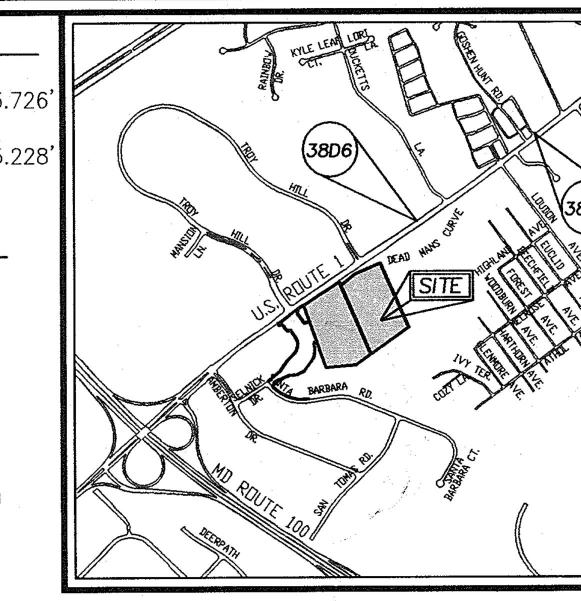

VICINITY MAP
SCALE: 1"=2000'

HOUSING UNIT ALLOCATION		
JULY 1, 2007	JULY 1, 2008	JULY 1, 2009
110	101	107

PHASING TABULATION AS APPROVED WITH S-04-10

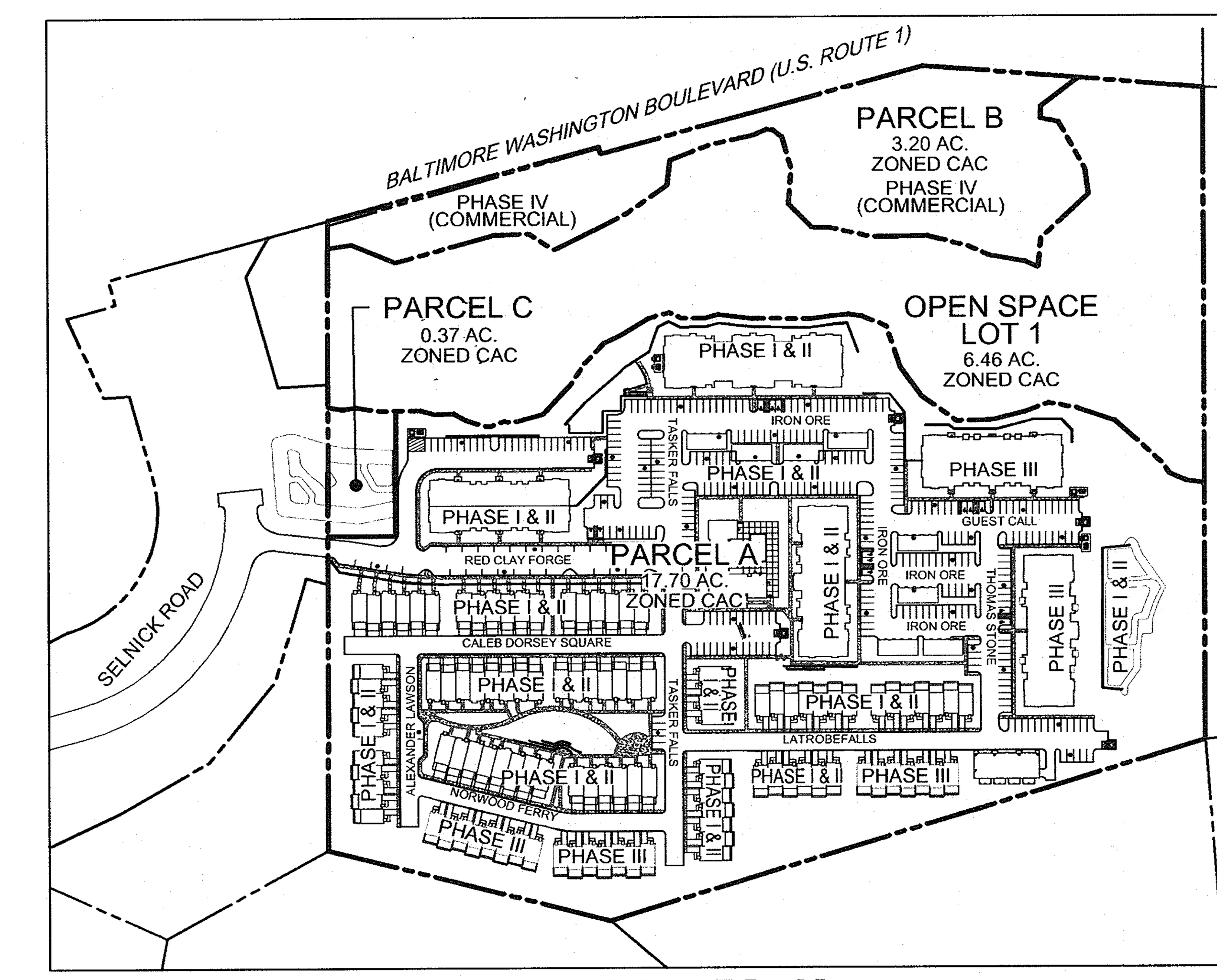

PHASING PLAN
SCALE: 1"=100'

COORDINATE CHART		
No.	Northing	Easting
109	555291.2125	1383729.3512
231	555820.8776	1384826.1141
232	555460.0422	1384320.2754
233	556109.0173	1383453.8130
236	556329.0853	1383774.1188
237	556321.9546	1383779.0196
238	556457.8979	1383981.8512
239	556578.0032	1384161.0698
240	556673.2237	1384537.1398
1091	555322.8440	1384127.9435

SHEET INDEX

DESCRIPTION	SHEET NO.
COVER SHEET	1 OF 14
ROAD PLAN	2 OF 14
ROAD PROFILE	3 OF 14
GRADING AND SEDIMENT CONTROL PLAN	4 OF 14
SEDIMENT AND EROSION CONTROL NOTES AND DETAILS	5 OF 14
STORM DRAIN DRAINAGE AREA MAP	6 OF 14
STORM DRAIN PROFILES	7 OF 14
STORMWATER MANAGEMENT NOTES AND DETAILS	8 OF 14
STORMWATER MANAGEMENT DETAILS	9 OF 14
LANDSCAPE PLAN	10 OF 14
OFFSITE FOREST CONSERVATION PLAN	11 OF 14
OFFSITE FOREST CONSERVATION NOTES AND DETAILS	12 OF 14
RETAINING WALL PLAN AND DETAILS	13 OF 14
HAUL ROAD AND TEMPORARY STOCKPILES	14 OF 14

OWNER/DEVELOPER

ELKRIDGE DEVELOPMENT, LLC
301 TRANSYLVANIA AVENUE
RALEIGH, NC 27609
(919) 789-9289

ELKRIDGE DEVELOPMENT NO.2, LLC
301 TRANSYLVANIA AVENUE
RALEIGH, NC 27609
(919) 789-9289

NO.	REVISION	DATE

FINAL ROAD CONSTRUCTION PLANS

COVER SHEET

BELMONT STATION
PARCELS 'A,' 'B' & 'C' & OPEN SPACE LOT 1
REF: WP-04-152, WP-06-79, S-04-10, P-05-17, F-06-169
TAX MAP 37 BLOCK 18 — PARCEL '196, 198, 199'
1ST ELECTION DISTRICT — HOWARD COUNTY, MARYLAND

ROBERT H. VOGEL
ENGINEERING, INC.
ENGINEERS • SURVEYORS • PLANNERS
8407 MAIN STREET
ELLICOTT CITY, MD 21043
TEL: 410.461.7666
FAX: 410.461.8961

STATE OF MARYLAND — WALTER GEORGE ZAMIS — No. 32033 — PROFESSIONAL ENGINEER [seal, signed 10/10/06]

DESIGN BY: WJZ
DRAWN BY: DZ
CHECKED BY:
DATE: OCTOBER 2006
SCALE: AS SHOWN
W.O. NO.: 04-08

SHEET 1 OF 14

F-06-169

THERMOPLASTIC PAVEMENT MARKING LEGEND

5DY	5" YELLOW COUBLE SOLID LINE
5W	5" WHITE SOLID LINE
24W	24" PREFORMED THERMOPLASTIC WHITE (STOPLINE)

NOTES:

1. ALL PAVEMENT MARKINGS NOT DETAILED ARE EXISTING AND SHALL REMAIN.

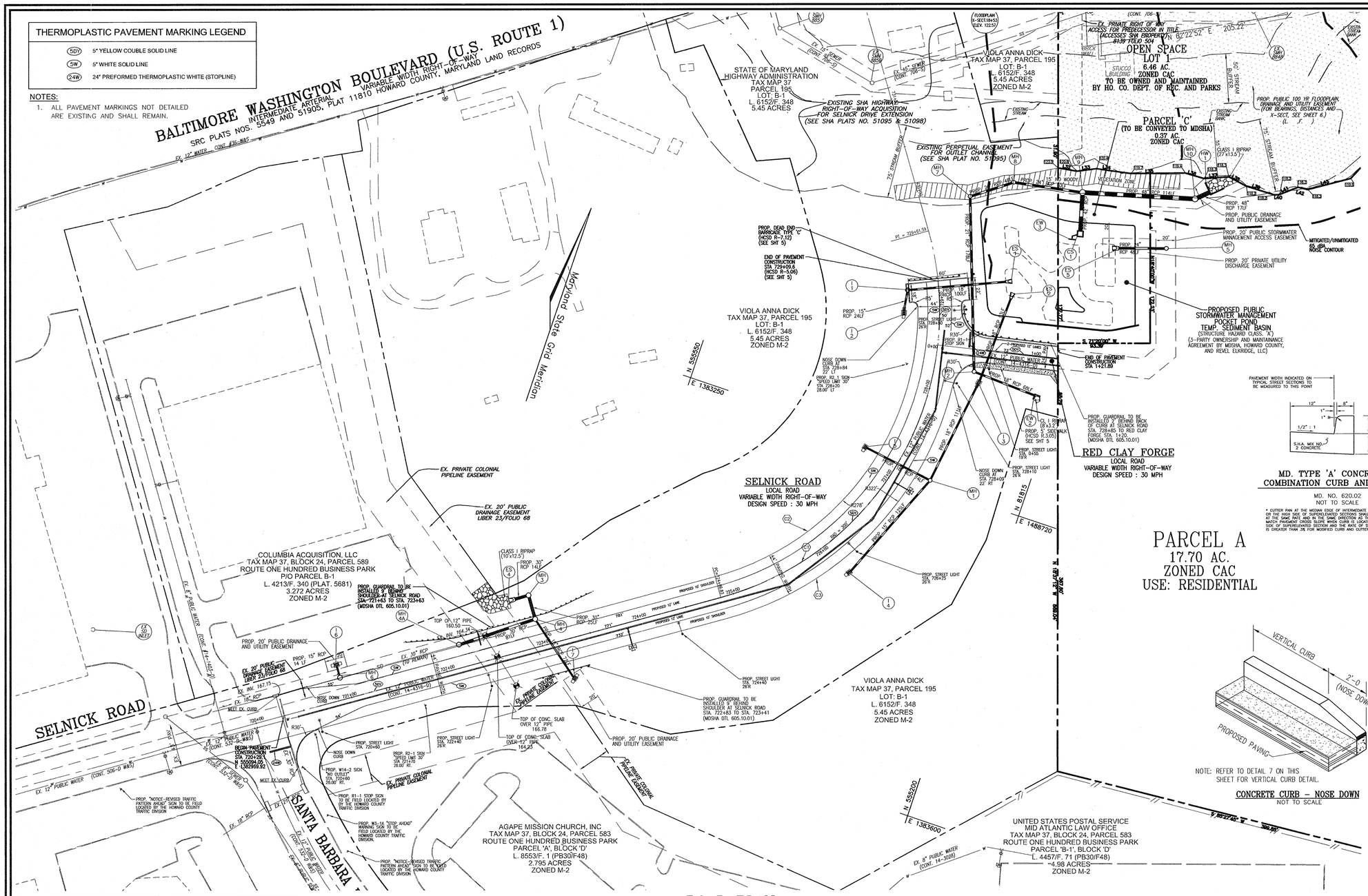

ROAD PLAN
SCALE: 1"=50'

THE SWMF TO BE OWNED BY MDSHA, AND MAINTAINED BY HOA
L. F.

LEGEND:

398	EXISTING CONTOUR
406	PROPOSED CONTOUR
+ 402.68	PROPOSED SPOT ELEVATION
× 402.68	EXISTING SPOT ELEVATION
	EXISTING CURB AND GUTTER
	PROPOSED CURB AND GUTTER
	EXISTING UTILITY POLE
	EXISTING LIGHT POLE
	EXISTING MAILBOX
	EXISTING SIGN
S	EXISTING SANITARY MANHOLE
S	EXISTING SANITARY LINE
CO	EXISTING CLEANOUT
FH	EXISTING FIRE HYDRANT
W	EXISTING WATER LINE
x x	EXISTING FENCE
	PROPERTY LINE
	RIGHT-OF-WAY LINE
M1B2 M1D3	SOILS BOUNDARY
	PROPOSED STORM DRAIN
	PROPOSED STORM DRAIN INLET
	PROPOSED SIDEWALK
	PROPOSED STREET LIGHT

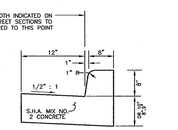

MD. TYPE 'A' CONCRETE COMBINATION CURB AND GUTTER

MD. NO. 620.02
NOT TO SCALE

* GUTTER PAN AT THE MEDIAN EDGE OF INTERMEDIATE ARTERIAL ON THE HIGH SIDE OF SUPERELEVATED SECTIONS SHALL BE SLOPED AT THE SAME RATE AND IN THE SAME DIRECTION AS THE PAVEMENT. MATCH PAVEMENT CROSS SLOPE WHEN CURB IS LOCATED ON THE LOW SIDE OF SUPERELEVATED SECTION AND THE RATE OF SUPERELEVATION IS GREATER THAN 3% FOR MODIFIED CURB AND GUTTER.

CONCRETE SIDEWALK HOWARD COUNTY STANDARD DETAIL R3.05 (MODIFIED)

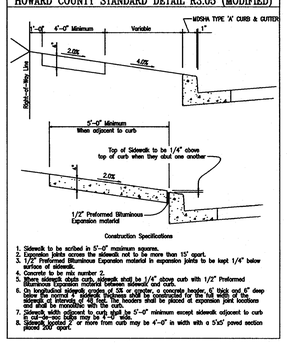

Construction Specifications

1. Sidewalk to be scribed in 5'-0" minimum squares.
2. Expansion joints across the sidewalk not to be more than 15' apart.
3. 1/2" Preformed Bituminous Expansion material in expansion joints to be kept 1/4" below surface of sidewalk.
4. Concrete to be mix number 2.
5. Where sidewalk abuts curb, sidewalk shall be 1/4" above curb with 1/2" Preformed Bituminous Expansion material between sidewalk and curb.
6. On longitudinal sidewalk grades of 5% or greater, a concrete border, 6" thick and 6" deep below the normal 4" sidewalk thickness shall be constructed for the full width of the sidewalk. Transverse joints, at 5'-0" on centers, shall be placed at expansion joint locations and shall be formed to 1/4" depth.
7. Sidewalk width adjacent to curb shall be 5'-0" minimum except sidewalk adjacent to curb in cut or in any grade may be 4'-0" wide.
8. Sidewalk located 4' or more from curb may be 4'-0" in width with a 5'x5' paved section placed 2x4' apart.

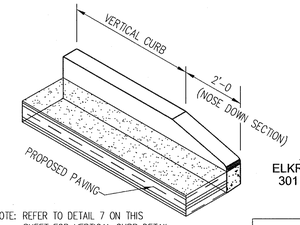

NOTE: REFER TO DETAIL 7 ON THIS SHEET FOR VERTICAL CURB DETAIL.

CONCRETE CURB – NOSE DOWN
NOT TO SCALE

OWNER/DEVELOPER

ELKRIDGE DEVELOPMENT, LLC
301 TRANSYLVANIA AVENUE
RALEIGH, NC 27609
(919) 789-9289

ELKRIDGE DEVELOPMENT NO.2, LLC
301 TRANSYLVANIA AVENUE
RALEIGH, NC 27609
(919) 789-9289

NO.	REVISION	DATE

APPROVED: HOWARD COUNTY DEPARTMENT OF PUBLIC WORKS

CHIEF, BUREAU OF HIGHWAYS — DATE 10-19-06

APPROVED: HOWARD COUNTY DEPARTMENT OF PLANNING AND ZONING

CHIEF, DEVELOPMENT ENGINEERING DIVISION — DATE 10/24/06

CHIEF, DIVISION OF LAND DEVELOPMENT — DATE 10/24/06

SELNICK DRIVE AND P/O RED CLAY DRIVE (SHA) PAVING SECTION

N.T.S

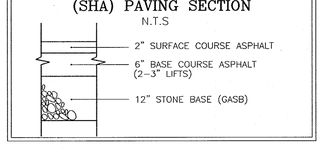

CURVE TABLE

CURVE	RADIUS	LENGTH	DELTA ANGLE	TANGENT	CHORD DIRECTION	CHORD LENGTH
C1	300.00	422.81	80°45'01"	303.54	N15°47'53"E	388.67
C2	288.00	368.08	75°51'40"	216.65	N18°14'34"E	341.78
C3	322.00	345.65	61°31'14"	191.59	N25°25'16"E	329.29

NOTE: ALL STREET LIGHTS WILL BE 250-WALL HPS VAPOR PENDANT FIXTURE (SAG) MOUNTED AT 30' ON BRONZE FIBERGLASS POLE USING 12' ARM.

ROAD CLASSIFICATION

STREET NAME	CLASSIFICATION	DESIGN SPEED	LIMITS
SELNICK DRIVE	LOCAL ROAD	30 MPH	15
RED CLAY FORGE	LOCAL ROAD	30 MPH	15
U.S. ROUTE 1	INTERMEDIATE ARTERIAL	50 MPH	15

FINAL ROAD CONSTRUCTION PLANS

ROAD PLAN & PAVEMENT MARKING

BELMONT STATION

PARCELS 'A,' 'B' & 'C' & OPEN SPACE LOT 1
REF: WP-04-152, WP-06-79, S-04-10, P-05-17, F-06-169
TAX MAP 37 BLOCK 18 — PARCEL '196, 198, 199'
1ST ELECTION DISTRICT — HOWARD COUNTY, MARYLAND

ROBERT H. VOGEL ENGINEERING, INC.
ENGINEERS • SURVEYORS • PLANNERS
8407 MAIN STREET
ELLICOTT CITY, MD 21043
TEL: 410.461.7666
FAX: 410.461.8961

STATE OF MARYLAND — WILLIAM GEORGE LEWIS — PROFESSIONAL ENGINEER — 10/16/06

DESIGN BY: WJZ
DRAWN BY: DZ
CHECKED BY:
DATE: OCTOBER 2006
SCALE: 1"=50'
W.O. NO.: 04-08

SHEET 2 OF 14

F-06-169

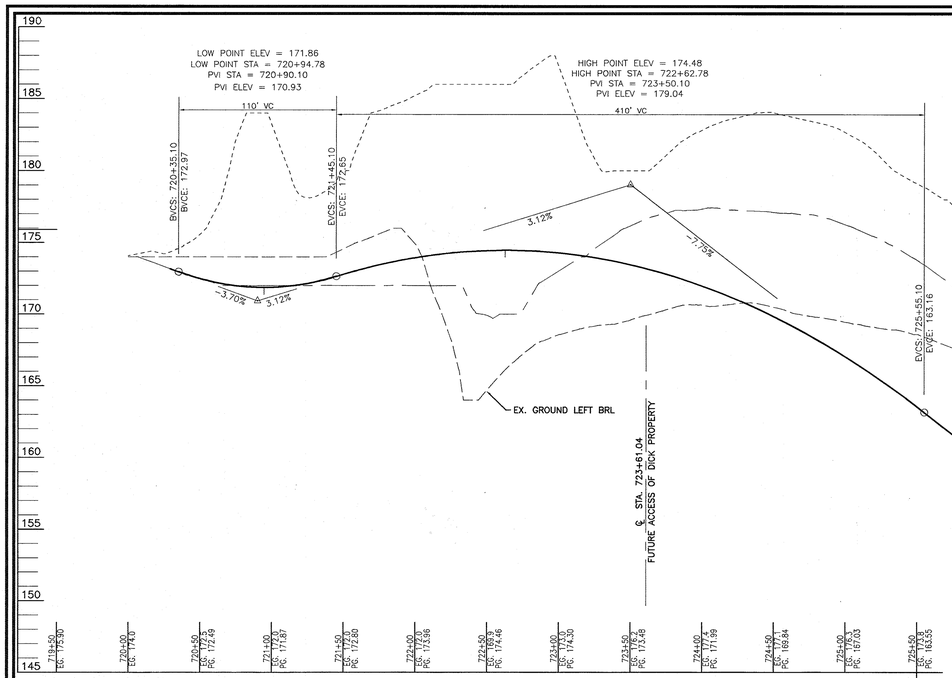

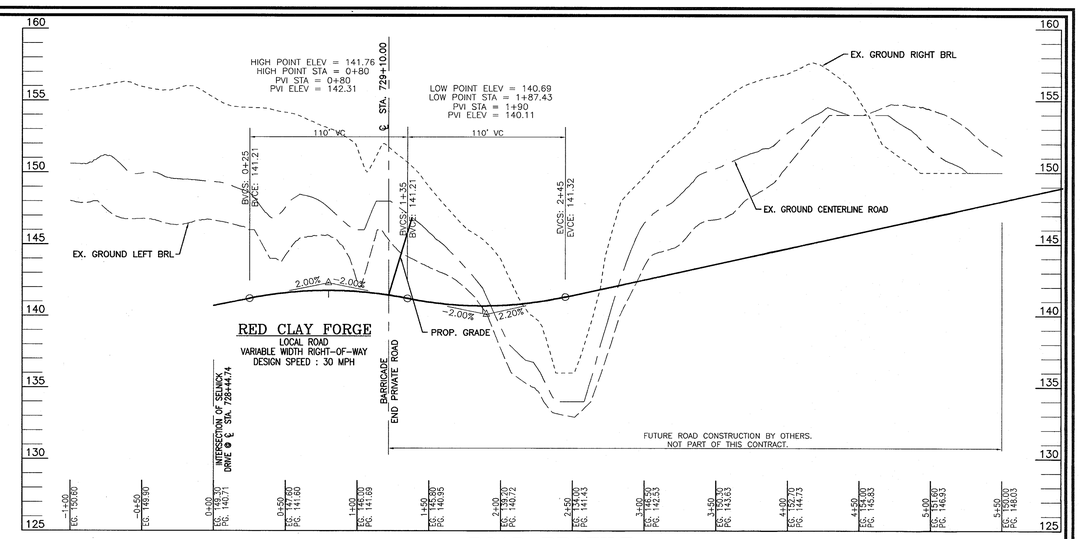

ROAD PROFILE

SCALE: HOR. 1"=50'
VERT. 1"=5'

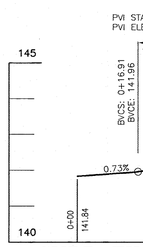

CURB FILLET PROFILE SOUTH OF INTERSECTION OF SELNICK DRIVE AND RED CLAY FORGE

SCALE: HOR. 1"=20'
VERT. 1"=2'

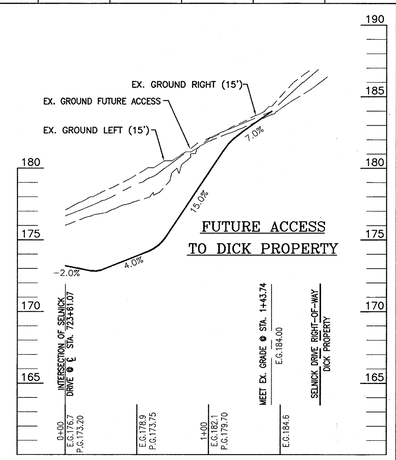

DRIVEWAY PROFILE

SCALE: HOR. 1"=50'
VERT. 1"=5'

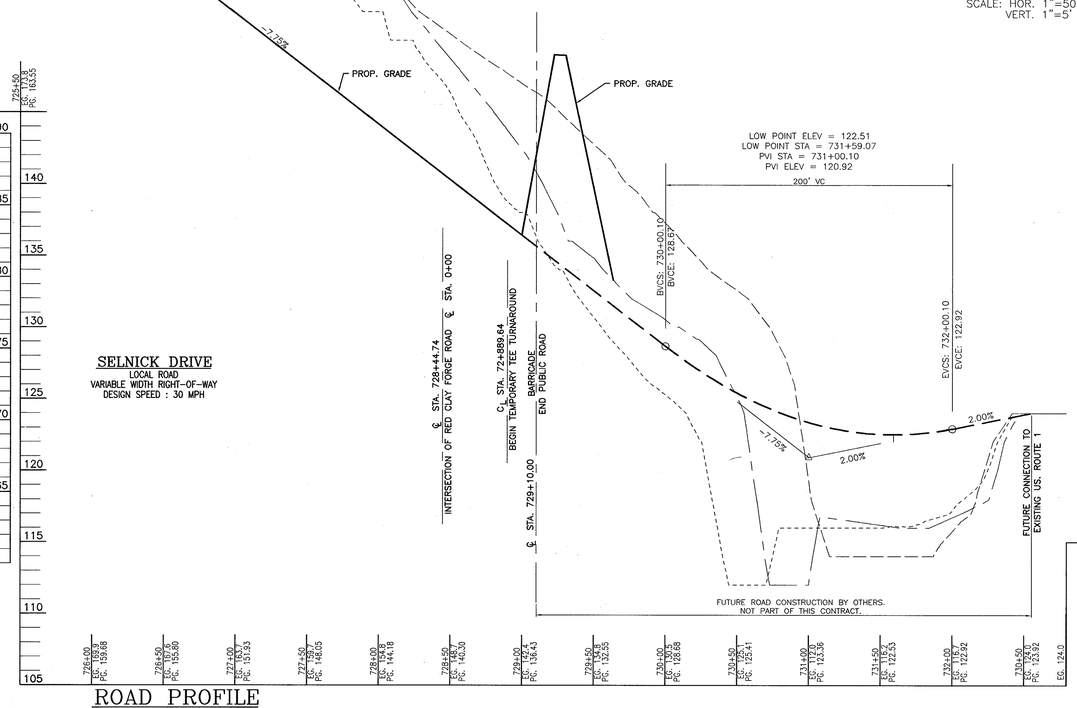

ROAD PROFILE

SCALE: HOR. 1"=50'
VERT. 1"=5'

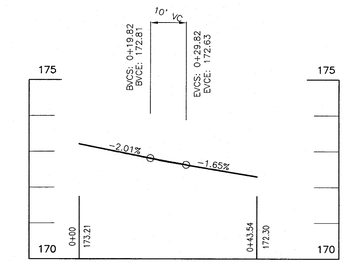

CURB FILLET PROFILE INTERSECTION OF SELNICK DRIVE AND SANTA BARBARA

SCALE: HOR. 1"=20'
VERT. 1"=2'

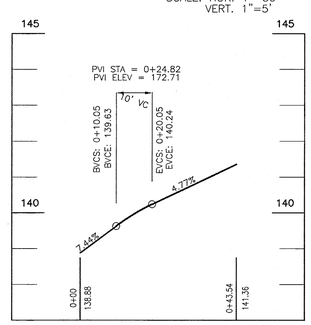

CURB FILLET PROFILE NORTH OF INTERSECTION OF SELNICK DRIVE AND RED CLAY FORGE

SCALE: HOR. 1"=20'
VERT. 1"=2'

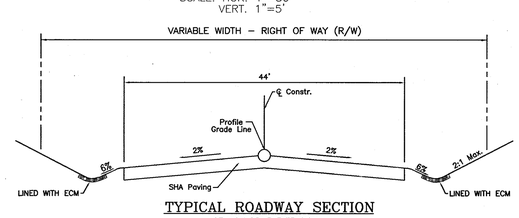

TYPICAL ROADWAY SECTION

SELNICK DRIVE EXTENSION
LIMITS OF CONSTRUCTION:
℄ STA. 720+29 TO ℄ STA. 729+10
(SECTION NOT TO SCALE)
SUPERELEVATION (MAX. E=0.04)
BEGINS AT STATION 723+65 & ENDS BEYOND THE LIMITS OF THIS CONTRACT
DESIGN SPEED: 30 MPH
ROAD CLASSIFICATION: LOCAL ROAD

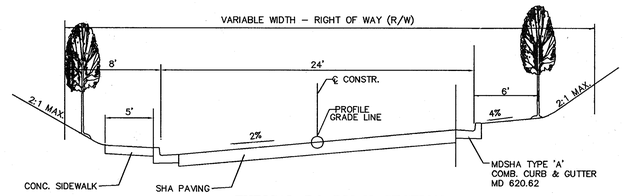

TYPICAL ROADWAY SECTION

RED CLAY FORGE
LIMITS OF CONSTRUCTION:
℄ STA. 0+009 TO ℄ STA. 1+21.89
DESIGN SPEED: 30 MPH
ROAD CLASSIFICATION: LOCAL ROAD

APPROVED: HOWARD COUNTY DEPARTMENT OF PUBLIC WORKS

CHIEF, BUREAU OF HIGHWAYS — DATE 10-19-06

APPROVED: HOWARD COUNTY DEPARTMENT OF PLANNING AND ZONING

CHIEF, DEVELOPMENT ENGINEERING DIVISION — DATE 10/23/06

CHIEF, DIVISION OF LAND DEVELOPMENT — DATE 10/24/06

OWNER/DEVELOPER
ELKRIDGE DEVELOPMENT, LLC
301 TRANSYLVANIA AVENUE
RALEIGH, NC 27609
(919) 789-9289

ELKRIDGE DEVELOPMENT NO.2, LLC
301 TRANSYLVANIA AVENUE
RALEIGH, NC 27609
(919) 789-9289

NO.	REVISION	DATE

FINAL ROAD CONSTRUCTION PLANS

ROAD PROFILE
SELNICK DRIVE AND RED CLAY FORGE
BELMONT STATION

PARCELS 'A,' 'B' & 'C' & OPEN SPACE LOT 1
REF: WP-04-152, WP-06-79, S-04-10, P-05-17, F-06-169
TAX MAP 37 BLOCK 18 — PARCEL '196, 198, 199'
1ST ELECTION DISTRICT — HOWARD COUNTY, MARYLAND

ROBERT H. VOGEL ENGINEERING, INC.
ENGINEERS • SURVEYORS • PLANNERS
8407 MAIN STREET
ELLICOTT CITY, MD 21043
TEL: 410.461.7666
FAX: 410.461.8961

STATE OF MARYLAND — WALTER GEORGE ZIMMERMAN — No. 32093 — PROFESSIONAL ENGINEER — 10/16/06

DESIGN BY: WJZ
DRAWN BY: DZ
CHECKED BY:
DATE: OCTOBER 2006
SCALE: AS SHOWN
W.O. NO.: 04-08

SHEET 3 OF 14

F-06-169

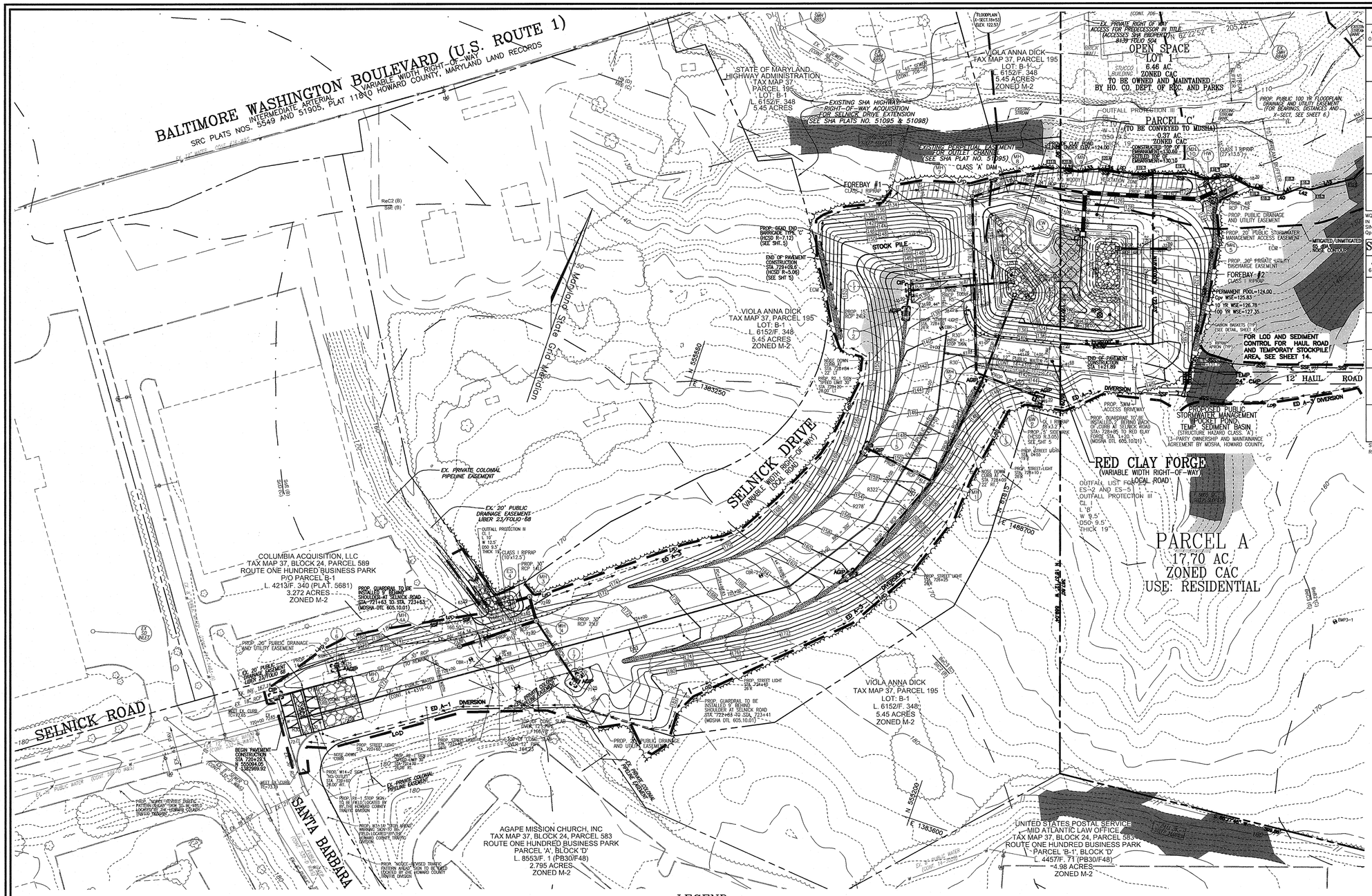

STORMWATER MANAGEMENT REQUIREMENTS (SP#2)

AREA 0.83	REQUIREMENT	VOLUME/CFS REQUIREMENT WITHOUT CREDITS	CREDITS	VOLUME REQUIREMENT WITH CREDITS	NOTES
1	WATER QUALITY VOLUME (WQv) DEVELOPED AREAS	SEE NOTE	——	SEE NOTE	THIS IS PROVIDED FOR IN BMP#1 AND ANALYSIS AT SP#1 DUE TO NECESSARY VERTICAL ALIGNMENT OF ROAD AND LIMITED R-O-W.
2	RECHARGE VOLUME (REv) DEVELOPED AREAS	0.06 AC. FT. OR 0.55 AC. (TOTAL SELNICK DRIVE DEVELOPMENT)	0.04 AC. FT.	0.00 AC. FT.	GRASS CHANNEL ALONG SELNICK DRIVE, SP#2, PROVIDES 0.04 OF CREDIT FOR Rev. REMAINDER OF Rev CREDIT, 0.54, PROVIDED IN ANALYSIS OF SP#1.
3	CHANNEL PROTECTION VOLUME* (CPv)	N/A	——	N/A	TYR PEAK DEVELOPMENT DISCHARGE OF 1 CFS IS LESS THAN REQUIRED 2 CFS FOR CPv
4	OVERHEAD FLOOD PROTECTION* ($Q_{10}P^2$)	REQUIRED		PROVIDED	
	EXISTING	3.79 CFS		——	0.61 CFS BYPASS
	PROVIDED	——		0.61 CFS (FROM TR-20, BYPASS+UNMANAGED)	2.99 CFS UNMANAGED
5	EXTREME FLOOD VOLUME* ($Q_{100}P^2$)				
	EXISTING	6.80 CFS		——	1.16 CFS BYPASS
	PROVIDED	——		1.16 CFS (FROM TR-20, BYPASS+UNMANAGED)	5.10 CFS UNMANAGED

WQv FOR DEVELOPMENT OF SELNICK DRIVE TO SP#2 IS PROVIDED AT BMP#1. Rev (PERCENT AREA METHOD) IS PROVIDED IN GRASS CHANNELS ALONG SELNICK DRIVE, (0.04 AC. TO SP#2 AND 0.54 AC. TO SP#1) . Cpv IS NOT REQUIRED AT SP#2 SINCE THE 1YR PEAK DEVELOPMENT q OF 0.1 CFS IS LESS THAN 2 CFS. THE POST DEVELOPMENT DISCHARGES OF Qf AND Qp ARE LESS THAN THE EXISTING DISCHARGES, THEREFORE NO MANAGEMENT IS PROPOSED.

STORMWATER MANAGEMENT REQUIREMENTS, FACILITY (SP#1)

AREA 6.45 AC.	REQUIREMENT	VOLUME/CFS REQUIREMENT WITHOUT CREDITS	CREDITS	VOLUME REQUIREMENT WITH CREDITS	NOTES
1	WATER QUALITY VOLUME (WQv) DEVELOPED AREAS	0.24 AC. FT.	——	0.24 AC. FT.	0.17 IS PROVIDED BELOW Cpv THIS IS PROVIDED FOR THE ENTIRE DEVELOPMENT OF SELNICK ROAD.
2	RECHARGE VOLUME (REv) DEVELOPED AREAS	0.056 AC. FT. OR 0.50 AC. (TOTAL SELNICK DR DEVELOPMENT)	0.58 AC. FT.	0.00 AC. FT.	GRASS CHANNEL ALONG SELNICK DRIVE, SP#1, PROVIDES 0.54 OF CREDIT FOR Rev. REMAINDER OF Rev CREDIT, 0.04, IS PROVIDED IN ANALYSIS OF SP#1.
3	CHANNEL PROTECTION VOLUME* (CPv)	0.30 AC.FT. 0.31 CFS ALLOWED	——	0.30 AC. FT. 0.14 CFS PROVIDED	Cpv PROVIDED IN BMP #1 TO ELEV.125.90
4	OVERHEAD FLOOD PROTECTION* ($Q_{10}P^2$)	REQUIRED		PROVIDED	
	EXISTING	40.21 CFS		——	20.97 CFS BYPASS
	PROVIDED	——		27.51 CFS TOTAL	3.13 CFS UNMANAGED 12.35 CFS TO POND
5	EXTREME FLOOD VOLUME* ($Q_{100}P^2$)				
	EXISTING	69.72CFS		——	35.29 CFS BYPASS
	PROVIDED	——		59.83 CFS TOTAL	5.57 CFS UNMANAGED 24.46 CFS TO POND

SWM WQv, Cpv, Qp, AND Qf PROVIDED BY POCKET POND, P-5, WITH CLAY LINER
Rev PROVIDED IN GRASS CHANNELS OF OPEN SECTION OF SELNICK DRIVE

* THE REQUIRED AND ALLOWABLE RUNOFF (Cpv, Q10p, Q100) INCLUDES THE DRAINAGE FROM ON-SITE, BYPASS, AND UNMANAGED AREAS SHOWN ON THESE DRAINAGE AREA MAPS.

STREET TREE CALCULATIONS

STREET NAME	LINEAR FEET	REQUIRED	PROVIDED
SELNICK DRIVE	1787	45	45
RED CLAY FORGE	144	4	4
U.S. ROUTE 1*	860	22	25

*STREET TREES ALONG U.S. ROUTE 1 WILL BE PROVIDED WITH SUBSEQUENT SITE DEVELOPMENT PLANS FOR THE BULK PARCEL 'B'

THE SWMF TO BE OWNED BY MDSHA, AND MAINTAINED BY HOA
L. F.

OWNER/DEVELOPER

ELKRIDGE DEVELOPMENT, LLC
301 TRANSYLVANIA AVENUE
RALEIGH, NC 27609
(919) 789-9289

ELKRIDGE DEVELOPMENT NO.2, LLC
301 TRANSYLVANIA AVENUE
RALEIGH, NC 27609
(919) 789-9289

NO.	REVISION	DATE

APPROVED: HOWARD COUNTY DEPARTMENT OF PUBLIC WORKS

CHIEF, BUREAU OF HIGHWAYS — DATE 10-19-06

APPROVED: HOWARD COUNTY DEPARTMENT OF PLANNING AND ZONING

CHIEF, DEVELOPMENT ENGINEERING DIVISION — DATE 10/23/06

CHIEF, DIVISION OF LAND DEVELOPMENT — DATE 10/24/06

THESE PLANS HAVE BEEN REVIEWED FOR HOWARD SOIL CONSERVATION DISTRICT AND MEETS THE TECHNICAL REQUIREMENTS.

USDA-NATURAL RESOURCES CONSERVATION SERVICE — DATE 10/17/06

THIS DEVELOPMENT PLAN IS APPROVED FOR SOIL EROSION AND SEDIMENT CONTROL BY THE HOWARD SOIL CONSERVATION DISTRICT.

HOWARD SCD — DATE 10/17/06

ENGINEER'S CERTIFICATE:

"I HEREBY CERTIFY THAT THIS PLAN FOR SEDIMENT AND EROSION CONTROL REPRESENTS A PRACTICAL AND WORKABLE PLAN BASED ON MY PERSONAL KNOWLEDGE OF THE SITE CONDITIONS AND THAT IT WAS PREPARED IN ACCORDANCE WITH THE REQUIREMENTS OF THE HOWARD SOIL CONSERVATION DISTRICT."

SIGNATURE OF ENGINEER WALTER G. ZAWISLAK, PE — DATE 10/6/06

DEVELOPER'S CERTIFICATE:

"I/WE CERTIFY THAT ALL DEVELOPMENT AND CONSTRUCTION WILL BE DONE IN ACCORDANCE TO THIS PLAN OF DEVELOPMENT FOR SEDIMENT CONTROL, AND THAT ALL RESPONSIBLE PERSONNEL INVOLVED IN THE CONSTRUCTION PROJECT WILL HAVE A CERTIFICATE OF ATTENDANCE AT A DEPARTMENT OF ENVIRONMENT APPROVED TRAINING PROGRAM FOR THE CONTROL OF SEDIMENT AND EROSION BEFORE BEGINNING THE PROJECT. I ALSO AUTHORIZE PERIODIC ON-SITE INSPECTIONS BY THE HOWARD SOIL CONSERVATION DISTRICT.

SIGNATURE OF DEVELOPER PETER G. VOELKEL — DATE 10/6/06

LEGEND:

SF — SILT FENCE
SSF — SUPER SILT FENCE
LOD — LIMIT OF DISTURBANCE
CIP — CURB INLET PROTECTION
AGIP — AT GRADE INLET PROTECTION
STABILIZED CONSTRUCTION ENTRANCE
EROSION CONTROL MATING
PROSED STEET LIGHT
EXISTING CONTOUR
PROPOSED CONTOUR
PROPOSED SPOT ELEVATION
EXISTING SPOT ELEVATION
EXISTING CURB AND GUTTER
PROPOSED CURB AND GUTTER
EXISTING UTILITY POLE
EXISTING LIGHT POLE
EXISTING MAILBOX
EXISTING SIGN
EXISTING SANITARY MANHOLE
EXISTING SANITARY LINE
EXISTING CLEANOUT
EXISTING FIRE HYDRANT
EXISTING WATER LINE
EXISTING FENCE
PROPERTY LINE
RIGHT-OF-WAY LINE
SOILS BOUNDARY
PROPOSED STORM DRAIN
PROPOSED STORM DRAIN INLET
PROPOSED SIDEWALK
MODERATE SLOPES (15% - 24.99%)
STEEP SLOPE (>25%)
PUBLIC 100 YR FLOODPLAIN
MOUNTABLE BERM

FINAL ROAD CONSTRUCTION PLANS

GRADING AND SEDIMENT CONTROL PLAN

BELMONT STATION

PARCELS 'A,' 'B' & 'C' & OPEN SPACE LOT 1
REF: WP-04-152, WP-06-79, S-04-10, P-05-17, F-06-169
TAX MAP 37 BLOCK 18 — PARCEL '196, 198, 199'
1ST ELECTION DISTRICT — HOWARD COUNTY, MARYLAND

ROBERT H. VOGEL ENGINEERING, INC.
ENGINEERS • SURVEYORS • PLANNERS
8407 MAIN STREET
ELLICOTT CITY, MD 21043
TEL: 410.461.7666
FAX: 410.461.8961

STATE OF MARYLAND WALTER G. ZAWISLAK 10/6/06

DESIGN BY:	WJZ
DRAWN BY:	DZ
CHECKED BY:	
DATE:	OCTOBER 2006
SCALE:	1"=50'
W.O. NO.:	04-08

SHEET 4 OF 14

F-06-169

DETAIL 24 – STABILIZED CONSTRUCTION ENTRANCE

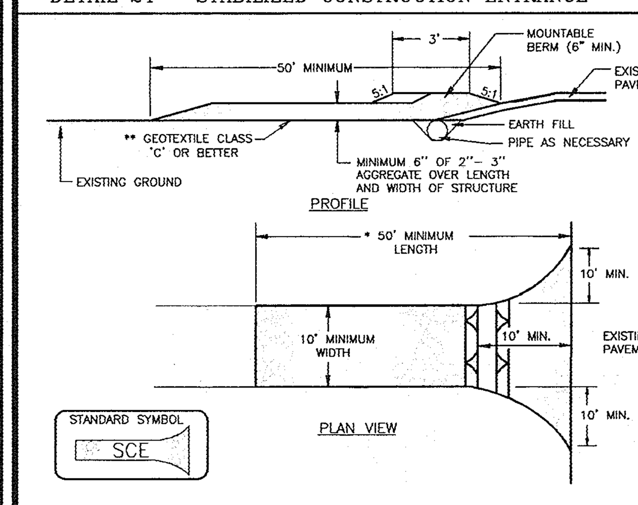

CONSTRUCTION SPECIFICATION

1. LENGTH – MINIMUM OF 50' (* 30' FOR A SINGLE RESIDENCE LOT).
2. WIDTH – 10' MINIMUM, SHOULD BE FLARED AT THE EXISTING ROAD TO PROVIDE A TURNING RADIUS.
3. GEOTEXTILE FABRIC (FILTER CLOTH) SHALL BE PLACED OVER THE EXISTING GROUND PRIOR TO PLACING STONE. ** THE PLAN APPROVAL AUTHORITY MAY NOT REQUIRE SINGLE FAMILY RESIDENCES TO USE GEOTEXTILE.
4. STONE – CRUSHED AGGREGATE (2" TO 3") OR RECLAIMED OR RECYCLED CONCRETE THE ENTRANCE.
5. SURFACE WATER – ALL SURFACE WATER FLOWING TO OR DIVERTED TOWARD CONSTRUCTION ENTRANCES SHALL BE PIPED THROUGH THE ENTRANCE, MAINTAINING POSITIVE DRAINAGE. PIPE INSTALLED THROUGH THE STABILIZED CONSTRUCTION ENTRANCE SHALL BE PROTECTED WITH A MOUNTABLE BERM WITH 5:1 SLOPES AND A MINIMUM OF 6" OF STONE OVER THE PIPE. PIPE HAS TO BE SIZED ACCORDING TO THE DRAINAGE. WHEN THE SCE IS LOCATED AT A HIGH SPOT AND HAS NO DRAINAGE TO CONVEY, A PIPE WILL NOT BE NECESSARY. PIPE SHOULD BE SIZED ACCORDING TO THE AMOUNT OF RUNOFF TO BE CONVEYED. A 6" MINIMUM WILL BE REQUIRED.
6. LOCATION – A STABILIZED CONSTRUCTION ENTRANCE SHALL BE LOCATED AT EVERY POINT WHERE CONSTRUCTION TRAFFIC ENTERS OR LEAVES A CONSTRUCTION SITE. VEHICLES LEAVING THE SITE MUST TRAVEL OVER THE ENTIRE LENGTH OF THE STABILIZED CONSTRUCTION ENTRANCE.

U.S. DEPARTMENT OF AGRICULTURE SOIL CONSERVATION SERVICE	PAGE F – 17 – 3	MARYLAND DEPARTMENT OF ENVIRONMENT WATER MANAGEMENT ADMINISTRATION

DETAIL 22 – SILT FENCE

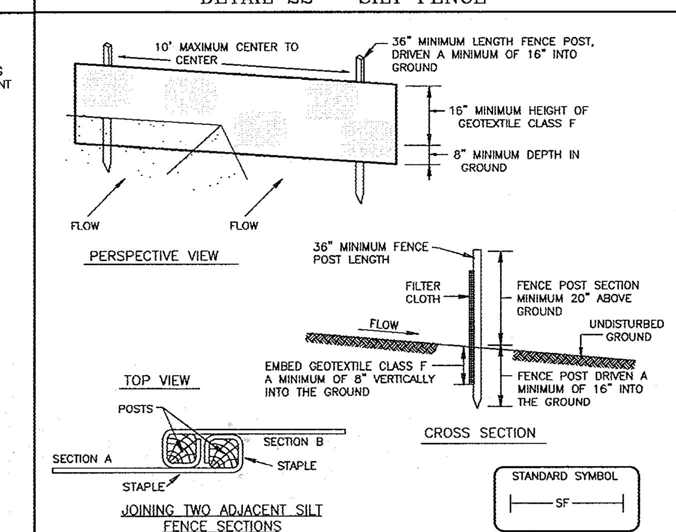

CONSTRUCTION SPECIFICATIONS

1. FENCE POSTS SHALL BE A MINIMUM OF 36" LONG, DRIVEN 16" MINIMUM INTO THE GROUND. WOOD POSTS SHALL BE 1 1/2" X 1 1/2" SQUARE (MINIMUM) CUT, OR 1 3/4" DIAMETER (MINIMUM) ROUND AND SHALL BE OF SOUND QUALITY HARDWOOD. STEEL POSTS WILL BE STANDARD T OR U SECTION WEIGHING NOT LESS THAN 1.00 POUND PER LINEAR FOOT.
2. GEOTEXTILE SHALL BE FASTENED SECURELY TO EACH FENCE POST WITH WIRE TIES OR STAPLES AT TOP AND MID-SECTION AND SHALL MEET THE FOLLOWING REQUIREMENTS FOR GEOTEXTILE CLASS F:

TENSILE STRENGTH	50 LBS/IN (MIN.)	TEST: MSMT 509
TENSILE MODULUS	20 LBS/IN (MIN.)	TEST: MSMT 509
FLOW RATE	0.3 GAL FT ²/MINUTE (MAX.)	TEST: MSMT 322
FILTERING EGGECIENCY	75% (MIN.)	TEST: MSMT 322

3. WHERE ENDS OF GEOTEXTILE FABRIC COME TOGETHER, THEY SHALL BE OVERLAPPED, FOLDED AND STAPLED TO PREVENT SEDIMENT BYPASS.
4. SILT FENCE SHALL BE INSPECTED AFTER EACH RAINFALL EVENT AND MAINTAINED WHEN BULGES OCCUR OR WHEN SEDIMENT ACCUMULATION REACHES 50% OF THE FABRIC HEIGHT.

U.S. DEPARTMENT OF AGRICULTURE SOIL CONSERVATION SERVICE	PAGE E – 15 – 3	MARYLAND DEPARTMENT OF ENVIRONMENT WATER MANAGEMENT ADMINISTRATION

DETAIL 33 – SUPER SILT FENCE

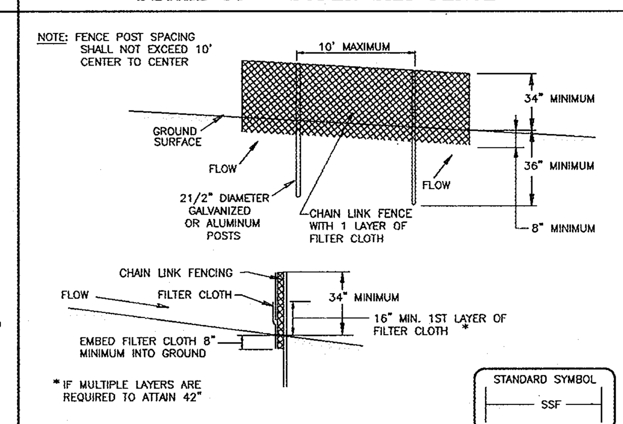

CONSTRUCTION SPECIFICATIONS

1. FENCING SHALL BE 42" IN HEIGHT AND CONSTRUCTED IN ACCORDANCE WITH THE LATEST MARYLAND STATE HIGHWAY DETAILS FOR CHAIN LINK FENCING. THE SPECIFICATION FOR A 6' FENCE SHALL BE USED, SUBSTITUTING 42" FABRIC AND 6' LENGTH POSTS.
2. CHAIN LINK FENCE SHALL BE FASTENED SECURELY TO THE FENCE POSTS WITH WIRE TIES. THE LOWER TENSION WIRE, BRACE AND TRUSS RODS, DRIVE ANCHORS AND POST CAPS ARE NOT REQUIRED EXCEPT ON THE ENDS OF THE FENCE.
3. FILTER CLOTH SHALL BE FASTENED SECURELY TO THE CHAIN LINK FENCE WITH TIES SPACED EVERY 24" AT THE TOP AND MID SECTION.
4. FILTER CLOTH SHALL BE EMBEDDED A MINIMUM OF 8" INTO THE GROUND.
5. WHEN TWO SECTIONS OF FILTER CLOTH ADJOIN EACH OTHER, THEY SHALL BE OVERLAPPED BY 6" AND FOLDED.
6. MAINTENANCE SHALL BE PERFORMED AS NEEDED AND SILT BUILDUPS REMOVED WHEN "BULGES" DEVELOP IN THE SILT FENCE, OR WHEN SILT REACHES 50% OF FENCE HEIGHT
7. FILTER CLOTH SHALL BE FASTENED SECURELY TO EACH FENCE POST WITH WIRE TIES OR STAPLES AT TOP AND MID SECTION AND SHALL MEET THE FOLLOWING REQUIREMENTS FOR GEOTEXTILE CLASS F:

TENSILE STRENGTH	50 LBS/IN (MIN.)	TEST: MSMT 509
TENSILE MODULUS	20 LBS/IN (MIN.)	TEST: MSMT 509
FLOW RATE	0.3 GAL/FT /MINUTE (MAX.)	TEST: MSMT 322
FILTERING EFFICIENCY	75% (MIN.)	TEST: MSMT 322

U.S. DEPARTMENT OF AGRICULTURE SOIL CONSERVATION SERVICE	PAGE H – 26 – 3	MARYLAND DEPARTMENT OF ENVIRONMENT WATER MANAGEMENT ADMINISTRATION

DETAIL 23C – CURB INLET PROTECTION (COG OR COS INLETS)

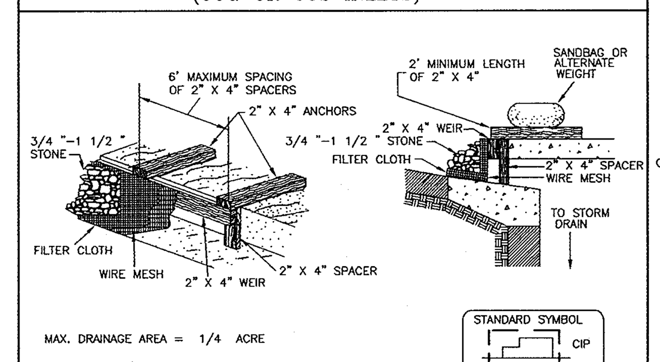

MAX. DRAINAGE AREA = 1/4 ACRE

CONSTRUCTION SPECIFICATIONS

1. ATTACH A CONTINUOUS PIECE OF WIRE MESH (30" MINIMUM WIDTH BY THROAT LENGTH PLUS 4') TO THE 2" X 4" WEIR (MEASURING THROAT LENGTH PLUS 2') AS SHOWN ON THE STANDARD DRAWING.
2. PLACE A CONTINUOUS PIECE OF GEOTEXTILE CLASS E THE SAME DIMENSIONS AS THE WIRE MESH OVER THE WIRE MESH AND SECURELY ATTACH IT TO THE 2" X 4" WEIR.
3. SECURELY NAIL THE 2" X 4" WEIR TO A 9" LONG VERTICAL SPACER TO BE LOCATED BETWEEN THE WEIR AND THE INLET FACE (MAX. 4' APART).
4. PLACE THE ASSEMBLY AGAINST THE INLET THROAT AND NAIL (MINIMUM 2' LENGTHS OF 2" X 4" TO THE TOP OF THE WEIR AT SPACER LOCATIONS). THESE 2" X 4" ANCHORS SHALL EXTEND ACROSS THE INLET TOP AND BE HELD IN PLACE BY SANDBAGS OR ALTERNATE WEIGHT.
5. THE ASSEMBLY SHALL BE PLACED SO THAT THE END SPACERS ARE A MINIMUM 1' BEYOND BOTH ENDS OF THE THROAT OPENING.
6. FORM THE 1/2 " X 1/2 " WIRE MESH AND THE GEOTEXTILE FABRIC TO THE CONCRETE GUTTER AND AGAINST THE FACE OF THE CURB ON BOTH SIDES OF THE INLET. PLACE CLEAN 3/4 " X 1 1/2 " STONE OVER THE WIRE MESH AND GEOTEXTILE IN SUCH A MANNER TO PREVENT WATER FROM ENTERING THE INLET UNDER OR AROUND THE GEOTEXTILE.
7. THIS TYPE OF PROTECTION MUST BE INSPECTED FREQUENTLY AND THE FILTER CLOTH AND STONE REPLACED WHEN CLOGGED WITH SEDIMENT.
8. ASSURE THAT STORM FLOW DOES NOT BYPASS THE INLET BY INSTALLING A TEMPORARY EARTH OR ASPHALT DIKE TO DIRECT THE FLOW TO THE INLET.

U.S. DEPARTMENT OF AGRICULTURE SOIL CONSERVATION SERVICE	PAGE E – 16 – 5B	MARYLAND DEPARTMENT OF ENVIRONMENT WATER MANAGEMENT ADMINISTRATION

DETAIL 23B – AT GRADE INLET PROTECTION

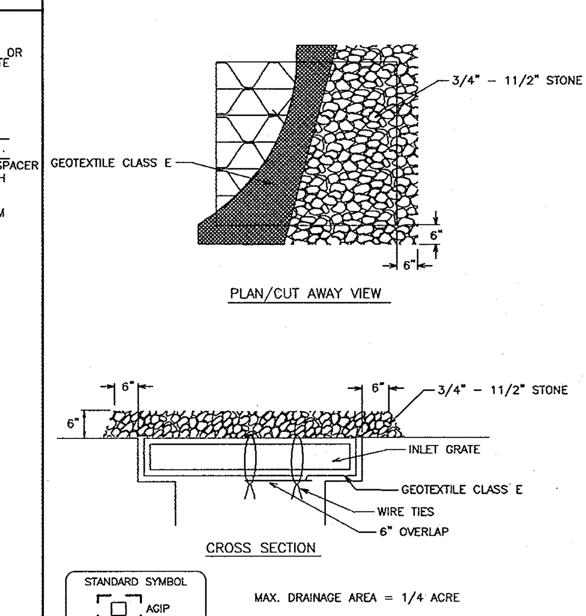

MAX. DRAINAGE AREA = 1/4 ACRE

CONSTRUCTION SPECIFICATIONS

1. LIFT GRATE AND WRAP WITH GEOTEXTILE CLASS E TO COMPLETELY COVER ALL OPENINGS, THEN SET GRATE BACK IN PLACE.
2. PLACE 3/4" TO 11/2" STONE, 4"–6" THICK ON THE GRATE TO SECURE THE FABRIC AND PROVIDE ADDITIONAL FILTRATION.

U.S. DEPARTMENT OF AGRICULTURE SOIL CONSERVATION SERVICE	PAGE E – 16 – 5A	MARYLAND DEPARTMENT OF ENVIRONMENT WATER MANAGEMENT ADMINISTRATION

DETAIL 1 – EARTH DIKE

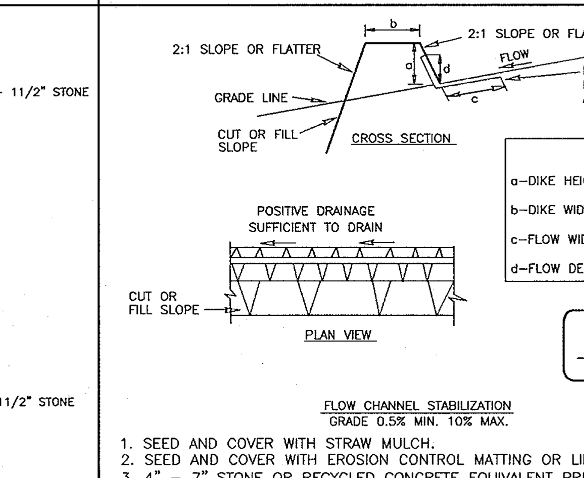

	DIKE A	DIKE B
a–DIKE HEIGHT	18"	30"
b–DIKE WIDTH	24"	36"
c–FLOW WIDTH	4'	6'
d–FLOW DEPTH	12"	24"

STANDARD SYMBOL A–2 / B–3

FLOW CHANNEL STABILIZATION
GRADE 0.5% MIN. 10% MAX.

1. SEED AND COVER WITH STRAW MULCH.
2. SEED AND COVER WITH EROSION CONTROL MATTING OR LINE WITH SOD.
3. 4" – 7" STONE OR RECYCLED CONCRETE EQUIVALENT PRESSED INTO THE SOIL 7" MINIMUM

CONSTRUCTION SPECIFICATIONS

1. ALL TEMPORARY EARTH DIKES SHALL HAVE UNINTERRUPTED POSITIVE GRADE TO AN OUTLET. SPOT ELEVATIONS MAY BE NECESSARY FOR GRADES LESS THAN 1%.
2. RUNOFF DIVERTED FROM A DISTURBED AREA SHALL BE CONVEYED TO A SEDIMENT TRAPPING DEVICE.
3. RUNOFF DIVERTED FROM AN UNDISTURBED AREA SHALL OUTLET DIRECTLY INTO AN UNDISTURBED, STABILIZED AREA AT A NON–EROSIVE VELOCITY.
4. ALL TREES, BRUSH, STUMPS, OBSTRUCTIONS, AND OTHER OBJECTIONAL MATERIAL SHALL BE REMOVED AND DISPOSED OF SO AS NOT TO INTERFERE WITH THE PROPER FUNCTIONING OF THE DIKE.
5. THE DIKE SHALL BE EXCAVATED OR SHAPED TO LINE, GRADE AND CROSS SECTION AS REQUIRED TO MEET THE CRITERIA SPECIFIED HEREIN AND BE FREE OF BANK PROJECTIONS OR OTHER IRREGULARITIES WHICH WILL IMPEDE NORMAL FLOW.
6. FILL SHALL BE COMPACTED BY EARTH MOVING EQUIPMENT.
7. ALL EARTH REMOVED AND NOT NEEDED FOR CONSTRUCTION SHALL BE PLACED SO THAT IT WILL NOT INTERFERE WITH THE FUNCTIONING OF THE DIKE.
8. INSPECTION AND MAINTENANCE MUST BE PROVIDED PERIODICALLY AND AFTER EACH RAIN EVENT.

U.S. DEPARTMENT OF AGRICULTURE SOIL CONSERVATION SERVICE	PAGE A – 1 – 6	MARYLAND DEPARTMENT OF ENVIRONMENT WATER MANAGEMENT ADMINISTRATION

DETAIL 20A – REMOVABLE PUMPING STATION

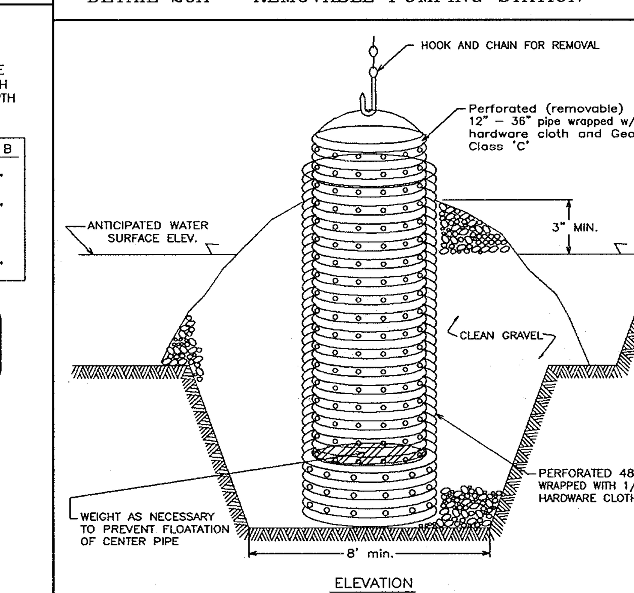

Construction Specifications

1. The outer pipe should be 48" dia. or shall, in any case, be at least 4" greater in diameter than the center pipe. The outer pipe shall be wrapped with 1/2" hardware cloth to prevent backfill material from entering the perforations.
2. After installing the outer pipe, backfill around outer pipe with 2" aggregate or clean gravel.
3. The inside stand pipe (center pipe) should be constructed by perforating a corrugated or PVC pipe between 12" and 36" in diameter. The perforations shall be 1/2" X 6" slits or 1" diameter holes 6" on center. The center pipe shall be wrapped with 1/2" hardware cloth first, then wrapped again with Geotextile Class C.
4. The center pipe should extend 12" to 18" above the anticipated water surface elevation or riser crest elevation when dewatering a basin.

U.S. DEPARTMENT OF AGRICULTURE SOIL CONSERVATION SERVICE	PAGE D – 12 – 4	MARYLAND DEPARTMENT OF ENVIRONMENT WATER MANAGEMENT ADMINISTRATION

DETAIL 30 – EROSION CONTROL MATTING

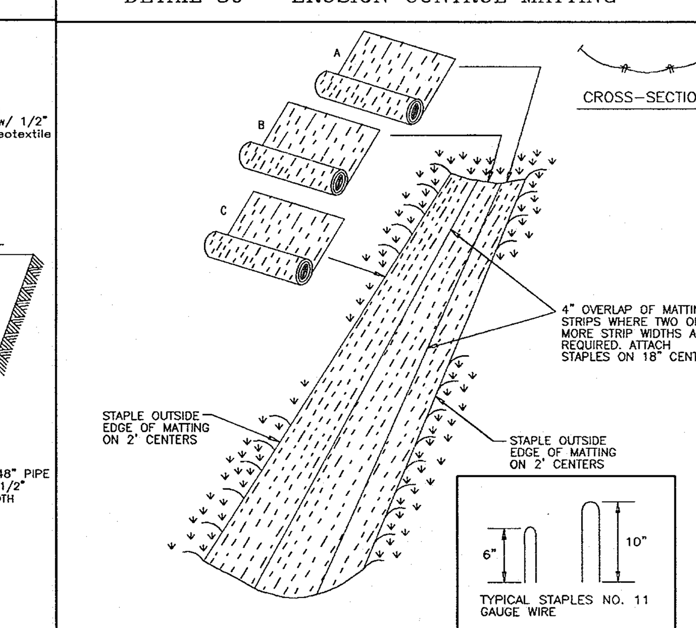

CONSTRUCTION SPECIFICATIONS

1. KEY–IN THE MATTING BY PLACING THE TOP ENDS OF THE MATTING IN A NARROW TRENCH, 6" IN DEPTH. BACKFILL THE TRENCH AND TAMP FIRMLY TO CONFORM TO THE CHANNEL CROSS–SECTION. SECURE WITH A ROW OF STAPLES ABOUT 4" DOWN SLOPE FROM THE TRENCH. SPACING BETWEEN STAPLES IS 6".
2. STAPLE THE 4" OVERLAP IN THE CHANNEL CENTER USING AN 18" SPACING BETWEEN STAPLES.
3. BEFORE STAPLING THE OUTER EDGES OF THE MATTING, MAKE SURE THE MATTING IS SMOOTH AND IN FIRM CONTACT WITH THE SOIL.
4. STAPLES SHALL BE PLACED 2' APART WITH 4 ROWS FOR EACH STRIP, 2 OUTER ROWS, AND 2 ALTERNATING ROWS DOWN THE CENTER.
5. WHERE ONE ROLL OF MATTING ENDS AND ANOTHER BEGINS, THE END OF THE TOP STRIP SHALL OVERLAP THE UPPER END OF THE LOWER STRIP BY 4", SHIPLAP FASHION. REINFORCE THE OVERLAP WITH A DOUBLE ROW OF STAPLES SPACED 6" APART IN A STAGGERED PATTERN ON EITHER SIDE.
6. THE DISCHARGE END OF THE MATTING LINER SHOULD BE SIMILARLY SECURED WITH 2 DOUBLE ROWS OF STAPLES.

NOTE: IF FLOW WILL ENTER FROM THE EDGE OF THE MATTING THEN THE AREA EFFECTED BY THE FLOW MUST BE KEYED–IN.

U.S. DEPARTMENT OF AGRICULTURE SOIL CONSERVATION SERVICE	PAGE G – 22 – 2	MARYLAND DEPARTMENT OF ENVIRONMENT WATER MANAGEMENT ADMINISTRATION

PERMANENT SEEDING NOTES

APPLY TO GRADED OR CLEARED AREAS NOT SUBJECT TO IMMEDIATE FURTHER DISTURBANCE WHERE A PERMANENT LONG–LIVED VEGETATIVE

SEEDBED PREPARATION: Loosen upper three inches of soil by raking, discing or other acceptable means before seeding, if not previously

SOIL AMENDMENTS: In lieu of soil test recommendations, use one of

1) Preferred–Apply 2 tons per acre dolomitic limestone (92 lbs/100 sq.ft.) and 600 lbs per acre 10–10–10 fertilizer (14 lbs./1000 sq.ft.) before seeding. Harrow or disc into upper three inches of soil. At the time of seeding, apply 400 lbs. per acre 30–0–0 ureaform fertilizer (9 lbs/1000 sq.ft.)
2) Acceptable–Apply 2 tons per acre dolomatic limestone (92 lbs/1000 sq.ft.) and apply 1000 lbs. per acre 10–10–10– fertilizer (23 lbs./1000 sq.ft.) before seeding. Harrow or disc into upper

SEEDING: For the periods March 1 thru April 30, and August 1 thru October 15, seed with 60 lbs. per acre (1.4 lbs/1000 sq.ft.) of Kentucky 31 Tall Fescue. For the period May 1 thru July 31, seed with 60 lbs. Kentucky 31 Tall Fescue per acre and 2 lbs. per acre (.05 lbs./1000 sq.ft.) of weeping lovegrass. During the period of October 16 thru February 28, protect site by: Option (1) 2 tons per acre well anchored straw mulch and seed as soon as possible in the spring. Option (2) Use sod. Option (3) Seed with 60 lbs/acre Kentucky 31 Tall Fescue and mulch with 2 tons/acre well anchored

MULCHING: Apply 1 1/2 to 2 tons per acre (70 to 90 lbs/1000 sq. ft.) of unrotted small grain straw immediately after seeding. Anchor mulch immediately after application using mulch anchoring tool or 218 gallons per acre (5 gal/1000 sq.ft.) of emulsified asphalt on flat areas. On slopes 8 feet or higher, use 348 gallons

MAINTENANCE: Inspect all seeded areas and make needed repairs.

TEMPORARY SEEDING NOTES

SEEDBED PREPARATION: Loosen upper three inches of soil by raking, discing or other acceptable means before seeding, if not previously

SOIL AMENDMENTS: Apply 600 lbs. per acre 10–10–10 fertilizer

SEEDING: For periods March 1 thru April 30 and from August 15 thru November 15, seed with 2 1/2 bushel per acre of annual rye (3.2 lbs./1000 sq.ft.) For the period May 1 thru August 14, seed with 3 lbs. per acre of weeping lovegrass (.07 lbs./1000 sq.ft.). For the period November 1 thru February 28, protect site by applying 2 tons per acre of well anchored straw mulch and seed as soon as possible

MULCHING: Apply 1 1/2 to 2 tons per acre (70 to 90 lbs./1000 sq.ft.) of unrotted small grain straw immediately after seeding. Anchor mulch immediately after application using mulch anchoring tool or 218 gallons per acre (5 gal/1000 sq.ft.) of emulsified asphalt on flat areas. On slopes 8 feet or higher, use 348 gallons per acre

REFER TO THE 1994 MARYLAND STANDARDS AND SPECIFICATIONS FOR SOIL EROSION AND SEDIMENT CONTROL FOR RATE AND METHODS NOT

21.0 STANDARDS AND SPECIFICATIONS FOR TOPSOIL

Placement of topsoil over a prepared subsoil prior to

To provide a suitable soil medium for vegetable growth. Soils of concern have low moisture content, low nutrient levels, low pH, materials toxic to plants, and/or

Conditions Where Practice Applies

I. This practice is limited to areas having 2:1 or flatter
a. The texture of the exposed subsoil/parent material
b. The soil material is so shallow that the rooting zone is not deep enough to support plants or furnish continuing supplies of moisture and plant nutrients.
c. The original soil to be vegetated contains
d. The soil is so acidic that treatment with

II. For the purpose of these Standards and Specifications, areas having slopes steeper than 2:1 require special consideration and design for adequate stabilization. Areas having slopes steeper than 2:1 shall have the appropriate

Construction and Material Specifications

I. Topsoil salvaged from the existing site may be used provided that it meets the standards as set forth in these specifications. Typically, the depth of topsoil to be salvaged for a given soil type can be found in the representative soil profile section in the Soil Survey published by USDA–SCS in cooperation with Maryland

II. Topsoil Specifications – Soil to be used as topsoil
i. Topsoil shall be a loam, sandy loam, clay loam, silt loam, sandy clay loam, loamy sand. Other soils may be used if recommended by an agronomist or a soil scientist and approved by the appropriate approval authority. Regardless, topsoil shall not be a mixture of contrasting textured subsoils and shall contain less than 5% by volume of cinders, stones, slag, coarse fragments, gravel, sticks, roots, trash, or other materials larger that 1 and 1/2" in
ii. Topsoil must be free of plants or plant parts such as Bermuda grass, quackgrass, Johnsongrass, nutsedge, poison
iii. Where the subsoil is either highly acidic or composed of heavy clays, ground limestone shall be spread at the rate of 4–8 tons/acre (200–400 pounds per 1,000 square feet) prior to the placement of topsoil. Lime shall be distributed uniformly over designated areas and worked into the soil in conjunction with tillage operations as described

II. For sites having disturbed areas under 5 acres:
i. Place topsoil (if required) and apply soil amendments as specified in 20.0 Vegetative Stabilization – Section I – Vegetative Stabilization Methods and Materials.

iii. For sites having disturbed areas over 5 acres:
i. On soil meeting topsoil specifications, obtain test results dictating fertilizer and lime amendments required to bring the soil into compliance with the following:
a. pH for topsoil shall be between 6.0 and 7.5. If the tested soil demonstrates a pH of less than 6.0, sufficient lime shall be prescribed to raise the pH to 6.5 or higher.
b. Organic content of topsoil shall be not less than 1.5 percent by weight.
c. Topsoil having soluble salt content greater than 500 parts per million shall not be used.
d. No sod or seed shall be placed on soil soil which has been treated with soil sterilants or chemicals used for weed control until sufficient time has elapsed (14 days min.) to permit dissipation of phyto–toxic materials.

NOTE: Topsoil substitutes or amendments, as recommended by a qualified agronomist or soil scientist and approved by the appropriate approval authority, may be used in lieu of natural topsoil.

ii. Place topsoil (if required) and apply soil ammendments specified in 20.0 Vegetative Stabilization–Section I–Vegetative Stabilization Methods and Materials.

V. Topsoil Application
i. When topsoiling, maintain needed erosion and sediment control practices such as diversions, Grade Stabilization Structures, Earth Dikes, Slope Silt Fence and Sediment Traps and Basins.
ii. Grades on the areas to be topsoiled, which have been previously established, shall be maintained, albeit 4" – 8" higher in elevation.
iii. Topsoil shall be uniformly distributed in a 4" – 8" layer and lightly compacted to a minimum thickness of 4". Spreading shall be performed in such a manner that sodding or seeding can proceed with a minimum of additional soil preparation and tillage. Any irregularities in the surface resulting from topsoiling or other operations shall be corrected in order to prevent the formation of depressions or water pockets.
iv. Topsoil shall not be place while the topsoil or subsoil is in a frozen or muddy condition, when the subsoil is excessively wet or in a condition that may otherwise be detrimental to proper grading and seedbed preparation.

SEQUENCE OF CONSTRUCTION

1. OBTAIN HOWARD COUNTY GRADING PERMIT AND MDE PERMIT (TRACKING #20046044/03–NT–0489 DATED AUGUST 15, 2006. (WEEK 1)
2. NOTIFY HOWARD COUNTY AT LEAST 48 HOURS PRIOR TO START OF CONSTRUCTION. (WEEK 1)
3. CONDUCT A PRE–CONSTRUCTION MEETING WITH THE SEDIMENT CONTROL INSPECTOR PRIOR TO ANY LAND DISTURBANCE. (WEEK 1)
4. WITH APPROVAL OF SEDIMENT CONTROL INSPECTOR, CLEAR AND GRUB FOR SEDIMENT CONTROL MEASURES ONLY. INSTALL SUPER SILT FENCE, AND EARTH DIKES AND MOUNTABLE BERMS FOR HAUL ROAD AND TEMPORARY STOCKPILES. (WEEK 2)
5. CONSTRUCT RETAINING WALL AND INSTALL ALL REMAINING SEDIMENT CONTROL MEASURES, INLCUDING BASIN (WITHOUT FOREBAYS), EARTH DIKES AND STORM DRAIN FROM EW–2 TO HW–1. (WEEK 3)
6. UPON RECEIVING WRITTEN PERMISSION FROM INSPECTOR, BEGIN GRADING.
7. BEGIN UTLITY INSTALLATION, AND BLOCK INLETS AS WORK PROGRESSES. (WEEK 7)
8. INSTALL ON–SITE PAVING BASE COURSE. (WEEK 6)
9. COMPLETE ALL UTILITY CONSTRUCTION. (WEEK 9)
10. COMPLETE ALL PAVING CONSTRUCTION. (WEEK 10)
11. INSTALL SIDEWALK. (WEEK 11)
12. FINE GRADE AND STABILIZE ALL AREAS OF PARCEL INCLUDING ANY EXPOSED EARTH AREAS OUTSIDE THE LOD. REMOVE ALL TRASH JUNK AND DEBREES FROM ENTIRE PARCEL, INCLUDING FLOODPLAIN. UPON STABILIZATION OF DRAINAGE AREA TO BASIN #1, INCLUDING THOSE AREAS ON PARCEL A (SDP–06–034), CONVERT BASIN TO PERMANENT SWM FACILITY, AFTER RECEIVING APPROVAL FROM SEDIMENT CONTROL INSPECTOR.
13. INSTALL LANDSCAPING. (WEEK 13)
14. REMOVE ALL SEDIMENT CONTROL MEASURES AFTER RECEIVING APPROVAL FROM THE SEDIMENT CONTROL INSPECTOR. (WEEK 14)

NOTES:

1. DURING GRADING AND AFTER EACH RAINFALL, CONTRACTOR WILL INSPECT AND PROVIDE NECESSARY MAINTENANCE TO THE SEDIMENT CONTROL MEASURES ON THIS PLAN.
2. FOLLOWING INITIAL SOIL DISTURBANCES OR REDISTURBANCE PERMANENT OR TEMPORARY STABILIZATION SHALL BE COMPLETED WITHIN:
   A. 7 CALENDAR DAYS FOR ALL PERIMETER SEDIMENT CONTROL STRUCTURES, DIKES, SWALES AND ALL SLOPES GREATER THAN 3:1.
   B. 14 CALENDAR DAYS FOR ALL OTHER DISTURBED AREAS.

SEDIMENT CONTROL NOTES

1. A minimum of 48 hours notice must be given to the Howard County Department of Inspection, License and Permits Sediment Control Division prior to the start of any construction (313–1855).
2. All vegetation and structural practices are to be installed according to the provisions of this plan and are to be in conformance with the 1994 MARYLAND STANDARDS AND SPECIFICATIONS FOR SOIL EROSION AND SEDIMENT CONTROL and revisions thereto.
3. Following initial soil disturbance or redisturbance, permanent or temporary stabilization shall be completed within: (a) 7 calendar days for all perimeter sediment control structures, dikes, perimeter slopes, and all slopes greater than 3:1, (b) 14 days as to all other disturbed or graded areas on the project site.
4. All sediment traps/basins shown must be fenced and warning signs posted around their perimeter in accordance with Vol. 1, Chapter 7, HOWARD COUNTY DESIGN MANUAL, Storm Drainage, i.e. all sediment traps and basins in residential areas or in residential developments expected to have occupants before thier removal shall be fenced if the maximum depth for the sediment volume exceeds 18 inches. Fencing shall be equivalent to snow fencing in height, ability to be seen and abiliity to restrict inadvertent passage.
5. All disturbed areas must be stabilized within the time period specified above in accordance with the 1994 MARYLAND STANDARDS AND SPECIFICATIONS FOR SOIL EROSION AND SEDIMENT CONTROL for permanent seeding, sod, temporary seeding, and mulching (Sec. G). Temporary stabilization with mulch alone shall be done when recommended seeding dates do not allow for proper germination and establishment of grasses.
6. All sediment control structures are to remain in place and are to be maintained in operative condition until permission for their removal has been obtained from the Howard County Sediment Control Inspector.
7. Site Analysis :

Total Area	19.9 Acres
Area Disturbed	6.83 Acres
Area to be roofed or paved	0.95 Acres
Area to be vegetatively stabilized	5.88 Acres
Total Cut	12,000 CY
Total Fill	12,000 CY
WASTE/BORROW LOCATION	ONSITE & OFFSITE*

8. Any sediment control practice which is disturbed by grading activity for placement of utilities must be repaired on the same day of disturbance.
9. Additional sediment controls must be provided, if deemed necessary by the howard County Sediment Control Inspector.
10. On all sites with disturbed areas in excess of 2 acres, approval of the inspection agency shall be requested upon completion of installation of perimeter erosion and sediment controls, but before proceeding with any other earth disturbance or grading. Other building or grading inspection approvals may not be authorized until this initial approval by the inspection agency is made.
11. Trenches for the construction of utilities is limited to three pipe lengths or that which shall be back–filled and stabilized within one working day, whichever is shorter.

* To be determined by contractor, with pre–approval of the Sediment Control Inspector to a site with an approved and active grading permit

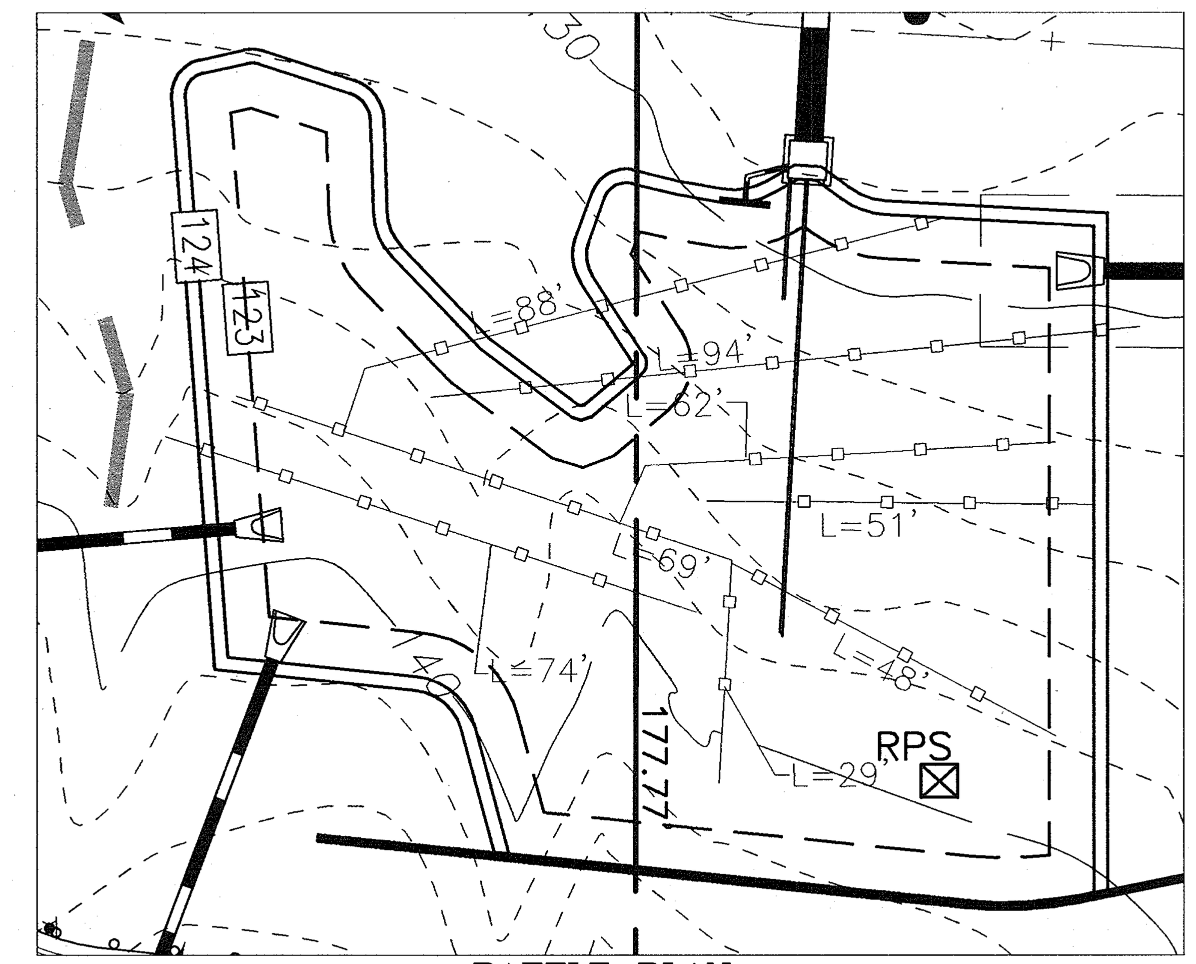

BAFFLE PLAN
SCALE: 1"=20'

DETAIL 18 – SEDIMENT BASIN BAFFLES

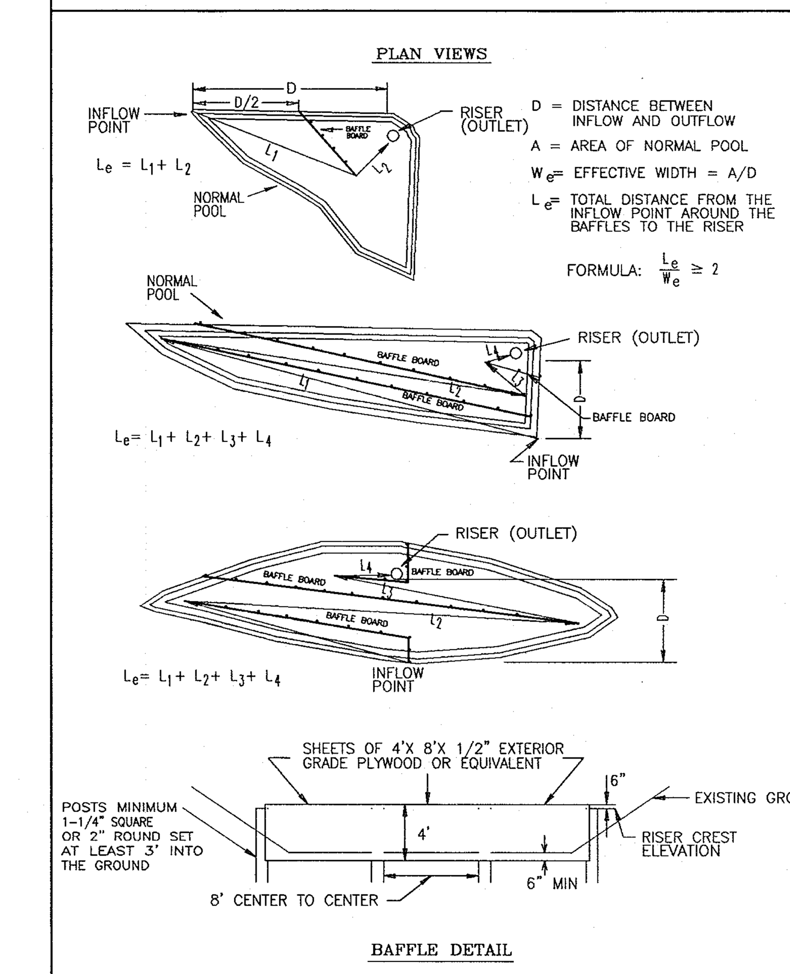

U.S. DEPARTMENT OF AGRICULTURE SOIL CONSERVATION SERVICE	PAGE C – 10 – 28	MARYLAND DEPARTMENT OF ENVIRONMENT WATER MANAGEMENT ADMINISTRATION

SEDIMENT BASIN #1

D.A. =	7.32 AC.
STORAGE REQUIRED (SEDIMENT)=	26352 CF.
STORAGE PROVIDED (SEDIMENT)=	64149 CF.
TOP OF DAM =	130.76
TOP OF RISER =	129.43
WEIR CREST EL. =	126.8
BOTTOM EL. =	121.75
C/O EL. =	122.88
SIDE SLOPES =	3:1
WEIR WIDTH =	3.5'
WET VOLUME REQUIRED =	13176
WET VOLUME PROVIDED =	13176
WET STORAGE EL. =	123.68
DRY VOLUME REQUIRED =	13176
DRY STORAGE PROVIDED =	50970
DRY STORAGE EL. =	128.74
Q_1 (TSWM) =	0.69 CFS.
Q_{10} (TSWM) =	18.37 CFS.
Q_{100}(TSWM) =	32.90 CFS.
Q_1 (EX) =	9.81 CFS.

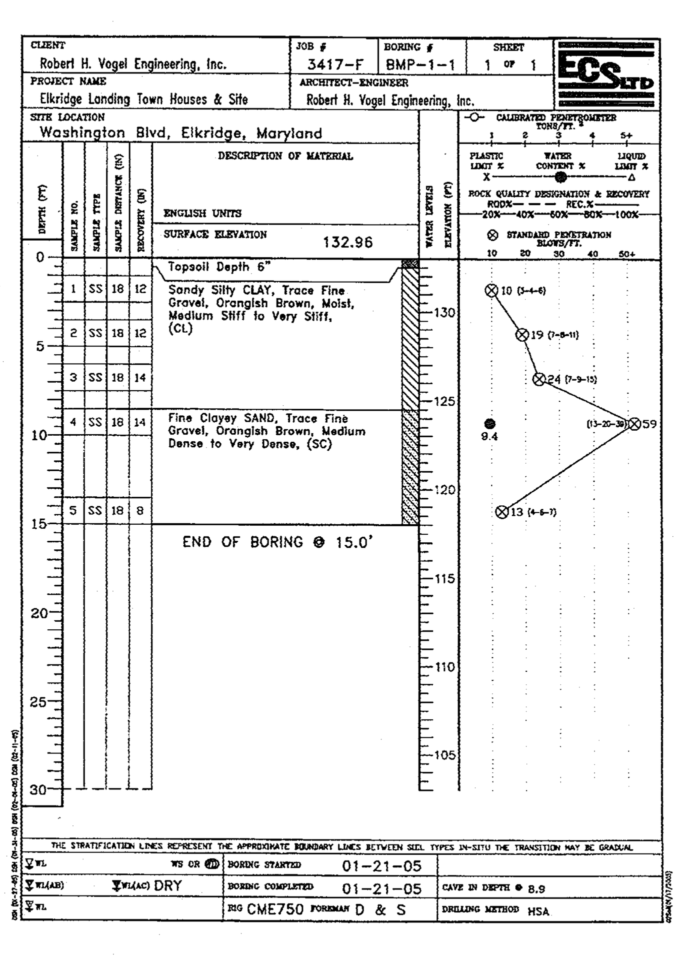

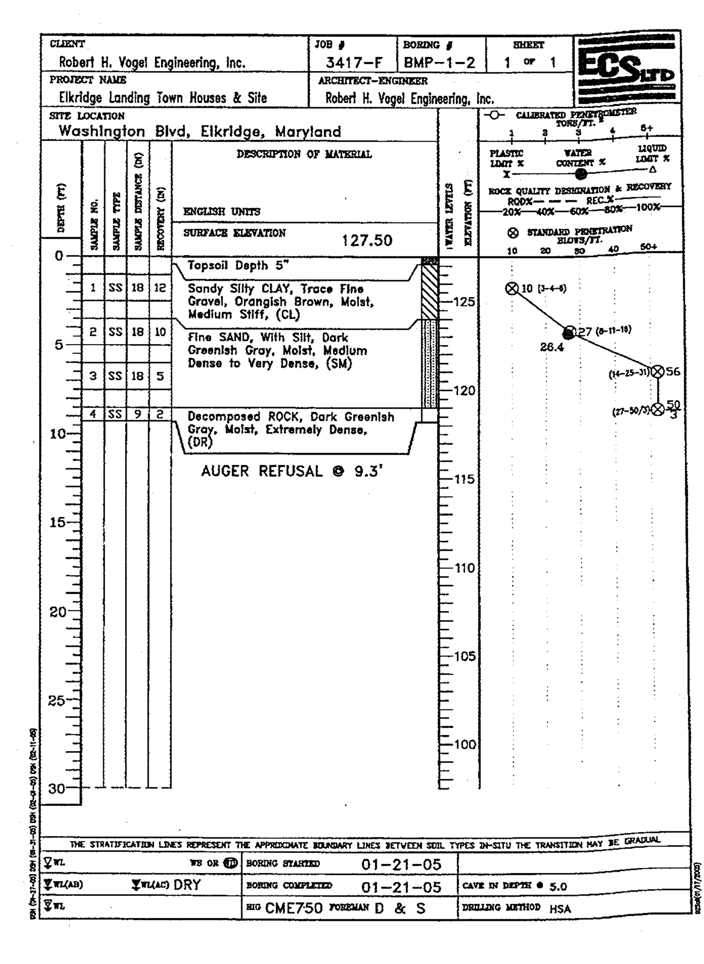

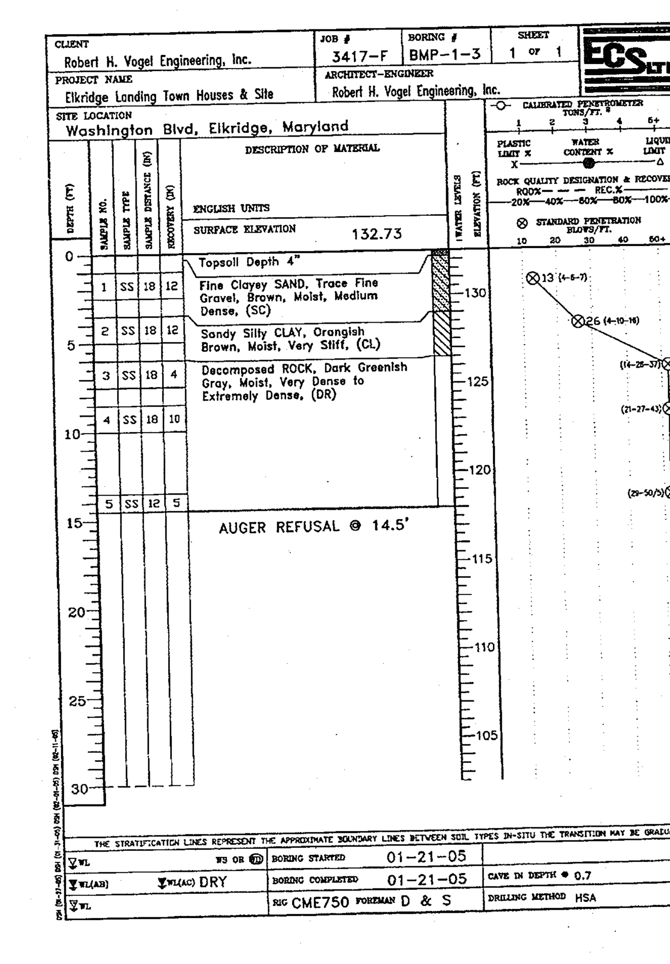

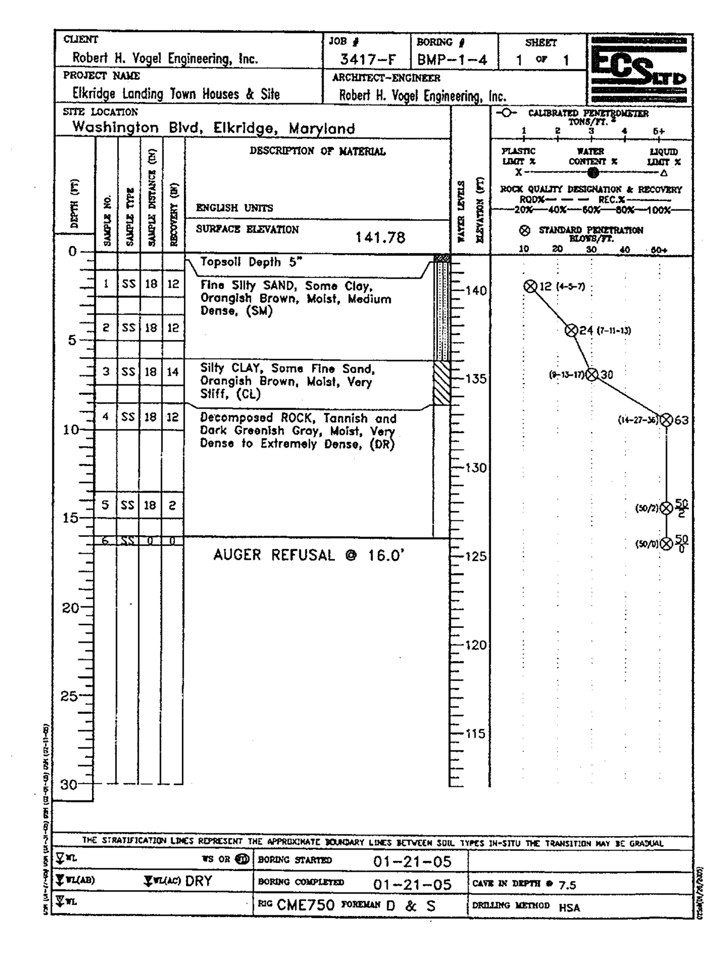

OWNER/DEVELOPER

ELKRIDGE DEVELOPMENT, LLC
301 TRANSYLVANIA AVENUE
RALEIGH, NC 27609
(919) 789-9289

ELKRIDGE DEVELOPMENT NO.2, LLC
301 TRANSYLVANIA AVENUE
RALEIGH, NC 27609
(919) 789-9289

NO.	REVISION	DATE

APPROVED: HOWARD COUNTY DEPARTMENT OF PUBLIC WORKS

CHIEF, BUREAU OF HIGHWAYS — DATE 10-19-06

APPROVED: HOWARD COUNTY DEPARTMENT OF PLANNING AND ZONING

CHIEF, DEVELOPMENT ENGINEERING DIVISION — DATE 10/23/06

CHIEF, DIVISION OF LAND DEVELOPMENT — DATE 10/24/06

THESE PLANS HAVE BEEN REVIEWED FOR HOWARD SOIL CONSERVATION DISTRICT AND MEETS THE TECHNICAL REQUIREMENTS.

USDA–NATURAL RESOURCES CONSERVATION SERVICE — DATE 10/17/06

THIS DEVELOPMENT PLAN IS APPROVED FOR SOIL EROSION AND SEDIMENT CONTROL BY THE HOWARD SOIL CONSERVATION DISTRICT.

HOWARD S.C.D. — DATE 10/17/06

ENGINEER'S CERTIFICATE:

"I HEREBY CERTIFY THAT THIS PLAN FOR SEDIMENT AND EROSION CONTROL REPRESENTS A PRACTICAL AND WORKABLE PLAN BASED ON MY PERSONAL KNOWLEDGE OF THE SITE CONDITIONS AND THAT IT WAS PREPARED IN ACCORDANCE WITH THE REQUIREMENTS OF THE HOWARD SOIL CONSERVATION DISTRICT."

SIGNATURE OF ENGINEER — WALTER G. ZAWISLAK, PE — DATE 10/6/06

DEVELEOPER'S CERTIFICATE:

"I/WE CERTIFY THAT ALL DEVELOPMENT AND CONSTRUCTION WILL BE DONE IN ACCORDANCE TO THIS PLAN OF DEVELOPMENT FOR SEDIMENT CONTROL, AND THAT ALL RESPONSIBLE PERSONNEL INVOLVED IN THE CONSTRUCTION PROJECT WILL HAVE A CERTIFICATE OF ATTENDANCE AT A DEPARTMENT OF ENVIRONMENT APPROVED TRAINING PROGRAM FOR THE CONTROL OF SEDIMENT AND EROSION BEFORE BEGINNING THE PROJECT. I ALSO AUTHORIZE PERIODIC ON–SITE INSPECTIONS BY THE HOWARD SOIL CONSERVATION DISTRICT.

Peter G. Voelkel
SIGNATURE OF DEVELOPER — PETER G. VOELKEL — DATE 10/6/06

SOILS LEGEND

SYMBOL	GROUP	NAME	DESCRIPTION
BeB2	C	BELTSVILLE SILT LOAM	1%–5% SLOPES, MODERATELY ERODED
BeC3	C	BELTSVILLE SILT LOAM	5%–10% SLOPES, SEVERELY ERODED
Ha	D	HATBORO SILT LOAM	POORLEY DRAINED
KeB2	D	KELLY SILT LOAM	3%–8% SLOPES, MODERATELY ERODED
KcE3	D	KELLY CLAY LOAM	15%–30% SLOPES, SEVERELY ERODED
ScD	C	SANDY & CLAYEY LOAM	MODERATELY SLOPING
SfC2	B	SASSAFRAS GRAVELLY SANDY LOAM	5%–10% SLOPES, MODERATELY ERODED
SiC2	B	SASSAFRAS LOAM	5%–10% SLOPES, MODERATELY ERODED
SsE	B	SASSAFRAS LOAM	15%–40% SLOPES

FINAL ROAD CONSTRUCTION PLANS

SEDIMENT AND EROSION CONTROL NOTES AND DETAILS

BELMONT STATION

PARCELS 'A,' 'B' & 'C' & OPEN SPACE LOT 1
REF: WP-04-152, WP-06-79, S-04-10, P-05-17, F-06-169
TAX MAP 37 BLOCK 18 — PARCEL '196, 198, 199'
1ST ELECTION DISTRICT — HOWARD COUNTY, MARYLAND

ROBERT H. VOGEL ENGINEERING, INC.
ENGINEERS • SURVEYORS • PLANNERS
8407 MAIN STREET ELLICOTT CITY, MD 21043
TEL: 410.461.7666 FAX: 410.461.8961

STATE OF MARYLAND — WALTER GEORGE ZAWISLAK — PROFESSIONAL ENGINEER — 10/6/06

DESIGN BY:	WJZ
DRAWN BY:	DZ
CHECKED BY:	
DATE:	OCTOBER 2006
SCALE:	AS SHOWN
W.O. NO.:	04–08

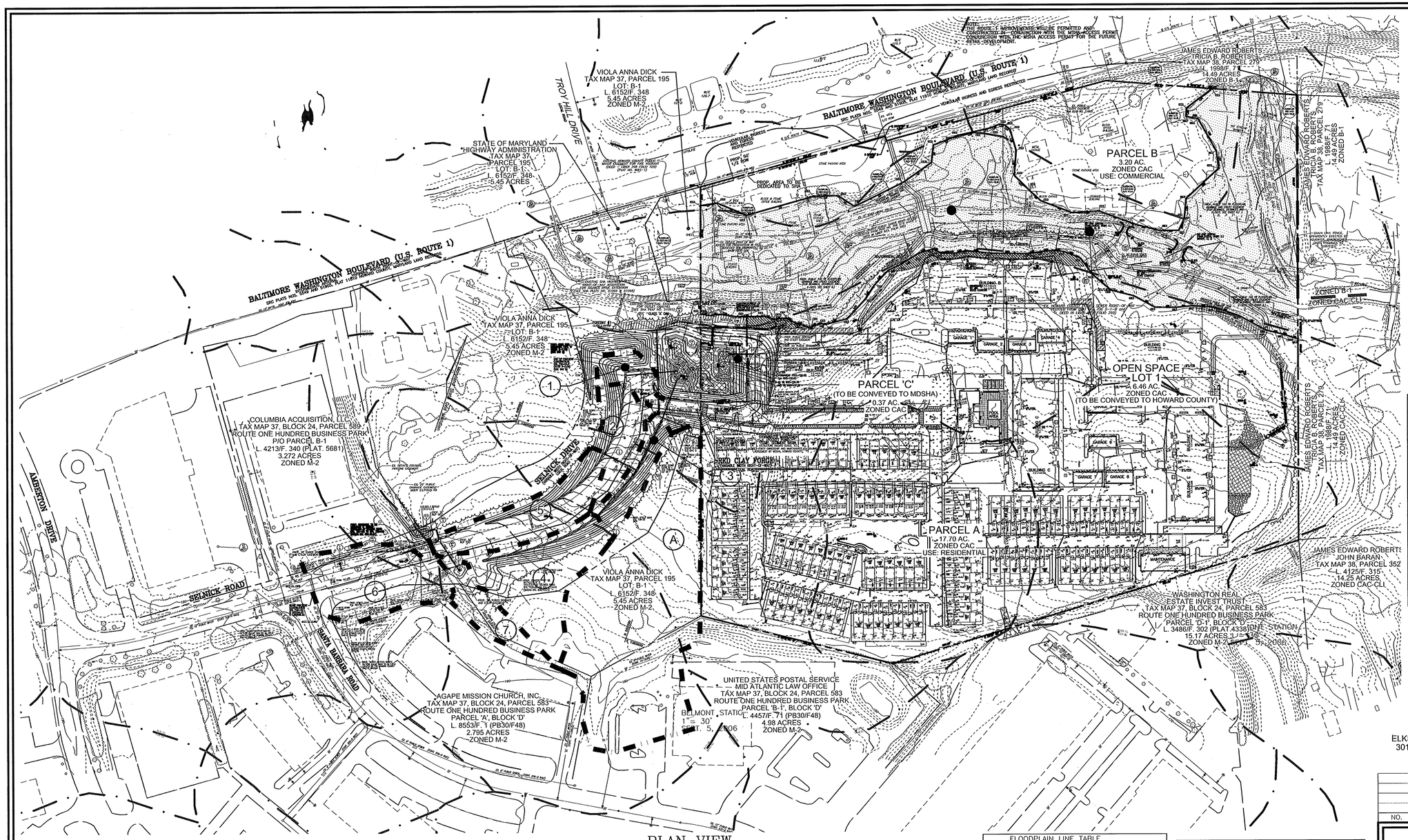

PLAN VIEW
SCALE: 1"=100'

LEGEND:

388	EXISTING CONTOUR
400	PROPOSED CONTOUR
+ 400.68	PROPOSED SPOT ELEVATION
× 422.68	EXISTING SPOT ELEVATION
	EXISTING CURB AND GUTTER
	PROPOSED CURB AND GUTTER
	EXISTING UTILITY POLE
	EXISTING LIGHT POLE
M	EXISTING MAILBOX
	EXISTING SIGN
S	EXISTING SANITARY MANHOLE
S	EXISTING SANITARY LINE
CO	EXISTING CLEANOUT
FH	EXISTING FIRE HYDRANT
W	EXISTING WATER LINE
x x	EXISTING FENCE
	PROPERTY LINE
	RIGHT-OF-WAY LINE
M1B2	SOILS BOUNDARY
M1D3	PROPOSED STORM DRAIN
	PROPOSED STORM DRAIN INLET
	PROPOSED SIDEWALK

HOWARD COUNTY DEEP RUN STUDY CAPITAL PROJ. D-1094		BELMONT STATION FLOODPLAIN STUDY	
**SECTION	WSEL	SECTION	WSEL
TRIB D-6 360	111.48	TRIB 3+77	108.79
TRIB D-6 280	110.21	TRIB 2+53	106.21
--	--	TRIB 1+30	106.81
TRIB D 11100	122.57	18+53	120.30
TRIB D 10870	122.36	16+64	118.62
TRIB D 10650	119.67	14+64	116.32
--	--	13+08	113.82
--	--	12+63	111.71
TRIB D 10320	116.93	11+49	110.66
TRIB D 10100	113.44	8+84	109.54
TRIB D 9800	108.39	7+01	105.10
--	--	4+79	105.01
--	--	3+18	105.59
TRIB D 9500	106.12	2+85	104.27
TRIB D 9410	105.51	2+05	104.37
TRIB D 9200	104.27	0+00	104.27*

**APPROXIMATE CORRELATION BETWEEN STUDIES

* HOWARD COUNTY DEEP RUN WATERSHED STUDY D-1094 CROSS SECTION 92+00

A FLOODPLAIN ANALYSIS WAS PERFORMED BY ROBERT H. VOGEL ENGINEERING, JULY 2005 TO SUPPLEMENT THE DEEP RUN WATERSHED STUDY D-1094. THE RESULTING 100-YEAR WATER SURFACE ELEVATIONS ARE LOWER THAN THE HOWARD COUNTY STUDY. THEREFORE THE COUNTY'S ELEVATION ARE UTILIZED TO DETERMINE THE FLOODPLAIN LIMITS.

OWNER/DEVELOPER

ELKRIDGE DEVELOPMENT, LLC
301 TRANSYLVANIA AVENUE
RALEIGH, NC 27609
(919) 789-9289

ELKRIDGE DEVELOPMENT NO.2, LLC
301 TRANSYLVANIA AVENUE
RALEIGH, NC 27609
(919) 789-9289

NO.	REVISION	DATE

FLOODPLAIN LINE TABLE

L1	N70a48'03"E 35.40		
L2	N87a48'35"E 20.00		
L3	N67a04'44"E 25.00		
L4	S82a18'21"E 19.25		
L5	N89a59'09"E 32.85		
L6	N49a37'27"E 23.10		
L7	N84a59'54"E 10.00		
L8	N56a50'14"E 45.00		
L9	N24a21'24"E 55.00		
L10	N14a28'06"E 35.00		
L11	N21a02'06"E 13.86		
L12	N27a02'18"E 26.18		
L13	N46a34'09"E 25.00		
L14	N39a23'19"E 38.97		
L15	N45a01'13"E 9.38		
L16	N60a19'51"E 24.84		
L17	N89a22'39"E 20.39		
L18	N70a37'29"E 30.00		
L19	N56a13'24"E 20.00		
L20	N77a09'20"E 43.35		
L21	N72 84'33"E 81.58		
L22	N64a46'33"E 59.82		
L23	S89a47'04"E 50.03		
L24	S54a26'27"E 40.98		
L25	S68a14'18"E 48.66		
L26	N85a40'28"E 47.30		
L27	S80a41'39"E 48.94		
L28	N72a38'28"E 41.36		
L29	N65a18'58"E 34.48		
L30	N74a48'00"E 42.58		
L31	S89a54'12"E 53.96		
L32	S80a05'52"E 61.99		
L33	N85a00'24"E 35.47		
L34	N88a37'46"E 32.03		
L39	N62a48'51"E 33.62		
L40	S86a10'05"E 65.00		
L41	N55a37'59"E 140.00		
L42	N69a47'31"E 50.00		
L43	S75a15'20"E 40.00		
L44	N45a07'05"E 110.00		
L45	N36a22'09"E 70.00		
L46	N12a23'48"W 35.00		
L47	N50a23'16"E 55.00		
L48	N58a19'04"E 45.00		
L49	N58a15'56"E 20.00		
L50	N48a59'25"E 20.00		
L51	N76a22'58"E 10.00		
L52	S69a59'14"E 15.00		
L53	S34a43'03"E 45.00		
L54	S14a11'43"E 50.00		
L55	S63a58'02"E 45.00		
L56	S65a57'20"E 29.54		
L57	S87a44'25"E 67.41		
L58	N67a54'12"E 54.43		
L59	S88a30'45"E 79.61		
L60	N85a33'20"E 48.56		
L61	N72a06'59"E 39.59		
L62	N05a55'10"E 27.33		
L63	N13a24'47"W 40.00		
L64	N28a25'28"E 90.00		
L65	N25a44'38"W 35.00		
L66	N48a16'40"W 75.00		
L67	S80a54'41"W 25.00		
L68	N15a06'17"W 17.00		
L69	N34a06'11"E 64.96		

STORM DRAIN SUMMARY

DA LABEL	AREA (AC.)	'C'	% IMPERVIOUS
1	0.26	0.59	47
2	0.37	0.65	53
3	0.32	0.31	0
4	0.84	0.27	3
5	0.65	0.60	60
6	0.79	0.54	34
7	0.59	0.61	54
A	2.31	0.82	88

APPROVED: HOWARD COUNTY DEPARTMENT OF PUBLIC WORKS

CHIEF, BUREAU OF HIGHWAYS — DATE 10-19-06

APPROVED: HOWARD COUNTY DEPARTMENT OF PLANNING AND ZONING

CHIEF, DEVELOPMENT ENGINEERING DIVISION — DATE 10/2/06

CHIEF, DIVISION OF LAND DEVELOPMENT — DATE 10/2/06

THESE PLANS HAVE BEEN REVIEWED FOR HOWARD SOIL CONSERVATION DISTRICT AND MEETS THE TECHNICAL REQUIREMENTS.

USDA-NATURAL RESOURCES CONSERVATION SERVICE — DATE

THIS DEVELOPMENT PLAN IS APPROVED FOR SOIL EROSION AND SEDIMENT CONTROL BY THE HOWARD SOIL CONSERVATION DISTRICT. CONSERVATION DISTRICT.

HOWARD S.C.D. — DATE

ENGINEER'S CERTIFICATE:

"I HEREBY CERTIFY THAT THIS PLAN FOR SEDIMENT AND EROSION CONTROL REPRESENTS A PRACTICAL AND WORKABLE PLAN BASED ON MY PERSONAL KNOWLEDGE OF THE SITE CONDITIONS AND THAT IT WAS PREPARED IN ACCORDANCE WITH THE REQUIREMENTS OF THE HOWARD SOIL CONSERVATION DISTRICT.

SIGNATURE OF ENGINEER
WALTER G. ZAWISLAK, PE — DATE 10/6/06

DEVELOPER'S CERTIFICATE:

"I/WE CERTIFY THAT ALL DEVELOPMENT AND CONSTRUCTION WILL BE DONE IN ACCORDANCE TO THIS PLAN OF DEVELOPMENT FOR SEDIMENT CONTROL, AND THAT ALL RESPONSIBLE PERSONNEL INVOLVED IN THE CONSTRUCTION PROJECT WILL HAVE A CERTIFICATE OF ATTENDANCE AT A DEPARTMENT OF ENVIRONMENT APPROVED TRAINING PROGRAM FOR THE CONTROL OF SEDIMENT AND EROSION BEFORE BEGINNING THE PROJECT. I ALSO AUTHORIZE PERIODIC ON-SITE INSPECTIONS BY THE HOWARD SOIL CONSERVATION DISTRICT.

SIGNATURE OF DEVELOPER
PETER G. VOELKEL — DATE 10/6/06

FINAL ROAD CONSTRUCTION PLANS

STORM DRAIN DRAINAGE AREA MAP

BELMONT STATION

PARCELS 'A,' 'B' & 'C' & OPEN SPACE LOT 1
REF: WP-04-152, WP-06-79, S-04-10, P-05-17, F-06-169
TAX MAP 37 BLOCK 18 — PARCEL '196, 198, 199'
1ST ELECTION DISTRICT — HOWARD COUNTY, MARYLAND

ROBERT H. VOGEL ENGINEERING, INC.
ENGINEERS • SURVEYORS • PLANNERS
8407 MAIN STREET
ELLICOTT CITY, MD 21043
TEL: 410.461.7666
FAX: 410.461.8961

STATE OF MARYLAND — PROFESSIONAL ENGINEER — WALTER G. ZAWISLAK — No. 19842 — 10/6/06

DESIGN BY:	WJZ
DRAWN BY:	DZ
CHECKED BY:	
DATE:	OCTOBER 2006
SCALE:	1"=100'
W.O. NO.:	04-08

SHEET 6 OF 14

F-06-169

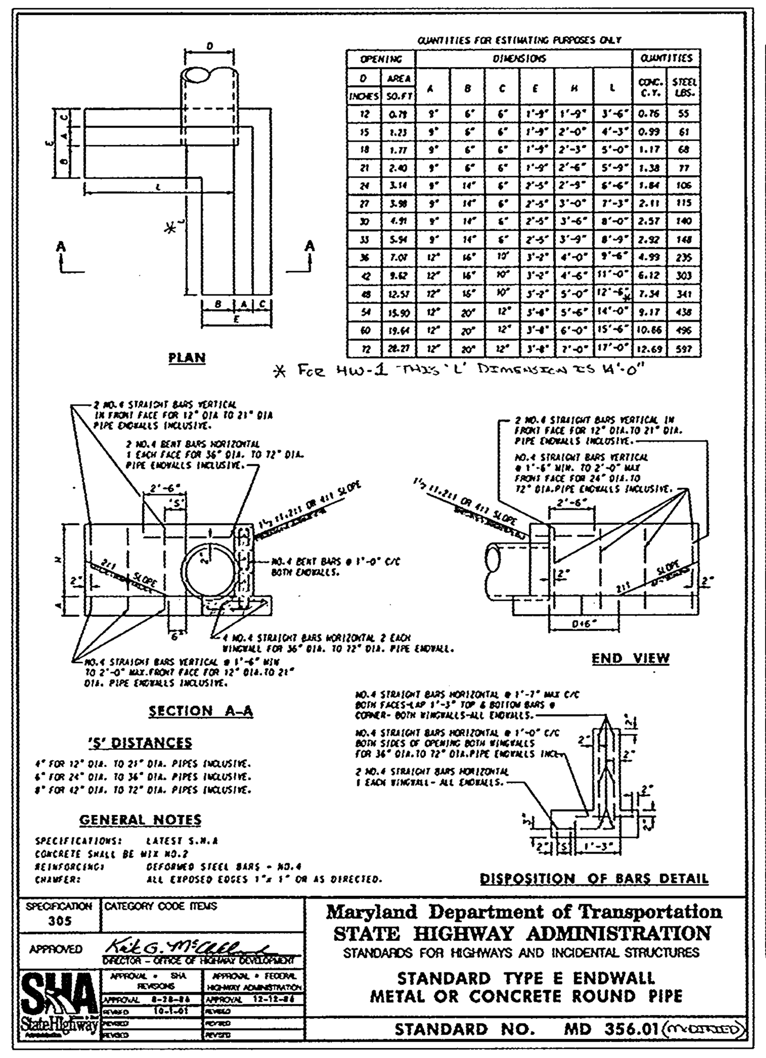

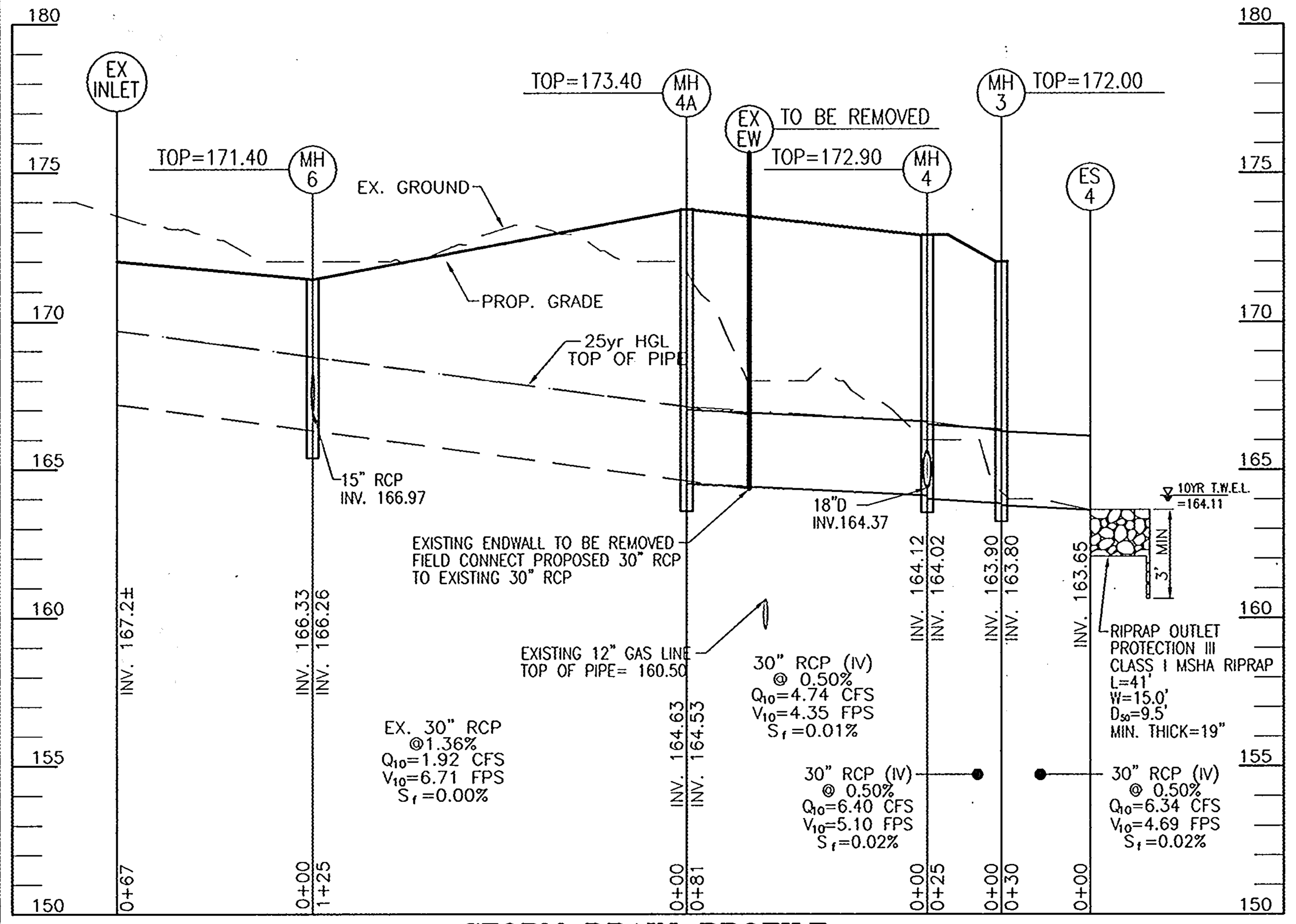

STORM DRAIN PROFILE
SCALE : HORIZONTAL – 1"=50'
VERTICAL – 1"=5'

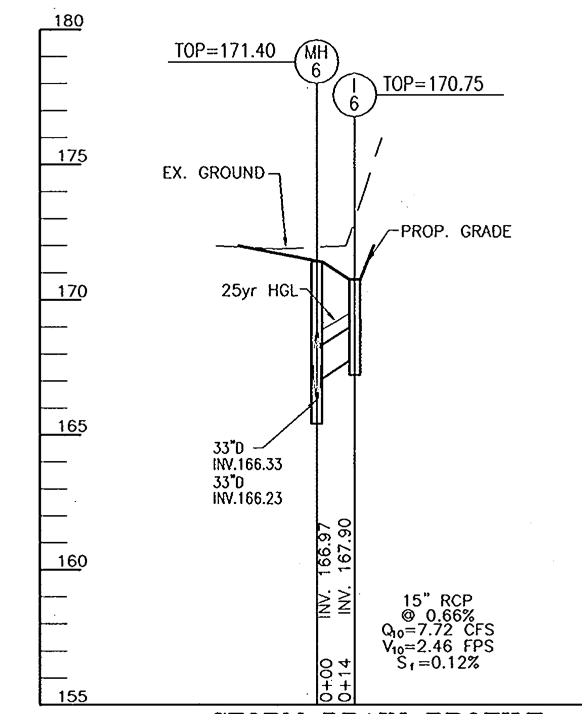

STORM DRAIN PROFILE
SCALE : HORIZONTAL – 1"=50'
VERTICAL – 1"=5'

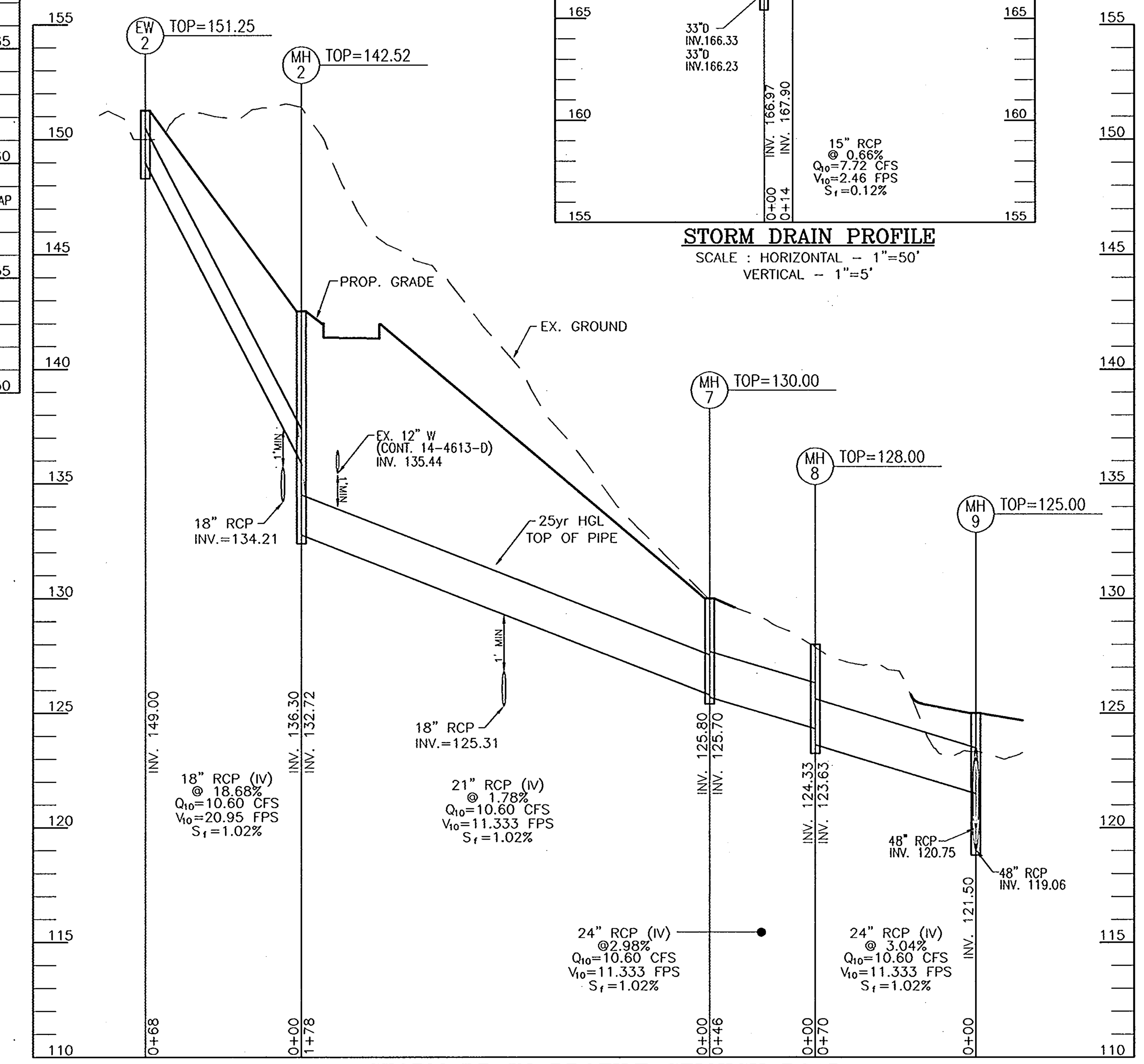

STORM DRAIN PROFILE SELNICK ROAD
SCALE : HORIZONTAL – 1"=50'
VERTICAL – 1"=5'

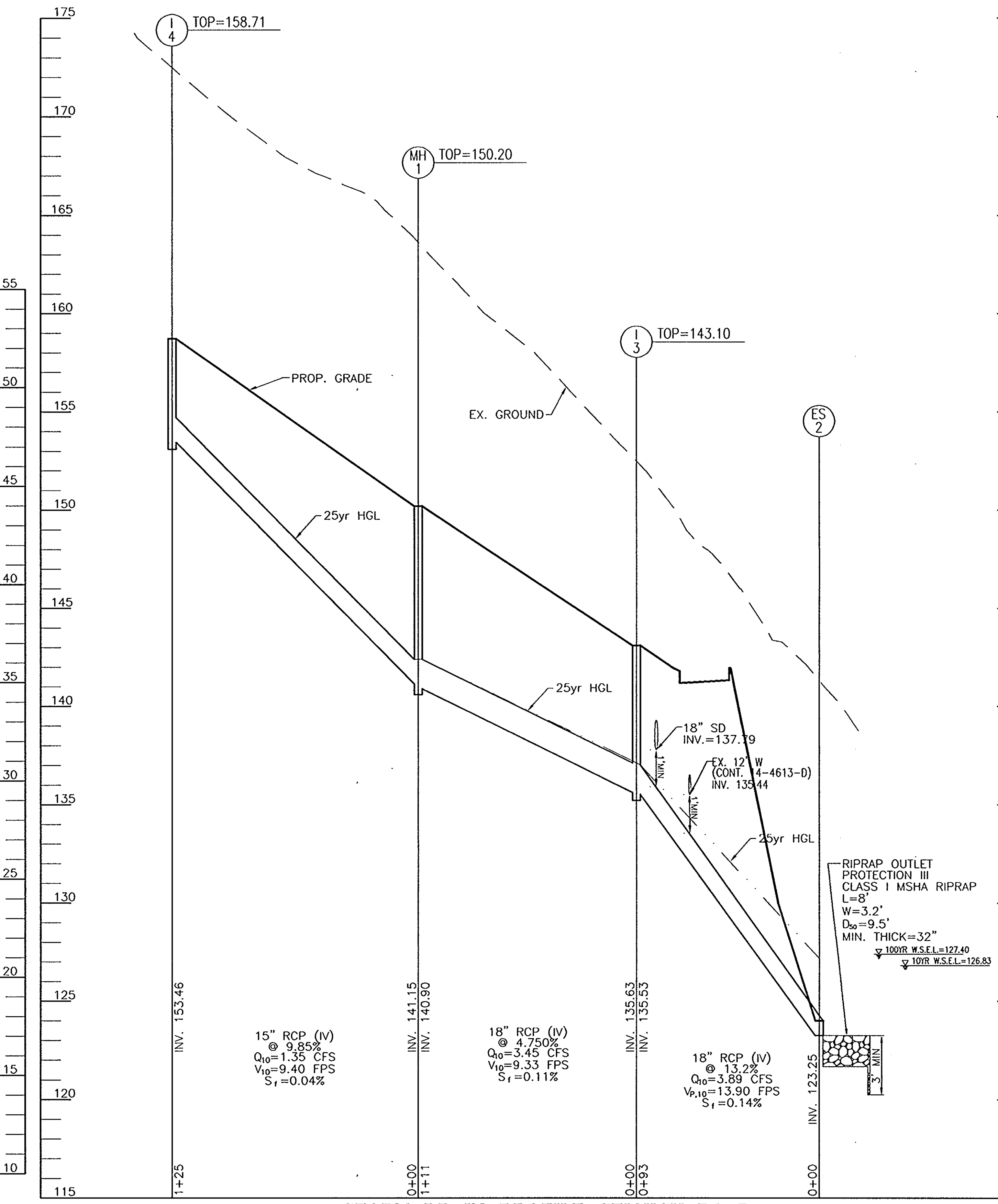

STORM DRAIN PROFILE SELNICK ROAD
SCALE : HORIZONTAL – 1"=50'
VERTICAL – 1"=5'

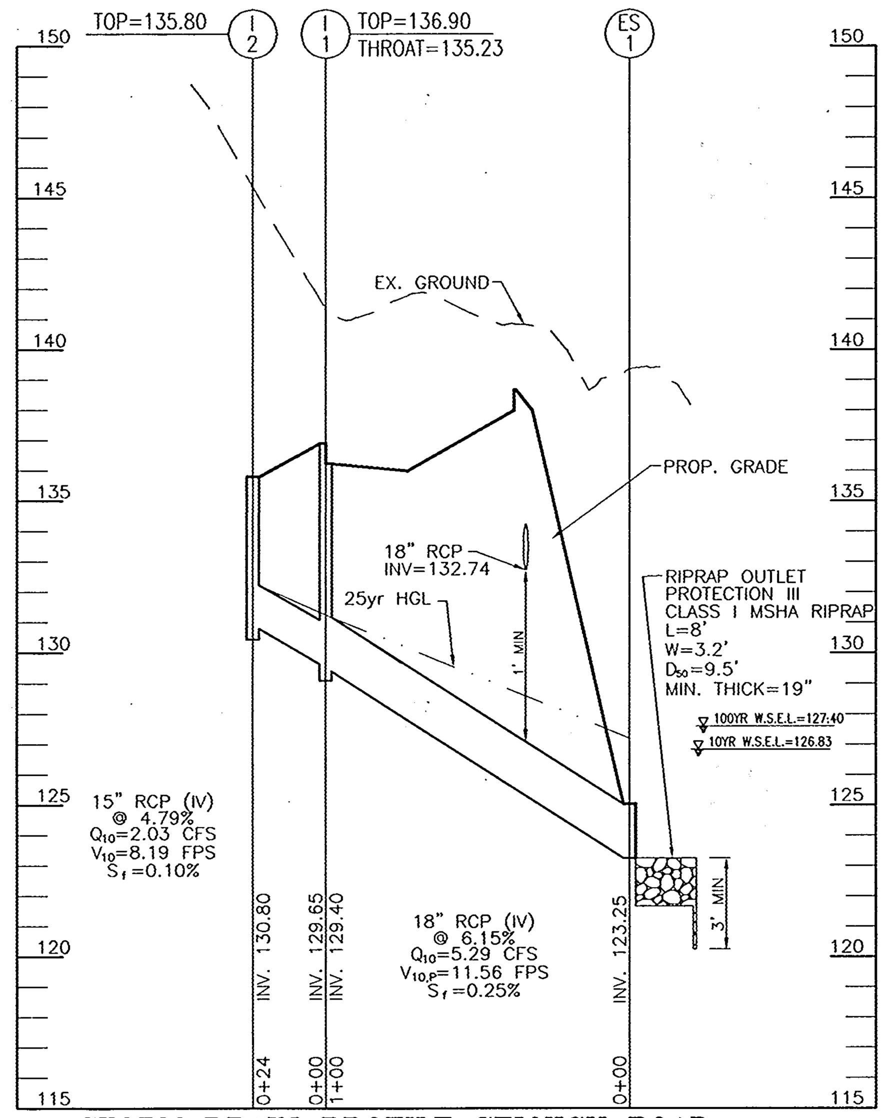

STORM DRAIN PROFILE SELNICK ROAD
SCALE : HORIZONTAL – 1"=50'
VERTICAL – 1"=5'

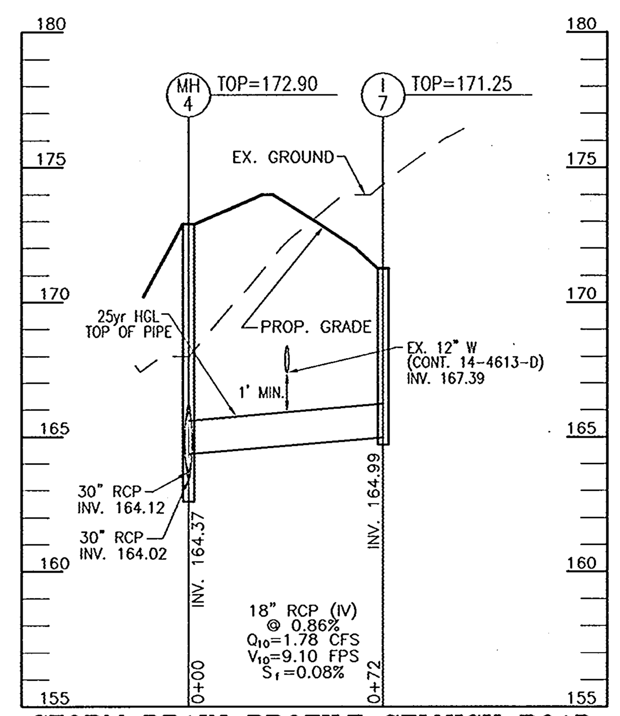

STORM DRAIN PROFILE SELNICK ROAD
SCALE : HORIZONTAL – 1"=50'
VERTICAL – 1"=5'

NO.	TYPE	℄ STATION, OFFSET	TOP ELEV.	THROAT ELEV.	INV. IN	INV. OUT	COMMENTS
I–1	COS–10	729+03.1, 31.53' LT	135.90	135.23	129.65	129.40	MD374.61
I–2	TYPE 'K' INET, 2 OPENING	728+77.3, 36.18' LT	135.80			130.80	MD378.05
I–3	TYPE 'K' INET, 2 OPENINGS	728+15.3, 47.11' RT	140.88		135.63	135.53	MD378.05
I–4	TYPE 'K' INET, 1 OPENING	726+07.6, 36.92' RT	158.71			153.46	MD378.05
I–5	TYPE 'K' INET, 1 OPENING	727+14.4, 36.71' LT	148.07			142.82	MD378.05
I–6	TYPE 'K' INET, 1 OPENING	720+93.7, 36.13' LT	169.08		164.79	164.69	MD378.05
I–7	TYPE 'K' INET, 2 OPENING	723+23.1, 40.48' RT	170.75			167.75	MD378.05
MH–1	STANDARD MANHOLE	727+19.1, 36.92' RT	150.20		141.15 141.40	140.90	MD384.01
MH–2	STANDARD MANHOLE	728+24.7, 40.32' RT	142.52		136.30	135.80	MD384.01
MH–3	STANDARD MANHOLE	722+99.7, 53.00' LT	172.00		164.12	164.02	MD384.03
MH–4	STANDARD MANHOLE	722+99.8, 28.00' LT	172.90		164.36 165.51	164.26	MD384.03
MH–4A	STANDARD MANHOLE	722+18.6, 23.25' LT	173.40		164.87	164.77	MD384.03
MH–5	STANDARD MANHOLE	722+60.1, 26.20' LT	132.80		123.97 123.97 124.46	123.71	MD384.03
MH–6	STANDARD MANHOLE	720+93.8, 22.36' LT	171.40		164.87	164.77	MD384.03
MH–7	STANDARD MANHOLE	729+83.5, 50.06' RT	130.00		125.80	125.70	MD384.01
MH–8	STANDARD MANHOLE	729+81.5, 96.31 RT	128.00		124.33	123.63	MD384.01
MH–9	STANDARD MANHOLE	729+58.1, 160.54 RT	125.00		121.50 120.75	120.15	MD384.05
MH–10	STANDARD MANHOLE	729+39.2, 269.85 RT					MD384.05
ES–1	STANDARD CONCRETE END SECTION – 18'	729+03.4, 68.11' RT	––			123.25	MD368.03
ES–2	STANDARD CONCRETE END SECTION – 18"	728+89.2, 72.10' RT	––			123.25	MD384.03
ES–4	STANDARD CONCRETE END SECTION – 30"	722+85.5, 52.93' LT	––			163.94	MD368.03
ES–5	STANDARD CONCRETE END SECTION – 24"	729+18.5, 185.44' RT	––			123.25	MD368.03
HW–1	STANDARD TYPE 'E' HEADWALL – 48" (DETAIL, THIS SHEET)	729+41.2, 286.41' RT	123.30			118.30	MD356.01 (MODIFIED)
EW–2	STANDARD TYPE 'E' ENDWALL – 18"	728+15.3, 105.43' RT	––			149.00	MD356.01
EW–3	STANDARD TYPE 'C' ENDWALL – 15"	729+27.1, 149.20' RT	––				MD354.01
CS–1	CONTROL STRUCTURE, SEE SHEET 9	729+31.6, 149.15' RT	128.00				

STRUCTURE SCHEDULE

NOTE :
1. FOR TYPE 'K' INLETS, TOP ELEVATION ARE AT CENTER TOP OF GRATE. FOR ALL MANHOLES, TOP ELEVATION ARE AT CENTER TOP OF MANHOLE COVER. TOP ELEVATIONS ARE AT TOP OF CURB FOR COS INLETS
2. FOR TOP SLAB SLOPES SEE GRADING PLAN.
3. SEE ARCHITECTURAL PLANS FOR ROOF DRAIN DETAILS.
4. MANHOLE COVER FOR MH4A&6 TO BE PLACED SUCH THAT COVER IS NOT IN PAVED ROADWAY.
5. MD356.01 MODIFICATION IS THE WING WALL PARALLEL TO THE DISCHARGE IS TO HAVE "L" = 14'

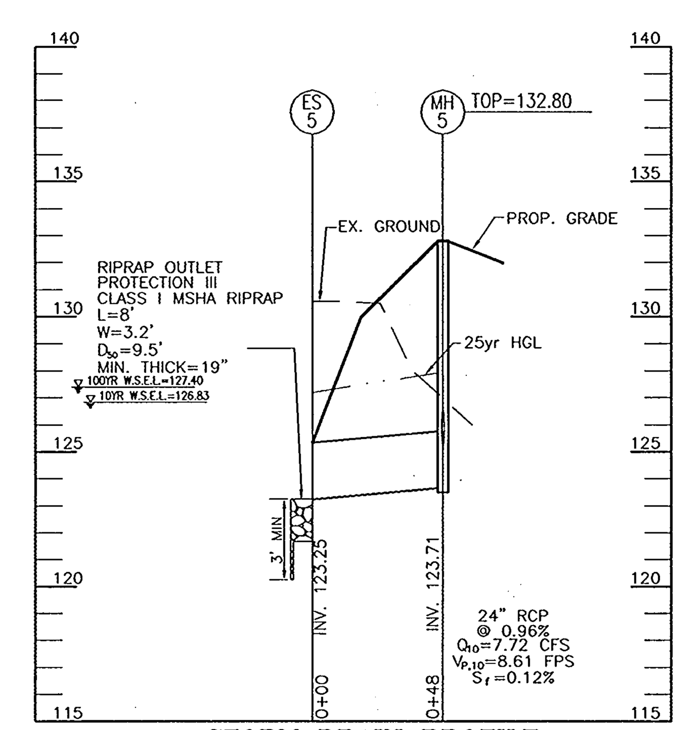

STORM DRAIN PROFILE
SCALE : HORIZONTAL – 1"=50'
VERTICAL – 1"=5'

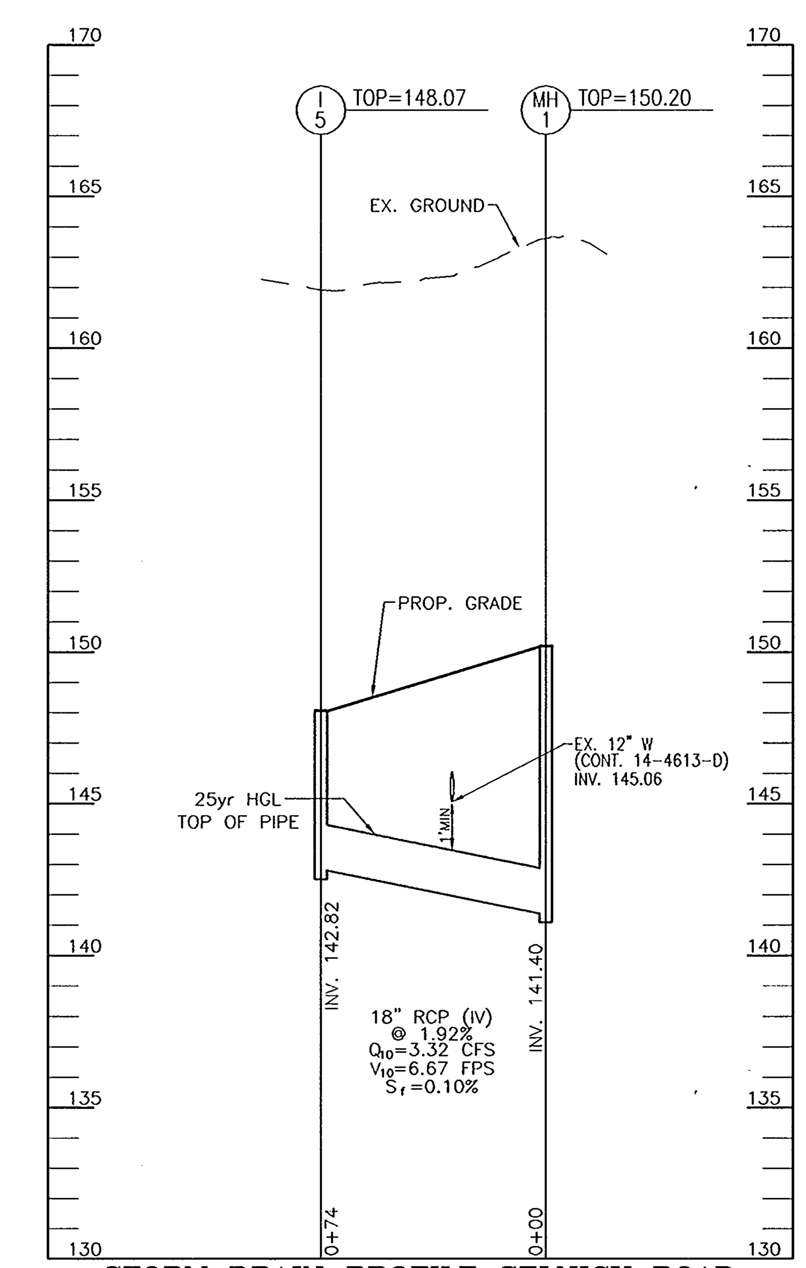

STORM DRAIN PROFILE SELNICK ROAD
SCALE : HORIZONTAL – 1"=50'
VERTICAL – 1"=5'

PIPE SCHEDULE

SIZE	TYPE	LENGTH
15"	RCP (IV)	163 LF
18"	RCP (IV)	518 LF
21"	RCP (IV)	178 LF
24"	RCP (IV)	116 LF
30"	RCP (IV)	120 LF
42"	RCP (IV)	39 LF
48"	RCP (IV)	165 LF

APPROVED: HOWARD COUNTY DEPARTMENT OF PUBLIC WORKS

CHIEF, BUREAU OF HIGHWAYS — 10-19-06 DATE

APPROVED: HOWARD COUNTY DEPARTMENT OF PLANNING AND ZONING

CHIEF, DEVELOPMENT ENGINEERING DIVISION — 10/23/06 DATE

CHIEF, DIVISION OF LAND DEVELOPMENT — 10/24/06 DATE

THESE PLANS HAVE BEEN REVIEWED FOR HOWARD SOIL CONSERVATION DISTRICT AND MEETS THE TECHNICAL REQUIREMENTS.

USDA–NATURAL RESOURCES CONSERVATION SERVICE — 10/17/06 DATE

THIS DEVELOPMENT PLAN IS APPROVED FOR SOIL EROSION AND SEDIMENT CONTROL BY THE HOWARD SOIL CONSERVATION DISTRICT.

HOWARD S.C.D. — 10/17/06 DATE

ENGINEER'S CERTIFICATE:

"I HEREBY CERTIFY THAT THIS PLAN FOR SEDIMENT AND EROSION CONTROL REPRESENTS A PRACTICAL AND WORKABLE PLAN BASED ON MY PERSONAL KNOWLEDGE OF THE SITE CONDITIONS AND THAT IT WAS PREPARED IN ACCORDANCE WITH THE REQUIREMENTS OF THE HOWARD SOIL CONSERVATION DISTRICT."

SIGNATURE OF ENGINEER WALTER G. ZAWISLAK, PE — 10/6/06 DATE

DEVELEOPER'S CERTIFICATE:

"I/WE CERTIFY THAT ALL DEVELOPMENT AND CONSTRUCTION WILL BE DONE IN ACCORDANCE TO THIS PLAN OF DEVELOPMENT FOR SEDIMENT CONTROL, AND THAT ALL RESPONSIBLE PERSONNEL INVOLVED IN THE CONSTRUCTION PROJECT WILL HAVE A CERTIFICATE OF ATTENDANCE AT A DEPARTMENT OF ENVIRONMENT APPROVED TRAINING PROGRAM FOR THE CONTROL OF SEDIMENT AND EROSION BEFORE BEGINNING THE PROJECT. I ALSO AUTHORIZE PERIODIC ON-SITE INSPECTIONS BY THE HOWARD SOIL CONSERVATION DISTRICT.

SIGNATURE OF DEVELOPER PETER G. VOELKEL — 10/6/06 DATE

OWNER/DEVELOPER

ELKRIDGE DEVELOPMENT, LLC
301 TRANSYLVANIA AVENUE
RALEIGH, NC 27609
(919) 789-9289

ELKRIDGE DEVELOPMENT NO.2, LLC
301 TRANSYLVANIA AVENUE
RALEIGH, NC 27609
(919) 789-9289

NO.	REVISION	DATE

FINAL ROAD CONSTRUCTION PLANS

STORM DRAIN PROFILES
BELMONT STATION

PARCELS 'A,' 'B' & 'C' & OPEN SPACE LOT 1
REF: WP-04-152, WP-06-79, S-04-10, P-05-17, F-06-169
TAX MAP 37 BLOCK 18 — PARCEL '196, 198, 199'
1ST ELECTION DISTRICT — HOWARD COUNTY, MARYLAND

ROBERT H. VOGEL ENGINEERING, INC.
ENGINEERS • SURVEYORS • PLANNERS
8407 MAIN STREET, ELLICOTT CITY, MD 21043
TEL: 410.461.7666 FAX: 410.461.8961

DESIGN BY: WJZ
DRAWN BY: DZ
CHECKED BY:
DATE: OCTOBER 2006
SCALE: AS SHOWN
W.O. NO.: 04-08

F-06-169

MARYLAND 378
STORMWATER MANAGEMENT POND CONSTRUCTION SPECIFICATIONS

CONSTRUCTION SPECIFICATIONS

These specifications are appropriate to all ponds within the scope of the Standard for practice MD-378. All references to ASTM and AASHTO specifications apply to the most recent version.

Site Preparation

Areas designated for borrow areas, embankment, and structural works shall be cleared, grubbed and stripped of topsoil. All trees, vegetation, roots and other objectionable material shall be removed. Channel banks and sharp breaks shall be sloped to no steeper than 1:1. All trees shall be cleared and grubbed within 15 feet of the toe of the embankment.

Areas to be covered by the reservoir will be cleared of all trees, brush, logs, fences, rubbish and other objectionable material unless otherwise designated on the plans. Trees, brush, and stumps shall be cut approximately level with the ground surface. For dry stormwater management ponds, a minimum of a 25-foot radius around the inlet structure shall be cleared.

All cleared and grubbed material shall be disposed of outside and below the limits of the dam and reservoir as directed by the owner or his representative. When specified, a sufficient quantity of topsoil will be stockpiled in a suitable location for use on the embankment and other designated areas.

Earth Fill

Material – The fill material shall be taken from approved designated borrow areas. It shall be free of roots, stumps, wood, rubbish, stones greater than 6", frozen or other objectionable materials. Fill material for the center of the embankment, and cut off trench shall conform to Unified Soil Classification GC, SC, CH, or CL and must have at least 30% passing the #200 sieve. Consideration may be given to the use of other materials in the embankment if designed by a geotechnical engineer. Such special designs must have construction supervised by a geotechnical engineer. Materials used in the outer shell of the embankment must have the capability to support vegetation of the quality required to prevent erosion of the embankment.

Placement – Areas on which fill is to be placed shall be scarified prior to placement of fill. Fill materials shall be placed in maximum 8 inch thick (before compaction) layers which are to be continuous over the entire length of the fill. The most permeable borrow material shall be placed in the downstream portions of the embankment. The principal spillway must be installed concurrently with fill placement and not excavated into the embankment.

Compaction – The movement of the hauling and spreading equipment over the fill shall be controlled so that the entire surface of each lift shall be traversed by not less than one tread track of heavy equipment or compaction shall be achieved by a minimum of four complete passes of a sheepsfoot, rubber tired or vibratory roller. Fill material shall contain sufficient moisture such that the required degree of compaction will be obtained with the equipment used. The fill material shall contain sufficient moisture so that if formed into a ball it will not crumble, yet not be so wet that water can be squeezed out.

When required by the reviewing agency the minimum required density shall not be less than 95% of maximum dry density with a moisture content within +\-2% of the optimum. Each layer of fill shall be compacted as necessary to obtain that density, and is to be certified by the Engineer at the time of construction. All compaction is to be determined by AASHTO Method T-99 (Standard Proctor).

Cut Off Trench – The cutoff trench shall be excavated into impervious material along or parallel to the centerline of the embankment as shown on the plans. The bottom width of the trench shall be governed by the equipment used for excavation, with the minimum width being four feet. The depth shall be at least four feet below existing grade or as shown on the plans. The side slopes of the trench shall be 1 to 1 or flatter. The backfill shall be compacted with construction equipment, rollers, or hand tampers to assure maximum density and minimum permeability.

Embankment Core – The core shall be parallel to the centerline of the embankment as shown on the plans. The top width of the core shall be a minimum of four feet. The height shall extend up to at least the 10 year water elevation or as shown on the plans. The side slopes shall be 1 to 1 or flatter. The core shall be compacted with construction equipment, rollers, or hand tampers to assure maximum density and minimum permeability. In addition, the core shall be placed concurrently with the outer shell of the embankment.

Structure Backfill

Backfill adjacent to pipes or structures shall be of the type and quality conforming to that specified for the adjoining fill material. The fill shall be placed in horizontal layers not to exceed four inches in thickness and compacted by hand tampers or other manually directed compaction equipment. The material needs to fill completely all spaces under and adjacent to the pipe. At no time during the backfilling operation shall driven equipment be allowed to operated closer than four feet, measured horizontally, to any part of a structure. Under no circumstances shall equipment be driven over any part of a concrete structure or pipe, unless there is a compacted fill of 24" or greater over the structure or pipe.

Structure backfill may be flowable fill meeting the requirements of Maryland Department of Transportation, State Highway Administration Standard Specifications for Construction and Materials, Section 313 as modified. The mixture shall have a 100-200 psi; 28 day unconfined compressive strength. The flowable fill shall have a minimum pH of 4.0 and a minimum resistivity of 2,000 ohm-cm. Material shall be placed such that minimum of 6" (measured perpendicular to the outside of the pipe) of flowable fill shall be under (bedding), over and, on the sides of the pipe. It only needs to extend up to the spring line for rigid conduits. Average slump of the fill shall be 7" to assure flowability of the material. Adequate measures shall be taken (sand bags, etc.) to prevent floating the pipe. When using flowable fill, all metal pipe shall be bituminous coated. Any adjoining soil fill shall be placed in horizontal layers not to exceed four inches in thickness and compacted by hand tampers or other manually directed compaction equipment. The material shall completely fill all voids adjacent to the flowable fill zone. At no time during the backfilling operation shall driven equipment be allowed to operate closer than four feet, measured horizontally, to any part of the structure. Under no circumstances shall equipment be driven over any part of a structure or pipe unless there is a compacted fill of 24" or greater over the structure or pipe. Backfill (flowable fill)zone shall be of the type and quality conforming to that specified for the core of the embankment or other embankment materials.

Pipe Conduits

All pipes shall be circular in cross section.

Corrugated Metal Pipe – All of the following criteria shall apply for corrugated metal pipe:

1. Materials – (Polymer Coated steel pipe)– Steel pipes with polymeric coating shall have a minimum coating thickness of 0.01 inch (10 mil) on both sides of the pipe. This pipe and its appurtenances shall conform to the requirements of AASHTO Specifications M-245 & M-246 with watertight coupling bands or flanges.

Materials – (Aluminum Coated Steel Pipe) – This pipe and its appurtenances shall conform to the requirements of AASHTO Specification M-274 with watertight coupling bands or flanges. Aluminum Coated Steel Pipe, when used with flowable fill or when soil and/or water conditions warrant the need for increased durability, shall be fully bituminous coated per requirements of AASHTO Specification M-190 Type A. Any aluminum coating damaged or otherwise removed shall be replaced with cold applied bituminous coating compound. Aluminum surfaces that are to be in contact with concrete shall be painted with one coat of zinc chromate primer or two coats of asphalt.

Materials – (Aluminum Pipe) – This pipe and its appurtenances shall conform to the requirements of AASHTO Specification M-196 or M-211 with watertight coupling bands or flanges. Aluminum Pipe, when used with flowable fill or when soil and/or water conditions warrant for increased durability, shall be fully bituminous coated per requirements of AASHTO Specification M-190 Type A. Aluminum surfaces that are to be in contact with concrete shall be painted with one coat of zinc chromate primer or two coats of asphalt. Hot dip galvanized bolts may be used for connections. The pH of the surrounding soils shall be between 4 and 9.

2. Coupling, bands, anti-seep collars, end sections, etc., must be composed of the same material and coatings as the pipe. Metals must be insulated from dissimilar materials with use of rubber or plastic insulating materials at lease 24 mils in thickness.

3. Connections – All connections with pipes must be completely watertight. The drain pipe or barrel connection to the riser shall be welded all around when the pipe and riser are metal. Anti-seep collars shall be connected to the pipe in such a manner as to be completely watertight. Dimple bands are not considered to be watertight.

All connections shall use a rubber or neoprene gasket when joining pipe sections. The end of each pipe shall be re-rolled an adequate number of corrugations to accommodate the bandwidth. The following type connections are acceptable for pipes less than 24 inches diameter: flanges on both ends of the pipe with a circular 3/8 inch thick closed cell circular neoprene gasket; and a 12-inch wide hugger type band with o-ring gaskets having a minimum diameter of 1/2 inch greater than the corrugation depth. Pipes 24 inches in diameter and larger shall be connected by a 24 inch long annular corrugated band using a minimum of 4(four) rods and lugs, 2 on each connecting pipe end. A 24-inch wide by 3/8-inch thick closed cell circular neoprene gasket will be installed with 12 inches on the end of each pipe. Flanged joints with 3/8"inch closed cell gaskets the full width of the flange is also acceptable.

Helically corrugated pipe shall have either continuously welded seams or have lock seams with internal caulking or a neoprene bead.

4. Bedding – The pipe shall be firmly and uniformly bedded throughout its entire length. Where rock or soft, spongy or other unstable soil is encountered, all such material shall be removed and replaced with suitable earth compacted to provide adequate support.

5. Backfilling shall conform to "Structure Backfill."

6. Other details (anti-seep collars, valves, etc.) shall be as shown on the drawings.

Reinforced Concrete Pipe – All of the following criteria shall apply for reinforced concrete pipe:
1. Materials – Reinforced concrete pipe shall have bell and spigot joints with rubber gaskets and shall equal or exceed ASTM C-361.
2. Bedding – Reinforced concrete pipe conduits shall be laid in a concrete bedding/cradle for their entire length. This bedding/cradle shall consist of high slump concrete placed under the pipe and up the sides of the pipe at least 50% of its outside diameter with a minimum thickness of 6 inches. Where a concrete cradle is not needed for structural reasons, flowable fill may be used as described in the "Structure Backfill" section of this standard. Gravel bedding is not permitted.
3. Laying pipe – Bell and spigot pipe shall be placed with the bell end upstream. Joints shall be made in accordance with recommendations of the manufacturer of the material. After the joints are sealed for the entire line, the bedding shall be placed so that all spaces under the pipe are filled. Care shall be exercised to prevent any deviation from the original line and grade of the pipe. The first joint must be located within 4 feet from the riser.
4. Backfilling shall conform to "Structure Backfill."
5. Other details (anti-seep collars, valves, etc.) shall be shown on the drawings.

Plastic Pipe – The following criteria shall apply for plastic pipe:
1. Materials – PVC pipe shall be PVC-1120 or PVC-1220 conforming to ASTM D-1785 or ASTM D-2241. Corrugated High Density Polyethylene (HDPE) pipe, couplings and fittings shall conform to the following: 4" -10" inch pipe shall meet the requirements of AASHTO M252 Type S, and 12" through 24" inch shall meet the requirements of AASHTO M294 Type S.
2. Joints and connections to anti-seep collars shall be completely watertight.
3. Bedding – The pipe shall be firmly and uniformly bedded throughout its entire length. Where rock or soft, spongy or other unstable soil is encountered, all such material shall be removed and replaced with suitable earth compacted to provide adequate support.
4. Backfilling shall conform to "Structure Backfill."
5. Other details (anti-seep collars, valves, etc.) shall be as shown on the drawings.

Drainage Diaphragms – When a drainage diaphragm is used, a registered professional engineer will supervise the design and construction inspection.

Concrete
Concrete shall meet the requirements of Maryland Department of Transportation, State Highway Administration Standard Specifications for Construction and Materials, Section 414, Mix No. 3.

Rock Riprap
Rock riprap shall meet the requirements of Maryland Department of Transportation, State Highway Administration Standard Specifications for Construction Materials, Section 311.

Geotexile shall be placed under all riprap and shall meet requirements of Maryland Department of Transportation, State Highway Administration Standard Specifications for Construction and Materials, Section 921.09, Class C.

Care of Water during Construction
All work on permanent structures shall be carried out in areas free from water. The Contractor shall construct and maintain all temporary dikes, levees, cofferdams, drainage channels, and stream diversions necessary to protect to be occupied by the permanent works. The contractor shall also furnish, install, operate, and maintain all necessary pumping and other equipment required for removal of water from various parts of the work and for maintaining the excavations, foundation, and other parts of the work free from water as required or directed by the engineer for constructing each part of the work free from water as required or directed by the engineer for constructing each part of the work. After having served their purpose, all temporary protective works shall be removed or leveled and graded to the extent required to prevent obstruction in any degree whatsoever of the flow of water to the spillway or outlet works and so as not to interfere in any way with the operation or maintenance of the structure. Stream diversions shall be maintained until the full flow can be passed through the permanent works. The removal of water from the required excavation and the foundation shall be accomplished in a manner and to the extent that will maintain stability of the excavated slopes and bottom required excavations and will allow satisfactory performance of all construction operations. During the placing and compacting of material in required excavations, the water level at the locations being refilled shall be maintained below the bottom of the excavation at such locations which may require draining the water sumps from which the water shall be pumped.

Stabilization
All borrow areas shall be graded to provide proper drainage and left I a sightly condition. All exposed surfaces of the embankment, spillway, spoil and borrow areas, and berms shall be stabilized by seeding, liming, fertilizing and mulching in accordance with the Natural Resources Conservation Service Standards and Specifications for Critical Area Planting (MD-342) or as shown on the accompanying drawings.

Erosion and Sediment Control
Construction operations will be carried out in such a manner that erosion will be controlled and water and air pollution minimized. State and local laws concerning pollution abatement will be followed. Construction plans shall detail erosion and sediment control measures.

POND BOTTOM SOIL CONDITIONS

If broken rock fragments are encountered at finished pond bottom, under cut a minimum of 12" below basin grade and to a horizontal distance of at least 18" beyond each edge of the broken rock and backfill with fine-grained ML or CL soils compacted to a firm condition. This procedure should be performed under the supervision of the project Geotechnical Engineer.

In order to lower the infiltration rate into the sands with gravel, it is recommmended that the sands with gravel be undercut and replaced with a minimum of 12 inches of soils classified as SM per ASTM D-2487 or Sandy Loam per USDA classification. The fill soil should be compacted to at least 95 percent of its maximum dry density per ASTM D-698.

OPERATION, MAINTENANCE AND INSPECTION

INSPECTION OF THE POND(S) SHOWN HEREON SHALL BE PERFORMED AT LEAST ANNUALLY, IN ACCORDANCE WITH THE CHECKLIST AND REQUIREMENTS CONTAINED WITHIN USDA, NRCS "STANDARDS AND SPECIFICATIONS FOR PONDS" (MD-378). THE POND OWNER(S) AND ANY HEIRS, SUCCESSORS, OR ASSIGNS SHALL BE RESPONSIBLE FOR THE SAFETY OF THE POND AND THE CONTINUED OPERATION, SURVEILLANCE, INSPECTION, AND MAINTENANCE THEREOF. THE POND OWNER(S) SHALL PROMPTLY NOTIFY THE SOIL CONSERVATION DISTRICT OF ANY UNUSUAL OBSERVATIONS THAT MAY BE INDICATIONS OF DISTRESS SUCH AS EXCESSIVE SEEPAGE, TURBID SEEPAGE, SLIDING OR SLUMPING.

OPERATION AND MAINTENANCE SCHEDULE FOR STORMWATER MANAGEMENT EXTENDED DETENTION FACILITY

STORMWATER MANAGEMENT FACILITY

ROUTINE MAINTENANCE

1. FACILITY WILL BE INSPECTED ANNUALLY AND AFTER MAJOR STORMS. INSPECTIONS SHOULD BE PERFORMED DURING WET WEATHER TO DETERMINE IS FUNCTIONING PROPERLY.
2. TOP AND SIDE SLOPES OF THE EMBANKMENT SHALL BE MOWED A MINIMUM OF TWO (2) TIMES A YEAR, ONCE IN JUNE AND ONCE IN SEPTEMBER. OTHER SIDE SLOPES AND MAINTENANCE ACCESS SHOULD BE MOWED AS NEEDED.
3. DEBRIS AND LITTER NEXT TO THE OUTLET STRUCTURE SHALL BE REMOVED DURING REGULAR MOWING OPERATIONS AND AS NEEDED.
4. VISIBLE SIGNS OF EROSION IN THE POND AS WELL AS RIPRAP OUTLET AREAS SHALL BE REPAIRED AS SOON AS IT IS NOTICED.

NON-ROUTINE MAINTENANCE

1. STRUCTURAL COMPONENTS OF THE POND SUCH AS THE DAM, THE RISER, AND THE PIPES SHALL BE REPAIRED UPON DETECTION OF ANY DAMAGE. THE COMPONENTS SHOULD BE INSPECTED DURING ROUTINE MAINTENANCE OPERATIONS.
2. SEDIMENT SHOULD BE REMOVED WHEN ITS ACCUMULATION SIGNIFICANTLY REDUCES THE DESIGN STORAGE, INTERFERE WITH THE FUNCTION OF THE RISER, WHEN DEEMED NECESSARY FOR AESTHETIC REASONS, OR WHEN DEEMED NECESSARY BY THE HOWARD COUNTY DEPARTMENT OF PUBLIC WORKS.

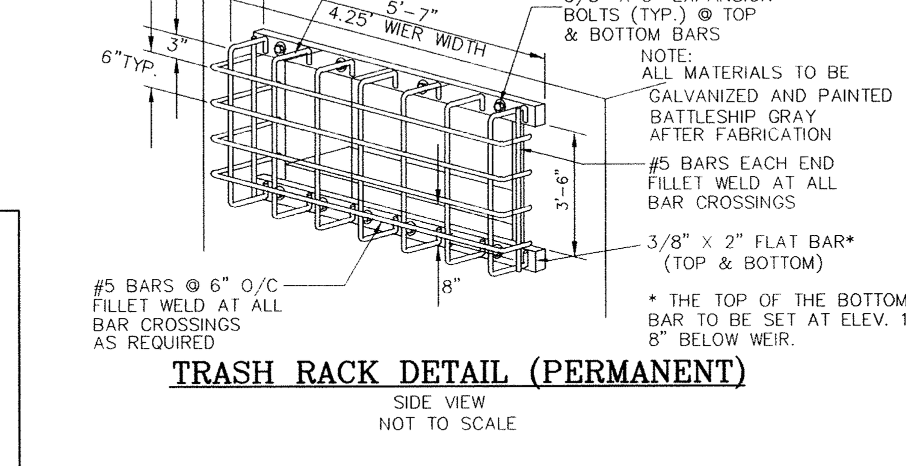

TRASH RACK DETAIL (PERMANENT)
SIDE VIEW
NOT TO SCALE

APPROVED: HOWARD COUNTY DEPARTMENT OF PUBLIC WORKS

[signature] 10-19-06
CHIEF, BUREAU OF HIGHWAYS — DATE

APPROVED: HOWARD COUNTY DEPARTMENT OF PLANNING AND ZONING

[signature] 10/23/06
CHIEF, DEVELOPMENT ENGINEERING DIVISION — DATE

[signature] 10/24/06
CHIEF, DIVISION OF LAND DEVELOPMENT — DATE

THESE PLANS HAVE BEEN REVIEWED FOR HOWARD SOIL CONSERVATION DISTRICT AND MEETS THE TECHNICAL REQUIREMENTS.

[signature] 10/17/06
USDA-NATURAL RESOURCES CONSERVATION SERVICE — DATE

THIS DEVELOPMENT PLAN IS APPROVED FOR SOIL EROSION AND SEDIMENT CONTROL BY THE HOWARD SOIL CONSERVATION DISTRICT.

[signature] 10/17/06
HOWARD S.C.D. — DATE

GEOTECH CONSTRUCTION CONSIDERATIONS

The near-surface, on-site soils contain appreciable amounts of fines and will be very sensitive to moisture increases and to construction disturbance. Construction activities in the presence of excessive moisture can lead to softening of the subgrade soils and loss of bearing capacity. Therefore, it will be prudent to schedule earthwork operations during the warmer and drier seasons that generally occur from late spring to early fall. Measures should also be taken to limit site disturbance, especially from rubber-tired heavy construction equipment, and to provide for drainage of surface water from areas being developed. It will be advisable to designate construction traffic areas to limit areas of disturbance and to prevent construction traffic from excessively degrading sensitive subgrade soils over large portions of the site.

A firm working surface for the placement of engineered fill should be established prior to construction of new fills. The moisture content of the fill soils at the time of placement should be carefully controlled to ensure that the required compaction effort can be achieved without excessive pumping or movement of the fill mass. In the event that the earthwork operations are accomplished during the cooler and wetter periods of the year, delays and additional costs should be anticipated. At these times, reduction of soil moisture may need to be accomplished by a combination of mechanical manipulation and the use of chemical additives, such as lime or cement, in order to lower moisture contents to levels appropriate for compaction. In order to prevent disturbance to footing subgrades from groundwater intrusion, 3-inch thick mud mats consisting of lean concrete should be provided.

As noted in the Water Level Observations section of this report, groundwater was not encountered within the depths of any of the soil borings during drilling. Therefore, it is anticipated that groundwater levels will not impact construction operations at the site. However, seasonally high groundwater levels, or perched water conditions, may require the use of sump pumps and pits, or other appropriate dewatering procedures.

Because the on-site soils are moisture-sensitive and are susceptible to loss of strength upon exposure to precipitation during construction activity, all foundation excavations must be protected to prevent the disturbance of the subgrade materials and to minimize any potential loss of support capacity. Foundation concrete generally should be placed for foundations during the same day that the foundation excavations are made and approved. Should excavating and placing the foundation concrete the same day not be practical, we recommend that a concrete mud mat, 2 to 3 inches thick, be placed to protect the subgrade soils from moisture changes and disturbance. If protection of the soils is not provided, then undercutting of softened or loosened soils may be necessary prior to the placement of reinforcing steel and foundation concrete.
Prior to the placement of any foundation concrete or mud mat, the subgrade soils must be carefully examined and tested by a qualified representative of the Geotechnical Engineer to confirm the availability of the design soil bearing capacity. To minimize disturbance to the subgrade soils during excavation, we recommend that a bucket without scarifying teeth, in addition to hand excavation methods, be used during the final phases of the excavation for the foundations.

Any cuts or excavations associated with building and utility excavations may require forming or bracing, slope flattening or other physical measures to control sloughing and/or to prevent slope failures. An examination of the applicable codes (e.g. OSHA, MOSHA) should be made by the appropriate Contractor to ensure that adequate protection of the excavations and trench walls is provided.

The surface soils contain fines and are considered erodible. The Contractor should provide and maintain good site drainage during earthwork operations to help to maintain the integrity of the surface soils. All erosion and sedimentation shall be controlled in accordance with sound engineering practice and current local requirements. Surface water should be directed away from the construction area, and the work area should be sloped at gradients of 1 to 2 percent to reduce the potential for ponding water and the subsequent saturation of the surface soils.

CLOSING

This report has been prepared to provide the Owner and the Design Team with subsurface information and related evaluations and recommendations to guide geotechnical-related design and construction for development of the site.

The evaluations and recommendations presented in this report are, of necessity, based on the information made available to us at the time of the actual writing of the report and the on-site conditions, surface and subsurface, which existed at the time the exploratory borings were drilled. Further assumption has been made that the limited exploratory borings, in relation both to the areal extent of the site and to depth, are representative of general subsurface conditions across the site. If subsurface conditions are encountered which differ significantly from those reported herein, the Geotechnical Engineer should be notified immediately so that the analyses and recommendations can be reviewed for validity.

Should there be significant changes to the proposed construction discussed in this report, it may be necessary for ECS to review the changes to determine whether or not the evaluations and recommendations of this report would remain valid. ECS should be provided with appropriate plans and other information as site design progresses so that we can review the information and provide additional geotechnical guidance, as needed.

SWM Pond Construction

Existing Fill Considerations

Based upon the information provided to us, it appears that the existing Fill soils encountered in the general area of Boring BMP-2-2 will be completely removed during site grading activities. It is our judgment that these existing Fill soils should be reused in the fill areas of Phase I or Phase II. Alternatively, the existing Fill soils can be disposed of at an off-site location. If the existing Fill soils are not completely removed during site grading activities due to changes in the design elevations of BMP No. 2, ECS recommends that the existing Fill soils be thoroughly investigated to evaluate it's suitability to remain in place. If the existing fill is found to be unsuitable, the existing fill should be completely removed and replaced with new engineered fill.

Cut-Off Trench and Impervious Core

According to the plans provided to us, each SWM detention pond and bioretention facility will primarily be constructed in cut; however, depending on final grades, some areas of new fill may be required. In accordance with county and state criteria, cut-off trenches and impervious cores are required in all areas of new fill embankment construction.

In accordance with Maryland Code 378 requirements, the cutoff trench should extend at least 4 feet below the principal spillway pipe, have a minimum width of 4 feet, and have side slopes of 1H:1V, or flatter. The impervious core should extend vertically upward from the cutoff trench up to the 10-year water surface elevation. Fill materials for the cutoff trench and impervious core construction should consist of GC, SC, CL, or CH soil types and have at least 30 percent by weight passing the No. 200 sieve.

Based upon the results of the soil borings, it appears that there should be sufficient quantities of soils classified as SC and CL at the project site for use as fill materials in cutoff trench and impervious core construction. The on-site soils that are identified for potential use in cut-off trench and impervious core construction will need to be sampled, tested, and approved by the Geotechnical Engineer prior to their use in SWM facility construction at the site. The earthwork contractor should exercise caution in the excavation of the SC and CL materials so that they are not mistakenly mixed with other on-site soils that are not considered suitable for cut-off trench and impervious core construction.

Fill materials for the cut-off trench and impervious core should be placed in 8-inch loose lifts and compacted to at least 95 percent of the maximum dry density in accordance with the Standard Proctor test method, ASTM D 698. We recommend that moisture contents at the time of construction should generally be within the range of the optimum moisture content to 3 percentage points wet of the optimum moisture content. Placement and compaction of the cut-off trench and impervious core fill materials should be monitored by the Geotechnical Engineer on a full-time basis to ensure that fill materials are being placed and compacted in accordance with plans and specifications.

General Embankment Construction

According to the plans provided, it appears that each of the SWM detention ponds are to be constructed to a configuration of 3H:1V in both cut and fill situations. The results of the borings indicate that the cut slopes should primarily contain natural soil types classified as CL, SC, and SM per ASTM D-2487, as well as Decomposed Rock. It is our opinion that these soils should be suitable for the proposed 3H:1V embankment configurations. However, if CH soils are encountered in cut slopes they should be removed and replaced. The fill slopes planned at 3H:1V should consist of embankment fill as recommended below.

Embankment soils placed outside the limits of the cut-off trench and impervious core should consist of soils classified as CL, ML, SC, SM, or more granular in accordance with ASTM D-2487. Soils of these types should be readily available from excavated materials associated with the pond construction, although care will need to be exercised to ensure that the materials do not contain excessive amounts of organics.

Riser Structure Foundation

The provided plans do not indicate the presence of riser structures within either of the proposed detention ponds; however, we anticipate that such structures will be required. Based on the results of the borings performed in the general area of BMP No. 1 and BMP No. 3, and bottom elevations at each of the ponds as provided, the soils that are anticipated to be encountered at or immediately below the foundation bearing elevations will likely consist of medium stiff to very stiff clay soils, medium dense to dense sand soils, and very dense to extremely dense Decomposed Rock. It is our judgment that the soils that are likely to be encountered at the foundation elevations at each of the riser structures will be suitable for a design bearing pressure of 3,000 psf.

If soft, unsuitable bearing soils are encountered during footing excavation, or if the subgrade soils are significantly disturbed at the design bottom slab elevations during excavation, these materials should be undercut to suitable bearing soils, and replaced with regular or lean concrete or with engineered fill materials to restore the design subgrade elevation.

If the depth of undercut necessary to reach firm natural soils is only a few feet, then it may be practical to place regular concrete, or lean (2,000 psi) concrete, from the top of the firm natural soils up to the bearing level of the riser foundation. If this procedure is employed, then the sides of the undercut excavation can essentially be neat with the sides of the riser structure footing. From a practical standpoint, the sides of the undercut excavation will need to be sloped to facilitate stability during excavation operations; however, the immediate foundation area can be formed neatly with the limits of the riser foundation to minimize the amount of concrete fill needed to restore the design bearing elevation.

If new engineered fill materials are constructed for support of the riser structure foundation, then the engineered fill materials will need to be capable of distributing foundation stresses to any soft sediments that remain in place outside the limits of the engineered fill materials. Proper distribution of foundation stresses can be provided by extending the limits of the undercut excavation at least 0.5 feet horizontally for each 1 foot of undercut below the footing bearing level, but in no case less than 5 feet beyond the perimeter of the footing.

The on-site granular soil types (SC, SM, and SP) can be used in construction of engineered fill for support of the riser structure foundation. The fill materials should be placed in loose lifts not exceeding 8 inches, moisture conditioned to within 2 percentage points of the optimum moisture content, and then compacted to at least 95 percent of the Standard Proctor maximum dry density (ASTM D-698).

Summary of SWM Pond Design

Based on the subsurface conditions encountered at the site and our review of the provided plans, it is our opinion that the design for the proposed SWM ponds and embankments, with modifications as recommended herein, is in general accordance with Maryland Code 378 requirements with regard to geotechnical considerations. Careful observation of soil conditions exposed during construction will be needed to ensure that measures are taken to provide necessary improvement of soil conditions, especially in the areas of cut slopes and in areas of structural support.

Earthwork Operations

It is expected that the earthwork operations will consist of significant cuts in the building area, as well as cuts and fills in the pavement and SWM areas. The following paragraphs detail our recommendations regarding the compacted fill requirements.

Cut/Fill Considerations

Based upon our review of existing and proposed site grades as shown on the plans provided to us, ECS anticipates that final grades for the Phase III of the Elkridge Landing project will be established by significant cut and relatively minor fill operations. Maximum cuts and fills in the area of the townhomes are anticipated to be on the order of 20 feet and 5 feet, respectively, whereas maximum cuts and fills in the areas of the SWM facilities are anticipated to be on the order of 30 feet and 7 feet, respectively. According to the borings performed in Phase III, the soils to be excavated during mass grading operations in this area should generally consist of CL, SC, SM, and GP soil types. ECS recommends that the CL, SC, SM, and GP soil types excavated during mass grading operations in Phase III be stored on-site in individually designated stockpile areas for future use.

It is our judgment that the Clay (CL) soil types can be reused as fill materials for cut-off trench and impervious core construction within the proposed SWM facilities. Additionally, these soils may be placed as engineered fill in the deeper fill areas of Phase I and Phase II. If used as engineered fill for Phase I and Phase II, ECS recommends that the CL soils should be placed at depths greater than 4 feet below final building and pavement subgrade levels. Furthermore, the Gravel (GP) soils can also be used in the deeper fill areas of Phase I and Phase II with similar restrictions.

The Clayey Sand (SC) and Silty Sand (SM) soil types can be reused as fill materials for the construction of SWM facility embankments as well as for pavement, footing, and slab subgrades. The SC soils may also be used as fill materials for cut-off trench and impervious core construction within the proposed SWM facilities; however, these soils should only be used for cut-off trench and impervious core construction if sufficient quantities of CL soils are not available.

Rock Excavation/Blasting Excavations

Based upon the results of the borings and our estimates of final grades at the site, ECS anticipates that very dense to extremely dense Decomposed Rock materials will be encountered in the range of 10 feet below final grade to above final grade in the general location of several of the borings. These locations include, but may not be limited to, Borings TH-3, TH-5, TH-6, TH-9, BMP-1-3, BMP-1-4, BMP-2-2, BMP-2-4, BMP-3-1, and BMP-3-2.

For preliminary estimating purposes, excavation difficulty may be correlated to SPT results. It should be possible to excavate decomposed rock materials displaying SPT results of 50 blows per 4 inches of penetration or greater with conventional earthwork equipment, which most likely will include ripping. Materials exhibiting SPT results of 50 blows per 4 inches of penetration or less or at auger refusal levels most likely will require hoe ramming, or blasting, particularly in narrow trench excavations.

Once the final grades have been established for the buildings, pavements, stormwater management facilities and utilities, it is recommended that a seismic refraction survey be performed in the areas where there is a potential for rock excavation. The seismic refraction survey provides the seismic velocities of the underlying materials that can be correlated to various types of excavation equipment such as rippers and tracked excavators. In addition to the seismic refraction survey, test pits should be performed along the seismic lines to provide data that can be used to calibrate the seismic refraction survey data. The test pits when excavated should be observed by potential excavators as this should give them hands on information on how difficult or easy the rock will be to excavate. Depending on the volume of rock, it may also be beneficial to perform a ripping test so that an understanding of the rippability of the rock can be provided to potential earthwork contractors.

In addition to the excavation guidelines outlined above, it should be pointed out that the physical characteristics of the extremely dense residual soils and underlying rock, such as foliation, jointing, fracturing and lithology, along with the type of excavation equipment used, will greatly influence this aspect of the earthwork operations. We recommend that the applicable contractors carefully review the results of the final subsurface investigation and also consider a test pit program, which can assist in correlating the subsurface data with anticipated excavation difficulties during building, roadway, and utility construction with the type of equipment planned for use on the project site. It is also imperative that all contract documents related to the excavation of rock materials include specific criteria (i.e. equipment type and power ratings) to define rock excavation for mass grading and removal in narrow excavations. The applicable contractors should also be required to visit the site to observe the existing conditions and should be encouraged to perform their own explorations to determine the impact that rock may have on their working on the project site.

DEWATERING STRATEGY

Dewatering refers to the act of removing and discharging water from excavated areas on construction sites or from sediment traps or basins on construction sites. Standards and specifications for dewatering practices follow:

These standards apply to removal and discharge of water from any excavated area or sediment trap or basin at any construction site. Given the unique conditions at any particular construction site, any or all of the practices may apply. Regardless of the applicability of the practices listed herein, operators are required to use acceptable procedures for maintenance and dewatering. In all cases, every effort shall be made to eliminate sediment pollution associated with dewatering.

Designers shall specify the preferred procedures for dewatering on plans. In particular, designers should identify procedures for dewatering sediment traps and basins prior to elimination of the last sediment control facility on the site or prior to conversion of sediment control facilities to stormwater management facilities. Recommended procedures shall be consistent with these standards. Atypical site conditions may require innovative dewatering designs. Dewatering measures not referenced in this standard may be used with the consent of the approval authority.

Dewatering of Excavated Areas
A. Designers shall specify on plans, and in sequences of construction included on plans, practices for dewatering of excavated areas. Plan reviewers shall check to see that procedures for dewatering are included on plans.
B. In all cases, water removed from excavated areas shall be discharged such that it shall pass through a sediment control device prior to entering receiving waters. Sediment control devices include sediment traps and basins, in addition to the practices in this section.

Approved Practices for Dewatering of Excavated Areas
1. Pumping of water to an existing sediment basin or trap in which the entire volume of water from the area to be dewatered can be contained without discharge to receiving waters.
2. Pumping of water to an existing sediment basin or trap such that the entire volume of water from the area to be dewatered can be managed without exceeding the design outflow from the sediment control structure.
3. Removable Pumping Station. Standards and specifications for Removable Pumping Station are on Detail 20A.
4. Use of a Sump Pit. Standards and specifications for a sump pit are on Detail 20B.
5. Sediment Tank. Standards and specifications for a sump pit are on Detail 21.

Dewatering of Sediment Traps and Basins

Designers shall specify on plans, and in sequences of construction included on plans, the practices for dewatering of traps and basins. Plan reviewers shall check to see that procedures for dewatering to be used are included on plans. In all cases, water removed from traps and basins shall be discharged so that it passes through a sediment control device prior to entering receiving waters.

Approved Practices for Dewatering of Traps and Basins
1. Removable pumping station.
2. Use of a Sump Pit.
3. Use of a floating suction hose to pump the cleaner water from the top of the pond. As the cleaner water is pumped the suction hose will lower and eventually encounter sediment laden water. When this happens the pumping operation will cease. Provisions shall be made to filter water

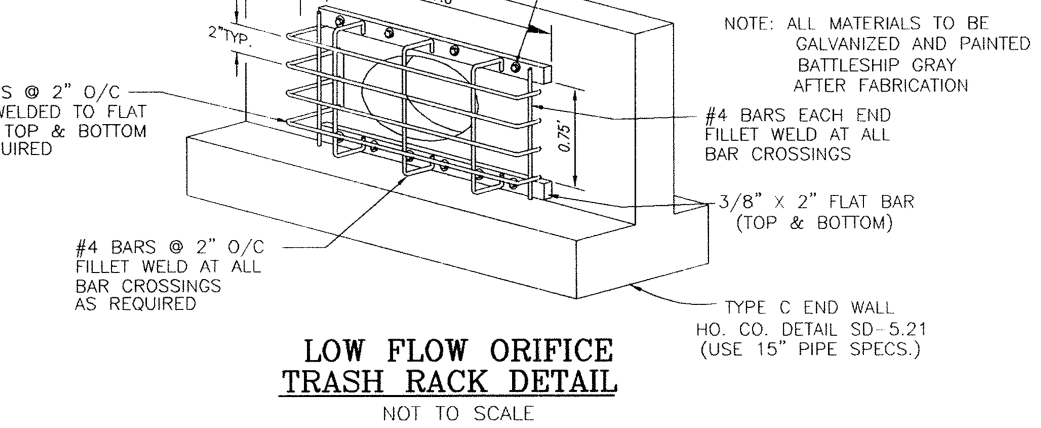

LOW FLOW ORIFICE TRASH RACK DETAIL
NOT TO SCALE

ENGINEER'S CERTIFICATE:

"I HEREBY CERTIFY THAT THIS PLAN FOR SEDIMENT AND EROSION CONTROL REPRESENTS A PRACTICAL AND WORKABLE PLAN BASED ON MY PERSONAL KNOWLEDGE OF THE SITE CONDITIONS AND THAT IT WAS PREPARED IN ACCORDANCE WITH THE REQUIREMENTS OF THE HOWARD SOIL CONSERVATION DISTRICT."

[signature] 10/6/06
SIGNATURE OF ENGINEER — DATE
WALTER G. ZAWISLAK, PE

DEVELEOPER'S CERTIFICATE:

"I/WE CERTIFY THAT ALL DEVELOPMENT AND CONSTRUCTION WILL BE DONE IN ACCORDANCE TO THIS PLAN OF DEVELOPMENT FOR SEDIMENT CONTROL, AND THAT ALL RESPONSIBLE PERSONNEL INVOLVED IN THE CONSTRUCTION PROJECT WILL HAVE A CERTIFICATE OF ATTENDANCE AT A DEPARTMENT OF ENVIRONMENT APPROVED TRAINING PROGRAM FOR THE CONTROL OF SEDIMENT AND EROSION BEFORE BEGINNING THE PROJECT. I ALSO AUTHORIZE PERIODIC ON-SITE INSPECTIONS BY THE HOWARD SOIL CONSERVATION DISTRICT.

Peter G. Voelkel 10/6/06
SIGNATURE OF DEVELOPER — DATE
PETER G. VOELKEL

STORMWATER MANAGEMENT REQUIREMENTS (SP#2)

AREA 0.83	REQUIREMENT	VOLUME/CFS REQUIREMENT WITHOUT CREDITS	CREDITS	VOLUME REQUIREMENT WITH CREDITS	NOTES
1	WATER QUALITY VOLUME (WQv) DEVELOPED AREAS	SEE NOTE	——	SEE NOTE	THIS IS PROVIDED FOR IN BMP#1 AND ANALYSIS AT SP#1 DUE TO NECESSARY VERTICAL ALIGNMENT OF ROAD AND LIMITED R-O-W.
2	RECHARGE VOLUME (REv) DEVELOPED AREAS	0.06 AC. FT. OR 0.55 AC. (TOTAL SELNICK DRIVE DEVELOPMENT)	0.04 AC. FT.	0.00 AC. FT.	GRASS CHANNEL ALONG SELNICK DRIVE, SP#2, PROVIDES 0.04 OF CREDIT FOR Rev. REMAINDER OF Rev CREDIT, 0.54, PROVIDED W/ANALYSIS OF SP#1.
3	CHANNEL PROTECTION VOLUME* (CPv)	N/A	——	N/A	1YR PEAK DEVELOPMENT DISCHARGE OF 1 CFS IS LESS THAN REQUIRED 2 CFS FOR CPV
4	OVERHEAD FLOOD PROTECTION* ($Q_{10}P$) EXISTING PROVIDED	REQUIRED 3.79 CFS ——	PROVIDED —— 0.61 CFS (FROM TR-20, BYPASS+UNMANAGED)		0.61 CFS BYPASS 2.99 CFS UNMANAGED
5	EXTREME FLOOD VOLUME* ($Q_{100}P$) EXISTING PROVIDED	6.80 CFS ——	—— 1.16 CFS (FROM TR-20, BYPASS+UNMANAGED)		1.16 CFS BYPASS 5.10 CFS UNMANAGED

WQv FOR DEVELOPMENT OF SELNICK DRIVE TO SP#2 IS PROVIDED AT BMP#1. Rev (PERCENT AREA METHOD) IS PROVIDED IN GRASS CHANNELS ALONG SELNICK DRIVE, (0.04 AC. TO SP#2 AND 0.54 AC. TO SP#1) , Cpv IS NOT REQUIRED AT SP#2 SINCE THE 1YR PEAK DEVELOPMENT q OF 0.1 CFS IS LESS THAN 2 CFS. THE POST DEVELOPMENT DISCHARGES OF Qf AND Qp ARE LESS THAN THE EXISTING DISCHARGES, THEREFORE NO MANAGEMENT IS PROPOSED.

STORMWATER MANAGEMENT REQUIREMENTS, FACILITY (SP#1)

AREA 6.45 AC.	REQUIREMENT	VOLUME/CFS REQUIREMENT WITHOUT CREDITS	CREDITS	VOLUME REQUIREMENT WITH CREDITS	NOTES
1	WATER QUALITY VOLUME (WQv) DEVELOPED AREAS	0.24 AC. FT.	——	0.24 AC. FT.	0.17 IS PROVIDED BELOW Cpv THIS IS PROVIDED FOR THE ENTIRE DEVELOPMENT OF SELNICK ROAD.
2	RECHARGE VOLUME (REv) DEVELOPED AREAS	0.056 AC. FT. OR 0.50 AC. (TOTAL SELNICK DR DEVELOPMENT)	0.58 AC. FT.	0.00 AC. FT.	GRASS CHANNEL ALONG SELNICK DRIVE, SP#1, PROVIDES 0.54 OF CREDIT FOR Rev. REMAINDER OF Rev CREDIT, 0.04, IS PROVIDED W/ANALYSIS OF SP#2
3	CHANNEL PROTECTION VOLUME* (CPv)	0.30 AC.FT. 0.31 CFS ALLOWED	——	0.30 AC. FT. 0.14 CFS PROVIDED	Cpv PROVIDED IN BMP #1 TO ELEV.125.90
4	OVERHEAD FLOOD PROTECTION* ($Q_{10}P$) EXISTING PROVIDED	REQUIRED 40.21 CFS ——	PROVIDED —— 27.51 CFS TOTAL		20.97 CFS BYPASS 3.13 CFS UNMANAGED 12.35 CFS TO POND
5	EXTREME FLOOD VOLUME* ($Q_{100}P$) EXISTING PROVIDED	69.72CFS ——	—— 59.83 CFS TOTAL		35.29 CFS BYPASS 5.57 CFS UNMANAGED 24.46 CFS TO POND

SWM WQv, Cpv, Qp, AND Qf PROVIDED BY POCKET POND, P.5, WITH CLAY LINER
Rev PROVIDED IN GRASS CHANNELS OF OPEN SECTION OF SELNICK DRIVE

* THE REQUIRED AND ALLOWABLE RUNOFF (Cpv, Q10p, Q100f) INCLUDES THE DRAINAGE FROM ON-SITE, BYPASS, AND UNMANAGED AREAS SHOWN ON THESE DRAINAGE AREA MAPS.

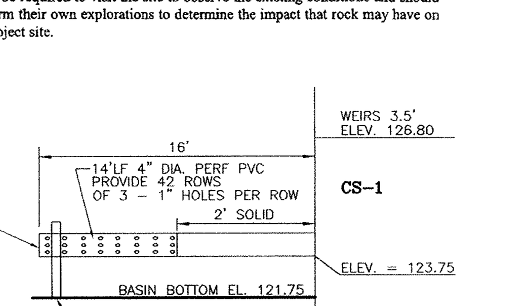

ALL PVC SHALL BE ASTM D-3033 SCH. 40

TEMP. SEDIMENT BASIN HORIZONTAL DRAW-DOWN DEVICE
NOT TO SCALE
REF.: 1994 MARYLAND STANDARDS AND SPECIFICATIONS FOR SOIL EROSION AND SEDIMENT CONTROL PAGE C-10-29

CONSTRUCTION SPECIFICATIONS
1. THE TOTAL AREA OF THE PERFORATIONS MUST BE GREATER THEN 4 TIMES THE AREA OF THE INTERNAL ORIFICE.
2. THE PERFORATED PORTION OF THE DRAW-DOWN DEVICE SHALL BE WRAPPED WITH 1/2" HARDWARE CLOTH AND GEOTEXTILE FABRIC. THE GEOTEXTILE FABRIC SHALL MEET THE SPECIFICATIONS FOR GEOTEXTILE CLASS E.
3. PROVIDE SUPPORT OF DRAW-DOWN DEVICE TO PREVENT SAGGING AND FLOATATION. AN ACCEPTABLE PREVENTATIVE MEASURE IS TO STAKE BOTH SIDES OF DRAW-DOWN DEVICE WITH 1" STEEL ANGLE, OR 1' x4" SQUARE OR 2" ROUND WOODEN POSTS SET 3' MINIMUM INTO THE GROUND THEN JOINING THEM TO THE DEVICE BY WRAPPING WITH 12 GAUGE MINIMUM WIRE.

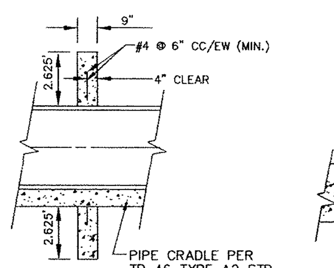

SECTION A-A

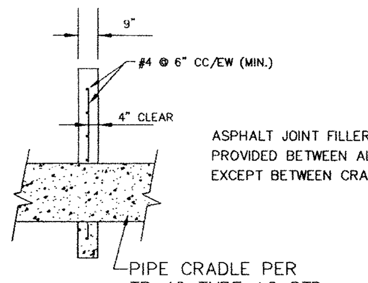

SECTION B-B

ASPHALT JOINT FILLER MATERIAL SHALL BE PROVIDED BETWEEN ALL CONCRETE SURFACES EXCEPT BETWEEN CRADLE AND PIPE.

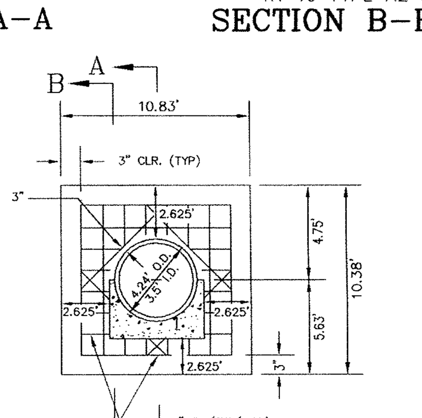

NOTES:
1. ANTI-SEEP COLLARS SHOULD BE PLACED WITHIN THE SATURATION ZONE.
2. ALL ANTI-SEEP COLLARS AND THEIR CONNECTIONS TO THE CONDUIT SHALL BE WATERTIGHT AND MADE OF COMPATIBLE WITH THE CONDUIT.
3. COLLARS DIMENSIONS SHALL EXTEND A MIN. OF 2' IN ALL DIRECTIONS AROUND THE PIPE.
4. ANTI-SEEP COLLARD SHALL BE PLACED A MIN. OF 2' FROM PIPE JOINTS EXCEPT WHERE FLANGED JOINTS ARE USED.
5. THERE SHALL BE PREFORMED JOINT FILLER MATERIAL BETWEEN ARE CONCRETE SURFACE EXEPT BETWEEN THE PIPE AND CRADLE.

CONCRETE ANTI-SEEP COLLAR DETAIL
NOT TO SCALE

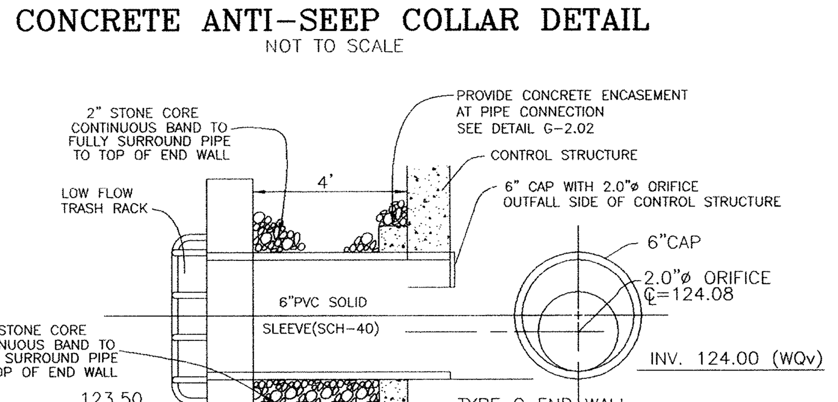

PERMANENT ORIFICE DETAIL IN CONTROL STRUCTURE
NOT TO SCALE

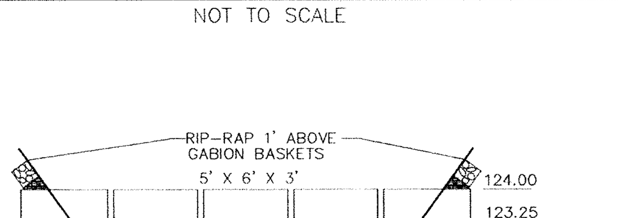

GABION BASKET WEIR DETAIL
NOT TO SCALE

NOTES:
1. ALL WIRE USED IN GABION CONSTRUCTION SHALL BE GALVANIZED AND PLASTIC COATED.
2. FILTER CLOTH SHALL BE PLACED WHEREVER GABIONS COME INTO CONTACT WITH SOIL.
3. STONE FILL SHALL CONSIST OF HARD, DURABLE, CLEAN STONE 4"-8" IN DIAMETER.
4. CONSTRUCTION MATERIALS AND METHODS SHALL BE IN ACCORDANCE WITH MANUFACTURER'S SPECIFICATIONS.
5. RIP-RAP TO BE PLACED BELOW GABION WEIR TO BOTTOM OF FOREBAY.

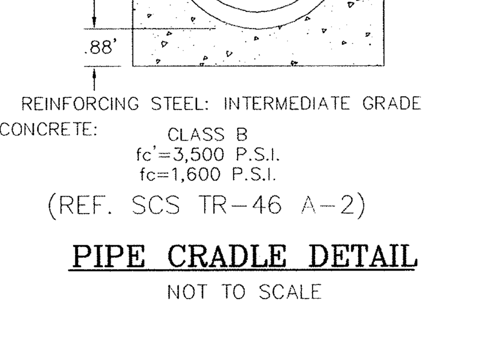

REINFORCING STEEL: INTERMEDIATE GRADE
CONCRETE: CLASS B
fc'=3,500 P.S.I.
fc=1,600 P.S.I.
(REF. SCS TR-46 A-2)

PIPE CRADLE DETAIL
NOT TO SCALE

OWNER/DEVELOPER
ELKRIDGE DEVELOPMENT, LLC
301 TRANSYLVANIA AVENUE
RALEIGH, NC 27609
(919) 789-9289

ELKRIDGE DEVELOPMENT NO.2, LLC
301 TRANSYLVANIA AVENUE
RALEIGH, NC 27609
(919) 789-9289

NO.	REVISION	DATE

FINAL ROAD CONSTRUCTION PLANS

STORMWATER MANAGEMENT NOTES AND DETAILS

BELMONT STATION

PARCELS 'A,' 'B' & 'C' & OPEN SPACE LOT 1
REF: WP-04-152, WP-06-79, S-04-10, P-05-17, F-06-169
TAX MAP 37 BLOCK 18 — PARCEL '196, 198, 199'
1ST ELECTION DISTRICT — HOWARD COUNTY, MARYLAND

ROBERT H. VOGEL ENGINEERING, INC.
ENGINEERS • SURVEYORS • PLANNERS
8407 MAIN STREET
ELLICOTT CITY, MD 21043
TEL: 410.461.7666
FAX: 410.461.8961

STATE OF MARYLAND — WALTER GEORGE ZAWISLAK — PROFESSIONAL ENGINEER [seal] 10/6/06

DESIGN BY: WJZ
DRAWN BY: DZ
CHECKED BY:
DATE: OCTOBER 2006
SCALE: AS SHOWN
W.O. NO.: 04-08

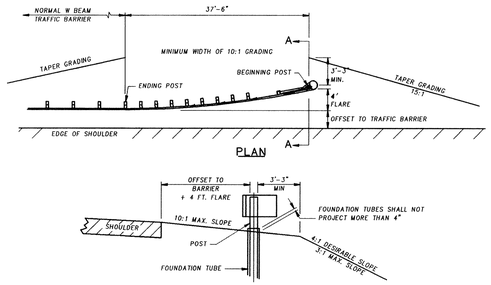

NOTES APPLICABLE TO ALL TYPE B TERMINALS

1. 6:1 MAX GRADING IS ALLOWABLE WHEN THE BARRIER IS LOCATED 12 FT. OR MORE FROM THE OUTSIDE EDGE OF SHOULDER.
2. ADD DELINEATION ON END OF TREATMENT AS DIRECTED BY THE OFFICE OF TRAFFIC AND SAFETY.
3. 4" FLARE REQUIRED
4. TYPE B TERMINAL SHALL ONLY BE USED WHEN THE GRADING AS SHOWN AND THE REQUIRED LENGTH OF NEED IS PROVIDED.

MDSHA-605.02

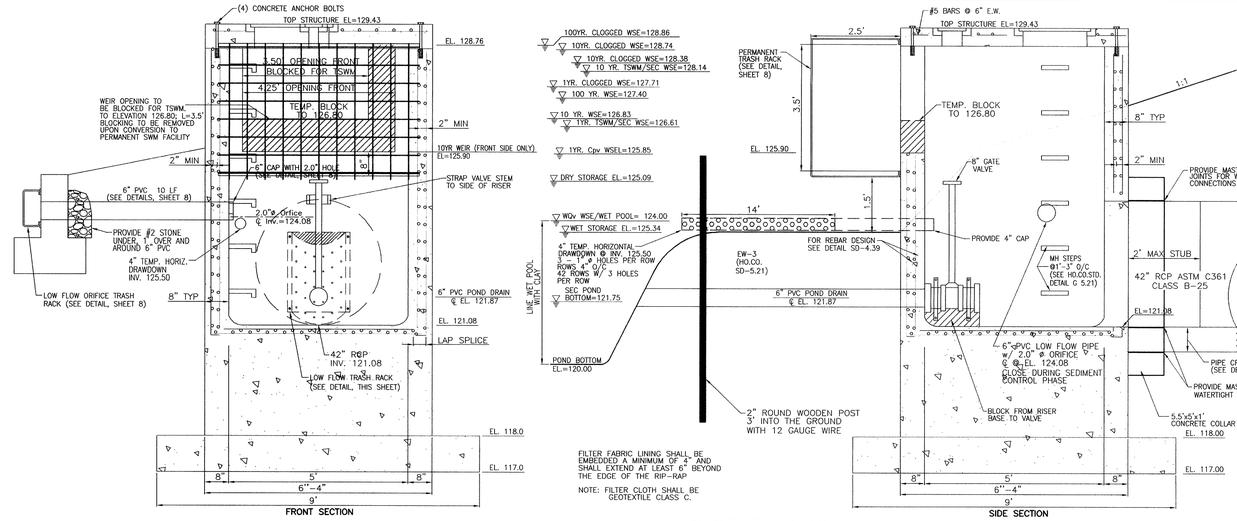

FILTER FABRIC LINING SHALL BE EMBEDDED A MINIMUM OF 4" AND SHALL EXTEND AT LEAST 6" BEYOND THE EDGE OF THE RIP-RAP

NOTE: FILTER CLOTH SHALL BE GEOTEXTILE CLASS C.

CAST-IN-PLACE STRUCTURE (CS-1) DETAIL

SCALE: 1/2"=1'

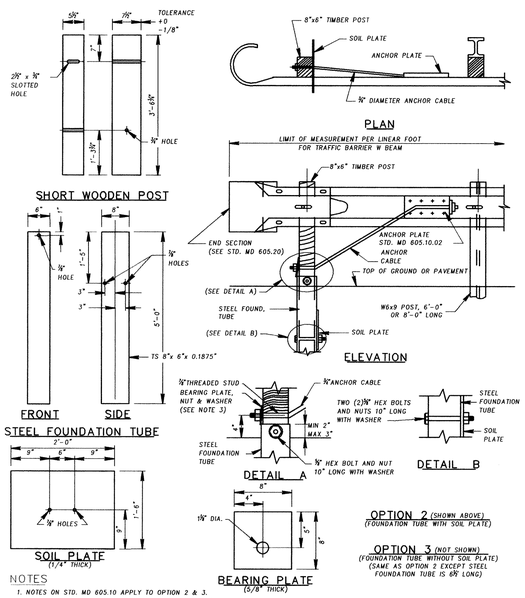

NOTES

1. NOTES ON STD. MD 605.10 APPLY TO OPTION 2 & 3.
2. IF THE FOUNDATION TUBE AND SOIL PLATE (OPTION 2) ARE DRIVEN INTO THE SOIL, PROPER CARE SHOULD BE TAKEN TO ENSURE THAT THE SOIL PLATE FASTENERS ARE NOT BROKEN DURING THE DRIVING PROCESS.
3. SECURE BEARING PLATE WITH 16 PENNY GALVANIZED NAIL TO PREVENT ROTATION OF PLATE.
4. SAME AS MD 605.01 NOTE 6

MDSHA-605.10.01

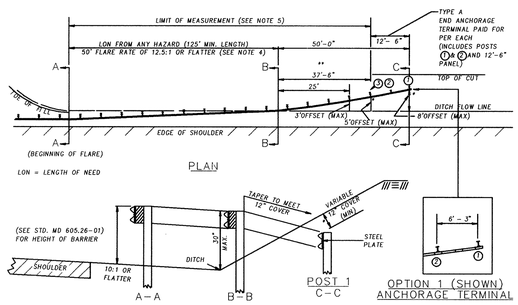

* WHEN EARTH COVER OVER POST 1 EXCEEDS 12", OFFSET DISTANCES 5' & 8' MAY BE LESSENED. HEIGHT OF THE PANEL MUST REMAIN RELATIVE TO DITCH ELEVATION.

** POSTS IN BACK OF DITCH BOTTOM MAY BE SHORTENED - MINIMUM EMBEDMENT INTO EXISTING GROUND IS 4'

SECTION

NOTES

1. ALL POSTS SHALL BE 6' IN LENGTH. POSTS 1 AND 2 SHALL BE 4'- 0" IN LENGTH.
2. THE SLOPE BACK FILL MATERIAL SHALL BE COMPACTED FIRMLY TO THE ESTABLISHED SLOPE AND STABILIZED AS DIRECTED BY THE ENGINEER.
3. THE CONTRACTOR HAS THE OPTION TO CONSTRUCT THE END ANCHORAGE TERMINAL USING ONE OF THE TWO OPTIONS. OPTION 1 - 4' STEEL POSTS (SEE STD. MD 605.01-02) OPTION 2 - CONCRETE ANCHOR BLOCK (SEE STD. MD 605.01-03)
4. LOW SPEED INSTALLATIONS REQUIRES 50 FEET (MINIMUM) USING A 9:1 FLARE RATE.
5. PAID FOR PER LINEAR FOOT OF "TRAFFIC BARRIER W BEAM USING 6 FOOT POST." THE "END ANCHORAGE TERMINAL FOR TYPE A END TREATMENT EITHER OPTION." PAID FOR PER EACH.
6. FOR ALTERNATIVE OFFSET BLOCKS SEE STD. MD 605.21 NOTE 5.

MDSHA-605.01

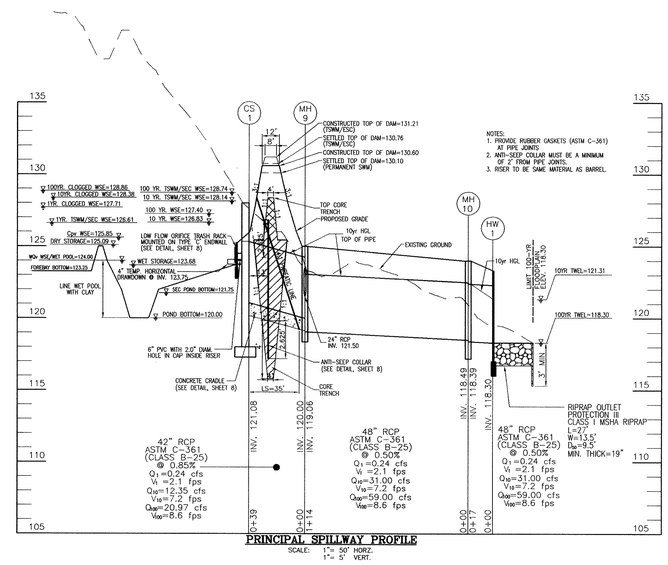

NOTES:

1. PROVIDE RUBBER GASKETS (ASTM C-361) AT PIPE JOINTS
2. ANTI-SEEP COLLAR MUST BE A MINIMUM OF 2' FROM PIPE JOINTS.
3. RISER TO BE SAME MATERIAL AS BARREL.

PRINCIPAL SPILLWAY PROFILE

SCALE: 1"= 50' HORZ. 1"= 5' VERT.

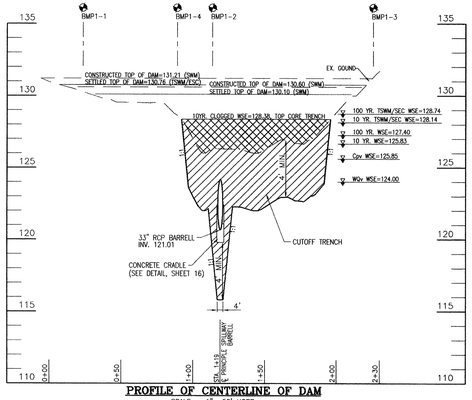

PROFILE OF CENTERLINE OF DAM

SCALE: 1"= 50' HORZ. 1"= 5' VERT.

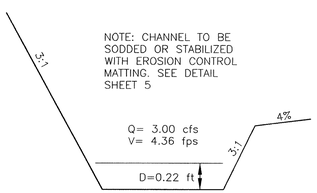

TYPICAL SWALE CROSS SECTION

NOT TO SCALE

THE SWMF TO BE OWNED BY MDSHA, AND MAINTAINED BY HOA

L. F.

OWNER/DEVELOPER

ELKRIDGE DEVELOPMENT, LLC
301 TRANSYLVANIA AVENUE
RALEIGH, NC 27609
(919) 789-9289

ELKRIDGE DEVELOPMENT NO.2, LLC
301 TRANSYLVANIA AVENUE
RALEIGH, NC 27609
(919) 789-9289

NO.	REVISION	DATE

APPROVED: HOWARD COUNTY DEPARTMENT OF PUBLIC WORKS

CHIEF, BUREAU OF HIGHWAYS — DATE 10-19-06

APPROVED: HOWARD COUNTY DEPARTMENT OF PLANNING AND ZONING

CHIEF, DEVELOPMENT ENGINEERING DIVISION — DATE 10/23/06

CHIEF, DIVISION OF LAND DEVELOPMENT — DATE 10/23/06

THESE PLANS HAVE BEEN REVIEWED FOR HOWARD SOIL CONSERVATION DISTRICT AND MEETS THE TECHNICAL REQUIREMENTS.

USDA-NATURAL RESOURCES CONSERVATION SERVICE — DATE 10/17/06

THIS DEVELOPMENT PLAN IS APPROVED FOR SOIL EROSION AND SEDIMENT CONTROL BY THE HOWARD SOIL CONSERVATION DISTRICT.

HOWARD S.C.D. — DATE 10/17/06

ENGINEER'S CERTIFICATE:

"I HEREBY CERTIFY THAT THIS PLAN FOR SEDIMENT AND EROSION CONTROL REPRESENTS A PRACTICAL AND WORKABLE PLAN BASED ON MY PERSONAL KNOWLEDGE OF THE SITE CONDITIONS AND THAT IT WAS PREPARED IN ACCORDANCE WITH THE REQUIREMENTS OF THE HOWARD SOIL CONSERVATION DISTRICT."

SIGNATURE OF ENGINEER WALTER G. ZAWISLAK, PE — DATE 10/6/06

DEVELOPER'S CERTIFICATE:

"I/WE CERTIFY THAT ALL DEVELOPMENT AND CONSTRUCTION WILL BE DONE IN ACCORDANCE TO THIS PLAN OF DEVELOPMENT FOR SEDIMENT CONTROL, AND THAT ALL RESPONSIBLE PERSONNEL INVOLVED IN THE CONSTRUCTION PROJECT WILL HAVE A CERTIFICATE OF ATTENDANCE AT A DEPARTMENT OF ENVIRONMENT APPROVED TRAINING PROGRAM FOR THE CONTROL OF SEDIMENT AND EROSION BEFORE BEGINNING THE PROJECT. I ALSO AUTHORIZE PERIODIC ON-SITE INSPECTIONS BY THE HOWARD SOIL CONSERVATION DISTRICT."

SIGNATURE OF DEVELOPER PETER G. VOELKEL — DATE 10/6/06

FINAL ROAD CONSTRUCTION PLANS

STORMWATER MANAGEMENT DETAILS, AND STORM DRAIN PROFILES

BELMONT STATION

PARCELS 'A,' 'B' & 'C' & OPEN SPACE LOT 1
REF: WP-04-152, WP-06-79, S-04-10, P-05-17, F-06-169
TAX MAP 37 BLOCK 18 — PARCEL '196, 198, 199'
1ST ELECTION DISTRICT — HOWARD COUNTY, MARYLAND

ROBERT H. VOGEL ENGINEERING, INC.
ENGINEERS • SURVEYORS • PLANNERS
8407 MAIN STREET
ELLICOTT CITY, MD 21043
TEL: 410.461.7666
FAX: 410.461.8961

STATE OF MARYLAND — WALTER GEORGE ZAWISLAK — No. 11431 — PROFESSIONAL ENGINEER — 10/6/06

DESIGN BY: WJZ
DRAWN BY: DZ
CHECKED BY:
DATE: OCTOBER 2006
SCALE: AS SHOWN
W.O. NO.: 04-08

SHEET 9 OF 14

F-06-169

THE SWMF TO BE OWNED
BY MDSHA,
AND MAINTAINED BY HOA.
L. F.

SHRUB PLANTING DETAIL

NOT TO SCALE

TYPICAL EVERGREEN TREE PLANTING DETAIL

NOT TO SCALE

TREE PLANTING AND STAKING

DECIDUOUS TREES UP TO 2-1/2" CALIPER — NOT TO SCALE

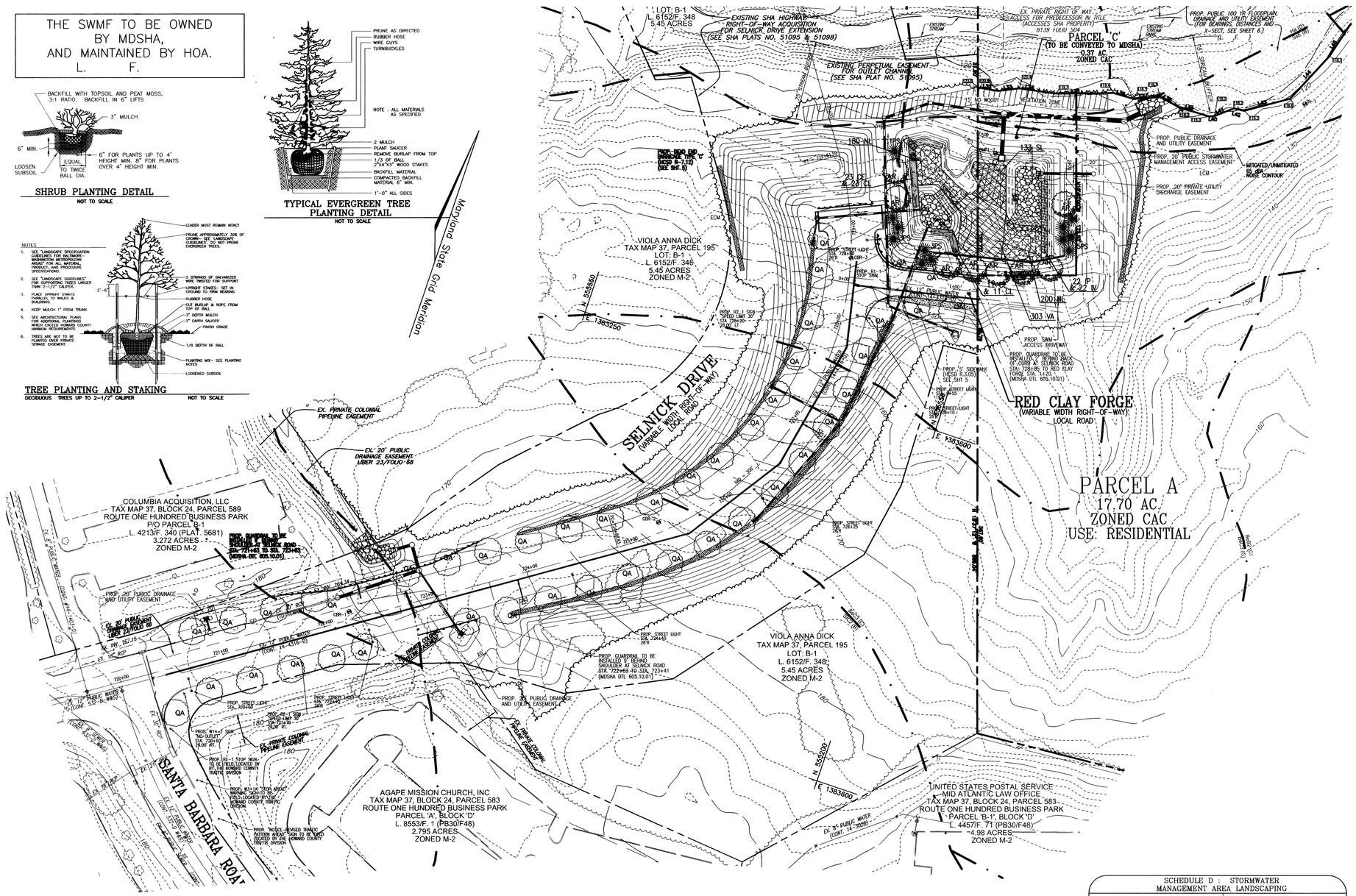

LEGEND:

- EXISTING CONTOUR
- PROPOSED CONTOUR
- PROPOSED SPOT ELEVATION
- EXISTING SPOT ELEVATION
- EXISTING CURB AND GUTTER
- PROPOSED CURB AND GUTTER
- EXISTING UTILITY POLE
- EXISTING LIGHT POLE
- EXISTING MAILBOX
- EXISTING SIGN
- EXISTING SANITARY MANHOLE
- EXISTING SANITARY LINE
- EXISTING CLEANOUT
- EXISTING FIRE HYDRANT
- EXISTING WATER LINE
- EXISTING FENCE
- PROPERTY LINE
- RIGHT-OF-WAY LINE
- M1B2 M1D3 SOILS BOUNDARY
- PROPOSED STORM DRAIN
- PROPOSED STORM DRAIN INLET
- PROPOSED SIDEWALK
- PROPOSED LIGHT POLE
- MODERATE SLOPES (15% - 24.99%)
- STEEP SLOPE (>25%)
- QA AR PROPOSED SHADE TREE
- PS PROPOSED EVERGREEN TREE
- PROPOSED STREET LIGHT

LANDSCAPE SCHEDULE NOTES:

1. ALL PLANT MATERIALS SHALL BE FULL AND HEAVY, BE WELL FORMED AND SYMMETRICAL, CONFORM TO THE MOST CURRENT AAN SPECIFICATIONS AND BE INSTALLED IN ACCORDANCE WITH LCAMW PLANTING SPECIFICATIONS.
2. MAINTENANCE TO INCLUDE MONITORING AND HAND WATERING AS NEEDED FOR THE FIRST TWO GROWING SEASONS TO ESTABLISH WOODY PLANTS. SPECIALIZED PLANTING AREAS INCLUDING FOUNDATION PLANTING OR ANNUAL BEDS MAY REQUIRE REGULAR HAND WATERING OR IRRIGATION.
3. CONTRACTOR SHALL VERIFY LOCATION OF ALL UNGERGROUND UTILITIES PRIOR TO DIGGING.
4. CONTRACTOR SHALL VERIFY PLANT QUANTITIES PRIOR TO BIDDING. IF PLAN DIFFERS FROM LANDSCAPE SCHEDULE, THE PLAN SHALL GOVERN.

GENERAL NOTES:

1. THIS PLAN HAS BEEN PREPARED IN ACCORDANCE WITH THE PROVISIONS OF SECTION 16.124 OF THE HOWARD COUNTY CODE AND THE LANDSCAPE MANUAL. THE LANDSCAPING SHOWN ON THIS PLAN IS SUBJECT TO CHANGE WITH THE SITE DEVELOPMENT PLANS FOR THE BULK PARCELS.
2. FINANCIAL SURETY FOR THE REQUIRED LANDSCAPING WILL BE POSTED AS PART OF THE DEVELOPER'S AGREEMENT IN THE AMOUNT OF $4,800.00 FOR THE REQUIRED 10 SHADE TREES AND 12 EVERGREEN TREES.
3. FINANCIAL SURETY FOR THE REQUIRED STREET TREES WILL BE POSTED AS PART OF THE DEVELOPER'S AGREEMENT IN THE AMOUNT OF $12,900.00 FOR THE REQUIRED 43 SHADE TREES.
4. PERIMETER LANDSCAPE PLANTINGS FOR BULK PARCELS 'A' & 'B' WILL BE PROVIDED WITH SITE DEVELOPMENT PLANS FOR THE RESPECTIVE PARCELS.

OWNER/DEVELOPER

ELKRIDGE DEVELOPMENT, LLC
301 TRANSYLVANIA AVENUE
RALEIGH, NC 27609
(919) 789-9289

ELKRIDGE DEVELOPMENT NO.2, LLC
301 TRANSYLVANIA AVENUE
RALEIGH, NC 27609
(919) 789-9289

NO.	REVISION	DATE

APPROVED: HOWARD COUNTY DEPARTMENT OF PUBLIC WORKS

CHIEF, BUREAU OF HIGHWAYS — DATE 10-19-06

APPROVED: HOWARD COUNTY DEPARTMENT OF PLANNING AND ZONING

CHIEF, DEVELOPMENT ENGINEERING DIVISION — DATE 10/23/06

CHIEF, DIVISION OF LAND DEVELOPMENT — DATE 10/24/06

STREET TREE CALCULATIONS

STREET NAME	LINEAR FEET	REQUIRED	PROVIDED
SELNICK DRIVE	1560	39	39
RED CLAY FORGE	162	4	4

DEVELOPER'S/BUILDER'S CERTIFICATE

I/WE CERTIFY THAT THE LANDSCAPING SHOWN ON THIS PLAN WILL BE DONE ACCORDING TO THE PLAN, SECTION 16.124 OF THE HOWARD COUNTY CODE AND THE HOWARD COUNTY LANDSCAPE MANUAL. I/WE FURTHER CERTIFY THAT UPON COMPLETION, A CERTIFICATION OF LANDSCAPE INSTALLATION, ACCOMPANIED BY AN EXECUTED ONE (1) YEAR GUARANTEE OF PLANT MATERIALS, WILL BE SUBMITTED TO THE DEPARTMENT OF PLANNING AND ZONING.

SIGNATURE OF DEVELOPER — DATE 10/6/06

LANDSCAPE SCHEDULE

KEY	QUAN.	BOTANICAL NAME	SIZE	REMARKS
AR	9	ACER RUERUM 'OCTOBER GLORY' OCTOBER GLORY RED MAPLE	2 1/2"-3" CAL.	B & B
PS	11	PINUS STROBUS EASTERN WHITE PINE	7-9' HT.	B & B
QA	43	QUERCUS ACUTISSIMA SAWTOOTH OAK	2 1/2"-3" CAL.	B & B

SCHEDULE D : STORMWATER MANAGEMENT AREA LANDSCAPING

LINEAR FEET OF PERIMETER	490 LF
CREDIT FOR EXISTING VEGETATION (NO, YES AND LINEAR FEET)	NO
CREDIT FOR OTHER LANDSCAPING (NO, YES AND %)	NO
NUMBER OF TREES REQUIRED SHADE TREES EVERGREEN TREES	(B BUFFER) 10 SHADE TREES 12 EVERGREEN TREES
NUMBER OF TREES PROVIDED SHADE TREES EVERGREEN TREES	10 SHADE TREES 12 EVERGREEN TREES

2' DEEP STORMWATER POND HERBACEOUS LANDSCAPE SCHEDULE

KEY	QUAN.	BOTANICAL NAME	SIZE	REMARKS
IP	11	Iris pseudocoris Yellow Water Iris	plug	1.5' oc
IV	11	Iris versicolor Blue Flag (wear gloves)	plug	1.5' oc
CE	34	Cyperus esculentus Yellow Nut Sedge	plug	2' oc
CL	34	Carex lacustris Lake Sedge	plug	2' oc
SL	133	Sagittaria latifolia Duck Potato (do not plant tubers)	plug	4' oc
VA	303	Vallisneria americana Wild Celery	plug	2' oc
NL	380	Nuphor luteum Spatterdock	plug	1.5' oc

PRIOR TO INSTALLATION OF PLANT MATERIALS, ADD THREE INCHES OF TOPSOIL TO PLANTING AREA. STABILIZE WITH 40 POUNDS PER ACRE OF A HYDROSEED MIX (WET MIX AND MEADOW MIX) FROM SYLVA NATIVE NURSERY OR EQUAL.
ALL PLANT MATERIALS TO CONFORM TO THE MOST CURRENT AAN SPECIFICATIONS AND BE INSTALLED IN ACCORDANCE WITH LCAMW SPECIFICATIONS.

FINAL ROAD CONSTRUCTION PLANS

PLANTING PLAN

BELMONT STATION

PARCELS 'A,' 'B' & 'C' & OPEN SPACE LOT 1
REF: WP-04-152, WP-06-79, S-04-10, P-05-17, F-06-169
TAX MAP 37 BLOCK 18 — PARCEL '196, 198, 199'
1ST ELECTION DISTRICT — HOWARD COUNTY, MARYLAND

ROBERT H. VOGEL ENGINEERING, INC.
ENGINEERS • SURVEYORS • PLANNERS
8407 MAIN STREET
ELLICOTT CITY, MD 21043
TEL: 410.461.7666
FAX: 410.461.8961

STATE OF MARYLAND — PROFESSIONAL ENGINEER

DESIGN BY: WJZ
DRAWN BY: DZ
CHECKED BY:
DATE: OCTOBER 2006
SCALE: AS SHOWN
W.O. NO.: 04-08

SHEET 10 OF 14

F-06-169

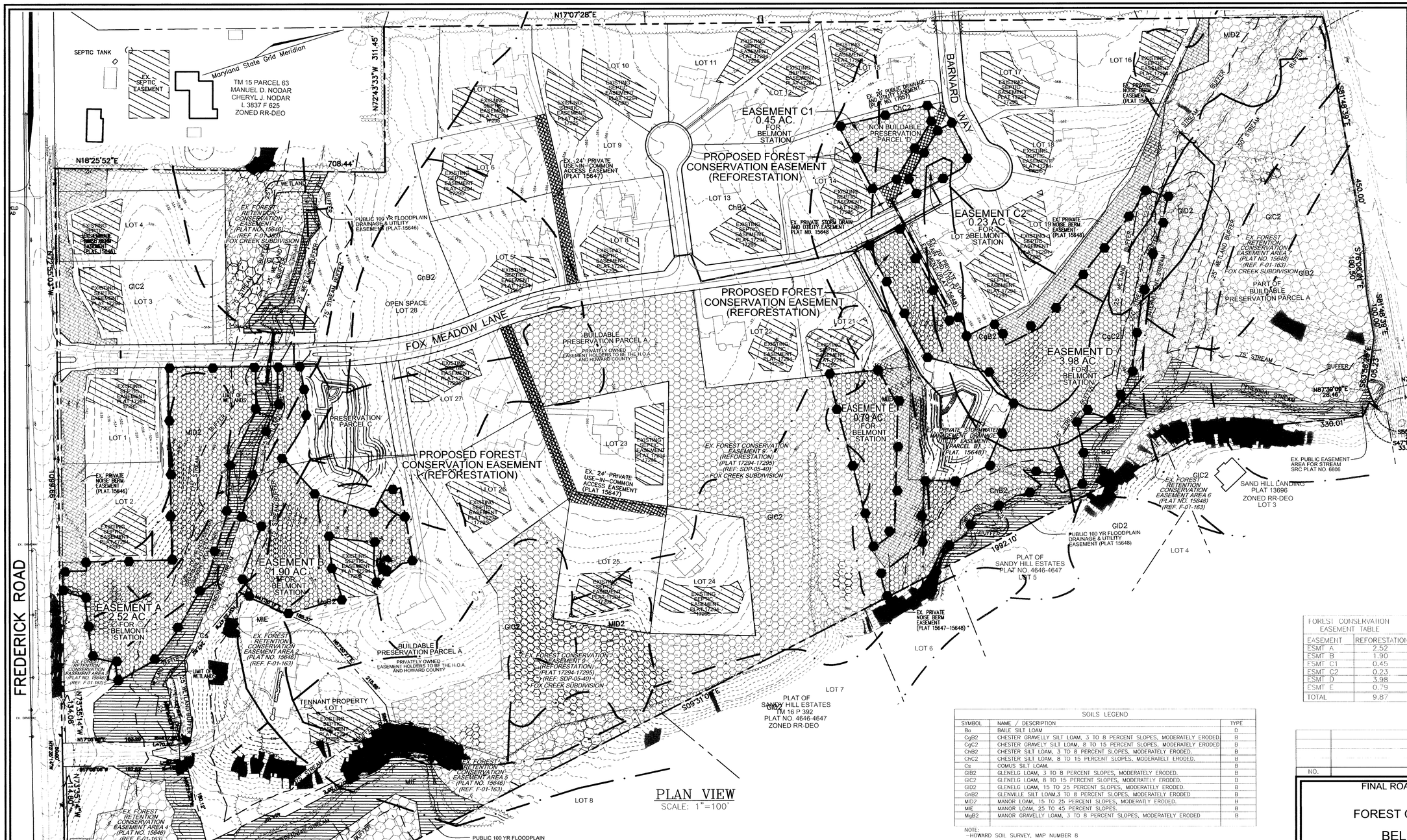

PLAN VIEW
SCALE: 1"=100'

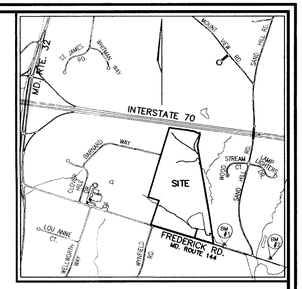

VICINITY MAP
SCALE: 1"=2000'

LEGEND

- EX. CONTOUR
- PROP. CONTOUR
- PROP. SPOT ELEVATION
- EX. SPOT ELEVATION
- EX. CURB AND GUTTER
- PROP. CURB AND GUTTER
- EX. UTILITY POLE
- EX. LIGHT POLE
- EX. MAILBOX
- EX. SIGN
- EX. SANITARY MANHOLE
- EX. SANITARY LINE
- EX. CLEANOUT
- EX. FIRE HYDRANT
- EX. WATER LINE
- PROP. STORM DRAIN
- PROP. STORM DRAIN INLET
- EX. TREES (FIELD LOCATED)
- EX. TREELINE (FIELD LOCATED)
- EX. VEGETATION (APPROXIMATE LOCATION)
- EX. FENCE
- PROPERTY LINE
- RIGHT-OF-WAY LINE
- SOILS BOUNDARY
- FOREST CONSERVATION SIGNS
- EX. FOREST CONSERVATION EASEMENT (RETENTION)
- EX. FOREST CONSERVATION EASEMENT (REFORESTATION)
- PROP. FOREST CONSERVATION EASEMENT (REFORESTATION)
- EX. PRIVATE NOISE BERM AND ENTRANCE FEATURE EASEMENT
- LIMIT OF EX. WETLANDS AND WETLANDS BUFFER
- EX. 100 YEAR FLOODPLAIN DRAINAGE AND UTILITY EASEMENT
- STREAM
- STREAM BUFFER
- EX. MODERAGE SLOPES (15-24.99%)
- EX. STEEP SLOPES (25% OR GREATER)
- EX. SEPTIC AREA
- 20' PUBLIC DRAINAGE & UTILITY EASEMENT PLAT# 15648 & 17057

FOREST CONSERVATION EASEMENT TABLE	
EASEMENT	REFORESTATION
ESMT A	2.52
ESMT B	1.90
ESMT C1	0.45
ESMT C2	0.23
ESMT D	3.98
ESMT E	0.79
TOTAL	9.87

SOILS LEGEND		
SYMBOL	NAME / DESCRIPTION	TYPE
Ba	BAILE SILT LOAM	D
CgB2	CHESTER GRAVELLY SILT LOAM, 3 TO 8 PERCENT SLOPES, MODERATELY ERODED	B
CgC2	CHESTER GRAVELLY SILT LOAM, 8 TO 15 PERCENT SLOPES, MODERATELY ERODED	B
ChB2	CHESTER SILT LOAM, 3 TO 8 PERCENT SLOPES, MODERATELY ERODED.	B
ChC2	CHESTER SILT LOAM, 8 TO 15 PERCENT SLOPES, MODERATELY ERODED.	B
Cs	COMUS SILT LOAM.	B
GIB2	GLENELG LOAM, 3 TO 8 PERCENT SLOPES, MODERATELY ERODED.	B
GIC2	GLENELG LOAM, 8 TO 15 PERCENT SLOPES, MODERATELY ERODED.	B
GID2	GLENELG LOAM, 15 TO 25 PERCENT SLOPES, MODERATELY ERODED.	B
GnB2	GLENVILLE SILT LOAM,3 TO 8 PERCENT SLOPES, MODERATELY ERODED	B
MID2	MANOR LOAM, 15 TO 25 PERCENT SLOPES, MODERATELY ERODED.	H
MIE	MANOR LOAM, 25 TO 45 PERCENT SLOPES.	B
MgB2	MANOR GRAVELLY LOAM, 3 TO 8 PERCENT SLOPES, MODERATELY ERODED	B

NOTE:
-HOWARD SOIL SURVEY, MAP NUMBER 8

NO.	REVISION	DATE

FINAL ROAD CONSTRUCTION PLANS

FOREST CONSERVATION PLAN

BELMONT STATION

PARCELS 'A,' 'B' & 'C' & OPEN SPACE LOT 1
REF: WP-04-152, WP-06-79, S-04-10, P-05-17, F-06-169
TAX MAP 37 BLOCK 18 PARCEL '196, 198, 199'
1ST ELECTION DISTRICT HOWARD COUNTY, MARYLAND

ROBERT H. VOGEL ENGINEERING, INC.
ENGINEERS • SURVEYORS • PLANNERS
8407 MAIN STREET TEL: 410.461.7666
ELLICOTT CITY, MD 21043 FAX: 410.461.8961

APPROVED: HOWARD COUNTY DEPARTMENT OF PUBLIC WORKS

CHIEF, BUREAU OF HIGHWAYS — DATE 10-19-06

APPROVED: HOWARD COUNTY DEPARTMENT OF PLANNING AND ZONING

CHIEF, DEVELOPMENT ENGINEERING DIVISION — DATE 10/24/06

CHIEF, DIVISION OF LAND DEVELOPMENT — DATE 10/24/06

DEVELOPER'S/BUILDER'S CERTIFICATE

I/WE CERTIFY THAT THE LANDSCAPING SHOWN ON THIS PLAN WILL BE DONE ACCORDING TO THE PLAN, SECTION 16.124 OF THE HOWARD COUNTY CODE AND THE HOWARD COUNTY LANDSCAPE MANUAL. I/WE FURTHER CERTIFY THAT UPON COMPLETION, A CERTIFICATION OF LANDSCAPE INSTALLATION, ACCOMPANIED BY AN EXECUTED ONE (1) YEAR GUARANTEE OF PLANT MATERIALS, WILL BE SUBMITTED TO THE DEPARTMENT OF PLANNING AND ZONING.

SIGNATURE OF DEVELOPER — DATE 10/6/06

OWNER/DEVELOPER
BELMONT STATION
(PARCELS A, B, C AND OPEN SPACE LOT 1)

ELKRIDGE DEVELOPMENT, LLC
301 TRANSYLVANIA AVENUE
RALEIGH, NC 27609
(919) 789-9289

ELKRIDGE DEVELOPMENT NO.2, LLC
301 TRANSYLVANIA AVENUE
RALEIGH, NC 27609
(919) 789-9289

OWNER- BUILDABLE
FOX CREEK
PRESERVATION PARCELS 'A' & 'D'

RICHARD W. TENNANT
MARY L. TENNANT (DECEASED)
12256 FREDERICK ROAD
ELLICOTT CITY, MARYLAND
21042

10.6.06
LARRY J. THOMPSON
DNR QUALIFIED PROFESSIONAL

FOX CREEK
PARCEL A AND PARCEL D

FOX CREEK SUBDIVISION RECORDED AS PLAT 17293-17296
DPZ FILE NUMBERS- S-00-03, F-01-163, F-01-52, P-01-01, RE-01-02, WP-01-02, F-02-44, PLAT NO. 15646-15649, F-05-119
ZONED RR-DEO

TAX MAP 15, BLOCK 12 & 18
TAX MAP 15, BLOCK 12 & 18 PARCEL '183'
3RD ELECTION DISTRICT HOWARD COUNTY, MARYLAND

STATE OF MARYLAND — REGISTERED PROFESSIONAL ENGINEER — 10/6/06

DESIGN BY:	WJZ
DRAWN BY:	DZ
CHECKED BY:	WGZ
DATE:	OCTOBER 2006
SCALE:	AS SHOWN
W.O. NO.:	04-08

SHEET 11 OF 14

F-06-169

LONG TERM FOREST MANAGEMENT

PLANTED AREAS MAY BE MANAGED FOR AESTHETICS, WILDLIFE, TIMBER PRODUCTS AND WATERSHED PROTECTION IN ACCORDANCE WITH SOUND FOREST MANAGEMENT PRACTICES. CONTROL OF INVASIVES SUCH AS MULTIFLORA ROSE AND HONEYSUCKLE WILL BE CRUCIAL DURING THE ESTABLISHMENT YEARS. A FOREST MANAGEMENT PLAN SHOULD BE DEVELOPED BY A MARYLAND REGISTERED FORESTER FOR RECOMMNEDATIONS BEYOND THE INITIAL 5-YEAR ESTABLISHMENT PERIOD.

REFORESTATION MONITORING NOTES

1. MONTHLY VISITS DURING THE FIRST GROWING SEASON ARE TO ASSESS THE SUCESS OF THE PLANTINGS AND TO DETERMINE IF SUPPLEMENTAL WATERING, PEST CONTROL OR OTHER ACTIONS ARE NECESSARY. EARLY SPRING VISITS WILL DOCUMENT WINTER KILL AND AUTUMN VISITS WILL DOCUMENT SUMMER KILL.
2. THE MINIMUM SURVIVAL RATE SHALL BE 75% OF THE TOTAL NUMBER OF TREES PLANTED PER ACRE AT THE END OF THE TWO YEAR MAINTENANCE PERIOD. WILD TREE SEEDLINGS FROM NATURAL REGENERATION ON THE PLANTING SITE MAY BE COUNTY UP TO 50% TOWARD THE TOTAL SURVIVAL NUMBER IF THEY ARE HEALTHY NATIVE SPECIES AT LEAST 12 INCHES TALL.
3. SURVIVAL WILL BE DETERMINED BY A STRATIFIED RANDOM SAMPLE OF THE PLANTINGS. THE SPECIES COMPOSITION OF THE SAMPLE POPULATION SHOUD BE PROPERTIONATE TO THE AMOUNT OF EACH SPECIES IN THE ENTIRE PLANTING TO BE SAMPLED.
4. EFFECTIVE MONITORING WILL ASSESS PLANT SURVIVABILITY DURING THE FIRST GROWING SEASON AND MAKE RECOMMENDATIONS FOR REINFORCEMENT PLANTING IF REQUIRED AT THE TIME.

REFORESTATION AREA PLANTING NOTES

1. INTIAL PLANTING INSPECTION AND CERTIFICATION REQUIRED.
2. REFORESTATION AREAS MAY BE PLANTED AS SOON AS REASONABLE TO DO SO. LATE WINTER – EARLY SPRING PLANTINGS ARE PREFERRED. EARLIEST PLANTING DATES WILL VARY FROM YEAR TO YEAR BUT PLANTING MAY GENERALLY BEGIN AS SOON AS THE GROUND IS NO LONGER FROZEN. ALTERNATE PLANTING DATES MAY BE CONSIDERED AS CONDITIONS WARRANTS.
3. SOIL AMENDMENTS AND FERTILIZATION RECOMMENDATIONS WILL BE MADE BASED UPON THE RESULTS OF SOIL ANALYSIS FOR NITROGEN, PHOSPHORUS, POTASSIUM, ORGANIC MATTER CONTENT AND PH. I IF REQUIRED, FERTILIZER WILL BE PROVIDED USING A SLOW RELEASE, SOLUBLE 16-8-16 ANALYSIS DESIGNED TO LAST 5-8 YEARS CONTAINED IN POLYETHYLENE PERFORATED BAGS SUCH AS MANUFACTURED BY ADCO WORKS, P.O. BOX 310 HOLLINS, NY 11423 OR APPROVED EQUAL.
4. PLANT MATERIALS SHALL BE PLANTED IN ACCORDANCE WITH THE PLANTING DIAGRAM, PLANTING DETAILS AND PLANTING SCHEDULE.
5. PLANT STOCK MUST BE PROTECTED FROM DESICCATION AT ALL TIMES PRIOR TO PLATING. MATERIALS HELD FOR PLANTING SHALL BE MOISTENED AND PLACED IN COOL SHADED AREAS UNTIL READY FOR PLACEMENT.
6. PLANTING MATERIALS SHALL BE NURSERY GROWN AND INSPECTED PRIOR TO PLANTING. PLANTS NOT CONFORMING TO THE AMERICAN STANDARDS FOR NURSERY STOCK SPECIFICATIONS FOR SIZE, FORM, VIGOR, OR ROOTS, OR DUE TO TRUNK WOUNDS, BREAKAGE, DESICCATION, INSECT OR DISEASE MUST BE REPLACED.
7. ALL STOCK TO BE CONTAINER GROWN WITH DEER REPELLENT TABLETS IN GROWING MEDIUM SUCH AS "REPELLEX."
8. NEWLY PLANTED TREES MAY REQUIRE WATERING AT LEAST ONCE PER WEEK DURING THE FIRST GROWING SEASON DEPENDING ON RAINFALL IN ORDER TO GET ESTABLISHED. THE INITIAL PLANTING OPERATION SHOULD ALLOW FOR WATERING DURING INSTALLATION TO COMPLETELY SOAK BACKFILL MATERIALS.
9. MULCH SHALL BE APPLIED IN ACCORDANCE WITH THE DIAGRAM PROVIDED AND SHALL CONSIST OF COMPOSTED, SHREDDED HARDWOOD BARK MULCH, FREE OF WOOD ALCOHOL.
10. PLANTING HOLES SHOULD BE EXCAVATED TO A MINIMUM DIAMETER OF 2.5 TO 3 TIMES THE DIAMETER OF THE ROOT BALL OR CONTAINER. MECHANICAL AUGURING IS PREFERRED WITH SCARIFICATION OF THE SIDES OF EACH HOLE.

PLANT SELECTION AND DENSITY SPACING REQUIREMENTS

PLANTING MATERIAL SIZE AND DENSITY PLANTING:

PLANTING SIZE AND DENSITY MAY VARY WITH A COMBINATION OF PLANTING STOCK WHICH WILL BE DETERMINED AT THE TIME OF PLANTING. PLANTING QUANTITY AND SPACING ARE BASED ON SQUARE FOOTAGE CREDIT, WHICH VARIES BY MATERIAL SIZE. A TOTAL OF 43,560 SFOF PLANTING CREDIT MUST BE FULFILLED FOR EACH ACRE PLANTED. THIS CREDIT CAN BE FULFILLED WITH ANY COMBINATION OF MATERIAL SIZE IN ACCORDANCE WITH THE FOLLOWING CHART.

PLANT MATERIAL SIZE TABLE

MATERIAL SIZE	SPACING	TPA	SF CREDIT PER PLANT	COMMENTS
2" CALIPER TREES	20' X 20'	100	435.6	B & B
1" CALIPER TREES	15' X 15'	200	217.8	B & B
SEEDLINGS OR WHIPS	11' X 11'	350	125	CONTAINER 1-3 GAL. W/ TREE SHELTERS
SEEDLINGS	8' X 8'	700	62	BARE ROOT OR CONTAINER GROWN

FOREST CONSERVATION EASEMENT TABLE	
EASEMENT	REFORESTATION
ESMT A	2.52
ESMT B	1.90
ESMT C1	0.45
ESMT C2	0.23
ESMT D	3.98
ESMT E	0.79
TOTAL	9.87

PROPOSED FOREST CONSERVATION EASEMENTS A-E: 9.88 AC

QTY	BOTANICAL NAME	COMMON NAME	MIN. SIZE	SPACING	NOTES
EASEMENT A: 2.52 AC (200 TPA) = 504					
72	ACER RUBRUM	RED MAPLE	1" CAL.	15' O.C.	1" CAL. BALLED AND BURLAPED
72	LIQUIDAMBAR STYRACIFLUA	SWEETGUM	1" CAL.	15' O.C.	
72	PLATANUS OCCIDENTALIS	SYCAMORE	1" CAL.	15' O.C.	
72	QUERCUS PALUSTRIS	PIN OAK	1" CAL.	15' O.C.	
72	CERCIS CANADENSIS	REDBUD	1" CAL.	15' O.C.	
72	CARPINUS CAROLINIANA	AMERICAN HORNBEAM	1" CAL.	15' O.C.	
72	PINUS TAEDA	LOBLOLLY PINE	1" CAL.	15' O.C.	
EASEMENT B: 1.90 AC (200 TPA) = 380					
55	ACER RUBRUM	RED MAPLE	1" CAL.	15' O.C.	1" CAL. BALLED AND BURLAPED
55	LIQUIDAMBAR STYRACIFLUA	SWEETGUM	1" CAL.	15' O.C.	
54	PLATANUS OCCIDENTALIS	SYCAMORE	1" CAL.	15' O.C.	
54	QUERCUS PALUSTRIS	PIN OAK	1" CAL.	15' O.C.	
54	CERCIS CANADENSIS	REDBUD	1" CAL.	15' O.C.	
54	CARPINUS CAROLINIANA	AMERICAN HORNBEAM	1" CAL.	15' O.C.	
54	PINUS TAEDA	LOBLOLLY PINE	1" CAL.	15' O.C.	
EASEMENT C1: 0.45 AC (200 TPA) = 90					
14	ACER RUBRUM	RED MAPLE	1" CAL.	15' O.C.	1" CAL. BALLED AND BURLAPED
14	LIQUIDAMBAR STYRACIFLUA	SWEETGUM	1" CAL.	15' O.C.	
14	PLATANUS OCCIDENTALIS	SYCAMORE	1" CAL.	15' O.C.	
12	QUERCUS PALUSTRIS	PIN OAK	1" CAL.	15' O.C.	
12	CERCIS CANADENSIS	REDBUD	1" CAL.	15' O.C.	
12	CARPINUS CAROLINIANA	AMERICAN HORNBEAM	1" CAL.	15' O.C.	
12	PINUS TAEDA	LOBLOLLY PINE	1" CAL.	15' O.C.	
EASEMENT C2: 0.23 AC (200 TPA) = 46					
7	ACER RUBRUM	RED MAPLE	1" CAL.	15' O.C.	1" CAL. BALLED AND BURLAPED
6	LIQUIDAMBAR STYRACIFLUA	SWEETGUM	1" CAL.	15' O.C.	
6	PLATANUS OCCIDENTALIS	SYCAMORE	1" CAL.	15' O.C.	
6	QUERCUS PALUSTRIS	PIN OAK	1" CAL.	15' O.C.	
6	CERCIS CANADENSIS	REDBUD	1" CAL.	15' O.C.	
6	CARPINUS CAROLINIANA	AMERICAN HORNBEAM	1" CAL.	15' O.C.	
6	PINUS TAEDA	LOBLOLLY PINE	1" CAL.	15' O.C.	
EASEMENT D: 3.98 AC (200 TPA) = 796					
115	ACER RUBRUM	RED MAPLE	1" CAL.	15' O.C.	1" CAL. BALLED AND BURLAPED
115	LIQUIDAMBAR STYRACIFLUA	SWEETGUM	1" CAL.	15' O.C.	
114	PLATANUS OCCIDENTALIS	SYCAMORE	1" CAL.	15' O.C.	
114	QUERCUS PALUSTRIS	PIN OAK	1" CAL.	15' O.C.	
114	CERCIS CANADENSIS	REDBUD	1" CAL.	15' O.C.	
114	CARPINUS CAROLINIANA	AMERICAN HORNBEAM	1" CAL.	15' O.C.	
114	PINUS TAEDA	LOBLOLLY PINE	1" CAL.	15' O.C.	
EASEMENT E: 0.79 AC (200 TPA) = 158					
24	ACER RUBRUM	RED MAPLE	1" CAL.	15' O.C.	1" CAL. BALLED AND BURLAPED
24	LIQUIDAMBAR STYRACIFLUA	SWEETGUM	1" CAL.	15' O.C.	
22	PLATANUS OCCIDENTALIS	SYCAMORE	1" CAL.	15' O.C.	
22	QUERCUS PALUSTRIS	PIN OAK	1" CAL.	15' O.C.	
22	CERCIS CANADENSIS	REDBUD	1" CAL.	15' O.C.	
22	CARPINUS CAROLINIANA	AMERICAN HORNBEAM	1" CAL.	15' O.C.	
22	PINUS TAEDA	LOBLOLLY PINE	1" CAL.	15' O.C.	
1980	TOTAL PLANTINGS				

FOREST CONSERVATION NARRATIVE

THIS FOREST CONSERVATION PLAN WAS PREPARED IN ACCORDANCE WITH THE HOWARD COUNTY FOREST CONSERVATION MANUAL.

THIS PLAN PROVIDES OFF-SITE PLANTING FOR BELMONT STATION. THE REQUIRED REFORESTATION OBLIGATION FOR THIS SUBDIVISION IS 9.83 ACRES AND WILL BE FULFILLED BY PLANTING 9.87 ACRES WITHIN SIX FOREST CONSERVATION EASEMENTS LOCATED ON THE FOX CREEK SUBDIVISION, PRESERVATION PARCELS A & D, TAX MAP 15.

PLANTINGS SHALL OCCUR USING THE STOCK SIZE SHOWN ON THE PLANTING SCHEDULE. HOWEVER IF DUE TO SEASONAL VARIABILITY THE PRESCRIBED SIZE OR SPECIES ARE NOT AVAILABLE, SUBSTITUTIONS MAY BE MADE IF APPROVED BY HOWARD COUNTY PRIOR TO INSTALLATION.

THE FOREST CONSERVATION OBLIGATION OF 9.83 ACRES OF REFORESTATION FOR THIS SUBDIVISION WILL BE MET BY PROVIDING 9.87 ACRES OF REFORESTATION FOREST CONSERVATION EASEMENTS (FCE'S A-E) OFFSITE ON BUILDABLE PRESERVATION PARCELS A & D, FOX CREEK. FOREST CONSERVATION SURETY IN THE AMOUNT OF $214,968.60 WILL BE POSTED AS PART OF THE DEVELOPER'S AGREEMENT.

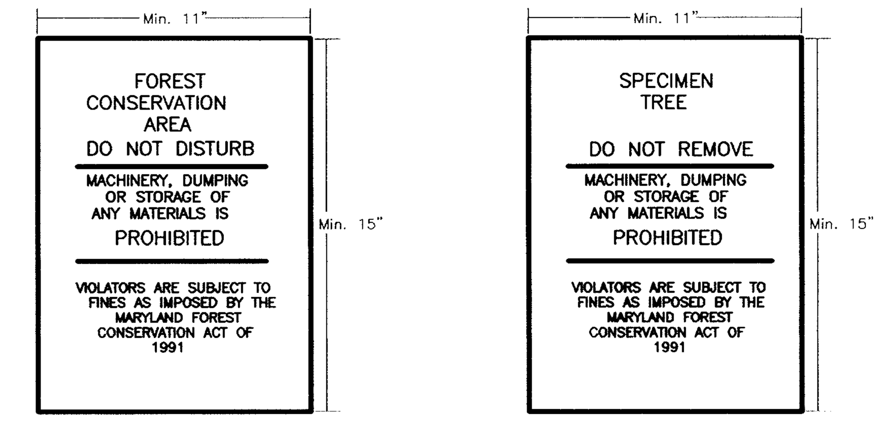

NOTE:
1. BOTTOM OF SIGNS TO BE HIGHER THAN TOP OF TREE PROTECTION FENCE.
2. SIGNS TO BE PLACED APPROXIMATELY 50-100' FEET APART. CONDITIONS ON SITE AFFECTING VISIBILITY MY WARRANT PLACING SIGNS CLOSER OR FARTHER APART.
3. ATTACHMENT OF SIGNS TO TREES IS PROHIBITED.

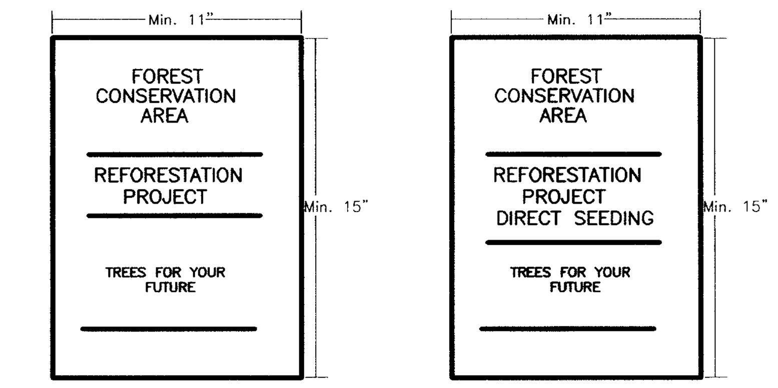

NOTE:
1. THE SIGNS NOTIFY CONSTRUCTION WORKERS AND FUTURE RESIDENTS OF THE NEWLY PLANTED MATERIAL, IMPROVING THE TREES' SURVIVAL RATES.
2. SIGNS MAY BE ADAPTED BY RESIDENTS FOR IDENTIFICATION OF FOREST RETENTION AREAS IN LONG TERM .

FOREST CONSERVATION AREA SIGNS

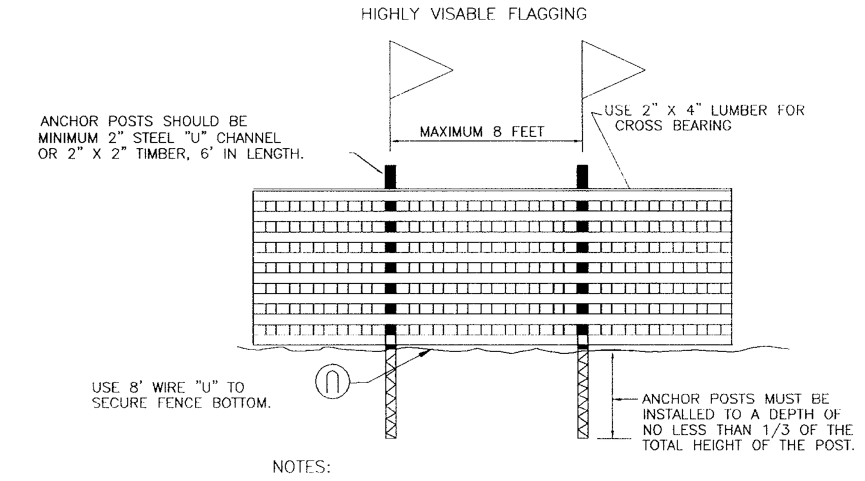

NOTES:
1. Forest protection device only.
2. Retention area will be set as part of the review process.
3. Boundaries of retention area should be staked and flagged prior to installing device.
4. Roof damage should be avoided.
5. Protection signage should be used.
6. Device should be maintained throughout construction.

BLAZE ORANGE PLASTIC MESH
TYPICAL TREE PROTECTION FENCE DETAIL
NO SCALE

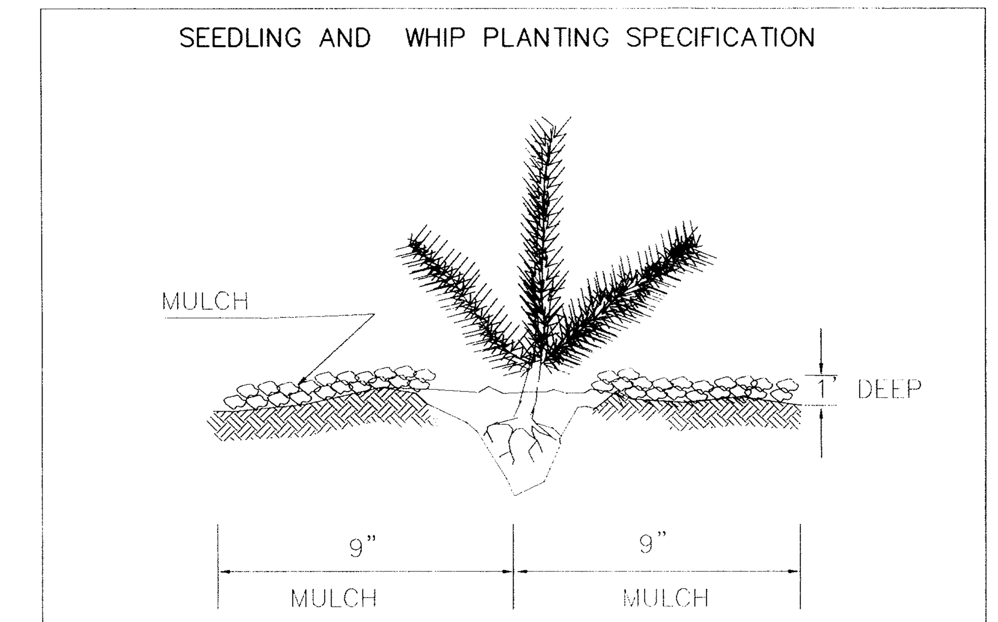

NOTE:
1. PLANT MIX TO BE 1/3 PIONEER & 2/3 MID TO LATE SUCCESSIONAL SPECIES
2. PLANT LARGER STOCK AND EVERGREENS AROUND PERIMETER TO PROTECT INTERIOR SMALLER STOCK.
3. WHEN SHRUBS ARE SPECIFIED, PLANT THEM IN CLUSTERS.
4. DO NOT PLANT TREES IN A GRID PATTERN.

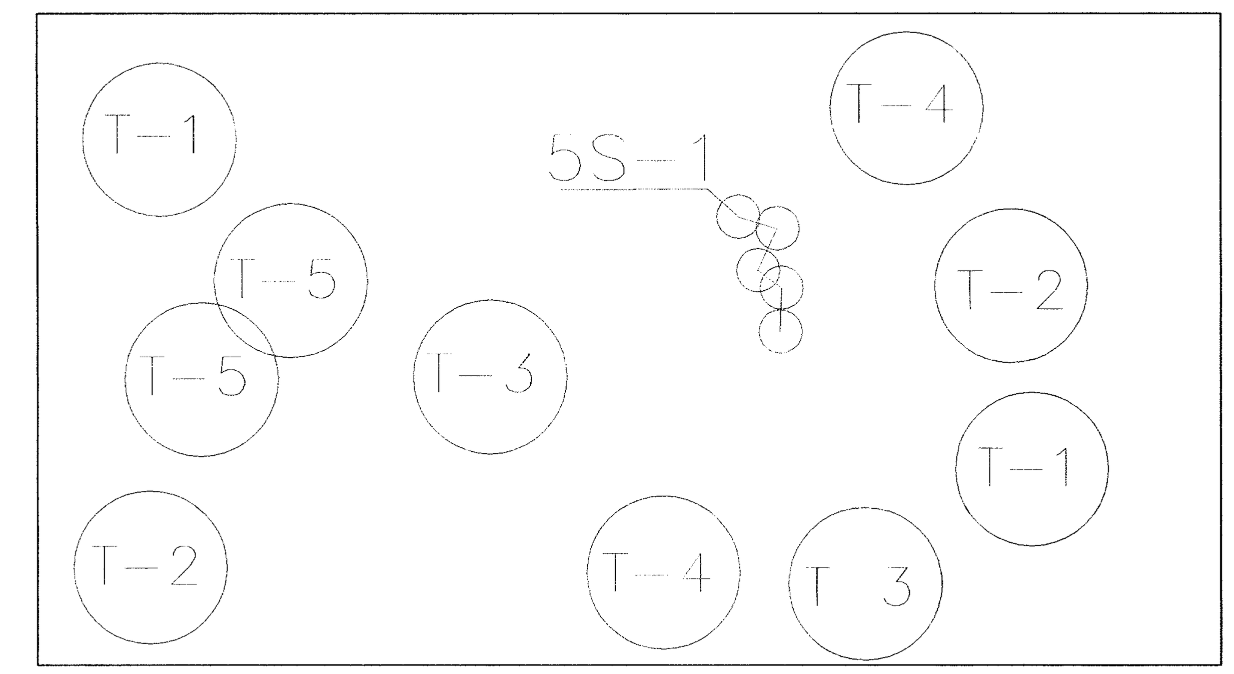

TYPICAL RANDOM PLANT SPACING DETAIL & CHART

NOTE:
1. PLANT MIX TO BE 1/3 PIONEER & 2/3 MID TO LATE SUCCESSIONAL SPECIES
2. PLANT LARGER STOCK AND EVERGREENS AROUND PERIMETER TO PROTECT INTERIOR SMALLER STOCK.
3. WHEN SHRUBS ARE SPECIFIED, PLANT THEM IN CLUSTERS
4. DO NOT PLANT TREES IN A GRID PATTERN.

DENSITY CHART

SIZE	QTY. PER ACRE	AVERAGE SPACING
2" CALIPER	100	20'x20'
1" CALIPER	200	15'x15'
WHIPS	350	11'x11'
SEEDLINGS	700	8'x8'

FOREST CONSERVATION WORKSHEET

NET TRACT AREA:

A. TOTAL TRACT AREA	27.80 AC
B. AREA WITHIN 100 YEAR FLOODPLAIN	7.00 AC
C. AREA TO REMAIN IN AGRICULTURAL PRODUCTION	0.00 AC
D. NET TRACT AREA	20.80 AC

LAND USE CATEGORY (FROM TABLE 3.2.1, PAGE 40, MANUAL)

INPUT THE NUMBER "1" UNDER THE APPROPIATE LAND USE ZONING, AND LIMIT TO ONLY ONE ENTRY.

ARA	MDR	IDA	HDR	MPD	CIA
0	0	0	1	0	0

E. AFFOREST THRESHOLD	15% X C =	3.12 AC
F. CONSERVATION THRESHOLD	20% X C =	4.16 AC

EXISTING FOREST COVER:

G. EXISTING FOREST COVER (EXCLUDING FLOODPLAIN) =	10.20 AC
H. AREA OF FOREST ABOVE AFFORESTATION THRESHOLD =	7.08 AC
I. AREA OF FOREST ABOVE CONSERVATION THRESHOLD =	6.04 AC

BREAK EVEN POINT:

H. FOREST RETENTION ABOVE THRESHOLD WITH NO MITIGATION =	5.37 AC
I. CLEARING PERMITTED WITHOUT MITIGATION =	4.83 AC

PROPOSED FOREST CLEARING:

J. TOTAL AREA OF FOREST TO BE CLEARED =	10.20 AC
K. TOTAL AREA OF FOREST TO BE RETAINED =	0.00 AC

PLANTING REQUIREMENTS:

L. REFORESTATION FOR CLEARING ABOVE CONSERVATION THRESHOLD =	1.51 AC
M. REFORESTATION FOR CLEARING BELOW CONSERVATION THRESHOLD =	8.32 AC
N. CREDIT FOR RETENTION ABOVE CONSERVATION THRESHOLD =	0.00 AC
P. TOTAL REFORESTATION REQUIRED =	9.83 AC
Q. TOTAL AFFORESTATION REQUIRED =	0.00 AC
R. TOTAL REFORESTATION AND AFFORESTATION REQUIRED =	9.83 AC

THE FOREST CONSERVATION OBLIGATIONS OF 9.83 ACRES OF REFORESTATION FOR SUBDIVISION WILL BE MET BY PROVIDING 9.87 ACRES OF REFORESTATION FOREST CONSERVATION EASEMENTS (FCE A-E) OFFSITE ON BUILDABLE PRESERVATION PARCELS A & D, FOX CREEK. FOREST CONSERVATION SURETY IN THE AMOUNT OF $214,968.60 WILL BE POSTED AS PART OF THE DEVELOPERS AGREEMENT.

10.6.06
LARRY J. THOMPSON
DNR QUALIFIED PROFESSIONAL

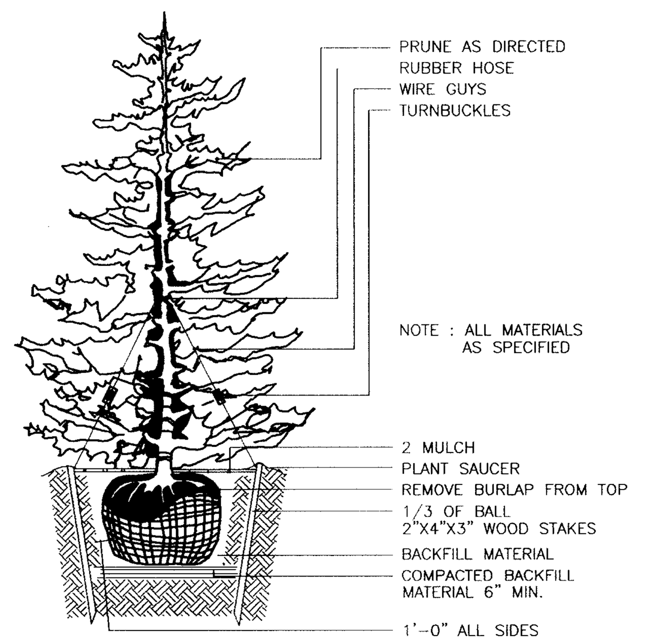

TYPICAL EVERGREEN TREE PLANTING DETAIL

NOT TO SCALE

NOTES
1. SEE "LANDSCAPE SPECIFICATION GUIDELINES FOR BALTIMORE-WASHINGTON METROPOLITAN AREAS" FOR ALL MATERIAL, PRODUCT, AND PROCEDURE SPECIFICATIONS.
2. SEE "LANDSCAPE GUIDELINES" FOR SUPPORTING TREES LARGER THAN 2-1/2" CALIPER.
3. PLACE UPRIGHT STAKES PARALLEL TO WALKS & BUILDINGS.
4. KEEP MULCH 1" FROM TRUNK
5. SEE ARCHITECTURAL PLANS FOR ADDITIONAL PLANTINGS WHICH EXCEED HOWARD COUNTY MINIMUM REQUIREMENTS.
6. TREES ARE NOT TO BE PLANTED OVER PRIVATE SEWAGE EASEMENT.

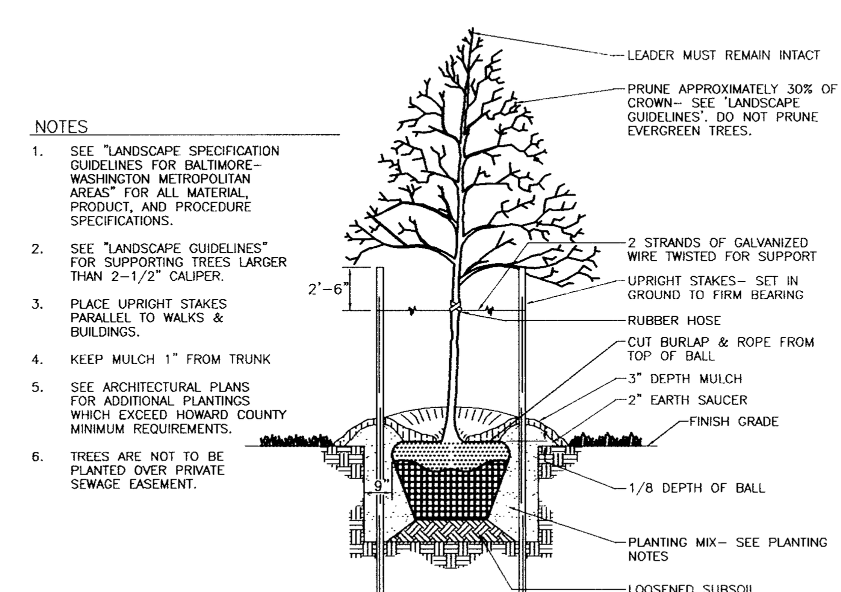

TREE PLANTING AND STAKING

DECIDUOUS TREES UP TO 2-1/2" CALIPER — NOT TO SCALE

APPROVED: HOWARD COUNTY DEPARTMENT OF PUBLIC WORKS

10-19-06
CHIEF, BUREAU OF HIGHWAYS — DATE

APPROVED: HOWARD COUNTY DEPARTMENT OF PLANNING AND ZONING

10/23/06
CHIEF, DEVELOPMENT ENGINEERING DIVISION — DATE

10/24/06
CHIEF, DIVISION OF LAND DEVELOPMENT — DATE

DEVELOPER'S/BUILDER'S CERTIFICATE

I/WE CERTIFY THAT THE LANDSCAPING SHOWN ON THIS PLAN WILL BE DONE ACCORDING TO THE PLAN, SECTION 16.124 OF THE HOWARD COUNTY CODE AND THE HOWARD COUNTY LANDSCAPE MANUAL. I/WE FURTHER CERTIFY THAT UPON COMPLETION, A CERTIFICATION OF LANDSCAPE INSTALLATION, ACCOMPANIED BY AN EXECUTED ONE (1) YEAR GUARANTEE OF PLANT MATERIALS, WILL BE SUBMITTED TO THE DEPARTMENT OF PLANNING AND ZONING.

Peter G. Voelkel — 10/6/06
SIGNATURE OF DEVELOPER — DATE

OWNER/DEVELOPER
BELMONT STATION
(PARCELS A, B, C AND OPEN SPACE LOT 1)

ELKRIDGE DEVELOPMENT, LLC
301 TRANSYLVANIA AVENUE
RALEIGH, NC 27609
(919) 789-9289

ELKRIDGE DEVELOPMENT NO.2, LLC
301 TRANSYLVANIA AVENUE
RALEIGH, NC 27609
(919) 789-9289

OWNER- BUILDABLE
FOX CREEK
PRESERVATION PARCELS 'A' & 'D'

RICHARD W. TENNANT
MARY L. TENNANT (DECEASED)
12256 FREDERICK ROAD
ELLICOTT CITY, MARYLAND
21042

FOX CREEK
PARCEL A AND PARCEL D

FOX CREEK SUBDIVISION RECORDED AS PLAT 17293-17296
DPZ FILE NUMBERS-S-00-03, F-01-163, F-01-52, P-01-01, RE-01-02, WP-01-02, F-02-44, PLAT NO. 15646-15649, F-05-119
ZONED RR-DEO

TAX MAP 15, BLOCK 12 & 18
TAX MAP 15, BLOCK 12 & 18
3RD ELECTION DISTRICT
PARCEL '183'
HOWARD COUNTY, MARYLAND

NO.	REVISION	DATE

FINAL ROAD CONSTRUCTION PLANS

FOREST CONSERVATION PLAN

BELMONT STATION

PARCELS 'A,' 'B' & 'C' & OPEN SPACE LOT 1
REF: WP-04-152, WP-06-79, S-04-10, P-05-17, F-06-169
TAX MAP 37 BLOCK 18 — PARCEL '196, 198, 199'
1ST ELECTION DISTRICT — HOWARD COUNTY, MARYLAND

ROBERT H. VOGEL ENGINEERING, INC.
ENGINEERS • SURVEYORS • PLANNERS
8407 MAIN STREET
ELLICOTT CITY, MD 21043
TEL: 410.461.7666
FAX: 410.461.8961

DESIGN BY:	WJZ
DRAWN BY:	DZ
CHECKED BY:	WGZ
DATE:	OCTOBER 2006
SCALE:	AS SHOWN
W.O. NO.:	04-08

Retaining Wall Specifications and Guidelines

Part 1: General

1.01 Description
A. Retaining walls must be constructed under the supervision of a Maryland Registered Professional Engineer.
B. Work includes preparation of foundation soils, furnishing all materials, and installing all materials to the lines and grades shown on the construction drawings.

1.02 Codes and Standards
A. "International Building Code – 2003", International Code Council, Inc.
B. "ACI Manual of Concrete Practice – Parts 1 Through 5 – 2001"
C. "Manual of Standard Practice" – Concrete Steel Reinforcing Institute
D. "American Society for Testing and Materials"

1.03 Damage, Storage, and Handling
A. The Contractor shall check the materials upon delivery to assure that the proper materials have been received.
B. The Contractor shall properly handle and store the materials to prevent damage to the materials. Damaged materials shall not be incorporated into the wall.

1.04 Quality Assurance
A. The Owner shall engage a qualified testing agency to provide observation and testing services as described below.
B. Concrete Placement
1. The agency shall inspect the formwork and reinforcing steel placement for compliance with the contract documents. Reinforcing steel should be inspected for correct size, quantity, and spacing.
2. Fresh concrete shall be sampled in accordance with ASTM C 172, and tested for slump, air entrainment, and temperature.
3. Test cylinders shall be molded in accordance with ASTM C 31. Four test cylinders shall be molded for each day's pour, or for every 100 cubic yards of concrete placed, whichever is greater.
C. Fill Placement
1. All soil fills shall be tested in accordance with ASTM D 2922.
2. A minimum of one compaction test per lift should be made per 2,500 square feet of fill lift area, but not fewer than two tests per lift should be made.
3. The elevations and locations of the field density tests should be clearly identified at the time of fill placement and compaction.

Part 2: Materials

2.01 Concrete
A. Concrete shall conform to Maryland Department of Transportation, State Highway Administration Standard Specifications for Construction and Materials, Section 414
B. Concrete shall have a minimum 28-day compressive strength of 5,000 psi.
C. Concrete shall have a maximum slump of 6 inches and shall be air entrained to 6% (+/- 1%) by volume. Concrete for foundations does not require air entrainment.
D. Concrete shall have a minimum density of 145 pcf and a maximum water-to-cement ratio of 0.50

2.02 Steel Reinforcement
A. Steel reinforcing shall conform to ASTM A-615, Grade 60.
B. Submit shop drawings at least 15 business days before date reviewed submittals will be needed. Shop drawings shall bear the contractor's stamp of approval which shall constitute that he has verified all field measurements, construction criteria, materials, and similar data, and has checked each drawing for completeness, coordination, and compliance with contract documents.

2.03 Soil Backfill
A. Material should consist of soil classified as SM, SC, or more granular, in accordance with ASTM D 2487.
B. Material should have no particle larger than 2.5 inches and shall contain at least 30 percent, by weight, retained on the U.S. No. 200 sieve.
C. Materials should have a Liquid Limit less than 45, and a Plasticity Index less than 20.
D. Material should have a minimum friction angle of 28 degrees and a minimum dry unit weight of 120 pcf.
E. The Contractor should submit samples of the proposed backfill soils to the Geotechnical Engineer of Record for approval prior to their use.

2.04 Drainage Board
A. Drainage board used behind the walls shall consist of Miradrain 9900, or an approved equivalent.

Part 3: Construction

3.01 General
A. All existing underground utilities shall be properly marked, and relocated if necessary, prior to construction.
B. All proposed underground utilities or structures in the general wall area shall be completely installed prior to the construction of the wall.
C. Protect all existing and/or new structures from damage by construction equipment. Immediately repair any damage that may occur.

3.02 Foundation
A. The wall foundation shall be excavated to the grades and lines as shown on the construction drawings. Contractor should take care not to disturb foundation soils beyond the lines and grades shown.
B. The foundation shall bear at the minimum embedment depths indicated, as measured from the final grade at the front of the wall.
C. The foundation subgrade soils shall be testing by a qualified representative of the Geotechnical Engineer to verify the availability of the design bearing pressure of 3,000 psf.
D. If unsuitable soils are encountered at design foundation levels, the unsuitable soils shall be removed and the over-excavated areas shall be replaced with compacted structural fill.

3.03 Steel Reinforcement
A. All steel reinforcing shall have a minimum clear cover of 3 inches unless otherwise noted on the contract documents.
B. Where applicable, splices for reinforcing steel shall be made by contact tension lap splices.
C. Welding and field-bending of reinforcing steel is not permitted.
D. Furnish all accessories, chairs, space bars, supports, etc. necessary to secure reinforcing.

3.04 Cast-In-Place Concrete.

A. Footing Concrete
1. The vertical faces of the footing and key excavation may be used as forms for placement of foundation concrete.
2. Foundation concrete, or protective mud mats, should be placed the same day that the foundation subgrade is approved.
3. Provide concrete protection against freezing during placement and for 5 days thereafter.

B. Wall Concrete
1. Furnish and erect concrete forms to the lines and grades shown on the construction drawings.
2. Locate construction joints as to not impair the strength of the structure, but not more than 60 feet in any direction. Provide continuous bentonite strip waterstrip at all construction joints.
3. Make stops in concrete pours using vertical bulkheads.
4. All reinforcing shall be continuous through joints and bulkheads.
5. Chamfer exposed concrete corners 3/4" by 3/4" minimum.
6. Provide 4" diameter weep holes every 8 feet along the bottom of the wall and at wall ends. The weep holes should be formed in place prior to concrete placement by using PCV pipe. Weep hole locations must not interfere with steel reinforcing, and shall be no greater than 4 inches above final grade at the front of the wall.
7. Where a fence is required, it is recommended that the fence posts be installed during wall concrete placement. The fence posts shall have a minimum of 24 inches of embedment into the wall, and be located along the center of the wall. Alternatively, provide 4 inch diameter by 24 inch deep post holes at the designated fence post locations along the centerline of the wall. The post holes should be formed in place prior to concrete placment by using PVC pipe.

3.05 Backfilling
A. All soil backfill shall conform to the material requirements of section 2.03.
B. Backfill shall be moisture conditioned to within 2 percentage points of the optimum moisture content, as determined in accordance with ASTM D-698.
C. Backfill shall be placed in loose lifts, not exceeding 8 inches in thickness, and then compacted to at least 95 percent of the maximum dry density, as determined in accordance with ASTM D-698.
D. Backfilling shall not occur against the wall until the wall concrete has attained at least 75 percent of the 28-day design strength, and no earlier than 3 days after placement.
E. Where feasible, maintain equal grades on each side of the wall during backfilling to prevent overturning and lateral movements. When the grade differential at the wall exceeds 12 inches, only hand-operated compaction equipment shall be allowed.
F. Drainage boards shall be placed against the wall, extending from the weep hole up within 12 inches of final grade at the top of the wall.

3.06 Finish

A. Refer to Architectural drawings and specifications for detailed information regarding wall finish and wall cap (if any).
B. Final grades at the wall shall be established by the Contractor in accordance with the most recent site grading plans.
C. Final grades shall be stabilized and seeded per the approved civil plans unless noted otherwise on the site grading plans.
D. Install fence at the top of the wall in accordance with project documents. If fence posts are installed subsequent to wall construction, the fence posts shall be grouted into the PVC post holes using 3,000 psi non-shrink grout.
E. See Architectural or Landscape plans and specifications for additional fence details.

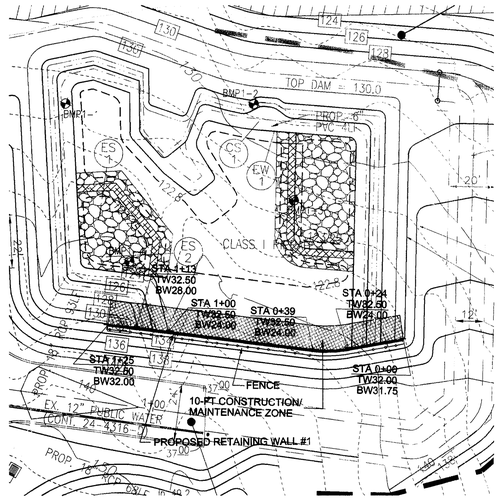

PLAN VIEW

SCALE 1"=30'

WALL #1 REINFORCEMENT	
A	#9 @ 16" O.C.
B	#5 @ 12" O.C.
C	#9 @ 16" O.C.
D	#7 @ 16" O.C.

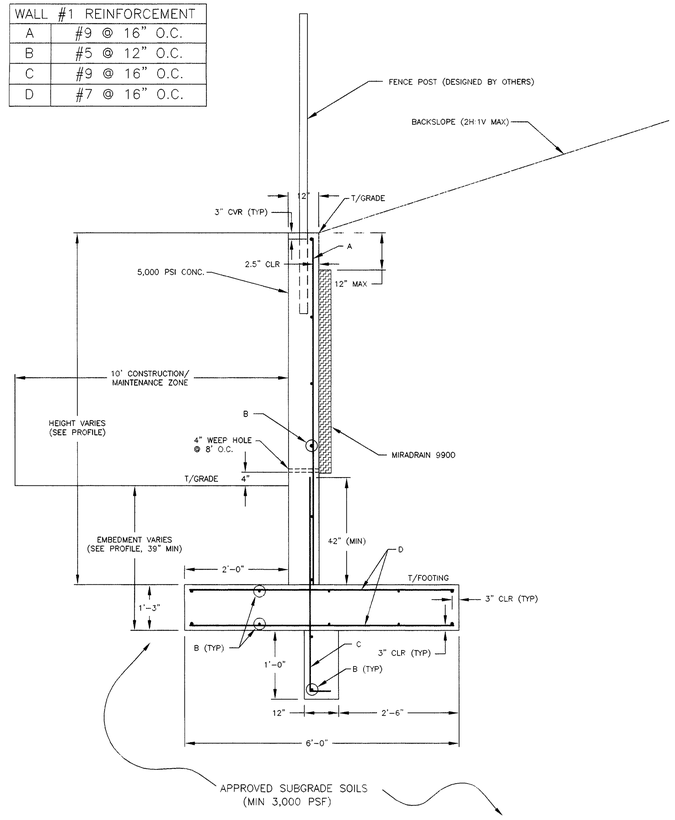

WALL #1 TYPICAL SECTION

NTS

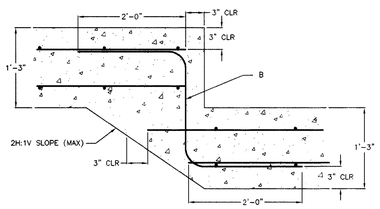

FOOTING STEP

NTS

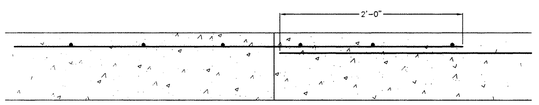

CONSTRUCTION JOINT

NTS

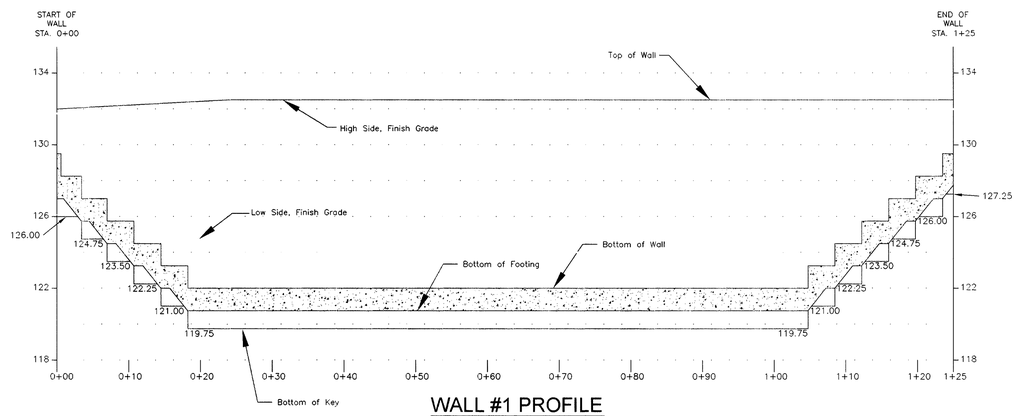

WALL #1 PROFILE

SCALE
VERTICAL SCALE 1"=4'
HORIZONTAL SCALE 1"=10'

FOR CLARITY, FENCE NOT SHOWN ON ELEVATION VIEW

OWNER/DEVELOPER

ELKRIDGE DEVELOPMENT, LLC
301 TRANSYLVANIA AVENUE
RALEIGH, NC 27609
(919) 789-9289

ELKRIDGE DEVELOPMENT NO.2, LLC
301 TRANSYLVANIA AVENUE
RALEIGH, NC 27609
(919) 789-9289

NO.	REVISIONS	DATE

BELMONT STATION

PARCELS 'A,' 'B' & 'C' & OPEN SPACE LOT 1
REF: WP-04-152, WP-06-79, S-04-10, P-05-17, F-06-169

TAX MAP 37 BLOCK 18
1ST ELECTION DISTRICT

PARCEL '196, 198, 199'
HOWARD COUNTY, MARYLAND

FINAL ROAD CONSTRUCTION PLANS

DSH	KRM	10/06/06	3417-H	13 of 14

APPROVED: HOWARD COUNTY DEPARTMENT OF PUBLIC WORKS

CHIEF, BUREAU OF HIGHWAYS — DATE 10-19-06

APPROVED: HOWARD COUNTY DEPARTMENT OF PLANNING AND ZONING

CHIEF, DEVELOPMENT ENGINEERING DIVISION — DATE 10/23/06

CHIEF, DIVISION OF LAND DEVELOPMENT — DATE 10/24/06

STATE OF MARYLAND — MICHAEL E. LEWIS — No. 13216 — REGISTERED PROFESSIONAL ENGINEER — 10/6/06

ECS MID-ATLANTIC, LLC
1340 CHARWOOD ROAD, SUITE P
HANOVER, MARYLAND 21076
OFFICE (410) 859-4300
FAX (410) 859-4324

"Setting The Standard For Service"

ECS LLC MID-ATLANTIC

F-06-169

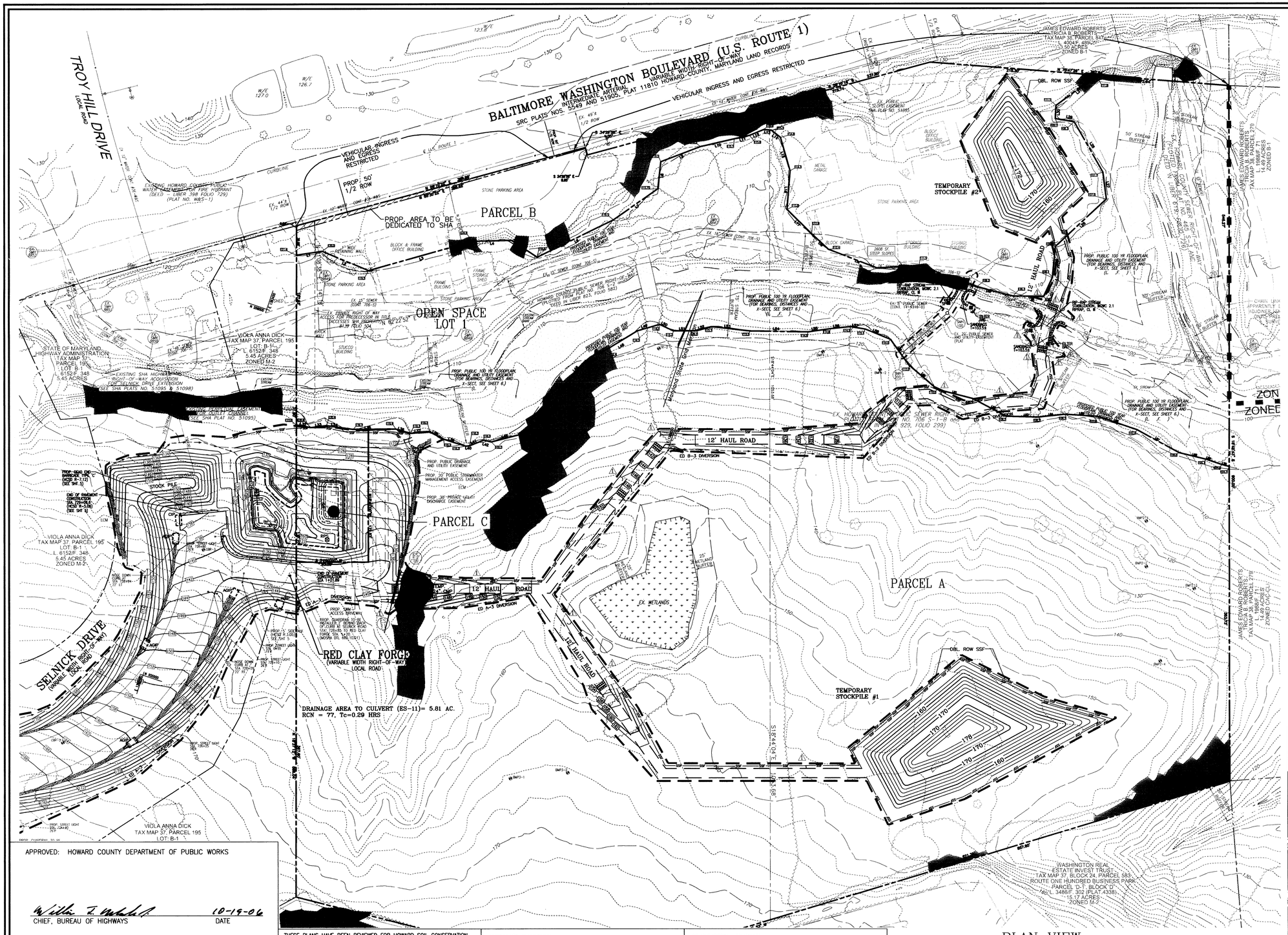

PLAN VIEW
SCALE: 1"=60

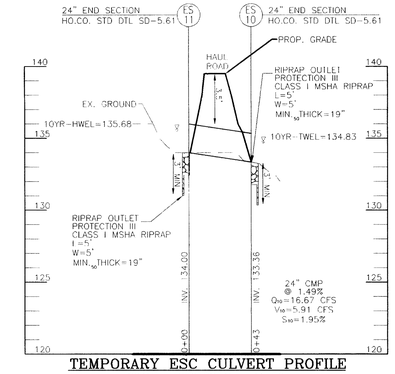

TEMPORARY ESC CULVERT PROFILE

SCALE : HORIZONTAL – 1"=50'
VERTICAL – 1"=5'

LEGEND:

- EXISTING TREELINE (FIELD LOCATED)
- EXISTING VEGETATION (APPROXIMATE LOCATION)
- EXISTING FENCE
- PROPERTY LINE
- RIGHT-OF-WAY LINE
- 598 EXISTING CONTOUR
- 406 PROPOSED CONTOUR
- SF SILT FENCE
- SSF SUPER SILT FENCE
- LOD LIMIT OF DISTURBANCE
- CIP CURB INLET PROTECTION
- AGIF AT GRADE INLET PROTECTION
- MOUNTABLE BERM
- LOCATION TO CURB SUPER SILT FENCE
- EROSION CONTROL MATING

OWNER/DEVELOPER

ELKRIDGE DEVELOPMENT, LLC
301 TRANSYLVANIA AVENUE
RALEIGH, NC 27609
(919) 789-9289

ELKRIDGE DEVELOPMENT NO.2, LLC
301 TRANSYLVANIA AVENUE
RALEIGH, NC 27609
(919) 789-9289

NO.	REVISION	DATE

FINAL ROAD CONSTRUCTION PLANS

HAUL ROAD AND TEMPORARY STOCKPILE

BELMONT STATION

PARCELS 'A,' 'B' & 'C' & OPEN SPACE LOT 1
REF: WP-04-152, WP-06-79, S-04-10, P-05-17, F-06-169
TAX MAP 37 BLOCK 18 — PARCEL '196, 198, 199'
1ST ELECTION DISTRICT — HOWARD COUNTY, MARYLAND

ROBERT H. VOGEL ENGINEERING, INC.
ENGINEERS • SURVEYORS • PLANNERS
8407 MAIN STREET
ELLICOTT CITY, MD 21043
TEL: 410.461.7666
FAX: 410.461.8961

STATE OF MARYLAND — 10/6/06

DESIGN BY:	WJZ
DRAWN BY:	DZ
CHECKED BY:	
DATE:	OCTOBER 2006
SCALE:	AS SHOWN
W.O. NO.:	04-08

SHEET 14 OF 14

APPROVED: HOWARD COUNTY DEPARTMENT OF PUBLIC WORKS

CHIEF, BUREAU OF HIGHWAYS	10-19-06 DATE

APPROVED: HOWARD COUNTY DEPARTMENT OF PLANNING AND ZONING

CHIEF, DEVELOPMENT ENGINEERING DIVISION	DATE
CHIEF, DIVISION OF LAND DEVELOPMENT	10/24/06 DATE

THESE PLANS HAVE BEEN REVIEWED FOR HOWARD SOIL CONSERVATION DISTRICT AND MEETS THE TECHNICAL REQUIREMENTS.

USDA-NATURAL RESOURCES CONSERVATION SERVICE	10/17/06 DATE

THIS DEVELOPMENT PLAN IS APPROVED FOR SOIL EROSION AND SEDIMENT CONTROL BY THE HOWARD SOIL CONSERVATION DISTRICT.

HOWARD S.C.D.	10/17/06 DATE

ENGINEER'S CERTIFICATE:

"I HEREBY CERTIFY THAT THIS PLAN FOR SEDIMENT AND EROSION CONTROL REPRESENTS A PRACTICAL AND WORKABLE PLAN BASED ON MY PERSONAL KNOWLEDGE OF THE SITE CONDITIONS AND THAT IT WAS PREPARED IN ACCORDANCE WITH THE REQUIREMENTS OF THE HOWARD SOIL CONSERVATION DISTRICT."

SIGNATURE OF ENGINEER WALTER G. ZAWISLAK, PE	10/6/06 DATE

DEVELOPER'S CERTIFICATE:

"I/WE CERTIFY THAT ALL DEVELOPMENT AND CONSTRUCTION WILL BE DONE IN ACCORDANCE TO THIS PLAN OF DEVELOPMENT FOR SEDIMENT CONTROL, AND THAT ALL RESPONSIBLE PERSONNEL INVOLVED IN THE CONSTRUCTION PROJECT WILL HAVE A CERTIFICATE OF ATTENDANCE AT A DEPARTMENT OF ENVIRONMENT APPROVED TRAINING PROGRAM FOR THE CONTROL OF SEDIMENT AND EROSION BEFORE BEGINNING THE PROJECT. I ALSO AUTHORIZE PERIODIC ON-SITE INSPECTIONS BY THE HOWARD SOIL CONSERVATION DISTRICT.

SIGNATURE OF DEVELOPER PETER G. VOELKEL	10/6/06 DATE

F-06-169

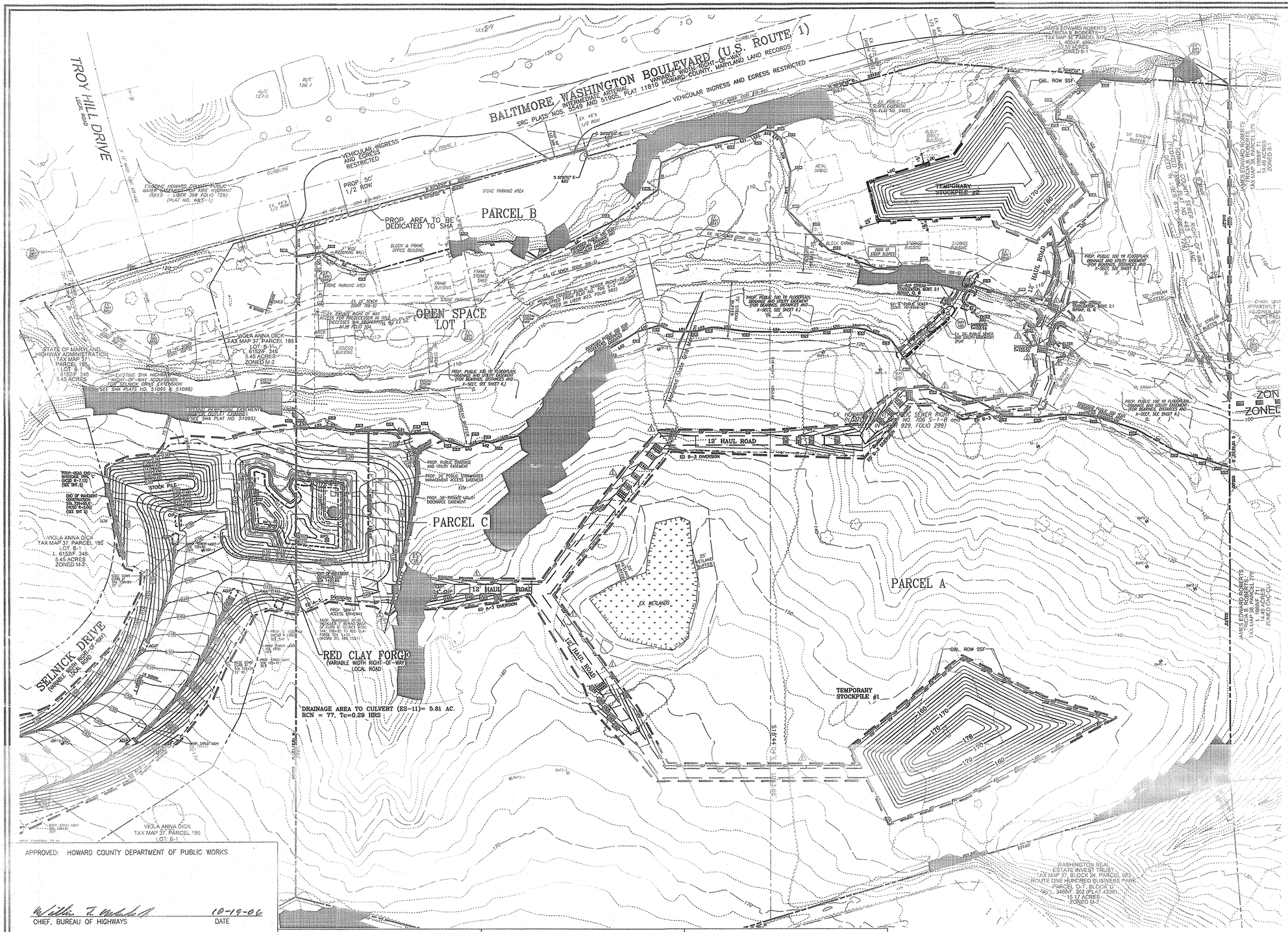

PLAN VIEW
SCALE: 1"=60'

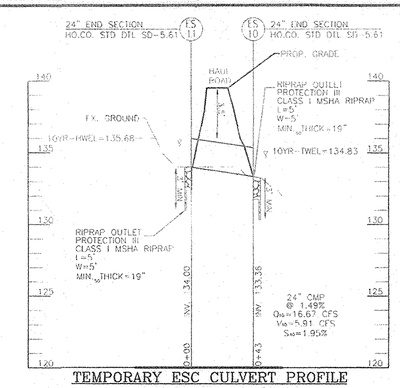

TEMPORARY ESC CULVERT PROFILE
SCALE : HORIZONTAL - 1"=50'
VERTICAL - 1"=5'

LEGEND:

- EXISTING TREELINE (FIELD LOCATED)
- EXISTING VEGETATION (APPROXIMATE LOCATION)
- EXISTING FENCE
- PROPERTY LINE
- RIGHT-OF-WAY LINE
- 200 EXISTING CONTOUR
- 406 PROPOSED CONTOUR
- SF — SF SILT FENCE
- SSF — SSF SUPER SILT FENCE
- LOD — LOD LIMIT OF DISTURBANCE
- CIP CURB INLET PROTECTION
- AGIF AT GRADE INLET PROTECTION
- MOUNTABLE BERM
- LOCATION TO CURB SUPER SILT FENCE
- EROSION CONTROL MATING

OWNER/DEVELOPER

ELKRIDGE DEVELOPMENT, LLC
301 TRANSYLVANIA AVENUE
RALEIGH, NC 27609
(919) 789-9289

ELKRIDGE DEVELOPMENT NO.2, LLC
301 TRANSYLVANIA AVENUE
RALEIGH, NC 27609
(919) 789-9289

NO.	REVISION	DATE
2	REVISE TEMPORARY STOCKPILE #2	4-30-07
1	ADD SILT FENCE TO STREAM/SEWER CONNECTION	3-20-07

FINAL ROAD CONSTRUCTION PLANS

HAUL ROAD AND TEMPORARY STOCKPILE

BELMONT STATION

PARCELS 'A,' 'B' & 'C' & OPEN SPACE LOT 1
REF: WP-04-152, WP-06-79, S-04-10, P-05-17, F-06-169
TAX MAP 37 BLOCK 18 PARCEL '196, 198, 199'
1ST ELECTION DISTRICT HOWARD COUNTY, MARYLAND

ROBERT H. VOGEL ENGINEERING, INC.
ENGINEERS • SURVEYORS • PLANNERS
8407 MAIN STREET
ELLICOTT CITY, MD 21043
TEL: 410.461.7666
FAX: 410.461.9961

STATE OF MARYLAND — 10/9/06

DESIGN BY: WJZ
DRAWN BY: DZ
CHECKED BY:
DATE: OCTOBER 2006
SCALE: AS SHOWN
W.O. NO.: 94-98

SHEET 14 OF 14

APPROVED: HOWARD COUNTY DEPARTMENT OF PUBLIC WORKS

CHIEF, BUREAU OF HIGHWAYS — DATE 10-19-06

APPROVED: HOWARD COUNTY DEPARTMENT OF PLANNING AND ZONING

CHIEF, DEVELOPMENT ENGINEERING DIVISION — DATE 10-2-06

CHIEF, DIVISION OF LAND DEVELOPMENT — DATE 10/2/06

THESE PLANS HAVE BEEN REVIEWED FOR HOWARD SOIL CONSERVATION DISTRICT AND MEETS THE TECHNICAL REQUIREMENTS.

USDA-NATURAL RESOURCES CONSERVATION SERVICE — DATE 10/2/06

THIS DEVELOPMENT PLAN IS APPROVED FOR SOIL EROSION AND SEDIMENT CONTROL BY THE HOWARD SOIL CONSERVATION DISTRICT.

HOWARD S.C.D. — DATE 10/2/06

ENGINEER'S CERTIFICATE:

"I HEREBY CERTIFY THAT THIS PLAN FOR SEDIMENT AND EROSION CONTROL REPRESENTS A PRACTICAL AND WORKABLE PLAN BASED ON MY PERSONAL KNOWLEDGE OF THE SITE CONDITIONS AND THAT IT WAS PREPARED IN ACCORDANCE WITH THE REQUIREMENTS OF THE HOWARD SOIL CONSERVATION DISTRICT."

SIGNATURE OF ENGINEER
WALTER G. ZAWISLAK, PE — DATE 10/6/06

DEVELOPER'S CERTIFICATE:

"I/WE CERTIFY THAT ALL DEVELOPMENT AND CONSTRUCTION WILL BE DONE IN ACCORDANCE TO THIS PLAN OF DEVELOPMENT FOR SEDIMENT CONTROL, AND THAT ALL RESPONSIBLE PERSONNEL INVOLVED IN THE CONSTRUCTION PROJECT WILL HAVE A CERTIFICATE OF ATTENDANCE AT A DEPARTMENT OF ENVIRONMENT APPROVED TRAINING PROGRAM FOR THE CONTROL OF SEDIMENT AND EROSION BEFORE BEGINNING THE PROJECT. I ALSO AUTHORIZE PERIODIC ON-SITE INSPECTIONS BY THE HOWARD SOIL CONSERVATION DISTRICT.

SIGNATURE OF DEVELOPER
PETER G. VOELKEL — DATE 10/6/06

F-06-169

FINAL PLAN
BELMONT STATION
SELNICK ROAD EXTENTION & P/O RED CLAY FORGE
PARCELS
'A,' 'B' & 'C' & OPEN SPACE LOT 1

SITE DATA

LOCATION: TAX MAP 37; BLOCK 18; PARCELS '196, 198, & 199'
1ST ELECTION DISTRICT
EXISTING ZONING: CAC
SUBDIVISION: BELMONT STATION
DPZ REFERENCES: S-04-10, WP-04-152, P-05-17, WP-06-79; SDP-06-034
GROSS AREA OF PARCEL: 27.76610 AC
NUMBER OF PROPOSED PARCELS: 3 PARCELS; 1 OPEN SPACE LOT
AREA OF PARCEL A: 17.69706 AC.
AREA OF PARCEL B: 3.20096 AC.
AREA OF PARCEL C: 0.37216 AC.
OPEN SPACE LOT 1 (AREA OF FLOODPLAIN): 6.46392 AC±
LAND TO BE DEDICATED TO THE STATE: 0.03200
AREA OF STEEP SLOPES: 0.90 AC
NET AREA OF PROJECT: 20.40218 AC.
AREA SHA ROW FOR SELNICK DRIVE (PLAT 51095 & 51098): 4.5 AC.
APPROXIMATE LIMIT OF DISTURBANCE: 6.84 AC (297,680 SF± INCL. HAUL ROAD & TEMP. STOCKPILE)
UNITS PERMITTED: 20.40208 AC x 25 DU/AC. = 510 UNITS
MIHU REQUIRED -- 15% OF PROPOSED UNITS
REQUIRED COMMERCIAL SPACE: 200 SQ FT PER RESIDENTIAL UNIT
318 UNITS x 200 SQ FT/UNIT = 63,600 SQ FT

GENERAL NOTES

1. ALL ASPECTS OF THE PROJECT ARE IN CONFORMANCE WITH THE LATEST HOWARD COUNTY STANDARDS UNLESS WAIVERS HAVE BEEN APPROVED
2. DEED REFERENCES: 8139/504; 3103/616
3. THE PROJECT BOUNDARY IS BASED ON A BOUNDARY SURVEY PERFORMED BY DAFT McCUNE WALKER, INC. DATED FEBRUARY 2004.
4. THE TOPOGRAPHY SHOWN HEREON IS BASED ON AN AERIAL SURVEY BY VRM DATED FEBRUARY 2004.
5. COORDINATE DATUM IS BASED ON THE MARYLAND COORDINATE SYSTEM (NAD '83) AS PROJECTED BY THE FOLLOWING HO.CO. GEODETIC CONTROL STATIONS: 38D5 & 38D6
6. WATER AND SEWER FOR THIS PROJECT TO TIE TO A PUBLIC SYSTEM
   EXISTING WATER: 14-4316-D
   EXISTING SEWER: 14-4316-D
7. STORMWATER MANAGEMENT SERVING THE PROPOSED PUBLIC ROAD AND A PORTION OF PARCEL 'A' WILL BE INCLUDED IN THIS SUBMISSION.
   WQv, Cpv, Qp, AND Qf ARE PROVIDED BY THE PROPOSED POCKET POND FACILITY.
   Rev IS PROVIDED IN THE GRASS CHANNELS OF THE SELNICK ROAD OPEN ROAD SECTION.
   THIS POCKET POND IS SUBJECT TO "DEVELOPER AGREEMENT AND MEMORANDUM OF UNDERSTANDING SELNICK DRIVE EXTENDED BY AND AMONG HOUWARD COUNTY ELKRIDGE LANDING DEVELOPMENT COMPANY, INC. AND STATE HIGHWAY ADMINSTRATION." SWM FOR THE REMAINDER OF BULK PARCEL 'A' AND 'B' WILL BE DETERMINED ON THEIR RESPECTIVE SITE DEVELOPMENT PLANS, AND WILL BE IN ACCORDANCE WITH THE 2000 MARYLAND STORMWATER DESIGN MANUAL.
8. STORMWATER MANAGEMENT SOIL BORINGS FOR THIS SITE ARE BASED ON A GEOTECHNICAL ANALYSIS PROVIDED BY ECS, LTC DATED FEBRUARY 25, 2005.
9. WETLANDS DELINEATED BY ECO-SCIENCE PROFESSIONALS, INC. DATED MAY 28, 2004.
10. STEEP SLOPES ON SITE WITH A CONTIGUOUS AREA OF 20,000 SF OR GREATER ARE SHOWN.
11. FLOODPLAIN DATA TAKEN FROM HOWARD COUNTY FLOODPLAIN STUDY AND ADJUSTED PER TOPOGRAPHY.
12. FOREST STAND DELINEATION PLAN PREPARED BY ECO-SCIENCE PROFESSIONALS, INC. DATED MAY 2004.
13. APFO TRAFFIC STUDY PREPARED BY THE TRAFFIC GROUP, DATED MAY 2004. APPROVED WITH THE S-04-10, FEB. 15, 2005.
14. THE UNMITIGATED 65dBA NOISE LINE IS SHOWN ON THESE PLANS, APPROVED 8/3/05. THE MITIGATED NOISE LINE AND WALL MITIGATION FEATURES WILL BE PROVIDED WITH THE SITE DEVELOPMENT PLAN.
15. ALL LANDSCAPING REQUIREMENTS SHALL BE COMPLIED WITH AS SET FORTH IN THE HOWARD COUNTY LANDSCAPE MANUAL.
16. SEDIMENT AND EROSION CONTROL WILL BE PROVIDED FOR THIS SITE.
17. THIS PROPERTY IS WITHIN THE METROPOLITAN DISTRICT.
18. TO THE BEST OF THE OWNERS KNOWLEDGE, THERE ARE NO BURIAL/CEMETERY LOCATIONS ON SITE.
19. TRASH COLLECTION AND RECYCLING WILL BE PRIVATE.
20. AT THE SKETCH PLAN (S-04-10) STAGE OF PROCESSING THIS PROPERTY IS IN COMPLIANCE WITH THE ROUTE 1 MANUAL FOR CAC ZONING WITH THE FOLLOWING EXCEPTIONS:
    1. THE REQUIREMENT FOR THE REQUIRED COMMERCIAL SPACE HAS BEEN REDUCED FROM 300 SQ FT TO 200 SF PER RESIDENTIAL UNIT BY THE DIRECTOR OF THE DEPARTMENT OF PLANNING AND ZONING BASED UPON THE CONDITIONS OUTLINED IN SECTION 127.5.E.3.c OF THE HOWARD COUNTY ZONING REGULATIONS.
21. THE EXISTING STRUCTURES ON THE SITE ARE TO BE REMOVED.
22. RECREATIONAL OPEN SPACE IS NOT REQUIRED FOR THIS PROJECT.
23. NO ACCESS IS PERMITTED ALONG U.S. ROUTE 1 EXCEPT FOR THE COMMERCIAL PARCEL ENTRANCE. ACCESS RESTRICTIONS TO U.S. ROUTE 1 TO BE DETERMINED WITH THE SITE DEVELOPMENT PLANS. A DEDICATION OF 0.03± ACRES WILL BE REQUIRED ALONG US ROUTE 1 FRONTAGE ASSOCIATED WITH THIS DEVELOPMENT.
24. THIS PROJECT IS SUBJECT TO COMPLIANCE WITH THE AMENDED FIFTH EDITION OF THE SUBDIVISION AND LAND DEVELOPMENT REGULATIONS.
25. THE FOREST CONSERVATION OBLIGATION OF 9.83 ACRES OF RETENTION FOR THIS SUBDIVISION WILL BE MET BY PROVIDING 9.87 ACRES OF REFORESTATION FOREST CONSERVATION EASEMENTS (FCE A-E) OFFSITE ON F-07-097 FOX CREEK, PRESERVATION PARCELS A & D, PLAT NOS. 18712-15. FOREST CONSERVATION SURETY IN THE AMOUNT OF $214,968.60 WILL BE POSTED AS PART OF THE DEVELOPER AGREEMENT.
26. NO CLEARING, GRADING OR CONSTRUCTION IS PERMITTED WITHIN THE FLOODPLAIN, STREAM(S) OR THEIR REQUIRED BUFFERS, AREAS OF STEEP SLOPES GREATER THAN OR EQUAL TO 20,000 SF, AND FOREST CONSERVATION EASEMENT AREAS, EXCEPT AS NOTED ON THESE PLANS, AND APPROVED UNDER WP-06-079..
27. THIS PLAN IS SUBJECT TO WP-04-152, DATED AUGUST 3, 2004, TO WAIVE SECTION 16.116.a.(1) AND SECTION 16.116.a.(1). THE WAIVER APPROVED REQUEST TO WAIVE SECTION 16.116.a(1) WHICH WILL ALLOW DISTURBANCE TO WETLAND AREA AND THE WETLAND BUFFER; AS SHOWN ON THE SKETCH PLAN (S-04-10). APPROVAL SUBJECT TO THE FOLLOWING CONDITIONS:
    1. THE PETITIONER SHALL OBTAIN ANY NECESSARY WETLAND PERMITS FROM THE MARYLAND DEPARTMENT OF THE ENVIRONMENT.
    THE WAIVER WAS DENIED REQUEST TO WAIVE SECTION 16.116.a.(1) WHICH PROHIBITS GRADING AND CLEARING ON SLOPES OVER 25% IN GRADE, AND OVER 20,000 SF IN CONTIGUOUS AREA. DENIAL IS BASED ON THE FOLLOWING:
    1. THE LOCATION OF THE SWM POND AND THE PARKING LOT AREA CAN BE SHIFTED TO AVOID DISTURBANCE TO THE STEEP SLOPE AREA, WHICH IS PART OF A SENSITIVE ENVIRONMENTAL AREA ASSOCIATED WITH THE STREAM VALLEY SYSTEM ON THE SUBJECT SITE AND EXTENDING ONTO THE ADJOINING PROPERTY. THE JUSTIFICATION PRESENTED DOES NOT DEMONSTRATE THAT THERE IS AN UNDO HARDSHIP ON THE PETITIONER IN COMPLYING WITH THE REGULATIONS, NOR DOES IT DEMONSTRATE THAT THERE ARE NO REASONABLE ALTERNATIVES TO THE PROPOSED SITE LAYOUT.
28. LANDSCAPE BUFFERING, LANDSCAPE WALLS AND/OR EARTH BERMS WILL BE PROVIDED TO SCREEN THE RETAIL PARKING AREA ALONG ROUTE 1. THESE WILL BE DETERMINED WITH THE SITE DEVELOPMENT PLANS FOR BULK PARCELS 'A' & 'B'.
29. THE ENVIRONMENTAL DISTURBANCE ASSOCIATED WITH THE SIDEWALK/PATHWAY SYSTEM AND POND OUTFALL LOCATION ARE CONSIDERED "NECESSARY" DISTURBANCE IN ACCORDANCE WITH SECTION 16.116 OF HOWARD COUNTY SUBDIVISION AND LAND DEVELOPMENT REGULATIONS.
30. WAIVER PETITION WP-06-079, APPROVED MARCH 1, 2006, TO PERMIT CLEARING, GRADING ANDDEVELOPMENT WITHIN 75 FEET OF A PERENNIAL STREAM IN THE RESIDENTIAL LAND USE AREA (PARCEL A) OF A MIXED USE (CAC) ZONING DISTRICT. APPROVAL IS SUBJECT TO THE FOLLOWING CONDITION:
    1. THE AREA OR LIMIT OF DISTURBANCE WITHIN 75' STREAM BUFFER ON PARCEL A SHALL NOT EXCEED THE ONE SHOWN ON THE WAIVER PETITION EXHIBIT/PLAN SUBMITTED ON 2/13/06.
31. FINANCIAL SURETY FOR THE REQUIRED LANDSCAPING WILL BE POSTED AS PART OF THE DEVELOPER'S AGREEMENT IN THE AMOUNT OF $4,800.00 FOR THE REQUIRED 10 SHADE TREES AND 12 EVERGREEN TREES. FINANCIAL SURETY FOR THE REQUIRED STREET TREES WILL BE POSTED AS PART OF THE DEVELOPER'S AGREEMENT IN THE AMOUNT OF $12,900.00 FOR THE REQUIRED 43 SHADE TREES.
32. ANY 95% COMPACTION OF FILL AREAS SHALL BE IN ACCORDANCE WITH AASHTO T-180 STANDARDS.
33. TRAFFIC CONTROL DEVICES, MARKINGS AND SIGNING SHALL BE IN ACCORDANCE WITH THE LATEST EDITION OF THE MANUAL OF UNIFORM TRAFFIC CONTROL DEVICES (MUTCD). ALL STREET AND REGULATORY SIGNS SHALL BE IN PLACE PRIOR TO PLACEMENT OF ANY ASPHALT.
34. STREET LIGHT PLACEMENT AND TYPE OF FIXTURE AND POLE SHALL BE IN ACCORDANCE WITH THE HOWARD COUNTY DESIGN MANUAL, VOLUME III (1993) AND AS MODIFIED BY "GUIDELINES FOR STREET LIGHTS IN RESIDENTIAL DEVELOPMENTS (JUNE 1993). A MINIMUM SPACING OF 20' SHALL BE MAINTAINED BETWEEN ANY STREET LIGHT AND ANY TREE.
35. ALL SIGN POSTS USED FOR TRAFFIC CONTROL SIGNS INSTALLED IN THE COUNTY RIGHT OF WAY SHALL BE MOUNTED ON A 2" GALVANIZED STEEL, PERFORATED, SQUARE TUBE POST (14 GAUGE) INSERTED INTO A 2-1/2" GALVANIZED STEEL, PERFORATED SQUARE TUBE SLEEVE (12 GAUGE)-3' LONG. A GALVANIZED STEEL POLE CAP SHALL BE MOUNTED ON TOP OF EACH POST.
36. THIS PLAN IS SUBJECT TO MDE APPLICATION TRACKING NO. 20046044/03-NT-0489 DATED AUGUST 15, 2006. THIS MDE APPLICATION COVERS FILLING OF THE WETLANDS IN THE MIDDLE OF BULK PARCEL 'A', THE STREAM CROSSING FOR THE SEWER CONNECTION, THE REMOVAL OF THE STREAM CULVERT, AND THE RECREATION TRAIL.

APPROVED: HOWARD COUNTY DEPARTMENT OF PUBLIC WORKS

William F. Malik [signature] — 10-19-06
CHIEF, BUREAU OF HIGHWAYS — DATE

APPROVED: HOWARD COUNTY DEPARTMENT OF PLANNING AND ZONING

[signature] — 10/23/06
CHIEF, DEVELOPMENT ENGINEERING DIVISION — DATE

Cindy Hamilton [signature] — 10/24/06
CHIEF, DIVISION OF LAND DEVELOPMENT — DATE

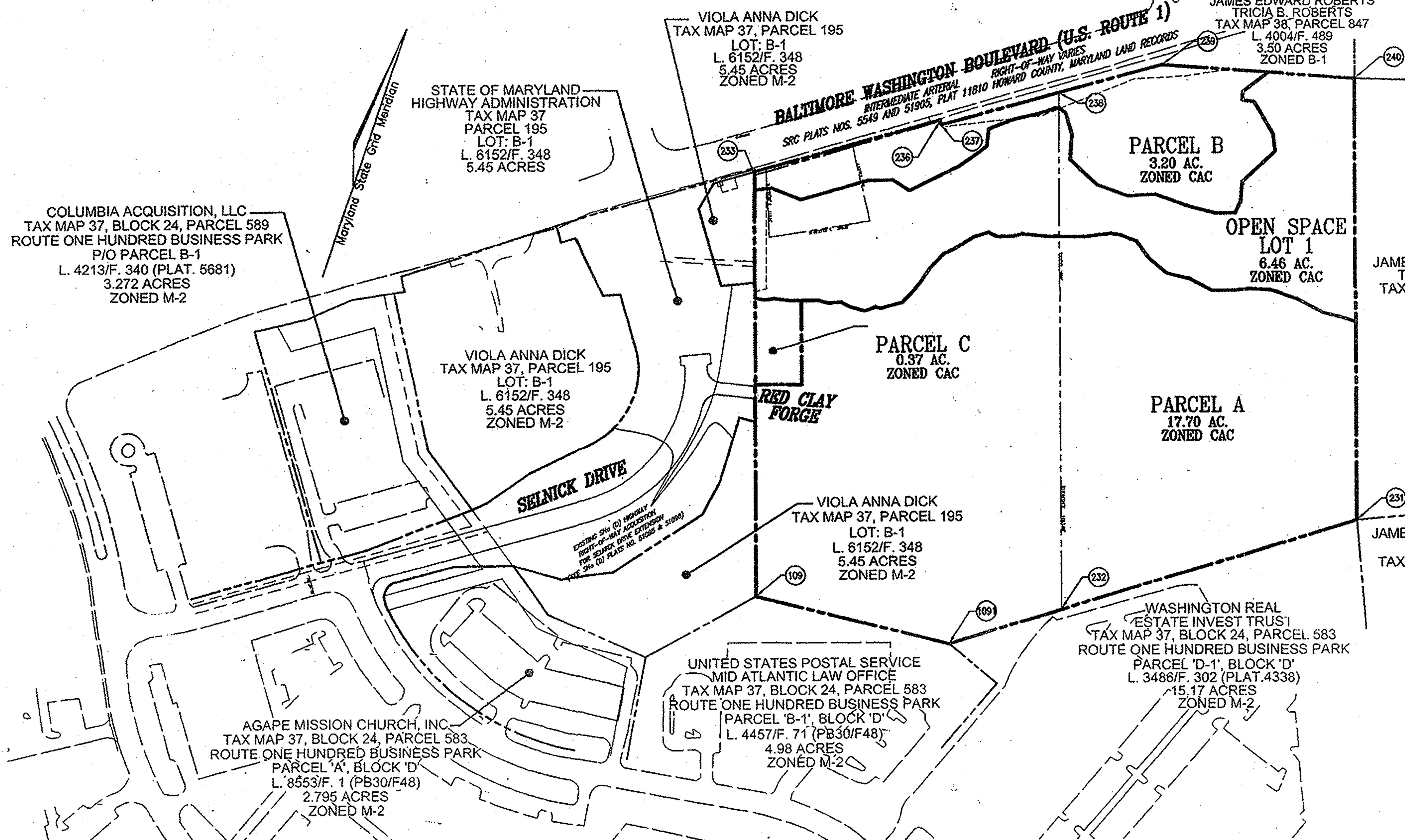

LOCATION MAP
SCALE: 1"=100'

BENCHMARKS

HOWARD COUNTY BENCHMARK 38D5
N 558,378.575 E 1,386,524.158 ELEV.: 193.726'
HOWARD COUNTY BENCHMARK 38D6
N 557,155.459 E 1,384,992.262 ELEV.: 175.228'

LEGEND

Existing Contour
Proposed Contour — 82 —
Existing Spot Elevation
Proposed Spot Elevation +82.53
Direction of Flow
Existing Trees to Remain
Light Poles — Single Overhead — Double Overhead
Concrete

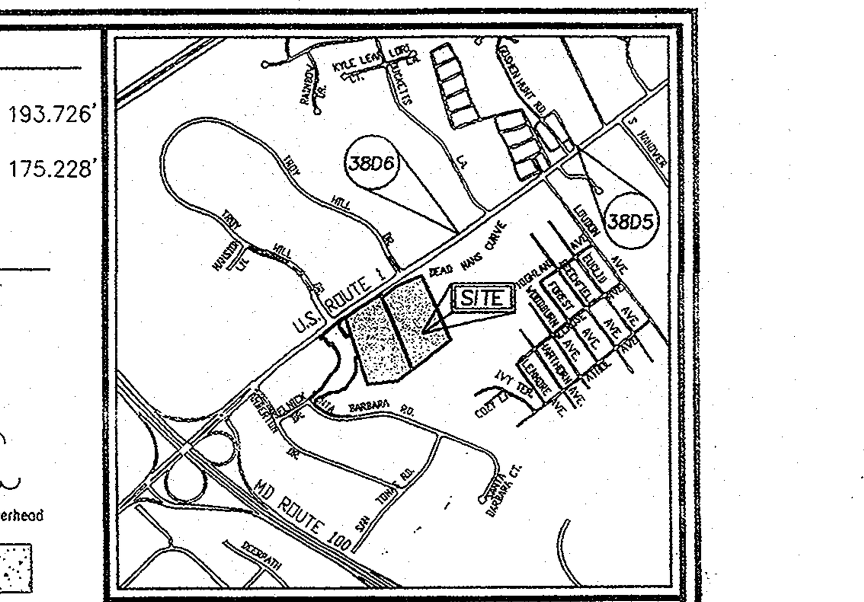

VICINITY MAP
SCALE: 1"=2000'

HOUSING UNIT ALLOCATION		
JULY 1, 2007	JULY 1, 2008	JULY 1, 2009
110	101	107

PHASING TABULATION AS APPROVED WITH S-04-10

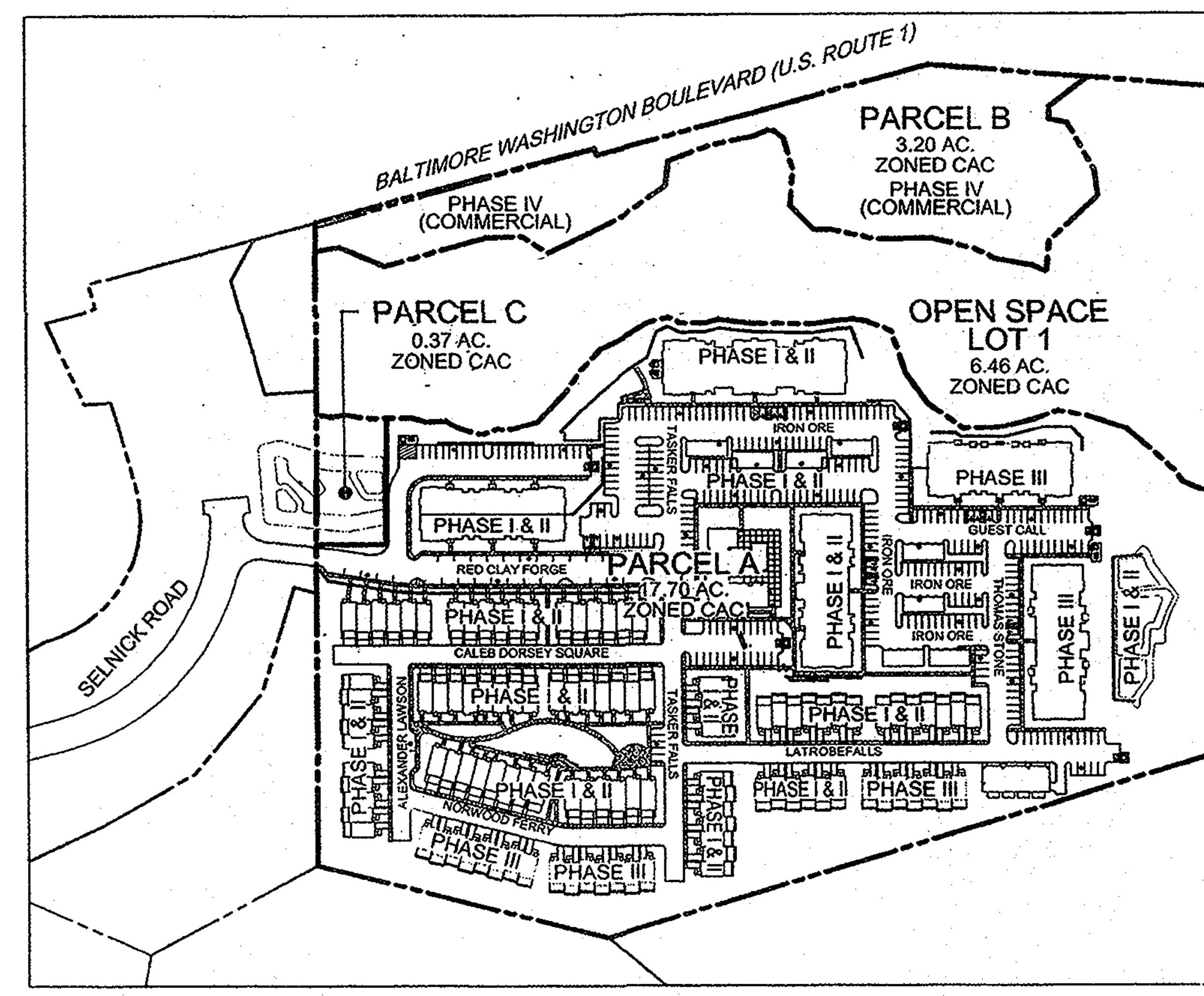

PHASING PLAN
SCALE: 1"=100'

OWNER/DEVELOPER

ELKRIDGE DEVELOPMENT, LLC
301 TRANSYLVANIA AVENUE
RALEIGH, NC 27609
(919) 789-9289

ELKRIDGE DEVELOPMENT NO.2, LLC
301 TRANSYLVANIA AVENUE
RALEIGH, NC 27609
(919) 789-9289

COORDINATE CHART

No.	Northing	Easting
109	555291.2125	1383729.3512
231	555820.8776	1384826.1141
232	555460.0422	1384320.2754
233	556109.0173	1383453.8130
236	556329.0853	1383774.1188
237	556321.9546	1383779.0196
238	556457.8979	1383981.8512
239	556578.0032	1384161.0698
240	556673.2237	1384537.1398
1091	555322.8440	1384127.9435

BEST MANAGEMENT PRACTICES FOR WORKING IN NONTIDEL WETLANDS, WETLAND BUFFERS, WATERWAYS, AND 100-YEAR FLOODPLAINS

1. NO EXCESS FILL, CONSTRUCTION MATERIAL, OR DEBRIS SHALL BE STOCKPILED OR STORED IN NONTIDAL WETLANDS, NONTIDAL WETLAND BUFFERS, WATERWAYS, OR THE 100-YEAR FLOODPLAIN.
2. PLACE MATERIALS IN A LOCATION AND MANNER THAT DOES NOT ADVERSELY IMPACT SURFACE OR SUBSURFACE WATER FLOW INTO OR OUT OF NONTIDAL WETLANDS, NONTIDAL WETLAND BUFFERS, WATERWAYS, OR THE 100-YEAR FLOODPLAIN.
3. DO NOT USE THE EXCAVATED MATERIAL AS BACKFILL IF IT CONTAINS WASTE METAL PRODUCTS, UNSIGHTLY DEBRIS, TOXIC MATERIAL, OR ANY OTHER DELETERIOUS SUBSTANCE. IF ADDITIONAL BACKFILL IS REQUIRED, USE CLEAN MATERIAL FREE OF WASTE METAL PRODUCTS, UNSIGHTLY DEBRIS, TOXIC MATERIAL, OR ANY OTHER DELETERIOUS SUBSTANCE.
4. PLACE HEAVY EQUIPMENT ON MATS OR SUITABLY OPERATE THE EQUIPMENT TO PREVENT DAMAGE TO NONTIDAL WETLANDS, NONTIDAL WETLAND BUFFERS, WATERWAYS, OR THE 100-YEAR FLOODPLAIN.
5. REPAIR AND MAINTAIN ANY SERVICEABLE STRUCTURE OR FILL SO THERE IS NO PERMANENT LOSS OF NONTIDAL WETLANDS, NONTIDAL WETLAND BUFFERS, OR WATERWAYS, OR PERMANENT MODIFICATION OF THE 100-YEAR FLOODPLAIN IN EXCESS OF THAT LOST UNDER THE ORIGINALLY AUTHORIZED STRUCTURE OR FILL.
6. RECTIFY ANY NONTIDAL WETLANDS, WETLAND BUFFERS, WATERWAYS, OR 100-YEAR FLOODPLAIN TEMPORARILY IMPACTED BY ANY CONSTRUCTION.
7. ALL STABILIZATION IN THE NONTIDAL WETLAND AND NONTIDAL WETLAND BUFFER SHALL CONSIST OF THE FOLLOWING SPECIES: ANNUAL RYEGRASS (LOLIUM MULTIFLORUM), MILLET (SETARIA ITALICA), BARLEY (HORDEUM SP.), OATS (UNIOLA SP.), AND/OR RYE (SECALE CEREALE). THESE SPECIES WILL ALLOW FOR THE STABILIZATION OF THE SITE WHILE ALSO ALLOWING FOR THE VOLUNTARY REVEGETATION OF THE NATURAL WETLAND SPECIES. OTHER NON-PERSISTENT VEGETATION MAY BE ACCEPTABLE, BUT MUST BE APPROVED BY THE NONTIDAL WETLANDS AND WATERWAYS DIVISION. KENTUCKY 31 FESCUE SHALL NOT BE UTILIZED IN WETLAND OR BUFFER AREAS. THE AREA SHOULD BE SEEDED AND MULCHED TO REDUCE EROSION AFTER CONSTRUCTION ACTIVITIES HAVE BEEN COMPLETED.
8. AFTER INSTALLATION HAS BEEN COMPLETED, MAKE POST-CONSTRUCTION GRADES AND ELEVATIONS THE SAME AS THE ORIGINAL GRADES AND ELEVATIONS IN THE TEMPORALITY IMPACTED AREAS.
9. TO PROTECT AQUATIC SPECIES, IN-STREAM WORK IS PROHIBITED AS DETERMINED BY THE CLASSIFICATION OF THE STREAM: USE I WATERS: IN-STREAM WORK SHALL NOT BE CONDUCTED DURING THE PERIOD MARCH 1 THROUGH JUNE 15, INCLUSIVE DURING ANY YEAR.
10. STORMWATER RUNOFF FROM IMPERVIOUS SURFACES SHALL BE CONTROLLED TO PREVENT THE WASHING OF DEBRIS INTO THE WATERWAY.
11. CULVERTS SHALL BE CONSTRUCTED AND ANY RIPRAP PLACED SO AS NOT TO OBSTRUCT THE MOVEMENT OF AQUATIC SPECIES, UNLESS THE PURPOSE OF THE ACTIVITY IS TO IMPOUND WATER.

SHEET INDEX

DESCRIPTION	SHEET NO.
COVER SHEET	1 OF 14
ROAD PLAN	2 OF 14
ROAD PROFILE	3 OF 14
GRADING AND SEDIMENT CONTROL PLAN	4 OF 14
SEDIMENT AND EROSION CONTROL NOTES AND DETAILS	5 OF 14
STORM DRAIN DRAINAGE AREA MAP	6 OF 14
STORM DRAIN PROFILES	7 OF 14
STORMWATER MANAGEMENT NOTES AND DETAILS	8 OF 14
STORMWATER MANAGEMENT DETAILS	9 OF 14
LANDSCAPE PLAN	10 OF 14
OFFSITE FOREST CONSERVATION PLAN	11 OF 14
OFFSITE FOREST CONSERVATION NOTES AND DETAILS	12 OF 14
RETAINING WALL PLAN AND DETAILS	13 OF 14
HAUL ROAD AND TEMPORARY STOCKPILES	14 OF 14

NO.	REVISION	DATE
2	REVISE TEMPORARY STOCKPILE #2 AND GENERAL NOTE 25	4-30-07
1	ADD BEST MANAGEMENT PRACTICES	4-20-07

FINAL ROAD CONSTRUCTION PLANS

COVER SHEET

BELMONT STATION
PARCELS 'A,' 'B' & 'C' & OPEN SPACE LOT 1
REF: WP-04-152, WP-06-79, S-04-10, P-05-17, F-06-169
TAX MAP 37 BLOCK 18 — PARCEL '196, 198, 199'
1ST ELECTION DISTRICT — HOWARD COUNTY, MARYLAND

ROBERT H. VOGEL ENGINEERING, INC.
ENGINEERS • SURVEYORS PLANNERS
8407 MAIN STREET
ELLICOTT CITY, MD 21043
TEL: 410.461.7666
FAX: 410.461.8961

STATE OF MARYLAND — WALTER GEORGE ZAWISTOWSKI — No. 32933 — PROFESSIONAL ENGINEER [seal] 10/16/06

DESIGN BY: WJZ
DRAWN BY: DZ
CHECKED BY:
DATE: OCTOBER 2006
SCALE: AS SHOWN
W.O. NO.: 04-08

SHEET 1 OF 14

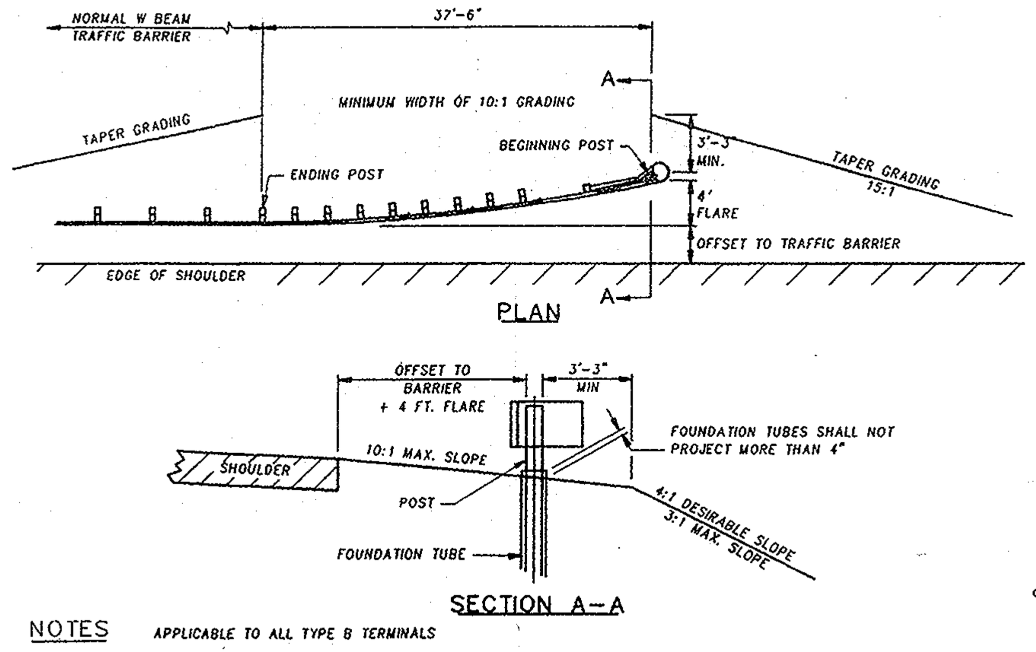

NOTES APPLICABLE TO ALL TYPE B TERMINALS

1. 6:1 MAX GRADING IS ALLOWABLE WHEN THE BARRIER IS LOCATED 12 FT. OR MORE FROM THE OUTSIDE EDGE OF SHOULDER.
2. ADD DELINEATION ON END OF TREATMENT AS DIRECTED BY THE OFFICE OF TRAFFIC AND SAFETY.
3. 4' FLARE REQUIRED
4. TYPE B TERMINAL SHALL ONLY BE USED WHEN THE GRADING AS SHOWN AND THE REQUIRED LENGTH OF NEED IS PROVIDED.

MDSHA-605.02

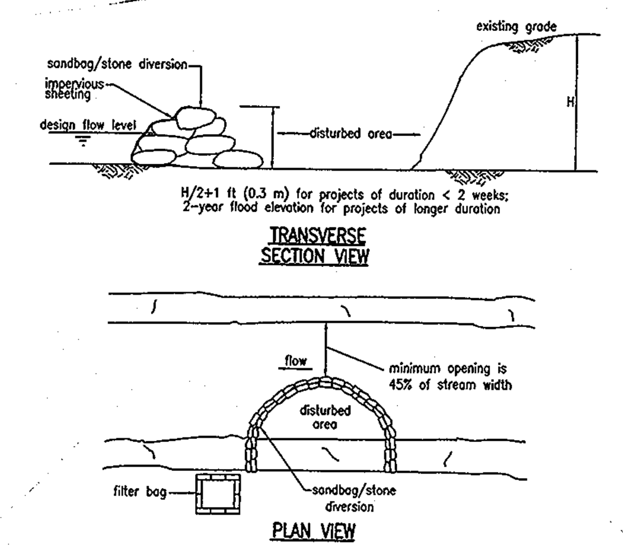

MGWC 1.5: SANDBAG/STONE DIVERSION

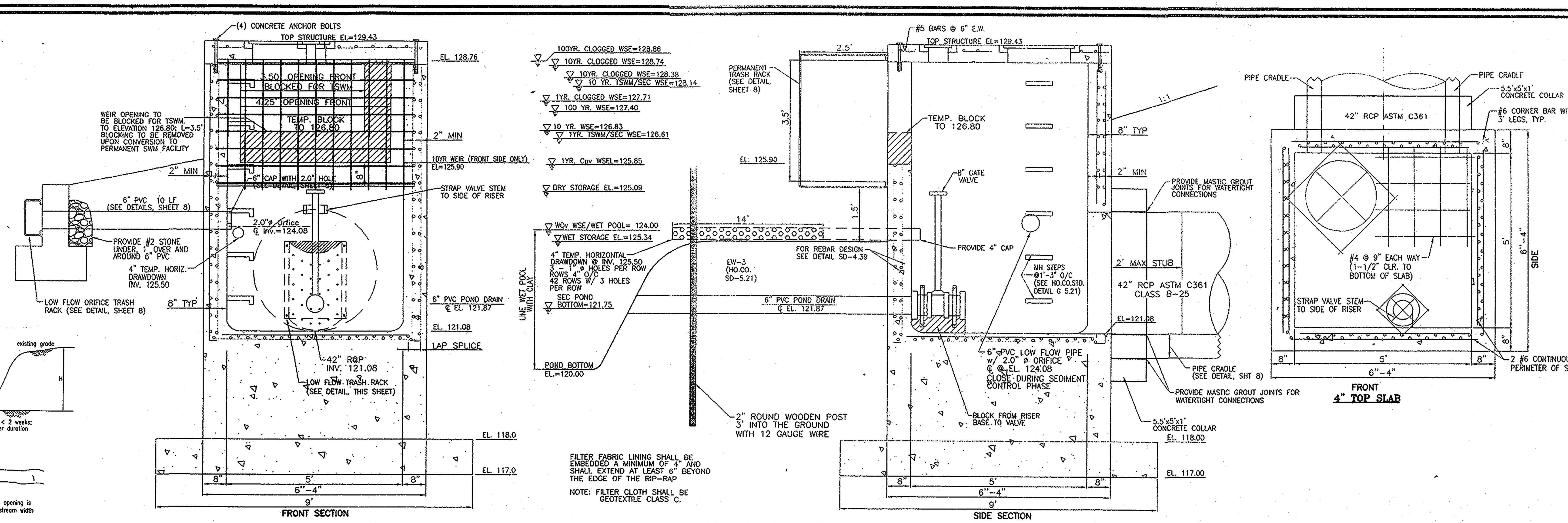

CAST-IN-PLACE STRUCTURE (CS-1) DETAIL

SCALE: 1/2"=1'

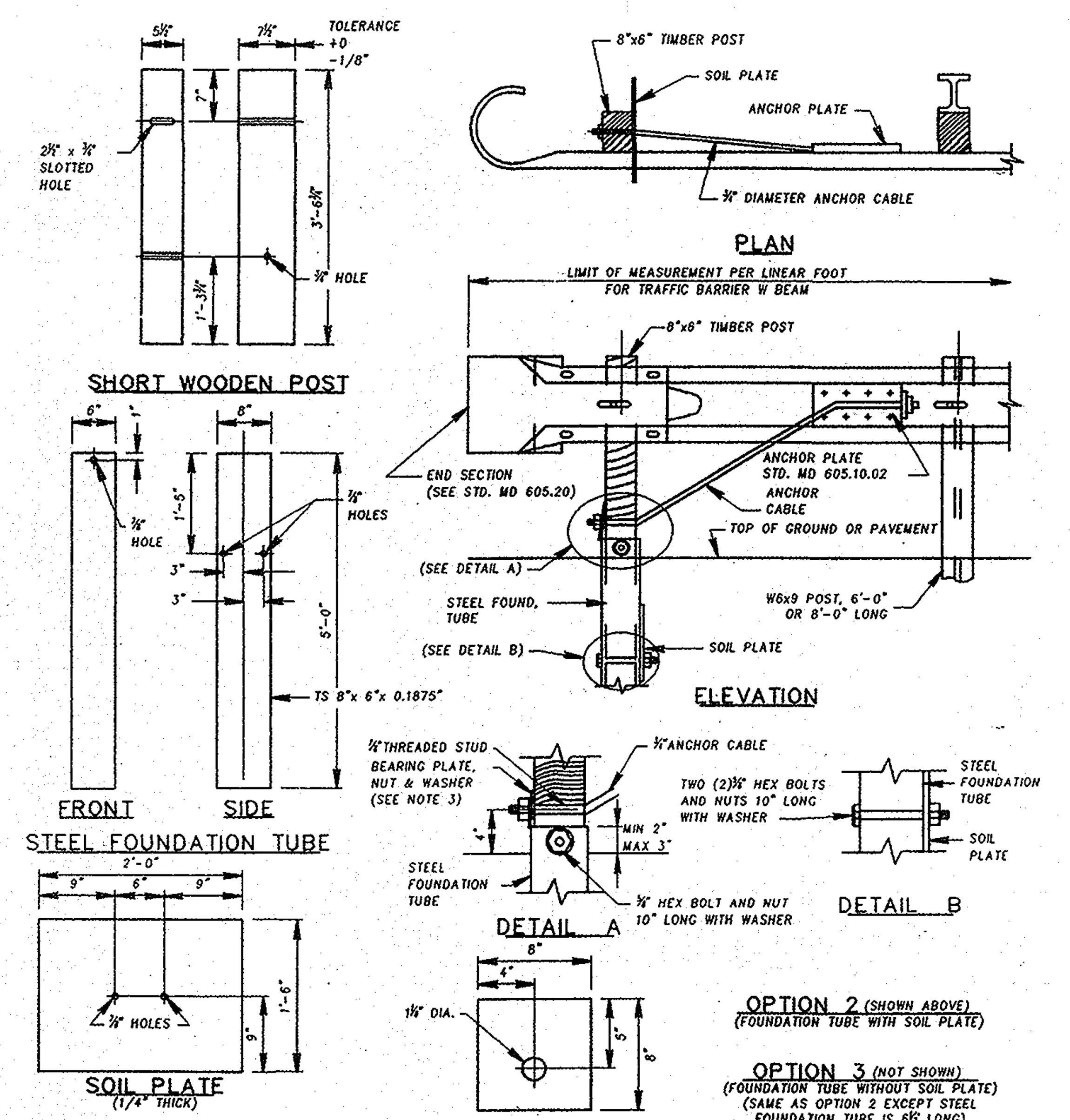

NOTES

1. NOTES ON STD. MD 605.10 APPLY TO OPTION 2 & 3.
2. IF THE FOUNDATION TUBE AND SOIL PLATE (OPTION 2) ARE DRIVEN INTO THE SOIL, PROPER CARE SHOULD BE TAKEN TO ENSURE THAT THE SOIL PLATE FASTENERS ARE NOT BROKEN DURING THE DRIVING PROCESS.
3. SECURE BEARING PLATE WITH 16 PENNY GALVANIZED NAIL TO PREVENT ROTATION OF PLATE.
4. SAME AS MD 605.01 NOTE 6

MDSHA-605.10.01

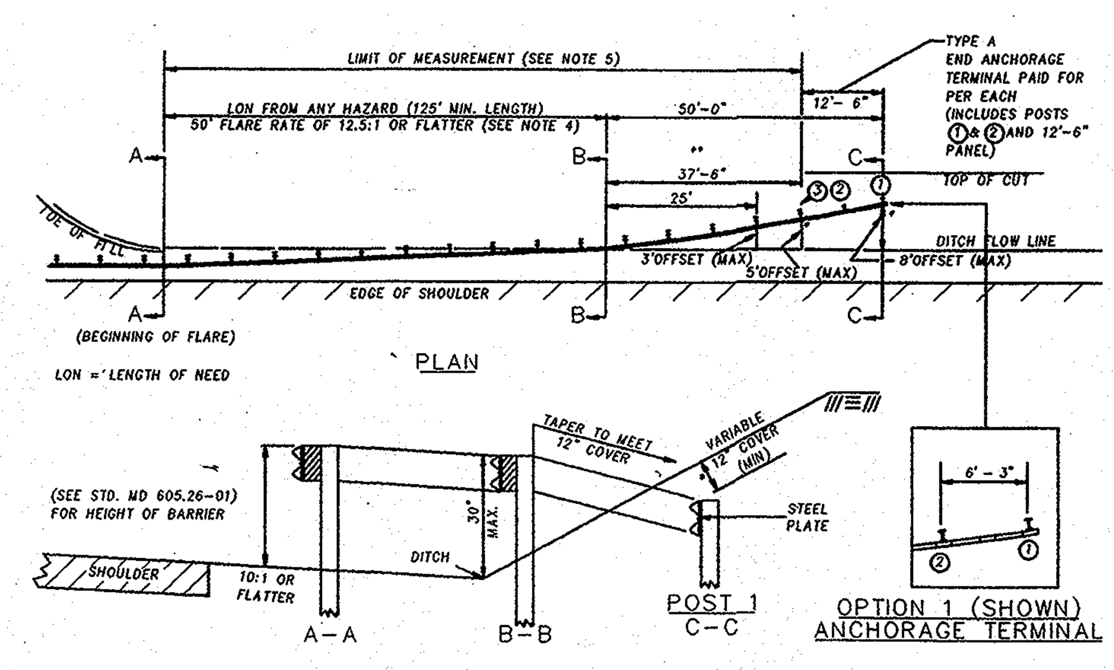

* WHEN EARTH COVER OVER POST 1 EXCEEDS 12", OFFSET DISTANCES 5' & 8' MAY BE LESSENED. HEIGHT OF THE PANEL MUST REMAIN RELATIVE TO DITCH ELEVATION.

** POSTS IN BACK OF DITCH BOTTOM MAY BE SHORTENED -- MINIMUM EMBEDMENT INTO EXISTING GROUND IS 4'

SECTION

NOTES

1. ALL POSTS SHALL BE 6' IN LENGTH. POSTS 1 AND 2 SHALL BE 4'- 0" IN LENGTH.
2. THE SLOPE BACK FILL MATERIAL SHALL BE COMPACTED FIRMLY TO THE ESTABLISHED SLOPE AND STABILIZED AS DIRECTED BY THE ENGINEER.
3. THE CONTRACTOR HAS THE OPTION TO CONSTRUCT THE END ANCHORAGE TERMINAL USING ONE OF THE TWO OPTIONS. OPTION 1 - 4' STEEL POSTS (SEE STD. MD 605.01-02) OPTION 2 - CONCRETE ANCHOR BLOCK (SEE STD. MD 605.01-03)
4. LOW SPEED INSTALLATIONS REQUIRES 50 FEET (MINIMUM) USING A 9:1 FLARE RATE.
5. PAID FOR PER LINEAR FOOT OF "TRAFFIC BARRIER W BEAM USING 6 FOOT POST." THE "END ANCHORAGE TERMINAL FOR TYPE A END TREATMENT EITHER OPTION," PAID FOR PER EACH.
6. FOR ALTERNATIVE OFFSET BLOCKS SEE STD. MD 605.21 NOTE 5.

MDSHA-605.01

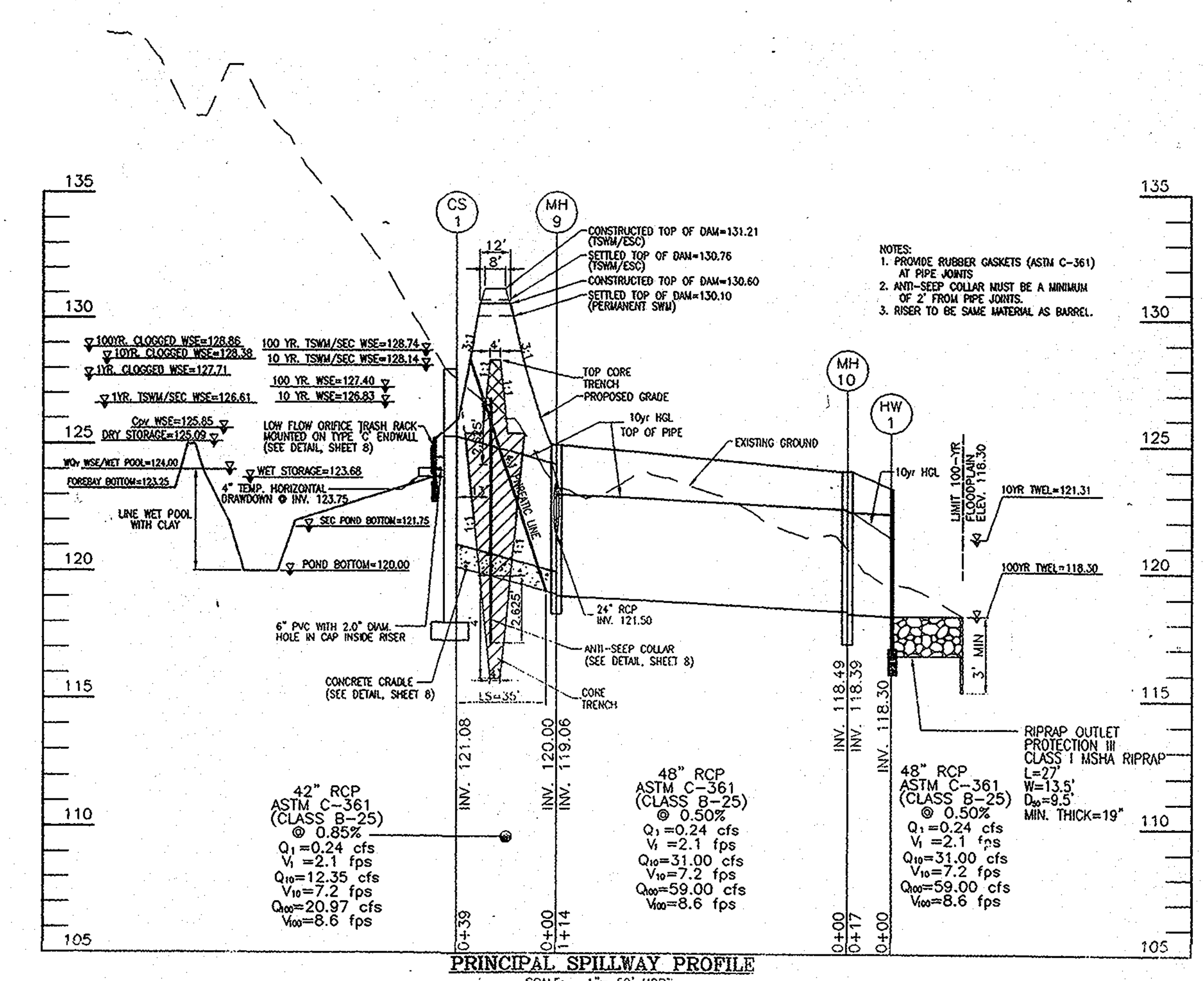

PRINCIPAL SPILLWAY PROFILE

SCALE: 1"= 50' HORZ. 1"= 5' VERT.

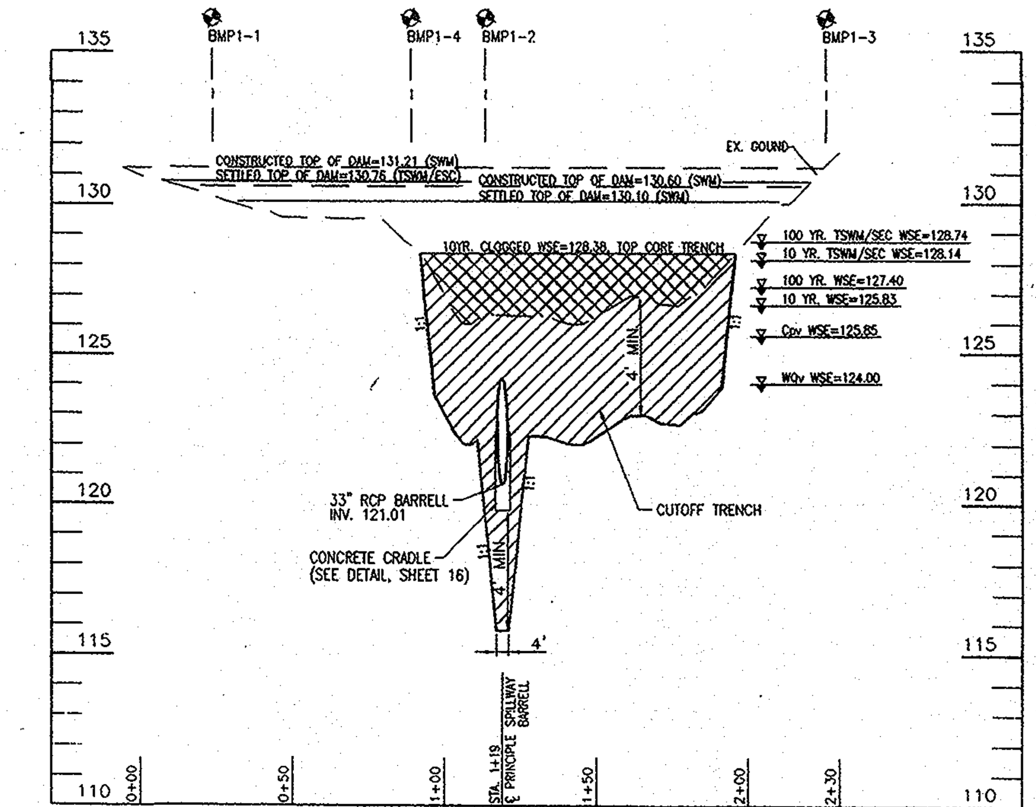

PROFILE OF CENTERLINE OF DAM

SCALE: 1"= 50' HORZ. 1"= 5' VERT.

MGWC 1.5: SANDBAG/STONE CHANNEL DIVERSION

Temporary measure for dewatering in channel construction sites

DESCRIPTION

The work work should consist of installing sandbag or stone flow diversion for the purpose of erosion control when construction activities occur within the stream channel.

INSTALLATION GUIDELINES

All erosion and sediment control devices, including dewatering basins, should be implemented as the first order of business according to a plan approved by the WMA or local authority. Installation should proceed from the upstream to the downstream during periods of low flow. If necessary, silt fence or straw around the perimeter of the work area. Sand bag/stone diversions can be used independently or as component of other stream diversion techniques. Installation of this measures should proceed as follows (refer to Detail 1.5):

1. The diversion structure should be installed from upstream to downstream.
2. The height of the sandbag/stone diversion should be a function of the duration of the project in the stream height, measured from the channel bed, plus 1 foot (0.3 meters) or bankfull height, whichever is greater. For projects of longer duration, the top of the sandbag or stone diversion should correspond to bankfull height. For diversion structures utilizing sandbags, the stream bed should be hand prepared prior to placement of the base layer of sandbags in order to ensure a water tight fit. Additionally, it may be necessary to prepare the bank in a similar fashion.
3. All evacuated material should be deposited and stabilized in a approved area outside 100-year floodplain unless otherwise authorized by the WMA.
4. Sediment-laden water from the construction area should be pumped to a dewatering basin.
5. Sheeting on the diversion should be positioned such that the upstream portion covers the downstream portion with at least a 18-inch (0.45 meters) overlap.
6. Sandbag or stone diversions should not obstruct more than 45% of the stream width. Additionally, bank stabilization measures should be placed in the constructed section if accelerated erosion and bank scour are observed during the construction time or if the project time is expected to last more than 2 weeks.
7. Prior to removal of these temporary structures, any accumulated sediment should be removed, deposited and stabilized in an approved area outside the 100-year floodplain unless authorized by the WMA.
8. Sediment control devices, including perimeter erosion controls, are to remain in place until all disturbed areas are stabilized in accordance with an approved sediment and erosion control plan and the inspection authority approves their removal.

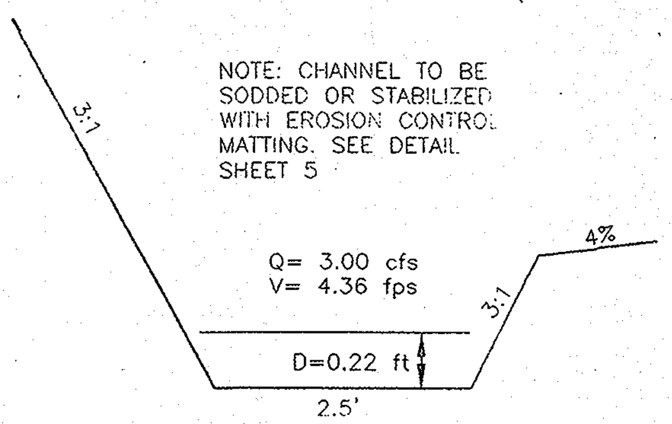

TYPICAL SWALE CROSS SECTION
NOT TO SCALE

THE SWMF TO BE OWNED BY MDSHA, AND MAINTAINED BY HOA
L. F.

APPROVED: HOWARD COUNTY DEPARTMENT OF PUBLIC WORKS

[signature] 10-19-06
CHIEF, BUREAU OF HIGHWAYS — DATE

APPROVED: HOWARD COUNTY DEPARTMENT OF PLANNING AND ZONING

[signature] 10/23/06
CHIEF, DEVELOPMENT ENGINEERING DIVISION — DATE

[signature] 10/24/06
CHIEF, DIVISION OF LAND DEVELOPMENT — DATE

THESE PLANS HAVE BEEN REVIEWED FOR HOWARD SOIL CONSERVATION DISTRICT AND MEETS THE TECHNICAL REQUIREMENTS.

[signature] 10/17/06
USDA-NATURAL RESOURCES CONSERVATION SERVICE — DATE

THIS DEVELOPMENT PLAN IS APPROVED FOR SOIL EROSION AND SEDIMENT CONTROL BY THE HOWARD SOIL CONSERVATION DISTRICT.

[signature] 10/17/06
HOWARD S.C.D. — DATE

ENGINEER'S CERTIFICATE:

"I HEREBY CERTIFY THAT THIS PLAN FOR SEDIMENT AND EROSION CONTROL REPRESENTS A PRACTICAL AND WORKABLE PLAN BASED ON MY PERSONAL KNOWLEDGE OF THE SITE CONDITIONS AND THAT IT WAS PREPARED IN ACCORDANCE WITH THE REQUIREMENTS OF THE HOWARD SOIL CONSERVATION DISTRICT."

[signature] 10/6/06
SIGNATURE OF ENGINEER WALTER G. ZAWISLAK, PE — DATE

DEVELOPER'S CERTIFICATE:

"I/WE CERTIFY THAT ALL DEVELOPMENT AND CONSTRUCTION WILL BE DONE IN ACCORDANCE TO THIS PLAN OF DEVELOPMENT FOR SEDIMENT CONTROL, AND THAT ALL RESPONSIBLE PERSONNEL INVOLVED IN THE CONSTRUCTION PROJECT WILL HAVE A CERTIFICATE OF ATTENDANCE AT A DEPARTMENT OF ENVIRONMENT APPROVED TRAINING PROGRAM FOR THE CONTROL OF SEDIMENT AND EROSION BEFORE BEGINNING THE PROJECT. I ALSO AUTHORIZE PERIODIC ON-SITE INSPECTIONS BY THE HOWARD SOIL CONSERVATION DISTRICT.

Peter G. Voelkel 10/6/06
SIGNATURE OF DEVELOPER PETER G. VOELKEL — DATE

OWNER/DEVELOPER

ELKRIDGE DEVELOPMENT, LLC
301 TRANSYLVANIA AVENUE
RALEIGH, NC 27609
(919) 789-9289

ELKRIDGE DEVELOPMENT NO.2, LLC
301 TRANSYLVANIA AVENUE
RALEIGH, NC 27609
(919) 789-9289

NO.	REVISION	DATE
1	ADD MGWC 1.5 DETAILS	4-20-07

FINAL ROAD CONSTRUCTION PLANS

STORMWATER MANAGEMENT DETAILS, AND STORM DRAIN PROFILES

BELMONT STATION

PARCELS 'A,' 'B' & 'C' & OPEN SPACE LOT 1
REF: WP-04-152, WP-06-79, S-04-10, P-05-17, F-06-169
TAX MAP 37 BLOCK 18 — PARCEL '196, 198, 199'
1ST ELECTION DISTRICT — HOWARD COUNTY, MARYLAND

ROBERT H. VOGEL ENGINEERING, INC.
ENGINEERS • SURVEYORS • PLANNERS
8407 MAIN STREET
ELLICOTT CITY, MD 21043
TEL: 410.461.7666
FAX: 410.461.8961

STATE OF MARYLAND — WALTER GEORGE ZAWISLAK — PROFESSIONAL ENGINEER [seal, signature 10/6/06]

DESIGN BY: WJZ
DRAWN BY: DZ
CHECKED BY:
DATE: OCTOBER 2006
SCALE: AS SHOWN
W.O. NO.: 04-08

SHEET 9 OF 14

DETAIL 24 - STABILIZED CONSTRUCTION ENTRANCE

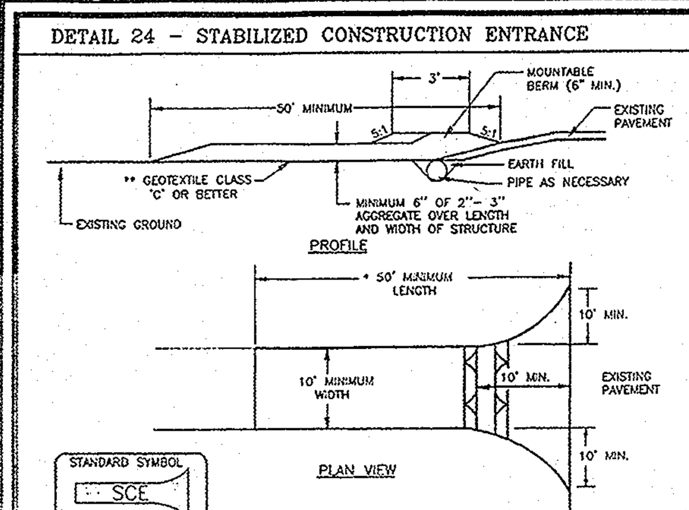

CONSTRUCTION SPECIFICATION

1. LENGTH – MINIMUM OF 50' (* 30' FOR A SINGLE RESIDENCE LOT).
2. WIDTH – 10' MINIMUM, SHOULD BE FLARED AT THE EXISTING ROAD TO PROVIDE A TURNING RADIUS.
3. GEOTEXTILE FABRIC (FILTER CLOTH) SHALL BE PLACED OVER THE EXISTING GROUND PRIOR TO PLACING STONE. ** THE PLAN APPROVAL AUTHORITY MAY NOT REQUIRE SINGLE FAMILY RESIDENCES TO USE GEOTEXTILE.
4. STONE – CRUSHED AGGREGATE (2" TO 3") OR RECLAIMED OR RECYCLED CONCRETE THE ENTRANCE.
5. SURFACE WATER – ALL SURFACE WATER FLOWING TO OR DIVERTED TOWARD CONSTRUCTION ENTRANCES SHALL BE PIPED THROUGH THE ENTRANCE, MAINTAINING POSITIVE DRAINAGE. PIPE INSTALLED THROUGH THE STABILIZED CONSTRUCTION ENTRANCE SHALL BE PROTECTED WITH A MOUNTABLE BERM WITH 5:1 SLOPES AND A MINIMUM OF 6" OF STONE OVER THE PIPE. PIPE HAS TO BE SIZED ACCORDING TO THE DRAINAGE. WHEN THE SCE IS LOCATED AT A HIGH SPOT AND HAS NO DRAINAGE TO CONVEY, A PIPE WILL NOT BE NECESSARY. PIPE SHOULD BE SIZED ACCORDING TO THE AMOUNT OF RUNOFF TO BE CONVEYED. A 6" MINIMUM WILL BE REQUIRED.
6. LOCATION – A STABILIZED CONSTRUCTION ENTRANCE SHALL BE LOCATED AT EVERY POINT WHERE CONSTRUCTION TRAFFIC ENTERS OR LEAVES A CONSTRUCTION SITE. VEHICLES LEAVING THE SITE MUST TRAVEL OVER THE ENTIRE LENGTH OF THE STABILIZED CONSTRUCTION ENTRANCE.

U.S. DEPARTMENT OF AGRICULTURE SOIL CONSERVATION SERVICE	PAGE F - 17 - 3	MARYLAND DEPARTMENT OF ENVIRONMENT WATER MANAGEMENT ADMINISTRATION

DETAIL 22 - SILT FENCE

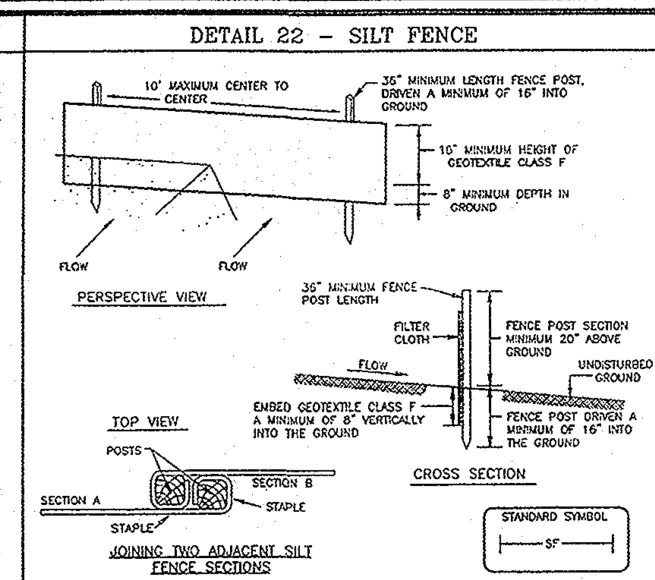

CONSTRUCTION SPECIFICATIONS

1. FENCE POSTS SHALL BE A MINIMUM OF 36" LONG, DRIVEN 16" MINIMUM INTO THE GROUND. WOOD POSTS SHALL BE 1 1/2" X 1 1/2" SQUARE (MINIMUM) CUT, OR 1 3/4" DIAMETER (MINIMUM) ROUND AND SHALL BE OF SOUND QUALITY HARDWOOD. STEEL POSTS WILL BE STANDARD T OR U SECTION WEIGHING NOT LESS THAN 1.00 POUND PER LINEAR FOOT.
2. GEOTEXTILE SHALL BE FASTENED SECURELY TO EACH FENCE POST WITH WIRE TIES OR STAPLES AT TOP AND MID-SECTION AND SHALL MEET THE FOLLOWING REQUIREMENTS FOR GEOTEXTILE CLASS F:

TENSILE STRENGTH	50 LBS/IN (MIN.)	TEST: MSMT 509
TENSILE MODULUS	20 LBS/IN (MIN.)	TEST: MSMT 509
FLOW RATE	0.3 GAL FT ²/MINUTE (MAX.)	TEST: MSMT 322
FILTERING EGGECIENCY	75% (MIN.)	TEST: MSMT 322

3. WHERE ENDS OF GEOTEXTILE FABRIC COME TOGETHER, THEY SHALL BE OVERLAPPED, FOLDED AND STAPLED TO PREVENT SEDIMENT BYPASS.
4. SILT FENCE SHALL BE INSPECTED AFTER EACH RAINFALL EVENT AND MAINTAINED WHEN BULGES OCCUR OR WHEN SEDIMENT ACCUMULATION REACHES 50% OF THE FABRIC HEIGHT.

U.S. DEPARTMENT OF AGRICULTURE SOIL CONSERVATION SERVICE	PAGE E - 15 - 3	MARYLAND DEPARTMENT OF ENVIRONMENT WATER MANAGEMENT ADMINISTRATION

DETAIL 33 - SUPER SILT FENCE

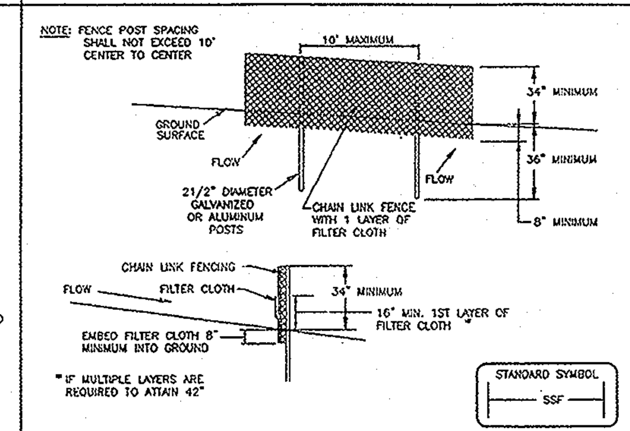

CONSTRUCTION SPECIFICATIONS

1. FENCING SHALL BE 42" IN HEIGHT AND CONSTRUCTED IN ACCORDANCE WITH THE LATEST MARYLAND STATE HIGHWAY DETAILS FOR CHAIN LINK FENCING. THE SPECIFICATION FOR A 6' FENCE SHALL BE USED, SUBSTITUTING 42" FABRIC AND 6' LENGTH POSTS.
2. CHAIN LINK FENCE SHALL BE FASTENED SECURELY TO THE FENCE POSTS WITH WIRE TIES. THE LOWER TENSION WIRE, BRACE AND TRUSS RODS, DRIVE ANCHORS AND POST CAPS ARE NOT REQUIRED EXCEPT ON THE ENDS OF THE FENCE.
3. FILTER CLOTH SHALL BE FASTENED SECURELY TO THE CHAIN LINK FENCE WITH TIES SPACED EVERY 24" AT THE TOP AND MID SECTION.
4. FILTER CLOTH SHALL BE EMBEDDED A MINIMUM OF 8" INTO THE GROUND.
5. WHEN TWO SECTIONS OF FILTER CLOTH ADJOIN EACH OTHER, THEY SHALL BE OVERLAPPED BY 6" AND FOLDED.
6. MAINTENANCE SHALL BE PERFORMED AS NEEDED AND SILT BUILDUPS REMOVED WHEN "BULGES" DEVELOP IN THE SILT FENCE, OR WHEN SILT REACHES 50% OF FENCE HEIGHT.
7. FILTER CLOTH SHALL BE FASTENED SECURELY TO EACH FENCE POST WITH WIRE TIES OR STAPLES AT TOP AND MID SECTION AND SHALL MEET THE FOLLOWING REQUIREMENTS FOR GEOTEXTILE CLASS F:

TENSILE STRENGTH	50 LBS/IN (MIN.)	TEST: MSMT 509
TENSILE MODULUS	20 LBS/IN (MIN.)	TEST: MSMT 509
FLOW RATE	0.3 GAL/FT /MINUTE (MAX.)	TEST: MSMT 322
FILTERING EFFICIENCY	75% (MIN.)	TEST: MSMT 322

U.S. DEPARTMENT OF AGRICULTURE SOIL CONSERVATION SERVICE	PAGE H - 26 - 3	MARYLAND DEPARTMENT OF ENVIRONMENT WATER MANAGEMENT ADMINISTRATION

DETAIL 23C - CURB INLET PROTECTION (COG OR COS INLETS)

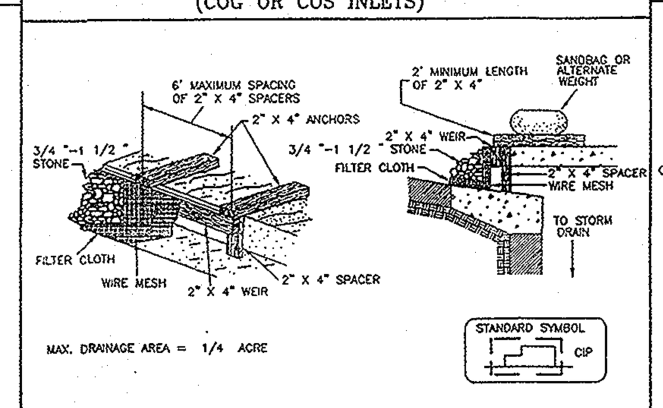

CONSTRUCTION SPECIFICATIONS

1. ATTACH A CONTINUOUS PIECE OF WIRE MESH (30" MINIMUM WIDTH BY THROAT LENGTH PLUS 4') TO THE 2" X 4" WEIR (MEASURING THROAT LENGTH PLUS 2') AS SHOWN ON THE STANDARD DRAWING.
2. PLACE A CONTINUOUS PIECE OF GEOTEXTILE CLASS E THE SAME DIMENSIONS AS THE WIRE MESH OVER THE WIRE MESH AND SECURELY ATTACH IT TO THE 2" X 4" WEIR.
3. SECURELY NAIL THE 2" X 4" WEIR TO A 9" LONG VERTICAL SPACER TO BE LOCATED BETWEEN THE WEIR AND THE INLET FACE (MAX. 4' APART).
4. PLACE THE ASSEMBLY AGAINST THE INLET THROAT AND NAIL (MINIMUM 2' LENGTHS OF 2" X 4" TO THE TOP OF THE WEIR AT SPACER LOCATIONS). THESE 2" X 4" ANCHORS SHALL EXTEND ACROSS THE INLET TOP AND BE HELD IN PLACE BY SANDBAGS OR ALTERNATE WEIGHT.
5. THE ASSEMBLY SHALL BE PLACED SO THAT THE END SPACERS ARE A MINIMUM 1' BEYOND BOTH ENDS OF THE THROAT OPENING.
6. FORM THE 1/2 " X 1/2 " WIRE MESH AND THE GEOTEXTILE FABRIC TO THE CONCRETE GUTTER AND AGAINST THE FACE OF THE CURB ON BOTH SIDES OF THE INLET. PLACE CLEAN 3/4 " X 1 1/2 " STONE OVER THE WIRE MESH AND GEOTEXTILE IN SUCH A MANNER TO PREVENT WATER FROM ENTERING THE INLET UNDER OR AROUND THE GEOTEXTILE.
7. THIS TYPE OF PROTECTION MUST BE INSPECTED FREQUENTLY AND THE FILTER CLOTH AND STONE REPLACED WHEN CLOGGED WITH SEDIMENT.
8. ASSURE THAT STORM FLOW DOES NOT BYPASS THE INLET BY INSTALLING A TEMPORARY EARTH OR ASPHALT DIKE TO DIRECT THE FLOW TO THE INLET.

U.S. DEPARTMENT OF AGRICULTURE SOIL CONSERVATION SERVICE	PAGE E - 16 - 5B	MARYLAND DEPARTMENT OF ENVIRONMENT WATER MANAGEMENT ADMINISTRATION

DETAIL 23B - AT GRADE INLET PROTECTION

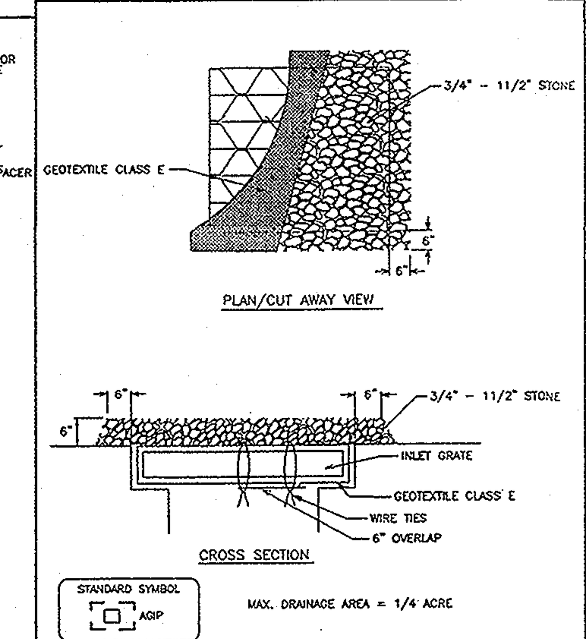

CONSTRUCTION SPECIFICATIONS

1. LIFT GRATE AND WRAP WITH GEOTEXTILE CLASS E TO COMPLETELY COVER ALL OPENINGS, THEN SET GRATE BACK IN PLACE.
2. PLACE 3/4" TO 11/2" STONE, 4"-6" THICK ON THE GRATE TO SECURE THE FABRIC AND PROVIDE ADDITIONAL FILTRATION.

U.S. DEPARTMENT OF AGRICULTURE SOIL CONSERVATION SERVICE	PAGE E - 16 - 5A	MARYLAND DEPARTMENT OF ENVIRONMENT WATER MANAGEMENT ADMINISTRATION

DETAIL 1 - EARTH DIKE

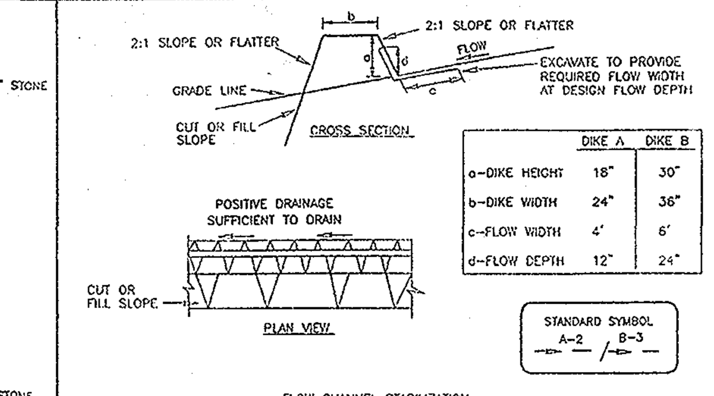

	DIKE A	DIKE B
a–DIKE HEIGHT	18"	30"
b–DIKE WIDTH	24"	36"
c–FLOW WIDTH	4'	6'
d–FLOW DEPTH	12"	24"

FLOW CHANNEL STABILIZATION
GRADE 0.5% MIN. 10% MAX.

1. SEED AND COVER WITH STRAW MULCH.
2. SEED AND COVER WITH EROSION CONTROL MATTING OR LINE WITH SOD.
3. 4" – 7" STONE OR RECYCLED CONCRETE EQUIVALENT PRESSED INTO THE SOIL 7" MINIMUM

CONSTRUCTION SPECIFICATIONS

1. ALL TEMPORARY EARTH DIKES SHALL HAVE UNINTERRUPTED POSITIVE GRADE TO AN OUTLET. SPOT ELEVATIONS MAY BE NECESSARY FOR GRADES LESS THAN 1%.
2. RUNOFF DIVERTED FROM A DISTURBED AREA SHALL BE CONVEYED TO A SEDIMENT TRAPPING DEVICE.
3. RUNOFF DIVERTED FROM AN UNDISTURBED AREA SHALL OUTLET DIRECTLY INTO AN UNDISTURBED, STABILIZED AREA AT A NON-EROSIVE VELOCITY.
4. ALL TREES, BRUSH, STUMPS, OBSTRUCTIONS, AND OTHER OBJECTIONAL MATERIAL SHALL BE REMOVED AND DISPOSED OF SO AS NOT TO INTERFERE WITH THE PROPER FUNCTIONING OF THE DIKE.
5. THE DIKE SHALL BE EXCAVATED OR SHAPED TO LINE, GRADE AND CROSS SECTION AS REQUIRED TO MEET THE CRITERIA SPECIFIED HEREIN AND BE FREE OF BANK PROJECTIONS OR OTHER IRREGULARITIES WHICH WILL IMPEDE NORMAL FLOW.
6. FILL SHALL BE COMPACTED BY EARTH MOVING EQUIPMENT.
7. ALL EARTH REMOVED AND NOT NEEDED FOR CONSTRUCTION SHALL BE PLACED SO THAT IT WILL NOT INTERFERE WITH THE FUNCTIONING OF THE DIKE.
8. INSPECTION AND MAINTENANCE MUST BE PROVIDED PERIODICALLY AND AFTER EACH RAIN EVENT.

U.S. DEPARTMENT OF AGRICULTURE SOIL CONSERVATION SERVICE	PAGE A - 1 - 6	MARYLAND DEPARTMENT OF ENVIRONMENT WATER MANAGEMENT ADMINISTRATION

DETAIL 20A - REMOVABLE PUMPING STATION

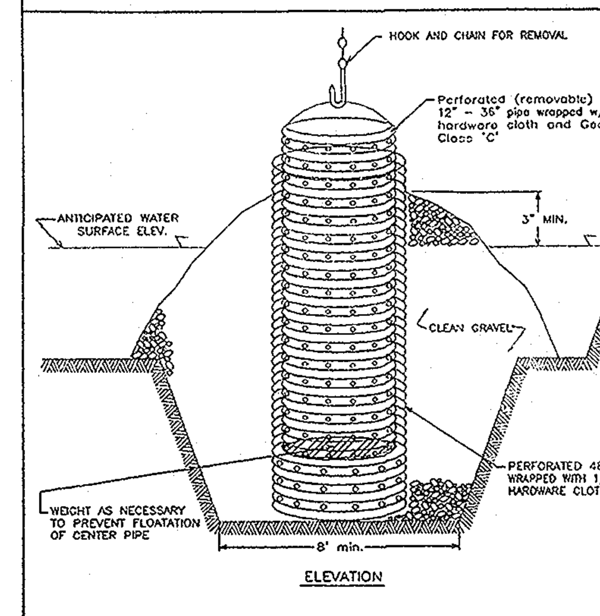

Construction Specifications

1. The outer pipe should be 48" dia. or shall, in any case, be at least 4" greater in diameter than the center pipe. The outer pipe shall be wrapped with 1/2" hardware cloth to prevent backfill material from entering the perforations.
2. After installing the outer pipe, backfill around outer pipe with 2" aggregate or clean gravel.
3. The inside stand pipe (center pipe) should be constructed by perforating a corrugated or PVC pipe between 12" and 36" in diameter. The perforations shall be 1/2" X 6" slits or 1" diameter holes 6" on center. The center pipe shall be wrapped with 1/2" hardware cloth first, then wrapped again with Geotextile Class C.
4. The center pipe should extend 12" to 18" above the anticipated water surface elevation or riser crest elevation when dewatering a basin.

U.S. DEPARTMENT OF AGRICULTURE SOIL CONSERVATION SERVICE	PAGE D - 12 - 4	MARYLAND DEPARTMENT OF ENVIRONMENT WATER MANAGEMENT ADMINISTRATION

DETAIL 30 - EROSION CONTROL MATTING

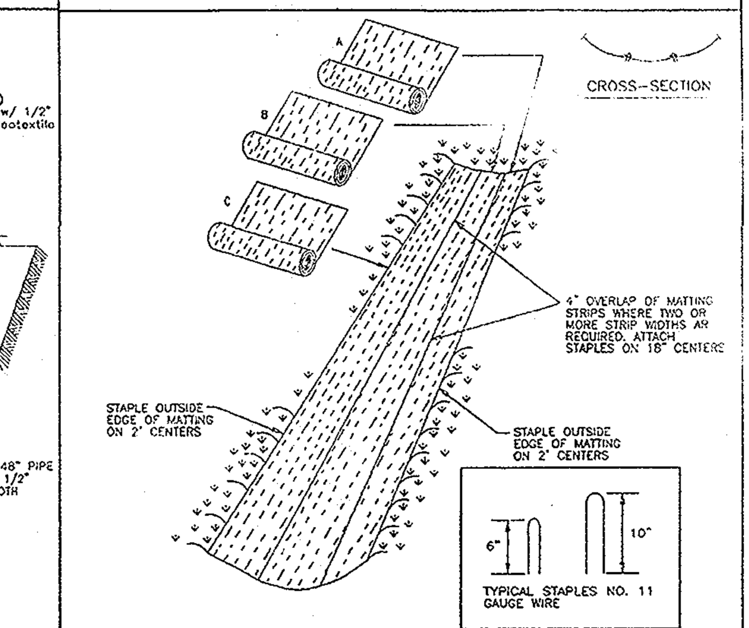

CONSTRUCTION SPECIFICATIONS

1. KEY-IN THE MATTING BY PLACING THE TOP ENDS OF THE MATTING IN A NARROW TRENCH, 6" IN DEPTH. BACKFILL THE TRENCH AND TAMP FIRMLY TO CONFORM TO THE CHANNEL CROSS-SECTION. SECURE WITH A ROW OF STAPLES ABOUT 4" DOWN SLOPE FROM THE TRENCH. SPACING BETWEEN STAPLES IS 6".
2. STAPLE THE 4" OVERLAP IN THE CHANNEL CENTER USING AN 18" SPACING BETWEEN STAPLES.
3. BEFORE STAPLING THE OUTER EDGES OF THE MATTING, MAKE SURE THE MATTING IS SMOOTH AND IN FIRM CONTACT WITH THE SOIL.
4. STAPLES SHALL BE PLACED 2' APART WITH 4 ROWS FOR EACH STRIP, 2 OUTER ROWS, AND 2 ALTERNATING ROWS DOWN THE CENTER.
5. WHERE ONE ROLL OF MATTING ENDS AND ANOTHER BEGINS, THE END OF THE TOP STRIP SHALL OVERLAP THE UPPER END OF THE LOWER STRIP BY 4", SHIPLAP FASHION. REINFORCE THE OVERLAP WITH A DOUBLE ROW OF STAPLES SPACED 6" APART IN A STAGGERED PATTERN ON EITHER SIDE.
6. THE DISCHARGE END OF THE MATTING LINER SHOULD BE SIMILARLY SECURED WITH 2 DOUBLE ROWS OF STAPLES.

NOTE: IF FLOW WILL ENTER FROM THE EDGE OF THE MATTING THEN THE AREA EFFECTED BY THE FLOW MUST BE KEYED-IN.

U.S. DEPARTMENT OF AGRICULTURE SOIL CONSERVATION SERVICE	PAGE C - 22 - 2	MARYLAND DEPARTMENT OF ENVIRONMENT WATER MANAGEMENT ADMINISTRATION

PERMANENT SEEDING NOTES

APPLY TO GRADED OR CLEARED AREAS NOT SUBJECT TO IMMEDIATE FURTHER DISTURBANCE WHERE A PERMANENT LONG-LIVED VEGETATIVE

SEEDBED PREPARATION: Loosen upper three inches of soil by raking, discing or other acceptable means before seeding, if not previously

SOIL AMENDMENTS: In lieu of soil test recommendations, use one of

1) Preferred–Apply 2 tons per acre dolomitic limestone (92 lbs/100 sq.ft.) and 600 lbs per acre 10-10-10 fertilizer (14 lbs./1000 sq.ft.) before seeding. Harrow or disc into upper three inches of soil. At the time of seeding, apply 400 lbs. per acre 30-0-0 ureaform fertilizer (9 lbs/1000 sq.ft.)
2) Acceptable–Apply 2 tons per acre dolomitic limestone (92 lbs/1000 sq.ft.) and apply 1000 lbs. per acre 10-10-10- fertilizer (23 lbs./1000 sq.ft.) before seeding. Harrow or disc into upper

SEEDING: For the periods March 1 thru April 30, and August 1 thru October 15, seed with 60 lbs. per acre (1.4 lbs/1000 sq.ft.) of Kentucky 31 Tall Fescue. For the period May 1 thru July 31, seed with 60 lbs. Kentucky 31 Tall Fescue per acre and 2 lbs. per acre (.05 lbs./1000 sq.ft.) of weeping lovegrass. During the period of October 16 thru February 28, protect site by: Option (1) 2 tons per acre well anchored straw mulch and seed as soon as possible in the spring. Option (2) Use sod. Option (3) Seed with 60 lbs/acre Kentucky 31 Tall Fescue and mulch with 2 tons/acre well anchored

MULCHING: Apply 1 1/2 to 2 tons per acre (70 to 90 lbs/1000 sq. ft.) of unrotted small grain straw immediately after seeding. Anchor mulch immediately after application using mulch anchoring tool or 218 gallons per acre (5 gal/1000 sq.ft.) of emulsified asphalt on flat areas. On slopes 8 feet or higher, use 348 gallons

MAINTENANCE: Inspect all seeded areas and make needed repairs.

TEMPORARY SEEDING NOTES

SEEDBED PREPARATION: Loosen upper three inches of soil by raking, discing or other acceptable means before seeding, if not previously

SOIL AMENDMENTS: Apply 600 lbs. per acre 10-10-10 fertilizer

SEEDING: For periods March 1 thru April 30 and from August 15 thru November 15, seed with 2 1/2 bushel per acre of annual rye (3.2 lbs./1000 sq.ft.) For the period May 1 thru August 14, seed with 3 lbs. per acre of weeping lovegrass (.07 lbs./1000 sq.ft.). For the period November 1 thru February 28, protect site by applying 2 tons per acre of well anchored straw mulch and seed as soon as possible

MULCHING: Apply 1 1/2 to 2 tons per acre (70 to 90 lbs./1000 sq.ft.) of unrotted small grain straw immediately after seeding. Anchor mulch immediately after application using mulch anchoring tool or 218 gallons per acre (5 gal/1000 sq.ft.) of emulsified asphalt on flat areas. On slopes 8 feet or higher, use 348 gallons per acre

REFER TO THE 1994 MARYLAND STANDARDS AND SPECIFICATIONS FOR SOIL EROSION AND SEDIMENT CONTROL FOR RATE AND METHODS NOT

21.0 STANDARDS AND SPECIFICATIONS FOR TOPSOIL

Placement of topsoil over a prepared subsoil prior to

To provide a suitable soil medium for vegetable growth. Soils of concern have low moisture content, low nutrient levels, low pH, materials toxic to plants, and/or

Conditions Where Practice Applies

I. This practice is limited to areas having 2:1 or flatter
   a. The texture of the exposed subsoil/parent material
   b. The soil material is so shallow that the rooting zone is not deep enough to support plants or furnish continuing supplies of moisture and plant nutrients.
   c. The original soil to be vegetated contains
   d. The soil is so acidic that treatment with

II. For the purpose of these Standards and Specifications, areas having slopes steeper than 2:1 require special consideration and design for adequate stabilization. Areas having slopes steeper than 2:1 shall have the appropriate

Construction and Material Specifications

I. Topsoil salvaged from the existing site may be used provided that it meets the standards as set forth in these specifications. Typically, the depth of topsoil to be salvaged for a given soil type can be found in the representative soil profile section in the Soil Survey published by USDA-SCS in cooperation with Maryland

II. Topsoil Specifications – Soil to be used as topsoil
   i. Topsoil shall be a loam, sandy loam, clay loam, silt loam, sandy clay loam, loamy sand. Other soils may be used if recommended by an agronomist or a soil scientist and approved by the appropriate approval authority. Regardless, topsoil shall not be a mixture of contrasting textured subsoils and shall contain less than 5% by volume of cinders, stones, slag, coarse fragments, gravel, sticks, roots, trash, or other materials larger that 1 and 1/2" in
   ii. Topsoil must be free of plants or plant parts such as Bermuda grass, quackgrass, Johnsongrass, nutsedge, poison
   iii. Where the subsoil is either highly acidic or composed of heavy clays, ground limestone shall be spread at the rate of 4-8 tons/acre (200-400 pounds per 1,000 square feet) prior to the placement of topsoil. Lime shall be distributed uniformly over designated areas and worked into the soil in conjunction with tillage operations as described

II. For sites having disturbed areas under 5 acres:
   i. Place topsoil (if required) and apply soil amendments as specified in 20.0 Vegetative Stabilization – Section I – Vegetative Stabilization Methods and Materials.

iii. For sites having disturbed areas over 5 acres:
   i. On soil meeting topsoil specifications, obtain test results dictating fertilizer and lime amendments required to bring the soil into compliance with the following:
   a. pH for topsoil shall be between 6.0 and 7.5. If the tested soil demonstrates a pH of less than 6.0, sufficient lime shall be prescribed to raise the pH to 6.5 or higher.
   b. Organic content of topsoil shall be not less than 1.5 percent by weight.
   c. Topsoil having soluble salt content greater than 500 parts per million shall not be used.
   d. No sod or seed shall be placed on soil soil which has been treated with soil sterilants or chemicals used for weed control until sufficient time has elapsed (14 days min.) to permit dissipation of phyto-toxic materials.

NOTE: Topsoil substitutes or amendments, as recommended by a qualified agronomist or soil scientist and approved by the appropriate approval authority, may be used in lieu of natural topsoil.

ii. Place topsoil (if required) and apply soil ammendments specified in 20.0 Vegetative Stabilization–Section I–Vegetative Stabilization Methods and Materials.

V. Topsoil Application
   i. When topsoiling, maintain needed erosion and sediment control practices such as diversions, Grade Stabilization Structures, Earth Dikes, Slope Silt Fence and Sediment Traps and Basins.
   ii. Grades on the areas to be topsoiled, which have been previously established, shall be maintained, albeit 4" – 8" higher in elevation.
   iii. Topsoil shall be uniformly distributed in a 4" – 8" layer and lightly compacted to a minimum thickness of 4". Spreading shall be performed in such a manner that sodding or seeding can proceed with a minimum of additional soil preparation and tillage. Any irregularities in the surface resulting from topsoiling or other operations shall be corrected in order to prevent the formation of depressions or water pockets.
   iv. Topsoil shall not be place while the topsoil or subsoil is in a frozen or muddy condition, when the subsoil is excessively wet or in a condition that may otherwise be detrimental to proper grading and seedbed preparation.

SEQUENCE OF CONSTRUCTION

1. OBTAIN HOWARD COUNTY GRADING PERMIT AND MDE PERMIT (WEEK 1) (TRACKING # 20046044/03-NT-0489 DATED AUGUST 15,2006)-STREAM CONSTRUCTION, CLASS III. NO WORK BETWEEN MARCH 1st AND JUNE 15th.
2. NOTIFY HOWARD COUNTY AT LEAST 48 HOURS PRIOR TO START OF CONSTRUCTION. (WEEK 1)
3. CONDUCT A PRE-CONSTRUCTION MEETING WITH THE SEDIMENT CONTROL INSPECTOR PRIOR TO ANY LAND DISTURBANCE. (WEEK 1)
4. WITH APPROVAL OF SEDIMENT CONTROL INSPECTOR, CLEAR AND GRUB FOR SEDIMENT CONTROL MEASURES ONLY. INSTALL SUPER SILT FENCE, AND EARTH DIKES AND MOUNTABLE BERMS FOR HAUL ROAD AND TEMPORARY STOCKPILES. (WEEK 2)
5. CONSTRUCT RETAINING WALL AND INSTALL ALL REMAINING SEDIMENT CONTROL MEASURES, INLCUDING BASIN (WITHOUT FOREBAYS), EARTH DIKES AND STORM DRAIN FROM EW-2 TO HW-1. (WEEK 3)
6. UPON RECEIVING WRITTEN PERMISSION FROM INSPECTOR, BEGIN GRADING.
7. BEGIN UTLITY INSTALLATION, AND BLOCK INLETS AS WORK PROGRESSES. (WEEK 7)
8. INSTALL ON-SITE PAVING BASE COURSE. (WEEK 6)
9. COMPLETE ALL UTILITY CONSTRUCTION. (WEEK 9)
10. COMPLETE ALL PAVING CONSTRUCTION. (WEEK 10)
11. INSTALL SIDEWALK. (WEEK 11)
12. FINE GRADE AND STABILIZE ALL AREAS OF PARCEL INCLUDING ANY EXPOSED EARTH AREAS OUTSIDE THE LOD. REMOVE ALL TRASH JUNK AND DEBREES FROM ENTIRE PARCEL, INCLUDING FLOODPLAIN. UPON STABILIZATION OF DRAINAGE AREA TO BASIN #1, INCLUDING THOSE AREAS ON PARCEL A (SDP-06-034), CONVERT BASIN TO PERMANENT SWM FACILITY, AFTER RECEIVING APPROVAL FROM SEDIMENT CONTROL INSPECTOR.
13. INSTALL LANDSCAPING. (WEEK 13)
14. REMOVE ALL SEDIMENT CONTROL MEASURES AFTER RECEIVING APPROVAL FROM THE SEDIMENT CONTROL INSPECTOR. (WEEK 14)

NOTES:

1. DURING GRADING AND AFTER EACH RAINFALL, CONTRACTOR WILL INSPECT AND PROVIDE NECESSARY MAINTENANCE TO THE SEDIMENT CONTROL MEASURES ON THIS PLAN.
2. FOLLOWING INITIAL SOIL DISTURBANCES OR REDISTURBANCE PERMANENT OR TEMPORARY STABILIZATION SHALL BE COMPLETED WITHIN:
   A. 7 CALENDAR DAYS FOR ALL PERIMETER SEDIMENT CONTROL STRUCTURES, DIKES, SWALES AND ALL SLOPES GREATER THAN 3:1.
   B. 14 CALENDAR DAYS FOR ALL OTHER DISTURBED AREAS.

SEDIMENT CONTROL NOTES

1. A minimum of 48 hours notice must be given to the Howard County Department of Inspection, License and Permits Sediment Control Division prior to the start of any construction (313-1855).
2. All vegetation and structural practices are to be installed according to the provisions of this plan and are to be in conformance with the 1994 MARYLAND STANDARDS AND SPECIFICATIONS FOR SOIL EROSION AND SEDIMENT CONTROL. and revisions thereto.
3. Following initial soil disturbance or redisturbance, permanent or temporary stabilization shall be completed within: (a) 7 calendar days for all perimeter sediment control structures, dikes, perimeter slopes, and all slopes greater than 3:1, (b) 14 days as to all other disturbed or graded areas on the project site.
4. All sediment traps/basins shown must be fenced and warning signs posted around their perimeter in accordance with Vol. 1, Chapter 7, HOWARD COUNTY DESIGN MANUAL, Storm Drainage, i.e. all sediment traps and basins in residential areas or in residential developments expected to have occupants before thier removal shall be fenced if the maximum depth for the sediment volume exceeds 18 inches. Fencing shall be equivalent to snow fencing in height, ability to be seen and abiliity to restrict inadvertent passage.
5. All disturbed areas must be stabilized within the time period specified above in accordance with the 1994 MARYLAND STANDARDS AND SPECIFICATIONS FOR SOIL EROSION AND SEDIMENT CONTROL for permanent seeding, sod, temporary seeding, and mulching (Sec. G). Temporary stabilization with mulch alone shall be done when recommended seeding dates do not allow for proper germination and establishment of grasses.
6. All sediment control structures are to remain in place and are to be maintained in operative condition until permission for their removal has been obtained from the Howard County Sediment Control Inspector.
7. Site Analysis :

Total Area	19.9 Acres
Area Disturbed	6.83 Acres
Area to be roofed or paved	0.95 Acres
Area to be vegetatively stabilized	5.88 Acres
Total Cut	12,000 CY
Total Fill	12,000 CY
WASTE/BORROW LOCATION	ONSITE & OFFSITE*

8. Any sediment control practice which is disturbed by grading activity for placement of utilities must be repaired on the same day of disturbance.
9. Additional sediment controls must be provided, if deemed necessary by the howard County Sediment Control Inspector.
10. On all sites with disturbed areas in excess of 2 acres, approval of the inspection agency shall be requested upon completion of installation of perimeter erosion and sediment controls, but before proceeding with any other earth disturbance or grading. Other building or grading inspection approvals may not be authorized until this initial approval by the inspection agency is made.
11. Trenches for the construction of utilities is limited to three pipe lengths or that which shall be back-filled and stabilized within one working day, whichever is shorter.

* To be determined by contractor, with pre-approval of the Sediment Control Inspector to a site with an approved and active grading permit

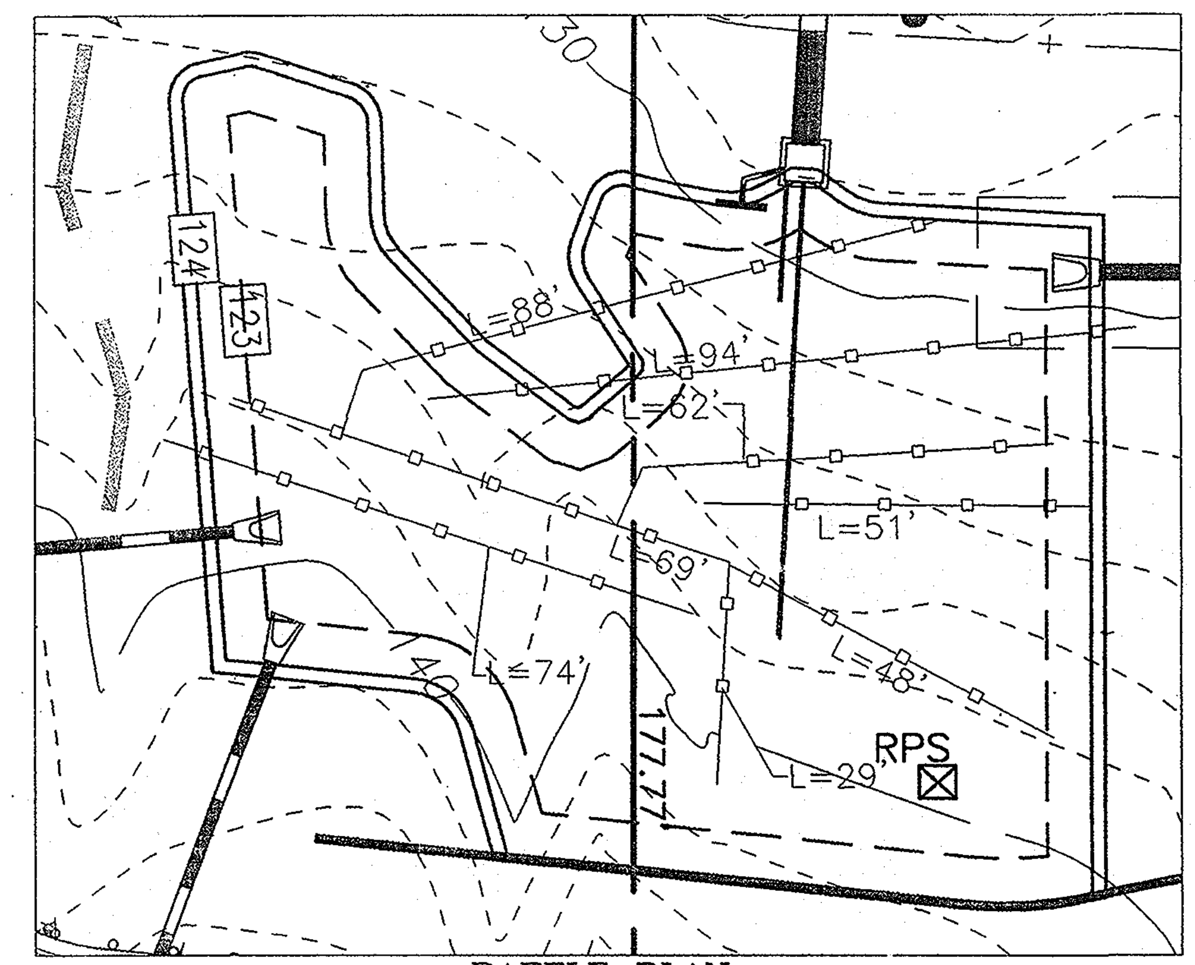

BAFFLE PLAN
SCALE: 1"=20'

DETAIL 18 - SEDIMENT BASIN BAFFLES

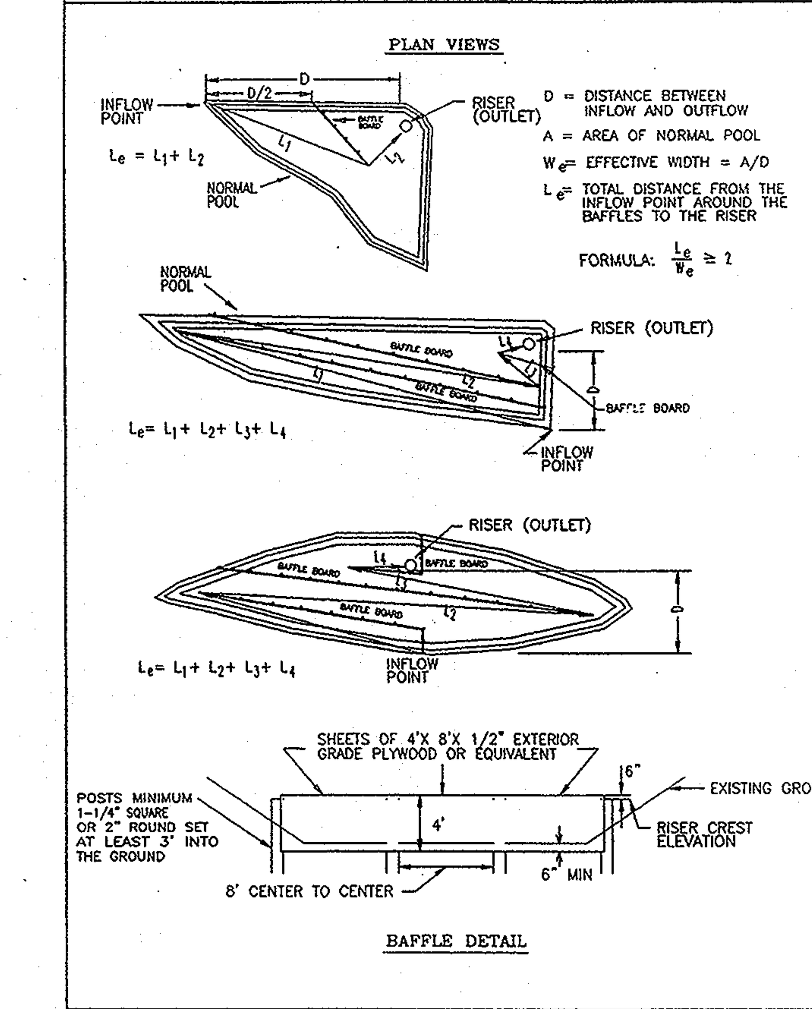

U.S. DEPARTMENT OF AGRICULTURE SOIL CONSERVATION SERVICE	PAGE C - 10 - 28	MARYLAND DEPARTMENT OF ENVIRONMENT WATER MANAGEMENT ADMINISTRATION

SEDIMENT BASIN #1

D.A. =	7.32 AC.
STORAGE REQUIRED (SEDIMENT)=	26352 CF.
STORAGE PROVIDED (SEDIMENT)=	64149 CF.
TOP OF DAM =	130.76
TOP OF RISER =	129.43
WEIR CREST EL. =	126.8
BOTTOM EL. =	121.75
C/O EL. =	122.88
SIDE SLOPES =	3:1
WEIR WIDTH =	3.5'
WET VOLUME REQUIRED =	13176
WET VOLUME PROVIDED =	13176
WET STORAGE EL. =	123.68
DRY VOLUME REQUIRED =	13176
DRY STORAGE PROVIDED =	50970
DRY STORAGE EL. =	128.74
Q_1 (TSWM) =	0.69 CFS.
Q_{10} (TSWM) =	18.37 CFS.
Q_{100}(TSWM) =	32.90 CFS.
Q_1 (EX) =	9.81 CFS.

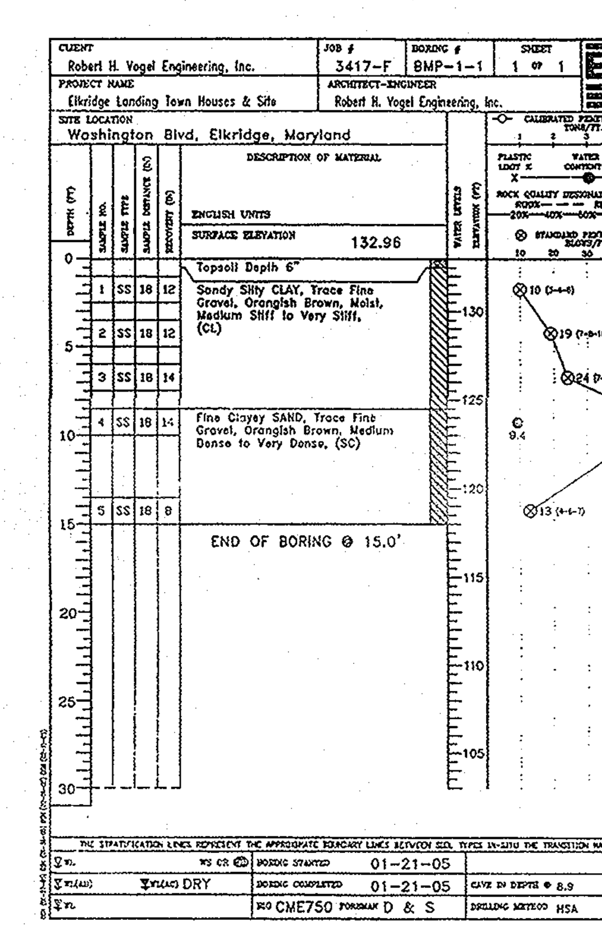

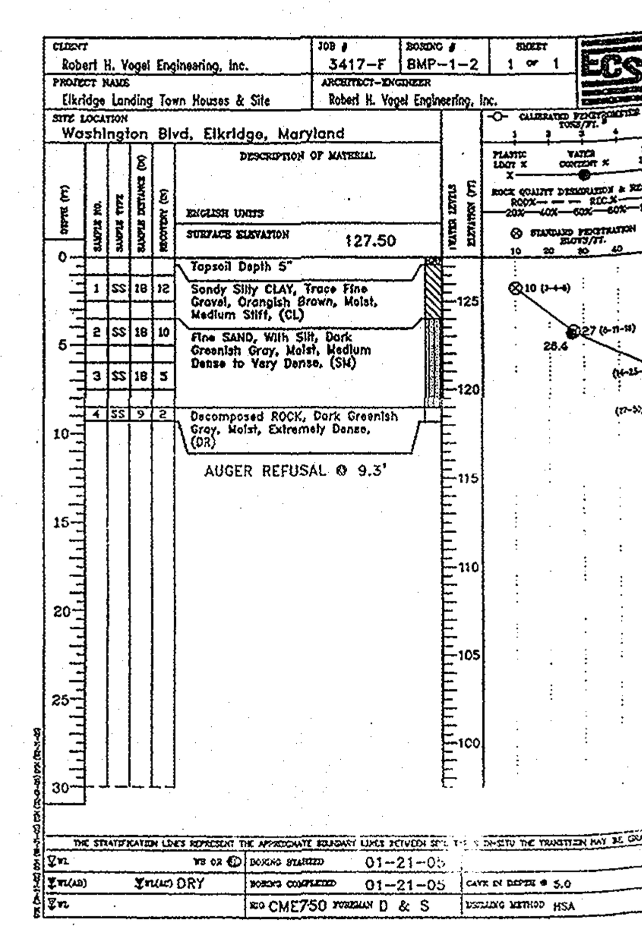

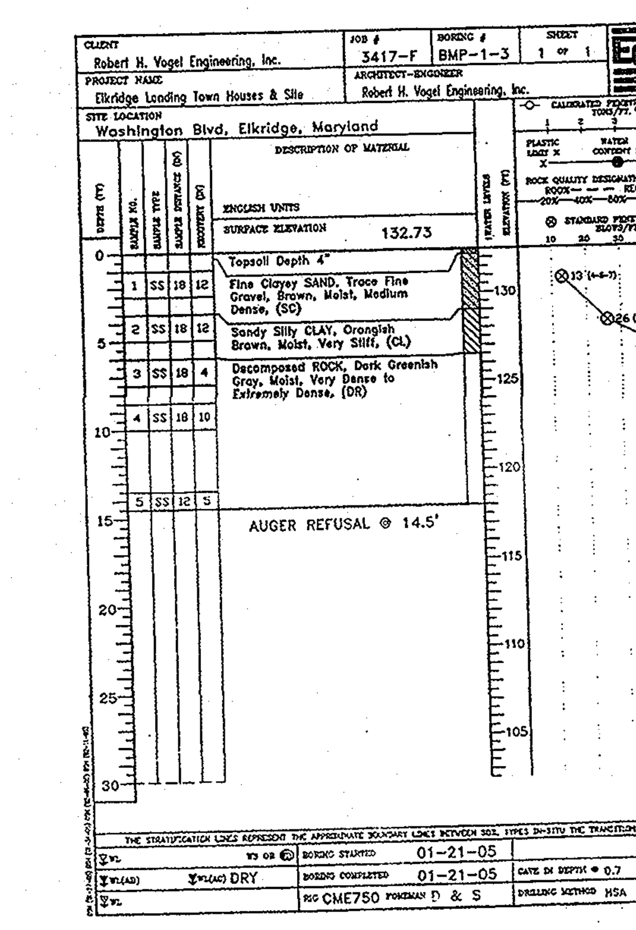

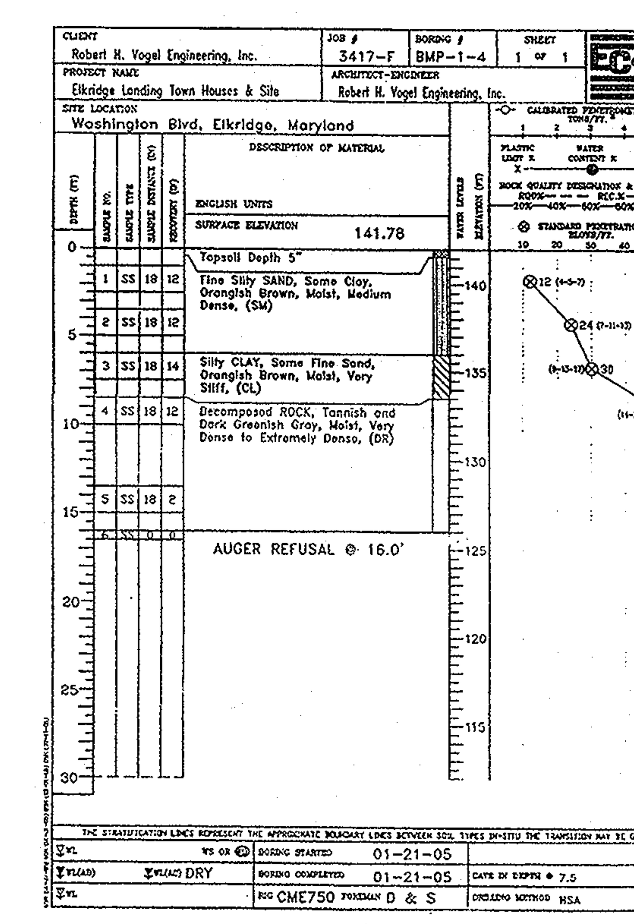

OWNER/DEVELOPER

ELKRIDGE DEVELOPMENT, LLC
301 TRANSYLVANIA AVENUE
RALEIGH, NC 27609
(919) 789-9289

ELKRIDGE DEVELOPMENT NO.2, LLC
301 TRANSYLVANIA AVENUE
RALEIGH, NC 27609
(919) 789-9289

NO.	REVISION	DATE
1	REVISE SEQUENCE OF CONSTRUCTION	4-20-07

APPROVED: HOWARD COUNTY DEPARTMENT OF PUBLIC WORKS

CHIEF, BUREAU OF HIGHWAYS — 10-19-06 DATE

APPROVED: HOWARD COUNTY DEPARTMENT OF PLANNING AND ZONING

CHIEF, DEVELOPMENT ENGINEERING DIVISION — 10/23/06 DATE

CHIEF, DIVISION OF LAND DEVELOPMENT — 10/24/06 DATE

THESE PLANS HAVE BEEN REVIEWED FOR HOWARD SOIL CONSERVATION DISTRICT AND MEETS THE TECHNICAL REQUIREMENTS.

USDA-NATURAL RESOURCES CONSERVATION SERVICE — 10/17/06 DATE

THIS DEVELOPMENT PLAN IS APPROVED FOR SOIL EROSION AND SEDIMENT CONTROL BY THE HOWARD SOIL CONSERVATION DISTRICT.

HOWARD S.C.D. — 10/17/06 DATE

ENGINEER'S CERTIFICATE:

"I HEREBY CERTIFY THAT THIS PLAN FOR SEDIMENT AND EROSION CONTROL REPRESENTS A PRACTICAL AND WORKABLE PLAN BASED ON MY PERSONAL KNOWLEDGE OF THE SITE CONDITIONS AND THAT IT WAS PREPARED IN ACCORDANCE WITH THE REQUIREMENTS OF THE HOWARD SOIL CONSERVATION DISTRICT."

SIGNATURE OF ENGINEER — WALTER G. ZAWISLAK, PE — 10/6/06 DATE

DEVELEOPER'S CERTIFICATE:

"I/WE CERTIFY THAT ALL DEVELOPMENT AND CONSTRUCTION WILL BE DONE IN ACCORDANCE TO THIS PLAN OF DEVELOPMENT FOR SEDIMENT CONTROL, AND THAT ALL RESPONSIBLE PERSONNEL INVOLVED IN THE CONSTRUCTION PROJECT WILL HAVE A CERTIFICATE OF ATTENDANCE AT A DEPARTMENT OF ENVIRONMENT APPROVED TRAINING PROGRAM FOR THE CONTROL OF SEDIMENT AND EROSION BEFORE BEGINNING THE PROJECT. I ALSO AUTHORIZE PERIODIC ON-SITE INSPECTIONS BY THE HOWARD SOIL CONSERVATION DISTRICT.

Peter G. Voelkel — SIGNATURE OF DEVELOPER — PETER G. VOELKEL — 10/6/06 DATE

SOILS LEGEND

SYMBOL	GROUP	NAME	DESCRIPTION
BeB2	C	BELTSVILLE SILT LOAM	1%-5% SLOPES, MODERATELY ERODED
BeC3	C	BELTSVILLE SILT LOAM	5%-10% SLOPES, SEVERELY ERODED
Ha	D	HATBORO SILT LOAM	POORLEY DRAINED
KeB2	D	KELLY SILT LOAM	3%-8% SLOPES, MODERATELY ERODED
KcE3	D	KELLY CLAY LOAM	15%-30% SLOPES, SEVERELY ERODED
ScD	C	SANDY & CLAYEY LOAM	MODERATELY SLOPING
SfC2	B	SASSAFRAS GRAVELLY SANDY LOAM	5%-10% SLOPES, MODERATELY ERODED
SiC2	B	SASSAFRAS LOAM	5%-10% SLOPES, MODERATELY ERODED
SsE	B	SASSAFRAS LOAM	15%-40% SLOPES

FINAL ROAD CONSTRUCTION PLANS

SEDIMENT AND EROSION CONTROL NOTES AND DETAILS

BELMONT STATION

PARCELS 'A,' 'B' & 'C' & OPEN SPACE LOT 1
REF: WP-04-152, WP-06-79, S-04-10, P-05-17, F-06-169
TAX MAP 37 BLOCK 18 — PARCEL '196, 198, 199'
1ST ELECTION DISTRICT — HOWARD COUNTY, MARYLAND

ROBERT H. VOGEL ENGINEERING, INC.
ENGINEERS • SURVEYORS • PLANNERS
8407 MAIN STREET
ELLICOTT CITY, MD 21043
TEL: 410.461.7666
FAX: 410.461.8961

STATE OF MARYLAND — WALTER GEORGE ZAWISLAK — PROFESSIONAL ENGINEER — 10/6/06

DESIGN BY:	WJZ
DRAWN BY:	DZ
CHECKED BY:	
DATE:	OCTOBER 2006
SCALE:	AS SHOWN
W.O. NO.:	04-08