FINAL ROAD CONSTRUCTION PLAN
DENNIS PRESERVE
LOTS 1-58
HOWARD COUNTY, MARYLAND

BENCHMARK NO. 1: COUNTY CONTROL #31EA
N 569641.123 E 1374815.935
ELEV. = 469.603

BENCHMARK NO. 2: COUNTY CONTROL #31EB
N 568730.984 E 1376273.491
ELEV. = 453.396

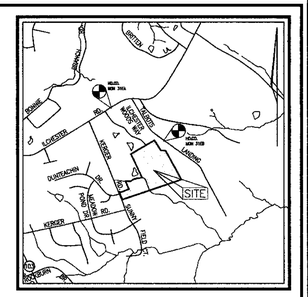

VICINITY MAP
SCALE: 1"=2000'

SITE DATA

LOCATION: TAX MAP 31, GRID 21, PARCEL '226'
1ST ELECTION DISTRICT
EXISTING ZONING: R-20
DPZ REFERENCES: S-01-06, P-02-27, WP-03-07 (APP. 11/05/02)
GROSS AREA OF PROJECT: 31.37 AC.
AREA OF 100-YR FLOODPLAIN: 1.57 AC. (68,284 SF±)
NET AREA OF PROJECT: 29.80 AC.
AREA OF PUBLIC RIGHT-OF-WAY DEDICATION: 2.09 AC. (91,223 SF±)
AREA OF OPEN SPACE REQUIRED: 30% OR 9.41 AC.
AREA OF CREDITED OPEN SPACE PROVIDED: 34.5% OR 10.75 AC. (468,159 SF±)
AREA OF NON-CREDITED OPEN SPACE: 0.09 AC.
TOTAL AREA OF OPEN SPACE PROVIDED: 10.84 AC. OR 34.6%
APPROXIMATE LIMIT OF DISTURBANCE: 21.55 AC±

GENERAL NOTES

1. ALL ASPECTS OF THE PROJECT ARE IN CONFORMANCE WITH THE LATEST HOWARD COUNTY STANDARDS UNLESS WAIVERS HAVE BEEN APPROVED.
2. ALL CONSTRUCTION SHALL BE IN ACCORDANCE WITH THE LATEST STANDARDS AND SPECIFICATIONS OF HOWARD COUNTY PLUS MSHA STANDARDS AND SPECIFICATIONS IF APPLICABLE.
3. THE CONTRACTOR SHALL NOTIFY THE DEPARTMENT OF PUBLIC WORKS/BUREAU OF ENGINEERING/CONSTRUCTION INSPECTION DIVISION AT (410) 313-1880 AT LEAST FIVE (5) WORKING DAYS PRIOR TO THE START OF WORK.
4. THE CONTRACTOR SHALL NOTIFY "MISS UTILITY" AT 1-800-257-7777 AT LEAST 48 HOURS PRIOR TO ANY EXCAVATION WORK BEING DONE.
5. TRAFFIC CONTROL DEVICES, MARKINGS AND SIGNING SHALL BE IN ACCORDANCE WITH THE LATEST EDITION OF THE MANUAL OF UNIFORM TRAFFIC CONTROL DEVICES (MUTCD). ALL STREET AND REGULATORY SIGNS SHALL BE IN PLACE PRIOR TO THE PLACEMENT OF ANY ASPHALT.
6. DEED REFERENCE: 5342/533
7. THE PROJECT BOUNDARY IS BASED ON A SURVEY PREPARED BY FREDERICK WARD ASSOCIATES, DATED DECEMBER 2001.
8. THE TOPOGRAPHY SHOWN HEREON IS BASED ON AERIAL PHOTOGRAMETRIC SURVEY PREPARED BY GREENMAN PEDERSON, DATED FEBRUARY 2001.
9. COORDINATE DATUM IS BASED ON THE MARYLAND COORDINATE SYSTEM (NAD 83) AS PROJECTED BY THE FOLLOWING HOWARD COUNTY GEODETIC CONTROL STATIONS: #31EA & #31EB
10. WATER AND SEWER FOR THIS PROJECT WILL BE PUBLIC AND PROVIDED THROUGH CONTRACT NO. 14-4078-D.
11. STORMWATER MANAGEMENT IS PROVIDED FOR THIS DEVELOPMENT. THE TWO STORMWATER MANAGEMENT FACILITIES ARE LOCATED ON OPEN SPACE LOTS 9 AND 21 AND WILL BE PRIVATELY OWNED AND MAINTAINED BY THE HOA. POND #1 AND POND #2 ARE MICROPOOL EXTENDED DETENTION FACILITES PROVIDING THE REQUIRED WQv AND Cpv FOR THE DEVELOPMENT. BOTH FACILITIES ARE HAZARD CLASS 'A'.
12. EXCAVATION OF SEDIMENT FROM SWM MAINTENANCE TO BE HAULED OFF-SITE AND STOCKPILED ON-SITE.
13. STORMWATER MANAGEMENT SOIL BORINGS FOR THIS SITE ARE BASED ON A GEOTECHNICAL ANALYSIS PREPARED BY HILLIS-CARNES ENGINEERING ASSOC., DATED JANUARY 2002.
14. HDPE BEDDING SPECIFICATIONS ARE TO BE AS PER ASTM STANDARDS.
15. WETLANDS AND STREAMS SHOWN ON-SITE ARE BASED ON A FIELD INVESTIGATION BY EXPLORATION RESEARCH, DATED JUNE 2000, AND THE AERIAL PHOTOGRAMETRIC SURVEY PREPARED BY GREENMAN PEDERSON.
16. FLOODPLAIN SHOWN ON-SITE IS BASED ON A STUDY PREPARED BY FREDERICK WARD ASSOCIATES, DATED MAY 2002.
17. A FOREST STAND DELINEATION PLAN WAS PREPARED FOR THIS SITE BY VOGEL AND ASSOC., DATED JUNE 2000, AND APPROVED UNDER S-01-06.
18. FOREST CONSERVATION PLAN PREPARED BY FREDERICK WARD ASSOCIATES, DATED JANUARY 2002. FOREST CONSERVATION REQUIREMENTS PER SECTION 16.1202 OF THE HOWARD COUNTY CODE AND THE FOREST CONSERVATION MANUAL FOR THIS SUBDIVISION WILL BE FULFILLED BY THE RETENTION OF EXISTING FOREST IN THE AMOUNT OF 4.89 AC., ON-SITE REFORESTATION IN THE AMOUNT OF 2.03 AC. AND FEE-IN-LIEU OF $6,534.00 FOR THE REMAINING 0.30 AC. OF REFORESTATION. TOTAL OBLIGATION FOR THIS SITE IS 4.89 AC. OF RETENTION AND 2.33 AC. OF REFORESTION. FINANCIAL SURETY IN THE AMOUNT OF $86,815.10 WILL BE POSTED WITH THE FOREST CONSERVATION AGREEMENT.
19. NO CLEARING, GRADING, OR CONSTRUCTION IS PERMITTED WITHIN THE WETLANDS, STREAMS, OR THEIR BUFFERS, AND THE FOREST CONSERVATION EASEMENTS EXCEPT THOSE AREAS SPECIFIED FOR THE CONTRUCTION OF PUBLIC WATER AND PUBLIC SEWER. (MDE PERMIT TRACKING NO. 04-NT-0197/200463350)
20. APFO TRAFFIC STUDY PREPARED BY THE TRAFFIC GROUP, DATED AUGUST 2000, AND APPROVED UNDER S-01-06.
21. PERIMETER AND STORMWATER MANAGEMENT LANDSCAPING REQUIREMENTS AS SET FORTH IN SECTION 16.124 OF THE SUBDIVISION REGULATIONS AND THE HOWARD COUNTY LANDSCAPE MANUAL SHALL BE COMPLIED WITH. A FINANCIAL SURETY IN THE AMOUNT OF $26,280.00 FOR THE REQUIRED 51 SHADE TREES, 31 EVERGREEN TREES, 11 SHRUBS, AND 20 PRIVATE STREET TREES WILL BE POSTED AS PART OF THE DEVELOPER'S AGREEMENT.
22. STREET TREES ARE REQUIRED FOR THIS PROJECT IN ACCORDANCE WITH SECTION 16.124(e)(1) OF THE SUBDIVISION REGULATIONS AND THE LANDSCAPE MANUAL. A FINANCIAL SURETY IN THE AMOUNT OF $30,600.00 TO BE POSTED AS PART OF THE DEVELOPER'S AGREEMENT FOR THE REQUIRED 102 PUBLIC STREET TREES.
23. TREE PROTECTION FENCING WILL BE PROVIDED AT THE LIMITS OF DISTURBANCE WHERE GRADING IS ADJACENT TO FOREST CONSERVATION RETENTION AREAS AND SENSITIVE ENVIRONMENTAL AREAS, SUCH AS STREAM AND WETLAND BUFFERS.
24. STREET LIGHTING HAS BEEN PROVIDED FOR THE PUBLIC ROADS IN ACCORDANCE WITH SECTION 16.135 OF THE HOWARD COUNTY SUBDIVISION AND LAND DEVELOPMENT REGULATIONS AND THE DESIGN MANUAL. A MINIMUM OF 20' SHALL BE MAINTAINED BETWEEN ANY STREET LIGHT AND ANY TREE.
25. SEDIMENT AND EROSION CONTROL HAS BEEN PROVIDED FOR THIS SITE.
26. THIS PROPERTY IS WITHIN THE METROPOLITAN DISTRICT.
27. TO THE BEST OF THE OWNERS KNOWLEDGE, THERE ARE NO BURIAL/CEMETARY LOCATIONS ON SITE.
28. A NOISE STUDY IS NOT REQUIRED FOR THIS SITE.
29. OPEN SPACE LOTS 9, 21 AND 34 ARE TO BE PRIVATELY OWNED AND MAINTAINED BY THE HOA. OPEN SPACE LOTS 8 AND 35 ARE TO BE OWNED AND MAINTAINED BY HOWARD COUNTY DEPT. OF RECREATION AND PARKS.
30. LOTS 36-38 WILL UTILIZE A USE-IN-COMMON DRIVEWAY. HOWARD COUNTY STANDARD DETAIL NO. R-6.06 WILL BE UTILIZED FOR THE ENTRANCE AT THE INTERSECTION OF THE PUBLIC ROAD.
31. NON-BUILDABLE LOT 30 TO BE TRANSFERRED TO THE OWNER OF ADJACENT PARCEL '659' FOR THE PURPOSES OF A PRIVATE ACCESS EASEMENT FOR THE SUBDIVISION OF ADJACENT PARCEL '659'.
32. OPEN SPACE LOT 35 TO BE ACCESSED THROUGH LOT 34.
33. FOR FLAG OR PIPE STEM LOTS, REFUSE COLLECTION, SNOW REMOVAL AND ROAD MAINTENANCE ARE PROVIDED TO THE JUNCTION OF THE FLAG OR PIPE STEM AND THE ROAD RIGHT-OF-WAY ONLY AND NOT ONTO THE FLAG OR PIPE STEM DRIVEWAY.
34. WP-03-07: A WAIVER PETITION HAS BEEN SUBMITTED AND APPROVED, DATED NOVEMBER 5, 2002, TO WAIVE SECTION 16.147 TO WAIVE THE REQUIREMENT OF A FINAL SUBDIVISION PLAT/PLAN AND PERMIT THE ADJUSTMENT OF THE PROPERTY LINES AND ACREAGES OF PARCELS 226, 327, 431 AND 497 TO BE DONE BY ADJOINER DEED CONVEYANCE.
    APPROVAL IS SUBJECT TO THE FOLLOWING CONDITIONS:
    1. THE ADJOINER DEED TRANSFERS OF LAND SHALL BE ACCOMPLISHED PRIOR TO SUBMISSION OF THE FUTURE SUBDIVISION PLAN FOR THIS PROJECT, AND THE NEW DEED RECORDING NUMBERS SHALL BE INDICATED WHERE REQUIRED ON THE FUTURE FINAL SUBDIVISION PLATS AND PLANS.

    THIS WAIVER IS VALID FROM 11/5/02 TO 11/5/03 OR AS LONG AS THE SUBDIVISION REMAINS IN ACTIVE PROCESSING.
35. AS A CONSEQUENCE OF ITS SUBMISSION PRIOR TO NOVEMBER 15, 2001, THIS SUBDIVISION PLAN IS GRANDFATHERED TO THE FOURTH EDITION OF THE SUBDIVISION AND LAND DEVELOPMENT REGULATIONS AND BECAUSE THE PRELIMINARY PLAN WAS NOT APPROVED PRIOR TO NOVEMBER 1, 2001, THIS PROJECT IS SUBJECT TO COMPLIANCE WITH COUNTY COUNCIL BILL 50-2001 WHICH AMENDED PORTIONS OF THE ZONING REGULATIONS.
36. ALL FILLED AREAS OF EARTHWORK REQUIRE 95% COMPACTION PER AASHTO-180 SPECIFICATIONS.
37. DRIVEWAY PLACEMENT AND GRADING WILL BE FINALIZED AT SITE DEVELOPMENT PHASE.
38. DEVELOPMENT OR CONSTRUCTION ON THESE LOTS MUST COMPLY WITH THE SETBACK AND BUFFER REGULATIONS IN EFFECT AT THE TIME OF THE SUBMISSION OF THE SITE DEVELOPMENT PLAN, WAIVER PETITION OR BUILDING/GRADING PERMIT.

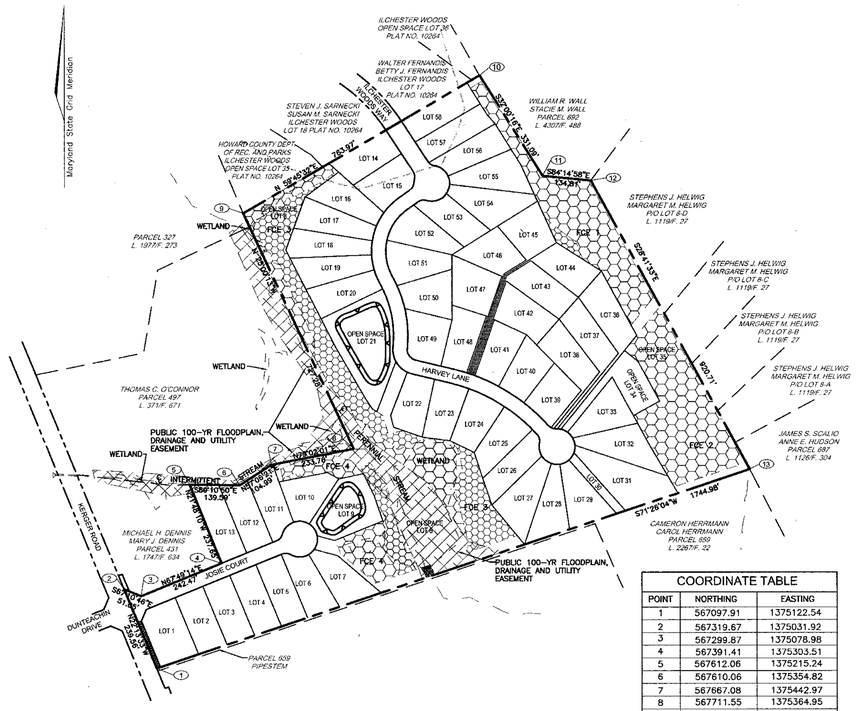

LOCATION PLAN
SCALE: 1"=200'

COORDINATE TABLE		
POINT	NORTHING	EASTING
1	567097.91	1375122.54
2	567319.67	1375031.92
3	567299.87	1375078.98
4	567391.41	1375303.51
5	567612.06	1375215.74
6	567610.06	1375354.82
7	567667.08	1375442.97
8	567711.55	1375364.95
9	568370.94	1375365.06
10	568755.43	1376025.06
11	568474.66	1376200.53
12	568461.15	1376334.67
13	567653.50	1376776.71

SHEET INDEX	
SHEET NO.	TITLE
1 OF 17	COVER SHEET
2 OF 17	ROAD CONSTRUCTION PLAN
3 OF 17	ROAD CONSTRUCTION PROFILES
4 OF 17	ROAD CONSTRUCTION PLAN AND PROFILES
5 OF 17	GRADING AND SEDIMENT & EROSION CONTROL PLAN
6 OF 17	GRADING AND SEDIMENT & EROSION CONTROL PLAN AND TRAFFIC CONTROL PLAN
7 OF 17	GRADING AND SEDIMENT & EROSION CONTROL DETAILS
8 OF 17	STORM DRAIN DRAINAGE AREA MAP
9 OF 17	STORM DRAIN DRAINAGE AREA MAP
10 OF 17	STORM DRAIN PROFILES
11 OF 17	STORM DRAIN PROFILES
12 OF 17	STORMWATER MANAGEMENT DETAILS-POND #1
13 OF 17	STORMWATER MANAGEMENT DETAILS-POND #2
14 OF 17	LANDSCAPE PLAN
15 OF 17	LANDSCAPE PLAN
16 OF 17	FOREST CONSERVATION PLAN
17 OF 17	FOREST CONSERVATION PLAN

NO.	REVISION	DATE

APPROVED: DEPARTMENT OF PUBLIC WORKS

Chief, Bureau of Highways — Date 10-19-04

APPROVED: DEPARTMENT OF PLANNING AND ZONING

Chief, Division of Land Development — Date 10/27/04

Chief, Development Engineering Division — Date 10/25/04

FINAL ROAD CONSTRUCTION PLAN
DENNIS PRESERVE
LOTS 1-58

TAX MAP 31 BLOCK 21 PARCEL '226'
1ST ELECTION DISTRICT HOWARD COUNTY, MARYLAND
REF.: S-01-06, P-02-27, WP-03-07 (APP. 11/05/02)
MDE PERMIT TRACKING NO. 04-NT-0197/200463350

ROBERT H. VOGEL ENGINEERING, INC.
ENGINEERS • SURVEYORS • PLANNERS
8407 MAIN STREET ELLICOTT CITY, MD 21043
TEL: 410.461.7666 FAX: 410.461.8961

DEVELOPER
ELLICOTT CITY LAND HOLDINGS, LLC
8000 MAIN STREET
ELLICOTT CITY, MARYLAND 21043
ATTN: MR. DONALD R. REUWER
(410) 480-9105

OWNER
DENNIS PRESERVE, LLC
ELLICOTT CITY LAND HOLDINGS, LLC
SOLE MEMBER
8000 MAIN STREET
ELLICOTT CITY, MD 21043
410-480-9105

STATE OF MARYLAND — ROBERT HARRIS VOGEL — No. 16193 — REGISTERED PROFESSIONAL ENGINEER — 10-25-04
ROBERT H. VOGEL, PE No.16193

DESIGN BY:	RHV
DRAWN BY:	CMH
CHECKED BY:	RHV
DATE:	SEPTEMBER 2004
SCALE:	AS SHOWN
W.O. NO.:	2017019.0

SHEET 1 OF 17

F-04-74

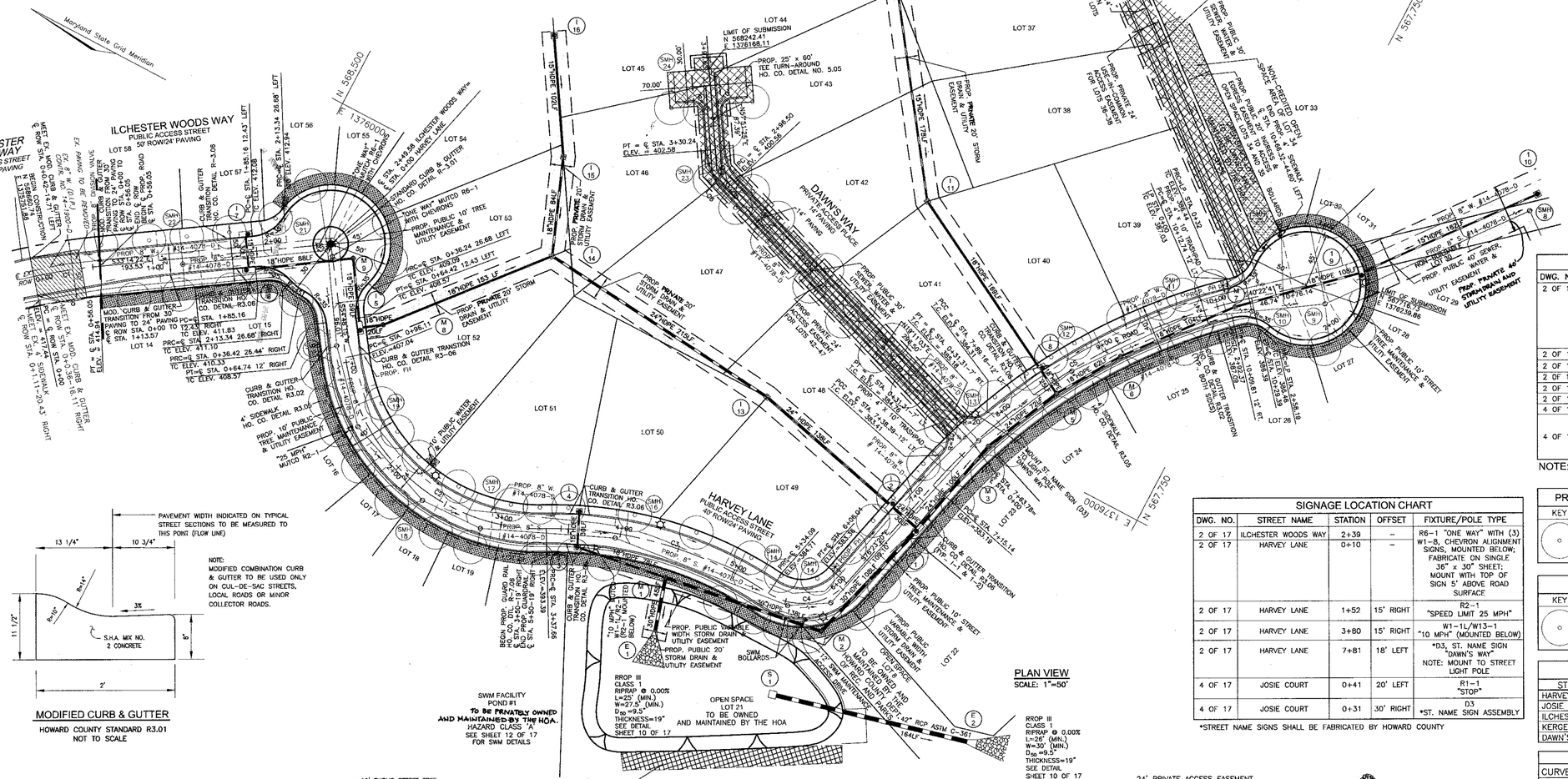
Maryland State Grid Meridian
N 568,500
E 1375000
E 1376500
N 567,500
E 1376000
N 567,000
ILCHESTER WOODS WAY
PUBLIC ACCESS STREET
50' ROW/24' PAVING
EX. ILCHESTER WOODS WAY
PUBLIC ACCESS STREET
50' ROW 30' PAVING
HARVEY LANE
PUBLIC ACCESS STREET
40' ROW/24' PAVING
DAWN'S WAY
PRIVATE ACCESS PLACE
14' PAVING
LIMIT OF SUBMISSION
N 568242.41
E 1376168.11
PROP. 25' x 60' TEE TURN-AROUND HO. CO. DETAIL NO. 5.05
PROP. PRIVATE 14' USE-IN-COMMON DRIVEWAY FOR LOTS 36-38
PROP. PRIVATE 24' USE-IN-COMMON ACCESS EASEMENT FOR LOTS 36-38
PROP. PUBLIC 30' WATER & SEWER & UTILITY EASEMENT
NON-CREDITED OPEN SPACE AREA LOT 34
EXIST. PUBLIC 20' WATER & SEWER & UTILITY EASEMENT
PROP. 4' SIDEWALK
EXIST. PUBLIC 40' SEWER, WATER & UTILITY EASEMENT
PROP. PRIVATE 40' STORM DRAIN AND UTILITY EASEMENT
PROP. PUBLIC 10' STREET TREE MAINTENANCE & UTILITY EASEMENT
PROP. PRIVATE 20' STORM DRAIN & UTILITY EASEMENT
PROP. PUBLIC 30' WATER & SEWER & UTILITY EASEMENT
PROP. PUBLIC 10' TREE MAINTENANCE & UTILITY EASEMENT
PROP. PUBLIC 20' STORM DRAIN & UTILITY EASEMENT
PROP. PUBLIC MANHOLE WIDTH STORM DRAIN & UTILITY EASEMENT
PROP. PUBLIC VARIABLE WIDTH STORM DRAIN & UTILITY EASEMENT
OPEN SPACE LOT 21 TO BE OWNED AND MAINTAINED BY THE HOA
SWM BOLLARDS
SWM FACILITY POND #1 TO BE PRIVATELY OWNED AND MAINTAINED BY THE HOA.
HAZARD CLASS "A"
SEE SHEET 12 OF 17 FOR SWM DETAILS
RROP III CLASS 1 RIPRAP @ 0.00% L=25' (MIN.) W=27.5' (MIN.) D50 =9.5" THICKNESS=19" SEE DETAIL SHEET 10 OF 17
RROP III CLASS 1 RIPRAP @ 0.00% L=26' (MIN.) W=30' (MIN.) D50 =9.5" THICKNESS=19" SEE DETAIL SHEET 10 OF 17
42" RCP, ASTM C-361
164LF
PROP. 15" NO WOODY VEGETATION BUFFER
LOT 37
LOT 38
LOT 39
LOT 40
LOT 41
LOT 42
LOT 43
LOT 44
LOT 45
LOT 46
LOT 47
LOT 48
LOT 49
LOT 50
LOT 51
LOT 52
LOT 53
LOT 54
LOT 55
LOT 56
LOT

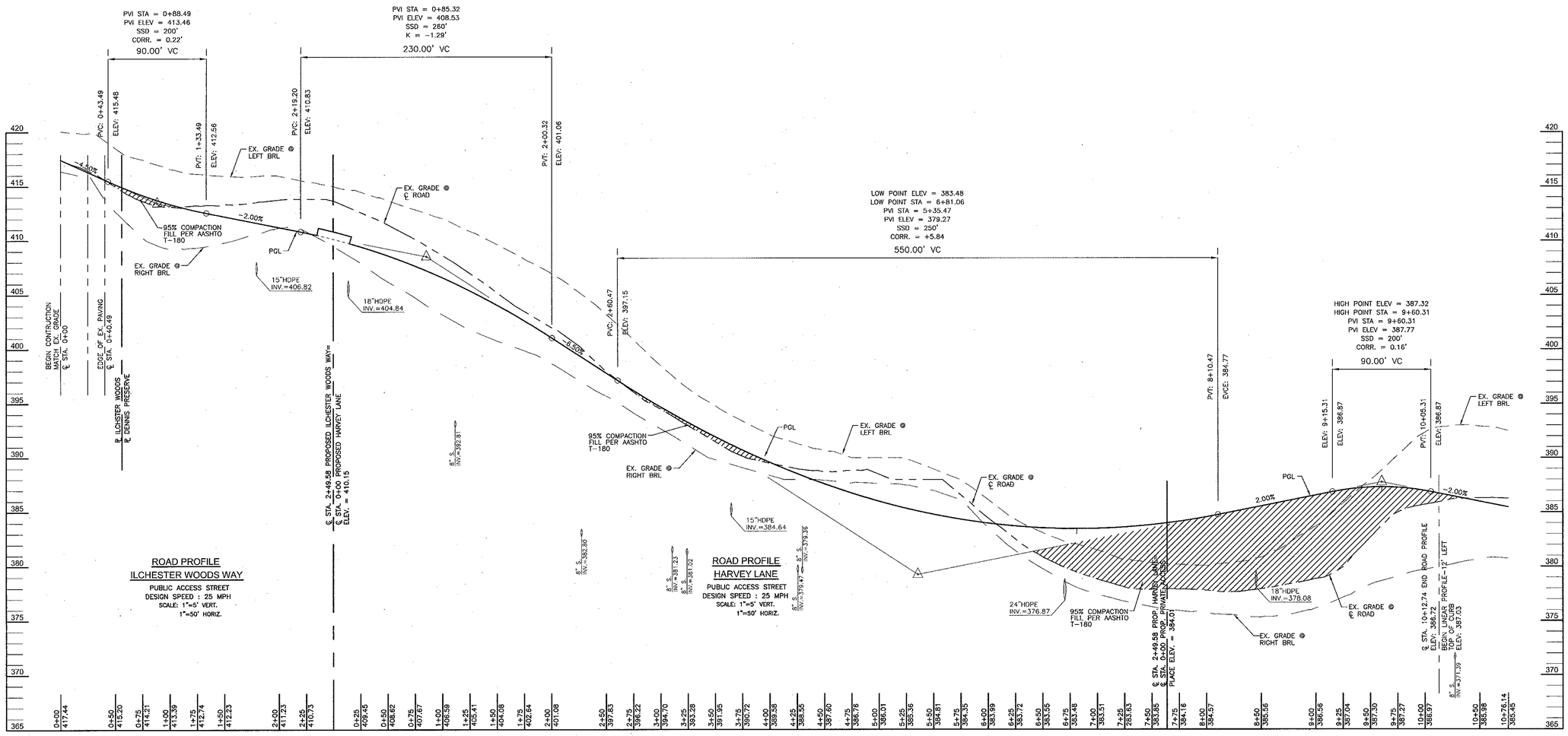

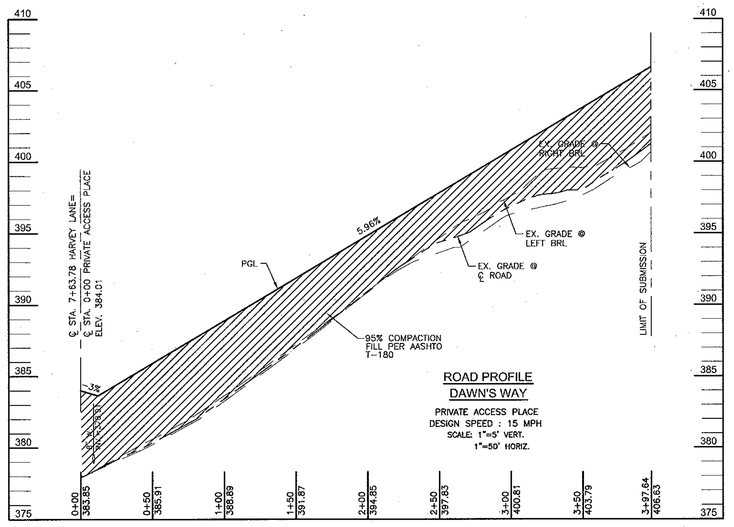

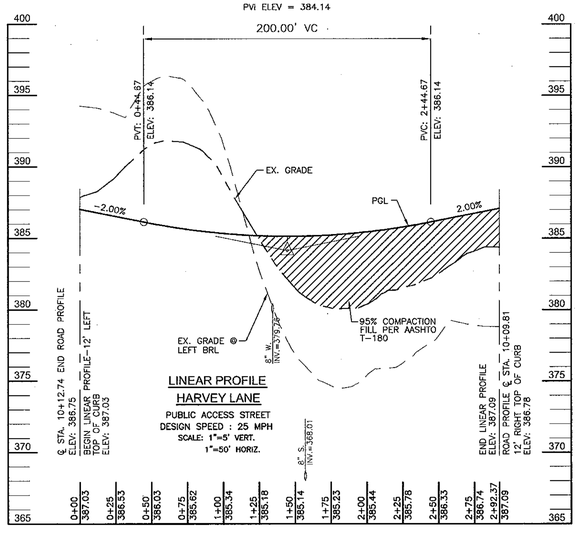

APPROVED: DEPARTMENT OF PUBLIC WORKS

Chief, Bureau of Highways — Date 10-19-04

APPROVED: DEPARTMENT OF PLANNING AND ZONING

Chief, Division of Land Development — Date 10/21/04

Chief, Development Engineering Division — Date 10/25/04

NO.	REVISION	DATE

ROAD CONSTRUCTION PROFILES

DENNIS PRESERVE
LOTS 1-58

TAX MAP 31 BLOCK 21 PARCEL '226'
1ST ELECTION DISTRICT HOWARD COUNTY, MARYLAND
REF.: S-01-06, P-02-27, WP-03-07 (APP. 11/05/02)

ROBERT H. VOGEL ENGINEERING, INC.
ENGINEERS • SURVEYORS • PLANNERS
8407 MAIN STREET TEL: 410.461.7666
ELLICOTT CITY, MD 21043 FAX: 410.461.8961

DEVELOPER
ELLICOTT CITY LAND HOLDINGS LLC
8000 MAIN STREET
ELLICOTT CITY, MARYLAND 21043
ATTN: MR. DONALD R. REUWER
(410) 480-9105

OWNER
DENNIS PRESERVE, LLC
ELLICOTT CITY LAND HOLDINGS, LLC
SOLE MEMBER
8000 MAIN STREET
ELLICOTT CITY, MD 21043
410-480-9105

STATE OF MARYLAND — ROBERT HARRIS VOGEL — No. 16193 — PROFESSIONAL ENGINEER
ROBERT H. VOGEL, PE No.16193

DESIGN BY:	RHV
DRAWN BY:	CMH
CHECKED BY:	RHV
DATE:	SEPTEMBER 2004
SCALE:	AS SHOWN
W.O. NO.:	2017019.0

SHEET 3 OF 17

F-04-74

STREET LIGHT LOCATION CHART				
DWG. NO.	STREET NAME	STATION	OFFSET	FIXTURE/POLE TYPE
2 OF 17	HARVEY LANE	0+00	--	150 WATT HPS VAPOR PREMIER POST-TOP FIXTURE MOUNTED ON A 14' BLACK FIBERGLASS MOUNTED ON A 14' POLE NOTE: ALL FOUR LENSES IN THIS FIXTURE SHALL BE "STREET SIDE"
2 OF 17	HARVEY LANE	2+29	15' LEFT	100 WATT HPS VAPOR PREMIER POST-TOP FIXTURE MOUNTED ON A 14' BLACK FIBERGLASS MOUNTED ON A 14' POLE NOTE: MOUNT D3, ST. NAME SIGN ASSEMBLY, TO LIGHT POLE AT STA. 7+81
2 OF 17	HARVEY LANE	4+30	15' LEFT	
2 OF 17	HARVEY LANE	5+78	14' RIGHT	
2 OF 17	HARVEY LANE	7+81	18' LEFT	
2 OF 17	HARVEY LANE	LP 1+53	4' LEFT	
4 OF 17	JOSIE COURT	LP 1+58	4' LEFT	
4 OF 17	JOSIE COURT	0+35	23' RIGHT	150 WATT HPS VAPOR PREMIER POST-TOP FIXTURE, MOUNTED ON A 14' BLACK FIBERGLASS POLE

NOTE: A MINIMUM OF 20' IS REQUIRED BETWEEN ANY STREET LIGHT AND ANY TREE

PRIVATE ACCESS PLACE STREET TREE SCHEDULE				
KEY	QUAN.	BOTANICAL NAME	SIZE	REM.
○	20	ACER RUBRUM 'AUTUMN FLAME'	2 1/2"-3" CAL.	B & B

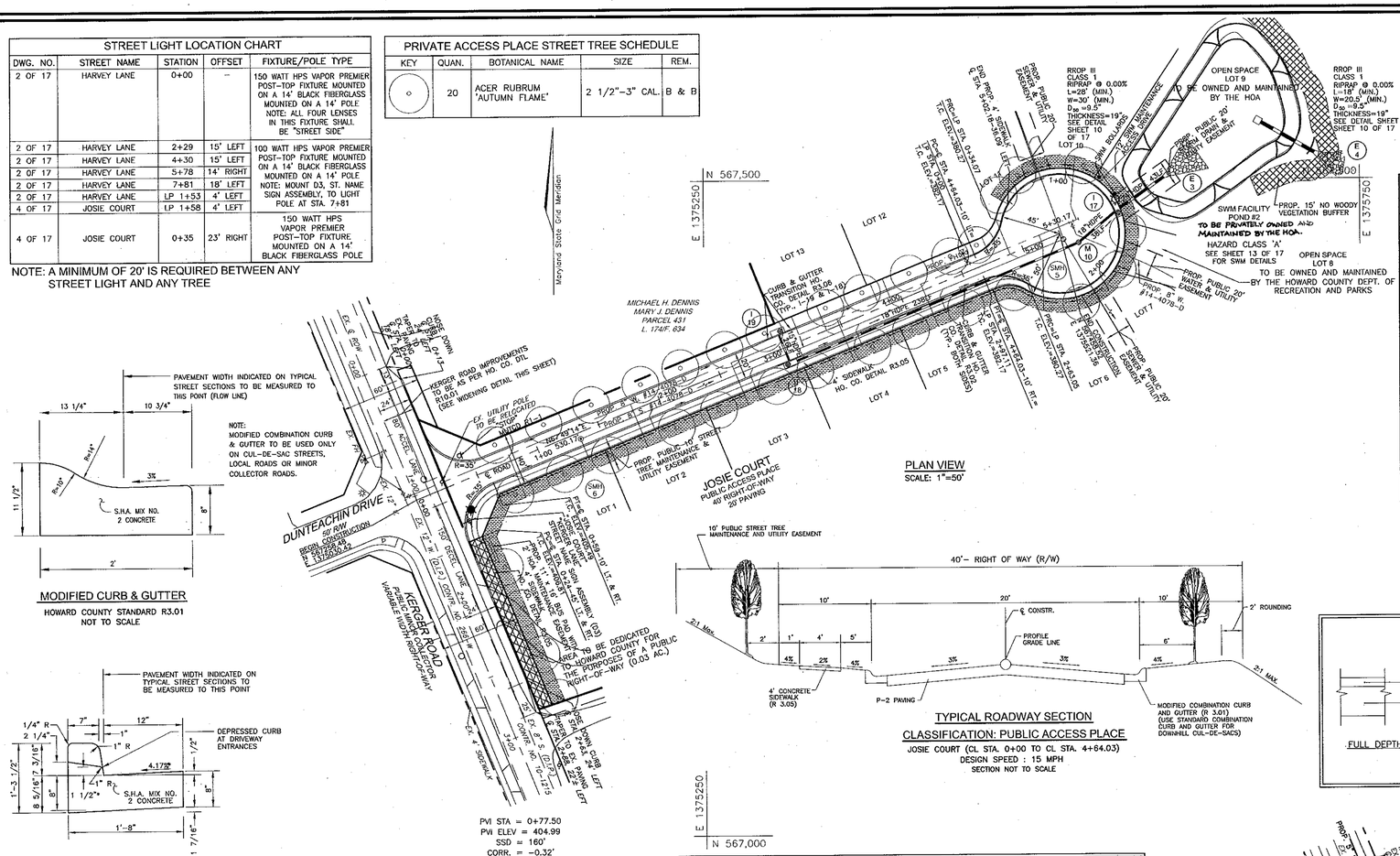
Maryland State Grid Meridian
N 567,500
E 1375250
E 1375750
N 567,000
DUNTEACHIN DRIVE
KERGER ROAD
JOSIE COURT
PUBLIC ACCESS PLACE
40' RIGHT-OF-WAY
28' PAVING
LOT 1
LOT 2
LOT 3
LOT 4
LOT 5
LOT 6
LOT 7
LOT 8
LOT 9
LOT 10
LOT 11
LOT 12
LOT 13
OPEN SPACE LOT 9 TO BE OWNED AND MAINTAINED BY THE HOA
OPEN SPACE LOT 8 TO BE OWNED AND MAINTAINED BY THE HOWARD COUNTY DEPT. OF RECREATION AND PARKS
SWM FACILITY POND #2 TO BE PRIVATELY OWNED MAINTAINED BY THE HOA.
HAZARD CLASS 'A' SEE SHEET 13 OF 17 FOR SWM DETAILS
PROP. 15' NO WOODY VEGETATION BUFFER
MICHAEL H. DENNIS MARY J. DENNIS PARCEL 431 L. 1714/F. 634
PROP. 8" W. #14-1079-D
PROP. 6" S. #13-1078-D
PROP. 8" W. #13-1078-D
PROP. 6" W. #13-1078-D
PROP. 8" S. #13-1078-D
PROP. 6" S. #14-1079-D
PROP. 8" W. #14-1079-D
PROP. 6" W. #14-1079-D
PROP. 8" S. #14-1079

SOILS LEGEND

SYMBOL	NAME / DESCRIPTION	GROUP
CnB2	CHILLUM–FAIRFAX LOAMS, 1 TO 5 PERCENT SLOPES, MODERATELY ERODED	B
CnD3	CHILLUM–FAIRFAX LOAMS, 5 TO 15 PERCENT SLOPES, SEVERELY ERODED	B
EnB2	ELSINBORO LOAM, 3 TO 8 PERCENT SLOPES, MODERATELY ERODED	B
EnC2	ELSINBORO LOAM, 8 TO 15 PERCENT SLOPES, MODERATELY ERODED	B
IuB	IUKA LOAM, LOCAL ALLUVIUM, 1 TO 5 PERCENT SLOPES	C
KhC2	KEYPORT SILT LOAM, 3 TO 10 PERCENT SLOPES, MODERATELY ERODED	C
LeB2	LEGORE SILT LOAM, 3 TO 8 PERCENT SLOPES, MODERATELY ERODED	B
LgC3	LEGORE SILTY CLAY LOAM, 8 TO 15 PERCENT SLOPES, SEVERELY ERODED	B
Mo	MIXED ALLUVIAL LAND	–
MrE	MONTALTO AND RELAY SOILS, 15 TO 45 PERCENT SLOPES	C
ScD	SANDY AND CLAYEY LAND, MODERATELY SLOPING	–
SIB2	SASSAFRAS LOAM, 1 TO 5 PERCENT SLOPES, MODERATELY ERODED	B
SIC2	SASSAFRAS LOAM, 5 TO 10 PERCENT SLOPES, MODERATELY ERODED	B
SsE	SASSAFRAS SOILS, 15 TO 40 PERCENT SLOPES	B
WaB	WATCHUNG SILT LOAM, 3 TO 8 PERCENT SLOPES	D

MAPS 20 & 25 OF THE HOWARD COUNTY SOIL SURVEY

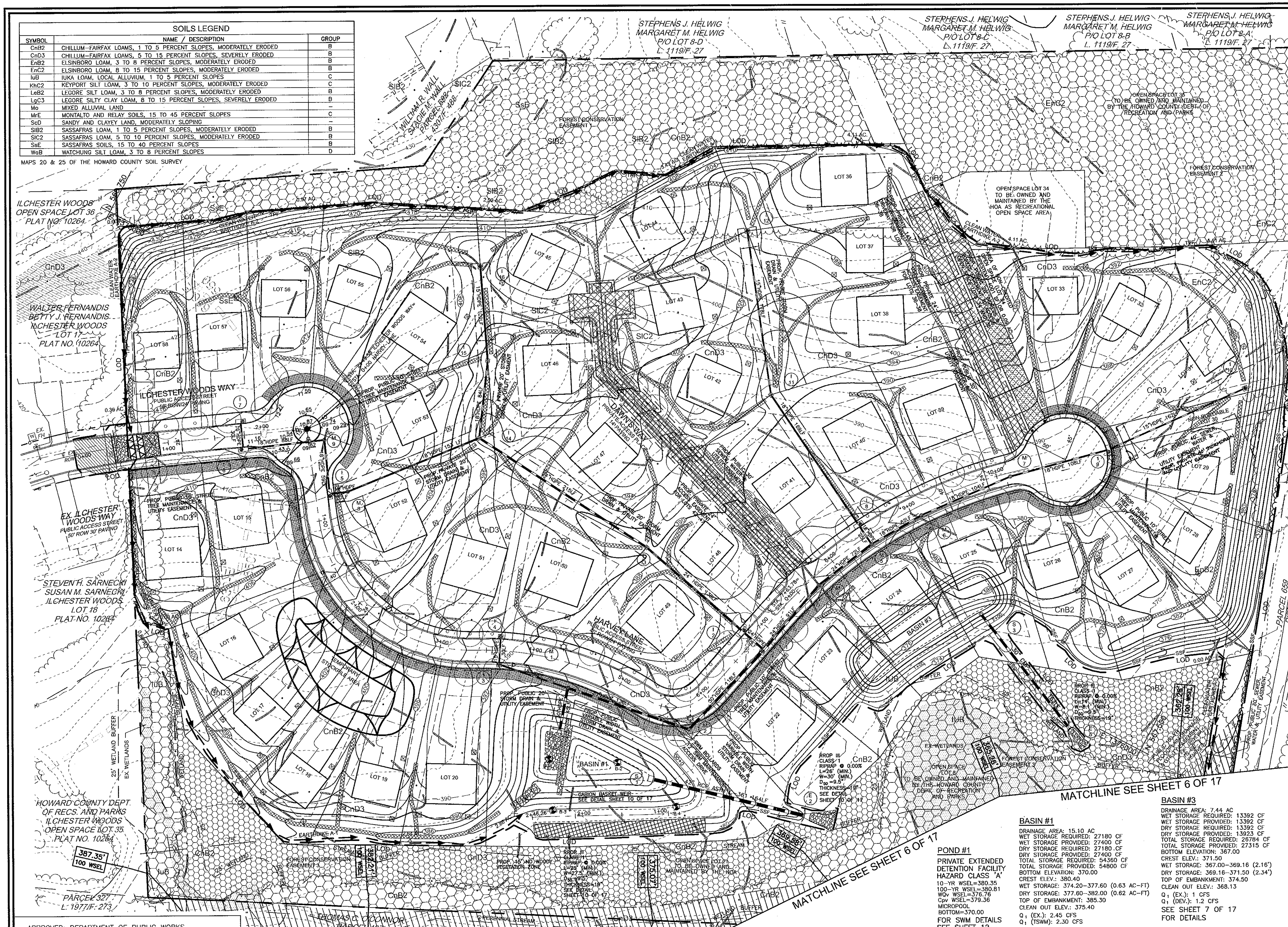

LEGEND

EXISTING CONTOUR	440
PROPOSED CONTOUR	412
SPOT ELEVATION / DIRECTION OF FLOW	+82.53
EXISTING TREES TO REMAIN	
SIGNS/LIGHT POLES	POST-TOP
PROPOSED STREET TREE	
SOILS	SIB2 SsE
AREA OF 15 TO 24.9 PERCENT SLOPES	
AREA OF 24 PERCENT OR GREATER SLOPES	
PROP. PUBLIC UTILITY EASEMENT	
PROP. PUBLIC STREET TREE MAINTENANCE & UTILITY EASEMENT	
PROP. PUBLIC OR PRIVATE ACCESS EASEMENT	
PROP. FOREST CONSERVATON AREA (RETENTION)	
PROP. FOREST CONSERVATON AREA (REFORESTATION)	
PUBLIC 100–YR FLOODPLAIN DRAINAGE & UTILITY EASEMENT	
EXISTING WETLANDS	
SUPER SILT FENCE	SSF
LIMIT OF DISTURBANCE	LOD
EROSION CONTROL MATTING	
EARTHDIKE	
STABILIZED CONSTRUCTION ENTRANCE	SCE
GABION INFLOW PROTECTION	
TREE PROTECTION FENCE	TPF
PROPOSED DRYWELL	⊠

POND #1

PRIVATE EXTENDED DETENTION FACILITY HAZARD CLASS 'A'
10–YR WSEL=380.35
100–YR WSEL=380.81
WQv WSEL=376.76
Cpv WSEL=379.36
MICROPOOL BOTTOM=370.00
FOR SWM DETAILS SEE SHEET 12 OF 17

BASIN #1

DRAINAGE AREA: 15.10 AC
WET STORAGE REQUIRED: 27180 CF
WET STORAGE PROVIDED: 27400 CF
DRY STORAGE REQUIRED: 27180 CF
DRY STORAGE PROVIDED: 27400 CF
TOTAL STORAGE REQUIRED: 54360 CF
TOTAL STORAGE PROVIDED: 54800 CF
BOTTOM ELEVATION: 370.00
CREST ELEV.: 380.40
WET STORAGE: 374.20–377.60 (0.63 AC–FT)
DRY STORAGE: 377.60–382.00 (0.62 AC–FT)
TOP OF EMBANKMENT: 385.30
CLEAN OUT ELEV.: 375.40
Q_1 (EX.): 2.45 CFS
Q_1 (TSWM): 2.30 CFS

BASIN #3

DRAINAGE AREA: 7.44 AC
WET STORAGE REQUIRED: 13392 CF
WET STORAGE PROVIDED: 13392 CF
DRY STORAGE REQUIRED: 13392 CF
DRY STORAGE PROVIDED: 13923 CF
TOTAL STORAGE REQUIRED: 26784 CF
TOTAL STORAGE PROVIDED: 27315 CF
BOTTOM ELEVATION: 367.00
CREST ELEV.: 371.50
WET STORAGE: 367.00–369.16 (2.16')
DRY STORAGE: 369.16–371.50 (2.34')
TOP OF EMBANKMENT: 374.50
CLEAN OUT ELEV.: 368.13
Q_1 (EX.): 1 CFS
Q_1 (DEV.): 1.2 CFS
SEE SHEET 7 OF 17 FOR DETAILS

APPROVED: DEPARTMENT OF PUBLIC WORKS
[signature] 10-19-04
Chief, Bureau of Highways — Date

APPROVED: DEPARTMENT OF PLANNING AND ZONING
Cindy Hamilton 10/27/04
Chief, Division of Land Development — Date
[signature] 10/25/04
Chief, Development Engineering Division — Date

These plans have been reviewed for HOWARD SOIL CONSERVATION DISTRICT and meet technical requirements for small pond construction and soil erosion and sediment control
Jim Myers/GS. 9/27/04
USDA–Natural Resources Conservation Service — Date

These plans for small pond construction and soil erosion and sediment control meet the requirements of the HOWARD SOIL CONSERVATION DISTRICT.
[signature] 9/27/04
Howard Soil Conservation District — Date

DEVELOPER'S CERTIFICATE

"I/We certify that all development and construction will be done according to this plan of development for sediment and erosion control, and that all responsible personnel involved in the construction project will have a Certificate of Attendance at a Department of Environment Approved Training Program for the Control of Sediment and Erosion before beginning the project. I also authorize periodic on–site inspections by the Howard Soil Conservation District. I shall engage a registered professional engineer to supervise pond construction and provide the Howard Soil Conservation District with and "As–Built" plan of the pond within 30 days of completion."

[signature] 9/14/04
Signature of Developer — Date

ENGINEER'S CERTIFICATE

"I hereby certify that this plan for pond construction and sediment and erosion control represents a practical and workable plan based on my personal knowledge of the site conditions and that it was prepared in accordance with the requirements of the Howard Soil Conservation District. I have notified the developer that he/she must engage a Registered Professional Engineer to supervise pond construction and provide the Howard Soil Conservation District with an "As–Built" plan of the pond within 30 days of completion."

[signature] 9/13/04
Signature of Engineer — Date
Robert H. Vogel

DEVELOPER

ELLICOTT CITY LAND HOLDINGS, LLC
8000 MAIN STREET
ELLICOTT CITY, MARYLAND 21043
ATTN: MR. DONALD R. REUWER
(410) 480–9105

OWNER

DENNIS PRESERVE, LLC
ELLICOTT CITY LAND HOLDINGS, LLC
SOLE MEMBER
8000 MAIN STREET
ELLICOTT CITY, MD 21043
410-480-9105

NO.	REVISION	DATE

GRADING AND SEDIMENT & EROSION CONTROL PLAN

DENNIS PRESERVE

LOTS 1-58

TAX MAP 31 BLOCK 21 — PARCEL '226'
1ST ELECTION DISTRICT — HOWARD COUNTY, MARYLAND
REF.: S–01–06, P–02–27, WP–03–07 (APP. 11/05/02)

ROBERT H. VOGEL ENGINEERING, INC.
ENGINEERS · SURVEYORS · PLANNERS
8407 MAIN STREET, ELLICOTT CITY, MD 21043
TEL: 410.461.7666 FAX: 410.461.8961

STATE OF MARYLAND — ROBERT HARRIS VOGEL — No. 16193 — PROFESSIONAL ENGINEER
ROBERT H. VOGEL, PE No.16193

DESIGN BY:	RHV
DRAWN BY:	CMH
CHECKED BY:	RHV
DATE:	SEPTEMBER 2004
SCALE:	1"=50'
W.O. NO.:	2017019.0

SHEET 5 OF 17

F-04-74

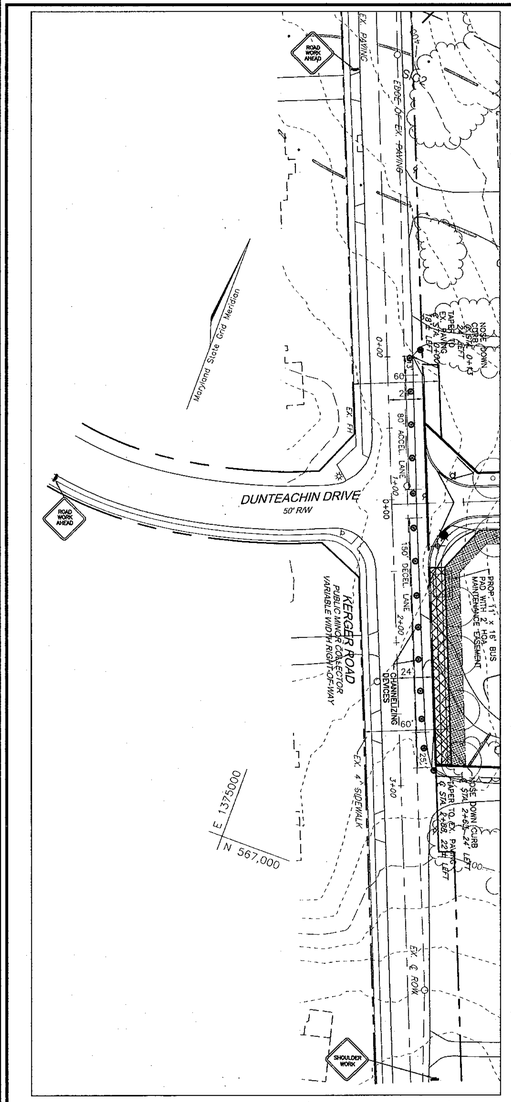

WORK ZONE TRAFFIC CONTROL PLAN
FOR KERGER ROAD IMPROVEMENTS
SCALE: 1"=50'

POND #2

PRIVATE EXTENDED DETENTION FACILITY
HAZARD CLASS 'A'
10-YR WSEL=372.10
100-YR WSEL=372.36
WQv WSEL=368.35
Cpv WSEL=371.50
MICROPOOL
BOTTOM=364.00
FOR SWM DETAILS SEE SHEET 13 OF 17

BASIN #2

DRAINAGE AREA: 4.55 AC
WET STORAGE REQUIRED: 8100 CF
WET STORAGE PROVIDED: 8100 CF
DRY STORAGE REQUIRED: 8100 CF
DRY STORAGE PROVIDED: 8100 CF
TOTAL STORAGE REQUIRED: 16200 CF
TOTAL STORAGE PROVIDED: 16200 CF
BOTTOM ELEVATION: 368.35
CREST ELEV.: 370.80
WET STORAGE: 367.30–370.80 (0.19 AC–FT)
DRY STORAGE: 370.80–372.30 (0.19 AC–FT)
TOP OF EMBANKMENT: 375.80
CLEAN OUT ELEV: 368.80
Q_1 (EX.): 1.3 CFS
Q_1 (TSWM): 1.4 CFS

LEGEND

EXISTING CONTOUR — 440
PROPOSED CONTOUR — 412
SPOT ELEVATION — +82.53
DIRECTION OF FLOW
EXISTING TREES TO REMAIN
SIGNS/LIGHT POLES — POST-TOP
PROPOSED STREET TREE
SOILS — SIB2, SsE
AREA OF 15 TO 24.9 PERCENT SLOPES
AREA OF 24 PERCENT OR GREATER SLOPES
PROP. PUBLIC UTILITY EASEMENT
PROP. PUBLIC STREET TREE MAINTENANCE & UTILITY EASEMENT
PROP. PUBLIC OR PRIVATE ACCESS EASEMENT
PROP. FOREST CONSERVATON AREA (RETENTION)
PROP. FOREST CONSERVATON AREA (REFORESTATION)
PUBLIC 100-YR FLOODPLAIN DRAINAGE & UTILITY EASEMENT
EXISTING WETLANDS
SUPER SILT FENCE — SSF
LIMIT OF DISTURBANCE — LOD
EROSION CONTROL MATTING
EARTHDIKE
STABILIZED CONSTRUCTION ENTRANCE — SCE
GABION INFLOW PROTECTION
TREE PROTECTION FENCE — TPF
PROPOSED DRYWELL — ⊠

SOILS LEGEND

SYMBOL	NAME / DESCRIPTION	GROUP
CnB2	CHILLUM–FAIRFAX LOAMS, 1 TO 5 PERCENT SLOPES, MODERATELY ERODED	B
CnD3	CHILLUM–FAIRFAX LOAMS, 5 TO 15 PERCENT SLOPES, SEVERELY ERODED	B
EnB2	ELSINBORO LOAM, 3 TO 8 PERCENT SLOPES, MODERATELY ERODED	B
EnC2	ELSINBORO LOAM, 8 TO 15 PERCENT SLOPES, MODERATELY ERODED	B
IuB	IUKA LOAM, LOCAL ALLUVIUM, 1 TO 5 PERCENT SLOPES	C
KhC2	KEYPORT SILT LOAM, 3 TO 10 PERCENT SLOPES, MODERATELY ERODED	C
LeB2	LEGORE SILT LOAM, 3 TO 8 PERCENT SLOPES, MODERATELY ERODED	B
LgC3	LEGORE SILTY CLAY LOAM, 8 TO 15 PERCENT SLOPES, SEVERELY ERODED	B
Mo	MIXED ALLUVIAL LAND	–
MrE	MONTALTO AND RELAY SOILS, 15 TO 45 PERCENT SLOPES	C
ScD	SANDY AND CLAYEY LAND, MODERATELY SLOPING	–
SlB2	SASSAFRAS LOAM, 1 TO 5 PERCENT SLOPES, MODERATELY ERODED	B
SlC2	SASSAFRAS LOAM, 5 TO 10 PERCENT SLOPES, MODERATELY ERODED	B
SsE	SASSAFRAS SOILS, 15 TO 40 PERCENT SLOPES	B
WaB	WATCHUNG SILT LOAM, 3 TO 8 PERCENT SLOPES	D

MAPS 20 & 25 OF THE HOWARD COUNTY SOIL SURVEY

NO.	REVISION	DATE

GRADING AND SEDIMENT & EROSION CONTROL PLAN AND WORK ZONE TRAFFIC CONTROL PLAN

DENNIS PRESERVE

LOTS 1-58

TAX MAP 31 BLOCK 21 PARCEL '226'
1ST ELECTION DISTRICT HOWARD COUNTY, MARYLAND
REF.: S-01-06, P-02-27, WP-03-07 (APP. 11/05/02)

ROBERT H. VOGEL ENGINEERING, INC.
ENGINEERS • SURVEYORS • PLANNERS
8407 MAIN STREET ELLICOTT CITY, MD 21043
TEL: 410.461.7666 FAX: 410.461.8961

APPROVED: DEPARTMENT OF PUBLIC WORKS

Chief, Bureau of Highways — Date 10-19-04

APPROVED: DEPARTMENT OF PLANNING AND ZONING

Chief, Division of Land Development — Date 10/27/04

Chief, Development Engineering Division — Date 10/25/04

These plans have been reviewed for HOWARD SOIL CONSERVATION DISTRICT and meet technical requirements for small pond construction and soil erosion and sediment control

USDA–Natural Resources Conservation Service — Date 9/27/04

These plans for small pond construction and soil erosion and sediment control meet the requirements of the HOWARD SOIL CONSERVATION DISTRICT.

Howard Soil Conservation District — Date 9/27/04

DEVELOPER'S CERTIFICATE

"I/We certify that all development and construction will be done according to this plan of development for sediment and erosion control, and that all responsible personnel involved in the construction project will have a Certificate of Attendance at a Department of Environment Approved Training Program for the Control of Sediment and Erosion before beginning the project. I also authorize periodic on-site inspections by the Howard Soil Conservation District. I shall engage a registered professional engineer to supervise pond construction and provide the Howard Soil Conservation District with and "As-Built" plan of the pond within 30 days of completion.

Signature of Developer — Date 9/14/04

ENGINEER'S CERTIFICATE

"I hereby certify that this plan for pond construction and sediment and erosion control represents a practical and workable plan based on my personal knowledge of the site conditions and that it was prepared in accordance with the requirements of the Howard Soil Conservation District. I have notified the developer that he/she must engage a Registered Professional Engineer to supervise pond construction and provide the Howard Soil Conservation District with an "As-Built" plan of the pond within 30 days of completion."

Signature of Engineer Robert H. Vogel — Date 9/15/04

DEVELOPER
ELLICOTT CITY LAND HOLDINGS, LLC
8000 MAIN STREET
ELLICOTT CITY, MARYLAND 21043
ATTN: MR. DONALD R. REUWER
(410) 480-9105

OWNER
DENNIS PRESERVE, LLC
ELLICOTT CITY LAND HOLDINGS, LLC
SOLE MEMBER
8000 MAIN STREET
ELLICOTT CITY, MD 21043
410-480-9105

STATE OF MARYLAND — ROBERT HARRIS VOGEL — No. 16193 — PROFESSIONAL ENGINEER
ROBERT H. VOGEL, PE No. 16193

DESIGN BY:	RHV
DRAWN BY:	CMH
CHECKED BY:	RHV
DATE:	SEPTEMBER 2004
SCALE:	1"=50'
W.O. NO.:	2017019.0

SHEET 6 OF 17

F-04-74

DETAIL 33 - SUPER SILT FENCE

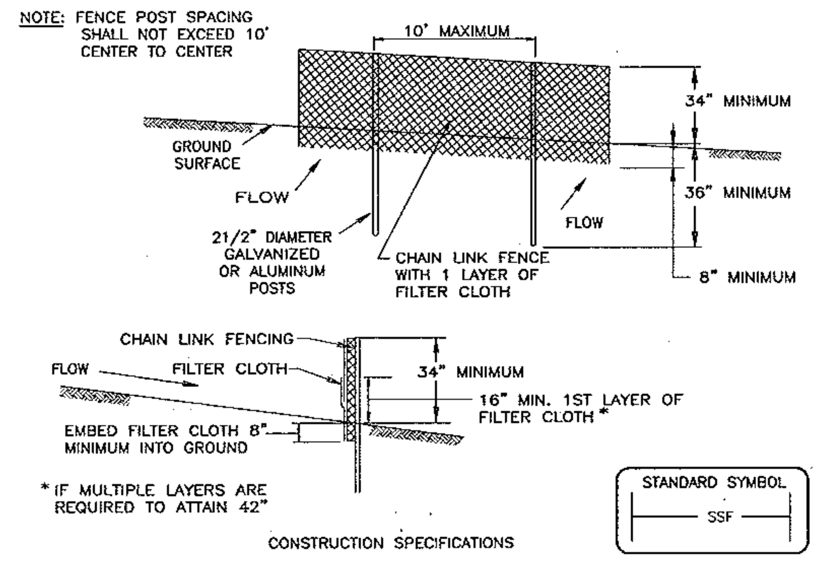

CONSTRUCTION SPECIFICATIONS

1. FENCING SHALL BE 42" IN HEIGHT AND CONSTRUCTED IN ACCORDANCE WITH THE LATEST MARYLAND STATE HIGHWAY DETAILS FOR CHAIN LINK FENCING. THE SPECIFICATION FOR A 6' FENCE SHALL BE USED, SUBSTITUTING 42" FABRIC AND 6' LENGTH POSTS.

2. CHAIN LINK FENCE SHALL BE FASTENED SECURELY TO THE FENCE POSTS WITH WIRE TIES. THE LOWER TENSION WIRE, BRACE AND TRUSS RODS, DRIVE ANCHORS AND POST CAPS ARE NOT REQUIRED EXCEPT ON THE ENDS OF THE FENCE.

3. FILTER CLOTH SHALL BE FASTENED SECURELY TO THE CHAIN LINK FENCE WITH TIES SPACED EVERY 24" AT THE TOP AND MID SECTION.

4. FILTER CLOTH SHALL BE EMBEDDED A MINIMUM OF 8" INTO THE GROUND.

5. WHEN TWO SECTIONS OF FILTER CLOTH ADJOIN EACH OTHER, THEY SHALL BE OVERLAPPED BY 6" AND FOLDED.

6. MAINTENANCE SHALL BE PERFORMED AS NEEDED AND SILT BUILDUPS REMOVED WHEN "BULGES" DEVELOP IN THE SILT FENCE, OR WHEN SILT REACHES 50% OF FENCE HEIGHT

7. FILTER CLOTH SHALL BE FASTENED SECURELY TO EACH FENCE POST WITH WIRE TIES OR STAPLES AT TOP AND MID SECTION AND SHALL MEET THE FOLLOWING REQUIREMENTS FOR GEOTEXTILE CLASS F:

TENSILE STRENGTH	50 LBS/IN (MIN.)	TEST: MSMT 509
TENSILE MODULUS	20 LBS/IN (MIN.)	TEST: MSMT 509
FLOW RATE	0.3 GAL/FT² /MINUTE (MAX.)	TEST: MSMT 322
FILTERING EFFICIENCY	75% (MIN.)	TEST: MSMT 322

U.S. DEPARTMENT OF AGRICULTURE SOIL CONSERVATION SERVICE	PAGE H - 26 - 3	MARYLAND DEPARTMENT OF ENVIRONMENT WATER MANAGEMENT ADMINISTRATION

DETAIL 1 - EARTH DIKE

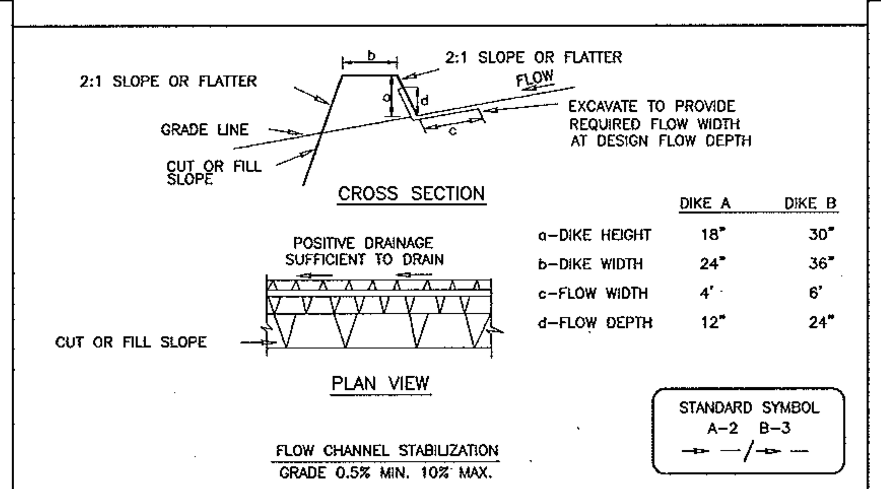

	DIKE A	DIKE B
a-DIKE HEIGHT	18"	30"
b-DIKE WIDTH	24"	36"
c-FLOW WIDTH	4'	6'
d-FLOW DEPTH	12"	24"

1. SEED AND COVER WITH STRAW MULCH.
2. SEED AND COVER WITH EROSION CONTROL MATTING OR LINE WITH SOD.
3. 4" - 7" STONE OR RECYCLED CONCRETE EQUIVALENT PRESSED INTO THE SOIL 7" MINIMUM

CONSTRUCTION SPECIFICATIONS

1. ALL TEMPORARY EARTH DIKES SHALL HAVE UNINTERRUPTED POSITIVE GRADE TO AN OUTLET. SPOT ELEVATIONS MAY BE NECESSARY FOR GRADES LESS THAN 1%.

2. RUNOFF DIVERTED FROM A DISTURBED AREA SHALL BE CONVEYED TO A SEDIMENT TRAPPING DEVICE.

3. RUNOFF DIVERTED FROM AN UNDISTURBED AREA SHALL OUTLET DIRECTLY INTO AN UNDISTURBED, STABILIZED AREA AT A NON-EROSIVE VELOCITY.

4. ALL TREES, BRUSH, STUMPS, OBSTRUCTIONS, AND OTHER OBJECTIONAL MATERIAL SHALL BE REMOVED AND DISPOSED OF SO AS NOT TO INTERFERE WITH THE PROPER FUNCTIONING OF THE DIKE.

5. THE DIKE SHALL BE EXCAVATED OR SHAPED TO LINE, GRADE AND CROSS SECTION AS REQUIRED TO MEET THE CRITERIA SPECIFIED HEREIN AND BE FREE OF BANK PROJECTIONS OR OTHER IRREGULARITIES WHICH WILL IMPEDE NORMAL FLOW.

6. FILL SHALL BE COMPACTED BY EARTH MOVING EQUIPMENT.

7. ALL EARTH REMOVED AND NOT NEEDED FOR CONSTRUCTION SHALL BE PLACED SO THAT IT WILL NOT INTERFERE WITH THE FUNCTIONING OF THE DIKE.

8. INSPECTION AND MAINTENANCE MUST BE PROVIDED PERIODICALLY AND AFTER EACH RAIN EVENT.

U.S. DEPARTMENT OF AGRICULTURE SOIL CONSERVATION SERVICE	PAGE A - 1 - 6	MARYLAND DEPARTMENT OF ENVIRONMENT WATER MANAGEMENT ADMINISTRATION

DETAIL 24 - STABILIZED CONSTRUCTION ENTRANCE

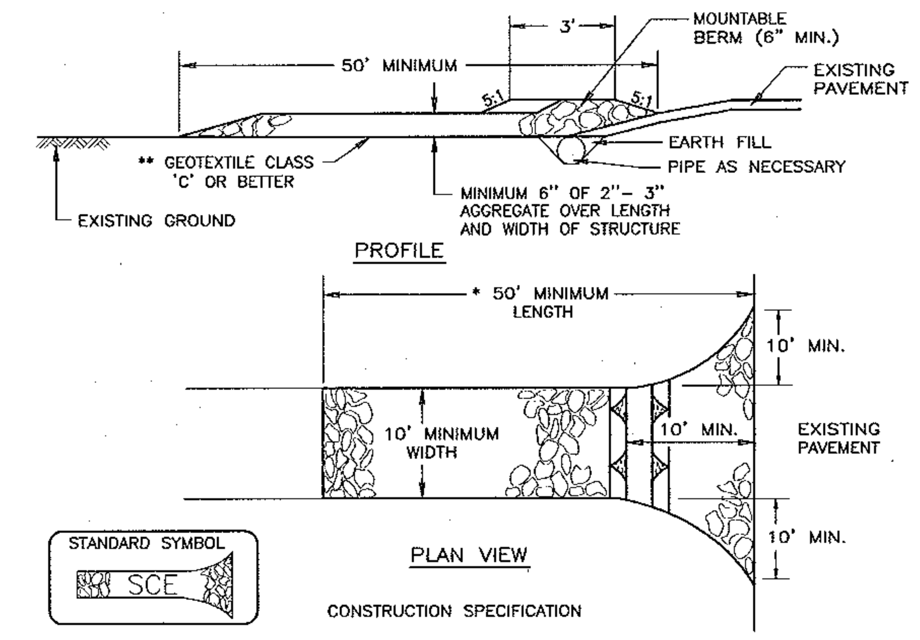

CONSTRUCTION SPECIFICATION

1. LENGTH - MINIMUM OF 50' (* 30' FOR A SINGLE RESIDENCE LOT).

2. WIDTH - 10' MINIMUM, SHOULD BE FLARED AT THE EXISTING ROAD TO PROVIDE A TURNING RADIUS.

3. GEOTEXTILE FABRIC (FILTER CLOTH) SHALL BE PLACED OVER THE EXISTING GROUND PRIOR TO PLACING STONE. ** THE PLAN APPROVAL AUTHORITY MAY NOT REQUIRE SINGLE FAMILY RESIDENCES TO USE GEOTEXTILE.

4. STONE - CRUSHED AGGREGATE (2" TO 3") OR RECLAIMED OR RECYCLED CONCRETE EQUIVALENT SHALL BE PLACED AT LEAST 6" DEEP OVER THE LENGTH AND WIDTH OF THE ENTRANCE.

5. SURFACE WATER - ALL SURFACE WATER FLOWING TO OR DIVERTED TOWARD CONSTRUCTION ENTRANCES SHALL BE PIPED THROUGH THE ENTRANCE, MAINTAINING POSITIVE DRAINAGE. PIPE INSTALLED THROUGH THE STABILIZED CONSTRUCTION ENTRANCE SHALL BE PROTECTED WITH A MOUNTABLE BERM WITH 5:1 SLOPES AND A MINIMUM OF 6" OF STONE OVER THE PIPE. PIPE HAS TO BE SIZED ACCORDING TO THE DRAINAGE. WHEN THE SCE IS LOCATED AT A HIGH SPOT AND HAS NO DRAINAGE TO CONVEY, A PIPE WILL NOT BE NECESSARY. PIPE SHOULD BE SIZED ACCORDING TO THE AMOUNT OF RUNOFF TO BE CONVEYED. A 6" MINIMUM WILL BE REQUIRED.

6. LOCATION - A STABILIZED CONSTRUCTION ENTRANCE SHALL BE LOCATED AT EVERY POINT WHERE CONSTRUCTION TRAFFIC ENTERS OR LEAVES A CONSTRUCTION SITE. VEHICLES LEAVING THE SITE MUST TRAVEL OVER THE ENTIRE LENGTH OF THE STABILIZED CONSTRUCTION ENTRANCE.

U.S. DEPARTMENT OF AGRICULTURE SOIL CONSERVATION SERVICE	PAGE F - 17 - 3	MARYLAND DEPARTMENT OF ENVIRONMENT WATER MANAGEMENT ADMINISTRATION

DETAIL 6 - GABION INFLOW PROTECTION

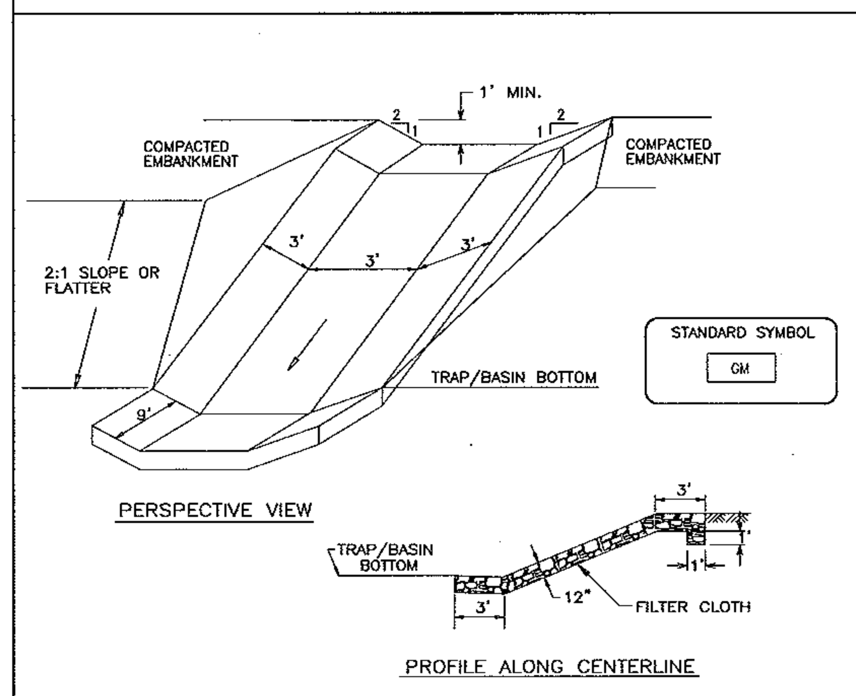

CONSTRUCTION SPECIFICATIONS

1. GABION INFLOW PROTECTION SHALL BE CONSTRUCTED OF 9' X 3' X 9" GABION BASKETS FORMING A TRAPEZOIDAL CROSS SECTION 1' DEEP, WITH 2:1 SIDE SLOPES, AND A 3' BOTTOM WIDTH.

2. GEOTEXTILE CLASS C SHALL BE INSTALLED UNDER ALL GABION BASKETS.

3. THE STONE USED TO FILL THE GABION BASKETS SHALL BE 4" - 7".

4. GABIONS SHALL BE INSTALLED IN ACCORDANCE WITH MANUFACTURERS RECOMMENDATIONS.

5. GABION INFLOW PROTECTION SHALL BE USED WHERE CONCENTRATED FLOW IS PRESENT ON SLOPES STEEPER THAN 4:1.

U.S. DEPARTMENT OF AGRICULTURE SOIL CONSERVATION SERVICE	PAGE 8 - 7 - 2	MARYLAND DEPARTMENT OF ENVIRONMENT WATER MANAGEMENT ADMINISTRATION

DETAIL 16 - CONCENTRIC TRASH RACK AND ANTI-VORTEX DEVICE

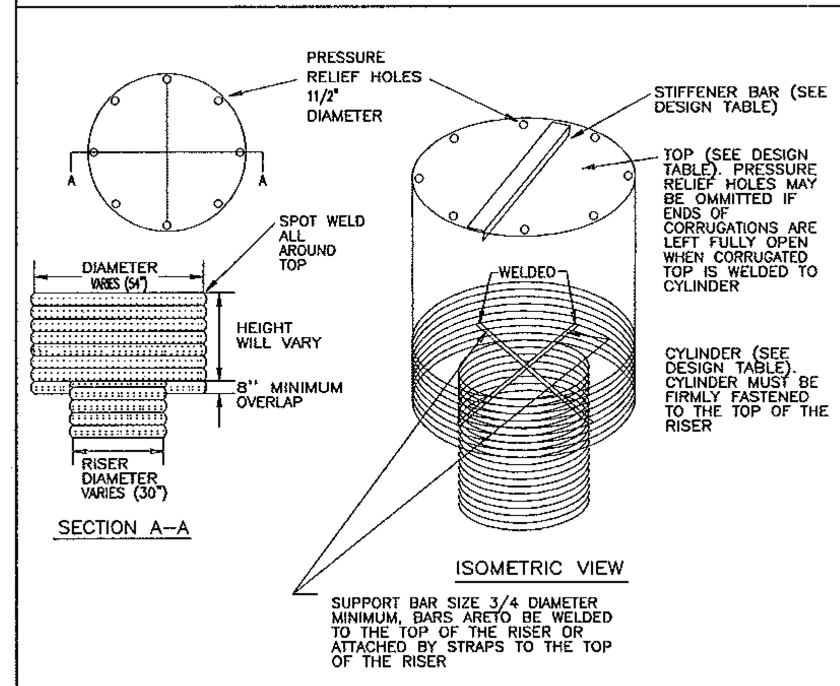

U.S. DEPARTMENT OF AGRICULTURE SOIL CONSERVATION SERVICE	PAGE C - 10 - 26	MARYLAND DEPARTMENT OF ENVIRONMENT WATER MANAGEMENT ADMINISTRATION

DETAIL 16 CONCENTRIC TRASH RACK AND ANTI-VORTEX DEVICE (continued)

RISER DIAM., IN.	TRASH RACK CYLINDER DIAM. IN.	THICK., GAGE	H, IN.	MINIMUM SIZE SUPPORT BAR	MINIMUM TOP THICKNESS	STIFFENER
12	18	16	6	#6 REBAR	16 GA.	--
15	21	16	7	"	"	--
18	27	16	8	"	"	--
21	30	16	11	"	"	--
24	36	16	13	"	14 GA.	--
27	42	16	15	"	14 GA.	--
30,36	54	14	17	#8 REBAR	12 GA.	--
42	60	14	19	"	"	--
48	72	12	21	1-1/4" PIPE OR 1-1/4 X 1-1/4 X1/4 ANGLE	10 GA.	--
54	78	12	25	"	"	--
60	90	12	29	1-1/2" PIPE OR 1-1/2 X 1-1/2 X1/4 ANGLE	8 GA.	--
66	96	10	33	2" PIPE OR 2X2X3/16 ANGLE	8 GA., W/STIFFENER	2X2X1/4 ANGLE
72	102	10	36	"	"	2-1/2X2-1/2X1/4 ANGLE
78	114	10	39	2-1/2" PIPE OR 2X2X1/4 ANGLE	"	"
84	120	10	42	2-1/2" PIPE OR 2-1/2X2-1/2X1/4 ANGLE	"	2-1/2 X2-1/2X 5/16 ANGLE

NOTE: THE ABOVE TRASH RACK AND ANTI-VORTEX DEVICE INFORMATION IS ONLY FOR CORRUGATED METAL PIPE. CONCRETE RISERS MUST MEET THE REQUIREMENTS OF MD 378.

U.S. DEPARTMENT OF AGRICULTURE SOIL CONSERVATION SERVICE	PAGE C - 10 - 26A	MARYLAND DEPARTMENT OF ENVIRONMENT WATER MANAGEMENT ADMINISTRATION

DETAIL 15 - RISER BASE DETAIL

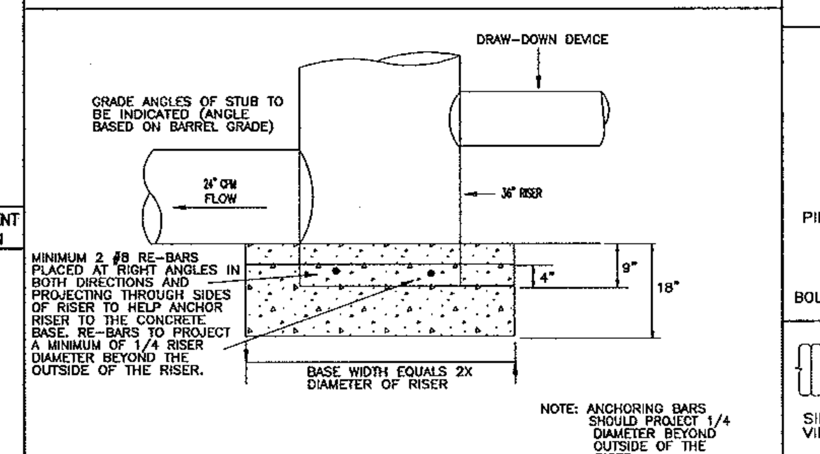

CONSTRUCTION SPECIFICATIONS

THE RISER SHALL HAVE A BASE ATTACHED WITH A WATERTIGHT CONNECTION AND SHALL HAVE SUFFICIENT WEIGHT TO PREVENT FLOTATION OF THE RISER. TWO APPROVED BASES FOR RISERS 10" OR LESS IN HEIGHT ARE:

1. A CONCRETE BASE 18" THICK WITH THE RISER EMBEDDED 9" IN THE BASE.

2. A 1/4" MINIMUM THICKNESS STEEL PLATE ATTACHED TO THE RISER BY A CONTINUOUS WELD AROUND THE CIRCUMFERENCE OF THE RISER TO FORM A WATERTIGHT CONNECTION. THE PLATE SHALL HAVE 2' OF STONE, GRAVEL, OR COMPACTED EARTH PLACED ON IT TO PREVENT FLOTATION. IN EITHER CASE, EACH SIDE OF THE SQUARE BASE SHALL BE TWICE THE RISER DIAMETER.

NOTE: FOR RISERS GREATER THAN TEN FEET HIGH COMPUTATIONS SHALL BE MADE TO DESIGN A BASE WHICH WILL PREVENT FLOATATION. THE MINIMUM FACTOR OF SAFETY SHALL BE 1.20 (DOWNWARD FORCES = 1.20 X UPWARD FORCES).

U.S. DEPARTMENT OF AGRICULTURE SOIL CONSERVATION SERVICE	PAGE C - 10 - 25	MARYLAND DEPARTMENT OF ENVIRONMENT WATER MANAGEMENT ADMINISTRATION

DETAIL 17 - TYPES OF COUPLERS FOR CORRUGATED STEEL PIPE

(ALL CONNECTOR BANDS REQUIRE NEOPRENE GASKETS)

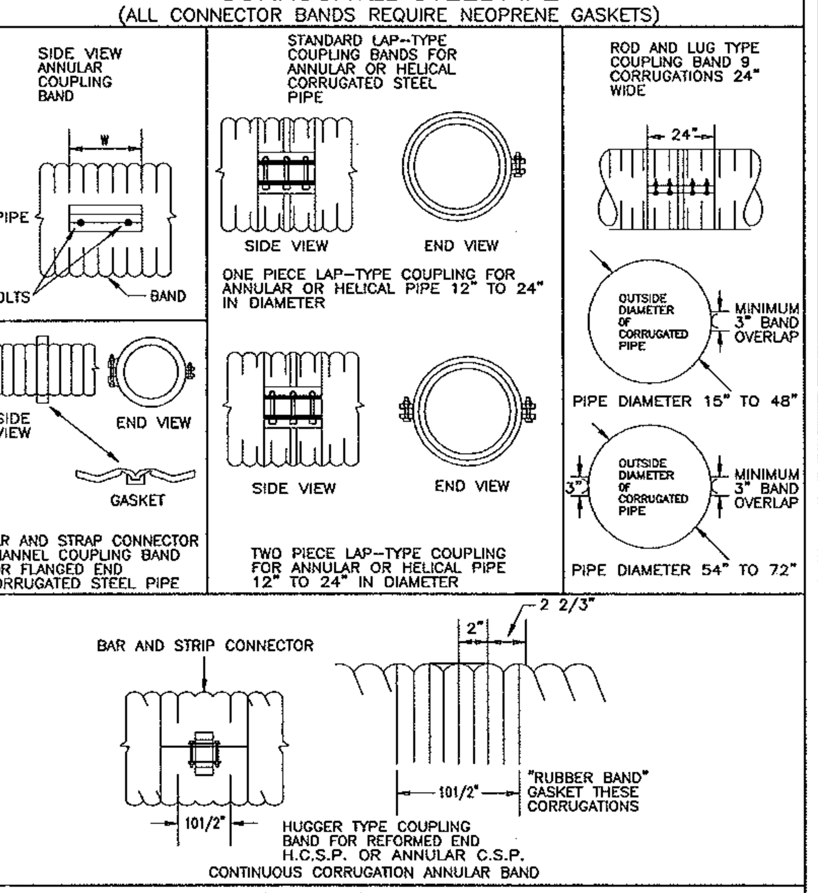

NOTE: UNDER NO CIRCUMSTANCES WILL THE DIMPLE (UNIVERSAL) CONNECTOR BAND BE ACCEPTABLE FOR USE IN ANY SEDIMENT CONTROL OR STORMWATER MANAGEMENT STRUCTURE

U.S. DEPARTMENT OF AGRICULTURE SOIL CONSERVATION SERVICE	PAGE C - 10 - 27	MARYLAND DEPARTMENT OF ENVIRONMENT WATER MANAGEMENT ADMINISTRATION

21.0 STANDARDS AND SPECIFICATIONS FOR TOPSOIL

DEFINITION

PLACEMENT OF TOPSOIL OVER A PREPARED SUBSOIL PRIOR TO ESTABLISHMENT OF PERMANENT VEGETATION.

PURPOSE

TO PROVIDE A SUITABLE SOIL MEDIUM FOR VEGETABLE GROWTH. SOILS OF CONCERN HAVE LOW MOISTURE CONTENT, LOW NUTRIENT LEVELS, LOW PH, MATERIALS TOXIC TO PLANTS, AND/OR UNACCEPTABLE SOIL GRADATION.

CONDITIONS WHERE PRACTICE APPLIES

I. THIS PRACTICE IS LIMITED TO AREAS HAVING 2:1 OR FLATTER SLOPES WHERE:

A. THE TEXTURE OF THE EXPOSED SUBSOIL/PARENT MATERIAL IS NOT ADEQUATE TO PRODUCE VEGETATIVE GROWTH.

B. THE SOIL MATERIAL IS SO SHALLOW THAT THE ROOTING ZONE IS NOT DEEP ENOUGH TO SUPPORT PLANTS OR FURNISH CONTINUING SUPPLIES OF MOISTURE AND PLANT NUTRIENTS.

C. THE ORIGINAL SOIL TO BE VEGETATED CONTAINS MATERIAL TOXIC TO PLANT GROWTH.

D. THE SOIL IS SO ACIDIC THAT TREATMENT WITH LIMESTONE IS NOT FEASIBLE.

II. FOR THE PURPOSE OF THESE STANDARDS AND SPECIFICATIONS, AREAS HAVING SLOPES STEEPER THAN 2:1 REQUIRE SPECIAL CONSIDERATION AND DESIGN FOR ADEQUATE STABILIZATION. AREAS HAVING SLOPES STEEPER THAN 2:1 SHALL HAVE THE APPROPRIATE STABILIZATION SHOWN ON THE PLANS.

CONSTRUCTION AND MATERIAL SPECIFICATIONS

I. TOPSOIL SALVAGED FROM THE EXISTING SITE MAY BE USED PROVIDED THAT IT MEETS THE STANDARDS AS SET FORTH IN THESE SPECIFICATIONS. TYPICALLY, THE DEPTH OF TOPSOIL TO BE SALVAGED FOR A GIVEN SOIL TYPE CAN BE FOUND IN THE REPRESENTATIVE SOIL PROFILE SECTION IN THE SOIL SURVEY PUBLISHED BY USDA-SCS IN COOPERATION WITH MARYLAND AGRICULTURAL EXPERIMENTAL STATION.

II. TOPSOIL SPECIFICATIONS - SOIL TO BE USED AS TOPSOIL MUST MEET THE FOLLOWING:

I. TOPSOIL SHALL BE A LOAM, SANDY LOAM, CLAY LOAM, SILT LOAM, SANDY CLAY LOAM, LOAMY SAND. OTHER SOILS MAY BE USED IF RECOMMENDED BY AN AGRONOMIST OR A SOIL SCIENTIST AND APPROVED BY THE APPROPRIATE APPROVAL AUTHORITY. REGARDLESS, TOPSOIL SHALL NOT BE A MIXTURE OF CONTRASTING TEXTURED SUBSOILS AND SHALL CONTAIN LESS THAN 5% BY VOLUME OF CINDERS, STONES, SLAG, COARSE FRAGMENTS, GRAVEL, STICKS, ROOTS, TRASH, OR OTHER MATERIALS LARGER THAT 1 AND 1/2" IN DIAMETER.

II. TOPSOIL MUST BE FREE OF PLANTS OR PLANT PARTS SUCH AS BERMUDA GRASS, QUACKGRASS, JOHNSONGRASS, NUTSEDGE, POISON IVY, THISTLE, OR OTHERS AS SPECIFIED.

III. WHERE THE SUBSOIL IS EITHER HIGHLY ACIDIC OR COMPOSED OF HEAVY CLAYS, GROUND LIMESTONE SHALL BE SPREAD AT THE RATE OF 4-8 TONS/ACRE (200-400 POUNDS PER 1,000 SQUARE FEET) PRIOR TO THE PLACEMENT OF TOPSOIL. LIME SHALL BE DISTRIBUTED UNIFORMLY OVER DESIGNATED AREAS AND WORKED INTO THE SOIL IN CONJUNCTION WITH TILLAGE OPERATIONS AS DESCRIBED IN THE FOLLOWING PROCEDURES.

II. FOR SITES HAVING DISTURBED AREAS UNDER 5 ACRES:

I. PLACE TOPSOIL (IF REQUIRED) AND APPLY SOIL AMENDMENTS AS SPECIFIED IN 20.0 VEGETATIVE STABILIZATION - SECTION I - VEGETATIVE STABILIZATION METHODS AND MATERIALS.

III. FOR SITES HAVING DISTURBED AREAS OVER 5 ACRES:
1. ON SOIL MEETING TOPSOIL SPECIFICATIONS, OBTAIN TEST RESULTS DICTATING FERTILIZER AND LIME AMENDMENTS REQUIRED TO BRING THE SOIL INTO COMPLIANCE WITH THE FOLLOWING:
A. PH FOR TOPSOIL SHALL BE BETWEEN 6.0 AND 7.5. IF THE TESTED SOIL DEMONSTRATES A PH OF LESS THAN 6.0, SUFFICIENT LIME SHALL BE PRESCRIBED TO RAISE THE PH TO 6.5 OR HIGHER.
B. ORGANIC CONTENT OF TOPSOIL SHALL BE NOT LESS THAN 1.5 PERCENT BY WEIGHT.
C. TOPSOIL HAVING SOLUBLE SALT CONTENT GREATER THAN 500 PARTS PER MILLION SHALL NOT BE USED.
D. NO SOD OR SEED SHALL BE PLACED ON SOIL SOIL WHICH HAS BEEN TREATED WITH SOIL STERILANTS OR CHEMICALS USED FOR WEED CONTROL UNTIL SUFFICIENT TIME HAS ELAPSED (14 DAYS MIN.) TO PERMIT DISSIPATION OF PHYTO-TOXIC MATERIALS.
NOTE: TOPSOIL SUBSTITUTES OR AMENDMENTS, AS RECOMMENDED BY A QUALIFIED AGRONOMIST OR SOIL SCIENTIST AND APPROVED BY THE APPROPRIATE APPROVAL AUTHORITY, MAY BE USED IN LIEU OF NATURAL TOPSOIL.

II. PLACE TOPSOIL (IF REQUIRED) AND APPLY SOIL AMMENDMENTS SPECIFIED IN 20.0 VEGETATIVE STABILIZATION-SECTION I-VEGETATIVE STABILIZATION METHODS AND MATERIALS.

V. TOPSOIL APPLICATION

I. WHEN TOPSOILING, MAINTAIN NEEDED EROSION AND SEDIMENT CONTROL PRACTICES SUCH AS DIVERSIONS, GRADE STABILIZATION STRUCTURES, EARTH DIKES, SLOPE SILT FENCE AND SEDIMENT TRAPS AND BASINS.

II. GRADES ON THE AREAS TO BE TOPSOILED, WHICH HAVE BEEN PREVIOUSLY ESTABLISHED, SHALL BE MAINTAINED, ALBEIT 4" - 8" HIGHER IN ELEVATION.

III. TOPSOIL SHALL BE UNIFORMLY DISTRIBUTED IN A 4" - 8" LAYER AND LIGHTLY COMPACTED TO A MINIMUM THICKNESS OF 4". SPREADING SHALL BE PERFORMED IN SUCH A MANNER THAT SODDING OR SEEDING CAN PROCEED WITH A MINIMUM OF ADDITIONAL SOIL PREPARATION AND TILLAGE. ANY IRREGULARITIES IN THE SURFACE RESULTING FROM TOPSOILING OR OTHER OPERATIONS SHALL BE CORRECTED IN ORDER TO PREVENT THE FORMATION OF DEPRESSIONS OR WATER POCKETS.

IV. TOPSOIL SHALL NOT BE PLACE WHILE THE TOPSOIL OR SUBSOIL IS IN A FROZEN OR MUDDY CONDITION, WHEN THE SUBSOIL IS EXCESSIVELY WET OR IN A CONDITION THAT MAY OTHERWISE BE DETRIMENTAL TO PROPER GRADING AND SEEDBED PREPARATION.

PERMANENT SEEDING NOTES

APPLY TO GRADED OR CLEARED AREAS NOT SUBJECT TO IMMEDIATE FURTHER DISTURBANCE WHERE A PERMANENT LONG-LIVED VEGETATIVE COVER IS NEEDED.

SEEDBED PREPARATION: LOOSEN UPPER THREE INCHES OF SOIL BY RAKING, DISCING OR OTHER ACCEPTABLE MEANS BEFORE SEEDING, IF NOT PREVIOUSLY LOOSENED.

SOIL AMENDMENTS: IN LIEU OF SOIL TEST RECOMMENDATIONS, USE ONE OF THE FOLLOWING SCHEDULES:

1) PREFERRED-APPLY 2 TONS PER ACRE DOLOMITIC LIMESTONE (92 LBS/ 100 SQ.FT.) AND 600 LBS PER ACRE 10-10-10 FERTILIZER (14 LBS./ 1000 SQ.FT.) BEFORE SEEDING. HARROW OR DISC INTO UPPER THREE INCHES OF SOIL. AT THE TIME OF SEEDING, APPLY 400 LBS. PER ACRE 30-0-0 UREAFORM FERTILIZER (9 LBS/1000 SQ.FT.)

2) ACCEPTABLE-APPLY 2 TONS PER ACRE DOLOMATIC LIMESTONE (92 LBS/ 1000 SQ.FT.) AND APPLY 1000 LBS. PER ACRE 10-10-10- FERTILIZER (23 LBS./1000 SQ.FT.) BEFORE SEEDING. HARROW OR DISC INTO UPPER THREE INCHES OF SOIL.

SEEDING: FOR THE PERIODS MARCH 1 THRU APRIL 30, AND AUGUST 1 THRU OCTOBER 15, SEED WITH 60 LBS. PER ACRE (1.4 LBS/1000 SQ.FT.) OF KENTUCKY 31 TALL FESCUE. FOR THE PERIOD MAY 1 THRU JULY 31, SEED WITH 60 LBS. KENTUCKY 31 TALL FESCUE PER ACRE AND 2 LBS. PER ACRE (.05 LBS./1000 SQ.FT.) OF WEEPING LOVEGRASS. DURING THE PERIOD OF OCTOBER 16 THRU FEBRUARY 28, PROTECT SITE BY: OPTION (1) 2 TONS PER ACRE WELL ANCHORED STRAW MULCH AND SEED AS SOON AS POSSIBLE IN THE SPRING. OPTION (2) USE SOD. OPTION (3) SEED WITH 60 LBS/ACRE KENTUCKY 31 TALL FESCUE AND MULCH WITH 2 TONS/ACRE WELL ANCHORED STRAW.

MULCHING: APPLY 1 1/2 TO 2 TONS PER ACRE (70 TO 90 LBS/1000 SQ. FT.) OF UNROTTED SMALL GRAIN STRAW IMMEDIATELY AFTER SEEDING. ANCHOR MULCH IMMEDIATELY AFTER APPLICATION USING MULCH ANCHORING TOOL OR 218 GALLONS PER ACRE (5 GAL/1000 SQ.FT.) OF EMULSIFIED ASPHALT ON FLAT AREAS. ON SLOPES 8 FEET OR HIGHER, USE 348 GALLONS PER ACRE (8 GAL/1000 SQ.FT.) FOR ANCHORING.

MAINTENANCE: INSPECT ALL SEEDED AREAS AND MAKE NEEDED REPAIRS, REPLACEMENTS AND RESEEDINGS.

TEMPORARY SEEDING NOTES

SEEDBED PREPARATION: LOOSEN UPPER THREE INCHES OF SOIL BY RAKING, DISCING OR OTHER ACCEPTABLE MEANS BEFORE SEEDING, IF NOT PREVIOUSLY LOOSENED.

SOIL AMENDMENTS: APPLY 600 LBS. PER ACRE 10-10-10 FERTILIZER (14 LBS./1000 SQ.FT).

SEEDING: FOR PERIODS MARCH 1 THRU APRIL 30 AND FROM AUGUST 15 THRU NOVEMBER 15, SEED WITH 2 1/2 BUSHEL PER ACRE OF ANNUAL RYE (3.2 LBS./1000 SQ.FT.) FOR THE PERIOD MAY 1 THRU AUGUST 14, SEED WITH 3 LBS. PER ACRE OF WEEPING LOVEGRASS (.07 LBS./1000 SQ.FT.). FOR THE PERIOD NOVEMBER 1 THRU FEBRUARY 28, PROTECT SITE BY APPLYING 2 TONS PER ACRE OF WELL ANCHORED STRAW MULCH AND SEED AS SOON AS POSSIBLE IN THE SPRING, OR USE SOD.

MULCHING: APPLY 1 1/2 TO 2 TONS PER ACRE (70 TO 90 LBS./1000 SQ.FT.) OF UNROTTED SMALL GRAIN STRAW IMMEDIATELY AFTER SEEDING. ANCHOR MULCH IMMEDIATELY AFTER APPLICATION USING MULCH ANCHORING TOOL OR 218 GALLONS PER ACRE (5 GAL/1000 SQ.FT.) OF EMULSIFIED ASPHALT ON FLAT AREAS. ON SLOPES 8 FEET OR HIGHER, USE 348 GALLONS PER ACRE (8 GAL/1000 SQ.FT.) FOR ANCHORING.

REFER TO THE 1994 MARYLAND STANDARDS AND SPECIFICATIONS FOR SOIL EROSION AND SEDIMENT CONTROL FOR RATE AND METHODS NOT COVERED.

SEDIMENT CONTROL NOTES

1. A MINIMUM OF 48 HOURS NOTICE MUST BE GIVEN TO THE HOWARD COUNTY DEPARTMENT OF INSPECTION, LICENSE AND PERMITS SEDIMENT CONTROL DIVISION PRIOR TO THE START OF ANY CONSTRUCTION (313-1855).
2. ALL VEGETATION AND STRUCTURAL PRACTICES ARE TO BE INSTALLED ACCORDING TO THE PROVISIONS OF THIS PLAN AND ARE TO BE IN CONFORMANCE WITH THE 1994 MARYLAND STANDARDS AND SPECIFICATIONS FOR SOIL EROSION AND SEDIMENT CONTROL AND REVISIONS THERETO.
3. FOLLOWING INITIAL SOIL DISTURBANCE OR REDISTURBANCE, PERMANENT OR TEMPORARY STABILIZATION SHALL BE COMPLETED WITHIN: (A) 7 CALENDAR DAYS FOR ALL PERIMETER SEDIMENT CONTROL STRUCTURES, DIKES, PERIMETER SLOPES, AND ALL SLOPES GREATER THAN 3:1, (B) 14 DAYS AS TO ALL OTHER DISTURBED OR GRADED AREAS ON THE PROJECT SITE.
4. ALL SEDIMENT TRAPS/BASINS SHOWN MUST BE FENCED AND WARNING SIGNS POSTED AROUND THEIR PERIMETER IN ACCORDANCE WITH VOL. 1, CHAPTER 7, HOWARD COUNTY DESIGN MANUAL, STORM DRAINAGE.
5. ALL DISTURBED AREAS MUST BE STABILIZED WITHIN THE TIME PERIOD SPECIFIED ABOVE IN ACCORDANCE WITH THE 1994 MARYLAND STANDARDS AND SPECIFICATIONS FOR SOIL EROSION AND SEDIMENT CONTROL FOR PERMANENT SEEDING, SOD, TEMPORARY SEEDING, AND MULCHING (SEC. G). TEMPORARY STABILIZATION WITH MULCH ALONE SHALL BE DONE WHEN RECOMMENDED SEEDING DATES DO NOT ALLOW FOR PROPER GERMINATION AND ESTABLISHMENT OF GRASSES.
6. ALL SEDIMENT CONTROL STRUCTURES ARE TO REMAIN IN PLACE AND ARE TO BE MAINTAINED IN OPERATIVE CONDITION UNTIL PERMISSION FOR THEIR REMOVAL HAS BEEN OBTAINED FROM THE HOWARD COUNTY SEDIMENT CONTROL INSPECTOR.
7. SITE ANALYSIS :

TOTAL AREA	31.37 AC.
AREA DISTURBED	21.55 AC.
AREA TO BE ROOFED OR PAVED	6.50 AC.
AREA TO BE VEGETATIVELY STABILIZED	15.05 AC.
TOTAL CUT	60,000 CY
TOTAL FILL	60,000 CY
OFFSITE WASTE/BORROW AREA LOCATION	*

8. ANY SEDIMENT CONTROL PRACTICE WHICH IS DISTURBED BY GRADING ACTIVITY FOR PLACEMENT OF UTILITIES MUST BE REPAIRED ON THE SAME DAY OF DISTURBANCE.
9. ADDITIONAL SEDIMENT CONTROLS MUST BE PROVIDED, IF DEEMED NECESSARY BY THE HOWARD COUNTY SEDIMENT CONTROL INSPECTOR.
10. ON ALL SITES WITH DISTURBED AREAS IN EXCESS OF 2 ACRES, APPROVAL OF THE INSPECTION AGENCY SHALL BE REQUESTED UPON COMPLETION OF INSTALLATION OF PERIMETER EROSION AND SEDIMENT CONTROLS, BUT BEFORE PROCEEDING WITH ANY OTHER EARTH DISTURBANCE OR GRADING. OTHER BUILDING OR GRADING INSPECTION APPROVALS MAY NOT BE AUTHORIZED UNTIL THIS INITIAL APPROVAL BY THE INSPECTION AGENCY IS MADE.
11. TRENCHES FOR THE CONSTRUCTION OF UTILITIES IS LIMITED TO THREE PIPE LENGTHS OR THAT WHICH SHALL BE BACK-FILLED AND STABILIZED WITHIN ONE WORKING DAY, WHICHEVER IS SHORTER.

* TO BE DETERMINED BY CONTRACTOR, WITH PRE-APPROVAL OF THE SEDIMENT CONTROL INSPECTOR WITH AN APPROVED AND ACTIVE GRADING PERMIT

BEST MANAGEMENT PRACTICES FOR WORKING IN NONTIDAL WETLANDS, WETLAND BUFFERS, WATERWAYS AND 100-YEAR FLOODPLAINS

1. No excess fill, construction material, or debris shall be stockpiled or stored in nontidal wetlands, nontidal wetland buffers, waterways, or the 100-year floodplain.
2. Place materials in a location and manner that does not adversely impact surface or subsurface water flow into or out of nontidal wetlands, nontidal wetland buffers, waterways, or the 100-year floodplain.
3. Do not use the excavated material as backfill if it contains waste metal products, unsightly debris, toxic material, or any other deleterious substance. If additional backfill is required, use clean material free of waste metal products, unsightly debris, toxic material or any other deleterious substance.
4. Place heavy equipment on mats or suitable operate the equipment to prevent damage to nontidal wetlands, non tidal wetland buffers, waterways, or the 100-year floodplain.
5. Repair and maintain any serviceable structure or fill so there is no permanent loss of nontidal wetlands, non tidal wetland buffers, or waterways, or permanent modification of the 100-year floodplain in excess of that lost under the originally authorized structure or fill.
6. Rectify any nontidal wetlands, wetland buffers, waterways, or 100-year floodplain temporarily impacted by any construction.
7. All stabilization in the nontidal wetland and nontidal wetland buffer shall consist of the following species: Annual Ryegrass (Lolium multiflorum), Millet (Setaria italica), Barley (Hordeum sp.), Oats (Uniola sp.) and/or Rye (Secale cereale). These species will allow for the stabilization of the site while also allowing for the voluntary revegtation of natural wetland species. Other non-persistent vegetation may be acceptable, but must be approved by the Nontidal Wetlands and Waterways Division. Kentucky 31 fescue shall not be utilized in wetland or buffer areas. The area should be seeded and mulched to reduce erosion after construction activities have been completed.
8. After installation has been completed, make post construction grades and elevations the same as the original grades and elevations in temporarily impacted areas.
9. To protect aquatic specifies, in-stream work is prohibited as determined by the classification of the stream:

Use I waters: In-stream work shall not be conducted during the period March 1 through June 15, inclusive, during any year.

10. Stormwater runoff from impervious surfaces shall be controlled to prevent the washing of debris into the waterway.
11. Culverts shall be constructed and any riprap places so as not to obstruct the movement of aquatic species, unless the purpose of the activity is to impound water.

PROFILE ALONG ℄ OF EMBANKMENT

BASIN #3

SCALE: 1"=5' VERT. 1"=50' HORIZ.

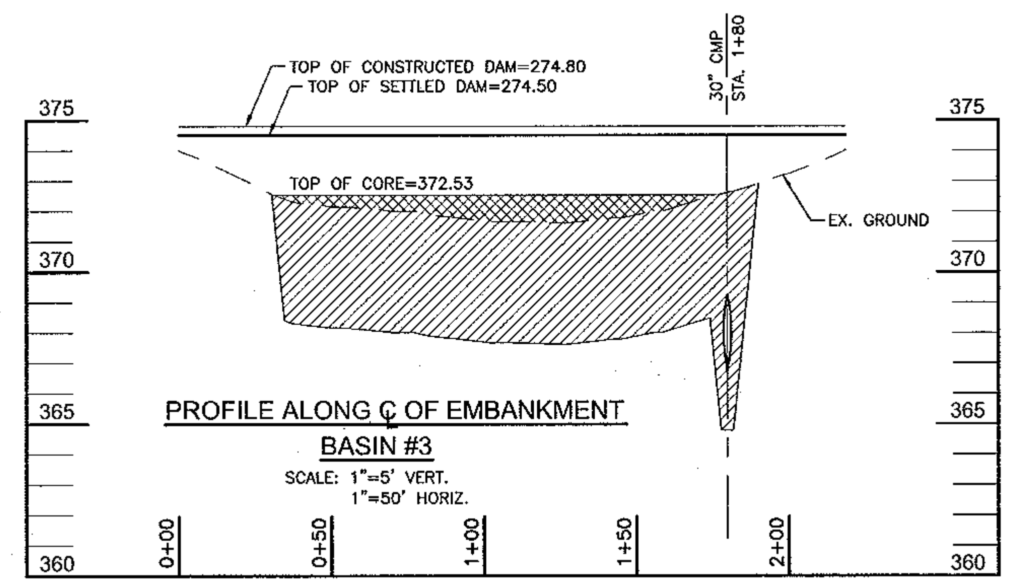

SEDIMENT BASIN DEWATERING DEVICE I WITH 4" PERFORATED RISER

NOT TO SCALE

BASIN #3

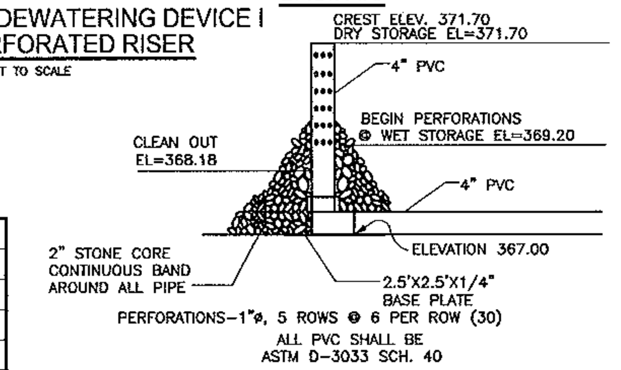

ALL PVC SHALL BE ASTM D-3033 SCH. 40

REF.: 1994 MARYLAND STANDARDS AND SPECIFICATIONS FOR SOIL EROSION AND SEDIMENT CONTROL PAGE C-10-30

CONSTRUCTION SPECIFICATIONS

1. PERFORATIONS IN THE DRAW-DOWN DEVICE MAY NOT EXTEND INTO WET STORAGE.
2. THE TOTAL AREA OF THE PERFORATIONS MUST BE GREATER THAN 2 TIMES THE AREA OF THE INTERNAL ORIFICE.
3. THE PERFORATED PORTIONS OF THE DRAW-DOWN DEVICE SHALL BE WRAPPED WITH 1/2" HARDWARE CLOTH AND GEOTEXTILE FABRIC. THE GEOTEXTILE FABRIC SHALL MEET THE SPECIFICATIONS FOR GEOTEXTILE CLASS E.
4. PROVIDE SUPPORT OF DRAW-DOWN DEVICE TO PREVENT SAGGING AND FLOTATION. AN ACCEPTABLE PREVENTATIVE MEASURE IS TO STAKE BOTH SIDES OF DRAW-DOWN DEVICE WITH 1" STEEL ANGLE OR 1' x 4" SQUARE OR 2" ROUND WOODEN POSTS SET 3' MINIMUM INTO THE GROUND THEN JOINING THEM TO THE DEVICE BY WRAPPING WITH 12 GAUGE MINIMUM WIRE.

DETAIL 14 - TYPICAL ANTI-SEEP COLLARS

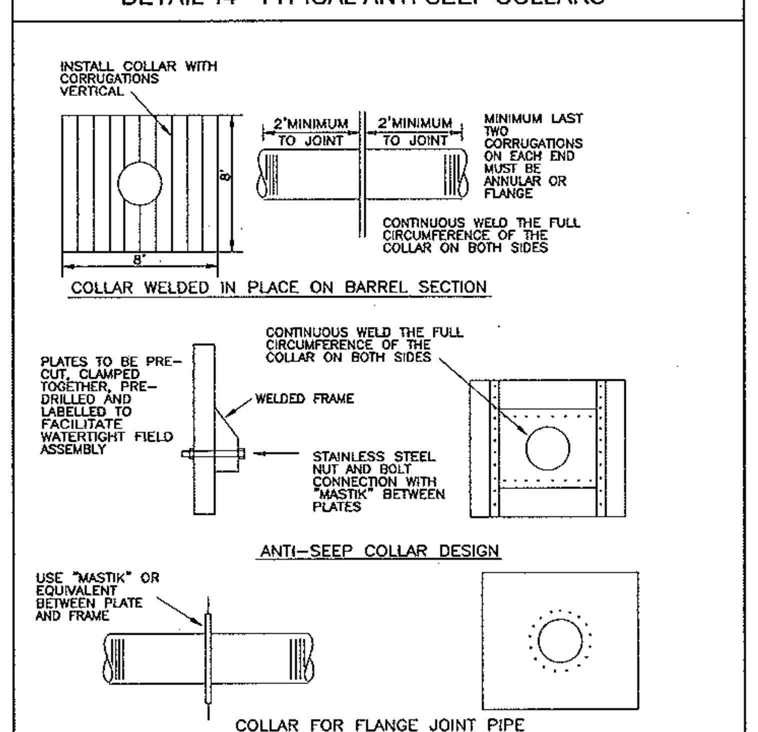

U.S. DEPARTMENT OF AGRICULTURE SOIL CONSERVATION SERVICE	PAGE C - 10 - 24	MARYLAND DEPARTMENT OF ENVIRONMENT WATER MANAGEMENT ADMINISTRATION

PRINCIPLE SPILLWAY PROFILE

BASIN #3

SCALE: 1"=5' VERT. 1"=50' HORIZ.

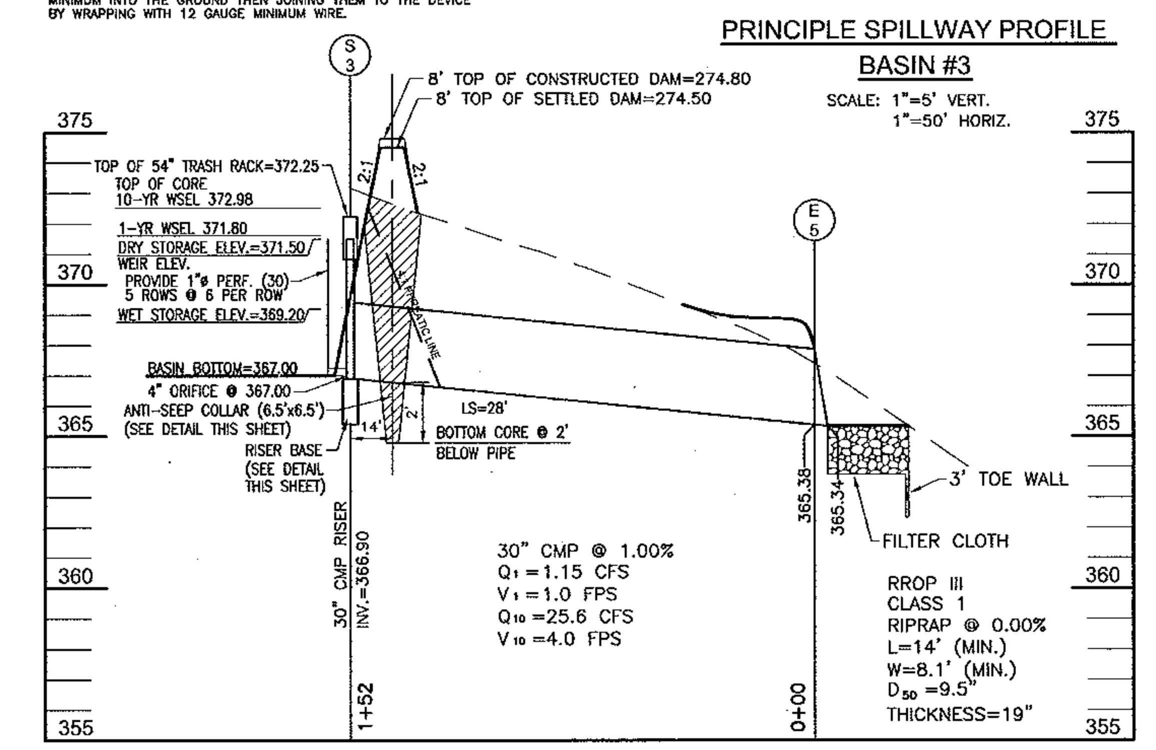

NOTES:

DURING GRADING AND AFTER EACH RAINFALL, THE CONTRACTOR SHALL INSPECT AND PROVIDE THE NECESSARY MAINTENANCE ON THE SEDIMENT AND EROSION CONTROL MEASURES SHOWN HEREON.

FOLLOWING INITIAL SOIL DISTURBANCE OR REDISTURBANCE PERMANENT OR TEMPORARY STABILIZATION SHALL BE COMPLIED WITH:

STRUCTURES, DIKES, SWALES, DITCH PERIMETER SLOPES SLOPES AND ALL SLOPES GREATER THAN 3:1.
B. 14 CALENDAR DAYS FOR ALL OTHER DISTURBED AREAS.
A. 7 CALENDAR DAYS FOR ALL PERIMETER SEDIMENT CONTROL

STRUCTURE SCHEDULE FOR SEDIMENT BASIN #3 (TEMPORARY)

NO.	TYPE	LOCATION	TOP ELEV.	INV IN	INV OUT	REMARKS
S-3	SEE DETAIL 16, THIS SHEET	N 567719.40, E 1376050.29	372.25	371.50	366.90	-
E-5	30" METAL END SECTION	N 567581.49, E 1375987.00	375.69	30" 367.88	368.34	SD 5.61

SEQUENCE OF CONSTRUCTION

	DURATION
1. OBTAIN GRADING PERMIT AND MDE PERMIT FOR STREAM CROSSING (MDE PERMIT APPLICATION TRACKING NO. 04-NT-0197/200463350)	1 DAY
2. NOTIFY HOWARD COUNTY BUREAU OF INSPECTIONS AND PERMITS (313-1880) AT LEAST 24 HOURS BEFORE STARTING ANY WORK.	1 DAY
3. CONSTRUCT STABILIZED CONSTRUCTION ENTRANCES AND INSTALL TREE PROTECTION DEVICES.	4 DAYS
4. WITH COUNTY INSPECTOR'S APPROVAL OF TREE PROTECTION DEVICE INSTALL PERIMETER SUPER SILT FENCE, TREE PROTECTION FENCE, AND CLEANWATER EARTH DIKES.	
5. CONSTRUCT STORMWATER MANAGEMENT FACILITIES (SEDIMENT BASINS #1, #2 AND #3) AND INSTALL STORM DRAIN SYSTEM.	3 DAYS
6. INSTALL NON-CLEANWATER EARTHDIKES	1 DAY
7. WITH INSPECTOR'S APPROVALS CLEAR AND GRUB SITE TO LOD.	2 WEEK
8. BEGIN CONSTRUCTION OF WATER, SEWER AND STORM DRAIN SYSTEM. NOTE: DELAY ALL WORK IN STREAM AREA UNTIL THE START OF A 5-DAY CLEAR WEATHER FORCAST. COMPLETE ALL WORK IN THE STREAM AREA WITHIN THESE 5 DAYS. REFERENCE SHEET 10 OF 17 FOR MWGC DETAILS 4.2(a) AND 4.2(b) FOR UTILITY CROSSING OF A STREAM. NO IN-STREAM CONSTRUCTION MAY OCCUR FROM 3/1-6/15.	2 WEEKS
9. GRADE ROAD TO SUB-BASE AND ROUGH GRADE REMAINING SITE.	1 WEEK
10. WITH ROAD GRADED TO SUB-BASE AND INLETS ARE IN PLACE BEGIN INSTALLATION OF CURB AND GUTTER.	2 WEEKS
11. WITH STORM DRAIN SYSTEM I-1 TO I-10 IN PLACE, REMOVE SEDIMENT BASIN #3, S-3 AND E-5, AND DIVERT RUN-OFF TO BASIN #1.	1 WEEK
12. WITH CURB AND GUTTER IN PLACE PAVE ROAD AND INSTALL SIDEWALK. INSTALL STREET TREES.	2 WEEKS
13. AS STORMWATER MANAGEMENT POND IS STABILIZED, INSTALL POND LANDSCAPING AS SHOWN IN SCHEDULE 'D' AND PERIMETER LANDSCAPING AS SHOWN IN SCHEDULE 'A'. SEE SHEET 15 FOR SCHEDULE TABLES.	1 WEEK
14. WITH INSPECTOR'S APPROVAL AND ROAD PAVING COMPLETE AND CONTRIBUTING DRAINAGE AREAS STABILIZED, CONVERT SEDIMENT BASINS TO FINAL STORMWATER MANAGEMENT BY REMOVING DEWATERING DEVICES AND BLOCKING FROM BASINS	1 WEEK

DEVELOPER

ELLICOTT CITY LAND HOLDINGS, LLC
8000 MAIN STREET
ELLICOTT CITY, MARYLAND 21043
ATTN: MR. DONALD R. REUWER
(410) 480-9105

OWNER

DENNIS PRESERVE, LLC
ELLICOTT CITY LAND HOLDINGS, LLC
SOLE MEMBER
8000 MAIN STREET
ELLICOTT CITY, MD 21043
410-480-9105

TEMP. PIPE SCHEDULE		
PIPE SIZE	TYPE	TOTAL LENGTH
30"	CMP	152 LF

NO.	REVISION	DATE

APPROVED: DEPARTMENT OF PUBLIC WORKS

William L. Malick 10-19-04
Chief, Bureau of Highways — Date

APPROVED: DEPARTMENT OF PLANNING AND ZONING

Cindy Hamilton 10/27/04
Chief, Division of Land Development — Date

10/25/04
Chief, Development Engineering Division — Date

These plans have been reviewed for HOWARD SOIL CONSERVATION DISTRICT and meet technical requirements for small pond construction and soil erosion and sediment control

Jim Myers / US 9/27/04
USDA-Natural Resources Conservation Service — Date

These plans for small pond construction and soil erosion and sediment control meet the requirements of the HOWARD SOIL CONSERVATION DISTRICT.

9/27/04
Howard Soil Conservation District — Date

DEVELOPER'S CERTIFICATE

"I/We certify that all development and construction will be done according to this plan of development for sediment and erosion control, and that all responsible personnel involved in the construction project will have a Certificate of Attendance at a Department of Environment Approved Training Program for the Control of Sediment and Erosion before beginning the project. I also authorize periodic on-site inspections by the Howard Soil Conservation District. I shall engage a registered professional engineer to supervise pond construction and provide the Howard Soil Conservation District with and "As-Built" plan of the pond within 30 days of completion."

9/14/04
Signature of Developer — Date

ENGINEER'S CERTIFICATE

"I hereby certify that this plan for pond construction and sediment and erosion control represents a practical and workable plan based on my personal knowledge of the site conditions and that it was prepared in accordance with the requirements of the Howard Soil Conservation District. I have notified the developer that he/she must engage a Registered Professional Engineer to supervise pond construction and provide the Howard Soil Conservation District with an "As-Built" plan of the pond within 30 days of completion."

9/15/04
Signature of Engineer — Date
Robert H. Vogel

SEDIMENT AND EROSION CONTROL DETAILS

DENNIS PRESERVE

LOTS 1-58

TAX MAP 31 BLOCK 21 — PARCEL '226'
1ST ELECTION DISTRICT — HOWARD COUNTY, MARYLAND
REF.: S-01-06, P-02-27, WP-03-07 (APP. 11/05/02)

ROBERT H. VOGEL ENGINEERING, INC.
ENGINEERS • SURVEYORS • PLANNERS
8407 MAIN STREET ELLICOTT CITY, MD 21043
TEL: 410.461.7666 FAX: 410.461.8961

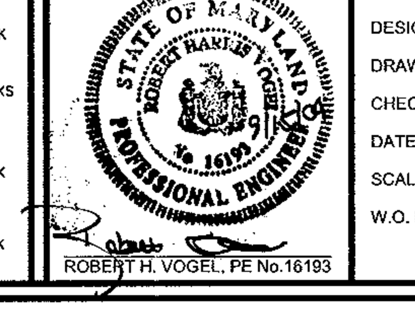

ROBERT H. VOGEL, PE No.16193

DESIGN BY:	RHV
DRAWN BY:	CMH
CHECKED BY:	RHV
DATE:	SEPTEMBER 2004
SCALE:	AS SHOWN
W.O. NO.:	2017019.0

SHEET 7 OF 17

F-04-74

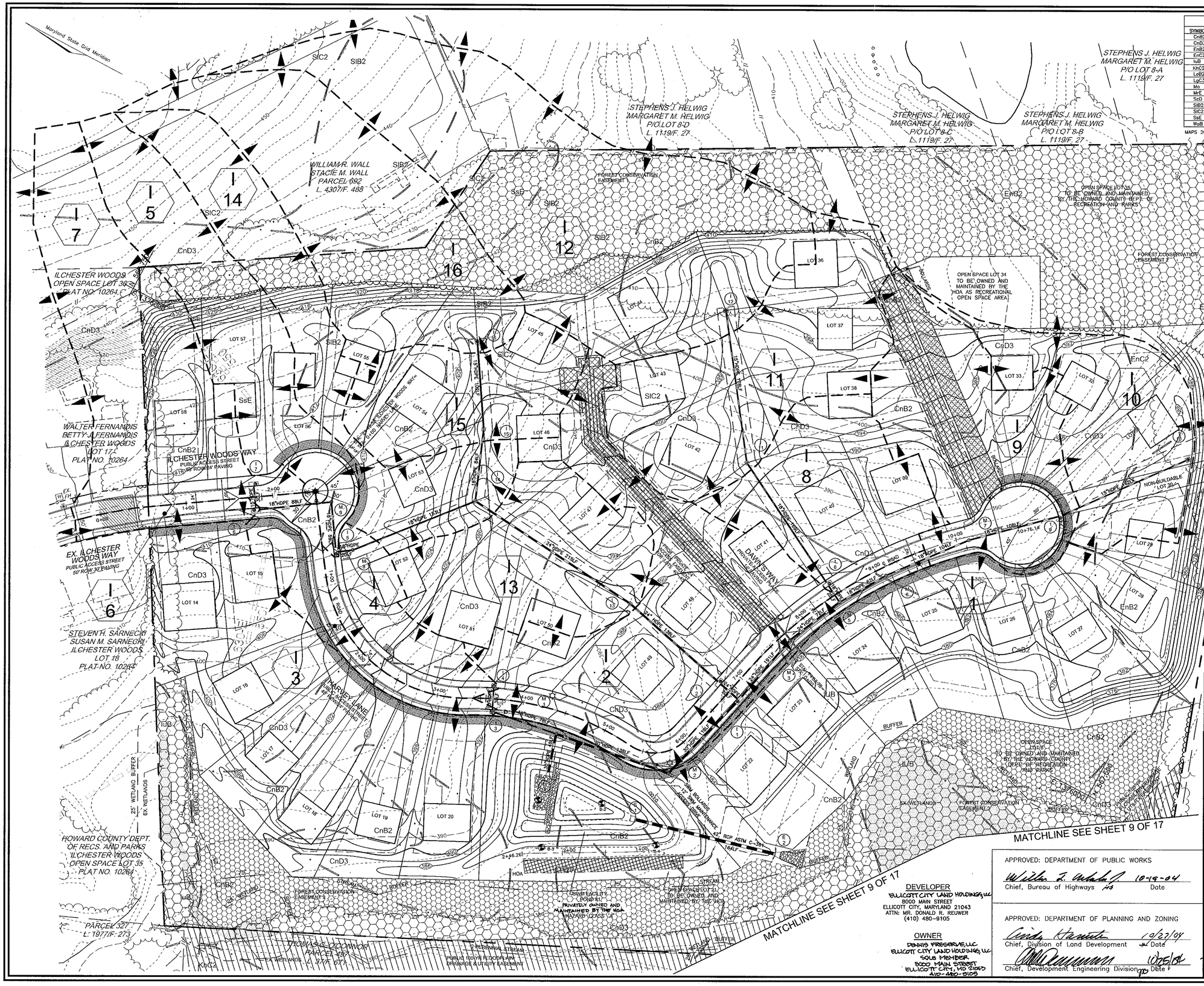

SOILS LEGEND

SYMBOL	NAME / DESCRIPTION	GROUP
CnB2	CHILLUM-FAIRFAX LOAMS, 1 TO 5 PERCENT SLOPES, MODERATELY ERODED	B
CnD3	CHILLUM-FAIRFAX LOAMS, 5 TO 15 PERCENT SLOPES, SEVERELY ERODED	B
EnB2	ELSINBORO LOAM, 3 TO 8 PERCENT SLOPES, MODERATELY ERODED	B
EnC2	ELSINBORO LOAM, 8 TO 15 PERCENT SLOPES, MODERATELY ERODED	B
IuB	IUKA LOAM, LOCAL ALLUVIUM, 1 TO 5 PERCENT SLOPES	C
KhC2	KEYPORT SILT LOAM, 3 TO 10 PERCENT SLOPES, MODERATELY ERODED	C
LeB2	LEGORE SILT LOAM, 3 TO 8 PERCENT SLOPES, MODERATELY ERODED	B
LgC3	LEGORE SILTY CLAY LOAM, 8 TO 15 PERCENT SLOPES, SEVERELY ERODED	B
Mo	MIXED ALLUVIAL LAND	–
MrE	MONTALTO AND RELAY SOILS, 15 TO 45 PERCENT SLOPES	C
ScD	SANDY AND CLAYEY LAND, MODERATELY SLOPING	–
SlB2	SASSAFRAS LOAM, 1 TO 5 PERCENT SLOPES, MODERATELY ERODED	B
SlC2	SASSAFRAS LOAM, 5 TO 10 PERCENT SLOPES, MODERATELY ERODED	B
SsE	SASSAFRAS SOILS, 15 TO 40 PERCENT SLOPES	B
WaB	WATCHUNG SILT LOAM, 3 TO 8 PERCENT SLOPES	D

MAPS 20 & 25 OF THE HOWARD COUNTY SOIL SURVEY

LEGEND

EXISTING CONTOUR — 440
PROPOSED CONTOUR — 412
SPOT ELEVATION — +82.53
DIRECTION OF FLOW
EXISTING TREES TO REMAIN
SIGNS/LIGHT POLES — POST-TOP
PROPOSED STREET TREE
SOILS — SlB2, SsE
AREA OF 15 TO 24.9 PERCENT SLOPES
AREA OF 24 PERCENT OR GREATER SLOPES
PROP. PUBLIC UTILITY EASEMENT
DRAINAGE DIVIDE

DRAINAGE AREA TABULATIONS

NO.	AREA	'C'	% IMP.	SOIL TYPE	ZONE
I-1	0.31 AC.	0.69	77%	B/C	R-20
I-2	1.56 AC.	0.35	39%	B	R-20
I-3	0.33 AC.	0.54	62%	B	R-20
I-4	0.39 AC.	0.36	40%	B	R-20
I-5	1.01 AC.	0.31	34%	B	R-20
I-6	0.12 AC.	0.61	64%	B	R-20
I-7	1.38 AC.	0.29	33%	B	R-20
I-8	0.83 AC.	0.30	33%	B	R-20
I-9	1.14 AC.	0.31	39%	B	R-20
I-10	0.89 AC.	0.26	29%	B	R-20
I-11	1.25 AC.	0.26	30%	B	R-20
I-12	2.48 AC.	0.22	18%	B	R-20
I-13	0.96 AC.	0.26	30%	B	R-20
I-14	1.07 AC.	0.25	28%	B	R-20
I-15	0.71 AC.	0.26	30%	B	R-20
I-16	1.50 AC.	0.19	8%	B	R-20
I-17	1.75 AC.	0.36	39%	B/C/D	R-20
I-18	0.91 AC.	0.36	38%	B/C	R-20
I-19	0.49 AC.	0.38	41%	B	R-20

NO.	REVISION	DATE

STORM DRAIN DRAINAGE AREA MAP

DENNIS PRESERVE
LOTS 1-58

TAX MAP 31 BLOCK 21 — PARCEL '226'
1ST ELECTION DISTRICT — HOWARD COUNTY, MARYLAND
REF.: S-01-06, P-02-27, WP-03-07 (APP. 11/05/02)

ROBERT H. VOGEL ENGINEERING, INC.
ENGINEERS • SURVEYORS • PLANNERS
8407 MAIN STREET, ELLICOTT CITY, MD 21043
TEL: 410.461.7666
FAX: 410.461.8961

DEVELOPER
ELLICOTT CITY LAND HOLDINGS, LLC
8000 MAIN STREET
ELLICOTT CITY, MARYLAND 21043
ATTN: MR. DONALD R. REUWER
(410) 480-9105

OWNER
DENNIS PRESERVE, LLC
ELLICOTT CITY LAND HOLDINGS, LLC
SOLE MEMBER
8000 MAIN STREET
ELLICOTT CITY, MD 21043
410-480-9105

APPROVED: DEPARTMENT OF PUBLIC WORKS
Chief, Bureau of Highways — Date 10-19-04

APPROVED: DEPARTMENT OF PLANNING AND ZONING
Chief, Division of Land Development — Date 10/27/04
Chief, Development Engineering Division — Date 10/25/04

STATE OF MARYLAND — ROBERT HARRIS VOGEL — No. 16193 — PROFESSIONAL ENGINEER
ROBERT H. VOGEL, PE No.16193

DESIGN BY: RHV
DRAWN BY: CMH
CHECKED BY: RHV
DATE: SEPTEMBER 2004
SCALE: 1"=50'
W.O. NO.: 2017019.0

8 SHEET OF 17

F-04-74

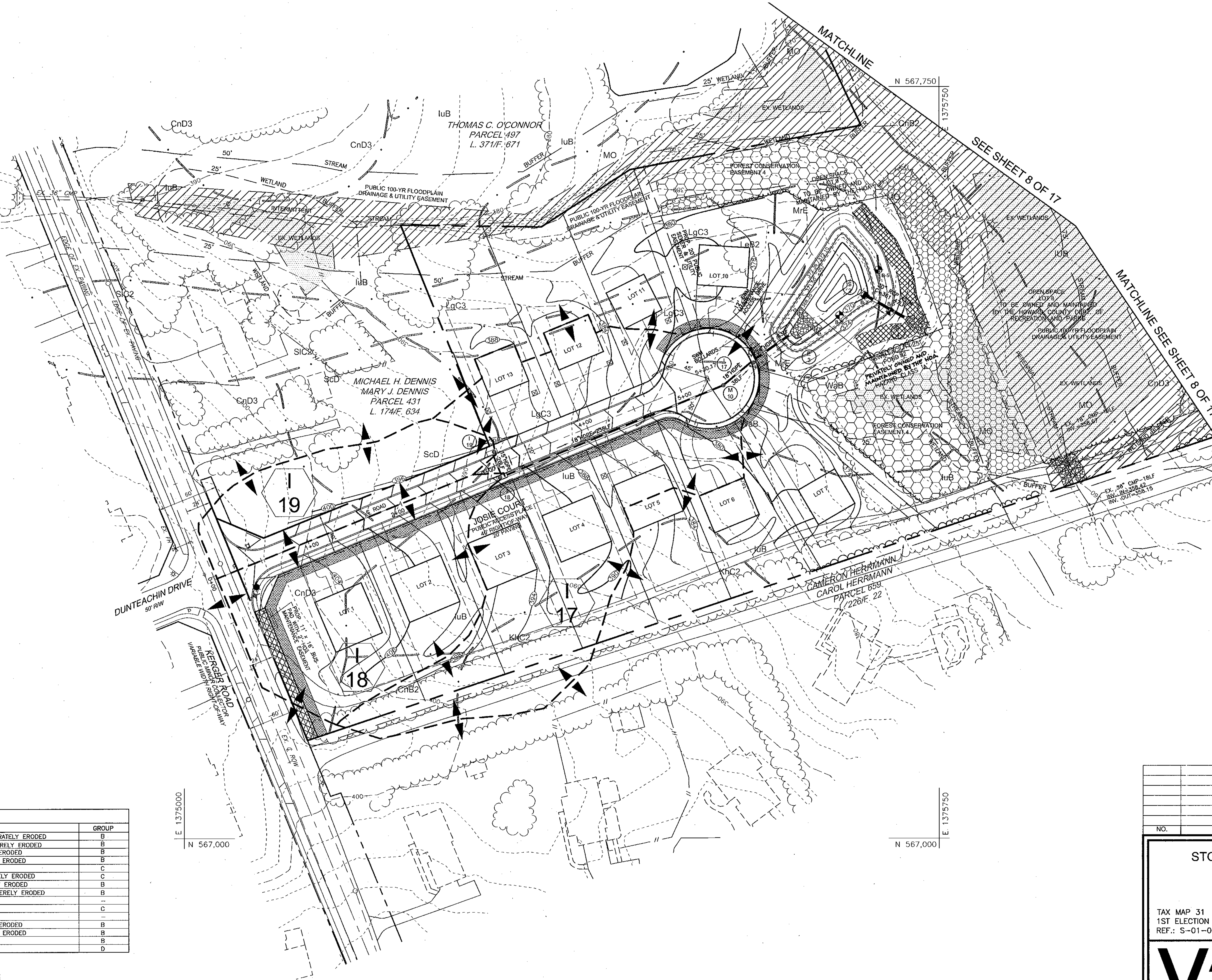

LEGEND

- EXISTING CONTOUR — 440
- PROPOSED CONTOUR — 412
- SPOT ELEVATION — +82 53
- DIRECTION OF FLOW
- EXISTING TREES TO REMAIN
- SIGNS/LIGHT POLES — POST-TOP
- PROPOSED STREET TREE
- SOILS — SIB2, SsE
- AREA OF 15 TO 24.9 PERCENT SLOPES
- AREA OF 24 PERCENT OR GREATER SLOPES
- PROP. PUBLIC UTILITY EASEMENT
- PROP. PUBLIC STREET TREE MAINTENANCE & UTILITY EASEMENT
- PROP. PUBLIC OR PRIVATE ACCESS EASEMENT
- PROP. FOREST CONSERVATON AREA (RETENTION)
- PROP. FOREST CONSERVATON AREA (REFORESTATION)
- PUBLIC 100-YR FLOODPLAIN DRAINAGE & UTILITY EASEMENT
- EXISTING WETLANDS
- DRAINAGE DIVIDE

DRAINAGE AREA TABULATIONS

NO.	AREA	'C'	% IMP.	SOIL TYPE	ZONE
I-1	0.31 AC.	0.69	77%	B/C	R-20
I-2	1.56 AC.	0.35	39%	B	R-20
I-3	0.33 AC.	0.54	62%	B	R-20
I-4	0.39 AC.	0.36	40%	B	R-20
I-5	1.01 AC.	0.31	34%	B	R-20
I-6	0.12 AC.	0.61	64%	B	R-20
I-7	1.38 AC.	0.29	33%	B	R-20
I-8	0.83 AC.	0.30	33%	B	R-20
I-9	1.14 AC.	0.31	39%	B	R-20
I-10	0.89 AC.	0.26	29%	B	R-20
I-11	1.25 AC.	0.26	30%	B	R-20
I-12	2.48 AC.	0.22	18%	B	R-20
I-13	0.96 AC.	0.26	30%	B	R-20
I-14	1.07 AC.	0.25	28%	B	R-20
I-15	0.71 AC.	0.26	30%	B	R-20
I-16	1.50 AC.	0.19	8%	B	R-20
I-17	1.75 AC.	0.36	39%	B/C/D	R-20
I-18	0.91 AC.	0.36	38%	B/C	R-20
I-19	0.49 AC.	0.38	41%	B	R-20

SOILS LEGEND

SYMBOL	NAME / DESCRIPTION	GROUP
CnB2	CHILLUM-FAIRFAX LOAMS, 1 TO 5 PERCENT SLOPES, MODERATELY ERODED	B
CnD3	CHILLUM-FAIRFAX LOAMS, 5 TO 15 PERCENT SLOPES, SEVERELY ERODED	B
EnB2	ELSINBORO LOAM, 3 TO 8 PERCENT SLOPES, MODERATELY ERODED	B
EnC2	ELSINBORO LOAM, 8 TO 15 PERCENT SLOPES, MODERATELY ERODED	B
IuB	IUKA LOAM, LOCAL ALLUVIUM, 1 TO 5 PERCENT SLOPES	C
KhC2	KEYPORT SILT LOAM, 3 TO 10 PERCENT SLOPES, MODERATELY ERODED	C
LeB2	LEGORE SILT LOAM, 3 TO 8 PERCENT SLOPES, MODERATELY ERODED	B
LgC3	LEGORE SILTY CLAY LOAM, 8 TO 15 PERCENT SLOPES, SEVERELY ERODED	B
Mo	MIXED ALLUVIAL LAND	–
MrE	MONTALTO AND RELAY SOILS, 15 TO 45 PERCENT SLOPES	C
ScD	SANDY AND CLAYEY LAND, MODERATELY SLOPING	–
SIB2	SASSAFRAS LOAM, 1 TO 5 PERCENT SLOPES, MODERATELY ERODED	B
SIC2	SASSAFRAS LOAM, 5 TO 10 PERCENT SLOPES, MODERATELY ERODED	B
SsE	SASSAFRAS SOILS, 15 TO 40 PERCENT SLOPES	B
WaB	WATCHUNG SILT LOAM, 3 TO 8 PERCENT SLOPES	D

MAPS 20 & 25 OF THE HOWARD COUNTY SOIL SURVEY

APPROVED: DEPARTMENT OF PUBLIC WORKS

Chief, Bureau of Highways — 10-19-04 Date

APPROVED: DEPARTMENT OF PLANNING AND ZONING

Chief, Division of Land Development — 10/27/04 Date

Chief, Development Engineering Division — 10/25/04 Date

DEVELOPER

ELLICOTT CITY LAND HOLDINGS, LLC
8000 MAIN STREET
ELLICOTT CITY, MARYLAND 21043
ATTN: MR. DONALD R. REUWER
(410) 480-9105

OWNER

DENNIS PRESERVE, LLC
ELLICOTT CITY LAND HOLDINGS, LLC
SOLE MEMBER
8000 MAIN STREET
ELLICOTT CITY, MD 21043
410-480-9105

NO.	REVISION	DATE

STORM DRAIN DRAINAGE AREA MAP

DENNIS PRESERVE

LOTS 1-58

TAX MAP 31 BLOCK 21 — PARCEL '226'
1ST ELECTION DISTRICT — HOWARD COUNTY, MARYLAND
REF.: S-01-06, P-02-27, WP-03-07 (APP. 11/05/02)

ROBERT H. VOGEL ENGINEERING, INC.
ENGINEERS • SURVEYORS • PLANNERS
8407 MAIN STREET, ELLICOTT CITY, MD 21043
TEL: 410.461.7666
FAX: 410.461.8961

STATE OF MARYLAND — ROBERT HARRIS VOGEL — No. 16193 — PROFESSIONAL ENGINEER

ROBERT H. VOGEL, PE No.16193

DESIGN BY: RHV
DRAWN BY: CMH
CHECKED BY: RHV
DATE: SEPTEMBER 2004
SCALE: 1"=50'
W.O. NO.: 2017019.0

F-04-74

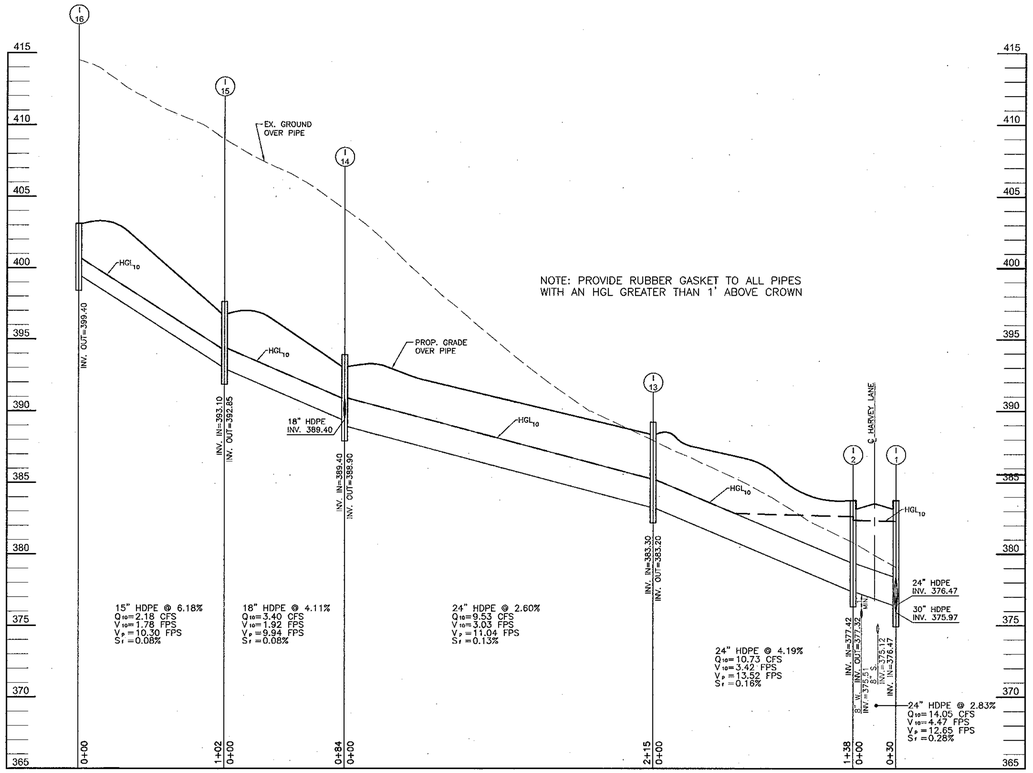

STORM DRAIN PROFILE

SCALE: 1"=50' HORIZ.
1"=5' VERT.

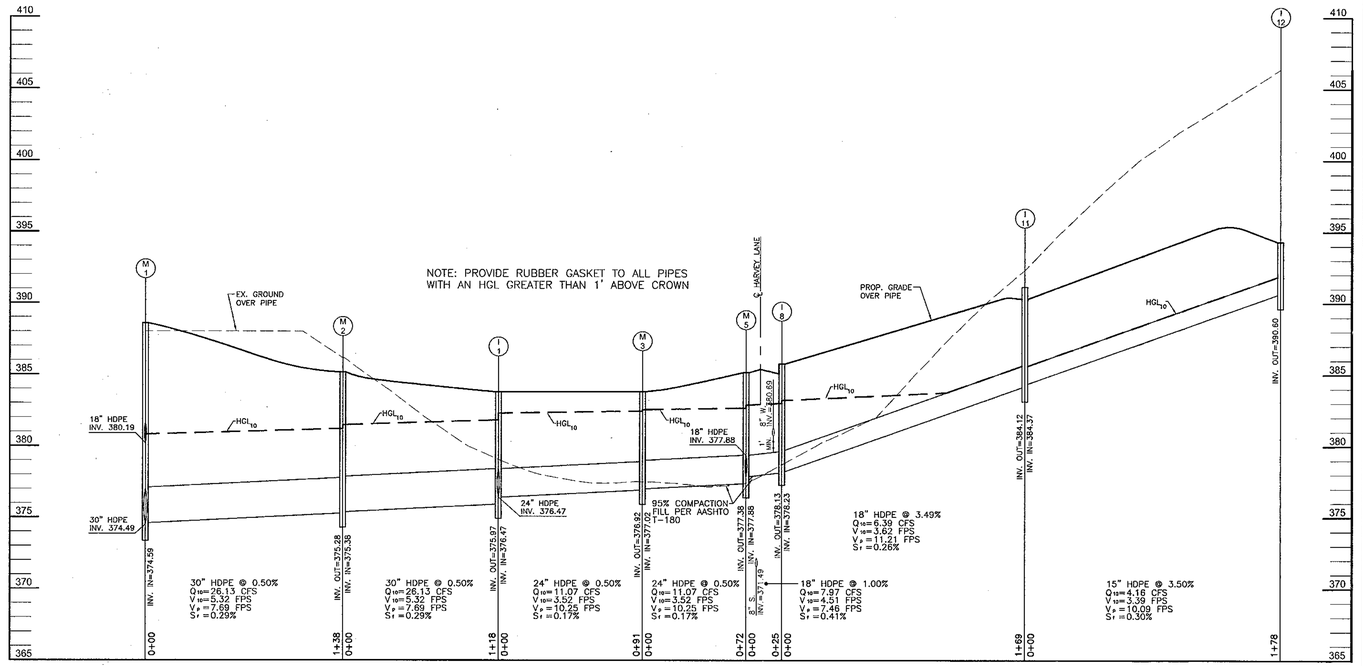

STORM DRAIN PROFILE

SCALE: 1"=50' HORIZ.
1"=5' VERT.

DETAIL 27 - ROCK OUTLET PROTECTION III

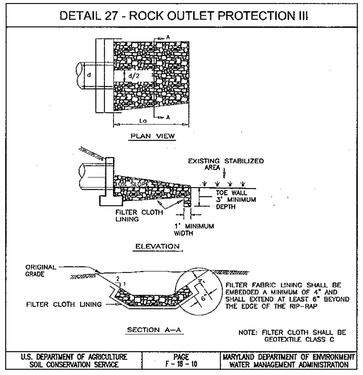

U.S. DEPARTMENT OF AGRICULTURE SOIL CONSERVATION SERVICE	PAGE F - 18 - 10	MARYLAND DEPARTMENT OF ENVIRONMENT WATER MANAGEMENT ADMINISTRATION

ROCK OUTLET PROTECTION

CONSTRUCTION SPECIFICATIONS

1. THE SUBGRADE FOR THE FILTER, RIP--RAP, OR GABION SHALL BE PREPARED TO THE REQUIRED LINES AND GRADES. ANY FILL REQUIRED IN THE SUBGRADE SHALL BE COMPACTED TO A DENSITY OF APPROXIMATELY THAT OF THE SURROUNDING UNDISTURBED MATERIAL.

2. THE ROCK OR GRAVEL SHALL CONFORM TO THE SPECIFIED GRADING LIMITS WHEN INSTALLED RESPECTIVELY IN THE RIP--RAP OR FILTER.

3. GEOTEXTILE SHALL BE PROTECTED FROM PUNCHING, CUTTING, OR TEARING. ANY DAMAGE OTHER THAN AN OCCASIONAL SMALL HOLE SHALL BE REPAIRED BY PLACING ANOTHER PIECE OF GEOTEXTILE OVER THE DAMAGED PART OR BY COMPLETELY REPLACING THE GEOTEXTILE. ALL OVERLAPS WHETHER FOR REPAIRS OR FOR JOINING TWO PIECES OF GEOTEXTILE SHALL BE A MINIMUM OF ONE FOOT.

4. STONE FOR THE RIP--RAP OR GABION OUTLETS MAY BE PLACED BY EQUIPMENT. THEY SHALL BE CONSTRUCTED TO THE FULL COURSE THICKNESS IN ONE OPERATION AND IN SUCH A MANNER AS TO AVOID DISPLACEMENT OF UNDERLYING MATERIALS. THE STONE FOR RIP--RAP OR GABION OUTLETS SHALL BE DELIVERED AND PLACED IN A MANNER THAT WILL ENSURE THAT IT IS REASONABLY HOMOGENEOUS WITH THE SMALLER STONES AND SPALLS FILLING THE VOIDS BETWEEN THE LARGER STONES. RIP--RAP SHALL BE PLACED IN A MANNER TO PREVENT DAMAGE TO THE FILTER BLANKET OR GEOTEXTILE. HAND PLACEMENT WILL BE REQUIRED TO THE EXTENT NECESSARY TO PREVENT DAMAGE TO THE PERMANENT WORKS.

5. THE STONE SHALL BE PLACED SO THAT IT BLENDS IN WITH THE EXISTING GROUND. IF THE STONE IS PLACED TOO HIGH THEN THE FLOW WILL BE FORCED OUT OF THE CHANNEL AND SCOUR ADJACENT TO THE STONE WILL OCCUR.

U.S. DEPARTMENT OF AGRICULTURE SOIL CONSERVATION SERVICE	PAGE F - 18 - 8A	MARYLAND DEPARTMENT OF ENVIRONMENT WATER MANAGEMENT ADMINISTRATION

Maryland's Guidelines To Waterway Construction
DETAIL 4.2(a): UTILITY CROSSING

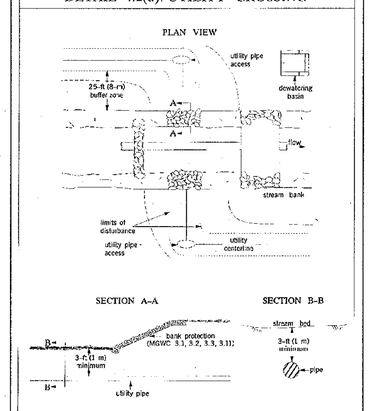

STREAM CROSSINGS	PAGE 42 - 3	MARYLAND DEPARTMENT OF THE ENVIRONMENT WATER MANAGEMENT ADMINISTRATION

Maryland's Guidelines To Waterway Construction
DETAIL 4.2(b): UTILITY CROSSING

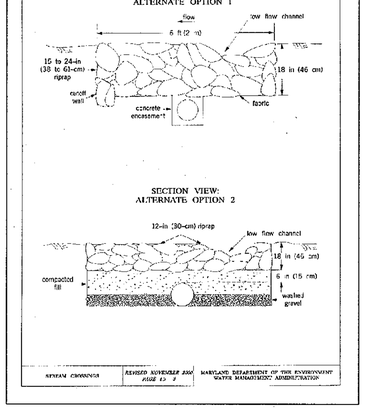

STREAM CROSSINGS	REVISED NOVEMBER 2000 PAGE 42 - 5	MARYLAND DEPARTMENT OF THE ENVIRONMENT WATER MANAGEMENT ADMINISTRATION

DESCRIPTION

THE WORK SHOULD CONSIST OF INSTALLING EROSION CONTROL DEVICES IN AND ADJACENT TO THE CONSTRUCTION OF UTILITY CROSSINGS.

INSTALLATION GUIDELINES

ALL EROSION AND SEDIMENT CONTROL DEVICES, INCLUDING DEWATERING BASINS, SHOULD BE IMPLEMENTED AS THE FIRST ORDER OF BUSINESS ACCORDING TO A PLAN APPROVED BY THE WMA OR LOCAL AUTHORITY. (SEE THE 1994 MARYLAND STANDARDS AND SPECIFICATIONS FOR SOIL EROSION AND SEDIMENT CONTROL.) THE PROPOSED CONSTRUCTION SEQUENCE IS AS FOLLOWS (REFER TO DETAIL 4.2):

1. THE CONTRACTOR SHOULD INSURE THAT A CONTINUOUS PERIMETER CONTROL BARRIER IS IN PLACE TO MINIMIZE THE AMOUNT OF POLLUTANTS ENTERING THE FLOW. A DIVERSION PIPE AS SHOWN IN MGWC 1.4: DIVERSION PIPE OR OTHER MEASURE SHOULD BE INSTALLED AND SANDBAG OR STONE BARRIERS AS SHOWN IN MGWC 1.5: SANDBAG/STONE DIVERSION SHOULD BE CONSTRUCTED ACCORDING TO SPECIFICATIONS TO DIVERT THE STREAMFLOW
2. EXCAVATED TOPSOIL AND SUBSOIL SHOULD BE KEPT SEPARATE, PLACED ON THE UPLAND SIDE OF THE EXCAVATION, AND REPLACED IN THEIR NATURAL ORDER.
3. ALL CONSTRUCTION SHOULD TAKE PLACE DURING STREAM LOW FLOWS. THE LENGTH OF CONSTRUCTION TIME SHOULD BE LIMITED TO A MAXIMUM OF 5 CONSECUTIVE DAYS FOR EACH CROSSING.
4. ALL UTILITY CROSSINGS SHOULD BE PLACED A MINIMUM OF 3 FEET (1 METER) BENEATH THE STREAM BED UNLESS AN ALTERNATIVE SECTION IS SPECIFICALLY APPROVED BY THE WMA. FOR INSTANCES WHERE A 3--FOOT COVER IS NOT VIABLE, TWO ALTERNATE STABILIZATION OPTIONS ARE GIVEN IN DETAIL 4.2. A LOW FLOW CHANNEL SHALL BE CONSTRUCTED THROUGH ALL RIP--RAP PLACEMENTS ACROSS THE STREAM BED.
5. THE STREAM SHOULD BE DIVERTED BY AN APPROVED TEMPORARY STREAM DIVERSION, THE CONSTRUCTION AREA SHOULD BY DEWATERED, AND ANY DISTURBED BANKS SHOULD BE STABILIZED. THE CONTRACTOR MAY ELECT TO CONSTRUCT THE UTILITY CROSSING IN TWO STAGES. IN THIS CASE, THE WMA APPROVED FLOW BARRIER MAY BE CONSTRUCTED TO KEEP THE CONSTRUCTION AREA DRY.
6. ONCE THE CROSSING IS COMPLETED, THE DIVERSION SHOULD BE REMOVED FROM UPSTREAM TO DOWNSTREAM. SEDIMENT CONTROL DEVICES, INCLUDING PERIMETER EROSION CONTROLS, ARE TO REMAIN IN PLACE UNTIL ALL DISTURBED AREAS ARE STABILIZED IN ACCORDANCE WITH AN APPROVED SEDIMENT AND EROSION CONTROL PLAN AND INSPECTION AUTHORITY APPROVES THEIR REMOVAL.

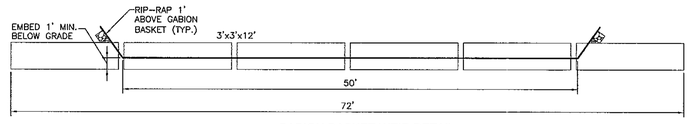

GABION BASKET WEIR DETAIL
POND #1
NTS

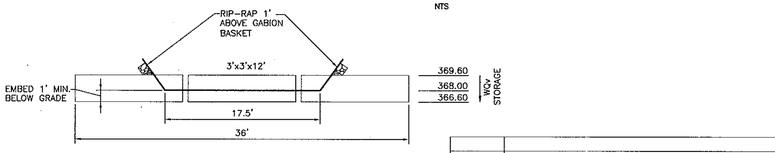

GABION BASKET WEIR DETAIL
POND #2
NTS

NO.	REVISION	DATE

APPROVED: DEPARTMENT OF PLANNING AND ZONING

Chief, Division of Land Development — Date 10/27/04

Chief, Development Engineering Division — Date 10/25/04

APPROVED: DEPARTMENT OF PUBLIC WORKS

Chief, Bureau of Highways — Date 10-19-04

DEVELOPER
ELLICOTT CITY LAND HOLDINGS, LLC
8000 MAIN STREET
ELLICOTT CITY, MARYLAND 21043
ATTN: MR. DONALD R. REUWER
(410) 480-9105

OWNER
DENNIS PRESERVE, LLC
ELLICOTT CITY LAND HOLDINGS, LLC
SOLE MEMBER
8000 MAIN STREET
ELLICOTT CITY, MD 21043
410-480-9105

STORM DRAIN PROFILES

DENNIS PRESERVE
LOTS 1-58

TAX MAP 31 BLOCK 21 PARCEL '226'
1ST ELECTION DISTRICT HOWARD COUNTY, MARYLAND
REF.: S-01-06, P-02-27, WP-03-07 (APP. 11/05/02)

ROBERT H. VOGEL ENGINEERING, INC.
ENGINEERS • SURVEYORS • PLANNERS
8407 MAIN STREET ELLICOTT CITY, MD 21043
TEL: 410.461.7666 FAX: 410.461.8961

STATE OF MARYLAND — ROBERT HARRIS VOGEL — No. 16193 — PROFESSIONAL ENGINEER

ROBERT H. VOGEL, PE No. 16193

DESIGN BY:	RHV
DRAWN BY:	CMH
CHECKED BY:	RHV
DATE:	SEPTEMBER 2004
SCALE:	AS SHOWN
W.O. NO.:	2017019.0

SHEET 10 OF 17

F-04-74

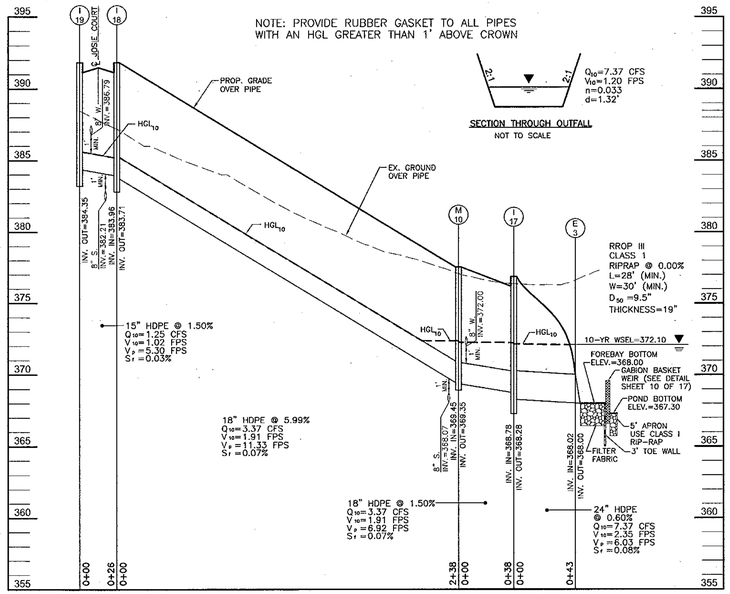

STORM DRAIN PROFILE

SCALE: 1"=50' HORIZ.
1"=5' VERT.

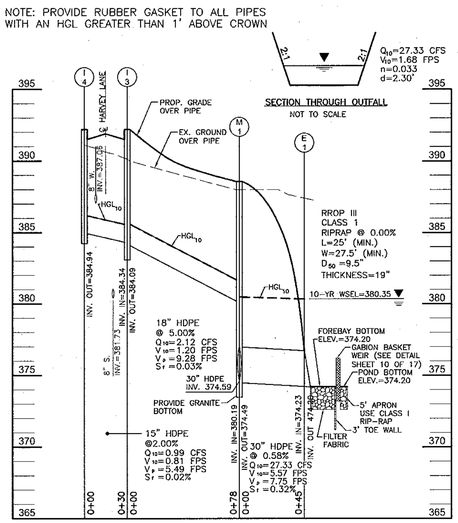

STORM DRAIN PROFILE

SCALE: 1"=50' HORIZ.
1"=5' VERT.

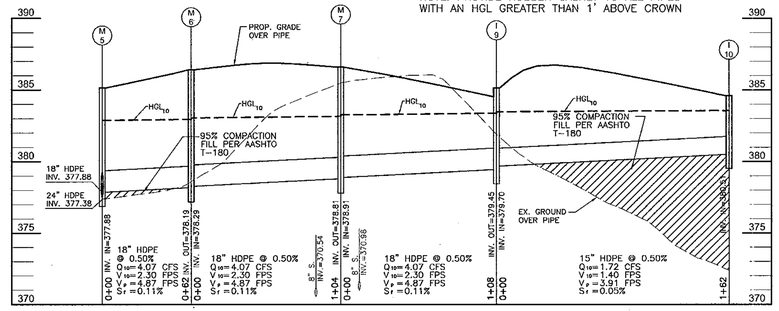

STORM DRAIN PROFILE

SCALE: 1"=50' HORIZ.
1"=5' VERT.

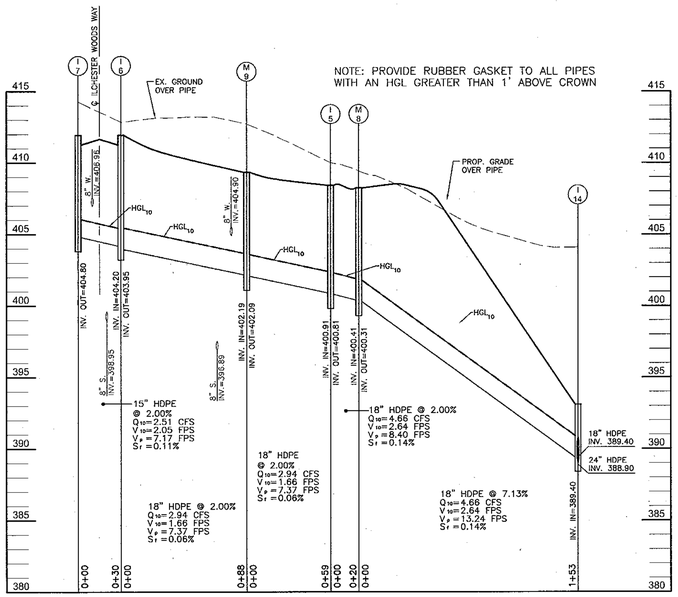

STORM DRAIN PROFILE

SCALE: 1"=50' HORIZ.
1"=5' VERT.

STRUCTURE SCHEDULE						
NO.	TYPE	LOCATION	TOP ELEV.	INV IN	INV OUT	REMARKS
E-1	30" CONCRETE END SECTION	N 568062.96 E 1375730.52	376.73	30" 374.23	374.20	SD 5.51
E-2	42" CONCRETE END SECTION	N 567789.02, E 1375769.44	375.69	42" 372.19	372.12	SD 5.51
E-3	24" CONCRETE END SECTION	N 567501.48 E 1375600.81	370.02	24" 368.02	368.00	SD 5.51
E-4	30" CONCRETE END SECTION	N 567519.80, E 1375115.54	369.06	30" 366.56	366.50	SD 5.51
I-1	TYPE 'A-10' INLET	CL STA. 6+79.22-12.43' R.	383.78 *383.11	24" 376.47 24" 376.47	30" 375.97	SD 4.41
I-2	TYPE 'A-10' INLET	CL STA. 6+79.22-12.43' L.	383.78 *383.11	24" 377.42	24" 377.32	SD 4.41
I-3	TYPE 'A-5' INLET	CL STA. 3+64.50-12.43' R.	391.52 *390.85	15" 384.34	18" 384.09	SD 4.40
I-4	TYPE 'A-5' INLET	CL STA. 3+64.50-12.43' L.	391.52 *390.85	-	15" 384.94	SD 4.40
I-5	TYPE 'A-5' INLET	CL STA. 0+72.76-12.43' L.	408.06 *407.39	18" 400.91	16" 400.81	SD 4.40
I-6	TYPE 'A-10' INLET	CL STA. 1+79.51-12.43' R.	411.94 *411.27	15" 404.20	18" 403.95	SD 4.41
I-7	TYPE 'A-10' INLET	CL STA. 1+79.51-12.43' L.	411.94 *411.27	-	15" 404.80	SD 4.41
I-8	TYPE 'A-10' INLET	CL STA. 8+45.31-12.43' L.	385.77 *385.10	18" 378.23	18" 378.13	SD 4.41
I-9	TYPE 'A-10' INLET	LP STA. 1+44.72	385.14 *384.47	15" 379.70	18" 379.45	SD 4.41
I-10	YARD INLET	N 567581.82 E 1376398.01	384.60	-	15" 380.51	SD 4.14
I-11	TYPE 'D' INLET	N 568029.59 E 1376155.17	391.13 *390.30	15" 384.37	18" 384.12	SD 4.39
I-12	YARD INLET	N 568134.11 E 1376299.69	394.30	-	15" 390.60	SD 4.14
I-13	TYPE 'D' INLET	N 568071.60 E 1375947.46	389.23 *388.40	24" 383.30	24" 383.20	SD 4.39
I-14	TYPE 'D' INLET	N 568285.48 E 1375968.45	393.93 *393.10	18" 389.40 18" 389.40	24" 388.90	SD 4.39
I-15	TYPE 'D' INLET	N 568316.08 E 1376046.50	397.63 *396.80	15" 393.10	18" 392.85	SD 4.39
I-16	YARD INLET	N 568370.27 E 1376132.73	403.10	-	15" 399.40	SD 4.14
I-17	TYPE 'A-10' INLET	LP STA. 1+49.31	376.86 *376.19	18" 368.78	24" 368.28	SD 4.41
I-18	TYPE 'A-10' INLET	CL STA. 3+02.91-10.43' R.	391.82 *391.15	15" 383.96	18" 383.71	SD 4.41
I-19	TYPE 'A-10' INLET	CL STA. 3+02.91-10.43' L.	391.82 *391.15	-	15" 384.35	SD 4.41
M-1	STANDARD 5' MANHOLE	CL STA. 4+47.31-26.21' R.	388.53	18" 380.19 30" 374.59	30" 374.49	G 5.13
M-2	STANDARD 5' MANHOLE	CL STA. 5+74.47-25.22' R.	385.16	30" 375.38	30" 375.28	G 5.13
M-3	STANDARD .5' MANHOLE	CL STA. 7+71.70-9.88' R.	383.81	24" 377.02	24" 376.92	G 5.13
M-5	STANDARD 5' MANHOLE	CL STA. 8+45.31-9.95' R.	385.14	18" 377.88 18" 377.88	24" 377.38	G 5.13
M-6	STANDARD 5' MANHOLE	CL STA. 9+08.57-9.81' R.	386.41	18" 378.29	18" 378.19	G 5.13
M-7	STANDARD 5' MANHOLE	CL STA. 10+14.30-4.08' R.	386.60	18" 378.91	18" 378.81	G 5.13
M-8	STANDARD 5' MANHOLE	N 568383.67 E 1375851.64	408.24	18" 400.41	18" 400.31	G 5.13
M-9	STANDARD 5' MANHOLE	CL STA. 0+13.92-16.99' L.	409.34	18" 402.19	16" 402.09	G 5.13
M-10	STANDARD 5' MANHOLE	N 567451.90 E 1375535.74	377.53	18" 369.45	18" 369.35	G 5.13
S-1	CONTROL STRUCTURE	N 567951.23 E 1375728.75	383.63	2.5" 375.10	42" 373.50	SEE DETAIL 12 OF 17
S-2	CONTROL STRUCTURE	N 567544.20 E 1375672.69	374.30	1.5" 368.40	30" 367.05	SEE DETAIL 13 OF 17

*ELEVATION AT THROAT OPENING

NOTES:
1. PROVIDE RUBBER GASKET TO ALL PIPES WITH AN HGL GREATER THAN 1' ABOVE CROWN.
2. PROVIDE GRANITE BOTTOM AT M1.
3. HDPE BEDDING SPECIFICATIONS ARE TO BE AS PER ASTM STANDARDS.

PIPE SCHEDULE		
PIPE SIZE	TYPE	TOTAL LENGTH
15"	HDPE	528 LF
18"	HDPE	1226 LF
24"	HDPE	589 LF
30"	HDPE	301 LF
30"	RCP ASTM C-361	47 LF
42"	RCP ASTM C-361	164 LF

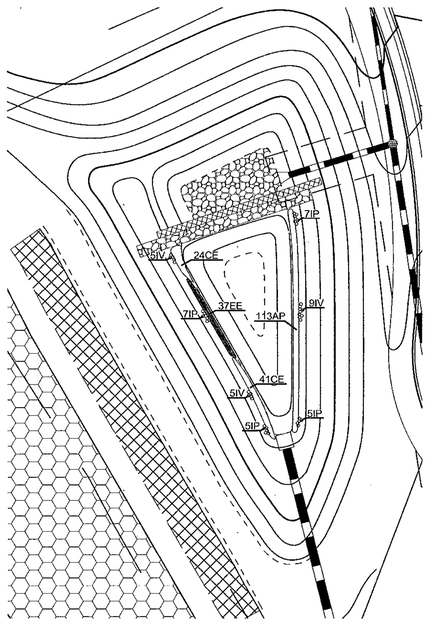

POND #1
PLANTING DETAIL

SCALE: 1"=30'

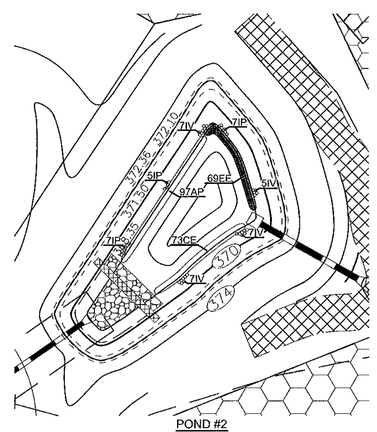

POND #2
PLANTING DETAIL

SCALE: 1"=30'

10" DEEP POND #1 LANDSCAPE SCHEDULE				
KEY	QUAN.	BOTANICAL NAME	SIZE	REMARKS
IP	24	Iris pseudacoris Yellow Water Iris	plug	1.5' oc
IV	19	Iris versicolor Blue Flag (wear gloves)	plug	1.5' oc
AP	113	Alisma plantago-aquatica Water Plantain	plug	2' oc
CE	64	Cyperus esculentus Yellow Nut Sedge	plug	2' oc
EE	37	Eleocharis equisetoides Knotted Spike Rush	rhizome	2' oc

ADD THREE INCHES OF TOPSOIL TO PLANTING AREA. STABILIZE WITH 40 POUNDS PER ACRE OF A HYDROSEED MIX (WET MIX AND MEADOW MIX) FROM SYLVA NATIVE NURSERY OR EQUAL. ALL PLANT MATERIALS TO CONFORM TO THE MOST CURRENT AAN SPECIFICATIONS AND BE INSTALLED IN ACCORDANCE WITH LCAMW SPECIFICATIONS.

1' POND #2 LANDSCAPE SCHEDULE				
KEY	QUAN.	BOTANICAL NAME	SIZE	REMARKS
IP	19	Iris pseudacoris Yellow Water Iris	plug	1.5' oc
IV	26	Iris versicolor Blue Flag (wear gloves)	plug	1.5' oc
AP	97	Alisma plantago-aquatica Water Plantain	plug	2' oc
CE	73	Cyperus esculentus Yellow Nut Sedge	plug	2' oc
EE	69	Eleocharis equisetoides Knotted Spike Rush	rhizome	2' oc

ADD THREE INCHES OF TOPSOIL TO PLANTING AREA. STABILIZE WITH 40 POUNDS PER ACRE OF A HYDROSEED MIX (WET MIX AND MEADOW MIX) FROM SYLVA NATIVE NURSERY OR EQUAL. ALL PLANT MATERIALS TO CONFORM TO THE MOST CURRENT AAN SPECIFICATIONS AND BE INSTALLED IN ACCORDANCE WITH LCAMW SPECIFICATIONS.

APPROVED: DEPARTMENT OF PLANNING AND ZONING

Chief, Division of Land Development — Date 10/27/04

Chief, Development Engineering Division — Date 10/25/04

APPROVED: DEPARTMENT OF PUBLIC WORKS

Chief, Bureau of Highways — Date 10-19-04

NO.	REVISION	DATE

STORM DRAIN PROFILES

DENNIS PRESERVE
LOTS 1-58

TAX MAP 31 BLOCK 21 PARCEL '226'
1ST ELECTION DISTRICT HOWARD COUNTY, MARYLAND
REF.: S-01-06, P-02-27, WP-03-07 (APP. 11/05/02)

ROBERT H. VOGEL ENGINEERING, INC.
ENGINEERS • SURVEYORS • PLANNERS
8407 MAIN STREET ELLICOTT CITY, MD 21043
TEL: 410.461.7666 FAX: 410.461.8961

DEVELOPER
ELLICOTT CITY LAND HOLDINGS,LLC
8000 MAIN STREET
ELLICOTT CITY, MARYLAND 21043
ATTN: MR. DONALD R. REUWER
(410) 480-9105

OWNER
DENNIS PRESERVE, LLC.
ELLICOTT CITY LAND HOLDINGS, LLC
SOLE MEMBER
8000 MAIN STREET
ELLICOTT CITY, MD 21043
410-480-9105

STATE OF MARYLAND — ROBERT HARRIS VOGEL — No. 16193 — PROFESSIONAL ENGINEER

ROBERT H. VOGEL, PE No.16193

DESIGN BY:	RHV
DRAWN BY:	CMH
CHECKED BY:	RHV
DATE:	SEPTEMBER 2003
SCALE:	AS SHOWN
W.O. NO.:	2017019.0

SHEET 11 OF 17

F-04-74

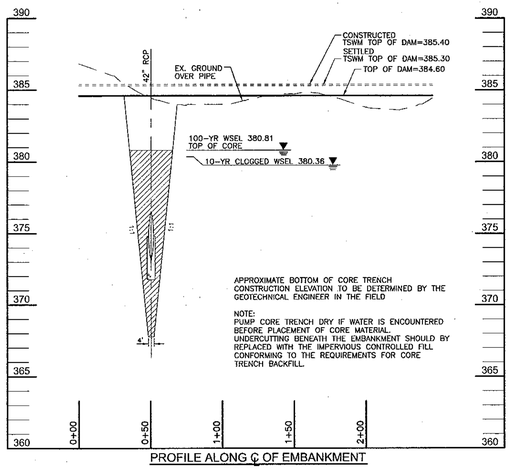

PROFILE ALONG ℄ OF EMBANKMENT

POND #1

SCALE: 1"=5' VERT.
1"=50' HORIZ.

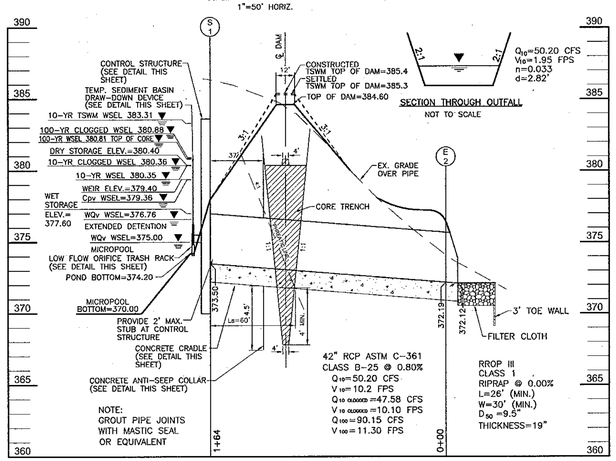

PRINCIPLE SPILLWAY PROFILE

POND #1

SCALE: 1"=5' VERT.
1"=50' HORIZ.

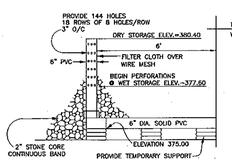

SEDIMENT BASIN DEWATERING DEVICE I
WITH 6" PERFORATED RISER

NOT TO SCALE
REF.: 1994 MARYLAND STANDARDS AND SPECIFICATIONS FOR SOIL EROSION AND SEDIMENT CONTROL PAGE C-10-30

CONSTRUCTION SPECIFICATIONS

1. PERFORATIONS IN THE DRAW-DOWN DEVICE MAY NOT EXTEND INTO WET STORAGE.
2. THE TOTAL AREA OF THE PERFORATIONS MUST BE GREATER THAN 2 TIMES THE AREA OF THE INTERNAL ORIFICE.
3. THE PERFORATED PORTIONS OF THE DRAW-DOWN DEVICE SHALL BE WRAPPED WITH 1/2" HARDWARE CLOTH AND GEOTEXTILE FABRIC. THE GEOTEXTILE FABRIC SHALL MEET THE SPECIFICATIONS FOR GEOTEXTILE CLASS E.
4. PROVIDE SUPPORT OF DRAW-DOWN DEVICE TO PREVENT SAGGING AND FLOTATION. AN ACCEPTABLE PREVENTATIVE MEASURE IS TO STAKE BOTH SIDES OF DRAW-DOWN DEVICE WITH 1" STEEL ANGLE OR 1" x 4" SQUARE OR 2" ROUND WOODEN POSTS SET 3' MINIMUM INTO THE GROUND THEN JOINING THEM TO THE DEVICE BY WRAPPING WITH 12 GAUGE MINIMUM WIRE.

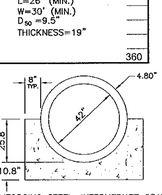

REINFORCING STEEL: INTERMEDIATE GRADE
CONCRETE: CLASS B
fc'=4,000 P.S.I.
fc=1,600 P.S.I.

(REF. TR-46)

A2 PIPE CRADLE DETAIL

NOT TO SCALE

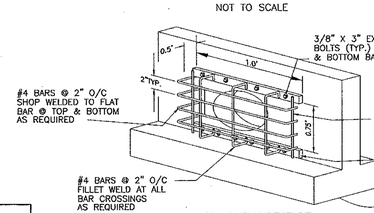

LOW FLOW ORIFICE TRASH RACK DETAIL

NOT TO SCALE

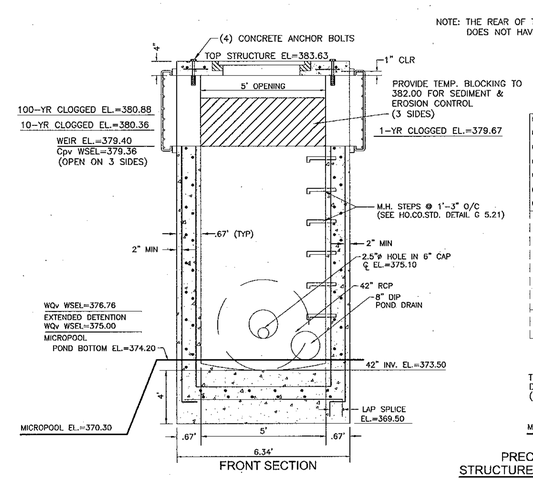

FRONT SECTION

NOTE: THE REAR OF THE STRUCTURE DOES NOT HAVE ANY OPENINGS.

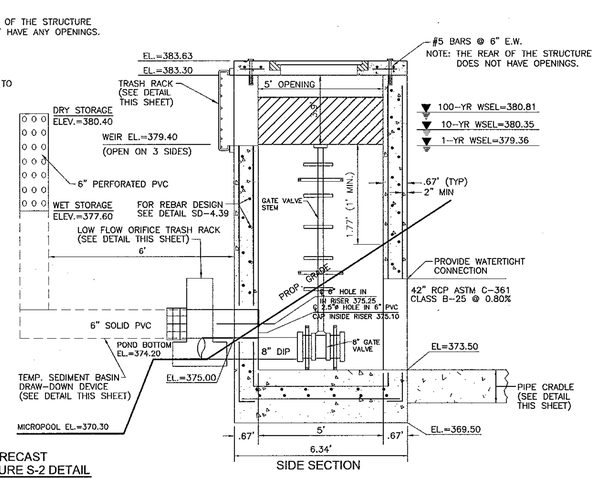

SIDE SECTION

PRECAST
STRUCTURE S-2 DETAIL

NOT TO SCALE

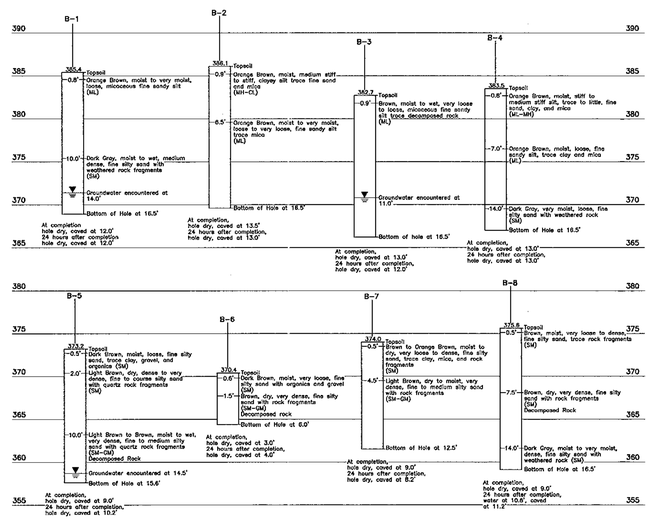

STORMWATER MANAGEMENT BORING PROFILES

NOT TO SCALE

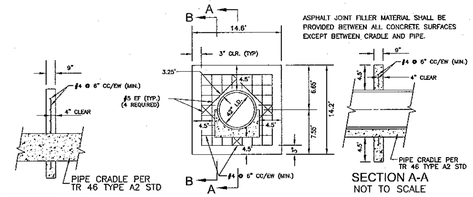

NOT TO SCALE

1. ANTI-SEEP COLLARS SHOULD BE PLACED WITHIN THE SATURATION ZONE.
2. ALL ANTI-SEEP COLLARS AND THEIR CONNECTIONS TO THE CONDUIT SHALL BE WATERTIGHT AND MADE OF COMPATIBLE WITH THE CONDUIT.
3. COLLARS DIMENSIONS SHALL EXTEND A MIN. OF 2' IN ALL DIRECTIONS
4. ANTI-SEEP COLLARD SHALL BE PLACED A MIN. OF 2' FROM PIPE JOINTS EXCEPT WHERE FLANGED JOINTS ARE USED.

CONCRETE ANTI-SEEP COLLAR DETAIL

NOT TO SCALE

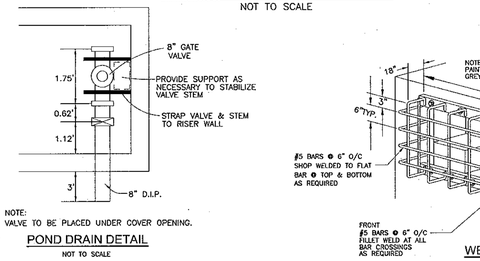

POND DRAIN DETAIL

NOT TO SCALE

WEIR TRASH RACK DETAIL

NOT TO SCALE

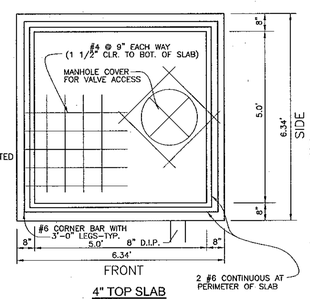

4" TOP SLAB

NOT TO SCALE

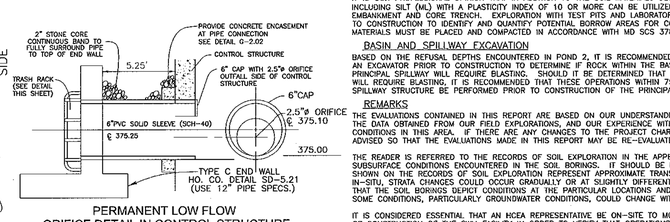

PERMANENT LOW FLOW ORIFICE DETAIL IN CONTROL STRUCTURE

NOT TO SCALE

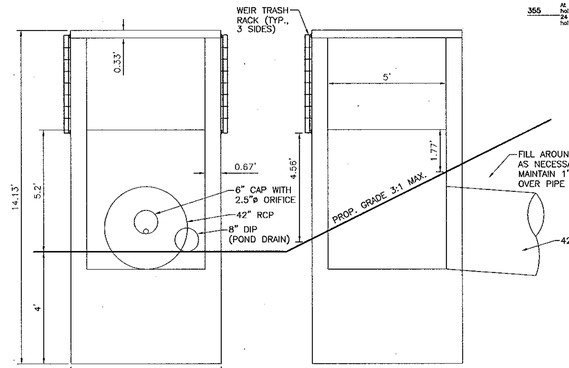

FRONT SECTION

SIDE SECTION

PRECAST
STRUCTURE S-1 DETAIL

SCALE: 1"=3'

POND SUMMARY

	1 YEAR	10 YEAR	100 YEAR
FLOW INTO POND	11.12 CFS	50.67 CFS	90.15 CFS
FLOW OUT OF POND	0.33 CFS	50.20 CFS	86.29 CFS
W.S. ELEVATION	379.36	380.35	380.81
STORAGE VOLUME	0.75 AC-FT	0.99 AC-FT	1.12 AC-FT

OPERATION, MAINTENANCE AND INSPECTION

INSPECTION OF THE POND(S) SHOWN HEREON SHALL BE PERFORMED AT LEAST ANNUALLY, IN ACCORDANCE WITH THE CHECKLIST AND REQUIREMENTS CONTAINED WITHIN USDA, SCS "STANDARDS AND SPECIFICATIONS FOR PONDS" (MD-378). THE POND OWNER(S) AND ANY HEIRS, SUCCESSORS, OR ASSIGNS SHALL BE RESPONSIBLE FOR THE SAFETY OF THE POND AND THE CONTINUED OPERATION, SURVEILLANCE, INSPECTION, AND MAINTENANCE THEREOF. THE POND OWNER(S) SHALL PROMPTLY NOTIFY THE SOIL CONSERVATION DISTRICT OF ANY UNUSUAL OBSERVATIONS THAT MAY BE INDICATIONS OF DISTRESS SUCH AS EXCESSIVE SEEPAGE, TURBID SEEPAGE, SLIDING OR SLUMPING.

OPERATION AND MAINTENANCE SCHEDULE FOR STORMWATER MANAGEMENT DETENTION FACILITY

STORMWATER MANAGEMENT FACILITY
ROUTINE MAINTENANCE BY HOA

1. FACILITY WILL BE INSPECTED ANNUALLY AND AFTER MAJOR STORMS. INSPECTIONS SHOULD BE PERFORMED DURING WET WEATHER TO DETERMINE IS FUNCTIONING PROPERLY.
2. TOP AND SIDE SLOPES OF THE EMBANKMENT SHALL BE MOWED A MINIMUM OF TWO (2) TIMES A YEAR, ONCE IN JUNE AND ONCE IN SEPTEMBER. OTHER SIDE SLOPES AND MAINTENANCE ACCESS SHOULD BE MOWED AS NEEDED.
3. DEBRIS AND LITTER NEXT TO THE OUTLET STRUCTURE SHALL BE REMOVED DURING REGULAR MOWING OPERATIONS AND AS NEEDED.
4. VISIBLE SIGNS OF EROSION IN THE POND AS WELL AS RIPRAP OUTLET AREAS SHALL BE REPAIRED AS SOON AS IT IS NOTICED.

NON-ROUTINE MAINTENANCE BY **HOA**

1. STRUCTURAL COMPONENTS OF THE POND SUCH AS THE DAM, THE RISER, AND THE PIPES SHALL BE REPAIRED UPON DETECTION OF ANY DAMAGE. THE COMPONENTS SHOULD BE INSPECTED DURING ROUTINE MAINTENANCE OPERATIONS.
2. SEDIMENT SHOULD BE REMOVED WHEN ITS ACCUMULATION SIGNIFICANTLY REDUCES THE DESIGN STORAGE, INTERFERE WITH THE FUNCTION OF THE RISER, WHEN DEEMED NECESSARY FOR AESTHETIC REASONS, OR WHEN DEEMED NECESSARY BY THE HOWARD COUNTY DEPARTMENT OF PUBLIC WORKS.

EVALUATIONS

BASED ON THE STATE OF MARYLAND'S "2000 MARYLAND STORMWATER DESIGN MANUAL, VOLUMES I & II, INFILTRATION BASINS AND TRENCHES ARE NOT ACCEPTABLE PRACTICES WHEN INFILTRATION RATES OF LESS THAN 0.52 INCHES PER HOUR ARE OBTAINED. ALSO, THE BOTTOMS OF THE FACILITIES SHOULD BE LOCATED A MINIMUM OF 4 FT. ABOVE THE SEASONALLY HIGH WATER TABLE AND/OR BEDROCK.

BASED ON THE GROUNDWATER CONDITIONS ENCOUNTERED, THE PRESENCE OF DENSE AND DECOMPOSED ROCK MATERIALS, THE ABOVE-OUTLINED CRITERIA, AND EXPERIENCE WITH INFILTRATION STRUCTURES IN THE PROJECT AREA, IT IS OUT OPINION THAT INFILTRATION METHODS OF STORMWATER MANAGEMENT WILL NOT BE FEASIBLE AT THE PROPOSED SWM POND LOCATIONS.

EMBANKMENT AND CUT-OFF CONSTRUCTION

THE AREAS OF THE PROPOSED SWM PONDS SHOULD BE STRIPPED OF TOPSOIL AND ANY OTHER UNSUITABLE MATERIALS FROM THE EMBANKMENT OR STRUCTURE AREA IN ACCORDANCE WITH SOIL CONSERVATION GUIDELINES. AFTER STRIPPING OPERATIONS HAVE BEEN COMPLETED, THE EXPOSED SUBGRADE MATERIALS SHOULD BE PROOFROLLED WITH A LOADED DUMP TRUCK OR SIMILAR EQUIPMENT IN THE PRESENCE OF A GEOTECHNICAL ENGINEER OR HIS REPRESENTATIVE. FOR AREAS THAT ARE NOT ACCESSIBLE TO A DUMP TRUCK, THE EXPOSED MATERIALS SHOULD BE OBSERVED AND TESTED BY A GEOTECHNICAL ENGINEER OF HIS REPRESENTATIVE UTILIZING A DYNAMIC CONE PENETROMETER. ANY EXCESSIVELY SOFT OR LOOSE MATERIALS IDENTIFIED BY PROOFROLLING OR PENETROMETER TESTING SHOULD BE EXCAVATED TO SUITABLE FIRM SOIL, AND THEN GRADES RE-ESTABLISHED BY BACK FILLING WITH SUITABLE SOIL.

A REPRESENTATIVE OF THE GEOTECHNICAL ENGINEER SHOULD BE PRESENT TO MONITOR PLACEMENT AND COMPACTION OF FILL FOR THE EMBANKMENT AND CUT-OFF TRENCH. IN ACCORDANCE WITH THE MARYLAND SOIL CONSERVATION SPECIFICATIONS 378 SOILS CONSIDERED SUITABLE FOR THE CENTER OF EMBANKMENT AND CUT-OFF TRENCH SHALL CONFORM TO UNIFIED SOIL CLASSIFICATION GC, SC, CH, OR CL.

IT IS OUR PROFESSIONAL OPINION THAT IN ADDITION TO THE SOIL MATERIALS DESCRIBED ABOVE A FINE-GRAINED SOIL, INCLUDING SILT (ML) WITH A PLASTICITY INDEX OF 10 OR MORE CAN BE UTILIZED FOR THE CENTER OF THE EMBANKMENT AND CORE TRENCH. EXPLORATION WITH TEST PITS AND LABORATORY TESTING CAN BE CONDUCTED PRIOR TO CONSTRUCTION TO IDENTIFY AND QUANTIFY POTENTIAL BORROW AREAS FOR CORE TRENCH MATERIAL. ALL FILL MATERIALS MUST BE PLACED AND COMPACTED IN ACCORDANCE WITH MD SCS 378 SPECIFICATIONS.

BASIN AND SPILLWAY EXCAVATION

BASED ON THE REFUSAL DEPTHS ENCOUNTERED IN POND 2, IT IS RECOMMENDED THAT TEST PITS BE PERFORMED WITH AN EXCAVATOR PRIOR TO CONSTRUCTION TO DETERMINE IF ROCK WITHIN THE BASIN AREA AS WELL AS ALONG THE PRINCIPAL SPILLWAY WILL REQUIRE BLASTING. SHOULD IT BE DETERMINED THAT THE ROCK WITHIN THE BASIN AREAS WILL REQUIRE BLASTING, IT IS RECOMMENDED THAT THESE OPERATIONS WITHIN 75 FT. OF THE RISER AND PRINCIPAL SPILLWAY STRUCTURE BE PERFORMED PRIOR TO CONSTRUCTION OF THE PRINCIPAL SPILLWAY AND RISER STRUCTURE.

REMARKS

THE EVALUATIONS CONTAINED IN THIS REPORT ARE BASED ON OUR UNDERSTANDING OF THE PROPOSED CONSTRUCTION, THE DATA OBTAINED FROM OUR FIELD EXPLORATIONS, AND OUR EXPERIENCE WITH THE SOILS AND SUBSURFACE CONDITIONS IN THIS AREA. IF THERE ARE ANY CHANGES TO THE PROJECT CHARACTERISTICS, THIS OFFICE SHOULD BE ADVISED SO THAT THE EVALUATIONS MADE IN THIS REPORT MAY BE RE-EVALUATED.

THE READER IS REFERRED TO THE RECORDS OF SOIL EXPLORATION IN THE APPENDIX FOR DETAILS RELATED TO THE SUBSURFACE CONDITIONS ENCOUNTERED IN THE SOIL BORINGS. IT SHOULD BE NOTED THAT STRATIFICATION LINES SHOWN ON THE RECORDS OF SOIL EXPLORATION REPRESENT APPROXIMATE TRANSITIONS BETWEEN MATERIAL TYPES. IN-SITU, STRATA CHANGES COULD OCCUR GRADUALLY OR AT SLIGHTLY DIFFERENT LEVELS. ALSO, IT SHOULD BE NOTED THAT THE SOIL BORINGS DEPICT CONDITIONS AT THE PARTICULAR LOCATIONS AND AT THE PARTICULAR TIMES INDICATED. SOME CONDITIONS, PARTICULARLY GROUNDWATER CONDITIONS, COULD CHANGE WITH TIME.

IT IS CONSIDERED ESSENTIAL THAT AN HCEA REPRESENTATIVE BE ON-SITE TO MONITOR, INSPECT, AND TEST ALL FACETS OF CONSTRUCTION OF THE SWM FACILITY IN ORDER TO VERIFY THAT OPERATIONS ARE PERFORMED CONSISTENT TO THE PROPOSED PLANS PROVIDED BY THE CIVIL ENGINEER AND RECOMMENDATIONS MADE BY HCEA.

NO.	REVISION	DATE

STORMWATER MANAGEMENT DETAILS
POND #1
DENNIS PRESERVE
LOTS 1-58

TAX MAP 31 BLOCK 21 PARCEL '226'
1ST ELECTION DISTRICT HOWARD COUNTY, MARYLAND
REF.: S-01-06, P-02-27, WP-03-07 (APP. 11/05/02)

ROBERT H. VOGEL ENGINEERING, INC.
ENGINEERS • SURVEYORS • PLANNERS
8407 MAIN STREET TEL: 410.461.7666
ELLICOTT CITY, MD 21043 FAX: 410.461.8961

APPROVED: DEPARTMENT OF PUBLIC WORKS

Chief, Bureau of Highways — Date 10-19-04

APPROVED: DEPARTMENT OF PLANNING AND ZONING

Chief, Division of Land Development — Date 10/7/04

Chief, Development Engineering Division — Date 10/5/04

These plans have been reviewed for HOWARD SOIL CONSERVATION DISTRICT and meet technical requirements for small pond construction and soil erosion and sediment control

USDA—Natural Resources Conservation Service — Date 9/27/04

These plans for small pond construction and soil erosion and sediment control meet the requirements of the HOWARD SOIL CONSERVATION DISTRICT.

Howard Soil Conservation District — Date 9/27/04

DEVELOPER'S CERTIFICATE

"I/We certify that all development and construction will be done according to this plan of development for sediment and erosion control, and that all responsible personnel involved in the construction project will have a Certificate of Attendance at a Department of Environment Approved Training Program for the Control of Sediment and Erosion before beginning the project. I also authorize periodic on-site inspections by the Howard Soil Conservation District. I shall engage a registered professional engineer to supervise pond construction and provide the Howard Soil Conservation District with and "As-Built" plan of the pond within 30 days of completion.

Signature of Developer — Date 9/14/04

ENGINEER'S CERTIFICATE

"I hereby certify that this plan for pond construction and sediment and erosion control represents a practical and workable plan based on my personal knowledge of the site conditions and that it was prepared in accordance with the requirements of the Howard Soil Conservation District. I have notified the developer that he/she must engage a Registered Professional Engineer to supervise pond construction and provide the Howard Soil Conservation District with an "As-Built" plan of the pond within 30 days of completion."

Signature of Engineer Robert H. Vogel — Date 9/15/04

DEVELOPER
ELLICOTT CITY LAND HOLDINGS, LLC
8000 MAIN STREET
ELLICOTT CITY, MARYLAND 21043
ATTN: MR. DONALD R. REUWER
(410) 480-9105

OWNER
DENNIS PRESERVE, LLC
ELLICOTT CITY LAND HOLDINGS, LLC
SOLE MEMBER
8000 MAIN STREET
ELLICOTT CITY, MD 21043
410-480-9105

ROBERT H. VOGEL, PE No.16183

DESIGN BY:	RHV
DRAWN BY:	CMH
CHECKED BY:	RHV
DATE:	SEPTEMBER 2004
SCALE:	AS SHOWN
W.O. NO.:	2017019.0

SHEET 12 OF 17

F-04-74

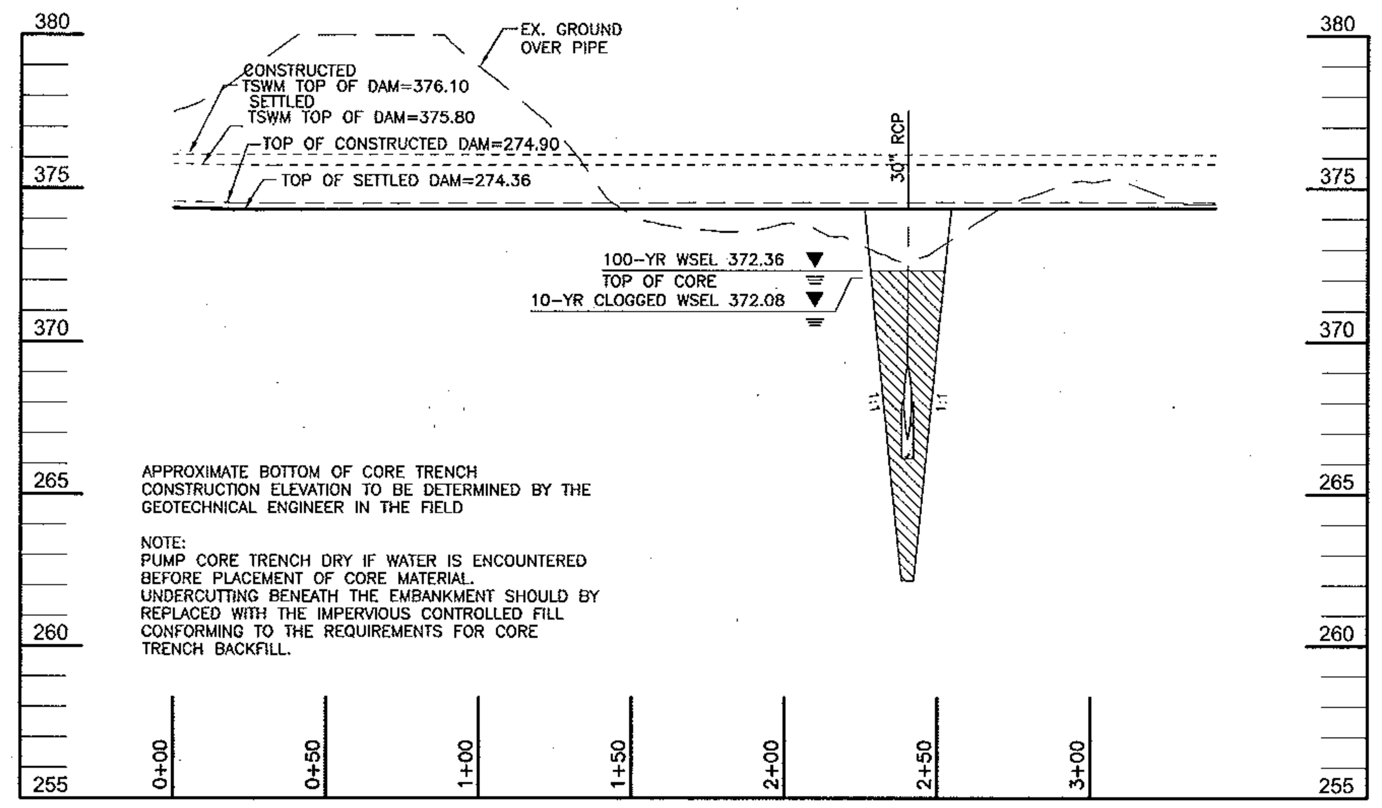

PROFILE ALONG ℄ OF EMBANKMENT
POND #2
SCALE: 1"=5' VERT.
1"=50' HORIZ.

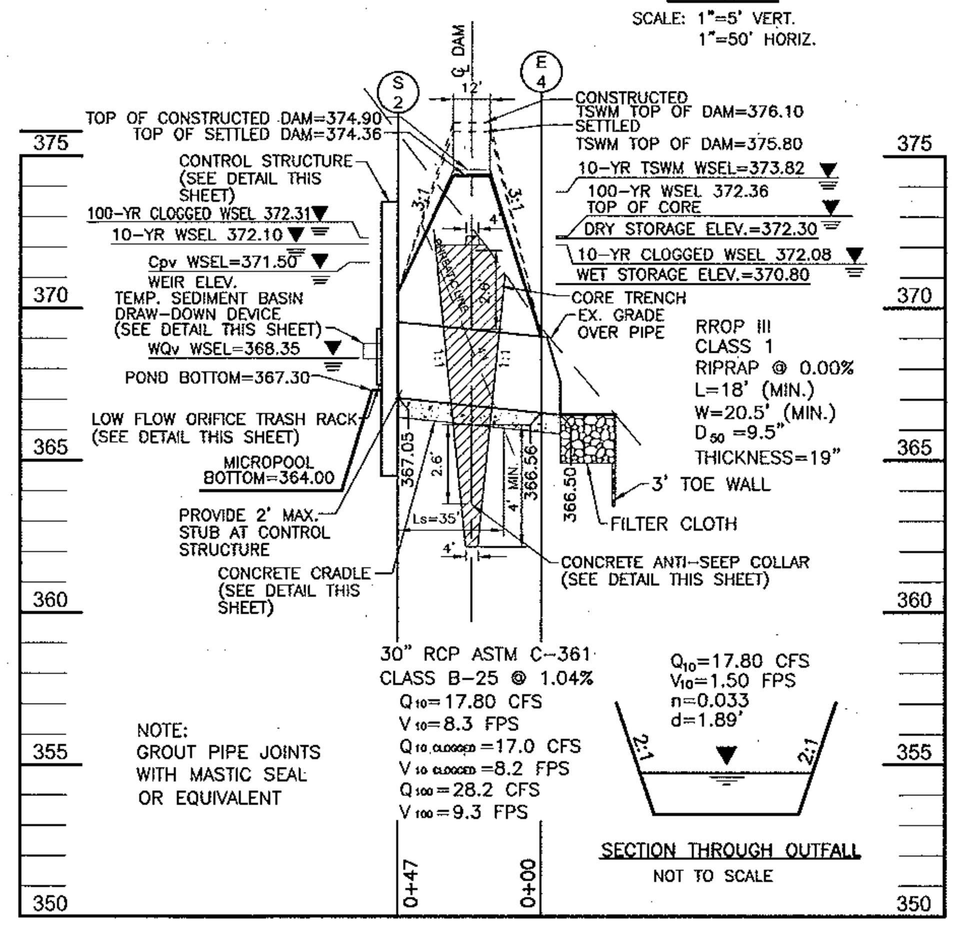

PRINCIPLE SPILLWAY PROFILE
POND #2
SCALE: 1"=5' VERT.
1"=50' HORIZ.

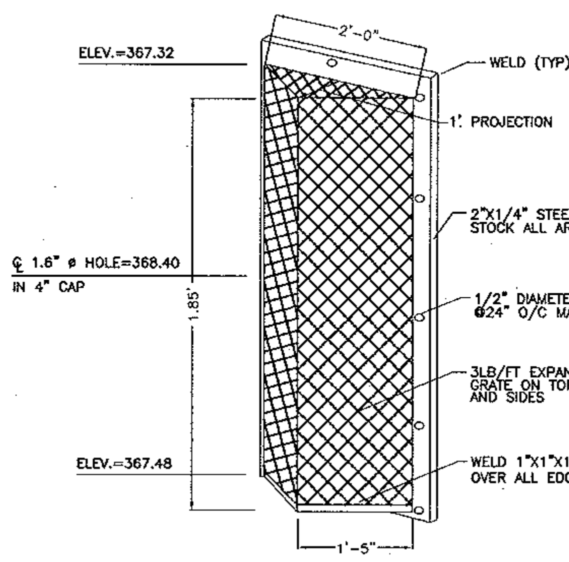

NOTES FOR TRASH RACK

1. TRASH RACK TO BE CENTERED OVER OPENING.
2. STEEL TO CONFORM TO ASTM A-36.
3. ALL SURFACES TO BE COATED WITH ZRC COLD GALVANIZING COMPOUND AFTER WELDING.
4. TRASH RACK TO BE FASTENED TO THE WALL WITH 1/2" MASONARY ANCHORS. TRASH RACK TO BE REMOVABLE.

LOW FLOW ORIFICE
TRASH RACK DETAIL (NTS)

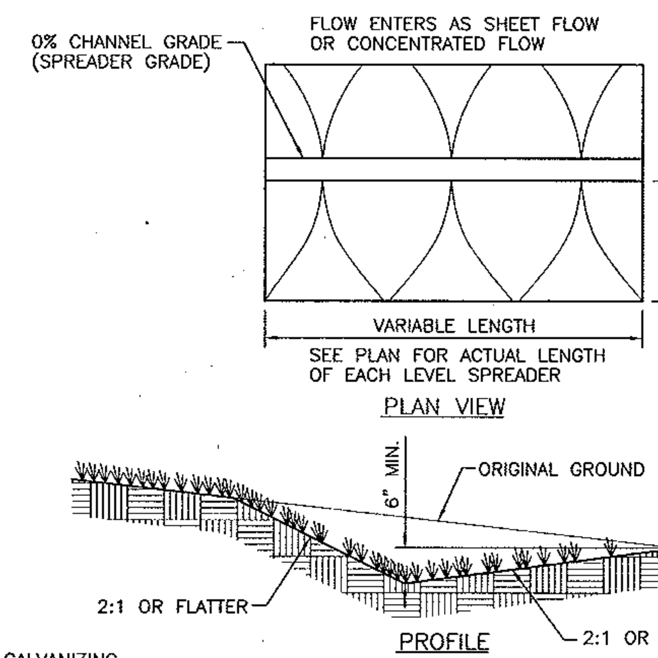

LEVEL SPREADER
NOT TO SCALE

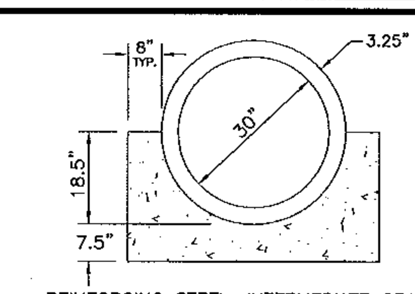

REINFORCING STEEL: INTERMEDIATE GRADE
CONCRETE: CLASS B
fc'=4,000 P.S.I.
fc=1,600 P.S.I.
(REF. TR-46)

A2 PIPE CRADLE DETAIL
NOT TO SCALE

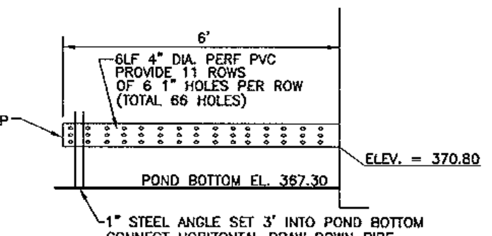

TEMP. SEDIMENT BASIN HORIZONTAL DRAW-DOWN DEVICE
NOT TO SCALE
REF.: 1994 MARYLAND STANDARDS AND SPECIFICATIONS FOR SOIL EROSION AND SEDIMENT CONTROL PAGE C-10-29

CONSTRUCTION SPECIFICATIONS

1. THE TOTAL AREA OF THE PERFORATIONS MUST BE GREATER THEN 2 TIMES THE AREA OF THE INTERNAL ORIFICE.
2. THE PERFORATED PORTION OF THE DRAW-DOWN DEVICE SHALL BE WRAPPED WITH 1/2" HARDWARE CLOTH AND GEOTEXTILE FABRIC. THE GEOTEXTILE FABRIC SHALL MEET THE SPECIFICATIONS FOR GEOTEXTILE CLASS E.
3. PROVIDE SUPPORT OF DRAW-DOWN DEVICE TO PREVENT SAGGING AND FLOATATION. AN ACCEPTABLE PREVENTATIVE MEASURE IS TO STAKE BOTH SIDES OF DRAW-DOWN DEVICE WITH 1" STEEL ANGLE, OR 1' x4" SQUARE OR 2" ROUND WOODEN POSTS SET 3' MINIMUM INTO THE GROUND THEN JOINING THEM TO THE DEVICE BY WRAPPING WITH 12 GAUGE MINIMUM WIRE.

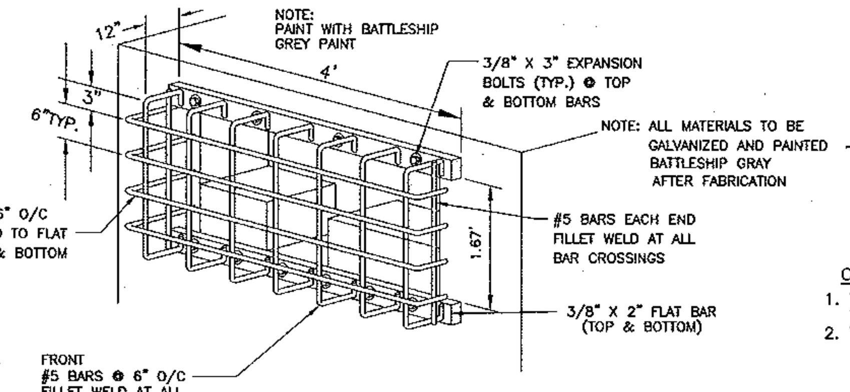

WEIR TRASH RACK DETAIL
NOT TO SCALE

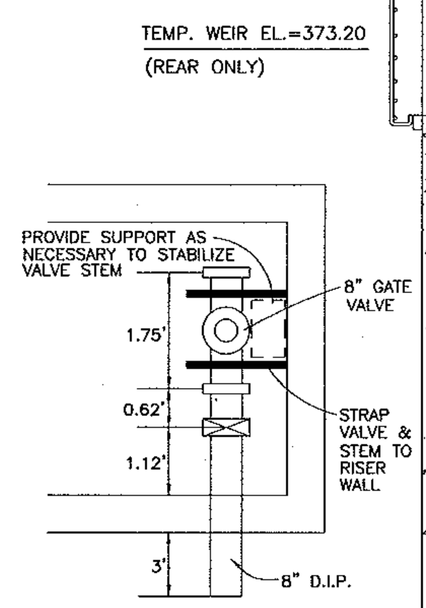

NOTE:
VALVE TO BE PLACED UNDER COVER OPENING.

POND DRAIN DETAIL
NOT TO SCALE

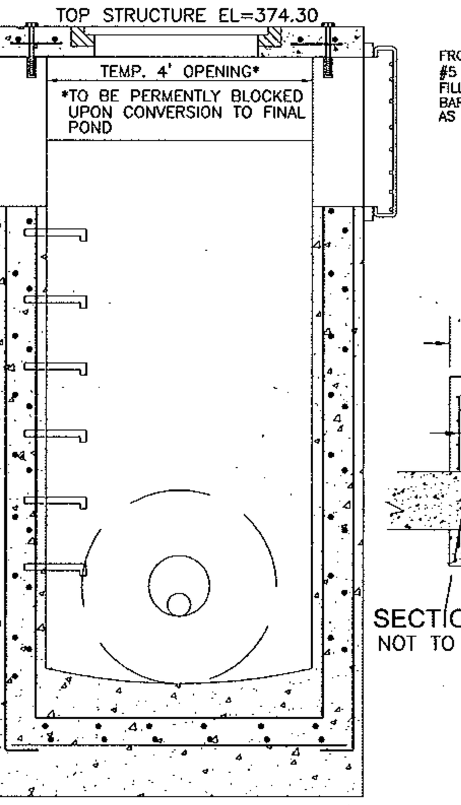

REAR SECTION

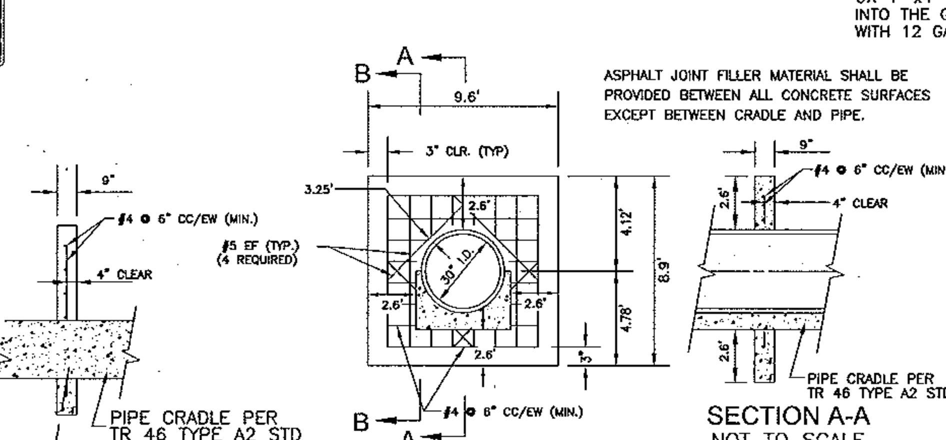

1. ANTI-SEEP COLLARS SHOULD BE PLACED WITHIN THE SATURATION ZONE.
2. ALL ANTI-SEEP COLLARS AND THEIR CONNECTIONS TO THE CONDUIT SHALL BE WATERTIGHT AND MADE OF COMPATIBLE WITH THE CONDUIT.
3. COLLARS DIMENSIONS SHALL EXTEND A MIN. OF 2' IN ALL DIRECTIONS
4. ANTI-SEEP COLLARD SHALL BE PLACED A MIN. OF 2' FROM PIPE JOINTS EXCEPT WHERE FLANGED JOINTS ARE USED.

CONCRETE ANTI-SEEP COLLAR DETAIL
NOT TO SCALE

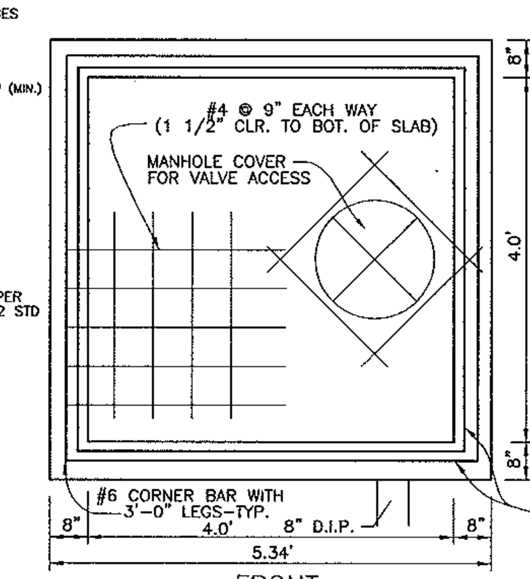

4" TOP SLAB
NOT TO SCALE

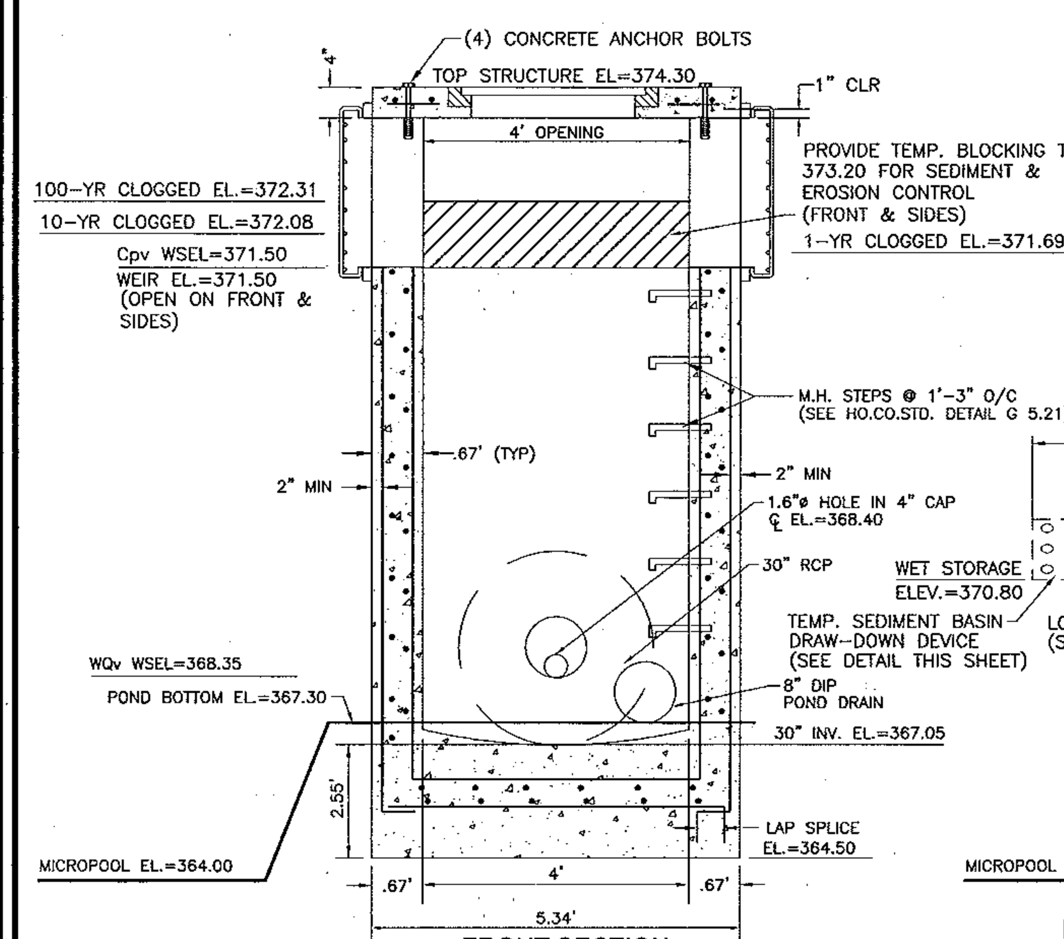

FRONT SECTION

PRECAST
STRUCTURE S-2 DETAIL
NOT TO SCALE

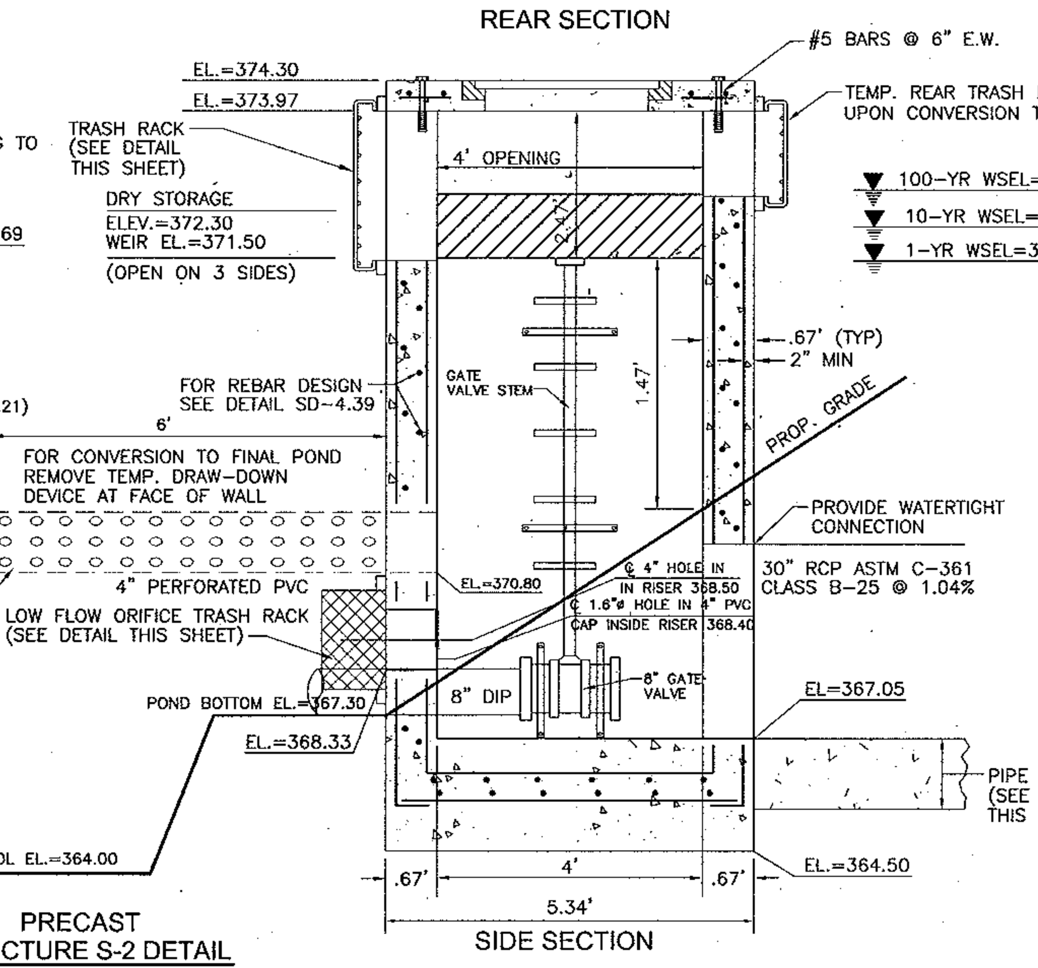

SIDE SECTION

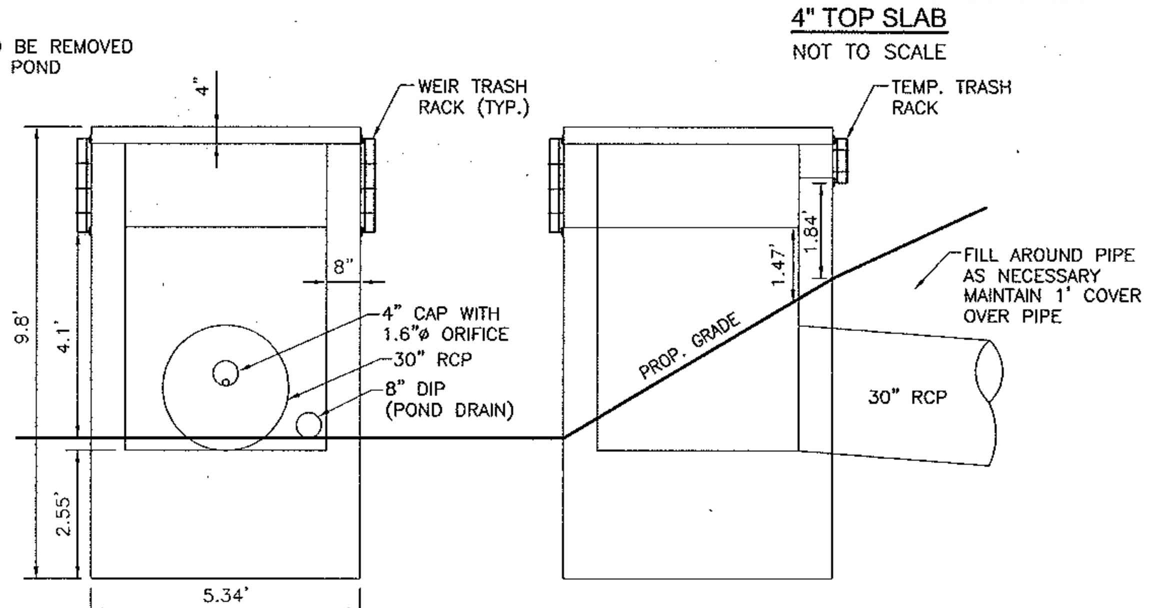

PRECAST
STRUCTURE S-2
SCALE: 1"=3'

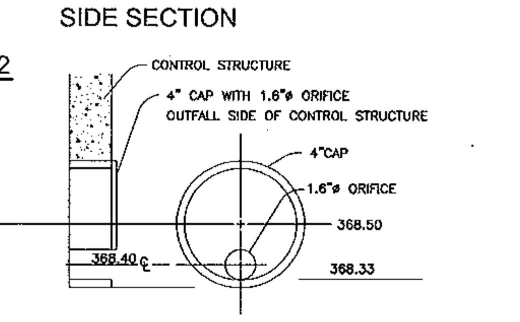

PERMANENT
ORIFICE DETAIL IN CONTROL STRUCTURE
NOT TO SCALE

MARYLAND 378
STORMWATER MANAGEMENT POND CONSTRUCTION SPECIFICATIONS

CONSTRUCTION SPECIFICATIONS

These specifications are appropriate to all ponds within the scope of the Standard for practice MD-378. All references to ASTM and AASHTO specifications apply to the most recent version.

Site Preparation

Areas designated for borrow areas, embankment, and structural works shall be cleared, grubbed and stripped of topsoil. All trees, vegetation, roots and other objectionable material shall be removed. Channel banks and sharp breaks shall be sloped to no steeper thon 1:1. All trees shall be cleared and grubbed within 15 feet of the tow of the embankment.

Areas to be covered by the reservoir will be cleared of all trees, brush, logs, fences, rubbish and other objectionable material unless otherwise designated on the plans. Trees, brush, and stumps shall be cut approximately level with the ground surface. For dry stormwater management ponds, a minimum of a 25-foot radius around the inlet structure shall be cleared.

All cleared and grubbed material shall be disposed of outside and below the limits of the dam and reservoir as directed by the owner or his representative. When specified, a sufficient quantity of topsoil will be stockpiled in a suitable location for use on the embankment and other designated areas.

Earth Fill

Material - The fill material shall be taken from approved designated borrow areas. It shall be free of roots, stumps, wood, rubbish, stones greater than 6", frozen or other objectionable materials. Fill material for the center of the embankment, and cut off trench shall conform to Unified Soil Classification GC, SC, CH, or CL and must have at least 30% passing the #200 sieve. Consideration may be given to the use of other materials in the embankment if designed by a geotechnical engineer. Such special designs must have construction supervised by a geotechnical engineer. Materials used in the outer shell of the embankment must have the capability to support vegetation of the quality required to prevent erosion of the embankment.

Placement - Areas on which fill is to be placed shall be scarified prior to placement of fill. Fill materials shall be placed in maximum 8 inch thick (before compaction) layers which are to be continuous over the entire length of the fill. The most permeable borrow material shall be placed in the downstream portions of the embankment. The principal spillway must be installed concurrently with fill placement and not excavated into the embankment.

Compaction - The movement of the hauling and spreading equipment over the fill shall be controlled so that the entire surface of each lift shall be traversed by not less than one tread track of heavy equipment or compaction shall be achieved by a minimum of four complete passes of a sheepsfoot, rubber tired or vibratory roller. Fill material shall contain sufficient moisture such that the required degree of compaction will be obtained with the equipment used. The fill material shall contain sufficient moisture so that if formed into a ball it will not crumble, yet not be so wet that water can be squeezed out.

When required by the reviewing agency the minimum required density shall not be less than 95% of maximum dry density with a moisture content within +\-2% of the optimum. Each layer of fill shall be compacted as necessary to obtain that density, and is to be certified by the Engineer at the time of construction. All compaction is to be determined by AASHTO Method T-99 (Standard Proctor).

Cut Off Trench - The cutoff trench shall be excavated into impervious material along or parallel to the centerline of the embankment as shown on the plans. The bottom width of the trench shall be governed by the equipment used for excavation, with the minimum width being four feet. The depth shall be at least four feet below existing grade or as shown on the plans. The side slopes of the trench shall be 1 to 1 or flatter. The backfill shall be compacted with construction equipment, rollers, or hand tampers to assure maximum density and minimum permeability.

Embankment Core - The core shall be parallel to the centerline of the embankment as shown on the plans. The top width of the core shall be a minimum of four feet. The height shall extend up to at least the 10 year water elevation or as shown on the plans. The side slopes shall be 1 to 1 or flatter. The core shall be compacted with construction equipment, rollers, or hand tampers to assure maximum density and minimum permeability. In addition, the core shall be placed currently with the outer shell of the outer shell of the embankment.

Structure Backfill

Backfill adjacent to pipes or structures shall be of the type and quality conforming to that specified for the adjoining fill material. The fill shall be placed in horizontal layers not to exceed four inches in thickness and compacted by hand tampers or other manually directed compaction equipment. The material needs to fill completely all spaces under and adjacent to the pipe. At no time during the backfilling operation shall driven equipment be allowed to operated closer than four feet, measured horizontally, to any part of a structure. Under no circumstances shall equipment be driven over any part of a concrete structure or pipe, unless there is a compacted fill of 24" or greater over the structure or pipe.

Structure backfill may be flowable fill meeting the requirements of Maryland Department of Transportation, State Highway Administration Standard Specifications for Construction and Materials, Section 313 as modified. The mixture shall have a 100-200 psi; 28 day unconfined compressive strength. The flowable fill shall have a minimum pH of 4.0 and a minimum resistivity of 2,000 ohm-cm. Material shall be placed such that minimum of 6" (measured perpendicular to the outside of the pipe) of flowable fill shall be under (bedding), over and, on the sides of the pipe. It only needs to extend up to the spring line for rigid conduits. Average slump of the fill shall be 7" to assure flowability of the material. Adequate measures shall be taken (sand bags, etc.) to prevent floating the pipe. When using flowable fill, all metal pipe shall be bituminous coated. Any adjoining soil fill shall be placed in horizontal layers not to exceed four inches in thickness and compacted by hand tampers or other manually directed compaction equipment. The material shall completely fill all voids adjacent to the flowable fill zone. At no time during the backfilling operation shall driven equipment be allowed to operate closer than four feet, measured horizontally, to any part of the structure. Under no circumstances shall equipment be driven over any part of a structure or pipe unless there is a compacted fill of 24" or greater over the structure or pipe. Backfill (flowable fill)zone shall be of the type and quality conforming to that specified for the core of the embankment or other embankment materials.

Pipe Conduits

All pipes shall be circular in cross section.

Corrugated Metal Pipe - All of the following criteria shall apply for corrugated metal pipe:

1. Materials - (Polymer Coated steel pipe)- Steel pipes with polymeric coating shall have a minimum coating thickness of 0.01 inch (10 mil) on both sides of the pipe. This pipe and its appurtenances shall conform to the requirements of AASHTO Specifications M-245 & M-246 with watertight coupling bands or flanges.

Materials - (Aluminum Coated Steel Pipe) - This pipe and its appurtenances shall conform to the requirements of AASHTO Specification M-274 with watertight coupling bands or flanges. Aluminum Coated Steel Pipe, when used with flowable fill or when soil and/or water conditions warrant the need for increased durability, shall be fully bituminous coated per requirements of AASHTO Specification M-190 Type A. Any aluminum coating damaged or otherwise removed shall be replaced with cold applied bituminous coating compound. Aluminum surfaces that are to be in contact with concrete shall be painted with one coat of zinc chromate primer or two coats of asphalt.

Materials - (Aluminum Pipe) - This pipe and its appurtenances shall conform to the requirements of AASHTO Specification M-196 or M-211 with watertight coupling bands or flanges. Aluminum Pipe, when used with flowable fill or when soil and/or water conditions warrant for increased durability, shall be fully bituminous coated per requirements of AASHTO Specification M-190 Type A. Aluminum surfaces that are to be in contact with concrete shall be painted with one coat of zinc chromate primer or two coats of asphalt. Hot dip galvanized bolts may be used for connections. The pH of the surrounding soils shall be between 4 and 9.

2. Coupling, bands, anti-seep collars, end sections, etc., must be composed of the same material and coatings as the pipe. Metals must be insulated from dissimilar materials with use of rubber or plastic insulating materials at lease 24 mils in thickness.

3. Connections - All connections with pipes must be completely watertight. The drain pipe or barrel connection to the riser shall be welded all around when the pipe and riser are metal. Anti-seep collars shall be connected to the pipe in such a manner as to be completely watertight. Dimple bands are not considered to be watertight.

All connections shall use a rubber or neoprene gasket when joining pipe sections. The end of each pipe shall be re-rolled an adequate number of corrugations to accommodate the bandwidth. The following type connections are acceptable for pipes less than 24 inches diameter: flanges on both ends of the pipe with a circular 3/8 inch thick closed cell circular neoprene gasket; and a 12-inch wide hugger type band with o-ring gaskets having a minimum diameter of 1/2 inch greater than the corrugation depth. Pipes 24 inches in diameter and larger shall be connected by a 24 inch long annular corrugated band using a minimum of 4(four) rods and lugs, 2 on each connecting pipe end. A 24-inch wide by 3/8-inch thick closed cell circular neoprene gasket will be installed with 12 inches on the end of each pipe. Flanged joints with 3/8 inch closed cell gaskets the full width of the flange is also acceptable.

Helically corrugated pipe shall have either continuously welded seams or have lock seams with internal caulking or a neoprene bead.

4. Bedding - The pipe shall be firmly and uniformly bedded throughout its entire length. Where rock or soft, spongy or other unstable soil is encountered, all such material shall be removed and replaced with suitable earth compacted to provide adequate support.

5. Backfilling shall conform to "Structure Backfill ".
6. Other details (anti-seep collars, valves, etc.) shall be as shown on the drawings.

Reinforced Concrete Pipe - All of the following criteria shall apply for reinforced concrete pipe:

1. Materials - Reinforced concrete pipe shall have bell and spigot joints with rubber gaskets and shall equal or exceed ASTM C-361.

2. Bedding - Reinforced concrete pipe conduits shall be laid in a concrete bedding/cradle for their entire length. This bedding/cradle shall consist of high slump concrete placed under the pipe and up the sides of the pipe at least 50% of its outside diameter with a minimum thickness of 6 inches. Where a concrete cradle is not needed for structural reasons, flowable fill may be used as described in the "Structure Backfill" section of this standard. Gravel bedding is not permitted.

3. Laying pipe - Bell and spigot pipe shall be placed with the bell end upstream. Joints shall be made in accordance with recommendations of the manufacturer of the material. After the joints are sealed for the entire line, the bedding shall be placed so that all spaces under the pipe are filled. Care shall be exercised to prevent any deviation from the original line and grade of the pipe. The first joint must be located within 4 feet from the riser.

4. Backfilling shall conform to "Structure Backfill ".

5. Other details (anti-seep collars, valves, etc.) shall be shown on the drawings.

Plastic Pipe - The following criteria shall apply for plastic pipe:

1. Materials - PVC pipe shall be PVC-1120 or PVC-1220 conforming to ASTM D-1785 or ASTM D-2241. Corrugated High Density Polyethylene (HDPE) pipe, couplings and fittings shall conform to the following: 4" -10" inch pipe shall meet the requirements of AASHTO M252 Type S, and 12" through 24" inch shall meet the requirements of AASHTO M294 Type S.

2. Joints and connections to anti-seep collars shall be completely watertight.

3. Bedding - The pipe shall be firmly and uniformly bedded throughout its entire length. Where rock or soft, spongy or other unstable soil is encountered, all such material shall be removed and replaced with suitable earth compacted to provide adequate support.

4. Backfilling shall conform to "Structure Backfill ".

5. Other details (anti-seep collars, valves, etc.) shall be as shown on the drawings.

Drainage Diaphragms - When a drainage diaphragm is used, a registered professional engineer will supervise the design and construction inspection.

Concrete

Concrete shall meet the requirements of Maryland Department of Transportation, State Highway Administration Standard Specifications for Construction and Materials, Section 414, Mix No. 3.

Rock Riprap

Rock riprap shall meet the requirements of Maryland Department of Transportation, State Highway Administration Standard Specifications for Construction Materials, Section 311.

Geotexile shall be placed under all riprap and shall meet requirements of Maryland Department of Transportation, State Highway Administration Standard Specifications for Construction and Materials, Section 921.09, Class C.

Care of Water during Construction

All work on permanent structures shall be carried out in areas free from water. The Contractor shall construct and maintain all temporary dikes, levees, cofferdams, drainage channels, and stream diversions necessary to protect to be occupied by the permanent works. The contractor shall also furnish, install, operate, and maintain all necessary pumping and other equipment required for removal of water from various parts of the work and for maintaining the excavations, foundation, and other parts of the work free from water as required or directed by the engineer for constructing each part of the work free from water as required or directed by the engineer for constructing each part of the work. After having served their purpose, all temporary protective works shall be removed or leveled and graded to the extent required to prevent obstruction in any degree whatsoever of the flow of water to the spillway or outlet works and so as not to interfere in any way with the operation or maintenance of the structure. Stream diversions shall be maintained until the full flow can be passed through the permanent works. The removal of water from the required excavation and the foundation shall be accomplished in a manner and to the extent that will maintain stability of the excavated slopes and bottom required excavations and will allow satisfactory performance of all construction operations. During the placing and compacting of material in required excavations, the water level at the locations being refilled shall be maintained below the bottom of the excavation at such locations which may require draining the water sumps from which the water shall be pumped.

Stabilization

All borrow areas shall be graded to provide proper drainage and left I a sightly condition. All exposed surfaces of the embankment, spillway, spoil and borrow areas, and berms shall be stabilized by seeding, liming, fertilizing and mulching in accordance with the Natural Resources Conservation Service Standards and Specifications for Critical Area Planting (MD-342) or as shown on the accompanying drawings.

Erosion and Sediment Control

Construction operations will be carried out in such a manner that erosion will be controlled and water and air pollution minimized. State and local laws concerning pollution abatement will be followed. Construction plans

POND BOTTOM SOIL CONDITIONS

If broken rock fragments are encountered at finished pond bottom, under cut a minimum of 12" below basin grade and to a horizontal distance of at least 18" beyond each edge of the broken rock and backfill with fine-grained ML or CL soils compacted to a firm condition. This procedure should be performed under the supervision of the project Geotechnical Engineer.

POND SUMMARY

	1 YEAR	10 YEAR	100 YEAR
FLOW INTO POND	5.30 CFS	18.35 CFS	30.53 CFS
FLOW OUT OF POND	4.94 CFS	17.03 CFS	28.24 CFS
W.S. ELEVATION	371.48	372.10	372.36
STORAGE VOLUME	0.25 AC-FT	0.34 AC-FT	0.37 AC-FT

OPERATION, MAINTENANCE AND INSPECTION

INSPECTION OF THE POND(S) SHOWN HEREON SHALL BE PERFORMED AT LEAST ANNUALLY, IN ACCORDANCE WITH THE CHECKLIST AND REQUIREMENTS CONTAINED WITHIN USDA, SCS "STANDARDS AND SPECIFICATIONS FOR PONDS" (MD-378). THE POND OWNER(S) AND ANY HEIRS, SUCCESSORS, OR ASSIGNS SHALL BE RESPONSIBLE FOR THE SAFETY OF THE POND AND THE CONTINUED OPERATION, SURVEILLANCE, INSPECTION, AND MAINTENANCE THEREOF. THE POND OWNER(S) SHALL PROMPTLY NOTIFY THE SOIL CONSERVATION DISTRICT OF ANY UNUSUAL OBSERVATIONS THAT MAY BE INDICATIONS OF DISTRESS SUCH AS EXCESSIVE SEEPAGE, TURBID SEEPAGE, SLIDING OR SLUMPING.

OPERATION AND MAINTENANCE SCHEDULE FOR STORMWATER MANAGEMENT DETENTION FACILITY

STORMWATER MANAGEMENT FACILITY
ROUTINE MAINTENANCE BY HOA

1. FACILITY WILL BE INSPECTED ANNUALLY AND AFTER MAJOR STORMS. INSPECTIONS SHOULD BE PERFORMED DURING WET WEATHER TO DETERMINE IS FUNCTIONING PROPERLY.
2. TOP AND SIDE SLOPES OF THE EMBANKMENT SHALL BE MOWED A MINIMUM OF TWO (2) TIMES A YEAR, ONCE IN JUNE AND ONCE IN SEPTEMBER. OTHER SIDE SLOPES AND MAINTENANCE ACCESS SHOULD BE MOWED AS NEEDED.
3. DEBRIS AND LITTER NEXT TO THE OUTLET STRUCTURE SHALL BE REMOVED DURING REGULAR MOWING OPERATIONS AND AS NEEDED.
4. VISIBLE SIGNS OF EROSION IN THE POND AS WELL AS RIPRAP OUTLET AREAS SHALL BE REPAIRED AS SOON AS IT IS NOTICED.

NON-ROUTINE MAINTENANCE BY HOA

1. STRUCTURAL COMPONENTS OF THE POND SUCH AS THE DAM, THE RISER, AND THE PIPES SHALL BE REPAIRED UPON DETECTION OF ANY DAMAGE. THE COMPONENTS SHOULD BE INSPECTED DURING ROUTINE MAINTENANCE OPERATIONS.
2. SEDIMENT SHOULD BE REMOVED WHEN ITS ACCUMULATION SIGNIFICANTLY REDUCES THE DESIGN STORAGE, INTERFERE WITH THE FUNCTION OF THE RISER, WHEN DEEMED NECESSARY FOR AESTHETIC REASONS, OR WHEN DEEMED NECESSARY BY THE HOWARD COUNTY DEPARTMENT OF PUBLIC WORKS.

NO.	REVISION	DATE

STORMWATER MANAGEMENT DETAILS
POND #2
DENNIS PRESERVE
LOTS 1-58

TAX MAP 31 BLOCK 21 PARCEL '226'
1ST ELECTION DISTRICT HOWARD COUNTY, MARYLAND
REF.: S-01-06, P-02-27, WP-03-07 (APP. 11/05/02)

ROBERT H. VOGEL
ENGINEERING, INC.
ENGINEERS • SURVEYORS • PLANNERS
8407 MAIN STREET
ELLICOTT CITY, MD 21043
TEL: 410.461.7666
FAX: 410.461.8961

APPROVED: DEPARTMENT OF PUBLIC WORKS
William F. Malek Jr. 10-19-04
Chief, Bureau of Highways Date

APPROVED: DEPARTMENT OF PLANNING AND ZONING
Cindy Hamilton 10/27/04
Chief, Division of Land Development Date
10/25/04
Chief, Development Engineering Division Date

These plans have been reviewed for HOWARD SOIL CONSERVATION DISTRICT and meet technical requirements for small pond construction and soil erosion and sediment control
Jim Myers 9/22/04
USDA-Natural Resources Conservation Service Date

These plans for small pond construction and soil erosion and sediment control meet the requirements of the HOWARD SOIL CONSERVATION DISTRICT.
9/22/04
Howard Soil Conservation District Date

DEVELOPER'S CERTIFICATE

"I/We certify that all development and construction will be done according to this plan of development for sediment and erosion control, and that all responsible personnel involved in the construction project will have a Certificate of Attendance at a Department of Environment Approved Training Program for the Control of Sediment and Erosion before beginning the project. I also authorize periodic on-site inspections by the Howard Soil Conservation District. I shall engage a registered professional engineer to supervise pond construction and provide the Howard Soil Conservation District with and "As-Built" plan of the pond within 30 days of completion."

9/14/04
Signature of Developer Date

ENGINEER'S CERTIFICATE

"I hereby certify that this plan for pond construction and sediment and erosion control represents a practical and workable plan based on my personal knowledge of the site conditions and that it was prepared in accordance with the requirements of the Howard Soil Conservation District. I have notified the developer that he/she must engage a Registered Professional Engineer to supervise pond construction and provide the Howard Soil Conservation District with an "As-Built" plan of the pond within 30 days of completion."

9/15/04
Signature of Engineer Date
Robert H. Vogel

DEVELOPER
ELLICOTT CITY LAND HOLDINGS, LLC
8000 MAIN STREET
ELLICOTT CITY, MARYLAND 21043
ATTN: MR. DONALD R. REUWER
(410) 480-9105

OWNER
DENNIS PRESERVE, LLC
ELLICOTT CITY LAND HOLDINGS, LLC
SOLE MEMBER
8000 MAIN STREET
ELLICOTT CITY, MD 21043
410-480-9105

ROBERT H. VOGEL, PE No.16193

DESIGN BY:	RHV
DRAWN BY:	CMH
CHECKED BY:	RHV
DATE:	SEPTEMBER 2004
SCALE:	AS SHOWN
W.O. NO.:	2017019.0

13 SHEET OF 17

F-04-74

SOILS LEGEND

SYMBOL	NAME / DESCRIPTION	GROUP
CnB2	CHILLUM–FAIRFAX LOAMS, 1 TO 5 PERCENT SLOPES, MODERATELY ERODED	B
CnD3	CHILLUM–FAIRFAX LOAMS, 5 TO 15 PERCENT SLOPES, SEVERELY ERODED	B
EnB2	ELSINBORO LOAM, 3 TO 8 PERCENT SLOPES, MODERATELY ERODED	B
EnC2	ELSINBORO LOAM, 8 TO 15 PERCENT SLOPES, MODERATELY ERODED	B
IuB	IUKA LOAM, LOCAL ALLUVIUM, 1 TO 5 PERCENT SLOPES	C
KhC2	KEYPORT SILT LOAM, 3 TO 10 PERCENT SLOPES, MODERATELY ERODED	C
LeB2	LEGORE SILT LOAM, 3 TO 8 PERCENT SLOPES, MODERATELY ERODED	B
LgC3	LEGORE SILTY CLAY LOAM, 8 TO 15 PERCENT SLOPES, SEVERELY ERODED	B
Mo	MIXED ALLUVIAL LAND	–
MrE	MONTALTO AND RELAY SOILS, 15 TO 45 PERCENT SLOPES	C
ScD	SANDY AND CLAYEY LAND, MODERATELY SLOPING	–
SlB2	SASSAFRAS LOAM, 1 TO 5 PERCENT SLOPES, MODERATELY ERODED	B
SlC2	SASSAFRAS LOAM, 5 TO 10 PERCENT SLOPES, MODERATELY ERODED	B
SsE	SASSAFRAS SOILS, 15 TO 40 PERCENT SLOPES	B
WoB	WATCHUNG SILT LOAM, 3 TO 8 PERCENT SLOPES	D

MAPS 20 & 25 OF THE HOWARD COUNTY SOIL SURVEY

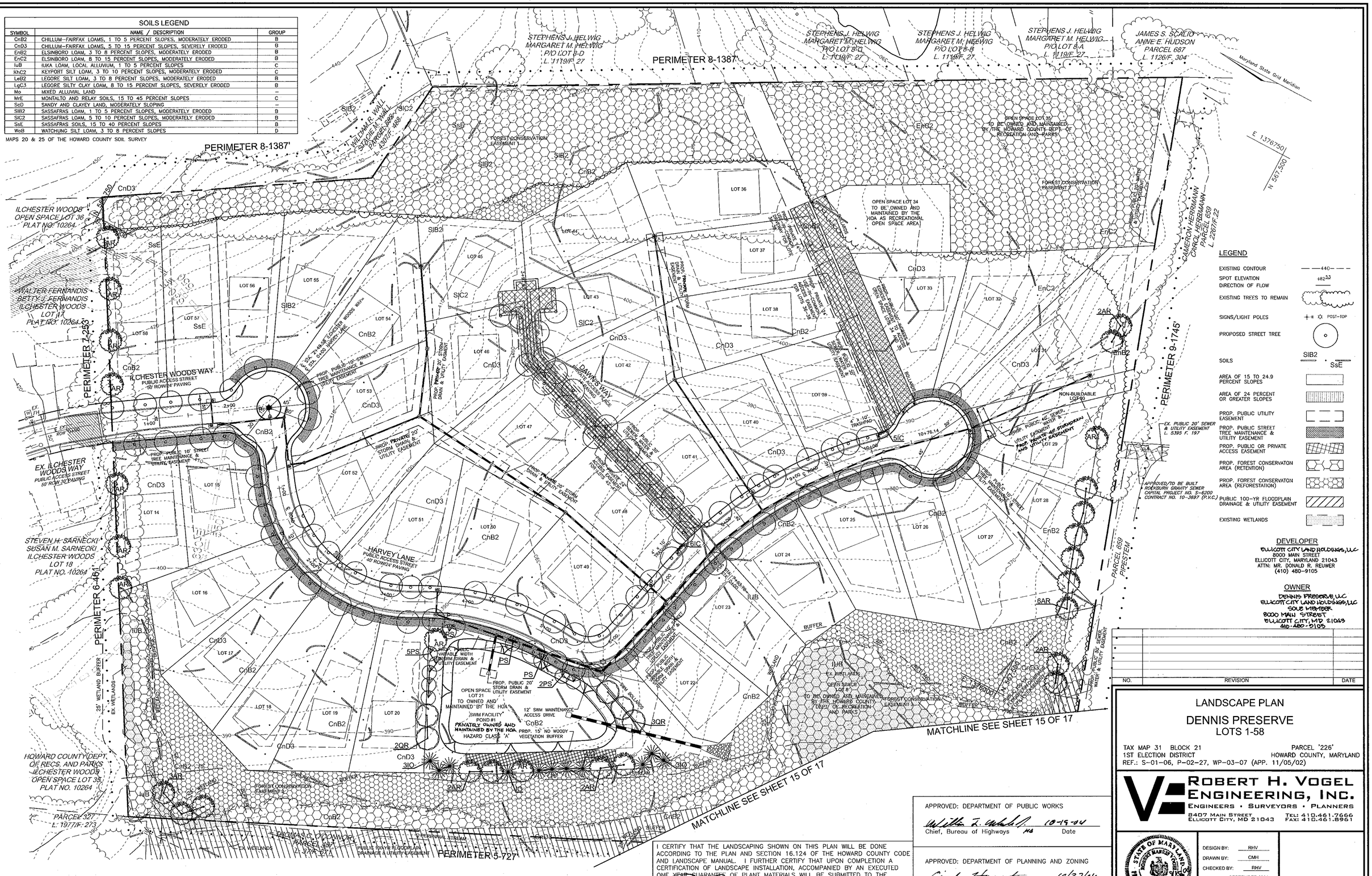

LEGEND

- EXISTING CONTOUR
- SPOT ELEVATION
- DIRECTION OF FLOW
- EXISTING TREES TO REMAIN
- SIGNS/LIGHT POLES — POST-TOP
- PROPOSED STREET TREE
- SOILS
- AREA OF 15 TO 24.9 PERCENT SLOPES
- AREA OF 24 PERCENT OR GREATER SLOPES
- PROP. PUBLIC UTILITY EASEMENT
- PROP. PUBLIC STREET TREE MAINTENANCE & UTILITY EASEMENT
- PROP. PUBLIC OR PRIVATE ACCESS EASEMENT
- PROP. FOREST CONSERVATON AREA (RETENTION)
- PROP. FOREST CONSERVATON AREA (REFORESTATION)
- PUBLIC 100-YR FLOODPLAIN DRAINAGE & UTILITY EASEMENT
- EXISTING WETLANDS

DEVELOPER

ELLICOTT CITY LAND HOLDINGS, LLC
8000 MAIN STREET
ELLICOTT CITY, MARYLAND 21043
ATTN: MR. DONALD R. REUWER
(410) 480-9105

OWNER

DENNIS PRESERVE LLC
ELLICOTT CITY LAND HOLDINGS, LLC
SOLE MEMBER
8000 MAIN STREET
ELLICOTT CITY, MD 21043
410-480-9105

NO.	REVISION	DATE

LANDSCAPE PLAN

DENNIS PRESERVE
LOTS 1-58

TAX MAP 31 BLOCK 21 — PARCEL '226'
1ST ELECTION DISTRICT — HOWARD COUNTY, MARYLAND
REF.: S-01-06, P-02-27, WP-03-07 (APP. 11/05/02)

I CERTIFY THAT THE LANDSCAPING SHOWN ON THIS PLAN WILL BE DONE ACCORDING TO THE PLAN AND SECTION 16.124 OF THE HOWARD COUNTY CODE AND LANDSCAPE MANUAL. I FURTHER CERTIFY THAT UPON COMPLETION A CERTIFICATION OF LANDSCAPE INSTALLATION, ACCOMPANIED BY AN EXECUTED ONE YEAR GUARANTEE OF PLANT MATERIALS WILL BE SUBMITTED TO THE DEPARTMENT OF PLANNING AND ZONING

OWNER/DEVELOPER — DATE 9/M/04

APPROVED: DEPARTMENT OF PUBLIC WORKS

Chief, Bureau of Highways — Date 10-19-04

APPROVED: DEPARTMENT OF PLANNING AND ZONING

Chief, Division of Land Development — Date 10/27/04

Chief, Development Engineering Division — Date 10/25/04

ROBERT H. VOGEL ENGINEERING, INC.
ENGINEERS • SURVEYORS • PLANNERS
8407 MAIN STREET ELLICOTT CITY, MD 21043
TEL: 410.461.7666 FAX: 410.461.8961

STATE OF MARYLAND — ROBERT HARRIS VOGEL — NO. 16193 — PROFESSIONAL ENGINEER
ROBERT H. VOGEL, PE No.16193

DESIGN BY:	RHV
DRAWN BY:	CMH
CHECKED BY:	RHV
DATE:	SEPTEMBER 2004
SCALE:	1"=50'
W.O. NO.:	2017019.0

SHEET 14 OF 17

F-04-74

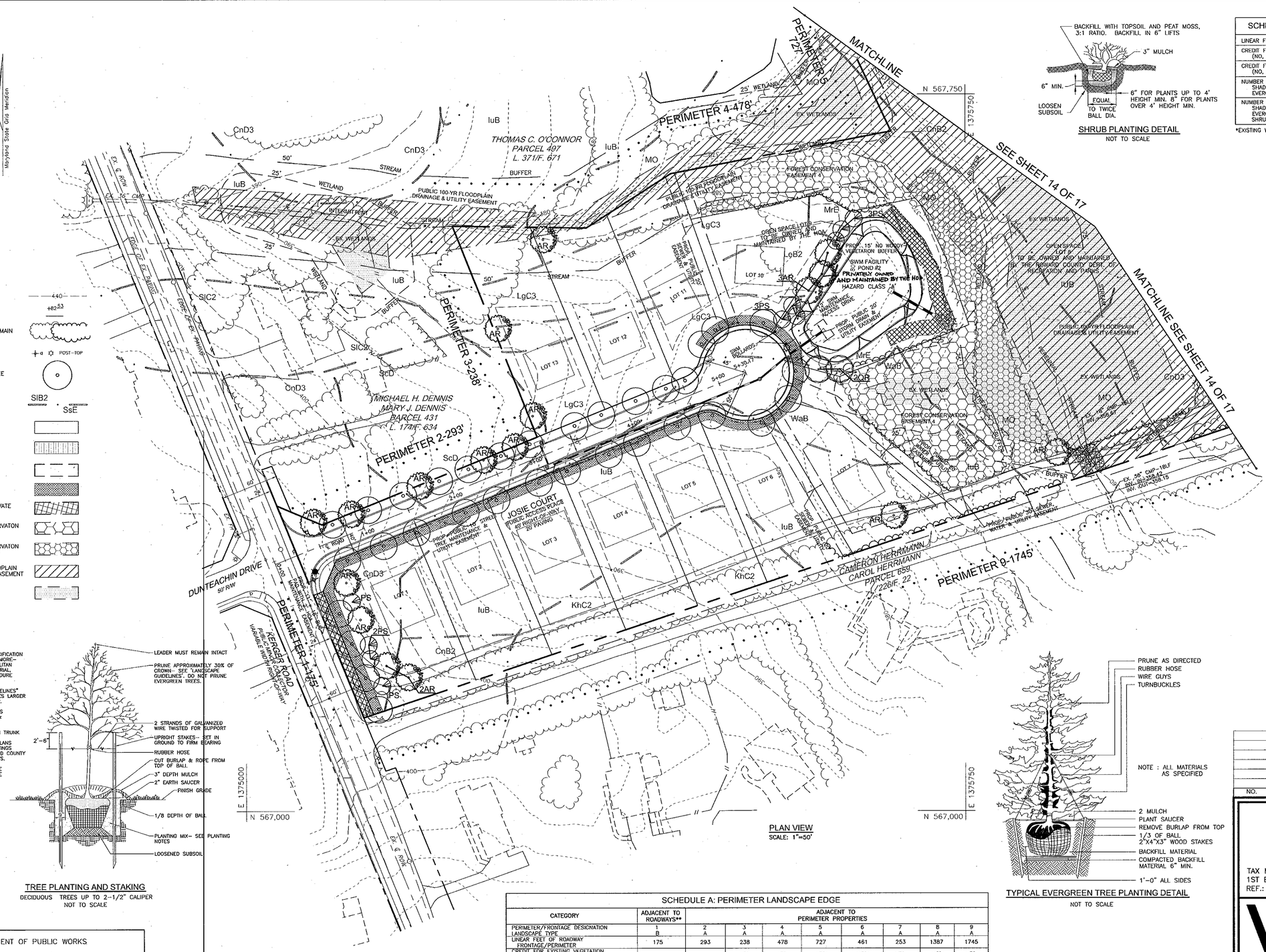
Maryland State Grid Meridian
MATCHLINE SEE SHEET 14 OF 17
MATCHLINE SEE SHEET 14 OF 17
N 567,750
E 1375750
N 567,000
E 1375000
PERIMETER 4-478'
PERIMETER 3-238'
PERIMETER 2-293'
PERIMETER 1-135'
PERIMETER 9-1745'
THOMAS C. O'CONNOR PARCEL 497 L. 371/F. 671
MICHAEL H. DENNIS MARY J. DENNIS PARCEL 431 L. 1741/F. 634
CAMERON HERRMANN CAROL HERRMANN PARCEL 659 L. 2226/F. 22
JOSIE COURT
PUBLIC ACCESS PLACE 40' RIGHT-OF-WAY 29' PAVING
DUNTEACHIN DRIVE 50' R/W
KERGER ROAD PUBLIC ACCESS PLACE VARIABLE WIDTH RIGHT-OF-WAY
EX. 6" CMP
EDGE OF EX. PAVING
EX. C ROW
EX. 36" CMP
EX. 18" CMP
EX. 12" CMP
EX. 36" CMP-18LF INV. 363.22 INV. OUT-358.15
EX. 18" CMP-16LF INV. 358.82
EX. 12" CMP-16LF INV. 359.52
PROP. 15" RCP INV. 358.15
PROP. 15" RCP INV. 358.65
PROP. 15" RCP INV. 359.15
PROP. 15" RCP INV. 359.65
PROP. 15" RCP INV. 360.15
PROP. 15" RCP INV. 360.65
PROP. 15" RCP INV. 361.15
PROP. 15" RCP INV. 361.65
PROP. 15" RCP INV.

SOILS LEGEND

SYMBOL	NAME / DESCRIPTION	GROUP
CnB2	CHILLUM–FAIRFAX LOAMS, 1 TO 5 PERCENT SLOPES, MODERATELY ERODED	B
CnD3	CHILLUM–FAIRFAX LOAMS, 5 TO 15 PERCENT SLOPES, SEVERELY ERODED	B
EnB2	ELSINBORO LOAM, 3 TO 8 PERCENT SLOPES, MODERATELY ERODED	B
EnC2	ELSINBORO LOAM, 8 TO 15 PERCENT SLOPES, MODERATELY ERODED	B
IuB	IUKA LOAM, LOCAL ALLUVIUM, 1 TO 5 PERCENT SLOPES	C
KhC2	KEYPORT SILT LOAM, 3 TO 10 PERCENT SLOPES, MODERATELY ERODED	C
LeB2	LEGORE SILT LOAM, 3 TO 8 PERCENT SLOPES, MODERATELY ERODED	B
LgC3	LEGORE SILTY CLAY LOAM, 8 TO 15 PERCENT SLOPES, SEVERELY ERODED	B
Mo	MIXED ALLUVIAL LAND	--
MrE	MONTALTO AND RELAY SOILS, 15 TO 45 PERCENT SLOPES	C
SsD	SANDY AND CLAYEY LAND, MODERATELY SLOPING	--
SIB2	SASSAFRAS LOAM, 1 TO 5 PERCENT SLOPES, MODERATELY ERODED	B
SIC2	SASSAFRAS LOAM, 5 TO 10 PERCENT SLOPES, MODERATELY ERODED	B
SsE	SASSAFRAS SOILS, 15 TO 40 PERCENT SLOPES	B
WaB	WATCHUNG SILT LOAM, 3 TO 8 PERCENT SLOPES	D

MAPS 20 & 25 OF THE HOWARD COUNTY SOIL SURVEY

Maryland State Grid Meridian
E 1376750
N 567,500

LEGEND

EXISTING CONTOUR	440
SPOT ELEVATION	+82.53
DIRECTION OF FLOW	
PROPOSED CONTOUR	412
EXISTING TREES TO REMAIN	
TREE PROTECTION FENCE	TPF
SIGNS/LIGHT POLES	POST-TOP
PROPOSED STREET TREE	
SOILS	SIB2 / SsE
AREA OF 15 TO 24.9 PERCENT SLOPES	
AREA OF 24 PERCENT OR GREATER SLOPES	
PROP. PUBLIC UTILITY EASEMENT	
PROP. PUBLIC STREET TREE MAINTENANCE & UTILITY EASEMENT	
PROP. PUBLIC OR PRIVATE ACCESS EASEMENT	
PROP. FOREST CONSERVATON AREA (RETENTION)	
PROP. FOREST CONSERVATON AREA (REFORESTATION)	
PUBLIC 100-YR FLOODPLAIN DRAINAGE & UTILITY EASEMENT	
EXISTING WETLANDS	
LIMIT OF DISTURBANCE	LOD
SUPER SILT FENCE	SSF

EX. PUBLIC 20' SEWER & UTILITY EASEMENT L. 5393 F. 197

PROHIBITED/TO BE BUILT ROCKBURN/GRAVITY SEWER CAPITAL PROJECT NO. S-6200 CONTRACT NO. 10-3697 (P.V.C.)

NO.	REVISION	DATE

FOREST CONSERVATION PLAN

DENNIS PRESERVE
LOTS 1-58

TAX MAP 31 BLOCK 21 PARCEL '226'
1ST ELECTION DISTRICT HOWARD COUNTY, MARYLAND
REF.: S-01-06, P-02-27, WP-03-07 (APP. 11/05/02)

ROBERT H. VOGEL ENGINEERING, INC.
ENGINEERS • SURVEYORS • PLANNERS
8407 MAIN STREET TEL: 410.461.7666
ELLICOTT CITY, MD 21043 FAX: 410.461.8961

DESIGN BY: RHV
DRAWN BY: CMH
CHECKED BY: RHV
DATE: SEPTEMBER 2004
SCALE: 1"=50'
W.O. NO.: 2017019.0

9/15/04
LARRY A. THOMPSON
DNR QUALIFIED PROFESSIONAL

SHEET 16 OF 17

APPROVED: DEPARTMENT OF PUBLIC WORKS

Chief, Bureau of Highways — Date 10-15-04

APPROVED: DEPARTMENT OF PLANNING AND ZONING

Chief, Division of Land Development — Date 10/27/04

Chief, Development Engineering Division — Date 10/26/04

DEVELOPER
ELLICOTT CITY LAND HOLDINGS, LLC
8000 MAIN STREET
ELLICOTT CITY, MARYLAND 21043
ATTN: MR. DONALD R. REUWER
(410) 480-9105

OWNER
DENNIS PRESERVE, LLC
ELLICOTT CITY LAND HOLDINGS, LLC
SOLE MEMBER
8000 MAIN STREET
ELLICOTT CITY, MD 21043
410-442-2105

F-04-74

HOWARD COUNTY
FOREST CONSERVATION WORKSHEET

ZONED R-20

NET TRACT AREA:

A. TOTAL TRACT AREA	31.37 AC
B. AREA WITHIN 100 YEAR FLOODPLAIN	1.57 AC
C. AREA TO REMAIN IN AGRICULTURAL PRODUCTION	0.00 AC
D. NET TRACT AREA	29.80 AC

LAND USE CATEGORY

INPUT THE NUMBER "1" UNDER THE APPROPIATE LAND USE ZONING, AND LIMIT TO ONLY ONE ENTRY. ZONED R-ED.

ARA	MDR	IDA	HDR	MPD	CIA
0	0	0	1	0	0

E. AFFOREST THRESHOLD	15%	X D = 4.47 AC
F. CONSERVATION THRESHOLD	20%	X D = 5.96 AC

EXISTING FOREST COVER:

G. EXISTING FOREST COVER (EXCLUDING FLOODPLAIN) =	6.70 AC
H. AREA OF FOREST ABOVE AFFORESTATION THRESHOLD =	2.23 AC
I. AREA OF FOREST ABOVE CONSERVATION THRESHOLD =	0.74 AC

BREAK EVEN POINT:

(0.2 X I) + F = BREAK EVEN POINT (6.11 AC)

J. FOREST RETENTION WITH NO MITIGATION =	6.11 AC
K. CLEARING PERMITTED WITHOUT MITIGATION =	0.59 AC

PROPOSED FOREST CLEARING:

L. TOTAL AREA OF FOREST TO BE CLEARED =	1.81 AC
M. TOTAL AREA OF FOREST TO BE RETAINED =	4.89 AC

PLANTING REQUIREMENTS:

N. REFORESTATION FOR CLEARING ABOVE CONSERVATION THRESHOLD =	0.19 AC
P. REFORESTATION FOR CLEARING BELOW CONSERVATION THRESHOLD =	2.14 AC
Q. CREDIT FOR RETENTION ABOVE CONSERVATION THRESHOLD =	0.00 AC
R. TOTAL REFORESTATION REQUIRED (N+P-Q) =	2.33 AC
S. TOTAL AFFORESTATION REQUIRED =	0.00 AC
T. TOTAL REFORESTATION AND AFFORESTATION REQUIRED =	2.33 AC

OBLIGATION TO BE FULFILLED BY ON-SITE RETENTION OF 4.89 AC. (213,008 SF), ON-SITE REFORESTATION OF 2.03 AC. (88,427 SF) AND FEE-IN-LIEU FOR THE REMAINING 0.30 AC. (13,068 SF)

NOTES

1. THE PROPERTY OUTLINE IS BASED ON A BOUNDARY SURVEY PREPARED BY FREDERICK WARD ASSOCIATES IN DECEMBER 2001.
2. THE EXISTING FEATURES AND CONTOURS SHOWN HEREON ARE BASED ON AERIAL TOPOGRAPHY PREPARED BY GREENMAN PEDERSON COMPANY, AUGUST 2001.

LEGEND

EXISTING CONTOUR — 440 —
SPOT ELEVATION +82.53
DIRECTION OF FLOW
PROPOSED CONTOUR — 432 —
EXISTING TREES TO REMAIN
TREE PROTECTION FENCE — TPF —
SIGNS/LIGHT POLES — POST-TOP
PROPOSED STREET TREE
SOILS SIB2 SsE
AREA OF 15 TO 24.9 PERCENT SLOPES
AREA OF 24 PERCENT OR GREATER SLOPES
PROP. PUBLIC UTILITY EASEMENT
PROP. PUBLIC STREET TREE MAINTENANCE & UTILITY EASEMENT
PROP. PUBLIC OR PRIVATE ACCESS EASEMENT
PROP. FOREST CONSERVATON AREA (RETENTION)
PROP. FOREST CONSERVATON AREA (REFORESTATION)
PUBLIC 100-YR FLOODPLAIN DRAINAGE & UTILITY EASEMENT
EXISTING WETLANDS
LIMIT OF DISTURBANCE — LOD —
SUPER SILT FENCE — SSF —

FOREST CONSERVATION EASEMENT TABLE		
FOREST CONSERVATION EASEMENT 1		
RETENTION	1.4419 AC.	
REFORESTATION	0.0736 AC.	
	1.5155 AC.	TOTAL
FOREST CONSERVATION EASEMENT 2		
RETENTION	1.7916 AC.	TOTAL
FOREST CONSERVATION EASEMENT 3		
RETENTION	1.0060 AC.	
REFORESTATION	1.6516 AC.	
	2.6576 AC.	TOTAL
FOREST CONSERVATION EASEMENT 4		
RETENTION	0.6497 AC.	
REFORESTATION	0.3048 AC.	
	0.9545 AC.	TOTAL
TOTAL RETENTION	4.8892 AC.	
TOTAL REFORESTATION	2.0300 AC.	

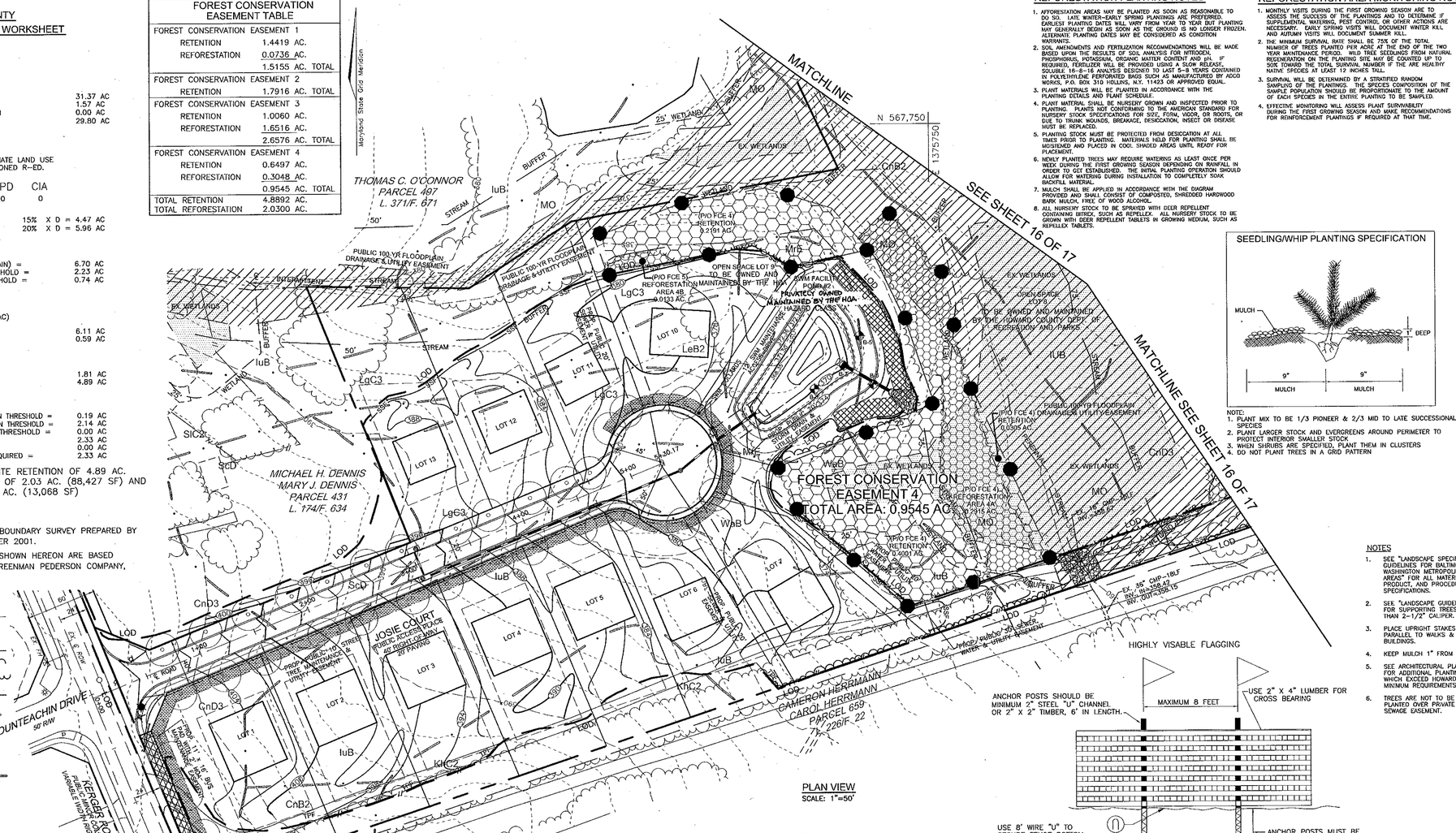
MATCHLINE SEE SHEET 16 OF 17
MATCHLINE SEE SHEET 16 OF 17
N 567,750
E 1375750
THOMAS C. O'CONNOR PARCEL 497 L. 371/F. 671
MICHAEL H. DENNIS MARY J. DENNIS PARCEL 431 L. 174/F. 634
CAMERON HERRMANN CAROL HERRMANN PARCEL 659 L. 226/F. 22
FOREST CONSERVATION EASEMENT 4 TOTAL AREA: 0.9545 AC±
OPEN SPACE LOT 9 TO BE OWNED AND MAINTAINED BY THE HOA
SWM FACILITY POND #2 PRIVATELY OWNED MAINTAINED BY THE HOA
TO BE OWNED AND MAINTAINED BY THE HOWARD COUNTY DEPT. OF RECREATION AND PARKS
JOSIE COURT PUBLIC ACCESS PLACE 40' RIGHT-OF-WAY 22' PAVING
DUNTEACHIN DRIVE 50' R/W
KERGER ROAD PUBLIC UNIMPROVED ROAD VARIABLE WIDTH RIGHT-OF-WAY
PROP. PUBLIC 10' TREE MAINTENANCE & UTILITY EASEMENT
PROP. PUBLIC 20' DRAINAGE & UTILITY EASEMENT
PUBLIC 100-YR FLOODPLAIN DRAINAGE & UTILITY EASEMENT
(P/O FCE 4) RETENTION 0.2191 AC.
(P/O FCE 4) REFORESTATION AREA 4A 0.2115 AC.
(P/O FCE 4) RETENTION 0.0295 AC.
(P/O FCE 4) REFORESTATION AREA 4B 0.0109 AC.
(P/O FCE 5) REFORESTATION AREA 4B 0.0133 AC.
(P/O FCE 3) REFORESTATION AREA 3A 0.0147 AC.
(P/O FCE 3) REFORESTATION AREA 3B 0.0147 AC.
PROP. PUBLIC 20' DRAINAGE & UTILITY EASEMENT
PROP. PUBLIC 10' TREE MAINTENANCE & UTILITY EASEMENT

SOILS LEGEND

SYMBOL	NAME / DESCRIPTION	GROUP
CnB2	CHILLUM-FAIRFAX LOAMS, 1 TO 5 PERCENT SLOPES, MODERATELY ERODED	B
CnD3	CHILLUM-FAIRFAX LOAMS, 5 TO 15 PERCENT SLOPES, SEVERELY ERODED	B
EnB2	ELSINBORO LOAM, 3 TO 8 PERCENT SLOPES, MODERATELY ERODED	B
EnC2	ELSINBORO LOAM, 8 TO 15 PERCENT SLOPES, MODERATELY ERODED	B
IuB	IUKA LOAM, LOCAL ALLUVIUM, 1 TO 5 PERCENT SLOPES	C
KhC2	KEYPORT SILT LOAM, 3 TO 10 PERCENT SLOPES, MODERATELY ERODED	C
LeB2	LEGORE SILT LOAM, 3 TO 8 PERCENT SLOPES, MODERATELY ERODED	B
LgC3	LEGORE SILTY CLAY LOAM, 8 TO 15 PERCENT SLOPES, SEVERELY ERODED	B
Mo	MIXED ALLUVIAL LAND	–
MrE	MONTALTO AND RELAY SOILS, 15 TO 45 PERCENT SLOPES	C
ScD	SANDY AND CLAYEY LAND, MODERATELY SLOPING	–
SlB2	SASSAFRAS LOAM, 1 TO 5 PERCENT SLOPES, MODERATELY ERODED	B
SlC2	SASSAFRAS LOAM, 5 TO 10 PERCENT SLOPES, MODERATELY ERODED	B
SsE	SASSAFRAS SOILS, 15 TO 40 PERCENT SLOPES	B
WaB	WATCHUNG SILT LOAM, 3 TO 8 PERCENT SLOPES	D

MAPS 20 & 25 OF THE HOWARD COUNTY SOIL SURVEY

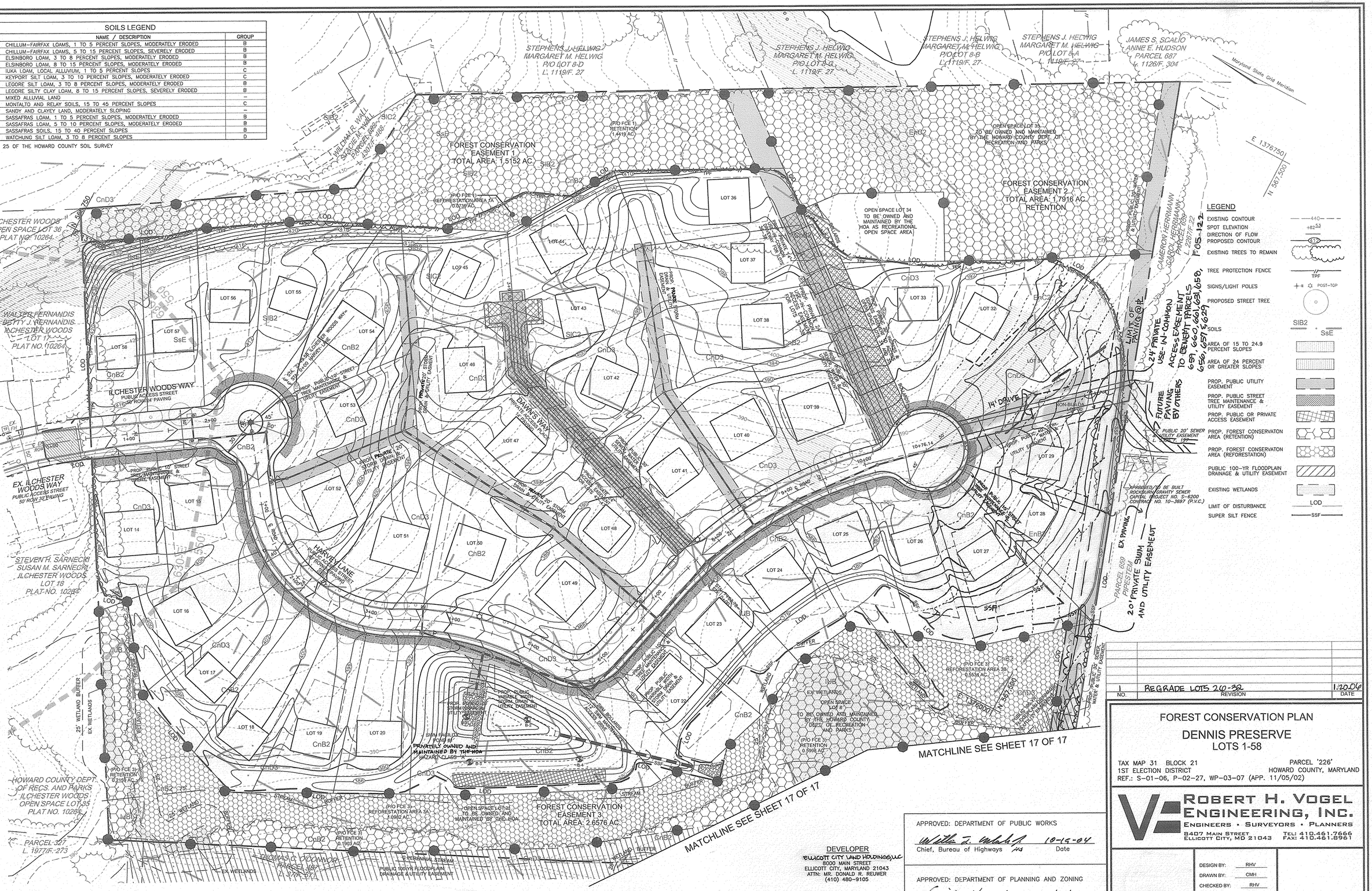

LEGEND

- EXISTING CONTOUR — 440
- SPOT ELEVATION — +85.53
- DIRECTION OF FLOW
- PROPOSED CONTOUR — 432
- EXISTING TREES TO REMAIN
- TREE PROTECTION FENCE — TPF
- SIGNS/LIGHT POLES
- PROPOSED STREET TREE — POST-TOP
- SOILS — SlB2, SsE
- AREA OF 15 TO 24.9 PERCENT SLOPES
- AREA OF 24 PERCENT OR GREATER SLOPES
- PROP. PUBLIC UTILITY EASEMENT
- PROP. PUBLIC STREET TREE MAINTENANCE & UTILITY EASEMENT
- PROP. PUBLIC OR PRIVATE ACCESS EASEMENT
- PROP. FOREST CONSERVATON AREA (RETENTION)
- PROP. FOREST CONSERVATON AREA (REFORESTATION)
- PUBLIC 100-YR FLOODPLAIN DRAINAGE & UTILITY EASEMENT
- EXISTING WETLANDS
- LIMIT OF DISTURBANCE — LOD
- SUPER SILT FENCE — SSF

APPROVED/TO BE BUILT ROCKBURN/GRAVITY SEWER CAPITAL PROJECT NO. S-6200 CONTRACT NO. 10-3697 (P.V.C.)

NO.	REVISION	DATE
1	REGRADE LOTS 20-32	1.20.06

FOREST CONSERVATION PLAN

DENNIS PRESERVE
LOTS 1-58

TAX MAP 31 BLOCK 21 PARCEL '226'
1ST ELECTION DISTRICT HOWARD COUNTY, MARYLAND
REF.: S-01-06, P-02-27, WP-03-07 (APP. 11/05/02)

DEVELOPER
ELLICOTT CITY LAND HOLDINGS,LLC
8000 MAIN STREET
ELLICOTT CITY, MARYLAND 21043
ATTN: MR. DONALD R. REUWER
(410) 480-9105

OWNER
DENNIS PRESERVE, LLC
ELLICOTT CITY LAND HOLDINGS, LLC
SOLE MEMBER
8000 MAIN STREET
ELLICOTT CITY, MD 21043
410-480-9105

APPROVED: DEPARTMENT OF PUBLIC WORKS
Chief, Bureau of Highways — Date 10-15-04

APPROVED: DEPARTMENT OF PLANNING AND ZONING
Chief, Division of Land Development — Date 10/27/04
Chief, Development Engineering Division — Date 10/26/04

ROBERT H. VOGEL ENGINEERING, INC.
ENGINEERS • SURVEYORS • PLANNERS
8407 MAIN STREET
ELLICOTT CITY, MD 21043
TEL: 410.461.7666
FAX: 410.461.8961

9/15/04
LARRY A. THOMSON
DNR QUALIFIED PROFESSIONAL

DESIGN BY:	RHV
DRAWN BY:	CMH
CHECKED BY:	RHV
DATE:	SEPTEMBER 2004
SCALE:	1"=50'
W.O. NO.:	2017019.0

SHEET 16 OF 17

F-04-74

SOILS LEGEND		
SYMBOL	NAME / DESCRIPTION	GROUP
CnB2	CHILLUM–FAIRFAX LOAMS, 1 TO 5 PERCENT SLOPES, MODERATELY ERODED	B
CnD3	CHILLUM–FAIRFAX LOAMS, 5 TO 15 PERCENT SLOPES, SEVERELY ERODED	B
EnB2	ELSINBORO LOAM, 3 TO 8 PERCENT SLOPES, MODERATELY ERODED	B
EnC2	ELSINBORO LOAM, 8 TO 15 PERCENT SLOPES, MODERATELY ERODED	B
IuB	IUKA LOAM, LOCAL ALLUVIUM, 1 TO 5 PERCENT SLOPES	C
KhC2	KEYPORT SILT LOAM, 3 TO 10 PERCENT SLOPES, MODERATELY ERODED	C
LeB2	LEGORE SILT LOAM, 3 TO 8 PERCENT SLOPES, MODERATELY ERODED	B
LgC3	LEGORE SILTY CLAY LOAM, 8 TO 15 PERCENT SLOPES, SEVERELY ERODED	B
Mo	MIXED ALLUVIAL LAND	–
MrE	MONTALTO AND RELAY SOILS, 15 TO 45 PERCENT SLOPES	C
ScD	SANDY AND CLAYEY LAND, MODERATELY SLOPING	–
SlB2	SASSAFRAS LOAM, 1 TO 5 PERCENT SLOPES, MODERATELY ERODED	B
SlC2	SASSAFRAS LOAM, 5 TO 10 PERCENT SLOPES, MODERATELY ERODED	B
SsE	SASSAFRAS SOILS, 15 TO 40 PERCENT SLOPES	B
WaB	WATCHUNG SILT LOAM, 3 TO 8 PERCENT SLOPES	D

MAPS 20 & 25 OF THE HOWARD COUNTY SOIL SURVEY

PERIMETER 8-1387'

STEPHENS J. HELWIG MARGARET M. HELWIG P/O LOT 8-D L. 1119/F. 27

STEPHENS J. HELWIG MARGARET M. HELWIG P/O LOT 8-A L. 1119/F. 27

STEPHENS J. HELWIG MARGARET M. HELWIG P/O LOT 8-B L. 1119/F. 27

JAMES S. SCALIA ANNE E. HUDSON PARCEL 687 L. 1126/F. 304

WILLIAM R. WALL GRACE M. WALL PARCEL 488 L. 1307/F. 488

Maryland State Grid Meridian

E 1376750

N 567,500

ILCHESTER WOODS OPEN SPACE LOT 36 PLAT NO. 10264

WALTER FERNANDIS BETTY J. FERNANDIS ILCHESTER WOODS LOT 17 PLAT NO. 10264

STEVEN H. SARNECKI SUSAN M. SARNECKI ILCHESTER WOODS LOT 18 PLAT NO. 10264

HOWARD COUNTY DEPT. OF RECS. AND PARKS ILCHESTER WOODS OPEN SPACE LOT 38 PLAT NO. 10264

PARCEL 327 L. 1977/F. 273

CAMERON HERRIMAWN CAROL HERRIMAWN PARCEL 659 L. 2267/F. 22

F-05-122

PERIMETER 7-253'

PERIMETER 6-461'

PERIMETER 9-1745'

PERIMETER 5-727'

ILCHESTER WOODS WAY PUBLIC ACCESS STREET 50' ROW/24' PAVING

EX. ILCHESTER WOODS WAY PUBLIC ACCESS STREET 50' ROW/ 30' PAVING

DAWNS WAY PRIVATE ACCESS PLACE 22' PAVING

HARVEY LANE PUBLIC ACCESS STREET 40' ROW/24' PAVING

FOREST CONSERVATION EASEMENT

OPEN SPACE LOT 35 TO BE OWNED AND MAINTAINED BY THE HOWARD COUNTY DEPT. OF RECREATION AND PARKS

OPEN SPACE LOT 34 TO BE OWNED AND MAINTAINED BY THE HOA AS RECREATIONAL OPEN SPACE AREA

OPEN SPACE LOT 21 TO OWNED AND MAINTAINED BY THE HOA

"SWM FACILITY" POND #1 PRIVATELY OWNED AND MAINTAINED BY THE HOA

PROP. 15' NO WOODY VEGETATION BUFFER

12' SWM MAINTENANCE ACCESS DRIVE

OPEN SPACE LOT 39 TO BE OWNED AND MAINTAINED BY THE HOWARD COUNTY DEPT. OF RECREATION AND PARKS

PROP. PUBLIC 20' STORM DRAIN & UTILITY EASEMENT

PROP. PRIVATE 20' STORM DRAIN & UTILITY EASEMENT

PROP. PUBLIC 10' STREET TREE MAINTENANCE & UTILITY EASEMENT

PROP. PUBLIC 40' SEWER, WATER & UTILITY EASEMENT

PROP. PUBLIC VARIABLE WIDTH STORM DRAIN & UTILITY EASEMENT

PROP. PUBLIC VARIABLE WIDTH STREET TREE MAINTENANCE & UTILITY EASEMENT

PROP. PUBLIC VARIABLE WIDTH SEWER, WATER & UTILITY EASEMENT

PROP. PUBLIC 10' STREET TREE MAINTENANCE & UTILITY EASEMENT

EX. PUBLIC 20' SEWER & UTILITY EASEMENT L. 5395 F. 197

24' PRIVATE USE-IN-COMMON ACCESS EASEMENT TO BENEFIT PARCELS 659, 660, 661, 658, 656, 657 & 629

20' PRIVATE SWM AND UTILITY EASEMENT

PROP. PUBLIC 8" SEWER & WATER

PROP. PUBLIC 8" WATER

PROP. PUBLIC 8" SEWER & WATER & UTILITY EASEMENT

EX. WETLANDS

PUBLIC 100-YR FLOODPLAIN DRAINAGE & UTILITY EASEMENT

2 PERENNIAL STREAM

25' WETLAND BUFFER

50' STREAM BUFFER

NON-BUILDABLE LOT 40

APPROVED/TO BE BUILT ROCKBURN GRAVITY SEWER CAPITAL PROJECT NO. S-6200 CONTRACT NO. 10-3697 (P.V.C.)

MATCHLINE SEE SHEET 15 OF 17

MATCHLINE SEE SHEET 15 OF 17

LEGEND

- EXISTING CONTOUR — 440 —
- SPOT ELEVATION 482.53
- DIRECTION OF FLOW
- EXISTING TREES TO REMAIN
- SIGNS/LIGHT POLES — POST-TOP
- PROPOSED STREET TREE
- SOILS — SlB2 / SsE
- AREA OF 15 TO 24.9 PERCENT SLOPES
- AREA OF 24 PERCENT OR GREATER SLOPES
- PROP. PUBLIC UTILITY EASEMENT
- PROP. PUBLIC STREET TREE MAINTENANCE & UTILITY EASEMENT
- PROP. PUBLIC OR PRIVATE ACCESS EASEMENT
- PROP. FOREST CONSERVATON AREA (RETENTION)
- PROP. FOREST CONSERVATON AREA (REFORESTATION)
- PUBLIC 100-YR FLOODPLAIN DRAINAGE & UTILITY EASEMENT
- EXISTING WETLANDS

DEVELOPER

ELLICOTT CITY LAND HOLDINGS, LLC
8000 MAIN STREET
ELLICOTT CITY, MARYLAND 21043
ATTN: MR. DONALD R. REUWER
(410) 480-9105

OWNER

DENNIS PRESERVE, LLC
ELLICOTT CITY LAND HOLDINGS, LLC
SOLE MEMBER
8000 MAIN STREET
ELLICOTT CITY, MD 21043
410-480-9105

NO.	REVISION	DATE
1	REMOVE STORM DRAIN FROM I9 TO I10	1-20-06

LANDSCAPE PLAN

DENNIS PRESERVE
LOTS 1-58

TAX MAP 31 BLOCK 21 PARCEL '226'
1ST ELECTION DISTRICT HOWARD COUNTY, MARYLAND
REF.: S-01-06, P-02-27, WP-03-07 (APP. 11/05/02)

ROBERT H. VOGEL ENGINEERING, INC.
ENGINEERS • SURVEYORS • PLANNERS
8407 MAIN STREET TEL: 410.461.7666
ELLICOTT CITY, MD 21043 FAX: 410.461.8961

I CERTIFY THAT THE LANDSCAPING SHOWN ON THIS PLAN WILL BE DONE ACCORDING TO THE PLAN AND SECTION 16.124 OF THE HOWARD COUNTY CODE AND LANDSCAPE MANUAL. I FURTHER CERTIFY THAT UPON COMPLETION A CERTIFICATION OF LANDSCAPE INSTALLATION, ACCOMPANIED BY AN EXECUTED ONE YEAR GUARANTEE OF PLANT MATERIALS WILL BE SUBMITTED TO THE DEPARTMENT OF PLANNING AND ZONING

OWNER/DEVELOPER — DATE 9/11/04

APPROVED: DEPARTMENT OF PUBLIC WORKS

Chief, Bureau of Highways — Date 10-19-04

APPROVED: DEPARTMENT OF PLANNING AND ZONING

Chief, Division of Land Development — Date 10/27/04

Chief, Development Engineering Division — Date 10/28/04

STATE OF MARYLAND ROBERT HARRIS VOGEL No. 16193 PROFESSIONAL ENGINEER

ROBERT H. VOGEL, PE No.16193

DESIGN BY:	RHV
DRAWN BY:	CMH
CHECKED BY:	RHV
DATE:	SEPTEMBER 2004
SCALE:	1"=50'
W.O. NO.:	2017019.0

SHEET 14 OF 17

F-04-74

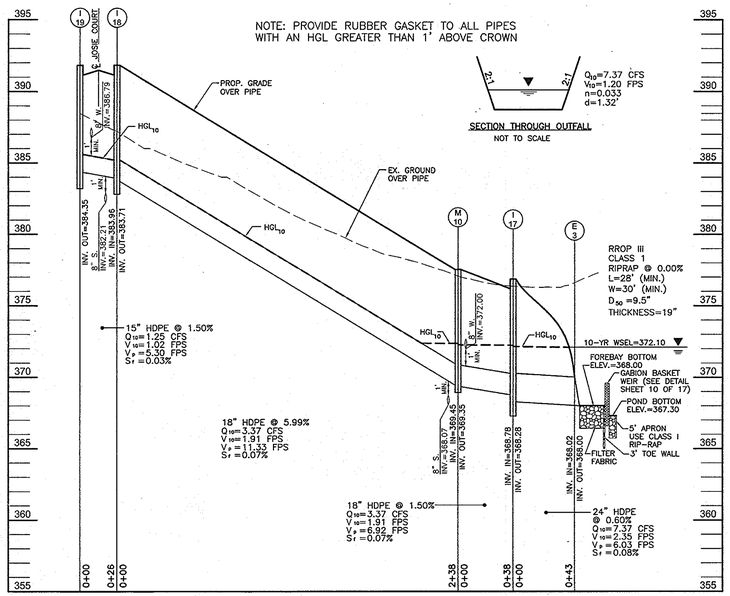

STORM DRAIN PROFILE

SCALE: 1"=50' HORIZ.
1"=5' VERT.

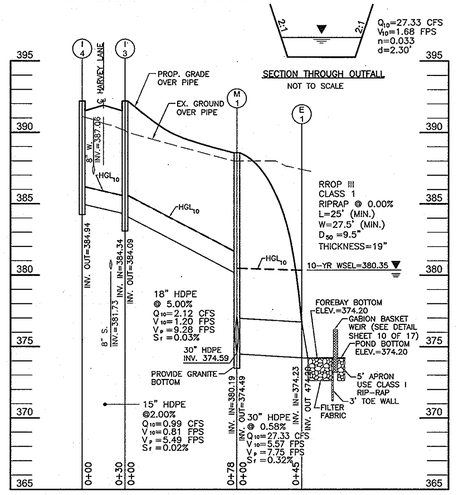

STORM DRAIN PROFILE

SCALE: 1"=50' HORIZ.
1"=5' VERT.

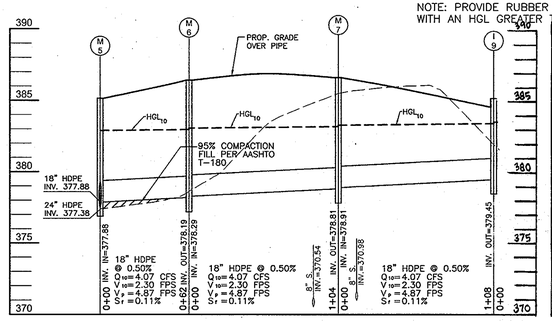

STORM DRAIN PROFILE

SCALE: 1"=50' HORIZ.
1"=5' VERT.

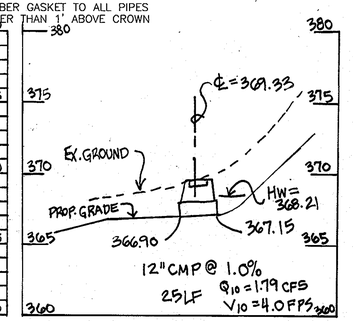

CULVERT PROFILE (USE-IN-COMMON)

SCALE: HOR.: 1" = 50'
VERT. 1" = 5'

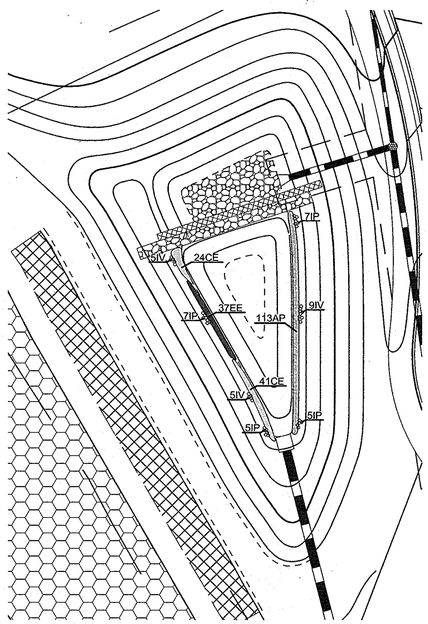

POND #1
PLANTING DETAIL

SCALE: 1"=30'

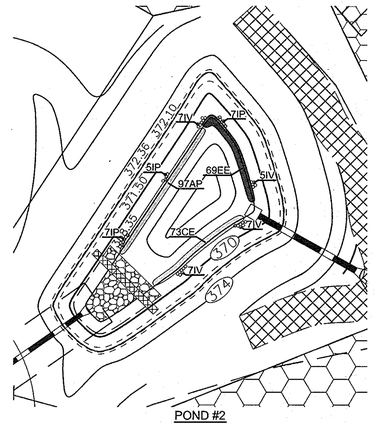

POND #2
PLANTING DETAIL

SCALE: 1"=30'

STORM DRAIN PROFILE

SCALE: 1"=50' HORIZ.
1"=5' VERT.

STRUCTURE SCHEDULE						
NO.	TYPE	LOCATION	TOP ELEV.	INV IN	INV OUT	REMARKS
E-1	30" CONCRETE END SECTION	N 568062.96 E 1375730.52	376.73	30" 374.23	374.20	SD 5.51
E-2	42" CONCRETE END SECTION	N 567789.02, E 1375769.44	375.69	42" 372.19	372.12	SD 5.51
E-3	24" CONCRETE END SECTION	N 567501.48 E 1375600.81	370.02	24" 368.02	368.00	SD 5.51
E-4	30" CONCRETE END SECTION	N 567519.80, E 1375115.54	369.06	30" 366.56	366.50	SD 5.51
I-1	TYPE 'A-10' INLET	CL STA. 6+79.22-12.43' R.	383.78 *383.11	24" 376.47 24" 376.47	30" 375.97	SD 4.41
I-2	TYPE 'A-10' INLET	CL STA. 6+79.22-12.43' L.	383.78 *383.11	24" 377.42	24" 377.32	SD 4.41
I-3	TYPE 'A-5' INLET	CL STA. 3+64.50-12.43' R.	391.52 *390.85	15" 384.34	18" 384.09	SD 4.40
I-4	TYPE 'A-5' INLET	CL STA. 3+64.50-12.43' L.	391.52 *390.85	-	15" 384.94	SD 4.40
I-5	TYPE 'A-5' INLET	CL STA. 0+72.76-12.43' L.	408.06 *407.39	18" 400.91	18" 400.81	SD 4.40
I-6	TYPE 'A-10' INLET	CL STA. 1+79.51-12.43' R.	411.94 *411.27	15" 404.20	18" 403.95	SD 4.41
I-7	TYPE 'A-10' INLET	CL STA. 1+79.51-12.43' L.	411.94 *411.27	-	15" 404.80	SD 4.41
I-8	TYPE 'A-10' INLET	CL STA. 8+45.31-12.43' L.	385.77 *385.10	18" 378.23	18" 378.13	SD 4.41
I-9	TYPE 'A-10' INLET	LP STA. 1+44.72	385.14 *384.47	15" 379.70	18" 379.45	SD 4.41
				-	-	
I-11	TYPE 'D' INLET	N 568029.59 E 1376155.17	391.13 *390.30	15" 384.37	18" 384.12	SD 4.39
I-12	YARD INLET	N 568134.11 E 1376299.69	394.30	-	15" 390.60	SD 4.14
I-13	TYPE 'D' INLET	N 568071.60 E 1375947.46	389.23 *388.40	24" 383.30	24" 383.20	SD 4.39
I-14	TYPE 'D' INLET	N 568285.48 E 1375968.45	393.93 *393.10	18" 389.40 18" 389.40	24" 388.90	SD 4.39
I-15	TYPE 'D' INLET	N 568316.08 E 1376046.50	397.63 *396.80	15" 393.10	18" 392.85	SD 4.39
I-16	YARD INLET	N 568370.27 E 1376132.73	403.10	-	15" 399.40	SD 4.14
I-17	TYPE 'A-10' INLET	LP STA. 1+49.31	376.86 *376.19	18" 368.78	24" 368.28	SD 4.41
I-18	TYPE 'A-10' INLET	CL STA. 3+02.91-10.43' R.	391.82 *391.15	15" 383.96	18" 383.71	SD 4.41
I-19	TYPE 'A-10' INLET	CL STA. 3+02.91-10.43' L.	391.82 *391.15	-	15" 384.35	SD 4.41
M-1	STANDARD 5' MANHOLE	CL STA. 4+47.31-26.21' R.	388.53	18" 380.19 30" 374.59	30" 374.49	G 5.13
M-2	STANDARD 5' MANHOLE	CL STA. 5+74.47-25.22' R.	385.16	30" 375.38	30" 375.28	G 5.13
M-3	STANDARD 5' MANHOLE	CL STA. 7+71.70-9.88' R.	383.81	24" 377.02	24" 376.92	G 5.13
M-5	STANDARD 5' MANHOLE	CL STA. 8+45.31-9.95' R.	385.14	18" 377.88 18" 377.88	24" 377.38	G 5.13
M-6	STANDARD 5' MANHOLE	CL STA. 9+08.57-9.81' R.	386.41	18" 378.29	18" 378.19	G 5.13
M-7	STANDARD 5' MANHOLE	CL STA. 10+14.30-4.08' R.	386.60	18" 378.91	18" 378.81	G 5.13
M-8	STANDARD 5' MANHOLE	N 568383.67 E 1375851.64	408.24	18" 400.41	18" 400.31	G 5.13
M-9	STANDARD 5' MANHOLE	CL STA. 0+13.92-16.99' L.	409.34	18" 402.19	18" 402.09	G 5.13
M-10	STANDARD 5' MANHOLE	N 567451.90 E 1375535.74	377.53	18" 369.45	18" 369.35	G 5.13
S-1	CONTROL STRUCTURE	N 567951.23 E 1375728.75	383.63	2.5" 375.10	42" 373.50	SEE DETAIL 12 OF 17
S-2	CONTROL STRUCTURE	N 567544.20 E 1375672.69	374.30	1.6" 368.40	30" 367.05	SEE DETAIL 13 OF 17

*ELEVATION AT THROAT OPENING

NOTES:
1. PROVIDE RUBBER GASKET TO ALL PIPES WITH AN HGL GREATER THAN 1' ABOVE CROWN.
2. PROVIDE GRANITE BOTTOM AT M1.
3. HDPE BEDDING SPECIFICATIONS ARE TO BE AS PER ASTM STANDARDS.

PIPE SCHEDULE		
PIPE SIZE	TYPE	TOTAL LENGTH
15"	HDPE	528 LF
18"	HDPE	1226 LF
24"	HDPE	589 LF
30"	HDPE	301 LF
30"	RCP ASTM C-361	47 LF
42"	RCP ASTM C-361	164 LF

10" DEEP POND #1 LANDSCAPE SCHEDULE				
KEY	QUAN.	BOTANICAL NAME	SIZE	REMARKS
IP	24	Iris pseudacoris Yellow Water Iris	plug	1.5' oc
IV	19	Iris versicolor Blue Flag (wear gloves)	plug	1.5' oc
AP	113	Alisma plantago-aquatica Water Plantain	plug	2' oc
CE	64	Cyperus esculentus Yellow Nut Sedge	plug	2' oc
EE	37	Eleocharis equisetoides Knotted Spike Rush	rhizome	2' oc

ADD THREE INCHES OF TOPSOIL TO PLANTING AREA. STABILIZE WITH 40 POUNDS PER ACRE OF A HYDROSEED MIX (WET MIX AND MEADOW MIX) FROM SYLVA NATIVE NURSERY OR EQUAL. ALL PLANT MATERIALS TO CONFORM TO THE MOST CURRENT AAN SPECIFICATIONS AND BE INSTALLED IN ACCORDANCE WITH LCAMW SPECIFICATIONS.

1' POND #2 LANDSCAPE SCHEDULE				
KEY	QUAN.	BOTANICAL NAME	SIZE	REMARKS
IP	19	Iris pseudacoris Yellow Water Iris	plug	1.5' oc
IV	26	Iris versicolor Blue Flag (wear gloves)	plug	1.5' oc
AP	97	Alisma plantago-aquatica Water Plantain	plug	2' oc
CE	73	Cyperus esculentus Yellow Nut Sedge	plug	2' oc
EE	69	Eleocharis equisetoides Knotted Spike Rush	rhizome	2' oc

ADD THREE INCHES OF TOPSOIL TO PLANTING AREA. STABILIZE WITH 40 POUNDS PER ACRE OF A HYDROSEED MIX (WET MIX AND MEADOW MIX) FROM SYLVA NATIVE NURSERY OR EQUAL. ALL PLANT MATERIALS TO CONFORM TO THE MOST CURRENT AAN SPECIFICATIONS AND BE INSTALLED IN ACCORDANCE WITH LCAMW SPECIFICATIONS.

APPROVED: DEPARTMENT OF PLANNING AND ZONING

Chief, Division of Land Development — Date 10/26/04

Chief, Development Engineering Division — Date 10/25/04

APPROVED: DEPARTMENT OF PUBLIC WORKS

Chief, Bureau of Highways — Date 10-19-04

DEVELOPER
ELLICOTT CITY LAND HOLDINGS, LLC
8000 MAIN STREET
ELLICOTT CITY, MARYLAND 21043
ATTN: MR. DONALD R. REUWER
(410) 480-9105

OWNER
DENNIS PRESERVE, LLC.
ELLICOTT CITY LAND HOLDINGS, LLC
SOLE MEMBER
8000 MAIN STREET
ELLICOTT CITY, MD 21043
410-480-9105

NO.	REVISION	DATE
1	REMOVE STORM DRAIN FROM I-9 TO I-10	1.20.06

STORM DRAIN PROFILES
DENNIS PRESERVE
LOTS 1-58

TAX MAP 31 BLOCK 21 PARCEL '226'
1ST ELECTION DISTRICT HOWARD COUNTY, MARYLAND
REF.: S-01-06, P-02-27, WP-03-07 (APP. 11/05/02)

ROBERT H. VOGEL ENGINEERING, INC.
ENGINEERS • SURVEYORS • PLANNERS
8407 MAIN STREET ELLICOTT CITY, MD 21043
TEL: 410.461.7666 FAX: 410.461.8961

STATE OF MARYLAND — ROBERT HARRIS VOGEL — No. 16193 — PROFESSIONAL ENGINEER
ROBERT H. VOGEL, PE No.16193

DESIGN BY:	RHV
DRAWN BY:	CMH
CHECKED BY:	RHV
DATE:	SEPTEMBER 2003
SCALE:	AS SHOWN
W.O. NO.:	2017019.0

SHEET 11 OF 17

F-04-74

SOILS LEGEND		
SYMBOL	NAME / DESCRIPTION	GROUP
CnB2	CHILLUM–FAIRFAX LOAMS, 1 TO 5 PERCENT SLOPES, MODERATELY ERODED	B
CnD3	CHILLUM–FAIRFAX LOAMS, 5 TO 15 PERCENT SLOPES, SEVERELY ERODED	B
EnB2	ELSINBORO LOAM, 3 TO 8 PERCENT SLOPES, MODERATELY ERODED	B
EnC2	ELSINBORO LOAM, 8 TO 15 PERCENT SLOPES, MODERATELY ERODED	B
IuB	IUKA LOAM, LOCAL ALLUVIUM, 1 TO 5 PERCENT SLOPES	C
KhC2	KEYPORT SILT LOAM, 3 TO 10 PERCENT SLOPES, MODERATELY ERODED	C
LaB2	LEGORE SILT LOAM, 3 TO 8 PERCENT SLOPES, MODERATELY ERODED	B
LgC3	LEGORE SILTY CLAY LOAM, 8 TO 15 PERCENT SLOPES, SEVERELY ERODED	B
Mo	MIXED ALLUVIAL LAND	–
MrE	MONTALTO AND RELAY SOILS, 15 TO 45 PERCENT SLOPES	C
ScD	SANDY AND CLAYEY LAND, MODERATELY SLOPING	–
SlB2	SASSAFRAS LOAM, 1 TO 5 PERCENT SLOPES, MODERATELY ERODED	B
SlC2	SASSAFRAS LOAM, 5 TO 10 PERCENT SLOPES, MODERATELY ERODED	B
SsE	SASSAFRAS SOILS, 15 TO 40 PERCENT SLOPES	B
WcB	WATCHUNG SILT LOAM, 3 TO 8 PERCENT SLOPES	D

MAPS 20 & 25 OF THE HOWARD COUNTY SOIL SURVEY

LEGEND

- EXISTING CONTOUR
- PROPOSED CONTOUR
- SPOT ELEVATION / DIRECTION OF FLOW
- EXISTING TREES TO REMAIN
- SIGNS/LIGHT POLES
- PROPOSED STREET TREE
- SOILS
- AREA OF 15 TO 24.9 PERCENT SLOPES
- AREA OF 24 PERCENT OR GREATER SLOPES
- PROP. PUBLIC UTILITY EASEMENT
- DRAINAGE DIVIDE

DRAINAGE AREA TABULATIONS					
NO.	AREA	'C'	% IMP.	SOIL TYPE	ZONE
I–1	0.31 AC.	0.69	77%	B/C	R–20
I–2	1.56 AC.	0.35	39%	B	R–20
I–3	0.33 AC.	0.54	62%	B	R–20
I–4	0.39 AC.	0.36	40%	B	R–20
I–5	1.01 AC.	0.31	34%	B	R–20
I–6	0.12 AC.	0.61	64%	B	R–20
I–7	1.38 AC.	0.29	33%	B	R–20
I–8	0.83 AC.	0.30	33%	B	R–20
I–9	1.14 AC.	0.31	39%	B	R–20
I–11	1.25 AC.	0.26	30%	B	R–20
I–12	2.48 AC.	0.22	18%	B	R–20
I–13	0.96 AC.	0.26	30%	B	R–20
I–14	1.07 AC.	0.25	28%	B	R–20
I–15	0.71 AC.	0.26	30%	B	R–20
I–16	1.50 AC.	0.19	8%	B	R–20
I–17	1.75 AC.	0.36	39%	B/C/D	R–20
I–18	0.91 AC.	0.36	38%	B/C	R–20
I–19	0.49 AC.	0.38	41%	B	R–20

NO.	REVISION	DATE
1	REGRADE LOTS 20-32	1.20.06

STORM DRAIN DRAINAGE AREA MAP

DENNIS PRESERVE
LOTS 1-58

TAX MAP 31 BLOCK 21 PARCEL '226'
1ST ELECTION DISTRICT HOWARD COUNTY, MARYLAND
REF.: S-01-06, P-02-27, WP-03-07 (APP. 11/05/02)

DEVELOPER
ELLICOTT CITY LAND HOLDINGS LLC
8000 MAIN STREET
ELLICOTT CITY, MARYLAND 21043
ATTN: MR. DONALD R. REUWER
(410) 480-9105

OWNER
DENNIS PRESERVE LLC
ELLICOTT CITY LAND HOLDINGS LLC
SOLE MEMBER
8000 MAIN STREET
ELLICOTT CITY, MD 21043
410-480-9105

APPROVED: DEPARTMENT OF PUBLIC WORKS
Chief, Bureau of Highways — Date 10-19-04

APPROVED: DEPARTMENT OF PLANNING AND ZONING
Chief, Division of Land Development — Date 10/27/04
Chief, Development Engineering Division — Date 10/25/04

ROBERT H. VOGEL ENGINEERING, INC.
ENGINEERS • SURVEYORS • PLANNERS
8407 MAIN STREET ELLICOTT CITY, MD 21043
TEL: 410.461.7666 FAX: 410.461.8961

ROBERT H. VOGEL, PE No.16193

DESIGN BY:	RHV
DRAWN BY:	CMH
CHECKED BY:	RHV
DATE:	SEPTEMBER 2004
SCALE:	1"=50'
W.O. NO.:	2017019.0

SHEET 8 OF 17

F-04-74

SOILS LEGEND		
SYMBOL	NAME / DESCRIPTION	GROUP
CnB2	CHILLUM–FAIRFAX LOAMS, 1 TO 5 PERCENT SLOPES, MODERATELY ERODED	B
CnD3	CHILLUM–FAIRFAX LOAMS, 5 TO 15 PERCENT SLOPES, SEVERELY ERODED	B
EnB2	ELSINBORO LOAM, 3 TO 8 PERCENT SLOPES, MODERATELY ERODED	B
EnC2	ELSINBORO LOAM, 8 TO 15 PERCENT SLOPES, MODERATELY ERODED	B
IuB	IUKA LOAM, LOCAL ALLUVIUM, 1 TO 5 PERCENT SLOPES	C
KhC2	KEYPORT SILT LOAM, 3 TO 10 PERCENT SLOPES, MODERATELY ERODED	C
LeB2	LEGORE SILT LOAM, 3 TO 8 PERCENT SLOPES, MODERATELY ERODED	B
LgC3	LEGORE SILTY CLAY LOAM, 8 TO 15 PERCENT SLOPES, SEVERELY ERODED	B
Mo	MIXED ALLUVIAL LAND	–
MrE	MONTALTO AND RELAY SOILS, 15 TO 45 PERCENT SLOPES	C
ScD	SANDY AND CLAYEY LAND, MODERATELY SLOPING	–
SIB2	SASSAFRAS LOAM, 1 TO 5 PERCENT SLOPES, MODERATELY ERODED	B
SIC2	SASSAFRAS LOAM, 5 TO 10 PERCENT SLOPES, MODERATELY ERODED	B
SsE	SASSAFRAS SOILS, 15 TO 40 PERCENT SLOPES	B
WaB	WATCHUNG SILT LOAM, 3 TO 8 PERCENT SLOPES	D

MAPS 20 & 25 OF THE HOWARD COUNTY SOIL SURVEY

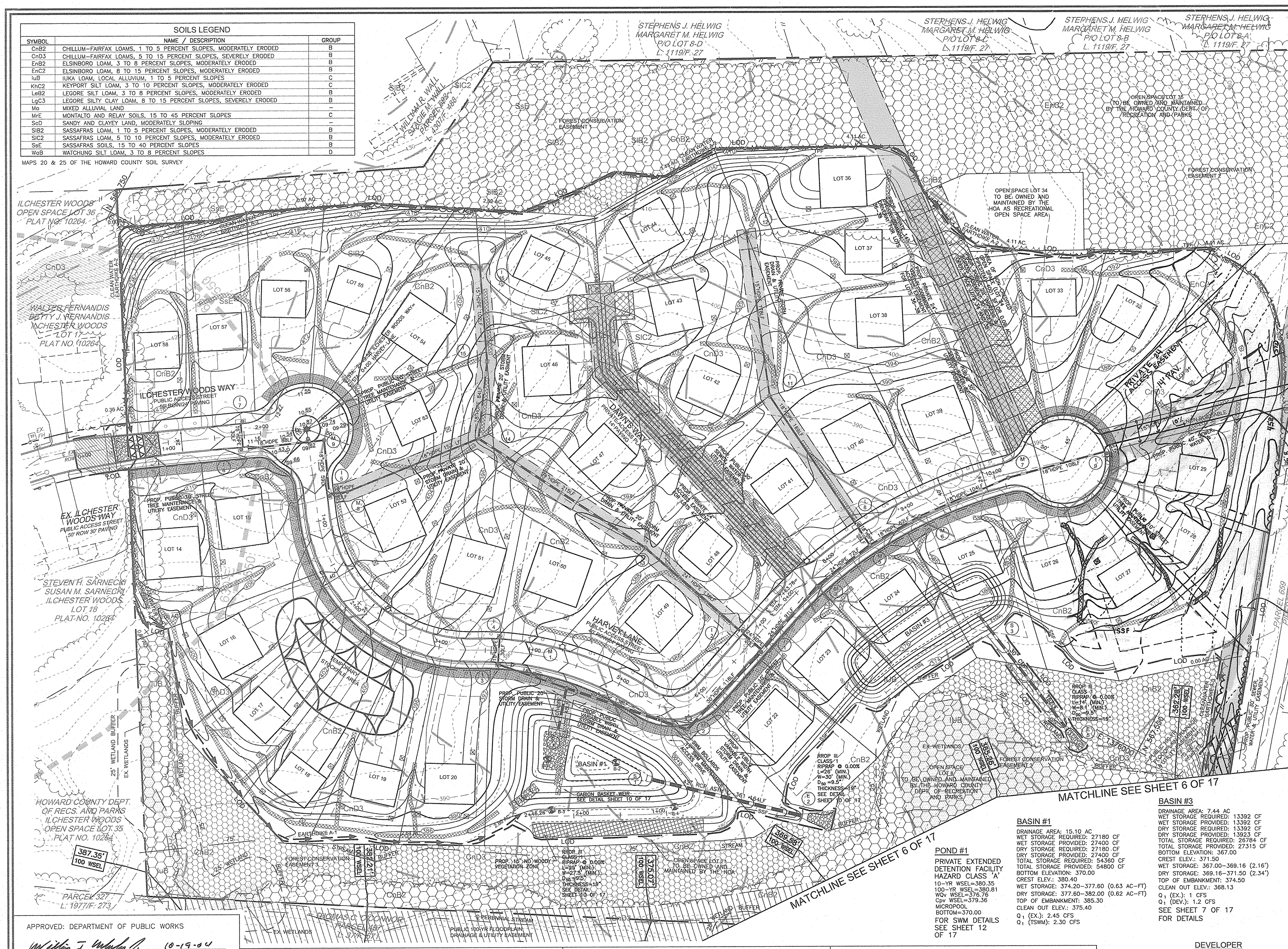

LEGEND

- EXISTING CONTOUR
- PROPOSED CONTOUR
- SPOT ELEVATION
- DIRECTION OF FLOW
- EXISTING TREES TO REMAIN
- SIGNS/LIGHT POLES — POST-TOP
- PROPOSED STREET TREE
- SOILS
- AREA OF 15 TO 24.9 PERCENT SLOPES
- AREA OF 24 PERCENT OR GREATER SLOPES
- PROP. PUBLIC UTILITY EASEMENT
- PROP. PUBLIC STREET TREE MAINTENANCE & UTILITY EASEMENT
- PROP. PUBLIC OR PRIVATE ACCESS EASEMENT
- PROP. FOREST CONSERVATON AREA (RETENTION)
- PROP. FOREST CONSERVATON AREA (REFORESTATION)
- PUBLIC 100-YR FLOODPLAIN DRAINAGE & UTILITY EASEMENT
- EXISTING WETLANDS
- SUPER SILT FENCE — SSF
- LIMIT OF DISTURBANCE — LOD
- EROSION CONTROL MATTING
- EARTHDIKE
- STABILIZED CONSTRUCTION ENTRANCE — SCE
- GABION INFLOW PROTECTION
- TREE PROTECTION FENCE — TPF
- PROPOSED DRYWELL

POND #1

PRIVATE EXTENDED DETENTION FACILITY HAZARD CLASS 'A'
10-YR WSEL=380.35
100-YR WSEL=380.81
WQv WSEL=376.76
Cpv WSEL=379.36
MICROPOOL BOTTOM=370.00
FOR SWM DETAILS SEE SHEET 12 OF 17

BASIN #1

DRAINAGE AREA: 15.10 AC
WET STORAGE REQUIRED: 27180 CF
WET STORAGE PROVIDED: 27400 CF
DRY STORAGE REQUIRED: 27180 CF
DRY STORAGE PROVIDED: 27400 CF
TOTAL STORAGE REQUIRED: 54360 CF
TOTAL STORAGE PROVIDED: 54800 CF
BOTTOM ELEVATION: 370.00
CREST ELEV.: 380.40
WET STORAGE: 374.20–377.60 (0.63 AC–FT)
DRY STORAGE: 377.60–382.00 (0.62 AC–FT)
TOP OF EMBANKMENT: 385.30
CLEAN OUT ELEV.: 375.40
Q_1 (EX.): 2.45 CFS
Q_1 (TSWM): 2.30 CFS

BASIN #3

DRAINAGE AREA: 7.44 AC
WET STORAGE REQUIRED: 13392 CF
WET STORAGE PROVIDED: 13392 CF
DRY STORAGE REQUIRED: 13392 CF
DRY STORAGE PROVIDED: 13923 CF
TOTAL STORAGE REQUIRED: 26784 CF
TOTAL STORAGE PROVIDED: 27315 CF
BOTTOM ELEVATION: 367.00
CREST ELEV.: 371.50
WET STORAGE: 367.00–369.16 (2.16')
DRY STORAGE: 369.16–371.50 (2.34')
TOP OF EMBANKMENT: 374.50
CLEAN OUT ELEV.: 368.13
Q_1 (EX.): 1 CFS
Q_1 (DEV.): 1.2 CFS
SEE SHEET 7 OF 17 FOR DETAILS

NO.	REVISION	DATE
1	REGRADE LOTS 26 – 32	1.20.06

APPROVED: DEPARTMENT OF PUBLIC WORKS

William J. Malcolm Jr. 10-19-04
Chief, Bureau of Highways — Date

APPROVED: DEPARTMENT OF PLANNING AND ZONING

Cindy Hamilton 10/27/04
Chief, Division of Land Development — Date

10/25/04
Chief, Development Engineering Division — Date

These plans have been reviewed for HOWARD SOIL CONSERVATION DISTRICT and meet technical requirements for small pond construction and soil erosion and sediment control.

Jim Myers / 6S. 9/27/04
USDA–Natural Resources Conservation Service — Date

These plans for small pond construction and soil erosion and sediment control meet the requirements of the HOWARD SOIL CONSERVATION DISTRICT.

9/27/04
Howard Soil Conservation District — Date

DEVELOPER'S CERTIFICATE

"I/We certify that all development and construction will be done according to this plan of development for sediment and erosion control, and that all responsible personnel involved in the construction project will have a Certificate of Attendance at a Department of Environment Approved Training Program for the Control of Sediment and Erosion before beginning the project. I also authorize periodic on-site inspections by the Howard Soil Conservation District. I shall engage a registered professional engineer to supervise pond construction and provide the Howard Soil Conservation District with and "As-Built" plan of the pond within 30 days of completion."

9/14/04
Signature of Developer — Date

ENGINEER'S CERTIFICATE

"I hereby certify that this plan for pond construction and sediment and erosion control represents a practical and workable plan based on my personal knowledge of the site conditions and that it was prepared in accordance with the requirements of the Howard Soil Conservation District. I have notified the developer that he/she must engage a Registered Professional Engineer to supervise pond construction and provide the Howard Soil Conservation District with an "As-Built" plan of the pond within 30 days of completion."

9/13/04
Signature of Engineer — Date
Robert H. Vogel

DEVELOPER

ELLICOTT CITY LAND HOLDINGS, LLC
8000 MAIN STREET
ELLICOTT CITY, MARYLAND 21043
ATTN: MR. DONALD R. REUWER
(410) 480-9105

OWNER

DENNIS PRESERVE, LLC
ELLICOTT CITY LAND HOLDINGS, LLC
SOLE MEMBER
8000 MAIN STREET
ELLICOTT CITY, MD 21043
410-480-9105

GRADING AND SEDIMENT & EROSION CONTROL PLAN

DENNIS PRESERVE

LOTS 1-58

TAX MAP 31 BLOCK 21 — PARCEL '226'
1ST ELECTION DISTRICT — HOWARD COUNTY, MARYLAND
REF.: S-01-06, P-02-27, WP-03-07 (APP. 11/05/02)

ROBERT H. VOGEL ENGINEERING, INC.
ENGINEERS • SURVEYORS • PLANNERS
8407 MAIN STREET ELLICOTT CITY, MD 21043
TEL: 410.461.7666 FAX: 410.461.8961

STATE OF MARYLAND — ROBERT HARRIS VOGEL — No 16193 — PROFESSIONAL ENGINEER
ROBERT H. VOGEL, PE No.16193

DESIGN BY: RHV
DRAWN BY: CMH
CHECKED BY: RHV
DATE: SEPTEMBER 2004
SCALE: 1"=50'
W.O. NO.: 2017019.0

F-04-74

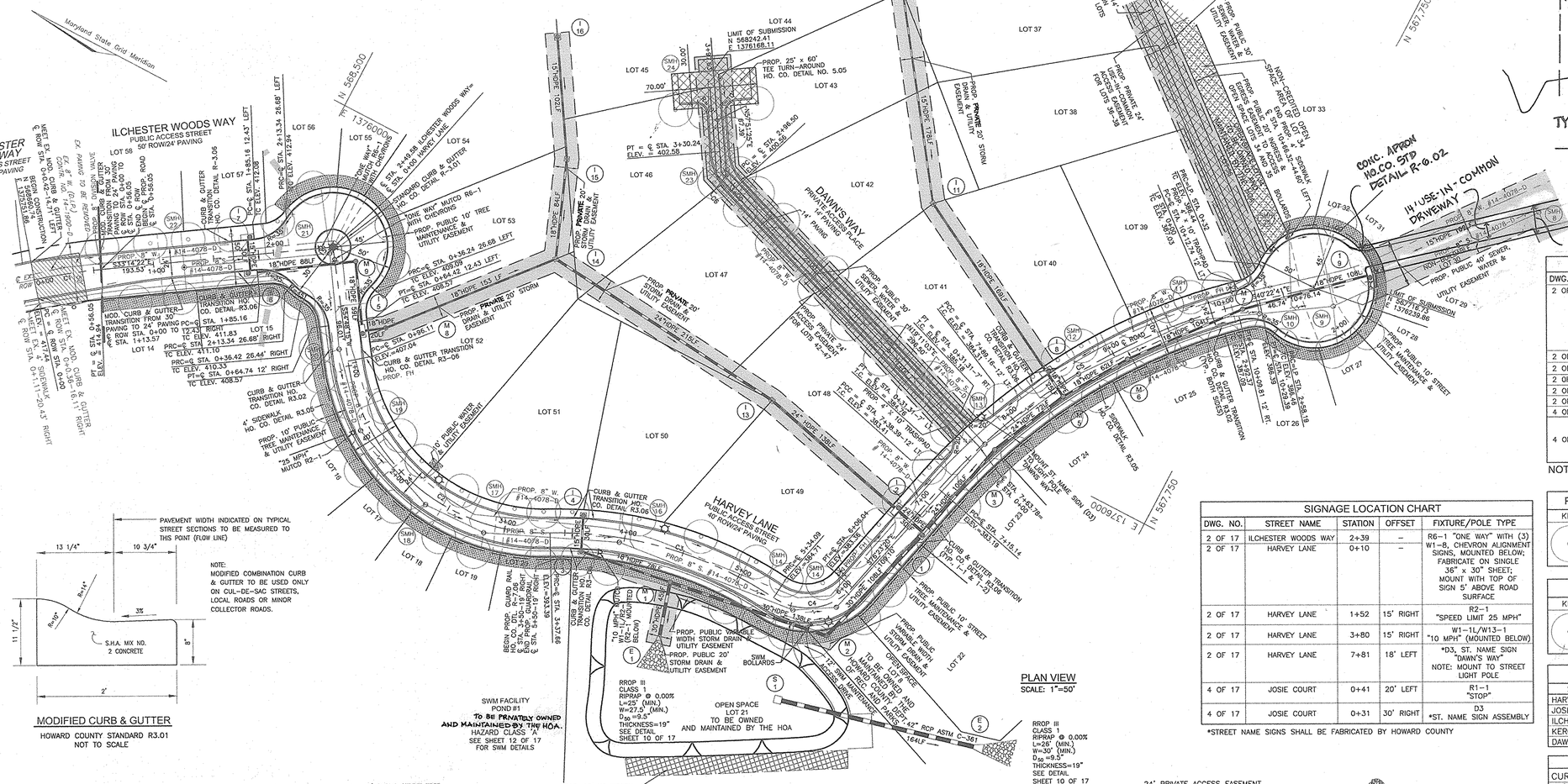

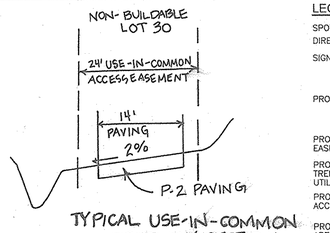

TYPICAL USE-IN-COMMON DRIVEWAY SECTION

NTS

LEGEND

- SPOT ELEVATION 482.53
- DIRECTION OF FLOW
- SIGNS/LIGHT POLES — POST-TOP, 100 WATT; POST-TOP, 150 WATT
- PROPOSED STREET TREE
- PROP. PUBLIC UTILITY EASEMENT
- PROP. PUBLIC STREET TREE MAINTENANCE & UTILITY EASEMENT
- PROP. PUBLIC OR PRIVATE ACCESS EASEMENT
- PROP. FOREST CONSERVATON AREA (RETENTION)
- PROP. FOREST CONSERVATON AREA (REFORESTATION)
- PUBLIC 100-YR FLOODPLAIN DRAINAGE & UTILITY EASEMENT
- EXISTING WETLANDS

STREET LIGHT LOCATION CHART

DWG. NO.	STREET NAME	STATION	OFFSET	FIXTURE/POLE TYPE
2 OF 17	HARVEY LANE	0+00	–	150 WATT HPS VAPOR PREMIER POST-TOP FIXTURE MOUNTED ON A 14' BLACK FIBERGLASS MOUNTED ON A 14' POLE NOTE: ALL FOUR LENSES IN THIS FIXTURE SHALL BE "STREET SIDE"
2 OF 17	HARVEY LANE	2+29	15' LEFT	100 WATT HPS VAPOR PREMIER POST-TOP FIXTURE MOUNTED ON A 14' BLACK FIBERGLASS MOUNTED ON A 14' POLE NOTE: MOUNT D3, ST. NAME SIGN ASSEMBLY, TO LIGHT POLE AT STA. 7+81
2 OF 17	HARVEY LANE	4+30	15' LEFT	
2 OF 17	HARVEY LANE	5+78	14' RIGHT	
2 OF 17	HARVEY LANE	7+81	18' LEFT	
2 OF 17	HARVEY LANE	LP 1+53	4' LEFT	
4 OF 17	JOSIE COURT	LP 1+58	4' LEFT	
4 OF 17	JOSIE COURT	0+35	23' RIGHT	150 WATT HPS VAPOR PREMIER POST-TOP FIXTURE MOUNTED ON A 14' BLACK FIBERGLASS POLE

NOTE: A MINIMUM OF 20' IS REQUIRED BETWEEN ANY STREET LIGHT AND ANY TREE

SIGNAGE LOCATION CHART

DWG. NO.	STREET NAME	STATION	OFFSET	FIXTURE/POLE TYPE
2 OF 17	ILCHESTER WOODS WAY	2+39	–	R6-1 "ONE WAY" WITH (3) W1-8, CHEVRON ALIGNMENT SIGNS, MOUNTED BELOW; FABRICATE ON SINGLE 36" x 30" SHEET; MOUNT WITH TOP OF SIGN 5' ABOVE ROAD SURFACE
2 OF 17	HARVEY LANE	0+10	–	
2 OF 17	HARVEY LANE	1+52	15' RIGHT	R2-1 "SPEED LIMIT 25 MPH"
2 OF 17	HARVEY LANE	3+80	15' RIGHT	W1-1L/W13-1 "10 MPH" (MOUNTED BELOW)
2 OF 17	HARVEY LANE	7+81	18' LEFT	*D3, ST. NAME SIGN "DAWN'S WAY" NOTE: MOUNT TO STREET LIGHT POLE
4 OF 17	JOSIE COURT	0+41	20' LEFT	R1-1 "STOP"
4 OF 17	JOSIE COURT	0+31	30' RIGHT	D3 *ST. NAME SIGN ASSEMBLY

*STREET NAME SIGNS SHALL BE FABRICATED BY HOWARD COUNTY

PRIVATE ACCESS PLACE STREET TREE SCHEDULE

KEY	QUAN.	BOTANICAL NAME	SIZE	REM.
○	20	ACER RUBRUM 'AUTUMN FLAME'	2 1/2"–3" CAL.	B & B

PUBLIC ROAD STREET TREE SCHEDULE

KEY	QUAN.	BOTANICAL NAME	SIZE	REM.
○	102	ACER RUBRUM 'AUTUMN FLAME'	2 1/2"–3" CAL.	B & B

STREET TREE CALCULATIONS

STREET NAME	LINEAR FEET	NO. REQUIRED	NO. PROVIDED
HARVEY LANE	2228/40	56	56
JOSIE COURT	1172/40	29	29
ILCHESTER WOODS WAY	503/40	13	13
KERGER ROAD	139/4	4	4
DAWN'S WAY	795/40	20	20

CURVE TABLE

CURVE	LENGTH	RADIUS	DELTA ANGLE	TANGENT	CHORD DIRECTION	CHORD LENGTH
C1	56.05'	449.40'	6°25'21"	28.06'	S 26°28'52" E	56.02'
C2	241.65'	165.00'	83°54'49"	148.34'	S 12°50'50" W	220.63'
C3	196.43'	320.03'	35°10'02"	101.42'	S 11°31'29" E	193.36'
C4	71.95'	50.00'	82°26'56"	43.81'	S 35°09'59" E	65.90'
C5	314.25'	500.00'	36°00'39"	162.51'	S 58°23'01" E	309.11
C6	33.75'	50.00'	38°40'22"	17.55'	N 38°31'14" E	33.11'

NO.	REVISION	DATE
1	DELETE STORMDRAIN SYSTEM FROM I-9 TO I-10	1.20.06

NOTE: MODIFIED COMBINATION CURB & GUTTER TO BE USED ONLY ON CUL-DE-SAC STREETS, LOCAL ROADS OR MINOR COLLECTOR ROADS.

MODIFIED CURB & GUTTER

HOWARD COUNTY STANDARD R3.01
NOT TO SCALE

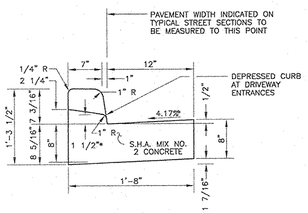

*NOTE : DEPRESSED CURB IN HANDICAP ACCESSABLE AREAS SHALL HAVE A 0.0417'(1/2") RISE FROM PAVING TO TOP OF CURB.

STANDARD COMBINATION CURB AND GUTTER

HOWARD COUNTY STANDARD R-3.01
NOT TO SCALE

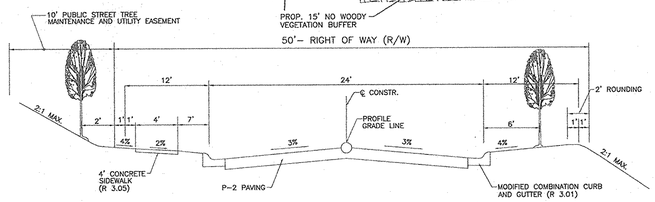

TYPICAL ROADWAY SECTION

CLASSIFICATION: PUBLIC ACCESS STREET

ILCHESTER WOODS WAY (CL. ROW STA. 0+00 TO CL STA. 2+49.58)
DESIGN SPEED : 25 MPH
SECTION NOT TO SCALE

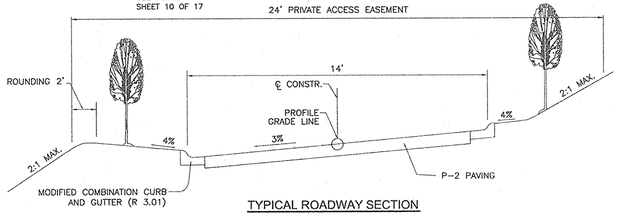

TYPICAL ROADWAY SECTION

CLASSIFICATION: PRIVATE ACCESS PLACE

DESIGN SPEED : 15 MPH
SECTION NOT TO SCALE

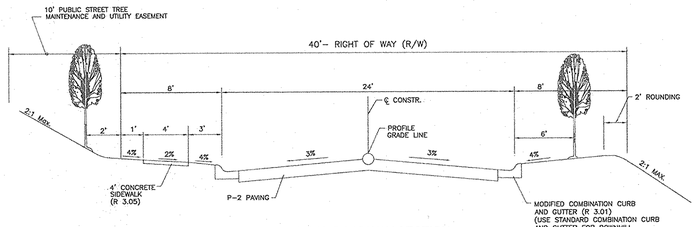

TYPICAL ROADWAY SECTION

CLASSIFICATION: PUBLIC ACCESS STREET

HARVEY LANE (CL STA. 0+00 TO CL STA. 10+12.74)
DESIGN SPEED : 25 MPH
SECTION NOT TO SCALE

P-2 LIGHT DUTY PAVING SECTION

N.T.S

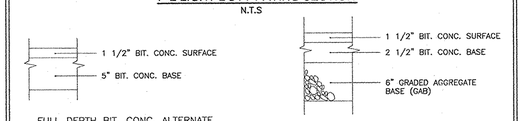

APPROVED: DEPARTMENT OF PUBLIC WORKS

William F. Weber Jr. 10-19-04
Chief, Bureau of Highways — Date

APPROVED: DEPARTMENT OF PLANNING AND ZONING

Cindy Hamilton 10/27/04
Chief, Division of Land Development — Date

10/25/04
Chief, Development Engineering Division — Date

DEVELOPER
ELLICOTT CITY LAND HOLDINGS, LLC
8000 MAIN STREET
ELLICOTT CITY, MARYLAND 21043
ATTN: MR. DONALD R. REUWER
(410) 480-9105

OWNER
DENNIS PRESERVE, LLC
ELLICOTT CITY LAND HOLDINGS LLC
SOLE MEMBER
8000 MAIN STREET
ELLICOTT CITY, MD 21043
410-480-9105

ROAD CONSTRUCTION PLAN

DENNIS PRESERVE
LOTS 1-58

TAX MAP 31 BLOCK 21 PARCEL '226'
1ST ELECTION DISTRICT HOWARD COUNTY, MARYLAND
REF.: S-01-06, P-02-27, WP-03-07 (APP. 11/05/02)

ROBERT H. VOGEL ENGINEERING, INC.
ENGINEERS • SURVEYORS • PLANNERS
8407 MAIN STREET ELLICOTT CITY, MD 21043
TEL: 410.461.7666 FAX: 410.461.8961

STATE OF MARYLAND — ROBERT HARRIS VOGEL — No. 16193 — PROFESSIONAL ENGINEER
ROBERT H. VOGEL, PE No.16193

DESIGN BY:	RHV
DRAWN BY:	CMH
CHECKED BY:	RHV
DATE:	SEPTEMBER 2004
SCALE:	AS SHOWN
W.O. NO.:	2017019.0

SHEET 2 OF 17

F-04-74

FINAL ROAD CONSTRUCTION PLAN
DENNIS PRESERVE
LOTS 1-58
HOWARD COUNTY, MARYLAND

BENCHMARK NO. 1: COUNTY CONTROL #31EA
N 569641.123 E 1374815.935
ELEV. = 469.603

BENCHMARK NO. 2: COUNTY CONTROL #31EB
N 568730.984 E 1376273.491
ELEV. = 453.396

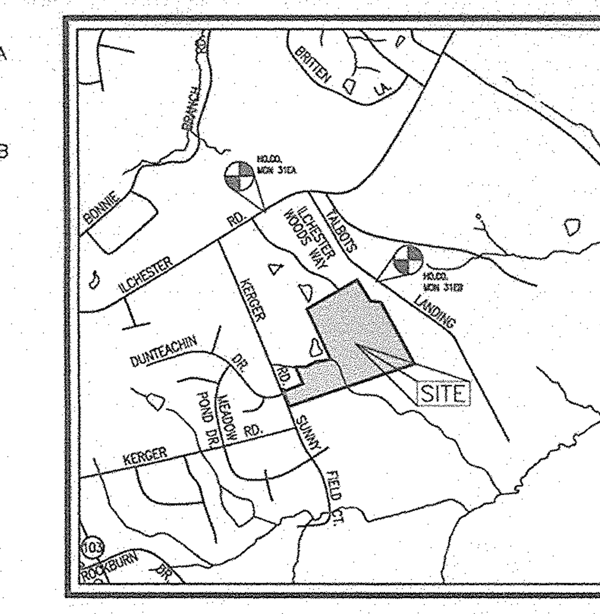

VICINITY MAP
SCALE: 1"=2000'

SITE DATA

LOCATION: TAX MAP 31, GRID 21, PARCEL '226'
1ST ELECTION DISTRICT
EXISTING ZONING: R-20
DPZ REFERENCES: S-01-06, P-02-27, WP-03-07 (APP. 11/05/02)
GROSS AREA OF PROJECT: 31.37 AC.
AREA OF 100-YR FLOODPLAIN: 1.57 AC. (68,284 SF±)
NET AREA OF PROJECT: 29.80 AC.
AREA OF PUBLIC RIGHT-OF-WAY DEDICATION: 2.09 AC. (91,223 SF±)
AREA OF OPEN SPACE REQUIRED: 30% OR 9.41 AC.
AREA OF CREDITED OPEN SPACE PROVIDED: 34.3% OR 10.75 AC. (468,159 SF±)
AREA OF NON-CREDITED OPEN SPACE: 0.09 AC.
TOTAL AREA OF OPEN SPACE PROVIDED: 10.84 AC. OR 34.6%
APPROXIMATE LIMIT OF DISTURBANCE: 21.55 AC±

GENERAL NOTES

1. ALL ASPECTS OF THE PROJECT ARE IN CONFORMANCE WITH THE LATEST HOWARD COUNTY STANDARDS UNLESS WAIVERS HAVE BEEN APPROVED.
2. ALL CONSTRUCTION SHALL BE IN ACCORDANCE WITH THE LATEST STANDARDS AND SPECIFICATIONS OF HOWARD COUNTY PLUS MSHA STANDARDS AND SPECIFICATIONS IF APPLICABLE.
3. THE CONTRACTOR SHALL NOTIFY THE DEPARTMENT OF PUBLIC WORKS/BUREAU OF ENGINEERING/CONSTRUCTION INSPECTION DIVISION AT (410) 313-1880 AT LEAST FIVE (5) WORKING DAYS PRIOR TO THE START OF WORK.
4. THE CONTRACTOR SHALL NOTIFY "MISS UTILITY" AT 1-800-257-7777 AT LEAST 48 HOURS PRIOR TO ANY EXCAVATION WORK BEING DONE.
5. TRAFFIC CONTROL DEVICES, MARKINGS AND SIGNING SHALL BE IN ACCORDANCE WITH THE LATEST EDITION OF THE MANUAL OF UNIFORM TRAFFIC CONTROL DEVICES (MUTCD). ALL STREET AND REGULATORY SIGNS SHALL BE IN PLACE PRIOR TO THE PLACEMENT OF ANY ASPHALT.
6. DEED REFERENCE: 5342/533
7. THE PROJECT BOUNDARY IS BASED ON A SURVEY PREPARED BY FREDERICK WARD ASSOCIATES, DATED DECEMBER 2001.
8. THE TOPOGRAPHY SHOWN HEREON IS BASED ON AERIAL PHOTOGRAMETRIC SURVEY PREPARED BY GREENMAN PEDERSON, DATED FEBRUARY 2001.
9. COORDINATE DATUM IS BASED ON THE MARYLAND COORDINATE SYSTEM (NAD 83) AS PROJECTED BY THE FOLLOWING HOWARD COUNTY GEODETIC CONTROL STATIONS: #31EA & #31EB
10. WATER AND SEWER FOR THIS PROJECT WILL BE PUBLIC AND PROVIDED THROUGH CONTRACT NO. 14-4078-D.
11. STORMWATER MANAGEMENT IS PROVIDED FOR THIS DEVELOPMENT. THE TWO STORMWATER MANAGEMENT FACILITIES ARE LOCATED ON OPEN SPACE LOTS 9 AND 21 AND WILL BE PRIVATELY OWNED AND MAINTAINED BY THE HOA. POND 1. AND POND #2 ARE MICROPOOL EXTENDED DETENTION FACILITES PROVIDING THE REQUIRED WQv AND Cpv FOR THE DEVELOPMENT. BOTH FACILITIES ARE HAZARD CLASS 'A'.
12. EXCAVATION OF SEDIMENT FROM SWM MAINTENANCE TO BE HAULED OFF-SITE AND STOCKPILED ON-SITE.
13. STORMWATER MANAGEMENT SOIL BORINGS FOR THIS SITE ARE BASED ON A GEOTECHNICAL ANALYSIS PREPARED BY HILLIS-CARNES ENGINEERING ASSOC., DATED JANUARY 2002.
14. HDPE BEDDING SPECIFICATIONS ARE TO BE AS PER ASTM STANDARDS.
15. WETLANDS AND STREAMS SHOWN ON-SITE ARE BASED ON A FIELD INVESTIGATION BY EXPLORATION RESEARCH, DATED JUNE 2000, AND THE AERIAL PHOTOGRAMETRIC SURVEY PREPARED BY GREENMAN PEDERSON.
16. FLOODPLAIN SHOWN ON-SITE IS BASED ON A STUDY PREPARED BY FREDERICK WARD ASSOCIATES, DATED MAY 2002.
17. A FOREST STAND DELINEATION PLAN WAS PREPARED FOR THIS SITE BY VOGEL AND ASSOC., DATED JUNE 2000, AND APPROVED UNDER S-01-06.
18. FOREST CONSERVATION PLAN PREPARED BY FREDERICK WARD ASSOCIATES, DATED JANUARY 2002. FOREST CONSERVATION REQUIREMENTS PER SECTION 16.1202 OF THE HOWARD COUNTY CODE AND THE FOREST CONSERVATION MANUAL FOR THIS SUBDIVISION WILL BE FULFILLED BY THE RETENTION OF EXISTING FOREST IN THE AMOUNT OF 4.89 AC., ON-SITE REFORESTATION IN THE AMOUNT OF 2.03 AC. AND FEE-IN-LIEU OF $6,534.00 FOR THE REMAINING 0.30 AC. OF REFORESTATION. TOTAL OBLIGATION FOR THIS SITE IS 4.89 AC. OF RETENTION AND 2.33 AC. OF REFORESTION. FINANCIAL SURETY IN THE AMOUNT OF $86,815.10 WILL BE POSTED WITH THE FOREST CONSERVATION AGREEMENT.
19. NO CLEARING, GRADING, OR CONSTRUCTION IS PERMITTED WITHIN THE WETLANDS, STREAMS, OR THEIR BUFFERS, AND THE FOREST CONSERVATION EASEMENTS EXCEPT THOSE AREAS SPECIFIED FOR THE CONTRUCTION OF PUBLIC WATER AND PUBLIC SEWER. (MDE PERMIT TRACKING NO. 04-NT-0197/200463350)
20. APFO TRAFFIC STUDY PREPARED BY THE TRAFFIC GROUP, DATED AUGUST 2000, AND APPROVED UNDER S-01-06.
21. PERIMETER AND STORMWATER MANAGEMENT LANDSCAPING REQUIREMENTS AS SET FORTH IN SECTION 16.124 OF THE SUBDIVISION REGULATIONS AND THE HOWARD COUNTY LANDSCAPE MANUAL SHALL BE COMPLIED WITH. A FINANCIAL SURETY IN THE AMOUNT OF $26,280.00 FOR THE REQUIRED 51 SHADE TREES, 31 EVERGREEN TREES, 11 SHRUBS, AND 20 PRIVATE STREET TREES WILL BE POSTED AS PART OF THE DEVELOPER'S AGREEMENT.
22. STREET TREES ARE REQUIRED FOR THIS PROJECT IN ACCORDANCE WITH SECTION 16.124(e)(1) OF THE SUBDIVISION REGULATIONS AND THE LANDSCAPE MANUAL. A FINANCIAL SURETY IN THE AMOUNT OF $30,600.00 TO BE POSTED AS PART OF THE DEVELOPER'S AGREEMENT FOR THE REQUIRED 102 PUBLIC STREET TREES.
23. TREE PROTECTION FENCING WILL BE PROVIDED AT THE LIMITS OF DISTURBANCE WHERE GRADING IS ADJACENT TO FOREST CONSERVATION RETENTION AREAS AND SENSITIVE ENVIRONMENTAL AREAS, SUCH AS STREAM AND WETLAND BUFFERS.
24. STREET LIGHTING HAS BEEN PROVIDED FOR THE PUBLIC ROADS IN ACCORDANCE WITH SECTION 16.135 OF THE HOWARD COUNTY SUBDIVISION AND LAND DEVELOPMENT REGULATIONS AND THE DESIGN MANUAL. A MINIMUN OF 20' SHALL BE MAINTAINED BETWEEN ANY STREET LIGHT AND ANY TREE.
25. SEDIMENT AND EROSION CONTROL HAS BEEN PROVIDED FOR THIS SITE.
26. THIS PROPERTY IS WITHIN THE METROPOLITAN DISTRICT.
27. TO THE BEST OF THE OWNERS KNOWLEDGE, THERE ARE NO BURIAL/CEMETARY LOCATIONS ON SITE.
28. A NOISE STUDY IS NOT REQUIRED FOR THIS SITE.
29. OPEN SPACE LOTS 9, 21 AND 34 ARE TO BE PRIVATELY OWNED AND MAINTAINED BY THE HOA. OPEN SPACE LOTS 8 AND 35 ARE TO BE OWNED AND MAINTAINED BY HOWARD COUNTY DEPT. OF RECREATION AND PARKS.
30. LOTS 36-38 WILL UTILIZE A USE-IN-COMMON DRIVEWAY. HOWARD COUNTY STANDARD DETAIL NO. R-6.06 WILL BE UTILIZED FOR THE ENTRANCE AT THE INTERSECTION OF THE PUBLIC ROAD.
31. NON-BUILDABLE LOT 30 TO BE TRANSFERRED TO HOWARD COUNTY FOR THE PURPOSES OF A PRIVATE ACCESS EASEMENT FOR THE SUBDIVISION OF ADJACENT PARCEL '659 AND ACCESS FOR PARCELS 659, 660, 661, 631, 658, 656, 629, & 657.
32. OPEN SPACE LOT 35 TO BE ACCESSED THROUGH LOT 34.
33. FOR FLAG OR PIPE STEM LOTS, REFUSE COLLECTION, SNOW REMOVAL AND ROAD MAINTENANCE ARE PROVIDED TO THE JUNCTION OF THE FLAG OR PIPE STEM AND THE ROAD RIGHT-OF-WAY ONLY AND NOT ONTO THE FLAG OR PIPE STEM DRIVEWAY.
34. WP-03-07: A WAIVER PETITION HAS BEEN SUBMITTED AND APPROVED, DATED NOVEMBER 5, 2002, TO WAIVE SECTION 16.147 TO WAIVE THE REQUIREMENT OF A FINAL SUBDIVISION PLAT/PLAN AND PERMIT THE ADJUSTMENT OF THE PROPERTY LINES AND ACREAGES OF PARCELS 226, 327, 431 AND 497 TO BE DONE BY ADJOINER DEED CONVEYANCE. APPROVAL IS SUBJECT TO THE FOLLOWING CONDITIONS:
    1. THE ADJOINER DEED TRANSFERS OF LAND SHALL BE ACCOMPLISHED PRIOR TO SUBMISSION OF THE FUTURE SUBDIVISION PLAN FOR THIS PROJECT, AND THE NEW DEED RECORDING NUMBERS SHALL BE INDICATED WHERE REQUIRED ON THE FUTURE FINAL SUBDIVISION PLATS AND PLANS.

    THIS WAIVER IS VALID FROM 11/5/02 TO 11/5/03 OR AS LONG AS THE SUBDIVISION REMAINS IN ACTIVE PROCESSING.
35. AS A CONSEQUENCE OF ITS SUBMISSION PRIOR TO NOVEMBER 15, 2001, THIS SUBDIVISION PLAN IS GRANDFATHERED TO THE FOURTH EDITION OF THE SUBDIVISION AND LAND DEVELOPMENT REGULATIONS AND BECAUSE THE PRELIMINARY PLAN WAS NOT APPROVED PRIOR TO NOVEMBER 1, 2001, THIS PROJECT IS SUBJECT TO COMPLIANCE WITH COUNTY COUNCIL BILL 50-2001 WHICH AMENDED PORTIONS OF THE ZONING REGULATIONS.
36. ALL FILLED AREAS OF EARTHWORK REQUIRE 95% COMPACTION PER AASHTO-180 SPECIFICATIONS.
37. DRIVEWAY PLACEMENT AND GRADING WILL BE FINALIZED AT SITE DEVELOPMENT PHASE.
38. DEVELOPMENT OR CONSTRUCTION ON THESE LOTS MUST COMPLY WITH THE SETBACK AND BUFFER REGULATIONS IN EFFECT AT THE TIME OF THE SUBMISSION OF THE SITE DEVELOPMENT PLAN, WAIVER PETITION OR BUILDING/GRADING PERMIT.

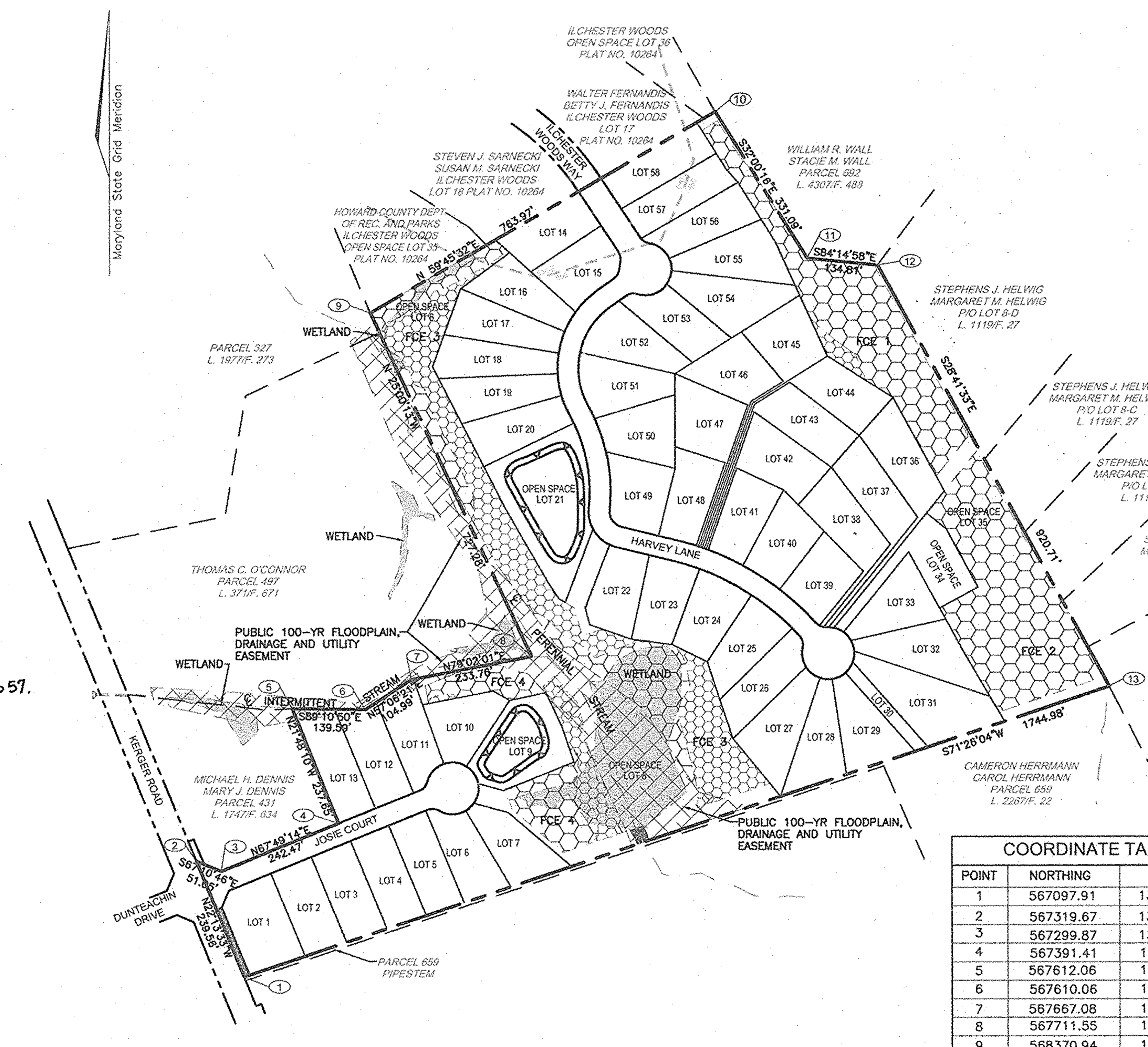

LOCATION PLAN
SCALE: 1"=200'

COORDINATE TABLE		
POINT	NORTHING	EASTING
1	567097.91	1375122.54
2	567319.67	1375031.92
3	567299.87	1375078.98
4	567391.41	1375303.51
5	567612.06	1375215.24
6	567610.06	1375354.82
7	567667.08	1375442.97
8	567711.55	1375364.95
9	568370.94	1375365.06
10	568755.43	1376025.06
11	568474.66	1376200.53
12	568461.15	1376334.67
13	567653.50	1376776.71

SHEET INDEX	
SHEET NO.	TITLE
1 OF 17	COVER SHEET
2 OF 17	ROAD CONSTRUCTION PLAN
3 OF 17	ROAD CONSTRUCTION PROFILES
4 OF 17	ROAD CONSTRUCTION PLAN AND PROFILES
5 OF 17	GRADING AND SEDIMENT & EROSION CONTROL PLAN
6 OF 17	GRADING AND SEDIMENT & EROSION CONTROL PLAN AND TRAFFIC CONTROL PLAN
7 OF 17	GRADING AND SEDIMENT & EROSION CONTROL DETAILS
8 OF 17	STORM DRAIN DRAINAGE AREA MAP
9 OF 17	STORM DRAIN DRAINAGE AREA MAP
10 OF 17	STORM DRAIN PROFILES
11 OF 17	STORM DRAIN PROFILES
12 OF 17	STORMWATER MANAGEMENT DETAILS-POND #1
13 OF 17	STORMWATER MANAGEMENT DETAILS-POND #2
14 OF 17	LANDSCAPE PLAN
15 OF 17	LANDSCAPE PLAN
16 OF 17	FOREST CONSERVATION PLAN
17 OF 17	FOREST CONSERVATION PLAN

NO.	REVISION	DATE
1	ADD NOTE FOR LOT 30 USE-IN-COMMON ACCESS	1.20.06

APPROVED: DEPARTMENT OF PUBLIC WORKS

William F. Malone 10-19-04
Chief, Bureau of Highways Date

APPROVED: DEPARTMENT OF PLANNING AND ZONING

Cindy Hamilton 10/27/04
Chief, Division of Land Development Date

10/25/04
Chief, Development Engineering Division Date

DEVELOPER
ELLICOTT CITY LAND HOLDINGS, LLC
8000 MAIN STREET
ELLICOTT CITY, MARYLAND 21043
ATTN: MR. DONALD R. REUWER
(410) 480-9105

OWNER
DENNIS PRESERVE, LLC
ELLICOTT CITY LAND HOLDINGS, LLC
SOLE MEMBER
8000 MAIN STREET
ELLICOTT CITY, MD 21043
410-480-9105

FINAL ROAD CONSTRUCTION PLAN
DENNIS PRESERVE
LOTS 1-58

TAX MAP 31 BLOCK 21 PARCEL '226'
1ST ELECTION DISTRICT HOWARD COUNTY, MARYLAND
REF.: S-01-06, P-02-27, WP-03-07 (APP. 11/05/02)
MDE PERMIT TRACKING NO. 04-NT-0197/200463350

ROBERT H. VOGEL ENGINEERING, INC.
ENGINEERS • SURVEYORS • PLANNERS
8407 MAIN STREET ELLICOTT CITY, MD 21043
TEL: 410.461.7666 FAX: 410.461.8961

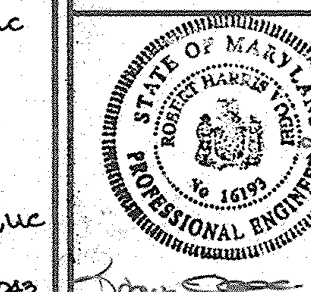

ROBERT H. VOGEL, PE No.16193

DESIGN BY: RHV
DRAWN BY: CMH
CHECKED BY: RHV
DATE: SEPTEMBER 2004
SCALE: AS SHOWN
W.O. NO.: 2017019.0

SHEET 1 OF 17

F-04-74