Final Plan
for
Fox Meadow
(Formerly Pfefferkorn Property)

Howard County **Maryland**

Legend

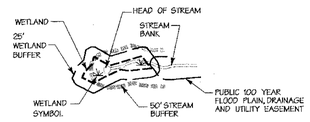

EX. CURB & GUTTER
EX. MAJOR CONTOURS
EX. MINOR CONTOURS
PROP. STORM DRAIN — 15" RCCP CL. IV
EX. STORM DRAIN
UTILITY EASEMENTS
LIMIT OF DISTURBANCE
PROPOSED SHADE TREE
PROPOSED FLOWERING TREE
PROPOSED EVERGREEN TREE
PROPOSED STREET TREE
SOIL LABEL — MIC2
SOIL BOUNDARY
SLOPES >25%
SLOPES 15%-25%
EX. FOREST EDGE
SCRUB/SHRUB; HEDGEROW OR TREE GROUP
PROPOSED WOODS EDGE
NON-WOODY VEGETATION BUFFER
FOREST CONSERVATION EASEMENT LINE
REFORESTATION AREA
EARTH/DIVERSION DIKE
SILT FENCE — SF —
SUPER SILT FENCE — SSF —
CLEAN WATER DIVERSION PIPE
LIMIT OF DISTURBANCE — LOD —
MOUNTABLE BERM
CURB INLET PROTECTION — CIP
AT GRADE INLET PROTECTION — AGIP
STABILIZED CONSTRUCTION ENTRANCE — SCE
PERMANENT SWALE
PROPOSED SWM EASEMENT
PROPERTY LINE
ROADWAY RIGHT-OF-WAY
PROPOSED LOT LINE
EXISTING CONDITION DRAINAGE AREA TO TRAPS AND BASINS
INTERIM CONDITION DRAINAGE AREAS
PROPOSED CONDITION DRAINAGE AREAS
EXISTING CONDITION Tc PATH
PROPOSED CONDITION Tc PATH
SOIL BORING — B-10
100 YR. FLOODPLAIN

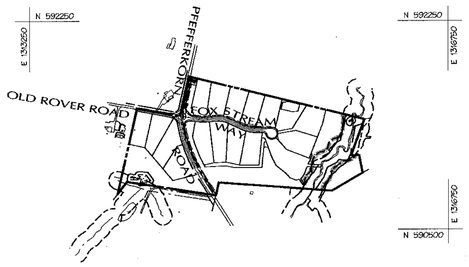

Overall Property Outline
Scale: 1"=600'

NORTH

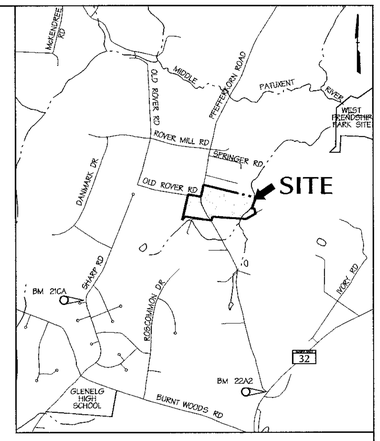

VICINITY MAP
SCALE: 1" = 2,000'

General Notes

1. All construction shall be in accordance with the latest standards and specifications of Howard County plus MSHA standards and specifications if applicable.

2. The contractor shall notify the Department of Public Works/Bureau of Engineering/Construction inspection division at 410-313-1880 at least five (5) working days prior to the start of work.

3. The contractor shall notify "Miss Utility" at 1-800-257-7777 at least 48 hours prior to any excavation work being done.

4. Traffic control devices, markings and signing shall be in accordance with the latest edition of the Manual of Uniform Traffic Control Devices (MUTCD). All street and regulatory signs be in place prior to the placement of any asphalt.

5. All plan dimensions are to face of curb unless otherwise noted.

6. The existing topography is taken from aerial survey with 2' contour intervals prepared by Virginia Resources Mapping, dated December 2001.

7. The coordinates shown hereon are based upon the Howard County Geodetic Control which is based upon the Maryland State Plane Coordinate System. Howard County Monument Nos. 21CA and 22A2 were used for this project.

8. Water is private

9. Sewer is private

10. Water quality is met by micro pool, bioretention and natural area conservation credits. Recharge is met by a grass swales along the proposed road along the south edge of lots 11-14 and behind Lots 1 and 16. Channel protection volume is met by extended detention of the 1-year storm in the swm facilities and by natural area conservation credits.

11. The floodplain study for this project was prepared by Daft-McCune-Walker, Inc., dated March 2002, and was approved in June 2002.

12. The wetlands delineation study for this project was prepared by Daft-McCune-Walker, Inc.

13. The traffic study was prepared by Wells & Associates, and was approved on October 2, 2000.

14. Project background information:

Subdivision Name: Fox Meadow
Tax Map: 15
Lot/Parcel: 167
Zoning: RR & RC
Election District: 3rd
Total Tract Area: 32.2± acres
Preliminary Plan Approval Date : OCTOBER 2, 2002
File Number: F-02-13, S-00-16

15. Street light placement and the type of fixture and pole shall be in accordance with the Howard County Design Manual, Volume III (1993) and as modified by "Guidelines for Street Lights in Residential Developments (June 1993)." A minimum spacing of 20' shall be maintained between lights and any tree.

16. Street trees shall be planted at least 5' from any inlet structure.

17. Storm water management facilities to be owned by the Home Owners Association (HOA)(PARCEL C). FACILITY ON(PARCEL B) TO BE PUBLIC.

18. Maintenance Responsibility, routine and non-routine schedule are shown on sheet 19 of 24. The SWM facilities are be jointly maintained by Howard Co. and the HOA - routine maintenance by HOA and non-routine by Howard County.

19. 95% compaction in fill area will be in accordance with AASHTO - T180.

20. Development of the Fox Meadow community under the current Forest Conservation Act proposes the retention of approximately 4.17 acres of forest and the clearing of approximately 1.84 acres of forest generating a reforestation obligation of 3.68 acres to be satisfied on-site.

21. A Landscape Surety in the amount of $43,360.00 will be posted as part of the Developer's Agreement. A forest conservation surety in the amount of $110,604.00 will be posted as part of the Developer's Agreement. A Street Tree Surety in the amount of $4,950 will be posted as part of the Developer's Agreement.

22. This project is subject to the 4th edition Subdivision Regulations and the Zoning Regulations amendments effective 1-8-02.

~~23. The developer shall enter into an agreement with Howard County for the construction of the traffic circle on Pfefferkorn Road in accordance with J-4134 Developer/County shared improvements and also be compatible with the B-3836 Pfefferkorn Road bridge project.~~

24. A fee-in-lieu of construction of the APFO required road improvements in the amount of $55,000 shall be paid by the developer to the Department of Public Works, Real Estate Division prior to or concurrent with the submission of the Developers Agreement at Final Plan.

25. The outfall from the stormwater management facility is a necessary disturbance to the floodplain/stream buffer.

26. The MDE permit number is 200360320.

Sheet Index

SHEET	DESCRIPTION
1	COVER SHEET
2	FINAL ROAD PLAN & PROFILE - FOX STREAM WAY
3	ROAD DETAILS
4	ROAD SIGNAGE AND PAVEMENT MARKING PLAN
5	TRAFFIC CONTROL PLAN
6	TRAFFIC CONTROL PLAN
7	DRAINAGE AREA MAP
8	STORM DRAIN PROFILE
9	SEDIMENT AND EROSION CONTROL PLAN
10	SEDIMENT AND EROSION CONTROL DETAILS
11	SEDIMENT AND EROSION CONTROL SPECIFICATIONS
12	DRAINAGE AREA MAP - SWM EXISTING CONDITIONS
13	DRAINAGE AREA MAP - SWM PROPOSED CONDITIONS
14	STORMWATER MANAGEMENT PLAN
15	STORMWATER MANAGEMENT PROFILES
16	STORMWATER MANAGEMENT - FACILITY 2 PLAN & DETAIL
17	STORMWATER MANAGEMENT DETAILS
18	STORMWATER MANAGEMENT SPECIFICATIONS
19	FOREST CONSERVATION PLAN
20	FOREST CONSERVATION PLAN
21	FOREST CONSERVATION NOTES AND DETAILS
22	STREET TREE & SWM POND PLANTING PLAN
23	PERIMETER LANDSCAPE PLAN
24	LANDSCAPE NOTES AND DETAILS

NORTH

TRACKING No. 200360320

3-25-04
Date

Professional Engr. No. 10551

Benchmark Description

21CA - Standard Howard County stamped disk set in a concrete monument northwest of the intersection of Sharp Road and Our Mile Court.
Elev.- 612.65 ft.

22A2 - Standard Howard County stamped disk set in a concrete monument southwest of the intersection of Maryland Route 32 and Pfefferkorn Road.
Elev.- 620.18 ft.

DATA SOURCES:
BOUNDARY PER DMW FIELD SURVEY DATED DECEMBER 2001.
TOPO FLOWN BY VIRGINIA RESOURCE MAPPING, DECEMBER, 2001.
APPROX. WETLAND LOCATION PER DMW FIELD VISIT DATED APRIL 2000. OFF SITE SEPTIC RESERVE AREAS PER RECORD PLATS, LOCATIONS OF WELLS NOT AVAILABLE.

APPROVED: HOWARD COUNTY DEPARTMENT OF PUBLIC WORKS

CHIEF, BUREAU OF HIGHWAYS — DATE 4/13/04

APPROVED: HOWARD COUNTY DEPT. OF PLANNING & ZONING

CHIEF, DEVELOPMENT ENGINEERING DIVISION — DATE 4/28/04

CHIEF, DIVISION OF LAND DEVELOPMENT — DATE 4/29/04

Date	No.	Revision Description

OWNER: NORTHRIDGE DEVELOPMENT. LLC
14045 GARED DRIVE
GLENWOOD, MD 21738

DEVELOPER: JAMES F. SELFRIDGE BUILDERS, INC.
14045 GARED DRIVE
GLENWOOD, MD 21738

DMW
Daft-McCune-Walker, Inc.
200 East Pennsylvania Avenue
Towson, Maryland 21286
(410) 296-3333
Fax 296-4705

A Team of Land Planners, Landscape Architects, Engineers, Surveyors & Environmental Professionals

SUBDIVISION NAME		SECTION/AREA		LOT/PARCEL #
FOX MEADOW		1		167
PLAT # OR L/F	BLOCK #	ZONE	TAX/ZONE MAP	ELEC. DISTRICT	CENSUS TRACT
5983/492	13, 19, 20	RR, RC	15	3	

TITLE
FOX MEADOW
(FORMERLY PFEFFERKORN PROPERTY)
COVER SHEET

Des By		Scale 1"=600'	Proj. No. 00042.B
Drn By	KDE	Date 1/7/04	
Chk By		Approved	1 OF 24

F.03.45

Thu Mar 25 10:47:04 2004 m:\00042\00042.tel
3/25/2004 10:46:54 AM \\ATENS\MSTATION\CADNET\NCF\daq-ncf cr122 o:\hpm\00042.hpm

SBARRA MARK G
MONTGOMERY CATHLEEN A J/T
3332/ 406
P.168.5
ZONE: RR-DEO

OLD ROVER ROAD
LOCAL ROAD

PFEFFERKORN ROAD
LOCAL ROAD - SCENIC

FOX STREAM WAY
LOCAL ROAD

PROPOSED STANDING PAD (15' X 20' X 4" (MIN.) CONCRETE)

SWALE TO BE STABILIZED WITH EROSION CONTROL MATTING (SEE GRADING PLAN)

REVERSE SLOPE MODIFIED MOUNTABLE CURB & GUTTER

PROPOSED 10' TREE MAINTENANCE EASEMENT

10' PUBLIC TREE MAINTENANCE EASEMENT

BEGIN CURB & GUTTER NOSE DOWN CURB

END CURB & GUTTER NOSE DOWN CURB

PROP. STD. CURB & GUTTER

PUBLIC STORM DRAIN & UTILITY EASEMENT

FIO PRESERVATION PARCEL B

PRESERVATION PARCEL A

BGE & C ELECTRIC DUCT EASEMENT

BGE & C ELECTRIC UTILITY EASEMENT

RESURFACING

OPEN SPACE

SRA

S 76°06'46" E 1509.75'

N 32°22'28" E 344.09'

S 79°03'36" E 367.40'

N 86°43'14" E

S 64°03'31" E

R 86°26'40" E

N 88°26'40" E

STA. 6+26.9
17' LT.

STA. 1+55.94 L.P.

1.137 AC.

N 591,237.31
E 1,315,324.30

SEE SHEETS 3 & 4 OF 24 FOR TRAFFIC CIRCLE DETAIL AND ADDITIONAL SIGNAGE

SEE SHEET 10 FOR CONTINUATION OF STORM DRAIN

NOTE:
SEE LANDSCAPE PLAN SHEET 17 FOR STREET TREES.

NOTE:
FOX STREAM WAY TO BE CONSTRUCTED PER THE TYPICAL SECTION (OPEN SECTION). THE CUL DE SAC WILL BE CLOSED SECTION (STD. CURB AND GUTTER).

CURVE DATA

CURVE NO.	DELTA	RADIUS	LENGTH	TANGENT	CHORD	
1	14°07'10"	280.00'	69.00'	34.68'	S 86°43'11" E	68.83'
2	29°31'15"	200.00'	102.00'	52.13'	S 79°10'08" E	100.90'
3	26°59'49"	295.00'	139.00'	70.81'	S 78°03'26" E	137.72'
4	260°01'06"	40.00'	181.53'	-1.00'	S 38°27'13" W	61.28'
5	80°01'06"	35.00'	48.88'	29.38'	N 51°32'47" W	45.00'

APPROVED: HOWARD COUNTY DEPARTMENT OF PUBLIC WORKS

CHIEF, BUREAU OF HIGHWAYS — DATE 4-13-04

APPROVED: HOWARD COUNTY DEPT. OF PLANNING & ZONING

CHIEF, DEVELOPMENT ENGINEERING DIVISION — DATE 4/28/04

CHIEF, DIVISION OF LAND DEVELOPMENT — DATE 4/27/04

Date	No.	Revision Description

OWNER: NORTHRIDGE DEVELOPMENT. LLC
14045 GARED DRIVE
GLENWOOD, MD 21738

DEVELOPER: JAMES F. SELFRIDGE BUILDERS, INC.
14045 GARED DRIVE
GLENWOOD, MD 21738

DMW
Daft-McCune-Walker, Inc.
200 East Pennsylvania Avenue
Towson, Maryland 21286
(410) 296-3333
Fax 296-4705

A Team of Land Planners, Landscape Architects, Engineers, Surveyors & Environmental Professionals

3-25-04
Date

Professional Engr. No. 10557

SUBDIVISION NAME: FOX MEADOW		SECTION/AREA 1	LOT/PARCEL 167
PLAT OR L/F 5983/492	BLOCK 13, 19, 20	ZONE RR, RC	TAX/ZONE MAP 15
ELECT. DISTRICT 3	CENSUS TRACT		

TITLE
FOX MEADOW
(FORMERLY PFEFFERKORN PROPERTY)
Final Road Plan and Profile
Fox Stream Way

Des By	DFM	Scale	1"=50'
Drn By	WDE	Date	1/7/04
Chk By		Approved	

Proj. No. 00042.B

2 OF 24

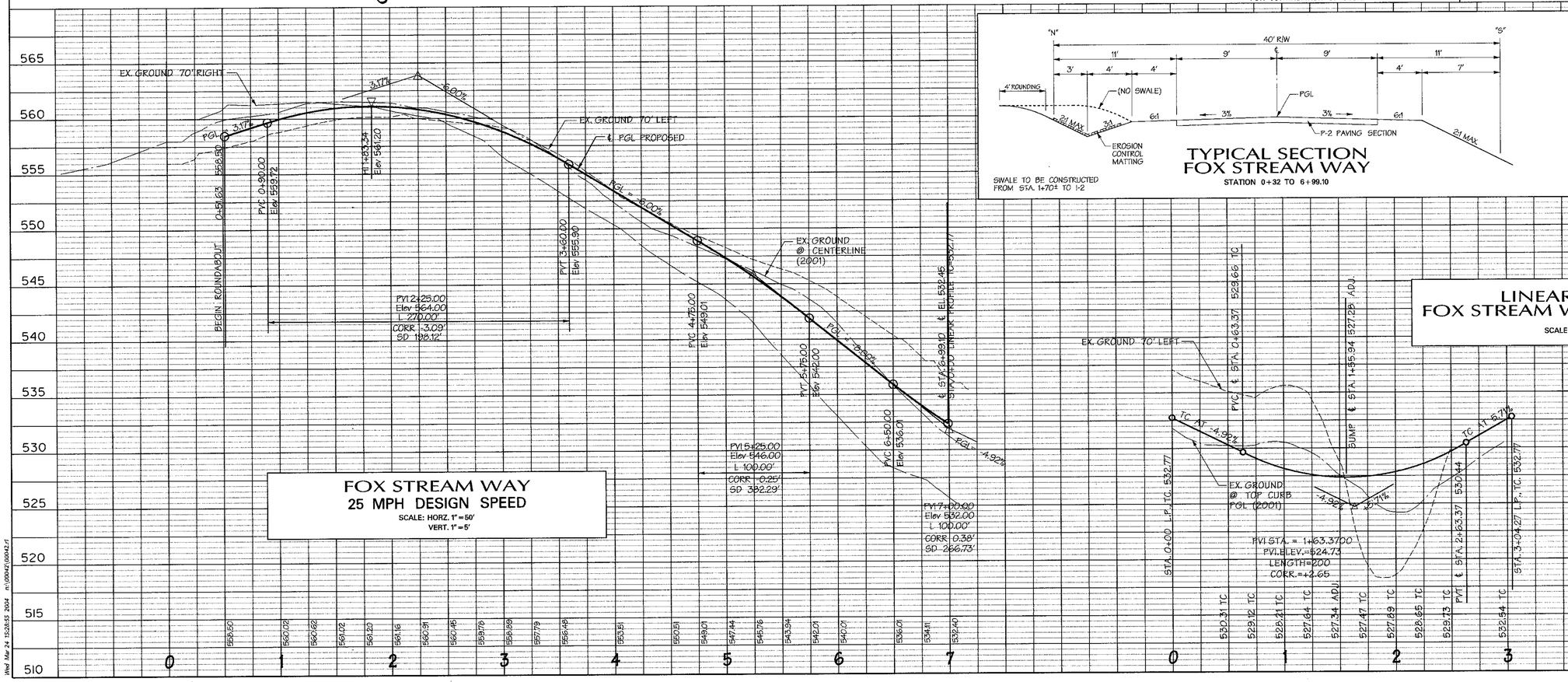

TYPICAL SECTION
FOX STREAM WAY
STATION 0+32 TO 6+99.10

SWALE TO BE CONSTRUCTED FROM STA. 1+70± TO 1+2

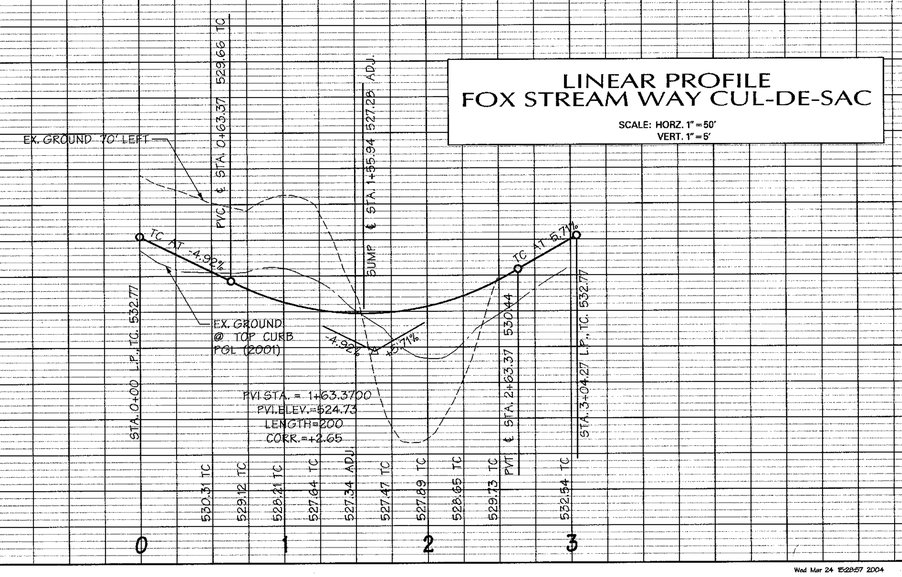

LINEAR PROFILE
FOX STREAM WAY CUL-DE-SAC
SCALE: HORZ. 1"=50'
VERT. 1"=5'

Wed Mar 24 15:28:55 2004 n:\00042\00042.r1

Wed Mar 24 15:28:57 2004 n\00042\00042.r1

F-03.45

3/24/2004 3:28:52 PM \\AIHENSMSTATION\CANONE1N\CCE\daq-qcf_cr122 ci\hpm\00042.hpm

F-03.45

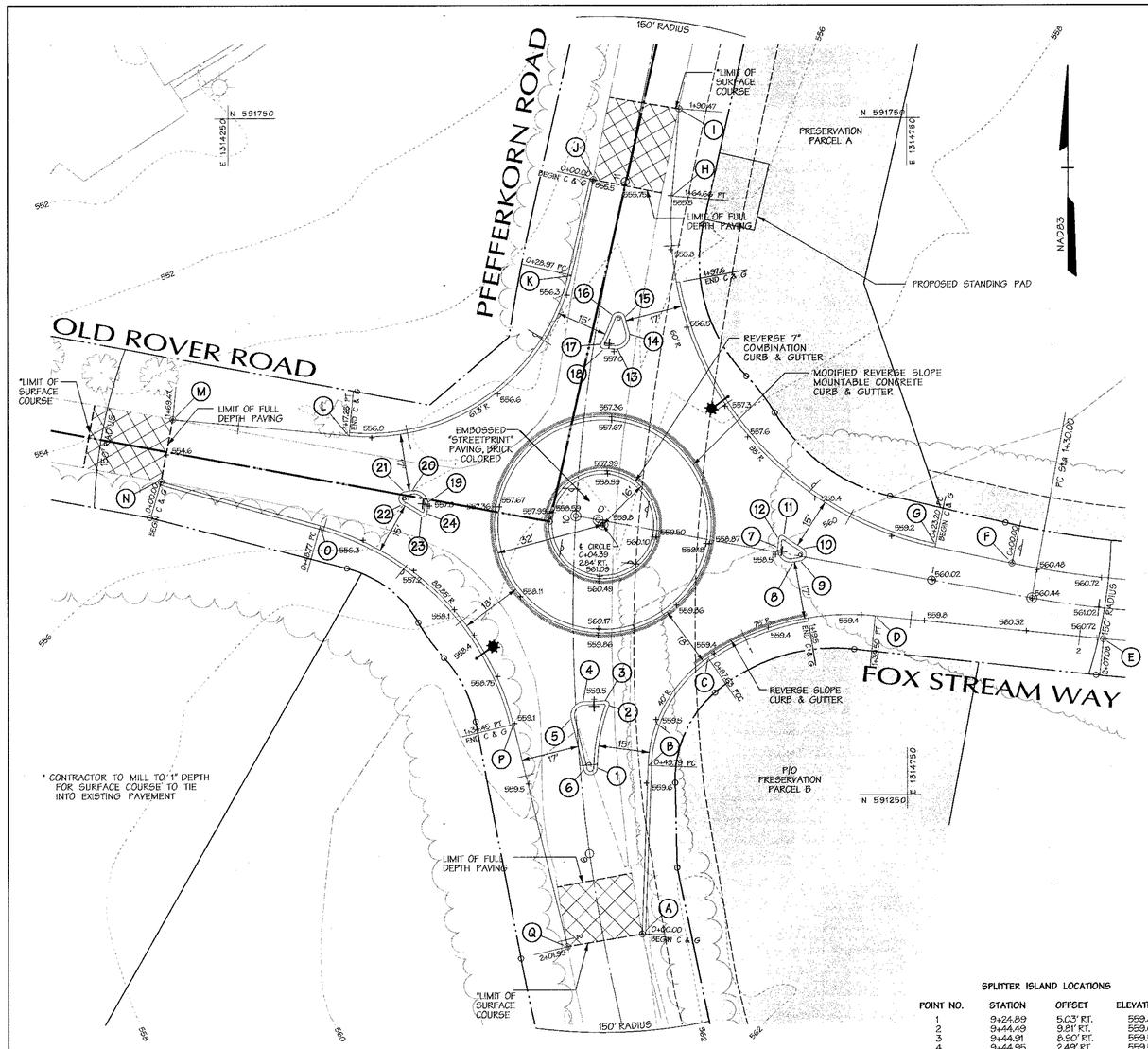

TRAFFIC CIRCLE DETAIL
SCALE: 1" = 20'

NOTE:
REMOVE TREES WITHIN RIGHT-OF-WAY AS DIRECTED BY THE HOWARD COUNTY TRAFFIC DIVISION FOR SIGHT DISTANCE, SIGNAGE, AND LIGHTING.

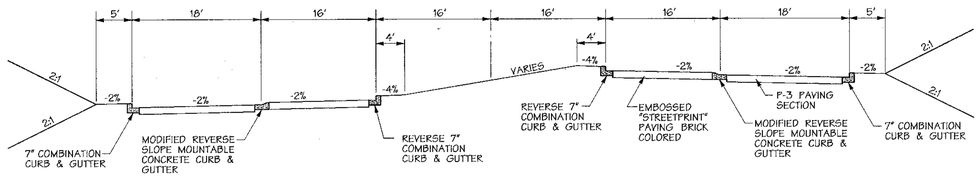

TYPICAL SECTION TRAFFIC CIRCLE
SCALE: 1" = 10'

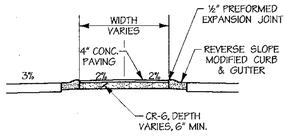

SPLITTER ISLAND DETAIL
SCALE: NONE

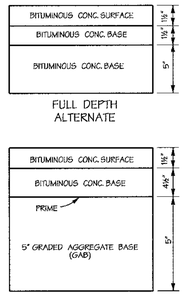

PAVING SECTION P-3 MINOR & MAJOR COLLECTORS
NO SCALE

STREET LIGHT LEGEND
250 WATT HIGH PRESSURE SODIUM (HPS) VAPOR, PENDANT (SAG) MOUNTED AT 30' ON A BRONZE FIBERGLASS POLE USING A 12' ARM

STREET LIGHT TABLE

DWG. No.	STREET NAME	STATION	OFF-SET	FIXTURE / POLE TYPE	COMMENTS
3	PFEFFERKORN ROAD	9+60	30' LT.	—✸	
3	PFEFFERKORN ROAD	10+41	30' RT.	—✸	

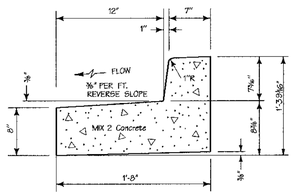

REVERSE 7" COMBINATION CURB & GUTTER
NO SCALE

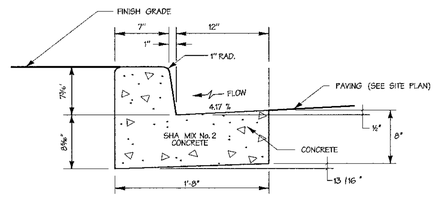

SECTION
TYPE "A" CURB AND GUTTER
NO SCALE

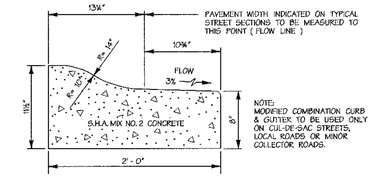

MODIFIED REVERSE SLOPE MOUNTABLE CONCRETE CURB & GUTTER
NO SCALE

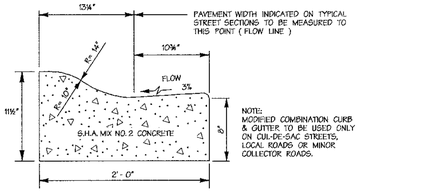

MODIFIED MOUNTABLE CONCRETE CURB & GUTTER
NO SCALE

SPLITTER ISLAND LOCATIONS

POINT NO.	STATION	OFFSET	ELEVATION
1	9+24.89	5.03' RT.	559.8
2	9+44.49	9.81' RT.	559.6
3	9+44.91	8.90' RT.	559.55
4	9+44.95	2.49' RT.	559.55
5	9+40.21	1.49' LT.	559.6
6	9+24.84	1.07' RT.	559.8
7	0+53.58	1.51' LT.	558.6
8	0+58.98	2.03' RT.	558.6
9	0+60.90	1.34' RT.	558.8
10	0+60.96	2.42' LT.	558.8
11	0+54.80	5.03' LT.	558.6
12	0+53.39	4.02' LT.	558.55
13	10+50.54	6.42' RT.	556.8
14	10+56.33	9.68' RT.	556.6
15	10+60.37	7.86' RT.	556.4
16	10+59.21	4.05' RT.	556.4
17	10+51.45	1.98' RT.	556.6
18	10+50.15	3.08' RT.	556.8
19	10+00.61	43.67' LT.	556.9
20	10+04.40	48.56' LT.	556.8
21	10+03.96	50.75' LT.	556.6
22	10+00.53	51.21' LT.	556.6
23	9+97.71	48.30' LT.	556.8
24	9+98.45	43.81' LT.	556.9

EDGE ROAD/CURB LOCATIONS

POINT NO.	STATION	OFFSET
A	9+75.33	11.49' RT.
B	9+24.35	20.08' RT.
C	9+56.99	39.64' RT.
D	0+85.54	13.36' RT.
E	1+52.23	9.00' RT.
F	1+22.40	9.11' LT.
G	0+99.21	9.76' LT.
H	12:38.54	14.40' RT.
I	11+24.16	11.17' RT.
J	10+98.59	9.34' LT.
K	10+69.79	9.96' LT.
L	10+17.65	68.31' LT.
M	10+17.84	120.52' LT.
N	10+02.80	122.62' LT.
O	9+93.86	75.02' LT.
P	9+39.51	18.63' LT.
Q	8+74.21	10.84' LT.

APPROVED: HOWARD COUNTY DEPARTMENT OF PUBLIC WORKS

CHIEF, BUREAU OF HIGHWAYS — DATE 4-13-04

APPROVED:

CHIEF, DEVELOPMENT ENGINEERING DIVISION — DATE 4/29/04

CHIEF, DIVISION OF LAND DEVELOPMENT — DATE 4/29/04

Date	No.	Revision Description

OWNER: NORTHRIDGE DEVELOPMENT, LLC
14045 GARED DRIVE
GLENWOOD, MD 21738

DEVELOPER: JAMES F. SELFRIDGE BUILDERS, INC.
14045 GARED DRIVE
GLENWOOD, MD 21738

Daft·McCune·Walker, Inc.
200 East Pennsylvania Avenue
Towson, Maryland 21286
(410) 296-3333
Fax 296-4705

A Team of Land Planners, Landscape Architects, Engineers, Surveyors & Environmental Professionals

3-25-04
Date

Professional Engr. No. 10551

SUBDIVISION NAME			SECTION/AREA		LOT/PARCEL
FOX MEADOW			1		167
PLAT OR L/F	BLOCK	ZONE	TAX/ZONE MAP	ELEC. DISTRICT	CENSUS TRACT
5980/482	13, 19, 20	RR, RC	15	3	

TITLE
FOX MEADOW
(FORMERLY PFEFFERKORN PROPERTY)
Final Plan
Roundabout Details

Des By	DFM	Scale AS SHOWN	Proj. No. 00042.B
Drn By	WDE	Date 1/7/04	3 OF 24
Chk By		Approved	

F-03-45

Wed Mar 24 15:28:05 2004 n:\00042\000042.r2
3/24/2004 3:29:45 PM \\ATHENS\MSTATION\CADNET\NCF\dagoff cr122 c:\hpm\000042.hpm

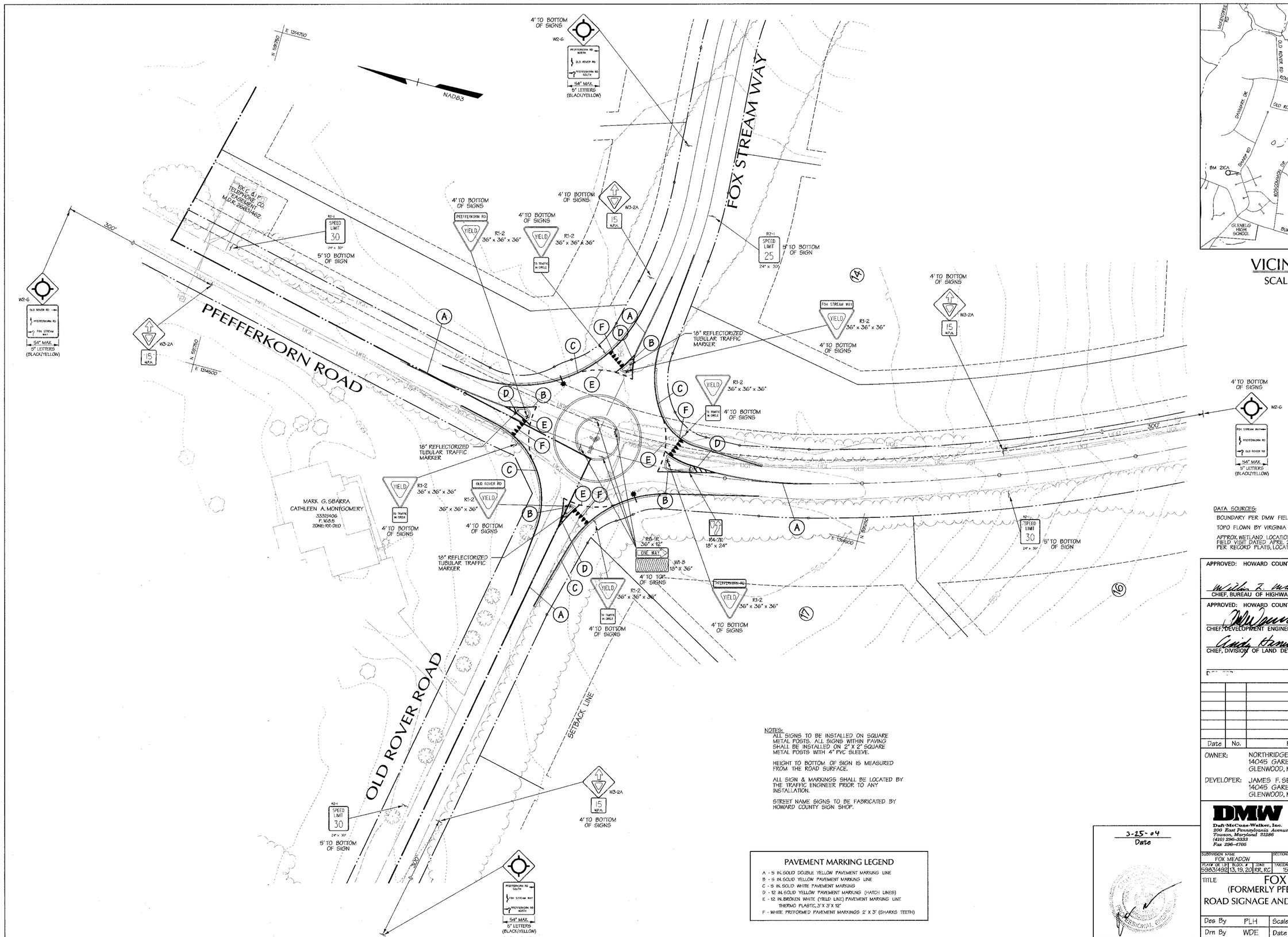

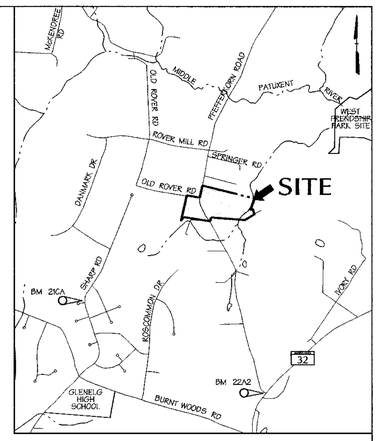

VICINITY MAP
SCALE: 1" = 2,000'

NOTES:
ALL SIGNS TO BE INSTALLED ON SQUARE METAL POSTS. ALL SIGNS WITHIN PAVING SHALL BE INSTALLED ON 2" X 2" SQUARE METAL POSTS WITH 4" PVC SLEEVE.

HEIGHT TO BOTTOM OF SIGN IS MEASURED FROM THE ROAD SURFACE.

ALL SIGN & MARKINGS SHALL BE LOCATED BY THE TRAFFIC ENGINEER PRIOR TO ANY INSTALLATION.

STREET NAME SIGNS TO BE FABRICATED BY HOWARD COUNTY SIGN SHOP.

PAVEMENT MARKING LEGEND

A - 5 IN. SOLID DOUBLE YELLOW PAVEMENT MARKING LINE
B - 5 IN. SOLID YELLOW PAVEMENT MARKING LINE
C - 5 IN. SOLID WHITE PAVEMENT MARKING
D - 12 IN. SOLID YELLOW PAVEMENT MARKING (HATCH LINES)
E - 12 IN. BROKEN WHITE (YIELD LINE) PAVEMENT MARKING LINE THERMO PLASTIC, 3' X 3' X 12"
F - WHITE PREFORMED PAVEMENT MARKINGS 2' X 3' (SHARKS TEETH)

DATA SOURCES:
BOUNDARY PER DMW FIELD SURVEY DATED DECEMBER 2001.
TOPO FLOWN BY VIRGINIA RESOURCE MAPPING, DECEMBER, 2001.
APPROX. WETLAND LOCATION PER DMW FIELD VISIT DATED APRIL 2000. OFF SITE SEPTIC RESERVE AREAS PER RECORD PLATS, LOCATIONS OF WELLS NOT AVAILABLE.

APPROVED: HOWARD COUNTY DEPARTMENT OF PUBLIC WORKS

CHIEF, BUREAU OF HIGHWAYS — DATE 4-13-04

APPROVED: HOWARD COUNTY DEPT. OF PLANNING & ZONING

CHIEF, DEVELOPMENT ENGINEERING DIVISION — DATE 4/28/04

CHIEF, DIVISION OF LAND DEVELOPMENT — DATE 4/29/04

Date	No.	Revision Description

OWNER: NORTHRIDGE DEVELOPMENT, LLC
14045 GARED DRIVE
GLENWOOD, MD 21738

DEVELOPER: JAMES F. SELFRIDGE BUILDERS, INC.
14045 GARED DRIVE
GLENWOOD, MD 21738

3-25-04
Date

Professional Engr. No. 10551

DMW
Daft-McCune-Walker, Inc.
200 East Pennsylvania Avenue
Towson, Maryland 21286
(410) 296-3333
Fax 296-4705

A Team of Land Planners, Landscape Architects, Engineers, Surveyors & Environmental Professionals

SUBDIVISION NAME	SECTION/AREA	LOT/PARCEL #
FOX MEADOW	1	167

PLAT# OR LP	BLOCK #	ZONE	TAX/ZONE MAP	ELECT. DISTRICT	CENSUS TRACT
5983/492	13, 19, 20	RR, RC	15	3	

TITLE FOX MEADOW
(FORMERLY PFEFFERKORN PROPERTY)
ROAD SIGNAGE AND PAVEMENT MARKING PLAN

Des By	PLH	Scale	1"=30'	Proj. No. 00042.B
Drn By	WDE	Date	1/7/04	4 OF 24
Chk By		Approved		

F.03.45

Wed Mar 24 14:06:42 2004 n:\00042\00042.r4

3/24/2004 2:06:35 PM \\ATHENS\MSTATION\CADNETN\CCF\dwg.qcf cr:zzt cz:\hpm\00042.hpm

F.03.45

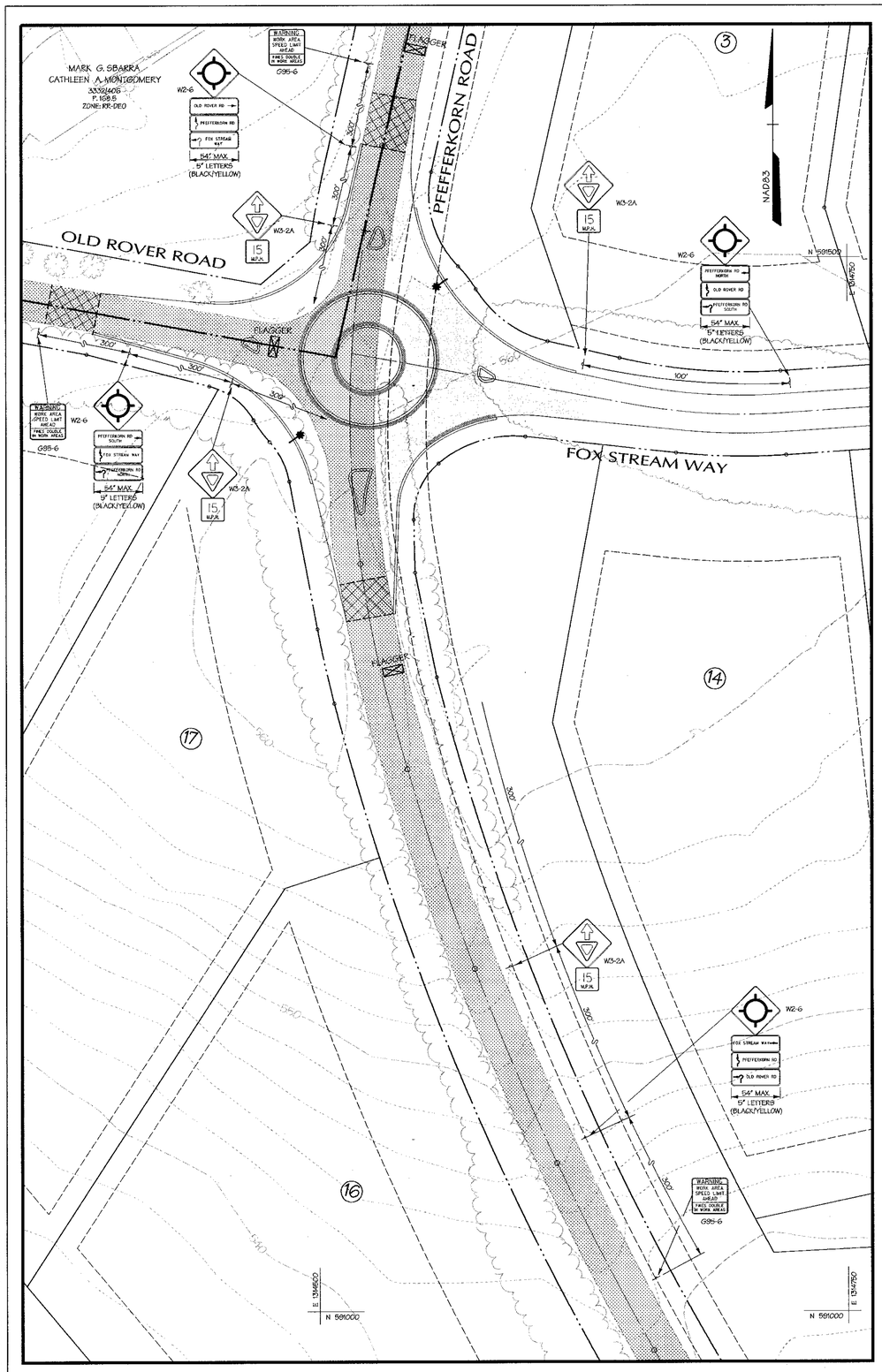

STAGE I

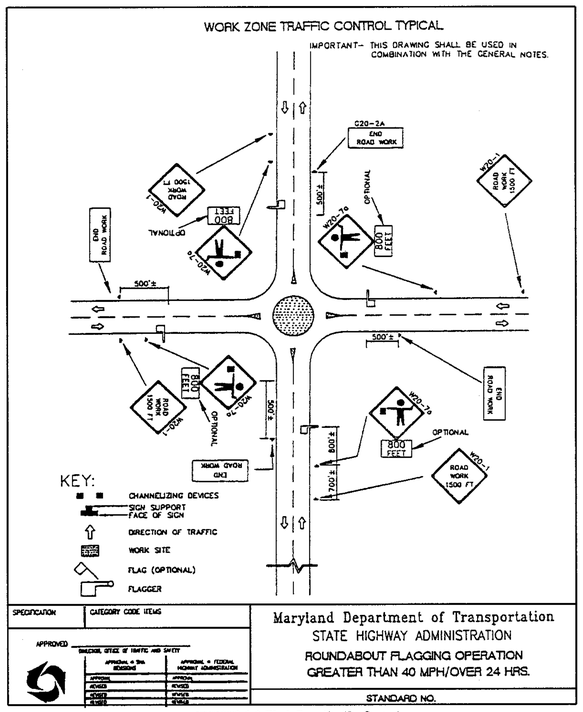

FIGURE 9.2 Work Zone Traffic Control

TRAFFIC CONTROL DURING CONSTRUCTION OF ROUNDABOUT

Construction in 4 stages, during each stage will need 3 flaggers for control of single lane, two way traffic during construction activities. In off hours will need stone, temporary paving, and temporary markings for maintenance of traffic.
During each stage, will need to provide smooth transition from new work to existing paving grade. Will want to place 15 mph limit on approaches during work.

STAGE I:

Construct easterly 1/2± of roundabout (grade, base courses and base for over-run paving in island. Use 3 flaggers to control single lane two way traffic on Pfefferkorn Road and turning movements. Hold barrier curb in center island for construction in stage II.

STAGE II:

Step I:
Install stone base and temporary bituminous paving in Southwest quadrant to maintain a minimum 12' single lane for Old Rover Road to Pfefferkorn Road movements while the Northwest quadrant is being constructed.
Step II:
Construct Northwest quadrant and remainder of center island, all base courses, mountable curbs and the barrier curbs in the island.

STAGE III:

Complete installation of base courses in Southwest quadrant.
Complete installation of over-run paving in island.

STAGE IV:

Finish construction of splitter islands, if not previously finished.
Install final surface course.
Complete installation of all traffic control signs.

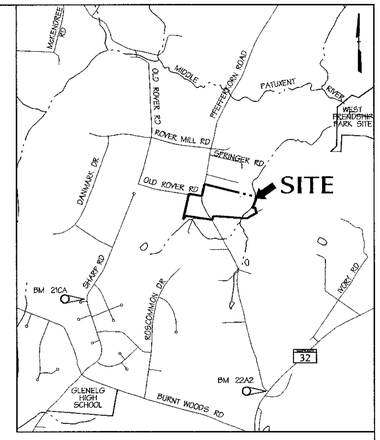

VICINITY MAP
SCALE: 1" = 2,000'

DATA SOURCES:
BOUNDARY PER DMW FIELD SURVEY DATED DECEMBER 2001.
TOPO FLOWN BY VIRGINIA RESOURCE MAPPING, DECEMBER, 2001.
APPROX. WETLAND LOCATION PER DMW FIELD VISIT DATED APRIL 2000. OFF SITE SEPTIC RESERVE AREAS PER RECORD PLATS, LOCATIONS OF WELLS NOT AVAILABLE.

APPROVED: HOWARD COUNTY DEPARTMENT OF PUBLIC WORKS

CHIEF, BUREAU OF HIGHWAYS — DATE 4-13-04

APPROVED: HOWARD COUNTY DEPT. OF PLANNING & ZONING

CHIEF, DEVELOPMENT ENGINEERING DIVISION — DATE 4/28/04

CHIEF, DIVISION OF LAND DEVELOPMENT — DATE 4/27/04

~~DIRECTOR~~ — ~~DATE~~

Date	No.	Revision Description

OWNER: NORTHRIDGE DEVELOPMENT, LLC
14045 GARED DRIVE
GLENWOOD, MD 21738

DEVELOPER: JAMES F. SELFRIDGE BUILDERS, INC.
14045 GARED DRIVE
GLENWOOD, MD 21738

DMW
Daft-McCune-Walker, Inc.
200 East Pennsylvania Avenue
Towson, Maryland 21286
(410) 296-3333
Fax 296-4705
A Team of Land Planners, Landscape Architects, Engineers, Surveyors & Environmental Professionals

3-25-04
Date

Professional Engr. No. 15551

SUBDIVISION NAME	SECTION/AREA	LOT/PARCEL #
FOX MEADOW	1	167

PLAT OR L/F	BLOCK #	ZONE	TAX/ZONE MAP	ELEC. DISTRICT	CENSUS TRACT
5983/492	13, 19, 20	RR, RC	15	3	

TITLE
FOX MEADOW
(FORMERLY PFEFFERKORN PROPERTY)
MAINTENANCE OF TRAFFIC PLAN

Des By	PLH	Scale 1"=30'	Proj. No. 00042.B
Drn By	WDE	Date 1/7/04	5 OF 24
Chk By		Approved	

F03.45

Wed Mar 24 14:07:54 2004 m:\00042\00042.mst
3/24/2004 2:07:27 PM \\ATHENS\STATION\CADNET\NCF\daily.qcf cr1221 c:\hpm\00042.hpm

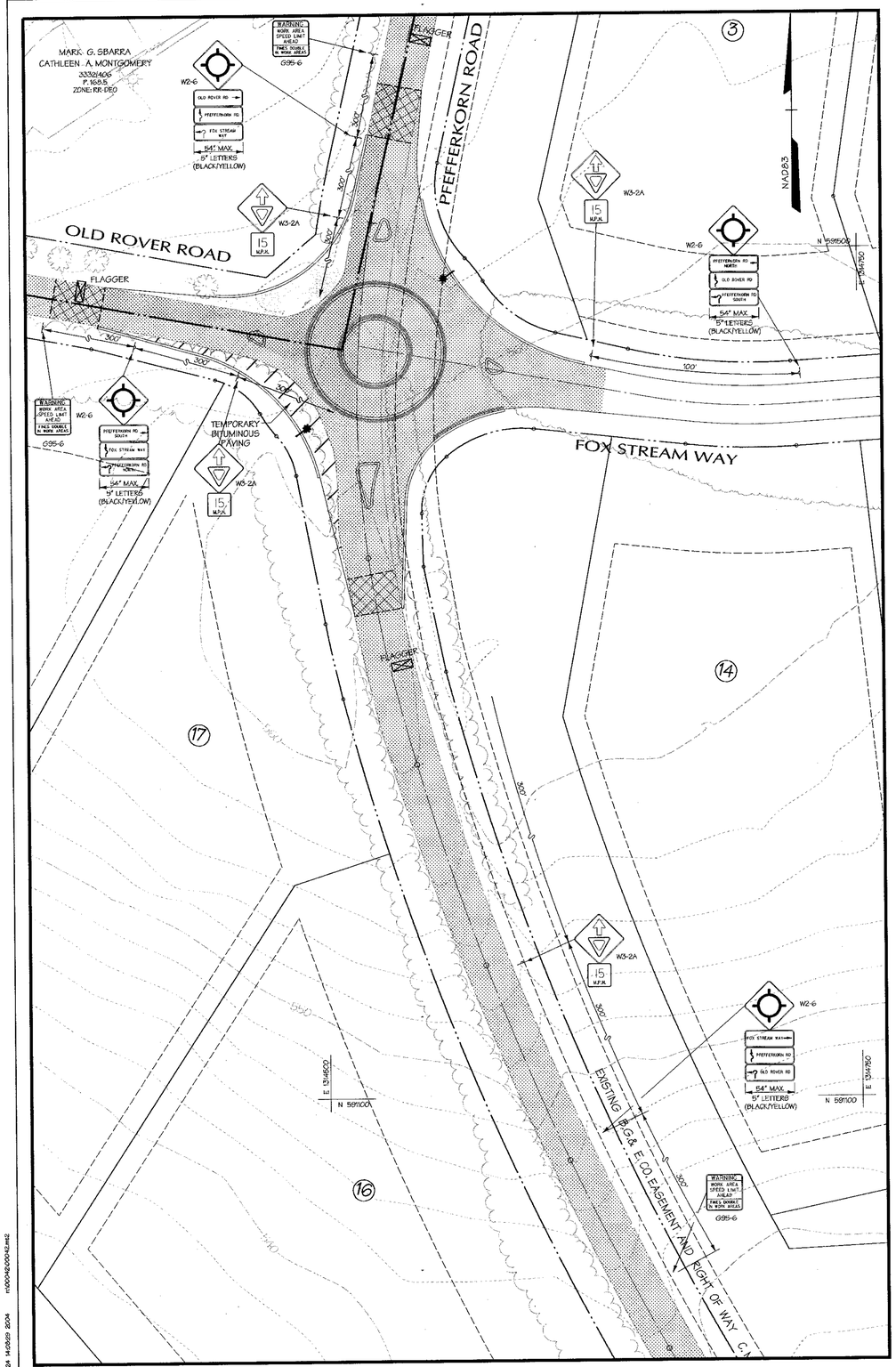

EXISTING PAVING

STAGE II CONSTRUCTION

STAGE II

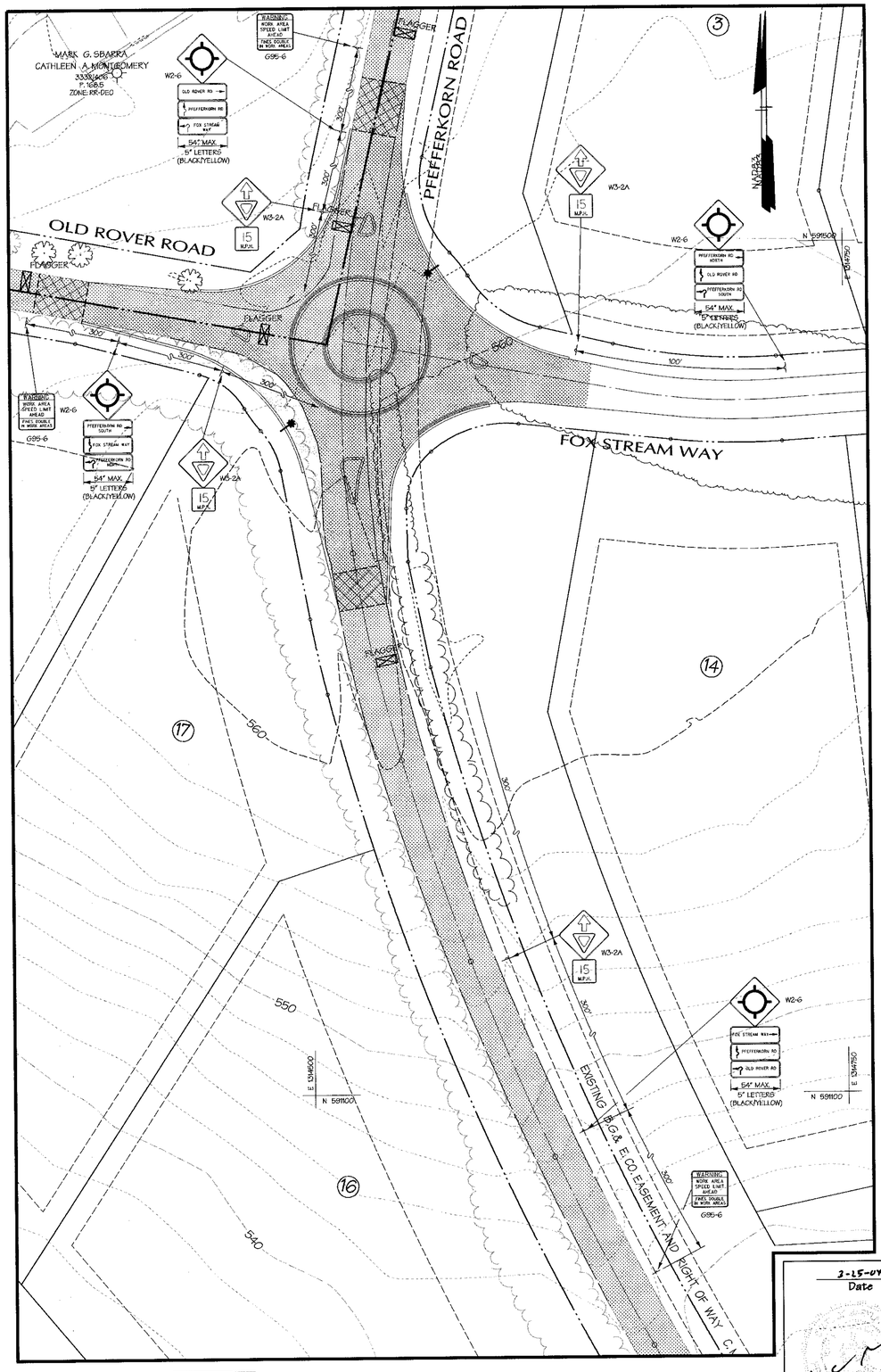

EXISTING PAVING

STAGE III CONSTRUCTION

STAGE III

DATA SOURCES:

BOUNDARY PER DMW FIELD SURVEY DATED DECEMBER 2001.

TOPO FLOWN BY VIRGINIA RESOURCE MAPPING, DECEMBER, 2001.

APPROX. WETLAND LOCATION PER DMW FIELD VISIT DATED APRIL 2000. OFF SITE SEPTIC RESERVE AREAS PER RECORD PLATS, LOCATIONS OF WELLS NOT AVAILABLE.

APPROVED: HOWARD COUNTY DEPARTMENT OF PUBLIC WORKS

CHIEF, BUREAU OF HIGHWAYS — DATE 4-13-04

APPROVED: HOWARD COUNTY DEPT. OF PLANNING & ZONING

CHIEF, DEVELOPMENT ENGINEERING DIVISION — DATE 4/28/04

CHIEF, DIVISION OF LAND DEVELOPMENT — DATE 4/30/04

~~DIRECTOR~~ — ~~DATE~~

Date	No.	Revision Description

OWNER: NORTHRIDGE DEVELOPMENT. LLC
14045 GARED DRIVE
GLENWOOD, MD 21738

DEVELOPER: JAMES F. SELFRIDGE BUILDERS, INC.
14045 GARED DRIVE
GLENWOOD, MD 21738

DMW
Daft-McCune-Walker, Inc.
200 East Pennsylvania Avenue
Towson, Maryland 21286
(410) 296-3333
Fax 296-4705

A Team of Land Planners, Landscape Architects, Engineers, Surveyors & Environmental Professionals

3-25-04
Date

Professional Engr. No. 15551

SUBDIVISION NAME: FOX MEADOW		SECTION/AREA: 1	LOT/PARCEL: 167
PLAT OR L/F: 5983/492	BLOCK: 13, 19, 20	ZONE: RR, RC	TAX/ZONE MAP: 15
ELECT. DIST/PCT: 3	CENSUS TRACT		

TITLE

FOX MEADOW
(FORMERLY PFEFFERKORN PROPERTY)
MAINTENANCE OF TRAFFIC PLAN

Des By	PLH	Scale 1"=30'	Proj. No. 00042.B
Drn By	WDE	Date 1/7/04	6 OF 24
Chk By		Approved	

F.03.45

#03.45

Wed Mar 24 14:08:23 2004 m:\00042\00042.mc2
3/24/2004 2:08:22 PM \\ATHENS\STATION\CADNET\OCF\dayoef cr122i c:\hpm\00042.hpm

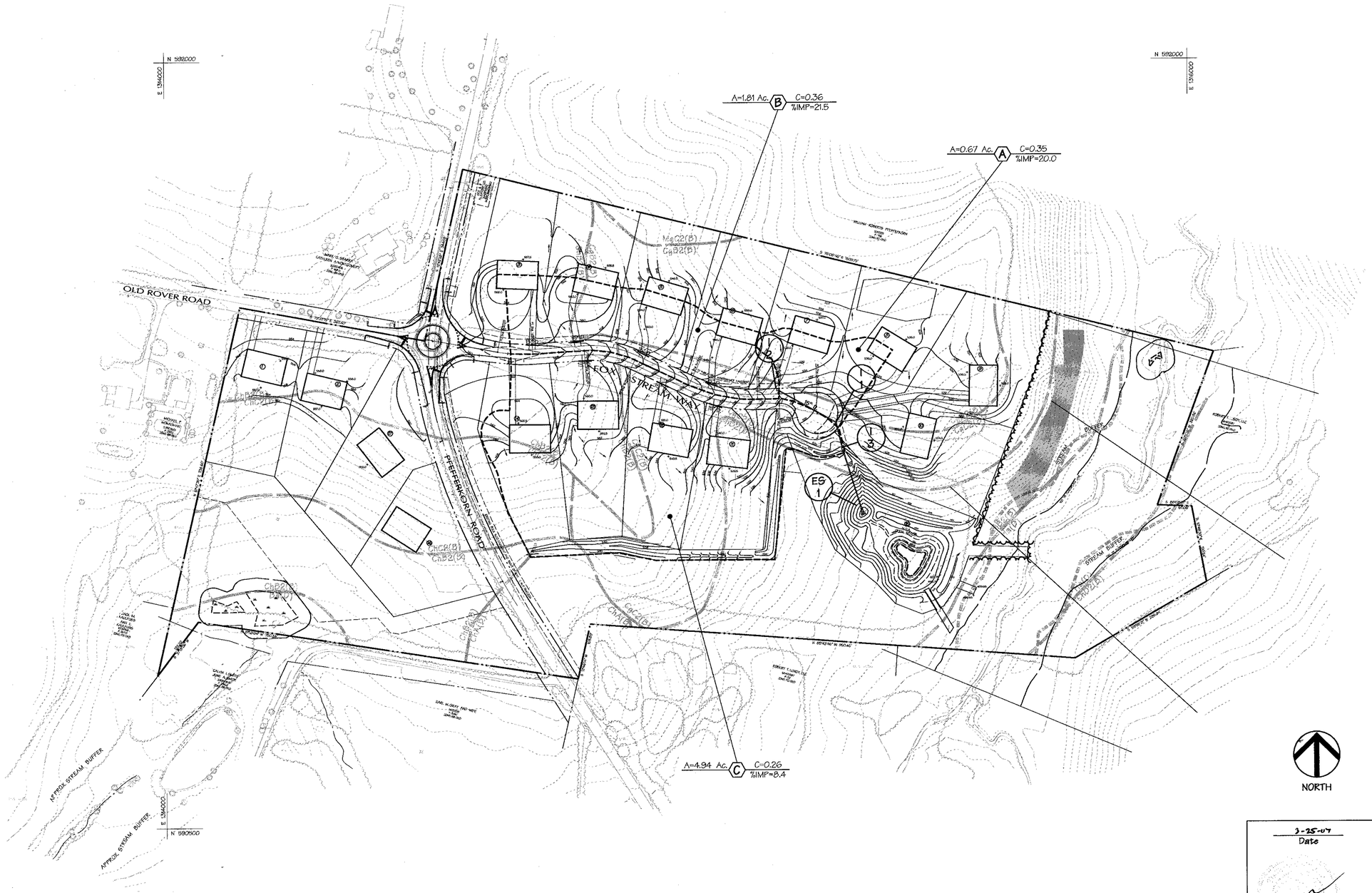

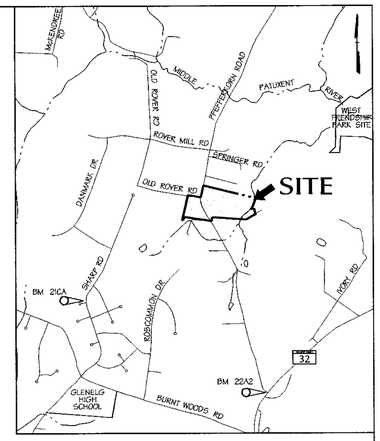

VICINITY MAP

SCALE: 1"=2000'

DATA SOURCES:

BOUNDARY PER DMW FIELD SURVEY DATED DECEMBER 2001.

TOPO FLOWN BY VIRGINIA RESOURCE MAPPING, DECEMBER, 2001.

APPROX. WETLAND LOCATION PER DMW FIELD VISIT DATED APRIL 2000. OFF SITE SEPTIC RESERVE AREAS PER RECORD PLATS, LOCATIONS OF WELLS NOT AVAILABLE.

APPROVED: HOWARD COUNTY DEPARTMENT OF PUBLIC WORKS

William F. Malone Jr. — 4-13-04

CHIEF, BUREAU OF HIGHWAYS — DATE

APPROVED: HOWARD COUNTY DEPT. OF PLANNING & ZONING

4/28/04

CHIEF, DEVELOPMENT ENGINEERING DIVISION — DATE

4/29/04

CHIEF, DIVISION OF LAND DEVELOPMENT — DATE

~~DIRECTOR~~ — ~~DATE~~

Date	No.	Revision Description

OWNER: NORTHRIDGE DEVELOPMENT. LLC
14045 GARED DRIVE
GLENWOOD, MD 21738

DEVELOPER: JAMES F. SELFRIDGE BUILDERS, INC.
14045 GARED DRIVE
GLENWOOD, MD 21738

DMW
Daft-McCune-Walker, Inc.
200 East Pennsylvania Avenue
Towson, Maryland 21286
(410) 296-3333
Fax 296-4705

A Team of Land Planners, Landscape Architects, Engineers, Surveyors & Environmental Professionals

3-25-04
Date

Professional Engr. No. 10551

SUBDIVISION NAME	SECTION/AREA	LOT/PARCEL #
FOX MEADOW	1	167

PLAT# OR LOT	BLOCK #	ZONE	TAX/ZONE MAP	ELECT. DISTRICT	CENSUS TRACT
5983/492	13, 19, 20	RR, RC	15	3	

TITLE

FOX MEADOW
(FORMERLY PFEFFERKORN PROPERTY)

Drainage Area Map

Des By LL	Scale 1"=100'	Proj. No. 00042.B
Drn By LL	Date 1/7/04	7 OF 24
Chk By	Approved	

F.03.45

Wed Mar 24 14:20:05 2004 n:\00042\00042.dwg

3/24/2004 2:19:55 PM \\ATHENS\MSTATION\CADNETN\OCF\dsy.qcf cr1zzi c:\hpm\00042.hpm

F.03.45

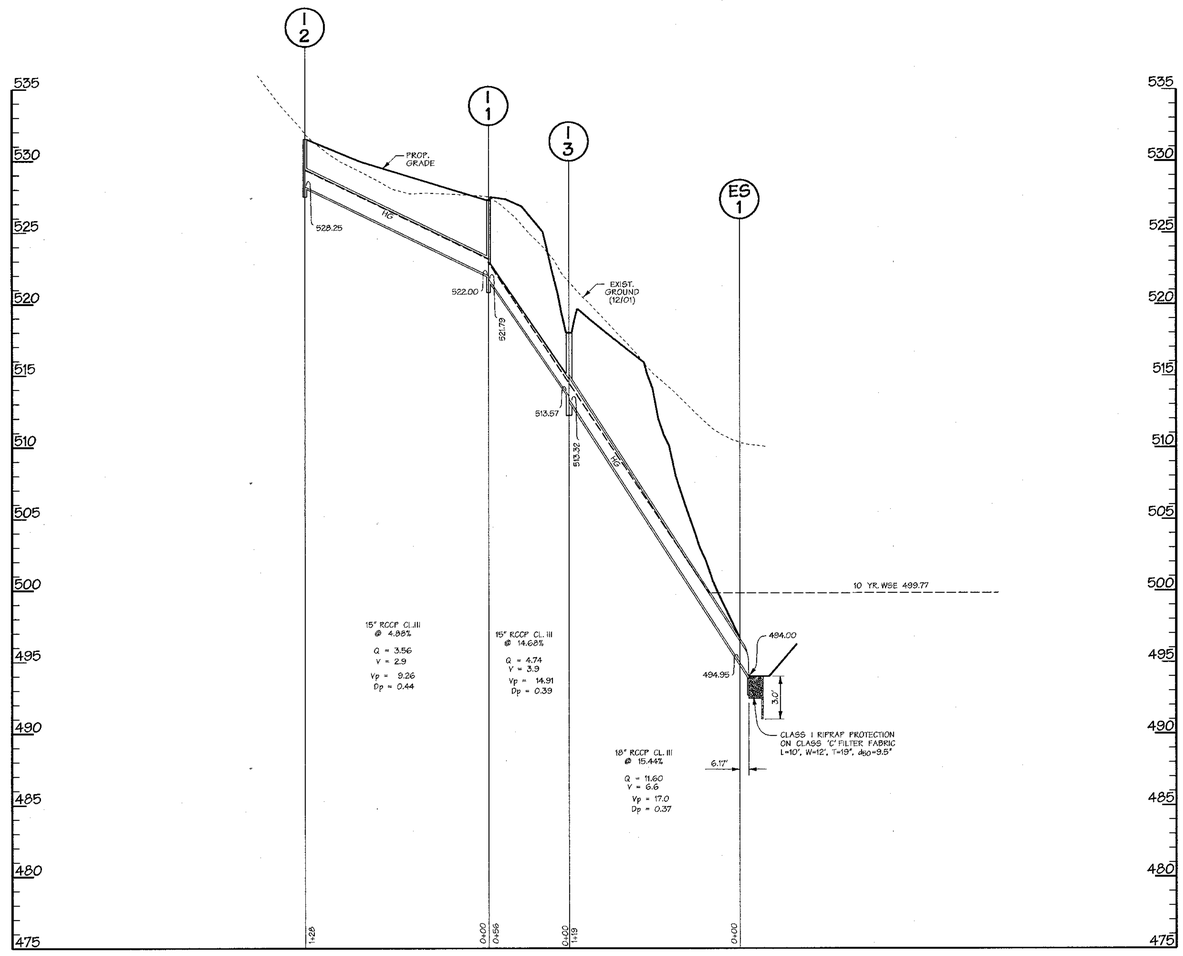

STORM DRAIN PROFILE

SCALE: HORIZ. 1"=50'
VERT. 1"=5'

NOTE:

1. LOTS 3-7 CULVERTS ARE TO BE 15" RCCP CL IV.
2. DRIVEWAYS FOR LOTS 8,9 & 10 ARE CLOSED SECTION ENTRANCE, HO.CO. STD. R-6.05, REMAINDER ARE OPEN SECTION, HO.CO. STD. R-6.06

INLET SCHEDULE

NO.	TYPE	Q	INV. OUT	TOP ELEV.
I-1	A-5, W = 2'6", HO. CO. SD 4.40	1.28	521.79	527.28
I-2	YARD INLET, W= 2'6", HO.CO. SD 4.14	3.56	528.25	532.00 Throat
I-3	YARD INLET, W= 2'6", HO.CO. SD 4.14	7.08	513.37	518.00 Throat
ES-1	CONC. END SECTION, HO. CO. SD 5.51		494.95	

PIPE SCHEDULE

SIZE (IN)	CATEGORY	L (FT)
15	RCCP CL. III	184
18	RCCP CL. III	119

APPROVED: HOWARD COUNTY DEPARTMENT OF PUBLIC WORKS

CHIEF, BUREAU OF HIGHWAYS — DATE 4-13-04

APPROVED:

CHIEF, DEVELOPMENT ENGINEERING DIVISION — DATE 4/20/04

CHIEF, DIVISION OF LAND DEVELOPMENT JA — DATE 4/29/04

~~DIRECTOR~~ — ~~DATE~~

Date	No.	Revision Description

OWNER: NORTHRIDGE DEVELOPMENT. LLC
14045 GARED DRIVE
GLENWOOD, MD 21738

DEVELOPER: JAMES F. SELFRIDGE BUILDERS, INC.
14045 GARED DRIVE
GLENWOOD, MD 21738

DMW
Daft-McCune-Walker, Inc.
200 East Pennsylvania Avenue
Towson, Maryland 21286
(410) 296-3333
Fax 296-4705

A Team of Land Planners, Landscape Architects, Engineers, Surveyors & Environmental Professionals

3-25-04
Date

Professional Engr. No. 6551

SUBDIVISION NAME			SECTION/AREA		LOT/PARCEL #
FOX MEADOW			1		167
PLAT # OR L/F	BLOCK #	ZONE	TAX/ZONE MAP	ELEC. DIST/PCT	CENSUS TRACT
5983/492	13, 19, 20	RR, RC	15	3	

TITLE
FOX MEADOW
(FORMERLY PFEFFERKORN PROPERTY)
Storm Drain Profile

Des By	LL	Scale AS SHOWN	Proj. No. 00042.B
Drn By	LL	Date 1/7/04	8 OF 24
Chk By		Approved	

F-03-45

Wed Mar 24 14:28:02 2004 n:\00042\00042.spl

3/24/2004 2:28:59 PM \\ATHENS\MSTATION\CADNETN\CDF\dsgn.pdf or:122 c:\hpm\00042.hpm

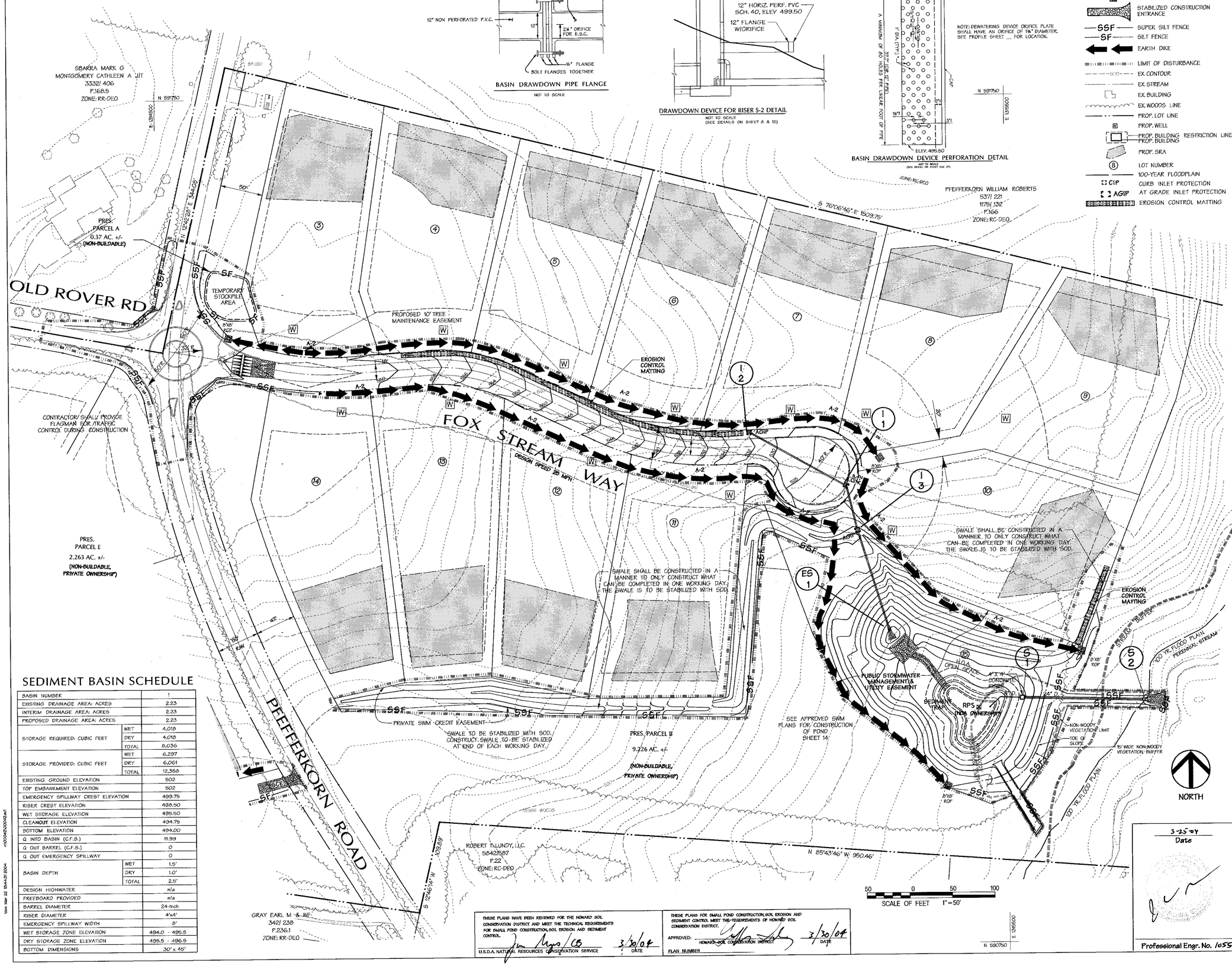

VICINITY MAP
SCALE: 1" = 2,000'

SEDIMENT BASIN SCHEDULE

BASIN NUMBER		1
EXISTING DRAINAGE AREA: ACRES		2.23
INTERIM DRAINAGE AREA: ACRES		2.23
PROPOSED DRAINAGE AREA: ACRES		2.23
STORAGE REQUIRED: CUBIC FEET	WET	4,018
	DRY	4,018
	TOTAL	8,036
STORAGE PROVIDED: CUBIC FEET	WET	6,297
	DRY	6,061
	TOTAL	12,358
EXISTING GROUND ELEVATION		502
TOP EMBANKMENT ELEVATION		502
EMERGENCY SPILLWAY CREST ELEVATION		499.75
RISER CREST ELEVATION		498.50
WET STORAGE ELEVATION		495.50
CLEANOUT ELEVATION		494.75
BOTTOM ELEVATION		494.00
Q INTO BASIN (C.F.S.)		11.99
Q OUT BARREL (C.F.S.)		0
Q OUT EMERGENCY SPILLWAY		0
BASIN DEPTH	WET	1.5'
	DRY	1.0'
	TOTAL	2.5'
DESIGN HIGHWATER		n/a
FREEBOARD PROVIDED		n/a
BARREL DIAMETER		24-Inch
RISER DIAMETER		4'x4'
EMERGENCY SPILLWAY WIDTH		8'
WET STORAGE ZONE ELEVATION		494.0 - 495.5
DRY STORAGE ZONE ELEVATION		495.5 - 496.5
BOTTOM DIMENSIONS		30' x 45'

THESE PLANS HAVE BEEN REVIEWED FOR THE HOWARD SOIL CONSERVATION DISTRICT AND MEET THE TECHNICAL REQUIREMENTS FOR SMALL POND CONSTRUCTION, SOIL EROSION AND SEDIMENT CONTROL.
U.S.D.A. NATURAL RESOURCES CONSERVATION SERVICE — 3/30/04 DATE

THESE PLANS FOR SMALL POND CONSTRUCTION, SOIL EROSION AND SEDIMENT CONTROL MEET THE REQUIREMENTS OF HOWARD SOIL CONSERVATION DISTRICT.
APPROVED: HOWARD SOIL CONSERVATION DISTRICT — 3/30/04 DATE
PLAN NUMBER

DEVELOPERS CERTIFICATE:

WE CERTIFY THAT ALL DEVELOPMENT AND/OR CONSTRUCTION WILL BE DONE ACCORDING TO THESE PLANS AND THAT ANY RESPONSIBLE PERSONNEL INVOLVED IN THE CONSTRUCTION PROJECT WILL HAVE A CERTIFICATE OF ATTENDANCE AT A DEPARTMENT OF ENVIRONMENT APPROVED TRAINING PROGRAM FOR THE CONTROL OF SEDIMENT AND EROSION BEFORE BEGINNING THE PROJECT. I SHALL ENGAGE A REGISTERED PROFESSIONAL ENGINEER TO SUPERVISE POND CONSTRUCTION AND PROVIDE THE HOWARD SOIL CONSERVATION DISTRICT WITH AN "AS-BUILT" PLAN OF THE POND WITHIN 30 DAYS OF COMPLETION. I ALSO AUTHORIZE PERIODIC ON-SITE INSPECTIONS BY THE HOWARD SOIL CONSERVATION DISTRICT.

SIGNATURE OF DEVELOPER — 3/23/04 DATE
PRINT NAME BELOW SIGNATURE JAMES H. SELFRIDGE

ENGINEERS CERTIFICATE:

I CERTIFY THAT THIS PLAN FOR POND CONSTRUCTION, EROSION AND SEDIMENT CONTROL REPRESENTS A PRACTICAL AND WORKABLE PLAN BASED ON MY PERSONAL KNOWLEDGE OF THE SITE CONDITIONS. THIS PLAN WAS PREPARED IN ACCORDANCE WITH THE REQUIREMENTS OF THE HOWARD SOIL CONSERVATION DISTRICT. I HAVE NOTIFIED THE DEVELOPER THAT HE/SHE MUST ENGAGE A REGISTERED PROFESSIONAL ENGINEER TO SUPERVISE POND CONSTRUCTION AND PROVIDE THE HOWARD SOIL CONSERVATION DISTRICT WITH AN "AS-BUILT" PLAN OF THE POND WITHIN 30 DAYS OF COMPLETION.

SIGNATURE OF ENGINEER — 3-25-04 DATE
PRINT NAME BELOW SIGNATURE John W. Ranacchia, Jr.

DATA SOURCES:
BOUNDARY PER DMW FIELD SURVEY DATED DECEMBER 2001.
TOPO FLOWN BY VIRGINIA RESOURCE MAPPING, DECEMBER, 2001.
APPROX. WETLAND LOCATION PER DMW FIELD VISIT DATED APRIL 2000. OFF SITE SEPTIC RESERVE AREAS PER RECORD PLATS, LOCATIONS OF WELLS NOT AVAILABLE.

APPROVED: HOWARD COUNTY DEPARTMENT OF PUBLIC WORKS
CHIEF, BUREAU OF HIGHWAYS — 4-13-04 DATE
APPROVED: HOWARD COUNTY DEPT. OF PLANNING & ZONING
CHIEF, DEVELOPMENT ENGINEERING DIVISION — 4/20/04 DATE
CHIEF, DIVISION OF LAND DEVELOPMENT JA — 4/29/04 DATE
~~DIRECTOR~~ ~~DATE~~

Date	No.	Revision Description

OWNER: NORTHRIDGE DEVELOPMENT. LLC
14045 GARED DRIVE
GLENWOOD, MD 21738

DEVELOPER: JAMES F. SELFRIDGE BUILDERS, INC.
14045 GARED DRIVE
GLENWOOD, MD 21738

DMW
Dart-McCune-Walker, Inc.
200 East Pennsylvania Avenue
Towson, Maryland 21286
(410) 296-3333
Fax 296-4705
A Team of Land Planners, Landscape Architects, Engineers, Surveyors & Environmental Professionals

3-25-04 Date

Professional Engr. No. 10551

SUBDIVISION NAME		SECTION/AREA		LOT/PARCEL #
FOX MEADOW				167
PLAT OR L/F	BOOK # / FOLIO	ZONE	TAX/ZONE MAP	ELECT. DISTRICT	CENSUS TRACT
5963/492	13, 19, 20	RR, RC	15	3	

TITLE
FOX MEADOW
(FORMERLY PFEFFERKORN PROPERTY)
Grading & Sediment and Erosion Control Plan

Des By DWR	Scale 1"=50'	Proj. No. 00042.B
Drn By DWR/BKC	Date 1/7/04	9 OF 24
Chk By	Approved	

F-03-45

Mon Mar 22 15:44:30 2004 n00042d00042.dwt

3/22/2004 3:44:16 PM \\ATHENS\STATION\CAD\ENGTNCC\dwg\of cr122 ct.hpm\00042.hpm

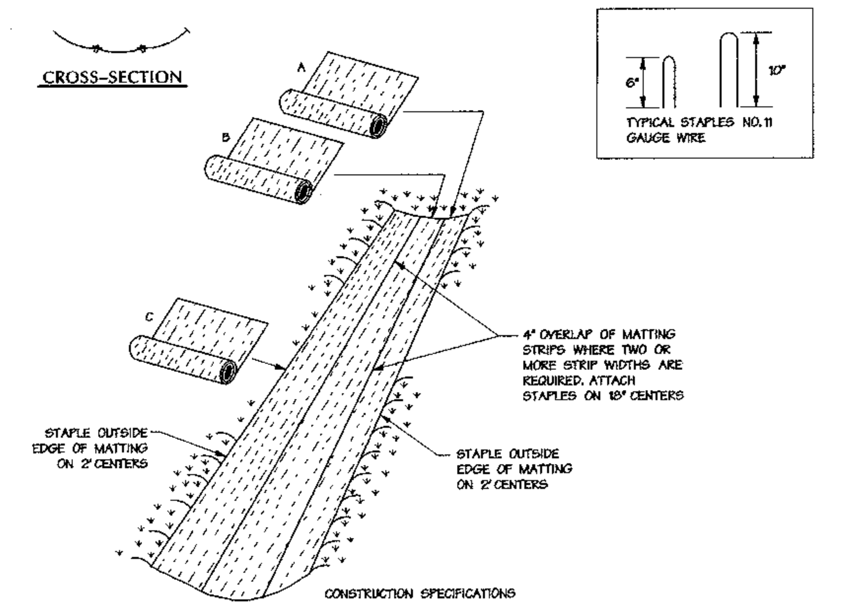

CONSTRUCTION SPECIFICATIONS

1. KEY-IN THE MATTING BY PLACING THE TOP ENDS OF THE MATTING IN A NARROW TRENCH, 6" IN DEPTH. BACKFILL THE TRENCH AND TAMP FIRMLY TO CONFORM TO THE CHANNEL CROSS-SECTION. SECURE WITH A ROW OF STAPLES ABOUT 4" DOWN SLOPE FROM THE TRENCH. SPACING BETWEEN STAPLES IN 6".
2. STAPLE THE 4" OVERLAP IN THE CHANNEL CENTER USING AN 18" SPACING BETWEEN STAPLES.
3. BEFORE STAPLING THE OUTER EDGES OF THE MATTING, MAKE SURE THE MATTING IS SMOOTH AND IN FIRM CONTACT WITH THE SOIL.
4. STAPLES SHALL BE PLACED 2' APART WITH 4 ROWS FOR EACH STRIP, 2 OUTER ROWS, AND 2 ALTERNATING ROWS DOWN THE CENTER.
5. WHERE ONE ROLL OF MATTING ENDS AND ANOTHER BEGINS, THE END OF THE TOP STRIP SHALL OVERLAP THE UPPER END OF THE LOWER STRIP BY 4", SHIPLAP FASHION. REINFORCE THE OVERLAP WITH A DOUBLE ROW OF STAPLES SPACED 6" APART IN A STAGGERED PATTERN ON EITHER SIDE.
6. THE DISCHARGE END OF THE MATTING LINER SHOULD BE SIMILARLY SECURED WITH 2 DOUBLE ROWS OF STAPLES.

NOTE: IF FLOW WILL ENTER FROM THE EDGE OF THE MATTING THEN THE AREA EFFECTED BY THE FLOW MUST BE KEYED-IN.

U.S. DEPARTMENT OF AGRICULTURE SOIL CONSERVATION SERVICE G - 22 - 2 *MARYLAND DEPARTMENT OF ENVIRONMENT WATER MANAGEMENT ADMINISTRATION*

Erosion Control Matting

Not To Scale

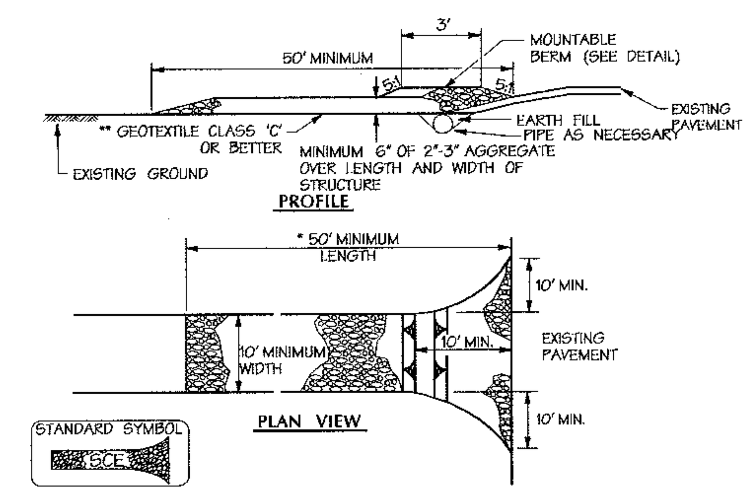

CONSTRUCTION SPECIFICATIONS

1. LENGTH - MINIMUM OF 50' (*30' FOR SINGLE RESIDENCE LOT).
2. WIDTH - 10' MINIMUM, SHOULD BE FLARED AT THE EXISTING ROAD TO PROVIDE A TURNING RADIUS.
3. GEOTEXTILE FABRIC CLASS C (FILTER CLOTH) SHALL BE PLACED OVER THE EXISTING GROUND PRIOR TO PLACING STONE. **THE PLAN APPROVAL AUTHORITY MAY NOT REQUIRE SINGLE FAMILY RESIDENCES TO USE GEOTEXTILE.
4. STONE - CRUSHED AGGREGATE (2" TO 3") OR RECLAIMED OR RECYCLED CONCRETE EQUIVALENT SHALL BE PLACED AT LEAST 6" DEEP OVER THE LENGTH AND WIDTH OF THE ENTRANCE.
5. SURFACE WATER - ALL SURFACE WATER FLOWING TO OR DIVERTED TOWARD CONSTRUCTION ENTRANCES SHALL BE PIPED THROUGH THE ENTRANCE, MAINTAINING POSITIVE DRAINAGE. PIPE INSTALLED THROUGH THE STABILIZED CONSTRUCTION ENTRANCE SHALL BE PROTECTED WITH A MOUNTABLE BERM WITH 5:1 SLOPES AND A MINIMUM OF 6" OF STONE OVER THE PIPE. PIPE HAS TO BE SIZED ACCORDING TO THE DRAINAGE. WHEN THE SCE IS LOCATED AT A HIGH SPOT AND HAS NO DRAINAGE TO CONVEY A PIPE WILL NOT BE NECESSARY. PIPE SHOULD BE SIZED ACCORDING TO THE AMOUNT OF RUNOFF TO BE CONVEYED. A 6" MINIMUM WILL BE REQUIRED.
6. LOCATION - A STABILIZED CONSTRUCTION ENTRANCE SHALL BE LOCATED AT EVERY POINT WHERE CONSTRUCTION TRAFFIC ENTERS OR LEAVES A CONSTRUCTION SITE. VEHICLES LEAVING THE SITE MUST TRAVEL OVER THE ENTIRE LENGTH OF THE STABILIZED CONSTRUCTION ENTRANCE.

U.S. DEPARTMENT OF AGRICULTURE SOIL CONSERVATION SERVICE F - 17 - 3 *MARYLAND DEPARTMENT OF ENVIRONMENT WATER MANAGEMENT ADMINISTRATION*

Stabilized Construction Entrance

Not To Scale

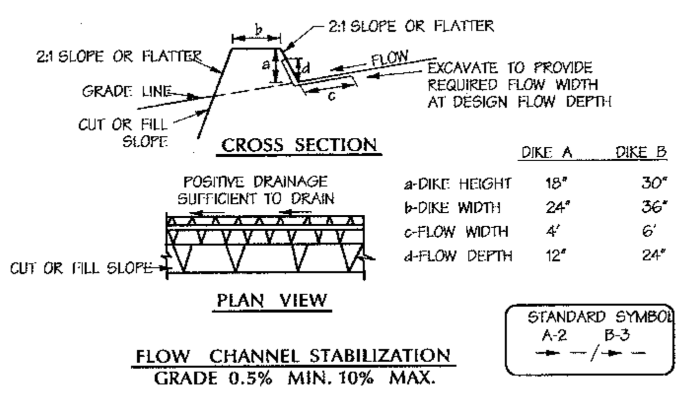

	DIKE A	DIKE B
a-DIKE HEIGHT	18"	30"
b-DIKE WIDTH	24"	36"
c-FLOW WIDTH	4'	6'
d-FLOW DEPTH	12"	24"

FLOW CHANNEL STABILIZATION
GRADE 0.5% MIN. 10% MAX.

1. SEED AND COVER WITH STRAW MULCH.
2. SEED AND COVER WITH EROSION CONTROL MATTING OR LINE WITH SOD.
3. 4" - 7" STONE OR RECYCLED CONCRETE EQUIVALENT PRESSED INTO THE SOIL 7" MINIMUM.

CONSTRUCTION SPECIFICATIONS

1. ALL TEMPORARY EARTH DIKES SHALL HAVE UNINTERRUPTED POSITIVE GRADE TO AN OUTLET. SPOT ELEVATIONS MAY BE NECESSARY FOR GRADES LESS THAN 1%.
2. RUNOFF DIVERTED FROM A DISTURBED AREA SHALL BE CONVEYED TO A SEDIMENT TRAPPING DEVICE.
3. RUNOFF DIVERTED FROM AN UNDISTURBED AREA SHALL OUTLET DIRECTLY INTO AN UNDISTURBED, STABILIZED AREA AT A NON-EROSIVE VELOCITY.
4. ALL TREES, BRUSH, STUMPS, OBSTRUCTIONS, AND OTHER OBJECTIONAL MATERIAL SHALL BE REMOVED AND DISPOSED OF SO AS NOT TO INTERFERE WITH THE PROPER FUNCTIONING OF THE DIKE.
5. THE DIKE SHALL BE EXCAVATED OR SHAPED TO LINE, GRADE AND CROSS SECTION AS REQUIRED TO MEET THE CRITERIA SPECIFIED HEREIN AND BE FREE OF BANK PROJECTIONS OR OTHER IRREGULARITIES WHICH WILL IMPEDE NORMAL FLOW.
5. FILL SHALL BE COMPACTED BY EARTH MOVING EQUIPMENT.
7. ALL EARTH REMOVED AND NOT NEEDED FOR CONSTRUCTION SHALL BE PLACED SO THAT IT WILL NOT INTERFERE WITH THE FUNCTIONING OF THE DIKE.
8. INSPECTION AND MAINTENANCE MUST BE PROVIDED PERIODICALLY AND AFTER EACH RAIN EVENT.

U.S. DEPARTMENT OF AGRICULTURE SOIL CONSERVATION SERVICE A - 1 - 6 *MARYLAND DEPARTMENT OF ENVIRONMENT WATER MANAGEMENT ADMINISTRATION*

Earth Dike

Not To Scale

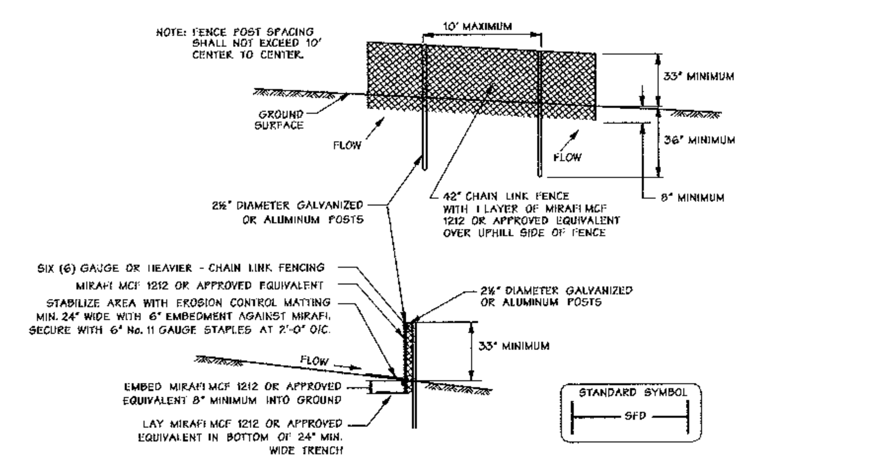

CONSTRUCTION SPECIFICATIONS

1. FENCING SHALL BE 42 INCHES IN HEIGHT AND CONSTRUCTED IN ACCORDANCE WITH THE LATEST MARYLAND STATE HIGHWAY (SHA) DETAILS FOR CHAIN LINK FENCING. THE SPECIFICATION FOR A 6' FENCE SHALL BE USED, SUBSTITUTING 42" FABRIC AND 6' LENGTH POSTS.
2. THE POSTS DO NOT NEED TO BE SET IN CONCRETE.
3. CHAIN LINK FENCE SHALL BE FASTENED SECURELY TO THE FENCE POSTS WITH WIRE TIES OR STAPLES. THE LOWER TENSION WIRE, BRACE OR TRUSS RODS, DRIVE ANCHORS AND POST CAPS ARE NOT REQUIRED EXCEPT ON THE ENDS OF THE FENCE. THE CHAIN LINK FENCING SHALL BE SIX (6) GAUGE OR HEAVIER.
4. MIRAFI MCF 1212 OR APPROVED EQUIVALENT SHALL BE FASTENED SECURELY TO THE CHAIN LINK FENCE WITH TIES SPACED EVERY 24" AT THE TOP AND MID SECTION.
5. MIRAFI MCF 1212 OR APPROVED EQUIVALENT SHALL BE EMBEDDED A MINIMUM OF 8" INTO THE GROUND.
6. WHEN TWO SECTIONS OF MIRAFI MCF 1212 OR APPROVED EQUIVALENT ADJOIN EACH OTHER, THEY SHALL BE OVERLAPPED BY 6" AND FOLDED.
7. MAINTENANCE SHALL BE PERFORMED AS NEEDED.
8. MAXIMUM FLOW SLOPE 10.0%.
9. MAXIMUM DRAINAGE AREA 5 ACRES.

U.S. DEPARTMENT OF AGRICULTURE SOIL CONSERVATION SERVICE H - 26 - 4 *MARYLAND DEPARTMENT OF ENVIRONMENT WATER MANAGEMENT ADMINISTRATION*

Super Fence Diversion

Not To Scale

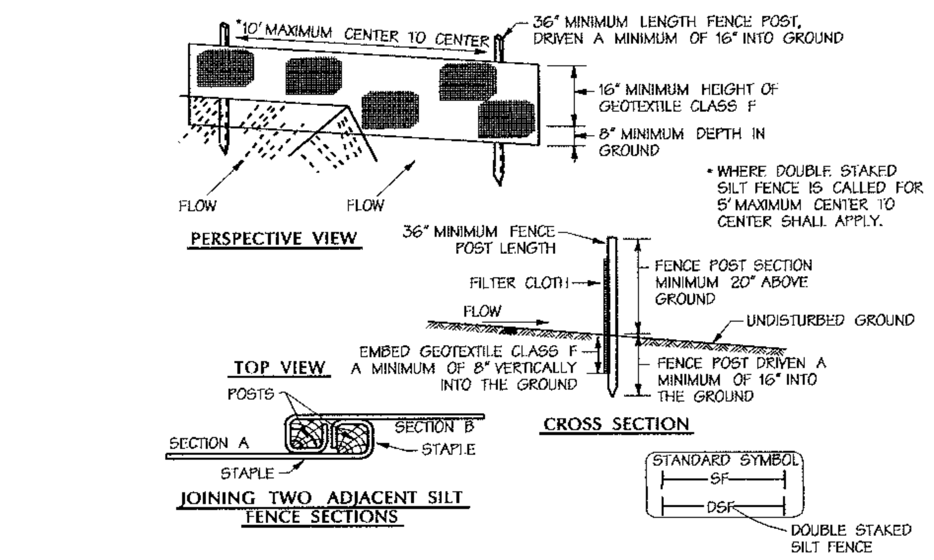

CONSTRUCTION SPECIFICATIONS

1. FENCE POSTS SHALL BE A MINIMUM OF 36" LONG DRIVEN 16" MINIMUM INTO THE GROUND. WOOD POSTS SHALL BE 1½" x 1½" SQUARE (MINIMUM) CUT, OR 1¾" DIAMETER (MINIMUM) ROUND AND SHALL BE OF SOUND QUALITY HARDWOOD. STEEL POSTS WILL BE STANDARD T OR U SECTION WEIGHTING NOT LESS THAN 1.00 POUND PER LINEAR FOOT.
2. GEOTEXTILE SHALL BE FASTENED SECURELY TO EACH FENCE POST WITH WIRE TIES OR STAPLES AT TOP AND MID-SECTION AND SHALL MEET THE FOLLOWING REQUIREMENTS FOR GEOTEXTILE CLASS F:

TENSILE STRENGTH	50 LBS/IN (MIN.)	TEST: MSMT 509
TENSILE MODULUS	20 LBS/IN (MIN.)	TEST: MSMT 509
FLOW RATE	0.3 GAL FT/MIN (MAX)	TEST: MSMT 322
FILTERING EFFICIENCY	75% (MIN.)	TEST: MSMT 322

3. WHERE ENDS OF GEOTEXTILE FABRIC COME TOGETHER, THEY SHALL BE OVERLAPPED, FOLDED AND STAPLED TO PREVENT SEDIMENT BYPASS.
4. SILT FENCE SHALL BE INSPECTED AFTER EACH RAINFALL EVENT AND MAINTAINED WHEN BULGES OCCUR OR WHEN SEDIMENT ACCUMULATION REACHED 50% OF THE FABRIC HEIGHT.

U.S. DEPARTMENT OF AGRICULTURE SOIL CONSERVATION SERVICE E - 15 - 3 *MARYLAND DEPARTMENT OF ENVIRONMENT WATER MANAGEMENT ADMINISTRATION*

Silt Fence

Not To Scale

DUST CONTROL SPECIFICATIONS

TEMPORARY METHODS:
1. MULCHES - SEE STANDARDS FOR VEGETATIVE STABILIZATION WITH MULCHES ONLY. MULCH SHOULD BE CRIMPED OR TACKED TO PREVENT BLOWING.
2. VEGETATIVE COVER - SEE STANDARDS FOR TEMPORARY VEGETATIVE COVER.
3. TILLAGE - TO ROUGHEN SURFACE AND BRING CLODS TO THE SURFACE. THIS IS AN EMERGENCY MEASURE WHICH SHOULD BE USED BEFORE SOIL BLOWING STARTS. BEGIN PLOWING ON WINDWARD SIDE OF SITE. CHISEL-TYPE PLOWS SPACED ABOUT 12 INCHES APART, SPRING-TOOTHED HARROWS, AND SIMILAR PLOWS ARE EXAMPLES OF EQUIPMENT WHICH MAY PRODUCE THE DESIRED EFFECT.
4. IRRIGATION - THIS IS GENERALLY DONE AS AN AN EMERGENCY TREATMENT. SITE IS SPRINKLED WITH WATER UNTIL THE SURFACE IS MOIST. REPEAT AS NEEDED. AT NO TIME SHOULD THE SITE BE IRRIGATED TO THE POINT THE RUNOFF BEGINS TO FLOW.
5. BARRIERS - SOLID BOARD FENCES, SNOW FENCES, BURLAP FENCES, STRAW BALES, AND SIMILAR MATERIAL CAN BE USED TO CONTROL AIR CURRENTS AND SOIL BLOWING. BARRIERS PLACED AT RIGHT ANGLES TO PREVAILING CURRENTS AT INTERVALS OF ABOUT 10 TIMES THEIR HEIGHT ARE AFFECTIVE IN CONTROLLING SOIL BLOWING.
6. CALCIUM CHLORIDE - APPLY AT A RATE THAT WILL KEEP SURFACE MOIST. MAY NEED RETREATMENT.

PERMANENT METHODS:
1. PERMANENT VEGETATION - SEE STANDARDS FOR PERMANENT VEGETATIVE COVER, AND PERMANENT STABILIZATION WITH SOD. EXISTING TREES OR LARGE SHRUBS MAY AFFORD VALUABLE PROTECTION IF LEFT IN PLACE.
2. TOPSOILING - COVERING WITH LESS EROSIVE SOIL MATERIALS. SEE STANDARDS FOR TOPSOILING.
3. STONE - COVER SURFACE WITH CRUSHED STONE OR COARSE GRAVEL AFTER RECEIVING PERMISSION FROM THE SEDIMENT CONTROL INSPECTOR.

U.S. DEPARTMENT OF AGRICULTURE SOIL CONSERVATION SERVICE H - 30 - 1 *MARYLAND DEPARTMENT OF ENVIRONMENT WATER MANAGEMENT ADMINISTRATION*

Dust Control Specifications

Not To Scale

1. A MINIMUM OF 48 HOURS NOTICE MUST BE GIVEN TO THE HOWARD COUNTY DEPARTMENT OF INSPECTIONS, AND PERMITS, SEDIMENT CONTROL DIVISION PRIOR TO THE START OF ANY CONSTRUCTION (313-1855).
2. ALL VEGETATIVE AND STRUCTURAL PRACTICES ARE TO BE INSTALLED ACCORDING TO THE PROVISIONS OF THIS PLAN AND ARE TO BE IN CONFORMANCE WITH THE MOST CURRENT MARYLAND STANDARDS AND SPECIFICATIONS FOR SOIL EROSION AND SEDIMENT CONTROL" AND REVISIONS THERETO.
3. FOLLOWING INITIAL SOIL DISTURBANCE OR RE-DISTURBANCE, PERMANENT OR TEMPORARY STABILIZATION SHALL BE COMPLETED WITHIN:
   A. SEVEN CALENDAR DAYS FOR ALL PERIMETER SEDIMENT CONTROL STRUCTURES, DIKES, PERIMETER SLOPES AND ALL SLOPES STEEPER THAN 3:1.
   B. FOURTEEN DAYS AS TO ALL OTHER DISTURBED OF GRADED AREAS ON THE PROJECT SITE.
4. ALL SEDIMENT TRAPS/BASING SHOWN MUST BE FENCED AND WARNING SIGNS POSTED AROUND THEIR PERIMETER IN ACCORDANCE WITH VOL.1, CHAPTER 12, OF THE "HOWARD COUNTY DESIGN MANUAL", STORM DRAINAGE.
5. ALL DISTURBED AREAS MUST BE STABILIZED WITHIN THE TIME PERIOD SPECIFIED ABOVE IN ACCORDANCE WITH THE "1994 MARYLAND STANDARDS AND SPECIFICATIONS FOR SOIL EROSION AND SEDIMENT CONTROL" FOR PERMANENT SEEDINGS (SEC.51), SODS (SEC.54), TEMPORARY SEEDING (SEC.50), AND MULCHING (SEC.52). TEMPORARY STABILIZATION WITH MULCH ALONE CAN ONLY BE DONE WHEN RECOMMENDED SEEDING DATES DO NOT ALLOW FOR PROPER GERMINATION AND ESTABLISHMENT OF GRASSES.
6. ALL SEDIMENT CONTROL STRUCTURES ARE TO REMAIN IN PLACE AND ARE TO BE MAINTAINED IN OPERATIVE CONDITION UNTIL PERMISSION FOR THEIR REMOVAL HAS BEEN OBTAINED FROM THE HOWARD COUNTY SEDIMENT CONTROL INSPECTOR.
7. SITE ANALYSIS:

TOTAL AREA OR SITE	= 6.5 ACRES
AREA DISTURBED	= 6.5 ACRES
AREA TO BE ROOFED OR PAVED	= 4.2 ACRES
AREA TO BE VEGETATIVELY STABILIZED	= 2.3 ACRES
TOTAL CUT	= 5,000 CUBIC YARDS
TOTAL FILL	= 5,000 CUBIC YARDS
WASTE BORROW AREA	= N/A

8. ANY SEDIMENT CONTROL PRACTICE WHICH IS DISTURBED BY GRADING ACTIVITY FOR PLACEMENT OF UTILITIES MUST BE REPAIRED ON THE SAME DAY OF DISTURBANCE.
9. ADDITIONAL SEDIMENT CONTROLS MUST BE PROVIDED, IF DEEMED NECESSARY BY THE HOWARD COUNTY SEDIMENT CONTROL INSPECTOR.
10. ON ALL SITES WITH DISTURBED AREAS IN EXCESS OF 2 ACRES, APPROVAL OF THE INSPECTION AGENCY SHALL BE REQUESTED UPON COMPLETION OF INSTALLATION OF PERIMETER EROSION AND SEDIMENT CONTROLS, BUT BEFORE PROCEEDING WITH ANY OTHER EARTH DISTURBANCE OR GRADING. OTHER BUILDING OR GRADING INSPECTION APPROVALS MAY NOT BE AUTHORIZED UNTIL THIS INITIAL APPROVAL BY THE INSPECTION AGENCY IS MADE.
11. TRENCHES FOR THE CONSTRUCTION OF UTILITIES IS LIMITED TO THREE PIPE LENGTHS OR THAT WHICH SHALL BE BACK-FILLED AND STABILIZED WITHIN ONE WORKING DAY, WHICHEVER IS SHORTER.

Sediment Control General Notes

Not To Scale

CONSTRUCTION SPECIFICATIONS

1. THE SUBGRADE FOR THE FILTER, RIP-RAP, OR GABION SHALL BE PREPARED TO THE REQUIRED LINES AND GRADES. ANY FILL REQUIRED IN THE SUBGRADE SHALL BE COMPACTED TO A DENSITY OF APPROXIMATELY THAT OF THE SURROUNDING UNDISTURBED MATERIAL.

2. THE ROCK OR GRAVEL SHALL CONFORM TO THE SPECIFIED GRADING LIMITS WHEN INSTALLED RESPECTIVELY IN THE RIP-RAP OR FILTER.

3. GEOTEXTILE CLASS C SHALL BE PROTECTED FROM PUNCHING, CUTTING, OR TEARING. ANY DAMAGE OTHER THAN AN OCCASIONAL SMALL HOLE SHALL BE REPAIRED BY PLACING ANOTHER PIECE OF GEOTEXTILE OVER THE DAMAGED PART OR BY COMPLETELY REPLACING THE GEOTEXTILE. ALL OVERLAPS WHETHER FOR REPAIRS OR FOR JOINING TWO PIECES OF GEOTEXTILE SHALL BE A MINIMUM OF ONE FOOT.

4. STONE FOR THE RIP-RAP OR GABION OUTLETS MAY BE PLACED BY EQUIPMENT. THEY SHALL BE CONSTRUCTED TO THE FULL COURSE THICKNESS IN ONE OPERATION AND IN SUCH A MANNER AS TO AVOID DISPLACEMENT OF UNDERLYING MATERIALS. THE STONE FOR RIP-RAP OR GABION OUTLETS SHALL BE DELIVERED AND PLACED IN A MANNER THAT WILL ENSURE THAT IT IS REASONABLY HOMOGENEOUS WITH THE SMALLER STONES AND SPALLS FILLING THE VOIDS BETWEEN THE LARGER STONES. RIP-RAP SHALL BE PLACED IN A MANNER TO PREVENT DAMAGE TO THE FILTER BLANKET OR GEOTEXTILE. HAND PLACEMENT WILL BE REQUIRED TO THE EXTENT NECESSARY TO PREVENT DAMAGE TO THE PERMANENT WORKS.

5. THE STONE SHALL BE PLACED SO THAT IT BLENDS IN WITH THE EXISTING GROUND. IF THE STONE IS PLACED TOO HIGH THEN THE FLOW WILL BE FORCED OUT OF THE CHANNEL AND SCOUR ADJACENT TO THE STONE WILL OCCUR.

U.S. DEPARTMENT OF AGRICULTURE SOIL CONSERVATION SERVICE F-18-8A, 9A, 10A *MARYLAND DEPARTMENT OF ENVIRONMENT WATER MANAGEMENT ADMINISTRATION*

Rock Outlet Protection Specifications

Not To Scale

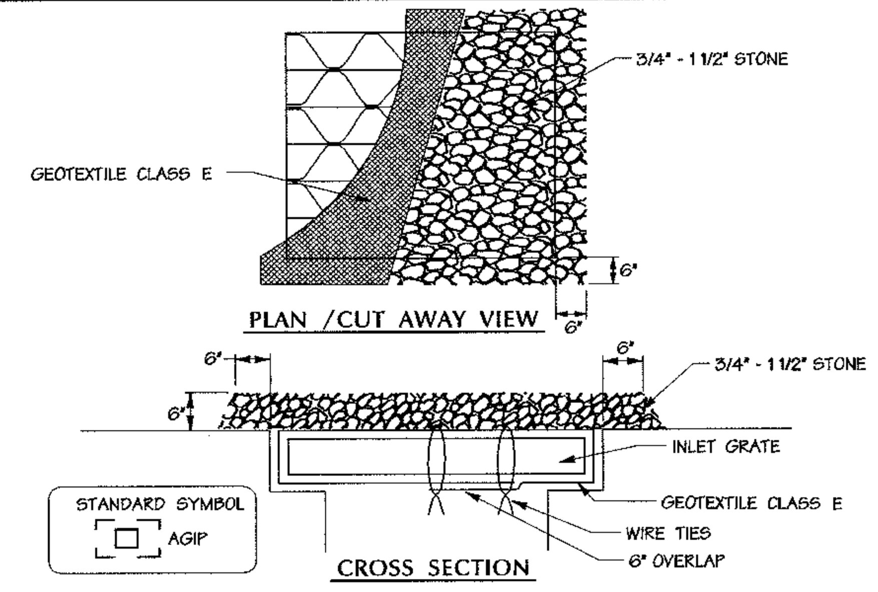

MAX. DRAINAGE AREA = 1/4 ACRE

CONSTRUCTION SPECIFICATIONS

1. LIFT GRATE AND WRAP WITH GEOTEXTILE CLASS E TO COMPLETELY COVER ALL OPENINGS, THEN SET GRATE BACK IN PLACE.
2. PLACE ¾" TO 1½" STONE, 4"-6" THICK ON THE GRATE TO SECURE THE FABRIC AND PROVIDE ADDITIONAL FILTRATION.

U.S. DEPARTMENT OF AGRICULTURE SOIL CONSERVATION SERVICE E - 16 - 5A *MARYLAND DEPARTMENT OF ENVIRONMENT WATER MANAGEMENT ADMINISTRATION*

At Grade Inlet Protection

Not To Scale

SILT FENCE DESIGN CRITERIA

SLOPE STEEPNESS	(MAXIMUM) SLOPE LENGTH	(MAXIMUM) SILT FENCE LENGTH
FLATTER THAN 50:1 (2%)	UNLIMITED	UNLIMITED
50:1 TO 10:1 (2-10%)	125 FEET	1,000 FEET
10:1 TO 5:1 (10-20%)	100 FEET	750 FEET
5:1 TO 3:1 (20-33%)	60 FEET	500 FEET
3:1 TO 2:1 (33-50%)	40 FEET	250 FEET
2:1 AND STEEPER (* 50%)	20 FEET	125 FEET

NOTE: IN AREAS OF LESS THAN 2% SLOPE AND SANDY SOILS (USDA GENERAL CLASSIFICATION SYSTEM, SOIL CLASS A) MAXIMUM SLOPE LENGTH AND SILT FENCE LENGTH WILL BE UNLIMITED. IN THESE AREAS A SILT FENCE MAY BE THE ONLY PERIMETER CONTROL REQUIRED

U.S. DEPARTMENT OF AGRICULTURE SOIL CONSERVATION SERVICE E - 15 - 3A *MARYLAND DEPARTMENT OF ENVIRONMENT WATER MANAGEMENT ADMINISTRATION*

Silt Fence

Not To Scale

DESIGN CRITERIA

SLOPE	SLOPE STEEPNESS	SLOPE LENGTH (MAXIMUM)	SILT FENCE LENGTH (MAXIMUM)
0 - 10%	0 - 10:1	UNLIMITED	UNLIMITED
10 - 20%	10:1 - 5:1	200 FEET	1,500 FEET
20 - 33%	5:1 - 3:1	100 FEET	1,000 FEET
33 - 50%	3:1 - 2:1	100 FEET	500 FEET
50% +	2:1 +	50 FEET	250 FEET

U.S. DEPARTMENT OF AGRICULTURE SOIL CONSERVATION SERVICE H - 26 - 3A *MARYLAND DEPARTMENT OF ENVIRONMENT WATER MANAGEMENT ADMINISTRATION*

Super Silt Fence

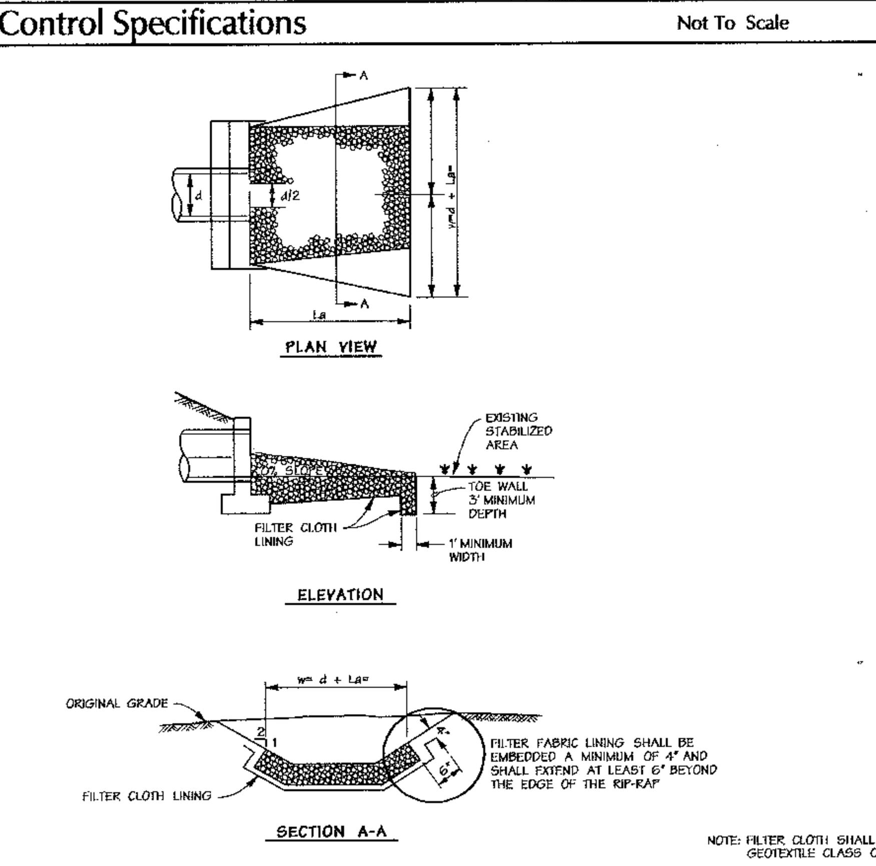

NOTE: FILTER CLOTH SHALL BE GEOTEXTILE CLASS C

U.S. DEPARTMENT OF AGRICULTURE SOIL CONSERVATION SERVICE F-18-10 (HEAD) *MARYLAND DEPARTMENT OF ENVIRONMENT WATER MANAGEMENT ADMINISTRATION*

Rock Outlet Protection III

Not To Scale

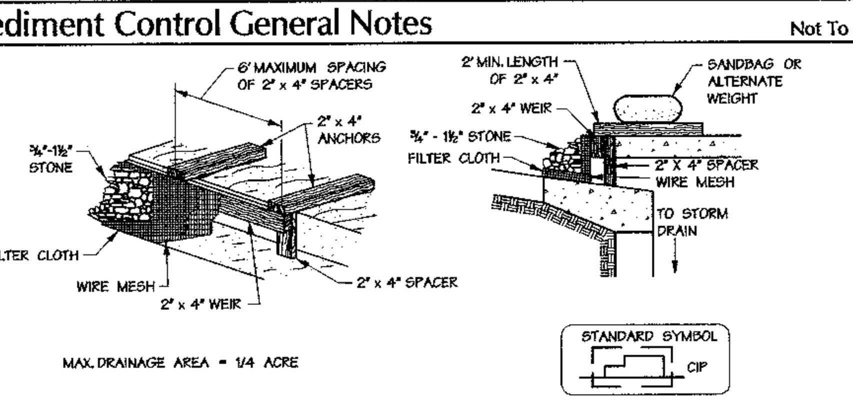

MAX. DRAINAGE AREA = 1/4 ACRE

CONSTRUCTION SPECIFICATIONS

1. ATTACH A CONTINUOUS PIECE OF ½" x ½" WIRE MESH (30" MINIMUM WIDTH BY THROAT LENGTH PLUS 4') TO THE 2" x 4" WEIR (MEASURING THROAT LENGTH PLUS 2') AS SHOWN ON THE STANDARD DRAWING.
2. PLACE A CONTINUOUS PIECE OF GEOTEXTILE CLASS E THE SAME DIMENSIONS AS THE WIRE MESH OVER THE WIRE MESH AND SECURELY ATTACH IT TO THE 2" x 4" WEIR.
3. SECURELY NAIL THE 2" x 4" WEIR TO A 9" LONG VERTICAL SPACER TO BE LOCATED BETWEEN THE WEIR AND THE INLET FACE (MAX. 4' APART).
4. PLACE THE ASSEMBLY AGAINST THE INLET THROAT AND NAIL (MINIMUM 2' LENGTHS OF 2" x 4" TO THE TOP OF THE WEIR AT SPACER LOCATIONS). THESE 2" x 4" ANCHORS SHALL EXTEND ACROSS THE INLET TOP AND BE HELD IN PLACE BY SANDBAGS OR ALTERNATE WEIGHT.
5. THE ASSEMBLY SHALL BE PLACED SO THAT THE END SPACERS ARE A MINIMUM 1' BEYOND BOTH ENDS OF THE THROAT OPENING.
6. FORM THE ½" x ½" WIRE MESH AND THE GEOTEXTILE FABRIC TO THE CONCRETE GUTTER AND AGAINST THE FACE OF THE CURB ON BOTH SIDES OF THE INLET. PLACE CLEAN ¾" X 1½" STONE OVER THE WIRE MESH AND GEOTEXTILE IN SUCH A MANNER TO PREVENT WATER FROM ENTERING THE INLET UNDER OR AROUND THE GEOTEXTILE.
7. THIS TYPE OF PROTECTION MUST BE INSPECTED FREQUENTLY AND THE FILTER CLOTH AND STONE REPLACED WHEN CLOGGED WITH SEDIMENT.
8. ASSURE THAT STORM FLOW DOES NOT BYPASS THE INLET BY INSTALLING A TEMPORARY EARTH OR ASPHALT DIKE TO DIRECT THE FLOW OF THE INLET.

U.S. DEPARTMENT OF AGRICULTURE SOIL CONSERVATION SERVICE E - 16 - 5B *MARYLAND DEPARTMENT OF ENVIRONMENT WATER MANAGEMENT ADMINISTRATION*

Curb Inlet Protection (COG or COS Inlets)

Not To Scale

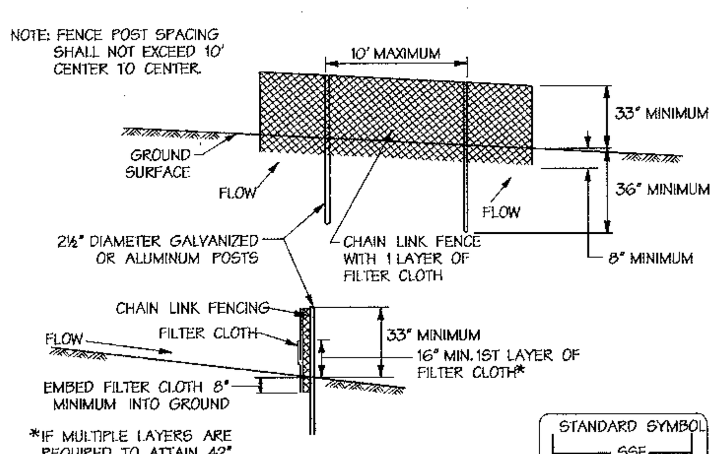

CONSTRUCTION SPECIFICATIONS

1. FENCING SHALL BE 42 INCHES IN HEIGHT AND CONSTRUCTED IN ACCORDANCE WITH THE LATEST MARYLAND STATE HIGHWAY (SHA) DETAILS FOR CHAIN LINK FENCING. THE SPECIFICATION FOR A 6' FENCE SHALL BE USED, SUBSTITUTING 42" FABRIC AND 6' LENGTH POSTS.
2. THE POSTS DO NOT NEED TO BE SET IN CONCRETE.
3. CHAIN LINK FENCE SHALL BE FASTENED SECURELY TO THE FENCE POSTS WITH WIRE TIES OR STAPLES. THE LOWER TENSION WIRE, BRACE AND TRUSS RODS, DRIVE ANCHORS AND POST CAPS ARE NOT REQUIRED EXCEPT ON THE ENDS OF THE FENCE. THE CHAIN LINK FENCING SHALL BE SIX (6) GAUGE OR HEAVIER.
4. FILTER CLOTH SHALL BE FASTENED SECURELY TO THE CHAIN LINK FENCE WITH TIES SPACED EVERY 24" AT THE TOP AND MID SECTION.
5. FILTER CLOTH SHALL BE EMBEDDED A MINIMUM OF 8" INTO THE GROUND.
6. WHEN TWO SECTIONS OF FILTER CLOTH ADJOIN EACH OTHER, THEY SHALL BE OVERLAPPED BY 6" AND FOLDED.
7. MAINTENANCE SHALL BE PERFORMED AS NEEDED AND SILT BUILDUPS REMOVED WHEN "BULGES" DEVELOP IN THE SILT FENCE, OR WHEN SILT REACHES 50% OF FENCE HEIGHT.

U.S. DEPARTMENT OF AGRICULTURE SOIL CONSERVATION SERVICE H - 26 - 3 *MARYLAND DEPARTMENT OF ENVIRONMENT WATER MANAGEMENT ADMINISTRATION*

Super Silt Fence

Not To Scale

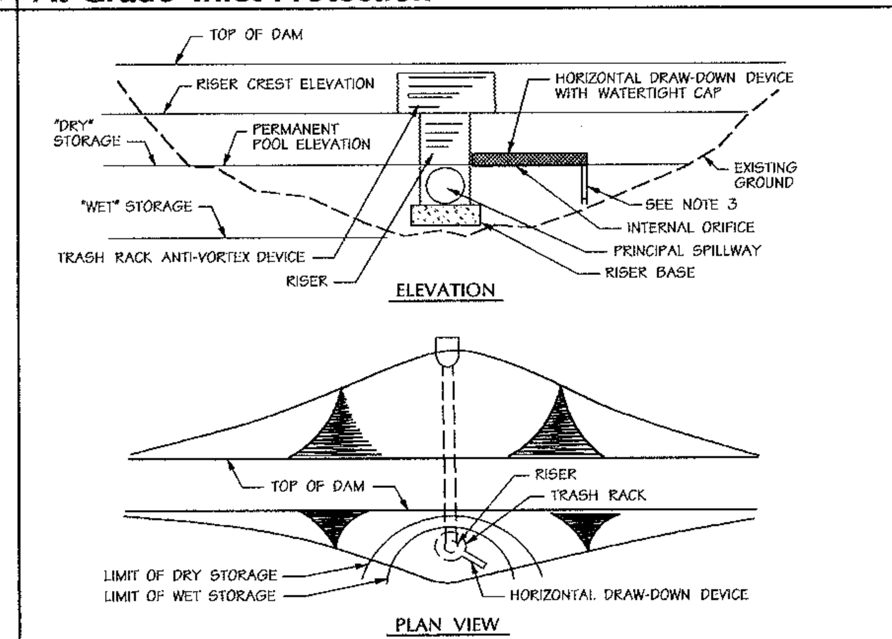

CONSTRUCTION SPECIFICATIONS

1. THE TOTAL AREA OF THE PERFORATIONS MUST BE GREATER THAN 4 TIMES THE AREA OF THE INTERNAL ORIFICE.
2. THE PERFORATED PORTION OF THE DRAW-DOWN DEVICE SHALL BE WRAPPED WITH ½" HARDWARE CLOTH AND GEOTEXTILE FABRIC. THE GEOTEXTILE FABRIC SHALL MEET THE SPECIFICATIONS FOR GEOTEXTILE CLASS E.
3. PROVIDE SUPPORT OF DRAW-DOWN DEVICE TO PREVENT SAGGING AND FLOTATION. AN ACCEPTABLE PREVENTATIVE MEASURE IS TO STAKE BOTH SIDES OF THE DRAW-DOWN DEVICE WITH 1" STEEL ANGLE, OR 1' BY 4" SQUARE OF 2" ROUND WOODEN POSTS SET 3' MINIMUM INTO THE GROUND THEN JOINING THEM TO THE DEVICE BY WRAPPING WITH 12 GAUGE MINIMUM WIRE.

U.S. DEPARTMENT OF AGRICULTURE SOIL CONSERVATION SERVICE C - 10 - 29 *MARYLAND DEPARTMENT OF ENVIRONMENT WATER MANAGEMENT ADMINISTRATION*

Basin Drawdown Schematic Hor. Drawdown Device

APPROVED: HOWARD COUNTY DEPARTMENT OF PUBLIC WORKS

William I. Whalen Jr. — 4-13-04
CHIEF, BUREAU OF HIGHWAYS — DATE

APPROVED:
[signature] — 4/20/04
CHIEF, DEVELOPMENT ENGINEERING DIVISION — DATE

[signature] — 4/29/04
CHIEF, DIVISION OF LAND DEVELOPMENT — DATE

~~DIRECTOR~~ — ~~DATE~~

Date	No.	Revision Description

OWNER: NORTHRIDGE DEVELOPMENT. LLC
14045 GARED DRIVE
GLENWOOD, MD 21738

DEVELOPER: JAMES F. SELFRIDGE BUILDERS, INC.
14045 GARED DRIVE
GLENWOOD, MD 21738

THESE PLANS HAVE BEEN REVIEWED FOR THE HOWARD SOIL CONSERVATION DISTRICT AND MEET THE TECHNICAL REQUIREMENTS FOR SMALL POND CONSTRUCTION, SOIL EROSION AND SEDIMENT CONTROL.

[signature] 3/30/04
U.S.D.A. NATURAL RESOURCES CONSERVATION SERVICE — DATE

THESE PLANS FOR SMALL POND CONSTRUCTION, SOIL EROSION AND SEDIMENT CONTROL MEET THE REQUIREMENTS OF HOWARD SOIL CONSERVATION DISTRICT.

APPROVED: [signature] 3/30/04
HOWARD SOIL CONSERVATION DISTRICT — DATE

PLAN NUMBER

DEVELOPERS CERTIFICATE:

I/WE CERTIFY THAT ALL DEVELOPMENT AND/OR CONSTRUCTION WILL BE DONE ACCORDING TO THESE PLANS AND THAT ANY RESPONSIBLE PERSONNEL INVOLVED IN THE CONSTRUCTION PROJECT WILL HAVE A CERTIFICATE OF ATTENDANCE AT A DEPARTMENT OF ENVIRONMENT APPROVED TRAINING PROGRAM FOR THE CONTROL OF SEDIMENT AND EROSION BEFORE BEGINNING THE PROJECT. I SHALL ENGAGE A REGISTERED PROFESSIONAL ENGINEER TO SUPERVISE POND CONSTRUCTION AND PROVIDE THE HOWARD SOIL CONSERVATION DISTRICT WITH AN "AS-BUILT" PLAN OF THE POND WITHIN 30 DAYS OF COMPLETION. I ALSO AUTHORIZE PERIODIC ON-SITE INSPECTIONS BY THE HOWARD SOIL CONSERVATION DISTRICT.

[signature] 3/23/04
SIGNATURE OF DEVELOPER — DATE
PRINT NAME BELOW SIGNATURE: JAMES H. SELFRIDGE

ENGINEERS CERTIFICATE:

I CERTIFY THAT THIS PLAN FOR POND CONSTRUCTION, EROSION AND SEDIMENT CONTROL REPRESENTS A PRACTICAL AND WORKABLE PLAN BASED ON MY PERSONAL KNOWLEDGE OF THE SITE CONDITIONS. THIS PLAN WAS PREPARED IN ACCORDANCE WITH THE REQUIREMENTS OF THE HOWARD SOIL CONSERVATION DISTRICT. I HAVE NOTIFIED THE DEVELOPER THAT HE/SHE MUST ENGAGE A REGISTERED PROFESSIONAL ENGINEER TO SUPERVISE POND CONSTRUCTION AND PROVIDE THE HOWARD SOIL CONSERVATION DISTRICT WITH AN "AS-BUILT" PLAN OF THE POND WITHIN 30 DAYS OF COMPLETION.

[signature] 3-25-04
SIGNATURE OF ENGINEER — DATE
PRINT NAME BELOW SIGNATURE: John W. Ranocchia Sr.

SEQUENCE OF CONSTRUCTION

SEQUENCE	NUMBER OF DAYS
1. OBTAIN A GRADING PERMIT. MDE PERMIT # 200360320	7
2. INSTALL SEDIMENT AND EROSION CONTROL DEVICES (INCLUDING STORM DRAIN NECESSARY FOR INLET TRAP).	7
3. ROUGH GRADE SITE AFTER OBTAINING PERMISSION FROM INSPECTOR TO PROCEED	30
4 CONSTRUCT STORM DRAIN AND INSTALL INLET PROTECTION	20
5. FINE GRADE SITE.	2
6. INSTALL CURB & GUTTER, PAVING.	5
7. STABILIZE ALL AREAS IN ACCORDANCE WITH THE STANDARDS AND SPECIFICATIONS.	2

3-25-04
Date

Professional Engr. No. 10551

DMW
Daft·McCune·Walker, Inc.
200 East Pennsylvania Avenue
Towson, Maryland 21286
(410) 296-3333
Fax 296-4705

A Team of Land Planners, Landscape Architects, Engineers, Surveyors & Environmental Professionals

SUBDIVISION NAME	SECTION/AREA	LOT/PARCEL
FOX MEADOW	1	167

PLAT OR L/F	BLOCK	ZONE	TAX/ZONE MAP	ELECT. DISTRICT	CENSUS TRACT
5983/492	13, 19, 20	RR, RC	15	3	

TITLE
FOX MEADOW
(FORMERLY PFEFFERKORN PROPERTY)
Sediment and Erosion Control Details

Des By	DWR	Scale	Proj. No. 00042.B
Drn By	DWR	Date 1/7/04	10 OF 24
Chk By		Approved	

Mon Mar 22 15:37:04 2004 n:\00042\00042.sc5

F-03-45

Mon Mar 22 15:37:04 2004 n:\00042\00042.sc5

3/22/2004 3:36:25 PM \\ATHENS\MSTATION\CADNET\N\OCF\day-pcf crizzi c:\hpm\00042.hpm

STANDARDS AND SPECIFICATIONS FOR VEGETATIVE STABILIZATION

SECTION I - VEGETATIVE STABILIZATION METHODS AND MATERIALS

A. SITE PREPARATION

I. Install erosion and sediment control structures (either temporary or permanent) such as diversions, grade stabilization structures, berms waterways, or sediment control basins.

II. Perform all grading operations at right angles to the slope. Final grading and shaping is not usually necessary for temporary seeding.

III. Schedule required soil test to determine soil amendment composition and application rates for sites having disturbed area over 5 acres.

B. SOIL AMENDMENTS (FERTILIZER AND LIME SPECIFICATIONS)

I. Soil test must be performed to determine the exact ratios and application rates for both lime and fertilizer on sites having disturbed areas over 5 acres. Soil analysis may be performed by the University of Maryland or a recognized commercial laboratory. Soil samples taken for engineering purposes may also be used for chemical analysis.

II. Fertilizers shall be uniform in composition, free flowing and suitable for accurate application by approved equipment. Manure may be substituted for fertilizer with prior approval from the appropriate approval authority. Fertilizers shall be delivered to the site fully labeled according to the applicable state fertilizer laws and shall bear the name, trade name or trademark and warrantee of the producer.

III. Lime materials shall be ground limestone (hydrated or brunt lime may be substituted) which contains at least 50% total oxides (calcium oxide plus magnesium oxide). Limestone shall be ground to such fineness that at least 50% will pass through a #100 mesh sieve and 98 - 100% will pass through a #20 mesh sieve.

IV. Incorporate lime and fertilizer into the top 3 - 5 inches of soil by disking or other suitable means.

C. SEEDBED PREPARATION

I. TEMPORARY SEEDING

A. Seedbed preparation shall consist of loosening soil to a depth of 3 inches to 5 inches by means of suitable agricultural or construction equipment, such a disc harrows or chisel plows or rippers mounted on construction equipment. After the soil is loosened it should not be rolled or dragged smooth but left in the roughened condition. Sloped areas (greater than 3:1) should be tracked leaving the surface in an irregular condition with ridges running parallel to the counter of the slope.

B. Apply fertilizer and lime as prescribed on the plans.

C. Incorporate lime and fertilizer into the top 3 - 5 inches of soil by disking or other suitable means.

II. PERMANENT SEEDING

A. Minimum soil conditions required for permanent vegetative establishment:

1. Soil ph shall be between 6.0 and 7.0.
2. Soluble salts shall be less than 500 parts per million (PPM).
3. The soil shall contain less than 40% clay but enough fine grained material (> 30% silt plus clay) to provide the capacity to hold a moderate amount of moisture. An exception is if Lovegrass or Serecia Lespedeza is to be planted. Then a sandy soil (< 30% silt plus clay) would be acceptable.
4. Soil shall contain 1.5% minimum organic matter by weight.
5. Soil must contain sufficient pore space to permit adequate root penetration.
6. If these conditions cannot be met by the soils on site, adding topsoil is required in accordance with Section 21 - Standard and Specification for Topsoil.

B. Areas previously graded in conformance with the drawings shall be maintained in a true and even grade, then scarified or otherwise loosened to a depth of 3 - 5 inches to permit bonding of the topsoil to the surface area and to create horizontal erosion check slots to prevent topsoil from sliding down a slope.

C. Apply soil amendments as per soil test or as included on the plans.

D. Mix soil amendments into the top 3 - 5 inches of topsoil by disking or other suitable means. Lawn areas should be raked to smooth the surface, remove large objects like stones and branches, and ready the area for seed application. Where site conditions will not permit normal seedbed preparation, loosen surface soil by dragging with a heavy chain or other equipment to roughen the surface. Steep slopes (steeper than 3:1) should be tracked by a dozer leaving the soil in an irregular condition with ridges running parallel to the contour of the slope. The top 1 - 3 inches of soil should be loose and friable. Seedbed loosening may not be necessary on newly disturbed areas.

D. SEED SPECIFICATIONS

I. All seed must meet the requirements of the Maryland State Seed Law. All seed shall be subject to re-testing by a recognized seed laboratory. All seed used shall have been tested within the 6 months immediately preceding the date of sowing such material on this job.

Note: Seed tags shall be made available to the inspector to verify type and rate of seed used.

II. Inoculant - The inoculant for treating legume seed in the seed mixtures shall be a pure culture of nitrogen-fixing bacteria prepared specifically for the species. Inoculants shall not be used later than the date indicated on the container. Add fresh inoculant as directed on package. Use four times the recommended rate when hydroseeding. Note: It is very important to keep inoculant as cool as possible until used. Temperatures above 75-80 F. can weaken bacteria and make the inoculant less effective.

E. METHODS OF SEEDING

I. Hydroseeding: Apply seed uniformly with hydroseeder (slurry includes seed and fertilizer), broadcast or drop seeder, or cultipacker seeder.

A. If fertilizer is being applied at the time of seeding, the application rates amounts will not exceed the following:
Nitrogen; maximum of 100 pounds per acre total of soluble
Nitrogen; P205 (phosphorous): 200 pounds per acre; K20 (potassium): 200 pounds per acre.

B. Lime: Use only ground agricultural limestone, (up to 3 tons per acre may be applied by hydroseeding). Normally, not more than 2 tons are applied- by hydroseeding at any one time. Do not use burnt or hydrated lime when hydroseeding.

C. Seed and fertilizer shall be mixed on site and seeding shall be done immediately and without interruption.

II. Dry Seeding: This includes use of conventional drop or broadcast spreaders.

A. Seed spread dry shall be incorporated into the subsoil at the rates prescribed on the temporary or permanent seeding summaries or tables 25 or 26. The seeded area shall then be rolled with a weighed roller to provide good seed soil contact.

B. Where practical, seed should be applied in two directions perpendicular to each other. Apply half the seeding rate in each direction.

III. Drill or cultipacker seeding: Mechanized seeders that apply and cover seed with soil.

A. Cultipacking seeders are required to bury the seed in such a fashion as to provide at least ¼ inch of soil covering.

Seedbed must be firm after planting.

B. Where practical, seed should be applied in two directions perpendicular to each other. Apply half the seeding rate in each direction.

F. MULCH SPECIFICATIONS (IN ORDER OF PREFERENCE)

I. Straw shall consist of thoroughly threshed wheat, rye or oat straw, reasonably bright in color, and shall not be musty, moldy, caked, decayed, or excessively dusty and shall be free of noxious weeds seeds as specified in the Maryland Seed Law.

II. Wood cellulose fiber mulch (WCFM)

A. WCFM shall consist of specially prepared wood cellulose processed into a uniform fibrous physical state.

B. WCFM shall be dyed green or contain a green dye in the package that will provide an appropriate color to facilitate visual inspection of the uniformly spread slurry.

C. WCFM, including dye shall contain no germination or growth inhibiting factors.

D. WCFM materials shall be manufactured and processed in such a manner that the wood cellulose fiber mulch will remain in uniform suspension in water under agitation and will blend with seed, fertilizer and other additives to form a homogeneous slurry. The mulch material shall form a blotter-like ground cover, on application, having moisture absorption and percolation properties and shall cover and hold grass seed in contact with the soil without inhibiting the growth of the grass seedings.

E. WCFM material shall contain no elements or compounds at concentration levels that will be phyto-toxic.

F. WCFM must conform to the following physical requirements:
Fiber length to approximately 10 mm., diameter approximately 1mm., ph range of 4.0 to 8.5, ash content of 1.6% maximum and water holding capacity of 90% minimum.

Note: Only sterile straw mulch should be used in areas where one species of grass is desired.

G. MULCHING SEEDED AREAS - Mulch shall be applied to all seeded areas where one species of grass is desired.

I. If grading is completed outside of the seeding season, mulch alone shall be applied as prescribed in this section and maintained until the seeding season returns and seeding can be performed in accordance with these specifications.

II. When straw mulch is used, it shall be spread over all seeded areas at the rate of 2 tons per acre. Mulch shall be applied in a uniform loose depth of between 1inches and 2 inches. Mulch applied shall achieve a uniform distribution and depth so that the surface is not exposed. If a mulch anchoring tool is to be used, the rate should be increased to 2.5 tons per acre.

III. Wood cellulose fiber used as a mulch shall be applied at a net dry weight of 1,500 pounds per acre. The wood cellulose fiber shall be mixed with water and the mixture shall contain a maximum of 50 pounds of wood cellulose fiber per 100 gallons of water.

H. SECURING STRAW MULCH - Mulch anchoring shall be performed immediately following mulch application to minimize loss by wind or water. This may be done by one of the following methods (listed by preference), depending upon size of area and erosion hazard:

I. A mulch anchoring tool is a tractor drawn implement design to punch and anchor mulch into the soil surface a minimum of two (2) inches. This practice is most effective on large areas, but is limited to flatter slopes where equipment can operate safely. If used on sloping land, this practice should be used on the contour if possible.

II. Wood cellulose fiber may be used for anchoring straw. The fiber binder shall be applied at a net dry weight of 750 pounds per acre. The wood cellulose fiber shall be mixed with water and the mixture shall contain a maximum of 50 pounds of wood cellulose fiber per 100 gallons of water.

III. Application of liquid binders should be heavier at the edges where wind catches mulch, such as in valleys or on crest of banks. The remainder of area should appear uniform after binder application. Synthetic binders - such as Acrylic DLR (agro-tack), DCA-70, Petroset, Terra Tax II, Terra Tack AR or other approved equal may be used at rates recommended by the manufacturer to anchor mulch.

IV. Lightweight plastic netting may be stapled over the mulch according to manufacturer's recommendations. Netting is usually available in rolls 4' to 15' feet wide and 300 to 3,000 feet long.

SECTION II - TEMPORARY SEEDING

VEGETATION - Annual grass or grain used to provide cover on disturbed areas for up to 12 months. For longer duration of vegetative cover, permanent seeding is required.

Seed Mixture (Hardiness Zone 6B)					Fertilizer Rate (10-10-10)	Lime Rate
No.	Species	Application Rate (Lb./Ac.)	Seeding Dates	Seeding Depths		
1	Annual Ryegrass	50	2/1 - 4/30 8/15 - 11/1	¼"-½"	600 Lbs./Ac. (15 Lbs./1000 SF)	2 Tons/Ac. (100 Lbs./1000 SF)
2	Weeping Lovegrass	4	5/1 - 8/14	¼"-½"		

SECTION III - PERMANENT SEEDING

Seeding grass and legumes to establish ground cover for a minimum of one year on disturbed areas generally receiving low maintenance.

Seed Mixture No. 3 (Hardiness Zone 6B)					Fertilizer Rate (10-20-20)			Lime Rate
%	Species	Application Rate (Lb./Ac.)	Seeding * Dates	Seeding Depths	N	P205	K20	
85	Rebel II Tall Fescue	125	3/1 - 5/15 8/15 - 10/15	¼"-½"	90 Lb./Ac. (2 Lb./ 1000 Sq.Ft.)	175 Lb./Ac. (4 Lb./ 1000 Sq.Ft.)	175 Lb./Ac. (4 Lb./ 1000 Sq.Ft.)	2 Tons/Ac. (100 Lb./ 1000 Sq.Ft.)
10	Pennfine Perennial Ryegrass	15						
5	Kenblue Kentucky Bluegrass	10						

* For 5-16 through 8-14 add two (2) pounds of Weeping Lovegrass per acre or ten (10) pounds of Millet per acre to seed mixture (i.e. Mix #3 shown).

SECTION IV - SOD

To provide quick cover on disturbed areas (2:1 grade or flatter)

A. GENERAL SPECIFICATIONS

I. Class of turfgrass sod shall be Maryland or Virginia State certified or approved. Sod labels shall be made available to the job foreman and inspector.

II. Sod shall be machine cut at a uniform soil thickness of¾", plus or minus¼", at the time of cutting. Measurement for thickness shall exclude top growth and thatch. Individual pieces of sod shall be cut to the suppliers width length. Maximum allowable deviation from standard widths and lengths shall be 5 percent. Broken pads and torn or uneven ends will not be acceptable.

III. Standard size sections of sod shall be strong enough to support their own weight and retain their size and shape when suspended vertically with a firm grasp on the upper 10 percent of the section.

IV. Sod shall not be harvested or transplanted when moisture content (excessively dry or wet) may adversely affect its survival.

V. Sod shall be harvested, delivered, and installed within a period of 36 hours. Sod not transplanted within this period shall be approved by an agronomist or soil scientist prior to its installation.

B. SOD INSTALLATION

I. During periods of excessively high temperature or in areas having dry subsoil, the subsoil shall be lightly irrigated immediately prior to laying the sod.

II. The first row of sod shall be laid in a straight line with subsequent rows placed parallel to and tightly wedged against each other. Lateral joints shall be staggered to promote more uniform growth and strength. Ensure that sod is not stretched or overlapped and that all joints are butted tight in order to prevent voids which air drying of the roots.

III. Wherever possible, sod shall be laid with the long edges parallel to the contour and with staggering joints. Sod shall be rolled and tamped, pegged or otherwise secured to prevent slippage on slopes and to ensure solid contact between sod roots and the underlying soil surface.

IV. Sod shall be watered immediately following rolling or tamping until the underside of the new sod pad and soil surface below the sod are thoroughly wet. the operations laying, tamping and irrigating for any piece of sod shall be completed within eight hours.

C. SOD MAINTENANCE

I. In the absence of adequate rainfall, watering shall be performed daily or as often as necessary during the first week and in sufficient quantities to maintain moist soil to a depth of 4 inches. Watering should be done during the heat of the day to prevent wilting.

II. After the first week, sod watering is required as necessary to maintain adequate moisture content.

III. The first mowing of sod should not be attempted until the sod is firmly rooted. No more than 1/3 of the grass leaf shall be removed by the initial cutting or subsequent cuttings. Grass height shall be maintained between 2 inches and 3 inches unless otherwise specified.

SECTION V - TURFGRASS ESTABLISHMENT

Areas where turfgrass may be desired may include lawns, parks, playgrounds, and commercial sires which will receive a medium high level of maintenance. Areas to receive seed shall be tilled by disking or other approved methods to a depth of 2 to 4 inches, leveled and raked to prepare a proper seedbed. Stones and debris over 1½inches in diameter shall be removed. The resulting seedbed shall be in such condition that future mowing of grasses will pose no difficulty.

Note: Choose certified material. Certified material is the best guarantee of cultivar purity. The certification program of the Maryland Department of Agriculture, Turf and Seed Section, provides a reliable means of consumer protection and assures a pure genetic line.

A. TURFGRASS MIXTURES

I. Kentucky Bluegrass - Full sun mixture - For use in areas that receive intensive management. Irrigation required in the areas of central Maryland and Eastern Shore. Recommended certified Kentucky Bluegrass cultivars seeding rate: 1.5 to 2.0 pounds per 1000 square feet. A minimum of three Bluegrass cultivars should be chosen ranging from a minimum of 10% to a maximum of 35% of the mixture by weight.

II. Kentucky Bluegrass/Perennial Rye - Full sun mixture - For use in full sun areas where rapid establishment is necessary and when turf will receive medium to intensive management. Certified Perennial Ryegrass cultivars/certified Kentucky Bluegrass seeding rate: 2 pounds mixture per 1000 square feet. A minimum of 3 Kentucky Bluegrass cultivars must be chosen, with each cultivar ranging from 10% to 35% of the mixture by weight.

III. Tall Fescue/Kentucky Bluegrass - Full sun mixture - For use in drought prone areas and/or for areas receiving low to medium management in full sun to medium shade. Recommended mixture includes; certified Tall Fescue cultivars 95-100%, certified Kentucky Bluegrass cultivars 0 - 5%, seeding rate: 5 to 8 pounds per 1000 square feet. One or more cultivars may be blended.

IV. Kentucky Bluegrass/Fine Fescue - Shade mixture - For use in areas with shade in Bluegrass lawns. For establishment in high quality, intensively managed turf area. Mixture includes; certified Kentucky Bluegrass cultivars 30-40% and certified Fine Fescue and 60-70%. Seeding rate: 1½- 3 pounds per 1000 square feet. A minimum of 3 Kentucky Bluegrass cultivars must be chosen. With each cultivar ranging from a minimum of 10% to a maximum of 35% of the mixture by weight.

Note: Turfgrass varieties should be selected form those listed in the most current University of Maryland publication, agronomy mimeo number 77, "Turfgrass Cultivar Recommendations for Maryland".

B. IDEAL TIMES OF SEEDING

Western Maryland: March 15 - June 1, August 1 - October 1 (hardiness zones - 5B, 6A).

Central Maryland: March 1 - May 15, August 15 - October 15 (hardiness zone - 6B).

Southern Maryland, Eastern Shore: March 1 - May 15, August 15 - October 15 (hardiness zones - 7A , 7B).

C. IRRIGATION

If soil moisture is different, supply new seedlings with adequate water for plant growth (1/2" - 1" every 3 to 4 days depending on soil texture) until they are firmly established. This is especially true when seedings are made late in the planting season, in abnormally dry or hot seasons, or on adverse sites.

D. REPAIRS AND MAINTENANCE

Inspect all seeded areas for failures and make necessary repairs, replacements, and reseedings within the planting season.

I. Once the vegetation is established, the site shall have 95% groundcover to be considered adequately stabilized.

II. If the stand provides less than 40% ground coverage, re-establish following original lime, fertilizer, seedbed preparation and seeding recommendations.

III. If the stand provides between 40% and 94% ground coverage, overseeding and fertilizing using half of the rates originally applied may be necessary.

IV. Maintenance fertilizer rates for permanent seedings are shown in Table 24, for lawns and other medium high maintenance turfgrass areas, refer to the University of Maryland publication "Lawn Care in Maryland" bulletin number 171.

G - 20 - 1A

Vegetative Stabilization

TABLE 28 STONE SIZE

	Size Range	D_{50}	D_{100}	AASHTO	Weight
Number 57 *	⅜" - 1½"	½"	1½"	M-43	N/A
Number 1	2" - 3"	2½"	3"	M-43	N/A
Rip-Rap **	4" - 7"	5½"	7"	N/A	N/A
Class I	N/A	9.5"	15"	N/A	150 Lb. max.
Class II	N/A	16"	24"	N/A	700 Lb. max.
Class III	N/A	23"	34"	N/A	2000 Lb. max.

* This classification is to be used on the inside face of stone outlets and check dams.

** This classification is to be used when ever small rip-rap is required. The State Highway Administration designation for this stone is stone for gabions (905.01.04).

STONE FOR GABION BASKETS

Basket Thickness		Size of Individual Stones	
Inches	MM	Inches	MM
6	150	3 - 5	75 - 125
9	225	4 - 7	100 - 175
12	300	4 - 7	100 - 175
18	460	4 - 7	100 - 175
36	910	4 - 12	100 - 300

Note: Recycled concrete equivalent may be substituted for all stone classifications. Recycled concrete equivalent shall be concrete broken into the sizes meeting the appropriate classification, shall contain no steel reinforcement, and shall have a density of 150 pounds per cubic foot.

TABLE 27 GEOTEXTILE FABRICS

Class	Apparent Opening Size MM. Max.	Grab Tensile Strength Lb. Min.	Burst Strength PSI. Min.
A	0.30 **	250	500
B	0.60	200	320
C	0.30	200	320
D	0.60	90	145
E	0.30	90	145
F (silt fence)	0.40-0.80 *	90	190

* US Standard sieve CW-02215 ** .50 MM max. for super silt fence

The properties shall be determined in accordance with the following procedures:
- Apparent opening size msmt 323
- Grab tensile strength ASTMD 1682: 4 x 8" specimen, 1 x 2" clamps, 12" min. strain rate in both principal directions of geotextile fabric.
- Burst strength: ASTMD D 3786.

The fabric shall be inert to commonly encountered chemicals and hydrocarbons, and will be rot and mildew resistant. It shall be manufactured from fibers consisting of long chain synthetic polymers, and composed of a minimum of 85% by weight of polyolephins, polyesters, or polyamides. The geotextile fabric shall resist deterioration from ultraviolet exposure

In addition, classes A through E shall have a 0.01 cm./sec. minimum permeability when tested in accordance with msmt 507, and an apparent minimum elongation of 20 percent (20%) when tested in accordance with the grab tensile strength requirements listed above.

Silt fence
Class F geotextile fabric for silt fence shall have a 50 lb./in. minimum tensile strength and a 20 lb./in. minimum tensile modules when tested in accordance with msmt 509. The material shall also have a 0.3 gal./ft./min. flow rate and seventy-five percent (75%) minimum filtering efficiency when tested in accordance with msmt 322. Geotextile fabrics used in the construction of silt fence shall resist deterioration from ultraviolet exposure. The fabric shall contain sufficient amount of ultraviolet ray inhibitors and stabilizers to provide a minimum of 12 months of expected usable construction life at a temperature range of 0 to 120 degrees fahrenheit.

MATERIALS SPECIFICATIONS

H - 24 - 1

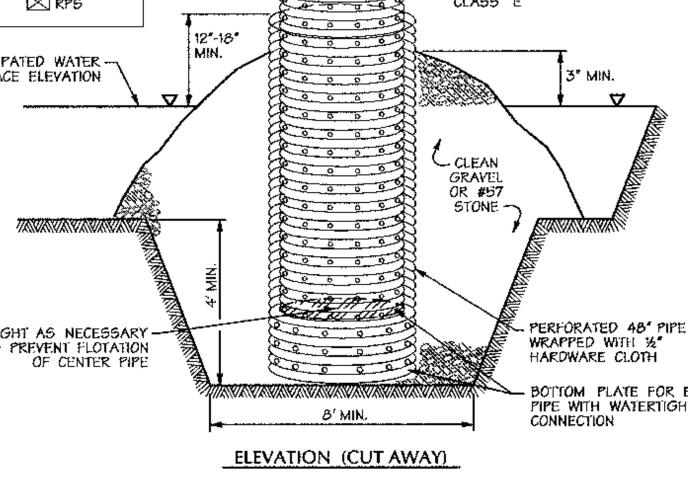

ELEVATION (CUT AWAY)

CONSTRUCTION SPECIFICATIONS

1. THE OUTER PIPE SHOULD BE 48" DIAMETER OR SHALL, IN ANY CASE, BE AT LEAST 4" GREATER IN DIAMETER THAN THE CENTER PIPE. THE OUTER PIPE SHALL BE WRAPPED WITH ½" HARDWARE CLOTH TO PREVENT BACKFILL MATERIAL FROM ENTERING THE PERFORATIONS.
2. AFTER INSTALLING THE OUTER PIPE, BACKFILL AROUND OUTER PIPE WITH 2" AGGREGATE OR CLEAN GRAVEL.
3. THE INSIDE STAND PIPE (CENTER PIPE) SHOULD BE CONSTRUCTED BY PERFORATING A CORRUGATED OR PVC PIPE BETWEEN 12" AND 36" IN DIAMETER. THE PERFORATIONS SHALL BE ½" x 6" SLITS OR 1" DIAMETER HOLES 6" ON CENTER. THE CENTER PIPE SHALL BE WRAPPED WITH ½" HARDWARE CLOTH FIRST, THEN WRAPPED AGAIN WITH GEOTEXTILE CLASS E.
4. THE CENTER PIPE SHOULD EXTEND 12" TO 18" ABOVE THE ANTICIPATED WATER SURFACE ELEVATION OR RISER CREST ELEVATION WHEN DEWATERING A BASIN.

U.S. DEPARTMENT OF AGRICULTURE SOIL CONSERVATION SERVICE — D - 12 - 5 — MARYLAND DEPARTMENT OF ENVIRONMENT WATER MANAGEMENT ADMINISTRATION

Removable Pumping Station — NOT TO SCALE

THESE PLANS HAVE BEEN REVIEWED FOR THE HOWARD SOIL CONSERVATION DISTRICT AND MEET THE TECHNICAL REQUIREMENTS FOR SMALL POND CONSTRUCTION, SOIL EROSION AND SEDIMENT CONTROL.
[signature] 3/30/04
U.S.D.A. NATURAL RESOURCES CONSERVATION SERVICE — DATE

THESE PLANS FOR SMALL POND CONSTRUCTION, SOIL EROSION AND SEDIMENT CONTROL MEET THE REQUIREMENTS OF HOWARD SOIL CONSERVATION DISTRICT.
APPROVED: [signature] 3/30/04
HOWARD SOIL CONSERVATION DISTRICT — DATE
PLAN NUMBER

DEVELOPERS CERTIFICATE:

I/WE CERTIFY THAT ALL DEVELOPMENT AND/OR CONSTRUCTION WILL BE DONE ACCORDING TO THESE PLANS AND THAT ANY RESPONSIBLE PERSONNEL INVOLVED IN THE CONSTRUCTION PROJECT WILL HAVE A CERTIFICATE OF ATTENDANCE AT A DEPARTMENT OF ENVIRONMENT APPROVED TRAINING PROGRAM FOR THE CONTROL OF SEDIMENT AND EROSION BEFORE BEGINNING THE PROJECT. I SHALL ENGAGE A REGISTERED PROFESSIONAL ENGINEER TO SUPERVISE POND CONSTRUCTION AND PROVIDE THE HOWARD SOIL CONSERVATION DISTRICT WITH AN "AS-BUILT" PLAN OF THE POND WITHIN 30 DAYS OF COMPLETION. I ALSO AUTHORIZE PERIODIC ON-SITE INSPECTIONS BY THE HOWARD SOIL CONSERVATION DISTRICT.

[signature] 3/23/04
SIGNATURE OF DEVELOPER — DATE
PRINT NAME BELOW SIGNATURE JAMES F. SELFRIDGE

ENGINEERS CERTIFICATE:

I CERTIFY THAT THIS PLAN FOR POND CONSTRUCTION, EROSION AND SEDIMENT CONTROL REPRESENTS A PRACTICAL AND WORKABLE PLAN BASED ON MY PERSONAL KNOWLEDGE OF THE SITE CONDITIONS. THIS PLAN WAS PREPARED IN ACCORDANCE WITH THE REQUIREMENTS OF THE HOWARD SOIL CONSERVATION DISTRICT. I HAVE NOTIFIED THE DEVELOPER THAT HE/SHE MUST ENGAGE A REGISTERED PROFESSIONAL ENGINEER TO SUPERVISE POND CONSTRUCTION AND PROVIDE THE HOWARD SOIL CONSERVATION DISTRICT WITH AN "AS-BUILT" PLAN OF THE POND WITHIN 30 DAYS OF COMPLETION.

[signature] 3-25-04
SIGNATURE OF ENGINEER
PRINT NAME BELOW SIGNATURE John W. Ramacchia, Sr. — DATE

3-25-04
Date

Professional Engr. No. 10551

APPROVED: HOWARD COUNTY DEPARTMENT OF PUBLIC WORKS

[signature] 4-13-04
CHIEF, BUREAU OF HIGHWAYS — DATE

APPROVED:
[signature] 4/28/04
CHIEF, DEVELOPMENT ENGINEERING DIVISION — DATE
[signature] 4/29/04
CHIEF, DIVISION OF LAND DEVELOPMENT — DATE
~~DIRECTOR~~ — ~~DATE~~

Date	No.	Revision Description

OWNER: NORTHRIDGE DEVELOPMENT. LLC
14045 GARED DRIVE
GLENWOOD, MD 21738

DEVELOPER: JAMES F. SELFRIDGE BUILDERS, INC.
14045 GARED DRIVE
GLENWOOD, MD 21738

DMW
Daft·McCune·Walker, Inc.
200 East Pennsylvania Avenue
Towson, Maryland 21286
(410) 296-3333
Fax 296-4705

A Team of Land Planners, Landscape Architects, Engineers, Surveyors & Environmental Professionals

SUBDIVISION NAME			SECTION/AREA		LOT/PARCEL
FOX MEADOW			1		167
PLAT OR L/F	BLOCK	ZONE	TAX/ZONE MAP	ELECT. DISTRICT	CENSUS TRACT
5983/492	13, 19, 20	RR, RC	15	3	

TITLE FOX MEADOW
(FORMERLY PFEFFERKORN PROPERTY)
Sediment and Erosion Control Specifications

Des By MM	Scale	Proj. No. 00042.B
Drn By BKC	Date 1/7/04	11 OF 24
Chk By	Approved	

F.03.45

Mon Mar 22 15:36:11 2004 m:\00042\00042.sc2

3/22/2004 3:35:43 PM \\ATHENS\MSTATION\CADNET\DCF\day-gcf crizzi c:\hpm\00042.hpm

N 592000
E 1353750

DESIGN POINT 3

DESIGN POINT 2

DESIGN POINT 1

DESIGN POINT 4

OLD ROVER ROAD

PFEFFERKORN ROAD

C-D 180' OCF, 5 FPS

0.0030 SQ.MI. 1.95 ACRES D.P. 3 RCN 63 Tc 0.38 HRS.

B-C 130' SCF, UNPAVED, 3.8%

A-B 100' SF, BRUSH, 2%

A-B 100' SF, D.GRASS, 2%

B-C 375' SCF, UNPAVED 7%

0.0055 SQ.MI. 3.55 ACRES D.P. 2 RCN 58 Tc 0.26 HRS.

C-D 100' & SWALE, ASSUME 5 FPS

B-C 168' SCF, UNPAVED 2.6%

A-B 100' SF, D.GRASS, 3.7%

A-B 100' SF, D.GRASS, 4.5%

A-B 100' SF, D.GRASS, 3%

B-C 135' SCF, UNPAVED 12.2%

B-C 950' SCF UNPAVED 6.7%

C-D 730' OCF 5 FPS

0.0258 SQ.MI. 16.52 ACRES D.P. 1 RCN 61 Tc 0.31 HRS.

C-D 270' SCF UNPAVED 3.7%

25' STATE WETLANDS BUFFER

0.0041 SQ.MI. 2.61 ACRES D.P. 4 RCN 60 Tc 0.28 HRS.

B-C 820' SCF, UNPAVED, 3.2%

25' STATE WETLANDS BUFFERS

MaC2(B) CgB2(B) ChB2(B) ChC2(B) HaF(B)

E 1353750
N 590250

N 590800
E 1356200

NORTH

VICINITY MAP

SCALE: 1"=2000'

SITE

MIDDLE PATUXENT RIVER

OLD ROVER RD

ROVER MILL RD

SPRINGER RD

DANMARK DR

BM 21CA

SHARP RD

ROSEMANN DR

BM 22A2

GLENELG HIGH SCHOOL

BURNT WOODS RD

ROUTE 32

LEGEND

- WETLAND BOUNDARY
- 25' STATE WETLANDS BUFFER
- EX. CONTOURS
- EX. CURB & GUTTER
- EX. BUILDING
- D.P. 2 HOWARD COUNTY ZONING LINES & LABELS
- STREAM BUFFER
- STREAM LINE
- PROPERTY BOUNDARY
- STEEP SLOPES
- EXISTING Tc PATH
- EXISTING DRAINAGE DIVIDE
- DESIGN POINT
- SOIL LINES/TYPES
- EXISTING SANITARY SEWER
- EXISTING STORM DRAIN
- CENTERLINE OF STREAM
- PROPOSED FLOODPLAIN

DATA SOURCES:

BOUNDARY PER DMW FIELD SURVEY DATED DECEMBER 2001.

TOPO FLOWN BY VIRGINIA RESOURCE MAPPING, DECEMBER, 2001.

APPROX. WETLAND LOCATION PER DMW FIELD VISIT DATED APRIL 2000. OFF SITE SEPTIC RESERVE AREAS PER RECORD PLATS, LOCATIONS OF WELLS NOT AVAILABLE.

APPROVED: HOWARD COUNTY DEPARTMENT OF PUBLIC WORKS

CHIEF, BUREAU OF HIGHWAYS — DATE 4-13-04

APPROVED: HOWARD COUNTY DEPT. OF PLANNING & ZONING

CHIEF, DEVELOPMENT ENGINEERING DIVISION — DATE 4/28/04

CHIEF, DIVISION OF LAND DEVELOPMENT JA — DATE 4/29/04

~~DIRECTOR~~ — ~~DATE~~

Date	No.	Revision Description

OWNER: NORTHRIDGE DEVELOPMENT. LLC
14045 GARED DRIVE
GLENWOOD, MD 21738

DEVELOPER: JAMES F. SELFRIDGE BUILDERS, INC.
14045 GARED DRIVE
GLENWOOD, MD 21738

DMW
Daft-McCune-Walker, Inc.
200 East Pennsylvania Avenue
Towson, Maryland 21286
(410) 296-3333
Fax 296-4705

A Team of Land Planners, Landscape Architects, Engineers, Surveyors & Environmental Professionals

3-25-04
Date

Professional Engr. No. 10551

SUBDIVISION NAME: FOX MEADOW	SECTION/AREA 1	LOT/PARCEL # 167
PLAT# OR L/F: 5983/492	BLOCK # 13, 19, 20	ZONE RR, RC
TAX/ZONE MAP: 15	ELEC. DISTRICT: 3	CENSUS TRACT

TITLE
FOX MEADOW
(FORMERLY PFEFFERKORN PROPERTY)
DRAINAGE AREA MAP
STORMWATER MANAGEMENT
EXISTING CONDITIONS

Des By	Scale 1"=100'	Proj. No. 00042.B
Drn By	Date 1/7/04	12 OF 24
Chk By	Approved	

F-03-45

Wed Mar 24 14:25:25 2004 n:\00042\00042.dwt
Wed Mar 24 14:25:24 2004 n:\00042\00042.dwt
4/2/2004 2:25:17 PM \\ATHENS\MSTATION\CADNET\DCF\day-dcf cr122 c:\hpm\00042.hpm

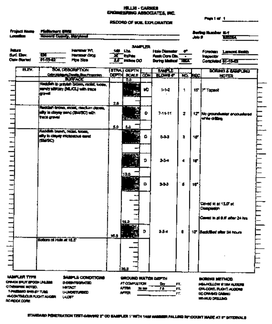

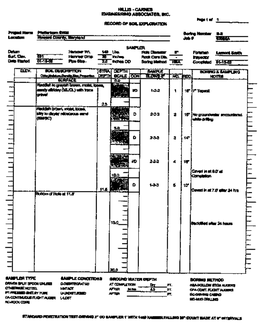

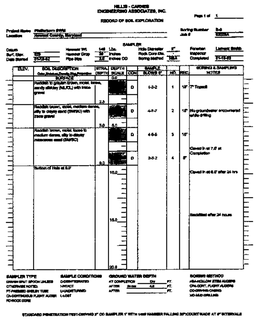

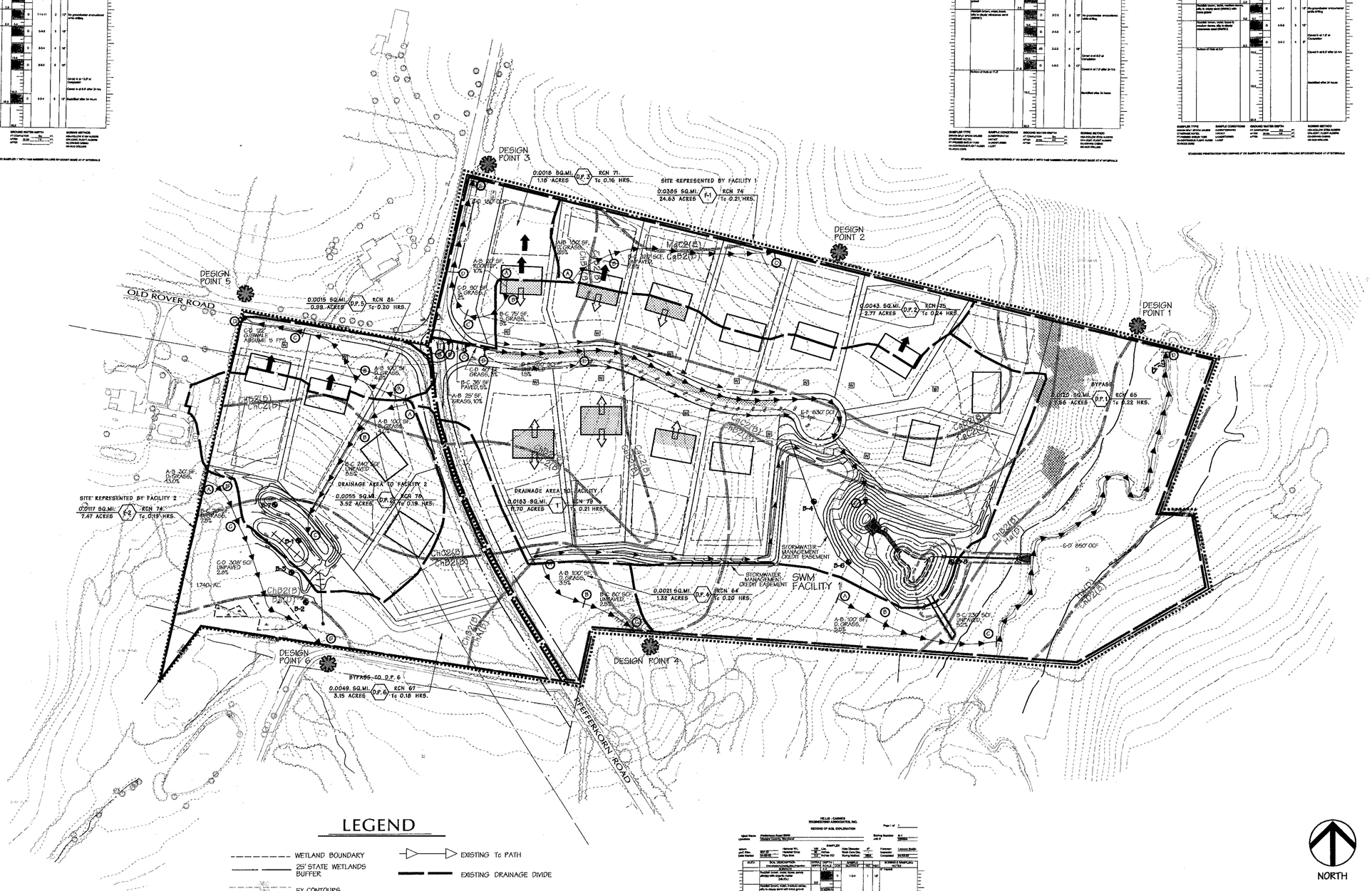

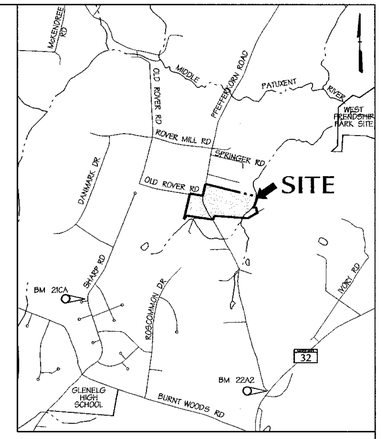

VICINITY MAP
SCALE: 1" = 2,000'

LEGEND

- WETLAND BOUNDARY
- 25' STATE WETLANDS BUFFER
- EX. CONTOURS
- EX. CURB & GUTTER
- EX. BUILDING
- D.R. 2 — HOWARD COUNTY ZONING LINES & LABELS
- STREAM BUFFER
- STREAM LINE
- PROPERTY BOUNDARY
- STEEP SLOPES
- EXISTING Tc PATH
- EXISTING DRAINAGE DIVIDE
- DESIGN POINT
- SOIL LINES/TYPES (BvD2 (C))
- EXISTING SANITARY SEWER
- EXISTING STORM DRAIN
- CENTERLINE OF STREAM
- PROPOSED FLOODPLAIN

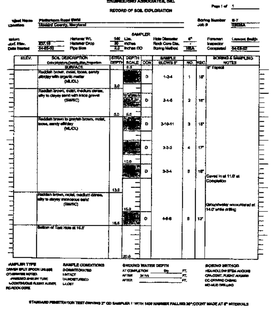

FLOOD STUDY BY DMW, APPROVED FEBRUARY 2002

DATA SOURCES:

BOUNDARY PER DMW FIELD SURVEY DATED DECEMBER 2001.

TOPO FLOWN BY VIRGINIA RESOURCE MAPPING, DECEMBER, 2001.

APPROX. WETLAND LOCATION PER DMW FIELD VISIT DATED APRIL 2000. OFF SITE SEPTIC RESERVE AREAS PER RECORD PLATS, LOCATIONS OF WELLS NOT AVAILABLE.

APPROVED: HOWARD COUNTY DEPARTMENT OF PUBLIC WORKS

CHIEF, BUREAU OF HIGHWAYS — DATE 4-13-04

APPROVED: HOWARD COUNTY DEPT. OF PLANNING & ZONING

CHIEF, DEVELOPMENT ENGINEERING DIVISION — DATE 4/20/04

CHIEF, DIVISION OF LAND DEVELOPMENT — DATE 4/19/04

~~DIRECTOR~~ — ~~DATE~~

Date	No.	Revision Description

OWNER: NORTHRIDGE DEVELOPMENT. LLC
14045 GARED DRIVE
GLENWOOD, MD 21738

DEVELOPER: JAMES F. SELFRIDGE BUILDERS, INC.
14045 GARED DRIVE
GLENWOOD, MD 21738

NORTH

3-25-04
Date

Professional Engr. No. 16557

DMW
Daft·McCune·Walker, Inc.
200 East Pennsylvania Avenue
Towson, Maryland 21286
(410) 296-3333
Fax 296-4705

A Team of Land Planners, Landscape Architects, Engineers, Surveyors & Environmental Professionals

SUBDIVISION NAME		SECT/OR/AREA		LOT/PARCEL #
FOX MEADOW		1		167
PLAT# OR L/F	BLOCK #	ZONE	TAX/ZONE MAP	ELEC. DISTRICT	CENSUS TRACT
5983/492	13, 19, 20	RR, RC	15	3	

TITLE
FOX MEADOW
(FORMERLY PFEFFERKORN PROPERTY)
DRAINAGE AREA MAP
STORMWATER MANAGEMENT
PROPOSED CONDITIONS

Des By DWR/MRT	Scale 1"=100'	Proj. No. 00042.B
Drn By	Date 9/11/03	13 OF 24
Chk By	Approved	

F-03-145

Wed Mar 24 14:28:00 2004 n:\00042\00042.dwg

3/24/2004 2:25:59 PM \\ATHENS\MSTATION\CADNET\DCF\dougcf cr122 c:\hpm\00042.hpm

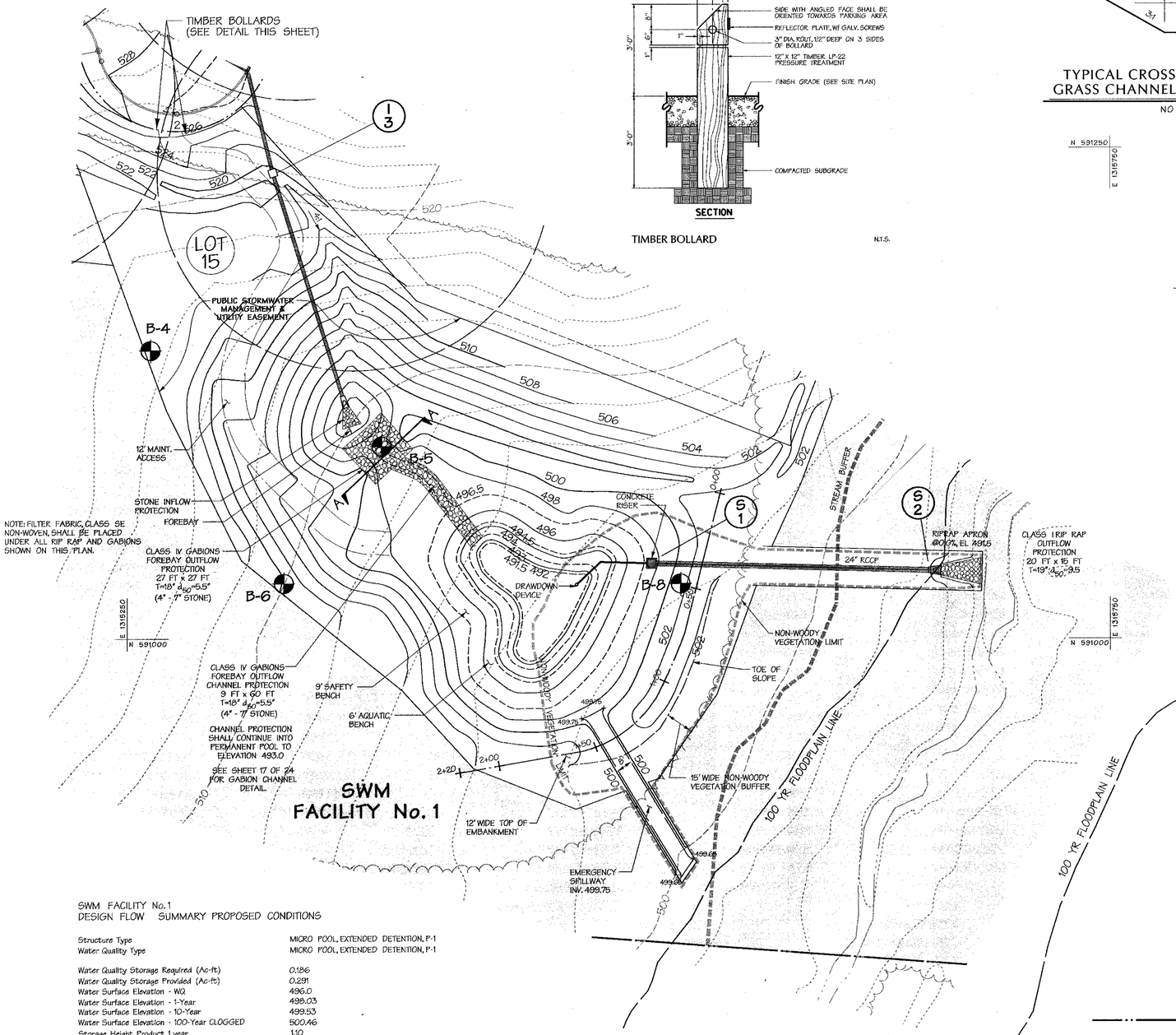

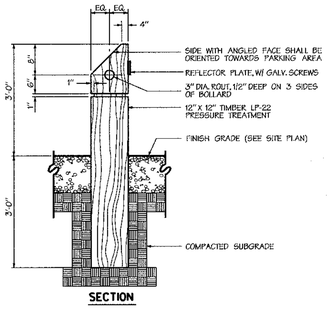

TIMBER BOLLARD N.T.S.

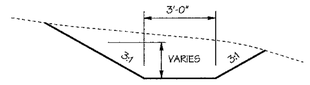

TYPICAL CROSS SECTION (CUT) OF GRASS CHANNEL BEHIND LOTS 11-14

NO SCALE

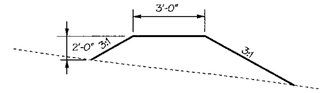

TYPICAL CROSS SECTION (FILL) OF GRASS CHANNEL BEHIND LOTS 11-14

NO SCALE

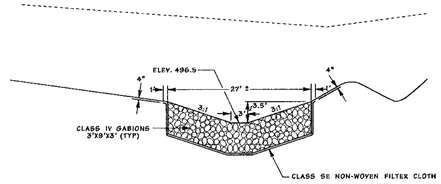

SECTION A-A
TYPICAL SECTION CLASS IV GABION FOREBAY OUTLET PROTECTION WEIR

NO SCALE

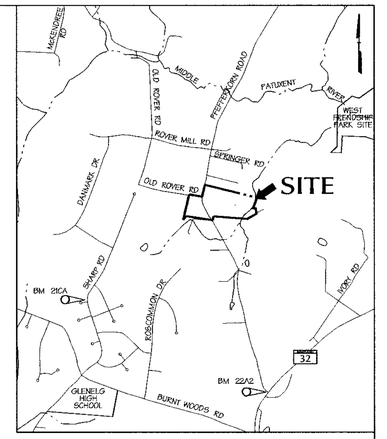

VICINITY MAP

SCALE: 1" = 2,000'

SWM FACILITY No. 1
DESIGN FLOW SUMMARY PROPOSED CONDITIONS

Structure Type	MICRO POOL, EXTENDED DETENTION, P-1
Water Quality Type	MICRO POOL, EXTENDED DETENTION, P-1
Water Quality Storage Required (Ac-ft)	0.186
Water Quality Storage Provided (Ac-ft)	0.291
Water Surface Elevation - WQ	496.0
Water Surface Elevation - 1-Year	498.03
Water Surface Elevation - 10-Year	499.53
Water Surface Elevation - 100-Year CLOGGED	500.46
Storage Height Product 1 year	1.10
Storage Height Product 10 year	4.43
Watershed Area to Facility (Actual D.A.)	0.0183 SQ. MILES
Level of Management Required	1-Year, Cpv
Level of Management Provided	1-Year, Cpv
Minimum Top Width Provided	12'
Maximum Height of Fill	1.0'
Freeboard Provided, 10-Year	2.47'
Freeboard Provided, 100-Year	1.57'

WATER QUALITY IS MET BY MICRO POOL AND NATURAL AREA CONSERVATION CREDITS. RECHARGE IS MET BY A GRASS SWALE ALONG THE PROPOSED ROAD AND ALONG THE SOUTH EDGE OF THE LOTS 11-14 AREA. CHANNEL PROTECTION VOLUME IS MET BY EXTENDED DETENTION OF THE 1-YR STORM IN THE SWM FACILITY AND BY NATURAL AREA CONSERVATION.

THIS FACILITY IS CLASSIFIED AS HAZARD CLASS 'A' AND IS A NON-MD-378 FACILITY.

THIS FACILITY IS HAZARD CLASS 'A' BECAUSE THERE ARE NO BUILDINGS OR ROADS DOWNSTREAM OF THIS FACILITY BEFORE FLOWS WOULD ENTER THE MIDDLE PATUXENT RIVER.

LEGEND

- PROPERTY BOUNDARY
- PROPOSED MAJOR CONTOUR
- PROPOSED MINOR CONTOUR
- PROPOSED INTERMEDIATE CONTOUR
- PROPOSED FLOODPLAIN
- PROPOSED STORM DRAIN (BY OTHERS)
- STREAM EDGE
- FOREST CONSERVATION AREA
- WETLAND BUFFER
- WETLAND BOUNDARY
- EX. CONTOURS
- EX. CURB & GUTTER
- FOREST BUFFER
- STREAM LINE

NORTH

DATA SOURCES:

BOUNDARY PER DMW FIELD SURVEY DATED DECEMBER 2001.

TOPO FLOWN BY VIRGINIA RESOURCE MAPPING, DECEMBER, 2001.

APPROX. WETLAND LOCATION PER DMW FIELD VISIT DATED APRIL 2002. OFF SITE SEPTIC RESERVE AREAS PER RECORD PLATS, LOCATIONS OF WELLS NOT AVAILABLE.

DEVELOPERS CERTIFICATION:

I/WE CERTIFY THAT ALL DEVELOPMENT AND/OR CONSTRUCTION WILL BE DONE ACCORDING TO THESE PLANS AND THAT ANY RESPONSIBLE PERSONNEL INVOLVED IN THE CONSTRUCTION PROJECT WILL HAVE A CERTIFICATE OF ATTENDANCE AT A DEPARTMENT OF ENVIRONMENT APPROVED TRAINING PROGRAM FOR THE CONTROL OF SEDIMENT AND EROSION BEFORE BEGINNING THE PROJECT. I SHALL ENGAGE A REGISTERED PROFESSIONAL ENGINEER TO SUPERVISE POND CONSTRUCTION AND PROVIDE THE HOWARD SOIL CONSERVATION DISTRICT WITH AN "AS-BUILT" PLAN OF THE POND WITHIN 30 DAYS OF COMPLETION. I ALSO AUTHORIZE PERIODIC ON-SITE INSPECTIONS BY THE HOWARD SOIL CONSERVATION DISTRICT.

SIGNATURE OF DEVELOPER — 3/23/04 DATE

PRINT NAME BELOW SIGNATURE: JAMES H. SELFRIDGE

ENGINEER'S CERTIFICATION:

I CERTIFY THAT THIS PLAN FOR POND CONSTRUCTION, EROSION AND SEDIMENT CONTROL REPRESENTS A PRACTICAL AND WORKABLE PLAN BASED ON MY PERSONAL KNOWLEDGE OF THE SITE CONDITIONS. THIS PLAN WAS PREPARED IN ACCORDANCE WITH THE REQUIREMENTS OF THE HOWARD SOIL CONSERVATION DISTRICT. I HAVE NOTIFIED THE DEVELOPER THAT HE/SHE MUST ENGAGE A REGISTERED PROFESSIONAL ENGINEER TO SUPERVISE POND CONSTRUCTION AND PROVIDE THE HOWARD SOIL CONSERVATION DISTRICT WITH AN "AS-BUILT" PLAN OF THE POND WITHIN 30 DAYS OF COMPLETION.

SIGNATURE OF ENGINEER — 3-25-04

PRINT NAME BELOW SIGNATURE: John W. Ramacciotti

THESE PLANS HAVE BEEN REVIEWED FOR THE HOWARD SOIL CONSERVATION DISTRICT AND MEET THE TECHNICAL REQUIREMENTS FOR SMALL POND CONSTRUCTION, SOIL EROSION AND SEDIMENT CONTROL.

U.S. NATURAL RESOURCE CONSERVATION SERVICE — 3/30/04 DATE

THESE PLANS FOR SMALL POND CONSTRUCTION, SOIL EROSION AND SEDIMENT CONTROL MEET THE REQUIREMENTS OF HOWARD SOIL CONSERVATION DISTRICT.

HOWARD S.C.D. — 3/30/04 DATE

3-25-04
Date

Professional Engr. No. 10551

APPROVED: HOWARD COUNTY DEPARTMENT OF PUBLIC WORKS

CHIEF, BUREAU OF HIGHWAYS — 4-13-04 DATE

APPROVED: HOWARD COUNTY DEPT. OF PLANNING & ZONING

CHIEF, DEVELOPMENT ENGINEERING DIVISION — 4/20/04 DATE

CHIEF, DIVISION OF LAND DEVELOPMENT — 4/21/04 DATE

~~DIRECTOR~~ — ~~DATE~~

Date	No.	Revision Description

OWNER: NORTHRIDGE DEVELOPMENT. LLC
14045 GARED DRIVE
GLENWOOD, MD 21738

DEVELOPER: JAMES F. SELFRIDGE BUILDERS, INC.
14045 GARED DRIVE
GLENWOOD, MD 21738

DMW
Daft-McCune-Walker, Inc.
200 East Pennsylvania Avenue
Towson, Maryland 21286
(410) 296-3333
Fax 296-4705

A Team of Land Planners, Landscape Architects, Engineers, Surveyors & Environmental Professionals

SUBDIVISION NAME		SECTION/AREA		LOT/PARCEL #
FOX MEADOW		1		167
PLAT OR L/F	BLOCK #	ZONE	TAX/ZONE MAP	ELECT. DISTRICT	CENSUS TRACT
5983/492	13, 19, 20	RR, RC	15	3	

TITLE

FOX MEADOW
(FORMERLY PFEFFERKORN PROPERTY)
Stormwater Management Facility 1
Stormwater Management Plan

Des By	DWR	Scale	1"=30'
Drn By	DWR	Date	1/7/04
Chk By		Approved	

Proj. No. 00042.B

14 OF 24

Mon Mar 22 153257 2004 n:\00042\00042.mß

3/22/2004 3:32:47 PM \\ATHENS\STATION\CADENCE\dwg-qef cr122 c:\hpm\00042.hpm

F.03.45

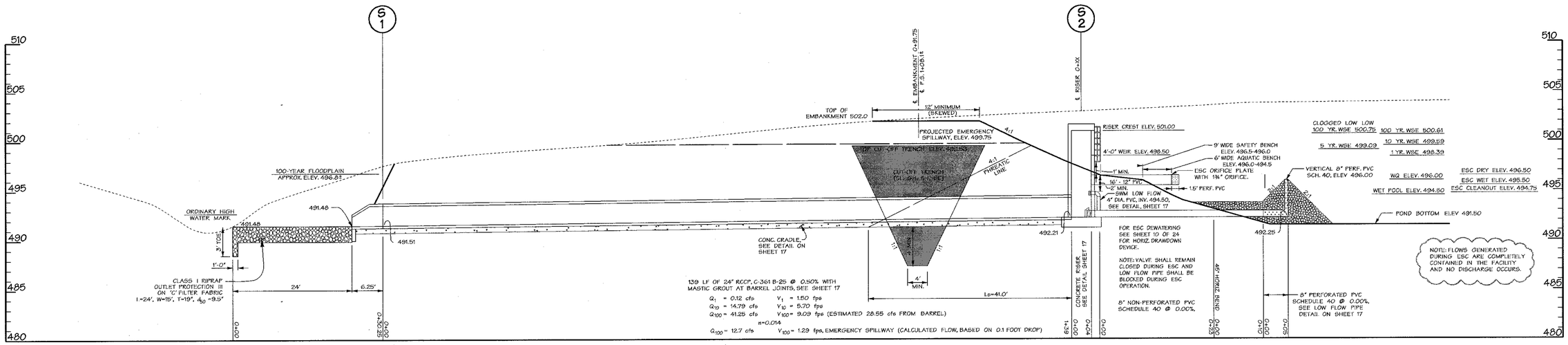

PROFILE ALONG PRINCIPAL SPILLWAY

SCALE: HORIZ. 1"=10'
VERT. 1"=5'

NOTE:

IF UNSUITABLE (PERVIOUS MATERIAL IS ENCOUNTERED AT TIME OF CUTOFF TRENCH INSTALLATION DEEPER THAN (4) FEET, IT WILL BE NECESSARY TO EXTEND THE CUTOFF TRENCH DOWN UNTIL SUITABLE MATERIAL IS ENCOUNTERED AS DETERMINED BY A GEOTECHNICAL ENGINEER. FILL MATERIAL FOR THE CUTOFF TRENCH AND IMPERVIOUS CORE SHALL CONFORM TO UNIFIED SOIL CLASSIFICATION GC, SC, CH, OR CL. CONSIDERATION MAY BE GIVEN TO THE USE OF OTHER MATERIALS IN THE EMBANKMENT IF DESIGN AND CONSTRUCTION ARE SUPERVISED BY A GEOTECHNICAL ENGINEER.

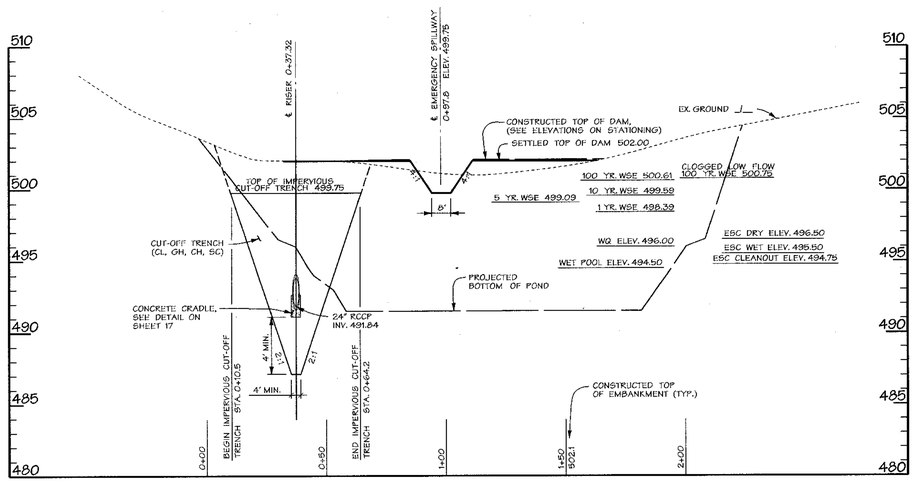

PROFILE ALONG CENTERLINE OF EMBANKMENT

SCALE: HORIZ. 1"=30'
VERT. 1"=5'

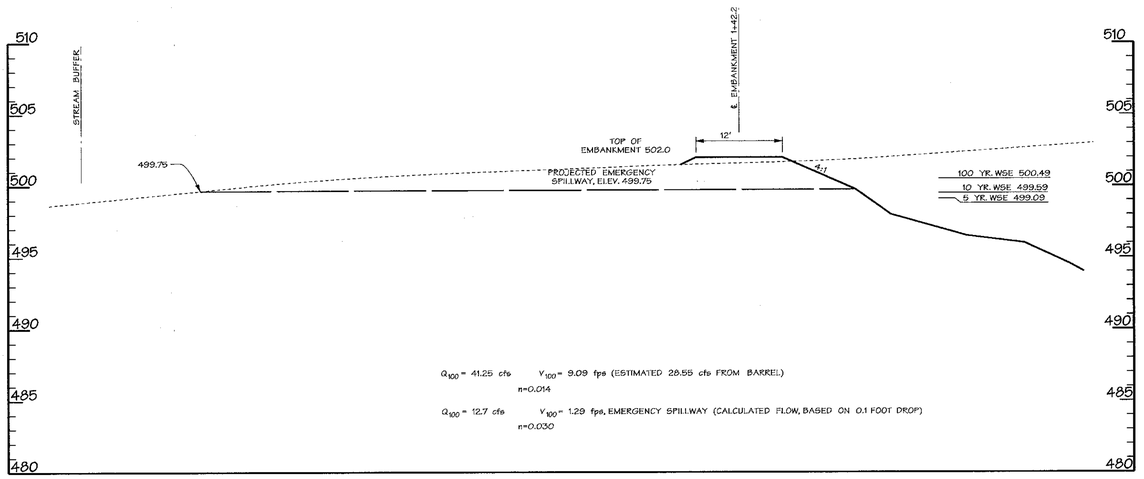

PROFILE ALONG EMERGENCY SPILLWAY

SCALE: HORIZ. 1"=10'
VERT. 1"=5'

DEVELOPERS CERTIFICATION:

I/WE CERTIFY THAT ALL DEVELOPMENT AND/OR CONSTRUCTION WILL BE DONE ACCORDING TO THESE PLANS AND THAT ANY RESPONSIBLE PERSONNEL INVOLVED IN THE CONSTRUCTION PROJECT WILL HAVE A CERTIFICATE OF ATTENDANCE AT A DEPARTMENT OF ENVIRONMENT APPROVED TRAINING PROGRAM FOR THE CONTROL OF SEDIMENT AND EROSION BEFORE BEGINNING THE PROJECT. I SHALL ENGAGE A REGISTERED PROFESSIONAL ENGINEER TO SUPERVISE POND CONSTRUCTION AND PROVIDE THE HOWARD SOIL CONSERVATION DISTRICT WITH AN "AS-BUILT" PLAN OF THE POND WITHIN 30 DAYS OF COMPLETION. I ALSO AUTHORIZE PERIODIC ON-SITE INSPECTIONS BY THE HOWARD SOIL CONSERVATION DISTRICT.

SIGNATURE OF DEVELOPER — 3/23/04 DATE
PRINT NAME BELOW SIGNATURE
JAMES H. SELFRIDGE

ENGINEER'S CERTIFICATION:

I CERTIFY THAT THIS PLAN FOR POND CONSTRUCTION, EROSION AND SEDIMENT CONTROL REPRESENTS A PRACTICAL AND WORKABLE PLAN BASED ON MY PERSONAL KNOWLEDGE OF THE SITE CONDITIONS. THIS PLAN WAS PREPARED IN ACCORDANCE WITH THE REQUIREMENTS OF THE HOWARD SOIL CONSERVATION DISTRICT. I HAVE NOTIFIED THE DEVELOPER THAT HE/SHE MUST ENGAGE A REGISTERED PROFESSIONAL ENGINEER TO SUPERVISE POND CONSTRUCTION AND PROVIDE THE HOWARD SOIL CONSERVATION DISTRICT WITH AN "AS-BUILT" PLAN OF THE POND WITHIN 30 DAYS OF COMPLETION.

SIGNATURE OF ENGINEER — 3-25-04
PRINT NAME BELOW SIGNATURE
John W. Ranocchia, Jr.

THESE PLANS HAVE BEEN REVIEWED FOR THE HOWARD SOIL CONSERVATION DISTRICT AND MEET THE TECHNICAL REQUIREMENTS FOR SMALL POND CONSTRUCTION, SOIL EROSION AND SEDIMENT CONTROL.

U.S. NATURAL RESOURCE CONSERVATION SERVICE — 3/30/04 DATE

THESE PLANS FOR SMALL POND CONSTRUCTION, SOIL EROSION AND SEDIMENT CONTROL MEET THE REQUIREMENTS OF HOWARD SOIL CONSERVATION DISTRICT.

HOWARD SOIL — 3/30/04 DATE

3-25-04
Date

Professional Engr. No. 15557

APPROVED: HOWARD COUNTY DEPARTMENT OF PUBLIC WORKS

CHIEF, BUREAU OF HIGHWAYS — 4-13-04 DATE

APPROVED:

CHIEF, DEVELOPMENT ENGINEERING DIVISION — 4/20/04 DATE

CHIEF, DIVISION OF LAND DEVELOPMENT — 4/6/04 DATE

~~DIRECTOR~~ — ~~DATE~~

Date	No.	Revision Description

OWNER: NORTHRIDGE DEVELOPMENT. LLC
14045 GARED DRIVE
GLENWOOD, MD 21738

DEVELOPER: JAMES F SELFRIDGE BUILDERS, INC.
14045 GARED DRIVE
GLENWOOD, MD 21738

DMW
Daft-McCune-Walker, Inc.
200 East Pennsylvania Avenue
Towson, Maryland 21286
(410) 296-3333
Fax 296-4705

A Team of Land Planners, Landscape Architects, Engineers, Surveyors & Environmental Professionals

SUBDIVISION NAME		SECTION/AREA		LOT/PARCEL
FOX MEADOW		1		167
PLAT OR L/F	BLOCK	ZONE	TAX/ZONE MAP	ELEC. DIST/ACCT	CENSUS TRACT
5983/492	13, 19, 20	RR, RC	15	3	

TITLE
FOX MEADOW
(FORMERLY PFEFFERKORN PROPERTY)
Stormwater Management Facility 1
Stormwater Management Profiles

Des By	DWR	Scale AS SHOWN	Proj. No. 00042.B
Drn By	DWR	Date 1/7/04	15 OF 24
Chk By		Approved	

F-03-175

Mon Mar 22 14:40:11 2004 m:\00042\00042.mp5

3/22/2004 2:40:04 PM \\ATHENS\MSTATION\CADNET\DCF\dayqdcf cr122 c:\hpm\000042.hpm

SWM FACILITY No. 2
DESIGN FLOW SUMMARY PROPOSED CONDITIONS

Structure Type	BIORETENTION FACILITY, F-6
Water Quality Type	BIORETENTION FACILITY, F-6
Water Quality Storage Required (Ac-ft)	0.067
Water Quality Storage Provided (Ac-ft)	0.079
Water Surface Elevation - WQ	536.5
Water Surface Elevation - 1-Year Cpv	536.5
Water Surface Elevation - 10-Year	536.75
Depth of Water Over Bioretention Area - WQ	1.0'
Storage Height Product 10-Year	0.42 Ac-Ft^2
Watershed Area to Facility (Actual D.A.)	0.0055 SQ. MILES
Level of Management Required	1-Year, Cpv
Level of Management Provided	1-Year, Cpv
Maximum Height of Fill	3.5'
Freeboard Provided Over 10-Year	0.75'
Freeboard Provided Over 100-Year	0.50'

WATER QUALITY IS MET BY BIORETENTION. RECHARGE IS MET BY THE AREA METHOD. PORTIONS OF LOTS 1 AND 2 DRAIN TO A GRASS SWALE. CHANNEL PROTECTION VOLUME IS MET BY EXTENDED DETENTION OF THE 1 YR STORM IN THE FACILITY.

NOTE: THIS SWM FACILITY SHALL BE OWNED AND MAINTAINED BY THE HOMEOWNER'S ASSOCIATION (HOA)

SEE LANDSCAPE PLAN FOR BIORETENTION PLANTING, SHEET 23 OF 24.

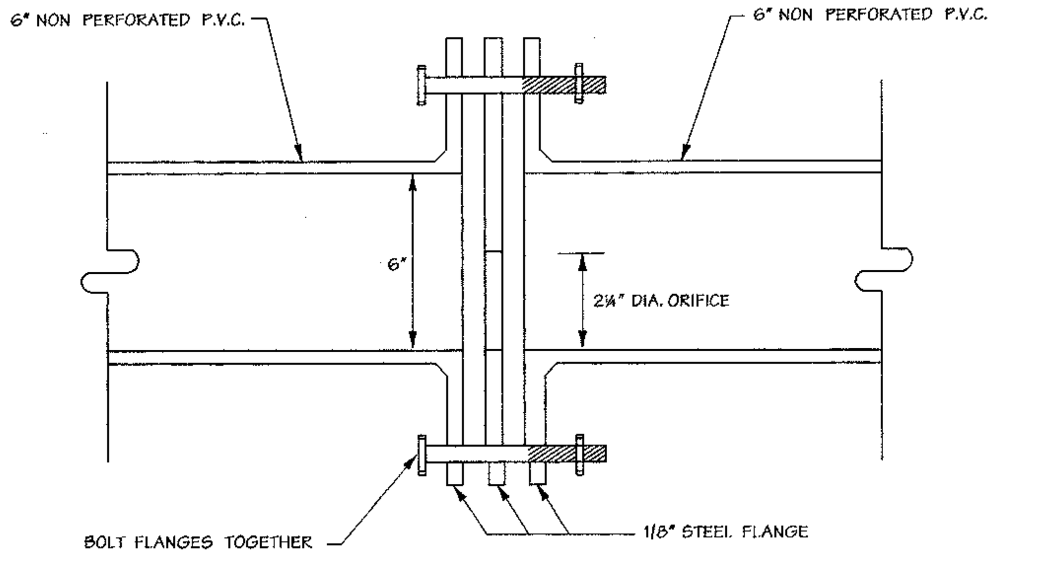

DEWATERING PIPE ORIFICE DETAIL

NOT TO SCALE

LEGEND

- WETLAND BUFFER
- WETLAND BOUNDARY
- EX. CONTOURS
- EX. CURB & GUTTER
- EX. BUILDING
- FOREST BUFFER
- STREAM LINE
- PROPERTY BOUNDARY
- 510 PROPOSED MAJOR CONTOUR
- 508 PROPOSED MINOR CONTOUR
- PROPOSED FLOODPLAIN
- ByD2 (C) SOIL LINES/TYPES
- EXISTING SANITARY SEWER
- EXISTING STORM DRAIN
- CENTERLINE OF STREAM
- A-2 PROPOSED EARTH DIKE
- SF PROPOSED SILT FENCE
- SSF PROPOSED SUPER SILT FENCE
- LIMIT OF DISTURBANCE
- SCE STABILIZED CONTRUCTION ENTRANCE
- SEPTIC AREA
- GRAVEL CURTAIN

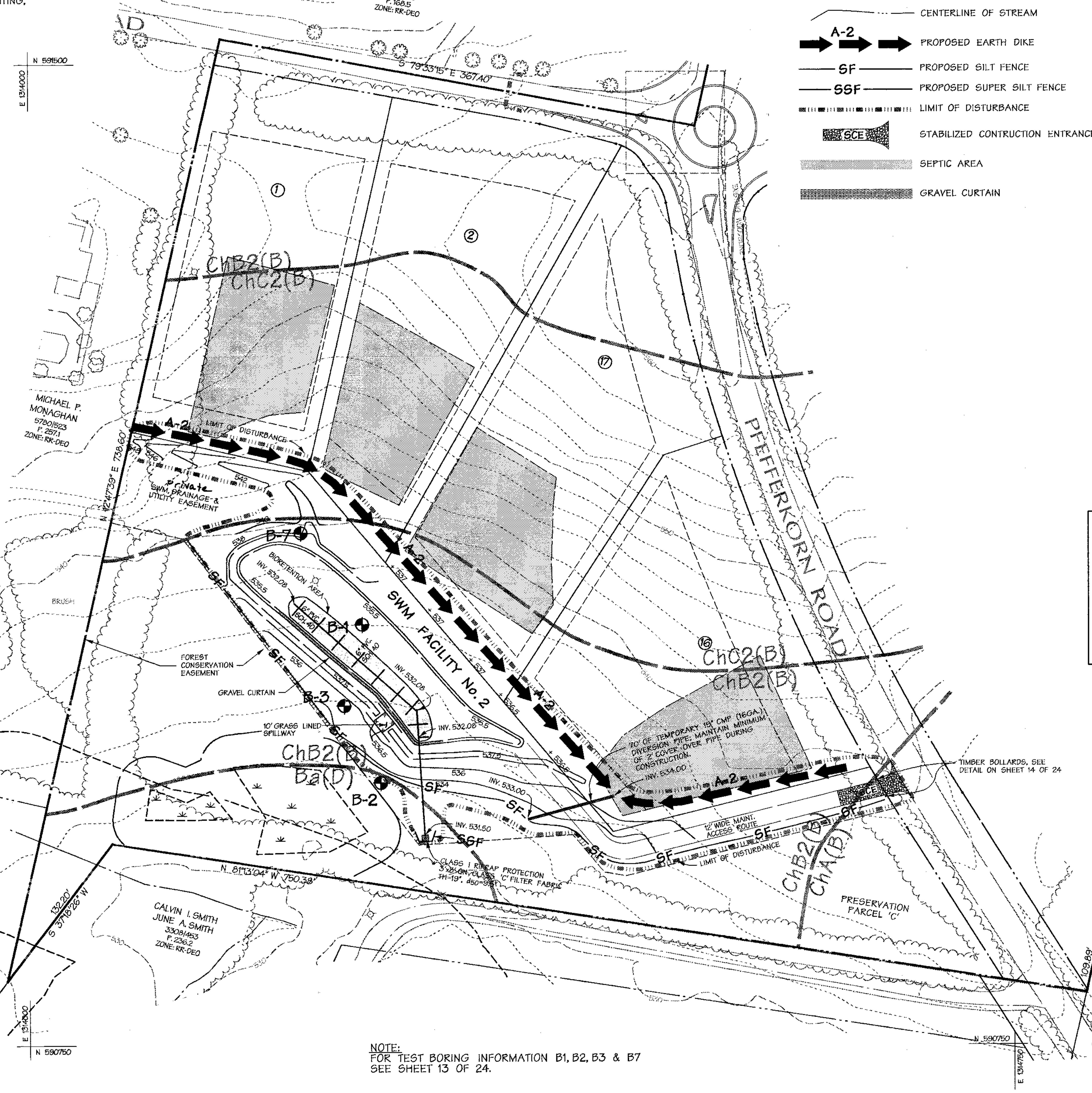

NOTE:
FOR TEST BORING INFORMATION B1, B2, B3 & B7 SEE SHEET 13 OF 24.

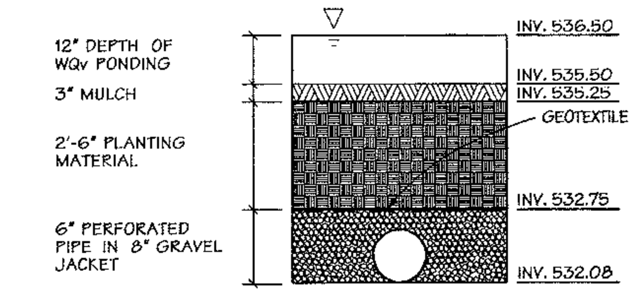

BIORETENTION FACILITY 1

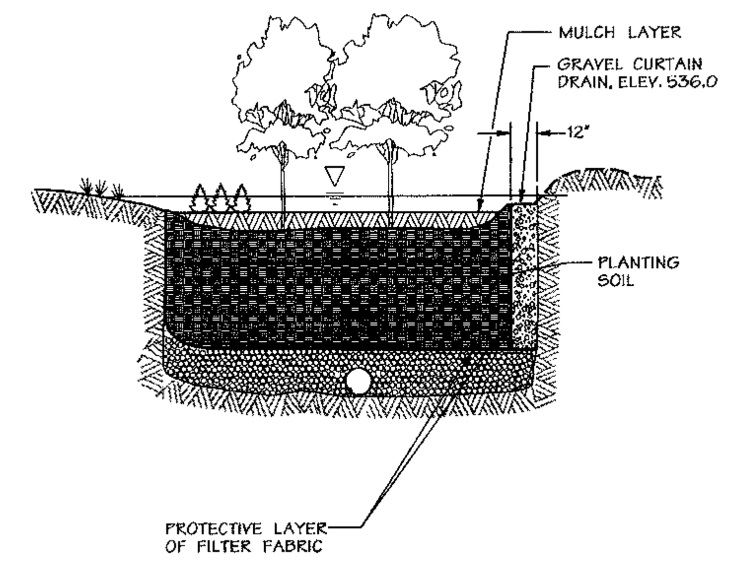

TYPICAL SECTION

BIORETENTION EXAMPLE

NOT TO SCALE

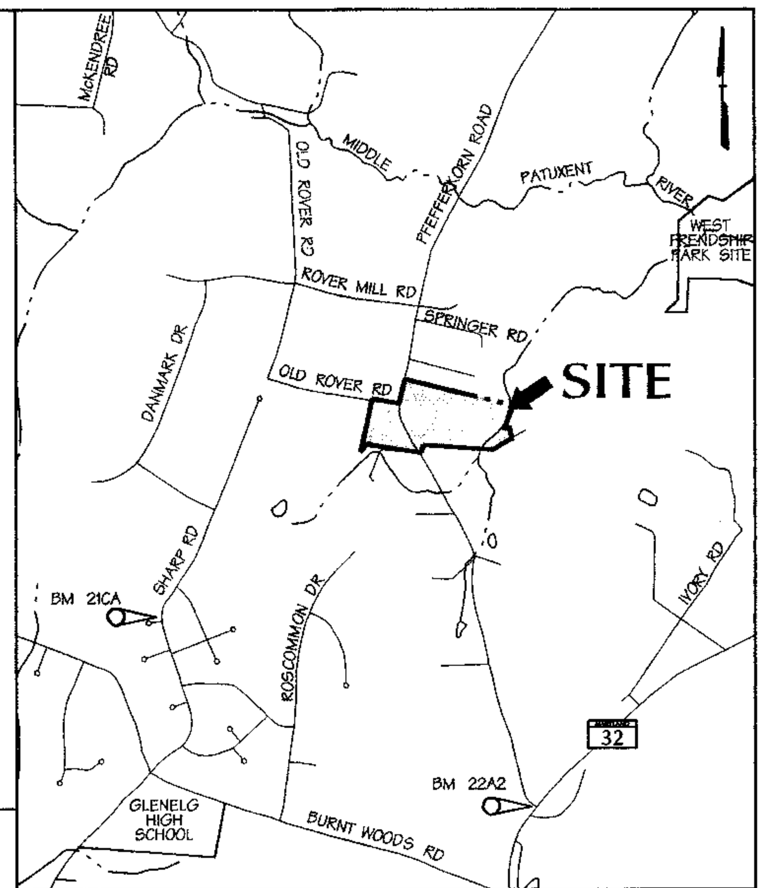

VICINITY MAP

SCALE: 1"=2000'

MATERIALS SPECIFICATION FOR BIORETENTION

MATERIAL	SPECIFICATION	SIZE	NOTES
PLANTINGS	SEE APPENDIX A, TABLE A.4	N/A	PLANTINGS ARE SITE-SPECIFIC
PLANTING SOIL (2.5 FEET DEEP)	SAND 35 - 60% SILT 30 - 55% CLAY 10 - 25%	N/A	USDA SOIL TYPES LOAMY SAND, SANDY LOAM OR LOAM.
MULCH	SHREDDED HARDWOOD		AGED 6 MONTHS, MIN.
PEA GRAVEL DIAPHRAGM AND CURTAIN DRAIN	PEA GRAVEL: ASTM-D-448 ORNAMENTAL STONE: WASHED COBBLES	PEA GRAVEL: NO. 6 STONE: 2" TO 5"	
GEOTEXTILE	CLASS "C" - APPARENT OPENING SIZE (ASTM-D-4751), GRAB TENSILE STRENGTH (ASTM-D-4632), PUNCTURE RESISTANCE (ASTM-D-4833)	N/A	FOR USE AS NECESSARY BENEATH UNDERDRAINS ONLY.
UNDERDRAIN GRAVEL	AASHTO M-43	0.375" TO 0.75"	
UNDERDRAIN PIPING	F 758, TYPE PS 28 OR AASHTO M-278	4" TO 6" RIGID SCH 40 PVC OR SDR35	⅜" PERF. @ 6" ON CENTER, 4 HOLES PER ROW; MINIMUM OF 3" OF GRAVEL OVER PIPES; NOT NECESSARY UNDERNEATH PIPES.
POURED IN PLACE CONCRETE (IF REQUIRED)	MSHA MIX NO.3; F'c=3500 PSI @ 28 DAYS, NORMAL WEIGHT, AIR-ENTRAINED; REINFORCED TO MEET ASTM-615-60	N/A	ON-SITE TESTING OF POURED-IN-PLACE CONCRETE REQUIRED: 28 DAY STRENGTH AND SLUMP TEST; ALL CONCRETE DESIGN (CAST-IN-PLACE OR PRE-CAST) NOT USING PREVIOUSLY APPROVED STATE OR LOCAL STANDARDS REQUIRES DESIGN DRAWINGS SEALED AND APPROVED BY A PROFESSIONAL STRUCTURAL ENGINEER LICENSED IN THE STATE OF MARYLAND - DESIGN TO INCLUDE MEETING ACI CODE 350.R/89; VERTICAL LOADING [H10 OR H-20]; ALLOWABLE HORIZONTAL LOADING (BASED ON SOIL PRESSURES); AND ANALYSIS OF POTENTIAL CRACKING.
SAND (1 FOOT DEEP)	AASHTO-M-6 OR ASTM-C-33	0.02" TO 0.04"	SAND SUBSTITUTIONS SUCH AS DIABASE AND GRAYSTONE #10 ARE NOT ACCEPTABLE. NO CALCIUM CARBONATE OR DOLOMITIC SAND SUBSTITUTIONS ARE ACCEPTABLE. NO "ROCK DUST" CAN BE USED FOR SAND.

SEQUENCE OF CONSTRUCTION - FACILITY No. 2

	No. of days
1. Obtain a grading permit.	7
2. Install sediment and erosion control devices.	2
3. Rough grade site after obtaining permission from inspector to preoceed.	2
4. Construct Facility Number 2, (bioretention facility) and fine grade.	5
5. Stabilize all areas in accordance with the standards and specifications.	2

NOTE: THIS FACILITY WILL NOT BE USED DURING THE ESC PHASE OF THIS PROJECT

DATA SOURCES:
BOUNDARY PER DMW FIELD SURVEY DATED DECEMBER 2001.
TOPO FLOWN BY VIRGINIA RESOURCE MAPPING, DECEMBER, 2001.
APPROX. WETLAND LOCATION PER DMW FIELD VISIT DATED APRIL 2000. OFF SITE SEPTIC RESERVE AREAS PER RECORD PLATS, LOCATIONS OF WELLS NOT AVAILABLE.

SPECIFICATION FOR BIORETENTION MAINTENANCE

TRASH AND DEBRIS SHALL BE REMOVED AS NECESSARY.

WHEN THE FILTERING CAPACITY OF THE FILTER DIMINISHES SUBSTANTIALLY (E.G., WHEN WATER PONDS ON THE SURFACE OF THE FILTER BED FOR MORE THAN 72 HOURS), THE TOP FEW INCHES OF DISCOLORED MATERIAL SHALL BE REMOVED AND SHALL BE REPLACED WITH NEW MATERIAL. THE REMOVAL OF SEDIMENTS SHOULD BE DISPOSED IN AN ACCEPTABLE MANNER (E.G., LANDFILL). SILT/SEDIMENT SHOULD BE REMOVED FROM THE FILTER BED WHEN THE ACCUMULATION EXCEEDS ONE INCH.

A DROP OF AT LEAST SIX INCHES SHALL BE PROVIDED AT THE INLET OF THE BIORETENTION FACILITY (F-6) (STONE DIAPHRAGM). DEAD OR DISEASED PLANT MATERIAL SHALL BE REMOVED. AREAS DEVOID OF MULCH SHOULD BE RE-MULCHED ON AN ANNUAL BASIS.

DIRECT MAINTENANCE ACCESS SHALL BE PROVIDED TO THE RETREATMENT AREA AND THE FILTER BED.

DEVELOPERS CERTIFICATION:

I/WE CERTIFY THAT ALL DEVELOPMENT AND/OR CONSTRUCTION WILL BE DONE ACCORDING TO THESE PLANS AND THAT ANY RESPONSIBLE PERSONNEL INVOLVED IN THE CONSTRUCTION PROJECT WILL HAVE A CERTIFICATE OF ATTENDANCE AT A DEPARTMENT OF ENVIRONMENT APPROVED TRAINING PROGRAM FOR THE CONTROL OF SEDIMENT AND EROSION BEFORE BEGINNING THE PROJECT. I SHALL ENGAGE A REGISTERED PROFESSIONAL ENGINEER TO SUPERVISE POND CONSTRUCTION AND PROVIDE THE HOWARD SOIL CONSERVATION DISTRICT WITH AN "AS-BUILT" PLAN OF THE POND WITHIN 30 DAYS OF COMPLETION. I ALSO AUTHORIZE PERIODIC ON-SITE INSPECTIONS BY THE HOWARD SOIL CONSERVATION DISTRICT.

[signature] 3/23/04
SIGNATURE OF DEVELOPER — DATE
PRINT NAME BELOW SIGNATURE
JAMES H. SELFRIDGE

ENGINEER'S CERTIFICATION:

I CERTIFY THAT THIS PLAN FOR POND CONSTRUCTION, EROSION AND SEDIMENT CONTROL REPRESENTS A PRACTICAL AND WORKABLE PLAN BASED ON MY PERSONAL KNOWLEDGE OF THE SITE CONDITIONS. THIS PLAN WAS PREPARED IN ACCORDANCE WITH THE REQUIREMENTS OF THE HOWARD SOIL CONSERVATION DISTRICT. I HAVE NOTIFIED THE DEVELOPER THAT HE/SHE MUST ENGAGE A REGISTERED PROFESSIONAL ENGINEER TO SUPERVISE POND CONSTRUCTION AND PROVIDE THE HOWARD SOIL CONSERVATION DISTRICT WITH AN "AS-BUILT" PLAN OF THE POND WITHIN 30 DAYS OF COMPLETION.

[signature] 3-25-04
SIGNATURE OF ENGINEER
PRINT NAME BELOW SIGNATURE
John W. Ranocchia, Sr.

THESE PLANS HAVE BEEN REVIEWED FOR THE HOWARD SOIL CONSERVATION DISTRICT AND MEET THE TECHNICAL REQUIREMENTS FOR SMALL POND CONSTRUCTION, SOIL EROSION AND SEDIMENT CONTROL

[signature] 3/30/04
U.S. NATURAL RESOURCE CONSERVATION SERVICE — DATE

THESE PLANS FOR SMALL POND CONSTRUCTION, SOIL EROSION AND SEDIMENT CONTROL MEET THE REQUIREMENTS OF HOWARD SOIL CONSERVATION DISTRICT.

[signature] 3/30/04
HOWARD S.C.D. — DATE

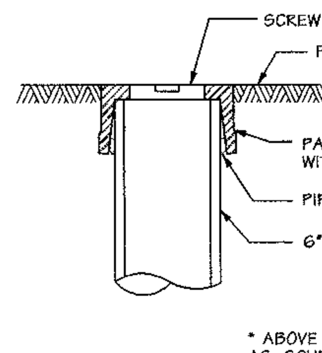

* ABOVE DETAIL PROVIDED AS SCHEMATIC SCREW TOP PVC CLEAN OUT CAP ONLY

EACH CLEANOUT SHALL INCLUDE THE FOLLOWING

1. FOR AN UNDERGROUND FLUSH MOUNTED CLEANOUT, PROVIDE A TUBE MADE OF NON-CORROSIVE MATERIAL, SCHEDULE 40 OR EQUAL, AT LEAST 3-FEET LONG WITH AN INSIDE DIAMETER OF AT LEAST 6-INCHES.
2. THE TUBE SHALL HAVE A FACTORY ATTACHED CAST IRON OR HIGH IMPACT PLASTIC COLLAR WITH RIBS TO PREVENT ROTATION WHEN REMOVING SCREW TOP LID. THE SCREW TOP LID SHALL BE CAST IRON OR HIGH IMPACT PLASTIC THAT WILL WITHSTAND ULTRA-VIOLET RAYS.

CLEAN OUT DETAIL

NOT TO SCALE

3-25-04
Date

Professional Engr. No. 10551

APPROVED: HOWARD COUNTY DEPARTMENT OF PUBLIC WORKS

[signature] 4-13-04
CHIEF, BUREAU OF HIGHWAYS — DATE

APPROVED: HOWARD COUNTY DEPT. OF PLANNING & ZONING

[signature] 4/28/04
CHIEF, DEVELOPMENT ENGINEERING DIVISION — DATE

[signature] 4/29/04
CHIEF, DIVISION OF LAND DEVELOPMENT — DATE

~~DIRECTOR~~ ~~DATE~~

Date	No.	Revision Description

OWNER: NORTHRIDGE DEVELOPMENT, LLC
14045 GARED DRIVE
GLENWOOD, MD 21738

DEVELOPER: JAMES F. SELFRIDGE BUILDERS, INC.
14045 GARED DRIVE
GLENWOOD, MD 21738

DMW
Daft-McCune-Walker, Inc.
200 East Pennsylvania Avenue
Towson, Maryland 21286
(410) 296-3333
Fax 296-4705
A Team of Land Planners, Landscape Architects, Engineers, Surveyors & Environmental Professionals

SUBDIVISION NAME			SECTION/AREA		LOT/PARCEL #
FOX MEADOW			1		167
PLAT# OR L/F	BLOCK #	ZONE	TAX/ZONE MAP	ELECT. DISTRICT	CENSUS TRACT
5983/492	13, 19, 20	RR, RC	15	3	

TITLE
FOX MEADOW
(FORMERLY PFEFFERKORN PROPERTY)
STORMWATER MANAGEMENT FACILITY 2 PLAN, DETAILS and SEDIMENT & EROSION CONTROL

Des By MRT/DW	Scale 1"=50'	Proj. No. 00042.B
Drn By MRT/DW	Date 1/7/04	16 OF 24
Chk By	Approved	

F-03-45

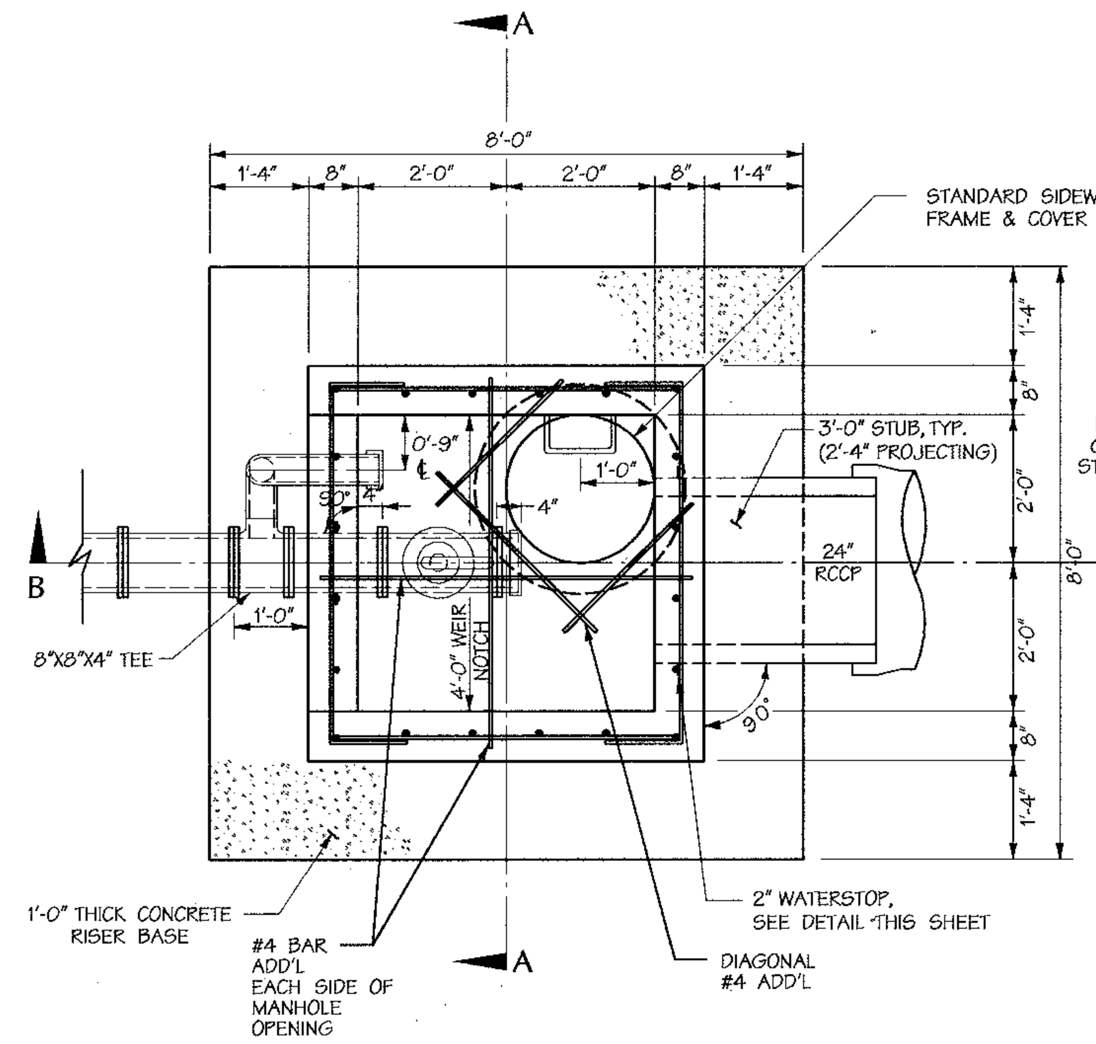

RISER - PLAN

CAST-IN-PLACE
SCALE: ½"=1'-0"

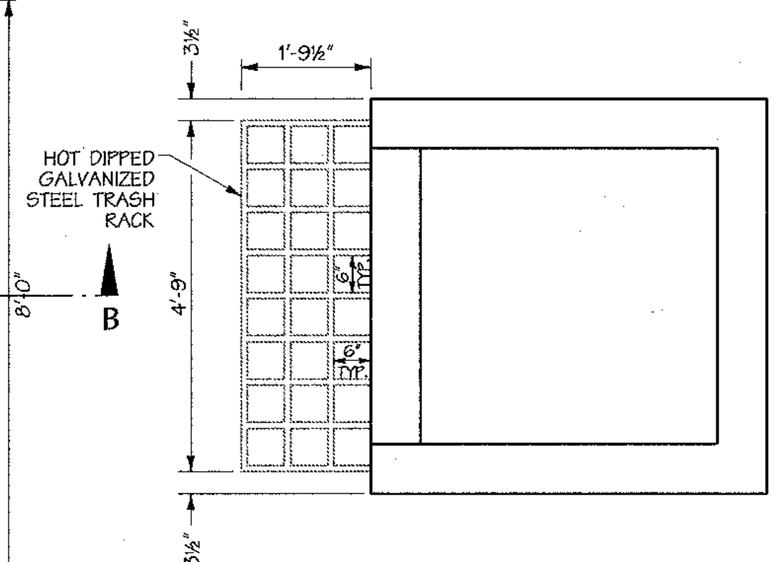

TRASH RACK DETAIL

SCALE: ½"=1'-0"

* No.8 SMOOTH BAR MAY BE SUBSTITUTED WITH 1"x 1" TUBULAR BARS, ALL JOINTS TO BE WELDED ALL AROUND. AFTER FABRICATION AND GALVANIZATION OF THE TRASH RACK, THE TRASH RACK SHALL BE PAINTED BATTLESHIP GRAY.

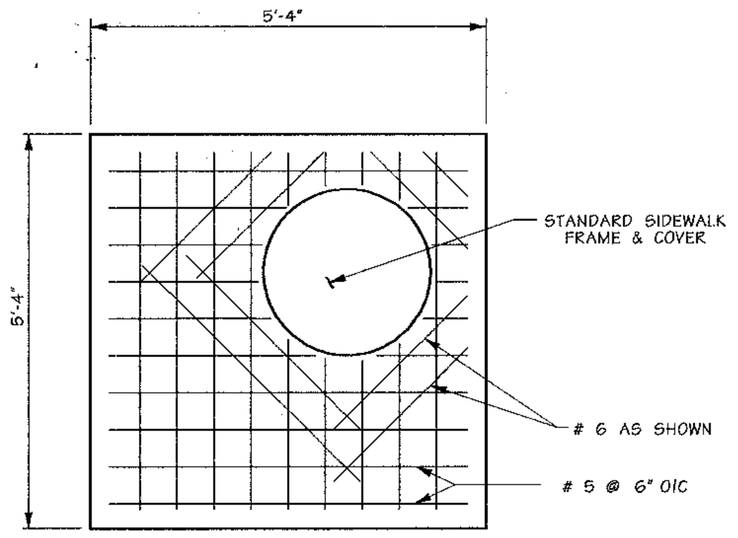

NOTES:

1. BOLT TOP SLAB TO RISER WITH (4) ½" x 6" LG. HEX. HEAD GALVANIZED BOLTS.
2. THE SIDE AND THE SLAB CLOSET TO THE FRAME AND COVER WILL LINE UP WITH THE SIDE OF THE RISER WITH STANDARD MANHOLE STEPS.

TOP SLAB

Scale: 59/64" = 1'-0"
CAST-IN-PLACE

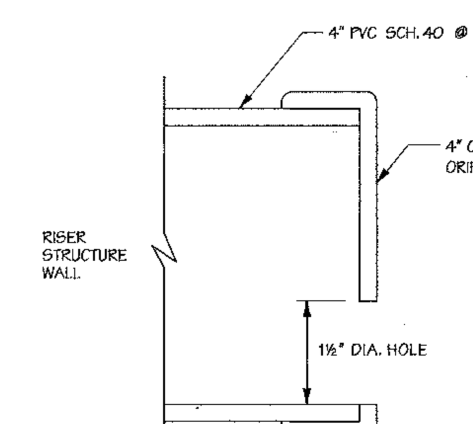

DEWATERING ORIFICE DETAIL

NOT TO SCALE

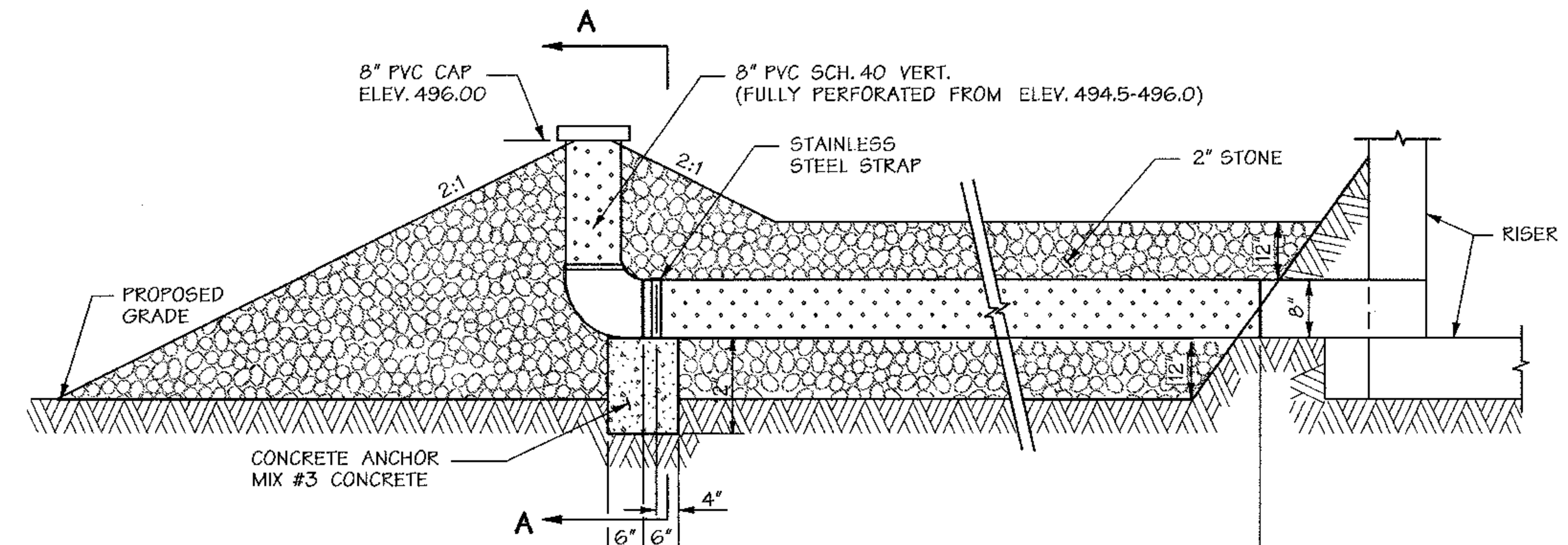

NOTE:

PERFORATED PVC SHALL BE "FULLY PERFORATED", HAVING A MINIMUM OF 32, 1" DIAMETER HOLES PER LINEAR FOOT. PERFORATIONS SHALL BE EVENLY DISTRIBUTED AROUND THE FULL PERIPHERY OF THE PIPE.

LOW FLOW PIPE DETAIL

NO SCALE

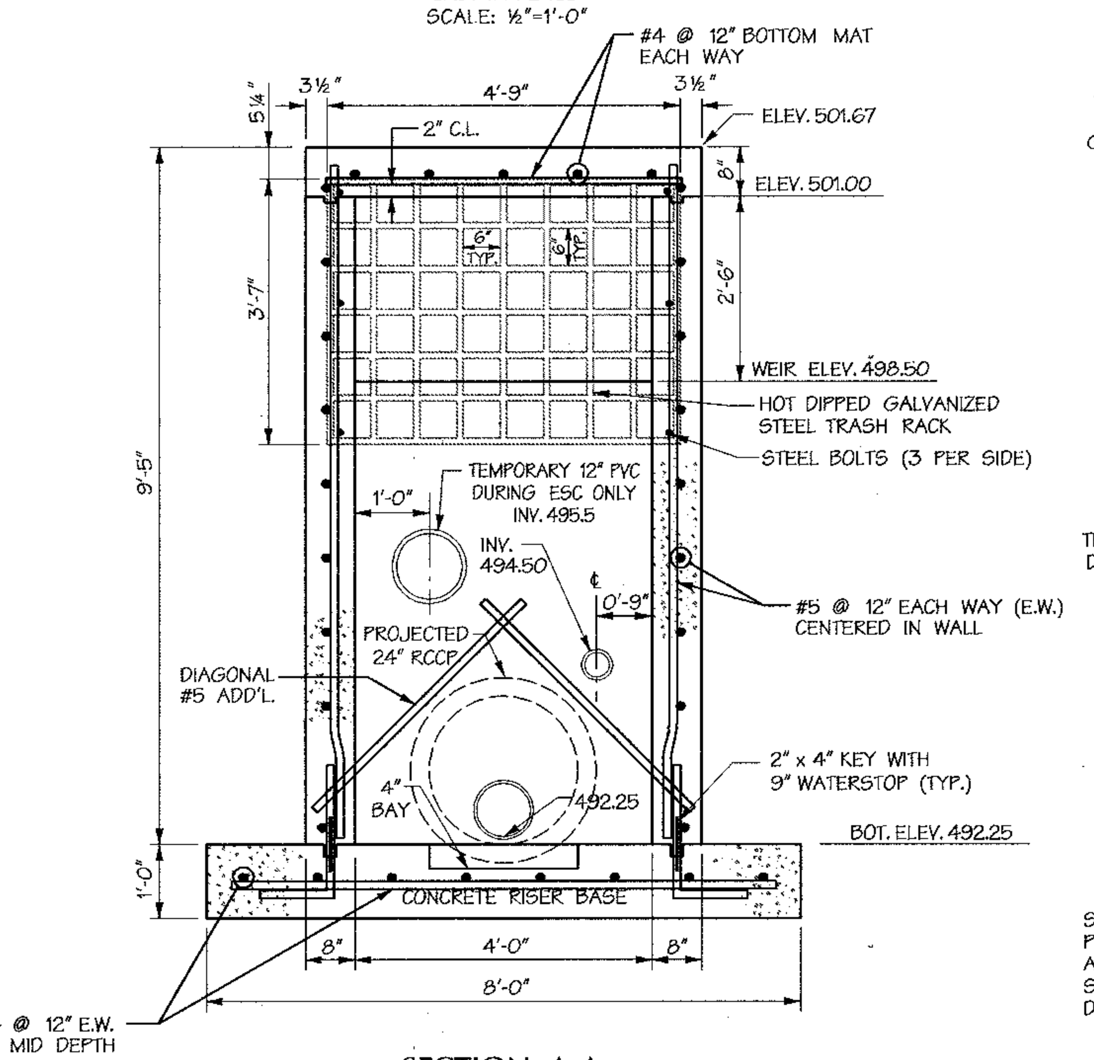

SECTION A-A

CAST-IN-PLACE
SCALE: ½"=1'-0"

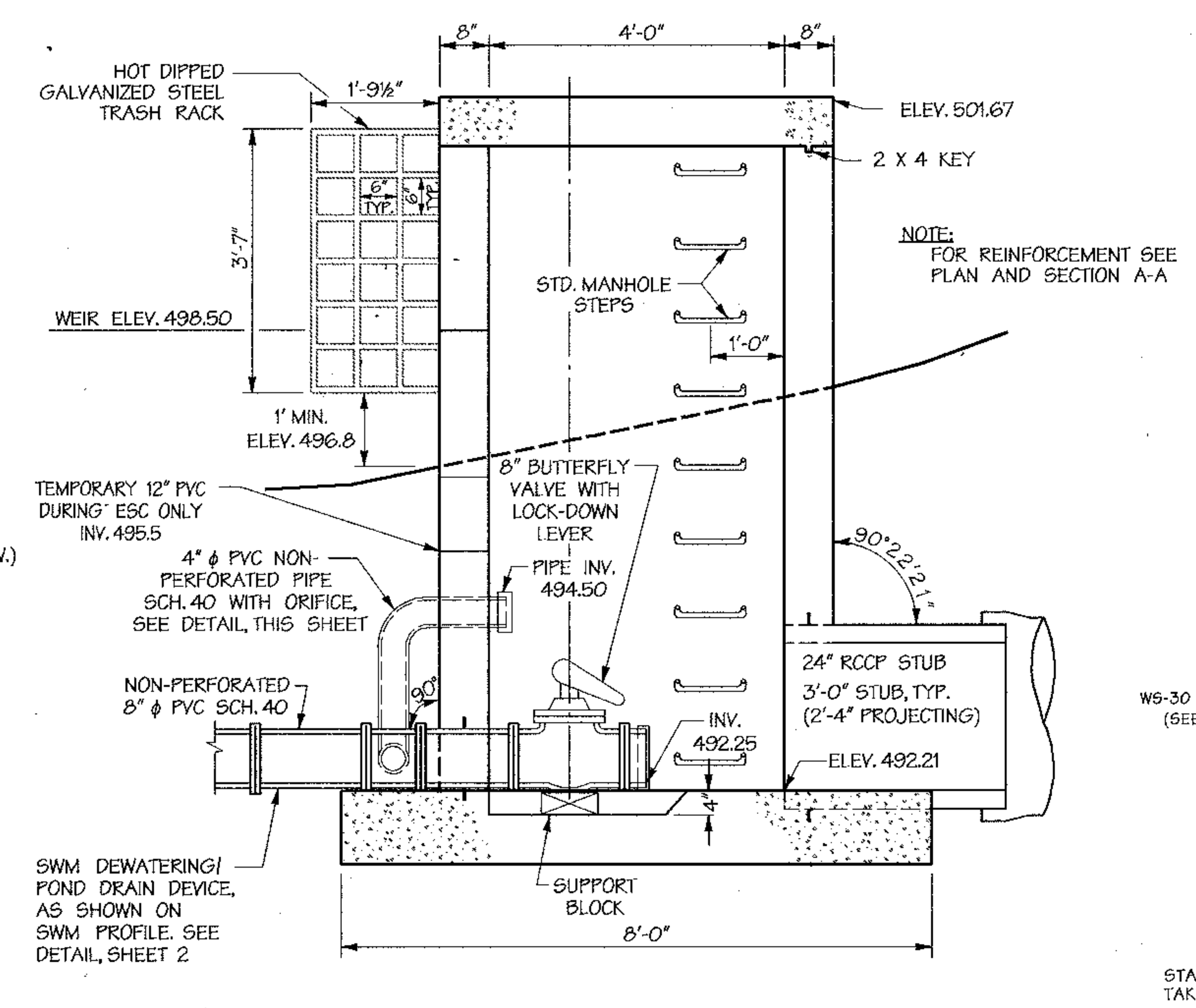

SECTION B-B

CAST-IN-PLACE
SCALE: ½"=1'-0"

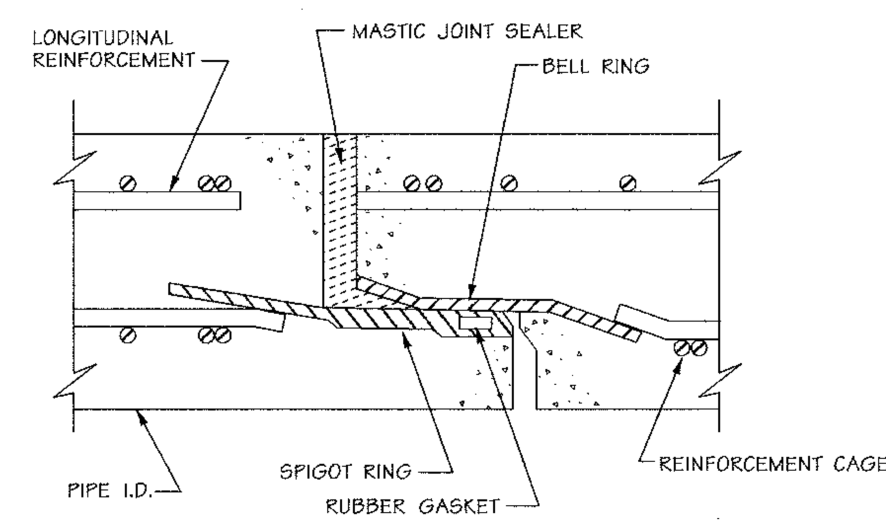

BARREL JOINT SEAL DETAIL

NTS

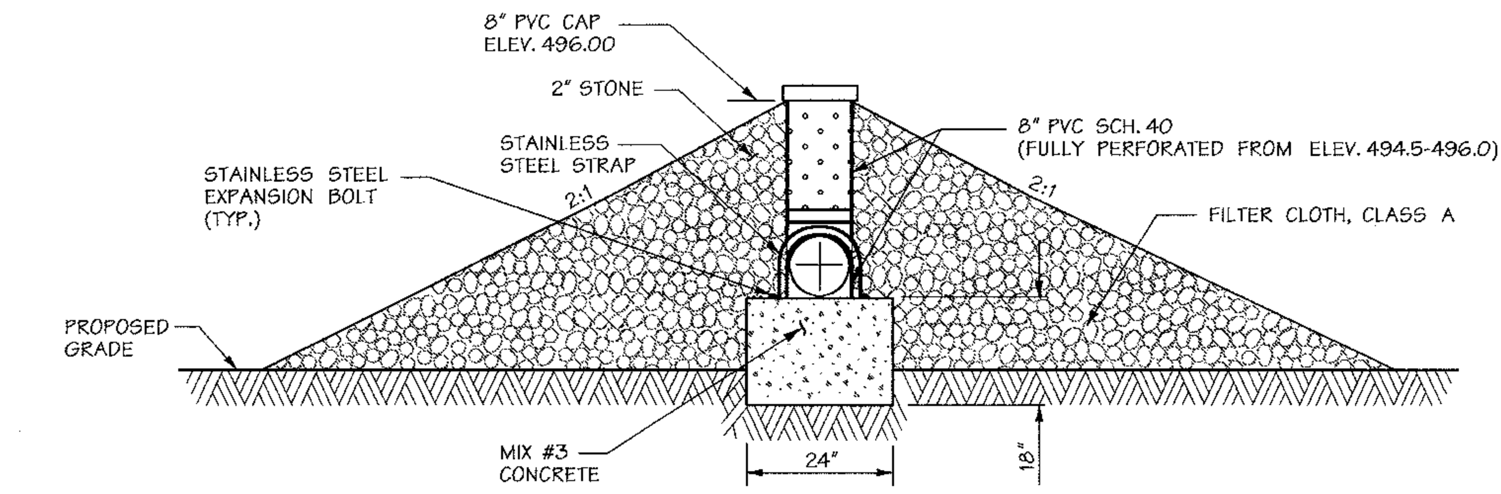

SECTION 'A-A'

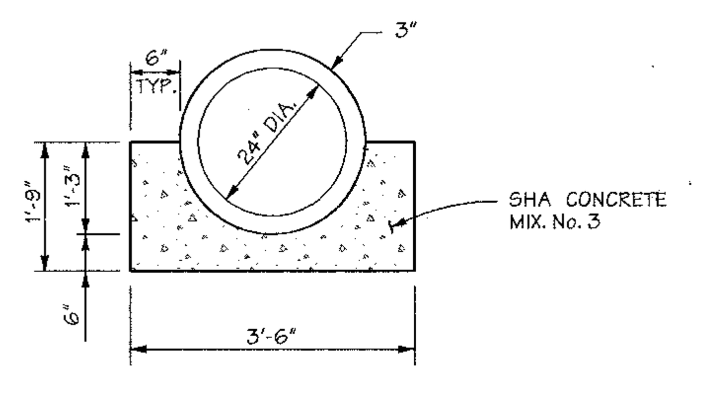

CONCRETE CRADLE

NOT TO SCALE

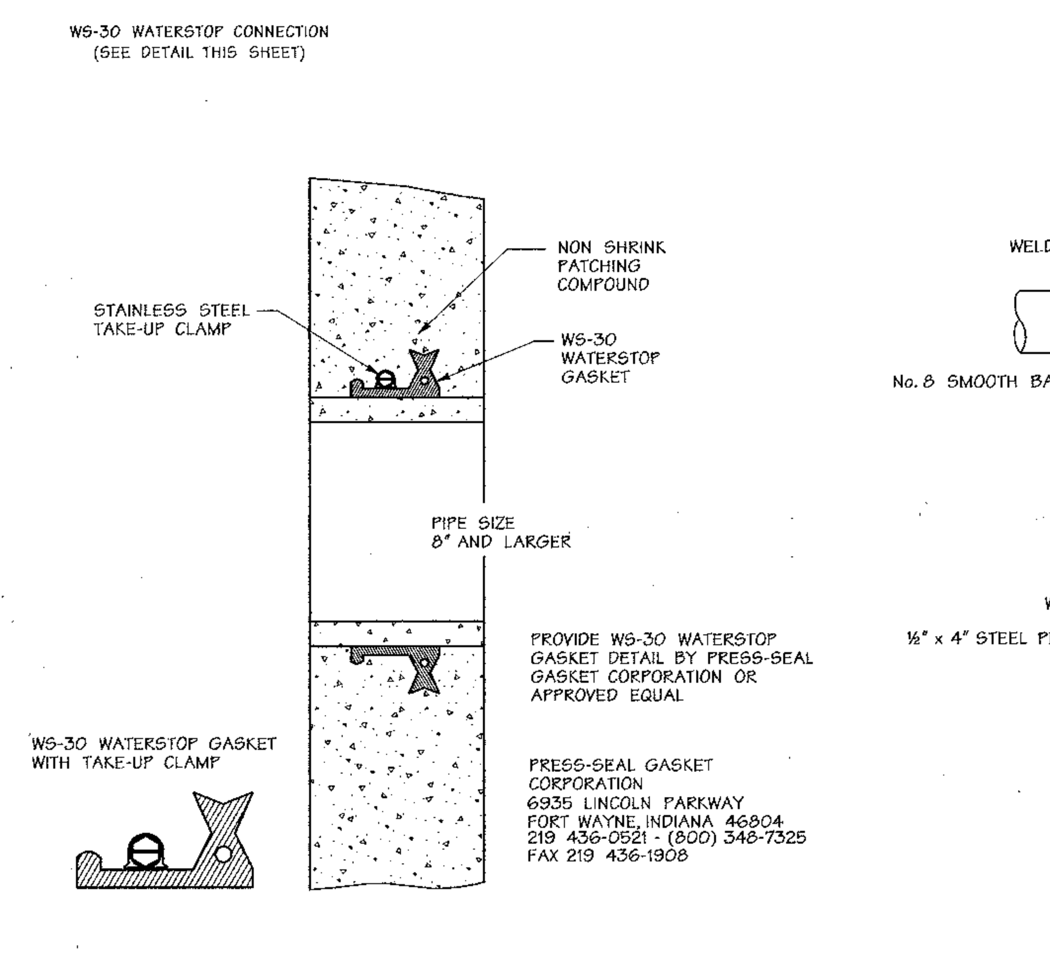

PROVIDE WS-30 WATERSTOP GASKET DETAIL BY PRESS-SEAL GASKET CORPORATION OR APPROVED EQUAL

PRESS-SEAL GASKET CORPORATION
6935 LINCOLN PARKWAY
FORT WAYNE, INDIANA 46804
219 436-0521 - (800) 348-7325
FAX 219 436-1908

WATERSTOP DETAIL

NOT TO SCALE

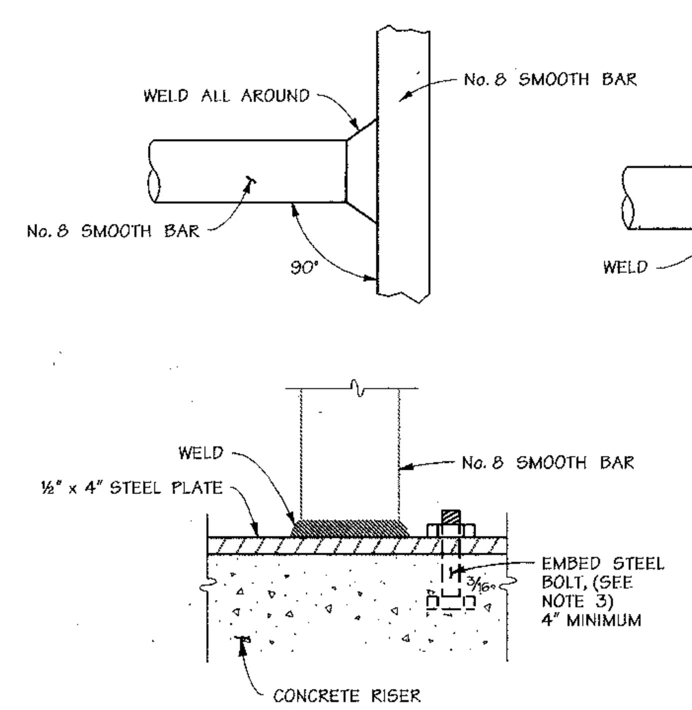

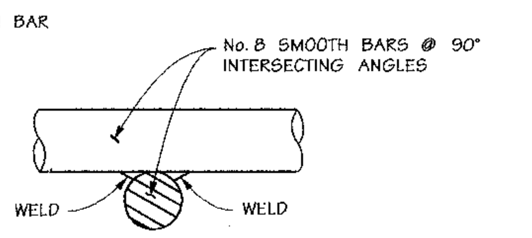

NOTES

1. NO RUST SHALL BE PERMITTED ON REBAR SURFACES TO BE WELDED.
2. TRASH RACK SHALL BE No. 8 SMOOTH BAR WELDED AT ALL INTERSECTIONS.
3. ½" x 6" STAINLESS STEEL BOLT (TYP.) ASTM F593-98.
4. *ALL STEEL SHALL BE ASTM A-36 (OR A-500 FOR TUBING) FULLY GALVANIZED AFTER FABRICATION IN ACCORDANCE WITH ASTM A-123.
5. ALL WELDED CONNECTIONS MUST BE HOT DIPPED GALVANIZED AND SHOP FABRICATED.
6. EXPOSED CONCRETE CORNERS MUST BE CHAMFERED WITH ¾" x ¾" MILLED CHAMFER STRIPS.
7. MINIMUM COVER FOR RE-BARS IS 2" AT WALLS AND 3" AT BOTTOM.
8. ALL PVC SHALL BE SCHEDULE 40.

DETAILS

TRASH RACK WELDING DETAIL

NOT TO SCALE

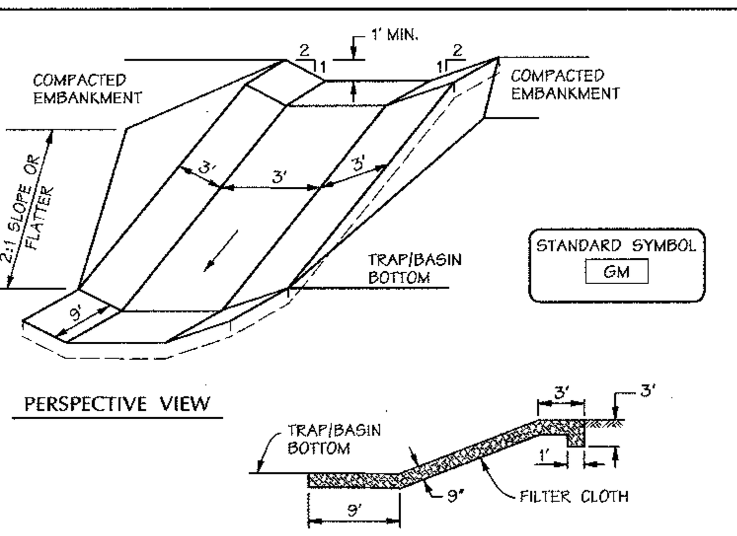

CONSTRUCTION SPECIFICATIONS

1. GABION INFLOW PROTECTION SHALL BE CONSTRUCTED OF 9' x 3' x 9" GABION BASKETS FORMING A TRAPEZOIDAL CROSS SECTION 1' DEEP, WITH 2:1 SIDE SLOPES, AND A 3' BOTTOM WIDTH.
2. GEOTEXTILE CLASS C SHALL BE INSTALLED UNDER ALL GABION BASKETS.
3. THE STONE USED TO FILL THE GABION BASKETS SHALL BE 4" - 7".
4. GABIONS SHALL BE INSTALLED IN ACCORDANCE WITH MANUFACTURERS RECOMMENDATIONS.
5. GABION INFLOW PROTECTION SHALL BE USED WHERE CONCENTRATED FLOW IS PRESENT ON SLOPES STEEPER THAN 4:1.

U.S. DEPARTMENT OF AGRICULTURE SOIL CONSERVATION SERVICE — B - 7 - 2 — MARYLAND DEPARTMENT OF ENVIRONMENT WATER MANAGEMENT ADMINISTRATION

Gabion Inflow Protection — NOT TO SCALE

Mon Mar 22 15:57:32 2004 n:\00042\00042.m4

DEVELOPERS CERTIFICATION:

I/WE CERTIFY THAT ALL DEVELOPMENT AND/OR CONSTRUCTION WILL BE DONE ACCORDING TO THESE PLANS AND THAT ANY RESPONSIBLE PERSONNEL INVOLVED IN THE CONSTRUCTION PROJECT WILL HAVE A CERTIFICATE OF ATTENDANCE AT A DEPARTMENT OF ENVIRONMENT APPROVED TRAINING PROGRAM FOR THE CONTROL OF SEDIMENT AND EROSION BEFORE BEGINNING THE PROJECT. I SHALL ENGAGE A REGISTERED PROFESSIONAL ENGINEER TO SUPERVISE POND CONSTRUCTION AND PROVIDE THE HOWARD SOIL CONSERVATION DISTRICT WITH AN "AS-BUILT" PLAN OF THE POND WITHIN 30 DAYS OF COMPLETION. I ALSO AUTHORIZE PERIODIC ON-SITE INSPECTIONS BY THE HOWARD SOIL CONSERVATION DISTRICT.

[signature] 3/23/04
SIGNATURE OF DEVELOPER — DATE
PRINT NAME BELOW SIGNATURE
JAMES H. SELFRIDGE

ENGINEER'S CERTIFICATION:

I CERTIFY THAT THIS PLAN FOR POND CONSTRUCTION, EROSION AND SEDIMENT CONTROL REPRESENTS A PRACTICAL AND WORKABLE PLAN BASED ON MY PERSONAL KNOWLEDGE OF THE SITE CONDITIONS. THIS PLAN WAS PREPARED IN ACCORDANCE WITH THE REQUIREMENTS OF THE HOWARD SOIL CONSERVATION DISTRICT. I HAVE NOTIFIED THE DEVELOPER THAT HE/SHE MUST ENGAGE A REGISTERED PROFESSIONAL ENGINEER TO SUPERVISE POND CONSTRUCTION AND PROVIDE THE HOWARD SOIL CONSERVATION DISTRICT WITH AN "AS-BUILT" PLAN OF THE POND WITHIN 30 DAYS OF COMPLETION.

[signature] 3-25-04
SIGNATURE OF ENGINEER
PRINT NAME BELOW SIGNATURE
John W. Ranecchia, Sr.

THESE PLANS HAVE BEEN REVIEWED FOR THE HOWARD SOIL CONSERVATION DISTRICT AND MEET THE TECHNICAL REQUIREMENTS FOR SMALL POND CONSTRUCTION, SOIL EROSION AND SEDIMENT CONTROL.

[signature] / GS 3/30/04
U.S. NATURAL RESOURCE CONSERVATION SERVICE — DATE

THESE PLANS FOR SMALL POND CONSTRUCTION, SOIL EROSION AND SEDIMENT CONTROL MEET THE REQUIREMENTS OF HOWARD SOIL CONSERVATION DISTRICT.

[signature] 3/30/04
HOWARD S.C.D. — DATE

3-25-04
Date

Professional Engr. No. 1-551

APPROVED: HOWARD COUNTY DEPARTMENT OF PUBLIC WORKS

[signature] 4-13-04
CHIEF, BUREAU OF HIGHWAYS — DATE

APPROVED:
[signature] 4/20/04
CHIEF, DEVELOPMENT ENGINEERING DIVISION — DATE

[signature] 4/29/4
CHIEF, DIVISION OF LAND DEVELOPMENT — DATE

~~DIRECTOR~~ — ~~DATE~~

Date	No.	Revision Description

OWNER: NORTHRIDGE DEVELOPMENT. LLC
14045 GARED DRIVE
GLENWOOD, MD 21738

DEVELOPER: JAMES F. SELFRIDGE BUILDERS, INC.
14045 GARED DRIVE
GLENWOOD, MD 21738

DMW
Daft-McCune-Walker, Inc.
200 East Pennsylvania Avenue
Towson, Maryland 21286
(410) 296-3333
Fax 296-4705

A Team of Land Planners, Landscape Architects, Engineers, Surveyors & Environmental Professionals

SUBDIVISION NAME			SECTION/AREA		LOT/PARCEL
FOX MEADOW			1		167
PLAT OR L/F	BLOCK	ZONE	TAX/ZONE MAP	ELECT. DISTRICT	CENSUS TRACT
5983/492	13, 19, 20	RR, RC	15	3	

TITLE
FOX MEADOW
(FORMERLY PFEFFERKORN PROPERTY)
Stormwater Management Facility 1
Stormwater Management Details

Des By	DWR	Scale AS SHOWN	Proj. No. 00042.B
Drn By	DWR	Date 1/7/04	17 OF 24
Chk By		Approved	

F.03.45

Mon Mar 22 15:37:31 2004 n:\00042\00042.m4

3/22/2004 3:37:22 PM \\ATHENS\MSTATION\CADNET\NCF\dey.gcf cr1221 c:\hpm\00042.hpm

STORMWATER MANAGEMENT POND
GENERAL CONSTRUCTION SPECIFICATIONS

1. GENERAL

ALL STORMWATER MANAGEMENT FACILITIES SHALL BE CONSTRUCTED IN ACCORDANCE WITH HOWARD COUNTY'S "STANDARD SPECIFICATIONS AND DETAILS FOR CONSTRUCTION (1985)" AND THE N.R.C.S. MARYLAND "STANDARDS AND SPECIFICATIONS FOR PONDS" (MD-378, 2000).

THESE SPECIFICATIONS ARE APPROPRIATE TO ALL PONDS WITHIN THE SCOPE OF THE STANDARD PRACTICE MD-378. ALL REFERENCES TO ASTM AND AASHTO SPECIFICATIONS APPLY TO THE MOST RECENT VERSION.

2. SITE PREPARATION

AREAS DESIGNATED FOR BORROW AREAS, EMBANKMENT, AND STRUCTURAL WORKS SHALL BE CLEARED, GRUBBED AND STRIPPED OF TOPSOIL. ALL TREES, VEGETATION, ROOTS AND OTHER OBJECTIONABLE MATERIAL SHALL BE REMOVED. CHANNEL BANKS AND SHARP BREAKS SHALL BE SLOPED TO NO STEEPER THAN 1:1. ALL TREES SHALL BE CLEARED AND GRUBBED WITHIN 15 FEET OF THE TOE OF THE EMBANKMENT.

AREAS TO BE COVERED BY THE RESERVOIR WILL BE CLEARED OF ALL TREES, BRUSH, LOGS, FENCES, RUBBISH AND OTHER OBJECTIONABLE MATERIAL UNLESS OTHERWISE DESIGNATED ON THE PLANS. TREES, BRUSH AND STUMPS SHALL BE CUT APPROXIMATELY LEVEL WITH THE GROUND SURFACE. FOR DRY STORMWATER MANAGEMENT PONDS, A MINIMUM OF A 25-FOOT RADIUS AROUND THE INLET STRUCTURE SHALL BE CLEARED.

ALL CLEARED AND GRUBBED MATERIAL SHALL BE DISPOSED OF OUTSIDE AND BELOW THE LIMITS OF THE DAM AND RESERVOIR AS DIRECTED BY THE OWNER OR HIS REPRESENTATIVE. WHEN SPECIFIED, A SUFFICIENT QUANTITY OF TOPSOIL WILL BE STOCKPILED IN A SUITABLE LOCATION FOR USE ON THE EMBANKMENT AND OTHER DESIGNATED AREAS.

3. EARTH FILL

MATERIAL - THE FILL MATERIAL SHALL BE TAKEN FROM APPROVED DESIGNATED BORROW AREAS. IT SHALL BE FREE OF ROOTS, STUMPS, WOOD, RUBBISH, STONES GREATER THAN 6", FROZEN OR OTHER OBJECTIONABLE MATERIALS. FILL MATERIAL FOR THE CENTER OF THE EMBANKMENT AND CUT OFF TRENCH SHALL CONFORM TO UNIFIED SOIL CLASSIFICATION GC, SC, CH, OR CL AND MUST HAVE AT LEAST 30% PASSING THE #200 SIEVE. CONSIDERATION MAY BE GIVEN TO THE USE OF OTHER MATERIALS IN THE EMBANKMENT IF DESIGNED BY A GEOTECHNICAL ENGINEER. SUCH SPECIAL DESIGNS MUST HAVE CONSTRUCTION SUPERVISED BY A GEOTECHNICAL ENGINEER.

MATERIALS USED IN THE OUTER SHELL OF THE EMBANKMENT MUST HAVE THE CAPABILITY TO SUPPORT VEGETATION OF THE QUALITY REQUIRED TO PREVENT EROSION OF THE EMBANKMENT.

PLACEMENT - AREAS ON WHICH FILL IS TO BE PLACED SHALL BE SCARIFIED PRIOR TO PLACEMENT OF FILL. FILL MATERIALS SHALL BE PLACED IN MAXIMUM 8 INCH THICK (BEFORE COMPACTION) LAYERS WHICH ARE TO BE CONTINUOUS OVER THE ENTIRE LENGTH OF THE FILL. THE MOST PERMEABLE BORROW MATERIAL SHALL BE PLACED IN THE DOWNSTREAM PORTIONS OF THE EMBANKMENT. THE PRINCIPAL SPILLWAY MUST BE INSTALLED CONCURRENTLY WITH FILL PLACEMENT AND NOT EXCAVATED INTO THE EMBANKMENT.

COMPACTION - THE MOVEMENT OF THE HAULING AND SPREADING EQUIPMENT OVER THE FILL SHALL BE CONTROLLED SO THAT THE ENTIRE SURFACE OF EACH LIFT SHALL BE TRAVERSED BY NOT LESS THAN ONE TREAD TRACK OF THE EQUIPMENT OR COMPACTION SHALL BE ACHIEVED BY A MINIMUM OF FOUR COMPLETE PASSES OF A SHEEPSFOOT, RUBBER TIRED OR VIBRATORY ROLLER. FILL MATERIAL SHALL CONTAIN SUFFICIENT MOISTURE SUCH THAT THE REQUIRED DEGREE OF COMPACTION WILL BE OBTAINED WITH THE EQUIPMENT USED. THE FILL MATERIAL SHALL CONTAIN SUFFICIENT MOISTURE SO THAT IF FORMED INTO A BALL IT WILL NOT CRUMBLE, YET NOT BE SO WET THAT WATER CAN BE SQUEEZED OUT.

WHEN REQUIRED BY THE REVIEWING AGENCY THE MINIMUM REQUIRED DENSITY SHALL NOT BE LESS THAN 95% OF THE MAXIMUM DRY DENSITY WITH A MOISTURE CONTENT WITHIN +/- 2% OF THE OPTIMUM. EACH LAYER OF FILL SHALL BE COMPACTED AS NECESSARY TO OBTAIN THAT DENSITY, AND IS TO BE CERTIFIED BY THE ENGINEER AT THE TIME OF CONSTRUCTION. ALL COMPACTION IS TO BE DETERMINED BY AASHTO METHOD T-99 (STANDARD PROCTOR).

CUT OFF TRENCH - THE CUTOFF TRENCH SHALL BE EXCAVATED INTO IMPERVIOUS MATERIAL ALONG OR PARALLEL TO THE CENTERLINE OF THE EMBANKMENT AS SHOWN ON THE PLANS. THE EQUIPMENT USED FOR EXCAVATION, WITH THE MINIMUM WIDTH BEING FOUR FEET SHALL GOVERN THE BOTTOM WIDTH OF THE TRENCH. THE DEPTH SHALL BE AT LEAST 4 FEET BELOW EXISTING GRADE OR AS SHOWN ON THE PLANS. THE SIDE SLOPES OF THE TRENCH SHALL BE 1 TO 1 OR FLATTER. THE BACKFILL SHALL BE COMPACTED WITH CONSTRUCTION EQUIPMENT, ROLLERS, OR HAND TAMPERS TO ASSURE MAXIMUM DENSITY AND MINIMUM PERMEABILITY.

EMBANKMENT CORE - THE CORE SHALL BE PARALLEL TO THE CENTERLINE OF THE EMBANKMENT AS SHOWN ON THE PLANS. THE TOP WIDTH OF THE CORE SHALL BE A MINIMUM OF FOUR FEET. THE HEIGHT SHALL EXTEND UP TO AT LEAST THE 10 YEAR WATER ELEVATION OR AS SHOWN ON THE PLANS. THE SIDE SLOPES SHALL BE 1 TO 1 OR FLATTER. THE CORE SHALL BE COMPACTED WITH CONSTRUCTION EQUIPMENT, ROLLERS, OR HAND TAMPERS TO ASSURE MAXIMUM DENSITY AND MINIMUM PERMEABILITY. IN ADDITION, THE CORE SHALL BE PLACED CONCURRENTLY WITH THE OUTER SHELL OF THE EMBANKMENT.

4. STRUCTURE BACKFILL

BACKFILL ADJACENT TO PIPES OR STRUCTURES SHALL BE OF THE TYPE AND QUALITY CONFORMING TO THAT SPECIFIED FOR THE ADJOINING FILL MATERIAL. THE FILL SHALL BE PLACED IN HORIZONTAL LAYERS NOT TO EXCEED 4 INCHES IN THICKNESS AND COMPACTED BY HAND TAMPERS OR OTHER MANUALLY DIRECTED COMPACTION EQUIPMENT. THE MATERIAL NEEDS TO FILL COMPLETELY ALL SPACES UNDER AND ADJACENT TO THE PIPE. AT NO TIME DURING THE BACKFILLING OPERATION SHALL DRIVEN EQUIPMENT BE ALLOWED TO OPERATE CLOSER THAN 4 FEET, MEASURED HORIZONTALLY, TO ANY PART OF A STRUCTURE. UNDER NO CIRCUMSTANCES SHALL EQUIPMENT BE DRIVEN OVER ANY PART OF A CONCRETE STRUCTURE OR PIPE, UNLESS THERE IS A COMPACTED FILL OF 24" OR GREATER OVER THE STRUCTURE OR PIPE.

STRUCTURE BACKFILL MAY BE FLOWABLE FILL MEETING THE REQUIREMENTS OF MARYLAND DEPARTMENT OF TRANSPORTATION, STATE HIGHWAY ADMINISTRATION STANDARD SPECIFICATIONS FOR CONSTRUCTION AND MATERIALS, SECTION313 AS MODIFIED. THE MIXTURE SHALL HAVE A 100-200 PSI; 28 DAY UNCONFINED COMPRESSIVE STRENGTH. THE FLOWABLE FILL SHALL HAVE A MINIMUM PH OF 4.0 AND A MINIMUM RESISTIVITY OF 2,000 OHM-CM. MATERIAL SHALL BE PLACED SUCH THAT A MINIMUM OF 6" (MEASURED PERPENDICULAR TO THE OUTSIDE OF THE PIPE) OF FLOWABLE FILL SHALL BE UNDER (BEDDING), OVER AND, ON THE SIDES OF THE PIPE. IT ONLY NEEDS TO EXTEND UP TO THE SPRING LINE FOR RIGID CONDUITS. AVERAGE SLUMP OF THE FILL SHALL BE 7" TO ASSURE FLOWABILITY OF THE MATERIAL. ADEQUATE MEASURES SHALL BE TAKEN (SAND BAGS, ETC.) TO PREVENT FLOATING THE PIPE. WHEN USING FLOWABLE FILL, ALL METAL PIPE SHALL BE BITUMINOUS COATED. ANY ADJOINING SOIL FILL SHALL BE PLACED IN HORIZONTAL LAYERS NOT TO EXCEED FUR INCHES IN THICKNESS AND COMPACTED BY HAND TAMPERS OR OTHER MANUALLY DIRECTED COMPACTION EQUIPMENT. THE MATERIAL SHALL COMPLETELY FILL ALL VOIDS ADJACENT TO THE FLOWABLE FILL ZONE. AT NO TIME DURING THE BACKFILLING OPERATION SHALL DRIVEN EQUIPMENT BE ALLOWED TO OPERATE CLOSER THAN 4 FEET, MEASURED HORIZONTALLY, TO ANY PART OF A STRUCTURE. UNDER NO CIRCUMSTANCES SHALL EQUIPMENT BE DRIVEN OVER ANY PART OF A STRUCTURE OR PIPE, UNLESS THERE IS A COMPACTED FILL OF 24" OR GREATER OVER THE STRUCTURE OR PIPE. BACKFILL MATERIAL OUTSIDE THE STRUCTURAL BACKFILL (FLOWABLE FILL) ZONE SHALL BE OF THE TYPE AND QUALITY CONFORMING TO THAT SPECIFIED FOR THE CORE OF THE EMBANKMENT OR OTHER EMBANKMENT MATERIALS.

5. REMOVAL AND REPLACEMENT OF DEFECTIVE FILL

FILL PLACED AT DENSITIES LOWER THAN SPECIFIED MINIMUM DENSITY OR AT MOISTURE CONTENTS OUTSIDE THE SPECIFIED ACCEPTABLE RANGE OF MOISTURE CONTENT OR OTHERWISE NOT CONFORMING TO THE REQUIREMENTS OF THE SPECIFICATIONS SHALL BE REWORKED TO MEET THE REQUIREMENTS OR REMOVED AND REPLACED BY ACCEPTABLE FILL. THE BOTTOMS OF SUCH EXCAVATIONS SHALL BE FINISHED FLAT OR GENTLY CURVING AND AT THE SIDES OF SUCH EXCAVATIONS THE ADJACENT SOUND FILL SHALL BE TRIMMED TO A SLOPE NOT STEEPER THAN 3 FEET HORIZONTALLY TO 1 FOOT VERTICALLY EXTENDING FROM THE BOTTOM OF THE EXCAVATION TO THE FILL SURFACE.

6. PIPE CONDUITS

ALL PIPES SHALL BE CIRCULAR IN CROSS SECTION. ALL PERFORATED PIPES SHALL HAVE A MINIMUM OF 3.31 SQUARE INCHES OF OPENING PER SQUARE FOOT OF PIPE SURFACE (EX. 30 3/8-INCH HOLES PER SQUARE FOOT). PERFORATIONS ARE TO BE UNIFORMLY SPACED AROUND THE FULL PERIPHERY OF THE PIPE. ANY HOLES BLOCKED OR PARTIALLY BLOCKED BY BITUMINOUS COATING SHALL BE OPENED PRIOR TO INSTALLATION.

REINFORCED CONCRETE PIPE - ALL OF THE FOLLOWING CRITERIA SHALL APPLY FOR REINFORCED CONCRETE PIPE:

1. MATERIALS - REINFORCED CONCRETE PIPE SHALL HAVE BELL AND SPIGOT JOINTS WITH RUBBER GASKETS AND SHALL EQUAL OR EXCEED ASTM C-361.
2. BEDDING - REINFORCED CONCRETE PIPE CONDUITS SHALL BE LAID IN A CONCRETE BEDDING FOR THEIR ENTIRE LENGTH. THIS BEDDING / CRADLE SHALL CONSIST OF HIGH SLUMP CONCRETE PLACED UNDER THE PIPE AND UP THE SIDES OF THE PIPE AT LEAST 50 PERCENT OF ITS OUTSIDE DIAMETER WITH A MINIMUM THICKNESS OF 6 INCHES. WHERE CONCRETE CRADLE IS NOT NEEDED FOR STRUCTURAL REASONS, FLOWABLE FILL MAY BE USED AS DESCRIBED IN THE "STRUCTURE BACKFILL" SECTION OF THIS STANDARD. GRAVEL BEDDING IS NOT PERMITTED.
3. LAYING PIPE - BELL AND SPIGOT PIPE SHALL BE PLACED WITH THE BELL END UPSTREAM. JOINTS SHALL BE MADE IN ACCORDANCE WITH RECOMMENDATIONS OF THE MANUFACTURER OF THE MATERIAL. AFTER THE JOINTS ARE SEALED FOR THE ENTIRE LINE, THE BEDDING SHALL BE PLACED SO THAT ALL SPACES UNDER THE PIPE ARE FILLED. CARE SHALL BE EXERCISED TO PREVENT ANY DEVIATION FROM THE ORIGINAL LINE AND GRADE OF THE PIPE. THE FIRST JOINT MUST BE LOCATED WITHIN 4 FEET FROM THE RISER.
4. BACKFILLING SHALL CONFORM TO "STRUCTURE BACKFILL".
5. CONNECTIONS - ALL CONNECTIONS (TO ANTI-SEEP COLLARS, RISER, ETC.) SHALL BE WATERTIGHT.
6. OTHER DETAILS (ANTI-SEEP COLLARS, VALVES, ETC.) SHALL BE AS SHOWN ON THE DRAWINGS.

PLASTIC PIPE - ALL OF THE FOLLOWING CRITERIA SHALL APPLY FOR PLASTIC PIPE:

1. MATERIALS - PVC PIPE SHALL BE PVC-1120 OR PVC-1220 CONFORMING TO ASTM D-1785 OR ASTM D-2241. CORRUGATED HIGH DENSITY POLYETHYLENE (HDPE), COUPLINGS AND FITTINGS SHALL CONFORM TO THE FOLLOWING; 4" - 10" INCH PIPE SHALL MEET THE REQUIREMENTS OF AASHTO M252 TYPE S, AND 12" THROUGH 24" SHALL MEET THE REQUIREMENTS OF AASHTO M294 TYPE S.
2. JOINTS AND CONNECTIONS TO ANTI-SEEP COLLARS SHALL BE COMPLETELY WATERTIGHT.
3. BEDDING - THE PIPE SHALL BE FIRMLY AND UNIFORMLY BEDDED THROUGHOUT ITS ENTIRE LENGTH. WHERE ROCK OR SOFT, SPONGY OR OTHER UNSTABLE SOIL IS ENCOUNTERED, ALL SUCH MATERIAL SHALL BE REMOVED AND REPLACED WITH SUITABLE EARTH COMPACTED TO PROVIDE ADEQUATE SUPPORT.
4. BACKFILLING SHALL CONFORM TO "STRUCTURE BACKFILL".
5. OTHER DETAILS (ANTI-SEEP COLLARS, VALVES, ETC.) SHALL BE AS SHOWN ON THE DRAWINGS.

7. CONCRETE

CONCRETE SHALL MEET THE REQUIREMENTS OF THE MARYLAND DEPARTMENT OF TRANSPORTATION, STATE HIGHWAY ADMINISTRATION STANDARD SPECIFICATIONS FOR CONSTRUCTION AND MATERIALS, SECTION 414, MIX NO. 3

CAST-IN-PLACE CONCRETE STRUCTURES

1. SPECIFICATIONS: MARYLAND DEPARTMENT OF TRANSPORTATION, STATE HIGHWAY ADMINISTRATION STANDARD SPECIFICATIONS FOR CONSTRUCTION AND MATERIALS, LATEST EDITION.

   AASHTO STANDARD SPECIFICATIONS FOR HIGHWAY BRIDGES, LATEST EDITION, FOR DESIGN. CONCRETE DESIGN BY THE "SERVICE LOAD DESIGN METHOD".
2. CONCRETE: SHALL MEET THE REQUIREMENTS OF THE MARYLAND DEPARTMENT OF TRANSPORTATION, STATE HIGHWAY ADMINISTRATION STANDARD SPECIFICATIONS FOR CONSTRUCTION AND MATERIALS, SECTION 414 AND 902, MIX NO. 3.
3. CONTRACTOR MAY ADD COLOR MIX AT PLANT IN ACCORDANCE WITH MANUFACTURES RECOMMENDATION "C-12 MESA BEIGE" AS MANUFACTURED BY L. M. SCOFIELD COMPANY (213) 723-5285.

   CONTRACTOR SHALL SUPPLY MIX DESIGN FOR APPROVAL PRIOR TO APPLICATION. LOAD AND MIX TICKETS SHALL BE SUPPLIED FOR EACH TRUCK DELIVERY. NO PARTIAL FIELD MIXES SHALL BE ALLOWED.

   ALL CONCRETE SHALL ATTAIN A MINIMUM COMPRESSIVE STRENGTH OF 3,500 PSI AT 28 DAYS. DESIGN FC = 1,200 PSI.

   ALL EXPOSED EDGES SHALL BE CHAMFERED 3/4" X 3/4". ALL CONSTRUCTION KEYS ARE SHOWN NOMINAL SIZE.
4. REINFORCING STEEL: REINFORCING STEEL SHALL CONFORM TO ASTM A-615, GRADE 60. WHERE NOT INDICATED, BAR LAP SPLICES SHALL BE IN ACCORDANCE WITH AASHTO SPECIFICATIONS. THE MINIMUM CONCRETE COVER SHALL BE 2 INCHES UNLESS OTHERWISE NOTED. DESIGN FS = 24,000 PSI.
5. FOUNDATION: PRESUMED SOIL BEARING CAPACITY = 2,500 PSF. THE ENGINEER MUST APPROVE ALL FOUNDATIONS PRIOR TO CONCRETE PLACEMENT. IF UNSUITABLE MATERIAL IS ENCOUNTERED, THE MATERIAL SHALL BE UNDERCUT AND BACKFILLED WITH STRUCTURAL BACKFILL.
6. STRUCTURAL BACKFILL: CAST-IN-PLACE CONCRETE STRUCTURES AND PIPE SHALL BE BACKFILLED WITH SELECT GRANULAR BACKFILL MEETING THE REQUIREMENTS OF SHA GRADED AGGREGATE-SUBBASE. STRUCTURAL FILL SHALL BE PLACED IN LOOSE LIFTS OF APPROXIMATELY 6 INCHES, AND COMPACTED TO 95 PERCENT OF THE STANDARD PROCTOR MAXIMUM DRY DENSITY IN ACCORDANCE WITH AASHTO T-180. THE STATIC WEIGHT OF EQUIPMENT USED ADJACENT TO WALLS SHALL NOT EXCEED 3,000 POUNDS. NO BACKFILL SHALL BE PLACED AGAINST THE CAST-IN-PLACE WALLS UNTIL THE CONCRETE HAS ATTAINED THE SPECIFIED 28 DAY STRENGTH.

PRE-CAST CONCRETE STRUCTURES

SHOP DRAWINGS FOR PRE-CAST STRUCTURES WITH SUPPORTING STRUCTURAL COMPUTATIONS (SIGNED AND SEALED BY A MARYLAND REGISTERED PROFESSIONAL ENGINEER) MEETING ASTM REQUIREMENTS FOR PRE-CAST STRUCTURES MUST BE SUBMITTED TO THE ENGINEER, AND THE APPROVING AGENCY (HOWARD COUNTY DEVELOPMENT ENGINEERING DIVISION) FOR APPROVAL PRIOR TO FABRICATION.

8. ROCK RIP-RAP

ROCK RIP-RAP SHALL MEET THE REQUIREMENTS OF THE MARYLAND DEPARTMENT OF TRANSPORTATION, STATE HIGHWAY ADMINISTRATION STANDARD SPECIFICATIONS FOR CONSTRUCTION AND MATERIALS, SECTION 311.

GEOTEXTILE SHALL BE PLACED UNDER ALL RIP-RAP AND SHALL MEET THE REQUIREMENTS OF THE MARYLAND DEPARTMENT OF TRANSPORTATION, STATE HIGHWAY ADMINISTRATION STANDARD SPECIFICATIONS FOR CONSTRUCTION AND MATERIALS, SECTION 921.09, CLASS C.

THE RIP-RAP SHALL BE PLACED TO THE REQUIRED THICKNESS IN ONE OPERATION. THE ROCK SHALL BE DELIVERED AND PLACED IN A MANNER THAT WILL INSURE THE RIP-RAP IN PLACE SHALL BE REASONABLY HOMOGENEOUS WITH THE LARGER ROCKS UNIFORMLY DISTRIBUTED AND FIRMLY IN CONTACT ONE TO ANOTHER WITH THE SMALLER ROCKS FILLING THE VOIDS BETWEEN THE LARGER ROCKS.

9. CARE OF WATER DURING CONSTRUCTION

ALL WORK ON PERMANENT STRUCTURES SHALL BE CARRIED OUT IN AREAS FREE FROM WATER. THE CONTRACTOR SHALL CONSTRUCT AND MAINTAIN ALL TEMPORARY DIKES, LEVEES, COFFERDAMS, DRAINAGE CHANNELS, AND STREAM DIVERSIONS NECESSARY TO PROTECT THE AREAS TO BE OCCUPIED BY THE PERMANENT WORKS. THE CONTRACTOR SHALL ALSO FURNISH, INSTALL, OPERATE, AND MAINTAIN ALL NECESSARY PUMPING AND OTHER EQUIPMENT REQUIRED FOR REMOVAL OF WATER FROM THE VARIOUS PARTS OF THE WORK AND FOR MAINTAINING THE EXCAVATIONS, FOUNDATION, AND OTHER PARTS OF THE WORK FREE FROM WATER AS REQUIRED OR DIRECTED BY THE ENGINEER FOR CONSTRUCTING EACH PART OF THE WORK. AFTER HAVING SERVED THEIR PURPOSE, ALL TEMPORARY PROTECTIVE WORKS SHALL BE REMOVED OR LEVELED AND GRADED TO THE EXTENT REQUIRED TO PREVENT OBSTRUCTION IN ANY DEGREE WHATSOEVER OF THE FLOW OF WATER TO THE SPILLWAY OR OUTLET WORKS AND SO AS NOT TO INTERFERE IN ANY WAY WITH THE OPERATION OR MAINTENANCE OF THE STRUCTURE. STREAM DIVERSIONS SHALL BE MAINTAINED UNTIL THE FULL FLOW CAN BE PASSED THROUGH THE PERMANENT WORKS. THE REMOVAL OF WATER FROM THE REQUIRED EXCAVATION AND THE FOUNDATION SHALL BE ACCOMPLISHED IN A MANNER AND TO THE EXTENT THAT WILL MAINTAIN STABILITY OF THE EXCAVATED SLOPES AND BOTTOM OF REQUIRED EXCAVATIONS AND WILL ALLOW SATISFACTORY PERFORMANCE OF ALL CONSTRUCTION OPERATIONS. DURING THE PLACING AND COMPACTING OF MATERIAL IN REQUIRED EXCAVATIONS, THE WATER LEVEL AT THE LOCATIONS BEING REFILLED SHALL BE MAINTAINED BELOW THE BOTTOM OF THE EXCAVATION AT SUCH LOCATIONS WHICH MAY REQUIRE DRAINING THE WATER TO SUMPS FROM WHICH THE WATER SHALL BE PUMPED.

10. STABILIZATION

ALL BORROW AREAS SHALL BE GRADED TO PROVIDE PROPER DRAINAGE AND LEFT IN A SIGHTLY CONDITION. ALL EXPOSED SURFACES OF THE EMBANKMENT, SPILLWAY, SPOIL AND BORROW AREAS, AND BERMS SHALL BE STABILIZED BY SEEDING, LIMING, FERTILIZING AND MULCHING IN ACCORDANCE WITH THE NATURAL RESOURCES CONSERVATION SERVICE STANDARDS AND SPECIFICATIONS FOR CRITICAL AREA PLANTING (MD-342) OR AS SHOWN ON THE ACCOMPANYING DRAWINGS.

11. EROSION AND SEDIMENT CONTROL

CONSTRUCTION OPERATIONS WILL BE CARRIED OUT IN SUCH A MANNER THAT EROSION WILL BE CONTROLLED AND WATER AND AIR POLLUTION MINIMIZED. STATE AND LOCAL LAWS CONCERNING POLLUTION ABATEMENT WILL BE FOLLOWED. CONSTRUCTION PLANS SHALL DETAIL EROSION AND SEDIMENT CONTROL MEASURES TO BE EMPLOYED DURING THE CONSTRUCTION PROCESS.

ALL DISTURBED AREAS SHALL BE CONTROLLED BY AN EROSION AND SEDIMENT CONTROL PLAN WHICH HAS BEEN APPROVED BY THE HOWARD SOIL CONSERVATION DISTRICT (H. S. C. D.).

12. SEEDING

SEEDING, FERTILIZING AND MULCHING SHALL BE AS FOLLOWS:

SEED MIX: 50% KENBLUE KENTUCKY BLUEGRASS
40% PENNLAWN CREEPING RED FESCUE
10% STREAKER REDTOP
APPLIED AT A RATE OF 150 LBS. PER ACRE.
(OR)
REBEL II TALL FESCUE (125 LBS. PER ACRE)
PENNFINE PERENNIAL RYEGRASS (15 LBS. PER ACRE)
KENBLUE KENTUCKY BLUEGRASS (10 LBS. PER ACRE)
(OR)
PENNLAWN CREEPING RED FESCUE (70 LBS. PER ACRE)
AURORA HARD FESCUE (50 LBS. PER ACRE)
COMMON WHITE CLOVER (6 LBS. PER ACRE)
WINTER RYE (45 LBS. PER ACRE)
(OR)
70% FORAGER TALL FESCUE
30% CHEMUNG CROWNVETCH, INOCULATED
APPLIED AT A RATE OF 55 LBS. PER ACRE
OPTIMUM SEEDING DATES: MARCH 1 TO APRIL 30.

LIME: 2 TONS/ACRE DOLOMITIC LIMESTONE.

FERTILIZER: 600 LBS./ACRE 10-10-10 FERTILIZER BEFORE SEEDING.
400 LBS./ACRE 30-0-0 UREAFORM FERTILIZER AT TIME OF SEEDING.

MULCH: STRAW AT 4,000 LBS. PER ACRE.

ANCHORING: MULCHING TOOL OR WOO CELLULOSE FIBER BINDER AT A NET DRY BINDER RATE OF 750 POUNDS PER ACRE. THE WOOD CELLULOSE FIBER SHALL BE MIXED WITH WATER AND THE MIXTURE SHALL CONTAIN A MAXIMUM OF 50 POUNDS OF WOOD CELLULOSE FIBER PER 100 GALLONS OF WATER OR AT RATES RECOMMENDED BY THE MANUFACTURER.

13. FILTER CLOTH

ALL FILTER CLOTH SHALL CONFORM TO THE 1994 MARYLAND STANDARDS AND SPECIFICATIONS FOR SOIL EROSION AND SEDIMENT CONTROL, OR THE LATEST EDITION.

14. GABIONS

ALL GABIONS SHALL BE PVC COATED WOVEN WIRE BASKETS. STONE SIZE SHALL BE 4 INCHES TO 7 INCHES. (CLASS IV GABIONS).

15. CONSTRUCTION INSPECTION BY DESIGNATED ENGINEERS

THE CONSTRUCTION OF THE POND AND EMBANKMENT, AND CERTIFICATION THAT THE POND AND EMBANKMENT HAVE BEEN BUILT IN ACCORDANCE WITH THE PLANS SHALL BE UNDER THE SUPERVISION OF A REGISTERED PROFESSIONAL ENGINEER. THE ENGINEER SHALL BE NOTIFIED SUFFICIENTLY IN ADVANCE OF CONSTRUCTION IN ORDER THAT ARRANGEMENTS CAN BE MADE FOR (1) INSPECTION OF PIPE TRENCH AND BEDDING, (2) INSPECTION OF RISER AND ANTI-SEEP COLLARS AND (3) SUPERVISION OF EMBANKMENT CONSTRUCTION AND COMPACTION TESTING. THE ENGINEER SHALL DIRECT THE HANDLING OF WATER DURING CONSTRUCTION. MINOR CHANGES NOT AFFECTING THE INTEGRITY OF THE DAM IN ORDER TO COMPENSATE FOR UNUSUAL SOIL CONDITIONS, AND THE REMOVAL AND REPLACEMENT OF DEFECTIVE FILL.

16. INSPECTION SCHEDULE

1. PRIOR NOTIFICATION SHALL BE GIVEN TO THE ENGINEER SO THAT INSPECTIONS MAY BE MADE AT THE FOLLOWING STAGES:

   (1) UPON COMPLETION OF EXCAVATION TO SUBFOUNDATION AND WHERE REQUIRED, INSTALLATION OF STRUCTURAL SUPPORTS OR REINFORCEMENT FOR STRUCTURES, INCLUDING BUT NOT LIMITED TO:
   - (I) CORE TRENCHES FOR STRUCTURAL EMBANKMENTS.
   - (II) INLET-OUTLET STRUCTURES AND ANTI-SEEP STRUCTURES, WATERTIGHT CONNECTORS ON PIPES AND
   - (III) TRENCHES FOR ENCLOSED STORM DRAINAGE FACILITIES.

   (2) DURING PLACEMENT OF STRUCTURAL FILL, REINFORCING AND CONCRETE, AND INSTALLATION OF PIPING AND CATCH BASINS
   (3) DURING BACKFILL OF FOUNDATIONS AND TRENCHES
   (4) DURING EMBANKMENT CONSTRUCTION AND
   (5) UPON COMPLETION OF FINAL GRADING AND ESTABLISHMENT OF PERMANENT STABILIZATION.

   NO WORK SHALL PROCEED UNTIL THE ENGINEER INSPECTS AND APPROVES THE WORK PREVIOUSLY COMPLETED.
2. GEOTECHNICAL COMPACTION TESTING OF THE FACILITY EMBANKMENT IS REQUIRED. CERTIFICATION MUST BE PROVIDED TO THE DESIGNATED ENGINEER IN CHARGE OF THE AS-BUILT.
3. A COPY OF ALL MATERIAL SUPPLY TICKETS MUST BE GIVEN TO THE DESIGNATED ENGINEER IN CHARGE OF THE AS-BUILT.

17. "ROUTINE BY HOA" ~~AND "NON ROUTINE BY COUNTY"~~

1. THE FACILITY SHALL BE INSPECTED TWICE ANNUALLY, MARCH AND SEPTEMBER, IN ACCORDANCE WITH THE CHECKLIST AND REQUIREMENTS CONTAINED WITHIN USDA, SCS "STANDARDS AND SPECIFICATIONS FOR PONDS" (MD-378). THE POND OWNER(S) AND ANY HEIRS, SUCCESSORS, OR ASSIGNS SHALL BE RESPONSIBLE FOR THE SAFETY OF THE POND AND THE CONTINUED OPERATION, SURVEILLANCE, INSPECTION, AND MAINTENANCE THEREOF. THE POND OWNER(S) SHALL PROMPTLY NOTIFY THE SOIL CONSERVATION DISTRICT OF ANY UNUSUAL OBSERVATIONS THAT MAY BE INDICATIONS OF DISTRESS SUCH AS EXCESSIVE SEEPAGE, TURBID SEEPAGE, SLIDING OR SLUMPING.
2. VEGETATED COVER SHALL BE MAINTAINED AT ALL TIMES.
3. RILLS ON THE SLOPES OF THE DAM AND WASHED IN THE EARTH SPILLWAY SHALL BE FILLED WITH SUITABLE MATERIAL AND THOROUGHLY COMPACTED. THESE AREAS SHALL BE RESEEDED OR RESODDED, LIMED, AND FERTILIZED AS NEEDED.
4. ALL APPURTENANCES SHALL BE KEPT FREE OF TRASH.
5. SEDIMENT SHALL BE REMOVED FROM FOREBAYS WHEN THE DEPTH EXCEEDS 1'.
6. TRASH AND DEBRIS SHALL BE REMOVED AS NECESSARY.
7. VEGETATION ON EMBANKMENT AND ACCESS BENCH SHALL NOT EXCEED 18" IN HEIGHT.
8. TOP AND OUTSIDE SIDE SLOPE OF THE EMBANKMENT SHALL BE MOWED A MINIMUM OF TWO (2) TIMES A YEAR, ONCE IN JUNE AND ONCE IN SEPTEMBER. INSIDE SIDE SLOPE, AND MAINTENANCE ACCESS SHOULD BE MOWED AS NEEDED. CARE SHALL BE TAKEN NOT TO MOW ANY OF THE WETLAND PLANTINGS IN THE VICINITY OF THE 5' SAFETY BENCH.

18. OPERATION, MAINTENANCE AND INSPECTION

INSPECTION OF PONDS SHOWN HEREON SHALL BE PERFORMED AT LEAST TWICE ANNUALLY, IN ACCORDANCE WITH THE CHECKLIST AND REQUIREMENTS CONTAINED WITHIN USDA, SCA "STANDARDS AND SPECIFICATIONS FOR PONDS" (MD-378). THE POND OWNER(S) AND ANY HEIRS, SUCCESSORS, OR ASSIGNS SHALL BE RESPONSIBLE FOR THE SAFETY OF THE POND AND THE CONTINUED OPERATION, SURVEILLANCE, INSPECTION, AND MAINTENANCE THEREOF. THE POND OWNER(S) SHALL PROMPTLY NOTIFY THE SOIL CONSERVATION DISTRICT OF ANY UNUSUAL OBSERVATIONS THAT MAY BE INDICATIONS OF DISTRESS SUCH AS EXCESSIVE SEEPAGE, TURBID SEEPAGE, SLIDING OR SLUMPING.

19. UTILITIES

NO UTILITIES MAY BE CONSTRUCTED WITHIN/ALONG ANY MD-378 EMBANKMENT.

GEOTECH RECOMMENDATIONS

THE AREAS OF THE PROPOSED SWM FACILITIES SHOULD BE STRIPPED OF TOPSOIL AND ANY OTHER UNSUITABLE MATERIALS FROM THE EMBANKMENT OR STRUCTURE AREAS IN ACCORDANCE. WITH SOIL CONSERVATION GUIDELINES. AFTER STRIPPING OPERATIONS HAVE BEEN COMPLETED, THE EXPOSED SUBGRADE MATERIALS SHOULD BE PROOFROLLED WITH A LOADED DUMP TRUCK OR SIMILAR EQUIPMENT IN THE PRESENCES OF A GEOTECHNICAL ENGINEER OR HIS REPRESENTATIVE. FOR AREAS THAT ARE NOT ACCESSIBLE TO A DUMP TRUCK, THE EXPOSED MATERIALS SHOULD BE OBSERVED AND TESTED BY A GEOTECHNICAL ENGINEER OR HIS REPRESENTATIVE UTILIZING A DYNAMIC CONE PENETROMETER. ANY EXCESSIVELY SOFT OR LOOSE MATERIALS IDENTIFIED BY PROOFROLLING OR PENETROMETER TESTING SHOULD BE EXCAVATED TO SUITABLE FIRM SOIL, AND THE GRADES RE-ESTABLISHED BY BACKFILLING WITH SUITABLE MATERIAL.

A REPRESENTATIVE OF THE GEOTECHNICAL ENGINEER SHOULD BE PRESENT TO MONITOR PLACEMENT AND COMPACTION OF FILL FOR THE EMBANKMENT AND CUT-OFF TRENCH. IN ACCORDANCE WITH MARYLAND SOIL CONSERVATION SPECIFICATION 378 SOILS CONSIDERED SUITABLE FOR THE CENTER OF EMBANKMENT AND CUT-OFF TRENCH SHALL CONFORM TO UNIFIED SOIL CLASSIFICATION GC, SC, CH, OR CL.

IT IS OUR PROFESSIONAL OPINION THAT IN ADDITION TO THE SOIL MATERIALS DESCRIBED ABOVE A FINE-GRAINED SOIL, INCLUDING SILT (ML) WITH A PLASTICITY INDEX OF 10 OR MORE CAN BE UTILIZED FOR THE CENTER OF THE EMBANKMENT AND CORE TRENCH. ALL FILL MATERIALS MUST BE PLACED AND COMPACTED IN ACCORDANCE WITH MD SCS 378 SPECIFICATIONS.

20. NON-ROUTINE MAINTENANCE (BY COUNTY)

1. STRUCTURAL COMPONENTS OF THE POND SUCH AS THE DAM, THE RISER, AND THE PIPES SHALL BE REPAIRED UPON THE DETECTION OF ANY DAMAGE. THE COMPONENTS SHOULD BE INSPECTED DURING ROUTINE MAINTENANCE OPERATIONS.
2. SEDIMENT SHOULD BE REMOVED WHEN ITS ACCUMULATION SIGNIFICANTLY REDUCES THE DESIGN STORAGE, INTERFERE WITH THE FUNCTION OF THE RISER, WHEN DEEMED NECESSARY FOR AESTHETIC REASONS, OR WHEN DEEMED NECESSARY BY THE HOWARD COUNTY'S DEPARTMENT OF PUBLIC WORKS.

HILLIS - CARNES ENGINEERING ASSOCIATES, INC.
RECORD OF SOIL EXPLORATION

Page 1 of 1

Project Name: Pfefferkorn SWM — Location: Howard County, Maryland — Boring Number: B-4 — Job #: 02025A
Datum: — Surf. Elev.: 517 — Date Started: 01-15-02
SAMPLER: Hammer Wt. 140 Lbs. — Hammer Drop 30 Inches — Pipe Size 2.0 Inches OD
Hole Diameter 6" — Rock Core Dia. - — Boring Method HSA
Foreman Lamont Smith — Inspector — Completed 01-15-02

ELEV.	SOIL DESCRIPTION (Color, Moisture, Density, Size, Proportion)	STRA. DEPTH	DEPTH SCALE	CON	SAMPLE BLOWS 6"	NO.	REC.	BORING & SAMPLING NOTES
	SURFACE		0.0					
	Reddish to grayish brown, moist, loose, sandy silt/clay (ML/CL) with trace gravel	2.5		I/D	1-1-2	1	13"	7" Topsoil
	Reddish brown, moist, medium dense, silty to clayey sand (SM/SC) with trace gravel		5.0	I/D	2-4-5	2	18"	No groundwater encountered while drilling
		7.5		D	4-4-5	3	14"	
	Reddish brown, moist, loose, silty to clayey micaceous sand (SM/SC)		10.0	D	2-2-3	4	12"	
				D	2-4-4	5	18"	Caved in at 13.0' at Completion; Caved in at 11.0' after 24 hrs
		16.5	15.0	I/D	2-4-6	6	12"	Backfilled after 24 hours
	Bottom of Hole at 16.5'		20.0					

SAMPLER TYPE: DRIVEN SPLIT SPOON UNLESS OTHERWISE NOTED. PT-PRESSED SHELBY TUBE; CA-CONTINUOUS FLIGHT AUGER; RC-ROCK CORE
SAMPLE CONDITIONS: D-DISINTEGRATED; I-INTACT; U-UNDISTURBED; L-LOST
GROUND WATER DEPTH: AT COMPLETION Dry FT.; AFTER 24 hrs 8.5 FT.; AFTER FT.
BORING METHOD: HSA-HOLLOW STEM AUGERS; CFA-CONT. FLIGHT AUGERS; DC-DRIVING CASING; MD-MUD DRILLING

STANDARD PENETRATION TEST-DRIVING 2" OD SAMPLER 1' WITH 140# HAMMER FALLING 30"; COUNT MADE AT 6" INTERVALS

HILLIS - CARNES ENGINEERING ASSOCIATES, INC.
RECORD OF SOIL EXPLORATION

Page 1 of 1

Project Name: Pfefferkorn SWM — Location: Howard County, Maryland — Boring Number: B-5 — Job #: 02025A
Datum: — Surf. Elev.: 511 — Date Started: 01-15-02
SAMPLER: Hammer Wt. 140 Lbs. — Hammer Drop 30 Inches — Pipe Size 2.0 Inches OD
Hole Diameter 6" — Rock Core Dia. - — Boring Method HSA
Foreman Lamont Smith — Inspector — Completed 01-15-02

ELEV.	SOIL DESCRIPTION (Color, Moisture, Density, Size, Proportion)	STRA. DEPTH	DEPTH SCALE	CON	SAMPLE BLOWS 6"	NO.	REC.	BORING & SAMPLING NOTES
	SURFACE		0.0					
	Reddish to grayish brown, moist, loose, sandy silt/clay (ML/CL) with trace gravel	2.5		D	1-1-2	1	13"	7" Topsoil
	Reddish brown, moist, loose to medium dense, silty to clayey micaceous sand (SM/SC)			D	2-4-6	2	15"	No groundwater encountered while drilling
			5.0	D	2-3-4	3	15"	
				D	3-6-8	4	13"	Caved in at 8.5' at Completion
		11.5	10.0	D	6-6-9	5	15"	Caved in at 6.0' after 24 hrs
	Bottom of Hole at 11.5'		15.0					Backfilled after 24 hours
			20.0					

SAMPLER TYPE: DRIVEN SPLIT SPOON UNLESS OTHERWISE NOTED. PT-PRESSED SHELBY TUBE; CA-CONTINUOUS FLIGHT AUGER; RC-ROCK CORE
SAMPLE CONDITIONS: D-DISINTEGRATED; I-INTACT; U-UNDISTURBED; L-LOST
GROUND WATER DEPTH: AT COMPLETION Dry FT.; AFTER 24 hrs 8.0 FT.; AFTER FT.
BORING METHOD: HSA-HOLLOW STEM AUGERS; CFA-CONT. FLIGHT AUGERS; DC-DRIVING CASING; MD-MUD DRILLING

STANDARD PENETRATION TEST-DRIVING 2" OD SAMPLER 1' WITH 140# HAMMER FALLING 30"; COUNT MADE AT 6" INTERVALS

HILLIS - CARNES ENGINEERING ASSOCIATES, INC.
RECORD OF SOIL EXPLORATION

Page 1 of 1

Project Name: Pfefferkorn SWM — Location: Howard County, Maryland — Boring Number: B-6 — Job #: 02025A
Datum: — Surf. Elev.: 510 — Date Started: 01-15-02
SAMPLER: Hammer Wt. 140 Lbs. — Hammer Drop 30 Inches — Pipe Size 2.0 Inches OD
Hole Diameter 6" — Rock Core Dia. - — Boring Method HSA
Foreman Lamont Smith — Inspector — Completed 01-15-02

ELEV.	SOIL DESCRIPTION (Color, Moisture, Density, Size, Proportion)	STRA. DEPTH	DEPTH SCALE	CON	SAMPLE BLOWS 6"	NO.	REC.	BORING & SAMPLING NOTES
	SURFACE		0.0					
	Reddish to grayish brown, moist, loose, sandy silt/clay (ML/CL) with trace gravel	2.5		I/D	1-2-3	1	11"	7" Topsoil
	Reddish brown, moist, loose to medium dense, silty to clayey micaceous sand (SM/SC)			D	3-3-5	2	18"	No groundwater encountered while drilling
			5.0	D	4-6-6	3	13"	
				D	4-4-5	4	14"	Caved in at 8.5' at Completion
		11.5	10.0	D	2-7-7	5	13"	Caved in at 8.5' after 24 hrs
	Bottom of Hole at 11.5'		15.0					Backfilled after 24 hours
			20.0					

SAMPLER TYPE: DRIVEN SPLIT SPOON UNLESS OTHERWISE NOTED. PT-PRESSED SHELBY TUBE; CA-CONTINUOUS FLIGHT AUGER; RC-ROCK CORE
SAMPLE CONDITIONS: D-DISINTEGRATED; I-INTACT; U-UNDISTURBED; L-LOST
GROUND WATER DEPTH: AT COMPLETION Dry FT.; AFTER 24 hrs 7.6 FT.; AFTER FT.
BORING METHOD: HSA-HOLLOW STEM AUGERS; CFA-CONT. FLIGHT AUGERS; DC-DRIVING CASING; MD-MUD DRILLING

STANDARD PENETRATION TEST-DRIVING 2" OD SAMPLER 1' WITH 140# HAMMER FALLING 30"; COUNT MADE AT 6" INTERVALS

HILLIS - CARNES ENGINEERING ASSOCIATES, INC.
RECORD OF SOIL EXPLORATION

Page 1 of 1

Project Name: Pfefferkorn Road SWM — Location: Howard County, Maryland — Boring Number: B-8 — Job #: 02025A
Datum: — Surf. Elev.: 502.82 — Date Started: 04-05-02
SAMPLER: Hammer Wt. 140 Lbs. — Hammer Drop 30 Inches — Pipe Size 2.0 Inches OD
Hole Diameter 6" — Rock Core Dia. - — Boring Method HSA
Foreman Lamont Smith — Inspector — Completed 04-05-02

ELEV.	SOIL DESCRIPTION (Color, Moisture, Density, Size, Proportion)	STRA. DEPTH	DEPTH SCALE	CON	SAMPLE BLOWS 6"	NO.	REC.	BORING & SAMPLING NOTES
	SURFACE		0.0					7" Topsoil
	Reddish brown, moist, loose, sandy silt/clay with organic matter and trace gravel (ML/CL)			I/D	1-2-3	1	13"	
		4.5		I	2-3-3	2	15"	
	Reddish brown, moist, medium dense, silty to clayey sand (SM/SC)	7.0	5.0	D	4-5-9	3	17"	
	Light brown, moist, loose, silty to clayey micaceous sand (SM/SC)			D	3-3-1	4	17"	
			10.0	D	1-2-2	5	18"	Caved in at 13.0' at Completion; Groundwater encountered at 14.0' while drilling
		16.5	15.0	I/D	4-5-6	6	13"	
	Bottom of Test Hole at 16.5'		20.0					

SAMPLER TYPE: DRIVEN SPLIT SPOON UNLESS OTHERWISE NOTED. PT-PRESSED SHELBY TUBE; CA-CONTINUOUS FLIGHT AUGER; RC-ROCK CORE
SAMPLE CONDITIONS: D-DISINTEGRATED; I-INTACT; U-UNDISTURBED; L-LOST
GROUND WATER DEPTH: AT COMPLETION 10.8 FT.; AFTER 24 hrs FT.; AFTER FT.
BORING METHOD: HSA-HOLLOW STEM AUGERS; CFA-CONT. FLIGHT AUGERS; DC-DRIVING CASING; MD-MUD DRILLING

STANDARD PENETRATION TEST-DRIVING 2" OD SAMPLER 1' WITH 140# HAMMER FALLING 30"; COUNT MADE AT 6" INTERVALS

APPROVED: HOWARD COUNTY DEPARTMENT OF PUBLIC WORKS

William J. Malone Jr. — CHIEF, BUREAU OF HIGHWAYS — DATE 4-13-04

APPROVED:
CHIEF, DEVELOPMENT ENGINEERING DIVISION — DATE 4/20/04

CHIEF, DIVISION OF LAND DEVELOPMENT — DATE 4/29/04

~~DIRECTOR~~ — ~~DATE~~

Date	No.	Revision Description

OWNER: NORTHRIDGE DEVELOPMENT. LLC
14045 GARED DRIVE
GLENWOOD, MD 21738

DEVELOPER: JAMES F. SELFRIDGE BUILDERS, INC.
14045 GARED DRIVE
GLENWOOD, MD 21738

DMW
Daft·McCune·Walker, Inc.
200 East Pennsylvania Avenue
Towson, Maryland 21286
(410) 296-3333
Fax 296-4705

A Team of Land Planners, Landscape Architects, Engineers, Surveyors & Environmental Professionals

DEVELOPERS CERTIFICATION:

I/WE CERTIFY THAT ALL DEVELOPMENT AND/OR CONSTRUCTION WILL BE DONE ACCORDING TO THESE PLANS AND THAT ANY RESPONSIBLE PERSONNEL INVOLVED IN THE CONSTRUCTION PROJECT WILL HAVE A CERTIFICATE OF ATTENDANCE AT A DEPARTMENT OF ENVIRONMENT APPROVED TRAINING PROGRAM FOR THE CONTROL OF SEDIMENT AND EROSION BEFORE BEGINNING THE PROJECT. I SHALL ENGAGE A REGISTERED PROFESSIONAL ENGINEER TO SUPERVISE POND CONSTRUCTION AND PROVIDE THE HOWARD SOIL CONSERVATION DISTRICT WITH AN "AS-BUILT" PLAN OF THE POND WITHIN 30 DAYS OF COMPLETION. I ALSO AUTHORIZE PERIODIC ON-SITE INSPECTIONS BY THE HOWARD SOIL CONSERVATION DISTRICT.

SIGNATURE OF DEVELOPER — DATE 3/23/04
PRINT NAME BELOW SIGNATURE
JAMES H. SELFRIDGE

ENGINEER'S CERTIFICATION:

I CERTIFY THAT THIS PLAN FOR POND CONSTRUCTION, EROSION AND SEDIMENT CONTROL REPRESENTS A PRACTICAL AND WORKABLE PLAN BASED ON MY PERSONAL KNOWLEDGE OF THE SITE CONDITIONS. THIS PLAN WAS PREPARED IN ACCORDANCE WITH THE REQUIREMENTS OF THE HOWARD SOIL CONSERVATION DISTRICT. I HAVE NOTIFIED THE DEVELOPER THAT HE/SHE MUST ENGAGE A REGISTERED PROFESSIONAL ENGINEER TO SUPERVISE POND CONSTRUCTION AND PROVIDE THE HOWARD SOIL CONSERVATION DISTRICT WITH AN "AS-BUILT" PLAN OF THE POND WITHIN 30 DAYS OF COMPLETION.

SIGNATURE OF ENGINEER — 3-25-04
PRINT NAME BELOW SIGNATURE
John W. Ranocchia, Jr.

THESE PLANS HAVE BEEN REVIEWED FOR THE HOWARD SOIL CONSERVATION DISTRICT AND MEET THE TECHNICAL REQUIREMENTS FOR SMALL POND CONSTRUCTION, SOIL EROSION AND SEDIMENT CONTROL.

U.S. NATURAL RESOURCE CONSERVATION SERVICE — DATE 3/30/04

THESE PLANS FOR SMALL POND CONSTRUCTION, SOIL EROSION AND SEDIMENT CONTROL MEET THE REQUIREMENTS OF HOWARD SOIL CONSERVATION DISTRICT.

HOWARD S.C.D. — DATE 3/30/04

3-25-04
Date

Professional Engr. No. 11551

SUBDIVISION NAME	SECTION/AREA	LOT/PARCEL
FOX MEADOW	1	167

PLAT OR L/F	BLOCK	ZONE	TAX/ZONE MAP	ELECT. DISTRICT	CENSUS TRACT
5983/492	13, 19, 20	RR, RC	15	3	

TITLE: FOX MEADOW
(FORMERLY PFEFFERKORN PROPERTY)
Stormwater Management Facility 1
Specifications and Borings

Des By	DWR	Scale	NONE	Proj. No. 00042.B
Drn By	DWR	Date	1/7/04	18 OF 24
Chk By		Approved		

F.03.45

Mon Mar 22 14:41:09 2004 m:\00042\00042.m5

Mon Mar 22 14:41:10 2004 m:\00042\00042.m5

3/22/2004 2:40:46 PM \\ATHENS\MSTATION\CADNETN\OCF\deg.ocf crizzi c:\hpm\00042.hpm

LEGEND

- EX. CONTOUR
- EX. STREAM
- EX. BUILDING
- EX. WOODS LINE
- EX. SEPTIC AREA
- RC-DEO / RR-DEO ZONING LINE
- PROP. LOT LINE
- PROP. REPLACEMENT WELL AREA / PROP. WELL
- PROP. BUILDING
- PROP. SRA
- (8) LOT NUMBER
- 75' STREAM BUFFER
- 25' WETLAND BUFFER / WETLAND
- PRELIMINARY 100-YEAR FLOODPLAIN
- FOREST RETENTION
- REFORESTATION
- FOREST CLEARING
- FOREST CONSERVATION EASEMENT
- SIGHT DISTANCE EASEMENT
- 178 PERC TEST HOLE (PASSED) / 147 PERC TEST HOLE (FAILED)
- PROPOSED WELL AND WELL RELOCATION AREA
- TEMPORARY FOREST PROTECTION FENCE
- PERMANENT FOREST PROTECTION SIGN
- REFORESTATION ZONE DELINEATION LINE

DATA SOURCES:

BOUNDARY PER DMW FIELD SURVEY DATED DECEMBER 2001.

TOPO FLOWN BY VIRGINIA RESOURCE MAPPING, DECEMBER, 2001.

APPROX. WETLAND LOCATION PER DMW FIELD VISIT DATED APRIL 2000. OFF SITE SEPTIC RESERVE AREAS PER RECORD PLATS, LOCATIONS OF WELLS NOT AVAILABLE.

APPROVED: HOWARD COUNTY DEPARTMENT OF PUBLIC WORKS

CHIEF, BUREAU OF HIGHWAYS	DATE 4-13-04

APPROVED: HOWARD COUNTY DEPT. OF PLANNING & ZONING

CHIEF, DEVELOPMENT ENGINEERING DIVISION	DATE 4/28/04
CHIEF, DIVISION OF LAND DEVELOPMENT	DATE 4/29/04
~~DIRECTOR~~	~~DATE~~

Date	No.	Revision Description

OWNER: NORTHRIDGE DEVELOPMENT, LLC
14045 GARED DRIVE
GLENWOOD, MD 21738

DEVELOPER: JAMES F. SELFRIDGE BUILDERS, INC.
14045 GARED DRIVE
GLENWOOD, MD 21738

3.25.04
Date

STATE OF MARYLAND — MELANIE MOSER — 551 — LANDSCAPE ARCHITECT

Landscape Architect No.

DMW
Daft·McCune·Walker, Inc.
200 East Pennsylvania Avenue
Towson, Maryland 21286
(410) 296-3333
Fax 296-4705

A Team of Land Planners, Landscape Architects, Engineers, Surveyors & Environmental Professionals

SUBDIVISION NAME	SECTION/AREA	LOT/PARCEL
FOX MEADOW	1	167

PLAT OR L/F	BLOCK	ZONE	TAX/ZONE MAP	ELECT. DISTRICT	CENSUS TRACT
5983/492	13, 19, 20	RR, RC	15	3	

TITLE
FOX MEADOW
(FORMERLY PFEFFERKORN PROPERTY)
FINAL FOREST CONSERVATION PLAN

Des By AJS	Scale 1"=50'	Proj. No. 00042.B
Drn By AJS/MSS	Date 1/07/04	19 OF 24
Chk By MM	Approved	

F.03.45

Wed Mar 24 14:29:01 2004 n:\00042\00042f.ff2

Wed Mar 24 14:29:02 2004 n:\00042\00042f.ff2

3/24/2004 2:28:52 PM \\ATHENS\WSTATION\CADNETN\GCF\day.gcf cr1221 c:\hpm\00042f.hpm

NOTE: SEE SHEET 15 OF 18 FOR FOREST CONSERVATION NOTES AND DETAILS.

MATCH LINE – SEE SHEET 19 OF 24

PFEFFERKORN, WILLIAM ROBERTS
5371/ 221
11751/ 132
P.166
ZONE: RC-DEO

S 76°06'46" E 1509.75'

1.84± AC CLEARING (CONTINUED)

100' WELL BUFFER TYP.

PROPOSED 20' PUBLIC TREE MAINTENANCE EASEMENT

N 38°39'08" E

N 88°26'40" E

N 88°26'04" E 125.79'

S 25°57'49" E 190.45'

N 88°26'04" E 151.74'

S 69°49'00" E 324.00'

75' STREAM BUFFER

100' FLOODPLAIN LINE

S 69°09'21" E 276.06'

S 20°16' W 300.92'

REFORESTATION ZONE III (CONT'D.) 1.9± AC.

FOREST CONSERVATION EASEMENT "B" 8.59± ACRES
3.47± AC RETENTION
2.50± AC REFORESTATION ZONE III
2.48± AC FLOODPLAIN
(CONTINUED)
0.14± AC REFORESTATION CREDIT DERIVED FROM LANDSCAPE PLANTING

PUBLIC STORMWATER MANAGEMENT EASEMENT

REFORESTATION ZONE V (CONT'D.)

REFORESTATION ZONE III (CONT'D.)

NORTHRIDGE DEVELOPMENT, LLC
5963/ 492
P.197
ZONE: RC-DEO

PRES. PARCEL B
9.226 AC. ±/-
(NON-BUILDABLE, PRIVATE OWNERSHIP)

N 85°43'46" W 950.46

UNKNOWN OWNERSHIP
P.22
ZONE: RC-DEO

LUNDY ROBERT T
SCHMITT BARBARA WF
609/ 22
P.118
ZONE: RC-DEO

S 69°55'21" W 496.54'

(AGRICULTURAL LAND PRESERVATION EASEMENT HO 91-18E)

MATCH LINE – SEE SHEET 19 OF 24

LEGEND

- EX. CONTOUR
- EX. STREAM
- EX. BUILDING
- EX. WOODS LINE
- EX. SEPTIC AREA
- RC-DEO / RR-DEO — ZONING LINE
- PROP. LOT LINE
- PROP. REPLACEMENT WELL AREA / PROP. WELL
- PROP. BUILDING
- PROP. SRA
- (8) LOT NUMBER
- 75' STREAM BUFFER
- 25' WETLAND BUFFER / WETLAND
- PRELIMINARY 100-YEAR FLOODPLAIN
- FOREST RETENTION
- REFORESTATION
- FOREST CLEARING
- FOREST CONSERVATION EASEMENT
- 178 PERC TEST HOLE (PASSED) / PERC TEST HOLE (FAILED) 147
- [W] PROPOSED WELL AND WELL RELOCATION AREA
- TEMPORARY FOREST PROTECTION FENCE
- PERMANENT FOREST PROTECTION SIGN
- REFORESTATION ZONE DELINEATION LINE
- PROP. TREELINE

DATA SOURCES:

BOUNDARY PER DMW FIELD SURVEY DATED DECEMBER 2001.

TOPO FLOWN BY VIRGINIA RESOURCE MAPPING, DECEMBER, 2001.

APPROX. WETLAND LOCATION PER DMW FIELD VISIT DATED APRIL 2000. OFF SITE SEPTIC RESERVE AREAS PER RECORD PLATS, LOCATIONS OF WELLS NOT AVAILABLE.

APPROVED: HOWARD COUNTY DEPARTMENT OF PUBLIC WORKS

CHIEF, BUREAU OF HIGHWAYS — DATE 4-13-04

APPROVED: HOWARD COUNTY DEPT. OF PLANNING & ZONING

CHIEF, DEVELOPMENT ENGINEERING DIVISION — DATE 4/20/04

CHIEF, DIVISION OF LAND DEVELOPMENT — DATE 4/19/04

~~DIRECTOR~~ — ~~DATE~~

Date	No.	Revision Description

OWNER: NORTHRIDGE DEVELOPMENT, LLC
14045 GARED DRIVE
GLENWOOD, MD 21738

DEVELOPER: JAMES F. SELFRIDGE BUILDERS, INC.
14045 GARED DRIVE
GLENWOOD, MD 21738

DMW
Daft-McCune-Walker, Inc.
200 East Pennsylvania Avenue
Towson, Maryland 21286
(410) 296-3333
Fax 296-4705

A Team of Land Planners, Landscape Architects, Engineers, Surveyors & Environmental Professionals

3.25.04
Date

STATE OF MAINE — 661 — LANDSCAPE ARCHITECT

Landscape Architect No.

SUBDIVISION NAME			SECTION/AREA		LOT/PARCEL
FOX MEADOW					167
PLAT OR L/F	BLOCK	ZONE	TAX/ZONE MAP	ELEC. DISTRICT	CENSUS TRACT
5963/492	13, 19, 20	RR, RC	15	3	

TITLE

FOX MEADOW
(FORMERLY PFEFFERKORN PROPERTY)
FINAL FOREST CONSERVATION PLAN

Des By AJS	Scale 1" = 50'	Proj. No. 00042.B	
Drn By AJS/MSS	Date 1/07/04	20 OF 24	
Chk By MM	Approved		

F-03-115

Wed Mar 24 14:28:32 2004 m:\00042\00042f15

3/24/2004 2:42:42 PM \\ATHENS\MSTATION\CADNET\DCF\dayspf cr122 e:\hpm\00042f.hpm

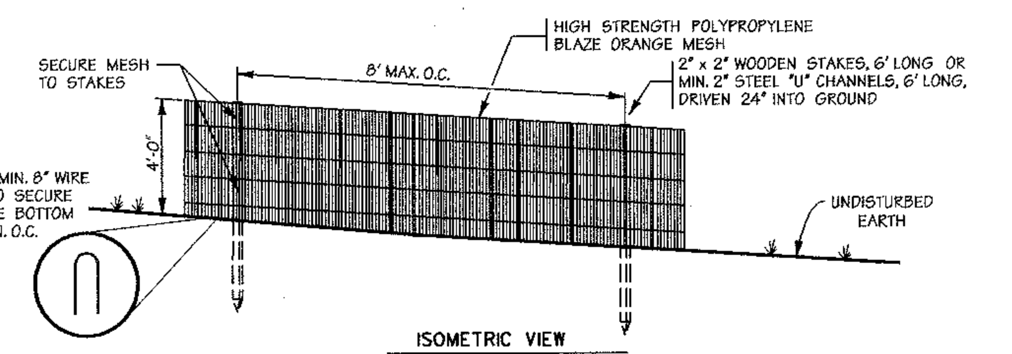

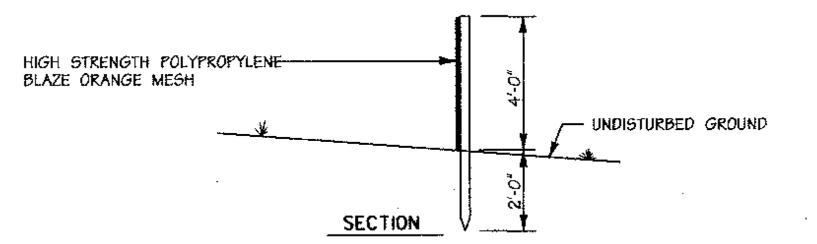

NOTES:

1. THIS DETAIL IS FOR FOREST PROTECTION DEVICE ONLY
2. FOREST RETENTION AREA WILL BE SET AS PART OF THE REVIEW PROCESS
3. BOUNDARIES OF FOREST RETENTION AREA SHOULD BE STAKED AND FLAGGED PRIOR TO INSTALLING THE DEVICE
4. ROOT DAMAGE SHALL BE AVOIDED
5. PROTECTION SIGNAGE MAY ALSO BE USED
6. FOREST PROTECTION FENCE SHALL BE MAINTAINED THROUGHOUT CONSTRUCTION

Forest Protection Fence *

Not To Scale

* WHERE SUPER SILT FENCE (S.S.F.) IS TO BE INSTALLED ADJACENT TO FOREST RETENTION AREAS, ATTACH HIGH VISIBILITY TAPE OR FLAGGING TO THE TOP EDGE OF S.S.F. AT 5' INTERVALS AND USE S.S.F. IN LIEU OF BLAZE ORANGE FENCE. TEMPORARY FOREST PROTECTION SIGNAGE MAY BE ATTACHED TO S.S.F.

PLANTING PROCEDURES FOR ALL CONTAINER GROWN TREES AND SHRUBS:

1. REMOVE THE PLANT EITHER BY CUTTING OR INVERTING THE CONTAINER
2. GENTLY LOOSEN ROOTS FROM SOILS. ROOTS MAY NOT BE CUT OR TRIMMED ON SITE
3. PLANT SHRUB OR TREE 1 TO 2 INCHES ABOVE THE EXISTING GRADE
4. APPLY 2 TO 3 INCH THICK LAYER OF SHREDDED HARDWOOD MULCH

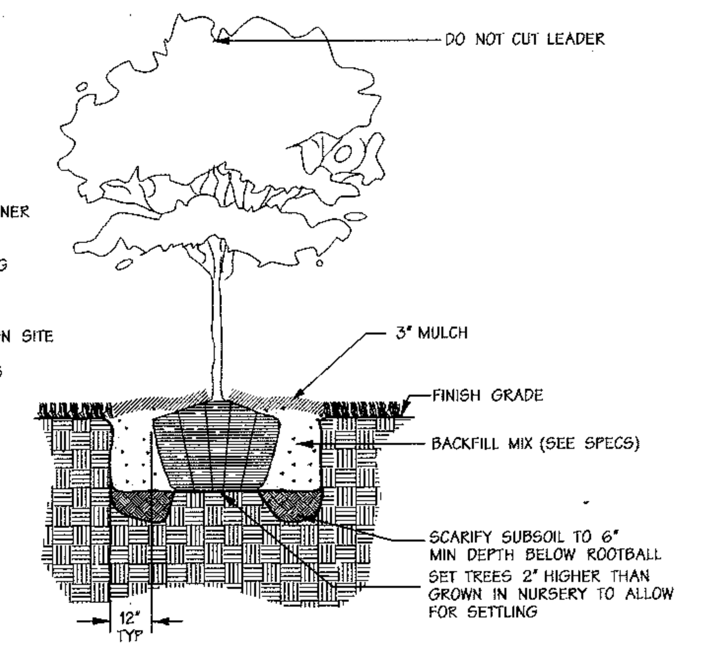

Typical Tree Planting (For container grown)

Not To Scale

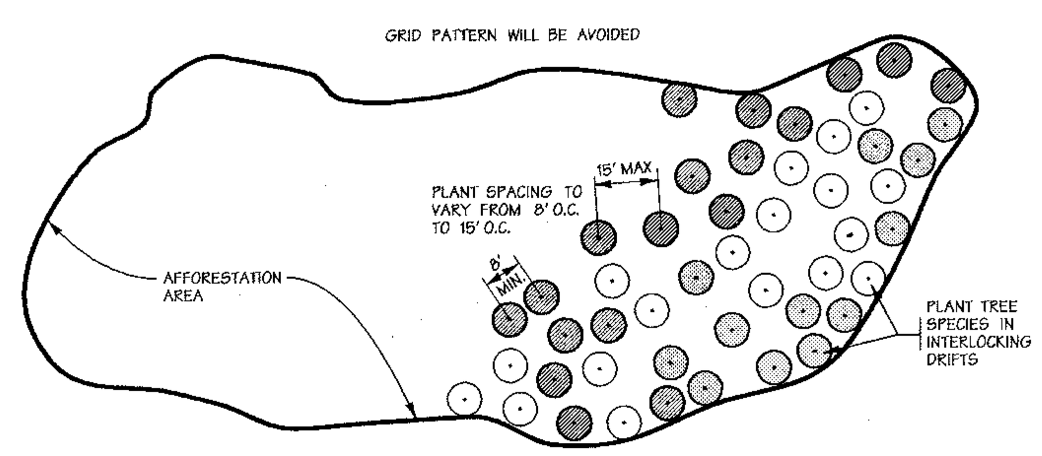

Planting Design Schematic

Not To Scale

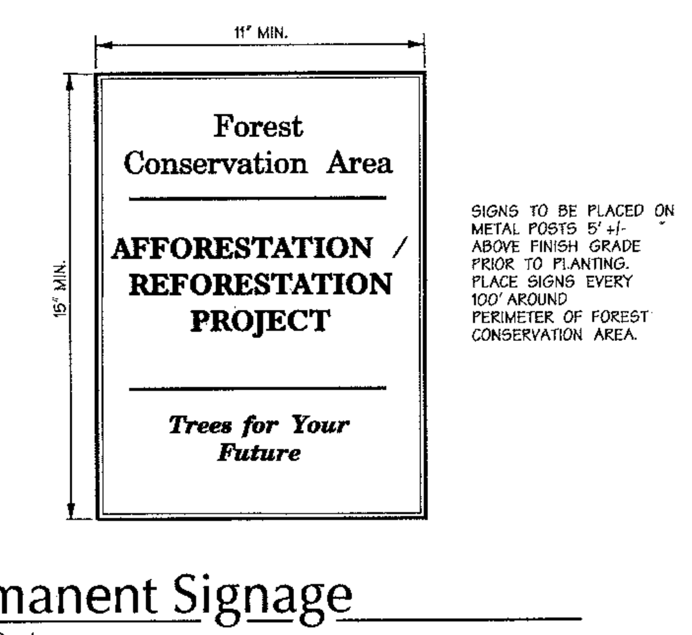

SIGNS TO BE PLACED ON METAL POSTS 5' +/- ABOVE FINISH GRADE PRIOR TO PLANTING. PLACE SIGNS EVERY 100' AROUND PERIMETER OF FOREST CONSERVATION AREA.

Permanent Signage

Not To Scale

FOREST CONSERVATION CALCULATIONS

BASIC SITE DATA

	ACRES (1/10)
GROSS SITE AREA	32.22
AREA WITHIN 100 YEAR FLOODPLAIN	2.49
AREA WITHIN AGRICULTURAL USE OR PRESERVATION PARCEL (IF APPLICABLE)	0.0
NET TRACT AREA	29.73
LAND USE CATEGORY	RESIDENTIAL

INFORMATION FOR CALCULATIONS

A. NET TRACT AREA	29.73
B. REFORESTATION THRESHOLD (25% x A)	7.43
C. AFFORESTATION MINIMUM (20% x A)	5.95
D. EXISTING FOREST ON NET TRACT AREA	6.01
E. FOREST AREAS TO BE CLEARED	1.84
F. FOREST AREAS TO BE RETAINED	4.17

REFORESTATION CALCULATIONS

A. NET TRACT AREA	29.73
B. REFORESTATION THRESHOLD (25% x A)	7.43
C. EXISTING FOREST ON NET TRACT AREA	6.01
D. FOREST AREAS TO BE CLEARED	1.84
E. FOREST AREAS TO BE RETAINED	4.17
F. FOREST AREAS CLEARED ABOVE REFORESTATION THRESHOLD	0.0
G. FOREST AREAS CLEARED BELOW REFORESTATION THRESHOLD	1.84
H. FOREST AREAS RETAINED ABOVE REFORESTATION THRESHOLD	0.0

CLEARING BELOW THE THRESHOLD

IF FOREST AREAS TO BE RETAINED ARE LESS THAN THE REFORESTATION THRESHOLD (IF F IS GREATER THAN B), THE FOLLOWING CALCULATIONS APPLY:

REFORESTATION FOR CLEARING ABOVE THRESHOLD Fx1/4	0.0
REFORESTATION FOR CLEARING BELOW THRESHOLD Gx2	3.68
TOTAL REFORESTATION REQUIRED (Fx1/4) + (Gx2)	3.68
TOTAL AFFORESTATION REQUIRED	0.0
NO CREDIT FOR RETENTION ABOVE CONSERVATION THRESHOLD	0.0
REFORESTATION REQUIRED	3.68 ACRES
REFORESTATION PROVIDED	3.68 ACRES

* NOT ALL VEGETATION WILL BE REMOVED. VEGETATION REMAINING AFTER ROAD GRADING WILL BE COUNTED TOWARDS LANDSCAPE REQUIREMENTS AND AUGMENTED WITH STREET TREES. HOWEVER FOR THE PURPOSE OF FOREST CONSERVATION CALCULATIONS THIS AREA IS COUNTED AS CLEARED BECAUSE IT IS NOT FORMERLY RETAINED IN AN FCE.

NOTE: LANDSCAPE-SIZE MATERIAL IS TO BE PLANTED ALONG FCE EDGES ADJACENT TO THE SCENIC ROAD.

GOALS AND OBJECTIVES

The goals and objectives of this Forest Conservation Plan are to identify forest retention areas under the current Forest Conservation Act in accordance with development of the Fox Meadow property, and to assign reforestation areas on-site to satisfy the replacement obligation. Approximately 4.17 acres of existing forest will be retained adjacent to water resources, and approximately 1.84 acres of forest will be cleared, generating a 3.68-acre reforestation obligation to be satisfied on-site with a combination of reforestation and landscaping.

Planting Zones have been described according to varying hydrologic regimes, with Zone I including wetland areas on the southwestern portion of the site. Zone II is a mesic area located on the outer fringes of the wetlands on the southwestern portion of the site, and is roughy bound by the 532-ft. contour. Zone III is assigned to uplands across the site. Zone IV is located along Pfefferkorn Road and will consist of larger-caliper planting stock to provide an aesthetic screen of forest between the proposed residential community and the scenic road. Zone V consists of landscaping behind lots 11-14.

FOREST RETENTION

Tree retention/ Soil Protection areas will be delineated with temporary forest protection fencing and retention area signage as appropriate. See forest protection fence and temporary signage Detail prior to the beginning of any construction activity. Attachment of signs to trees is prohibited.

PRECONSTRUCTION MEETING/CONSTRUCTION PERIOD PRACTICES

Before construction begins, a required preconstruction meeting shall be held. The principle contractors, engineer, Howard County Inspectors and a qualified forest professional familiar with the plan shall be present. All items pertaining to forest retention, tree preservation, and construction period practices shall be discussed.

Any changes to the plan due to on-site conditions must be approved by the Howard County Department of Planning and Zoning.

No grading, excavation, utility placement, sediment and erosion control activities, or vehicular traffic will occur within forest retention areas.

Storage of equipment and materials shall not be permitted in the forest retention areas.

There will be no burial or disposal of discarded material on-site within the retention area.

There will be no open burning within 100 feet of woodlands.

Temporary structures including, but not limited to construction trailers, sanitary facilities, etc. shall not be placed within the forest retention areas.

Employee parking shall not be permitted in the forest retention areas.

POST CONSTRUCTION MANAGEMENT/MAINTENANCE BY CONTRACTOR

All dead trees or tree limbs which pose an immediate safety hazard will be felled. Trees dropped within the forest retention area will not be removed.

All temporary forest protection structures will be removed after construction and permanent signage will be placed where indicated on the plan.

A 2-year Contractor's Maintenance and Monitoring Period shall begin at mobilization. Seventy five percent survivorship must be guaranteed for this period. The site shall be inspected at the end of the two year period to ascertain survivorship and provide for replacement if necessary.

The Contractor's maintenance of new planting shall consist of watering, cultivating, weeding, and mulching as necessary to insure survival.

Contractor shall protect planting areas and plants at all times against damage of all kinds for duration of maintenance period. Maintenance includes temporary protection barriers and signs as required for protection. If any plants become damaged or injured, because sufficient protection was not provided, treat or replace as directed by Landscape Architect at no additional cost to Owner.

ALL FOREST RETENTION & REFORESTATION AREAS SHOWN ON THIS PLAN TO BE PLACED IN FOREST CONSERVATION EASEMENT

STANDARDS AND SPECIFICATIONS FOR PLANTING

1. PLANT MATERIAL SELECTION

A. Nursery grown plant materials greater than 1" caliper should meet or exceed the requirements of the American Nurserymen Specifications, i.e. should be typical of the species and variety, have a normal habit of growth, be first quality, sound, vigorous, well-branched, have healthy, well furnished root systems, and be free of disease, insect pests and mechanical injuries.

B. Planting stock less than 1" caliper should meet the following standards:

Seedling/whips:

Hardwoods - 1/4" to 1/2" caliper with roots not less than 8" long
Shrubs - 1/8" or larger caliper with 8" root system.

2. PLANTING SITE PREPARATION

Soils shall not be disturbed outside the area necessary for planting individual specimens and the removal of exotic invasive plant material. These areas should be as shown on the temporary seeding notes on sheet 8.

3. PLANTING PERIOD

All material shall be planted between September 15 and May 31. Material shall not be installed when ground is frozen.

4. PLANT MATERIAL STORAGE

Plants should be planted within 24 hours of delivery if possible. Plant material which are left unplanted for more than 24 hours shall be protected from direct sun and weather and kept moist. Nursery stock should not be left unplanted for more than two weeks.

5. ON-SITE INSPECTION

Prior to planting, planting stock shall be inspected by the landscape architect or other qualified professional familiar with this plan. Plant material not conforming to standard nurseryman specifications for size, form, vigor, roots, trunk wounds, insects and disease should be replaced.

6. TOPSOIL FOR PLANTING SOIL

A. On-site material or imported from same source as topsoil used on site for finish grading.

1. Uniform composition, free of subsoil, clay lumps, stones, stumps, roots or similar objects larger than 1 inch.
2. Topsoil must be free of plants or plant parts of bermudagrass, quackgrass, Johnsongrass, nutsedge, poison ivy, Canada thistle, or others as specified.
3. All topsoil shall be tested by a recognized laboratory for pH and soluble salts. A pH of 4.5 to 7.5 is required. Soluble salts shall not be higher than 500 parts per million.

7. ADDITIVE FOR BACKFILL MIX

A. Wood Residuals:

1. Source shall be well composted, not chemically treated.
2. Physical properties - grading:

U.S. Sieve	Dry Weight Percent Passing
3/8"	100
1/4"	90 - 100
No. 8	70 - 100
No. 35	0 - 30

3. Organic content by ash analysis: 90 - 100 percent dry weight
4. Chemistry:

Range

a. Saturation Extract Conductivity (EC) —— Nil - 3.5
b. Reaction (pH) —— 3.0 - 5.5

5. Salinity: Maximum saturation extract conductivity 1.0 millimhos per cm at 25 degrees centigrade.

B. Sand

1. Physical Properties - Grading:

U.S. Sieve	Dry Weight Percent Passing
No. 4	100
No. 10	95 - 100
No. 18	90 - 100
No. 35	65 - 100
No. 60	0 - 50
No. 140	0 - 20
No. 270	0 - 7

2. Chemistry:

Saturation Extract Conductivity (EC) —— Nil - 3.0
Sodium Absorption Ratio (SAR) —— Nil - 6.0
Boron - ppm in saturation extract solution —— Nil - 1.0
Reaction (pH) —— 6.0 - 7.5
Available calcium - sodium acetate extractable - ppm dry weight Nil - 2000

C. Treble Superphosphate: Commercial product containing 19 to 20 percent available phosphoric acid.

8. MULCH

A. Shredded long fiber hardwood.

B. Mulch shall have been shredded within the last six (6) months.

9. PLANTING MIX

A. Planting mix shall be prepared at approved on-site staging area using approved on-site existing soil. Mix minimum quantities of 20 cubic yards or sufficient mix for entire job if less than 20 cubic yards is required.

B. Thoroughly mixed in the following proportions for tree and shrub planting mix:

.5 cy Existing soil
.2 cy Sharp sand
.3 cy Wood residuals
4.5 lbs. Treble superphosphate
5 lbs. Dolomite limestone (eliminate for acid loving plants)

10. LAYOUT AND EXCAVATION OF PLANTING AREAS

A. Plants shall be placed in each zone at random locations shown at spacing as indicated on the plan.

B. The Landscape Architect or qualified professional will check location of plants in the field and shall adjust to exact position before planting begins.

C. Subsoil shall not be worked when moisture content is so great that excessive compaction will occur, nor when it is so dry that clods will not readily break. Water shall be applied, if necessary, to bring soil to an optimum moisture content before tilling and planting.

D. Tree pits shall not be excavated more than 24 hours in advance of planting operation. Tree pits shall be excavated to the following dimensions:

Excavation for	Width	Depth
Canned Trees	Can + 12 in.	Can + 4 in.
B&B Trees	Ball + 12 in.	Ball + 4 in.

E. Excavate shrub pits to the following depths:

Excavation for	Width	Depth
Shrubs	Ball or Can + 8 in.	Can + 4 in., not less than 12 in.

11. PREPARING PLANT MATERIALS FOR PLANTING

A. Container stock shall be removed carefully after cans have been cut on two sides with approved cutter. Do not use spade to cut cans. Don not lift or handle container plants by tops, stems or trunks at any time.

B. Do not bind or handle any plant with wire or rope at any time so as to damage bark or break branches. Lift and handle plants only from bottom of ball.

C. Balled and burlapped (B&B) plants shall have firm balls of earth. Plants moved with a ball will not be accepted if the ball is cracked or broken before or during planting operations. B&B material shall be dug only when dormant. Pre-dug stored B&B material shall be inspected and approved at the storage site.

D. Do not force roots for bare rooted trees into excavated pits - custom dig pits to receive roots without deformation.

12. MIXING

A. Mix soil base, amendments and chemical additives by mechanical means.

B. Soil and sand bases shall be completely pulverized and free of lumps or aggregated material. Moisture content of base materials shall not be such that chemical granular or pelletized additives become dissolved during the mixing process.

C. Mix media in quantities of not less than 20 cubic yards or mix total quantity required if less than 50 cubic yards. The Contractor shall be responsible for continuity between batches.

D. Contaminating backfill mix with unmixed soil in backfill mixing lots shall be avoided.

13. INSTALLATION OF CONTAINERIZED PLANT MATERIAL

A. Scarify the walls and bottom of all plant pits immediately prior to the placement of plant and backfill mix. The Contractor shall remove all glazing of soil caused by an auger or mechanical hole digger.

B. Wells around trees and shrubs: after planting is complete, form a soil well 3 inches high around each plant, extending to the outer limit of the plant pit in accordance with planting details shown on the Drawings.

C. Smooth planted areas to conform to specified grades after full settlement as occurred. Contractor shall bear final responsibility for proper surface drainage of planted areas. Any discrepancy in the drawings or specifications, obstructions on the site, or prior work done by another party, which Contractor feels precludes establishing proper drainage, shall be brought to the attention of the Landscape Architect in writing.

D. Water all plants immediately again after planting.

E. Spread mulch in required areas to the compacted depth of 2 inches.

F. Install tree shelters around new plantings.

GUARANTEE:

A MINIMUM SURVIVAL RATE OF 75% IS TO BE GUARANTEED BY THE DEVELOPER AT THE END OF THE TWO YEAR MAINTENANCE PERIOD.

NOTE:

1. THE PRECISE LOCATION OF PLANT MASSINGS WILL BE LOCATED IN THE FIELD BY LANDSCAPE ARCHITECT.
2. GRID PATTERNS WILL BE AVOIDED
3. PLANT MATERIAL MAY BE GROUPED IN CLUSTERS OF NO MORE THAN 5 TO 7 WHIPS OF THE SAME PLANT. PLANTS WILL BE INSTALLED IN A RANDOM FASHION WITHIN SPECIFIED ZONES.
4. ALL PROPOSED SPECIES ARE TREES. NO SHRUBS SHALL BE PLANTED

Zone I (Wetland and buffer) Plants required -35 (Approx 0.1 acres x 350 whips/acre)

Species	Common name	Size	Quantity	Stage	Stratum	Remarks
Acer rubrum	Red Maple	18"-24" cont. stock	10	All	Tree	FAC
Betula nigra	River birch	18"-24" cont. stock	5	Early	Tree	FACW
Cornus amomum	Silky dogwood	18"-24" cont. stock	5	Mid	Tree	FACW
Platanus occidentalis	American sycamore	18"-24" cont. stock	5	Mid	Tree	FACW-
Quercus bicolor	Swamp white oak	18"-24" cont. stock	5	Mid	Tree	FACW+
Ulmus americana	American elm	18"-24" cont. stock	5	Mid	Tree	FACW-
TOTALS			35			

Zone II (Mesic) Plants required -105 (Approx. 0.3 acres x 350 whips/acre)

Species	Common name	Size	Quantity	Stage	Stratum	Remarks
Acer rubrum	Red maple	18"-24" cont. stock	40	All	Tree	FAC
Diospyros virginiana	Persimmon	18"-24" cont. stock	10	Late	Tree	FAC-
Fraxinus pensylvanica	Green ash	18"-24" cont. stock	25	Early	Tree	FACW
Nyssa sylvatica	Black gum	18"-24" cont. stock	10	Late	Tree	FAC
Quercus palustris	Pin oak	18"-24" cont. stock	20	Early	Tree	FACW
TOTALS			105			

Zone III (Upland) Plants required -910 (Approx. 2.6 acres x 350 whips/acre)

Species	Common name	Size	Quantity	Stage	Stratum	Remarks
Cercis canadensis	Eastern red bud	18"-24" cont. stock	95	Late	Tree	FACU
Liriodendron tulipifera	Tulip poplar	18"-24" cont. stock	215	Early	Tree	FACU
Pinus strobus	Eastern White Pine	18"-24" cont. stock	95	Early	Tree	FACU
Prunus serotina	Black cherry	18"-24" cont. stock	180	Early	Tree	FACU
Quercus alba	White oak	18"-24" cont. stock	100	Mid	Tree	FACU
Quercus rubra	Northern red oak	18"-24" cont. stock	100	Mid	Tree	FACU
Sassafras albidum	Sassafras	18"-24" cont. stock	30	Early	Tree	FACU
Viburnum prunifolium	Black haw	18"-24" cont. stock	95	Late	Tree/Shrub	FACU
TOTALS			910			

Zone IV (Landscape fringe) Plants required - 100 (Approx. 0.6 acres x 200 1"cal. trees/acre) See Note 3*

Species	Common name	Size	Quantity	Stage	Stratum	Remarks
Amelanchier canadensis	Serviceberry	6'-8' cont. stock	20	Late	Tree	FAC
Liriodendron tulipifera	Tulip poplar	1" caliper cont. stock	20	Early	Tree	FACU
Pinus strobus	Eastern white pine	1" caliper cont. stock	20	Mid	Tree	FACU
Quercus alba	White oak	1" caliper cont. stock	20	Mid	Tree	FACU
Quercus rubra	Northern red oak	1" caliper cont. stock	20	Mid	Tree	FACU
TOTALS			100			

NOTES

1. SMALL-SIZE PLANT MATERIAL SPECIFIED IN ZONES I, II, AND III SHALL BE POTECTED IN TREE SHELTERS.
2. REFORESTATION CREDIT DERIVED FROM LANDSCAPING WITHIN ZONE IV TOTALS 0.14 ACRES OR 6300 S.F., DERIVED AS FOLLOWS: (9 SHADE TREES X 400 S.F.) + (12 EVERGREEN TREES X 225 S.F.) = 6300 S.F.

* 3. A SURETY IN THE AMOUNT OF $36,329.00 SHALL BE POSTED FOR FOREST RETENTION (4.17 ACRES x 43560 S.F./ACRE x $0.20/S.F.). A SURETY IN THE AMOUNT OF $74,275.00 SHALL BE POSTED FOR REFORESTATION (3.68 ACRES x 43560 S.F. AT $0.50/S.F. MINUS x 11,750 S.F. AT $0.50/S.F.). TOTAL FOREST CONSERVATION SURETY EQUALS $110,604.00.

DATA SOURCES:

BOUNDARY PER DMW FIELD SURVEY DATED DECEMBER 2001.

TOPO FLOWN BY VIRGINIA RESOURCE MAPPING, DECEMBER, 2001.

APPROX. WETLAND LOCATION PER DMW FIELD VISIT DATED APRIL 2000. OFF SITE SEPTIC RESERVE AREAS PER RECORD PLATS, LOCATIONS OF WELLS NOT AVAILABLE.

APPROVED: HOWARD COUNTY DEPARTMENT OF PUBLIC WORKS

CHIEF, BUREAU OF HIGHWAYS — DATE 4-13-04

APPROVED: HOWARD COUNTY DEPT. OF PLANNING & ZONING

CHIEF, DEVELOPMENT ENGINEERING DIVISION — DATE 4/28/04

CHIEF, DIVISION OF LAND DEVELOPMENT — DATE 4/29/04

~~DIRECTOR~~ ~~DATE~~

Date	No.	Revision Description

OWNER: NORTHRIDGE DEVELOPMENT, LLC
14045 GARED DRIVE
GLENWOOD, MD 21738

DEVELOPER: JAMES F. SELFRIDGE BUILDERS, INC.
14045 GARED DRIVE
GLENWOOD, MD 21738

DMW

Daft·McCune·Walker, Inc.
200 East Pennsylvania Avenue
Towson, Maryland 21286
(410) 296-3333
Fax 296-4705

A Team of Land Planners, Landscape Architects, Engineers, Surveyors & Environmental Professionals

3.29.04
Date

Landscape Architect No.

SUBDIVISION NAME	SECTION/AREA	LOT/PARCEL
FOX MEADOW	1	167

PLAT OR L/F	BLOCK	ZONE	TAX/ZONE MAP	ELECT. DISTRICT	CENSUS TRACT
5983/492	13, 19, 20	RR, RC	15	3	

TITLE
FOX MEADOW
(FORMERLY PFEFFERKORN PROPERTY)
FINAL FOREST CONSERVATION
NOTES AND DETAILS

Des By AJS	Scale AS SHOWN	Proj. No. 00042.B
Drn By AJS/MSS	Date 1/07/04	21 OF 24
Chk By MM	Approved	

F-03-45

Wed Mar 24 14:30:24 2004 n:\00042\00042f.ffi

3/24/2004 2:30:06 PM \\ATHENS\MSTATION\CADNETN\DCF\dey-gof crizzi c:\hpm\00042f.hpm

SEE SHEET 23 FOR PLANT LIST AND SHEET 25 FOR PLANTING NOTES & DETAILS.

TOTAL LANDSCAPE PLANTS (THIS SHEET):

52 SHADE
72 EVERGREEN
26 ORNAMENTAL

(DOES NOT INCLUDE BIORETENTION PLANTING)

Water Quality Planting Plan**
Facility #1

ZONE "A" (7,760 ±s.f.)

Species	Size	Spacing	Quantity	Remarks
Scirpus tabernaemontanii	quart container*	36"	166	OBL
Iris pseudacoris	quart container*	36"	166	OBL
Lobelia cardinalis	quart container	36"	166	FACW
Iris versicolor	quart container*	36"	166	OBL
Panicum virgatum	quart container	36"	166	FAC
Saururus cernuus	quart container*	36"	166	OBL
TOTALS			996	

ZONE "B" (3,204 ±s.f.)

Species	Size	Spacing	Quantity	Remarks
Sagittaria latifolia	quart container*	36"	198	OBL
Peltandra virginica	quart container*	36"	198	OBL
TOTALS			396	

*Dormant rhizomes of *Scirpus*, *Iris* and *Saururus*, dormant tubers of *Sagittaria*, and 1st year bulbs of *Peltandra* may be substituted if plantings are to be installed during dormant season.

**Alternate species and install in random pattern, distributing each species across the hydrologic gradient of each planting zone. Single species massings to be avoided.

Plant List (Perimeter & SWM Landscaping)

QTY	SYM	BOTANICAL NAME/ COMMON NAME	SIZE	REMARKS
SHADE TREES				
34	QP	QUERCUS PALUSTRIS PIN OAK	2 1/2" - 3" CAL. 12'-14' HT	B & B FULL HEAD
24	QR	QUERCUS RUBRA RED OAK	2 1/2" - 3" CAL. 12'-14' HT	B & B FULL HEAD
22	AS	ACER SACCHARUM 'GREEN MOUNTAIN' GREEN MOUNTAIN SUGAR MAPLE	2 1/2" - 3" CAL. 12'-14' HT	B & B FULL HEAD
EVERGREEN TREES				
41	PA	PICEA ABIES NORWAY SPRUCE	6'-8' HT.	B & B
56	PS	PINUS STROBUS WHITE PINE	6'-8' HT.	B & B HEAVY / UNSHEARED
ORNAMENTAL TREES				
12	AL	AMELANCHIER LAEVIS ALLEGHENY SERVICEBERRY	8'-10' HT.	B & B
20	CC	CERCIS CANADENSIS EASTERN REDBUD	8'-10' HT.	B & B
GROUND COVER				
~~38~~	~~JG~~	~~JUNIPERUS CHINENSIS 'SEA GREEN' SEA GREEN JUNIPER~~	~~18-24" SPD.~~	~~CONT.~~

PERIMETER 1
±1180 L.F. - TYPE 'A'

PERIMETER 2
±432 L.F. - TYPE 'A'

PERIMETER 3
±467 L.F. - TYPE 'B'

PERIMETER 7
±344 L.F. - TYPE 'B'

PERIMETER 8
±407 L.F. - TYPE 'B'

SBARRA MARK G
MONTGOMERY CATHLEEN A J/T
3332/ 406
P.168.5
ZONE: RR-DEO

PFEFFERKORN WILLIAM ROBERTS
5371/ 221
11751/ 132
P.166
ZONE: RC-DEO

PRES. PARCEL A
0.37 AC. +/-
(NON-BUILDABLE)

PROPOSED STANDING PAD

FUTURE PAVEMENT

PROPOSED 10' TREE MAINTENANCE EASEMENT

PUBLIC DESIGN-SPEED 25 MPH ROAD

PFEFFERKORN ROAD
LOCAL ROAD & SCENIC ROAD

PRES. PARCEL B
P.226.1
(NON-BUILDABLE)
(PRIVATE OWNERSHIP)

FOREST CONSERVATION EASEMENT 'B'
NORTHRIDGE DEVELOPMENT LLC
5963/ 492
P.167
ZONE: RC-DEO

FOREST CONSERVATION EASEMENT 'A'

GRAY EARL M & WF
3421 238
P.236.1
ZONE: RR-DEO

UNKNOWN OWNERSHIP
P.22
ZONE: RC-DEO

SWM POND 1
±932 L.F. - PERIMETER
TYPE 'B'

PUBLIC STORMWATER MANAGEMENT EASEMENT (NON OWNERSHIP)

75' STREAM BUFFER

100 YR. FLOODPLAIN LINE

PERENNIAL STREAM

±183 L.F. - CREDIT

NON-WOODY VEGETATION LIMIT

TREE LINE

N 59°50'00" E 344.08'

S 76°06'46" E 1509.75'

S 12°46'14" W 105.89'

N 85°43'46" W 950.46'

11 QR; 8 PS; 3 CC; 2 CC; 4 CC; 6 PA; 3 AS; 3 PS; 2 QR; 4 PS; 3 AS; 3 PA; 3 QR; 6 PS; 4 QP; 5 QR; 6 PA; 7 QP; 33 QR; 3 PS; 3 AL; 4 PA; 1 QR; 2 QP; 3 AL; 10 PS; 4 QP; 1 AL; 7 PS; 3 AL; 9 PA; 4 QP; 2 AL; 6 PS

LEGEND

- EX. CONTOUR
- EX. STREAM
- EX. BUILDING
- EX. WOODS LINE
- EX. SEPTIC AREA
- RC-DEO / RR-DEO — ZONING LINE
- PROP. LOT LINE
- PROP. REPLACEMENT WELL AREA / PROP. WELL
- PROP. BUILDING
- PROP. SRA
- (8) LOT NUMBER
- 75' STREAM BUFFER
- 25' WETLAND BUFFER / WETLAND
- PRELIMINARY 100-YEAR FLOODPLAIN
- PROPOSED STREET TREES
- FOREST RETENTION
- AFFORESTATION/ REFORESTATION
- PROP. TREELINE
- FOREST CLEARING
- FOREST CONSERVATION EASEMENT
- WATER QUALITY PLANTING ZONE 'A'
- WATER QUALITY PLANTING ZONE 'B'

E 1314500
N 591000

NORTH

HO 2001-G005 (01)

3.25.04
Date

Landscape Architect No.

DATA SOURCES:
BOUNDARY PER DMW FIELD SURVEY DATED DECEMBER 2001.
TOPO FLOWN BY VIRGINIA RESOURCE MAPPING, DECEMBER, 2001.
APPROX. WETLAND LOCATION PER DMW FIELD VISIT DATED APRIL 2000. OFF SITE SEPTIC RESERVE AREAS PER RECORD PLATS, LOCATIONS OF WELLS NOT AVAILABLE.

APPROVED: HOWARD COUNTY DEPARTMENT OF PUBLIC WORKS

CHIEF, BUREAU OF HIGHWAYS — DATE 4-13-04

APPROVED: HOWARD COUNTY DEPT. OF PLANNING & ZONING

CHIEF, DEVELOPMENT ENGINEERING DIVISION — DATE 4/28/04

CHIEF, DIVISION OF LAND DEVELOPMENT JA — DATE 4/27/04

~~DIRECTOR~~ ~~DATE~~

Date	No.	Revision Description

OWNER: NORTHRIDGE DEVELOPMENT, LLC
14045 GARED DRIVE
GLENWOOD, MD 21738

DEVELOPER: JAMES F. SELFRIDGE BUILDERS, INC.
14045 GARED DRIVE
GLENWOOD, MD 21738

DMW
Daft-McCune-Walker, Inc.
200 East Pennsylvania Avenue
Towson, Maryland 21286
(410) 296-3333
Fax 296-4705

A Team of Land Planners, Landscape Architects, Engineers, Surveyors & Environmental Professionals

SUBDIVISION NAME			SECTION/AREA		LOT/PARCEL
FOX MEADOW			1		167
PLAT OR L/F	BLOCK	ZONE	TAX/ZONE MAP	ELEC. DISTRICT	CENSUS TRACT
5963/492	13, 19, 20	RR, RC	15	3	

TITLE
FOX MEADOW
(FORMERLY PFEFFERKORN PROPERTY)
STREET TREE & SWM LANDSCAPE PLAN

Des By	DWR	Scale	1"=50'
Drn By	DWR/BKC	Date	1/07/04
Chk By	MM	Approved	

Proj. No. 00042.B

22 OF 24

Wed Mar 24 14:20:57 2004 m:\00042\000421.plt

3/24/2004 2:30:48 PM \\ATHENS\MSTATION\CADNET\NCF\dayqcf cr122 ct\hpm\00042f.hpm

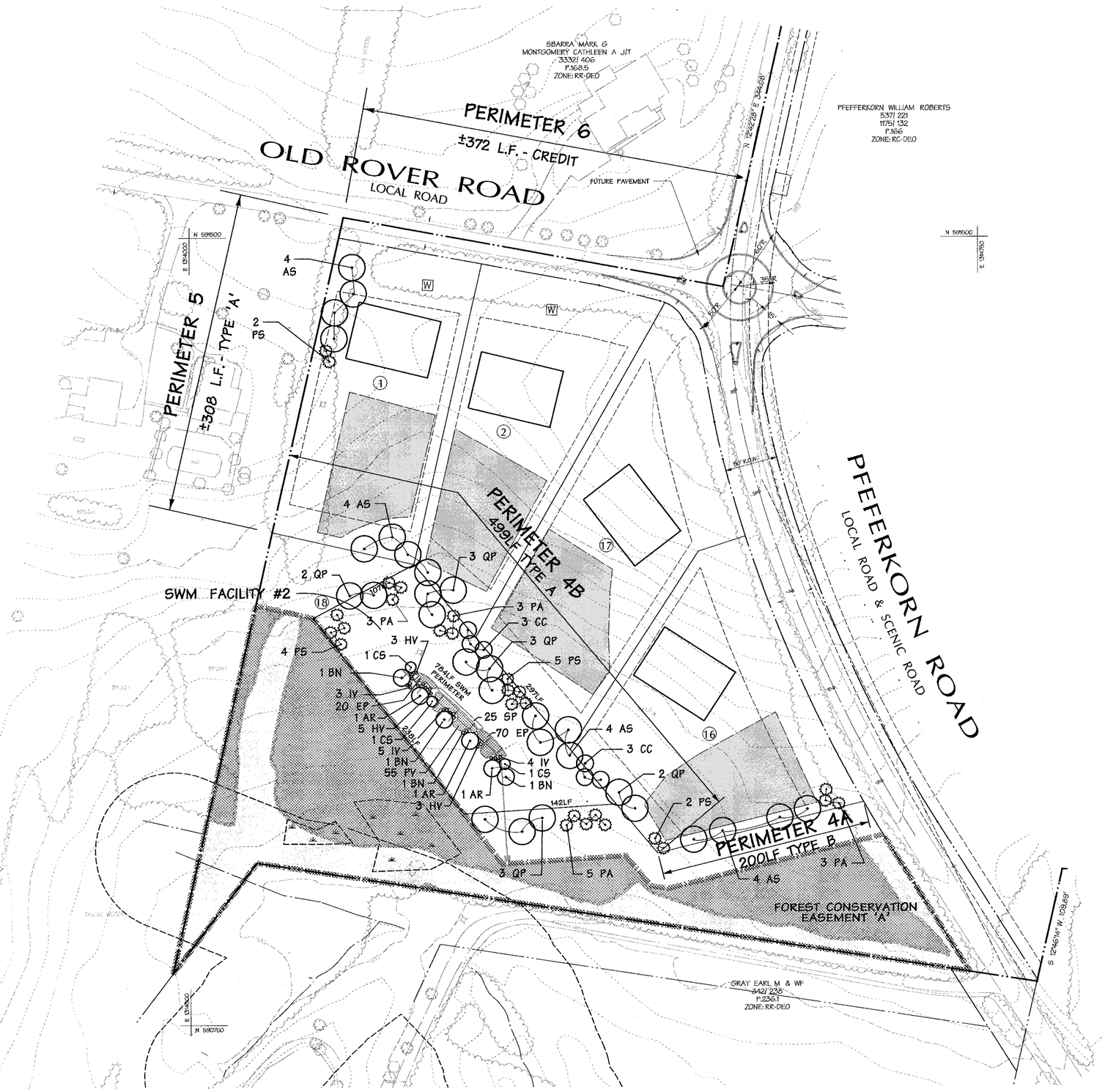

SEE SHEET 23 FOR PLANT LIST AND SHEET 25 FOR PLANTING NOTES & DETAILS.

TOTAL LANDSCAPE PLANTS (THIS SHEET):

29 SHADE
25 EVERGREEN
6 ORNAMENTAL

(DOES NOT INCLUDE BIORETENTION PLANTING)

Bioretention Area Plant List

Species	Common name	Size	Quantity	Spacing	Indicator status
Acer rubrum (AR)	red maple	2 1/2" -3" caliper, container grown	3	As shown	FAC
Betula nigra (BN)	river birch	2 1/2" - 3" caliper, container grown	3	As shown	FACW
Cornus stolonifera (CS)	red-osier dogwood	18" - 24" height" container grown	3	As shown	FACW
Hamamelis virginiana (HV)	witch hazel	18" - 24" height, container grown	15	As shown	FAC
Ilex verticillata (IV)	winterberry	18" - 24" height" container grown	12	As shown	FACW
Eupatorium perpureum (EP)	Joe Pye weed	quart-sized container*	70	Approx 3' OC throughout	FAC
Panicum virgatum (PV)	switchgrass	quart-sized container*	55	Approx 3' OC throughout	FAC
Scirpus pungens (SP)	common three square	quart-sized container*	25	Approx 3' OC throughout	FACW

* Note: Plugs, dormant rhizomes, or bare root stock may be substituted if available.

SCHEDULE A
PERIMETER LANDSCAPE EDGE

CATEGORY	ADJACENT to ROADWAYS			ADJACENT to PERIMETER PROPERTIES					
LANDSCAPE TYPE "A"				P 1	P 2			P 4B	P 5
LINEAR FEET OF PERIMETER				1180 LF.	432 LF.			499 LF.	308 LF.
LANDSCAPE TYPE "B"	P 6	P 7	P 8			P 3	P 4A		
LINEAR FEET OF PERIMETER	313 LF.	344 LF.	407			467 LF.	200 LF.		
LANDSCAPE TYPE "C"									
LINEAR FEET OF PERIMETER									
CREDIT FOR EXISTING VEGETATION (DESCRIBE BELOW IF NEEDED)	313 LF.	N/A	N/A	N/A	N/A	N/A	N/A	N/A	N/A
CREDIT FOR BERM (DESCRIBE BELOW IF NEEDED)	N/A	N/A	N/A	N/A	N/A	N/A	N/A	N/A	N/A
NUMBER OF PLANTS REQUIRED SHADE TREES EVERGREEN TREES SHRUBS	0 0 0	7 9 0	8 10 0	20 0 0	7 0 0	9 12 0	4 5 0	8 0 0	5 0 0
NUMBER OF PLANTS PROVIDED SHADE TREES EVERGREEN TREES OTHER TREES (2 :1 SUBSTITUTION) SHRUBS (10 :1 SUBSTITUTION) (DESCRIBE PLANT SUBSTITUTION CREDITS BELOW IF NEEDED)	0 0 0	5 9 4	8 10 0	11 8 10	7 0 0	9 12 0	4 5 0	8 0 0	4 2 0

* NOTE: STREET TREES WILL BE PROVIDED @ 1/40 LF.
* THE DEVELOPER WILL PROVIDE ALL PERIMETER LANDSCAPE OBLIGATIONS

SCHEDULE D
STORMWATER MANAGEMENT AREA LANDSCAPING

POND #	1	2
LINEAR FT OF PERIMETER (TYPE "B")	1175 LF	784 LF
NUMBER OF TREES REQUIRED SHADE TREES @ 1/50 L.F. EVERGREEN TREES @ 1/40 L.F.	20 25	16 20
CREDIT FOR EXISTING VEGETATION	183 LF	NA
CREDIT FOR OTHER LANDSCAPING	NA	NA
NUMBER OF TREES PROVIDED SHADE TREES EVERGREEN TREES FLOWERING TREES	11 31 12	13 20 6

* THE DEVELOPER WILL PROVIDE ALL SWM LANDSCAPE OBLIGATIONS

LEGEND

- EX. CONTOUR
- EX. STREAM
- EX. BUILDING
- EX. WOODS LINE
- EX. SEPTIC AREA
- ZONING LINE (RC-DEO / RR-DEO)
- PROP. LOT LINE
- PROP. REPLACEMENT WELL AREA / PROP. WELL
- PROP. BUILDING
- PROP. SRA
- LOT NUMBER
- 75' STREAM BUFFER
- 25' WETLAND BUFFER / WETLAND
- PRELIMINARY 100-YEAR FLOODPLAIN
- PROPOSED STREET TREES
- FOREST RETENTION
- AFFORESTATION/ REFORESTATION
- PROP. TREELINE
- FOREST CLEARING
- FOREST CONSERVATION EASEMENT

DATA SOURCES:

BOUNDARY PER DMW FIELD SURVEY DATED DECEMBER 2001.

TOPO FLOWN BY VIRGINIA RESOURCE MAPPING, DECEMBER, 2001.

APPROX. WETLAND LOCATION PER DMW FIELD VISIT DATED APRIL 2000. OFF SITE SEPTIC RESERVE AREAS PER RECORD PLATS, LOCATIONS OF WELLS NOT AVAILABLE.

APPROVED: HOWARD COUNTY DEPARTMENT OF PUBLIC WORKS

CHIEF, BUREAU OF HIGHWAYS — DATE 4-13-04

APPROVED: HOWARD COUNTY DEPT. OF PLANNING & ZONING

CHIEF, DEVELOPMENT ENGINEERING DIVISION — DATE 4/20/04

CHIEF, DIVISION OF LAND DEVELOPMENT — DATE 4/13/04

~~DIRECTOR~~ — ~~DATE~~

Date	No.	Revision Description

OWNER: NORTHRIDGE DEVELOPMENT. LLC
14045 GARED DRIVE
GLENWOOD, MD 21738

DEVELOPER: JAMES F. SELFRIDGE BUILDERS, INC.
14045 GARED DRIVE
GLENWOOD, MD 21738

NORTH

HO 2001-G005 (01)

3.25.04
Date

Landscape Architect No.

DMW
Daft-McCune-Walker, Inc.
200 East Pennsylvania Avenue
Towson, Maryland 21286
(410) 296-3333
Fax 296-4705

A Team of Land Planners, Landscape Architects, Engineers, Surveyors & Environmental Professionals

SUBDIVISION NAME			SECTION/AREA		LOT/PARCEL
FOX MEADOW			1		167
PLAT OR L/F	BLOCK	ZONE	TAX/ZONE MAP	ELEC. DISTRICT	CENSUS TRACT
5983/492	13, 19, 20	RR, RC	15	3	

TITLE
FOX MEADOW
(FORMERLY PFEFFERKORN PROPERTY)
STREET TREE & SWM LANDSCAPE PLAN

Des By	DWR	Scale	1"=50'
Drn By	DWR/BKC	Date	1/07/04
Chk By	MM	Approved	
Proj. No.	00042.B		

23 OF 24

F-03-175

Wed Mar 24 16:47:01 2004 m\00042\00042f.ipfa

3/24/2004 4:46:51 PM \\ATHENS\STATION\CADNET\N\DCF\dayoef cr122 c:\hpm\00042f.hpm

Landscape Notes

1. The contractor shall review architectural/engineering plans to become thoroughly familiar with grading and surface utilities.

2. All equipment and tools shall be placed so as not to interfere or hinder the pedestrian and vehicular traffic flow. See Seasonal Plant List for planting times of bulbs and seasonal plants.

3. The contractor shall coordinate with lighting and irrigation contractors regarding timing of installation of plant material.

4. The contractor shall insure that his work does not interrupt established or projected drainage patterns.

5. During planting operations, excess waste materials shall be promptly and frequently removed from the site.

6. The contractor is advised of the existence of underground utilities on the site. Their exact location shall be verified in the field with the owner or general contractor prior to the commencement of any digging operations. In the event they are uncovered, the contractor shall be held responsible for all damage to utilities and such damage shall not result in any additional expenses to the owner.

7. If utility lines are encountered in excavation of tree pits, other locations for trees shall be made by the contractor without additional compensation. No changes of location shall be made without approval of the landscape architect.

8. Maintain positive drainage out of planting beds at a minimum 2% slope. All grades, dimensions, and existing conditions shall be verified by the contractor on site before construction begins. Any discrepancies shall be brought to the attention of the landscape architect or owner.

9. Every possible safeguard shall be taken to protect building surfaces, equipment, and furnishing. The contractor shall be responsible for any damage or injury to person or property which may occur as a result of his negligence in the execution of the work.

10. In the event of variation between quantities shown on the plant list and the plans, the plans shall control. The contractor is responsible for verifying all plant quantities prior to the commencement of work. Sod quantity take-offs are the responsibility of the contractor. All discrepancies shall be reported to the landscape architect for clarification prior to bidding. The contractor shall furnish plant material in sizes as specified in plant list.

11. The contractor shall stake all material located on the site for review and/or adjustment by the landscape architect prior to planting. All locations are to be approved by the landscape architect before excavation.

12. Plants shall conform to current "American Standards for Nursery Stock" by American Association of Nurserymen (AAN), particularly with regard to size, growth, size of ball, and density of branch structure. Plant material shall be tagged at the source by the landscape architect unless this requirement is specifically waived.

13. All plants (B&B or container) shall be properly identified by weather-proof labels securely attached thereto before delivery to project site. Labels shall identify plants by name, species, and size. Labels shall not be removed until the final inspection by the landscape architect or agent in charge.

14. Any material and/or work may be rejected by the landscape architect if it does not meet the requirements of the specifications. All rejected materials shall be removed from the site by the contractor.

15. No substitutions shall be made without written consent of the owner or landscape architect.

16. The landscape architect or owner shall have the right, at any stage of the operations, to reject any and all work and material which, in his opinion, does not meet the requirements of these plans and specifications.

17. The contractor shall be wholly responsible for stability and conditions of all trees and shrubs and shall be legally liable for any damage caused by instability of any plant materials.

18. All proposed trees to be installed either entirely in or entirely out of planting beds. Planting bed lines are not to be obstructed. All shrubs and ground cover areas shall be planted in continuous prepared bed and top dressed with 3-inch shredded hardwood mulch. Mulch shall have been shredded within the last six months.

19. All planting beds adjacent to lawn, sod, or seeded areas shall be spade edged.

20. Maintenance shall begin after each plant has been installed and shall continue until 90 days after final acceptance by the architect or owner representative. Maintenance includes mowing of turf, watering, pruning, weeding, fertilizing, mulching, replacement of sick or dead plants, and any other care necessary for the proper growth of the plant material. The contractor must be able to provide continued maintenance if requested by the owner.

21. Upon completion of all landscaping, an acceptance of the work shall be held. The contractor shall notify the landscape architect or owner for scheduling the inspection at least seven (7) days prior to the anticipated inspection date.

22. All trees shall be guaranteed for 12 months from the date of acceptance. All shrubs and ground covers shall be guaranteed for 12 months from the date of acceptance.

23. The contractor is responsible for testing project soils. The contractor is to provide a certified soils report to the owner. The contractor shall verify that the soils on site are acceptable for the proper growth of the proposed plant material. Should the contractor find poor soil conditions, the contractor shall be required to provide soil amendments as necessary. These amendments shall include, but not be limited to, fertilizers, lime, and topsoil. Proper planting soils must be verified prior to planting of materials.

24. PLANTING MIX:
a. Planting mix shall be prepared at approved on-site staging area using approved on-site existing soil. Mix minimum quantities of 20 cubic yards or sufficient mix for entire job if less than 20 cubic yards is required.

b. Thoroughly mixed in the following proportions for tree and shrub planting mix
.5 cy existing soil
.2 cy sharp sand
.3 cy wood residuals
4.5 lbs treble superphosphate
5 lbs dolmonite limestone (eliminate for acid loving plants)

c. For bed planting, shrubs and groundcover spaces 24 inches or closer, incorporate the following ingredients per 20 sf and incorporate into top 8 inches of existing soils by rototilling or similar method of incorporation.
.2 cy sharp sand
.3 cy organic material
4.5 lbs treble superphosphate
5 lbs dolmonite limestone (eliminate for acid loving plants)

25. The contractor shall dispose of stumps and major roots of all plants to be removed. Any depressions caused by removal operations shall be refilled with fertile, friable soil placed and compacted so as to reestablish proper grade for new planting and/or lawn areas.

26. The contractor shall insure adequate vertical drainage in all plant beds and planters.

27. All disturbed areas on the site not planted with shrubs or ground cover shall be fine graded and seeded or sodded as noted on landscape plan.

28. All sod shall be obtained from areas having growing conditions familiar to areas to be covered. Areas to be sodded shall be raked of stones and debris. Debris and stones over 1 inch in diameter shall be removed from the site. All damaged sod will be rejected. All sod must be placed with staggered joints, tightly butted, with no inequalities in grade. Place all sod in rows at right angles to slopes (where applicable).

29. All planting procedures shall conform to Daft McCune Walker Inc. specifications.

30. Some field located plants are not graphically shown on this plan but are within the limit of construction line. All plants (field located plants and graphically shown plants) are noted on the plant list.

Water Quality Planting Specifications

PART 1 GENERAL

1.01 DESCRIPTION: Work consists of all labor, materials, equipment and services necessary for and incidental to the execution and completion of WETLAND PLANTS as indicated on the Drawings and specified herein.

A. Include:

1. Furnishing of all plant material.

2. Soil preparation, planting operations.

3. Maintenance and guarantee.

1.02 QUALITY ASSURANCE

A. American Association of Nurserymen (A.A.N.): "American Standard for Nursery Stock", (A.N.S.I. Z60.1) as expanded herein.

B. Nomenclature: In accordance with HORTUS III by L. H. Bailey.

C. United States Department of Agriculture: Textural Classification Diagram for Soils.

1.03 STANDARD OF COMPARISON

A. When the Drawings indicate a total quantity of five (5) or more of an individual plant (other than bulbs or perennials) the Contractor shall obtain approval of a standard of comparison prior to delivery on site. Assemble samples of all plants to be evaluated as "standards" at the principal business location of the Contractor. Notify Owner to schedule an inspection for approval of "standards" and to obtain record photographs. Photographs of each "standard" shall be used for comparison of all material subsequently installed on the site.

1.04 SUBMITTALS

A. Source: Notify the Owner, in writing, of source of all material before delivery.

1.05 DELIVERY, STORAGE AND HANDLING

A. Root stock of the plant material shall be kept moist during transport from the source to the job site and until planted.

B. Transport and handle plants so that foliage, roots, or balls are protected from breakage, sun and winds. Tops or roots of plants allowed to dry out or which have been damaged or disturbed root balls will be cause for rejection.

1.06 DRAWINGS

A. The Contractor shall use quantities of wetland plants noted on the plant list.

1.07 PROJECT CONDITIONS

A. Planting shall commence following approval of the as-built certification of the subject water quality facility.

B. All emergent wetland plantings shall be installed between April 15 and June 30 or as directed by the Landscape Architect. Do not plant when ground is frozen. Do not use frozen planting soil at any time.

1.08 DEFINITIONS

A. Start of Planting: Installation of plant material into excavated pits or beds.

B. Payment Release Inspection: Conducted monthly by the Owner or designated representative to verify quantity only for partial payment to the Contractor. Payment release inspection does not waive any requirements of the standard of comparison or initial acceptance clause.

C. Initial Inspection: Conducted at the request of the Contractor and the Owner when 90% or more of all planting and related tasks are complete.

D. Initial Acceptance: Occurs when all plant material is in place in accordance with the specifications and approved by the Owner.

E. Maintenance Period: From start of planting to final acceptance.

F. Guarantee Period: From initial acceptance and continuing for 90 days thereafter, excluding the period from November 1 to April 15.

G. Final Acceptance: Occurs after Contractor has completed all outstanding items, as determined by the Owner, at the end of the maintenance and guarantee period.

1.09 GUARANTEE AND REPLACEMENT

A. All plants in an impaired, dead or dying condition prior to initial acceptance and prior to final acceptance shall be removed and replaced. Replacement materials shall be the same size as other unreplaced material considering growth that has occurred since original installation. Methods of installation shall be identical to the original. The contractor shall guarantee 85% survivorship at the end of the guarantee period.

B. Replacements shall be made between April 15 and June 30, the season following the initial planting, and shall conform to the planting specifications listed above.

C. The contractor shall notify the Landscape Architect to arrange a site meeting to determine the replacement requirements, at the end of the guarantee period.

PART 2 PRODUCTS

2.01 PLANTS

A. Sound, healthy, vigorous, free from plant diseases, insect pests or their eggs.

B. Plants cut back from larger sizes or pruned prior to delivery will not be accepted.

C. It is anticipated that these plants will need to be obtained from a nursery source. These plant species are normally unavailable from standard landscape nursery sources.

D. Shape and Form: Plant materials shall be symmetrical and typical for the variety and species.

E. Container: The soil/root masses shall be thoroughly moist upon delivery to the job site. Any dry and light weight plants shall be rejected. If not planted immediately after being delivered to the job site, the plants shall be stored out of direct exposure to the sun and wind and their root masses maintained moist, through periodic watering, until the time of planting.

Until the removal of the plants from the containers, the soil/root masses shall be the size of the specified

soil exists on the bottom of the containers, the plants will be rejected since they have not been grown sufficiently long in the containers to root into the soils contained therein.

The plants shall appear healthy with no leaf spots, leaf damage, leaf discolorations, leaf wilting, or evidence of insects on the leaves.

The container size shall be at least as large as indicated in the specifications or shown in the plant tables/lists. Plants shall not be rejected if supplied in containers larger than specified.

F. Fiber or Peat Pot: If not planted immediately after being delivered to the job site, the plants shall be stored out of direct exposure to the sun and wind and their pots and associated root masses maintained moist, through periodic watering, until the time of planting.

The plants shall be well-rooted through the sides and bottoms of the pots and firmly contained therein.

Should the plants be removed from the pots by holding them from their tops and gently pulling on the pots, the plants shall be rejected.

If growing, the plants shall appear healthy with no foliar spots, discolorations, wilting, or other evidence of the presence of disease or insects.

Plants shall not be rejected if supplied in pots larger than specified.

The number of plants, stems, or culms per pot as specified or shown in the plant tables/lists at least shall be present, on the average, or the plants shall be rejected.

G. Dormant Propagule (Herbaceous): If not planted immediately after being delivered to the job site, the dormant propagules shall be stored out of the direct exposure to the sun and wind, and they shall be protected by covering with straw, peat moss, compost, or other suitable materials and shall be maintained moist, through periodic watering, until the time of planting.

The bodies and shoots associated with the propagules shall have turgor or be rigid to the touch. If the bodies and/or shoots associated with the propagules are soft or mushy or appear rotten or decomposed, the plant materials shall be rejected.

Rhizome (stolon) sections shall provide a minimum of two shoots per section or Rhizome (stolon) sections containing at least a terminal shoot shall be a minimum of four inches in length (in order to ensure sufficient stored energy to support the new growth). Rhizome sections containing shoots that are soft or mushy or otherwise appear rotten shall not be accepted.

Suckers shall contain a terminal shoot and be a minimum of four inches in length (in order to ensure sufficient stored energy to support the new growth).

Growing Bare Root Plant (Herbaceous): The plants shall contain new roots that are clean and white in coloration.

If not planted immediately after delivery to the job site, the plants shall be stored out of direct exposure to the sun and wind and the new roots shall be protected by the use of straw, peat moss, compost, or other suitable materials and shall be maintained moist, through periodic watering, until the time of planting.

The plants shall appear healthy with no foliar spots, discolorations, wilting, or other evidence of the presence of disease or of insects.

2.02 FERTILIZER

A. Plant Fertilizer: Slow release fertilizer such as Osmocote 19-6-12 analysis (3-4 month release) or equal approved by the Landscape Architect.

B. Slow release fertilizer shall be applied at the time of planting and at the following rate:

All emergent plant material - planting pit application of 1 oz. per container or bare root plant.

C. Pesticides, herbicides and fungicides will not be used unless judged necessary by the wetland landscaper. If applied, quantities recommended by the Department of Agriculture shall not be exceeded.

D. Fertilizer shall be delivered to the site in the original unopened containers with formulas attached.

3.01 PREPARATION

A. Plant Locations: As shown on the Drawings, to dimensions if shown, to scale if not dimensioned. Locations subject to review by the Landscape Architect before starting excavation.

B. No plant material shall be installed until the Landscape Architect has approved the finish grade of the planted areas.

3.02 PLANTING PROCEDURES

A. Set plants straight and plumb.

B. Plant material shall be planted in existing soil with each planting pit excavated to size sufficient to contain the entire root stock or root mass without cramping.

C. Where water is not available on-site, the Contractor shall furnish sufficient quantities to complete the Work at no additional cost to the Owner.

3.04 CLEAN-UP

A. During planting operations, excess and waste materials shall be removed from the site on a daily basis.

B. Repair turf areas and other existing conditions damaged during planting operations, including regrading, seed, mulch and fertilization to the satisfaction of the Owner.

3.05 MAINTENANCE

A. Watering of plant material shall take place at the end of each for fourteen (14) consecutive days after planting has been completed. The watering shall completely saturate the soil and partially immerse the plant material.

B. During maintenance period, on approximately the 1st and 15th of each month, the Contractor shall provide sufficient supervision, equipment, materials and manpower to:

1. Keep all plants in a healthy growing condition by watering, when necessary, removing dead or dying branches, controlling insect infestations, removing sprouts, weeding.

2. Remove and replace dead or damaged plant material. Where replacement is not possible due to season, remove dead material, etc. and level pit until planting is possible.

3. Notify Owner for review of activities prior to initiating maintenance operations each month.

General Planting Notes

1. All plant material to meet A.A.N. Standards.
2. Landscape Contractor to follow landscape specification guidelines for Baltimore Washington Metro area approved by LCAMW.
3. No substitutions to be made without consent of Landscape Architect or Owner.
4. All beds to be topped with three inches of hardwood mulch.
5. Landscape Contractor to verify location of utilities with Owner before planting.
6. Landscape Architect/Owner shall select, verify and/or approve all plant material. At Owner's discretion, specimen and other plant material will be selected.
7. Landscape Contractor shall coordinate plant bed filling operations and plant material installation with General Contractor and Utilities Contractor. At the time of final inspection with acceptance, all electric, water, drainage, and fountain utilities, as well as all plant materials, shall remain undamaged. Likewise, Landscape Contractor and Utilities Contractor shall coordinate efforts to ensure that surface utilities are at the proper elevation relative to final grades.
8. Contractor shall notify Miss Utility 72 hours prior to construction.
9. The owner, tenant, and/or their agents shall be responsible for maintenance of the required landscaping, including both plant materials and berms, fences and walls. All plant materials shall be maintained in good growing condition, and when necessary, replaced with new materials to ensure continued compliance with applicable regulations. All other required landscaping shall be permanently maintained in good condition, and when necessary, repaired or replaced.
10. This plan has been prepared in accordance with the provisions of Section 16.124 of the Ho. Co. code. Financial surety for the required landscaping in the amount of $43,350 must be posted as part of the developer's agreement. (104 shade, 81 evergreens).
11. Developer's/Builder's Certificate

I/we certify that the landscaping shown on this plan will be done according to the plan, Section 16.124 of the Howard County code and the Howard County Landscape Manual. I/we further certify that upon completion, a certification of landscape installation, accompanied by an executed one-year guarantee of plant materials, will be submitted to the Department of Planning and Zoning.

NAME: _______ DATE 3/23/04

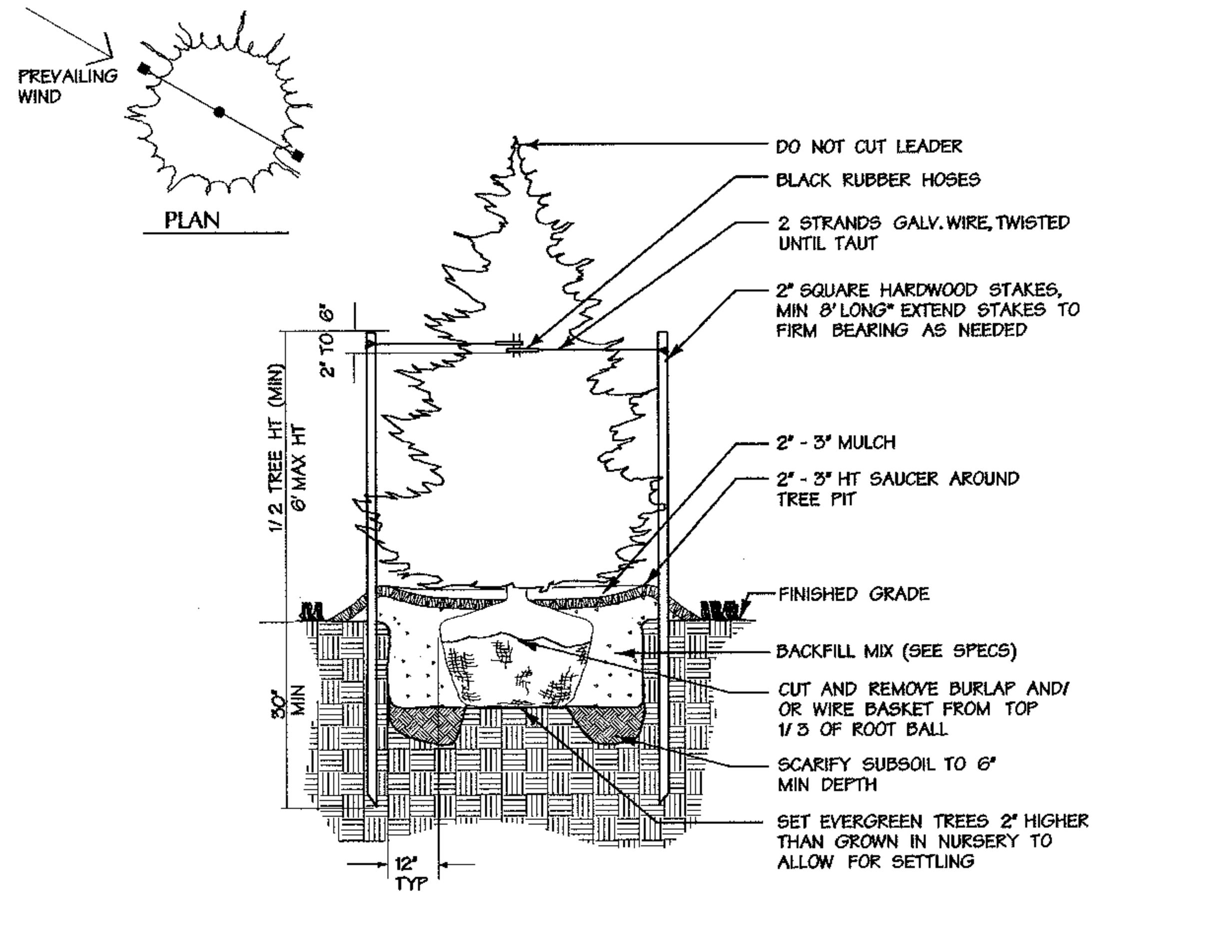

Evergreen Tree Planting
Not To Scale

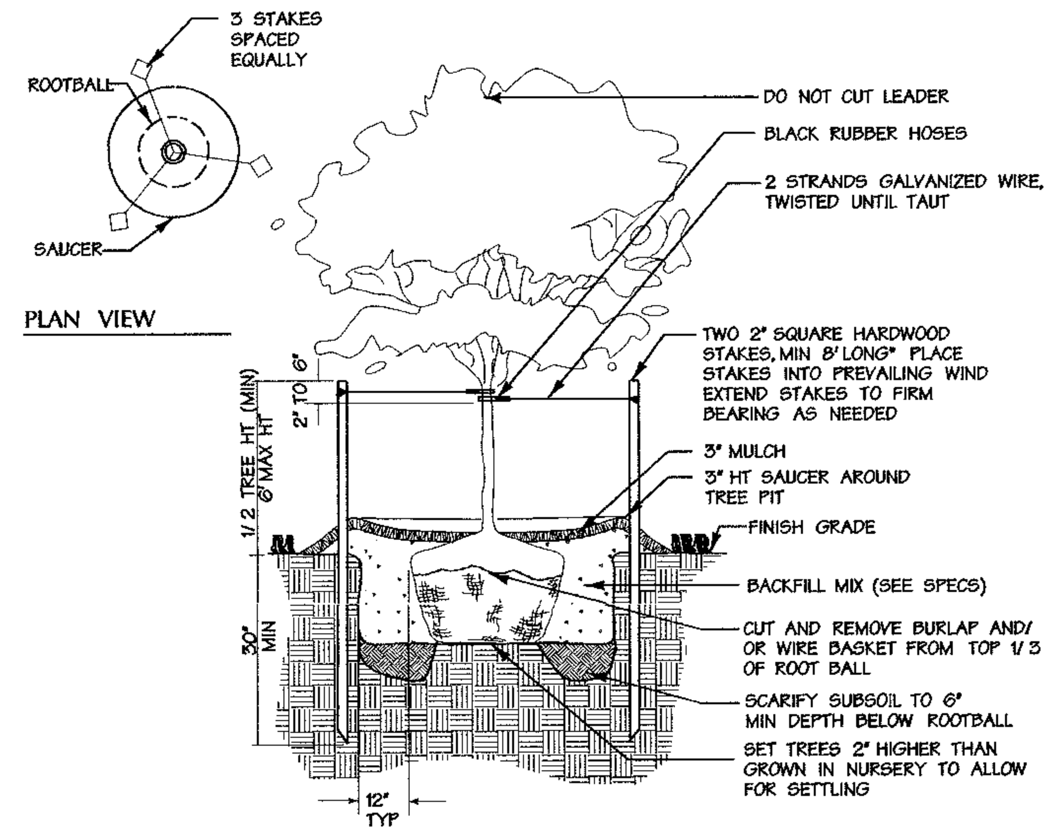

Less Than 3" Cal. Tree Planting
Not To Scale

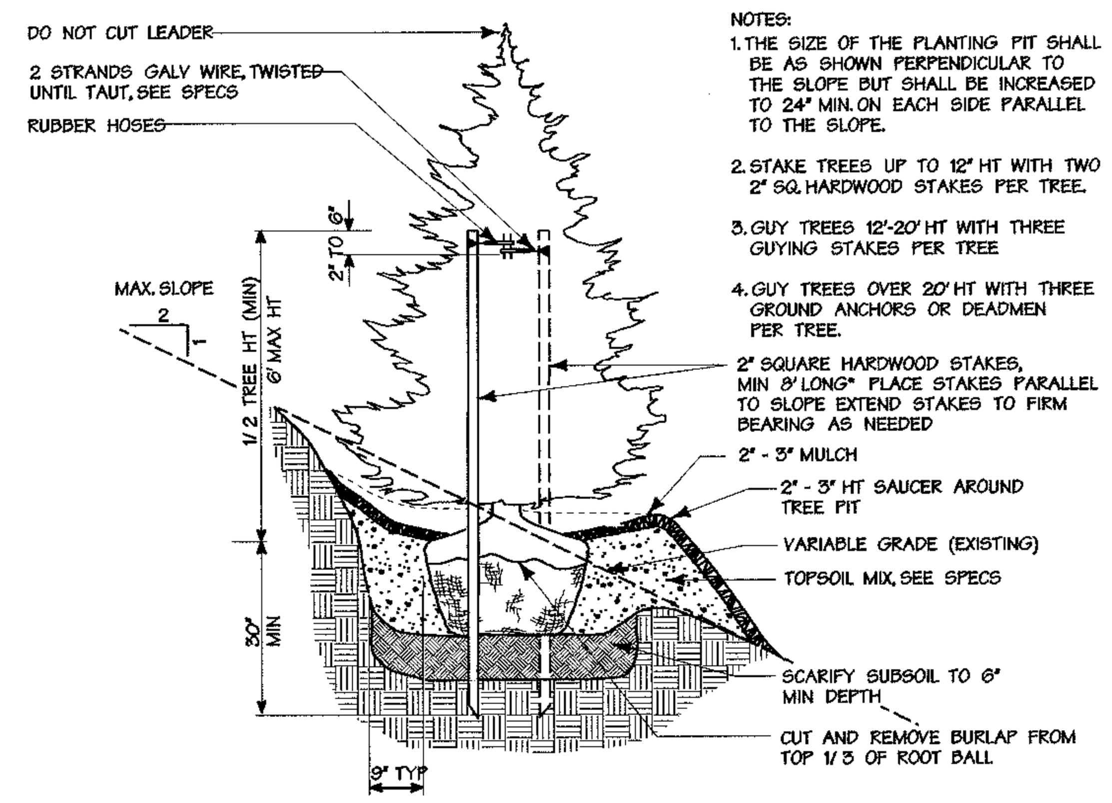

NOTES:
1. THE SIZE OF THE PLANTING PIT SHALL BE AS SHOWN PERPENDICULAR TO THE SLOPE BUT SHALL BE INCREASED TO 24" MIN. ON EACH SIDE PARALLEL TO THE SLOPE.
2. STAKE TREES UP TO 12' HT WITH TWO 2" SQ. HARDWOOD STAKES PER TREE.
3. GUY TREES 12'-20' HT WITH THREE GUYING STAKES PER TREE
4. GUY TREES OVER 20' HT WITH THREE GROUND ANCHORS OR DEADMEN PER TREE.

Evergreen Tree Planting on Slope
Not To Scale

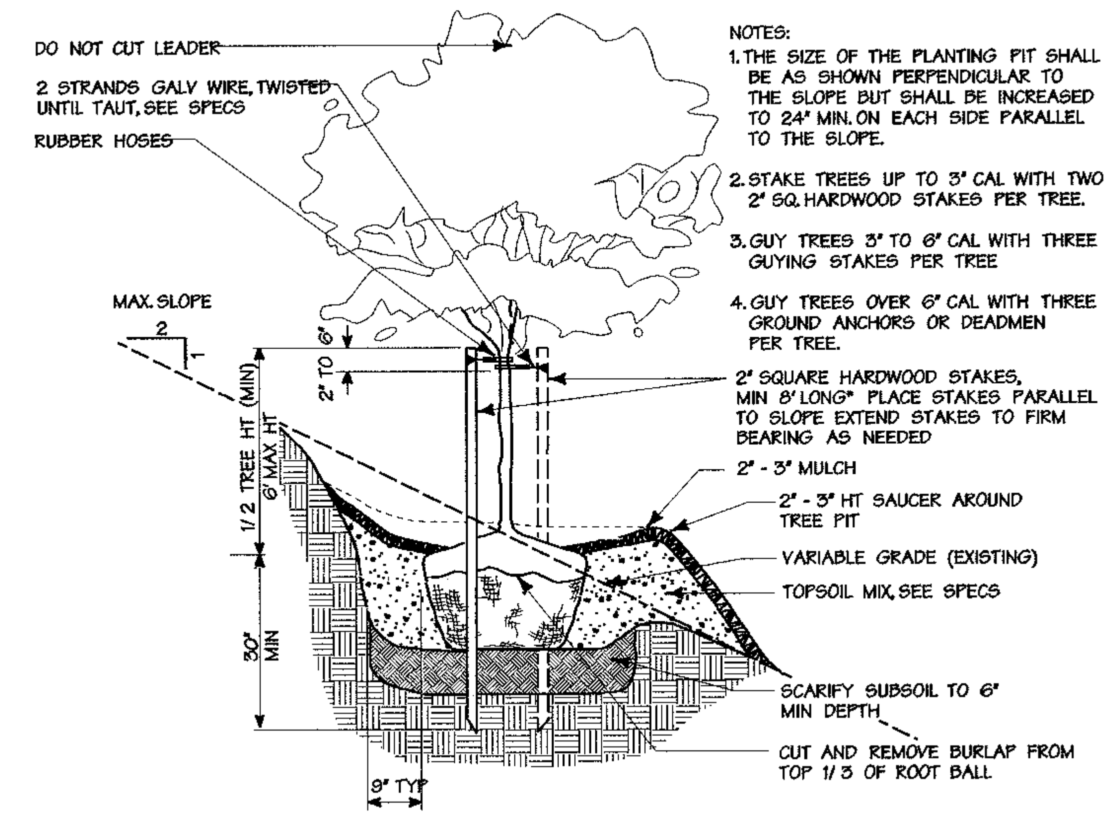

NOTES:
1. THE SIZE OF THE PLANTING PIT SHALL BE AS SHOWN PERPENDICULAR TO THE SLOPE BUT SHALL BE INCREASED TO 24" MIN. ON EACH SIDE PARALLEL TO THE SLOPE.
2. STAKE TREES UP TO 3" CAL WITH TWO 2" SQ. HARDWOOD STAKES PER TREE.
3. GUY TREES 3" TO 6" CAL WITH THREE GUYING STAKES PER TREE
4. GUY TREES OVER 6" CAL WITH THREE GROUND ANCHORS OR DEADMEN PER TREE.

Tree Planting on Slope
Not To Scale

DATA SOURCES:
BOUNDARY PER DMW FIELD SURVEY DATED DECEMBER 2001.
TOPO FLOWN BY VIRGINIA RESOURCE MAPPING, DECEMBER, 2001.
APPROX. WETLAND LOCATION PER DMW FIELD VISIT DATED APRIL 2000. OFF SITE SEPTIC RESERVE AREAS PER RECORD PLATS, LOCATIONS OF WELLS NOT AVAILABLE.

APPROVED: HOWARD COUNTY DEPARTMENT OF PUBLIC WORKS

CHIEF, BUREAU OF HIGHWAYS — DATE 4-13-04

APPROVED: HOWARD COUNTY DEPT. OF PLANNING & ZONING

CHIEF, DEVELOPMENT ENGINEERING DIVISION — DATE 4/28/04

CHIEF, DIVISION OF LAND DEVELOPMENT — DATE 4/29/04

~~DIRECTOR~~ — ~~DATE~~

Date	No.	Revision Description

OWNER: NORTHRIDGE DEVELOPMENT. LLC
14045 GARED DRIVE
GLENWOOD, MD 21738

DEVELOPER: JAMES F. SELFRIDGE BUILDERS, INC.
14045 GARED DRIVE
GLENWOOD, MD 21738

DMW
Daft·McCune·Walker, Inc.
200 East Pennsylvania Avenue
Towson, Maryland 21286
(410) 296-3333
Fax 296-4705

A Team of Land Planners, Landscape Architects, Engineers, Surveyors & Environmental Professionals

SUBDIVISION NAME	SECTION/AREA	LOT/PARCEL
FOX MEADOW	1	167

PLAT OR L/F	BLOCK	ZONE	TAX/ZONE MAP	ELECT. DISTRICT	CENSUS TRACT
5983/492	13, 19, 20	RR, RC	15	3	

TITLE FOX MEADOW
(FORMERLY PFEFFERKORN PROPERTY)
LANDSCAPE NOTES & DETAILS

Des By	BKC	Scale NONE	Proj. No. 00042.B
Drn By	BKC	Date 1/07/04	24 OF 24
Chk By	MM	Approved	

3 · 25 · 04
Date

Landscape Architect No.

Mon Mar 22 15:34:45 2004 r:\00042\00042f.lp3 F·03·45

3/22/2004 3:33:40 PM \\ATHENS\MSTATION\CADNET\NOCF\dmy-gcf crizzi c:\hpm\00042f.hpm

SBARRA MARK G
MONTGOMERY CATHLEEN A JT
3332/ 406
P.168.5
ZONE: RR-DEO

CURVE DATA					
CURVE NO.	DELTA	RADIUS	LENGTH	TANGENT	CHORD
①	14°07'10"	280.00'	69.00'	34.68'	S 86°43'11" E 68.83'
②	29°13'16"	200.00'	102.00'	52.13'	S 79°10'08" E 100.90'
③	26°59'49"	295.00'	139.00'	70.81'	S 78°03'26" E 137.72'
④	26°01'06"	40.00'	181.53'	1.00'	S 38°27'13" W 61.28'
⑤	80°01'06"	35.00'	48.88'	29.38'	N 51°32'47" W 45.00'

NOTE:
SEE LANDSCAPE PLAN SHEET 17 FOR STREET TREES.

NOTE:
FOX STREAM WAY TO BE CONSTRUCTED PER THE TYPICAL SECTION (OPEN SECTION). THE CUL DE SAC WILL BE CLOSED SECTION (STD. CURB AND GUTTER).

APPROVED: HOWARD COUNTY DEPARTMENT OF PUBLIC WORKS

CHIEF, BUREAU OF HIGHWAYS — DATE 4-12-04

APPROVED: HOWARD COUNTY DEPT. OF PLANNING & ZONING

CHIEF, DEVELOPMENT ENGINEERING DIVISION — DATE 4/20/04

CHIEF, DIVISION OF LAND DEVELOPMENT — DATE 4/21/04

Date	No.	Revision Description
6-11-04	⚠	REVISED LOT NUMBERS

OWNER: NORTHRIDGE DEVELOPMENT, LLC
14045 GARED DRIVE
GLENWOOD, MD 21738

DEVELOPER: JAMES F. SELFRIDGE BUILDERS, INC.
14045 GARED DRIVE
GLENWOOD, MD 21738

DMW
Daft-McCune-Walker, Inc.
200 East Pennsylvania Avenue
Towson, Maryland 21286
(410) 296-3333
Fax 296-4705

A Team of Land Planners, Landscape Architects, Engineers, Surveyors & Environmental Professionals

3-25-04
Date

Professional Engr. No. 10557

SUBDIVISION NAME: FOX MEADOW		ELECTION AREA 1	COORD(E): 167
PLAT OR L/F 5393/492	BLOCK 13, 19, 20	ZONE RR-DEO	ZONING MAP 15
ELECT. DISTRICT 3	CENSUS TRACT		

TITLE
FOX MEADOW
(FORMERLY PFEFFERKORN PROPERTY)
Final Road Plan and Profile
Fox Stream Way

Des By DFM	Scale 1"=50'	Proj. No. 00042.B	
Drn By WDE	Date 1/7/04	2 OF 24	
Chk By	Approved		

OLD ROVER ROAD
LOCAL ROAD

PFEFFERKORN ROAD
LOCAL ROAD - SCENIC

FOX STREAM WAY
LOCAL ROAD

SEE SHEETS 3 & 4 OF 24 FOR TRAFFIC CIRCLE DETAIL AND ADDITIONAL SIGNAGE

PROPOSED STANDING PAD (15' X 20' X 4" (MIN.) CONCRETE)

℄ SWALE TO BE STABILIZED WITH EROSION CONTROL MATTING (SEE GRADING PLAN)

REVERSE SLOPE MODIFIED MOUNTABLE CURB & GUTTER

PROPOSED 10' PUBLIC TREE MAINTENANCE EASEMENT

10' PUBLIC TREE MAINTENANCE EASEMENT

PIO PRESERVATION PARCEL A

PIO PRESERVATION PARCEL B

RESURFACING

STA. 6+96.9 17' L.T.

STA. 1+55.94 L.P.

BEGIN CURB & GUTTER NOSE DOWN CURB

END CURB & GUTTER NOSE DOWN CURB

PROP. STD. CURB & GUTTER

PUBLIC STORM DRAIN & UTILITY EASEMENT

1.137 AC.

N 591,237.31
E 1,315,324.30

OPEN SPACE

SEE SHEET 10 FOR CONTINUATION OF STORM DRAIN

SRA

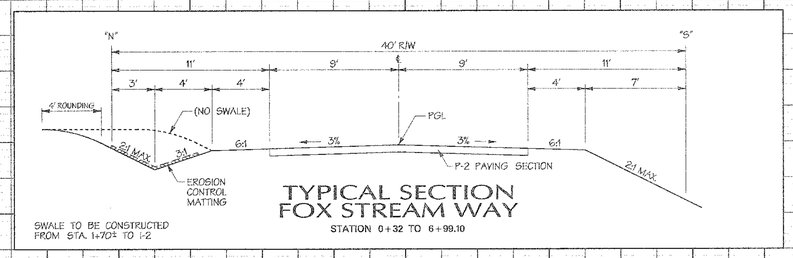

TYPICAL SECTION
FOX STREAM WAY
STATION 0+32 TO 6+99.10

SWALE TO BE CONSTRUCTED FROM STA. 1+70± TO 1-2

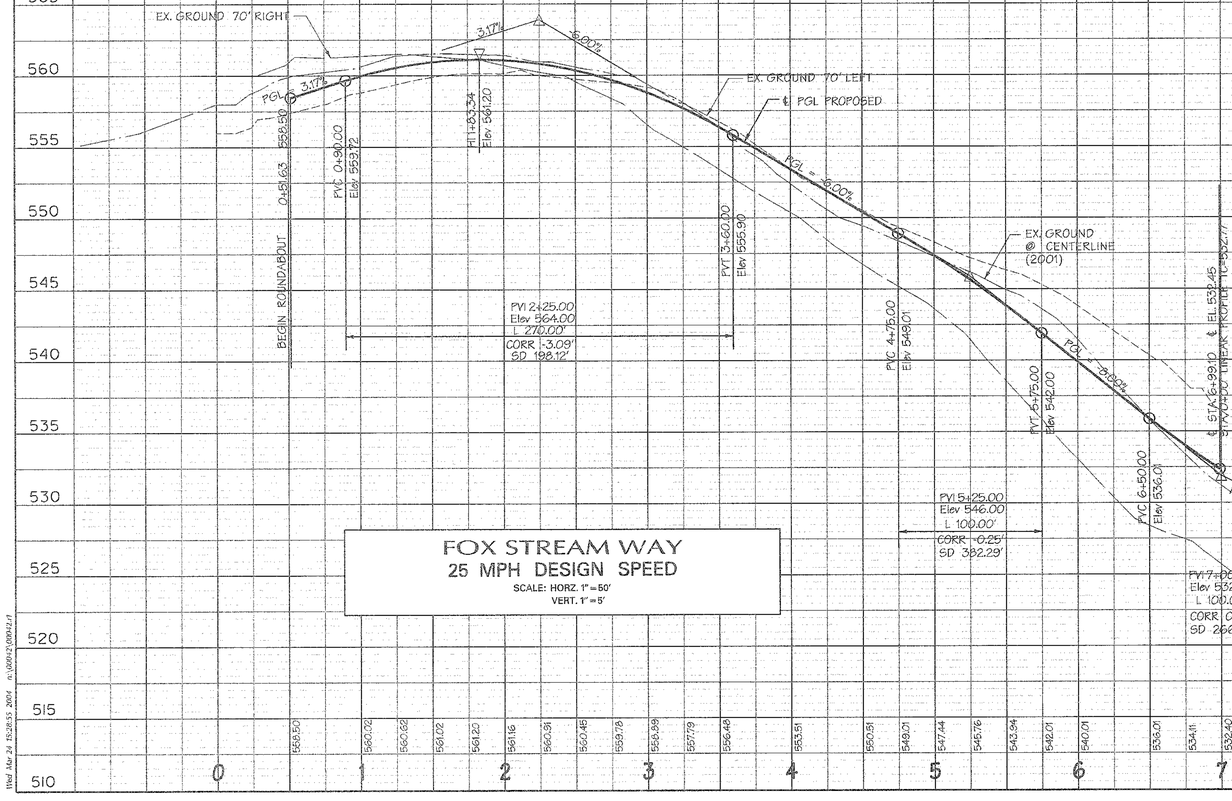

FOX STREAM WAY
25 MPH DESIGN SPEED
SCALE: HORZ. 1" = 50'
VERT. 1" = 5'

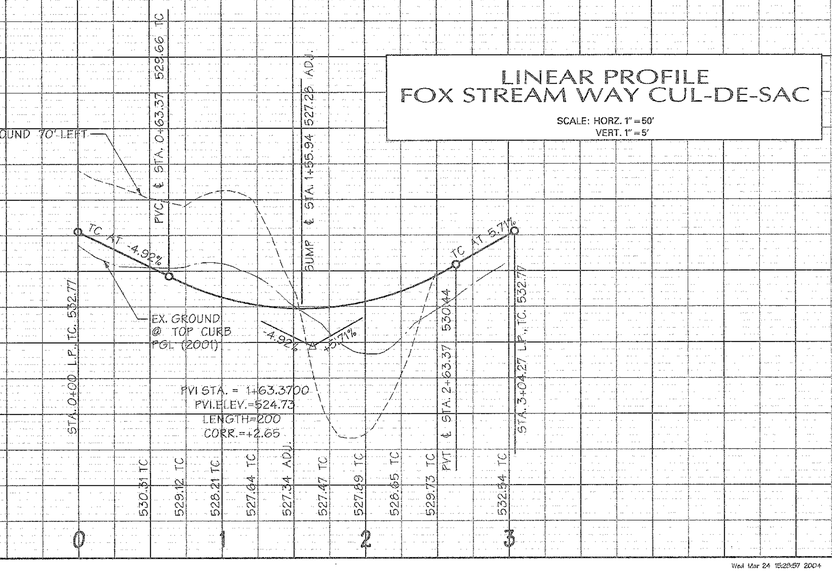

LINEAR PROFILE
FOX STREAM WAY CUL-DE-SAC
SCALE: HORZ. 1" = 50'
VERT. 1" = 5'

Wed Mar 24 15:28:55 2004 m:\00042\00042.r1

Wed Mar 24 15:28:59 2004 m\00042\00042.r1

F-03.45

3/24/2004 3:28:52 PM \\ATHENS\STATION\CADNET\NGCF\daygcf cr1221 c:\hpm\000042.hpm

F-03.45

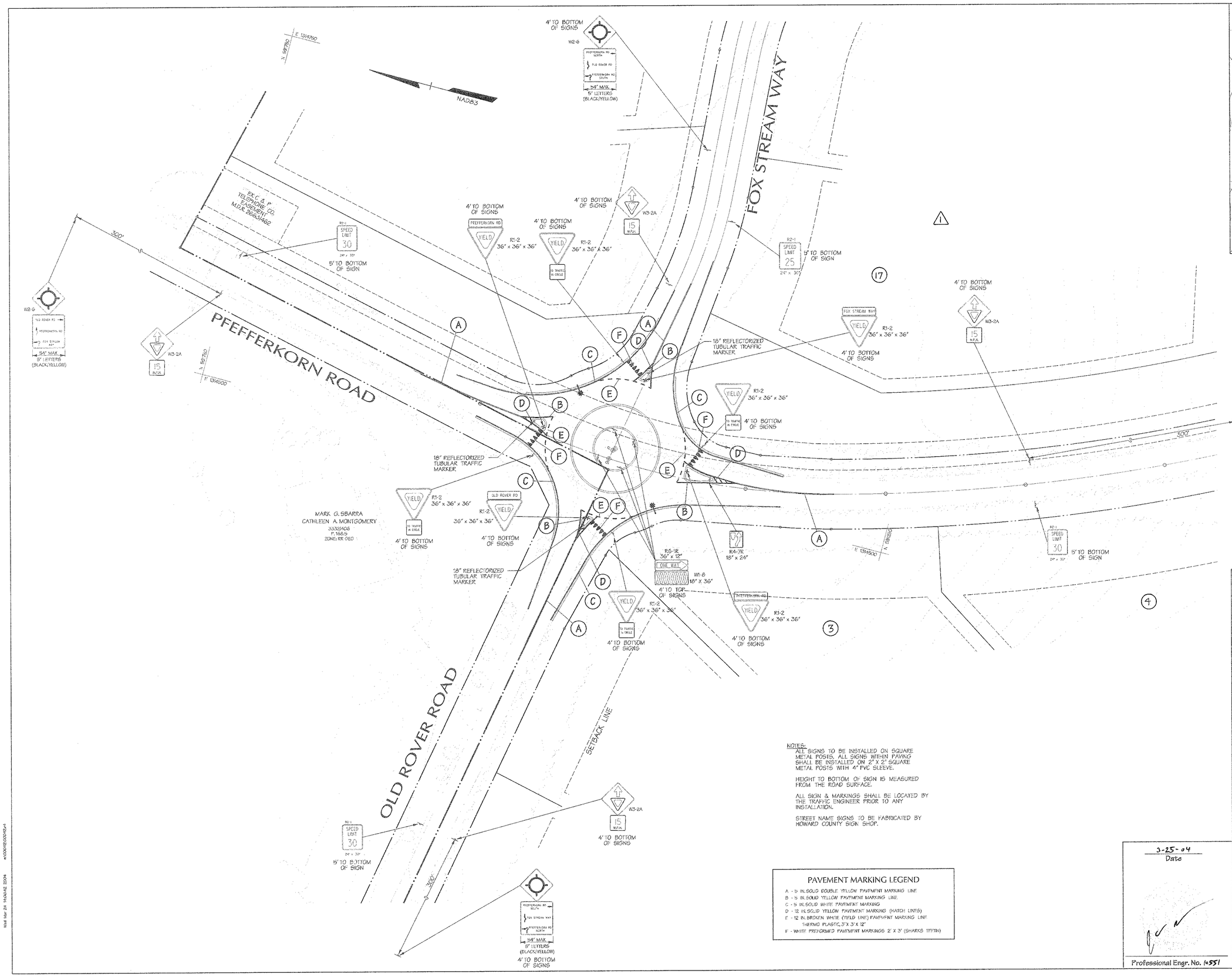

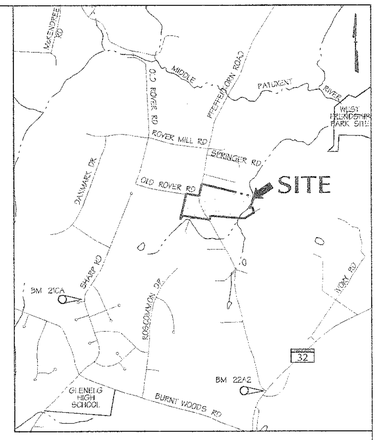

VICINITY MAP
SCALE: 1" = 2,000'

NOTES:
ALL SIGNS TO BE INSTALLED ON SQUARE METAL POSTS. ALL SIGNS WITHIN PAVING SHALL BE INSTALLED ON 2" X 2" SQUARE METAL POSTS WITH 4" PVC SLEEVE.

HEIGHT TO BOTTOM OF SIGN IS MEASURED FROM THE ROAD SURFACE.

ALL SIGN & MARKINGS SHALL BE LOCATED BY THE TRAFFIC ENGINEER PRIOR TO ANY INSTALLATION.

STREET NAME SIGNS TO BE FABRICATED BY HOWARD COUNTY SIGN SHOP.

PAVEMENT MARKING LEGEND

A - 5 IN. SOLID DOUBLE YELLOW PAVEMENT MARKING LINE
B - 5 IN. SOLID YELLOW PAVEMENT MARKING LINE
C - 5 IN. SOLID WHITE PAVEMENT MARKING
D - 12 IN. SOLID YELLOW PAVEMENT MARKING (HATCH LINES)
E - 12 IN. BROKEN WHITE (YIELD LINE) PAVEMENT MARKING LINE THERMO PLASTIC, 3' X 3' X 12"
F - WHITE PREFORMED PAVEMENT MARKINGS 2' X 3' (SHARKS TEETH)

DATA SOURCES:
BOUNDARY PER DMW FIELD SURVEY DATED DECEMBER 2001.
TOPO FLOWN BY VIRGINIA RESOURCE MAPPING, DECEMBER, 2001.
APPROX. WETLAND LOCATION PER DMW FIELD VISIT DATED APRIL 2000. OFF SITE SEPTIC RESERVE AREAS PER RECORD PLATS, LOCATIONS OF WELLS NOT AVAILABLE.

APPROVED: HOWARD COUNTY DEPARTMENT OF PUBLIC WORKS
CHIEF, BUREAU OF HIGHWAYS — DATE 4-13-04

APPROVED: HOWARD COUNTY DEPT. OF PLANNING & ZONING
CHIEF, DEVELOPMENT ENGINEERING DIVISION — DATE 4/28/04
CHIEF, DIVISION OF LAND DEVELOPMENT — DATE 4/29/04

Date	No.	Revision Description
6-11-04	1	REVISED LOT NUMBERS

OWNER: NORTHRIDGE DEVELOPMENT, LLC
14045 GARED DRIVE
GLENWOOD, MD 21738

DEVELOPER: JAMES F. SELFRIDGE BUILDERS, INC.
14045 GARED DRIVE
GLENWOOD, MD 21738

3-25-04
Date

Professional Engr. No. 10551

DMW
Daft-McCune-Walker, Inc.
200 East Pennsylvania Avenue
Towson, Maryland 21286
(410) 296-3333
Fax 296-4705

A Team of Land Planners, Landscape Architects, Engineers, Surveyors & Environmental Professionals

SUBDIVISION NAME			SECTION/AREA		TOTAL PARCEL #
FOX MEADOW			1		167
PLATE OR TYP	BLOCK #	ZONE	TAX/ZONE MAP	EFFECT DISTRICT	CENSUS TRACT
5983/492	13, 19, 20	RR, RC	15	3	

TITLE
FOX MEADOW
(FORMERLY PFEFFERKORN PROPERTY)
ROAD SIGNAGE AND PAVEMENT MARKING PLAN

Des By PLH	Scale 1"=30'	Proj. No. 00042.B	
Drn By WDE	Date 1/7/04	4 OF 24	
Chk By	Approved		

F.03.45

Wed Mar 24 14:08:42 2004 n:\00042\00042.r4

3/24/2004 2:06:35 PM \\ATHENS\MSTATION\CADNETN\DCF\day.gcf crizzi c:\hpm\00042.hpm

F.03.45

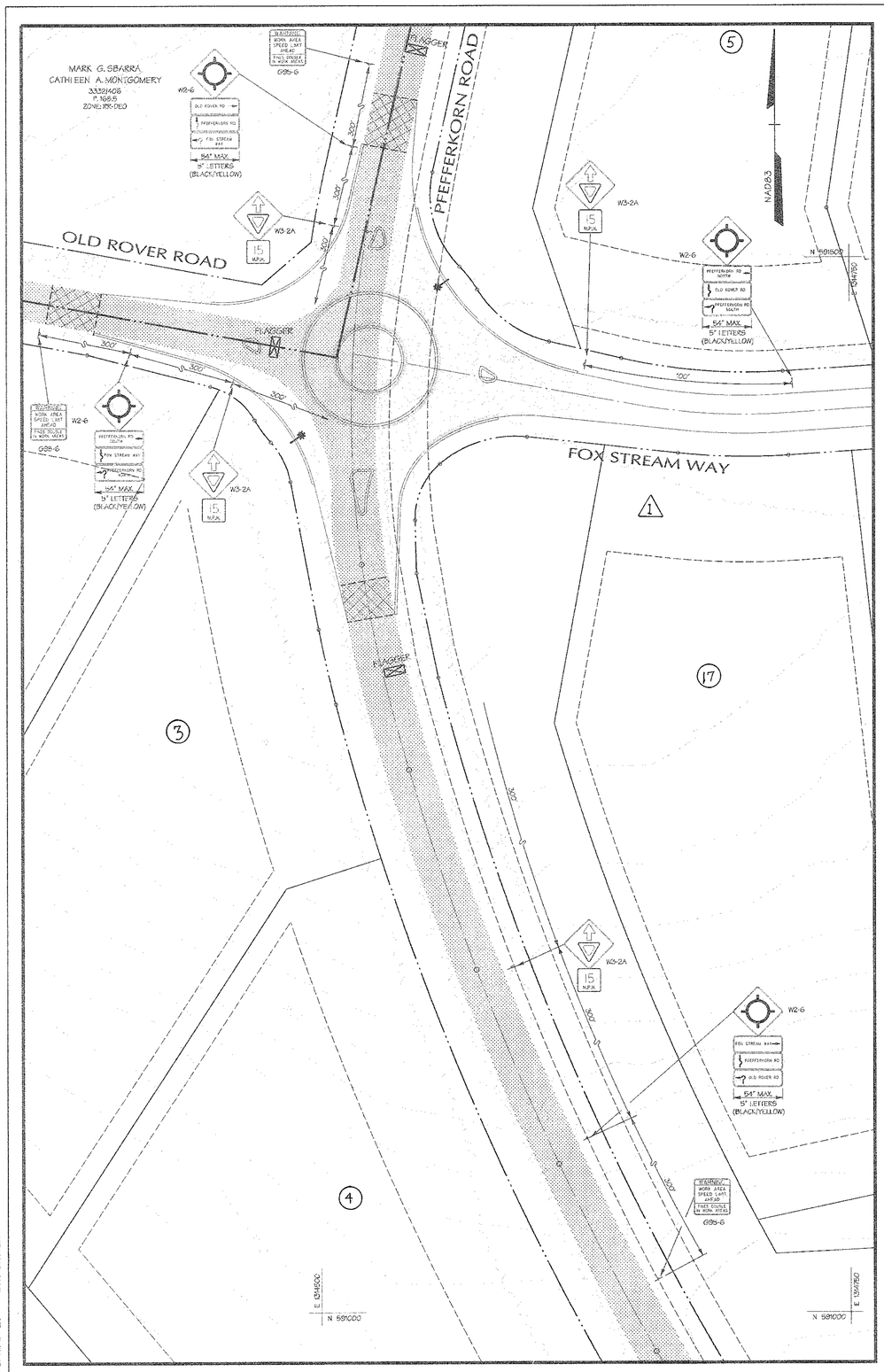

STAGE I

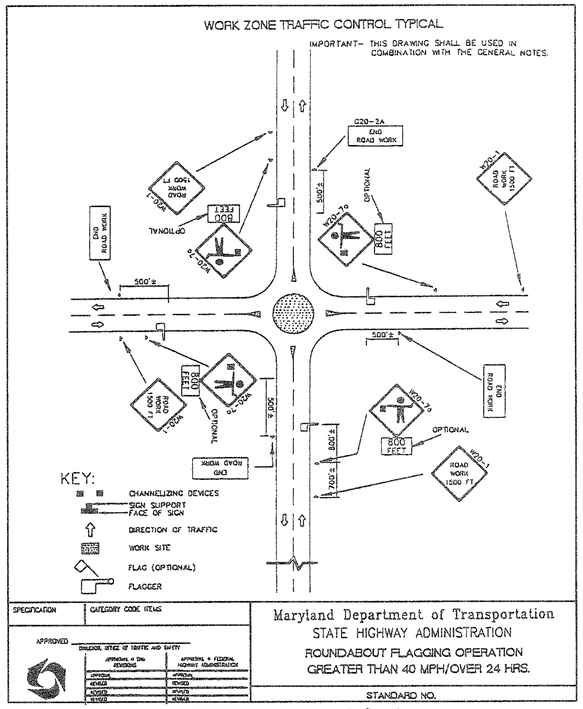

FIGURE 9.2 Work Zone Traffic Control

TRAFFIC CONTROL DURING CONSTRUCTION OF ROUNDABOUT

Construction in 4 stages, during each stage will need 3 flaggers for control of single lane, two way traffic during construction activities. In off hours will need stone, temporary paving, and temporary markings for maintenance of traffic.
During each stage, will need to provide smooth transition from new work to existing paving grade. Will want to place 15 mph limit on approaches during work.

STAGE I:

Construct easterly 1/2± of roundabout (grade, base courses and base for over-run paving in island. Use 3 flaggers to control single lane two way traffic on Pfefferkorn Road and turning movements. Hold barrier curb in center island for construction in stage II.

STAGE II:

Step I:
Install stone base and temporary bituminous paving in Southwest quadrant to maintain a minimum 12' single lane for Old Rover Road to Pfefferkorn Road movements while the Northwest quadrant is being constructed.
Step II:
Construct Northwest quadrant and remainder of center island, all base courses, mountable curbs and the barrier curbs in the island.

STAGE III:

Complete installation of base courses in Southwest quadrant.
Complete installation of over-run paving in island.

STAGE IV:

Finish construction of splitter islands, if not previously finished.
Install final surface course.
Complete installation of all traffic control signs.

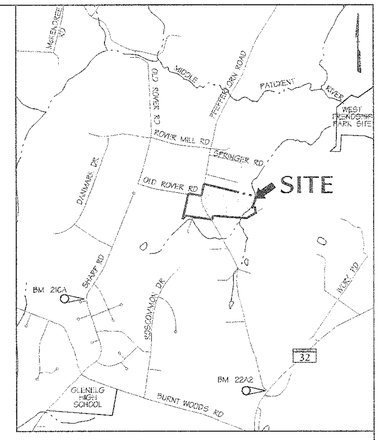

VICINITY MAP

SCALE: 1" = 2,000'

DATA SOURCES:
BOUNDARY PER DMW FIELD SURVEY DATED DECEMBER 2001.
TOPO FLOWN BY VIRGINIA RESOURCE MAPPING, DECEMBER, 2001.
APPROX. WETLAND LOCATION PER DMW FIELD VISIT DATED APRIL 2000. OF SITE SEPTIC RESERVE AREAS PER RECORD PLATS, LOCATIONS OF WELLS NOT AVAILABLE.

APPROVED: HOWARD COUNTY DEPARTMENT OF PUBLIC WORKS

CHIEF, BUREAU OF HIGHWAYS — DATE 4-13-04

APPROVED: HOWARD COUNTY DEPT. OF PLANNING & ZONING

CHIEF, DEVELOPMENT ENGINEERING DIVISION — DATE 4/29/04

CHIEF, DIVISION OF LAND DEVELOPMENT — DATE 4/13/04

~~DIRECTOR~~ — ~~DATE~~

Date	No.	Revision Description
6-11-04	1	REVISED LOT NUMBERS

OWNER: NORTHRIDGE DEVELOPMENT. LLC
14045 GARED DRIVE
GLENWOOD, MD 21738

DEVELOPER: JAMES F. SELFRIDGE BUILDERS, INC.
14045 GARED DRIVE
GLENWOOD, MD 21738

Daft-McCune-Walker, Inc.
200 East Pennsylvania Avenue
Towson, Maryland 21286
(410) 296-3333
Fax 296-4705

A Team of Land Planners, Landscape Architects, Engineers, Surveyors & Environmental Professionals

3-25-04
Date

Professional Engr. No. 15551

SUBDIVISION NAME	SECT/AREA #	LOT/PARCEL #	167
FOX MEADOW			
PLAT OR L/F	LIBER/F.	ZONE	TAX/ZONE MAP	ELEC. DIST.	CENSUS TRACT
5983/462	13, 19, 20	RR-DEO	15	3	

TITLE
FOX MEADOW
(FORMERLY PFEFFERKORN PROPERTY)
MAINTENANCE OF TRAFFIC PLAN

Des By	PLH	Scale 1"=30'	Proj. No. 00042.B
Drn By	WDE	Date 1/7/04	5 OF 24
Chk By		Approved	

F-03-45

Wed Mar 24 14:07:34 2004 n:\00042\00042.mst
3/24/2004 2:07:27 PM \\ATHENS\MSTATION\CADETN\DCF\daygef cr122 c:\hpm\00042.hpm

F-03-45

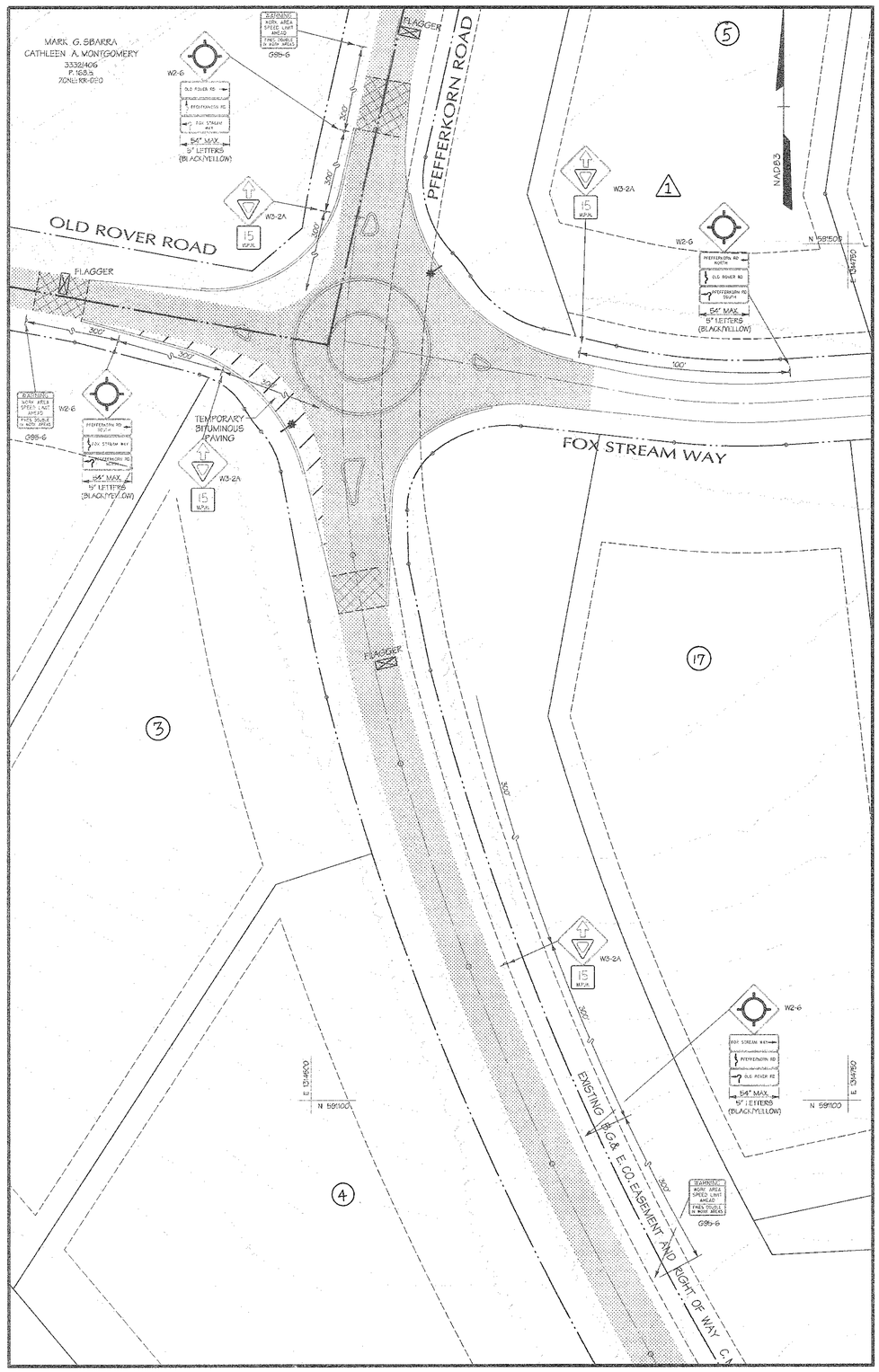

EXISTING PAVING

STAGE II CONSTRUCTION

STAGE II

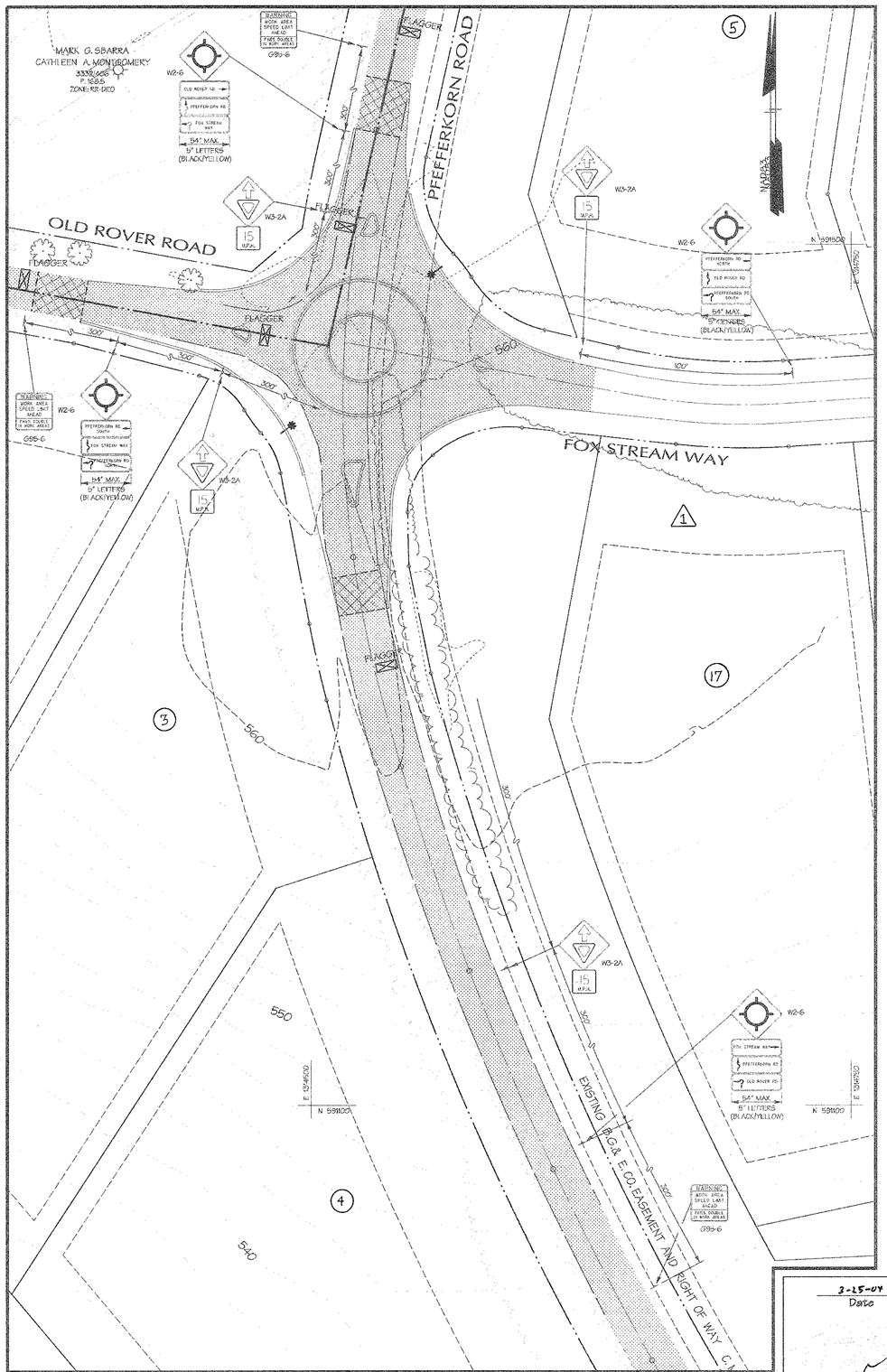

EXISTING PAVING

STAGE III CONSTRUCTION

STAGE III

DATA SOURCES:

BOUNDARY PER DMW FIELD SURVEY DATED DECEMBER 2001.

TOPO FLOWN BY VIRGINIA RESOURCE MAPPING, DECEMBER, 2001.

APPROX. WETLAND LOCATION PER DMW FIELD VISIT DATED APRIL 2000. OFF SITE SEPTIC RESERVE AREAS PER RECORD PLATS, LOCATIONS OF WELLS NOT AVAILABLE.

APPROVED: HOWARD COUNTY DEPARTMENT OF PUBLIC WORKS

CHIEF, BUREAU OF HIGHWAYS — DATE 4-13-04

APPROVED: HOWARD COUNTY DEPT. OF PLANNING & ZONING

CHIEF, DEVELOPMENT ENGINEERING DIVISION — DATE 4/28/04

CHIEF, DIVISION OF LAND DEVELOPMENT — DATE 4/29/04

~~DIRECTOR~~ — ~~DATE~~

Date	No.	Revision Description
6-11-04	1	REVISED LOT NUMBERS

OWNER: NORTHRIDGE DEVELOPMENT, LLC
14045 GARED DRIVE
GLENWOOD, MD 21738

DEVELOPER: JAMES F. SELFRIDGE BUILDERS, INC.
14045 GARED DRIVE
GLENWOOD, MD 21738

DMW
Daft-McCune-Walker, Inc.
200 East Pennsylvania Avenue
Towson, Maryland 21286
(410) 296-3333
Fax 296-4705

A Team of Land Planners, Landscape Architects, Engineers, Surveyors & Environmental Professionals

3-25-04
Date

Professional Engr. No. 11551

SUBDIVISION NAME			DESCRIPTION		LOT/PARCEL
FOX MEADOW			1		167
PLAT OR LIT	BLOCK	ZONE	TAX/ZONE MAP	ELECT. DISTRICT	CENSUS TRACT
5983/492	13, 19, 20	RR, RC	15	3	

TITLE
FOX MEADOW
(FORMERLY PFEFFERKORN PROPERTY)
MAINTENANCE OF TRAFFIC PLAN

Des By	PLH	Scale	1"=30'	Proj. No.	00042.B
Drn By	WDE	Date	1/7/04	6 OF 24	
Chk By		Approved			

F.03.45

Wed Mar 24 14:08:29 2004 m\00042\00042.mt2

3/24/2004 2:08:22 PM \\ATHENS\MSTATION\CADNETN\CCF\day.qcf crizzi c:\hpm\00042.hpm

F.03.45

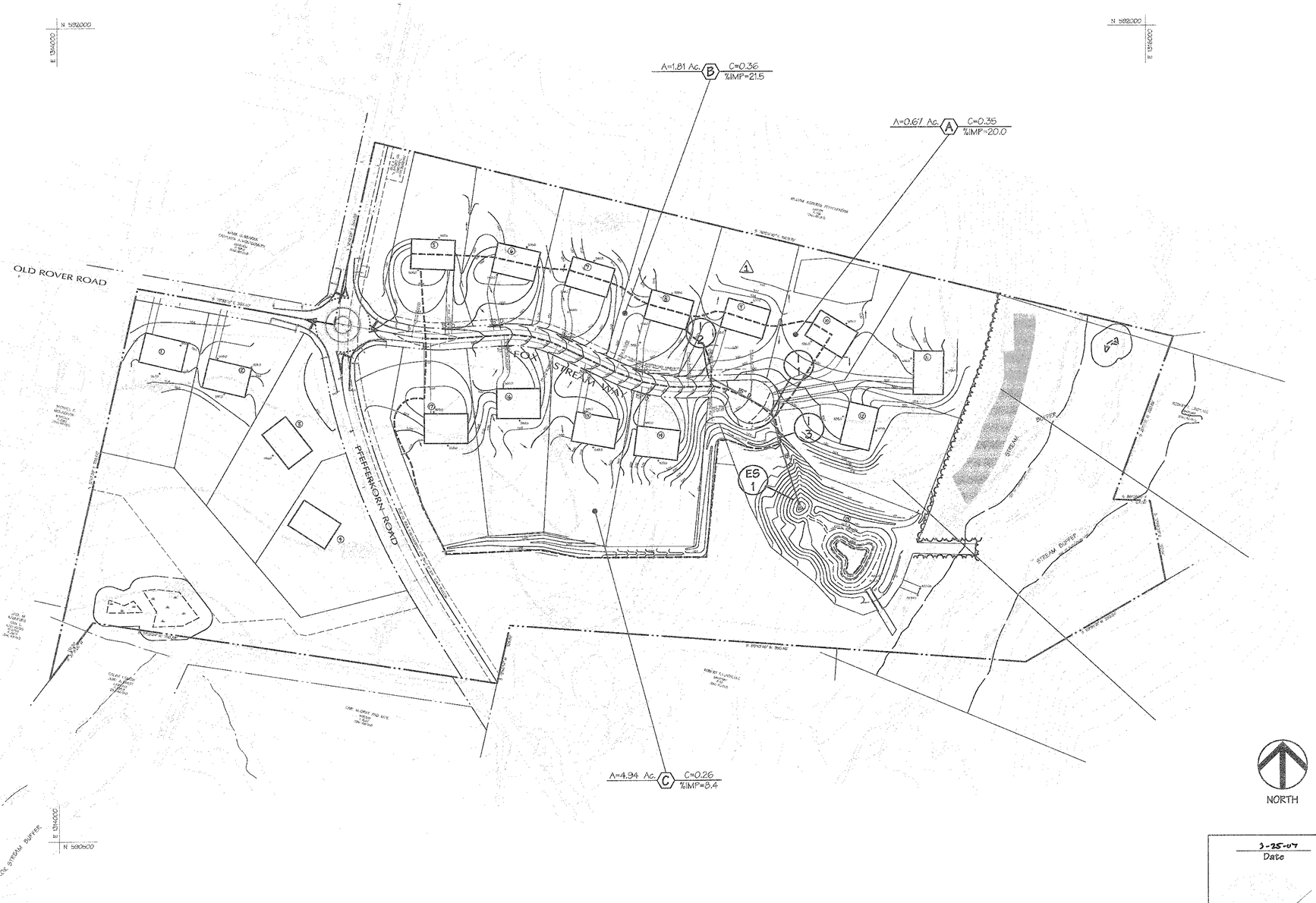

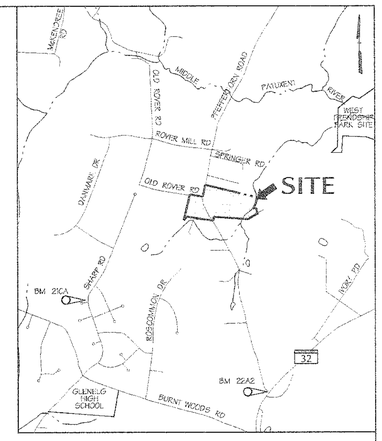

VICINITY MAP

SCALE: 1"=2000'

DATA SOURCES:

BOUNDARY PER DMW FIELD SURVEY DATED DECEMBER 2001.

TOPO FLOWN BY VIRGINIA RESOURCE MAPPING, DECEMBER, 2001.

APPROX. WETLAND LOCATION PER DMW FIELD VISIT DATED APRIL 2000. OFF SITE SEPTIC RESERVE AREAS PER RECORD PLATS, LOCATIONS OF WELLS NOT AVAILABLE.

APPROVED: HOWARD COUNTY DEPARTMENT OF PUBLIC WORKS

William L. Malone Jr. 4-13-04

CHIEF, BUREAU OF HIGHWAYS DATE

APPROVED: HOWARD COUNTY DEPT. OF PLANNING & ZONING

4/28/04

CHIEF, DEVELOPMENT ENGINEERING DIVISION DATE

4/29/04

CHIEF, DIVISION OF LAND DEVELOPMENT JA DATE

~~DIRECTOR~~ ~~DATE~~

Date	No.	Revision Description
6-11-04	1	REVISED LOT NUMBERS

OWNER: NORTHRIDGE DEVELOPMENT, LLC
14045 GARED DRIVE
GLENWOOD, MD 21738

DEVELOPER: JAMES F. SELFRIDGE BUILDERS, INC.
14045 GARED DRIVE
GLENWOOD, MD 21738

DMW

Daft·McCune·Walker, Inc.
200 East Pennsylvania Avenue
Towson, Maryland 21286
(410) 296-3333
Fax 296-4705

A Team of Land Planners, Landscape Architects, Engineers, Surveyors & Environmental Professionals

SUBDIVISION NAME			SECTION/AREA		LOT/PARCEL #
FOX MEADOW					167
PLAT# OR LIT	BLOCK #	ZONE	TAX/ZONE MAP	ELEC. DIST.	CENSUS TRACT
5983/492	13, 19, 20	RR, RC	15	3	

TITLE

FOX MEADOW
(FORMERLY PFEFFERKORN PROPERTY)

Drainage Area Map

Des By LL	Scale 1"=100'	Proj. No. 00042.B	
Drn By LL	Date 1/7/04	7 OF 24	
Chk By	Approved		

3-25-07
Date

Professional Engr. No. 10551

Wed Mar 24 14:20:03 2004 m:\00042\00042.dwg

F.03.45

3/24/2004 2:19:55 PM \\ATHENS\MSTATION\CADNETN\CDF\dwg\cf cr1221 c:\hpm\00042.hpm

F.03.45

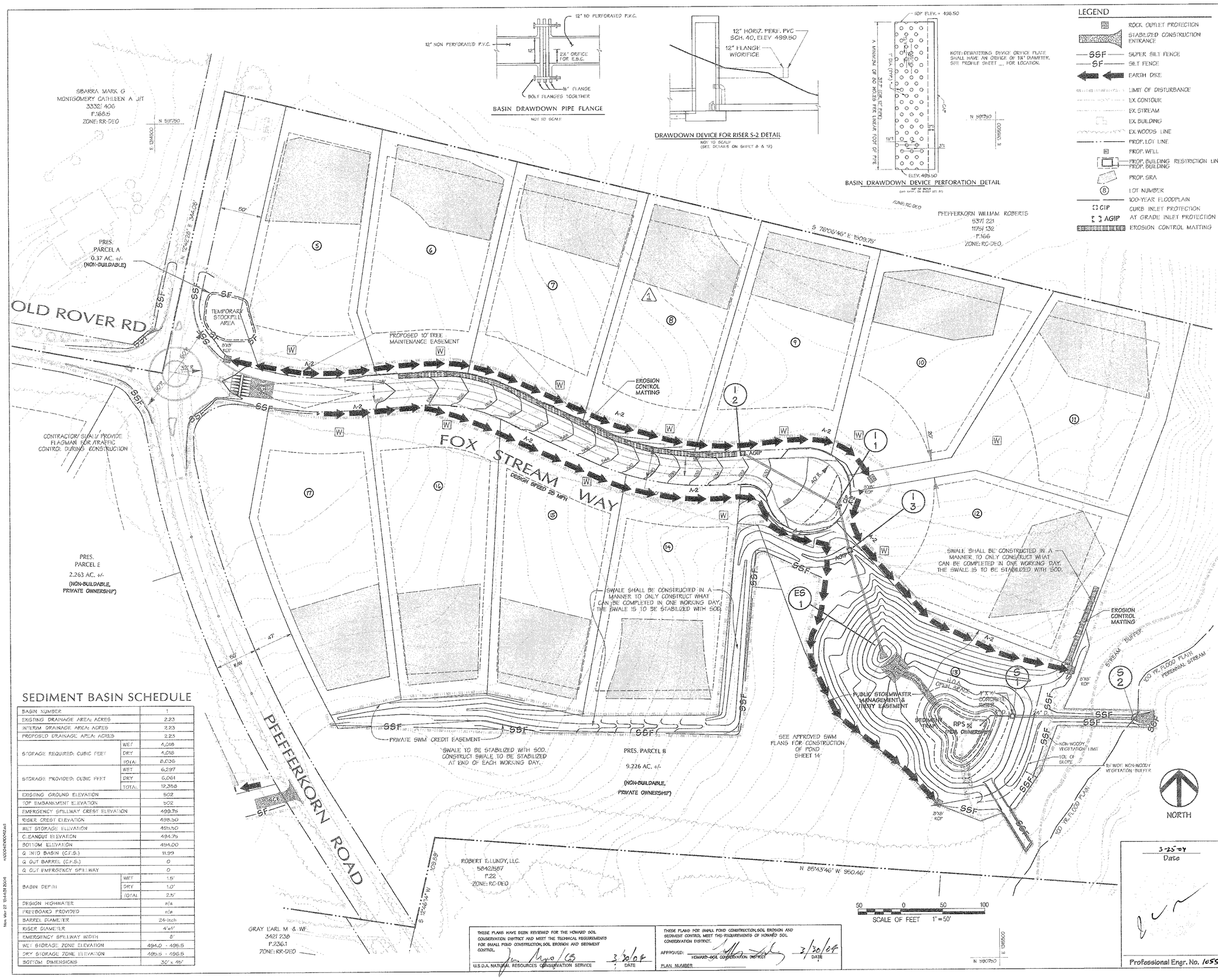

BASIN DRAWDOWN PIPE FLANGE

NOT TO SCALE

DRAWDOWN DEVICE FOR RISER S-2 DETAIL

NOT TO SCALE
(SEE DETAILS ON SHEET 8 & 12)

BASIN DRAWDOWN DEVICE PERFORATION DETAIL

NOT TO SCALE
(SEE DETAILS ON SHEET 8 & 12)

LEGEND

- ROCK OUTLET PROTECTION
- STABILIZED CONSTRUCTION ENTRANCE
- SSF — SUPER SILT FENCE
- SF — SILT FENCE
- EARTH DIKE
- LIMIT OF DISTURBANCE
- EX. CONTOUR
- EX. STREAM
- EX. BUILDING
- EX. WOODS LINE
- PROP. LOT LINE
- PROP. WELL
- PROP. BUILDING RESTRICTION LINE
- PROP. BUILDING
- PROP. SRA
- (8) LOT NUMBER
- 100-YEAR FLOODPLAIN
- CIP — CURB INLET PROTECTION
- AGIP — AT GRADE INLET PROTECTION
- EROSION CONTROL MATTING

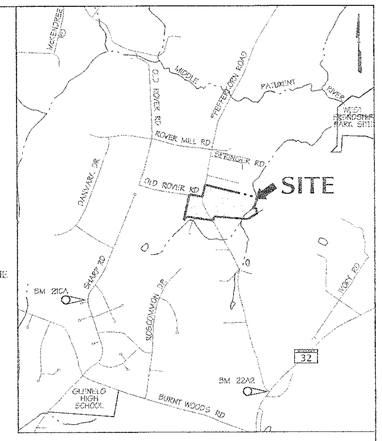

VICINITY MAP

SCALE: 1" = 2,000'

SEDIMENT BASIN SCHEDULE

BASIN NUMBER		1
EXISTING DRAINAGE AREA: ACRES		2.23
INTERIM DRAINAGE AREA: ACRES		2.23
PROPOSED DRAINAGE AREA: ACRES		2.23
STORAGE REQUIRED: CUBIC FEET	WET	4,018
	DRY	4,018
	TOTAL	8,036
STORAGE PROVIDED: CUBIC FEET	WET	6,297
	DRY	6,061
	TOTAL	12,358
EXISTING GROUND ELEVATION		502
TOP EMBANKMENT ELEVATION		502
EMERGENCY SPILLWAY CREST ELEVATION		499.75
RISER CREST ELEVATION		498.50
WET STORAGE ELEVATION		495.50
CLEANOUT ELEVATION		494.75
BOTTOM ELEVATION		494.00
Q INTO BASIN (CFS)		11.99
Q OUT BARREL (CFS)		0
Q OUT EMERGENCY SPILLWAY		0
BASIN DEPTH	WET	1.5'
	DRY	1.0'
	TOTAL	2.5'
DESIGN HIGHWATER		n/a
FREEBOARD PROVIDED		n/a
BARREL DIAMETER		24-Inch
RISER DIAMETER		4'x4'
EMERGENCY SPILLWAY WIDTH		8'
WET STORAGE ZONE ELEVATION		494.0 - 495.5
DRY STORAGE ZONE ELEVATION		495.5 - 496.5
BOTTOM DIMENSIONS		30' x 45'

DEVELOPERS CERTIFICATE:

WE CERTIFY THAT ALL DEVELOPMENT AND/OR CONSTRUCTION WILL BE DONE ACCORDING TO THESE PLANS AND THAT ANY RESPONSIBLE PERSONNEL INVOLVED IN THE CONSTRUCTION PROJECT WILL HAVE A CERTIFICATE OF ATTENDANCE AT A DEPARTMENT OF ENVIRONMENT APPROVED TRAINING PROGRAM FOR THE CONTROL OF SEDIMENT AND EROSION BEFORE BEGINNING THE PROJECT. I SHALL ENGAGE A REGISTERED PROFESSIONAL ENGINEER TO SUPERVISE POND CONSTRUCTION AND PROVIDE THE HOWARD SOIL CONSERVATION DISTRICT WITH AN "AS-BUILT" PLAN OF THE POND WITHIN 30 DAYS OF COMPLETION. I ALSO AUTHORIZE PERIODIC ON-SITE INSPECTIONS BY THE HOWARD SOIL CONSERVATION DISTRICT.

James H. Selfridge — 3/23/04

SIGNATURE OF DEVELOPER — DATE
PRINT NAME BELOW SIGNATURE: JAMES H. SELFRIDGE

ENGINEERS CERTIFICATE:

I CERTIFY THAT THIS PLAN FOR POND CONSTRUCTION, EROSION AND SEDIMENT CONTROL REPRESENTS A PRACTICAL AND WORKABLE PLAN BASED ON MY PERSONAL KNOWLEDGE OF THE SITE CONDITIONS. THIS PLAN WAS PREPARED IN ACCORDANCE WITH THE REQUIREMENTS OF THE HOWARD SOIL CONSERVATION DISTRICT. I HAVE NOTIFIED THE DEVELOPER THAT HE/SHE MUST ENGAGE A REGISTERED PROFESSIONAL ENGINEER TO SUPERVISE POND CONSTRUCTION AND PROVIDE THE HOWARD SOIL CONSERVATION DISTRICT WITH AN "AS-BUILT" PLAN OF THE POND WITHIN 30 DAYS OF COMPLETION.

John W. Ranecchia, Jr. — 3-25-04

SIGNATURE OF ENGINEER — DATE
PRINT NAME BELOW SIGNATURE: John W. Ranecchia, Jr.

DATA SOURCES:

BOUNDARY PER DMW FIELD SURVEY DATED DECEMBER 2001.

TOPO FLOWN BY VIRGINIA RESOURCE MAPPING, DECEMBER, 2001.

APPROX. WETLAND LOCATION PER DMW FIELD VISIT DATED APRIL 2000. OFF SITE SEPTIC RESERVE AREAS PER RECORD PLATS, LOCATIONS OF WELLS NOT AVAILABLE.

APPROVED: HOWARD COUNTY DEPARTMENT OF PUBLIC WORKS

William F. Mackey Jr. — 4-13-04

CHIEF, BUREAU OF HIGHWAYS — DATE

APPROVED: HOWARD COUNTY DEPT. OF PLANNING & ZONING

4/20/04

CHIEF, DEVELOPMENT ENGINEERING DIVISION — DATE

4/27/04

CHIEF, DIVISION OF LAND DEVELOPMENT JA — DATE

~~DIRECTOR~~ — ~~DATE~~

Date	No.	Revision Description
6-11-04	1	REVISED LOT NUMBERS

OWNER: NORTHRIDGE DEVELOPMENT, LLC
14045 GARED DRIVE
GLENWOOD, MD 21738

DEVELOPER: JAMES F. SELFRIDGE BUILDERS, INC.
14045 GARED DRIVE
GLENWOOD, MD 21738

DMW
Daft-McCune-Walker, Inc.
200 East Pennsylvania Avenue
Towson, Maryland 21286
(410) 296-3333
Fax 296-4705

A Team of Land Planners, Landscape Architects, Engineers, Surveyors & Environmental Professionals

3-25-04
Date

Professional Engr. No. 10551

SUBDIVISION NAME: FOX MEADOW		SECTION/PHASE: 1	LOT/PARCEL #: 167
PLAT OR L/F: 5963/492	GRID: 13, 19, 20	ZONE: RR, RC	TAX MAP: 15	ELEC. DISTRICT: 5	CENSUS TRACT:

TITLE

FOX MEADOW
(FORMERLY PFEFFERKORN PROPERTY)
Grading & Sediment and Erosion Control Plan

Des By DWR	Scale 1"=50'	Proj. No. 00042.B
Drn By DWR/BKC	Date 1/7/04	9 OF 24
Chk By	Approved	

THESE PLANS HAVE BEEN REVIEWED FOR THE HOWARD SOIL CONSERVATION DISTRICT AND MEET THE TECHNICAL REQUIREMENTS FOR SMALL POND CONSTRUCTION, SOIL EROSION AND SEDIMENT CONTROL.

U.S.D.A. NATURAL RESOURCES CONSERVATION SERVICE — 3/30/04 DATE

THESE PLANS FOR SMALL POND CONSTRUCTION, SOIL EROSION AND SEDIMENT CONTROL MEET THE REQUIREMENTS OF HOWARD SOIL CONSERVATION DISTRICT.

APPROVED: HOWARD SOIL CONSERVATION DISTRICT — 3/30/04 DATE

PLAN NUMBER

Mon Mar 22 15:44:30 2004 m00042D042.sd1

3/22/2004 3:44:16 PM \\ATHENS\STATION\CADNET\VCADD\dwg-pdf cr122 c:\hpm\00042.hpm

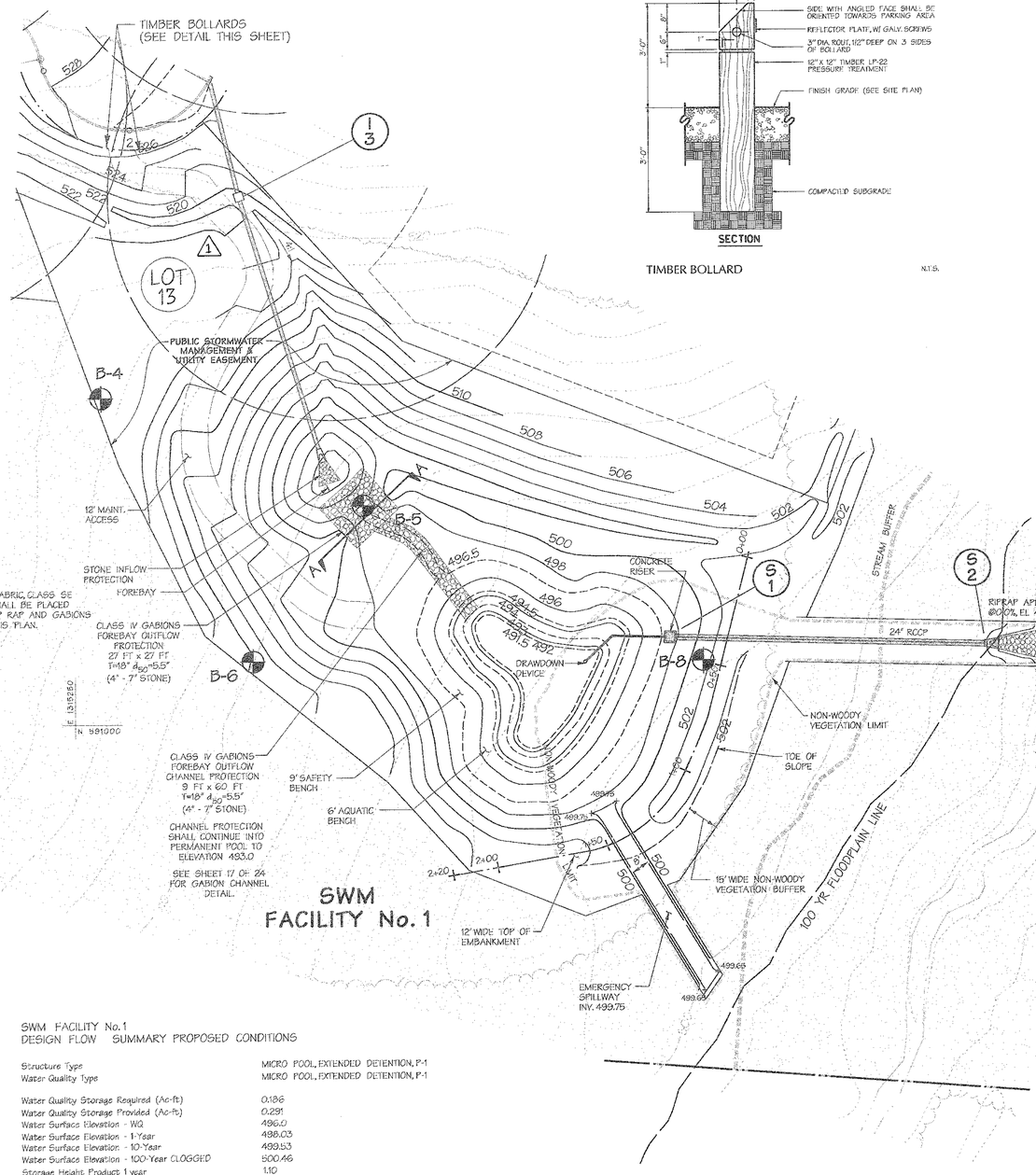

SWM FACILITY No. 1

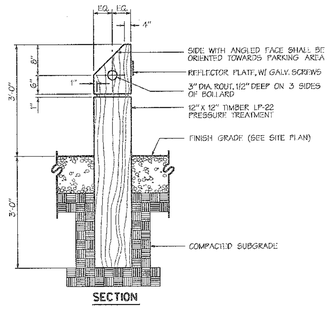

SECTION

TIMBER BOLLARD N.T.S.

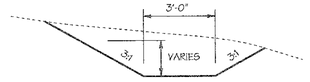

TYPICAL CROSS SECTION (CUT) OF GRASS CHANNEL BEHIND LOTS 14-17

NO SCALE

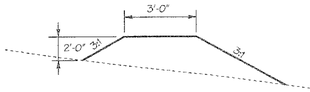

TYPICAL CROSS SECTION (FILL) OF GRASS CHANNEL BEHIND LOTS 14-17

NO SCALE

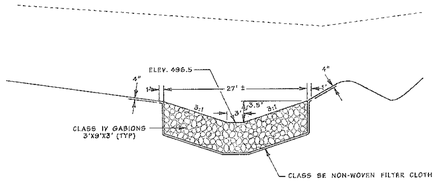

SECTION A-A
TYPICAL SECTION CLASS IV GABION FOREBAY OUTLET PROTECTION WEIR

NO SCALE

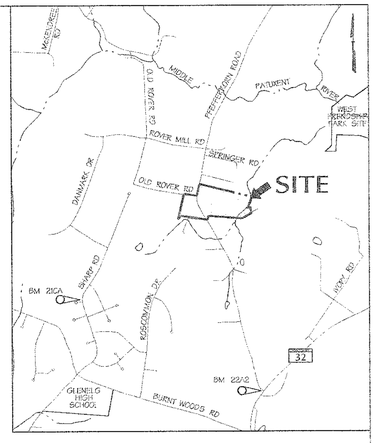

VICINITY MAP

SCALE: 1" = 2,000'

SWM FACILITY No. 1
DESIGN FLOW SUMMARY PROPOSED CONDITIONS

Structure Type	MICRO POOL, EXTENDED DETENTION, P-1
Water Quality Type	MICRO POOL, EXTENDED DETENTION, P-1
Water Quality Storage Required (Ac-ft)	0.186
Water Quality Storage Provided (Ac-ft)	0.291
Water Surface Elevation - WQ	496.0
Water Surface Elevation - 1-Year	498.03
Water Surface Elevation - 10-Year	499.53
Water Surface Elevation - 100-Year CLOGGED	500.46
Storage Height Product 1 year	1.10
Storage Height Product 10 year	4.43
Watershed Area to Facility (Actual D.A.)	0.0183 SQ. MILES
Level of Management Required	1-Year, Cpv
Level of Management Provided	1-Year, Cpv
Minimum Top Width Provided	12'
Maximum Height of Fill	1.0'
Freeboard Provided, 10-Year	2.47'
Freeboard Provided, 100-Year	1.57'

WATER QUALITY IS MET BY MICRO POOL AND NATURAL AREA CONSERVATION CREDITS. RECHARGE IS MET BY A GRASS SWALE ALONG THE PROPOSED ROAD AND ALONG THE SOUTH EDGE OF THE LOTS 11-14 AREA. CHANNEL PROTECTION VOLUME IS MET BY EXTENDED DETENTION OF THE 1-YR STORM IN THE SWM FACILITY AND BY NATURAL AREA CONSERVATION.

THIS FACILITY IS CLASSIFIED AS HAZARD CLASS 'A' AND IS A NON-MD-378 FACILITY.

THIS FACILITY IS HAZARD CLASS 'A' BECAUSE THERE ARE NO BUILDINGS OR ROADS DOWNSTREAM OF THIS FACILITY BEFORE FLOWS WOULD ENTER THE MIDDLE PATUXENT RIVER.

LEGEND

- PROPERTY BOUNDARY
- PROPOSED MAJOR CONTOUR
- PROPOSED MINOR CONTOUR
- PROPOSED INTERMEDIATE CONTOUR
- PROPOSED FLOODPLAIN
- PROPOSED STORM DRAIN (BY OTHERS)
- STREAM EDGE
- FOREST CONSERVATION AREA
- WETLAND BUFFER
- WETLAND BOUNDARY
- EX. CONTOURS
- EX. CURB & GUTTER
- FOREST BUFFER
- STREAM LINE

NORTH

DATA SOURCES:

BOUNDARY PER DMW FIELD SURVEY DATED DECEMBER 2001.

TOPO FLOWN BY VIRGINIA RESOURCE MAPPING, DECEMBER, 2001.

APPROX. WETLAND LOCATION PER DMW FIELD VISIT DATED APRIL 2000. OFF SITE SEPTIC RESERVE AREAS PER RECORD PLATS, LOCATIONS OF WELLS NOT AVAILABLE.

DEVELOPERS CERTIFICATION:

I/WE CERTIFY THAT ALL DEVELOPMENT AND/OR CONSTRUCTION WILL BE DONE ACCORDING TO THESE PLANS AND THAT ANY RESPONSIBLE PERSONNEL INVOLVED IN THE CONSTRUCTION PROJECT WILL HAVE A CERTIFICATE OF ATTENDANCE AT A DEPARTMENT OF ENVIRONMENT APPROVED TRAINING PROGRAM FOR THE CONTROL OF SEDIMENT AND EROSION BEFORE BEGINNING THE PROJECT. I SHALL ENGAGE A REGISTERED PROFESSIONAL ENGINEER TO SUPERVISE POND CONSTRUCTION AND PROVIDE THE HOWARD SOIL CONSERVATION DISTRICT WITH AN "AS-BUILT" PLAN OF THE POND WITHIN 30 DAYS OF COMPLETION. I ALSO AUTHORIZE PERIODIC ON-SITE INSPECTIONS BY THE HOWARD SOIL CONSERVATION DISTRICT.

SIGNATURE OF DEVELOPER — 3/23/04 DATE

PRINT NAME BELOW SIGNATURE: JAMES H. SELFRIDGE

ENGINEER'S CERTIFICATION:

I CERTIFY THAT THIS PLAN FOR POND CONSTRUCTION, EROSION AND SEDIMENT CONTROL REPRESENTS A PRACTICAL AND WORKABLE PLAN BASED ON MY PERSONAL KNOWLEDGE OF THE SITE CONDITIONS. THIS PLAN WAS PREPARED IN ACCORDANCE WITH THE REQUIREMENTS OF THE HOWARD SOIL CONSERVATION DISTRICT. I HAVE NOTIFIED THE DEVELOPER THAT HE/SHE MUST ENGAGE A REGISTERED PROFESSIONAL ENGINEER TO SUPERVISE POND CONSTRUCTION AND PROVIDE THE HOWARD SOIL CONSERVATION DISTRICT WITH AN "AS-BUILT" PLAN OF THE POND WITHIN 30 DAYS OF COMPLETION.

SIGNATURE OF ENGINEER — 3-25-04

PRINT NAME BELOW SIGNATURE: John W. Ranocchia, Sr.

THESE PLANS HAVE BEEN REVIEWED FOR THE HOWARD SOIL CONSERVATION DISTRICT AND MEET THE TECHNICAL REQUIREMENTS FOR SMALL POND CONSTRUCTION, SOIL EROSION AND SEDIMENT CONTROL.

U.S. NATURAL RESOURCE CONSERVATION SERVICE — 3/26/04 DATE

THESE PLANS FOR SMALL POND CONSTRUCTION, SOIL EROSION AND SEDIMENT CONTROL MEET THE REQUIREMENTS OF HOWARD SOIL CONSERVATION DISTRICT.

HOWARD S.C.D. — 3/26/04 DATE

3-25-04
Date

Professional Engr. No. 15551

APPROVED: HOWARD COUNTY DEPARTMENT OF PUBLIC WORKS

CHIEF, BUREAU OF HIGHWAYS — 4-13-04 DATE

APPROVED: HOWARD COUNTY DEPT. OF PLANNING & ZONING

CHIEF, DEVELOPMENT ENGINEERING DIVISION — 4/28/04 DATE

CHIEF, DIVISION OF LAND DEVELOPMENT — 4/27/04 DATE

~~DIRECTOR~~ — ~~DATE~~

Date	No.	Revision Description
6-11-04	1	REVISED LOT NUMBERS

OWNER: NORTHRIDGE DEVELOPMENT, LLC
14045 OAKED DRIVE
GLENWOOD, MD 21738

DEVELOPER: JAMES F. SELFRIDGE BUILDERS, INC.
14045 OAKED DRIVE
GLENWOOD, MD 21738

DMW
Daft-McCune-Walker, Inc.
200 East Pennsylvania Avenue
Towson, Maryland 21286
(410) 296-3333
Fax 296-4705

A Team of Land Planners, Landscape Architects, Engineers, Surveyors & Environmental Professionals

SUBDIVISION NAME			BY OWNER'S #		LOT/PARCEL #
FOX MEADOW					167
PLAT OR L/F	BOOK #	ZONE	TAX/ZONE MAP	TELEPHONE DIST.	CENSUS TRACT
596,5/492	13, 19, 20	RR, RC	15	3	

TITLE:
FOX MEADOW
(FORMERLY PFEFFERKORN PROPERTY)
Stormwater Management Facility 1
Stormwater Management Plan

Des By	DWR	Scale 1"=30'	Proj. No. 00042.B
Drn By	DWR	Date 1/7/04	14 OF 24
Chk By		Approved	

Mon Mar 22 15:32:59 2004 m:\00042\00042.m3

F-63,45

3/22/2004 3:32:47 PM \\ATHENS\MSTATION\CANONEIMAGEF\day.gcf cr122 c:\hpm\00042.hpm

SWM FACILITY No. 2
DESIGN FLOW SUMMARY PROPOSED CONDITIONS

Structure Type	BIORETENTION FACILITY, F-6
Water Quality Type	BIORETENTION FACILITY, F-6
Water Quality Storage Required (Ac-ft)	0.067
Water Quality Storage Provided (Ac-ft)	0.079
Water Surface Elevation - WQ	536.5
Water Surface Elevation - 1-Year Cpv	536.5
Water Surface Elevation - 10-Year	536.75
Depth of Water Over Bioretention Area - WQ	1.0'
Storage Height Product 10-Year	0.42 Ac-Ft^2
Watershed Area to Facility (Actual D.A.)	0.0055 SQ. MILES
Level of Management Required	1-Year, Cpv
Level of Management Provided	1-Year, Cpv
Maximum Height of Fill	3.5'
Freeboard Provided Over 10-Year	0.75'
Freeboard Provided Over 100-Year	0.50'

WATER QUALITY IS MET BY BIORETENTION. RECHARGE IS MET BY THE AREA METHOD. PORTIONS OF LOTS 1 AND 2 DRAIN TO A GRASS SWALE. CHANNEL PROTECTION VOLUME IS MET BY EXTENDED DETENTION OF THE 1 YR STORM IN THE FACILITY.

NOTE: THIS SWM FACILITY SHALL BE OWNED AND MAINTAINED BY THE HOMEOWNER'S ASSOCIATION (HOA)

SEE LANDSCAPE PLAN FOR BIORETENTION PLANTING, SHEET 23 OF 24.

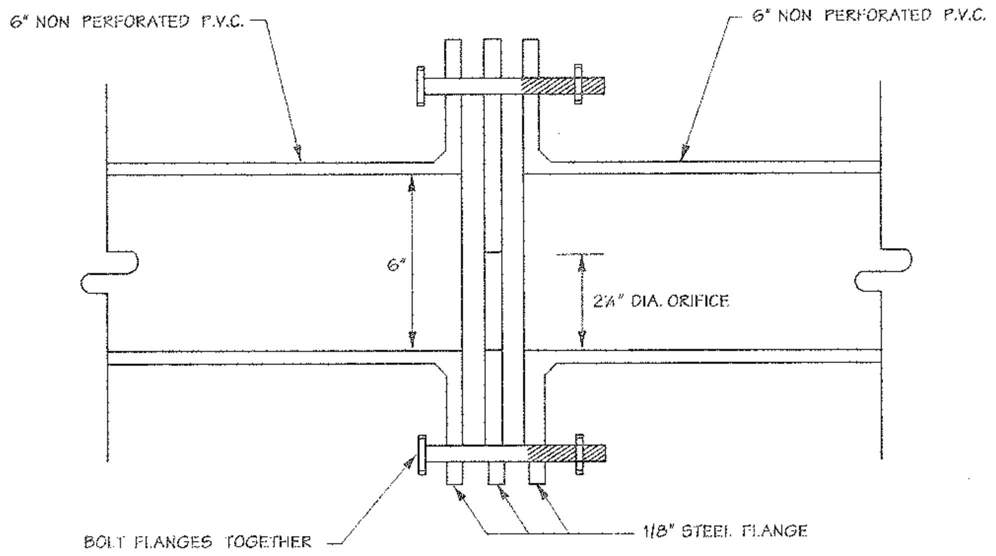

DEWATERING PIPE ORIFICE DETAIL
NOT TO SCALE

LEGEND

- WETLAND BUFFER
- WETLAND BOUNDARY
- EX. CONTOURS
- EX. CURB & GUTTER
- EX. BUILDING
- FOREST BUFFER
- STREAM LINE
- PROPERTY BOUNDARY
- 510 PROPOSED MAJOR CONTOUR
- 508 PROPOSED MINOR CONTOUR
- PROPOSED FLOODPLAIN
- BvD2 (C) SOIL LINES/TYPES
- EXISTING SANITARY SEWER
- EXISTING STORM DRAIN
- CENTERLINE OF STREAM
- A-2 PROPOSED EARTH DIKE
- SF PROPOSED SILT FENCE
- SSF PROPOSED SUPER SILT FENCE
- LIMIT OF DISTURBANCE
- SCE STABILIZED CONTRUCTION ENTRANCE
- SEPTIC AREA
- GRAVEL CURTAIN

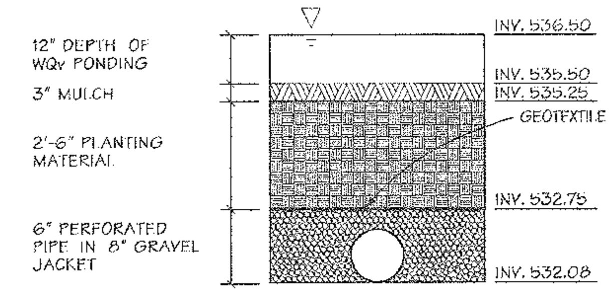

BIORETENTION FACILITY 1

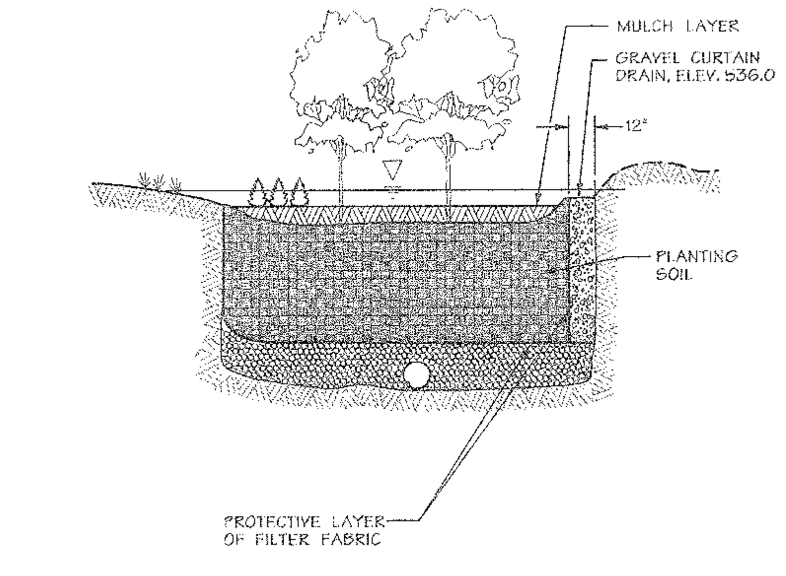

TYPICAL SECTION

BIORETENTION EXAMPLE
NOT TO SCALE

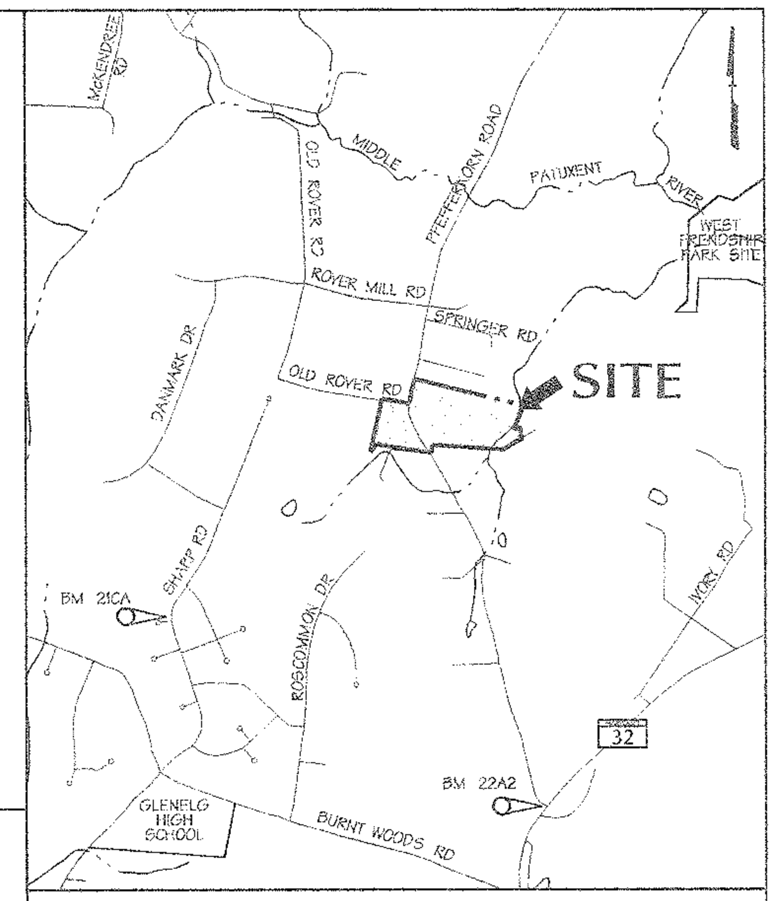

VICINITY MAP
SCALE: 1"=2000'

MATERIALS SPECIFICATION FOR BIORETENTION

MATERIAL	SPECIFICATION	SIZE	NOTES
PLANTINGS	SEE APPENDIX A, TABLE A.4	N/A	PLANTINGS ARE SITE-SPECIFIC
PLANTING SOIL (2.5 FEET DEEP)	SAND 35 - 60% SILT 30 - 55% CLAY 10 - 25%	N/A	USDA SOIL TYPES LOAMY SAND, SANDY LOAM OR LOAM.
MULCH	SHREDDED HARDWOOD		AGED 6 MONTHS, MIN.
PEA GRAVEL DIAPHRAGM AND CURTAIN DRAIN	PEA GRAVEL: ASTM-D-448 ORNAMENTAL STONE: WASHED COBBLES	PEA GRAVEL: NO. 6 STONE: 2" TO 5"	
GEOTEXTILE	CLASS "C" - APPARENT OPENING SIZE (ASTM-D-4751), GRAB TENSILE STRENGTH (ASTM-D-4632), PUNCTURE RESISTANCE (ASTM-D-4833)	N/A	FOR USE AS NECESSARY BENEATH UNDERDRAINS ONLY.
UNDERDRAIN GRAVEL	AASHTO M-43	0.375" TO 0.75"	
UNDERDRAIN PIPING	F 758, TYPE PS 28 OR AASHTO M-278	4" TO 6" RIGID SCH 40 PVC OR SDR35	⅜" PERF. @ 6" ON CENTER, 4 HOLES PER ROW; MINIMUM OF 3" OF GRAVEL OVER PIPES; NOT NECESSARY UNDERNEATH PIPES.
POURED IN PLACE CONCRETE (IF REQUIRED)	MSHA MIX NO.3; F'c=3500 PSI @ 28 DAYS, NORMAL WEIGHT, AIR-ENTRAINED; REINFORCED TO MEET ASTM-615-60	N/A	ON-SITE TESTING OF POURED-IN-PLACE CONCRETE REQUIRED: 28 DAY STRENGTH AND SLUMP TEST; ALL CONCRETE DESIGN (CAST-IN-PLACE OR PRE-CAST) NOT USING PREVIOUSLY APPROVED STATE OR LOCAL STANDARDS REQUIRES DESIGN DRAWINGS SEALED AND APPROVED BY A PROFESSIONAL STRUCTURAL ENGINEER LICENSED IN THE STATE OF MARYLAND - DESIGN TO INCLUDE MEETING ACI CODE 350.R/89; VERTICAL LOADING [H10 OR H-20]; ALLOWABLE HORIZONTAL LOADING (BASED ON SOIL PRESSURES); AND ANALYSIS OF POTENTIAL CRACKING.
SAND (1 FOOT DEEP)	AASHTO-M-6 OR ASTM-C-33	0.02" TO 0.04"	SAND SUBSTITUTIONS SUCH AS DIABASE AND GRAYSTONE #10 ARE NOT ACCEPTABLE. NO CALCIUM CARBONATE OR DOLOMITIC SAND SUBSTITUTIONS ARE ACCEPTABLE. NO "ROCK DUST" CAN BE USED FOR SAND.

SEQUENCE OF CONSTRUCTION - FACILITY No. 2

	No. of days
1. Obtain a grading permit.	7
2. Install sediment and erosion control devices.	2
3. Rough grade site after obtaining permission from inspector to preoceed.	2
4. Construct Facility Number 2, (bioretention facility) and fine grade.	5
5. Stabilize all areas in accordance with the standards and specifications.	2

NOTE: THIS FACILITY WILL NOT BE USED DURING THE ESC PHASE OF THIS PROJECT

DATA SOURCES:

BOUNDARY PER DMW FIELD SURVEY DATED DECEMBER 2001.

TOPO FLOWN BY VIRGINIA RESOURCE MAPPING, DECEMBER, 2001.

APPROX. WETLAND LOCATION PER DMW FIELD VISIT DATED APRIL 2000. OFF SITE SEPTIC RESERVE AREAS PER RECORD PLATS, LOCATIONS OF WELLS NOT AVAILABLE.

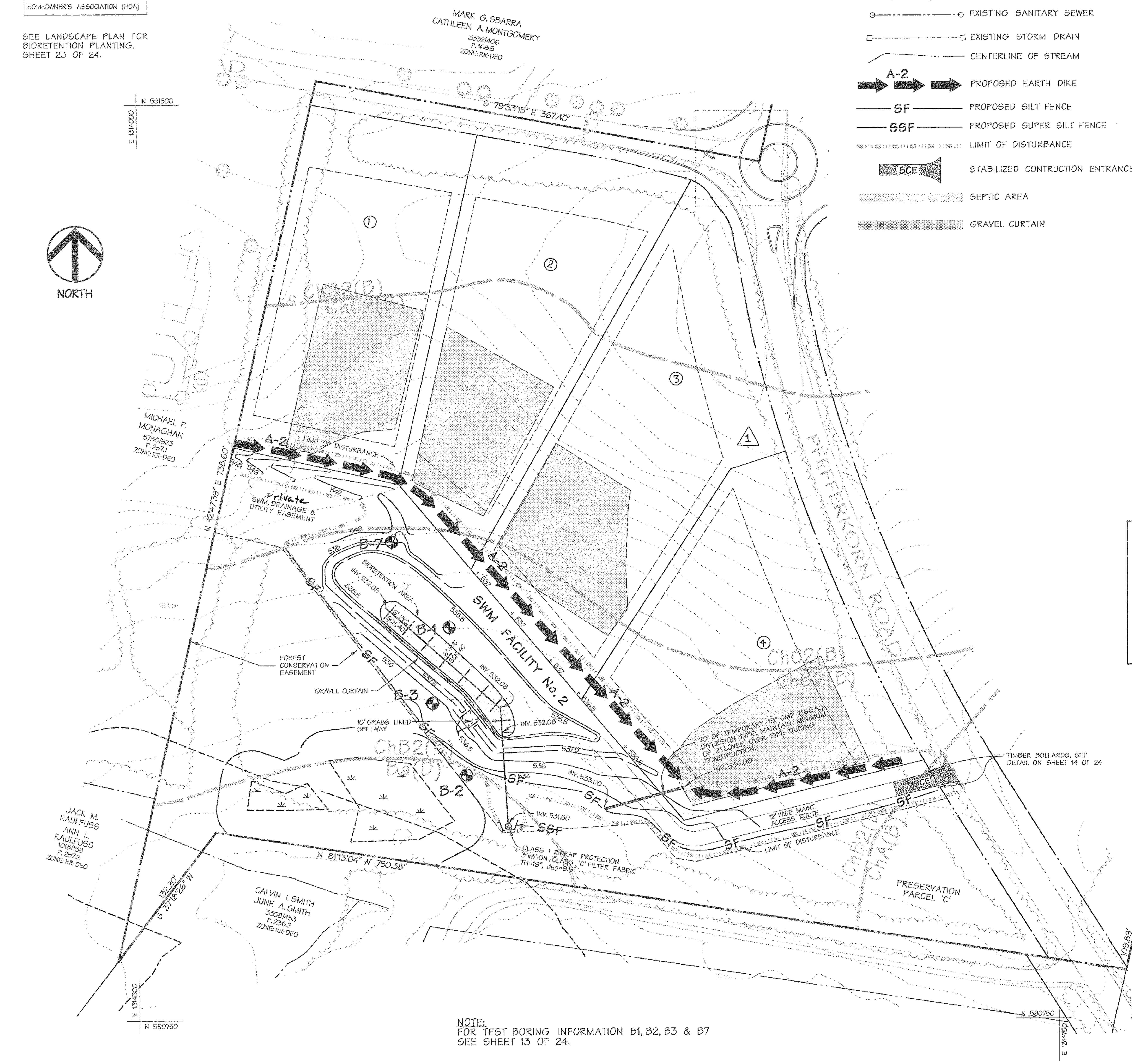

NOTE:
FOR TEST BORING INFORMATION B1, B2, B3 & B7 SEE SHEET 13 OF 24.

SPECIFICATION FOR BIORETENTION MAINTENANCE

TRASH AND DEBRIS SHALL BE REMOVED AS NECESSARY.

WHEN THE FILTERING CAPACITY OF THE FILTER DIMINISHES SUBSTANTIALLY (E.G., WHEN WATER PONDS ON THE SURFACE OF THE FILTER BED FOR MORE THAN 72 HOURS), THE TOP FEW INCHES OF DISCOLORED MATERIAL SHALL BE REMOVED AND SHALL BE REPLACED WITH NEW MATERIAL. THE REMOVAL OF SEDIMENTS SHOULD BE DISPOSED IN AN ACCEPTABLE MANNER (E.G., LANDFILL). SILT/SEDIMENT SHOULD BE REMOVED FROM THE FILTER BED WHEN THE ACCUMULATION EXCEEDS ONE INCH.

A DROP OF AT LEAST SIX INCHES SHALL BE PROVIDED AT THE INLET OF THE BIORETENTION FACILITY (F-6) (STONE DIAPHRAGM). DEAD OR DISEASED PLANT MATERIAL SHALL BE REMOVED. AREAS DEVOID OF MULCH SHOULD BE RE-MULCHED ON AN ANNUAL BASIS.

DIRECT MAINTENANCE ACCESS SHALL BE PROVIDED TO THE RETREATMENT AREA AND THE FILTER BED.

DEVELOPERS CERTIFICATION:

I/WE CERTIFY THAT ALL DEVELOPMENT AND/OR CONSTRUCTION WILL BE DONE ACCORDING TO THESE PLANS AND THAT ANY RESPONSIBLE PERSONNEL INVOLVED IN THE CONSTRUCTION PROJECT WILL HAVE A CERTIFICATE OF ATTENDANCE AT A DEPARTMENT OF ENVIRONMENT APPROVED TRAINING PROGRAM FOR THE CONTROL OF SEDIMENT AND EROSION BEFORE BEGINNING THE PROJECT. I SHALL ENGAGE A REGISTERED PROFESSIONAL ENGINEER TO SUPERVISE POND CONSTRUCTION AND PROVIDE THE HOWARD SOIL CONSERVATION DISTRICT WITH AN "AS-BUILT" PLAN OF THE POND WITHIN 30 DAYS OF COMPLETION. I ALSO AUTHORIZE PERIODIC ON-SITE INSPECTIONS BY THE HOWARD SOIL CONSERVATION DISTRICT.

SIGNATURE OF DEVELOPER — 3/23/04 DATE
PRINT NAME BELOW SIGNATURE
JAMES H. SELFRIDGE

ENGINEER'S CERTIFICATION:

I CERTIFY THAT THIS PLAN FOR POND CONSTRUCTION, EROSION AND SEDIMENT CONTROL REPRESENTS A PRACTICAL AND WORKABLE PLAN BASED ON MY PERSONAL KNOWLEDGE OF THE SITE CONDITIONS. THIS PLAN WAS PREPARED IN ACCORDANCE WITH THE REQUIREMENTS OF THE HOWARD SOIL CONSERVATION DISTRICT. I HAVE NOTIFIED THE DEVELOPER THAT HE/SHE MUST ENGAGE A REGISTERED PROFESSIONAL ENGINEER TO SUPERVISE POND CONSTRUCTION AND PROVIDE THE HOWARD SOIL CONSERVATION DISTRICT WITH AN "AS-BUILT" PLAN OF THE POND WITHIN 30 DAYS OF COMPLETION.

SIGNATURE OF ENGINEER — 3-25-04
PRINT NAME BELOW SIGNATURE
John W. Ranocchia, Sr.

THESE PLANS HAVE BEEN REVIEWED FOR THE HOWARD SOIL CONSERVATION DISTRICT AND MEET THE TECHNICAL REQUIREMENTS FOR SMALL POND CONSTRUCTION, SOIL EROSION AND SEDIMENT CONTROL.

U.S. NATURAL RESOURCE CONSERVATION SERVICE — 3/30/04 DATE

THESE PLANS FOR SMALL POND CONSTRUCTION, SOIL EROSION AND SEDIMENT CONTROL MEET THE REQUIREMENTS OF HOWARD SOIL CONSERVATION DISTRICT.

HOWARD S.C.D. — 3/30/04 DATE

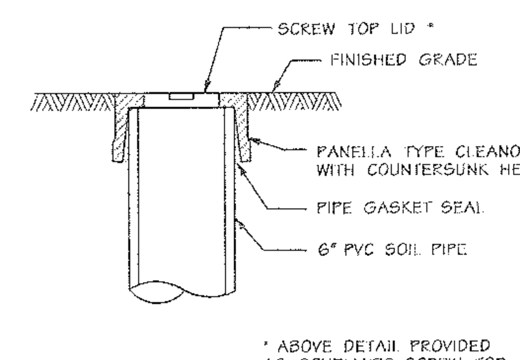

* ABOVE DETAIL PROVIDED AS SCHEMATIC SCREW TOP PVC CLEAN OUT CAP ONLY

EACH CLEANOUT SHALL INCLUDE THE FOLLOWING

1. FOR AN UNDERGROUND FLUSH MOUNTED CLEANOUT, PROVIDE A TUBE MADE OF NON-CORROSIVE MATERIAL, SCHEDULE 40 OR EQUAL, AT LEAST 3-FEET LONG WITH AN INSIDE DIAMETER OF AT LEAST 6-INCHES.
2. THE TUBE SHALL HAVE A FACTORY ATTACHED CAST IRON OR HIGH IMPACT PLASTIC COLLAR WITH RIBS TO PREVENT ROTATION WHEN REMOVING SCREW TOP LID. THE SCREW TOP LID SHALL BE CAST IRON OR HIGH IMPACT PLASTIC THAT WILL WITHSTAND ULTRA-VIOLET RAYS.

CLEAN OUT DETAIL
NOT TO SCALE

3-25-04
Date

Professional Engr. No. 10551

APPROVED: HOWARD COUNTY DEPARTMENT OF PUBLIC WORKS

CHIEF, BUREAU OF HIGHWAYS — 4-13-04 DATE

APPROVED: HOWARD COUNTY DEPT. OF PLANNING & ZONING

CHIEF, DEVELOPMENT ENGINEERING DIVISION — 4/20/04 DATE

CHIEF, DIVISION OF LAND DEVELOPMENT — 4/29/04 DATE

~~DIRECTOR~~ ~~DATE~~

Date	No.	Revision Description
6-11-04	1	REVISED LOT NUMBERS

OWNER: NORTHRIDGE DEVELOPMENT, LLC
14045 GARED DRIVE
GLENWOOD, MD 21738

DEVELOPER: JAMES F. SELFRIDGE BUILDERS, INC.
14045 GARED DRIVE
GLENWOOD, MD 21738

DMW
Daft-McCune-Walker, Inc.
200 East Pennsylvania Avenue
Towson, Maryland 21286
(410) 296-3333
Fax 296-4705

A Team of Land Planners, Landscape Architects, Engineers, Surveyors & Environmental Professionals

SUBDIVISION NAME	SECTION/AREA	LOT/PARCEL #
FOX MEADOW	1	167

PLAT # OR L/F	BLOCK #	ZONE	TAX/ZONE MAP	ELECT. DISTRICT	CENSUS TRACT
5983/492	13, 19, 20	RR, RC	15	3	

TITLE
FOX MEADOW
(FORMERLY PFEFFERKORN PROPERTY)
STORMWATER MANAGEMENT FACILITY 2 PLAN, DETAILS and SEDIMENT & EROSION CONTROL

Des By MRT/DW	Scale 1"=50'	Proj. No. 00042.B
Drn By MRT/DW	Date 1/7/04	16 OF 24
Chk By	Approved	

F-03-45

Mon Mar 22 17:08:06 2004 m\00042\00042.m2

Mon Mar 22 17:08:07 2004 m\00042\00042.m2

5:07:51 PM \\ATHENS\MSTATION\CADNET\N\OCF\dey.gcf cr.izzi c:\hpm\00042.hpm 00042

DATA SOURCES:
BOUNDARY PER DMW FIELD SURVEY DATED DECEMBER 2001.
TOPO FLOWN BY VIRGINIA RESOURCE MAPPING, DECEMBER, 2001.
APPROX WETLAND LOCATION PER DMW FIELD VISIT DATED APRIL 2000. OFF SITE SEPTIC RESERVE AREAS PER RECORD PLATS, LOCATIONS OF WELLS NOT AVAILABLE.

APPROVED: HOWARD COUNTY DEPARTMENT OF PUBLIC WORKS

CHIEF, BUREAU OF HIGHWAYS — DATE 4-13-04

APPROVED: HOWARD COUNTY DEPT. OF PLANNING & ZONING

CHIEF, DEVELOPMENT ENGINEERING DIVISION — DATE 4/8/04

CHIEF, DIVISION OF LAND DEVELOPMENT — DATE 4/09/04

DIRECTOR — DATE

Date	No.	Revision Description
6-11-04	1	REVISED LOT NUMBERS

OWNER: NORTHRIDGE DEVELOPMENT, LLC
14045 GARED DRIVE
GLENWOOD, MD 21738

DEVELOPER: JAMES F. SELFRIDGE BUILDERS, INC.
14045 GARED DRIVE
GLENWOOD, MD 21738

DMW
Daft-McCune-Walker, Inc.
200 East Pennsylvania Avenue
Towson, Maryland 21286
(410) 296-3333
Fax 296-4705

A Team of Land Planners, Landscape Architects, Engineers, Surveyors & Environmental Professionals

SUBDIVISION NAME			SECT/AREA	LOT/PARCEL
FOX MEADOW			1	167
PLAT OR L/F	B/SEQ	ZONE	TAX/ZONE MAP	ELEC. DIST/ZIP	CENSUS TRACT
9983/492	13, 19, 20	RR, RC	15	3	

TITLE
FOX MEADOW
(FORMERLY PFEFFERKORN PROPERTY)
FINAL FOREST CONSERVATION PLAN

Des By AJS	Scale 1"=50'	Proj. No. 00042.B
Drn By AJS/MSS	Date 1/07/04	19 OF 24
Chk By MM	Approved	

3.25.04
Date

STATE OF MARYLAND — MELANIE MOE — No. 1327 — REGISTERED LANDSCAPE ARCHITECT

Landscape Architect No.

Wed Mar 24 14:29:05 2004 m:\00042\00042sht.fit

3/24/2004 2:28:52 PM \\ATHENS\STATION\CADENTA\DCF\dayloaf cr1221 e1:\hpm\00042f.hpm

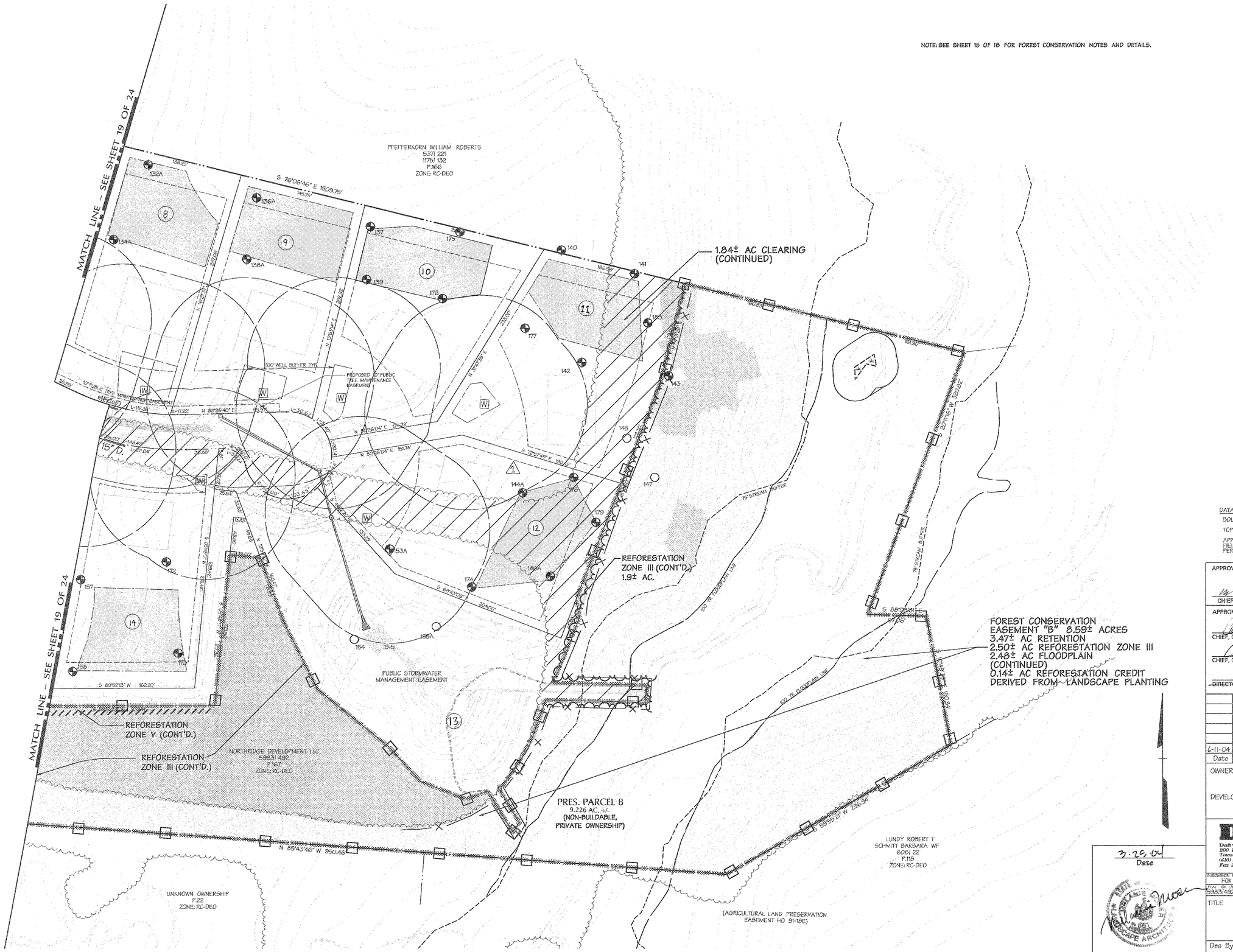

LEGEND

- EX. CONTOUR
- EX. STREAM
- EX. BUILDING
- EX. WOODS LINE
- EX. SEPTIC AREA
- ZONING LINE
- PROP. LOT LINE
- PROP. REPLACEMENT WELL AREA
- PROP. WELL
- PROP. BUILDING
- PROP. SRA
- LOT NUMBER
- 75' STREAM BUFFER
- 25' WETLAND BUFFER
- WETLAND
- PRELIMINARY 100-YEAR FLOODPLAIN
- FOREST RETENTION
- REFORESTATION
- FOREST CLEARING
- FOREST CONSERVATION EASEMENT
- PERC TEST HOLE (PASSED)
- PERC TEST HOLE (FAILED)
- PROPOSED WELL AND WELL RELOCATION AREA
- TEMPORARY FOREST PROTECTION FENCE
- PERMANENT FOREST PROTECTION SIGN
- REFORESTATION ZONE DELINEATION LINE
- PROP. TREELINE

DATA SOURCES:

BOUNDARY PER DMW FIELD SURVEY DATED DECEMBER 2001.

TOPO FLOWN BY VIRGINIA RESOURCE MAPPING, DECEMBER, 2001.

APPROX. WETLAND LOCATION PER DMW FIELD VISIT DATED APRIL 2000. OFF SITE SEPTIC RESERVE AREAS PER RECORD PLATS, LOCATIONS OF WELLS NOT AVAILABLE.

APPROVED: HOWARD COUNTY DEPARTMENT OF PUBLIC WORKS

CHIEF, BUREAU OF HIGHWAYS — DATE 4-13-04

APPROVED: HOWARD COUNTY DEPT. OF PLANNING & ZONING

CHIEF, DEVELOPMENT ENGINEERING DIVISION — DATE 4/20/04

CHIEF, DIVISION OF LAND DEVELOPMENT — DATE 4/29/04

DIRECTOR — DATE

Date	No.	Revision Description
6-11-04	1	REVISED LOT NUMBERS

OWNER: NORTHRIDGE DEVELOPMENT, LLC
14045 GARED DRIVE
GLENWOOD, MD 21738

DEVELOPER: JAMES F. SELFRIDGE BUILDERS, INC.
14045 GARED DRIVE
GLENWOOD, MD 21738

DMW
Daft-McCune-Walker, Inc.
200 East Pennsylvania Avenue
Towson, Maryland 21286
(410) 296-3333
Fax 296-4705
A Team of Land Planners, Landscape Architects, Engineers, Surveyors & Environmental Professionals

3.25.04
Date

Landscape Architect No.

SUBDIVISION NAME	SECTION/AREA	LOT/PARCEL
FOX MEADOW	1	167

PLAT OR LOT	BLOCK	ZONE	TAX/ZONE MAP	ELECT. DISTRICT	CENSUS TRACT
5983/492	13, 19, 20	RR, RC	15	3	

TITLE
FOX MEADOW
(FORMERLY PFEFFERKORN PROPERTY)
FINAL FOREST CONSERVATION PLAN

Des By AJS	Scale 1" = 50'	Proj. No. 00042.B
Drn By AJS/MSS	Date 1/07/04	20 OF 24
Chk By MM	Approved	

F-03-45

Wed Mar 24 14:29:32 2004 n:\00042\00042f.fr3

3/24/2004 2:29:24 PM \\ATHENS\MSTATION\CADNETN\DCF\dayqcf crizzi c:\hpm\00042f.hpm

SEE SHEET 23 FOR PLANT LIST AND SHEET 25 FOR PLANTING NOTES & DETAILS.

TOTAL LANDSCAPE PLANTS (THIS SHEET):

52 SHADE
72 EVERGREEN
26 ORNAMENTAL

(DOES NOT INCLUDE BIORETENTION PLANTING)

Water Quality Planting Plan**

Facility #1

ZONE "A" (7,760 +/- s.f.)

Species	Size	Spacing	Quantity	Remarks
Scirpus tabernaemontanii	quart container*	36"	166	OBL
Iris pseudacoris	quart container*	36"	166	OBL
Lobelia cardinalis	quart container	36"	166	FACW
Iris versicolor	quart container*	36"	166	OBL
Panicum virgatum	quart container	36"	166	FAC
Saururus cernuus	quart container*	36"	166	OBL
TOTALS			996	

ZONE "B" (3,204 +/- s.f.)

Species	Size	Spacing	Quantity	Remarks
Sagittaria latifolia	quart container*	36"	198	OBL
Peltandra virginica	quart container*	36"	198	OBL
TOTALS			396	

* Dormant rhizomes of *Scirpus*, *Iris* and *Saururus*, dormant tubers of *Sagittaria*, and 1st year bulbs of *Peltandra* may be substituted if plantings are to be installed during dormant season.

** Alternate species and install in random pattern, distributing each species across the hydrologic gradient of each planting zone. Single species massings to be avoided.

Plant List (Perimeter & SWM Landscaping)

QTY	SYM	BOTANICAL NAME/ COMMON NAME	SIZE	REMARKS
SHADE TREES				
34	QP	QUERCUS PALUSTRIS PIN OAK	2 1/2" - 3" CAL. 12'-14' HT	B & B FULL HEAD
24	QR	QUERCUS RUBRA RED OAK	2 1/2" - 3" CAL. 12'-14' HT	B & B FULL HEAD
22	AS	ACER SACCHARUM 'GREEN MOUNTAIN' GREEN MOUNTAIN SUGAR MAPLE	2 1/2" - 3" CAL. 12'-14' HT	B & B FULL HEAD
EVERGREEN TREES				
41	PA	PICEA ABIES NORWAY SPRUCE	6'-8' HT.	B & B
56	PS	PINUS STROBUS WHITE PINE	6'-8' HT.	B & B HEAVY / UNSHEARED
ORNAMENTAL TREES				
12	AL	AMELANCHIER LAEVIS ALLEGHENY SERVICEBERRY	8'-10' HT.	B & B
20	CC	CERCIS CANADENSIS EASTERN REDBUD	8'-10' HT.	B & B
GROUND COVER				
~~38~~	JG	~~JUNIPERUS CHINENSIS 'SEA GREEN' SEA GREEN JUNIPER~~	~~18-24" SPD.~~	~~6ONT. —~~

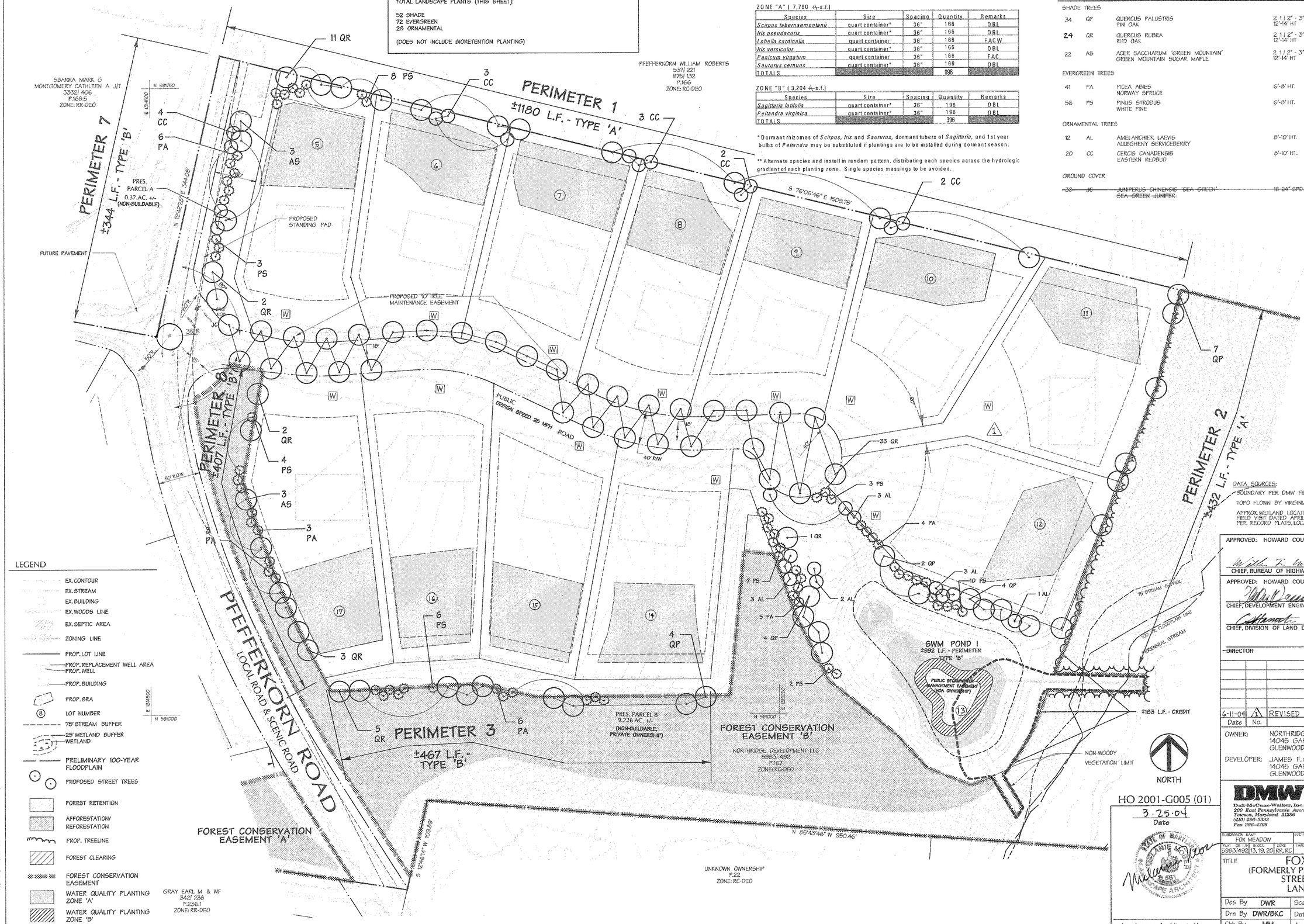

LEGEND

- EX. CONTOUR
- EX. STREAM
- EX. BUILDING
- EX. WOODS LINE
- EX. SEPTIC AREA
- ZONING LINE
- PROP. LOT LINE
- PROP. REPLACEMENT WELL AREA / PROP. WELL
- PROP. BUILDING
- PROP. SRA
- (8) LOT NUMBER
- 75' STREAM BUFFER
- 25' WETLAND BUFFER / WETLAND
- PRELIMINARY 100-YEAR FLOODPLAIN
- PROPOSED STREET TREES
- FOREST RETENTION
- AFFORESTATION/ REFORESTATION
- PROP. TREELINE
- FOREST CLEARING
- FOREST CONSERVATION EASEMENT
- WATER QUALITY PLANTING ZONE 'A'
- WATER QUALITY PLANTING ZONE 'B'

DATA SOURCES:
BOUNDARY PER DMW FIELD SURVEY DATED DECEMBER 2001.
TOPO FLOWN BY VIRGINIA RESOURCE MAPPING, DECEMBER, 2001.
APPROX. WETLAND LOCATION PER DMW FIELD VISIT DATED APRIL 2000. OFF SITE SEPTIC RESERVE AREAS PER RECORD PLATS, LOCATIONS OF WELLS NOT AVAILABLE.

APPROVED: HOWARD COUNTY DEPARTMENT OF PUBLIC WORKS

CHIEF, BUREAU OF HIGHWAYS — DATE 4-13-04

APPROVED: HOWARD COUNTY DEPT. OF PLANNING & ZONING

CHIEF, DEVELOPMENT ENGINEERING DIVISION — DATE 4/28/04

CHIEF, DIVISION OF LAND DEVELOPMENT — DATE 4/29/04

DIRECTOR — DATE

Date	No.	Revision Description
6-11-04	1	REVISED LOT NUMBERS

OWNER: NORTHRIDGE DEVELOPMENT, LLC
14045 GARED DRIVE
GLENWOOD, MD 21738

DEVELOPER: JAMES F. SELFRIDGE BUILDERS, INC.
14045 GARED DRIVE
GLENWOOD, MD 21738

HO 2001-G005 (01)

3.25.04
Date

Landscape Architect No.

DMW
Daft-McCune-Walker, Inc.
200 East Pennsylvania Avenue
Towson, Maryland 21286
(410) 296-3383
Fax 296-4705

A Team of Land Planners, Landscape Architects, Engineers, Surveyors & Environmental Professionals

SUBDIVISION NAME				SECT/AREA		LOT/PARCEL		ZONING	167
FOX MEADOW									
PLAT OR L/F	BLOCK	ZONE	TAX/ZONE MAP	ELEC. DISTRICT	CENSUS TRACT				
5983/492	13, 19, 20	RR, RC	15	3					

TITLE
FOX MEADOW
(FORMERLY PFEFFERKORN PROPERTY)
STREET TREE & SWM LANDSCAPE PLAN

Des By DWR	Scale 1"=50'	Proj. No. 00042.B	
Drn By DWR/BKC	Date 1/07/04	22 OF 24	
Chk By MM	Approved		

Wed Mar 24 14:30:57 2004 n:\00042\000421.fpl

3/24/2004 2:30:48 PM \\ATHENS\STATION\CADENET\DCF\daygdcf cr122i c:\hpm\00042f.hpm

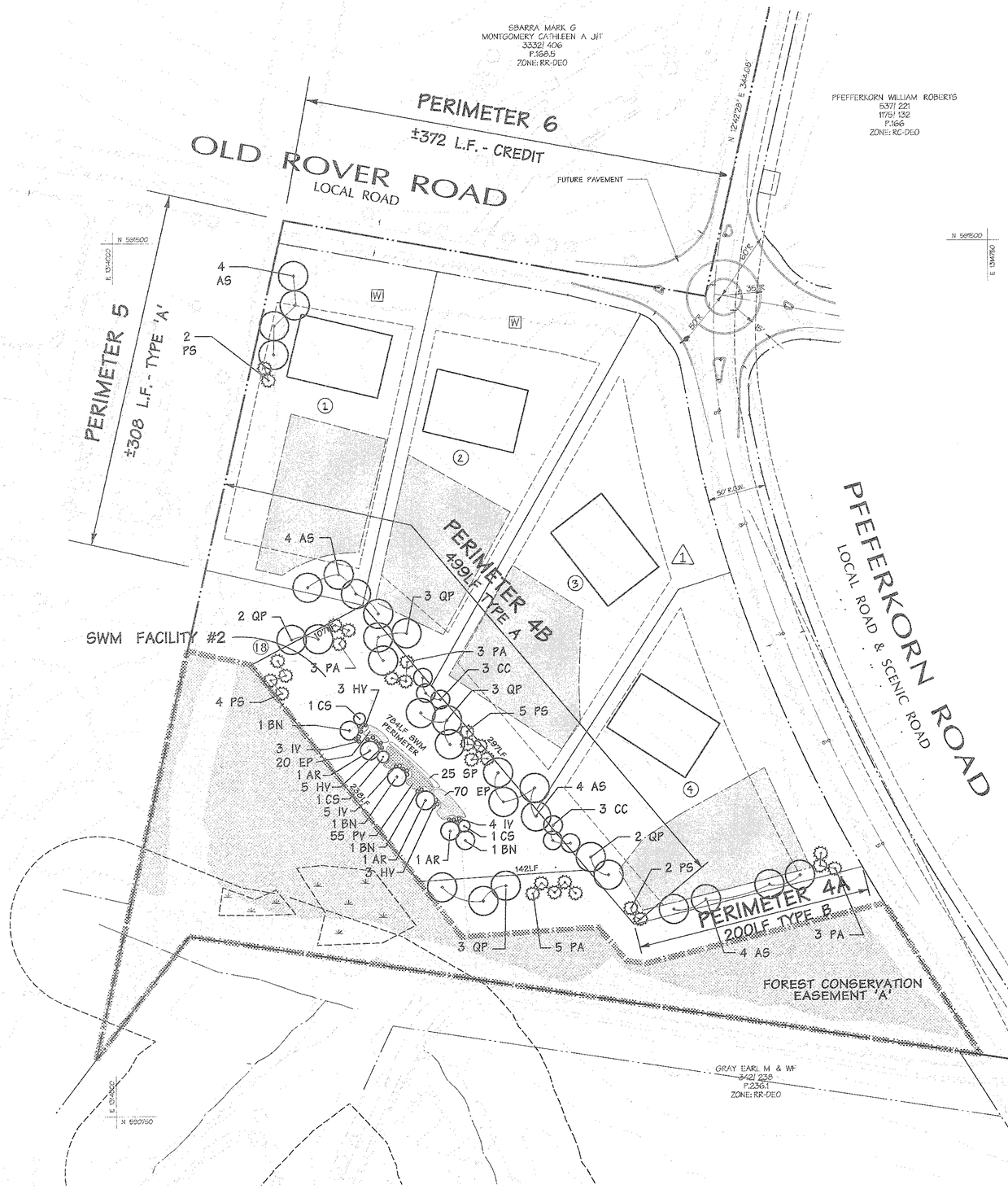

SEE SHEET 23 FOR PLANT LIST AND SHEET 25 FOR PLANTING NOTES & DETAILS.

TOTAL LANDSCAPE PLANTS (THIS SHEET):

29 SHADE
25 EVERGREEN
6 ORNAMENTAL

(DOES NOT INCLUDE BIORETENTION PLANTING)

Bioretention Area Plant List

Species	Common name	Size	Quantity	Spacing	Indicator status
Acer rubrum (AR)	red maple	2 1/2" -3" caliper, container grown	3	As shown	FAC
Betula nigra (BN)	river birch	2 1/2" - 3" caliper, container grown	3	As shown	FACW
Cornus stolonifera (CS)	red-osier dogwood	18" - 24" height* container grown	3	As shown	FACW
Hamamelis virginiana (HV)	witch hazel	18" - 24" height, container grown	13	As shown	FAC
Ilex verticillata (IV)	winterberry	18" - 24" height* container grown	12	As shown	FACW
Eupatorium perpureum (EP)	Joe Pye weed	quart-sized container*	70	Approx 3' OC throughout	FAC
Panicum virgatum (PV)	switchgrass	quart-sized container*	55	Approx 3' OC throughout	FAC
Scirpus pungens (SP)	common three square	quart-sized container*	25	Approx 3' OC throughout	FACW

* Note: Plugs, dormant rhizomes, or bare root stock may be substituted if available.

SCHEDULE A
PERIMETER LANDSCAPE EDGE

CATEGORY	ADJACENT to ROADWAYS			ADJACENT to PERIMETER PROPERTIES					
LANDSCAPE TYPE "A"				P 1	P 2			P 4B	P 5
LINEAR FEET OF PERIMETER				1180 LF.	432 LF.			498 LF.	308 LF.
LANDSCAPE TYPE "B"	P 6	P 7	P 8			P 3	P 4A		
LINEAR FEET OF PERIMETER	313 LF.	344 LF.	407			467 LF.	200 LF.		
LANDSCAPE TYPE "C"									
LINEAR FEET OF PERIMETER									
CREDIT FOR EXISTING VEGETATION (DESCRIBE BELOW IF NEEDED)	313 LF.	N/A	N/A	N/A	N/A	N/A	N/A	N/A	N/A
CREDIT FOR BERM (DESCRIBE BELOW IF NEEDED)	N/A	N/A	N/A	N/A	N/A	N/A	N/A	N/A	N/A
NUMBER OF PLANTS REQUIRED SHADE TREES EVERGREEN TREES SHRUBS	0 0 0	7 9 0	8 10 0	20 0 0	7 0 0	9 12 0	4 5 0	8 0 0	5 0 0
NUMBER OF PLANTS PROVIDED SHADE TREES EVERGREEN TREES OTHER TREES (2 :1 SUBSTITUTION) SHRUBS (10 :1 SUBSTITUTION) (DESCRIBE PLANT SUBSTITUTION CREDITS BELOW IF NEEDED)	0 0 0	5 9 4	8 10 0	11 8 10	7 0 0	9 12 0	4 5 0	8 0 0	4 2 0

* NOTE: STREET TREES WILL BE PROVIDED @ 1/40 LF.
* THE DEVELOPER WILL PROVIDE ALL PERIMETER LANDSCAPE OBLIGATIONS

SCHEDULE D
STORMWATER MANAGEMENT AREA LANDSCAPING

POND #	1	2
LINEAR FT OF PERIMETER (TYPE "B")	1175 LF	784 LF
NUMBER OF TREES REQUIRED SHADE TREES @ 1/50 L.F. EVERGREEN TREES @ 1/40 L.F.	20 25	16 20
CREDIT FOR EXISTING VEGETATION	183 LF	NA
CREDIT FOR OTHER LANDSCAPING	NA	NA
NUMBER OF TREES PROVIDED SHADE TREES EVERGREEN TREES FLOWERING TREES	11 31 12	13 20 6

* THE DEVELOPER WILL PROVIDE ALL SWM LANDSCAPE OBLIGATIONS

LEGEND

- EX. CONTOUR
- EX. STREAM
- EX. BUILDING
- EX. WOODS LINE
- EX. SEPTIC AREA
- ZONING LINE
- PROP. LOT LINE
- PROP. REPLACEMENT WELL AREA / PROP. WELL
- PROP. BUILDING
- PROP. SRA
- (8) LOT NUMBER
- 75' STREAM BUFFER
- 25' WETLAND BUFFER / WETLAND
- PRELIMINARY 100-YEAR FLOODPLAIN
- PROPOSED STREET TREES
- FOREST RETENTION
- AFFORESTATION/ REFORESTATION
- PROP. TREELINE
- FOREST CLEARING
- FOREST CONSERVATION EASEMENT

NORTH

HO 2001-G005 (01)

3.25.04
Date

Landscape Architect No.

DATA SOURCES:

BOUNDARY PER DMW FIELD SURVEY DATED DECEMBER 2001.

TOPO FLOWN BY VIRGINIA RESOURCE MAPPING, DECEMBER, 2001.

APPROX. WETLAND LOCATION PER DMW FIELD VISIT DATED APRIL 2000. OFF SITE SEPTIC RESERVE AREAS PER RECORD PLATS, LOCATIONS OF WELLS NOT AVAILABLE.

APPROVED: HOWARD COUNTY DEPARTMENT OF PUBLIC WORKS

CHIEF, BUREAU OF HIGHWAYS — DATE 11-13-04

APPROVED: HOWARD COUNTY DEPT. OF PLANNING & ZONING

CHIEF, DEVELOPMENT ENGINEERING DIVISION — DATE 4/20/04

CHIEF, DIVISION OF LAND DEVELOPMENT, JA — DATE 4/20/04

~~DIRECTOR~~ — ~~DATE~~

Date	No.	Revision Description
6-11-04	2	REVISED LOT NUMBERS

OWNER: NORTHRIDGE DEVELOPMENT. LLC
14045 GARED DRIVE
GLENWOOD, MD 21738

DEVELOPER: JAMES F. SELFRIDGE BUILDERS, INC.
14045 GARED DRIVE
GLENWOOD, MD 21738

DMW
Daft-McCune-Walker, Inc.
200 East Pennsylvania Avenue
Towson, Maryland 21286
(410) 296-3333
Fax 296-4705

A Team of Land Planners, Landscape Architects, Engineers, Surveyors & Environmental Professionals

SUBDIVISION NAME			SECTION/AREA		LOT/PARCEL
FOX MEADOW			15	3	167
PLAT OR L/F	BLOCK	ZONE	TAX/ZONE MAP	ELECTION DIST.	CENSUS TRACT
5383/482	13, 19, 20	RR-RC	15	3	

TITLE: FOX MEADOW
(FORMERLY PFEFFERKORN PROPERTY)
STREET TREE & SWM
LANDSCAPE PLAN

Des By DWR	Scale 1"=50'	Proj. No. 00042.B	
Drn By DWR/BKC	Date 1/07/04	23 OF 24	
Chk By MM	Approved		

Wed Mar 24 16:47:01 2004 n:\GC0042\GC00423.tpla

F-03-145

3/24/2004 4:46:51 PM \\ATHENS\STATION\CADNET\NCF\daq.qef cr122 c:\hpm\000423.hpm

Landscape Notes

1. The contractor shall review architectural/engineering plans to become thoroughly familiar with grading and surface utilities.

2. All equipment and tools shall be placed so as not to interfere or hinder the pedestrian and vehicular traffic flow. See Seasonal Plant List for planting times of bulbs and seasonal plants.

3. The contractor shall coordinate with lighting and irrigation contractors regarding timing of installation of plant material.

4. The contractor shall insure that his work does not interrupt established or projected drainage patterns.

5. During planting operations, excess waste materials shall be promptly and frequently removed from the site.

6. The contractor is advised of the existence of underground utilities on the site. Their exact location shall be verified in the field with the owner or general contractor prior to the commencement of any digging operations. In the event they are uncovered, the contractor shall be held responsible for all damage to utilities and such damage shall not result in any additional expenses to the owner.

7. If utility lines are encountered in excavation of tree pits, other locations for trees shall be made by the contractor without additional compensation. No changes of location shall be made without approval of the landscape architect.

8. Maintain positive drainage out of planting beds at a minimum 2% slope. All grades, dimensions, and existing conditions shall be verified by the contractor on site before construction begins. Any discrepancies shall be brought to the attention of the landscape architect or owner.

9. Every possible safeguard shall be taken to protect building surfaces, equipment, and furnishing. The contractor shall be responsible for any damage or injury to person or property which may occur as a result of his negligence in the execution of the work.

10. In the event of variation between quantities shown on the plant list and the plans, the plans shall control. The contractor is responsible for verifying all plant quantities prior to the commencement of work. Sod quantity take-offs are the responsibility of the contractor. All discrepancies shall be reported to the landscape architect for clarification prior to bidding. The contractor shall furnish plant material in sizes as specified in plant list.

11. The contractor shall stake all material located on the site for review and/or adjustment by the landscape architect prior to planting. All locations are to be approved by the landscape architect before excavation.

12. Plants shall conform to current "American Standards for Nursery Stock" by American Association of Nurserymen (AAN), particularly with regard to size, growth, size of ball, and density of branch structure. Plant material shall be tagged at the source by the landscape architect unless this requirement is specifically waived.

13. All plants (B&B or container) shall be properly identified by weather-proof labels securely attached thereto before delivery to project site. Labels shall identify plants by name, species, and size. Labels shall not be removed until the final inspection by the landscape architect or agent in charge.

14. Any material and/or work may be rejected by the landscape architect if it does not meet the requirements of the specifications. All rejected materials shall be removed from the site by the contractor.

15. No substitutions shall be made without written consent of the owner or landscape architect.

16. The landscape architect or owner shall have the right, at any stage of the operations, to reject any and all work and material which, in his opinion, does not meet the requirements of these plans and specifications.

17. The contractor shall be wholly responsible for stability and conditions of all trees and shrubs and shall be legally liable for any damage caused by instability of any plant materials.

18. All proposed trees to be installed either entirely in or entirely out of planting beds. Planting bed lines are not to be obstructed. All shrubs and ground cover areas shall be planted in continuous prepared bed and top dressed with 3-inch shredded hardwood mulch. Mulch shall have been shredded within the last six months.

19. All planting beds adjacent to lawn, sod, or seeded areas shall be spade edged.

20. Maintenance shall begin after each plant has been installed and shall continue until 90 days after final acceptance by the architect or owner representative. Maintenance includes mowing of turf, watering, pruning, weeding, fertilizing, mulching, replacement of sick or dead plants, and any other care necessary for the proper growth of the plant material. The contractor must be able to provide continued maintenance if requested by the owner.

21. Upon completion of all landscaping, an acceptance of the work shall be held. The contractor shall notify the landscape architect or owner for scheduling the inspection at least seven (7) days prior to the anticipated inspection date.

22. All trees shall be guaranteed for 12 months from the date of acceptance. All shrubs and ground covers shall be guaranteed for 12 months from the date of acceptance.

23. The contractor is responsible for testing project soils. The contractor is to provide a certified soils report to the owner. The contractor shall verify that the soils on site are acceptable for the proper growth of the proposed plant material. Should the contractor find poor soil conditions, the contractor shall be required to provide soil amendments as necessary. These amendments shall include, but not be limited to, fertilizers, lime, and topsoil. Proper planting soils must be verified prior to planting of materials.

24. PLANTING MIX:
a. Planting mix shall be prepared at approved on-site staging area using approved on-site existing soil. Mix minimum quantities of 20 cubic yards or sufficient mix for entire job if less than 20 cubic yards is required.

b. Thoroughly mixed in the following proportions for tree and shrub planting mix:
5 cy existing soil
2 cy sharp sand
3 cy wood residuals
4.5 lbs treble superphosphate
5 lbs dolomite limestone (eliminate for acid loving plants)

c. For bed planting, shrubs and groundcover spaces 24 inches or closer, incorporate the following ingredients per 20 sf and incorporate into top 8 inches of existing soils by rototilling or similar method of incorporation.
2 cy sharp sand
3 cy organic material
4.5 lbs treble superphosphate
5 lbs dolomite limestone (eliminate for acid loving plants)

25. The contractor shall dispose of stumps and major roots of all plants to be removed. Any depressions caused by removal operations shall be refilled with fertile, friable soil placed and compacted so as to reestablish proper grade for new planting and/or lawn areas.

26. The contractor shall insure adequate vertical drainage in all plant beds and planters.

27. All disturbed areas on the site not planted with shrubs or ground cover shall be fine graded and seeded or sodded as noted on landscape plan.

28. All sod shall be obtained from areas having growing conditions familiar to areas to be covered. Areas to be sodded shall be raked of stones and debris. Debris and stones over 1 inch in diameter shall be removed from the site. All damaged sod will be rejected. All sod must be placed with staggered joints, tightly butted, with no inequalities in grade. Place all sod in rows at right angles to slopes (where applicable).

29. All planting procedures shall conform to Daft McCune Walker Inc. specifications.

30. Some field located plants are not graphically shown on this plan but are within the limit of construction line. All plants (field located plants and graphically shown plants) are noted on the plant list.

Water Quality Planting Specifications

PART 1 GENERAL

1.01 DESCRIPTION: Work consists of all labor, materials, equipment and services necessary for and incidental to the execution and completion of WETLAND PLANTS as indicated on the Drawings and specified herein.

A. Include:

1. Furnishing of all plant material.

2. Soil preparation, planting operations.

3. Maintenance and guarantee.

1.02 QUALITY ASSURANCE

A. American Association of Nurserymen (A.A.N.): "American Standard for Nursery Stock", (A.N.S.I. Z60.1) as expanded herein.

B. Nomenclature: In accordance with HORTUS III by L. H. Bailey.

C. United States Department of Agriculture: Textural Classification Diagram for Soils.

1.03 STANDARD OF COMPARISON

A. When the Drawings indicate a total quantity of five (5) or more of an individual plant (other than bulbs or perennials) the Contractor shall obtain approval of a standard of comparison prior to delivery on site. Assemble samples of all plants to be evaluated as "standards" at the principal business location of the Contractor. Notify Owner to schedule an inspection for approval of "standards" and to obtain record photographs. Photographs of each "standard" shall be used for comparison of all material subsequently installed on the site.

1.04 SUBMITTALS

A. Source: Notify the Owner, in writing, of source of all material before delivery.

1.05 DELIVERY, STORAGE AND HANDLING

A. Root stock of the plant material shall be kept moist during transport from the source to the job site and until planted.

B. Transport and handle plants so that foliage, roots, or balls are protected from breakage, sun and winds. Tops or roots of plants allowed to dry out or which have been damaged or disturbed root balls will be cause for rejection.

1.06 DRAWINGS

A. The Contractor shall use quantities of wetland plants noted on the plant list.

1.07 PROJECT CONDITIONS

A. Planting shall commence following approval of the as-built certification of the subject water quality facility.

B. All emergent wetland plantings shall be installed between April 15 and June 30 or as directed by the Landscape Architect. Do not plant when ground is frozen. Do not use frozen planting soil at any time.

1.08 DEFINITIONS

A. Start of Planting: Installation of plant material into excavated pits or beds.

B. Payment Release Inspection: Conducted monthly by the Owner or designated representative to verify quantity only for partial payment to the Contractor. Payment release inspection does not waive any requirements of the standard of comparison or initial acceptance clause.

C. Initial Inspection: Conducted at the request of the Contractor and the Owner when 90% or more of all planting and related tasks are complete.

D. Initial Acceptance: Occurs when all plant material is in place in accordance with the specifications and approved by the Owner.

E. Maintenance Period: From start of planting to final acceptance.

F. Guarantee Period: From initial acceptance and continuing for 90 days thereafter, excluding the period from November 1 to April 15.

G. Final Acceptance: Occurs after Contractor has completed all outstanding items, as determined by the Owner, at the end of the maintenance and guarantee period.

1.09 GUARANTEE AND REPLACEMENT

A. All plants in an impaired, dead or dying condition prior to initial acceptance and prior to final acceptance shall be removed and replaced. Replacement materials shall be the same size as other unreplaced material considering growth that has occurred since original installation. Methods of installation shall be identical to the original. The contractor shall guarantee 85% survivorship at the end of the guarantee period.

B. Replacements shall be made between April 15 and June 30, the season following the initial planting, and shall conform to the planting specifications listed above.

C. The contractor shall notify the Landscape Architect to arrange a site meeting to determine the replacement requirements, at the end of the guarantee period.

PART 2 PRODUCTS

2.01 PLANTS

A. Sound, healthy, vigorous, free from plant diseases, insect pests or their eggs.

B. Plants cut back from larger sizes or pruned prior to delivery will not be accepted.

C. It is anticipated that these plants will need to be obtained from a nursery source. These plant species are normally unavailable from standard landscape nursery sources.

D. Shape and Form: Plant materials shall be symmetrical and typical for the variety and species.

E. Container: The soil/root masses shall be thoroughly moist upon delivery to the job site. Any dry and light weight plants shall be rejected. If not planted immediately after being delivered to the job site, the plants shall be stored out of direct exposure to the sun and wind and their root masses maintained moist, through periodic watering, until the time of planting.

Until the removal of the plants from the containers, the soil/root masses shall be the size of the specified soil ovlots on the bottom of the containers, the plants will be rejected since they have not been grown sufficiently long in the containers to root into the soils contained therein.

The plants shall appear healthy with no leaf spots, leaf damage, leaf discolorations, leaf wilting, or evidence of insects on the leaves.

The container size shall be at least as large as indicated in the specifications or shown in the plant tables/lists. Plants shall not be rejected if supplied in containers larger than specified.

F. Fiber or Peat Pots: If not planted immediately after being delivered to the job site, the plants shall be stored out of direct exposure to the sun and wind and their pots and associated root masses maintained moist, through periodic watering, until the time of planting.

The plants shall be well-rooted through the sides and bottoms of the pots and firmly contained therein.

Should the plants be removed from the pots by holding them from their tops and gently pulling on the pots, the plants shall be rejected.

If growing, the plants shall appear healthy with no foliar spots, discolorations, wilting, or other evidence of the presence of disease or insects.

Plants shall not be rejected if supplied in pots larger than specified.

The number of plants, stems, or culms per pot as specified or shown in the plant tables/lists at least shall be present, on the average, or the plants shall be rejected.

G. Dormant Propagule (Herbaceous): If not planted immediately after being delivered to the job site, the dormant propagules shall be stored out of the direct exposure to the sun and wind, and they shall be protected by covering with straw, peat moss, compost, or other suitable materials and shall be maintained moist, through periodic watering, until the time of planting.

The bodies and shoots associated with the propagules shall have turgor or be rigid to the touch. If the bodies and/or shoots associated with the propagules are soft or mushy or appear rotten or decomposed, the plant materials shall be rejected.

Rhizome (stolon) sections shall provide a minimum of two shoots per section or Rhizome (stolon) sections containing at least a terminal shoot shall be a minimum of four inches in length (in order to ensure sufficient stored energy to support the new growth). Rhizome sections containing shoots that are soft or mushy or otherwise appear rotten shall not be accepted.

Suckers shall contain a terminal shoot and be a minimum of four inches in length (in order to ensure sufficient stored energy to support the new growth).

Growing Bare Root Plant (Herbaceous): The plants shall contain new roots that are clean and white in coloration.

If not planted immediately after delivery to the job site, the plants shall be stored out of direct exposure to the sun and wind and the new roots shall be protected by the use of straw, peat moss, compost, or other suitable materials and shall be maintained moist, through periodic watering, until the time of planting.

The plants shall appear healthy with no foliar spots, discolorations, wilting, or other evidence of the presence of disease or of insects.

2.02 FERTILIZER

A. Plant Fertilizer: Slow release fertilizer such as Osmocote 19-6-12 analysis (3-4 month release) or equal approved by the Landscape Architect.

B. Slow release fertilizer shall be applied at the time of planting and at the following rate:

All emergent plant material - planting pit application of 1 oz. per container or bare root plant.

C. Pesticides, herbicides and fungicides will not be used unless judged necessary by the wetland landscaper. If applied, quantities recommended by the Department of Agriculture shall not be exceeded.

D. Fertilizer shall be delivered to the site in the original unopened containers with formulas attached.

3.01 PREPARATION

A. Plant Locations: As shown on the Drawings, to dimensions if shown, to scale if not dimensioned. Locations subject to review by the Landscape Architect before starting excavation.

B. No plant material shall be installed until the Landscape Architect has approved the finish grade of the planted areas.

3.02 PLANTING PROCEDURES

A. Set plants straight and plumb.

B. Plant material shall be planted in existing soil with each planting pit excavated to size sufficient to contain the entire root stock or root mass without cramping.

C. Where water is not available on-site, the Contractor shall furnish sufficient quantities to complete the Work at no additional cost to the Owner.

3.04 CLEAN-UP

A. During planting operations, excess and waste materials shall be removed from the site on a daily basis.

B. Repair turf areas and other existing conditions damaged during planting operations, including regrading, seed, mulch and fertilization to the satisfaction of the Owner.

3.05 MAINTENANCE

A. Watering of plant material shall take place at the end of each for fourteen (14) consecutive days after planting has been completed. The watering shall completely saturate the soil and partially immerse the plant material.

B. During maintenance period, on approximately the 1st and 15th of each month, the Contractor shall provide sufficient supervision, equipment, materials and manpower to:

1. Keep all plants in a healthy growing condition by watering, when necessary, removing dead or dying branches, controlling insect infestations, removing sprouts, weeding.

2. Remove and replace dead or damaged plant material. Where replacement is not possible due to season, remove dead material, etc. and level pit until planting is possible.

B. Notify Owner for review of activities prior to initiating maintenance operations each month.

General Planting Notes

1. All plant material to meet A.A.N. Standards.
2. Landscape Contractor to follow landscape specification guidelines for Baltimore Washington Metro area approved by LCAMW.
3. No substitutions to be made without consent of Landscape Architect or Owner.
4. All beds to be topped with three inches of hardwood mulch.
5. Landscape Contractor to verify location of utilities with Owner before planting.
6. Landscape Architect/Owner shall select, verify and/or approve all plant material. At Owner's discretion, specimen and other plant material will be selected.
7. Landscape Contractor shall coordinate plant bed filling operations and plant material installation with General Contractor and Utilities Contractor. At the time of final inspection with acceptance, all electric, water, drainage, and fountain utilities, as well as all plant materials, shall remain undamaged. Likewise, Landscape Contractor and Utilities Contractor shall coordinate efforts to ensure that surface utilities are at the proper elevation relative to final grades.
8. Contractor shall notify Miss Utility 72 hours prior to construction.
9. The owner, tenant, and/or their agents shall be responsible for maintenance of the required landscaping, including both plant materials and berms, fences and walls. All plant materials shall be maintained in good growing condition, and when necessary, replaced with new materials to ensure continued compliance with applicable regulations. All other required landscaping shall be permanently maintained in good condition, and when necessary, repaired or replaced.
10. This plan has been prepared in accordance with the provisions of Section 16.124 of the Ho. Co. code. Financial surety for the required landscaping in the amount of $43,350 must be posted as part of the developer's agreement. (104 shade, 81 evergreens).
11. Developer's/Builder's Certificate

I/we certify that the landscaping shown on this plan will be done according to the plan, Section 16.124 of the Howard County code and the Howard County Landscape Manual. I/we further certify that upon completion, a certification of landscape installation, accompanied by an executed one-year guarantee of plant materials, will be submitted to the Department of Planning and Zoning.

NAME: James H. Delfino DATE 3/23/04

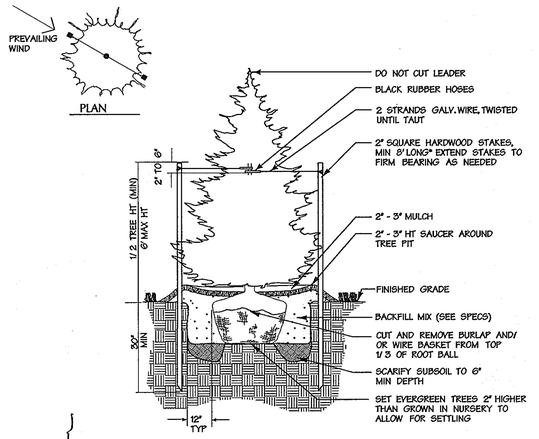

Evergreen Tree Planting
Not To Scale

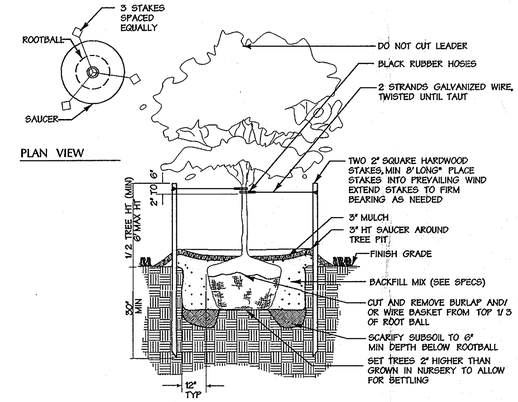

Less Than 3" Cal. Tree Planting
Not To Scale

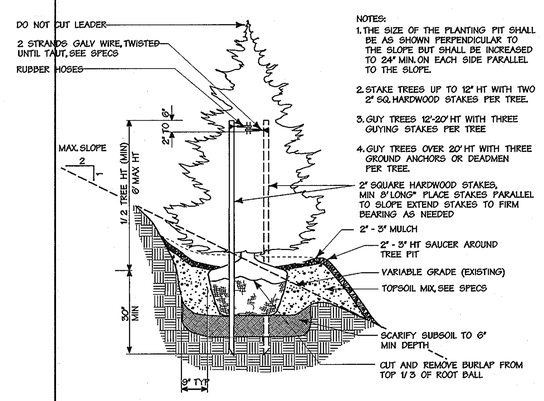

NOTES:
1. THE SIZE OF THE PLANTING PIT SHALL BE AS SHOWN PERPENDICULAR TO THE SLOPE BUT SHALL BE INCREASED TO 24" MIN. ON EACH SIDE PARALLEL TO THE SLOPE.
2. STAKE TREES UP TO 12' HT WITH TWO 2" SQ. HARDWOOD STAKES PER TREE.
3. GUY TREES 12'-20' HT WITH THREE GUYING STAKES PER TREE
4. GUY TREES OVER 20' HT WITH THREE GROUND ANCHORS OR DEADMEN PER TREE.

Evergreen Tree Planting on Slope
Not To Scale

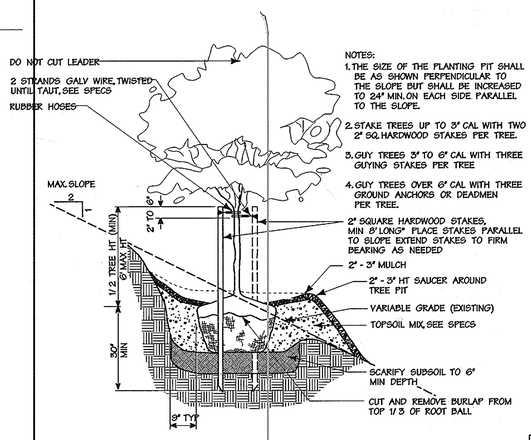

NOTES:
1. THE SIZE OF THE PLANTING PIT SHALL BE AS SHOWN PERPENDICULAR TO THE SLOPE BUT SHALL BE INCREASED TO 24" MIN. ON EACH SIDE PARALLEL TO THE SLOPE.
2. STAKE TREES UP TO 3" CAL WITH TWO 2" SQ. HARDWOOD STAKES PER TREE.
3. GUY TREES 3" TO 6" CAL WITH THREE GUYING STAKES PER TREE
4. GUY TREES OVER 6" CAL WITH THREE GROUND ANCHORS OR DEADMEN PER TREE.

Tree Planting on Slope
Not To Scale

DATA SOURCES:
BOUNDARY PER DMW FIELD SURVEY DATED DECEMBER 2001.
TOPO FLOWN BY VIRGINIA RESOURCE MAPPING, DECEMBER, 2001.
APPROX. WETLAND LOCATION PER DMW FIELD VISIT DATED APRIL 2002. OFF SITE SEPTIC RESERVE AREAS PER RECORD PLATS, LOCATIONS OF WELLS NOT AVAILABLE.

APPROVED: HOWARD COUNTY DEPARTMENT OF PUBLIC WORKS

CHIEF, BUREAU OF HIGHWAYS — DATE 4-13-04

APPROVED: HOWARD COUNTY DEPT. OF PLANNING & ZONING

CHIEF, DEVELOPMENT ENGINEERING DIVISION — DATE 4/28/04

CHIEF, DIVISION OF LAND DEVELOPMENT JA — DATE 4/29/04

~~DIRECTOR~~ — ~~DATE~~

Date	No.	Revision Description

OWNER: NORTHRIDGE DEVELOPMENT. LLC
14045 GARED DRIVE
GLENWOOD, MD 21738

DEVELOPER: JAMES F. SELFRIDGE BUILDERS, INC.
14045 GARED DRIVE
GLENWOOD, MD 21738

DMW
Daft-McCune-Walker, Inc.
200 East Pennsylvania Avenue
Towson, Maryland 21286
(410) 296-3333
Fax 296-4705

A Team of Land Planners, Landscape Architects, Engineers, Surveyors & Environmental Professionals

SUBDIVISION NAME			DISTRICT/AREA		LOT/PARCEL
FOX MEADOW			1		167
PLAT OR L/F	BLOCK	ZONE	TAXZONE MAP	ELEC. DISTRICT	CENSUS TRACT
5983/492	13, 19, 20	RR, RC	15	3	

TITLE: FOX MEADOW
(FORMERLY PFEFFERKORN PROPERTY)
LANDSCAPE NOTES & DETAILS

Des By	BKC	Scale	NONE	Proj. No. 00042.B
Drn By	BKC	Date	11/07/04	24 OF 24
Chk By	MM	Approved		

3.25.04
Date

STATE OF MARYLAND — MELANIE K. MEYER — No. 662 — REGISTERED LANDSCAPE ARCHITECT

Landscape Architect No.

F-03-45

Mon Mar 22 15:34:45 2004 n\00042\00042fp5

3/22/2004 3:33:40 PM \\ATHENS\STATION\CADNET\NCCF\dolgoff cr122 c:\hpm\00042f.hpm

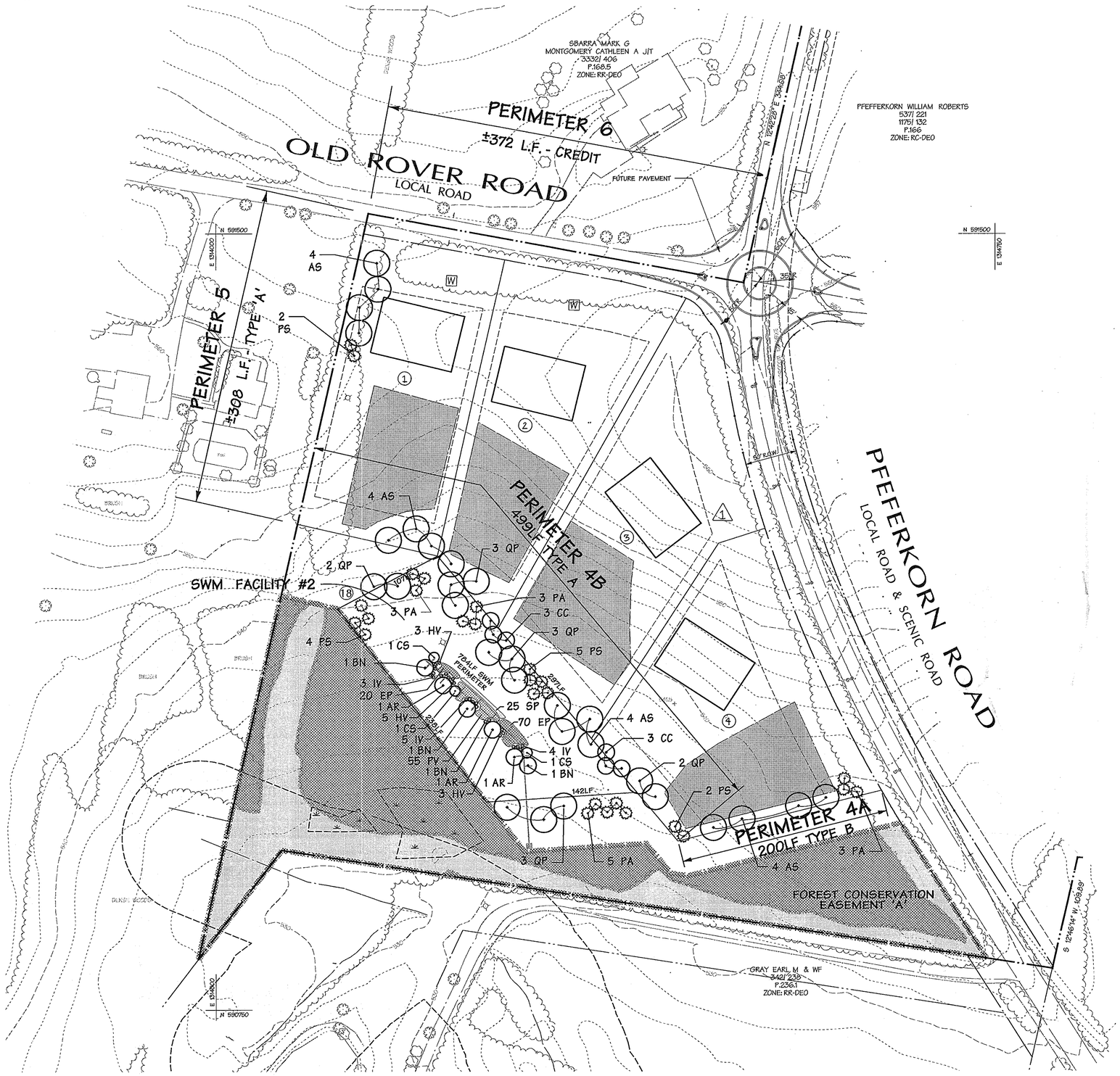

SEE SHEET 23 FOR PLANT LIST AND SHEET 25 FOR PLANTING NOTES & DETAILS.

TOTAL LANDSCAPE PLANTS (THIS SHEET):

29 SHADE
25 EVERGREEN
6 ORNAMENTAL

(DOES NOT INCLUDE BIORETENTION PLANTING)

Bioretention Area Plant List

Species	Common name	Size	Quantity	Spacing	Indicator status
Acer rubrum (AR)	red maple	2 1/2" -3" caliper, container grown	3	As shown	FAC
Betula nigra (BN)	river birch	2 1/2" - 3" caliper, container grown	3	As shown	FACW
Cornus stolonifera (CS)	red-osier dogwood	18" - 24" height* container grown	3	As shown	FACW
Hamamelis virginiana (HV)	witch hazel	18" - 24" height, container grown	13	As shown	FAC
Ilex verticillata (IV)	winterberry	18" - 24" height* container grown	12	As shown	FACW
Eupatorium perpureum (EP)	Joe Pye weed	quart-sized container*	70	Approx 3' OC throughout	FAC
Panicum virgatum (PV)	switchgrass	quart-sized container*	55	Approx 3' OC throughout	FAC
Scirpus pungens (SP)	common three square	quart-sized container*	25	Approx 3' OC throughout	FACW

* Note: Plugs, dormant rhizomes, or bare root stock may be substituted if available.

SCHEDULE A
PERIMETER LANDSCAPE EDGE

CATEGORY	ADJACENT to ROADWAYS			ADJACENT to PERIMETER PROPERTIES					
LANDSCAPE TYPE 'A'				P 1	P 2			P 4B	P 5
LINEAR FEET OF PERIMETER				1180 LF.	432 LF.			499 LF.	308 LF.
LANDSCAPE TYPE 'B'	P 6	P 7	P 8			P 3	P 4A		
LINEAR FEET OF PERIMETER	313 LF.	344 LF.	407			467 LF.	200 LF.		
LANDSCAPE TYPE 'C'									
LINEAR FEET OF PERIMETER									
CREDIT FOR EXISTING VEGETATION (DESCRIBE BELOW IF NEEDED)	313 LF.	N/A	N/A	N/A	N/A	N/A	N/A	N/A	N/A
CREDIT FOR BERM (DESCRIBE BELOW IF NEEDED)	N/A	N/A	N/A	N/A	N/A	N/A	N/A	N/A	N/A
NUMBER OF PLANTS REQUIRED									
SHADE TREES	0	7	8	20	7	9	4	8	5
EVERGREEN TREES	0	9	10	0	0	12	5	0	0
SHRUBS	0	0	0	0	0	0	0	0	0
NUMBER OF PLANTS PROVIDED									
SHADE TREES	0	5	8	11	7	9	4	8	4
EVERGREEN TREES	0	9	10	8	0	12	5	0	2
OTHER TREES (2 :1 SUBSTITUTION)	0	4	0	10	0	0	0	0	0
SHRUBS (10 :1 SUBSTITUTION) (DESCRIBE PLANT SUBSTITUTION CREDITS BELOW IF NEEDED)									

* NOTE: STREET TREES WILL BE PROVIDED @ 1/40 LF.
* THE DEVELOPER WILL PROVIDE ALL PERIMETER LANDSCAPE OBLIGATIONS

SCHEDULE D
STORMWATER MANAGEMENT AREA LANDSCAPING

POND #	1	2
LINEAR FT OF PERIMETER (TYPE "B")	1175 LF	784 LF
NUMBER OF TREES REQUIRED		
SHADE TREES @ 1/50 LF.	20	16
EVERGREEN TREES @ 1/40 LF.	25	20
CREDIT FOR EXISTING VEGETATION	183 LF	NA
CREDIT FOR OTHER LANDSCAPING	NA	NA
NUMBER OF TREES PROVIDED		
SHADE TREES	11	13
EVERGREEN TREES	31	20
FLOWERING TREES	12	6

* THE DEVELOPER WILL PROVIDE ALL SWM LANDSCAPE OBLIGATIONS

LEGEND

- EX. CONTOUR
- EX. STREAM
- EX. BUILDING
- EX. WOODS LINE
- EX. SEPTIC AREA
- RC-DEO / RR-DEO — ZONING LINE
- PROP. LOT LINE
- PROP. REPLACEMENT WELL AREA / PROP. WELL
- PROP. BUILDING
- PROP. SRA
- LOT NUMBER
- 75' STREAM BUFFER
- 25' WETLAND BUFFER / WETLAND
- PRELIMINARY 100-YEAR FLOODPLAIN
- PROPOSED STREET TREES
- FOREST RETENTION
- AFFORESTATION/ REFORESTATION
- PROP. TREELINE
- FOREST CLEARING
- FOREST CONSERVATION EASEMENT

NORTH

HO 2001-G005 (01)

3.25.04
Date

STATE OF MARYLAND — MELANIE MACKER — No. 681 — LANDSCAPE ARCHITECT

Landscape Architect No.

DATA SOURCES:

BOUNDARY PER DMW FIELD SURVEY DATED DECEMBER 2001.

TOPO FLOWN BY VIRGINIA RESOURCE MAPPING, DECEMBER, 2001.

APPROX. WETLAND LOCATION PER DMW FIELD VISIT DATED APRIL 2000. OFF SITE SEPTIC RESERVE AREAS PER RECORD PLATS, LOCATIONS OF WELLS NOT AVAILABLE.

APPROVED: HOWARD COUNTY DEPARTMENT OF PUBLIC WORKS

CHIEF, BUREAU OF HIGHWAYS — DATE 4-13-04

APPROVED: HOWARD COUNTY DEPT. OF PLANNING & ZONING

CHIEF, DEVELOPMENT ENGINEERING DIVISION — DATE 4/20/04

CHIEF, DIVISION OF LAND DEVELOPMENT — DATE 4/07/04

~~DIRECTOR~~ — ~~DATE~~

Date	No.	Revision Description
6-11-04	1	REVISED LOT NUMBERS

OWNER: NORTHRIDGE DEVELOPMENT. LLC
14045 GARED DRIVE
GLENWOOD, MD 21738

DEVELOPER: JAMES F. SELFRIDGE BUILDERS, INC.
14045 GARED DRIVE
GLENWOOD, MD 21738

DMW
Daft-McCune-Walker, Inc.
200 East Pennsylvania Avenue
Towson, Maryland 21286
(410) 296-3333
Fax 296-4705

A Team of Land Planners, Landscape Architects, Engineers, Surveyors & Environmental Professionals

SUBDIVISION NAME			SECTION/AREA		LOT/PARCEL
FOX MEADOW			1		167
PLAT OR L/F	BLOCK	ZONE	TAX/ZONE MAP	ELEC. DISTRICT	CENSUS TRACT
5983/492	13, 19, 20	RR, RC	15	3	

TITLE
FOX MEADOW
(FORMERLY PFEFFERKORN PROPERTY)
STREET TREE & SWM LANDSCAPE PLAN

Des By	DWR	Scale 1"=50'	Proj. No. 00042.B
Drn By	DWR/BKC	Date 1/07/04	
Chk By	MM	Approved	23 OF 24

F-03-115

Wed Mar 24 16:47:01 2004 m\00042\00042f.tpl

3/24/2004 4:46:51 PM \\ATHENS\STATION\CADNETV\DGN\00042f.hpm

SEE SHEET 23 FOR PLANT LIST AND SHEET 25 FOR PLANTING NOTES & DETAILS.

TOTAL LANDSCAPE PLANTS (THIS SHEET):

52 SHADE
72 EVERGREEN
26 ORNAMENTAL

(DOES NOT INCLUDE BIORETENTION PLANTING)

Water Quality Planting Plan**
Facility #1

ZONE "A" (7,760 +/- s.f.)

Species	Size	Spacing	Quantity	Remarks
Scirpus tabernaemontanii	quart container*	36"	166	OBL
Iris pseudacoris	quart container*	36"	166	OBL
Lobelia cardinalis	quart container	36"	166	FACW
Iris versicolor	quart container*	36"	166	OBL
Panicum virgatum	quart container	36"	166	FAC
Saururus cernuus	quart container*	36"	166	OBL
TOTALS			996	

ZONE "B" (3,204 +/- s.f.)

Species	Size	Spacing	Quantity	Remarks
Sagittaria latifolia	quart container*	36"	198	OBL
Peltandra virginica	quart container*	36"	198	OBL
TOTALS			396	

* Dormant rhizomes of *Scirpus, Iris* and *Saururus*, dormant tubers of *Sagittaria*, and 1st year bulbs of *Peltandra* may be substituted if plantings are to be installed during dormant season.

** Alternate species and install in random pattern, distributing each species across the hydrologic gradient of each planting zone. Single species massings to be avoided.

Plant List (Perimeter & SWM Landscaping)

QTY	SYM	BOTANICAL NAME/ COMMON NAME	SIZE	REMARKS
SHADE TREES				
34	QP	QUERCUS PALUSTRIS PIN OAK	2 1/2" - 3" CAL. 12'-14' HT	B & B FULL HEAD
24	QR	QUERCUS RUBRA RED OAK	2 1/2" - 3" CAL. 12'-14' HT	B & B FULL HEAD
22	AS	ACER SACCHARUM 'GREEN MOUNTAIN' GREEN MOUNTAIN SUGAR MAPLE	2 1/2" - 3" CAL. 12'-14' HT	B & B FULL HEAD
EVERGREEN TREES				
41	PA	PICEA ABIES NORWAY SPRUCE	6'-8' HT.	B & B
56	PS	PINUS STROBUS WHITE PINE	6'-8' HT.	B & B HEAVY / UNSHEARED
ORNAMENTAL TREES				
12	AL	AMELANCHIER LAEVIS ALLEGHENY SERVICEBERRY	8'-10' HT.	B & B
20	CC	CERCIS CANADENSIS EASTERN REDBUD	8'-10' HT.	B & B
GROUND COVER				
~~38~~	~~JC~~	~~JUNIPERUS CHINENSIS 'SEA GREEN' SEA GREEN JUNIPER~~	~~18-24" SPD.~~	~~CONT.~~

PERIMETER 1
±1180 L.F. - TYPE 'A'

PERIMETER 2
±432 L.F. - TYPE 'A'

PERIMETER 3
±467 L.F. - TYPE 'B'

PERIMETER 7
±344 L.F. - TYPE 'B'

PERIMETER 8
±407 L.F. - TYPE 'B'

PFEFFERKORN ROAD
LOCAL ROAD & SCENIC ROAD

PUBLIC DESIGN SPEED 25 MPH ROAD

PROPOSED "10' TREE" MAINTENANCE EASEMENT

PROPOSED STANDING PAD

FUTURE PAVEMENT

PRES. PARCEL A
0.37 AC. +/-
(NON-BUILDABLE)

PRES. PARCEL B
9.226 AC. +/-
(NON-BUILDABLE, PRIVATE OWNERSHIP)

FOREST CONSERVATION EASEMENT 'A'

FOREST CONSERVATION EASEMENT 'B'
NORTHRIDGE DEVELOPMENT LLC
5983/ 492
P.167
ZONE: RC-DEO

SWM POND 1
±992 L.F. - PERIMETER
TYPE 'B'

PUBLIC STORMWATER MANAGEMENT EASEMENT (HOA OWNERSHIP)

±183 L.F. - CREDIT

75' STREAM BUFFER

100 YR. FLOODPLAIN LINE

PERENNIAL STREAM

NON-WOODY VEGETATION LIMIT

SBARRA MARK G
MONTGOMERY CATHLEEN A J/T
3332/ 406
P.168&5
ZONE: RR-DEO

PFEFFERKORN WILLIAM ROBERTS
537/ 221
1175/ 132
P.166
ZONE: RC-DEO

GRAY EARL M & WF
342/ 238
P.236.1
ZONE: RR-DEO

UNKNOWN OWNERSHIP
P.22
ZONE: RC-DEO

S 76°06'46" E 1509.75'

N 85°43'46" W 950.46'

S 12°46'14" W 109.89'

N 591750

E 1314500

N 1242287

E 344.08'

N 591000

E 1315100

11 QR
8 PS
3 CC
3 CC
2 CC
2 CC
4 CC
6 PA
3 AS
3 PS
2 QR
2 QR
4 PS
3 AS
3 PA
3 PA
3 QR
5 QR
6 PA
6 PS
4 QP
2 PS
33 QR
3 PS
3 AL
4 PA
1 QR
2 QP
3 AL
10 PS
4 QP
1 AL
2 AL
7 PS
3 AL
5 PA
4 QP
7 QP

DATA SOURCES:
BOUNDARY PER DMW FIELD SURVEY DATED DECEMBER 2001.
TOPO FLOWN BY VIRGINIA RESOURCE MAPPING, DECEMBER, 2001.
APPROX. WETLAND LOCATION PER DMW FIELD VISIT DATED APRIL 2000. OFF SITE SEPTIC RESERVE AREAS PER RECORD PLATS, LOCATIONS OF WELLS NOT AVAILABLE.

APPROVED: HOWARD COUNTY DEPARTMENT OF PUBLIC WORKS

CHIEF, BUREAU OF HIGHWAYS — DATE 4-13-04

APPROVED: HOWARD COUNTY DEPT. OF PLANNING & ZONING

CHIEF, DEVELOPMENT ENGINEERING DIVISION — DATE 4/28/04

CHIEF, DIVISION OF LAND DEVELOPMENT — DATE 4/29/04

DIRECTOR — DATE

Date	No.	Revision Description
6-11-04	1	REVISED LOT NUMBERS

OWNER: NORTHRIDGE DEVELOPMENT. LLC
14045 GARED DRIVE
GLENWOOD, MD 21738

DEVELOPER: JAMES F. SELFRIDGE BUILDERS, INC.
14045 GARED DRIVE
GLENWOOD, MD 21738

HO 2001-G005 (01)

3.25.04
Date

Landscape Architect No.

NORTH

DMW
Daft-McCune-Walker, Inc.
200 East Pennsylvania Avenue
Towson, Maryland 21286
(410) 296-3333
Fax 296-4705

A Team of Land Planners, Landscape Architects, Engineers, Surveyors & Environmental Professionals

SUBDIVISION NAME			SECT/AREA	LOT/PARCEL
FOX MEADOW			1	167
PLAT OR L/F	BLOCK	ZONE	TAX/ZONE MAP	ELEC.DISTRICT	CENSUS TRACT
5983/492	13, 19, 20	RR, RC	15	3	

TITLE
FOX MEADOW
(FORMERLY PFEFFERKORN PROPERTY)
STREET TREE & SWM LANDSCAPE PLAN

Des By DWR	Scale 1"=50'	Proj. No. 00042.B
Drn By DWR/BKC	Date 1/07/04	22 OF 24
Chk By MM	Approved	

LEGEND

- EX. CONTOUR
- EX. STREAM
- EX. BUILDING
- EX. WOODS LINE
- EX. SEPTIC AREA
- RC-DEO / RR-DEO — ZONING LINE
- PROP. LOT LINE
- PROP. REPLACEMENT WELL AREA / PROP. WELL
- PROP. BUILDING
- PROP. SRA
- (8) LOT NUMBER
- 75' STREAM BUFFER
- 25' WETLAND BUFFER / WETLAND
- PRELIMINARY 100-YEAR FLOODPLAIN
- PROPOSED STREET TREES
- FOREST RETENTION
- AFFORESTATION/ REFORESTATION
- PROP. TREELINE
- FOREST CLEARING
- FOREST CONSERVATION EASEMENT
- WATER QUALITY PLANTING ZONE 'A'
- WATER QUALITY PLANTING ZONE 'B'

Wed Mar 24 14:20:58 2004 n:\00042\000421.lpl

3/24/2004 2:32:48 PM \\ATHENS\STATION\CADETN\DCF\daygof cr1221 o1\hpm\00042f.hpm

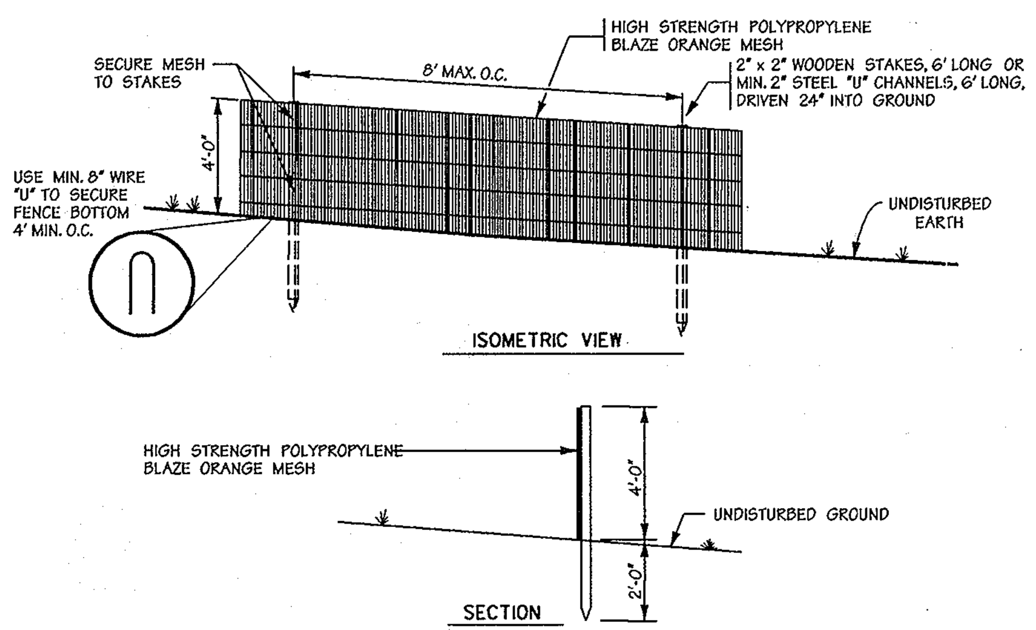

NOTES:

1. THIS DETAIL IS FOR FOREST PROTECTION DEVICE ONLY
2. FOREST RETENTION AREA WILL BE SET AS PART OF THE REVIEW PROCESS
3. BOUNDARIES OF FOREST RETENTION AREA SHOULD BE STAKED AND FLAGGED PRIOR TO INSTALLING THE DEVICE
4. ROOT DAMAGE SHALL BE AVOIDED
5. PROTECTION SIGNAGE MAY ALSO BE USED
6. FOREST PROTECTION FENCE SHALL BE MAINTAINED THROUGHOUT CONSTRUCTION

Forest Protection Fence *

Not To Scale

* WHERE SUPER SILT FENCE (S.S.F.) IS TO BE INSTALLED ADJACENT TO FOREST RETENTION AREAS, ATTACH HIGH VISIBILITY TAPE OR FLAGGING TO THE TOP EDGE OF S.S.F. AT 5' INTERVALS AND USE S.S.F. IN LIEU OF BLAZE ORANGE FENCE. TEMPORARY FOREST PROTECTION SIGNAGE MAY BE ATTACHED TO S.S.F.

PLANTING PROCEDURES FOR ALL CONTAINER GROWN TREES AND SHRUBS:

1. REMOVE THE PLANT EITHER BY CUTTING OR INVERTING THE CONTAINER
2. GENTLY LOOSEN ROOTS FROM SOILS. ROOTS MAY NOT BE CUT OR TRIMMED ON SITE
3. PLANT SHRUB OR TREE 1 TO 2 INCHES ABOVE THE EXISTING GRADE
4. APPLY 2 TO 3 INCH THICK LAYER OF SHREDDED HARDWOOD MULCH

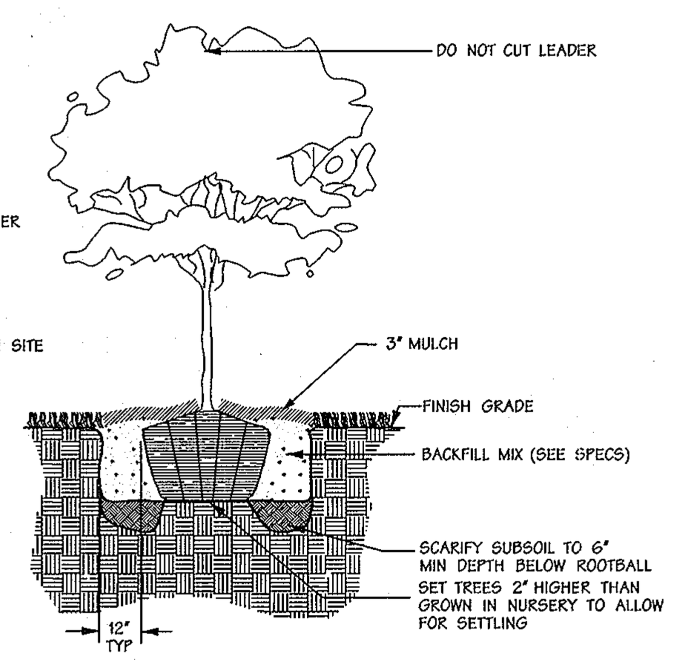

Typical Tree Planting (For container grown)

Not To Scale

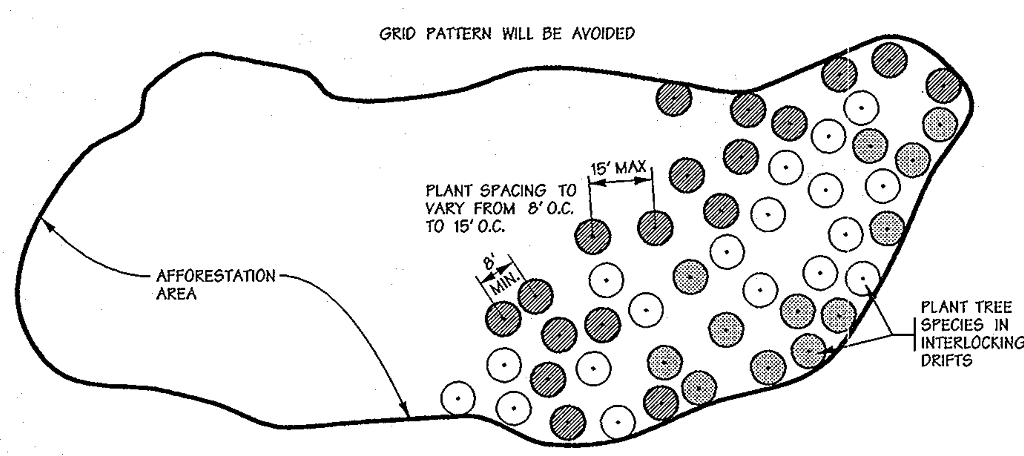

Planting Design Schematic

Not To Scale

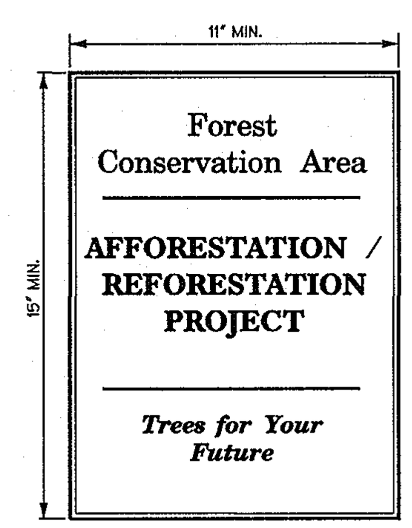

SIGNS TO BE PLACED ON METAL POSTS 5' +/- ABOVE FINISH GRADE PRIOR TO PLANTING. PLACE SIGNS EVERY 100' AROUND PERIMETER OF FOREST CONSERVATION AREA.

Permanent Signage

Not To Scale

Wed Mar 24 14:30:24 2004 n:\00042\00042f.ff1

FOREST CONSERVATION CALCULATIONS

BASIC SITE DATA

	ACRES (1/10)
GROSS SITE AREA	32.22
AREA WITHIN 100 YEAR FLOODPLAIN	2.49
AREA WITHIN AGRICULTURAL USE OR PRESERVATION PARCEL (IF APPLICABLE)	0.0
NET TRACT AREA	29.73
LAND USE CATEGORY	RESIDENTIAL

INFORMATION FOR CALCULATIONS

A. NET TRACT AREA	29.73
B. REFORESTATION THRESHOLD (25% x A)	7.43
C. AFFORESTATION MINIMUM (20% x A)	5.95
D. EXISTING FOREST ON NET TRACT AREA	6.01
E. FOREST AREAS TO BE CLEARED	1.84
F. FOREST AREAS TO BE RETAINED	4.17

REFORESTATION CALCULATIONS

A. NET TRACT AREA	29.73
B. REFORESTATION THRESHOLD (25% x A)	7.43
C. EXISTING FOREST ON NET TRACT AREA	6.01
D. FOREST AREAS TO BE CLEARED	1.84
E. FOREST AREAS TO BE RETAINED	4.17
F. FOREST AREAS CLEARED ABOVE REFORESTATION THRESHOLD	0.0
G. FOREST AREAS CLEARED BELOW REFORESTATION THRESHOLD	1.84
H. FOREST AREAS RETAINED ABOVE REFORESTATION THRESHOLD	0.0

CLEARING BELOW THE THRESHOLD

IF FOREST AREAS TO BE RETAINED ARE LESS THAN THE REFORESTATION THRESHOLD (IF F IS GREATER THAN B), THE FOLLOWING CALCULATIONS APPLY:

REFORESTATION FOR CLEARING ABOVE THRESHOLD Fx1/4	0.0
REFORESTATION FOR CLEARING BELOW THRESHOLD Gx2	3.68
TOTAL REFORESTATION REQUIRED (Fx1/4) + (Gx2)	3.68
TOTAL AFFORESTATION REQUIRED	0.0
NO CREDIT FOR RETENTION ABOVE CONSERVATION THRESHOLD	0.0
REFORESTATION REQUIRED	3.68 ACRES
REFORESTATION PROVIDED	3.68 ACRES

* NOT ALL VEGETATION WILL BE REMOVED. VEGETATION REMAINING AFTER ROAD GRADING WILL BE COUNTED TOWARDS LANDSCAPE REQUIREMENTS AND AUGMENTED WITH STREET TREES. HOWEVER FOR THE PURPOSE OF FOREST CONSERVATION CALCULATIONS THIS AREA IS COUNTED AS CLEARED BECAUSE IT IS NOT FORMERLY RETAINED IN AN FCE.

NOTE: LANDSCAPE-SIZE MATERIAL IS TO BE PLANTED ALONG FCE EDGES ADJACENT TO THE SCENIC ROAD.

GOALS AND OBJECTIVES

The goals and objectives of this Forest Conservation Plan are to identify forest retention areas under the current Forest Conservation Act in accordance with development of the Fox Meadow property, and to assign reforestation areas on-site to satisfy the replacement obligation. Approximately 4.17 acres of existing forest will be retained adjacent to water resources, and approximately 1.84 acres of forest will be cleared, generating a 3.68-acre reforestation obligation to be satisfied on-site with a combination of reforestation and landscaping.

Planting Zones have been described according to varying hydrologic regimes, with Zone I including wetland areas on the southwestern portion of the site. Zone II is a mesic area located on the outer fringes of the wetlands on the southwestern portion of the site, and is roughy bound by the 532-ft. contour. Zone III is assigned to uplands across the site. Zone IV is located along Pfefferkorn Road and will consist of larger-caliper planting stock to provide an aesthetic screen of forest between the proposed residential community and the scenic road. Zone V consists of landscaping behind lots 11-14.

FOREST RETENTION

Tree retention/ Soil Protection areas will be delineated with temporary forest protection fencing and retention area signage as appropriate. See forest protection fence and temporary signage Detail prior to the beginning of any construction activity. Attachment of signs to trees is prohibited.

PRECONSTRUCTION MEETING/CONSTRUCTION PERIOD PRACTICES

Before construction begins, a required preconstruction meeting shall be held. The principle contractors, engineer, Howard County Inspectors and a qualified forest professional familiar with the plan shall be present. All items pertaining to forest retention, tree preservation, and construction period practices shall be discussed.

Any changes to the plan due to on-site conditions must be approved by the Howard County Department of Planning and Zoning.

No grading, excavation, utility placement, sediment and erosion control activities, or vehicular traffic will occur within forest retention areas.

Storage of equipment and materials shall not be permitted in the forest retention areas.

There will be no burial or disposal of discarded material on-site within the retention area.

There will be no open burning within 100 feet of woodlands.

Temporary structures including, but not limited to construction trailers, sanitary facilities, etc. shall not be placed within the forest retention areas.

Employee parking shall not be permitted in the forest retention areas.

POST CONSTRUCTION MANAGEMENT/MAINTENANCE BY CONTRACTOR

All dead trees or tree limbs which pose an immediate safety hazard will be felled. Trees dropped within the forest retention area will not be removed.

All temporary forest protection structures will be removed after construction and permanent signage will be placed where indicated on the plan.

A 2-year Contractor's Maintenance and Monitoring Period shall begin at mobilization. Seventy five percent survivorship must be guaranteed for this period. The site shall be inspected at the end of the two year period to ascertain survivorship and provide for replacement if necessary.

The Contractor's maintenance of new planting shall consist of watering, cultivating, weeding, and mulching as necessary to insure survival.

Contractor shall protect planting areas and plants at all times against damage of all kinds for duration of maintenance period. Maintenance includes temporary protection barriers and signs as required for protection. If any plants become damaged or injured, because sufficient protection was not provided, treat or replace as directed by Landscape Architect at no additional cost to Owner.

ALL FOREST RETENTION & REFORESTATION AREAS SHOWN ON THIS PLAN TO BE PLACED IN FOREST CONSERVATION EASEMENT

STANDARDS AND SPECIFICATIONS FOR PLANTING

1. PLANT MATERIAL SELECTION

A. Nursery grown plant materials greater than 1" caliper should meet or exceed the requirements of the American Nurserymen Specifications, i.e. should be typical of the species and variety, have a normal habit of growth, be first quality, sound, vigorous, well-branched, have healthy, well furnished root systems, and be free of disease, insect pests and mechanical injuries.

B. Planting stock less than 1" caliper should meet the following standards:

Seedling/whips:

Hardwoods - 1/4" to 1/2" caliper with roots not less than 8" long
Shrubs - 1/8" or larger caliper with 8" root system.

2. PLANTING SITE PREPARATION

Soils shall not be disturbed outside the area necessary for planting individual specimens and the removal of exotic invasive plant material. These areas should be as shown on the temporary seeding notes on sheet 8.

3. PLANTING PERIOD

All material shall be planted between September 15 and May 31. Material shall not be installed when ground is frozen.

4. PLANT MATERIAL STORAGE

Plants should be planted within 24 hours of delivery if possible. Plant material which are left unplanted for more than 24 hours shall be protected from direst sun and weather and kept moist. Nursery stock should not be left unplanted for more than two weeks.

5. ON-SITE INSPECTION

Prior to planting, planting stock shall be inspected by the landscape architect or other qualified professional familiar with this plan. Plant material not conforming to standard nurseryman specifications for size, form, vigor, roots, trunk wounds, insects and disease should be replaced.

6. TOPSOIL FOR PLANTING SOIL

A. On-site material or imported from same source as topsoil used on site for finish grading.

1. Uniform composition, free of subsoil, clay lumps, stones, stumps, roots or similar objects larger than 1 inch.
2. Topsoil must be free of plants or plant parts of bermudagrass, quackgrass, Johnsongrass, nutsedge, poison ivy, Canada thistle, or others as specified.
3. All topsoil shall be tested by a recognized laboratory for pH and soluble salts. A pH of 4.5 to 7.5 is required. Soluble salts shall not be higher than 500 parts per million.

7. ADDITIVE FOR BACKFILL MIX

A. Wood Residuals:

1. Source shall be well composted, not chemically treated.
2. Physical properties - grading:

U.S. Sieve	Dry Weight Percent Passing
3/8"	100
1/4"	90 - 100
No. 8	70 - 100
No. 35	0 - 30

3. Organic content by ash analysis: 90 - 100 percent dry weight
4. Chemistry:

Range

a. Saturation Extract Conductivity (EC) —— Nil - 3.5
b. Reaction (pH) —— 3.0 - 5.5

5. Salinity: Maximum saturation extract conductivity 1.0 millimhos per cm at 25 degrees centigrade.

B. Sand

1. Physical Properties - Grading:

U.S. Sieve	Dry Weight Percent Passing
No. 4	100
No. 10	95 - 100
No. 18	90 - 100
No. 35	65 - 100
No. 60	0 - 50
No. 140	0 - 20
No. 270	0 - 7

2. Chemistry:

Saturation Extract Conductivity (EC) —— Nil - 3.0
Sodium Absorption Ratio (SAR) —— Nil - 6.0
Boron - ppm in saturation extract solution —— Nil - 1.0
Reaction (pH) —— 6.0 - 7.5
Available calcium - sodium acetate extractable - ppm dry weight Nil - 2000

C. Treble Superphosphate: Commercial product containing 19 to 20 percent available phosphoric acid.

8. MULCH

A. Shredded long fiber hardwood.

B. Mulch shall have been shredded within the last six (6) months.

9. PLANTING MIX

A. Planting mix shall be prepared at approved on-site staging area using approved on-site existing soil. Mix minimum quantities of 20 cubic yards or sufficient mix for entire job if less than 20 cubic yards is required.

B. Thoroughly mixed in the following proportions for tree and shrub planting mix:

.5 cy Existing soil
.2 cy Sharp sand
.3 cy Wood residuals
4.5 lbs. Treble superphosphate
5 lbs. Dolomite limestone (eliminate for acid loving plants)

10. LAYOUT AND EXCAVATION OF PLANTING AREAS

A. Plants shall be placed in each zone at random locations shown at spacing as indicated on the plan.

B. The Landscape Architect or qualified professional will check location of plants in the field and shall adjust to exact position before planting begins.

C. Subsoil shall not be worked when moisture content is so great that excessive compaction will occur, nor when it is so dry that clods will not readily break. Water shall be applied, if necessary, to bring soil to an optimum moisture content before tilling and planting.

D. Tree pits shall not be excavated more than 24 hours in advance of planting operation. Tree pits shall be excavated to the following dimensions:

Excavation for	Width	Depth
Canned Trees	Can + 12 in.	Can + 4 in.
B&B Trees	Ball + 12 in.	Ball + 4 in.

E. Excavate shrub pits to the following depths:

Excavation for	Width	Depth
Shrubs	Ball or Can + 8 in.	Can + 4 in., not less than 12 in.

11. PREPARING PLANT MATERIALS FOR PLANTING

A. Container stock shall be removed carefully after cans have been cut on two sides with approved cutter. Do not use spade to cut cans. Don not lift or handle container plants by tops, stems or trunks at any time.

B. Do not bind or handle any plant with wire or rope at any time so as to damage bark or break branches. Lift and handle plants only from bottom of ball.

C. Balled and burlapped (B&B) plants shall have firm balls of earth. Plants moved with a ball will not be accepted if the ball is cracked or broken before or during planting operations. B&B material shall be dug only when dormant. Pre-dug stored B&B material shall be inspected and approved at the storage site.

D. Do not force roots for bare rooted trees into excavated pits - custom dig pits to receive roots without deformation.

12. MIXING

A. Mix soil base, amendments and chemical additives by mechanical means.

B. Soil and sand bases shall be completely pulverized and free of lumps or aggregated material. Moisture content of base materials shall not be such that chemical granular or pelletized additives become dissolved during the mixing process.

C. Mix media in quantities of not less than 20 cubic yards or mix total quantity required if less than 50 cubic yards. The Contractor shall be responsible for continuity between batches.

D. Contaminating backfill mix with unmixed soil in backfill mixing lots shall be avoided.

13. INSTALLATION OF CONTAINERIZED PLANT MATERIAL

A. Scarify the walls and bottom of all plant pits immediately prior to the placement of plant and backfill mix. The Contractor shall remove all glazing of soil caused by an auger or mechanical hole digger.

B. Wells around trees and shrubs: after planting is complete, form a soil well 3 inches high around each plant, extending to the outer limit of the plant pit in accordance with planting details shown on the Drawings.

C. Smooth planted areas to conform to specified grades after full settlement as occurred. Contractor shall bear final responsibility for proper surface drainage of planted areas. Any discrepancy in the drawings or specifications, obstructions on the site, or prior work done by another party, which Contractor feels precludes establishing proper drainage, shall be brought to the attention of the Landscape Architect in writing.

D. Water all plants immediately again after planting.

E. Spread mulch in required areas to the compacted depth of 2 inches.

F. Install tree shelters around new plantings.

GUARANTEE:

A MINIMUM SURVIVAL RATE OF 75% IS TO BE GUARANTEED BY THE DEVELOPER AT THE END OF THE TWO YEAR MAINTENANCE PERIOD.

NOTE:

1. THE PRECISE LOCATION OF PLANT MASSINGS WILL BE LOCATED IN THE FIELD BY LANDSCAPE ARCHITECT.
2. GRID PATTERNS WILL BE AVOIDED
3. PLANT MATERIAL MAY BE GROUPED IN CLUSTERS OF NO MORE THAN 5 TO 7 WHIPS OF THE SAME PLANT. PLANTS WILL BE INSTALLED IN A RANDOM FASHION WITHIN SPECIFIED ZONES.
4. ALL PROPOSED SPECIES ARE TREES. NO SHRUBS SHALL BE PLANTED

Zone I (Wetland and buffer) Plants required -35 (Approx 0.1 acres x 350 whips/acre)

Species	Common name	Size	Quantity	Stage	Stratum	Remarks
Acer rubrum	Red Maple	18"-24" cont. stock	10	All	Tree	FAC
Betula nigra	River birch	18"-24" cont. stock	5	Early	Tree	FACW
Cornus amomum	Silky dogwood	18"-24" cont. stock	5	Mid	Tree	FACW
Platanus occidentalis	American sycamore	18"-24" cont. stock	5	Mid	Tree	FACW-
Quercus bicolor	Swamp white oak	18"-24" cont. stock	5	Mid	Tree	FACW+
Ulmus americana	American elm	18"-24" cont. stock	5	Mid	Tree	FACW-
TOTALS			35			

Zone II (Mesic) Plants required -105 (Approx. 0.3 acres x 350 whips/acre)

Species	Common name	Size	Quantity	Stage	Stratum	Remarks
Acer rubrum	Red maple	18"-24" cont. stock	40	All	Tree	FAC
Diospyros virginiana	Persimmon	18"-24" cont. stock	10	Late	Tree	FAC-
Fraxinus pensylvanica	Green ash	18"-24" cont. stock	25	Early	Tree	FACW
Nyssa sylvatica	Black gum	18"-24" cont. stock	10	Late	Tree	FAC
Quercus palustris	Pin oak	18"-24" cont. stock	20	Early	Tree	FACW
TOTALS			105			

Zone III (Upland) Plants required -910 (Approx. 2.6 acres x 350 whips/acre)

Species	Common name	Size	Quantity	Stage	Stratum	Remarks
Cercis canadensis	Eastern red bud	18"-24" cont. stock	95	Late	Tree	FACU
Liriodendron tulipifera	Tulip poplar	18"-24" cont. stock	215	Early	Tree	FACU
Pinus strobus	Eastern White Pine	18"-24" cont. stock	95	Early	Tree	FACU
Prunus serotina	Black cherry	18"-24" cont. stock	180	Early	Tree	FACU
Quercus alba	White oak	18"-24" cont. stock	100	Mid	Tree	FACU
Quercus rubra	Northern red oak	18"-24" cont. stock	100	Mid	Tree	FACU
Sassafras albidum	Sassafras	18"-24" cont. stock	30	Early	Tree	FACU
Viburnum prunifolium	Black haw	18"-24" cont. stock	95	Late	Tree/ Shrub	FACU
TOTALS			910			

Zone IV (Landscape fringe) Plants required - 100 (Approx. 0.6 acres x 200 1"cal. trees/acre) See Note 3*

Species	Common name	Size	Quantity	Stage	Stratum	Remarks
Amelanchier canadensis	Serviceberry	6'-8' cont. stock	20	Late	Tree	FAC
Liriodendron tulipifera	Tulip poplar	1" caliper cont. stock	20	Early	Tree	FACU
Pinus strobus	Eastern white pine	1" caliper cont. stock	20	Mid	Tree	FACU
Quercus alba	White oak	1" caliper cont. stock	20	Mid	Tree	FACU
Quercus rubra	Northern red oak	1" caliper cont. stock	20	Mid	Tree	FACU
TOTALS			100			

NOTES

1. SMALL-SIZE PLANT MATERIAL SPECIFIED IN ZONES I, II, AND III SHALL BE POTECTED IN TREE SHELTERS.
2. REFORESTATION CREDIT DERIVED FROM LANDSCAPING WITHIN ZONE IV TOTALS 0.14 ACRES OR 6300 S.F., DERIVED AS FOLLOWS: (9 SHADE TREES X 400 S.F.) + (12 EVERGREEN TREES X 225 S.F.) = 6300 S.F.

* 3. A SURETY IN THE AMOUNT OF $36,329.00 SHALL BE POSTED FOR FOREST RETENTION (4.17 ACRES x 43560 S.F./ACRE x $0.20/S.F.). A SURETY IN THE AMOUNT OF $74,275.00 SHALL BE POSTED FOR REFORESTATION (3.68 ACRES x 43560 S.F. AT $0.50/S.F. MINUS x 11,750 S.F. AT $0.50/S.F.). TOTAL FOREST CONSERVATION SURETY EQUALS $110,604.00.

DATA SOURCES:

BOUNDARY PER DMW FIELD SURVEY DATED DECEMBER 2001.

TOPO FLOWN BY VIRGINIA RESOURCE MAPPING, DECEMBER, 2001.

APPROX. WETLAND LOCATION PER DMW FIELD VISIT DATED APRIL 2000. OFF SITE SEPTIC RESERVE AREAS PER RECORD PLATS, LOCATIONS OF WELLS NOT AVAILABLE.

APPROVED: HOWARD COUNTY DEPARTMENT OF PUBLIC WORKS

William F. Malone Jr. (signature) — 4-13-04
CHIEF, BUREAU OF HIGHWAYS — DATE

APPROVED: HOWARD COUNTY DEPT. OF PLANNING & ZONING

(signature) — 4/28/04
CHIEF, DEVELOPMENT ENGINEERING DIVISION — DATE

(signature) — 4/29/04
CHIEF, DIVISION OF LAND DEVELOPMENT — DATE

~~DIRECTOR~~ — ~~DATE~~

Date	No.	Revision Description

OWNER: NORTHRIDGE DEVELOPMENT. LLC
14045 GARED DRIVE
GLENWOOD, MD 21738

DEVELOPER: JAMES F. SELFRIDGE BUILDERS, INC.
14045 GARED DRIVE
GLENWOOD, MD 21738

DMW
Daft·McCune·Walker, Inc.
200 East Pennsylvania Avenue
Towson, Maryland 21286
(410) 296-3333
Fax 296-4705

A Team of Land Planners, Landscape Architects, Engineers, Surveyors & Environmental Professionals

3.25.04
Date

STATE OF MARYLAND · MELANIE MOSER · 561 · LANDSCAPE ARCHITECT

Landscape Architect No.

SUBDIVISION NAME	SECTION/AREA	LOT/PARCEL
FOX MEADOW	1	167

PLAT OR L/F	BLOCK	ZONE	TAX/ZONE MAP	ELECT. DISTRICT	CENSUS TRACT
5983/492	13, 19, 20	RR, RC	15	3	

TITLE
FOX MEADOW
(FORMERLY PFEFFERKORN PROPERTY) FINAL FOREST CONSERVATION NOTES AND DETAILS

Des By AJS	Scale AS SHOWN	Proj. No. 00042.B
Drn By AJS/MSS	Date 1/07/04	21 OF 24
Chk By MM	Approved	

F.03.45

Wed Mar 24 14:30:24 2004 n:\00042\00042f.ff1

3/24/2004 2:30:06 PM \\ATHENS\MSTATION\CADNETIN\QCF\day.qcf crizzi c:\hpm\00042f.hpm

LEGEND

- EX. CONTOUR
- EX. STREAM
- EX. BUILDING
- EX. WOODS LINE
- EX. SEPTIC AREA
- RC-DEO / RR-DEO — ZONING LINE
- PROP. LOT LINE
- PROP. REPLACEMENT WELL AREA / PROP. WELL
- PROP. BUILDING
- PROP. SRA
- (8) LOT NUMBER
- 75' STREAM BUFFER
- 25' WETLAND BUFFER / WETLAND
- PRELIMINARY 100-YEAR FLOODPLAIN
- FOREST RETENTION
- REFORESTATION
- FOREST CLEARING
- FOREST CONSERVATION EASEMENT
- 178 PERC TEST HOLE (PASSED) / PERC TEST HOLE (FAILED)
- 147 PROPOSED WELL AND WELL RELOCATION AREA
- TEMPORARY FOREST PROTECTION FENCE
- PERMANENT FOREST PROTECTION SIGN
- REFORESTATION ZONE DELINEATION LINE
- PROP. TREELINE

DATA SOURCES:

BOUNDARY PER DMW FIELD SURVEY DATED DECEMBER 2001.

TOPO FLOWN BY VIRGINIA RESOURCE MAPPING, DECEMBER, 2001.

APPROX. WETLAND LOCATION PER DMW FIELD VISIT DATED APRIL 2000. OFF SITE SEPTIC RESERVE AREAS PER RECORD PLATS, LOCATIONS OF WELLS NOT AVAILABLE.

APPROVED: HOWARD COUNTY DEPARTMENT OF PUBLIC WORKS

CHIEF, BUREAU OF HIGHWAYS — DATE 4-13-04

APPROVED: HOWARD COUNTY DEPT. OF PLANNING & ZONING

CHIEF, DEVELOPMENT ENGINEERING DIVISION — DATE 4/28/04

CHIEF, DIVISION OF LAND DEVELOPMENT — DATE 4/29/04

~~DIRECTOR~~ — ~~DATE~~

Date	No.	Revision Description
6-11-04	1	REVISED LOT NUMBERS

OWNER: NORTHRIDGE DEVELOPMENT. LLC
14045 GARED DRIVE
GLENWOOD, MD 21738

DEVELOPER: JAMES F. SELFRIDGE BUILDERS, INC.
14045 GARED DRIVE
GLENWOOD, MD 21738

3.25.04
Date

Landscape Architect No.

DMW
Daft-McCune-Walker, Inc.
200 East Pennsylvania Avenue
Towson, Maryland 21286
(410) 296-3333
Fax 296-4705

A Team of Land Planners, Landscape Architects, Engineers, Surveyors & Environmental Professionals

SUBDIVISION NAME	SECTION/AREA	LOT/PARCEL
FOX MEADOW	1	167

PLAT OR LIF	BLOCK	ZONE	TAX/ZONE MAP	ELECT. DISTRICT	CENSUS TRACT
5983/492	13, 19, 20	RR, RC	15	3	

TITLE
FOX MEADOW
(FORMERLY PFEFFERKORN PROPERTY)
FINAL FOREST CONSERVATION PLAN

Des By AJS	Scale 1" = 50'	Proj. No. 00042.B
Drn By AJS/MSS	Date 1/07/04	20 OF 24
Chk By MM	Approved	

F.03.45

Wed Mar 24 14:29:32 2004 n:\00042\00042f.fl13

3/24/2004 2:29:24 PM \\ATHENS\MSTATION\CADNETN\GCF\dey.qcf cr:tzzi c:\hpm\00042f.hpm

LEGEND

- EX. CONTOUR
- EX. STREAM
- EX. BUILDING
- EX. WOODS LINE
- EX. SEPTIC AREA
- RC-DEO / RR-DEO — ZONING LINE
- PROP. LOT LINE
- PROP. REPLACEMENT WELL AREA / PROP. WELL
- PROP. BUILDING
- PROP. SRA
- (8) LOT NUMBER
- 75' STREAM BUFFER
- 25' WETLAND BUFFER / WETLAND
- PRELIMINARY 100-YEAR FLOODPLAIN
- FOREST RETENTION
- REFORESTATION
- FOREST CLEARING
- FOREST CONSERVATION EASEMENT
- SIGHT DISTANCE EASEMENT
- 178 PERC TEST HOLE (PASSED) / 147 PERC TEST HOLE (FAILED)
- (W) PROPOSED WELL AND WELL RELOCATION AREA
- TEMPORARY FOREST PROTECTION FENCE
- PERMANENT FOREST PROTECTION SIGN
- REFORESTATION ZONE DELINEATION LINE

DATA SOURCES:

BOUNDARY PER DMW FIELD SURVEY DATED DECEMBER 2001.

TOPO FLOWN BY VIRGINIA RESOURCE MAPPING, DECEMBER, 2001.

APPROX. WETLAND LOCATION PER DMW FIELD VISIT DATED APRIL 2000. OFF SITE SEPTIC RESERVE AREAS PER RECORD PLATS, LOCATIONS OF WELLS NOT AVAILABLE.

APPROVED: HOWARD COUNTY DEPARTMENT OF PUBLIC WORKS

CHIEF, BUREAU OF HIGHWAYS — DATE 4-13-04

APPROVED: HOWARD COUNTY DEPT. OF PLANNING & ZONING

CHIEF, DEVELOPMENT ENGINEERING DIVISION — DATE 4/28/04

CHIEF, DIVISION OF LAND DEVELOPMENT — DATE 4/29/04

~~DIRECTOR~~ — ~~DATE~~

Date	No.	Revision Description
6-11-04	1	REVISED LOT NUMBERS

OWNER: NORTHRIDGE DEVELOPMENT, LLC
14045 GARED DRIVE
GLENWOOD, MD 21738

DEVELOPER: JAMES F. SELFRIDGE BUILDERS, INC.
14045 GARED DRIVE
GLENWOOD, MD 21738

DMW
Daft-McCune-Walker, Inc.
200 East Pennsylvania Avenue
Towson, Maryland 21286
(410) 296-3333
Fax 296-4705

A Team of Land Planners, Landscape Architects, Engineers, Surveyors & Environmental Professionals

3.25.04
Date

STATE OF MARYLAND — MELANIE M. SCHLOSSER — No. 1327 — LANDSCAPE ARCHITECT

Landscape Architect No.

SUBDIVISION NAME				SECTION/AREA		LOT/PARCEL
FOX MEADOW				1		167
PLAT OR L/F	BLOCK	ZONE	TAX/ZONE MAP	ELEC. DIST/TRACT		CENSUS TRACT
5983/492	13, 19, 20	RR, RC	15	3		

TITLE

FOX MEADOW
(FORMERLY PFEFFERKORN PROPERTY)
FINAL FOREST CONSERVATION PLAN

Des By	AJS	Scale	1"=50'
Drn By	AJS/MSS	Date	1/07/04
Chk By	MM	Approved	

Proj. No. 00042.B

19 OF 24

F-03-45

Wed Mar 24 14:28:02 2004 n:\00042\000421f12
3/24/2004 2:28:52 PM \\ATTENS\STATION\CADNET\NCF_Dog.qcf cr:22 c:\hpm\00042f.hpm

STORMWATER MANAGEMENT POND
GENERAL CONSTRUCTION SPECIFICATIONS

1. GENERAL

ALL STORMWATER MANAGEMENT FACILITIES SHALL BE CONSTRUCTED IN ACCORDANCE WITH HOWARD COUNTY'S "STANDARD SPECIFICATIONS AND DETAILS FOR CONSTRUCTION (1985)" AND THE N.R.C.S. MARYLAND "STANDARDS AND SPECIFICATIONS FOR PONDS" (MD-378, 2000).

THESE SPECIFICATIONS ARE APPROPRIATE TO ALL PONDS WITHIN THE SCOPE OF THE STANDARD PRACTICE MD-378. ALL REFERENCES TO ASTM AND AASHTO SPECIFICATIONS APPLY TO THE MOST RECENT VERSION.

2. SITE PREPARATION

AREAS DESIGNATED FOR BORROW AREAS, EMBANKMENT, AND STRUCTURAL WORKS SHALL BE CLEARED, GRUBBED AND STRIPPED OF TOPSOIL. ALL TREES, VEGETATION, ROOTS AND OTHER OBJECTIONABLE MATERIAL SHALL BE REMOVED. CHANNEL BANKS AND SHARP BREAKS SHALL BE SLOPED TO NO STEEPER THAN 1:1. ALL TREES SHALL BE CLEARED AND GRUBBED WITHIN 15 FEET OF THE TOE OF THE EMBANKMENT.

AREAS TO BE COVERED BY THE RESERVOIR WILL BE CLEARED OF ALL TREES, BRUSH, LOGS, FENCES, RUBBISH AND OTHER OBJECTIONABLE MATERIAL UNLESS OTHERWISE DESIGNATED ON THE PLANS. TREES, BRUSH AND STUMPS SHALL BE CUT APPROXIMATELY LEVEL WITH THE GROUND SURFACE. FOR DRY STORMWATER MANAGEMENT PONDS, A MINIMUM OF A 25-FOOT RADIUS AROUND THE INLET STRUCTURE SHALL BE CLEARED.

ALL CLEARED AND GRUBBED MATERIAL SHALL BE DISPOSED OF OUTSIDE AND BELOW THE LIMITS OF THE DAM AND RESERVOIR AS DIRECTED BY THE OWNER OR HIS REPRESENTATIVE. WHEN SPECIFIED, A SUFFICIENT QUANTITY OF TOPSOIL WILL BE STOCKPILED IN A SUITABLE LOCATION FOR USE ON THE EMBANKMENT AND OTHER DESIGNATED AREAS.

3. EARTH FILL

MATERIAL - THE FILL MATERIAL SHALL BE TAKEN FROM APPROVED DESIGNATED BORROW AREAS. IT SHALL BE FREE OF ROOTS, STUMPS, WOOD, RUBBISH, STONES GREATER THAN 6", FROZEN OR OTHER OBJECTIONABLE MATERIALS. FILL MATERIAL FOR THE CENTER OF THE EMBANKMENT AND CUT OFF TRENCH SHALL CONFORM TO UNIFIED SOIL CLASSIFICATION GC, SC, CH, OR CL AND MUST HAVE AT LEAST 30% PASSING THE #200 SIEVE. CONSIDERATION MAY BE GIVEN TO THE USE OF OTHER MATERIALS IN THE EMBANKMENT IF DESIGNED BY A GEOTECHNICAL ENGINEER. SUCH SPECIAL DESIGNS MUST HAVE CONSTRUCTION SUPERVISED BY A GEOTECHNICAL ENGINEER.

MATERIALS USED IN THE OUTER SHELL OF THE EMBANKMENT MUST HAVE THE CAPABILITY TO SUPPORT VEGETATION OF THE QUALITY REQUIRED TO PREVENT EROSION OF THE EMBANKMENT.

PLACEMENT - AREAS ON WHICH FILL IS TO BE PLACED SHALL BE SCARIFIED PRIOR TO PLACEMENT OF FILL. FILL MATERIALS SHALL BE PLACED IN MAXIMUM 8 INCH THICK (BEFORE COMPACTION) LAYERS WHICH ARE TO BE CONTINUOUS OVER THE ENTIRE LENGTH OF THE FILL. THE MOST PERMEABLE BORROW MATERIAL SHALL BE PLACED IN THE DOWNSTREAM PORTIONS OF THE EMBANKMENT. THE PRINCIPAL SPILLWAY MUST BE INSTALLED CONCURRENTLY WITH FILL PLACEMENT AND NOT EXCAVATED INTO THE EMBANKMENT.

COMPACTION - THE MOVEMENT OF THE HAULING AND SPREADING EQUIPMENT OVER THE FILL SHALL BE CONTROLLED SO THAT THE ENTIRE SURFACE OF EACH LIFT SHALL BE TRAVERSED BY NOT LESS THAN ONE TREAD TRACK OF THE EQUIPMENT OR COMPACTION SHALL BE ACHIEVED BY A MINIMUM OF FOUR COMPLETE PASSES OF A SHEEPSFOOT, RUBBER TIRED OR VIBRATORY ROLLER. FILL MATERIAL SHALL CONTAIN SUFFICIENT MOISTURE SUCH THAT THE REQUIRED DEGREE OF COMPACTION WILL BE OBTAINED WITH THE EQUIPMENT USED. THE FILL MATERIAL SHALL CONTAIN SUFFICIENT MOISTURE SO THAT IF FORMED INTO A BALL IT WILL NOT CRUMBLE, YET NOT BE SO WET THAT WATER CAN BE SQUEEZED OUT.

WHEN REQUIRED BY THE REVIEWING AGENCY THE MINIMUM REQUIRED DENSITY SHALL NOT BE LESS THAN 95% OF THE MAXIMUM DRY DENSITY WITH A MOISTURE CONTENT WITHIN +/- 2% OF THE OPTIMUM. EACH LAYER OF FILL SHALL BE COMPACTED AS NECESSARY TO OBTAIN THAT DENSITY, AND IS TO BE CERTIFIED BY THE ENGINEER AT THE TIME OF CONSTRUCTION. ALL COMPACTION IS TO BE DETERMINED BY AASHTO METHOD T-99 (STANDARD PROCTOR).

CUT OFF TRENCH - THE CUTOFF TRENCH SHALL BE EXCAVATED INTO IMPERVIOUS MATERIAL ALONG OR PARALLEL TO THE CENTERLINE OF THE EMBANKMENT AS SHOWN ON THE PLANS. THE EQUIPMENT USED FOR EXCAVATION, WITH THE MINIMUM WIDTH BEING FOUR FEET SHALL GOVERN THE BOTTOM WIDTH OF THE TRENCH. THE DEPTH SHALL BE AT LEAST 4 FEET BELOW EXISTING GRADE OR AS SHOWN ON THE PLANS. THE SIDE SLOPES OF THE TRENCH SHALL BE 1 TO 1 OR FLATTER. THE BACKFILL SHALL BE COMPACTED WITH CONSTRUCTION EQUIPMENT, ROLLERS, OR HAND TAMPERS TO ASSURE MAXIMUM DENSITY AND MINIMUM PERMEABILITY.

EMBANKMENT CORE - THE CORE SHALL BE PARALLEL TO THE CENTERLINE OF THE EMBANKMENT AS SHOWN ON THE PLANS. THE TOP WIDTH OF THE CORE SHALL BE A MINIMUM OF FOUR FEET. THE HEIGHT SHALL EXTEND UP TO AT LEAST THE 10 YEAR WATER ELEVATION OR AS SHOWN ON THE PLANS. THE SIDE SLOPES SHALL BE 1 TO 1 OR FLATTER. THE CORE SHALL BE COMPACTED WITH CONSTRUCTION EQUIPMENT, ROLLERS, OR HAND TAMPERS TO ASSURE MAXIMUM DENSITY AND MINIMUM PERMEABILITY. IN ADDITION, THE CORE SHALL BE PLACED CONCURRENTLY WITH THE OUTER SHELL OF THE EMBANKMENT.

4. STRUCTURE BACKFILL

BACKFILL ADJACENT TO PIPES OR STRUCTURES SHALL BE OF THE TYPE AND QUALITY CONFORMING TO THAT SPECIFIED FOR THE ADJOINING FILL MATERIAL. THE FILL SHALL BE PLACED IN HORIZONTAL LAYERS NOT TO EXCEED 4 INCHES IN THICKNESS AND COMPACTED BY HAND TAMPERS OR OTHER MANUALLY DIRECTED COMPACTION EQUIPMENT. THE MATERIAL NEEDS TO FILL COMPLETELY ALL SPACES UNDER AND ADJACENT TO THE PIPE. AT NO TIME DURING THE BACKFILLING OPERATION SHALL DRIVEN EQUIPMENT BE ALLOWED TO OPERATE CLOSER THAN 4 FEET, MEASURED HORIZONTALLY, TO ANY PART OF A STRUCTURE. UNDER NO CIRCUMSTANCES SHALL EQUIPMENT BE DRIVEN OVER ANY PART OF A CONCRETE STRUCTURE OR PIPE, UNLESS THERE IS A COMPACTED FILL OF 24" OR GREATER OVER THE STRUCTURE OR PIPE.

STRUCTURE BACKFILL MAY BE FLOWABLE FILL MEETING THE REQUIREMENTS OF MARYLAND DEPARTMENT OF TRANSPORTATION, STATE HIGHWAY ADMINISTRATION STANDARD SPECIFICATIONS FOR CONSTRUCTION AND MATERIALS, SECTION313 AS MODIFIED. THE MIXTURE SHALL HAVE A 100-200 PSI; 28 DAY UNCONFINED COMPRESSIVE STRENGTH. THE FLOWABLE FILL SHALL HAVE A MINIMUM PH OF 4.0 AND A MINIMUM RESISTIVITY OF 2,000 OHM-CM. MATERIAL SHALL BE PLACED SUCH THAT A MINIMUM OF 6" (MEASURED PERPENDICULAR TO THE OUTSIDE OF THE PIPE) OF FLOWABLE FILL SHALL BE UNDER (BEDDING), OVER AND, ON THE SIDES OF THE PIPE. IT ONLY NEEDS TO EXTEND UP TO THE SPRING LINE FOR RIGID CONDUITS. AVERAGE SLUMP OF THE FILL SHALL BE 7" TO ASSURE FLOWABILITY OF THE MATERIAL. ADEQUATE MEASURES SHALL BE TAKEN (SAND BAGS, ETC.) TO PREVENT FLOATING THE PIPE. WHEN USING FLOWABLE FILL, ALL METAL PIPE SHALL BE BITUMINOUS COATED. ANY ADJOINING SOIL FILL SHALL BE PLACED IN HORIZONTAL LAYERS NOT TO EXCEED FUR INCHES IN THICKNESS AND COMPACTED BY HAND TAMPERS OR OTHER MANUALLY DIRECTED COMPACTION EQUIPMENT. THE MATERIAL SHALL COMPLETELY FILL ALL VOIDS ADJACENT TO THE FLOWABLE FILL ZONE. AT NO TIME DURING THE BACKFILLING OPERATION SHALL DRIVEN EQUIPMENT BE ALLOWED TO OPERATE CLOSER THAN 4 FEET, MEASURED HORIZONTALLY, TO ANY PART OF A STRUCTURE. UNDER NO CIRCUMSTANCES SHALL EQUIPMENT BE DRIVEN OVER ANY PART OF A STRUCTURE OR PIPE, UNLESS THERE IS A COMPACTED FILL OF 24" OR GREATER OVER THE STRUCTURE OR PIPE. BACKFILL MATERIAL OUTSIDE THE STRUCTURAL BACKFILL (FLOWABLE FILL) ZONE SHALL BE OF THE TYPE AND QUALITY CONFORMING TO THAT SPECIFIED FOR THE CORE OF THE EMBANKMENT OR OTHER EMBANKMENT MATERIALS.

5. REMOVAL AND REPLACEMENT OF DEFECTIVE FILL

FILL PLACED AT DENSITIES LOWER THAN SPECIFIED MINIMUM DENSITY OR AT MOISTURE CONTENTS OUTSIDE THE SPECIFIED ACCEPTABLE RANGE OF MOISTURE CONTENT OR OTHERWISE NOT CONFORMING TO THE REQUIREMENTS OF THE SPECIFICATIONS SHALL BE REWORKED TO MEET THE REQUIREMENTS OR REMOVED AND REPLACED BY ACCEPTABLE FILL. THE BOTTOMS OF SUCH EXCAVATIONS SHALL BE FINISHED FLAT OR GENTLY CURVING AND AT THE SIDES OF SUCH EXCAVATIONS THE ADJACENT SOUND FILL SHALL BE TRIMMED TO A SLOPE NOT STEEPER THAN 3 FEET HORIZONTALLY TO 1 FOOT VERTICALLY EXTENDING FROM THE BOTTOM OF THE EXCAVATION TO THE FILL SURFACE.

6. PIPE CONDUITS

ALL PIPES SHALL BE CIRCULAR IN CROSS SECTION. ALL PERFORATED PIPES SHALL HAVE A MINIMUM OF 3.31 SQUARE INCHES OF OPENING PER SQUARE FOOT OF PIPE SURFACE (EX. 30 3/8-INCH HOLES PER SQUARE FOOT). PERFORATIONS ARE TO BE UNIFORMLY SPACED AROUND THE FULL PERIPHERY OF THE PIPE. ANY HOLES BLOCKED OR PARTIALLY BLOCKED BY BITUMINOUS COATING SHALL BE OPENED PRIOR TO INSTALLATION.

REINFORCED CONCRETE PIPE - ALL OF THE FOLLOWING CRITERIA SHALL APPLY FOR REINFORCED CONCRETE PIPE:

1. MATERIALS - REINFORCED CONCRETE PIPE SHALL HAVE BELL AND SPIGOT JOINTS WITH RUBBER GASKETS AND SHALL EQUAL OR EXCEED ASTM C-361.
2. BEDDING - REINFORCED CONCRETE PIPE CONDUITS SHALL BE LAID IN A CONCRETE BEDDING FOR THEIR ENTIRE LENGTH. THIS BEDDING / CRADLE SHALL CONSIST OF HIGH SLUMP CONCRETE PLACED UNDER THE PIPE AND UP THE SIDES OF THE PIPE AT LEAST 50 PERCENT OF ITS OUTSIDE DIAMETER WITH A MINIMUM THICKNESS OF 6 INCHES. WHERE CONCRETE CRADLE IS NOT NEEDED FOR STRUCTURAL REASONS, FLOWABLE FILL MAY BE USED AS DESCRIBED IN THE "STRUCTURE BACKFILL" SECTION OF THIS STANDARD. GRAVEL BEDDING IS NOT PERMITTED.
3. LAYING PIPE - BELL AND SPIGOT PIPE SHALL BE PLACED WITH THE BELL END UPSTREAM. JOINTS SHALL BE MADE IN ACCORDANCE WITH RECOMMENDATIONS OF THE MANUFACTURER OF THE MATERIAL. AFTER THE JOINTS ARE SEALED FOR THE ENTIRE LINE, THE BEDDING SHALL BE PLACED SO THAT ALL SPACES UNDER THE PIPE ARE FILLED. CARE SHALL BE EXERCISED TO PREVENT ANY DEVIATION FROM THE ORIGINAL LINE AND GRADE OF THE PIPE. THE FIRST JOINT MUST BE LOCATED WITHIN 4 FEET FROM THE RISER.
4. BACKFILLING SHALL CONFORM TO "STRUCTURE BACKFILL".
5. CONNECTIONS - ALL CONNECTIONS (TO ANTI-SEEP COLLARS, RISER, ETC.) SHALL BE WATERTIGHT.
6. OTHER DETAILS (ANTI-SEEP COLLARS, VALVES, ETC.) SHALL BE AS SHOWN ON THE DRAWINGS.

PLASTIC PIPE - ALL OF THE FOLLOWING CRITERIA SHALL APPLY FOR PLASTIC PIPE:

1. MATERIALS - PVC PIPE SHALL BE PVC-1120 OR PVC-1220 CONFORMING TO ASTM D-1785 OR ASTM D-2241. CORRUGATED HIGH DENSITY POLYETHYLENE (HDPE), COUPLINGS AND FITTINGS SHALL CONFORM TO THE FOLLOWING; 4" - 10" INCH PIPE SHALL MEET THE REQUIREMENTS OF AASHTO M252 TYPE S, AND 12" THROUGH 24" SHALL MEET THE REQUIREMENTS OF AASHTO M294 TYPE S.
2. JOINTS AND CONNECTIONS TO ANTI-SEEP COLLARS SHALL BE COMPLETELY WATERTIGHT.
3. BEDDING - THE PIPE SHALL BE FIRMLY AND UNIFORMLY BEDDED THROUGHOUT ITS ENTIRE LENGTH. WHERE ROCK OR SOFT, SPONGY OR OTHER UNSTABLE SOIL IS ENCOUNTERED, ALL SUCH MATERIAL SHALL BE REMOVED AND REPLACED WITH SUITABLE EARTH COMPACTED TO PROVIDE ADEQUATE SUPPORT.
4. BACKFILLING SHALL CONFORM TO "STRUCTURE BACKFILL".
5. OTHER DETAILS (ANTI-SEEP COLLARS, VALVES, ETC.) SHALL BE AS SHOWN ON THE DRAWINGS.

7. CONCRETE

CONCRETE SHALL MEET THE REQUIREMENTS OF THE MARYLAND DEPARTMENT OF TRANSPORTATION, STATE HIGHWAY ADMINISTRATION STANDARD SPECIFICATIONS FOR CONSTRUCTION AND MATERIALS, SECTION 414, MIX NO. 3

CAST-IN-PLACE CONCRETE STRUCTURES

1. SPECIFICATIONS: MARYLAND DEPARTMENT OF TRANSPORTATION, STATE HIGHWAY ADMINISTRATION STANDARD SPECIFICATIONS FOR CONSTRUCTION AND MATERIALS, LATEST EDITION.

   AASHTO STANDARD SPECIFICATIONS FOR HIGHWAY BRIDGES, LATEST EDITION, FOR DESIGN. CONCRETE DESIGN BY THE "SERVICE LOAD DESIGN METHOD".
2. CONCRETE: SHALL MEET THE REQUIREMENTS OF THE MARYLAND DEPARTMENT OF TRANSPORTATION, STATE HIGHWAY ADMINISTRATION STANDARD SPECIFICATIONS FOR CONSTRUCTION AND MATERIALS, SECTION 414 AND 902, MIX NO. 3.
3. CONTRACTOR MAY ADD COLOR MIX AT PLANT IN ACCORDANCE WITH MANUFACTURES RECOMMENDATION "C-12 MESA BEIGE" AS MANUFACTURED BY L. M. SCOFIELD COMPANY (213) 723-5285.

   CONTRACTOR SHALL SUPPLY MIX DESIGN FOR APPROVAL PRIOR TO APPLICATION. LOAD AND MIX TICKETS SHALL BE SUPPLIED FOR EACH TRUCK DELIVERY. NO PARTIAL FIELD MIXES SHALL BE ALLOWED.

   ALL CONCRETE SHALL ATTAIN A MINIMUM COMPRESSIVE STRENGTH OF 3,500 PSI AT 28 DAYS. DESIGN FC = 1,200 PSI.

   ALL EXPOSED EDGES SHALL BE CHAMFERED 3/4" X 3/4". ALL CONSTRUCTION KEYS ARE SHOWN NOMINAL SIZE.
4. REINFORCING STEEL: REINFORCING STEEL SHALL CONFORM TO ASTM A-615, GRADE 60. WHERE NOT INDICATED, BAR LAP SPLICES SHALL BE IN ACCORDANCE WITH AASHTO SPECIFICATIONS. THE MINIMUM CONCRETE COVER SHALL BE 2 INCHES UNLESS OTHERWISE NOTED. DESIGN FS = 24,000 PSI.
5. FOUNDATION: PRESUMED SOIL BEARING CAPACITY = 2,500 PSF. THE ENGINEER MUST APPROVE ALL FOUNDATIONS PRIOR TO CONCRETE PLACEMENT. IF UNSUITABLE MATERIAL IS ENCOUNTERED, THE MATERIAL SHALL BE UNDERCUT AND BACKFILLED WITH STRUCTURAL BACKFILL.
6. STRUCTURAL BACKFILL: CAST-IN-PLACE CONCRETE STRUCTURES AND PIPE SHALL BE BACKFILLED WITH SELECT GRANULAR BACKFILL MEETING THE REQUIREMENTS OF SHA GRADED AGGREGATE-SUBBASE. STRUCTURAL FILL SHALL BE PLACED IN LOOSE LIFTS OF APPROXIMATELY 6 INCHES, AND COMPACTED TO 95 PERCENT OF THE STANDARD PROCTOR MAXIMUM DRY DENSITY IN ACCORDANCE WITH AASHTO T-180. THE STATIC WEIGHT OF EQUIPMENT USED ADJACENT TO WALLS SHALL NOT EXCEED 3,000 POUNDS. NO BACKFILL SHALL BE PLACED AGAINST THE CAST-IN-PLACE WALLS UNTIL THE CONCRETE HAS ATTAINED THE SPECIFIED 28 DAY STRENGTH.

PRE-CAST CONCRETE STRUCTURES

SHOP DRAWINGS FOR PRE-CAST STRUCTURES WITH SUPPORTING STRUCTURAL COMPUTATIONS (SIGNED AND SEALED BY A MARYLAND REGISTERED PROFESSIONAL ENGINEER) MEETING ASTM REQUIREMENTS FOR PRE-CAST STRUCTURES MUST BE SUBMITTED TO THE ENGINEER, AND THE APPROVING AGENCY (HOWARD COUNTY DEVELOPMENT ENGINEERING DIVISION) FOR APPROVAL PRIOR TO FABRICATION.

8. ROCK RIP-RAP

ROCK RIP-RAP SHALL MEET THE REQUIREMENTS OF THE MARYLAND DEPARTMENT OF TRANSPORTATION, STATE HIGHWAY ADMINISTRATION STANDARD SPECIFICATIONS FOR CONSTRUCTION AND MATERIALS, SECTION 311.

GEOTEXTILE SHALL BE PLACED UNDER ALL RIP-RAP AND SHALL MEET THE REQUIREMENTS OF THE MARYLAND DEPARTMENT OF TRANSPORTATION, STATE HIGHWAY ADMINISTRATION STANDARD SPECIFICATIONS FOR CONSTRUCTION AND MATERIALS, SECTION 921.09, CLASS C.

THE RIP-RAP SHALL BE PLACED TO THE REQUIRED THICKNESS IN ONE OPERATION. THE ROCK SHALL BE DELIVERED AND PLACED IN A MANNER THAT WILL INSURE THE RIP-RAP IN PLACE SHALL BE REASONABLY HOMOGENEOUS WITH THE LARGER ROCKS UNIFORMLY DISTRIBUTED AND FIRMLY IN CONTACT ONE TO ANOTHER WITH THE SMALLER ROCKS FILLING THE VOIDS BETWEEN THE LARGER ROCKS.

9. CARE OF WATER DURING CONSTRUCTION

ALL WORK ON PERMANENT STRUCTURES SHALL BE CARRIED OUT IN AREAS FREE FROM WATER. THE CONTRACTOR SHALL CONSTRUCT AND MAINTAIN ALL TEMPORARY DIKES, LEVEES, COFFERDAMS, DRAINAGE CHANNELS, AND STREAM DIVERSIONS NECESSARY TO PROTECT THE AREAS TO BE OCCUPIED BY THE PERMANENT WORKS. THE CONTRACTOR SHALL ALSO FURNISH, INSTALL, OPERATE, AND MAINTAIN ALL NECESSARY PUMPING AND OTHER EQUIPMENT REQUIRED FOR REMOVAL OF WATER FROM THE VARIOUS PARTS OF THE WORK AND FOR MAINTAINING THE EXCAVATIONS, FOUNDATION, AND OTHER PARTS OF THE WORK FREE FROM WATER AS REQUIRED OR DIRECTED BY THE ENGINEER FOR CONSTRUCTING EACH PART OF THE WORK. AFTER HAVING SERVED THEIR PURPOSE, ALL TEMPORARY PROTECTIVE WORKS SHALL BE REMOVED OR LEVELED AND GRADED TO THE EXTENT REQUIRED TO PREVENT OBSTRUCTION IN ANY DEGREE WHATSOEVER OF THE FLOW OF WATER TO THE SPILLWAY OR OUTLET WORKS AND SO AS NOT TO INTERFERE IN ANY WAY WITH THE OPERATION OR MAINTENANCE OF THE STRUCTURE. STREAM DIVERSIONS SHALL BE MAINTAINED UNTIL THE FULL FLOW CAN BE PASSED THROUGH THE PERMANENT WORKS. THE REMOVAL OF WATER FROM THE REQUIRED EXCAVATION AND THE FOUNDATION SHALL BE ACCOMPLISHED IN A MANNER AND TO THE EXTENT THAT WILL MAINTAIN STABILITY OF THE EXCAVATED SLOPES AND BOTTOM OF REQUIRED EXCAVATIONS AND WILL ALLOW SATISFACTORY PERFORMANCE OF ALL CONSTRUCTION OPERATIONS. DURING THE PLACING AND COMPACTING OF MATERIAL IN REQUIRED EXCAVATIONS, THE WATER LEVEL AT THE LOCATIONS BEING REFILLED SHALL BE MAINTAINED BELOW THE BOTTOM OF THE EXCAVATION AT SUCH LOCATIONS WHICH MAY REQUIRE DRAINING THE WATER TO SUMPS FROM WHICH THE WATER SHALL BE PUMPED.

10. STABILIZATION

ALL BORROW AREAS SHALL BE GRADED TO PROVIDE PROPER DRAINAGE AND LEFT IN A SIGHTLY CONDITION. ALL EXPOSED SURFACES OF THE EMBANKMENT, SPILLWAY, SPOIL AND BORROW AREAS, AND BERMS SHALL BE STABILIZED BY SEEDING, LIMING, FERTILIZING AND MULCHING IN ACCORDANCE WITH THE NATURAL RESOURCES CONSERVATION SERVICE STANDARDS AND SPECIFICATIONS FOR CRITICAL AREA PLANTING (MD-342) OR AS SHOWN ON THE ACCOMPANYING DRAWINGS.

11. EROSION AND SEDIMENT CONTROL

CONSTRUCTION OPERATIONS WILL BE CARRIED OUT IN SUCH A MANNER THAT EROSION WILL BE CONTROLLED AND WATER AND AIR POLLUTION MINIMIZED. STATE AND LOCAL LAWS CONCERNING POLLUTION ABATEMENT WILL BE FOLLOWED. CONSTRUCTION PLANS SHALL DETAIL EROSION AND SEDIMENT CONTROL MEASURES TO BE EMPLOYED DURING THE CONSTRUCTION PROCESS.

ALL DISTURBED AREAS SHALL BE CONTROLLED BY AN EROSION AND SEDIMENT CONTROL PLAN WHICH HAS BEEN APPROVED BY THE HOWARD SOIL CONSERVATION DISTRICT (H. S. C. D.).

12. SEEDING

SEEDING, FERTILIZING AND MULCHING SHALL BE AS FOLLOWS:

SEED MIX: 50% KENBLUE KENTUCKY BLUEGRASS
40% PENNLAWN CREEPING RED FESCUE
10% STREAKER REDTOP
APPLIED AT A RATE OF 150 LBS. PER ACRE.
(OR)
REBEL II TALL FESCUE (125 LBS. PER ACRE)
PENNFINE PERENNIAL RYEGRASS (15 LBS. PER ACRE)
KENBLUE KENTUCKY BLUEGRASS (10 LBS. PER ACRE)
(OR)
PENNLAWN CREEPING RED FESCUE (70 LBS. PER ACRE)
AURORA HARD FESCUE (50 LBS. PER ACRE)
COMMON WHITE CLOVER (6 LBS. PER ACRE)
WINTER RYE (45 LBS. PER ACRE)
(OR)
70% FORAGER TALL FESCUE
30% CHEMUNG CROWNVETCH, INOCULATED
APPLIED AT A RATE OF 55 LBS. PER ACRE
OPTIMUM SEEDING DATES: MARCH 1 TO APRIL 30.

LIME: 2 TONS/ACRE DOLOMITIC LIMESTONE.

FERTILIZER: 600 LBS./ACRE 10-10-10 FERTILIZER BEFORE SEEDING,
400 LBS./ACRE 30-0-0 UREAFORM FERTILIZER AT TIME OF SEEDING.

MULCH: STRAW AT 4,000 LBS. PER ACRE.

ANCHORING: MULCHING TOOL OR WOO CELLULOSE FIBER BINDER AT A NET DRY BINDER RATE OF 750 POUNDS PER ACRE. THE WOOD CELLULOSE FIBER SHALL BE MIXED WITH WATER AND THE MIXTURE SHALL CONTAIN A MAXIMUM OF 50 POUNDS OF WOOD CELLULOSE FIBER PER 100 GALLONS OF WATER OR AT RATES RECOMMENDED BY THE MANUFACTURER.

13. FILTER CLOTH

ALL FILTER CLOTH SHALL CONFORM TO THE 1994 MARYLAND STANDARDS AND SPECIFICATIONS FOR SOIL EROSION AND SEDIMENT CONTROL, OR THE LATEST EDITION.

14. GABIONS

ALL GABIONS SHALL BE PVC COATED WOVEN WIRE BASKETS. STONE SIZE SHALL BE 4 INCHES TO 7 INCHES. (CLASS IV GABIONS).

15. CONSTRUCTION INSPECTION BY DESIGNATED ENGINEERS

THE CONSTRUCTION OF THE POND AND EMBANKMENT, AND CERTIFICATION THAT THE POND AND EMBANKMENT HAVE BEEN BUILT IN ACCORDANCE WITH THE PLANS SHALL BE UNDER THE SUPERVISION OF A REGISTERED PROFESSIONAL ENGINEER. THE ENGINEER SHALL BE NOTIFIED SUFFICIENTLY IN ADVANCE OF CONSTRUCTION IN ORDER THAT ARRANGEMENTS CAN BE MADE FOR (1) INSPECTION OF PIPE TRENCH AND BEDDING, (2) INSPECTION OF RISER AND ANTI-SEEP COLLARS AND (3) SUPERVISION OF EMBANKMENT CONSTRUCTION AND COMPACTION TESTING. THE ENGINEER SHALL DIRECT THE HANDLING OF WATER DURING CONSTRUCTION, MINOR CHANGES NOT AFFECTING THE INTEGRITY OF THE DAM IN ORDER TO COMPENSATE FOR UNUSUAL SOIL CONDITIONS, AND THE REMOVAL AND REPLACEMENT OF DEFECTIVE FILL.

16. INSPECTION SCHEDULE

1. PRIOR NOTIFICATION SHALL BE GIVEN TO THE ENGINEER SO THAT INSPECTIONS MAY BE MADE AT THE FOLLOWING STAGES:

   (1) UPON COMPLETION OF EXCAVATION TO SUBFOUNDATION AND WHERE REQUIRED, INSTALLATION OF STRUCTURAL SUPPORTS OR REINFORCEMENT FOR STRUCTURES, INCLUDING BUT NOT LIMITED TO:
   (I) CORE TRENCHES FOR STRUCTURAL EMBANKMENTS.
   (II) INLET-OUTLET STRUCTURES AND ANTI-SEEP STRUCTURES, WATERTIGHT CONNECTORS ON PIPES AND
   (III) TRENCHES FOR ENCLOSED STORM DRAINAGE FACILITIES.
   (2) DURING PLACEMENT OF STRUCTURAL FILL, REINFORCING AND CONCRETE, AND INSTALLATION OF PIPING AND CATCH BASINS
   (3) DURING BACKFILL OF FOUNDATIONS AND TRENCHES
   (4) DURING EMBANKMENT CONSTRUCTION AND
   (5) UPON COMPLETION OF FINAL GRADING AND ESTABLISHMENT OF PERMANENT STABILIZATION.

   NO WORK SHALL PROCEED UNTIL THE ENGINEER INSPECTS AND APPROVES THE WORK PREVIOUSLY COMPLETED.
2. GEOTECHNICAL COMPACTION TESTING OF THE FACILITY EMBANKMENT IS REQUIRED. CERTIFICATION MUST BE PROVIDED TO THE DESIGNATED ENGINEER IN CHARGE OF THE AS-BUILT.
3. A COPY OF ALL MATERIAL SUPPLY TICKETS MUST BE GIVEN TO THE DESIGNATED ENGINEER IN CHARGE OF THE AS-BUILT.

17. "ROUTINE BY HOA" ~~AND "NON ROUTINE BY COUNTY"~~

1. THE FACILITY SHALL BE INSPECTED TWICE ANNUALLY, MARCH AND SEPTEMBER, IN ACCORDANCE WITH THE CHECKLIST AND REQUIREMENTS CONTAINED WITHIN USDA, SCS "STANDARDS AND SPECIFICATIONS FOR PONDS" (MD-378). THE POND OWNER(S) AND ANY HEIRS, SUCCESSORS, OR ASSIGNS SHALL BE RESPONSIBLE FOR THE SAFETY OF THE POND AND THE CONTINUED OPERATION, SURVEILLANCE, INSPECTION, AND MAINTENANCE THEREOF. THE POND OWNER(S) SHALL PROMPTLY NOTIFY THE SOIL CONSERVATION DISTRICT OF ANY UNUSUAL OBSERVATIONS THAT MAY BE INDICATIONS OF DISTRESS SUCH AS EXCESSIVE SEEPAGE, TURBID SEEPAGE, SLIDING OR SLUMPING.
2. VEGETATED COVER SHALL BE MAINTAINED AT ALL TIMES.
3. RILLS ON THE SLOPES OF THE DAM AND WASHED IN THE EARTH SPILLWAY SHALL BE FILLED WITH SUITABLE MATERIAL AND THOROUGHLY COMPACTED. THESE AREAS SHALL BE RESEEDED OR RESODDED, LIMED, AND FERTILIZED AS NEEDED.
4. ALL APPURTENANCES SHALL BE KEPT FREE OF TRASH.
5. SEDIMENT SHALL BE REMOVED FROM FOREBAYS WHEN THE DEPTH EXCEEDS 1'.
6. TRASH AND DEBRIS SHALL BE REMOVED AS NECESSARY.
7. VEGETATION ON EMBANKMENT AND ACCESS BENCH SHALL NOT EXCEED 18" IN HEIGHT.
8. TOP AND OUTSIDE SIDE SLOPE OF THE EMBANKMENT SHALL BE MOWED A MINIMUM OF TWO (2) TIMES A YEAR, ONCE IN JUNE AND ONCE IN SEPTEMBER. INSIDE SIDE SLOPE, AND MAINTENANCE ACCESS SHOULD BE MOWED AS NEEDED. CARE SHALL BE TAKEN NOT TO MOW ANY OF THE WETLAND PLANTINGS IN THE VICINITY OF THE 5' SAFETY BENCH.

18. OPERATION, MAINTENANCE AND INSPECTION

INSPECTION OF PONDS SHOWN HEREON SHALL BE PERFORMED AT LEAST TWICE ANNUALLY, IN ACCORDANCE WITH THE CHECKLIST AND REQUIREMENTS CONTAINED WITHIN USDA, SCA "STANDARDS AND SPECIFICATIONS FOR PONDS" (MD-378). THE POND OWNER(S) AND ANY HEIRS, SUCCESSORS, OR ASSIGNS SHALL BE RESPONSIBLE FOR THE SAFETY OF THE POND AND THE CONTINUED OPERATION, SURVEILLANCE, INSPECTION, AND MAINTENANCE THEREOF. THE POND OWNER(S) SHALL PROMPTLY NOTIFY THE SOIL CONSERVATION DISTRICT OF ANY UNUSUAL OBSERVATIONS THAT MAY BE INDICATIONS OF DISTRESS SUCH AS EXCESSIVE SEEPAGE, TURBID SEEPAGE, SLIDING OR SLUMPING.

19. UTILITIES

NO UTILITIES MAY BE CONSTRUCTED WITHIN/ALONG ANY MD-378 EMBANKMENT.

GEOTECH RECOMMENDATIONS

THE AREAS OF THE PROPOSED SWM FACILITIES SHOULD BE STRIPPED OF TOPSOIL AND ANY OTHER UNSUITABLE MATERIALS FROM THE EMBANKMENT OR STRUCTURE AREAS IN ACCORDANCE. WITH SOIL CONSERVATION GUIDELINES. AFTER STRIPPING OPERATIONS HAVE BEEN COMPLETED, THE EXPOSED SUBGRADE MATERIALS SHOULD BE PROOFROLLED WITH A LOADED DUMP TRUCK OR SIMILAR EQUIPMENT IN THE PRESENCES OF A GEOTECHNICAL ENGINEER OR HIS REPRESENTATIVE. FOR AREAS THAT ARE NOT ACCESSIBLE TO A DUMP TRUCK, THE EXPOSED MATERIALS SHOULD BE OBSERVED AND TESTED BY A GEOTECHNICAL ENGINEER OR HIS REPRESENTATIVE UTILIZING A DYNAMIC CONE PENETROMETER. ANY EXCESSIVELY SOFT OR LOOSE MATERIALS IDENTIFIED BY PROOFROLLING OR PENETROMETER TESTING SHOULD BE EXCAVATED TO SUITABLE FIRM SOIL, AND THE GRADES RE-ESTABLISHED BY BACKFILLING WITH SUITABLE MATERIAL.

A REPRESENTATIVE OF THE GEOTECHNICAL ENGINEER SHOULD BE PRESENT TO MONITOR PLACEMENT AND COMPACTION OF FILL FOR THE EMBANKMENT AND CUT-OFF TRENCH. IN ACCORDANCE WITH MARYLAND SOIL CONSERVATION SPECIFICATION 378 SOILS CONSIDERED SUITABLE FOR THE CENTER OF EMBANKMENT AND CUT-OFF TRENCH SHALL CONFORM TO UNIFIED SOIL CLASSIFICATION GC, SC, CH, OR CL.

IT IS OUR PROFESSIONAL OPINION THAT IN ADDITION TO THE SOIL MATERIALS DESCRIBED ABOVE A FINE-GRAINED SOIL, INCLUDING SILT (ML) WITH A PLASTICITY INDEX OF 10 OR MORE CAN BE UTILIZED FOR THE CENTER OF THE EMBANKMENT AND CORE TRENCH. ALL FILL MATERIALS MUST BE PLACED AND COMPACTED IN ACCORDANCE WITH MD SCS 378 SPECIFICATIONS.

20. NON-ROUTINE MAINTENANCE (BY COUNTY)

1. STRUCTURAL COMPONENTS OF THE POND SUCH AS THE DAM, THE RISER, AND THE PIPES SHALL BE REPAIRED UPON THE DETECTION OF ANY DAMAGE. THE COMPONENTS SHOULD BE INSPECTED DURING ROUTINE MAINTENANCE OPERATIONS.
2. SEDIMENT SHOULD BE REMOVED WHEN ITS ACCUMULATION SIGNIFICANTLY REDUCES THE DESIGN STORAGE, INTERFERE WITH THE FUNCTION OF THE RISER, WHEN DEEMED NECESSARY FOR AESTHETIC REASONS, OR WHEN DEEMED NECESSARY BY THE HOWARD COUNTY'S DEPARTMENT OF PUBLIC WORKS.

HILLIS - CARNES
ENGINEERING ASSOCIATES, INC.
RECORD OF SOIL EXPLORATION
Page 1 of 1

Project Name: Pfefferkorn SWM — Location: Howard County, Maryland — Boring Number: B-4 — Job #: 02025A
Datum: — Surf. Elev.: 517 — Date Started: 01-15-02
SAMPLER: Hammer Wt. 140 Lbs. — Hammer Drop 30 Inches — Pipe Size 2.0 Inches OD
Hole Diameter 6" — Rock Core Dia. - — Boring Method HSA
Foreman: Lamont Smith — Inspector: — Completed: 01-15-02

ELEV.	SOIL DESCRIPTION (Color, Moisture, Density, Size, Proportion)	STRA. DEPTH	DEPTH SCALE	CON	SAMPLE BLOWS 6"	NO.	REC.	BORING & SAMPLING NOTES
	SURFACE		0.0					
	Reddish to grayish brown, moist, loose, sandy silt/clay (ML/CL) with trace gravel	2.5		I/D	1-1-2	1	13"	7" Topsoil
	Reddish brown, moist, medium dense, silty to clayey sand (SM/SC) with trace gravel			I/D	2-4-5	2	18"	No groundwater encountered while drilling
		7.5	5.0	D	4-4-6	3	14"	
	Reddish brown, moist, loose, silty to clayey micaceous sand (SM/SC)			D	2-2-3	4	12"	
			10.0	D	2-4-4	5	18"	Caved in at 13.0' at Completion; Caved in at 11.0' after 24 hrs
		16.5	15.0	I/D	2-4-6	6	12"	Backfilled after 24 hours
	Bottom of Hole at 16.5'		20.0					

SAMPLER TYPE: DRIVEN SPLIT SPOON UNLESS OTHERWISE NOTED. PT-PRESSED SHELBY TUBE; CA-CONTINUOUS FLIGHT AUGER; RC-ROCK CORE
SAMPLE CONDITIONS: D-DISINTEGRATED; I-INTACT; U-UNDISTURBED; L-LOST
GROUND WATER DEPTH: AT COMPLETION Dry FT.; AFTER 24 hrs 6.5 FT.; AFTER FT.
BORING METHOD: HSA-HOLLOW STEM AUGERS; CFA-CONT. FLIGHT AUGERS; DC-DRIVING CASING; MD-MUD DRILLING

STANDARD PENETRATION TEST-DRIVING 2" OD SAMPLER 1' WITH 140# HAMMER FALLING 30";COUNT MADE AT 6" INTERVALS

HILLIS - CARNES
ENGINEERING ASSOCIATES, INC.
RECORD OF SOIL EXPLORATION
Page 1 of 1

Project Name: Pfefferkorn SWM — Location: Howard County, Maryland — Boring Number: B-5 — Job #: 02025A
Datum: — Surf. Elev.: 511 — Date Started: 01-15-02
SAMPLER: Hammer Wt. 140 Lbs. — Hammer Drop 30 Inches — Pipe Size 2.0 Inches OD
Hole Diameter 6" — Rock Core Dia. - — Boring Method HSA
Foreman: Lamont Smith — Inspector: — Completed: 01-15-02

ELEV.	SOIL DESCRIPTION (Color, Moisture, Density, Size, Proportion)	STRA. DEPTH	DEPTH SCALE	CON	SAMPLE BLOWS 6"	NO.	REC.	BORING & SAMPLING NOTES
	SURFACE		0.0					
	Reddish to grayish brown, moist, loose, sandy silt/clay (ML/CL) with trace gravel	2.5		D	1-1-2	1	13"	7" Topsoil
	Reddish brown, moist, loose to medium dense, silty to clayey micaceous sand (SM/SC)			D	2-4-6	2	15"	No groundwater encountered while drilling
			5.0	D	2-3-4	3	15"	
				D	3-5-8	4	13"	Caved in at 8.5' at Completion
		11.5	10.0	D	6-8-9	5	16"	Caved in at 8.0' after 24 hrs
	Bottom of Hole at 11.5'		15.0					Backfilled after 24 hours
			20.0					

SAMPLER TYPE: DRIVEN SPLIT SPOON UNLESS OTHERWISE NOTED. PT-PRESSED SHELBY TUBE; CA-CONTINUOUS FLIGHT AUGER; RC-ROCK CORE
SAMPLE CONDITIONS: D-DISINTEGRATED; I-INTACT; U-UNDISTURBED; L-LOST
GROUND WATER DEPTH: AT COMPLETION Dry FT.; AFTER 24 hrs 8.0 FT.; AFTER FT.
BORING METHOD: HSA-HOLLOW STEM AUGERS; CFA-CONT. FLIGHT AUGERS; DC-DRIVING CASING; MD-MUD DRILLING

STANDARD PENETRATION TEST-DRIVING 2" OD SAMPLER 1' WITH 140# HAMMER FALLING 30";COUNT MADE AT 6" INTERVALS

HILLIS - CARNES
ENGINEERING ASSOCIATES, INC.
RECORD OF SOIL EXPLORATION
Page 1 of 1

Project Name: Pfefferkorn SWM — Location: Howard County, Maryland — Boring Number: B-6 — Job #: 02025A
Datum: — Surf. Elev.: 510 — Date Started: 01-15-02
SAMPLER: Hammer Wt. 140 Lbs. — Hammer Drop 30 Inches — Pipe Size 2.0 Inches OD
Hole Diameter 6" — Rock Core Dia. - — Boring Method HSA
Foreman: Lamont Smith — Inspector: — Completed: 01-15-02

ELEV.	SOIL DESCRIPTION (Color, Moisture, Density, Size, Proportion)	STRA. DEPTH	DEPTH SCALE	CON	SAMPLE BLOWS 6"	NO.	REC.	BORING & SAMPLING NOTES
	SURFACE		0.0					
	Reddish to grayish brown, moist, loose, sandy silt/clay (ML/CL) with trace gravel	2.5		I/D	1-2-3	1	11"	7" Topsoil
	Reddish brown, moist, loose to medium dense, silty to clayey micaceous sand (SM/SC)			D	3-3-5	2	18"	No groundwater encountered while drilling
			5.0	D	4-6-6	3	13"	
				D	4-4-5	4	14"	Caved in at 8.5' at Completion
		11.5	10.0	D	2-7-7	5	13"	Caved in at 8.5' after 24 hrs
	Bottom of Hole at 11.5'		15.0					Backfilled after 24 hours
			20.0					

SAMPLER TYPE: DRIVEN SPLIT SPOON UNLESS OTHERWISE NOTED. PT-PRESSED SHELBY TUBE; CA-CONTINUOUS FLIGHT AUGER; RC-ROCK CORE
SAMPLE CONDITIONS: D-DISINTEGRATED; I-INTACT; U-UNDISTURBED; L-LOST
GROUND WATER DEPTH: AT COMPLETION Dry FT.; AFTER 24 hrs 7.5 FT.; AFTER FT.
BORING METHOD: HSA-HOLLOW STEM AUGERS; CFA-CONT. FLIGHT AUGERS; DC-DRIVING CASING; MD-MUD DRILLING

STANDARD PENETRATION TEST-DRIVING 2" OD SAMPLER 1' WITH 140# HAMMER FALLING 30";COUNT MADE AT 6" INTERVALS

HILLIS - CARNES
ENGINEERING ASSOCIATES, INC.
RECORD OF SOIL EXPLORATION
Page 1 of 1

Project Name: Pfefferkorn Road SWM — Location: Howard County, Maryland — Boring Number: B-8 — Job #: 02025A
Datum: — Surf. Elev.: 502.83 — Date Started: 04-05-02
SAMPLER: Hammer Wt. 140 Lbs. — Hammer Drop 30 Inches — Pipe Size 2.0 Inches OD
Hole Diameter 6" — Rock Core Dia. - — Boring Method HSA
Foreman: Lamont Smith — Inspector: — Completed: 04-05-02

ELEV.	SOIL DESCRIPTION (Color, Moisture, Density, Size, Proportion)	STRA. DEPTH	DEPTH SCALE	CON	SAMPLE BLOWS 6"	NO.	REC.	BORING & SAMPLING NOTES
	SURFACE		0.0					7" Topsoil
	Reddish brown, moist, loose, sandy silt/clay with organic matter and trace gravel (ML/CL)			I/D	1-2-3	1	13"	
		4.5		I	2-3-3	2	15"	
	Reddish brown, moist, medium dense, silty to clayey sand (SM/SC)	7.0	5.0	D	4-5-9	3	17"	
	Light brown, moist, loose, silty to clayey micaceous sand (SM/SC)			D	3-3-1	4	17"	
			10.0	D	1-2-2	5	18"	Caved in at 13.0' at Completion; Groundwater encountered at 14.0' while drilling
		16.5	15.0	I/D	4-5-6	6	13"	
	Bottom of Test Hole at 16.5'		20.0					

SAMPLER TYPE: DRIVEN SPLIT SPOON UNLESS OTHERWISE NOTED. PT-PRESSED SHELBY TUBE; CA-CONTINUOUS FLIGHT AUGER; RC-ROCK CORE
SAMPLE CONDITIONS: D-DISINTEGRATED; I-INTACT; U-UNDISTURBED; L-LOST
GROUND WATER DEPTH: AT COMPLETION 10.0 FT.; AFTER 24 hrs FT.; AFTER FT.
BORING METHOD: HSA-HOLLOW STEM AUGERS; CFA-CONT. FLIGHT AUGERS; DC-DRIVING CASING; MD-MUD DRILLING

STANDARD PENETRATION TEST-DRIVING 2" OD SAMPLER 1' WITH 140# HAMMER FALLING 30";COUNT MADE AT 6" INTERVALS

APPROVED: HOWARD COUNTY DEPARTMENT OF PUBLIC WORKS

William J. Malcolm Jr. — 4-13-04
CHIEF, BUREAU OF HIGHWAYS — DATE

APPROVED:
[signature] — 4/28/04
CHIEF, DEVELOPMENT ENGINEERING DIVISION — DATE

[signature] — 4/29/04
CHIEF, DIVISION OF LAND DEVELOPMENT — DATE

~~DIRECTOR~~ — ~~DATE~~

Date	No.	Revision Description

OWNER: NORTHRIDGE DEVELOPMENT. LLC
14045 GARED DRIVE
GLENWOOD, MD 21738

DEVELOPER: JAMES F. SELFRIDGE BUILDERS, INC.
14045 GARED DRIVE
GLENWOOD, MD 21738

DEVELOPERS CERTIFICATION:

I/WE CERTIFY THAT ALL DEVELOPMENT AND/OR CONSTRUCTION WILL BE DONE ACCORDING TO THESE PLANS AND THAT ANY RESPONSIBLE PERSONNEL INVOLVED IN THE CONSTRUCTION PROJECT WILL HAVE A CERTIFICATE OF ATTENDANCE AT A DEPARTMENT OF ENVIRONMENT APPROVED TRAINING PROGRAM FOR THE CONTROL OF SEDIMENT AND EROSION BEFORE BEGINNING THE PROJECT. I SHALL ENGAGE A REGISTERED PROFESSIONAL ENGINEER TO SUPERVISE POND CONSTRUCTION AND PROVIDE THE HOWARD SOIL CONSERVATION DISTRICT WITH AN "AS-BUILT" PLAN OF THE POND WITHIN 30 DAYS OF COMPLETION. I ALSO AUTHORIZE PERIODIC ON-SITE INSPECTIONS BY THE HOWARD SOIL CONSERVATION DISTRICT.

[signature] — 3/23/04
SIGNATURE OF DEVELOPER — DATE
PRINT NAME BELOW SIGNATURE
JAMES H. SELFRIDGE

ENGINEER'S CERTIFICATION:

I CERTIFY THAT THIS PLAN FOR POND CONSTRUCTION, EROSION AND SEDIMENT CONTROL REPRESENTS A PRACTICAL AND WORKABLE PLAN BASED ON MY PERSONAL KNOWLEDGE OF THE SITE CONDITIONS. THIS PLAN WAS PREPARED IN ACCORDANCE WITH THE REQUIREMENTS OF THE HOWARD SOIL CONSERVATION DISTRICT. I HAVE NOTIFIED THE DEVELOPER THAT HE/SHE MUST ENGAGE A REGISTERED PROFESSIONAL ENGINEER TO SUPERVISE POND CONSTRUCTION AND PROVIDE THE HOWARD SOIL CONSERVATION DISTRICT WITH AN "AS-BUILT" PLAN OF THE POND WITHIN 30 DAYS OF COMPLETION.

[signature] — 3-25-04
SIGNATURE OF ENGINEER
PRINT NAME BELOW SIGNATURE
John W. Ranocchia, Sr.

THESE PLANS HAVE BEEN REVIEWED FOR THE HOWARD SOIL CONSERVATION DISTRICT AND MEET THE TECHNICAL REQUIREMENTS FOR SMALL POND CONSTRUCTION, SOIL EROSION AND SEDIMENT CONTROL.

Jim Myers / CS — 3/30/04
U.S. NATURAL RESOURCE CONSERVATION SERVICE — DATE

THESE PLANS FOR SMALL POND CONSTRUCTION, SOIL EROSION AND SEDIMENT CONTROL MEET THE REQUIREMENTS OF HOWARD SOIL CONSERVATION DISTRICT.

[signature] — 3/30/04
HOWARD S.C.D. — DATE

3-25-04
Date

STATE OF MARYLAND — JOHN W. RANOCCHIA, SR. — No. 10551 — REGISTERED PROFESSIONAL ENGINEER

Professional Engr. No. 1055'

DMW
Daft·McCune·Walker, Inc.
200 East Pennsylvania Avenue
Towson, Maryland 21286
(410) 296-3333
Fax 296-4705

A Team of Land Planners, Landscape Architects, Engineers, Surveyors & Environmental Professionals

SUBDIVISION NAME			SECTION/AREA		LOT/PARCEL
FOX MEADOW			1		167
PLAT OR L/F	BLOCK	ZONE	TAX/ZONE MAP	ELECT. DISTRICT	CENSUS TRACT
5983/492	13, 19, 20	RR, RC	15	3	

TITLE
FOX MEADOW
(FORMERLY PFEFFERKORN PROPERTY)
Stormwater Management Facility 1
Specifications and Borings

Des By	DWR	Scale	NONE	Proj. No. 00042.B
Drn By	DWR	Date	1/7/04	18 OF 24
Chk By		Approved		

F.03.45

Mon Mar 22 14:41:09 2004 m:\00042\00042.m5

Mon Mar 22 14:41:10 2004 m:\00042\00042.m5

3/22/2004 2:40:46 PM \\ATHENS\MSTATION\CADNETN\OCF\day-qcf crizzi c:\hpm\00042.hpm

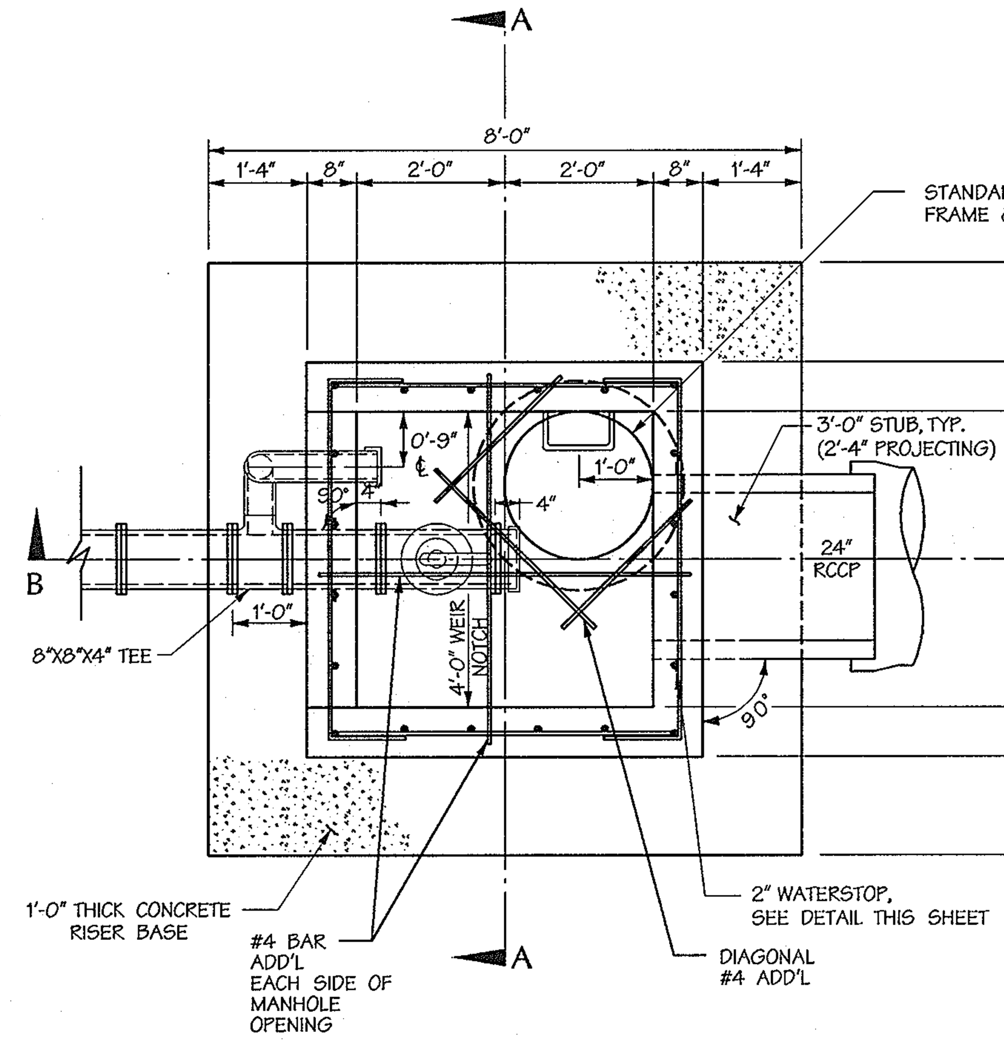

RISER - PLAN

CAST-IN-PLACE
SCALE: ½"=1'-0"

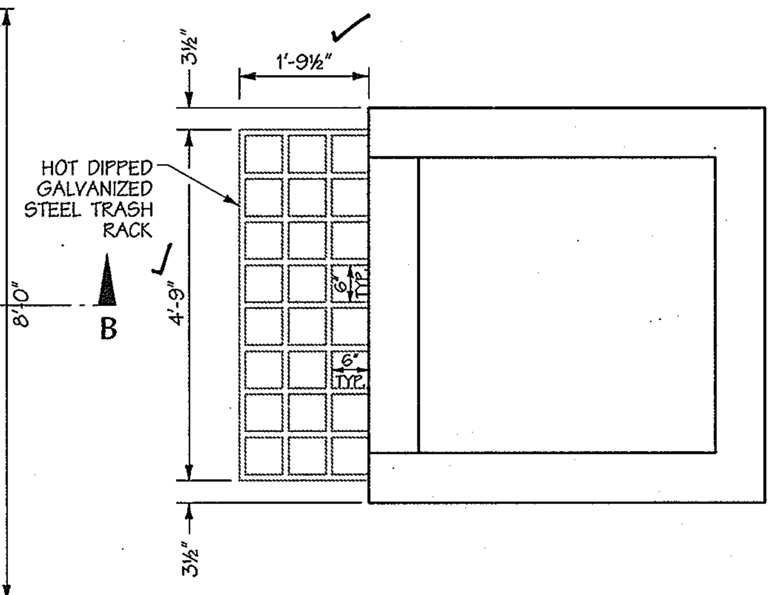

TRASH RACK DETAIL

SCALE: ½"=1'-0"

* No.8 SMOOTH BAR MAY BE SUBSTITUTED WITH 1"x 1" TUBULAR BARS, ALL JOINTS TO BE WELDED ALL AROUND. AFTER FABRICATION AND GALVANIZATION OF THE TRASH RACK, THE TRASH RACK SHALL BE PAINTED BATTLESHIP GRAY.

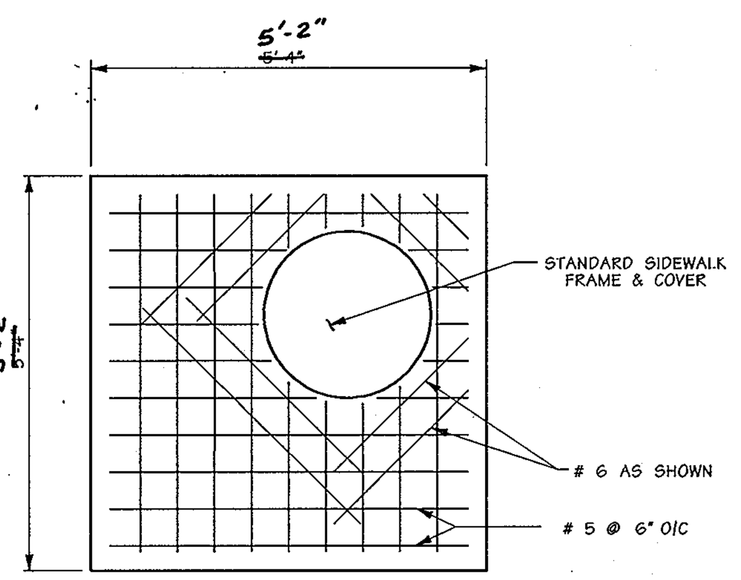

NOTES:

1. BOLT TOP SLAB TO RISER WITH (4) ½" x 6" LG. HEX. HEAD GALVANIZED BOLTS.
2. THE SIDE AND THE SLAB CLOSET TO THE FRAME AND COVER WILL LINE UP WITH THE SIDE OF THE RISER WITH STANDARD MANHOLE STEPS.

TOP SLAB

Scale: 59/64" = 1'-0"
CAST-IN-PLACE

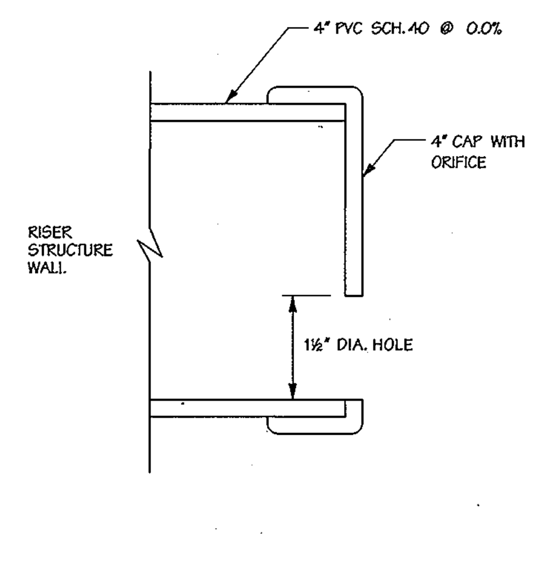

DEWATERING ORIFICE DETAIL

NOT TO SCALE

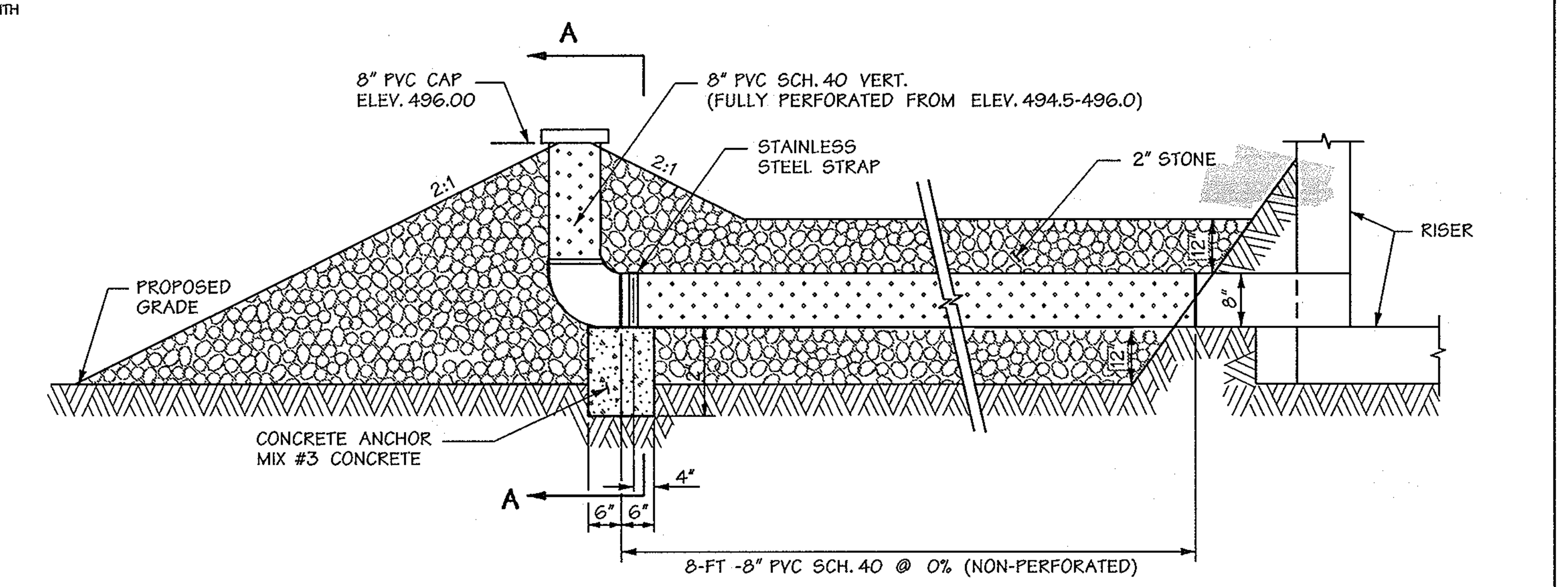

NOTE:
PERFORATED PVC SHALL BE "FULLY PERFORATED", HAVING A MINIMUM OF 32, 1" DIAMETER HOLES PER LINEAR FOOT. PERFORATIONS SHALL BE EVENLY DISTRIBUTED AROUND THE FULL PERIPHERY OF THE PIPE.

LOW FLOW PIPE DETAIL

NO SCALE

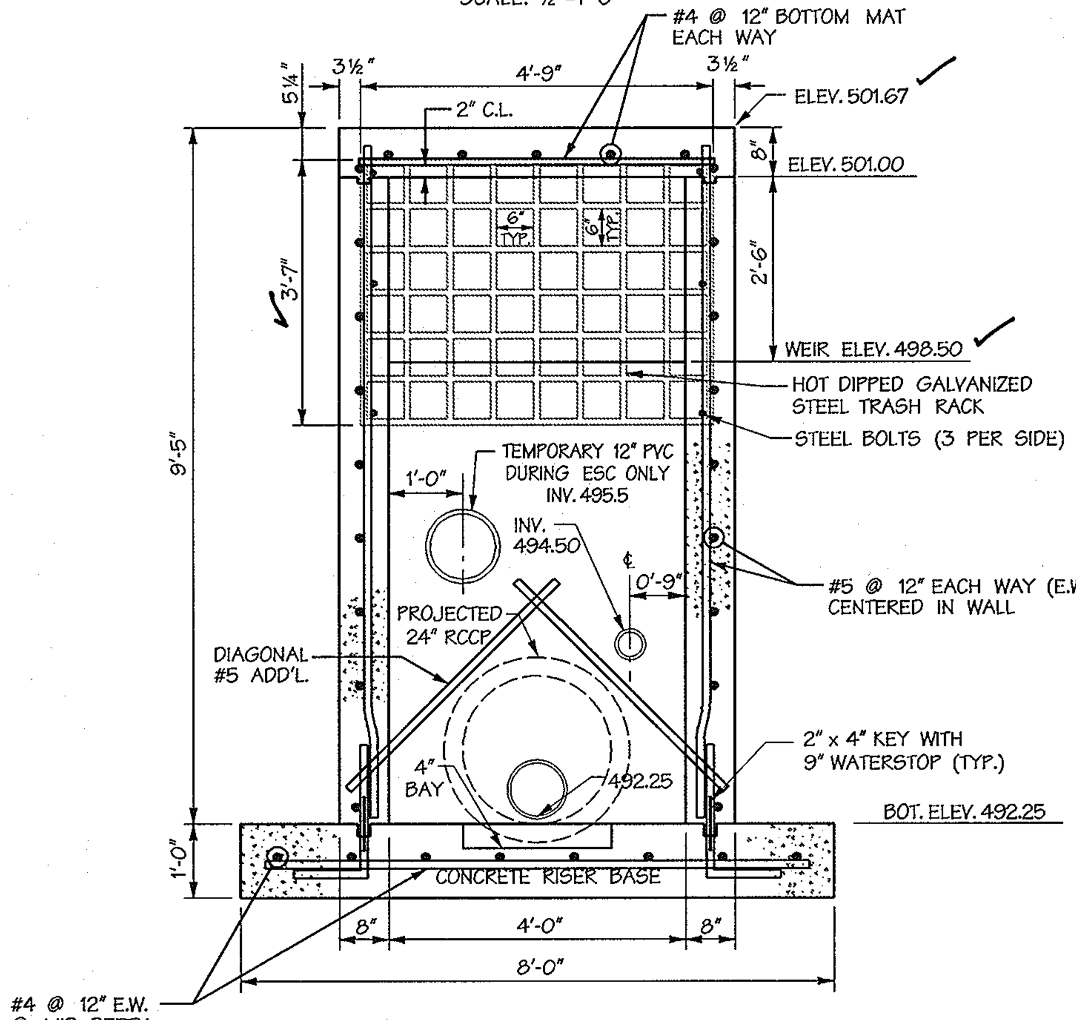

SECTION A-A

CAST-IN-PLACE
SCALE: ½"=1'-0"

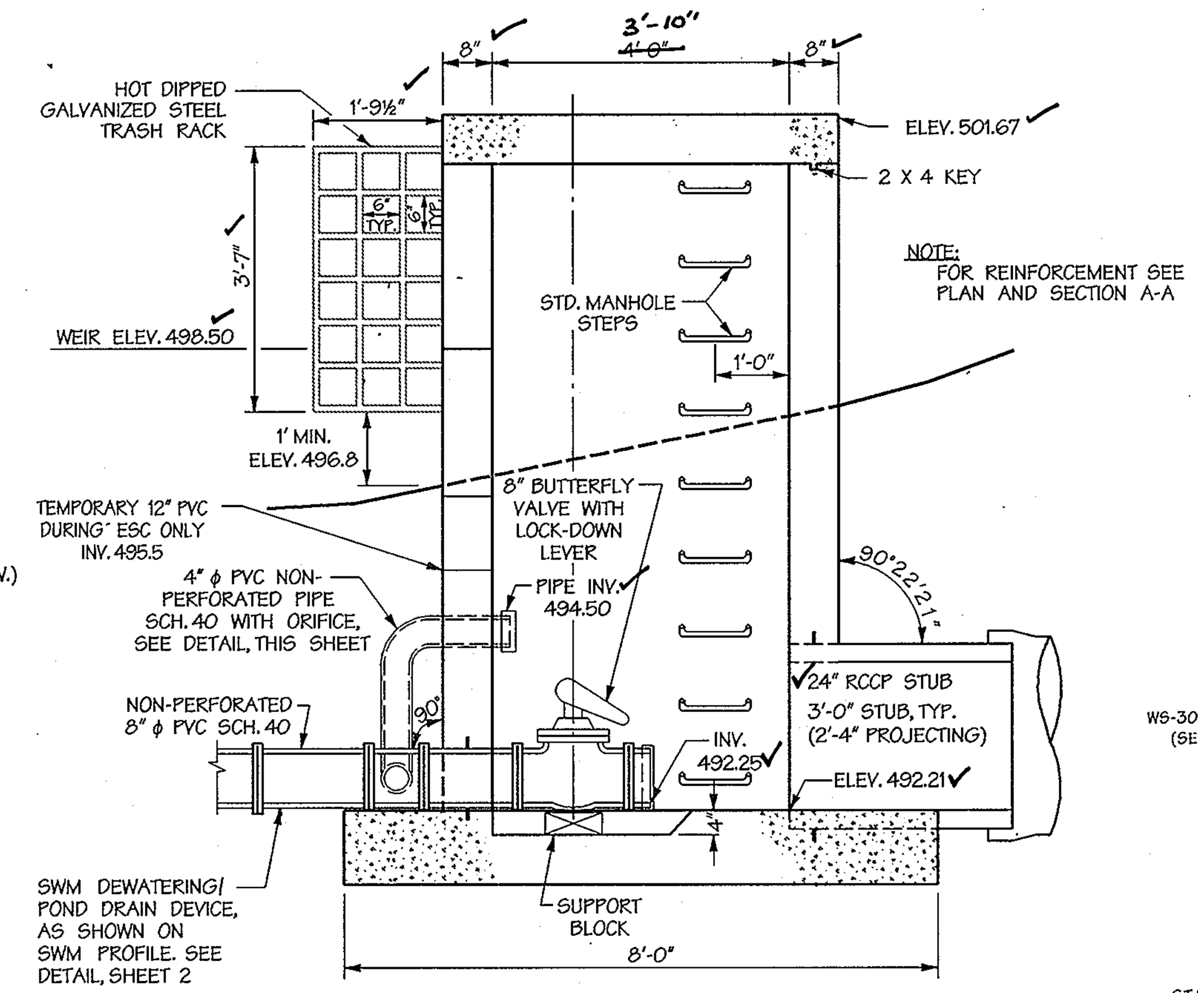

SECTION B-B

CAST-IN-PLACE
SCALE: ½"=1'-0"

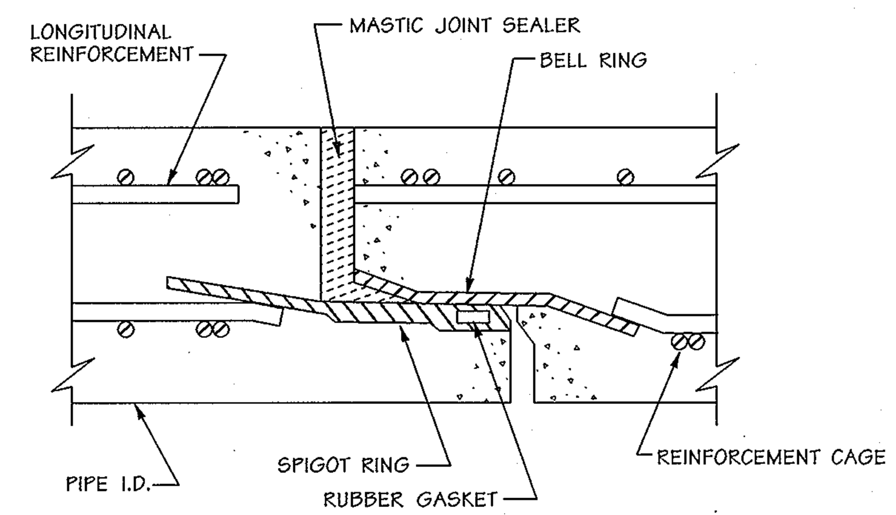

BARREL JOINT SEAL DETAIL

NTS

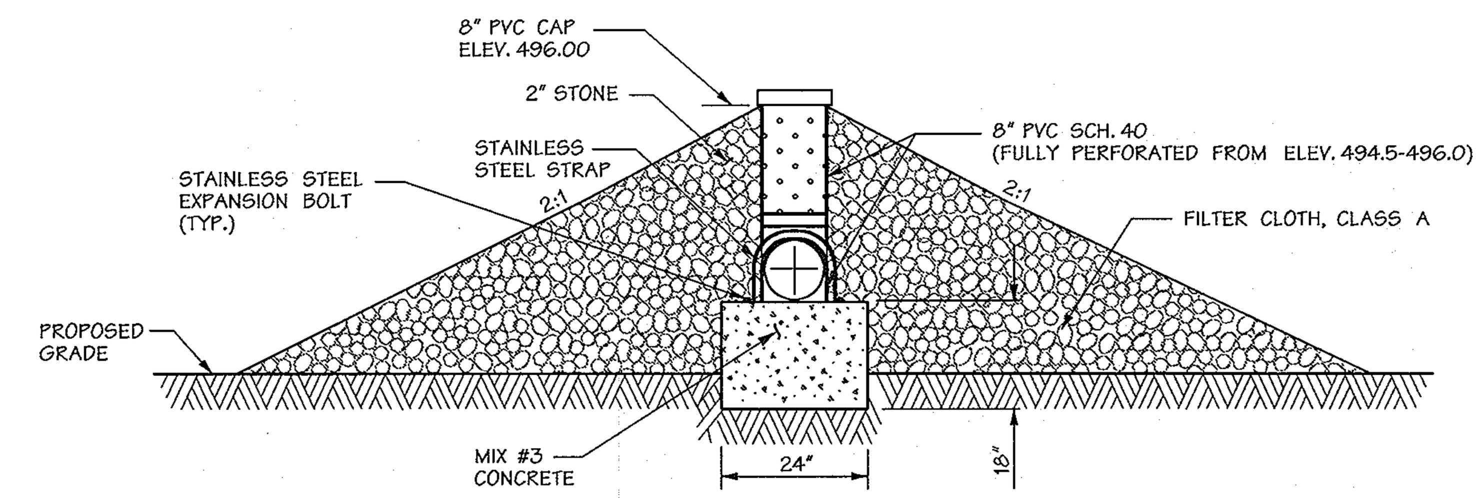

SECTION 'A-A'

WS-30 WATERSTOP CONNECTION (SEE DETAIL THIS SHEET)

AS BUILT CERTIFICATION

I HEREBY CERTIFY THAT THE FACILITY SHOWN ON THIS PLAN WAS CONSTRUCTED AS AS SHOWN ON THE "AS-BUILT" PLANS AND MEET THE APPROVED PLANS AND SPECIFICATIONS.

Donald Mason — P.E. No 21443
DONALD A. MASON — DATE 1-16-07

CERTIFY MEANS TO STATE OR DECLARE A PROFESSIONAL OPINION BASED UPON ONSITE INSPECTIONS AND MATERIALS TESTS WHICH ARE CONDUCTED DURING CONSTRUCTION. THE ONSITE INSPECTIONS AND MATERIALS TESTS ARE THOSE INSPECTIONS AND TESTS DEEMED SUFFICIENT AND APPROPRIATE BY COMMONLY ACCEPTED ENGINEERING STANDARDS. CERTIFY DOES NOT MEAN OR IMPLY A GUARANTEE BY THE ENGINEER NOR DOES AN ENGINEER'S CERTIFICATION RELIEVE ANY OTHER PARTY FROM MEETING REQUIREMENTS IMPOSED BY CONTRACT, EMPLOYMENT, OR OTHER MEANS, INCLUDING MEETING COMMONLY ACCEPTED INDUSTRY PRACTICES.

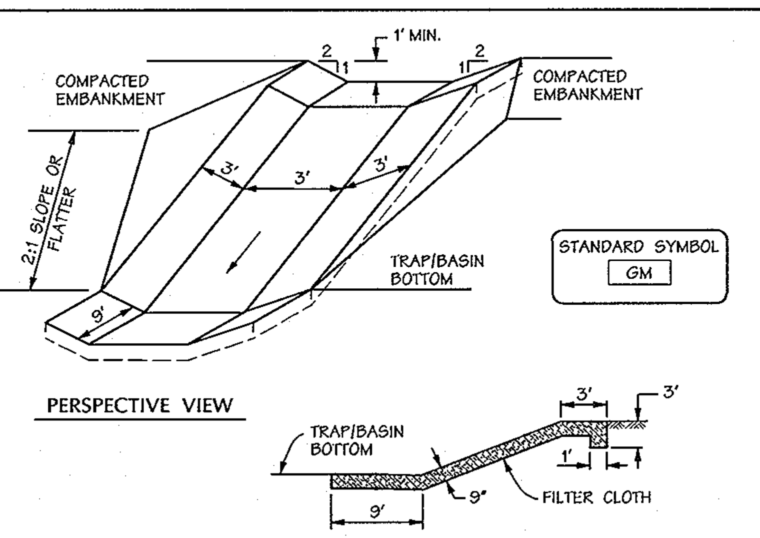

CONSTRUCTION SPECIFICATIONS

1. GABION INFLOW PROTECTION SHALL BE CONSTRUCTED OF 9' x 3' x 9" GABION BASKETS FORMING A TRAPEZOIDAL CROSS SECTION 1' DEEP, WITH 2:1 SIDE SLOPES, AND A 3' BOTTOM WIDTH.
2. GEOTEXTILE CLASS C SHALL BE INSTALLED UNDER ALL GABION BASKETS.
3. THE STONE USED TO FILL THE GABION BASKETS SHALL BE 4" - 7".
4. GABIONS SHALL BE INSTALLED IN ACCORDANCE WITH MANUFACTURERS RECOMMENDATIONS.
5. GABION INFLOW PROTECTION SHALL BE USED WHERE CONCENTRATED FLOW IS PRESENT ON SLOPES STEEPER THAN 4:1.

U.S. DEPARTMENT OF AGRICULTURE SOIL CONSERVATION SERVICE — B - 7 - 2 — MARYLAND DEPARTMENT OF ENVIRONMENT WATER MANAGEMENT ADMINISTRATION

Gabion Inflow Protection

NOT TO SCALE

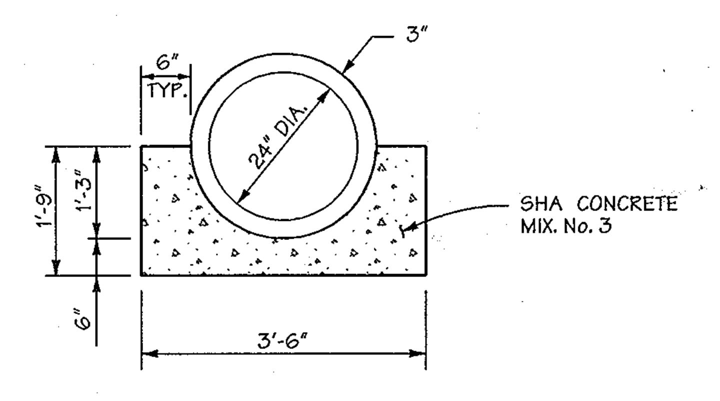

CONCRETE CRADLE

NOT TO SCALE

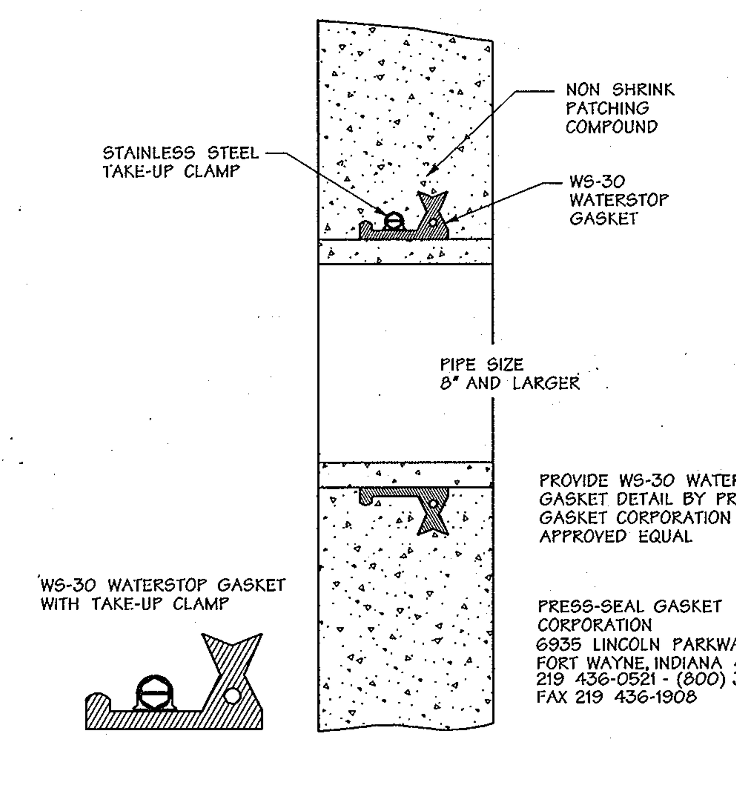

PROVIDE WS-30 WATERSTOP GASKET DETAIL BY PRESS-SEAL GASKET CORPORATION OR APPROVED EQUAL

PRESS-SEAL GASKET CORPORATION
6935 LINCOLN PARKWAY
FORT WAYNE, INDIANA 46804
219 436-0521 - (800) 348-7325
FAX 219 436-1908

WATERSTOP DETAIL

NOT TO SCALE

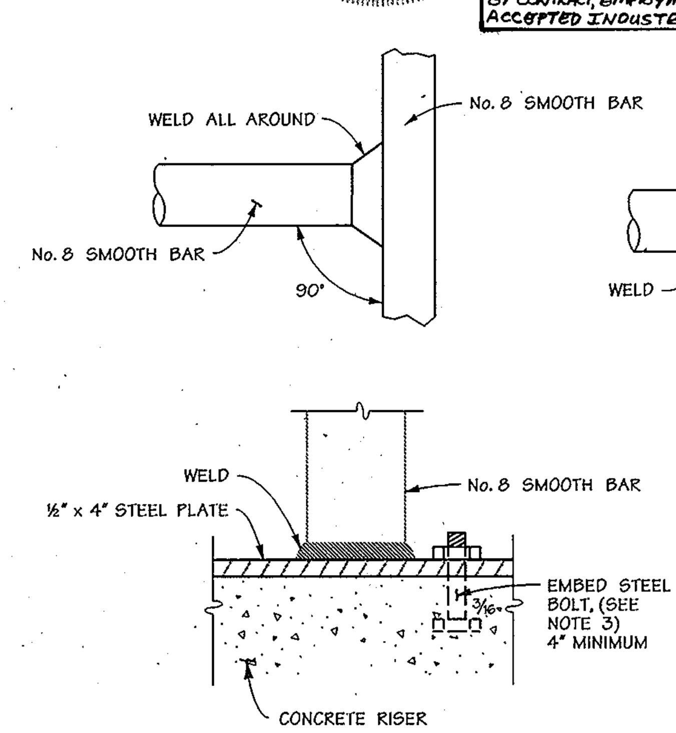

DETAILS

NOTES

1. NO RUST SHALL BE PERMITTED ON REBAR SURFACES TO BE WELDED.
2. TRASH RACK SHALL BE No. 8 SMOOTH BAR WELDED AT ALL INTERSECTIONS.
3. ½" x 6" STAINLESS STEEL BOLT (TYP.) ASTM F593-98.
4. *ALL STEEL SHALL BE ASTM A-36 (OR A-500 FOR TUBING) FULLY GALVANIZED AFTER FABRICATION IN ACCORDANCE WITH ASTM A-123.
5. ALL WELDED CONNECTIONS MUST BE HOT DIPPED GALVANIZED AND SHOP FABRICATED.
6. EXPOSED CONCRETE CORNERS MUST BE CHAMFERED WITH ¾" x ¾" MILLED CHAMFER STRIPS.
7. MINIMUM COVER FOR RE-BARS IS 2" AT WALLS AND 3" AT BOTTOM.
8. ALL PVC SHALL BE SCHEDULE 40.

TRASH RACK WELDING DETAIL

NOT TO SCALE

DEVELOPERS CERTIFICATION:

I/WE CERTIFY THAT ALL DEVELOPMENT AND/OR CONSTRUCTION WILL BE DONE ACCORDING TO THESE PLANS AND THAT ANY RESPONSIBLE PERSONNEL INVOLVED IN THE CONSTRUCTION PROJECT WILL HAVE A CERTIFICATE OF ATTENDANCE AT A DEPARTMENT OF ENVIRONMENT APPROVED TRAINING PROGRAM FOR THE CONTROL OF SEDIMENT AND EROSION BEFORE BEGINNING THE PROJECT. I SHALL ENGAGE A REGISTERED PROFESSIONAL ENGINEER TO SUPERVISE POND CONSTRUCTION AND PROVIDE THE HOWARD SOIL CONSERVATION DISTRICT WITH AN "AS-BUILT" PLAN OF THE POND WITHIN 30 DAYS OF COMPLETION. I ALSO AUTHORIZE PERIODIC ON-SITE INSPECTIONS BY THE HOWARD SOIL CONSERVATION DISTRICT.

SIGNATURE OF DEVELOPER — DATE 3/23/04
PRINT NAME BELOW SIGNATURE
JAMES H. SELFRIDGE

ENGINEER'S CERTIFICATION:

I CERTIFY THAT THIS PLAN FOR POND CONSTRUCTION, EROSION AND SEDIMENT CONTROL REPRESENTS A PRACTICAL AND WORKABLE PLAN BASED ON MY PERSONAL KNOWLEDGE OF THE SITE CONDITIONS. THIS PLAN WAS PREPARED IN ACCORDANCE WITH THE REQUIREMENTS OF THE HOWARD SOIL CONSERVATION DISTRICT. I HAVE NOTIFIED THE DEVELOPER THAT HE/SHE MUST ENGAGE A REGISTERED PROFESSIONAL ENGINEER TO SUPERVISE POND CONSTRUCTION AND PROVIDE THE HOWARD SOIL CONSERVATION DISTRICT WITH AN "AS-BUILT" PLAN OF THE POND WITHIN 30 DAYS OF COMPLETION.

SIGNATURE OF ENGINEER — 3-25-04
PRINT NAME BELOW SIGNATURE
John W. Ranocchia, Sr.

THESE PLANS HAVE BEEN REVIEWED FOR THE HOWARD SOIL CONSERVATION DISTRICT AND MEET THE TECHNICAL REQUIREMENTS FOR SMALL POND CONSTRUCTION, SOIL EROSION AND SEDIMENT CONTROL.

U.S. NATURAL RESOURCE CONSERVATION SERVICE — GS — DATE 3/30/04

THESE PLANS FOR SMALL POND CONSTRUCTION, SOIL EROSION AND SEDIMENT CONTROL MEET THE REQUIREMENTS OF HOWARD SOIL CONSERVATION DISTRICT.

HOWARD S.C.D. — DATE 3/30/04

3-25-04
Date

Professional Engr. No. 10551

APPROVED: HOWARD COUNTY DEPARTMENT OF PUBLIC WORKS

CHIEF, BUREAU OF HIGHWAYS — DATE 4-13-04

APPROVED:

CHIEF, DEVELOPMENT ENGINEERING DIVISION — DATE 4/28/04

CHIEF, DIVISION OF LAND DEVELOPMENT — DATE 4/29/4

~~DIRECTOR~~ — ~~DATE~~

Date	No.	Revision Description
1-10-07	1	REVISE PER AS-BUILT CONDITIONS

OWNER: NORTHRIDGE DEVELOPMENT, LLC
14045 GARED DRIVE
GLENWOOD, MD 21738

DEVELOPER: JAMES F. SELFRIDGE BUILDERS, INC.
14045 GARED DRIVE
GLENWOOD, MD 21738

DMW
Daft·McCune·Walker, Inc.
200 East Pennsylvania Avenue
Towson, Maryland 21286
(410) 296-3333
Fax 296-4705

A Team of Land Planners, Landscape Architects, Engineers, Surveyors & Environmental Professionals

SUBDIVISION NAME			SECTION/AREA		LOT/PARCEL
FOX MEADOW			1		167
PLAT OR L/F	BLOCK	ZONE	TAX/ZONE MAP	ELECT. DISTRICT	CENSUS TRACT
5983/492	13, 19, 20	RR, RC	15	3	

TITLE

FOX MEADOW

(FORMERLY PFEFFERKORN PROPERTY)

Stormwater Management Facility 1
Stormwater Management Details

Des By	DWR	Scale AS SHOWN	Proj. No. 00042.B
Drn By	DWR	Date 1/7/04	17 OF 24
Chk By		Approved	

F.03.45

Mon Mar 22 15:37:31 2004 n:\00042\00042.m4

Mon Mar 22 15:37:32 2004 n:\00042\00042.m4

3/22/2004 3:37:22 PM \\ATHENS\MSTATION\CADNETIN\GCF\dgj.gcf cr1z21 c:\hpm\00042.hpm

SWM FACILITY No. 2
DESIGN FLOW SUMMARY PROPOSED CONDITIONS

Structure Type	BIORETENTION FACILITY, F-6
Water Quality Type	BIORETENTION FACILITY, F-6
Water Quality Storage Required (Ac-ft)	0.067
Water Quality Storage Provided (Ac-ft)	0.079
Water Surface Elevation - WQ	536.5
Water Surface Elevation - 1-Year Cpv	536.5
Water Surface Elevation - 10-Year	536.75
Depth of Water Over Bioretention Area - WQ	1.0'
Storage Height Product 10-Year	0.42 Ac-Ft^2
Watershed Area to Facility (Actual D.A.)	0.0055 SQ. MILES
Level of Management Required	1-Year, Cpv
Level of Management Provided	1-Year, Cpv
Maximum Height of Fill	3.5'
Freeboard Provided Over 10-Year	0.75'
Freeboard Provided Over 100-Year	0.50'

WATER QUALITY IS MET BY BIORETENTION. RECHARGE IS MET BY THE AREA METHOD. PORTIONS OF LOTS 1 AND 2 DRAIN TO A GRASS SWALE. CHANNEL PROTECTION VOLUME IS MET BY EXTENDED DETENTION OF THE 1 YR STORM IN THE FACILITY.

NOTE: THIS SWM FACILITY SHALL BE OWNED AND MAINTAINED BY THE HOMEOWNER'S ASSOCIATION (HOA)

SEE LANDSCAPE PLAN FOR BIORETENTION PLANTING, SHEET 23 OF 24.

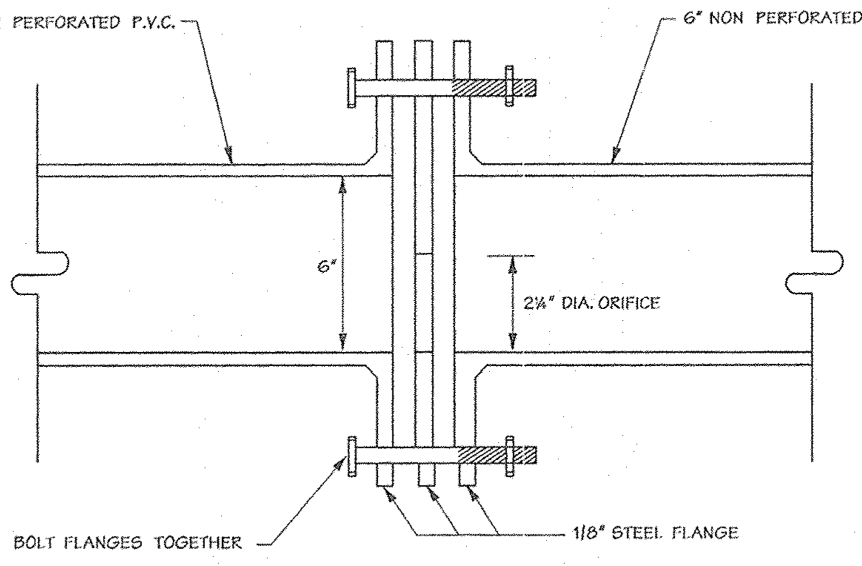

DEWATERING PIPE ORIFICE DETAIL

NOT TO SCALE

LEGEND

- WETLAND BUFFER
- WETLAND BOUNDARY
- EX. CONTOURS
- EX. CURB & GUTTER
- EX. BUILDING
- FOREST BUFFER
- STREAM LINE
- PROPERTY BOUNDARY
- 510 PROPOSED MAJOR CONTOUR
- 508 PROPOSED MINOR CONTOUR
- PROPOSED FLOODPLAIN
- ByD2 (C) SOIL LINES/TYPES
- EXISTING SANITARY SEWER
- EXISTING STORM DRAIN
- CENTERLINE OF STREAM
- A-2 PROPOSED EARTH DIKE
- SF PROPOSED SILT FENCE
- SSF PROPOSED SUPER SILT FENCE
- LIMIT OF DISTURBANCE
- SCE STABILIZED CONTRUCTION ENTRANCE
- SEPTIC AREA
- GRAVEL CURTAIN

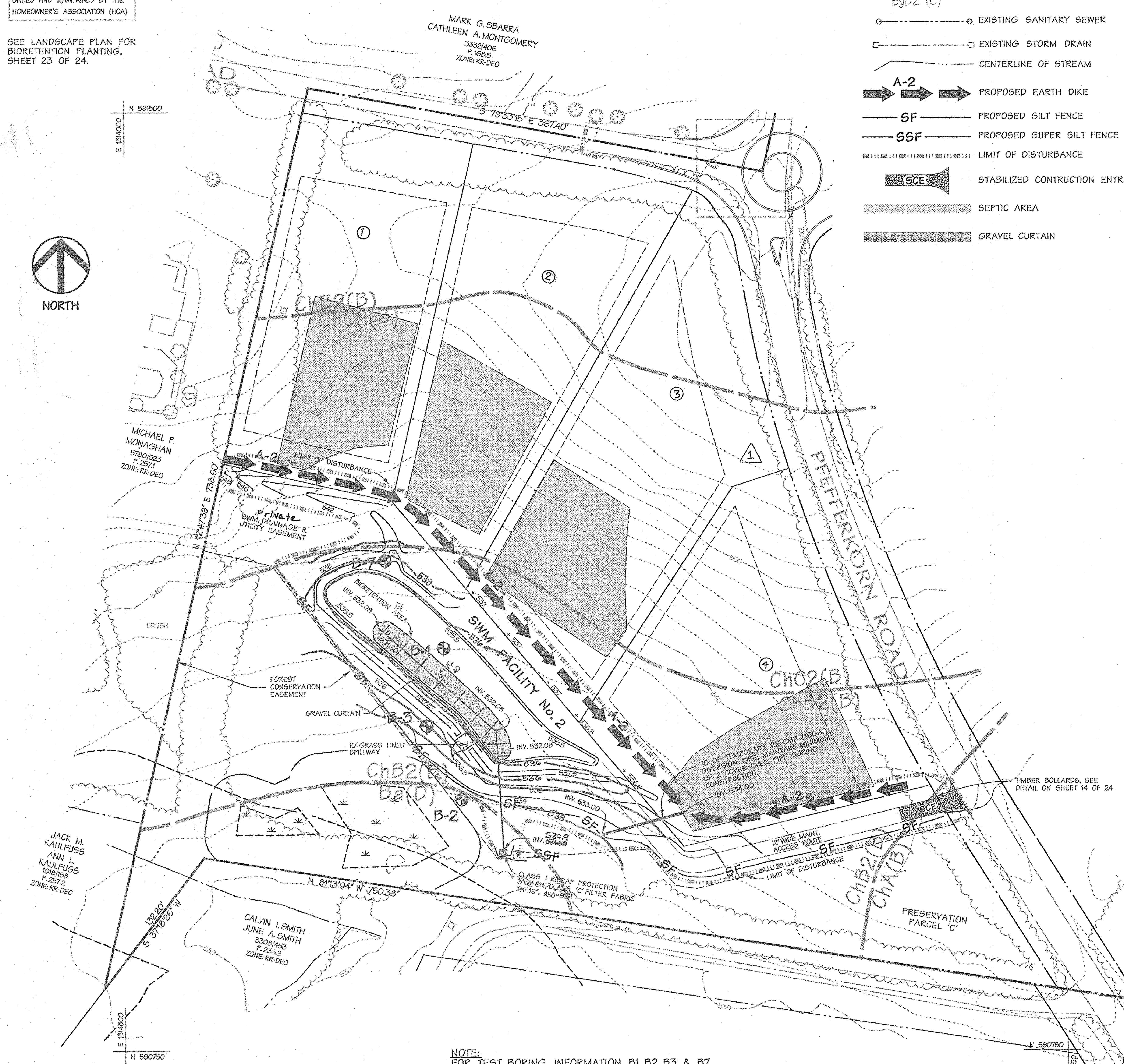

NOTE:
FOR TEST BORING INFORMATION B1, B2, B3 & B7 SEE SHEET 13 OF 24.

Mon Mar 22 17:08:07 2004 n:\00042\00042.m2

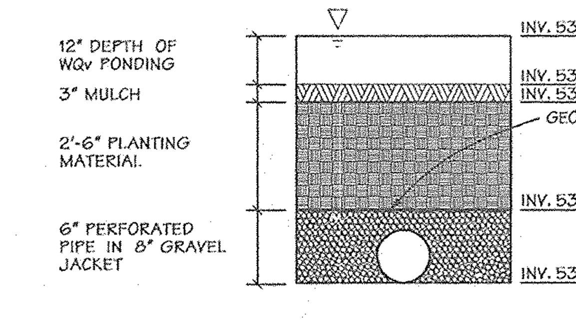

BIORETENTION FACILITY 1

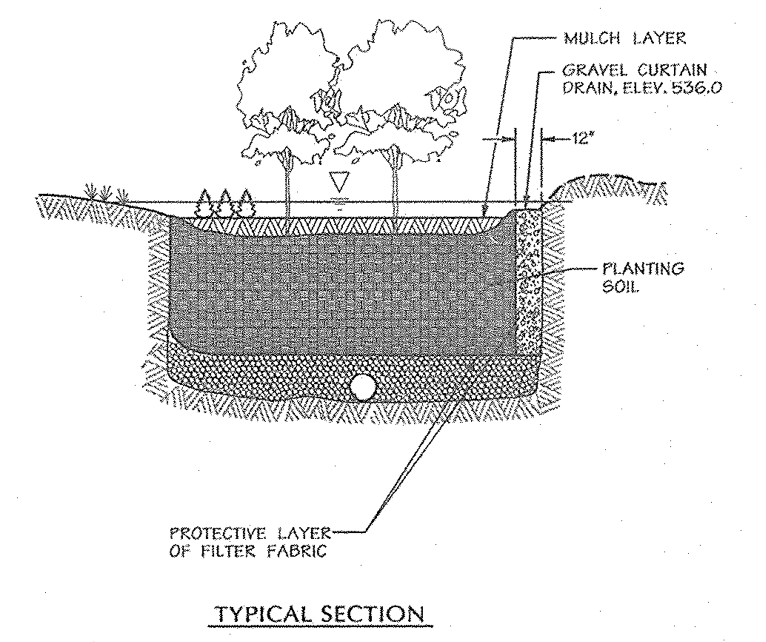

TYPICAL SECTION

BIORETENTION EXAMPLE

NOT TO SCALE

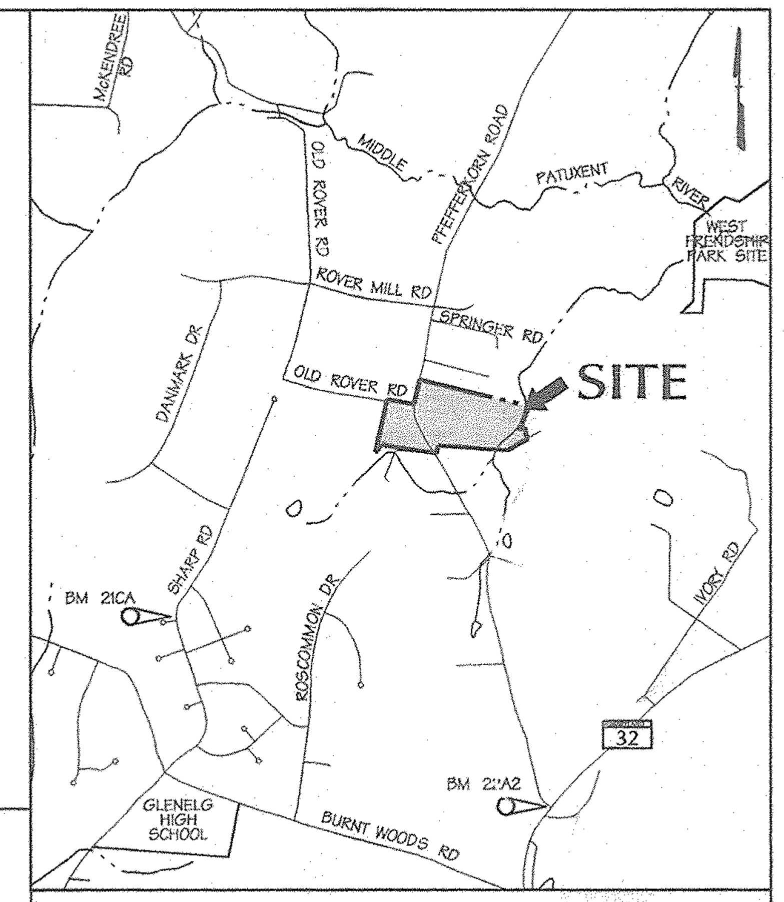

VICINITY MAP

SCALE: 1"=2000'

MATERIALS SPECIFICATION FOR BIORETENTION

MATERIAL	SPECIFICATION	SIZE	NOTES
PLANTINGS	SEE APPENDIX A, TABLE A.4	N/A	PLANTINGS ARE SITE-SPECIFIC
PLANTING SOIL (2.5 FEET DEEP)	SAND 35 - 60% SILT 30 - 55% CLAY 10 - 25%	N/A	USDA SOIL TYPES LOAMY SAND, SANDY LOAM OR LOAM.
MULCH	SHREDDED HARDWOOD		AGED 6 MONTHS, MIN.
PEA GRAVEL DIAPHRAGM AND CURTAIN DRAIN	PEA GRAVEL: ASTM-D-448 ORNAMENTAL STONE: WASHED COBBLES	PEA GRAVEL: NO. 6 STONE: 2" TO 5"	
GEOTEXTILE	CLASS "C" - APPARENT OPENING SIZE (ASTM-D-4751), GRAB TENSILE STRENGTH (ASTM-D-4632), PUNCTURE RESISTANCE (ASTM-D-4833)	N/A	FOR USE AS NECESSARY BENEATH UNDERDRAINS ONLY.
UNDERDRAIN GRAVEL	AASHTO M-43	0.375" TO 0.75"	
UNDERDRAIN PIPING	F 758, TYPE PS 28 OR AASHTO M-278	4" TO 6" RIGID SCH 40 PVC OR SDR35	⅜" PERF. @ 6" ON CENTER, 4 HOLES PER ROW; MINIMUM OF 3" OF GRAVEL OVER PIPES; NOT NECESSARY UNDERNEATH PIPES.
POURED IN PLACE CONCRETE (IF REQUIRED)	MSHA MIX NO.3; F'c=3500 PSI @ 28 DAYS, NORMAL WEIGHT, AIR-ENTRAINED; REINFORCED TO MEET ASTM-615-60	N/A	ON-SITE TESTING OF POURED-IN-PLACE CONCRETE REQUIRED: 28 DAY STRENGTH AND SLUMP TEST; ALL CONCRETE DESIGN (CAST-IN-PLACE OR PRE-CAST) NOT USING PREVIOUSLY APPROVED STATE OR LOCAL STANDARDS REQUIRES DESIGN DRAWINGS SEALED AND APPROVED BY A PROFESSIONAL STRUCTURAL ENGINEER LICENSED IN THE STATE OF MARYLAND - DESIGN TO INCLUDE MEETING ACI CODE 350.R/89; VERTICAL LOADING [H10 OR H-20]; ALLOWABLE HORIZONTAL LOADING (BASED ON SOIL PRESSURES); AND ANALYSIS OF POTENTIAL CRACKING.
SAND (1 FOOT DEEP)	AASHTO-M-6 OR ASTM-C-33	0.02" TO 0.04"	SAND SUBSTITUTIONS SUCH AS DIABASE AND GRAYSTONE #10 ARE NOT ACCEPTABLE. NO CALCIUM CARBONATE OR DOLOMITIC SAND SUBSTITUTIONS ARE ACCEPTABLE. NO "ROCK DUST" CAN BE USED FOR SAND.

SPECIFICATION FOR BIORETENTION MAINTENANCE

TRASH AND DEBRIS SHALL BE REMOVED AS NECESSARY.

WHEN THE FILTERING CAPACITY OF THE FILTER DIMINISHES SUBSTANTIALLY (E.G., WHEN WATER PONDS ON THE SURFACE OF THE FILTER BED FOR MORE THAN 72 HOURS), THE TOP FEW INCHES OF DISCOLORED MATERIAL SHALL BE REMOVED AND SHALL BE REPLACED WITH NEW MATERIAL. THE REMOVAL OF SEDIMENTS SHOULD BE DISPOSED IN AN ACCEPTABLE MANNER (E.G., LANDFILL). SILT/SEDIMENT SHOULD BE REMOVED FROM THE FILTER BED WHEN THE ACCUMULATION EXCEEDS ONE INCH.

A DROP OF AT LEAST SIX INCHES SHALL BE PROVIDED AT THE INLET OF THE BIORETENTION FACILITY (F-6) (STONE DIAPHRAGM). DEAD OR DISEASED PLANT MATERIAL SHALL BE REMOVED. AREAS DEVOID OF MULCH SHOULD BE RE-MULCHED ON AN ANNUAL BASIS.

DIRECT MAINTENANCE ACCESS SHALL BE PROVIDED TO THE RETREATMENT AREA AND THE FILTER BED.

SEQUENCE OF CONSTRUCTION - FACILITY No. 2

	No. of days
1. Obtain a grading permit.	7
2. Install sediment and erosion control devices.	2
3. Rough grade site after obtaining permission from inspector to preoceed.	2
4. Construct Facility Number 2. (bioretention facility) and fine grade.	5
5. Stabilize all areas in accordance with the standards and specifications.	2

NOTE: THIS FACILITY WILL NOT BE USED DURING THE ESC PHASE OF THIS PROJECT

DATA SOURCES:
BOUNDARY PER DMW FIELD SURVEY DATED DECEMBER 2001.
TOPO FLOWN BY VIRGINIA RESOURCE MAPPING, DECEMBER, 2001.
APPROX. WETLAND LOCATION PER DMW FIELD VISIT DATED APRIL 2000. OFF SITE SEPTIC RESERVE AREAS PER RECORD PLATS, LOCATIONS OF WELLS NOT AVAILABLE.

DEVELOPERS CERTIFICATION:

I/WE CERTIFY THAT ALL DEVELOPMENT AND/OR CONSTRUCTION WILL BE DONE ACCORDING TO THESE PLANS AND THAT ANY RESPONSIBLE PERSONNEL INVOLVED IN THE CONSTRUCTION PROJECT WILL HAVE A CERTIFICATE OF ATTENDANCE AT A DEPARTMENT OF ENVIRONMENT APPROVED TRAINING PROGRAM FOR THE CONTROL OF SEDIMENT AND EROSION BEFORE BEGINNING THE PROJECT. I SHALL ENGAGE A REGISTERED PROFESSIONAL ENGINEER TO SUPERVISE POND CONSTRUCTION AND PROVIDE THE HOWARD SOIL CONSERVATION DISTRICT WITH AN "AS-BUILT" PLAN OF THE POND WITHIN 30 DAYS OF COMPLETION. I ALSO AUTHORIZE PERIODIC ON-SITE INSPECTIONS BY THE HOWARD SOIL CONSERVATION DISTRICT.

[signature] 3/23/04
SIGNATURE OF DEVELOPER — DATE
PRINT NAME BELOW SIGNATURE
JAMES H. SELFRIDGE

ENGINEER'S CERTIFICATION:

I CERTIFY THAT THIS PLAN FOR POND CONSTRUCTION, EROSION AND SEDIMENT CONTROL REPRESENTS A PRACTICAL AND WORKABLE PLAN BASED ON MY PERSONAL KNOWLEDGE OF THE SITE CONDITIONS. THIS PLAN WAS PREPARED IN ACCORDANCE WITH THE REQUIREMENTS OF THE HOWARD SOIL CONSERVATION DISTRICT. I HAVE NOTIFIED THE DEVELOPER THAT HE/SHE MUST ENGAGE A REGISTERED PROFESSIONAL ENGINEER TO SUPERVISE POND CONSTRUCTION AND PROVIDE THE HOWARD SOIL CONSERVATION DISTRICT WITH AN "AS-BUILT" PLAN OF THE POND WITHIN 30 DAYS OF COMPLETION.

[signature] 3-25-04
SIGNATURE OF ENGINEER — DATE
PRINT NAME BELOW SIGNATURE
John W. Ranocchia, Sr.

THESE PLANS HAVE BEEN REVIEWED FOR THE HOWARD SOIL CONSERVATION DISTRICT AND MEET THE TECHNICAL REQUIREMENTS FOR SMALL POND CONSTRUCTION, SOIL EROSION AND SEDIMENT CONTROL.

[signature] 3/30/04
U.S. NATURAL RESOURCE CONSERVATION SERVICE — DATE

THESE PLANS FOR SMALL POND CONSTRUCTION, SOIL EROSION AND SEDIMENT CONTROL MEET THE REQUIREMENTS OF HOWARD SOIL CONSERVATION DISTRICT.

[signature] 3/30/04
HOWARD S.C.D. — DATE

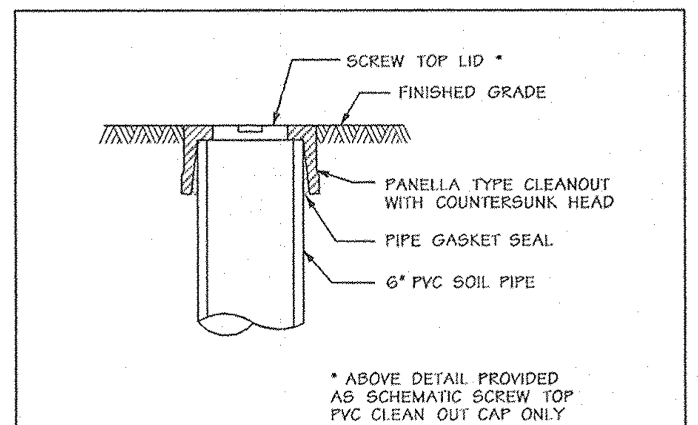

* ABOVE DETAIL PROVIDED AS SCHEMATIC SCREW TOP PVC CLEAN OUT CAP ONLY

EACH CLEANOUT SHALL INCLUDE THE FOLLOWING

1. FOR AN UNDERGROUND FLUSH MOUNTED CLEANOUT, PROVIDE A TUBE MADE OF NON-CORROSIVE MATERIAL, SCHEDULE 40 OR EQUAL, AT LEAST 3-FEET LONG WITH AN INSIDE DIAMETER OF AT LEAST 6-INCHES.
2. THE TUBE SHALL HAVE A FACTORY ATTACHED CAST IRON OR HIGH IMPACT PLASTIC COLLAR WITH RIBS TO PREVENT ROTATION WHEN REMOVING SCREW TOP LID. THE SCREW TOP LID SHALL BE CAST IRON OR HIGH IMPACT PLASTIC THAT WILL WITHSTAND ULTRA-VIOLET RAYS.

CLEAN OUT DETAIL

NOT TO SCALE

AS-BUILT 1-16-07

3-25-04
Date

Professional Engr. No. 10551

APPROVED: HOWARD COUNTY DEPARTMENT OF PUBLIC WORKS

[signature] 4-13-04
CHIEF, BUREAU OF HIGHWAYS — DATE

APPROVED: HOWARD COUNTY DEPT. OF PLANNING & ZONING

[signature] 4/28/04
CHIEF, DEVELOPMENT ENGINEERING DIVISION — DATE

[signature] 4/29/04
CHIEF, DIVISION OF LAND DEVELOPMENT — DATE

~~DIRECTOR~~ ~~DATE~~

Date	No.	Revision Description
1-10-07	2	REVISED PER 'AS-BUILT CONDITIONS
6-11-04	1	REVISED LOT NUMBERS

OWNER: NORTHRIDGE DEVELOPMENT, LLC
14045 GARED DRIVE
GLENWOOD, MD 21738

DEVELOPER: JAMES F. SELFRIDGE BUILDERS, INC.
14045 GARED DRIVE
GLENWOOD, MD 21738

DMW
Daft·McCune·Walker, Inc.
200 East Pennsylvania Avenue
Towson, Maryland 21286
(410) 296-3333
Fax 296-4705

A Team of Land Planners, Landscape Architects, Engineers, Surveyors & Environmental Professionals

SUBDIVISION NAME	SECTION/AREA	LOT/PARCEL #
FOX MEADOW	1	167

PLAT# OR L/F	BLOCK #	ZONE	TAX/ZONE MAP	ELECT. DISTRICT	CENSUS TRACT
5983/492	13, 19, 20	RR, RC	15	3	

TITLE
FOX MEADOW
(FORMERLY PFEFFERKORN PROPERTY)
STORMWATER MANAGEMENT FACILITY 2 PLAN, DETAILS and SEDIMENT & EROSION CONTROL

Des By MRT/DW	Scale 1"=50'	Proj. No. 00042.B
Drn By MRT/DW	Date 1/7/04	16 OF 24
Chk By	Approved	

F-03-45

Mon Mar 22 17:08:06 2004 n:\00042\00042.m2

5:07:51 PM \\ATHENS\WSTATION\CADNET\N\QCF\dej.qcf cr1221 c:\hpm\00042.hpm 00042

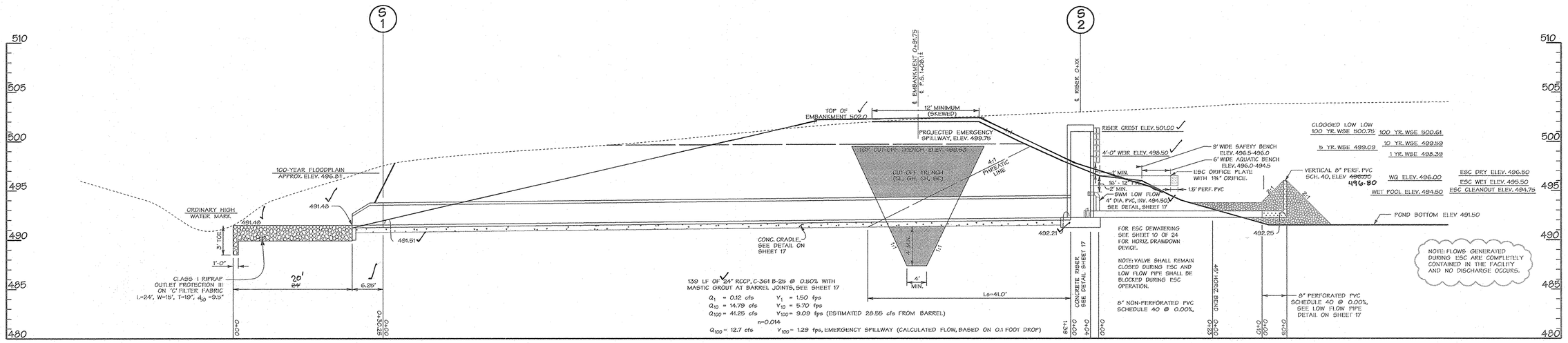

PROFILE ALONG PRINCIPAL SPILLWAY

SCALE: HORIZ. 1"=10'
VERT. 1"=5'

NOTE:

IF UNSUITABLE (PERVIOUS MATERIAL IS ENCOUNTERED AT TIME OF CUTOFF TRENCH INSTALLATION DEEPER THAN (4) FEET, IT WILL BE NECESSARY TO EXTEND THE CUTOFF TRENCH DOWN UNTIL SUITABLE MATERIAL IS ENCOUNTERED AS DETERMINED BY A GEOTECHNICAL ENGINEER. FILL MATERIAL FOR THE CUTOFF TRENCH AND IMPERVIOUS CORE SHALL CONFORM TO UNIFIED SOIL CLASSIFICATION GC, SC, CH, OR CL. CONSIDERATION MAY BE GIVEN TO THE USE OF OTHER MATERIALS IN THE EMBANKMENT IF DESIGN AND CONSTRUCTION ARE SUPERVISED BY A GEOTECHNICAL ENGINEER.

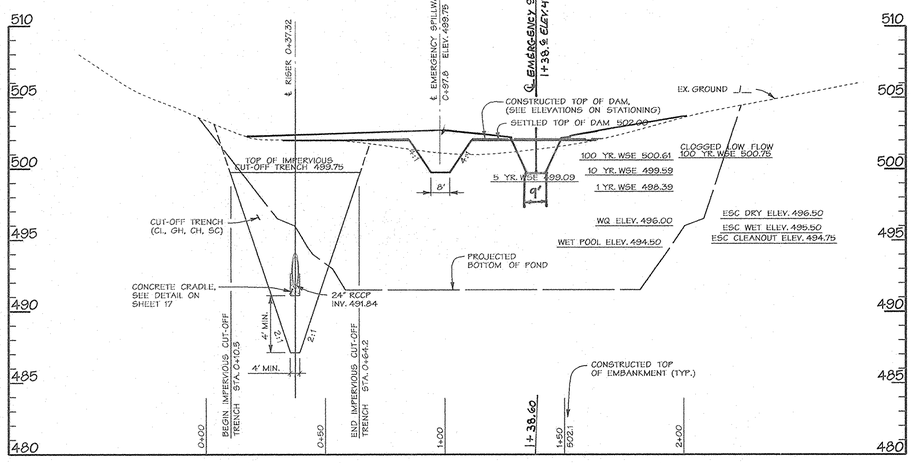

PROFILE ALONG CENTERLINE OF EMBANKMENT

SCALE: HORIZ. 1"=30'
VERT. 1"=5'

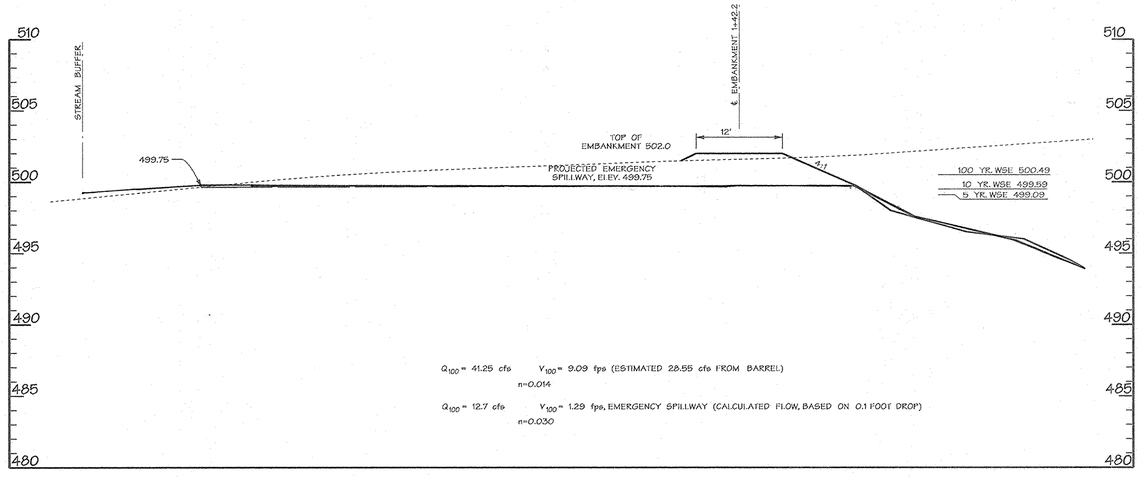

PROFILE ALONG EMERGENCY SPILLWAY

SCALE: HORIZ. 1"=10'
VERT. 1"=5'

AS-BUILT CERTIFICATION

I HEREBY CERTIFY THAT THE FACILITY SHOWN ON THIS PLAN WAS CONSTRUCTED AS SHOWN ON THE "AS-BUILT" PLANS AND MEETS THE APPROVED PLANS AND SPECIFICATIONS.

Donald Mason — PE. NO. 21443
DONALD A. MASON — DATE: 1-16-07

STATE OF MARYLAND · DONALD ALEXANDER MASON · 21443 · REGISTERED PROFESSIONAL ENGINEER

CERTIFY MEANS TO STATE OR DECLARE A PROFESSIONAL OPINION BASED UPON ON-SITE INSPECTIONS AND MATERIAL TESTS WHICH ARE CONDUCTED DURING CONSTRUCTION. THE ON-SITE INSPECTIONS AND MATERIAL TESTS ARE THOSE INSPECTIONS AND TESTS DEEMED SUFFICIENT AND APPROPRIATE BY COMMONLY ACCEPTED ENGINEERING STANDARDS. CERTIFY DOES NOT MEAN OR IMPLY A GUARANTEE BY THE ENGINEER NOR DOES AN ENGINEER'S CERTIFICATION RELIEVE ANY OTHER PARTY FROM MEETING REQUIREMENTS IMPOSED BY CONTRACT, EMPLOYMENT, OR OTHER MEANS, INCLUDING MEETING COMMONLY ACCEPTED INDUSTRY PRACTICES.

APPROVED: HOWARD COUNTY DEPARTMENT OF PUBLIC WORKS

CHIEF, BUREAU OF HIGHWAYS — DATE 4-13-04

APPROVED:

CHIEF, DEVELOPMENT ENGINEERING DIVISION — DATE 4/20/04

CHIEF, DIVISION OF LAND DEVELOPMENT — DATE 4/27/04

~~DIRECTOR~~ — ~~DATE~~

Date	No.	Revision Description
1-10-07	1	REVISED PER 'AS-BUILT' CONDITIONS

OWNER: NORTHRIDGE DEVELOPMENT. LLC
14045 GARED DRIVE
GLENWOOD, MD 21738

DEVELOPER: JAMES F. SELFRIDGE BUILDERS, INC.
14045 GARED DRIVE
GLENWOOD, MD 21738

DMW
Daft-McCune-Walker, Inc.
200 East Pennsylvania Avenue
Towson, Maryland 21286
(410) 296-3333
Fax 296-4705

A Team of Land Planners, Landscape Architects, Engineers, Surveyors & Environmental Professionals

SUBDIVISION NAME			SECTION/AREA		LOT/PARCEL
FOX MEADOW			1		167
PLAT OR L/F	BLOCK	ZONE	TAX/ZONE MAP	ELEC. DISTRICT	CENSUS TRACT
5983/492	13, 19, 20	RR, RC	15	3	

TITLE: FOX MEADOW
(FORMERLY PFEFFERKORN PROPERTY)
Stormwater Management Facility 1
Stormwater Management Profiles

Des By	DWR	Scale AS SHOWN	Proj. No. 00042.B
Drn By	DWR	Date 1/7/04	15 OF 24
Chk By		Approved	

F.03.45

DEVELOPERS CERTIFICATION:

I/WE CERTIFY THAT ALL DEVELOPMENT AND/OR CONSTRUCTION WILL BE DONE ACCORDING TO THESE PLANS AND THAT ANY RESPONSIBLE PERSONNEL INVOLVED IN THE CONSTRUCTION PROJECT WILL HAVE A CERTIFICATE OF ATTENDANCE AT A DEPARTMENT OF ENVIRONMENT APPROVED TRAINING PROGRAM FOR THE CONTROL OF SEDIMENT AND EROSION BEFORE BEGINNING THE PROJECT. I SHALL ENGAGE A REGISTERED PROFESSIONAL ENGINEER TO SUPERVISE POND CONSTRUCTION AND PROVIDE THE HOWARD SOIL CONSERVATION DISTRICT WITH AN "AS-BUILT" PLAN OF THE POND WITHIN 30 DAYS OF COMPLETION. I ALSO AUTHORIZE PERIODIC ON-SITE INSPECTIONS BY THE HOWARD SOIL CONSERVATION DISTRICT.

SIGNATURE OF DEVELOPER — DATE 3/23/04
PRINT NAME BELOW SIGNATURE
JAMES H. SELFRIDGE

ENGINEER'S CERTIFICATION:

I CERTIFY THAT THIS PLAN FOR POND CONSTRUCTION, EROSION AND SEDIMENT CONTROL REPRESENTS A PRACTICAL AND WORKABLE PLAN BASED ON MY PERSONAL KNOWLEDGE OF THE SITE CONDITIONS. THIS PLAN WAS PREPARED IN ACCORDANCE WITH THE REQUIREMENTS OF THE HOWARD SOIL CONSERVATION DISTRICT. I HAVE NOTIFIED THE DEVELOPER THAT HE/SHE MUST ENGAGE A REGISTERED PROFESSIONAL ENGINEER TO SUPERVISE POND CONSTRUCTION AND PROVIDE THE HOWARD SOIL CONSERVATION DISTRICT WITH AN "AS-BUILT" PLAN OF THE POND WITHIN 30 DAYS OF COMPLETION.

SIGNATURE OF ENGINEER — 3-25-04
PRINT NAME BELOW SIGNATURE
John W. Ranecchia, Jr.

THESE PLANS HAVE BEEN REVIEWED FOR THE HOWARD SOIL CONSERVATION DISTRICT AND MEET THE TECHNICAL REQUIREMENTS FOR SMALL POND CONSTRUCTION, SOIL EROSION AND SEDIMENT CONTROL.

U.S. NATURAL RESOURCE CONSERVATION SERVICE — 3/30/04 DATE

THESE PLANS FOR SMALL POND CONSTRUCTION, SOIL EROSION AND SEDIMENT CONTROL MEET THE REQUIREMENTS OF HOWARD SOIL CONSERVATION DISTRICT.

HOWARD SOIL CONSERVATION DISTRICT — 3/30/04 DATE

3-25-04
Date

STATE OF MARYLAND · JOHN W. RANECCHIA, JR. · 19961 · REGISTERED PROFESSIONAL ENGINEER

Professional Engr. No. 19961

Mon Mar 22 14:40:11 2004 n:\00042\200042.mp5

3/22/2004 2:40:04 PM \\ATHENS\MSTATION\CADNET\CCF\daylgcf cr122 ci:\hpm\00042.hpm

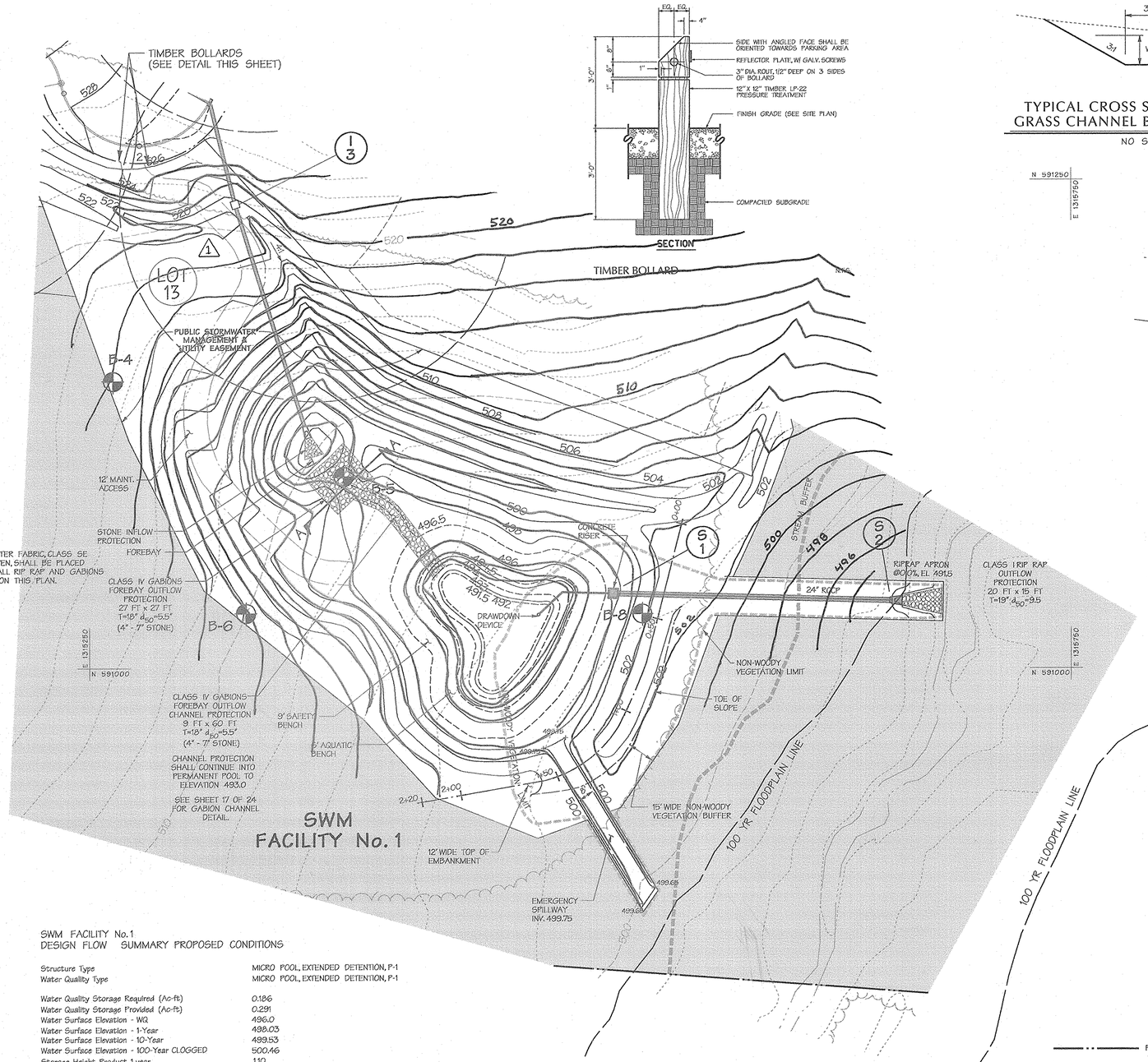

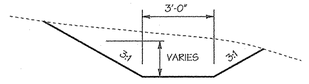

TYPICAL CROSS SECTION (CUT) OF GRASS CHANNEL BEHIND LOTS 14-17

NO SCALE

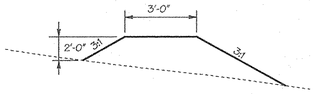

TYPICAL CROSS SECTION (FILL) OF GRASS CHANNEL BEHIND LOTS 14-17

NO SCALE

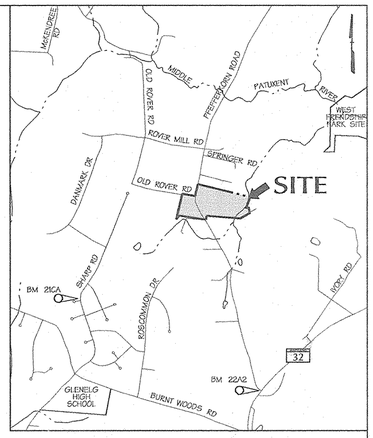

VICINITY MAP

SCALE: 1" = 2,000'

N 591250
E 1315750

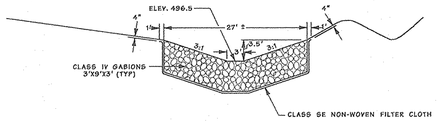

SECTION A-A
TYPICAL SECTION CLASS IV GABION FOREBAY OUTLET PROTECTION WEIR

NO SCALE

AS-BUILT CERTIFICATION

I HEREBY CERTIFY THAT THE FACILITY SHOWN ON THIS PLAN WAS CONSTRUCTED AS SHOWN ON THE 'AS-BUILT' PLANS AND MEETS THE APPROVED PLANS AND SPECIFICATIONS.

Donald Mason
DONALD A. MASON

PE NO. 21443
DATE 1-16-07

CERTIFY MEANS TO STATE OR DECLARE A PROFESSIONAL OPINION BASED UPON ONSITE INSPECTIONS AND MATERIAL TESTS WHICH ARE CONDUCTED DURING CONSTRUCTION, THE ONSITE INSPECTIONS AND MATERIAL TESTS ARE THOSE INSPECTIONS AND TEST DEEMED SUFFICIENT AND APPROPRIATE BY COMMONLY ACCEPTED ENGINEERING STANDARDS. CERTIFY DOES NOT MEAN OR IMPLY A GUARANTEE BY THE ENGINEER NOR DOES AN ENGINEER'S CERTIFICATION RELIEVE ANY OTHER PARTY FROM MEETING REQUIREMENTS IMPOSED BY CONTRACT, EMPLOYMENT, OR OTHER MEANS, INCLUDING MEETING COMMONLY ACCEPTED INDUSTRY PRACTICES.

DATA SOURCES:

BOUNDARY PER DMW FIELD SURVEY DATED DECEMBER 2001.

TOPO FLOWN BY VIRGINIA RESOURCE MAPPING, DECEMBER, 2001.

APPROX. WETLAND LOCATION PER DMW FIELD VISIT DATED APRIL 2002. OFF SITE SEPTIC RESERVE AREAS PER RECORD PLATS, LOCATIONS OF WELLS NOT AVAILABLE.

APPROVED: HOWARD COUNTY DEPARTMENT OF PUBLIC WORKS

CHIEF, BUREAU OF HIGHWAYS — DATE 4-13-04

APPROVED: HOWARD COUNTY DEPT. OF PLANNING & ZONING

CHIEF, DEVELOPMENT ENGINEERING DIVISION — DATE 4/28/04

CHIEF, DIVISION OF LAND DEVELOPMENT — DATE 4/27/04

~~DIRECTOR~~ — ~~DATE~~

Date	No.	Revision Description
1-10-07	2	REVISED PER AS-BUILT CONDITIONS
6-11-04	1	REVISED LOT NUMBERS

OWNER: NORTHRIDGE DEVELOPMENT, LLC
14045 GARED DRIVE
GLENWOOD, MD 21738

DEVELOPER: JAMES F. SELFRIDGE BUILDERS, INC.
14045 GARED DRIVE
GLENWOOD, MD 21738

DMW
Daft-McCune-Walker, Inc.
200 East Pennsylvania Avenue
Towson, Maryland 21286
(410) 296-3333
Fax 296-4705

A Team of Land Planners, Landscape Architects, Engineers, Surveyors & Environmental Professionals

SUBDIVISION NAME		SECTION/AREA		LOT/PARCEL #
FOX MEADOW		1		167
PLAT# OR L/F	BLOCK #	ZONE	TAX/ZONE MAP	ELECT. DISTRICT	CENSUS TRACT
5963/492	13, 19, 20	RR, RC	15	3	

TITLE

FOX MEADOW
(FORMERLY PFEFFERKORN PROPERTY)
Stormwater Management Facility 1
Stormwater Management Plan

Des By	DWR	Scale	1"=30'
Drn By	DWR	Date	1/7/04
Chk By		Approved	

Proj. No. 00042.B

14 OF 24

SWM FACILITY No. 1
DESIGN FLOW SUMMARY PROPOSED CONDITIONS

Structure Type	MICRO POOL, EXTENDED DETENTION, P-1
Water Quality Type	MICRO POOL, EXTENDED DETENTION, P-1
Water Quality Storage Required (Ac-ft)	0.186
Water Quality Storage Provided (Ac-ft)	0.291
Water Surface Elevation - WQ	496.0
Water Surface Elevation - 1-Year	498.03
Water Surface Elevation - 10-Year	499.53
Water Surface Elevation - 100-Year CLOGGED	500.46
Storage Height Product 1 year	1.10
Storage Height Product 10 year	4.43
Watershed Area to Facility (Actual D.A.)	0.0183 SQ. MILES
Level of Management Required	1-Year, Cpv
Level of Management Provided	1-Year, Cpv
Minimum Top Width Provided	12'
Maximum Height of Fill	1.0'
Freeboard Provided, 10-Year	2.47'
Freeboard Provided, 100-Year	1.57'

WATER QUALITY IS MET BY MICRO POOL AND NATURAL AREA CONSERVATION CREDITS. RECHARGE IS MET BY A GRASS SWALE ALONG THE PROPOSED ROAD AND ALONG THE SOUTH EDGE OF THE LOTS 11-14 AREA. CHANNEL PROTECTION VOLUME IS MET BY EXTENDED DETENTION OF THE 1-YR STORM IN THE SWM FACILITY AND BY NATURAL AREA CONSERVATION.

THIS FACILITY IS CLASSIFIED AS HAZARD CLASS 'A' AND IS A NON-MD-378 FACILITY.

THIS FACILITY IS HAZARD CLASS 'A' BECAUSE THERE ARE NO BUILDINGS OR ROADS DOWNSTREAM OF THIS FACILITY BEFORE FLOWS WOULD ENTER THE MIDDLE PATUXENT RIVER.

LEGEND

- PROPERTY BOUNDARY
- PROPOSED MAJOR CONTOUR (510)
- PROPOSED MINOR CONTOUR (508)
- PROPOSED INTERMEDIATE CONTOUR (507.5)
- PROPOSED FLOODPLAIN
- PROPOSED STORM DRAIN (BY OTHERS)
- STREAM EDGE
- FOREST CONSERVATION AREA
- WETLAND BUFFER
- WETLAND BOUNDARY
- EX. CONTOURS (380, 390)
- EX. CURB & GUTTER
- FOREST BUFFER
- STREAM LINE

NORTH

DEVELOPERS CERTIFICATION:

I(WE) CERTIFY THAT ALL DEVELOPMENT AND/OR CONSTRUCTION WILL BE DONE ACCORDING TO THESE PLANS AND THAT ANY RESPONSIBLE PERSONNEL INVOLVED IN THE CONSTRUCTION PROJECT WILL HAVE A CERTIFICATE OF ATTENDANCE AT A DEPARTMENT OF ENVIRONMENT APPROVED TRAINING PROGRAM FOR THE CONTROL OF SEDIMENT AND EROSION BEFORE BEGINNING THE PROJECT. I SHALL ENGAGE A REGISTERED PROFESSIONAL ENGINEER TO SUPERVISE POND CONSTRUCTION AND PROVIDE THE HOWARD SOIL CONSERVATION DISTRICT WITH AN "AS-BUILT" PLAN OF THE POND WITHIN 30 DAYS OF COMPLETION. I ALSO AUTHORIZE PERIODIC ON-SITE INSPECTIONS BY THE HOWARD SOIL CONSERVATION DISTRICT.

SIGNATURE OF DEVELOPER — DATE 3/23/04
PRINT NAME BELOW SIGNATURE JAMES F. SELFRIDGE

ENGINEER'S CERTIFICATION:

I CERTIFY THAT THIS PLAN FOR POND CONSTRUCTION, EROSION AND SEDIMENT CONTROL REPRESENTS A PRACTICAL AND WORKABLE PLAN BASED ON MY PERSONAL KNOWLEDGE OF THE SITE CONDITIONS. THIS PLAN WAS PREPARED IN ACCORDANCE WITH THE REQUIREMENTS OF THE HOWARD SOIL CONSERVATION DISTRICT. I HAVE NOTIFIED THE DEVELOPER THAT HE/SHE MUST ENGAGE A REGISTERED PROFESSIONAL ENGINEER TO SUPERVISE POND CONSTRUCTION AND PROVIDE THE HOWARD SOIL CONSERVATION DISTRICT WITH AN "AS-BUILT" PLAN OF THE POND WITHIN 30 DAYS OF COMPLETION.

SIGNATURE OF ENGINEER — DATE 3-25-04
PRINT NAME BELOW SIGNATURE
John W. Ranochia, Jr.

THESE PLANS HAVE BEEN REVIEWED FOR THE HOWARD SOIL CONSERVATION DISTRICT AND MEET THE TECHNICAL REQUIREMENTS FOR SMALL POND CONSTRUCTION, SOIL EROSION AND SEDIMENT CONTROL.

U.S. NATURAL RESOURCE CONSERVATION SERVICE — DATE 3/30/04

THESE PLANS FOR SMALL POND CONSTRUCTION, SOIL EROSION AND SEDIMENT CONTROL MEET THE REQUIREMENTS OF HOWARD SOIL CONSERVATION DISTRICT.

HOWARD S.C.D. — DATE 3/30/04

3-25-04
Date

STATE OF MARYLAND — JOHN W. RANOCHIA, JR. — No. 10551 — REGISTERED PROFESSIONAL ENGINEER

Professional Engr. No. 10551

Mon Mar 22 15:26:57 2004 n:\00042\00042.m3

3/22/2004 3:32:47 PM \\ATHENS\MSTATION\CADNET\MCCF\daugaf cr122 o:\hpm\00042.hpm

Mon Mar 22 15:26:56 2004 n:\00042\00042.m3 F:03.45

HILLIS - CARNES ENGINEERING ASSOCIATES, INC.

RECORD OF SOIL EXPLORATION

Page 1 of 1

Project Name: Pfefferkorn SWM — Location: Howard County, Maryland — Boring Number: B-1 — Job #: 02025A

SAMPLER — Datum — Surf. Elev.: 836 — Date Started: 01-15-02 — Hammer Wt.: 140 Lbs. — Hammer Drop: 30 Inches — Pipe Size: 2.0 Inches OD — Hole Diameter: 6" — Rock Core Dia.: - — Boring Method: HSA — Foreman: Lamont Smith — Inspector — Completed: 01-15-02

ELEV.	SOIL DESCRIPTION	STRA. DEPTH	DEPTH SCALE	CON	SAMPLE BLOWS/6"	NO.	REC	BORING & SAMPLING NOTES
	SURFACE		0.0					
	Reddish to grayish brown, moist, loose, sandy silt/clay (ML/CL) with trace gravel	2.5		I/D	1-1-2	1	15"	7" Topsoil
	Reddish brown, moist, medium dense, silty to clayey sand (SM/SC) with trace gravel	5.0	5.0	D	7-11-11	2	12"	No groundwater encountered while drilling
	Reddish brown, moist, loose, silty to clayey micaceous sand (SM/SC)			D	5-3-3	3	10"	
				D	3-3-4	4	18"	
			10.0	D	3-3-3	5	15"	Caved in at 13.0' at Completion; Caved in at 9.5' after 24 hrs
		16.5	15.0	D	3-3-4	6	10"	Backfilled after 24 hours
	Bottom of Hole at 16.5'		20.0					

SAMPLER TYPE: DRIVEN SPLIT SPOON UNLESS OTHERWISE NOTED. PT-PRESSED SHELBY TUBE, CA-CONTINUOUS FLIGHT AUGER, RC-ROCK CORE — SAMPLE CONDITIONS: D-DISINTEGRATED, I-INTACT, U-UNDISTURBED, L-LOST — GROUND WATER DEPTH: AT COMPLETION Dry FT.; AFTER 24 hrs 7.5 FT.; AFTER FT. — BORING METHOD: HSA-HOLLOW STEM AUGERS, CFA-CONT. FLIGHT AUGERS, DC-DRIVING CASING, MD-MUD DRILLING

STANDARD PENETRATION TEST-DRIVING 2" OD SAMPLER 1' WITH 140# HAMMER FALLING 30";COUNT MADE AT 6" INTERVALS

HILLIS - CARNES ENGINEERING ASSOCIATES, INC.

RECORD OF SOIL EXPLORATION

Page 1 of 1

Project Name: Pfefferkorn SWM — Location: Howard County, Maryland — Boring Number: B-2 — Job #: 02025A

Surf. Elev.: 831 — Date Started: 01-15-02 — Hammer Wt.: 140 Lbs. — Hammer Drop: 30 Inches — Pipe Size: 2.0 Inches OD — Hole Diameter: 6" — Boring Method: HSA — Foreman: Lamont Smith — Completed: 01-15-02

ELEV.	SOIL DESCRIPTION	STRA. DEPTH	DEPTH SCALE	CON	SAMPLE BLOWS/6"	NO.	REC	BORING & SAMPLING NOTES
	SURFACE		0.0					
	Reddish to grayish brown, moist, loose, sandy silt/clay (ML/CL) with trace gravel	2.5		I/D	1-2-2	1	18"	7" Topsoil
	Reddish brown, moist, loose, silty to clayey micaceous sand (SM/SC)		5.0	D	2-2-3	2	10"	No groundwater encountered while drilling
				D	2-3-3	3	14"	
			10.0	I/D	2-2-2	4	18"	Caved in at 9.0' at Completion
		11.5		D	1-3-3	5	10"	Caved in at 7.0' after 24 hrs
	Bottom of Hole at 11.5'		15.0					Backfilled after 24 hours
			20.0					

GROUND WATER DEPTH: AT COMPLETION Dry FT.; AFTER 24 hrs 6.0 FT.

STANDARD PENETRATION TEST-DRIVING 2" OD SAMPLER 1' WITH 140# HAMMER FALLING 30";COUNT MADE AT 6" INTERVALS

HILLIS - CARNES ENGINEERING ASSOCIATES, INC.

RECORD OF SOIL EXPLORATION

Page 1 of 1

Project Name: Pfefferkorn SWM — Location: Howard County, Maryland — Boring Number: B-3 — Job #: 02025A

Surf. Elev.: 829 — Date Started: 01-15-02 — Hammer Wt.: 140 Lbs. — Hammer Drop: 30 Inches — Pipe Size: 2.0 Inches OD — Hole Diameter: 6" — Boring Method: HSA — Foreman: Lamont Smith — Completed: 01-15-02

ELEV.	SOIL DESCRIPTION	STRA. DEPTH	DEPTH SCALE	CON	SAMPLE BLOWS/6"	NO.	REC	BORING & SAMPLING NOTES
	SURFACE		0.0					
	Reddish to grayish brown, moist, loose, sandy silt/clay (ML/CL) with trace gravel	2.5		D	1-2-2	1	18"	7" Topsoil
	Reddish brown, moist, medium dense, silty to clayey sand (SM/SC) with trace gravel	5.0	5.0	D	4-7-7	2	18"	No groundwater encountered while drilling
	Reddish brown, moist, loose to medium dense, silty to clayey micaceous sand (SM/SC)			D	4-5-5	3	15"	Caved in at 7.0' at Completion
		9.0		D	2-3-2	4	8"	Caved in at 6.0' after 24 hrs
	Bottom of Hole at 9.0'		10.0					
			15.0					Backfilled after 24 hours
			20.0					

GROUND WATER DEPTH: AT COMPLETION Dry FT.; AFTER 24 hrs 4.8 FT.

STANDARD PENETRATION TEST-DRIVING 2" OD SAMPLER 1' WITH 140# HAMMER FALLING 30";COUNT MADE AT 6" INTERVALS

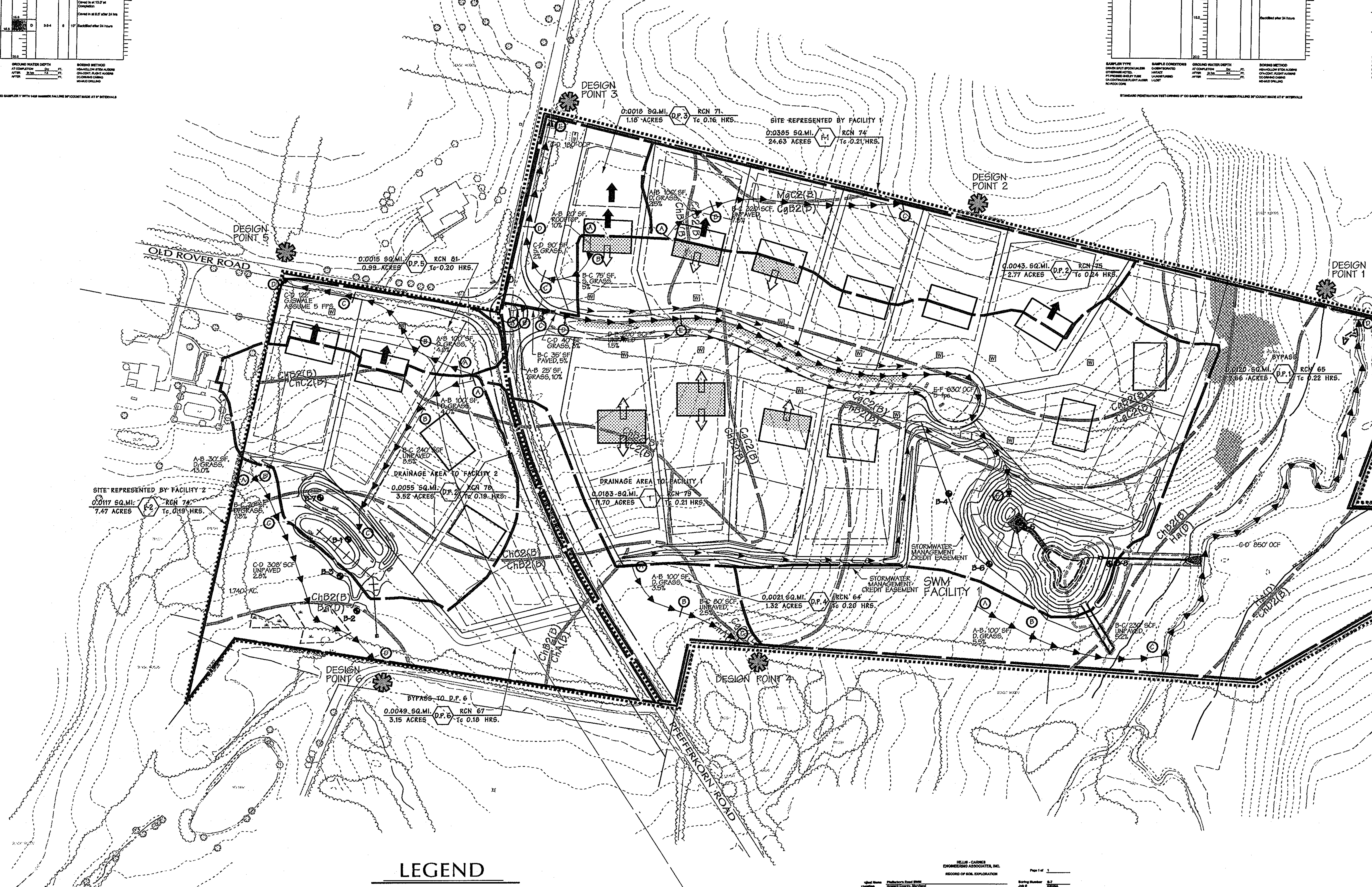

HILLIS - CARNES ENGINEERING ASSOCIATES, INC.

RECORD OF SOIL EXPLORATION

Page 1 of 1

Project Name: Pfefferkorn Road SWM — Location: Howard County, Maryland — Boring Number: B-7 — Job #: 02025A

Surf. Elev.: 837.14 — Date Started: 04-03-02 — Hammer Wt.: 140 Lbs. — Hammer Drop: 30 Inches — Pipe Size: 2.0 Inches OD — Hole Diameter: 6" — Boring Method: HSA — Foreman: Lamont Smith — Completed: 04-03-02

ELEV.	SOIL DESCRIPTION	STRA. DEPTH	DEPTH SCALE	CON	SAMPLE BLOWS/6"	NO.	REC	BORING & SAMPLING NOTES
	SURFACE		0.0					6" Topsoil
	Reddish brown, moist, loose, sandy silt/clay with organic matter (ML/CL)	2.0		D	1-2-4	1	15"	
	Reddish brown, moist, medium dense, silty to clayey sand with trace gravel (SM/SC)	5.0	5.0	D	3-4-5	2	18"	
	Reddish brown to grayish brown, moist, loose, sandy silt/clay (ML/CL)			D	3-10-11	3	15"	
				D	3-3-3	4	17"	
		13.0	10.0	D	3-3-4	5	18"	Caved in at 11.0' at Completion
	Reddish brown, moist, medium dense, silty to clayey micaceous sand (SM/SC)	16.5	15.0	D	4-6-8	6	13"	Groundwater encountered at 14.0' while drilling
	Bottom of Test Hole at 16.5'		20.0					

GROUND WATER DEPTH: AT COMPLETION Dry FT.; AFTER 24 hrs FT.

STANDARD PENETRATION TEST-DRIVING 2" OD SAMPLER 1' WITH 140# HAMMER FALLING 30";COUNT MADE AT 6" INTERVALS

LEGEND

Symbol	Description
	WETLAND BOUNDARY
	25' STATE WETLANDS BUFFER
360 / 380	EX. CONTOURS
	EX. CURB & GUTTER
	EX. BUILDING
D.R. 2	HOWARD COUNTY ZONING LINES & LABELS
	STREAM BUFFER
	STREAM LINE
	PROPERTY BOUNDARY
	STEEP SLOPES
	EXISTING Tc PATH
	EXISTING DRAINAGE DIVIDE
	DESIGN POINT
ByD2 (C)	SOIL LINES/TYPES
	EXISTING SANITARY SEWER
	EXISTING STORM DRAIN
	CENTERLINE OF STREAM
	PROPOSED FLOODPLAIN

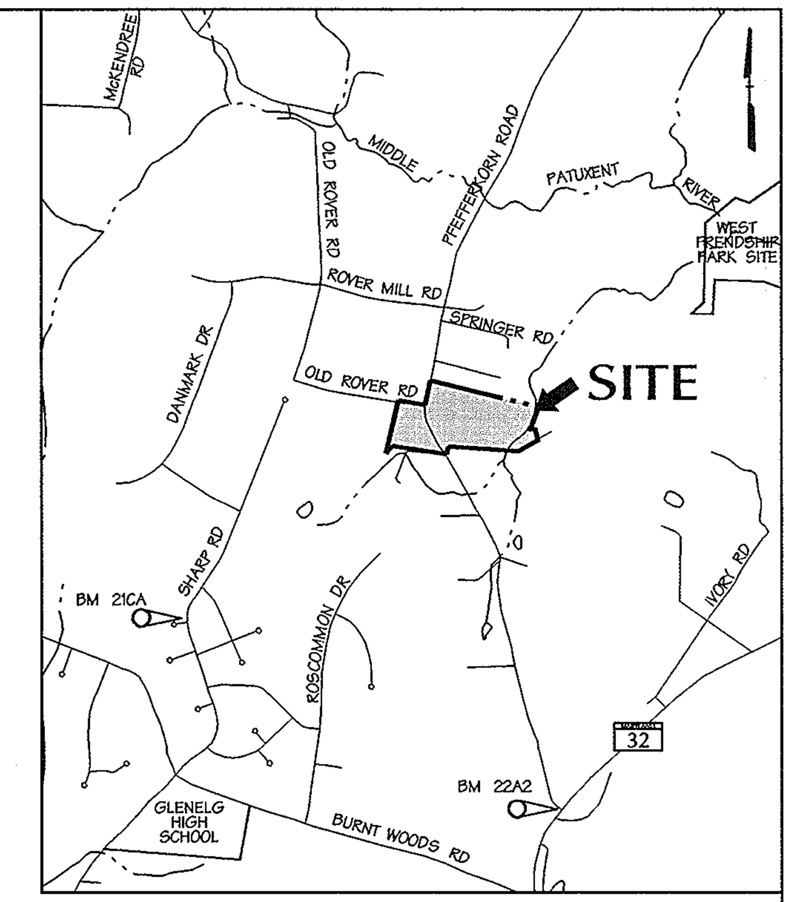

VICINITY MAP

SCALE: 1" = 2,000'

FLOOD STUDY BY DMW, APPROVED FEBRUARY 2002

DATA SOURCES:

BOUNDARY PER DMW FIELD SURVEY DATED DECEMBER 2001.

TOPO FLOWN BY VIRGINIA RESOURCE MAPPING, DECEMBER, 2001.

APPROX. WETLAND LOCATION PER DMW FIELD VISIT DATED APRIL 2000. OFF SITE SEPTIC RESERVE AREAS PER RECORD PLATS, LOCATIONS OF WELLS NOT AVAILABLE.

APPROVED: HOWARD COUNTY DEPARTMENT OF PUBLIC WORKS

William T. Malm Jr. — CHIEF, BUREAU OF HIGHWAYS HS — 4-13-04 DATE

APPROVED: HOWARD COUNTY DEPT. OF PLANNING & ZONING

CHIEF, DEVELOPMENT ENGINEERING DIVISION — 4/28/04 DATE

CHIEF, DIVISION OF LAND DEVELOPMENT JA — 4/29/04 DATE

~~DIRECTOR~~ — ~~DATE~~

Date	No.	Revision Description

OWNER: NORTHRIDGE DEVELOPMENT. LLC, 14045 GARED DRIVE, GLENWOOD, MD 21738

DEVELOPER: JAMES F. SELFRIDGE BUILDERS, INC., 14045 GARED DRIVE, GLENWOOD, MD 21738

NORTH

3-25-04
Date

Professional Engr. No. 10557

DMW

Daft·McCune·Walker, Inc.
200 East Pennsylvania Avenue
Towson, Maryland 21286
(410) 296-3333
Fax 296-4705

A Team of Land Planners, Landscape Architects, Engineers, Surveyors & Environmental Professionals

SUBDIVISION NAME	SECTION/AREA	LOT/PARCEL #
FOX MEADOW	1	167

PLAT# OR L/F	BLOCK #	ZONE	TAX/ZONE MAP	ELECT. DISTRICT	CENSUS TRACT
5983/492	13, 19, 20	RR, RC	15	3	

TITLE

FOX MEADOW
(FORMERLY PFEFFERKORN PROPERTY)
DRAINAGE AREA MAP
STORMWATER MANAGEMENT
PROPOSED CONDITIONS

Des By DWR/MRT	Scale 1"=100'	Proj. No. 00042.B
Drn By	Date 9/11/03	13 OF 24
Chk By	Approved	

F.03.45

Wed Mar 24 14:26:09 2004 — m:\00042\00042.da2

3/24/2004 2:25:59 PM \\ATHENS\MSTATION\CADNETN\OCF\dej-qcf cr1zzi c:\hpm\00042.hpm

N 592000
E 1313750

DESIGN POINT 3

DESIGN POINT 2

DESIGN POINT 1

DESIGN POINT 4

OLD ROVER ROAD

PFEFFERKORN ROAD

C-D 100' G.SWALE, ASSUME 5' FPS

B-C 168' SCF, UNPAVED, 2.6%

A-B 100' SF, D.GRASS, 3.7%

A-B 100' SF, D.GRASS, 4.5%

B-C 135' SCF, UNPAVED, 12.2%

C-D 270' SCF, UNPAVED, 3.7%

25' STATE WETLANDS BUFFER

C-D 180' OCF, 5 fps

0.0030 SQ.MI. / 1.95 ACRES — D.P. 3 — RCN 63 — Tc 0.38 HRS.

B-C 130' SCF, UNPAVED, 3.8%

A-B 100' SF, D.GRASS, 2%

B-C 375' SCF, UNPAVED, 7%

A-B 100' SF, BRUSH, 2%

A-B 100' SF, D.GRASS, 3%

A-B 100' SF, D.GRASS, 3%

0.0055 SQ.MI. / 3.55 ACRES — D.P. 2 — RCN 58 — Tc 0.26 HRS.

B-C 950' SCF, UNPAVED, 6.7%

C-D 750' OCF, 5 fps

0.0258 SQ.MI. / 16.52 ACRES — D.P. 1 — RCN 61 — Tc 0.31 HRS.

0.0041 SQ.MI. / 2.61 ACRES — D.P. 4 — RCN 60 — Tc 0.28 HRS.

B-C 820' SCF, UNPAVED, 3.2%

25' STATE WETLANDS BUFFER

N 592492' W 1900.62'

N 592250
E 1313750

N 592250
E 1316000

NORTH

VICINITY MAP

SCALE: 1"=2000'

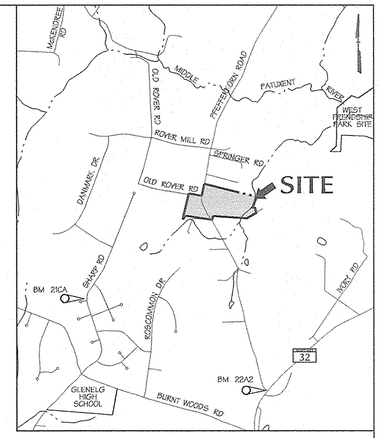

LEGEND

- WETLAND BOUNDARY
- 25' STATE WETLANDS BUFFER
- EX. CONTOURS
- EX. CURB & GUTTER
- EX. BUILDING
- D.R. 2 — HOWARD COUNTY ZONING LINES & LABELS
- STREAM BUFFER
- STREAM LINE
- PROPERTY BOUNDARY
- STEEP SLOPES
- EXISTING Tc PATH
- EXISTING DRAINAGE DIVIDE
- DESIGN POINT
- SOIL LINES/TYPES — ByD2 (C)
- EXISTING SANITARY SEWER
- EXISTING STORM DRAIN
- CENTERLINE OF STREAM
- PROPOSED FLOODPLAIN

DATA SOURCES:

BOUNDARY PER DMW FIELD SURVEY DATED DECEMBER 2001.

TOPO FLOWN BY VIRGINIA RESOURCE MAPPING, DECEMBER, 2001.

APPROX. WETLAND LOCATION PER DMW FIELD VISIT DATED APRIL 2000. OFF SITE SEPTIC RESERVE AREAS PER RECORD PLATS, LOCATIONS OF WELLS NOT AVAILABLE.

APPROVED: HOWARD COUNTY DEPARTMENT OF PUBLIC WORKS

CHIEF, BUREAU OF HIGHWAYS — DATE 4-13-04

APPROVED: HOWARD COUNTY DEPT. OF PLANNING & ZONING

CHIEF, DEVELOPMENT ENGINEERING DIVISION — DATE 4/28/04

CHIEF, DIVISION OF LAND DEVELOPMENT JA — DATE 4/29/04

~~DIRECTOR~~ — ~~DATE~~

Date	No.	Revision Description

OWNER: NORTHRIDGE DEVELOPMENT. LLC
14045 GARED DRIVE
GLENWOOD, MD 21738

DEVELOPER: JAMES F. SELFRIDGE BUILDERS, INC.
14045 GARED DRIVE
GLENWOOD, MD 21738

DMW
Daft·McCune·Walker, Inc.
200 East Pennsylvania Avenue
Towson, Maryland 21286
(410) 296-3333
Fax 296-4705

A Team of Land Planners, Landscape Architects, Engineers, Surveyors & Environmental Professionals

SUBDIVISION NAME			SECTION/AREA		LOT/PARCEL #
FOX MEADOW			1		167
PLAT# OR L/F	BLOCK #	ZONE	TAX/ZONE MAP	ELEC. DIST/PRCT	CENSUS TRACT
5983/492	13, 19, 20	RR, RC	15	3	

TITLE

FOX MEADOW
(FORMERLY PFEFFERKORN PROPERTY)
DRAINAGE AREA MAP
STORMWATER MANAGEMENT
EXISTING CONDITIONS

Des By	Scale 1"=100'	Proj. No. 00042.B
Drn By	Date 1/7/04	12 OF 24
Chk By	Approved	

3-25-04
Date

STATE OF MARYLAND — JOSEPH R. KNIGHTON — No. 10551 — REGISTERED PROFESSIONAL ENGINEER

Professional Engr. No. 10551

F-03-148

Wed Mar 24 14:25:28 2004 n:\00042\00042.dst

3/24/2004 2:25:17 PM \\ATHENS\STATION\CADNET\DCF\Dog.dcf cr122 c:\hpm\00042.hpm

STANDARDS AND SPECIFICATIONS FOR VEGETATIVE STABILIZATION

SECTION I - VEGETATIVE STABILIZATION METHODS AND MATERIALS

A. SITE PREPARATION

I. Install erosion and sediment control structures (either temporary or permanent) such as diversions, grade stabilization structures, berms waterways, or sediment control basins.

II. Perform all grading operations at right angles to the slope. Final grading and shaping is not usually necessary for temporary seeding.

III. Schedule required soil test to determine soil amendment composition and application rates for sites having disturbed area over 5 acres.

B. SOIL AMENDMENTS (FERTILIZER AND LIME SPECIFICATIONS)

I. Soil test must be performed to determine the exact ratios and application rates for both lime and fertilizer on sites having disturbed areas over 5 acres. Soil analysis may be performed by the University of Maryland or a recognized commercial laboratory. Soil samples taken for engineering purposes may also be used for chemical analysis.

II. Fertilizers shall be uniform in composition, free flowing and suitable for accurate application by approved equipment. Manure may be substituted for fertilizer with prior approval from the appropriate approval authority. Fertilizers shall be delivered to the site fully labeled according to the applicable state fertilizer laws and shall bear the name, trade name or trademark and warrantee of the producer.

III. Lime materials shall be ground limestone (hydrated or brunt lime may be substituted) which contains at least 50% total oxides (calcium oxide plus magnesium oxide). Limestone shall be ground to such fineness that at least 50% will pass through a #100 mesh sieve and 98 - 100% will pass through a #20 mesh sieve.

IV. Incorporate lime and fertilizer into the top 3 - 5 inches of soil by disking or other suitable means.

C. SEEDBED PREPARATION

I. TEMPORARY SEEDING

A. Seedbed preparation shall consist of loosening soil to a depth of 3 inches to 5 inches by means of suitable agricultural or construction equipment, such a disc harrows or chisel plows or rippers mounted on construction equipment. After the soil is loosened it should not be rolled or dragged smooth but left in the roughened condition. Sloped areas (greater than 3:1) should be tracked leaving the surface in an irregular condition with ridges running parallel to the counter of the slope.

B. Apply fertilizer and lime as prescribed on the plans.

C. Incorporate lime and fertilizer into the top 3 - 5 inches of soil by disking or other suitable means.

II. PERMANENT SEEDING

A. Minimum soil conditions required for permanent vegetative establishment:

1. Soil ph shall be between 6.0 and 7.0.
2. Soluble salts shall be less than 500 parts per million (PPM).
3. The soil shall contain less than 40% clay but enough fine grained material (> 30% silt plus clay) to provide the capacity to hold a moderate amount of moisture. An exception is if Lovegrass or Serecia Lespedeza is to be planted. Then a sandy soil (< 30% silt plus clay) would be acceptable.
4. Soil shall contain 1.5% minimum organic matter by weight.
5. Soil must contain sufficient pore space to permit adequate root penetration.
6. If these conditions cannot be met by the soils on site, adding topsoil is required in accordance with Section 21 - Standard and Specification for Topsoil.

B. Areas previously graded in conformance with the drawings shall be maintained in a true and even grade, then scarified or otherwise loosened to a depth of 3 - 5 inches to permit bonding of the topsoil to the surface area and to create horizontal erosion check slots to prevent topsoil from sliding down a slope.

C. Apply soil amendments as per soil test or as included on the plans.

D. Mix soil amendments into the top 3 - 5 inches of topsoil by disking or other suitable means. Lawn areas should be raked to smooth the surface, remove large objects like stones and branches, and ready the area for seed application. Where site conditions will not permit normal seedbed preparation, loosen surface soil by dragging with a heavy chain or other equipment to roughen the surface. Steep slopes (steeper than 3:1) should be tracked by a dozer leaving the soil in an irregular condition with ridges running parallel to the contour of the slope. The top 1 - 3 inches of soil should be loose and friable. Seedbed loosening may not be necessary on newly disturbed areas.

D. SEED SPECIFICATIONS

I. All seed must meet the requirements of the Maryland State Seed Law. All seed shall be subject to re-testing by a recognized seed laboratory. All seed used shall have been tested within the 6 months immediately preceding the date of sowing such material on this job.

Note: Seed tags shall be made available to the inspector to verify type and rate of seed used.

II. Inoculant - The inoculant for treating legume seed in the seed mixtures shall be a pure culture of nitrogen-fixing bacteria prepared specifically for the species. Inoculants shall not be used later than the date indicated on the container. Add fresh inoculant as directed on package. Use four times the recommended rate when hydroseeding. Note: It is very important to keep inoculant as cool as possible until used. Temperatures above 75-80 F. can weaken bacteria and make the inoculant less effective.

E. METHODS OF SEEDING

I. Hydroseeding: Apply seed uniformly with hydroseeder (slurry includes seed and fertilizer), broadcast or drop seeder, or cultipacker seeder.

A. If fertilizer is being applied at the time of seeding, the application rates amounts will not exceed the following:
Nitrogen; maximum of 100 pounds per acre total of soluble
Nitrogen; P205 (phosphorcus): 200 pounds per acre; K20 (potassium): 200 pounds per acre.

B. Lime: Use only ground agricultural limestone, (up to 3 tons per acre may be applied by hydroseeding). Normally, not more than 2 tons are applied by hydroseeding at any one time. Do not use burnt or hydrated lime when hydroseeding.

C. Seed and fertilizer shall be mixed on site and seeding shall be done immediately and without interruption.

II. Dry Seeding: This includes use of conventional drop or broadcast spreaders.

A. Seed spread dry shall be incorporated into the subsoil at the rates prescribed on the temporary or permanent seeding summaries or tables 25 or 26. The seeded area shall then be rolled with a weighed roller to provide good seed soil contact.

B. Where practical, seed should be applied in two directions perpendicular to each other. Apply half the seeding rate in each direction.

III. Drill or cultipacker seeding: Mechanized seeders that apply and cover seed with soil.

A. Cultipacking seeders are required to bury the seed in such a fashion as to provide at least ¼ inch of soil covering.

Seedbed must be firm after planting.

B. Where practical, seed should be applied in two directions perpendicular to each other. Apply half the seeding rate in each direction.

F. MULCH SPECIFICATIONS (IN ORDER OF PREFERENCE)

I. Straw shall consist of thoroughly threshed wheat, rye or oat straw, reasonably bright in color, and shall not be musty, moldy, caked, decayed, or excessively dusty and shall be free of noxious weeds seeds as specified in the Maryland Seed Law.

II. Wood cellulose fiber mulch (WCFM)

A. WCFM shall consist of specially prepared wood cellulose processed into a uniform fibrous physical state.

B. WCFM shall be dyed green or contain a green dye in the package that will provide an appropriate color to facilitate visual inspection of the uniformly spread slurry.

C. WCFM, including dye shall contain no germination or growth inhibiting factors.

D. WCFM materials shall be manufactured and processed in such a manner that the wood cellulose fiber mulch will remain in uniform suspension in water under agitation and will blend with seed, fertilizer and other additives to form a homogeneous slurry. The mulch material shall form a blotter-like ground cover, on application, having moisture absorption and percolation properties and shall cover and hold grass seed in contact with the soil without inhibiting the growth of the grass seedings.

E. WCFM material shall contain no elements or compounds at concentration levels that will be phyto-toxic.

F. WCFM must conform to the following physical requirements: Fiber length to approximately 10 mm., diameter approximately 1mm., ph range of 4.0 to 8.5, ash content of 1.6% maximum and water holding capacity of 90% minimum.

Note: Only sterile straw mulch should be used in areas where one species of grass is desired.

G. MULCHING SEEDED AREAS - Mulch shall be applied to all seeded areas where one species of grass is desired.

I. If grading is completed outside of the seeding season, mulch alone shall be applied as prescribed in this section and maintained until the seeding season returns and seeding can be performed in accordance with these specifications.

II. When straw mulch is used, it shall be spread over all seeded areas at the rate of 2 tons per acre. Mulch shall be applied in a uniform loose depth of between 1inches and 2 inches. Mulch applied shall achieve a uniform distribution and depth so that the surface is not exposed. If a mulch anchoring tool is to be used, the rate should be increased to 2.5 tons per acre.

III. Wood cellulose fiber used as a mulch shall be applied at a net dry weight of 1,500 pounds per acre. The wood cellulose fiber shall be mixed with water and the mixture shall contain a maximum of 50 pounds of wood cellulose fiber per 100 gallons of water.

H. SECURING STRAW MULCH - Mulch anchoring shall be performed immediately following mulch application to minimize loss by wind or water. This may be done by one of the following methods (listed by preference), depending upon size of area and erosion hazard:

I. A mulch anchoring tool is a tractor drawn implement design to punch and anchor mulch into the soil surface a minimum of two (2) inches. This practice is most effective on large areas, but is limited to flatter slopes where equipment can operate safely. If used on sloping land, this practice should be used on the contour if possible.

II. Wood cellulose fiber may be used for anchoring straw. The fiber binder shall be applied at a net dry weight of 750 pounds per acre. The wood cellulose fiber shall be mixed with water and the mixture shall contain a maximum of 50 pounds of wood cellulose fiber per 100 gallons of water.

III. Application of liquid binders should be heavier at the edges where wind catches mulch, such as in valleys or on crest of banks. The remainder of area should appear uniform after binder application. Synthetic binders - such as Acrylic DLR (agro-tack), DCA-70, Petroset, Terra Tax II, Terra Tack AR or other approved equal may be used at rates recommended by the manufacturer to anchor mulch.

IV. Lightweight plastic netting may be stapled over the mulch according to manufacturer's recommendations. Netting is usually available in rolls 4' to 15' feet wide and 300 to 3,000 feet long.

SECTION II - TEMPORARY SEEDING

VEGETATION - Annual grass or grain used to provide cover on disturbed areas for up to 12 months. For longer duration of vegetative cover, permanent seeding is required.

Seed Mixture (Hardiness Zone 6B)					Fertilizer Rate (10-10-10)	Lime Rate
No.	Species	Application Rate (Lb./Ac.)	Seeding Dates	Seeding Depths		
1	Annual Ryegrass	50	2/1 - 4/30 8/15 - 11/1	¼"-½"	600 Lbs./Ac. (15 Lbs./1000 SF)	2 Tons/Ac. (100 Lbs./1000 SF)
2	Weeping Lovegrass	4	5/1 - 8/14	¼"-½"		

SECTION III - PERMANENT SEEDING

Seeding grass and legumes to establish ground cover for a minimum of one year on disturbed areas generally receiving low maintenance.

Seed Mixture No. 3 (Hardiness Zone 6B)					Fertilizer Rate (10-20-20)			Lime Rate
%	Species	Application Rate (Lb./Ac.)	Seeding * Dates	Seeding Depths	N	P205	K20	
85	Rebel II Tall Fescue	125	3/1 - 5/15 8/15 - 10/15	¼"-½"	90 Lb./Ac. (2 Lb./ 1000 Sq.Ft.)	175 Lb./Ac. (4 Lb./ 1000 Sq.Ft.)	175 Lb./Ac. (4 Lb./ 1000 Sq.Ft.)	2 Tons/Ac. (100 Lb./ 1000 Sq.Ft.)
10	Pennfine Perennial Ryegrass	15						
5	Kenblue Kentucky Bluegrass	10						

* For 5-16 through 8-14 add two (2) pounds of Weeping Lovegrass per acre or ten (10) pounds of Millet per acre to seed mixture (i.e. Mix #3 shown).

SECTION IV - SOD

To provide quick cover on disturbed areas (2:1 grade or flatter)

A. GENERAL SPECIFICATIONS

I. Class of turfgrass sod shall be Maryland or Virginia State certified or approved. Sod labels shall be made available to the job foreman and inspector.

II. Sod shall be machine cut at a uniform soil thickness of¾", plus or minus¼", at the time of cutting. Measurement for thickness shall exclude top growth and thatch. Individual pieces of sod shall be cut to the suppliers width length. Maximum allowable deviation from standard widths and lengths shall be 5 percent. Broken pads and torn or uneven ends will not be acceptable.

III. Standard size sections of sod shall be strong enough to support their own weight and retain their size and shape when suspended vertically with a firm grasp on the upper 10 percent of the section.

IV. Sod shall not be harvested or transplanted when moisture content (excessively dry or wet) may adversely affect its survival.

V. Sod shall be harvested, delivered, and installed within a period of 36 hours. Sod not transplanted within this period shall be approved by an agronomist or soil scientist prior to its installation.

B. SOD INSTALLATION

I. During periods of excessively high temperature or in areas having dry subsoil, the subsoil shall be lightly irrigated immediately prior to laying the sod.

II. The first row of sod shall be laid in a straight line with subsequent rows placed parallel to and tightly wedged against each other. Lateral joints shall be staggered to promote more uniform growth and strength. Ensure that sod is not stretched or overlapped and that all joints are butted tight in order to prevent voids which air drying of the roots.

III. Wherever possible, sod shall be laid with the long edges parallel to the contour and with staggering joints. Sod shall be rolled and tamped, pegged or otherwise secured to prevent slippage on slopes and to ensure solid contact between sod roots and the underlying soil surface.

IV. Sod shall be watered immediately following rolling or tamping until the underside of the new sod pad and soil surface below the sod are thoroughly wet. the operations laying, tamping and irrigating for any piece of sod shall be completed within eight hours.

C. SOD MAINTENANCE

I. In the absence of adequate rainfall, watering shall be performed daily or as often as necessary during the first week and in sufficient quantities to maintain moist soil to a depth of 4 inches. Watering should be done during the heat of the day to prevent wilting.

II. After the first week, sod watering is required as necessary to maintain adequate moisture content.

III. The first mowing of sod should not be attempted until the sod is firmly rooted. No more than 1/3 of the grass leaf shall be removed by the initial cutting or subsequent cuttings. Grass height shall be maintained between 2 inches and 3 inches unless otherwise specified.

SECTION V - TURFGRASS ESTABLISHMENT

Areas where turfgrass may be desired may include lawns, parks, playgrounds, and commercial sires which will receive a medium high level of maintenance. Areas to receive seed shall be tilled by disking or other approved methods to a depth of 2 to 4 inches, leveled and raked to prepare a proper seedbed. Stones and debris over 1½inches in diameter shall be removed. The resulting seedbed shall be in such condition that future mowing of grasses will pose no difficulty.

Note: Choose certified material. Certified material is the best guarantee of cultivar purity. The certification program of the Maryland Department of Agriculture, Turf and Seed Section, provides a reliable means of consumer protection and assures a pure genetic line.

A. TURFGRASS MIXTURES

I. Kentucky Bluegrass - Full sun mixture - For use in areas that receive intensive management. Irrigation required in the areas of central Maryland and Eastern Shore. Recommended certified Kentucky Bluegrass cultivars seeding rate: 1.5 to 2.0 pounds per 1000 square feet. A minimum of three Bluegrass cultivars should be chosen ranging from a minimum of 10% to a maximum of 35% of the mixture by weight.

II. Kentucky Bluegrass/Perennial Rye - Full sun mixture - For use in full sun areas where rapid establishment is necessary and when turf will receive medium to intensive management. Certified Perennial Ryegrass cultivars/certified Kentucky Bluegrass seeding rate: 2 pounds mixture per 1000 square feet. A minimum of 3 Kentucky Bluegrass cultivars must be chosen, with each cultivar ranging from 10% to 35% of the mixture by weight.

III. Tall Fescue/Kentucky Bluegrass - Full sun mixture - For use in drought prone areas and/or for areas receiving low to medium management in full sun to medium shade. Recommended mixture includes; certified Tall Fescue cultivars 95-100%, certified Kentucky Bluegrass cultivars 0 - 5%, seeding rate: 5 to 8 pounds per 1000 square feet. One or more cultivars may be blended.

IV. Kentucky Bluegrass/Fine Fescue - Shade mixture - For use in areas with shade in Bluegrass lawns. For establishment in high quality, intensively managed turf area. Mixture includes; certified Kentucky Bluegrass cultivars 30-40% and certified Fine Fescue and 60-70%. Seeding rate: 1½- 3 pounds per 1000 square feet. A minimum of 3 Kentucky Bluegrass cultivars must be chosen. With each cultivar ranging from a minimum of 10% to a maximum of 35% of the mixture by weight.

Note: Turfgrass varieties should be selected form those listed in the most current University of Maryland publication, agronomy mimeo number 77, "Turfgrass Cultivar Recommendations for Maryland".

B. IDEAL TIMES OF SEEDING

Western Maryland: March 15 - June 1, August 1 - October 1 (hardiness zones - 5B, 6A).

Central Maryland: March 1 - May 15, August 15 - October 15 (hardiness zone - 6B).

Southern Maryland, Eastern Shore: March 1 - May 15, August 15 - October 15 (hardiness zones - 7A , 7B).

C. IRRIGATION

If soil moisture is different, supply new seedlings with adequate water for plant growth (1/2" - 1" every 3 to 4 days depending on soil texture) until they are firmly established. This is especially true when seedings are made late in the planting season, in abnormally dry or hot seasons, or on adverse sites.

D. REPAIRS AND MAINTENANCE

Inspect all seeded areas for failures and make necessary repairs, replacements, and reseedings within the planting season.

I. Once the vegetation is established, the site shall have 95% groundcover to be considered adequately stabilized.

II. If the stand provides less than 40% ground coverage, re-establish following original lime, fertilizer, seedbed preparation and seeding recommendations.

III. If the stand provides between 40% and 94% ground coverage, overseeding and fertilizing using half of the rates originally applied may be necessary.

IV. Maintenance fertilizer rates for permanent seedings are shown in Table 24, for lawns and other medium high maintenance turfgrass areas, refer to the University of Maryland publication "Lawn Care in Maryland" bulletin number 171.

G - 20 - 1A

Vegetative Stabilization

TABLE 28 STONE SIZE

	Size Range	D50	D100	AASHTO	Weight
Number 57 *	⅜" - 1½"	½"	1½"	M-43	N/A
Number 1	2" - 3"	2½"	3"	M-43	N/A
Rip-Rap **	4" - 7"	5½"	7"	N/A	N/A
Class I	N/A	9.5"	15"	N/A	150 Lb. max.
Class II	N/A	16"	24"	N/A	700 Lb. max.
Class III	N/A	23"	34"	N/A	2000 Lb. max.

* This classification is to be used on the inside face of stone outlets and check dams.

** This classification is to be used when ever small rip-rap is required. The State Highway Administration designation for this stone is stone for gabions (905.01.04).

STONE FOR GABION BASKETS

Basket Thickness		Size of Individual Stones	
Inches	MM	Inches	MM
6	150	3 - 5	75 - 125
9	225	4 - 7	100 - 175
12	300	4 - 7	100 - 175
18	460	4 - 7	100 - 175
36	910	4 - 12	100 - 300

Note: Recycled concrete equivalent may be substituted for all stone classifications. Recycled concrete equivalent shall be concrete broken into the sizes meeting the appropriate classification, shall contain no steel reinforcement, and shall have a density of 150 pounds per cubic foot.

TABLE 27 GEOTEXTILE FABRICS

Class	Apparent Opening Size MM. Max.	Grab Tensile Strength Lb. Min.	Burst Strength PSI. Min.
A	0.30 **	250	500
B	0.60	200	320
C	0.30	200	320
D	0.60	90	145
E	0.30	90	145
F (silt fence)	0.40-0.80 *	90	190

* US Standard sieve CW-02215 ** .50 MM max. for super silt fence

The properties shall be determined in accordance with the following procedures:
- Apparent opening size msmt 323
- Grab tensile strength ASTMD 1682: 4 x 8" specimen, 1 x 2" clamps, 12" min. strain rate in both principal directions of geotextile fabric.
- Burst strength: ASTMD D 3786.

The fabric shall be inert to commonly encountered chemicals and hydrocarbons, and will be rot and mildew resistant. It shall be manufactured from fibers consisting of long chain synthetic polymers, and composed of a minimum of 85% by weight of polyolephins, polyesters, or polyamides. The geotextile fabric shall resist deterioration from ultraviolet exposure

In addition, classes A through E shall have a 0.01 cm./sec. minimum permeability when tested in accordance with msmt 507, and an apparent minimum elongation of 20 percent (20%) when tested in accordance with the grab tensile strength requirements listed above.

Silt fence
Class F geotextile fabric for silt fence shall have a 50 lb./in. minimum tensile strength and a 20 lb./in. minimum tensile modules when tested in accordance with msmt 509. The material shall also have a 0.3 gal./ft./min. flow rate and seventy-five percent (75%) minimum filtering efficiency when tested in accordance with msmt 322. Geotextile fabrics used in the construction of silt fence shall resist deterioration from ultraviolet exposure. The fabric shall contain sufficient amount of ultraviolet ray inhibitors and stabilizers to provide a minimum of 12 months of expected usable construction life at a temperature range of 0 to 120 degrees fahrenheit.

MATERIALS SPECIFICATIONS

H - 24 - 1

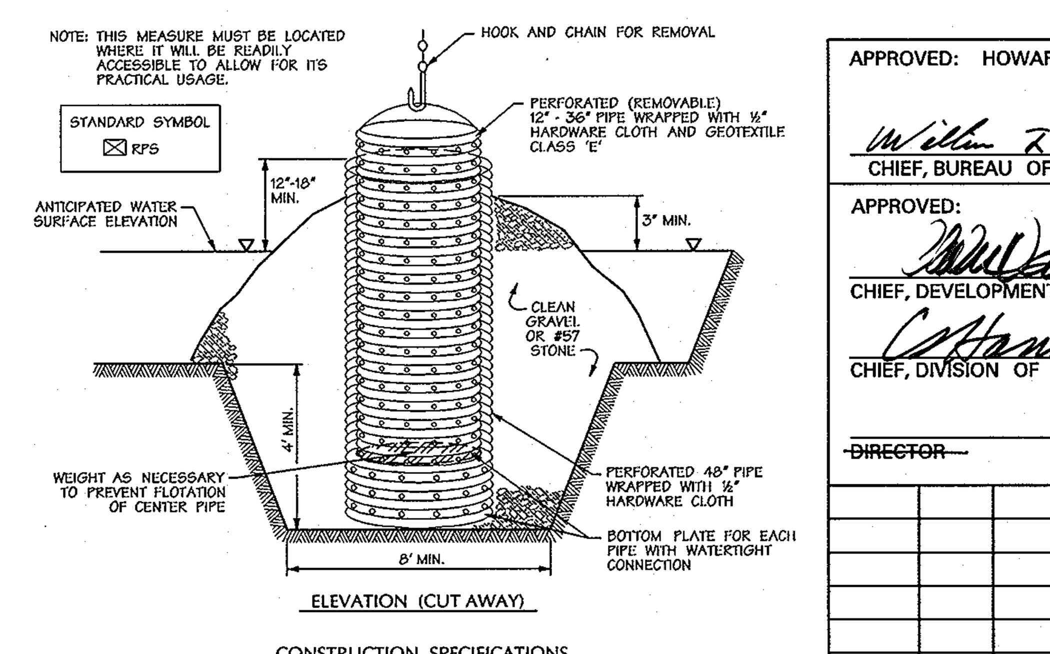

CONSTRUCTION SPECIFICATIONS

1. THE OUTER PIPE SHOULD BE 48" DIAMETER OR SHALL, IN ANY CASE, BE AT LEAST 4" GREATER IN DIAMETER THAN THE CENTER PIPE. THE OUTER PIPE SHALL BE WRAPPED WITH ½" HARDWARE CLOTH TO PREVENT BACKFILL MATERIAL FROM ENTERING THE PERFORATIONS.
2. AFTER INSTALLING THE OUTER PIPE, BACKFILL AROUND OUTER PIPE WITH 2" AGGREGATE OR CLEAN GRAVEL.
3. THE INSIDE STAND PIPE (CENTER PIPE) SHOULD BE CONSTRUCTED BY PERFORATING A CORRUGATED OR PVC PIPE BETWEEN 12" AND 36" IN DIAMETER. THE PERFORATIONS SHALL BE ½" x 6" SLITS OR 1" DIAMETER HOLES 6" ON CENTER. THE CENTER PIPE SHALL BE WRAPPED WITH ½" HARDWARE CLOTH FIRST, THEN WRAPPED AGAIN WITH GEOTEXTILE CLASS E.
4. THE CENTER PIPE SHOULD EXTEND 12" TO 18" ABOVE THE ANTICIPATED WATER SURFACE ELEVATION OR RISER CREST ELEVATION WHEN DEWATERING A BASIN.

U.S. DEPARTMENT OF AGRICULTURE SOIL CONSERVATION SERVICE D - 12 - 5 MARYLAND DEPARTMENT OF ENVIRONMENT WATER MANAGEMENT ADMINISTRATION

Removable Pumping Station

NOT TO SCALE

THESE PLANS HAVE BEEN REVIEWED FOR THE HOWARD SOIL CONSERVATION DISTRICT AND MEET THE TECHNICAL REQUIREMENTS FOR SMALL POND CONSTRUCTION, SOIL EROSION AND SEDIMENT CONTROL.

[signature] 3/30/04
U.S.D.A. NATURAL RESOURCES CONSERVATION SERVICE DATE

THESE PLANS FOR SMALL POND CONSTRUCTION, SOIL EROSION AND SEDIMENT CONTROL MEET THE REQUIREMENTS OF HOWARD SOIL CONSERVATION DISTRICT.

APPROVED: [signature] 3/30/04
HOWARD SOIL CONSERVATION DISTRICT DATE

PLAN NUMBER

DEVELOPERS CERTIFICATE:

I/WE CERTIFY THAT ALL DEVELOPMENT AND/OR CONSTRUCTION WILL BE DONE ACCORDING TO THESE PLANS AND THAT ANY RESPONSIBLE PERSONNEL INVOLVED IN THE CONSTRUCTION PROJECT WILL HAVE A CERTIFICATE OF ATTENDANCE AT A DEPARTMENT OF ENVIRONMENT APPROVED TRAINING PROGRAM FOR THE CONTROL OF SEDIMENT AND EROSION BEFORE BEGINNING THE PROJECT. I SHALL ENGAGE A REGISTERED PROFESSIONAL ENGINEER TO SUPERVISE POND CONSTRUCTION AND PROVIDE THE HOWARD SOIL CONSERVATION DISTRICT WITH AN "AS-BUILT" PLAN OF THE POND WITHIN 30 DAYS OF COMPLETION. I ALSO AUTHORIZE PERIODIC ON-SITE INSPECTIONS BY THE HOWARD SOIL CONSERVATION DISTRICT.

[signature] 3/23/04
SIGNATURE OF DEVELOPER DATE
PRINT NAME BELOW SIGNATURE JAMES H. SELFRIDGE

ENGINEERS CERTIFICATE:

I CERTIFY THAT THIS PLAN FOR POND CONSTRUCTION, EROSION AND SEDIMENT CONTROL REPRESENTS A PRACTICAL AND WORKABLE PLAN BASED ON MY PERSONAL KNOWLEDGE OF THE SITE CONDITIONS. THIS PLAN WAS PREPARED IN ACCORDANCE WITH THE REQUIREMENTS OF THE HOWARD SOIL CONSERVATION DISTRICT. I HAVE NOTIFIED THE DEVELOPER THAT HE/SHE MUST ENGAGE A REGISTERED PROFESSIONAL ENGINEER TO SUPERVISE POND CONSTRUCTION AND PROVIDE THE HOWARD SOIL CONSERVATION DISTRICT WITH AN "AS-BUILT" PLAN OF THE POND WITHIN 30 DAYS OF COMPLETION.

[signature] 3-25-04
SIGNATURE OF ENGINEER DATE
PRINT NAME BELOW SIGNATURE John W. Ranocchia, Sr.

3-25-04
Date

STATE OF MARYLAND JOHN W. RANOCCHIA, SR. No. 10551 REGISTERED PROFESSIONAL ENGINEER

Professional Engr. No. 10551

APPROVED: HOWARD COUNTY DEPARTMENT OF PUBLIC WORKS

[signature] 4-13-04
CHIEF, BUREAU OF HIGHWAYS DATE

APPROVED:
[signature] 4/28/04
CHIEF, DEVELOPMENT ENGINEERING DIVISION DATE

[signature] 4/29/04
CHIEF, DIVISION OF LAND DEVELOPMENT DATE

~~DIRECTOR~~ ~~DATE~~

Date	No.	Revision Description

OWNER: NORTHRIDGE DEVELOPMENT. LLC
14045 GARED DRIVE
GLENWOOD, MD 21738

DEVELOPER: JAMES F. SELFRIDGE BUILDERS, INC.
14045 GARED DRIVE
GLENWOOD, MD 21738

DMW
Daft·McCune·Walker, Inc.
200 East Pennsylvania Avenue
Towson, Maryland 21286
(410) 296-3333
Fax 296-4705

A Team of Land Planners, Landscape Architects, Engineers, Surveyors & Environmental Professionals

SUBDIVISION NAME			SECTION/AREA		LOT/PARCEL
FOX MEADOW			1		167
PLAT OR L/F	BLOCK	ZONE	TAX/ZONE MAP	ELECT. DISTRICT	CENSUS TRACT
5983/492	13, 19, 20	RR, RC	15	3	

TITLE FOX MEADOW
(FORMERLY PFEFFERKORN PROPERTY)
Sediment and Erosion Control Specifications

Des By MM	Scale	Proj. No. 00042.B
Drn By BKC	Date 1/7/04	11 OF 24
Chk By	Approved	

F.03.45

Mon Mar 22 15:36:11 2004 n:\00042\00042.sc2

3/22/2004 3:35:43 PM \\ATHENS\MSTATION\CADNETIN\QCF\day.qcf cr1221 c:\hpm\00042.hpm

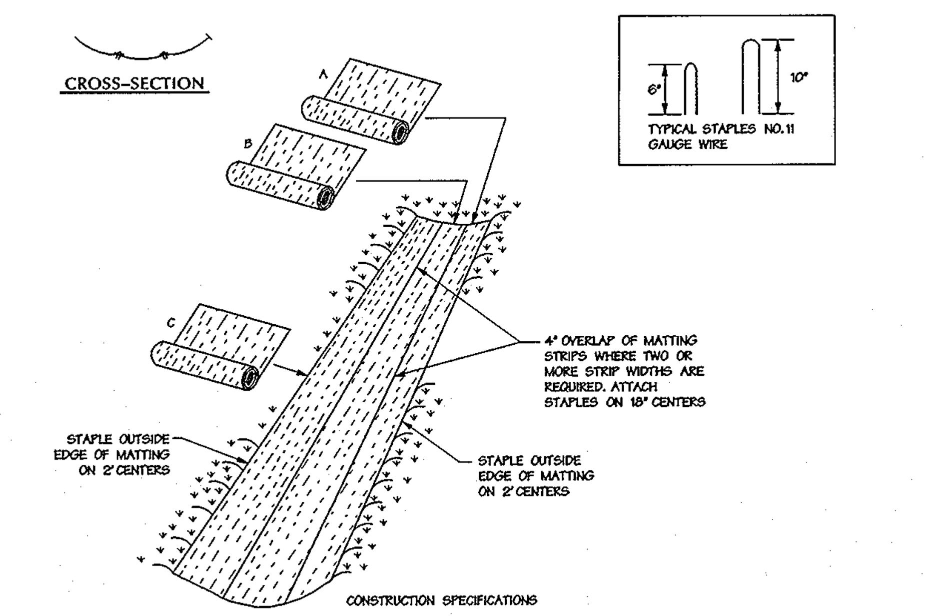

CONSTRUCTION SPECIFICATIONS

1. KEY-IN THE MATTING BY PLACING THE TOP ENDS OF THE MATTING IN A NARROW TRENCH, 6" IN DEPTH. BACKFILL THE TRENCH AND TAMP FIRMLY TO CONFORM TO THE CHANNEL CROSS-SECTION. SECURE WITH A ROW OF STAPLES ABOUT 4" DOWN SLOPE FROM THE TRENCH. SPACING BETWEEN STAPLES IN 6".
2. STAPLE THE 4" OVERLAP IN THE CHANNEL CENTER USING AN 18" SPACING BETWEEN STAPLES.
3. BEFORE STAPLING THE OUTER EDGES OF THE MATTING, MAKE SURE THE MATTING IS SMOOTH AND IN FIRM CONTACT WITH THE SOIL.
4. STAPLES SHALL BE PLACED 2' APART WITH 4 ROWS FOR EACH STRIP, 2 OUTER ROWS, AND 2 ALTERNATING ROWS DOWN THE CENTER.
5. WHERE ONE ROLL OF MATTING ENDS AND ANOTHER BEGINS, THE END OF THE TOP STRIP SHALL OVERLAP THE UPPER END OF THE LOWER STRIP BY 4", SHIPLAP FASHION. REINFORCE THE OVERLAP WITH A DOUBLE ROW OF STAPLES SPACED 6" APART IN A STAGGERED PATTERN ON EITHER SIDE.
6. THE DISCHARGE END OF THE MATTING LINER SHOULD BE SIMILARLY SECURED WITH 2 DOUBLE ROWS OF STAPLES.

NOTE: IF FLOW WILL ENTER FROM THE EDGE OF THE MATTING THEN THE AREA EFFECTED BY THE FLOW MUST BE KEYED-IN.

U.S. DEPARTMENT OF AGRICULTURE SOIL CONSERVATION SERVICE G - 22 - 2 *MARYLAND DEPARTMENT OF ENVIRONMENT WATER MANAGEMENT ADMINISTRATION*

Erosion Control Matting
Not To Scale

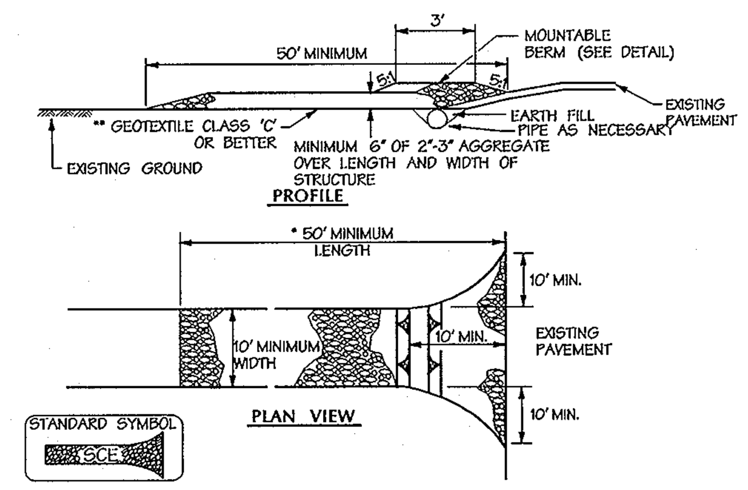

CONSTRUCTION SPECIFICATIONS

1. LENGTH - MINIMUM OF 50' (*30' FOR SINGLE RESIDENCE LOT).
2. WIDTH - 10' MINIMUM, SHOULD BE FLARED AT THE EXISTING ROAD TO PROVIDE A TURNING RADIUS.
3. GEOTEXTILE FABRIC CLASS C (FILTER CLOTH) SHALL BE PLACED OVER THE EXISTING GROUND PRIOR TO PLACING STONE. **THE PLAN APPROVAL AUTHORITY MAY NOT REQUIRE SINGLE FAMILY RESIDENCES TO USE GEOTEXTILE.
4. STONE - CRUSHED AGGREGATE (2" TO 3") OR RECLAIMED OR RECYCLED CONCRETE EQUIVALENT SHALL BE PLACED AT LEAST 6" DEEP OVER THE LENGTH AND WIDTH OF THE ENTRANCE.
5. SURFACE WATER - ALL SURFACE WATER FLOWING TO OR DIVERTED TOWARD CONSTRUCTION ENTRANCES SHALL BE PIPED THROUGH THE ENTRANCE, MAINTAINING POSITIVE DRAINAGE. PIPE INSTALLED THROUGH THE STABILIZED CONSTRUCTION ENTRANCE SHALL BE PROTECTED WITH A MOUNTABLE BERM WITH 5:1 SLOPES AND A MINIMUM OF 6" OF STONE OVER THE PIPE. PIPE HAS TO BE SIZED ACCORDING TO THE DRAINAGE. WHEN THE SCE IS LOCATED AT A HIGH SPOT AND HAS NO DRAINAGE TO CONVEY A PIPE WILL NOT BE NECESSARY. PIPE SHOULD BE SIZED ACCORDING TO THE AMOUNT OF RUNOFF TO BE CONVEYED. A 6" MINIMUM WILL BE REQUIRED.
6. LOCATION - A STABILIZED CONSTRUCTION ENTRANCE SHALL BE LOCATED AT EVERY POINT WHERE CONSTRUCTION TRAFFIC ENTERS OR LEAVES A CONSTRUCTION SITE. VEHICLES LEAVING THE SITE MUST TRAVEL OVER THE ENTIRE LENGTH OF THE STABILIZED CONSTRUCTION ENTRANCE.

U.S. DEPARTMENT OF AGRICULTURE SOIL CONSERVATION SERVICE F - 17 - 3 *MARYLAND DEPARTMENT OF ENVIRONMENT WATER MANAGEMENT ADMINISTRATION*

Stabilized Construction Entrance
Not To Scale

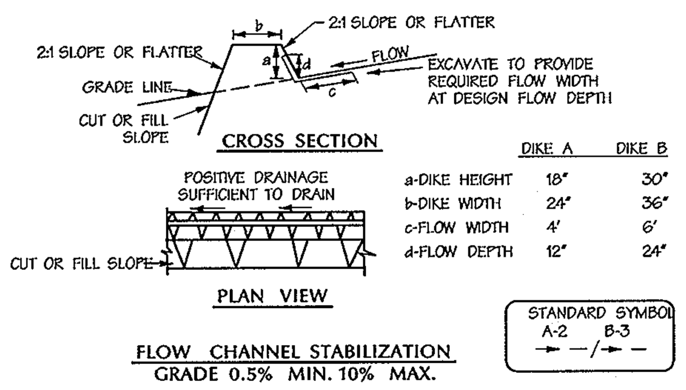

	DIKE A	DIKE B
a-DIKE HEIGHT	18"	30"
b-DIKE WIDTH	24"	36"
c-FLOW WIDTH	4'	6'
d-FLOW DEPTH	12"	24"

FLOW CHANNEL STABILIZATION
GRADE 0.5% MIN. 10% MAX.

1. SEED AND COVER WITH STRAW MULCH.
2. SEED AND COVER WITH EROSION CONTROL MATTING OR LINE WITH SOD.
3. 4" - 7" STONE OR RECYCLED CONCRETE EQUIVALENT PRESSED INTO THE SOIL 7" MINIMUM.

CONSTRUCTION SPECIFICATIONS

1. ALL TEMPORARY EARTH DIKES SHALL HAVE UNINTERRUPTED POSITIVE GRADE TO AN OUTLET. SPOT ELEVATIONS MAY BE NECESSARY FOR GRADES LESS THAN 1%.
2. RUNOFF DIVERTED FROM A DISTURBED AREA SHALL BE CONVEYED TO A SEDIMENT TRAPPING DEVICE.
3. RUNOFF DIVERTED FROM AN UNDISTURBED AREA SHALL OUTLET DIRECTLY INTO AN UNDISTURBED, STABILIZED AREA AT A NON-EROSIVE VELOCITY.
4. ALL TREES, BRUSH, STUMPS, OBSTRUCTIONS, AND OTHER OBJECTIONAL MATERIAL SHALL BE REMOVED AND DISPOSED OF SO AS NOT TO INTERFERE WITH THE PROPER FUNCTIONING OF THE DIKE.
5. THE DIKE SHALL BE EXCAVATED OR SHAPED TO LINE, GRADE AND CROSS SECTION AS REQUIRED TO MEET THE CRITERIA SPECIFIED HEREIN AND BE FREE OF BANK PROJECTIONS OR OTHER IRREGULARITIES WHICH WILL IMPEDE NORMAL FLOW.
5. FILL SHALL BE COMPACTED BY EARTH MOVING EQUIPMENT.
7. ALL EARTH REMOVED AND NOT NEEDED FOR CONSTRUCTION SHALL BE PLACED SO THAT IT WILL NOT INTERFERE WITH THE FUNCTIONING OF THE DIKE.
8. INSPECTION AND MAINTENANCE MUST BE PROVIDED PERIODICALLY AND AFTER EACH RAIN EVENT.

U.S. DEPARTMENT OF AGRICULTURE SOIL CONSERVATION SERVICE A - 1 - 6 *MARYLAND DEPARTMENT OF ENVIRONMENT WATER MANAGEMENT ADMINISTRATION*

Earth Dike
Not To Scale

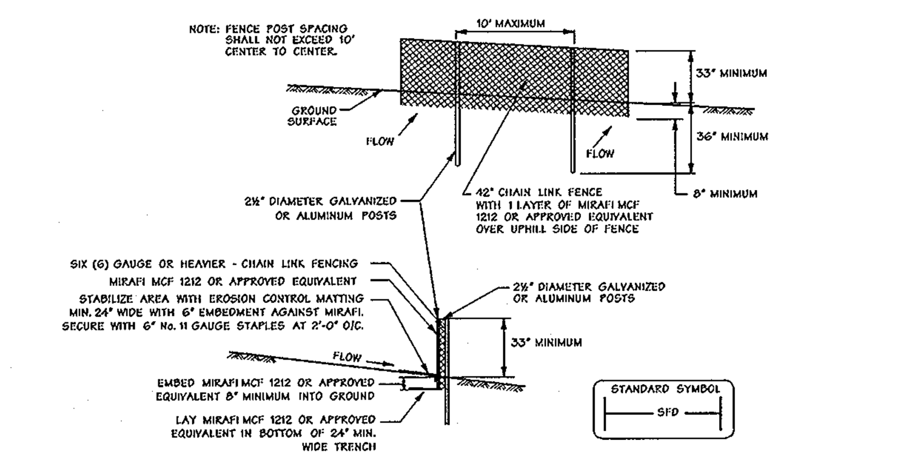

CONSTRUCTION SPECIFICATIONS

1. FENCING SHALL BE 42 INCHES IN HEIGHT AND CONSTRUCTED IN ACCORDANCE WITH THE LATEST MARYLAND STATE HIGHWAY (SHA) DETAILS FOR CHAIN LINK FENCING. THE SPECIFICATION FOR A 6' FENCE SHALL BE USED, SUBSTITUTING 42" FABRIC AND 6' LENGTH POSTS.
2. THE POSTS DO NOT NEED TO BE SET IN CONCRETE.
3. CHAIN LINK FENCE SHALL BE FASTENED SECURELY TO THE FENCE POSTS WITH WIRE TIES OR STAPLES. THE LOWER TENSION WIRE, BRACE OR TRUSS RODS, DRIVE ANCHORS AND POST CAPS ARE NOT REQUIRED EXCEPT ON THE ENDS OF THE FENCE. THE CHAIN LINK FENCING SHALL BE SIX (6) GAUGE OR HEAVIER.
4. MIRAFI MCF 1212 OR APPROVED EQUIVALENT SHALL BE FASTENED SECURELY TO THE CHAIN LINK FENCE WITH TIES SPACED EVERY 24" AT THE TOP AND MID SECTION.
5. MIRAFI MCF 1212 OR APPROVED EQUIVALENT SHALL BE EMBEDDED A MINIMUM OF 8" INTO THE GROUND.
6. WHEN TWO SECTIONS OF MIRAFI MCF 1212 OR APPROVED EQUIVALENT ADJOIN EACH OTHER, THEY SHALL BE OVERLAPPED BY 6" AND FOLDED.
7. MAINTENANCE SHALL BE PERFORMED AS NEEDED.
8. MAXIMUM FLOW SLOPE 10.0%.
9. MAXIMUM DRAINAGE AREA 5 ACRES.

U.S. DEPARTMENT OF AGRICULTURE SOIL CONSERVATION SERVICE H - 26 - 4 *MARYLAND DEPARTMENT OF ENVIRONMENT WATER MANAGEMENT ADMINISTRATION*

Super Fence Diversion
Not To Scale

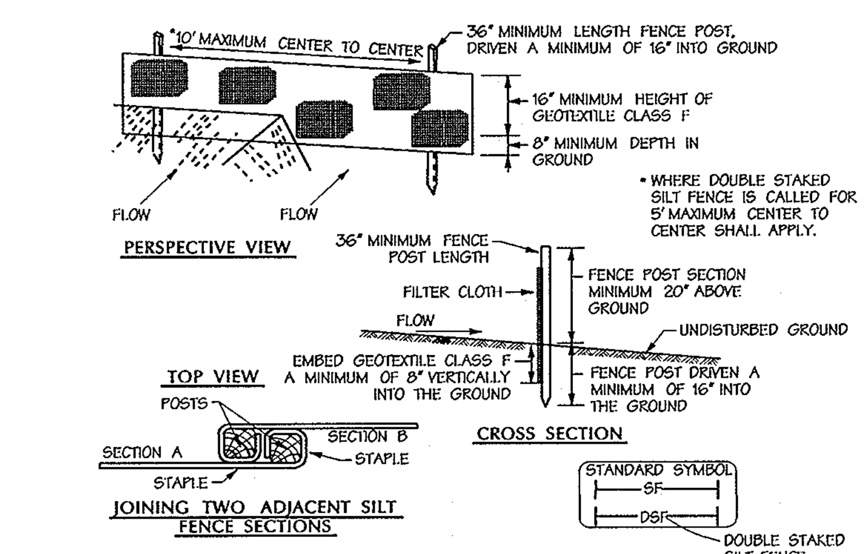

CONSTRUCTION SPECIFICATIONS

1. FENCE POSTS SHALL BE A MINIMUM OF 36" LONG DRIVEN 16" MINIMUM INTO THE GROUND. WOOD POSTS SHALL BE 1½" x 1½" SQUARE (MINIMUM) CUT, OR 1¾" DIAMETER (MINIMUM) ROUND AND SHALL BE OF SOUND QUALITY HARDWOOD. STEEL POSTS WILL BE STANDARD T OR U SECTION WEIGHTING NOT LESS THAN 1.00 POUND PER LINEAR FOOT.
2. GEOTEXTILE SHALL BE FASTENED SECURELY TO EACH FENCE POST WITH WIRE TIES OR STAPLES AT TOP AND MID-SECTION AND SHALL MEET THE FOLLOWING REQUIREMENTS FOR GEOTEXTILE CLASS F:

TENSILE STRENGTH	50 LBS/IN (MIN.)	TEST: MSMT 509
TENSILE MODULUS	20 LBS/IN (MIN.)	TEST: MSMT 509
FLOW RATE	0.3 GAL FT/MIN (MAX)	TEST: MSMT 322
FILTERING EFFICIENCY	75% (MIN.)	TEST: MSMT 322

3. WHERE ENDS OF GEOTEXTILE FABRIC COME TOGETHER, THEY SHALL BE OVERLAPPED, FOLDED AND STAPLED TO PREVENT SEDIMENT BYPASS.
4. SILT FENCE SHALL BE INSPECTED AFTER EACH RAINFALL EVENT AND MAINTAINED WHEN BULGES OCCUR OR WHEN SEDIMENT ACCUMULATION REACHED 50% OF THE FABRIC HEIGHT.

U.S. DEPARTMENT OF AGRICULTURE SOIL CONSERVATION SERVICE E - 15 - 3 *MARYLAND DEPARTMENT OF ENVIRONMENT WATER MANAGEMENT ADMINISTRATION*

Silt Fence
Not To Scale

DUST CONTROL SPECIFICATIONS

TEMPORARY METHODS:
1. MULCHES - SEE STANDARDS FOR VEGETATIVE STABILIZATION WITH MULCHES ONLY. MULCH SHOULD BE CRIMPED OR TACKED TO PREVENT BLOWING.
2. VEGETATIVE COVER - SEE STANDARDS FOR TEMPORARY VEGETATIVE COVER.
3. TILLAGE - TO ROUGHEN SURFACE AND BRING CLODS TO THE SURFACE. THIS IS AN EMERGENCY MEASURE WHICH SHOULD BE USED BEFORE SOIL BLOWING STARTS. BEGIN PLOWING ON WINDWARD SIDE OF SITE. CHISEL-TYPE PLOWS SPACED ABOUT 12 INCHES APART, SPRING-TOOTHED HARROWS, AND SIMILAR PLOWS ARE EXAMPLES OF EQUIPMENT WHICH MAY PRODUCE THE DESIRED EFFECT.
4. IRRIGATION - THIS IS GENERALLY DONE AS AN AN EMERGENCY TREATMENT. SITE IS SPRINKLED WITH WATER UNTIL THE SURFACE IS MOIST. REPEAT AS NEEDED. AT NO TIME SHOULD THE SITE BE IRRIGATED TO THE POINT THE RUNOFF BEGINS TO FLOW.
5. BARRIERS - SOLID BOARD FENCES, SNOW FENCES, BURLAP FENCES, STRAW BALES, AND SIMILAR MATERIAL CAN BE USED TO CONTROL AIR CURRENTS AND SOIL BLOWING. BARRIERS PLACED AT RIGHT ANGLES TO PREVAILING CURRENTS AT INTERVALS OF ABOUT 10 TIMES THEIR HEIGHT ARE AFFECTIVE IN CONTROLLING SOIL BLOWING.
6. CALCIUM CHLORIDE - APPLY AT A RATE THAT WILL KEEP SURFACE MOIST. MAY NEED RETREATMENT.

PERMANENT METHODS:
1. PERMANENT VEGETATION - SEE STANDARDS FOR PERMANENT VEGETATIVE COVER, AND PERMANENT STABILIZATION WITH SOD. EXISTING TREES OR LARGE SHRUBS MAY AFFORD VALUABLE PROTECTION IF LEFT IN PLACE.
2. TOPSOILING - COVERING WITH LESS EROSIVE SOIL MATERIALS. SEE STANDARDS FOR TOPSOILING.
3. STONE - COVER SURFACE WITH CRUSHED STONE OR COARSE GRAVEL AFTER RECEIVING PERMISSION FROM THE SEDIMENT CONTROL INSPECTOR.

U.S. DEPARTMENT OF AGRICULTURE SOIL CONSERVATION SERVICE H - 30 - 1 *MARYLAND DEPARTMENT OF ENVIRONMENT WATER MANAGEMENT ADMINISTRATION*

Dust Control Specifications
Not To Scale

1. A MINIMUM OF 48 HOURS NOTICE MUST BE GIVEN TO THE HOWARD COUNTY DEPARTMENT OF INSPECTIONS, AND PERMITS, SEDIMENT CONTROL DIVISION PRIOR TO THE START OF ANY CONSTRUCTION (313-1855).
2. ALL VEGETATIVE AND STRUCTURAL PRACTICES ARE TO BE INSTALLED ACCORDING TO THE PROVISIONS OF THIS PLAN AND ARE TO BE IN CONFORMANCE WITH THE MOST CURRENT MARYLAND STANDARDS AND SPECIFICATIONS FOR SOIL EROSION AND SEDIMENT CONTROL" AND REVISIONS THERETO.
3. FOLLOWING INITIAL SOIL DISTURBANCE OR RE-DISTURBANCE, PERMANENT OR TEMPORARY STABILIZATION SHALL BE COMPLETED WITHIN:
   A. SEVEN CALENDAR DAYS FOR ALL PERIMETER SEDIMENT CONTROL STRUCTURES, DIKES, PERIMETER SLOPES AND ALL SLOPES STEEPER THAN 3:1.
   B. FOURTEEN DAYS AS TO ALL OTHER DISTURBED OF GRADED AREAS ON THE PROJECT SITE.
4. ALL SEDIMENT TRAPS/BASING SHOWN MUST BE FENCED AND WARNING SIGNS POSTED AROUND THEIR PERIMETER IN ACCORDANCE WITH VOL. 1, CHAPTER 12, OF THE "HOWARD COUNTY DESIGN MANUAL", STORM DRAINAGE.
5. ALL DISTURBED AREAS MUST BE STABILIZED WITHIN THE TIME PERIOD SPECIFIED ABOVE IN ACCORDANCE WITH THE "1994 MARYLAND STANDARDS AND SPECIFICATIONS FOR SOIL EROSION AND SEDIMENT CONTROL" FOR PERMANENT SEEDINGS (SEC. 51), SODS (SEC. 54), TEMPORARY SEEDING (SEC. 50), AND MULCHING (SEC. 52). TEMPORARY STABILIZATION WITH MULCH ALONE CAN ONLY BE DONE WHEN RECOMMENDED SEEDING DATES DO NOT ALLOW FOR PROPER GERMINATION AND ESTABLISHMENT OF GRASSES.
6. ALL SEDIMENT CONTROL STRUCTURES ARE TO REMAIN IN PLACE AND ARE TO BE MAINTAINED IN OPERATIVE CONDITION UNTIL PERMISSION FOR THEIR REMOVAL HAS BEEN OBTAINED FROM THE HOWARD COUNTY SEDIMENT CONTROL INSPECTOR.
7. SITE ANALYSIS:

TOTAL AREA OR SITE	= 6.5 ACRES
AREA DISTURBED	= 6.5 ACRES
AREA TO BE ROOFED OR PAVED	= 4.2 ACRES
AREA TO BE VEGETATIVELY STABILIZED	= 2.3 ACRES
TOTAL CUT	= 5,000 CUBIC YARDS
TOTAL FILL	= 5,000 CUBIC YARDS
WASTE BORROW AREA	= N/A

8. ANY SEDIMENT CONTROL PRACTICE WHICH IS DISTURBED BY GRADING ACTIVITY FOR PLACEMENT OF UTILITIES MUST BE REPAIRED ON THE SAME DAY OF DISTURBANCE.
9. ADDITIONAL SEDIMENT CONTROLS MUST BE PROVIDED, IF DEEMED NECESSARY BY THE HOWARD COUNTY SEDIMENT CONTROL INSPECTOR.
10. ON ALL SITES WITH DISTURBED AREAS IN EXCESS OF 2 ACRES, APPROVAL OF THE INSPECTION AGENCY SHALL BE REQUESTED UPON COMPLETION OF INSTALLATION OF PERIMETER EROSION AND SEDIMENT CONTROLS, BUT BEFORE PROCEEDING WITH ANY OTHER EARTH DISTURBANCE OR GRADING. OTHER BUILDING OR GRADING INSPECTION APPROVALS MAY NOT BE AUTHORIZED UNTIL THIS INITIAL APPROVAL BY THE INSPECTION AGENCY IS MADE.
11. TRENCHES FOR THE CONSTRUCTION OF UTILITIES IS LIMITED TO THREE PIPE LENGTHS OR THAT WHICH SHALL BE BACK-FILLED AND STABILIZED WITHIN ONE WORKING DAY, WHICHEVER IS SHORTER.

Sediment Control General Notes

CONSTRUCTION SPECIFICATIONS

1. THE SUBGRADE FOR THE FILTER, RIP-RAP, OR GABION SHALL BE PREPARED TO THE REQUIRED LINES AND GRADES. ANY FILL REQUIRED IN THE SUBGRADE SHALL BE COMPACTED TO A DENSITY OF APPROXIMATELY THAT OF THE SURROUNDING UNDISTURBED MATERIAL.

2. THE ROCK OR GRAVEL SHALL CONFORM TO THE SPECIFIED GRADING LIMITS WHEN INSTALLED RESPECTIVELY IN THE RIP-RAP OR FILTER.

3. GEOTEXTILE CLASS C SHALL BE PROTECTED FROM PUNCHING, CUTTING, OR TEARING. ANY DAMAGE OTHER THAN AN OCCASIONAL SMALL HOLE SHALL BE REPAIRED BY PLACING ANOTHER PIECE OF GEOTEXTILE OVER THE DAMAGED PART OR BY COMPLETELY REPLACING THE GEOTEXTILE. ALL OVERLAPS WHETHER FOR REPAIRS OR FOR JOINING TWO PIECES OF GEOTEXTILE SHALL BE A MINIMUM OF ONE FOOT.

4. STONE FOR THE RIP-RAP OR GABION OUTLETS MAY BE PLACED BY EQUIPMENT. THEY SHALL BE CONSTRUCTED TO THE FULL COURSE THICKNESS IN ONE OPERATION AND IN SUCH A MANNER AS TO AVOID DISPLACEMENT OF UNDERLYING MATERIALS. THE STONE FOR RIP-RAP OR GABION OUTLETS SHALL BE DELIVERED AND PLACED IN A MANNER THAT WILL ENSURE THAT IT IS REASONABLY HOMOGENEOUS WITH THE SMALLER STONES AND SPALLS FILLING THE VOIDS BETWEEN THE LARGER STONES. RIP-RAP SHALL BE PLACED IN A MANNER TO PREVENT DAMAGE TO THE FILTER BLANKET OR GEOTEXTILE. HAND PLACEMENT WILL BE REQUIRED TO THE EXTENT NECESSARY TO PREVENT DAMAGE TO THE PERMANENT WORKS.

5. THE STONE SHALL BE PLACED SO THAT IT BLENDS IN WITH THE EXISTING GROUND. IF THE STONE IS PLACED TOO HIGH THEN THE FLOW WILL BE FORCED OUT OF THE CHANNEL AND SCOUR ADJACENT TO THE STONE WILL OCCUR.

U.S. DEPARTMENT OF AGRICULTURE SOIL CONSERVATION SERVICE F-18-8A, 9A, 10A *MARYLAND DEPARTMENT OF ENVIRONMENT WATER MANAGEMENT ADMINISTRATION*

Rock Outlet Protection Specifications
Not To Scale

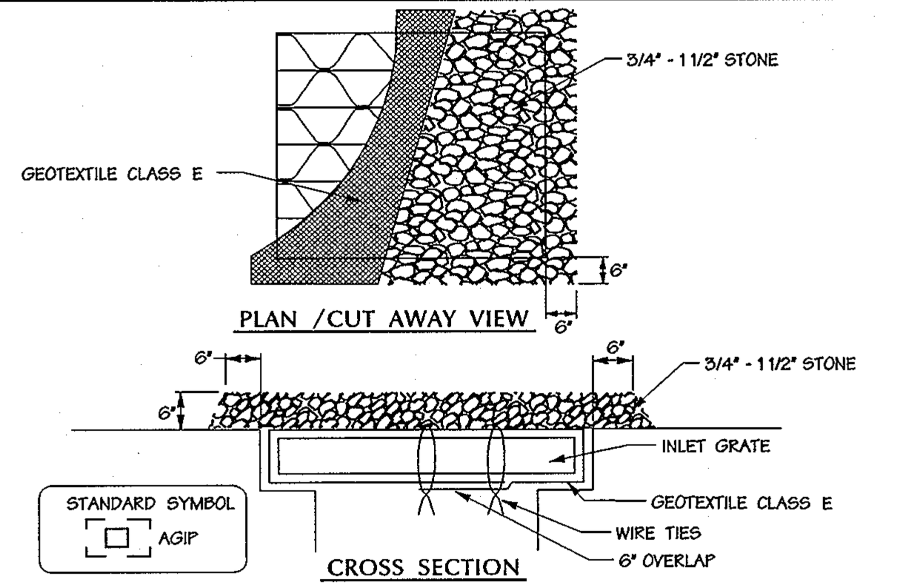

MAX. DRAINAGE AREA = 1/4 ACRE

CONSTRUCTION SPECIFICATIONS

1. LIFT GRATE AND WRAP WITH GEOTEXTILE CLASS E TO COMPLETELY COVER ALL OPENINGS, THEN SET GRATE BACK IN PLACE.
2. PLACE ¾" TO 1½" STONE, 4"-6" THICK ON THE GRATE TO SECURE THE FABRIC AND PROVIDE ADDITIONAL FILTRATION.

U.S. DEPARTMENT OF AGRICULTURE SOIL CONSERVATION SERVICE E - 16 - 5A *MARYLAND DEPARTMENT OF ENVIRONMENT WATER MANAGEMENT ADMINISTRATION*

At Grade Inlet Protection
Not To Scale

SILT FENCE DESIGN CRITERIA

SLOPE STEEPNESS	(MAXIMUM) SLOPE LENGTH	(MAXIMUM) SILT FENCE LENGTH
FLATTER THAN 50:1 (2%)	UNLIMITED	UNLIMITED
50:1 TO 10:1 (2-10%)	125 FEET	1,000 FEET
10:1 TO 5:1 (10-20%)	100 FEET	750 FEET
5:1 TO 3:1 (20-33%)	60 FEET	500 FEET
3:1 TO 2:1 (33-50%)	40 FEET	250 FEET
2:1 AND STEEPER (* 50%)	20 FEET	125 FEET

NOTE: IN AREAS OF LESS THAN 2% SLOPE AND SANDY SOILS (USDA GENERAL CLASSIFICATION SYSTEM, SOIL CLASS A) MAXIMUM SLOPE LENGTH AND SILT FENCE LENGTH WILL BE UNLIMITED. IN THESE AREAS A SILT FENCE MAY BE THE ONLY PERIMETER CONTROL REQUIRED

U.S. DEPARTMENT OF AGRICULTURE SOIL CONSERVATION SERVICE E - 15 - 3A *MARYLAND DEPARTMENT OF ENVIRONMENT WATER MANAGEMENT ADMINISTRATION*

Silt Fence
Not To Scale

DESIGN CRITERIA

SLOPE	SLOPE STEEPNESS	SLOPE LENGTH (MAXIMUM)	SILT FENCE LENGTH (MAXIMUM)
0 - 10%	0 - 10:1	UNLIMITED	UNLIMITED
10 - 20%	10:1 - 5:1	200 FEET	1,500 FEET
20 - 33%	5:1 - 3:1	100 FEET	1,000 FEET
33 - 50%	3:1 - 2:1	100 FEET	500 FEET
50% +	2:1 +	50 FEET	250 FEET

U.S. DEPARTMENT OF AGRICULTURE SOIL CONSERVATION SERVICE H - 26 - 3A *MARYLAND DEPARTMENT OF ENVIRONMENT WATER MANAGEMENT ADMINISTRATION*

Super Silt Fence

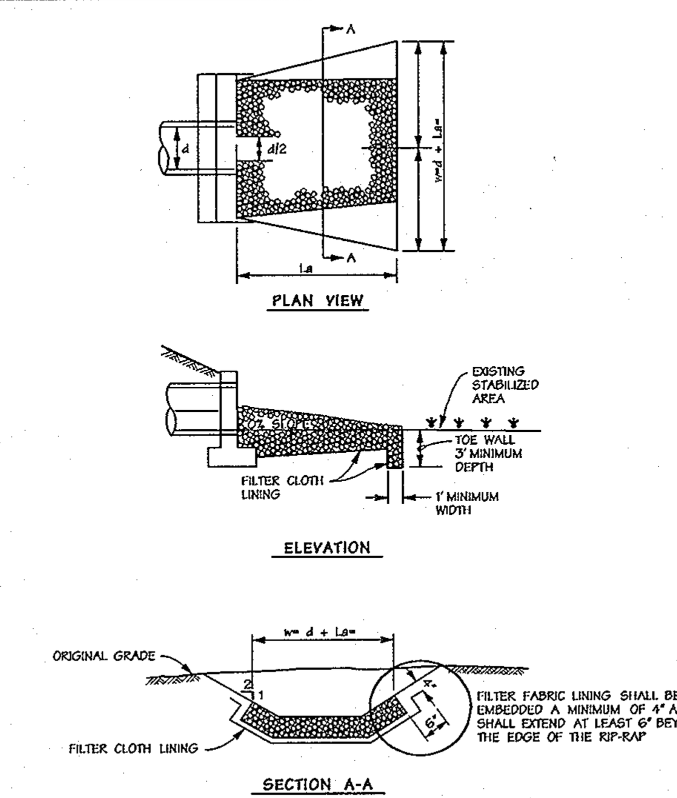

NOTE: FILTER CLOTH SHALL BE GEOTEXTILE CLASS C

U.S. DEPARTMENT OF AGRICULTURE SOIL CONSERVATION SERVICE F-18-10 (HEAD) *MARYLAND DEPARTMENT OF ENVIRONMENT WATER MANAGEMENT ADMINISTRATION*

Rock Outlet Protection III
Not To Scale

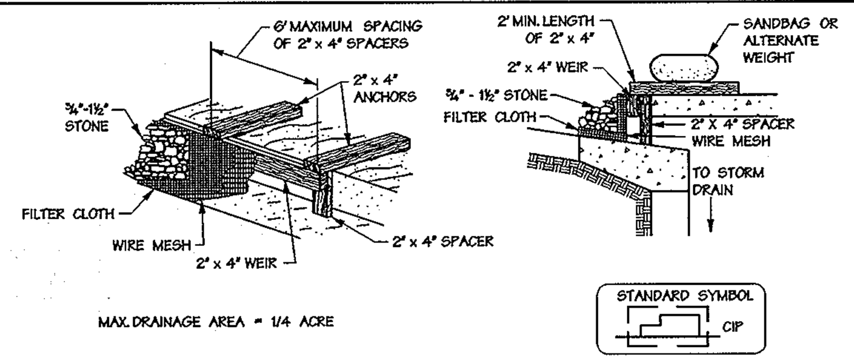

MAX. DRAINAGE AREA = 1/4 ACRE

CONSTRUCTION SPECIFICATIONS

1. ATTACH A CONTINUOUS PIECE OF ½" x ½" WIRE MESH (30" MINIMUM WIDTH BY THROAT LENGTH PLUS 4') TO THE 2" x 4" WEIR (MEASURING THROAT LENGTH PLUS 2') AS SHOWN ON THE STANDARD DRAWING.
2. PLACE A CONTINUOUS PIECE OF GEOTEXTILE CLASS E THE SAME DIMENSIONS AS THE WIRE MESH OVER THE WIRE MESH AND SECURELY ATTACH IT TO THE 2" x 4" WEIR.
3. SECURELY NAIL THE 2" x 4" WEIR TO A 9" LONG VERTICAL SPACER TO BE LOCATED BETWEEN THE WEIR AND THE INLET FACE (MAX. 4' APART).
4. PLACE THE ASSEMBLY AGAINST THE INLET THROAT AND NAIL (MINIMUM 2' LENGTHS OF 2" x 4" TO THE TOP OF THE WEIR AT SPACER LOCATIONS). THESE 2" x 4" ANCHORS SHALL EXTEND ACROSS THE INLET TOP AND BE HELD IN PLACE BY SANDBAGS OR ALTERNATE WEIGHT.
5. THE ASSEMBLY SHALL BE PLACED SO THAT THE END SPACERS ARE A MINIMUM 1' BEYOND BOTH ENDS OF THE THROAT OPENING.
6. FORM THE ½" x ½" WIRE MESH AND THE GEOTEXTILE FABRIC TO THE CONCRETE GUTTER AND AGAINST THE FACE OF THE CURB ON BOTH SIDES OF THE INLET. PLACE CLEAN ¾" X 1½" STONE OVER THE WIRE MESH AND GEOTEXTILE IN SUCH A MANNER TO PREVENT WATER FROM ENTERING THE INLET UNDER OR AROUND THE GEOTEXTILE.
7. THIS TYPE OF PROTECTION MUST BE INSPECTED FREQUENTLY AND THE FILTER CLOTH AND STONE REPLACED WHEN CLOGGED WITH SEDIMENT.
8. ASSURE THAT STORM FLOW DOES NOT BYPASS THE INLET BY INSTALLING A TEMPORARY EARTH OR ASPHALT DIKE TO DIRECT THE FLOW OF THE INLET.

U.S. DEPARTMENT OF AGRICULTURE SOIL CONSERVATION SERVICE E - 16 - 5B *MARYLAND DEPARTMENT OF ENVIRONMENT WATER MANAGEMENT ADMINISTRATION*

Curb Inlet Protection (COG or COS Inlets)
Not To Scale

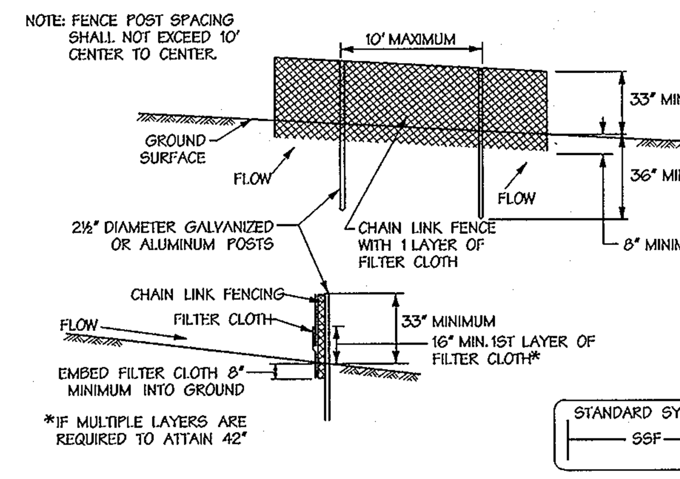

CONSTRUCTION SPECIFICATIONS

1. FENCING SHALL BE 42 INCHES IN HEIGHT AND CONSTRUCTED IN ACCORDANCE WITH THE LATEST MARYLAND STATE HIGHWAY (SHA) DETAILS FOR CHAIN LINK FENCING. THE SPECIFICATION FOR A 6' FENCE SHALL BE USED, SUBSTITUTING 42" FABRIC AND 6' LENGTH POSTS.
2. THE POSTS DO NOT NEED TO BE SET IN CONCRETE.
3. CHAIN LINK FENCE SHALL BE FASTENED SECURELY TO THE FENCE POSTS WITH WIRE TIES OR STAPLES. THE LOWER TENSION WIRE, BRACE AND TRUSS RODS, DRIVE ANCHORS AND POST CAPS ARE NOT REQUIRED EXCEPT ON THE ENDS OF THE FENCE. THE CHAIN LINK FENCING SHALL BE SIX (6) GAUGE OR HEAVIER.
4. FILTER CLOTH SHALL BE FASTENED SECURELY TO THE CHAIN LINK FENCE WITH TIES SPACED EVERY 24" AT THE TOP AND MID SECTION.
5. FILTER CLOTH SHALL BE EMBEDDED A MINIMUM OF 8" INTO THE GROUND.
6. WHEN TWO SECTIONS OF FILTER CLOTH ADJOIN EACH OTHER, THEY SHALL BE OVERLAPPED BY 6" AND FOLDED.
7. MAINTENANCE SHALL BE PERFORMED AS NEEDED AND SILT BUILDUPS REMOVED WHEN "BULGES" DEVELOP IN THE SILT FENCE, OR WHEN SILT REACHES 50% OF FENCE HEIGHT.

U.S. DEPARTMENT OF AGRICULTURE SOIL CONSERVATION SERVICE H - 26 - 3 *MARYLAND DEPARTMENT OF ENVIRONMENT WATER MANAGEMENT ADMINISTRATION*

Super Silt Fence
Not To Scale

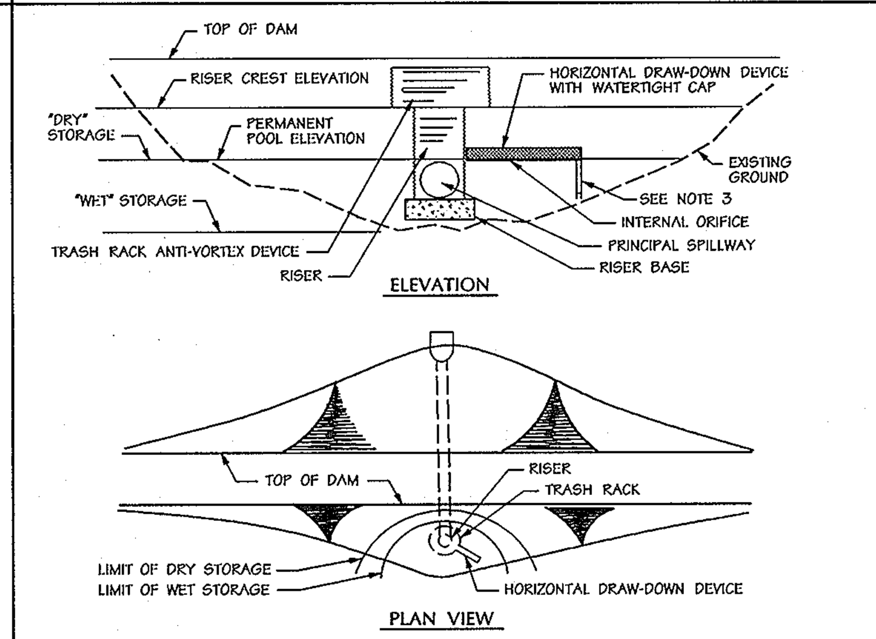

CONSTRUCTION SPECIFICATIONS

1. THE TOTAL AREA OF THE PERFORATIONS MUST BE GREATER THAN 4 TIMES THE AREA OF THE INTERNAL ORIFICE.
2. THE PERFORATED PORTION OF THE DRAW-DOWN DEVICE SHALL BE WRAPPED WITH ½" HARDWARE CLOTH AND GEOTEXTILE FABRIC. THE GEOTEXTILE FABRIC SHALL MEET THE SPECIFICATIONS FOR GEOTEXTILE CLASS E.
3. PROVIDE SUPPORT OF DRAW-DOWN DEVICE TO PREVENT SAGGING AND FLOTATION. AN ACCEPTABLE PREVENTATIVE MEASURE IS TO STAKE BOTH SIDES OF THE DRAW-DOWN DEVICE WITH 1" STEEL ANGLE, OR 1' BY 4" SQUARE OF 2" ROUND WOODEN POSTS SET 3' MINIMUM INTO THE GROUND THEN JOINING THEM TO THE DEVICE BY WRAPPING WITH 12 GAUGE MINIMUM WIRE.

U.S. DEPARTMENT OF AGRICULTURE SOIL CONSERVATION SERVICE C - 10 - 29 *MARYLAND DEPARTMENT OF ENVIRONMENT WATER MANAGEMENT ADMINISTRATION*

Basin Drawdown Schematic Hor. Drawdown Device

APPROVED: HOWARD COUNTY DEPARTMENT OF PUBLIC WORKS

William F. Malone Jr. — CHIEF, BUREAU OF HIGHWAYS — DATE 4-13-04

APPROVED:
CHIEF, DEVELOPMENT ENGINEERING DIVISION — DATE 4/28/04
CHIEF, DIVISION OF LAND DEVELOPMENT — DATE 4/29/04
~~DIRECTOR~~ ~~DATE~~

Date	No.	Revision Description

OWNER: NORTHRIDGE DEVELOPMENT. LLC
14045 GARED DRIVE
GLENWOOD, MD 21738

DEVELOPER: JAMES P. SELFRIDGE BUILDERS, INC.
14045 GARED DRIVE
GLENWOOD, MD 21738

DMW
Daft·McCune·Walker, Inc.
200 East Pennsylvania Avenue
Towson, Maryland 21286
(410) 296-3333
Fax 296-4705
A Team of Land Planners, Landscape Architects, Engineers, Surveyors & Environmental Professionals

SUBDIVISION NAME	SECTION/AREA	LOT/PARCEL
FOX MEADOW	1	167

PLAT OR L/F	BLOCK	ZONE	TAX/ZONE MAP	ELECT. DISTRICT	CENSUS TRACT
5983/492	13, 19, 20	RR, RC	15	3	

TITLE
FOX MEADOW
(FORMERLY PFEFFERKORN PROPERTY)
Sediment and Erosion Control Details

Des By	DWR	Scale	Proj. No. 00042.B
Drn By	DWR	Date 1/7/04	10 OF 24
Chk By		Approved	

3-25-04
Date

STATE OF MARYLAND — JOHN W. RANOCCHIA — No. 10551 — REGISTERED PROFESSIONAL ENGINEER

Professional Engr. No. 10551

SEQUENCE OF CONSTRUCTION

SEQUENCE	NUMBER OF DAYS
1. OBTAIN A GRADING PERMIT. MDE PERMIT # 200360320	7
2. INSTALL SEDIMENT AND EROSION CONTROL DEVICES (INCLUDING STORM DRAIN NECESSARY FOR INLET TRAP).	7
3. ROUGH GRADE SITE AFTER OBTAINING PERMISSION FROM INSPECTOR TO PROCEED	30
4 CONSTRUCT STORM DRAIN AND INSTALL INLET PROTECTION	20
5. FINE GRADE SITE.	2
6. INSTALL CURB & GUTTER, PAVING.	5
7. STABILIZE ALL AREAS IN ACCORDANCE WITH THE STANDARDS AND SPECIFICATIONS.	2

THESE PLANS HAVE BEEN REVIEWED FOR THE HOWARD SOIL CONSERVATION DISTRICT AND MEET THE TECHNICAL REQUIREMENTS FOR SMALL POND CONSTRUCTION, SOIL EROSION AND SEDIMENT CONTROL.

U.S.D.A. NATURAL RESOURCES CONSERVATION SERVICE — DATE 3/30/04

THESE PLANS FOR SMALL POND CONSTRUCTION, SOIL EROSION AND SEDIMENT CONTROL MEET THE REQUIREMENTS OF HOWARD SOIL CONSERVATION DISTRICT.

APPROVED: HOWARD SOIL CONSERVATION DISTRICT — DATE 3/30/04

PLAN NUMBER

DEVELOPERS CERTIFICATE:

I/WE CERTIFY THAT ALL DEVELOPMENT AND/OR CONSTRUCTION WILL BE DONE ACCORDING TO THESE PLANS AND THAT ANY RESPONSIBLE PERSONNEL INVOLVED IN THE CONSTRUCTION PROJECT WILL HAVE A CERTIFICATE OF ATTENDANCE AT A DEPARTMENT OF ENVIRONMENT APPROVED TRAINING PROGRAM FOR THE CONTROL OF SEDIMENT AND EROSION BEFORE BEGINNING THE PROJECT. I SHALL ENGAGE A REGISTERED PROFESSIONAL ENGINEER TO SUPERVISE POND CONSTRUCTION AND PROVIDE THE HOWARD SOIL CONSERVATION DISTRICT WITH AN "AS-BUILT" PLAN OF THE POND WITHIN 30 DAYS OF COMPLETION. I ALSO AUTHORIZE PERIODIC ON-SITE INSPECTIONS BY THE HOWARD SOIL CONSERVATION DISTRICT.

SIGNATURE OF DEVELOPER — DATE 3/23/04
PRINT NAME BELOW SIGNATURE: JAMES H. SELFRIDGE

ENGINEERS CERTIFICATE:

I CERTIFY THAT THIS PLAN FOR POND CONSTRUCTION, EROSION AND SEDIMENT CONTROL REPRESENTS A PRACTICAL AND WORKABLE PLAN BASED ON MY PERSONAL KNOWLEDGE OF THE SITE CONDITIONS. THIS PLAN WAS PREPARED IN ACCORDANCE WITH THE REQUIREMENTS OF THE HOWARD SOIL CONSERVATION DISTRICT. I HAVE NOTIFIED THE DEVELOPER THAT HE/SHE MUST ENGAGE A REGISTERED PROFESSIONAL ENGINEER TO SUPERVISE POND CONSTRUCTION AND PROVIDE THE HOWARD SOIL CONSERVATION DISTRICT WITH AN "AS-BUILT" PLAN OF THE POND WITHIN 30 DAYS OF COMPLETION.

SIGNATURE OF ENGINEER — DATE 3-25-04
PRINT NAME BELOW SIGNATURE: John W. Ranocchia Sr

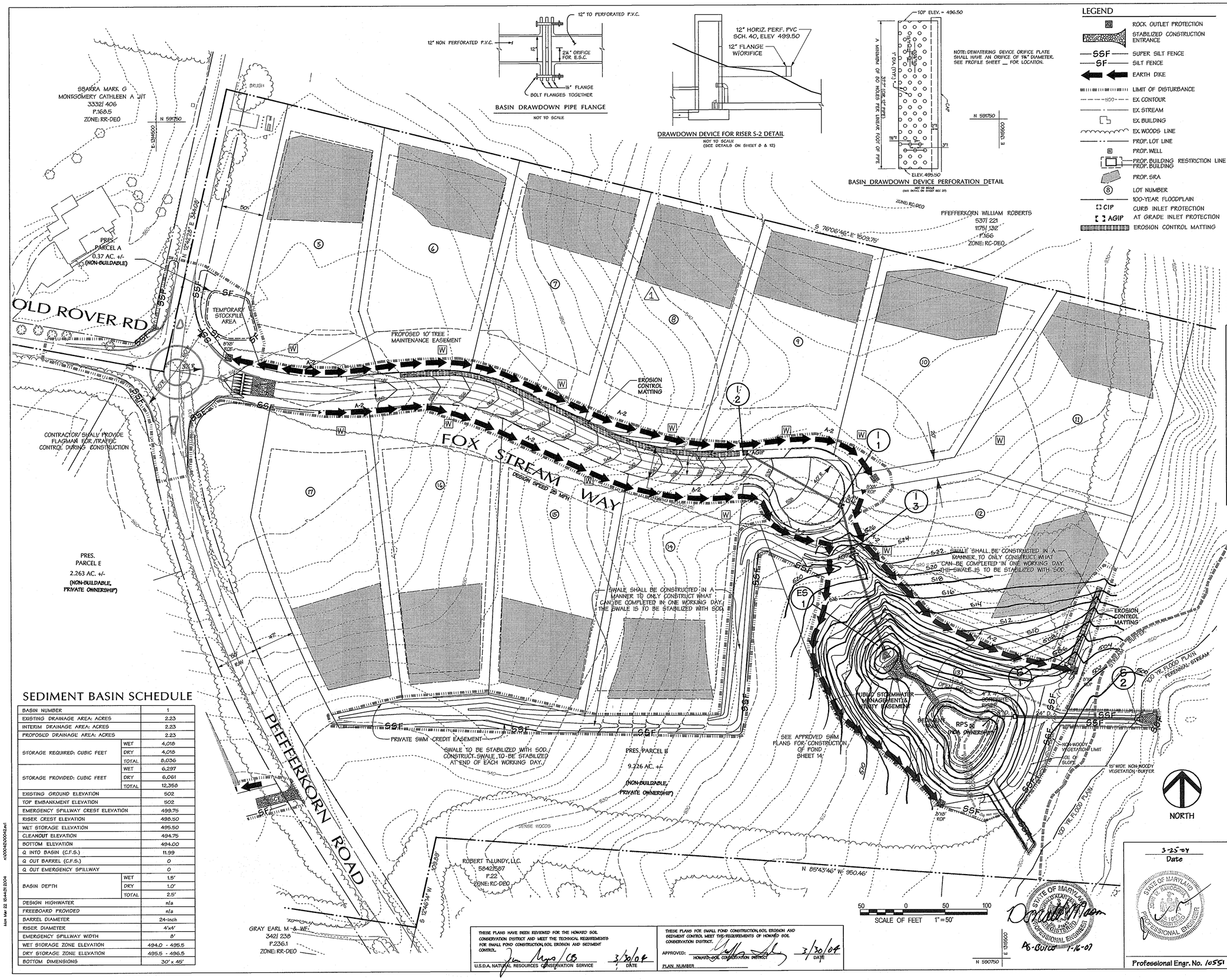
SBARRA MARK G
MONTGOMERY CATHLEEN A JT
3332/ 406
P.168.5
ZONE: RR-DEO
N 591750
E 1345600
PRES. PARCEL A
0.37 AC. +/-
(NON-BUILDABLE)
OLD ROVER RD
SSF
SF
TEMPORARY STOCKPILE AREA
PROPOSED 10' TREE MAINTENANCE EASEMENT
EROSION CONTROL MATTING
CONTRACTOR SHALL PROVIDE FLAGMAN FOR TRAFFIC CONTROL DURING CONSTRUCTION
FOX STREAM WAY
DESIGN SPEED 25 MPH
EX. AGIP
PFEFFERKORN ROAD
PRES. PARCEL E
2.263 AC. +/-
(NON-BUILDABLE, PRIVATE OWNERSHIP)
PRIVATE SWM CREDIT EASEMENT
SWALE TO BE STABILIZED WITH SOD. CONSTRUCT SWALE TO BE STABILIZED AT END OF EACH WORKING DAY.
PRES. PARCEL B
9.226 AC. +/-
(NON-BUILDABLE, PRIVATE OWNERSHIP)
SWALE SHALL BE CONSTRUCTED IN A MANNER TO ONLY CONSTRUCT WHAT CAN BE COMPLETED IN ONE WORKING DAY. THE SWALE IS TO BE STABILIZED WITH SOD.
SEE APPROVED SWM PLANS FOR CONSTRUCTION OF POND - SHEET 14
PUBLIC STORMWATER MANAGEMENT (SWM) EASEMENT
RPS W/ FENCE (NOT OWNERSHIP)
ROBERT T LUNDY, LLC.
5842/587
P.22
ZONE: RC-DEO
GRAY EARL M & WF.
342/ 238
P.236.1
ZONE: RR-DEO
PFEFFERKORN WILLIAM ROBERTS
537/ 221
1175/ 132
P.166
ZONE: RC-DEO
S 76°06'46" E 1509.75'
N 85°43'46" W 950.46'
S 12°46'14" W 102.89'
ZONE: RC-DEO
ZONE: RR-DEO
ZONE: RC-DEO
ZONE: RC-DEO
ZONE: RC

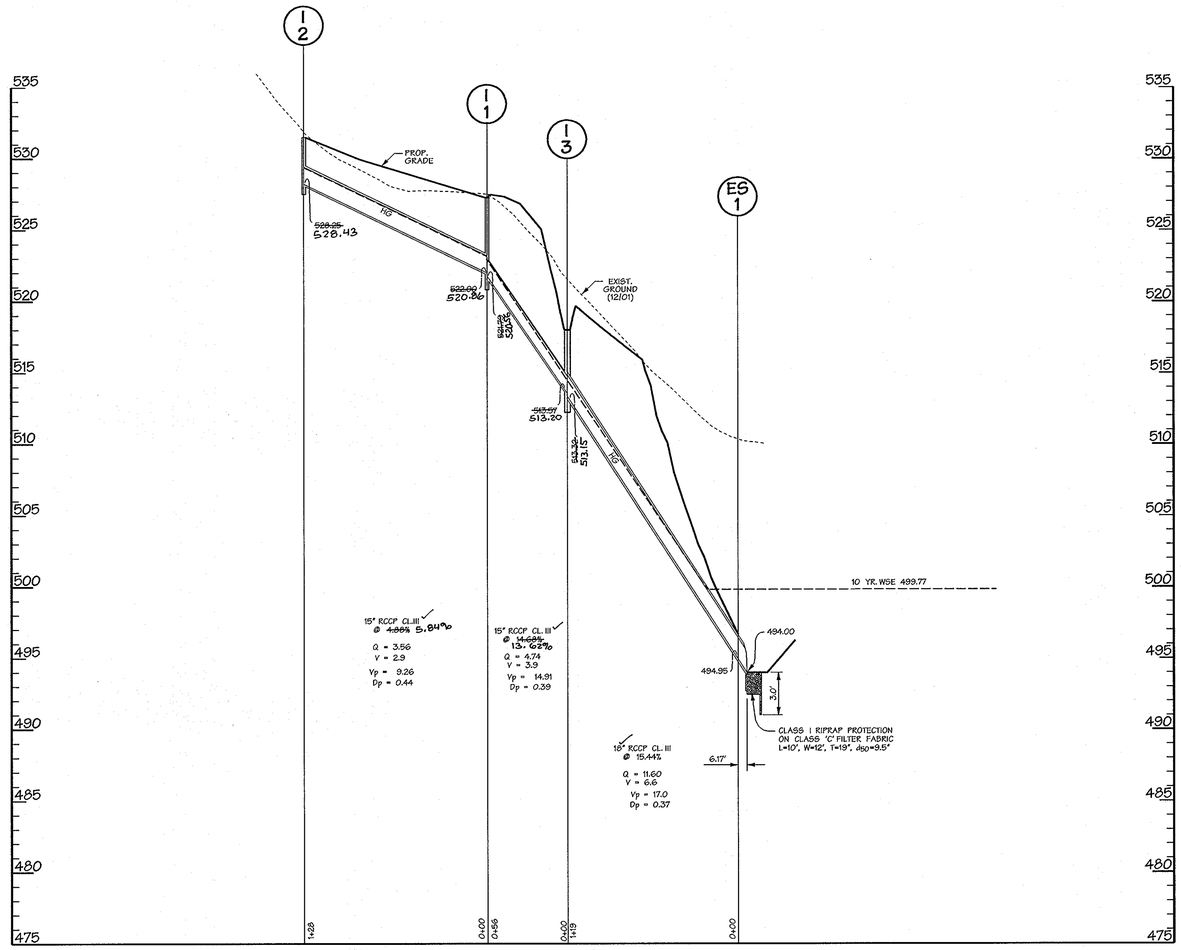

STORM DRAIN PROFILE

SCALE: HORIZ. 1"=50'
VERT. 1"=5'

NOTE:

1. LOTS 3-7 CULVERTS ARE TO BE 15" RCCP CL. IV.
2. DRIVEWAYS FOR LOTS 8, 9 & 10 ARE CLOSED SECTION ENTRANCE, HO.CO. STD. R-6.05, REMAINDER ARE OPEN SECTION, HO.CO. STD. R-6.06

INLET SCHEDULE

NO.	TYPE	Q	INV. OUT	TOP ELEV.
I-1	A-5, W = 2'6", HO. CO. SD 4.40	1.28	521.79	527.28
I-2	YARD INLET, W= 2'6", HO.CO. SD 4.14	3.56	528.~~25~~ 43	532.00 Throat
I-3	YARD INLET, W= 2'6", HO.CO. SD 4.14	7.08	513.~~37~~ 15	518.00 Throat
ES-1	CONC. END SECTION, HO. CO. SD 5.51		494.95	

PIPE SCHEDULE

SIZE (IN)	CATEGORY	L (FT)
15	RCCP CL. III	184
18	RCCP CL. III	119

APPROVED: HOWARD COUNTY DEPARTMENT OF PUBLIC WORKS

CHIEF, BUREAU OF HIGHWAYS — DATE 4-13-04

APPROVED:

CHIEF, DEVELOPMENT ENGINEERING DIVISION — DATE 4/28/04

CHIEF, DIVISION OF LAND DEVELOPMENT — DATE 4/29/04

~~DIRECTOR~~ — ~~DATE~~

Date	No.	Revision Description
1-10-07	1	REVISED PER AS-BUILT CONDITIONS

OWNER: NORTHRIDGE DEVELOPMENT. LLC
14045 GARED DRIVE
GLENWOOD, MD 21738

DEVELOPER: JAMES F. SELFRIDGE BUILDERS, INC.
14045 GARED DRIVE
GLENWOOD, MD 21738

DMW
Daft·McCune·Walker, Inc.
200 East Pennsylvania Avenue
Towson, Maryland 21286
(410) 296-3333
Fax 296-4705

A Team of Land Planners, Landscape Architects, Engineers, Surveyors & Environmental Professionals

SUBDIVISION NAME			SECTION/AREA		LOT/PARCEL #
FOX MEADOW			1		167
PLAT# OR LIP	BLOCK #	ZONE	TAX/ZONE MAP	ELECT. DISTRICT	CENSUS TRACT
5983/492	13, 19, 20	RR, RC	15	3	

TITLE: FOX MEADOW
(FORMERLY PFEFFERKORN PROPERTY)
Storm Drain Profile

Des By	LL	Scale AS SHOWN	Proj. No. 00042.B
Drn By	LL	Date 1/7/04	8 OF 24
Chk By		Approved	

AS-BUILT 1-16-07

3-25-04
Date

Professional Engr. No. 10551

F.03.45

Wed Mar 24 14:21:02 2004 n:\00042\00042.501

3/24/2004 2:20:59 PM \\ATHENS\MSTATION\CADNETN\OCF\dog.qcf cr:zz1 c:\hpm\00042.hpm

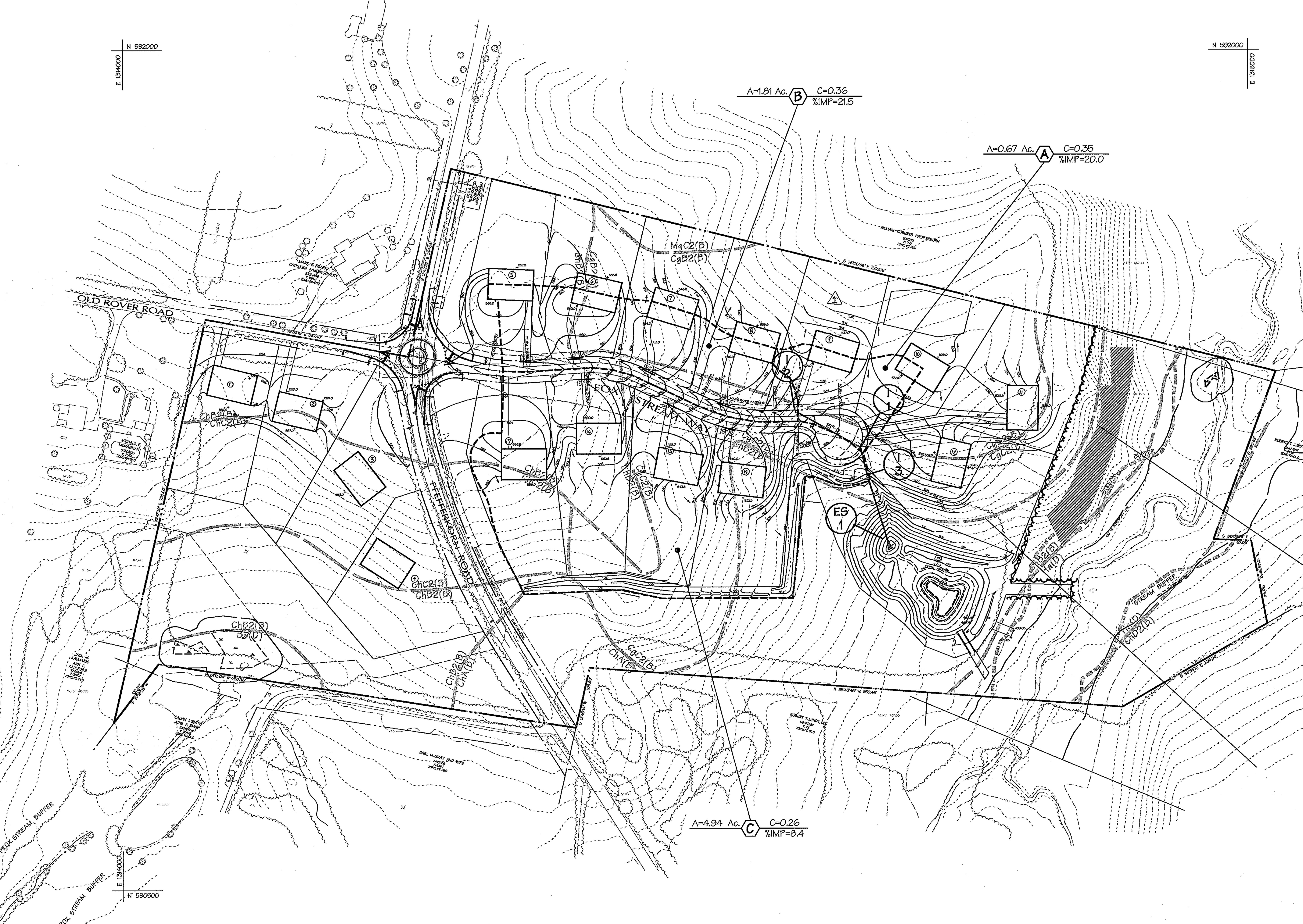

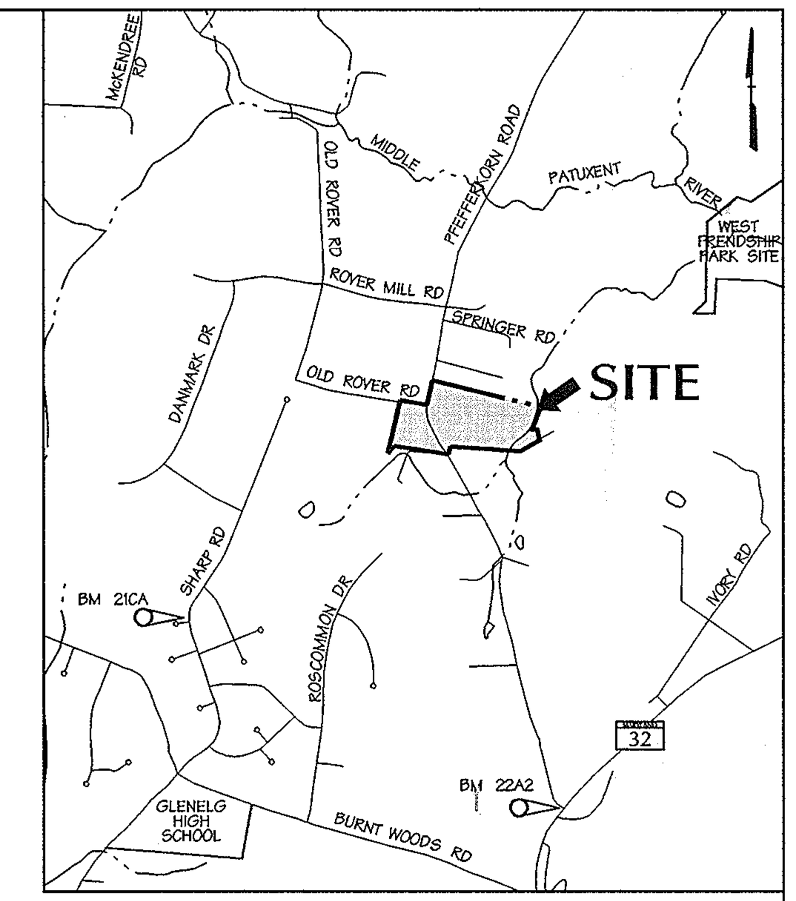

VICINITY MAP

SCALE: 1"=2000'

NORTH

DATA SOURCES:

BOUNDARY PER DMW FIELD SURVEY DATED DECEMBER 2001.

TOPO FLOWN BY VIRGINIA RESOURCE MAPPING, DECEMBER, 2001.

APPROX. WETLAND LOCATION PER DMW FIELD VISIT DATED APRIL 2000. OFF SITE SEPTIC RESERVE AREAS PER RECORD PLATS, LOCATIONS OF WELLS NOT AVAILABLE.

APPROVED: HOWARD COUNTY DEPARTMENT OF PUBLIC WORKS

William F. Malone Jr. — CHIEF, BUREAU OF HIGHWAYS — 4-13-04 DATE

APPROVED: HOWARD COUNTY DEPT. OF PLANNING & ZONING

CHIEF, DEVELOPMENT ENGINEERING DIVISION — 4/28/04 DATE

CHIEF, DIVISION OF LAND DEVELOPMENT JA — 4/29/04 DATE

~~DIRECTOR~~ — ~~DATE~~

Date	No.	Revision Description
6-11-04	△1	REVISED LOT NUMBERS

OWNER: NORTHRIDGE DEVELOPMENT. LLC
14045 GARED DRIVE
GLENWOOD, MD 21738

DEVELOPER: JAMES F. SELFRIDGE BUILDERS, INC.
14045 GARED DRIVE
GLENWOOD, MD 21738

DMW

Daft·McCune·Walker, Inc.
200 East Pennsylvania Avenue
Towson, Maryland 21286
(410) 296-3333
Fax 296-4705

A Team of Land Planners, Landscape Architects, Engineers, Surveyors & Environmental Professionals

SUBDIVISION NAME			SECTION/AREA		LOT/PARCEL #
FOX MEADOW			1		167
PLAT# OR L/F	BLOCK #	ZONE	TAX/ZONE MAP	ELECT. DISTRICT	CENSUS TRACT
5983/492	13, 19, 20	RR, RC	15	3	

TITLE

FOX MEADOW
(FORMERLY PFEFFERKORN PROPERTY)

Drainage Area Map

Des By LL	Scale 1"=100'	Proj. No. 00042.B
Drn By LL	Date 1/7/04	7 OF 24
Chk By	Approved	

3-25-04
Date

STATE OF MARYLAND JOHN W. RANOCCHIA No. 10551 REGISTERED PROFESSIONAL ENGINEER

Professional Engr. No. 10551

Wed Mar 24 14:20:03 2004 n:\00042\00042.da3

F.03.45

Wed Mar 24 14:20:04 2004 n:\00042\00042.da3

3/24/2004 2:19:55 PM \\ATHENS\MSTATION\CADNET\OCF\day-gcf cr1221 c:\hpm\00042.hpm

F.03.45

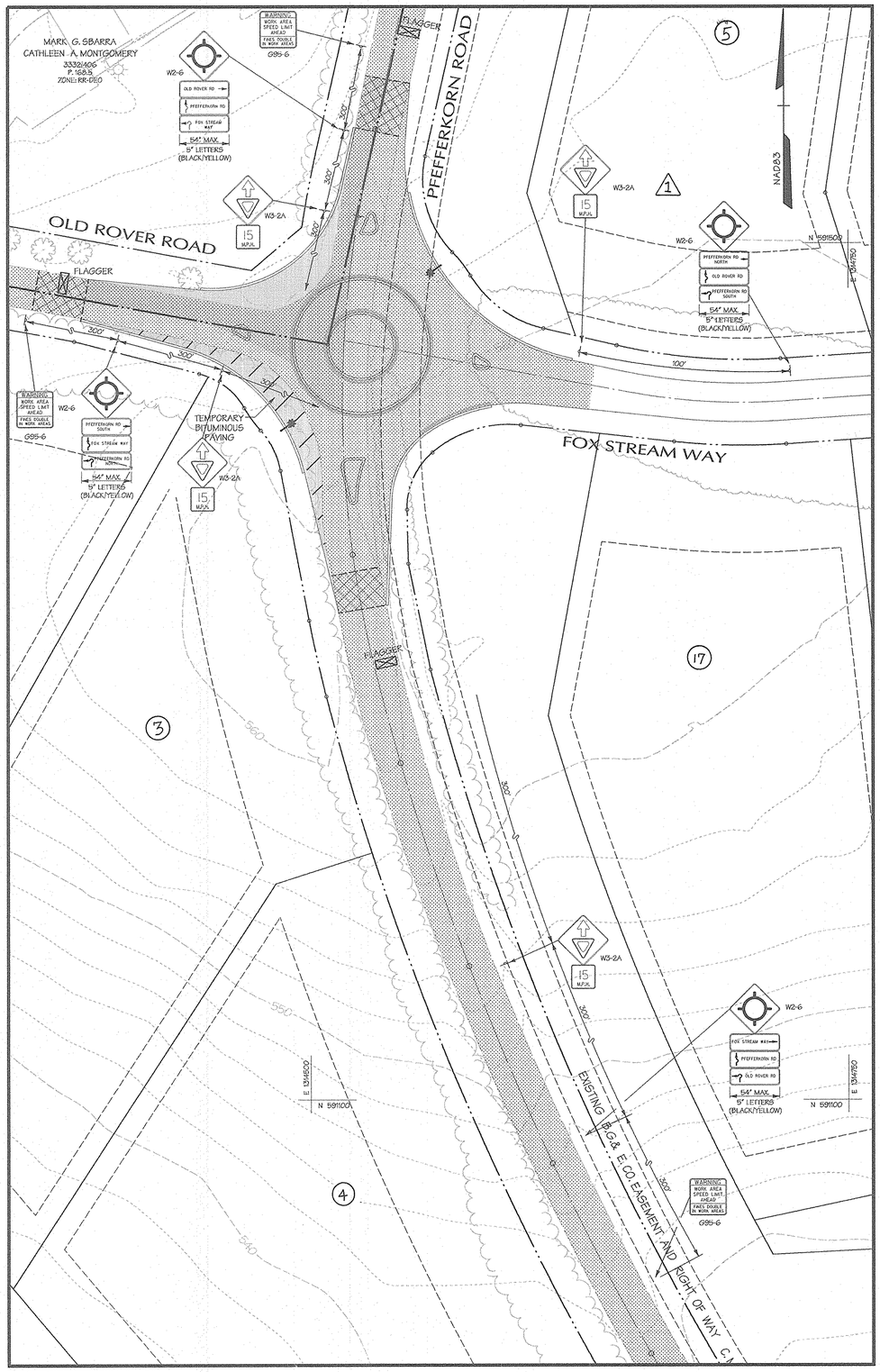

STAGE II

EXISTING PAVING

STAGE II CONSTRUCTION

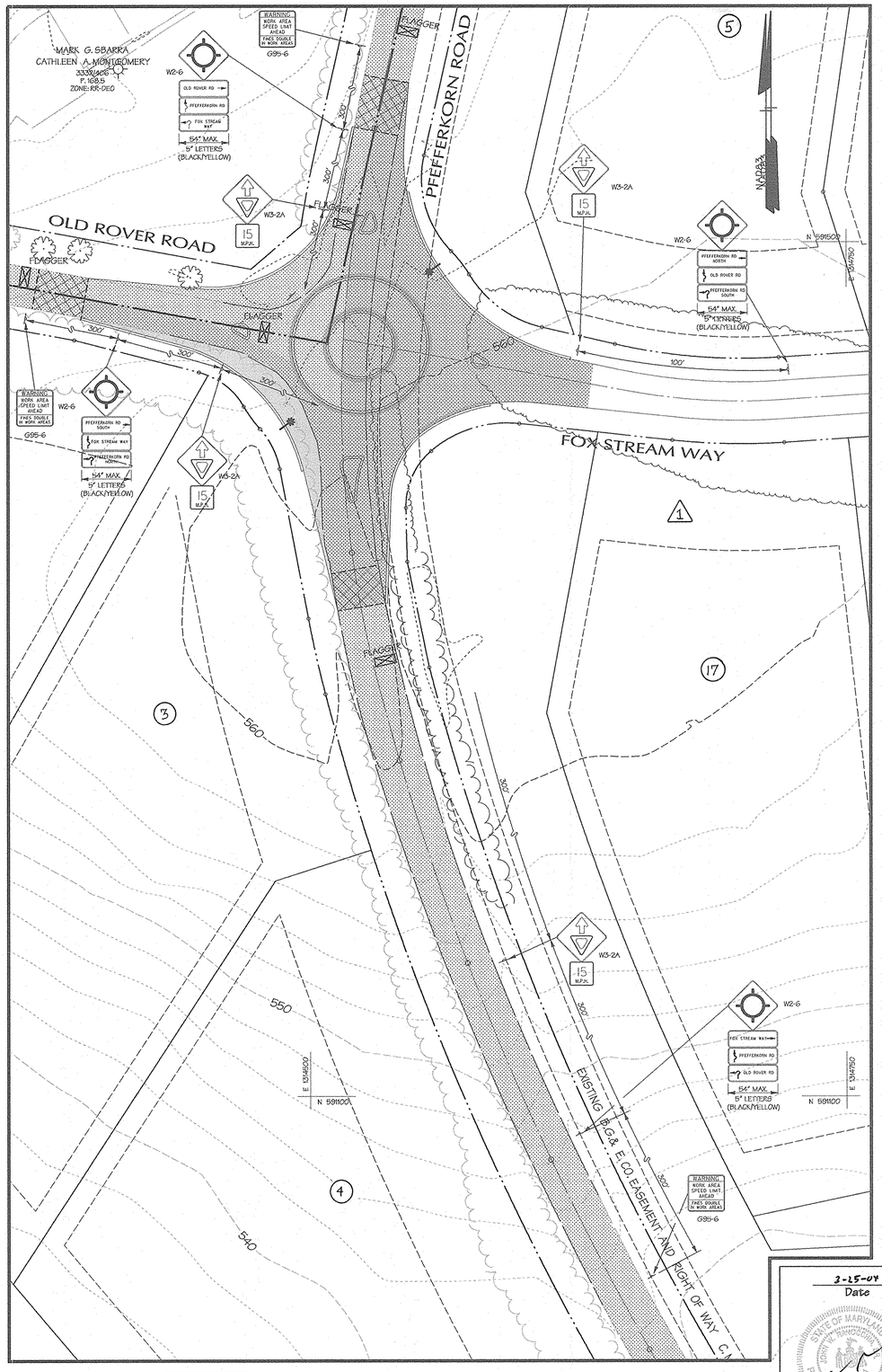

STAGE III

EXISTING PAVING

STAGE III CONSTRUCTION

DATA SOURCES:

BOUNDARY PER DMW FIELD SURVEY DATED DECEMBER 2001.

TOPO FLOWN BY VIRGINIA RESOURCE MAPPING, DECEMBER, 2001.

APPROX. WETLAND LOCATION PER DMW FIELD VISIT DATED APRIL 2000. OFF SITE SEPTIC RESERVE AREAS PER RECORD PLATS, LOCATIONS OF WELLS NOT AVAILABLE.

APPROVED: HOWARD COUNTY DEPARTMENT OF PUBLIC WORKS

CHIEF, BUREAU OF HIGHWAYS — DATE 4-13-04

APPROVED: HOWARD COUNTY DEPT. OF PLANNING & ZONING

CHIEF, DEVELOPMENT ENGINEERING DIVISION — DATE 4/28/04

CHIEF, DIVISION OF LAND DEVELOPMENT — DATE 4/9/04

~~DIRECTOR~~ — ~~DATE~~

Date	No.	Revision Description
6-11-04	1	REVISED LOT NUMBERS

OWNER: NORTHRIDGE DEVELOPMENT. LLC
14045 GARED DRIVE
GLENWOOD, MD 21738

DEVELOPER: JAMES F. SELFRIDGE BUILDERS, INC.
14045 GARED DRIVE
GLENWOOD, MD 21738

3-25-04
Date

Professional Engr. No. 15551

Daft-McCune-Walker, Inc.
200 East Pennsylvania Avenue
Towson, Maryland 21286
(410) 296-3333
Fax 296-4705

A Team of Land Planners, Landscape Architects, Engineers, Surveyors & Environmental Professionals

SUBDIVISION NAME		SECTION/AREA		LOT/PARCEL
FOX MEADOW		1		167
PLAT OR L/F	BLOCK	ZONE	TAX/ZONE MAP	ELEC. DIST.	CENSUS TRACT
5983/492	13, 19, 20	RR, RC	15	3	

TITLE
FOX MEADOW
(FORMERLY PFEFFERKORN PROPERTY)
MAINTENANCE OF TRAFFIC PLAN

Des By	PLH	Scale 1"=30'	Proj. No. 00042.B
Drn By	WDE	Date 1/7/04	6 OF 24
Chk By		Approved	

F.03.45

Wed Mar 24 14:05:29 2004 n:\00042\00042.mt2
3/24/2004 2:08:22 PM \\ATENES\MSTATION\CADNET\MCF\dagaget cr122i c:\hpm\00042.hpm

F.03.45

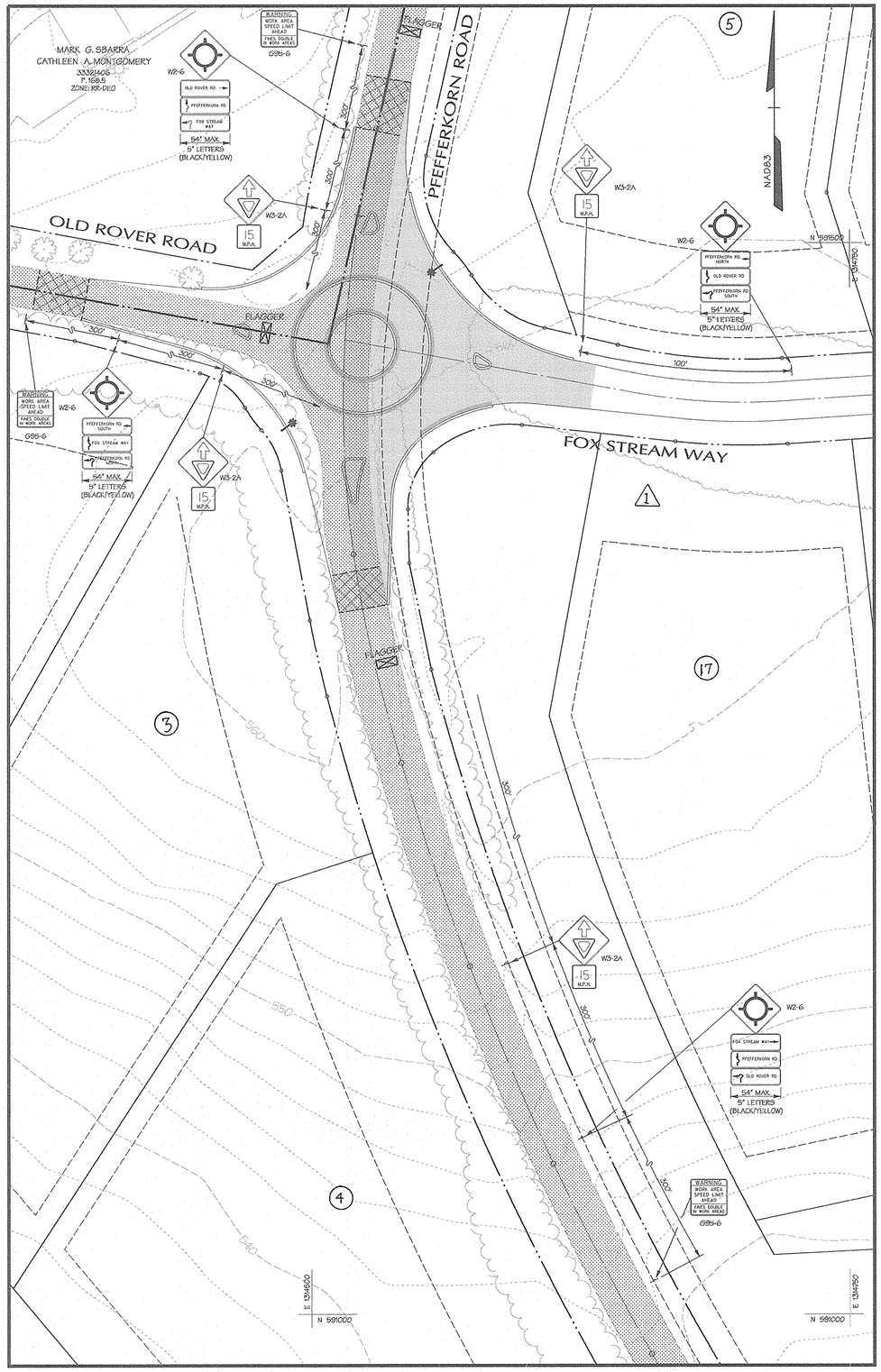

STAGE I

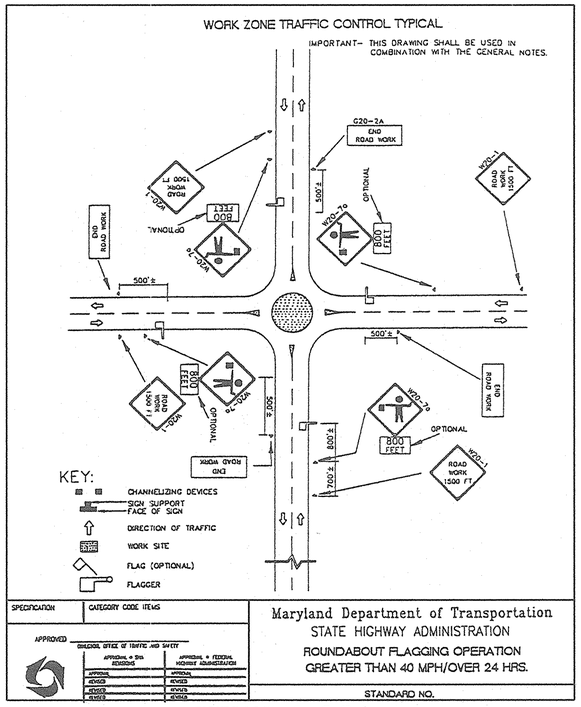

SPECIFICATION	CATEGORY CODE ITEMS
APPROVED	Maryland Department of Transportation STATE HIGHWAY ADMINISTRATION
CHIEF, OFFICE OF TRAFFIC AND SAFETY	ROUNDABOUT FLAGGING OPERATION GREATER THAN 40 MPH/OVER 24 HRS.
APPROVAL AS TO EXTENSIONS	APPROVAL FEDERAL HIGHWAY ADMINISTRATION
APPROVAL REVISED	APPROVAL REVISED
REVISED	REVISED
REVISED	REVISED
	STANDARD NO.

FIGURE 9.2 Work Zone Traffic Control

TRAFFIC CONTROL DURING CONSTRUCTION OF ROUNDABOUT

Construction in 4 stages, during each stage will need 3 flaggers for control of single lane, two way traffic during construction activities. In off hours will need stone, temporary paving, and temporary markings for maintenance of traffic.
During each stage, will need to provide smooth transition from new work to existing paving grade. Will want to place 15 mph limit on approaches during work.

STAGE I:

Construct easterly 1/2± of roundabout (grade, base courses and base for over-run paving in island. Use 3 flaggers to control single lane two way traffic on Pfefferkorn Road and turning movements. Hold barrier curb in center island for construction in stage II.

STAGE II:

Step I:
Install stone base and temporary bituminous paving in Southwest quadrant to maintain a minimum 12' single lane for Old Rover Road to Pfefferkorn Road movements while the Northwest quadrant is being constructed.
Step II:
Construct Northwest quadrant and remainder of center island, all base courses, mountable curbs and the barrier curbs in the island.

STAGE III:

Complete installation of base courses in Southwest quadrant.
Complete installation of over-run paving in island.

STAGE IV:

Finish construction of splitter islands, if not previously finished.
Install final surface course.
Complete installation of all traffic control signs.

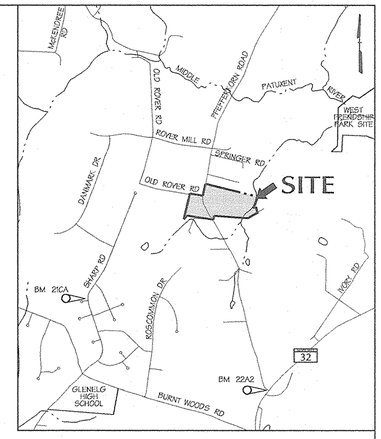

VICINITY MAP
SCALE: 1" = 2,000'

DATA SOURCES:
BOUNDARY PER DMW FIELD SURVEY DATED DECEMBER 2001.
TOPO FLOWN BY VIRGINIA RESOURCE MAPPING, DECEMBER, 2001.
APPROX. WETLAND LOCATION PER DMW FIELD VISIT DATED APRIL 2000. OFF SITE SEPTIC RESERVE AREAS PER RECORD PLATS, LOCATIONS OF WELLS NOT AVAILABLE.

APPROVED: HOWARD COUNTY DEPARTMENT OF PUBLIC WORKS

CHIEF, BUREAU OF HIGHWAYS — DATE 4-13-04

APPROVED: HOWARD COUNTY DEPT. OF PLANNING & ZONING

CHIEF, DEVELOPMENT ENGINEERING DIVISION — DATE 4/20/04

CHIEF, DIVISION OF LAND DEVELOPMENT — DATE 4/6/04

~~DIRECTOR~~ — ~~DATE~~

Date	No.	Revision Description
6-11-04	1	REVISED LOT NUMBERS

OWNER: NORTHRIDGE DEVELOPMENT. LLC
14045 GARED DRIVE
GLENWOOD, MD 21738

DEVELOPER: JAMES F. SELFRIDGE BUILDERS, INC.
14045 GARED DRIVE
GLENWOOD, MD 21738

DMW
Daft-McCune-Walker, Inc.
200 East Pennsylvania Avenue
Towson, Maryland 21286
(410) 296-3333
Fax 296-4705

A Team of Land Planners, Landscape Architects, Engineers, Surveyors & Environmental Professionals

3-25-04
Date

STATE OF MARYLAND — JOHN T. HANCOCK — REGISTERED — PROFESSIONAL ENGINEER

Professional Engr. No. 15551

SUBDIVISION NAME		SECTION/AREA		LOT/PARCEL #
FOX MEADOW		1		167
PLAT OR L/F	BLOCK #	ZONE	TAX/ZONE MAP	ELEC. DIST/PCT	CENSUS TRACT
5993/492	13, 19, 20	RR, RC	15	3	

TITLE
FOX MEADOW
(FORMERLY PFEFFERKORN PROPERTY)
MAINTENANCE OF TRAFFIC PLAN

Des By	PLH	Scale 1"=30'	Proj. No. 00042.B
Drn By	WDE	Date 1/7/04	5 OF 24
Chk By		Approved	

F-03-45

Wed Mar 24 14:07:34 2004 n:\00042\00042.mst

3/24/2004 2:07:27 PM \\ATENES\STATION\CADNET\NCOF\dag.dgf cr122 o:\hpm\00042.hpm

F-03-45

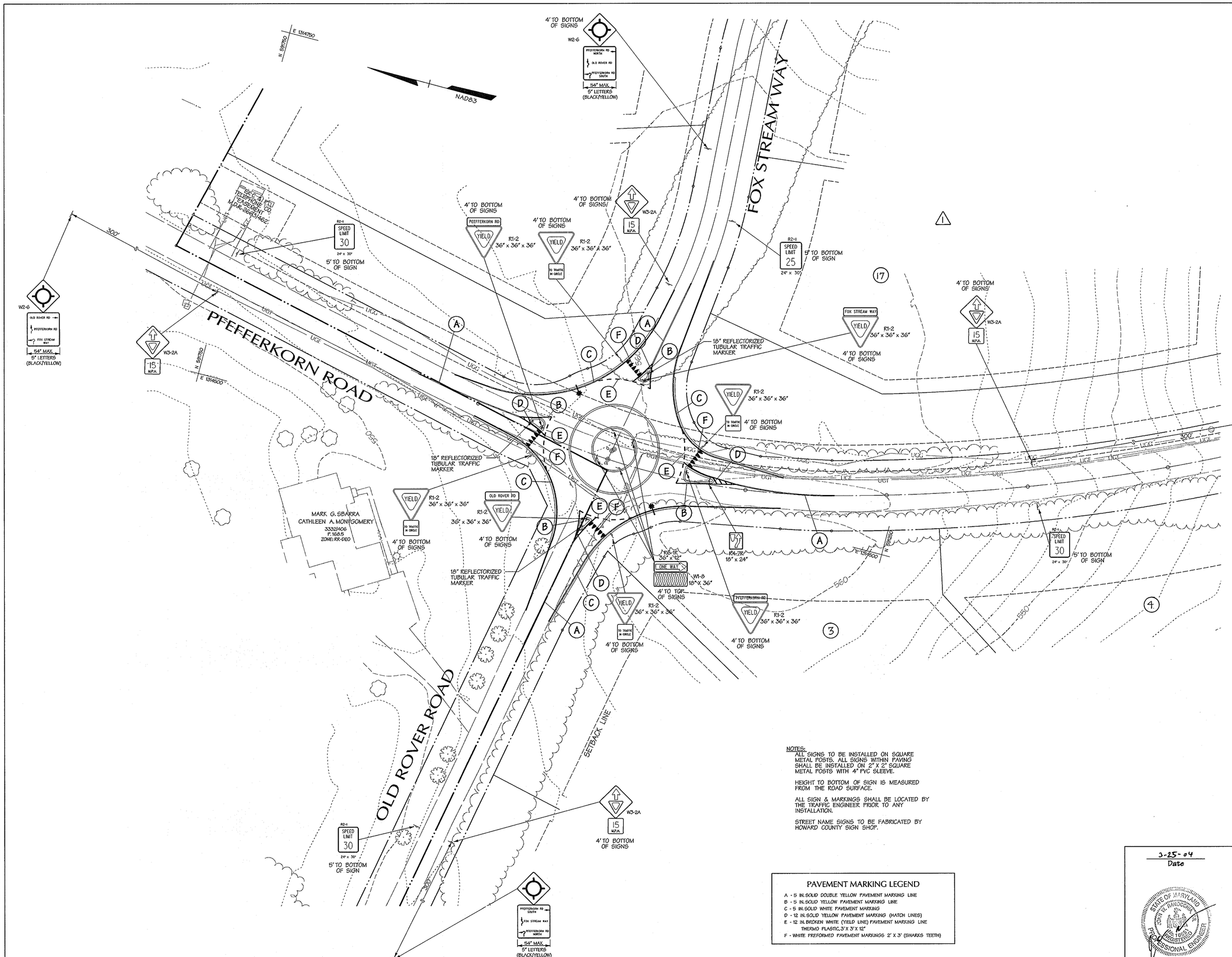

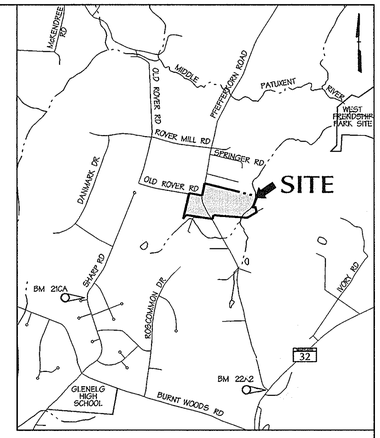

VICINITY MAP
SCALE: 1" = 2,000'

DATA SOURCES:

BOUNDARY PER DMW FIELD SURVEY DATED DECEMBER 2001.

TOPO FLOWN BY VIRGINIA RESOURCE MAPPING, DECEMBER, 2001.

APPROX. WETLAND LOCATION PER DMW FIELD VISIT DATED APRIL 2000. OFF SITE SEPTIC RESERVE AREAS PER RECORD PLATS, LOCATIONS OF WELLS NOT AVAILABLE.

NOTES:

ALL SIGNS TO BE INSTALLED ON SQUARE METAL POSTS. ALL SIGNS WITHIN PAVING SHALL BE INSTALLED ON 2" X 2" SQUARE METAL POSTS WITH 4" PVC SLEEVE.

HEIGHT TO BOTTOM OF SIGN IS MEASURED FROM THE ROAD SURFACE.

ALL SIGN & MARKINGS SHALL BE LOCATED BY THE TRAFFIC ENGINEER PRIOR TO ANY INSTALLATION.

STREET NAME SIGNS TO BE FABRICATED BY HOWARD COUNTY SIGN SHOP.

PAVEMENT MARKING LEGEND

A - 5 IN. SOLID DOUBLE YELLOW PAVEMENT MARKING LINE
B - 5 IN. SOLID YELLOW PAVEMENT MARKING LINE
C - 5 IN. SOLID WHITE PAVEMENT MARKING
D - 12 IN. SOLID YELLOW PAVEMENT MARKING (HATCH LINES)
E - 12 IN. BROKEN WHITE (YIELD LINE) PAVEMENT MARKING LINE THERMO PLASTIC, 3' X 3' X 12"
F - WHITE PREFORMED PAVEMENT MARKINGS 2' X 3' (SHARKS TEETH)

APPROVED: HOWARD COUNTY DEPARTMENT OF PUBLIC WORKS

CHIEF, BUREAU OF HIGHWAYS — DATE 4-13-04

APPROVED: HOWARD COUNTY DEPT. OF PLANNING & ZONING

CHIEF, DEVELOPMENT ENGINEERING DIVISION — DATE 4/28/04

CHIEF, DIVISION OF LAND DEVELOPMENT — DATE 4/29/04

Date	No.	Revision Description
6-11-04	1	REVISED LOT NUMBERS

OWNER: NORTHRIDGE DEVELOPMENT. LLC
14045 GARED DRIVE
GLENWOOD, MD 21738

DEVELOPER: JAMES F. SELFRIDGE BUILDERS, INC.
14045 GARED DRIVE
GLENWOOD, MD 21738

DMW
Daft·McCune·Walker, Inc.
200 East Pennsylvania Avenue
Towson, Maryland 21286
(410) 296-3333
Fax 296-4705
A Team of Land Planners, Landscape Architects, Engineers, Surveyors & Environmental Professionals

SUBDIVISION NAME			SECTION/AREA		LOT/PARCEL #
FOX MEADOW			1		167
PLAT# OR L/F	BLOCK #	ZONE	TAX/ZONE MAP	ELECT. DISTRICT	CENSUS TRACT
5963/492	13, 19, 20	RR, RC	15	3	

TITLE
FOX MEADOW
(FORMERLY PFEFFERKORN PROPERTY)
ROAD SIGNAGE AND PAVEMENT MARKING PLAN

Des By	PLH	Scale 1"=30'	Proj. No. 00042.B
Drn By	WDE	Date 1/7/04	4 OF 24
Chk By		Approved	

3-25-04
Date

STATE OF MARYLAND — PHILIP L. HOSKINSON — REGISTERED PROFESSIONAL ENGINEER

Professional Engr. No. 16551

F.03.45

Wed Mar 24 14:06:42 2004 n:\00042\000042-r4
3/24/2004 2:06:35 PM \\ATHENS\MSTATION\CADNET\NCF\daq.qef cr122i o:\hpm\00042.hpm

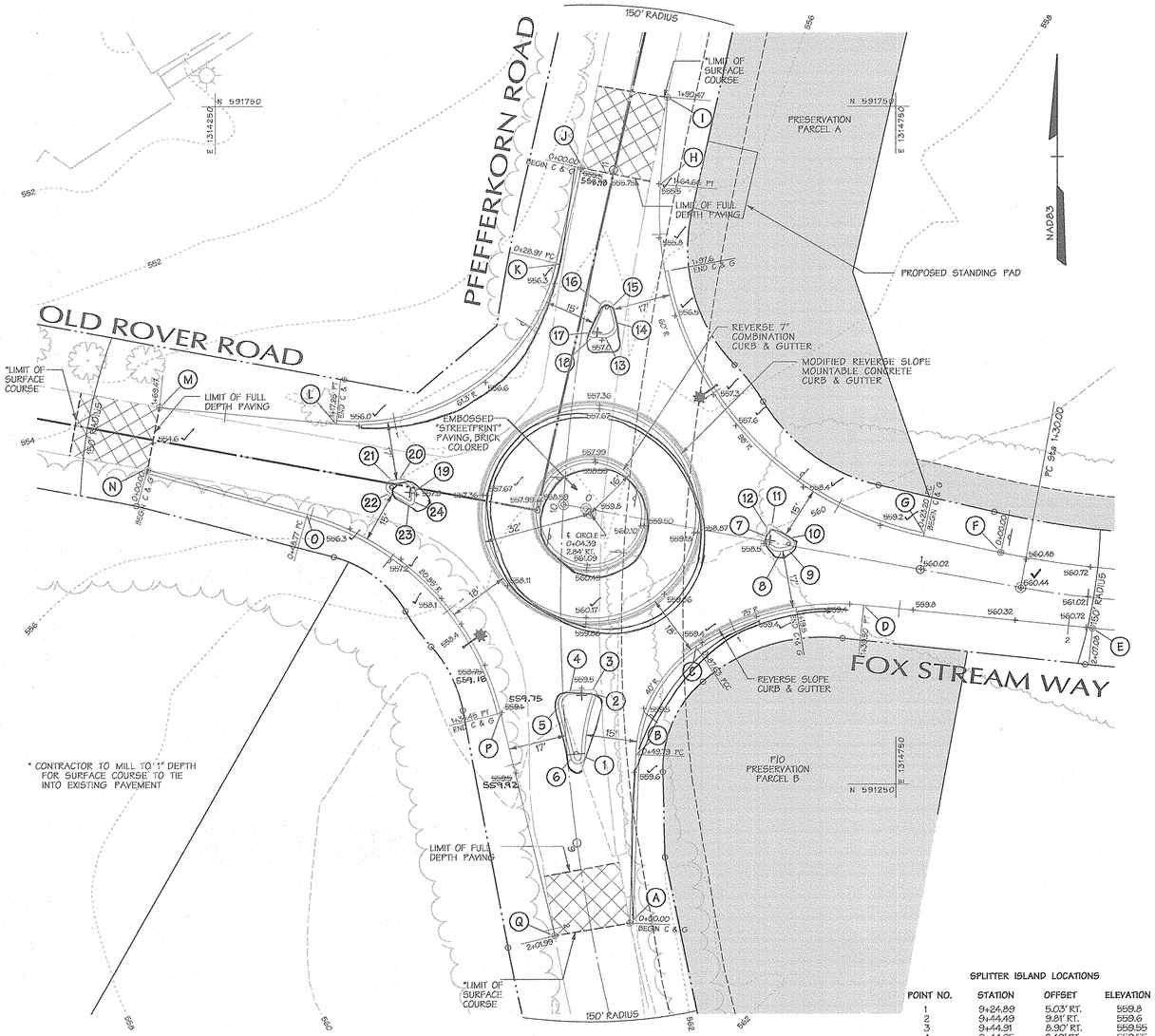

TRAFFIC CIRCLE DETAIL
SCALE: 1" = 20'

NOTE:
REMOVE TREES WITHIN RIGHT-OF-WAY AS DIRECTED BY THE HOWARD COUNTY TRAFFIC DIVISION FOR SIGHT DISTANCE, SIGNAGE, AND LIGHTING.

SPLITTER ISLAND LOCATIONS

POINT NO.	STATION	OFFSET	ELEVATION
1	9+24.89	5.03' RT.	559.8
2	9+44.49	9.81' RT.	559.6
3	9+44.91	8.30' RT.	559.55
4	9+44.95	2.49' RT.	559.55
5	9+40.21	1.49' LT.	559.6
6	9+24.84	1.07' RT.	559.8
7	0+53.58	1.51' LT.	558.6
8	0+58.98	2.03' RT.	558.6
9	0+60.90	1.34' RT.	558.8
10	0+60.96	2.42' LT.	558.8
11	0+54.80	5.03' LT.	558.6
12	0+53.39	4.02' LT.	558.55
13	10+50.54	6.42' RT.	556.8
14	10+56.33	9.68' RT.	556.6
15	10+60.37	7.85' RT.	556.4
16	10+58.91	4.05' RT.	556.4
17	10+51.45	1.39' RT.	556.6
18	10+50.15	3.08' RT.	556.8
19	10+00.61	43.67' LT.	556.9
20	10+04.40	48.56' LT.	556.8
21	10+03.96	50.75' LT.	556.6
22	10+00.53	51.21' LT.	556.6
23	9+97.71	45.30' LT.	556.8
24	9+98.45	43.84' LT.	556.9

EDGE ROAD/CURB LOCATIONS

POINT NO.	STATION	OFFSET
A	9+75.33	11.49' RT.
B	9+24.35	20.08' RT.
C	9+56.99	39.64' RT.
D	0+85.54	13.36' RT.
E	1+52.23	9.00' RT.
F	1+22.40	9.11' LT.
G	0+99.21	9.76' LT.
H	10+98.54	14.40' RT.
I	11+24.16	11.17' RT.
J	10+98.59	9.34' LT.
K	10+69.79	9.96' LT.
L	10+17.65	68.31' LT.
M	10+17.84	120.52' LT.
N	10+02.80	122.62' LT.
O	9+93.86	75.02' LT.
P	9+39.91	18.63' LT.
Q	8+74.21	10.84' LT.

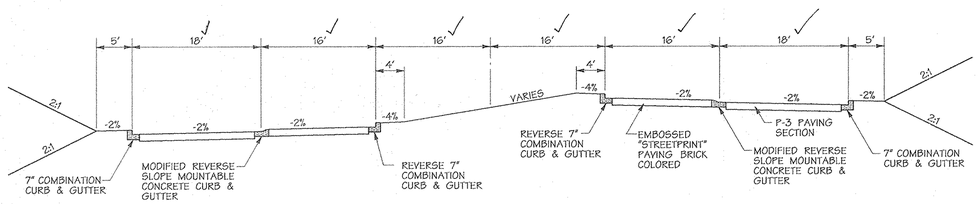

TYPICAL SECTION TRAFFIC CIRCLE
SCALE: 1" = 10'

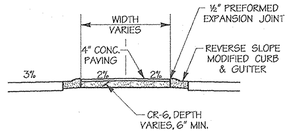

SPLITTER ISLAND DETAIL
SCALE: NONE

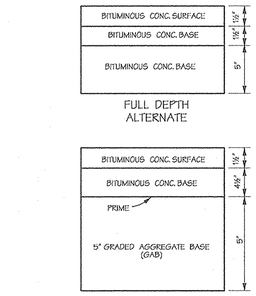

PAVING SECTION P-3 MINOR & MAJOR COLLECTORS
NO SCALE

STREET LIGHT LEGEND
250 WATT HIGH PRESSURE SODIUM (HPS) VAPOR, PENDANT (SAG) MOUNTED AT 30' ON A BRONZE FIBERGLASS POLE USING A 12' ARM

STREET LIGHT TABLE

DWG. No.	STREET NAME	STATION	OFF-SET	FIXTURE / POLE TYPE	COMMENTS
3	PFEFFERKORN ROAD	9+60	30' LT.	—☼	
3	PFEFFERKORN ROAD	10+41	38' RT.	—☼	

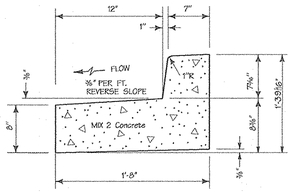

REVERSE 7" COMBINATION CURB & GUTTER
NO SCALE

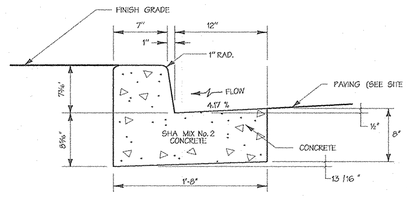

SECTION TYPE "A" CURB AND GUTTER
NO SCALE

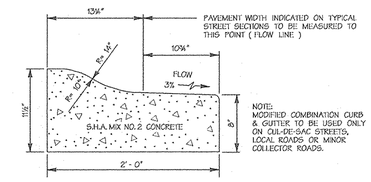

MODIFIED REVERSE SLOPE MOUNTABLE CONCRETE CURB & GUTTER
NO SCALE

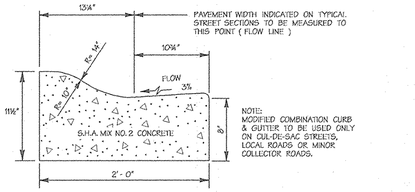

MODIFIED MOUNTABLE CONCRETE CURB & GUTTER
NO SCALE

APPROVED: HOWARD COUNTY DEPARTMENT OF PUBLIC WORKS

William F. Mackey Jr. — CHIEF, BUREAU OF HIGHWAYS — 4-13-04 DATE

APPROVED:

CHIEF, DEVELOPMENT ENGINEERING DIVISION — 4/29/04 DATE

CHIEF, DIVISION OF LAND DEVELOPMENT — 4/29/04 DATE

Date	No.	Revision Description
1-10-07	1	REVISED PER AS-BUILT CONDITIONS

OWNER: NORTHRIDGE DEVELOPMENT. LLC
14045 GARED DRIVE
GLENWOOD, MD 21738

DEVELOPER: JAMES F. SELFRIDGE BUILDERS, INC.
14045 GARED DRIVE
GLENWOOD, MD 21738

DMW
Daft·McCune·Walker, Inc.
200 East Pennsylvania Avenue
Towson, Maryland 21286
(410) 296-3333
Fax 296-4705

A Team of Land Planners, Landscape Architects, Engineers, Surveyors & Environmental Professionals

SUBDIVISION NAME		SECTION/AREA		LOT/PARCEL
FOX MEADOW		1		167
PLAT OR L/F	BLOCK	ZONE	TAX/ZONE MAP	ELEC. DISTRICT	CENSUS TRACT
5983/492	13, 19, 20	RR, RC	15	3	

TITLE
FOX MEADOW
(FORMERLY PFEFFERKORN PROPERTY)
Final Plan
Roundabout Details

Des By	DFM	Scale AS SHOWN	Proj. No. 00042.B
Drn By	WDE	Date 1/7/04	3 OF 24
Chk By		Approved	

3-25-04 Date

Professional Engr. No. 10551

AS-BUILT 1-16-07

F.03.45

Wed Mar 24 15:28:53 2004 n:\00042\00042r2

3/24/2004 3:29:45 PM \\ATTENS\MSTATION\CADNET\NCF\daq.ncf cr122 e:\hpm\00042.hpm

F.03.45

SBARRA MARK G
MONTGOMERY CATHLEEN A J/T
3332/ 406
P.168.5
ZONE: RR-DEO

OLD ROVER ROAD
LOCAL ROAD

PFEFFERKORN ROAD
LOCAL ROAD - SCENIC

FOX STREAM WAY
LOCAL ROAD

SEE SHEETS 3 & 4 OF 24 FOR TRAFFIC CIRCLE DETAIL AND ADDITIONAL SIGNAGE

PROPOSED STANDING PAD (15' X 20' X 4" (MIN.) CONCRETE)

REVERSE SLOPE MODIFIED MOUNTABLE CURB & GUTTER

℄ SWALE TO BE STABILIZED WITH EROSION CONTROL MATTING (SEE GRADING PLAN)

PROPOSED 8' PUBLIC TREE MAINTENANCE EASEMENT

8' PUBLIC TREE MAINTENANCE EASEMENT

BEGIN CURB & GUTTER NOSE DOWN CURB

END CURB & GUTTER NOSE DOWN CURB

PROP. STD. CURB & GUTTER

PUBLIC STORM DRAIN & UTILITY EASEMENT

PROPOSED 22' ACCESS & PUBLIC UTILITY EASEMENT

RESURFACING

P/O PRESERVATION PARCEL B

OPEN SPACE

SEE SHEET 10 FOR CONTINUATION OF STORM DRAIN

S 16°06'46" E 1509.75'

NOTE:
SEE LANDSCAPE PLAN SHEET 17 FOR STREET TREES.

NOTE:
FOX STREAM WAY TO BE CONSTRUCTED PER THE TYPICAL SECTION (OPEN SECTION). THE CUL DE SAC WILL BE CLOSED SECTION (STD. CURB AND GUTTER).

STA. 6+96.9
17' L.T.
I-2 TOP ELEV. 532.93
THROAT ELEV. 531.93
INV. OUT ELEV. 528.43

STA. 1+55.94 L.P.
I-1 TOP ELEV. 527.26
INV. IN ELEV. 520.86
INV. OUT ELEV. 520.56

I-3 TOP ELEV. 518.55
INV. IN ELEV. 513.20
INV. OUT ELEV. 513.15

N 591,237.31
E 1,316,324.30

1.137 AC.

CURVE NO.	DELTA	RADIUS	LENGTH	TANGENT	CHORD	
1	14°07'10"	280.00'	69.00'	34.68'	S 86°43'11" E	68.83'
2	29°13'15"	200.00'	102.00'	52.13'	S 79°10'08" E	100.90'
3	26°59'49"	296.00'	139.00'	70.81'	S 78°03'26" E	137.72'
4	260°01'06"	40.00'	181.53'	-1.00'	S 38°27'13" W	61.28'
5	80°01'06"	35.00'	48.88'	29.38'	N 51°32'47" W	45.00'

APPROVED: HOWARD COUNTY DEPARTMENT OF PUBLIC WORKS

CHIEF, BUREAU OF HIGHWAYS — DATE 4-13-04

APPROVED: HOWARD COUNTY DEPT. OF PLANNING & ZONING

CHIEF, DEVELOPMENT ENGINEERING DIVISION — DATE 4/28/04

CHIEF, DIVISION OF LAND DEVELOPMENT — DATE 4/27/04

AS-BUILT 1-16-07

Date	No.	Revision Description
1-12-07	2	REVISED PER AS-BUILT CONDITIONS
6-11-04	1	REVISED LOT NUMBERS

OWNER: NORTHRIDGE DEVELOPMENT. LLC
14045 GARED DRIVE
GLENWOOD, MD 21738

DEVELOPER: JAMES F. SELFRIDGE BUILDERS, INC.
14045 GARED DRIVE
GLENWOOD, MD 21738

DMW
Dash-McCune-Walker, Inc.
200 East Pennsylvania Avenue
Towson, Maryland 21286
(410) 296-3333
Fax 296-4705

A Team of Land Planners, Landscape Architects, Engineers, Surveyors & Environmental Professionals

3-25-04
Date

Professional Engr. No. 10557

SUBDIVISION NAME		SECTION/AREA		LOT/PARCEL
FOX MEADOW		1		167
PLAT OR L/F	BLOCK	ZONE	TAX/ZONE MAP	ELECT. DISTRICT	CENSUS TRACT
5983/492	13, 19, 20	RR, RC	15	3	

TITLE
FOX MEADOW
(FORMERLY PFEFFERKORN PROPERTY)
Final Road Plan and Profile
Fox Stream Way

Des By	DFM	Scale 1"=50'	Proj. No. 00042.B
Drn By	WDE	Date 1/7/04	2 OF 24
Chk By		Approved	

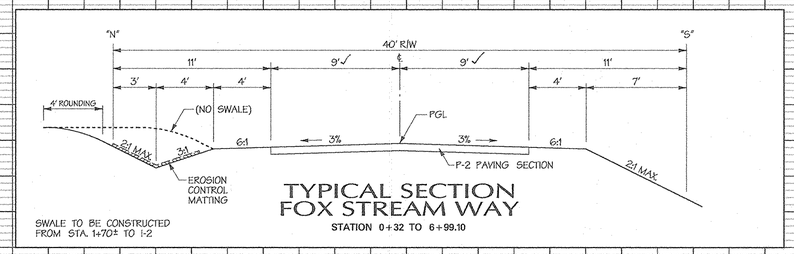

TYPICAL SECTION
FOX STREAM WAY
STATION 0+32 TO 6+99.10

SWALE TO BE CONSTRUCTED FROM STA. 1+70± TO 1-2

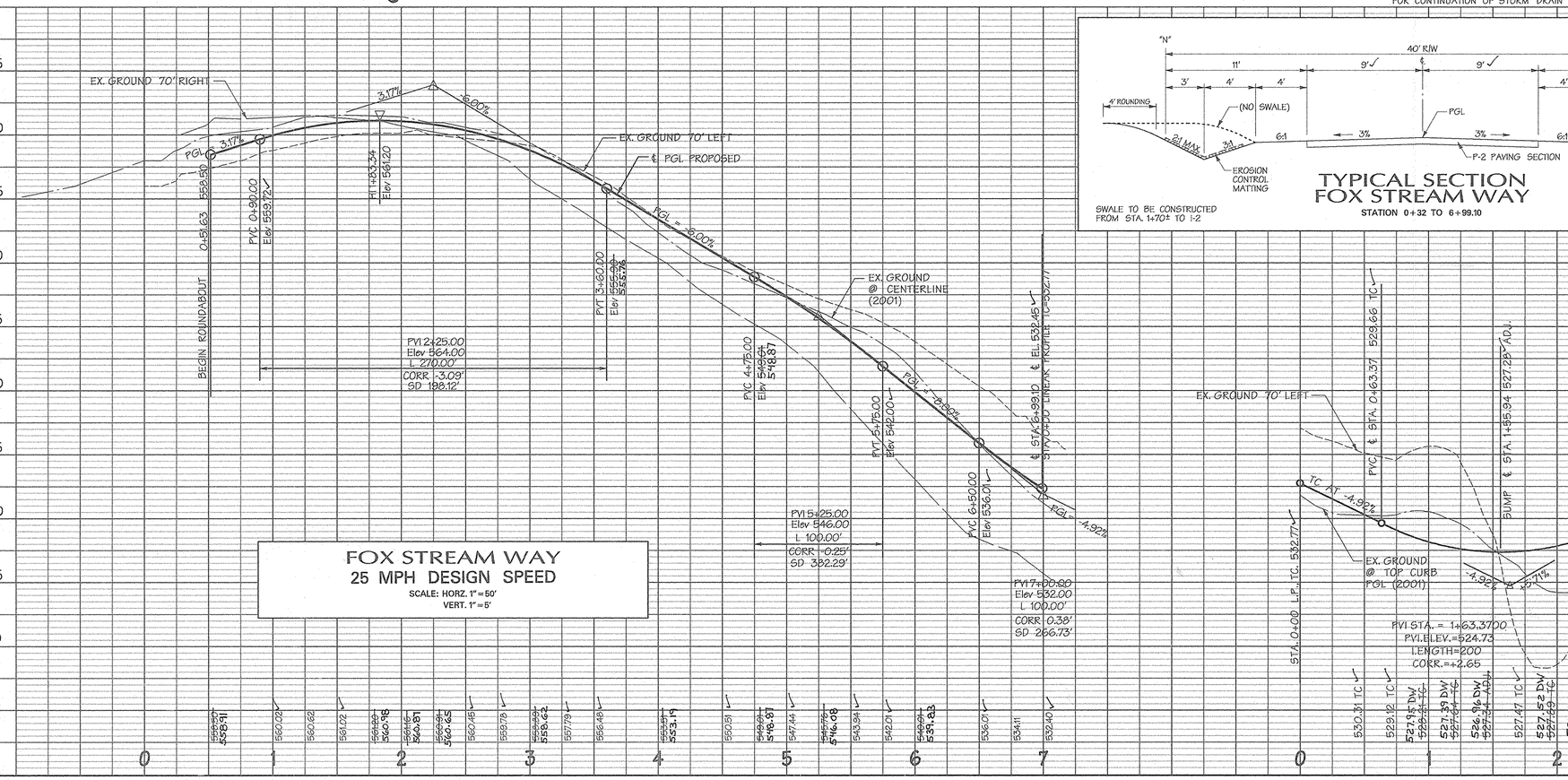

FOX STREAM WAY
25 MPH DESIGN SPEED
SCALE: HORZ. 1"=50'
VERT. 1"=5'

LINEAR PROFILE
FOX STREAM WAY CUL-DE-SAC
SCALE: HORZ. 1"=50'
VERT. 1"=5'

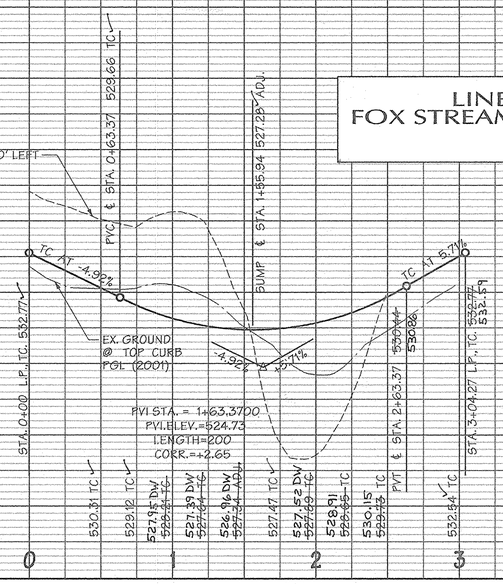

Wed Mar 24 15:28:55 2004 n:\00042\00042r1

Wed Mar 24 15:28:57 2004 n:\00042\00042r1

F.03.45

3/24/2004 3:28:52 PM \\ATKENS\MSTATION\CADNET\NCDF\daugaf_cr122i.plt\hpm\00042.hpm

F.03.45

Final Plan
for
Fox Meadow
(Formerly Pfefferkorn Property)

Howard County Maryland

Legend

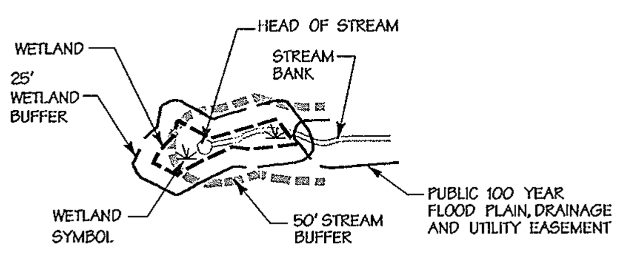

EX. CURB & GUTTER
EX. MAJOR CONTOURS — 400
EX. MINOR CONTOURS — 402
PROP. STORM DRAIN — 15" RCCP CL. IV
EX. STORM DRAIN — EX. 21" RCP
UTILITY EASEMENTS
LIMIT OF DISTURBANCE
PROPOSED SHADE TREE
PROPOSED FLOWERING TREE
PROPOSED EVERGREEN TREE
PROPOSED STREET TREE
SOIL LABEL — M1C2
SOIL BOUNDARY
SLOPES >25%
SLOPES 15%-25%
EX. FOREST EDGE
SCRUB/SHRUB; HEDGEROW OR TREE GROUP
PROPOSED WOODS EDGE
NON-WOODY VEGETATION BUFFER
FOREST CONSERVATION EASEMENT LINE
REFORESTATION AREA
EARTH/DIVERSION DIKE
SILT FENCE — SF
SUPER SILT FENCE — SSF
CLEAN WATER DIVERSION PIPE
LIMIT OF DISTURBANCE — LOD
MOUNTABLE BERM
CURB INLET PROTECTION — CIP
AT GRADE INLET PROTECTION — AGIP
STABILIZED CONSTRUCTION ENTRANCE — SCE
PERMANENT SWALE
PROPOSED SWM EASEMENT
PROPERTY LINE
ROADWAY RIGHT-OF-WAY
PROPOSED LOT LINE
EXISTING CONDITION DRAINAGE AREA TO TRAPS AND BASINS
INTERIM CONDITION DRAINAGE AREAS
PROPOSED CONDITION DRAINAGE AREAS
EXISTING CONDITION Tc PATH
PROPOSED CONDITION Tc PATH
SOIL BORING — B-10
100 YR. FLOODPLAIN

RIGHT-OF-WAY ELEVATION CHART NAD 83

R/W POINT NO.	DECRIPTION	ELEVATION
200	REBAR & CAP	551.93'
207	REBAR & CAP	556.10'
208	REBAR & CAP	558.04'
209	REBAR & CAP	558.57'
210	REBAR & CAP	560.45'
211	REBAR & CAP	559.69'
212	REBAR & CAP	559.38'
38	REBAR & CAP	552.79'
772	REBAR & CAP	532.48'
774	REBAR & CAP	530.45'
216	CONC. MON	560.88'
217	REBAR & CAP	560.49'
218	REBAR & CAP	561.42'
13	REBAR & CAP	562.73'
12	REBAR & CAP	537.28'
11	REBAR & CAP	536.06'
8	REBAR & CAP	536.82
7	REBAR & CAP	537.65'
205	REBAR & CAP	558.51'
206	REBAR & CAP	554.99'
204	REBAR & CAP	559.52'
203	REBAR & CAP	560.22'
202	REBAR & CAP	560.69'
201	REBAR & CAP	562.13'
6	REBAR & CAP	561.77'
214	REBAR & CAP	561.31'
213	REBAR & CAP	560.98'
22	REBAR & CAP	544.79'
23	REBAR & CAP	533.74'
29	REBAR & CAP	551.45'
30	REBAR & CAP	557.33'
20	REBAR & CAP	558.16'
28	REBAR & CAP	546.07'
27	REBAR & CAP	534.11'
26	REBAR & CAP	530.75'
21	REBAR & CAP	552.24'
215	REBAR & CAP	561.05

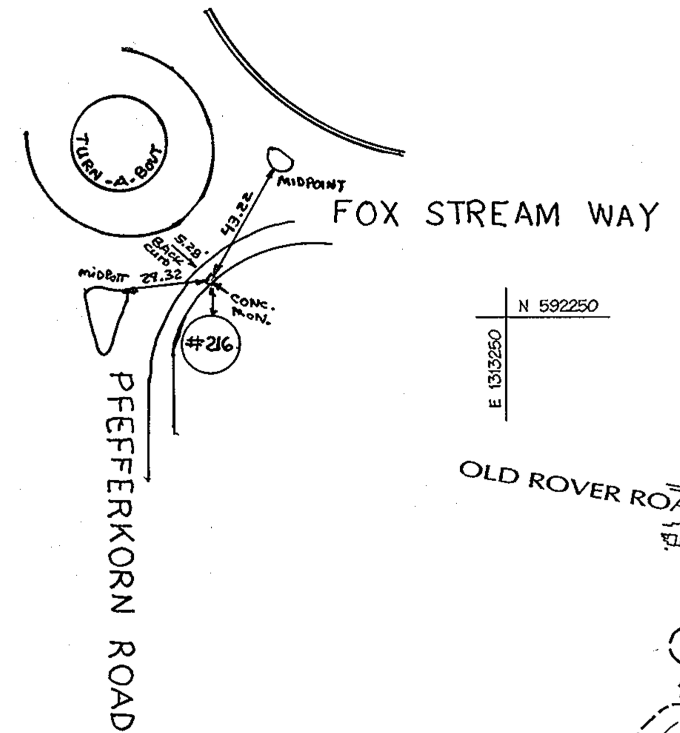

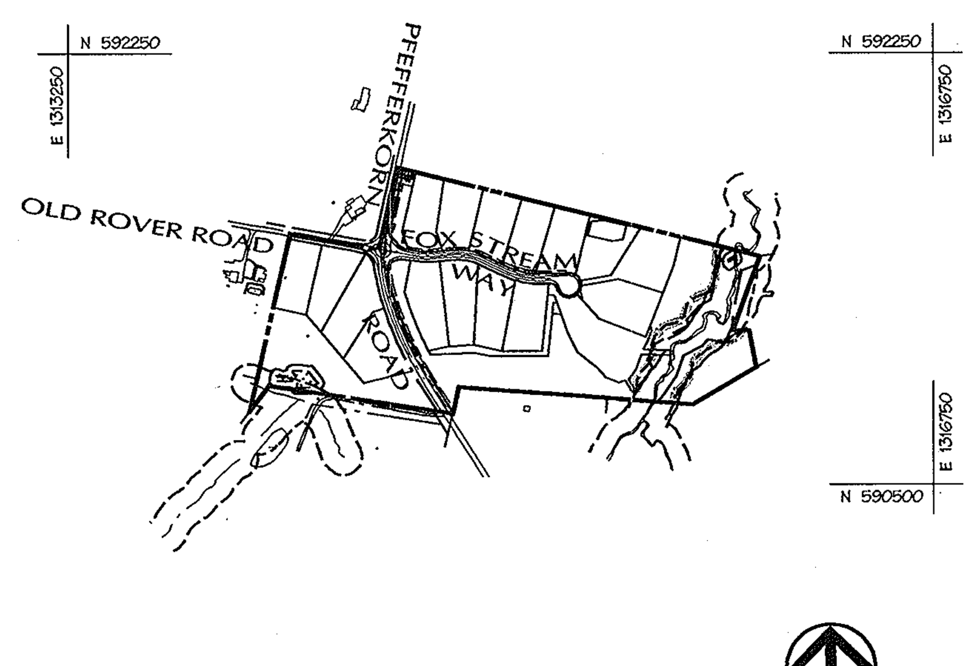

Overall Property Outline
Scale: 1"=600'

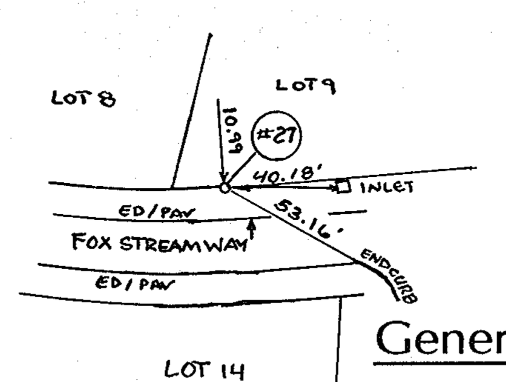

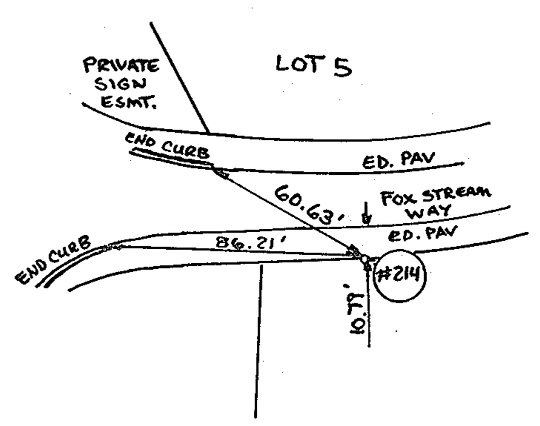

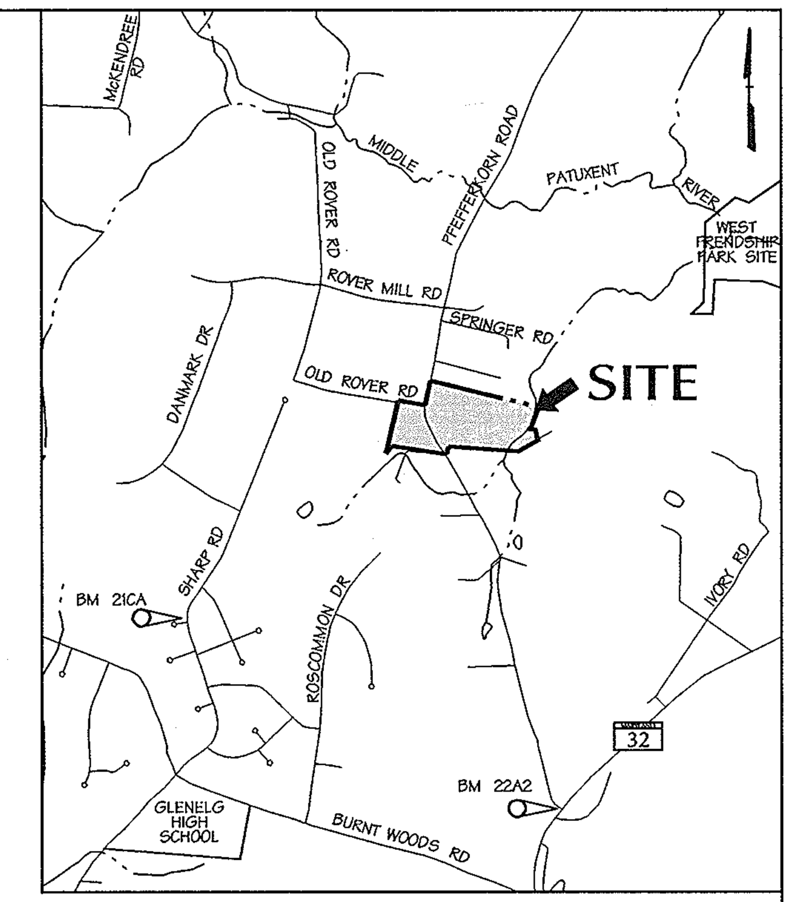

VICINITY MAP
SCALE: 1" = 2,000'

Benchmark
Description

21CA - Standard Howard County stamped disk set in a concrete monument northwest of the intersection of Sharp Road and Our Mile Court.
Elev.- 612.65 ft.

22A2 - Standard Howard County stamped disk set in a concrete monument southwest of the intersection of Maryland Route 32 and Pfefferkorn Road.
Elev. - 620.18 ft.

Sheet Index

SHEET	DESCRIPTION
1	COVER SHEET
2	FINAL ROAD PLAN & PROFILE - FOX STREAM WAY
3	ROAD DETAILS
4	ROAD SIGNAGE AND PAVEMENT MARKING PLAN
5	TRAFFIC CONTROL PLAN
6	TRAFFIC CONTROL PLAN
7	DRAINAGE AREA MAP
8	STORM DRAIN PROFILE
9	SEDIMENT AND EROSION CONTROL PLAN
10	SEDIMENT AND EROSION CONTROL DETAILS
11	SEDIMENT AND EROSION CONTROL SPECIFICATIONS
12	DRAINAGE AREA MAP - SWM EXISTING CONDITIONS
13	DRAINAGE AREA MAP - SWM PROPOSED CONDITIONS
14	STORMWATER MANAGEMENT PLAN
15	STORMWATER MANAGEMENT PROFILES
16	STORMWATER MANAGEMENT - FACILITY 2 PLAN & DETAIL
17	STORMWATER MANAGEMENT DETAILS
18	STORMWATER MANAGEMENT SPECIFICATIONS
19	FOREST CONSERVATION PLAN
20	FOREST CONSERVATION PLAN
21	FOREST CONSERVATION NOTES AND DETAILS
22	STREET TREE & SWM POND PLANTING PLAN
23	PERIMETER LANDSCAPE PLAN
24	LANDSCAPE NOTES AND DETAILS

DATA SOURCES:
BOUNDARY PER DMW FIELD SURVEY DATED DECEMBER 2001.
TOPO FLOWN BY VIRGINIA RESOURCE MAPPING, DECEMBER, 2001.
APPROX. WETLAND LOCATION PER DMW FIELD VISIT DATED APRIL 2000. OFF SITE SEPTIC RESERVE AREAS PER RECORD PLATS, LOCATIONS OF WELLS NOT AVAILABLE.

General Notes

1. All construction shall be in accordance with the latest standards and specifications of Howard County plus MSHA standards and specifications if applicable.

2. The contractor shall notify the Department of Public Works/Bureau of Engineering/Construction Inspection division at 410-313-1880 at least five (5) working days prior to the start of work.

3. The contractor shall notify "Miss Utility" at 1-800-257-7777 at least 48 hours prior to any excavation work being done.

4. Traffic control devices, markings and signing shall be in accordance with the latest edition of the Manual of Uniform Traffic Control Devices (MUTCD). All street and regulatory signs be in place prior to the placement of any asphalt.

5. All plan dimensions are to face of curb unless otherwise noted.

6. The existing topography is taken from aerial survey with 2' contour intervals prepared by Virginia Resources Mapping, dated December 2001.

7. The coordinates shown hereon are based upon the Howard County Geodetic Control which is based upon the Maryland State Plane Coordinate System. Howard County Monument Nos. 21CA and 22A2 were used for this project.

8. Water is private

9. Sewer is private

10. Water quality is met by micro pool, bioretention and natural area conservation credits. Recharge is met by a grass swales along the proposed road along the south edge of lots 11-14 and behind Lots 1 and 16. Channel protection volume is met by extended detention of the 1-year storm in the swm facilities and by natural area conservation credits.

11. The floodplain study for this project was prepared by Daft-McCune-Walker, Inc., dated March 2002, and was approved in June 2002.

12. The wetlands delineation study for this project was prepared by Daft-McCune-Walker, Inc.

13. The traffic study was prepared by Wells & Associates, and was approved on October 2, 2000.

14. Project background information:

Subdivision Name: Fox Meadow
Tax Map: 15
Lot./Parcel: 167
Zoning: RR & RC
Election District: 3rd
Total Tract Area: 32.2± acres
Preliminary Plan Approval Date : OCTOBER 2, 2002
File Number: P-02-13, S-00-16

15. Street light placement and the type of fixture and pole shall be in accordance with the Howard County Design Manual, Volume III (1993) and as modified by "Guidelines for Street Lights in Residential Developments (June 1993)." A minimum spacing of 20' shall be maintained between lights and any tree.

16. Street trees shall be planted at least 5' from any inlet structure.

17. Storm water management facilities to be owned by the Home Owners Association (HOA)(PARCEL C). FACILITY ON(PARCEL B) TO BE PUBLIC.

18. Maintenance Responsibility, routine and non-routine schedule are shown on sheet 19 of 24. The SWM facilities are be jointly maintained by Howard Co. and the HOA - routine maintenance by HOA and non-routine by Howard County.

19. 95% compaction in fill area will be in accordance with AASHTO - T180.

20. Development of the Fox Meadow community under the current Forest Conservation Act proposes the retention of approximately 4.17 acres of forest and the clearing of approximately 1.84 acres of forest generating a reforestation obligation of 3.68 acres to be satisfied on-site.

21. A Landscape Surety in the amount of $43,350.00 will be posted as part of the Developer's Agreement. A forest conservation surety in the amount of $110,604.00 will be posted as part of the Developer's Agreement. A Street Tree Surety in the amount of $4,950 will be posted as part of the Developer's Agreement.

22. This project is subject to the 4th edition Subdivision Regulations and the Zoning Regulations amendments effective 1-8-02.

~~23. The developer shall enter into an agreement with Howard County for the construction of the traffic circle on Pfefferkorn Road in accordance with J-4134 Developer/County shared improvements and also be compatible with the B-3836 Pfefferkorn Road bridge project.~~

24. A fee-in-lieu of construction of the APFO required road improvements in the amount of $55,000 shall be paid by the developer to the Department of Public Works, Real Estate Division prior to or concurrent with the submission of the Developers Agreement at Final Plan.

25. The outfall from the stormwater management facility is a necessary disturbance to the floodplain/stream buffer.

26. The MDE permit number is 200360320.

AS-BUILT 1-16-07

NORTH

TRACKING No. 200360320

3-25-04
Date

Professional Engr. No. 10551

APPROVED: HOWARD COUNTY DEPARTMENT OF PUBLIC WORKS

CHIEF, BUREAU OF HIGHWAYS — 4/13/04 DATE

APPROVED: HOWARD COUNTY DEPT. OF PLANNING & ZONING

CHIEF, DEVELOPMENT ENGINEERING DIVISION — 4/28/04 DATE

CHIEF, DIVISION OF LAND DEVELOPMENT — 4/29/04 DATE

Date	No.	Revision Description
1-12-07	1	REVISE PER AS-BUILT CONDITIONS

OWNER: NORTHRIDGE DEVELOPMENT. LLC
14045 GARED DRIVE
GLENWOOD, MD 21738

DEVELOPER: JAMES F. SELFRIDGE BUILDERS, INC.
14045 GARED DRIVE
GLENWOOD, MD 21738

DMW
Daft·McCune·Walker, Inc.
200 East Pennsylvania Avenue
Towson, Maryland 21286
(410) 296-3333
Fax 296-4705

A Team of Land Planners, Landscape Architects, Engineers, Surveyors & Environmental Professionals

SUBDIVISION NAME	SECTION/AREA	LOT/PARCEL #
FOX MEADOW	1	167

PLAT# OR L/F	BLOCK #	ZONE	TAX/ZONE MAP	ELECT. DISTRICT	CENSUS TRACT
5983/492	13, 19, 20	RR, RC	15	3	

TITLE FOX MEADOW
(FORMERLY PFEFFERKORN PROPERTY)
COVER SHEET

Des By	Scale 1"=600'	Proj. No. 00042.B
Drn By KDE	Date 1/7/04	1 OF 24
Chk By	Approved	

F.03.45

Thu Mar 25 10:47:04 2004 n:\00042\00042.tel

3/25/2004 10:46:54 AM \\ATHENS\MSTATION\CADNETN\OCF\day.ocf cr1z21 c:\hpm\00042.hpm

F.03.45