Final Plan
for
Emerson
(Formerly the Key Property)
Section 3, Area 1
Parcels A - I

Howard County Maryland

General Notes

1. All construction shall be in accordance with the latest standards and specifications of Howard County plus MSHA standards and specifications if applicable.

2. The contractor shall notify the Department of Public Works/Bureau of Engineering/Construction Inspection division at 410-313-1880 at least five (5) working days prior to the start of work.

3. The contractor shall notify "Miss Utility" at 1-800-257-7777 at least 48 hours prior to any excavation work being done.

4. Traffic control devices, markings and signing shall be in accordance with the latest edition of the Manual of Uniform Traffic Control Devices (MUTCD). All street and regulatory signs be in place prior to the placement of any asphalt.

5. All plan dimensions are to face of curb unless otherwise noted.

6. The existing topography is taken from aerial survey with 2' contour intervals prepared by Air Survey Corporation dated 1998.

7. The coordinates shown hereon are based upon the Howard County Geodetic Control which is based upon the Maryland State Plane Coordinate System. Howard County Monument Nos. 47E4 and 47G2 were used for this project.

8. Water is public, contract no. 24-4024-D, drainage area.

9. Sewer is public, contract no. 24-4024-D, drainage area.

10. Stormwater Management for this project will be addressed with the installation of 2 Stormwater Management Facilities which will control the runoff per the latest approved Design Standards.

11. Existing utilities are based on Construction Plans and field verified structures.

12. The floodplain study for this project was prepared by Daft-McCune-Walker, Inc., dated June 12, 2001, and was approved in September 2001.

13. The wetlands delineation study for this project was prepared by Daft-McCune-Walker, Inc., dated September 1998, and was approved by the U.S. Army Corps of Engineers on December 19, 2001.

14. The traffic study for this project was prepared by Wells and Associates, and was approved on February 1, 2002.

15. Project background information:

Subdivision Name: Emerson Section 3, Area 1
Tax Map: 47
Lot./Parcel: P/O: P.837
Zoning: PEC - MXD -3
Election District: 6th
Total Tract Area: 64.915± acres
Preliminary Plan Approval Date: November 30, 2001
Open Space Lots: 2
File Numbers: P-01-25; S-99-12; PB 339; ZB 979 M, PB-359

16. Street light placement and the type of fixture and pole shall be in accordance with the Howard County Design Manual, Volume III (1993) and as modified by "Guidelines for Street Lights in Residential Developments (June 1993)." A minimum spacing of 20' shall be maintained between lights and any tree.

17. Sidewalk ramps shall meet current ADA requirements.

18. Street trees shall be planted at least 5' from any inlet structure.

19. Storm water management facilities to be owned by the Property Owners Association (POA). Maintenance Responsibility, routine and non-routine schedule is shown on sheet 21.

20. Development of Emerson Section 3, Area 1 under the current Forest Conservation Act requires the clearing of approximately 26.94 forested acres and the retention of 23.96 acres of forest on the net tract. When evaluated cumulatively with previous phases of the project, no reforestation is required. Cumulative forest clearing totals 39.47 acres, cumulative retention is 45.83 acres, and cumulative reforestation provided is 5.03 acres.

21. "Stormwater quality and quantity management, per 2101 Howard County SWM Design Manual, is provided for roads and future development of parcels in the regional pond facilities. Recharge is provided for roads via a grass swale. The development parcels will have to provide their own recharge requirements, with the exception of a portion of Parcel C, which will be able to utilize the grass swale."

22. OPERATION AND MAINTENANCE SCHEDULE FOR PRIVATELY OWNED AND JOINTLY MAINTAINED STORMWATER MANAGEMENT PONDS
ROUTINE MAINTENANCE BY HOA
A. FACILITY SHALL BE INSPECTED ANNUALLY AND AFTER MAJOR STORMS, INSPECTIONS SHALL BE PERFORMED DURING WET WEATHER TO DETERMINE IF THE POND IS FUNCTIONING PROPERLY.
B. TOP AND SIDE SLOPES OF THE EMBANKMENT SHALL BE MOWED A MINIMUM OF TWO (2) TIMES PER YEAR, ONCE IN JUNE AND ONCE IN SEPTEMBER, OTHER SIDE SLOPES AND MAINTENANCE ACCESS SHALL BE MOWED AS NEEDED.
C. DEBRIS AND LITTER SHALL BE REMOVED DURING REGULAR MOWING OPERATIONS AND AS NEEDED.
D. VISIBLE SIGNS OF EROSION IN THE POND AS WELL AS RIP-RAP OR GABION OUTLET AREA SHALL BE REPAIRED AS SOON AS IT IS NOTICED.

NON-ROUTINE MAINTENANCE BY HOWARD COUNTY.
A. STRUCTURAL COMPONENTS OF THE POND SUCH AS THE DAM, RISER AND THE PIPES SHALL BE REPAIRED UPON THE DETECTION OF ANY DAMAGE. THE COMPONENTS SHALL BE INSPECTED DURING ROUTINE MAINTENANCE OPERATIONS.
B. SEDIMENT SHALL BE REMOVED FROM THE POND AND FOREBAY NO LATER THAN WHEN THE CAPACITY OF THE POND OR FOREBAY IS HALF FULL OF SEDIMENT OR WHEN DEEMED NECESSARY FOR AESTHETIC REASONS UPON APPROVAL FROM THE DEPARTMENT OF PUBLIC WORKS.

⚠1 23. A VARIANCE (RESOLUTION NO. 118-2011) PURSUANT TO SECTIONS 16.301 AND 16.200(a) OF THE HOWARD COUNTY CODE WAS GRANTED ON JULY 28, 2011 FOR GOVERNMENT USES FROM THE STRUCTURE AND USE SETBACK FOR A FENCE.

Sheet Index

SHEET	DESCRIPTION
1	COVER SHEET
2	ROAD CONSTRUCTION PLAN - STERLING DRIVE ℄ STA. 19+84.95 - 26+00
3	ROAD CONSTRUCTION PLAN - STERLING DRIVE ℄ STA. 26+00 - 32+00.95
4	ROAD CONSTRUCTION DETAILS
5	DRAINAGE AREA MAP
6	STORM DRAIN PROFILES
7	SEDIMENT & EROSION CONTROL DRAINAGE AREA MAP
8	FINAL PLAN GRADING & SEDIMENT EROSION CONTROL
9	FINAL PLAN GRADING & SEDIMENT EROSION CONTROL
10	FINAL PLAN GRADING & SEDIMENT EROSION CONTROL
11	FINAL PLAN GRADING & SEDIMENT EROSION CONTROL DETAILS
12	FINAL PLAN GRADING & SEDIMENT EROSION CONTROL DETAILS
13	FINAL PLAN GRADING & SEDIMENT EROSION CONTROL DETAILS
14	FINAL PLAN GRADING & SEDIMENT EROSION CONTROL DETAILS
15	STORMWATER MANAGEMENT DRAINAGE AREA MAP
16	STORMWATER MANAGEMENT POND PLAN VIEWS
17	STORMWATER MANAGEMENT PROFILES FOR SWM I
18	STORMWATER MANAGEMENT PROFILES FOR SWM II
19	STORMWATER MANAGEMENT DETAILS SWM I
20	STORMWATER MANAGEMENT DETAILS SWM II
21	STORMWATER MANAGEMENT SPECIFICATIONS & DETAILS
22	STORMWATER MANAGEMENT BORING LOGS
23	FINAL PLAN - FOREST CONSERVATION PLAN
24	FINAL PLAN - FOREST CONSERVATION PLAN
25	FINAL PLAN - FOREST CONSERVATION PLAN
26	FINAL PLAN - FOREST CONSERVATION PLAN
27	FINAL PLAN - FOREST CONSERVATION PLAN
28	FINAL PLAN - FOREST CONSERVATION NOTES AND DETAILS
29	FINAL PLAN - LANDSCAPE PLAN
30	FINAL PLAN - LANDSCAPE AND WATER QUALITY NOTES AND DETAILS
31	STORMWATER POND LANDSCAPING & WATER QUALITY PLANTING

⚠1 31A FENCE LAYOUT PLAN
31B SITE DETAILS
31C SITE DETAILS
31D SITE DETAILS

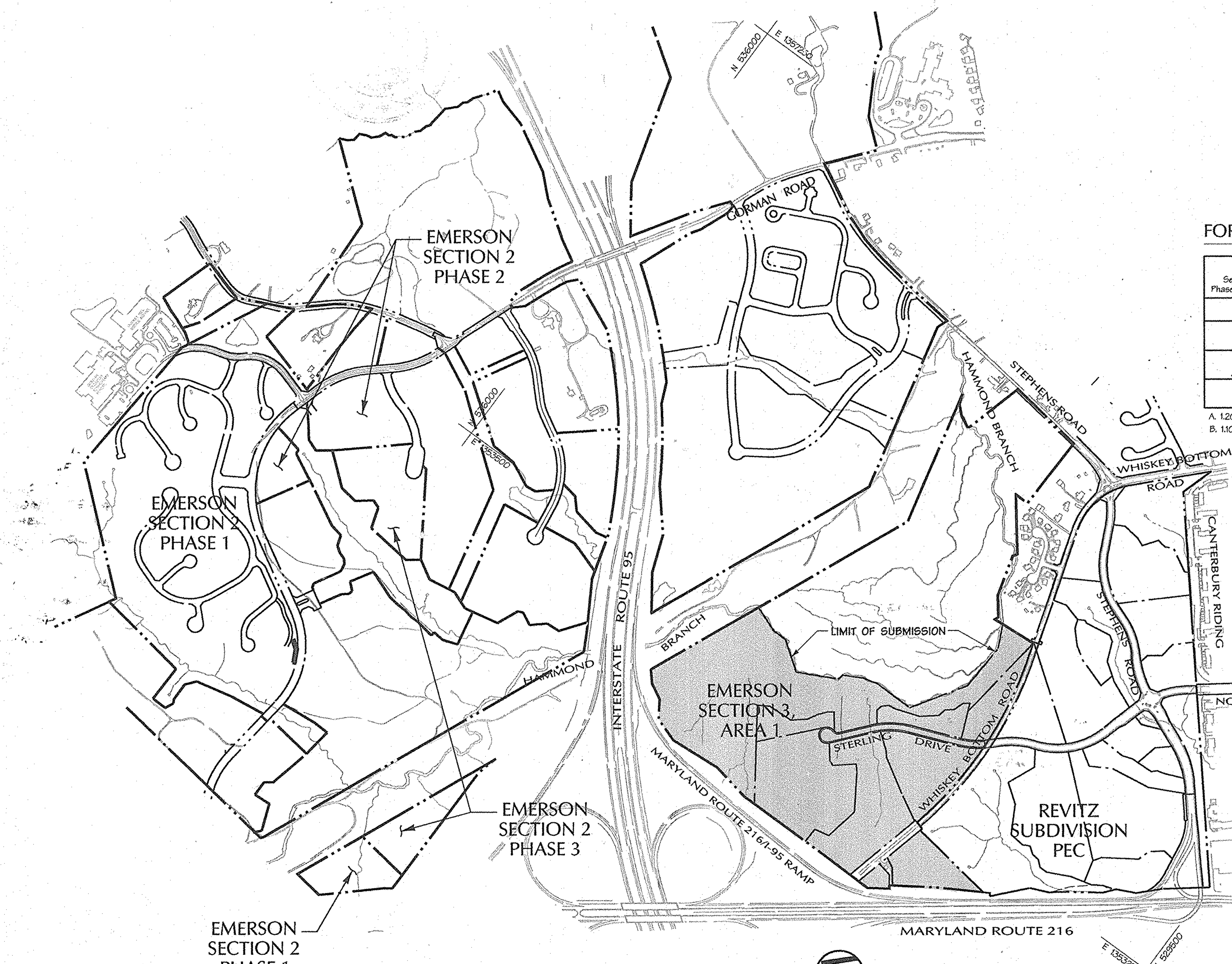

Overall Property Outline
Scale: 1"=600'

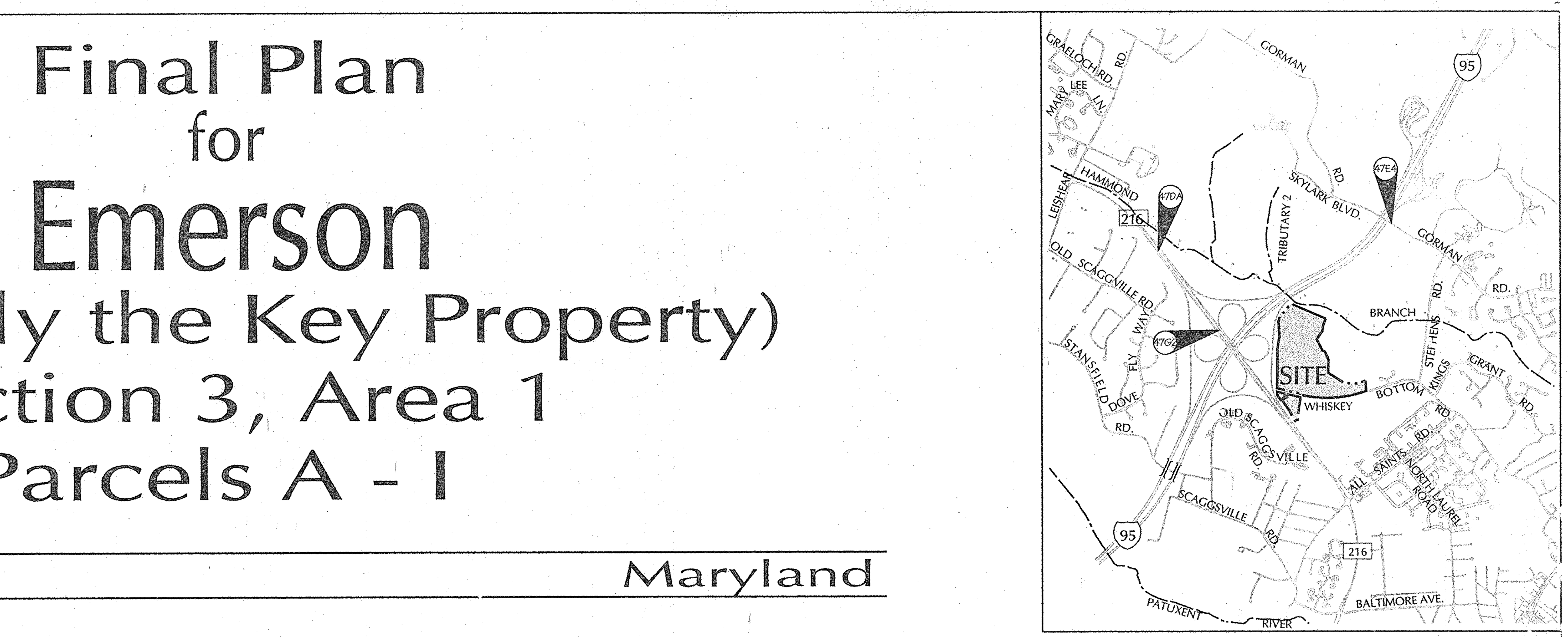

NORTH

Vicinity Map
SCALE: 1"=2000'

BENCHMARK

DESCRIPTION

COORDINATES IN MARYLAND NAD83(91) (HORIZONTAL) AND NGVD29 (VERTICAL) DATUMS.

47DA NORTHING: 163191.9104
EASTING: 4112865759
ELEVATION: 315.905 ft.

47G2 NORTHING: 162440.1212
EASTING: 4118539279
ELEVATION: 364.210ft.

47E4 NORTHING: 163326.2295
EASTING: 413136.2550
ELEVATION: 338.909ft.

FOREST CONSERVATION TRACKING CHART

Section/ Phase Number	Gross Area	Floodplain/Ex. Sewer Easement	Net Tract Area	Ex. Forest Area	Forest Cleared	Forest Retained	Reforest./Affor. Required	Reforest./Affor. Provided	Excess Reforest./Affor.	Future Forest Clearing	Future Refor./Affor.	Comments
2.1	106.20	3.50	102.70	24.70	7.93	16.77	0.61	5.03	4.42	4.48	3.41	
2.2	118.90	3.50	115.40	24.80	8.03	16.77	2.95	5.03	2.08	3.28	3.41	SEE NOTE 'A'
2.3	137.35	4.00	133.35	34.40	12.53	21.87	1.27	5.03	3.76	2.18	3.91	SEE NOTE 'B'
3.1	206.85	21.19	185.66	85.30	39.47	45.83	0.00	5.03	5.03	2.18	3.91	

A. 1.20± ACRES OF FUTURE FOREST CLEARING SHOWN ON F-01-137 WAS CLEARED FOR SWM ON OPEN SPACE LOT 174.
B. 1.10± ACRES OF FUTURE FOREST CLEARING SHOWN ON F-01-137 WAS CLEARED FOR SWM ON OPEN SPACE LOT 176.

⚠1 THE PURPOSE OF REVISION #1 IS:
1. SHOW THE PROPOSED EMERSON CAMPUS SECURITY FENCE.
2. ADD ADDITIONAL DRAWING SHEETS ASSOCIATED WITH THE PROPOSED EMERSON CAMPUS SECURITY FENCE.

⚠1 PROFESSIONAL CERTIFICATION REVISION #1
I HEREBY CERTIFY THAT THESE DOCUMENTS WERE PREPARED OR APPROVED BY ME, AND THAT I AM A DULY LICENSED PROFESSIONAL ENGINEER UNDER THE LAWS OF THE STATE OF MARYLAND, LICENSE NO. 45292
EXPIRATION DATE: 05/21/2016

APPROVED: HOWARD COUNTY DEPT. OF PUBLIC WORKS
CHIEF, BUREAU OF HIGHWAYS HS — DATE 11-25-02

APPROVED: HOWARD COUNTY DEPT. OF PLANNING AND ZONING
CHIEF, DIVISION OF LAND DEVELOPMENT HB — DATE 12/6/02
CHIEF, DEVELOPMENT ENGINEERING DIVISION MK — DATE 12/2/02

Date	No.	Revision Description
10/1/14	⚠1	CAMPUS PERIMETER SECURITY FENCE

FOR REVISION ⚠1
STATE OF MARYLAND ROBERT A. CROWLEY PROFESSIONAL ENGINEER 45292
10-1-2014

STATE OF MARYLAND RICHARD F. LANE No. 301 REGISTERED PROPERTY LINE SURVEYOR

9/25/02
Date

ROAD & STORM DRAIN ASBUILT

Professional Engr. No. 10551

EMERSON
(Formerly the Key Property)
Section 3, Area 1
Parcels A – I

OWNER /DEVELOPER:

THE HOWARD RESEARCH & DEVELOPMENT CORPORATION
10275 LITTLE PATUXENT PARKWAY
COLUMBIA, MARYLAND 21044

DMW
Daft·McCune·Walker, Inc.
200 East Pennsylvania Avenue
Towson, Maryland 21286
(410) 296-3333
Fax 296-4705

A Team of Land Planners, Landscape Architects, Engineers, Surveyors & Environmental Professionals

TITLE
COVER SHEET

Des By	RBW	Scale	1" = 600'	Proj. No.	01011.00
Drn By	WDE	Date	9-25-02	1 OF 31	
Chk By		Approved			

F-02-131

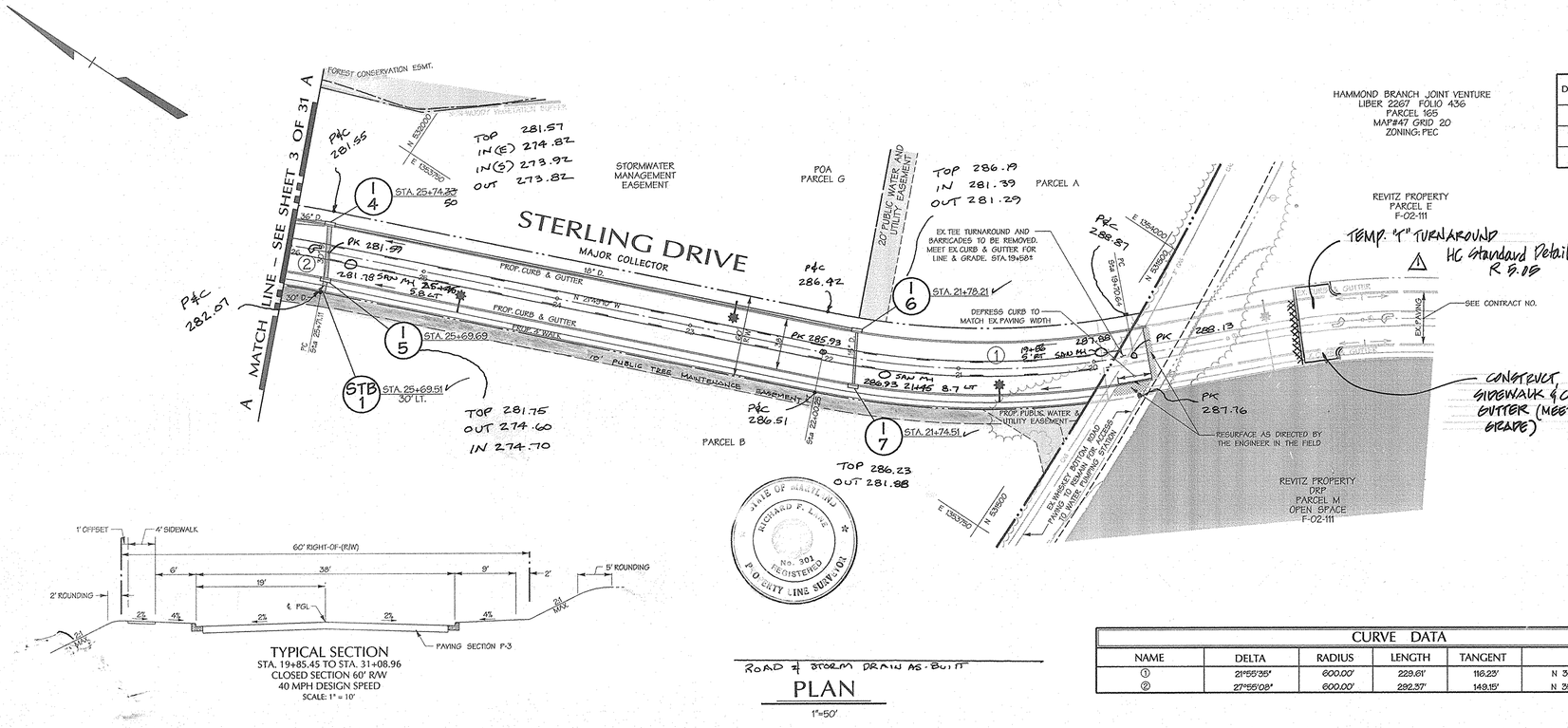

STREET LIGHT LEGEND

✱ 250 WATT HIGH PRESSURE SODIUM (HPS) VAPOR, PENDANT (SAG) MOUNTED AT 30' ON A BRONZE FIBERGLASS POLE USING A 12' ARM

STREET LIGHT TABLE

DWG. No.	STREET NAME	STATION	OFF-SET	FIXTURE / POLE TYPE	COMMENTS
	STERLING DRIVE	20+70	24' LT	✱	
	STERLING DRIVE	22+70	24' RT	✱	
	STERLING DRIVE	24+70	24' LT	✱	

Legend

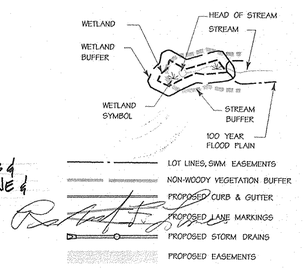

TYPICAL SECTION
STA. 19+85.45 TO STA. 31+08.96
CLOSED SECTION 60' R/W
40 MPH DESIGN SPEED
SCALE: 1" = 10'

ROAD & STORM DRAIN AS-BUILT

PLAN

1"=50'

CURVE DATA

NAME	DELTA	RADIUS	LENGTH	TANGENT	CHORD	
①	21°55'25"	600.00'	229.61'	116.23'	N 32°46'57" W	228.21'
②	27°55'08"	600.00'	292.37'	149.15'	N 35°46'43" W	289.48'

APPROVED: HOWARD COUNTY DEPT. OF PUBLIC WORKS

CHIEF, BUREAU OF HIGHWAYS — DATE 11-15-02

APPROVED: HOWARD COUNTY DEPT. OF PLANNING AND ZONING

CHIEF, DIVISION OF LAND DEVELOPMENT — DATE 12/6/02

CHIEF, DEVELOPMENT ENGINEERING DIVISION — DATE 12/2/02

Date	No.	Revision Description
9/12/03	⚠	ADD "T" TURNAROUND

EMERSON
(Formerly the Key Property)
Section 3, Area 1
Parcels A – I

OWNER /DEVELOPER:

THE HOWARD RESEARCH & DEVELOPMENT CORPORATION
10275 LITTLE PATUXENT PARKWAY
COLUMBIA, MARYLAND 21044

DMW
Daft-McCune-Walker, Inc.
200 East Pennsylvania Avenue
Towson, Maryland 21286
(410) 296-3333
Fax 296-4705

A Team of Land Planners, Landscape Architects, Engineers, Surveyors & Environmental Professionals

F-02-131

9/25/02
Date

Professional Engr. No. 10551

AREA

TAX MAP 47 PARCEL 837
6th ELECTION DISTRICT OF HOWARD COUNTY, MARYLAND

TITLE

FINAL PLAN
ROAD CONSTRUCTION PLAN
STERLING DRIVE

Des By	DFM	Scale	1" = 50'	Proj. No.	01011.CO
Drn By	WDE	Date	9/25/02		
Chk By		Approved			2 OF 31

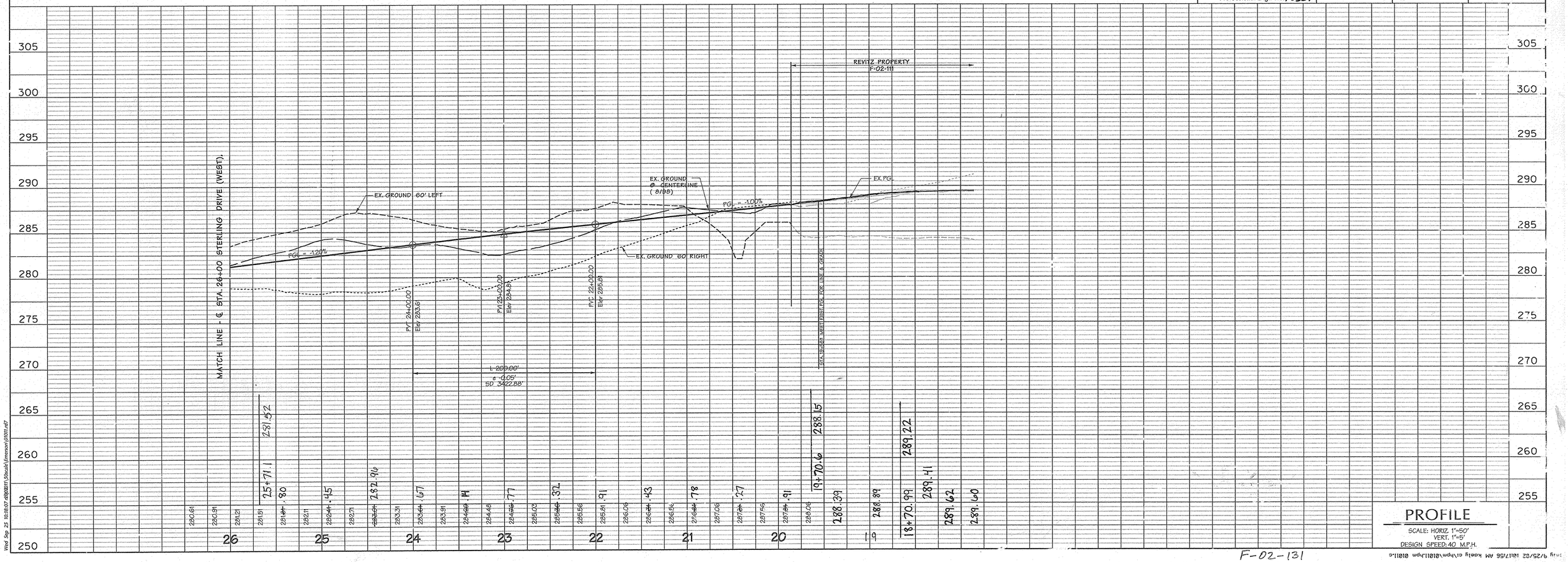

PROFILE

SCALE: HORIZ. 1"=50'
VERT. 1"=5'
DESIGN SPEED: 40 M.P.H.

F-02-131

Wed Sep 25 10:18:07 #8080\1 Stacie\Emerson\01011.mif
Thursday, 9/25/02 10:17:58 AM Kaelly c:\hpm\01011.hpm 01011.c

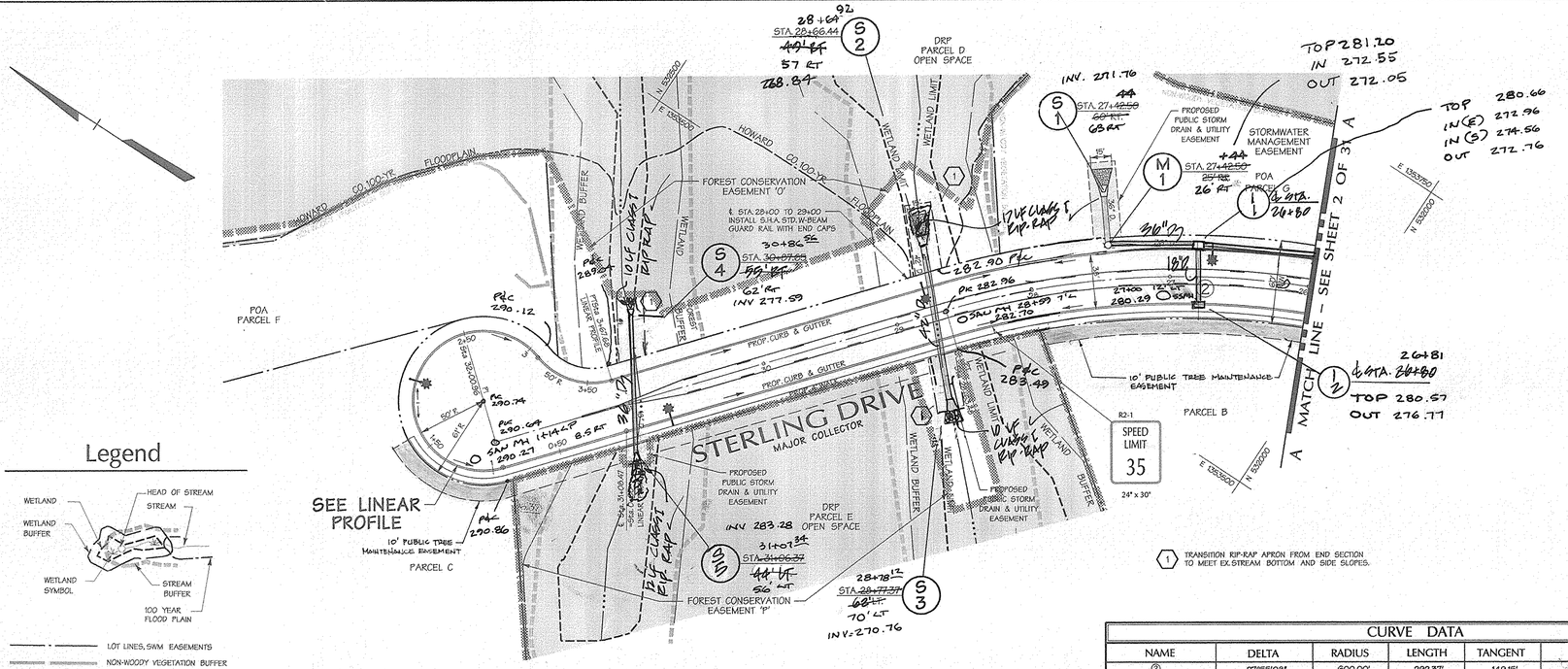

PLAN

1"=50'

Legend

- LOT LINES, SWM EASEMENTS
- NON-WOODY VEGETATION BUFFER
- PROPOSED CURB & GUTTER
- PROPOSED LANE MARKINGS
- PROPOSED STORM DRAINS
- PROPOSED EASEMENTS

(1) TRANSITION RIP-RAP APRON FROM END SECTION TO MEET EX. STREAM BOTTOM AND SIDE SLOPES.

CURVE DATA

NAME	DELTA	RADIUS	LENGTH	TANGENT	CHORD
②	27°55'08"	600.00'	292.57'	149.15'	N 35°46'43" W 289.68'

STREET LIGHT LEGEND

✱ 250 WATT HIGH PRESSURE SODIUM (HPS) VAPOR, PENDANT (SAG) MOUNTED AT 30'ON A BRONZE FIBERGLASS POLE USING A 12' ARM

STREET LIGHT TABLE

DWG. No.	STREET NAME	STATION	OFF-SET	FIXTURE / POLE TYPE	COMMENTS
	STERLING DRIVE	26+70	24' RT	✱	
	STERLING DRIVE	28+75	24' RT	✱	
	STERLING DRIVE	30+75	24' LT	✱	
	STERLING DRIVE	2+00 LP	5' LT/FC	✱	

STATE OF MARYLAND · RICHARD F. LANE · No. 201 · REGISTERED · PROPERTY LINE SURVEYOR

ROAD & STORM DRAIN AS-BUILT

F-02-131

10/2/02 Date

Professional Engr. No. 10551

APPROVED: HOWARD COUNTY DEPT. OF PUBLIC WORKS

CHIEF, BUREAU OF HIGHWAYS — DATE 11-25-02

APPROVED: HOWARD COUNTY DEPT. OF PLANNING AND ZONING

CHIEF, DIVISION OF LAND DEVELOPMENT — DATE 12/6/02

CHIEF, DEVELOPMENT ENGINEERING DIVISION — DATE 12/6/02

Date	No.	Revision Description
5/9/03	1	REVISE PROFILE AND STORM DRAINS S-3, S-4, ADD S-5, ELIMINATE I-3

EMERSON
(Formerly the Key Property)
Section 3, Area 1
Parcels A – I

OWNER /DEVELOPER:

THE HOWARD RESEARCH & DEVELOPMENT CORPORATION
10275 LITTLE PATUXENT PARKWAY
COLUMBIA, MARYLAND 21044

DMW
Daft-McCune-Walker, Inc.
200 East Pennsylvania Avenue
Towson, Maryland 21286
(410) 296-3333
Fax 296-4705

A Team of Land Planners, Landscape Architects, Engineers, Surveyors & Environmental Professionals

AREA

TAX MAP 47 PARCEL 837
6th ELECTION DISTRICT OF HOWARD COUNTY, MARYLAND

TITLE

FINAL PLAN
ROAD CONSTRUCTION PLAN
STERLING DRIVE

Des By	DFM	Scale	1"=50'	Proj. No.	01011.C0
Drn By	WDE	Date	9/25/02		3 OF 31
Chk By		Approved			

LINEAR PROFILE

SCALE: HORIZ. 1"=50'
VERT. 1"=5'

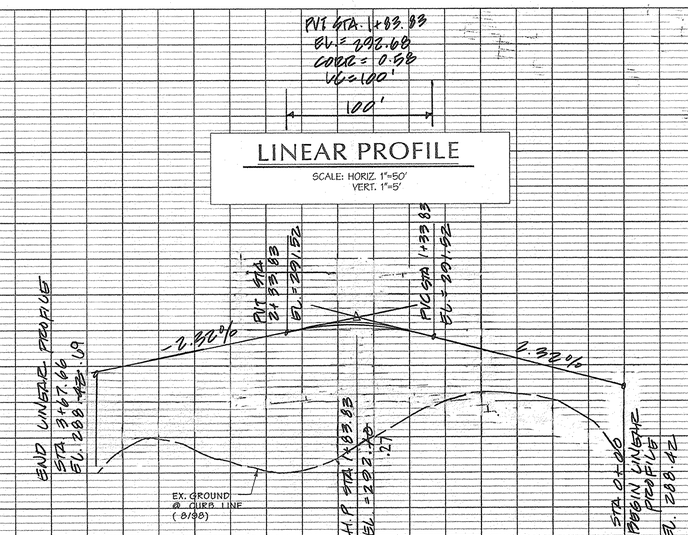

PROFILE

SCALE: HORIZ. 1"=50'
VERT. 1"=5'
DESIGN SPEED: 40 M.P.H.

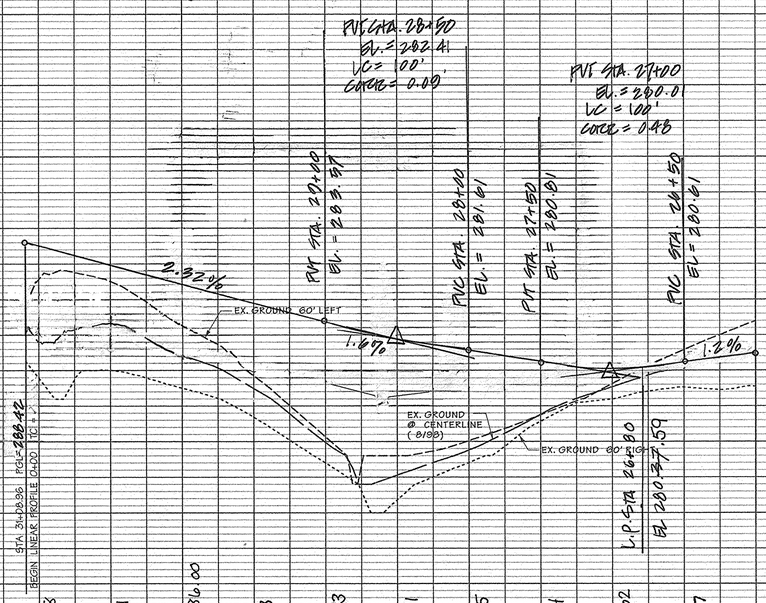

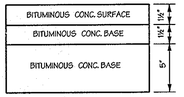

FULL DEPTH
ALTERNATE

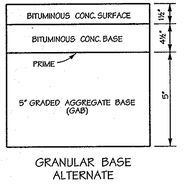

GRANULAR BASE
ALTERNATE

PAVING SECTION P-3
MINOR & MAJOR COLLECTORS

NO SCALE

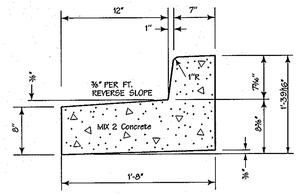

REVERSE 7" COMBINATION
CURB & GUTTER

NO SCALE

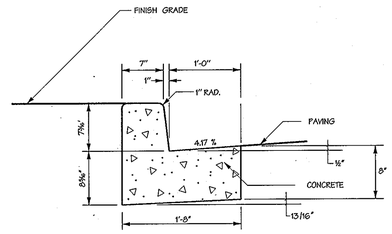

SECTION

TYPE "A" CURB AND GUTTER

NO SCALE

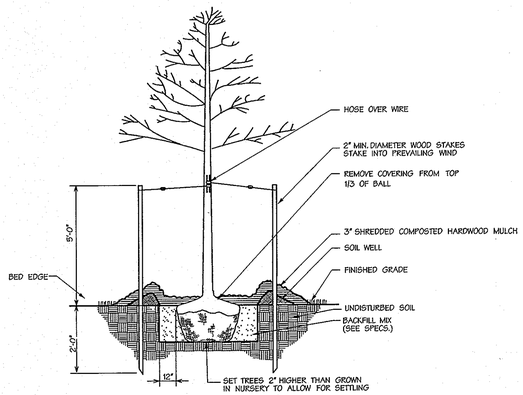

DECIDUOUS TREE DETAIL

(TO 3" CALIPER)

APPROVED: HOWARD COUNTY DEPT. OF PUBLIC WORKS

CHIEF, BUREAU OF HIGHWAYS HS — DATE 11-25-02

APPROVED: HOWARD COUNTY DEPT. OF PLANNING AND ZONING

CHIEF, DIVISION OF LAND DEVELOPMENT HB — DATE 12/6/02

CHIEF, DEVELOPMENT ENGINEERING DIVISION MK — DATE 12/2/02

Date	No.	Revision Description

EMERSON
(Formerly the Key Property)
Section 3, Area 1
Parcels A – I

OWNER /DEVELOPER:

THE HOWARD RESEARCH & DEVELOPMENT CORPORATION
10275 LITTLE PATUXENT PARKWAY
COLUMBIA, MARYLAND 21044

DMW
Daft·McCune·Walker, Inc.
200 East Pennsylvania Avenue
Towson, Maryland 21286
(410) 296-3333
Fax 296-4705

A Team of Land Planners, Landscape Architects, Engineers, Surveyors & Environmental Professionals

9/25/02
Date

PROFESSIONAL ENGINEER
STEVEN W. DAFT
No. 10551
STATE OF MARYLAND

Professional Engr. No. 10551

F-02-131

TITLE

FINAL PLAN
ROAD CONSTRUCTION DETAILS

Des By	RBW	Scale	AS SHOWN	Proj. No.	01011.C0
Drn By	WDE	Date	9/25/02		
Chk By		Approved			4 OF 31

Wed S : 2S:0S:00 2002\01011\Engineering\Roads\Details\01011D20.dgn

FOREST CONSERVATION EASEMENT 'O'

FOREST CONSERVATION EASEMENT 'P'

FOREST CONSERVATION EASEMENT 'Q'

FOREST CONSERVATION EASEMENT 'R'

DRP PARCEL D OPEN SPACE

DRP PARCEL E OPEN SPACE

PARCEL A

PARCEL B

PARCEL C

PARCEL H

PARCEL I

EMERSON 3/1 F-01-25

STERLING DRIVE

WHISKEY BOTTOM ROAD TO BE ABANDONED AND CONSOLIDATED WITH REVITZ PARCEL E

EX ROAD TO REMAIN

STATE ROUTE 32 - THE PARKWAY

SWM POND 1

SWM POND 2

POA PARCEL 1

STREAM

STREAM BUFFER

WETLAND

100 YR FLOOD PLAIN

50'

90'

N 532,950

N 532,750

A=0.48ac. EH C=0.20 SIMP=0

A=12.91ac. EK C=0.26 SIMP=5

A=5.84ac. EC C=0.87 SIMP=69

A=0.36ac. 0.23 PAV ED C=0.68 SIMP=64

A=0.81ac. 0.33 PAV EF C=0.55 SIMP=47

A=0.23ac. 0.18 PAV EE C=0.91 SIMP=82

A=0.33ac. 0.18 PAV EB C=0.61 SIMP=35

A=0.33ac. 0.09 PAV EA C=0.76 SIMP=76

A=0.16ac. EG C=0.76 SIMP=76

Vicinity Map

SCALE: 1"=2000'

SKYLARK BLVD., TRIBUTARY 2, 95, GORMAN RD., BRANCH, STEPHENS, RINGS, GRANT RD., SITE, WHISKEY BOTTOM RD., OLD SCAGGSVILLE RD., ALL SAINTS, NORTH LAUREL ROAD, SCAGGSVILLE RD., 216

Legend

240	EXISTING CONTOUR
240 / 15" D	PROPOSED POND CONTOUR / PROPOSED STORMDRAIN
	PROPOSED DRAINAGE AREA LIMIT
A=0.45ac. BA C=0.78 SIMP=100	PROPOSED DRAINAGE AREA LABEL
I/28	PROPOSED STORMDRAIN CALL OUT LABEL

APPROVED: HOWARD COUNTY DEPT. OF PUBLIC WORKS

CHIEF, BUREAU OF HIGHWAYS — DATE 11-25-02

APPROVED: HOWARD COUNTY DEPT. OF PLANNING AND ZONING

CHIEF, DIVISION OF LAND DEVELOPMENT — DATE 12/6/02

CHIEF, DEVELOPMENT ENGINEERING DIVISION — DATE 12/2/02

Date	No.	Revision Description

EMERSON

(Formerly the Key Property)
Section 3, Area 1
Parcels A – I

OWNER /DEVELOPER:

THE HOWARD RESEARCH & DEVELOPMENT CORPORATION
10275 LITTLE PATUXENT PARKWAY
COLUMBIA, MARYLAND 21044

DMW
Daft-McCune-Walker, Inc.
200 East Pennsylvania Avenue
Towson, Maryland 21286
(410) 296-3333
Fax 296-4705

A Team of Land Planners, Landscape Architects, Engineers, Surveyors & Environmental Professionals

10/28/02 Date

Professional Engr. No. 10551

TITLE: FINAL PLAN
STORM DRAIN
DRAINAGE AREA MAP

Des By	RBW	Scale	1" = 100'	Proj. No.	01011.00
Drn By	WDE	Date	9/25/02		
Chk By		Approved		5	OF 31

F-02-131

Thu Oct 3 [illegible]

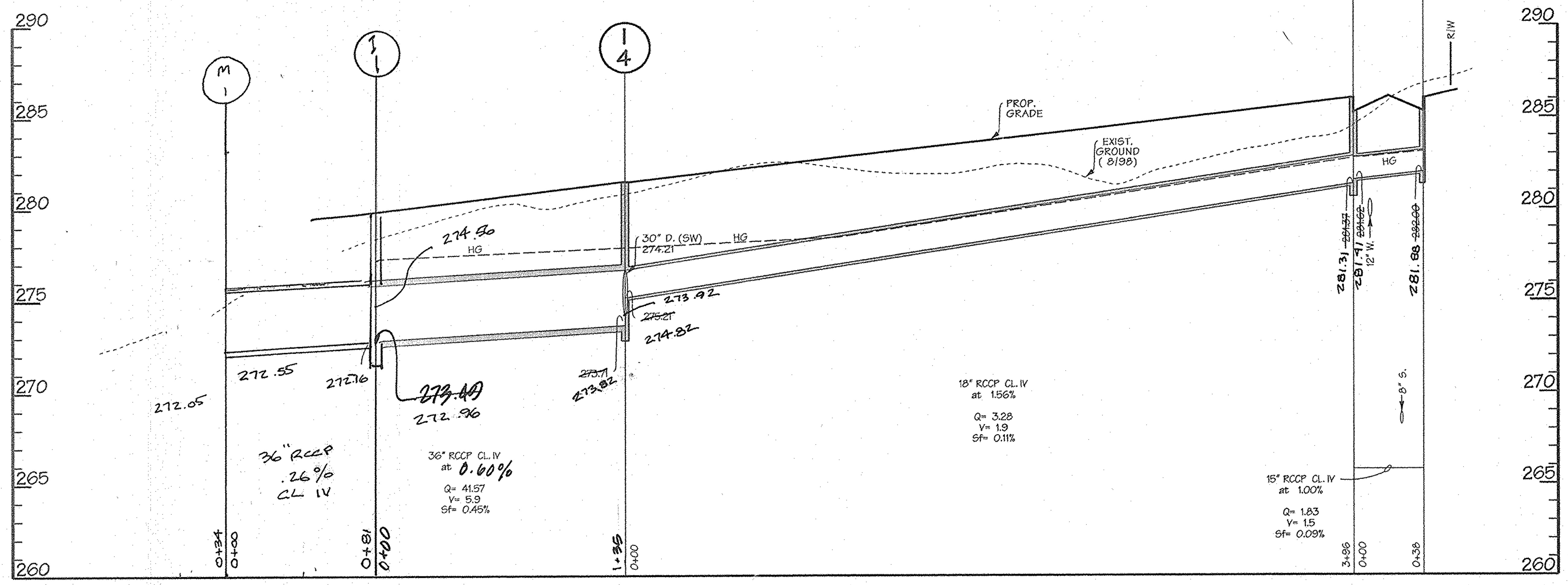

STORM DRAIN PROFILE
SCALE: HOR. 1" = 50'
VER. 1" = 5'

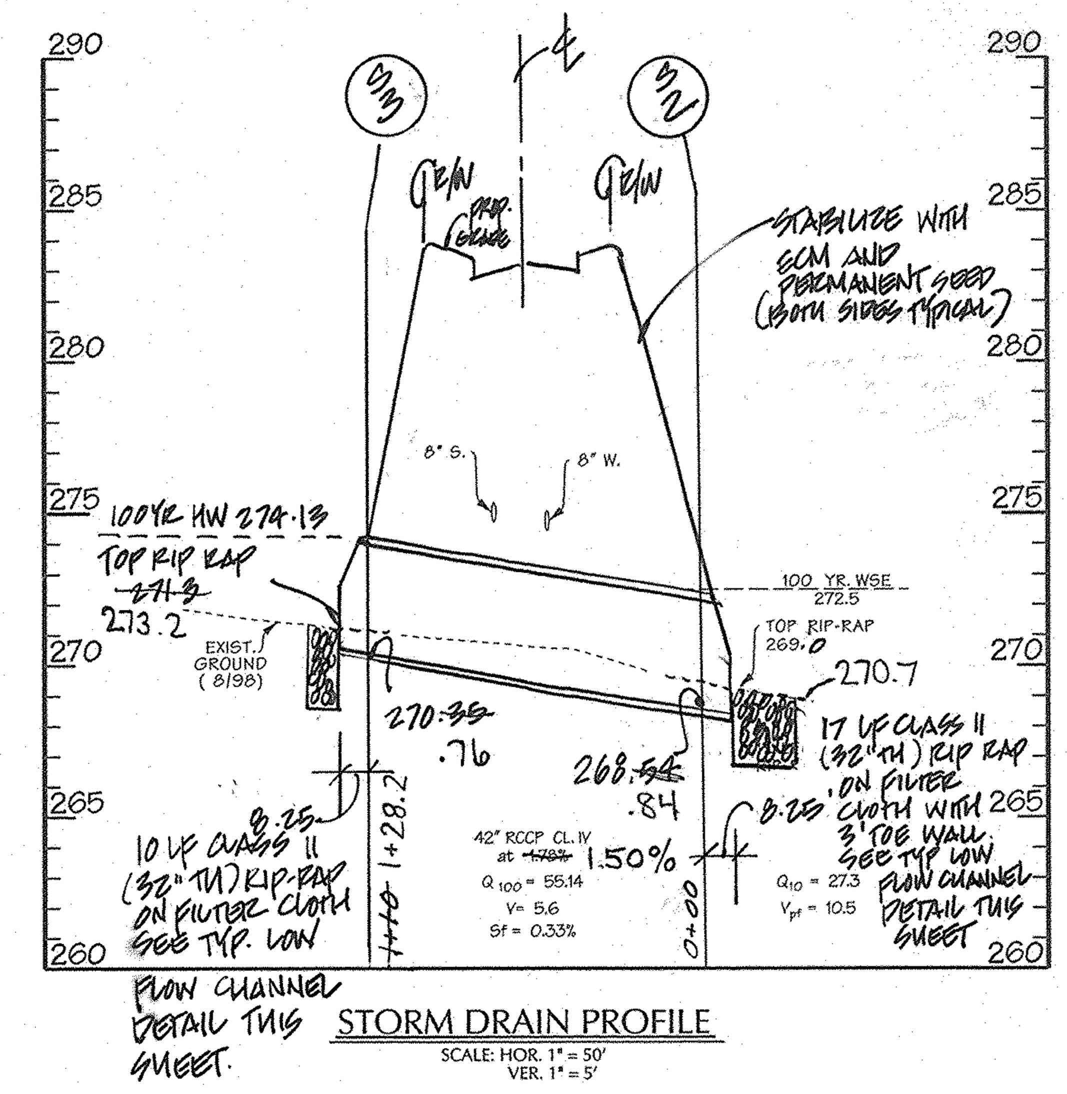

STORM DRAIN PROFILE
SCALE: HOR. 1" = 50'
VER. 1" = 5'

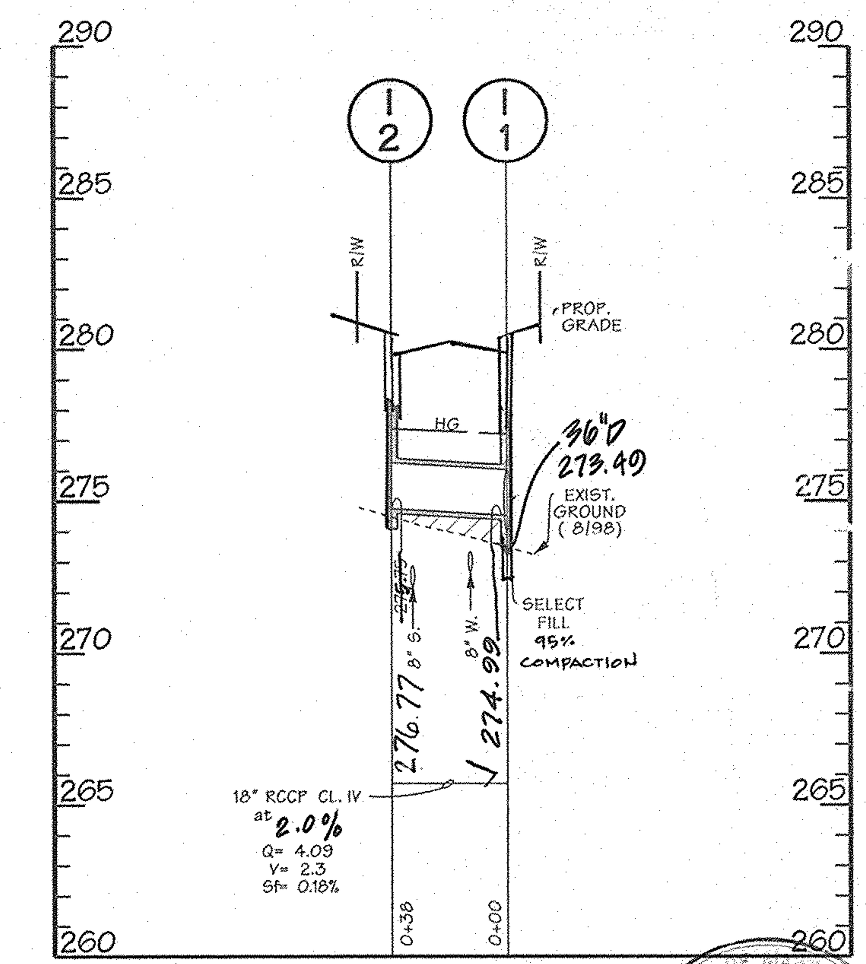

STORM DRAIN PROFILE
SCALE: HOR. 1" = 50'
VER. 1" = 5'

ROAD & STORM DRAIN AS-BUILT

PIPE SCHEDULE

SIZE (IN.)	CATEGORY	L (FT.)
15	RCCP CL. IV	38
18	RCCP CL. IV	460
30	RCCP CL. IV	50
36	RCCP CL. IV	269
42	RCCP CL. IV	110

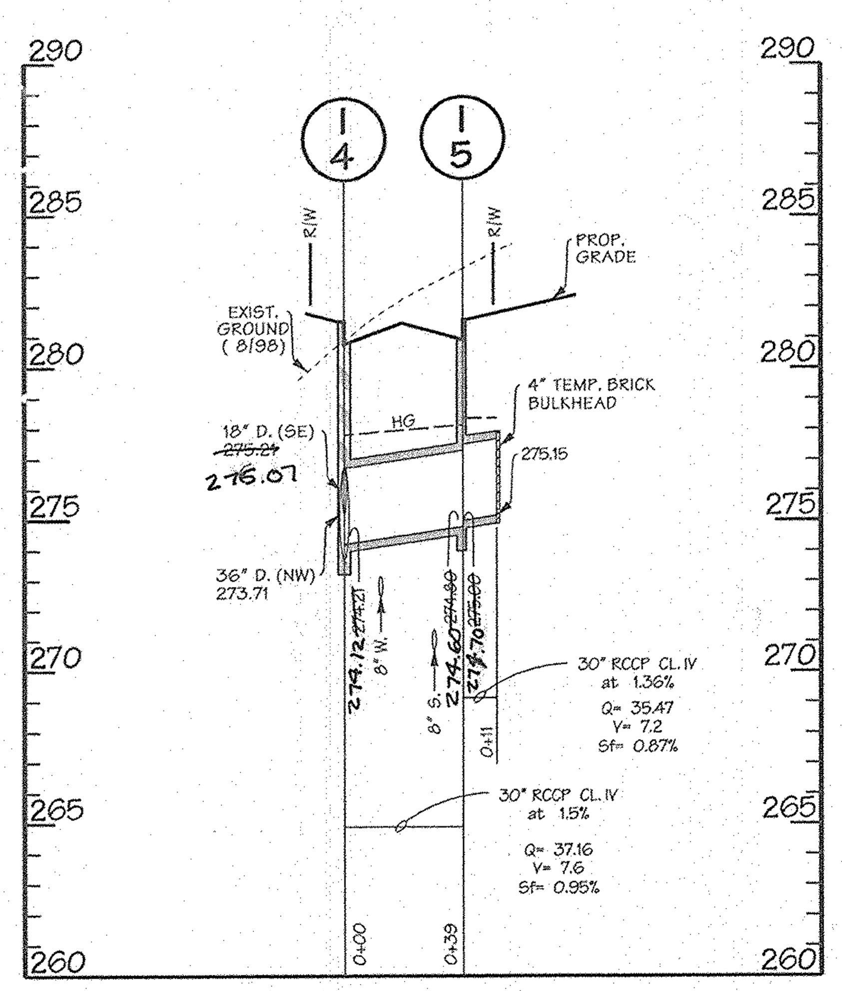

STORM DRAIN PROFILE
SCALE: HOR. 1" = 50'
VER. 1" = 5'

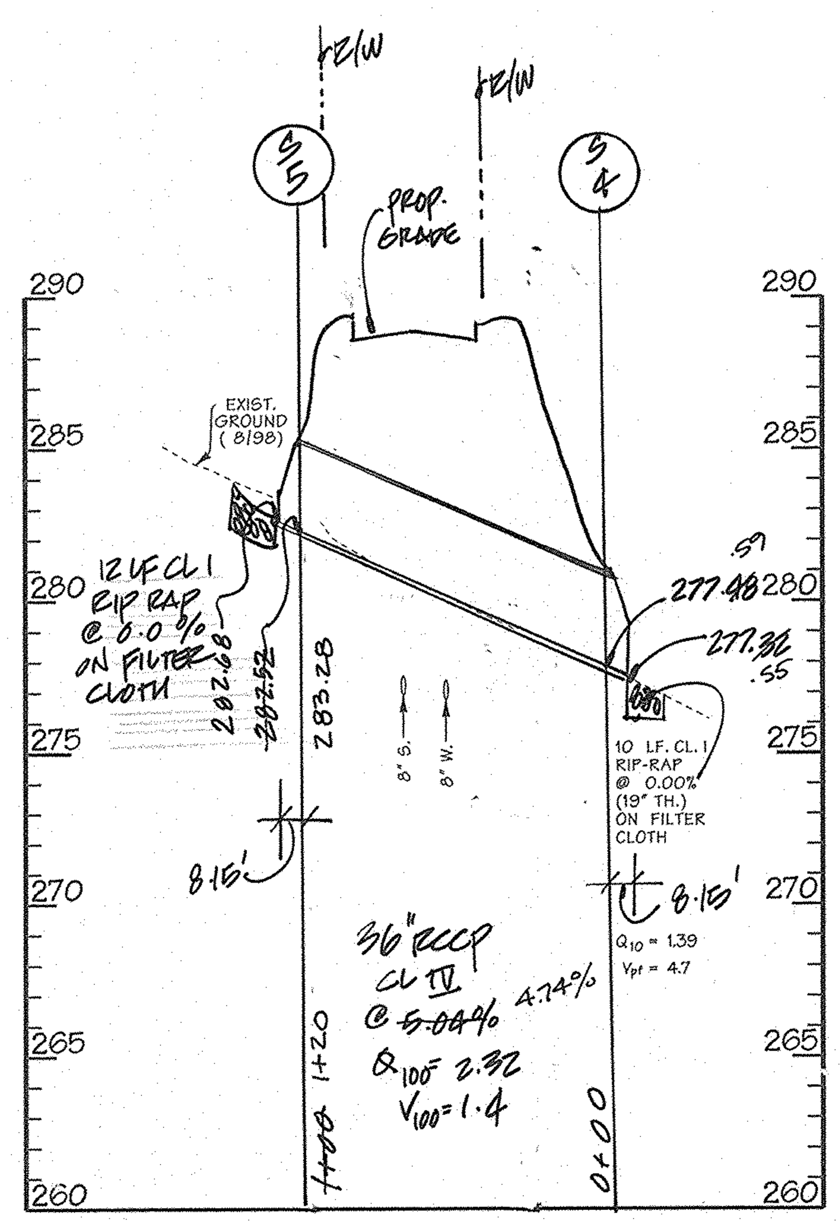

STORM DRAIN PROFILE
SCALE: HOR. 1" = 50'
VER. 1" = 5'

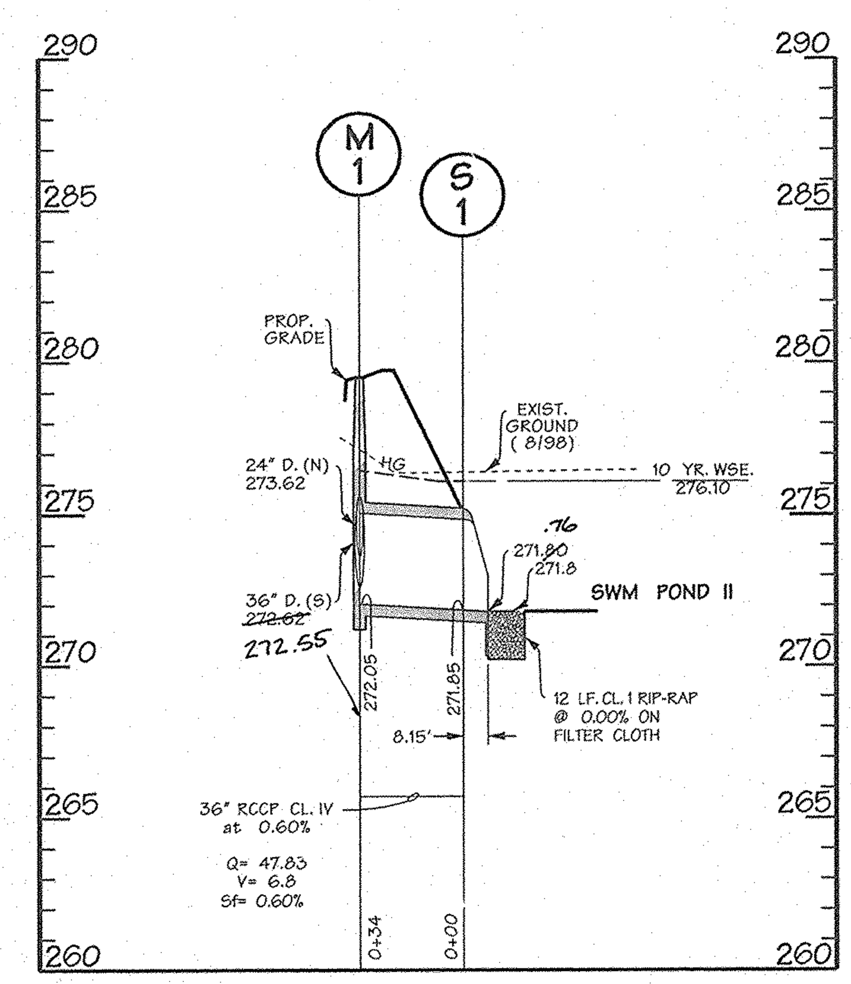

STORM DRAIN PROFILE
SCALE: HOR. 1" = 50'
VER. 1" = 5'

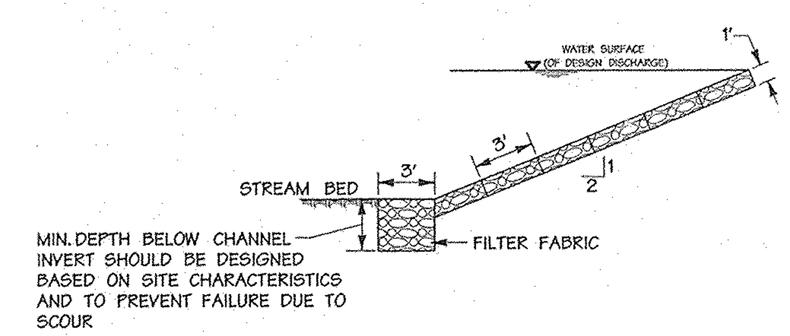

CROSS SECTION

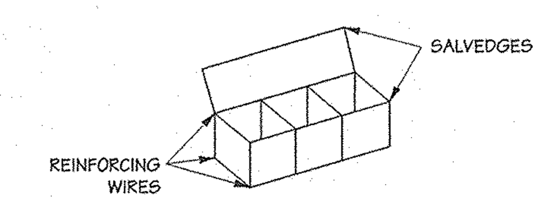

BASKET DETAILS

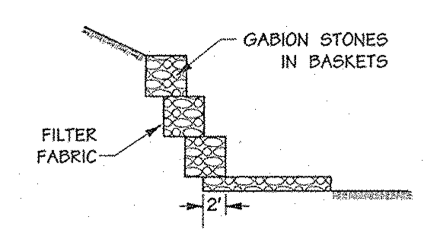

ALTERNATE SECTION

I. DESCRIPTION
THIS WORK SHALL CONSIST OF PROTECTING STREAM SLOPES AND CHANNELS WITH STONE-FILLED WIRE BASKETS IN ORDER TO PROVIDE STABILIZATION FOR STREAM CHANNELS AND BANKS. BASKETS SHALL BE PLACED IN SUCH A MANNER AS TO PREVENT UNDERMINING FROM WATER VELOCITIES AND OVERTURNING FROM LATERAL EARTH PRESSURES.

II. MATERIAL SPECIFICATIONS
1. FILTER FABRIC
FILTER FABRIC SHALL BE CAREFULLY AND LOOSELY PLACED ON THE PREPARED SUBGRADE AND HELD IN PLACE. ADJACENT STRIPS SHALL BE OVERLAPPED BY A MINIMUM OF 8 INCHES. CARE SHALL BE EXERCISED IN PLACING, STRETCHING AND HOLDING THE EMPTY BASKET UNITS IN GOOD ALIGNMENT IN ORDER TO AVOID DAMAGE TO THE CLOTH. IF THE FILTER FABRIC SHOULD BE TORN OR DAMAGED, IT SHALL MEET THE FOLLOWING REQUIREMENTS:

TENSILE STRENGTH	200 LBS.
BURST STRENGTH	350 LBS.
PUNCTURE STRENGTH	70 LBS.
PERMEABILITY	.02 CM/SEC
ELONGATION AT FAILURE	30%
MINIMUM LAP LENGTH	24 IN.

2. WIRE BASKETS
THE PLACEMENT OF THE WIRE BASKET UNITS SHALL BEGIN WITH THE CUTOFF WALLS. THE EMPTY WIRE BASKET UNITS SHALL BE SET ON THE PREPARED SUBGRADE AND THE VERTICAL ENDS BOUND TOGETHER WITH WIRE TIES AT SPACINGS THAT ARE ADEQUATE TO PERMIT STRETCHING OF THE UNITS TO REMOVE KINKS. THE USE OF STAKES, PINS OR OTHER ACCEPTABLE METHODS SHALL BE USED TO INSURE A GOOD ALIGNMENT OF THE EMPTY WIRE BASKET UNITS. TIE BACKS MAY BE REQUIRED TO INSURE STABILITY OF THE STREAM BANK FROM ROTATIONAL OVERTURNING.

3. STONE:
STONE FOR GABIONS, FOR WHICH THE SIZE OF PARTICLES WILL BE DETERMINED VISUALLY, SHALL MEET THE FOLLOWING REQUIREMENTS:

BASKET IN	THICKNESS MM	SIZE OF INDIVIDUAL PARTICLES IN
6	150	3 - 5
9	225	4 - 7
12	300	4 - 7
18	460	4 - 7
36	910	4 - 12

III. CONSTRUCTION REQUIREMENTS
1. THE CONTRACTOR SHALL INSTALL ALL SEDIMENT AND EROSION CONTROL DEVICES AS A FIRST ORDER OF BUSINESS.
2. EXCAVATION, INCLUDING CUTOFF WALLS, SHALL BE MADE IN REASONABLY CLOSE CONFORMITY WITH THE EXISTING STREAM SLOPE. THE SUBGRADE SHALL BE SMOOTH, FIRM AND FREE FROM PROTRUDING OBJECTS OR VOIDS THAT WOULD AFFECT THE PROPER PLACEMENT OF THE WIRE BASKETS OR DAMAGE THE FILTER CLOTH.
3. THE EMPTY BASKET UNITS SHALL BE FILLED CAREFULLY WITH STONE PLACED BY HAND OR MACHINE TO ASSURE GOOD ALIGNMENT WITH A MINIMUM OF VOIDS BETWEEN STONES AND TO AVOID BULGING OF MESH. THE MAXIMUM HEIGHT FROM WHICH THE STONE MAY BE DROPPED INTO THE UNITS SHALL BE 36 INCHES. THE STONE SHALL BE SO PLACED AS TO PROVIDE A MINIMUM OF TWO COURSES. CARE SHALL BE TAKEN IN PLACING THE TOP LAYER OF STONE TO ASSURE A UNIFORM SURFACE THUS AVOIDING ANY BULGING OF THE LID MESH. AFTER A BASKET UNIT HAS BEEN FILLED, IT'S LID SHALL BE BENT OVER UNTIL IT MEETS THE END OF THE UNIT. THE LID SHALL THEN BE SECURED TO THE SIDES AND ENDS WITH WIRE TIES. WHEN A COMPLETE BASKET UNIT CANNOT BE INSTALLED ON SLOPES OR CHANNELS BECAUSE OF SPACE LIMITATIONS, THE BASKET UNIT SHALL BE CUT TO FIT IN A MANNER APPROVED BY THE WRA.
4. ANY EXCAVATION VOIDS EXISTING ALONG THE EDGES OF THE COMPLETED GABIONS SHALL BE BACKFILLED AND PERMANENTLY STABILIZED IN ACCORDANCE WITH AN APPROVED SEDIMENT AND EROSION CONTROL PLAN.

DETAIL 2.3 – GABIONS

REVISED 11/2000 PAGE 23-5 — *MD DEPARTMENT OF THE ENVIRONMENT WATER MANAGEMENT ADMINISTRATION*

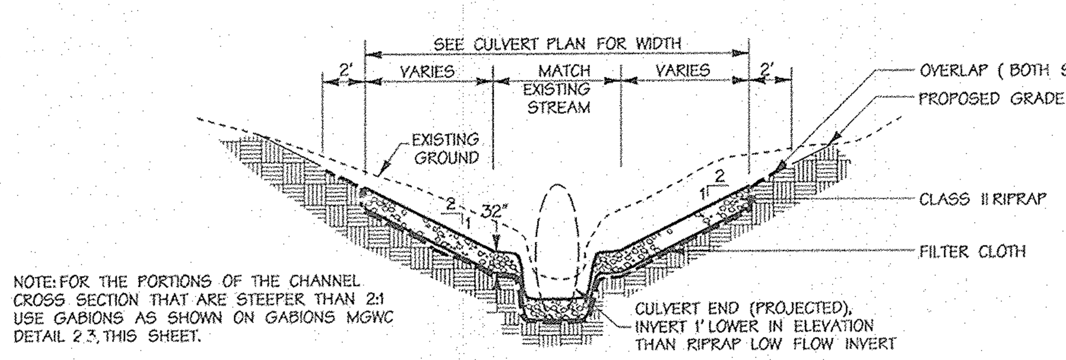

NOTE: FOR THE PORTIONS OF THE CHANNEL CROSS SECTION THAT ARE STEEPER THAN 2:1 USE GABIONS AS SHOWN ON GABIONS MGWC DETAIL 2.3, THIS SHEET.

TYPICAL LOW FLOW CHANNEL

STRUCTURE SCHEDULE

NO.	TYPE	INV. IN	INV. OUT	TOP ELEV.	REMARKS	LOCATION
I-1	A-10 W=4'-0"	272.96	274.06	280.66	HO. CO. STD. SD 4.01	℄ STA. ~~28+08.87~~ 26+80
I-2	A-5 W=2'-6"		276.73	280.57	HO. CO. STD. SD 4.01	℄ STA. ~~28+08.87~~ 26+80
~~I-3~~	~~D~~	—	~~279.70~~	~~282.7 *~~	~~HO. CO. STD. SD 4.11~~	~~℄ STA. 31+06.37, 37' LT.~~
I-4	A-10 W=4'-0"	274.82	273.82	281.57	HO. CO. STD. SD 4.02	℄ STA. 25+74.33 ✓
I-5	A-10 W=2'-6"	274.60	274.70	281.35	HO. CO. STD. SD 4.02	℄ STA. 25+69.69 ✓
I-6	A-5 W=2'-6"	281.39	281.29	286.19	HO. CO. STD. SD 4.01	℄ STA. 21+78.21 ✓
I-7	A-10 W=2'-6"		281.88	286.28	HO. CO. STD. SD 4.02	℄ STA. 21+74.51. ✓
M-1	SHALLOW PRE-CAST MANHOLE (72")	272.55	272.05	281.20	HO. CO. STD. G 5.12	℄ STA. 27+~~42.50~~ +44, ~~25'~~ 26' RT.
S-5	CONC. END SECTION (36")	282.28	[illegible]		HO. CO. STD. SD 5.51	℄ STA. ~~30+87.65~~ 31+07.34
S-1	CONC. END SECTION (36")	271.85	271.86		HO. CO. STD. SD 5.51	℄ STA. 27+~~42.50~~, +44
S-2	CONC. END SECTION (42")	[illegible]	268.84		HO. CO. STD. SD 5.51	℄ STA. 28+~~66.44~~, +64.92
S-3	CONC. END SECTION (42")	270.76	[illegible]		HO. CO. STD. SD 5.51	℄ STA. 28+~~77.37~~, +78.12
S-4	CONC. END SECTION (36)	[illegible]	277.59		HO. CO. STD. SD 5.51	℄ STA. 30+~~87.65~~, +86.02

* THROAT ELEVATION

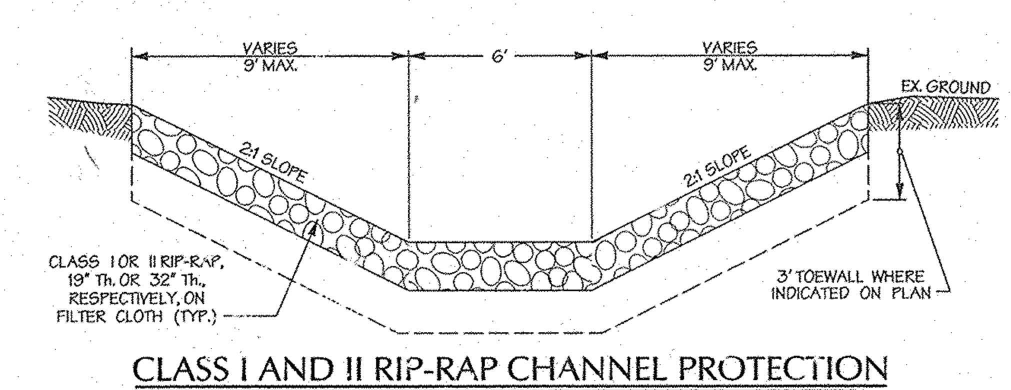

CLASS I AND II RIP-RAP CHANNEL PROTECTION
NTS

STATE OF MARYLAND — RICHARD F. LANE — No. 301 REGISTERED PROPERTY LINE SURVEYOR

APPROVED: HOWARD COUNTY DEPT. OF PUBLIC WORKS

CHIEF, BUREAU OF HIGHWAYS — DATE 11-25-02

APPROVED: HOWARD COUNTY DEPT. OF PLANNING AND ZONING

CHIEF, DIVISION OF LAND DEVELOPMENT — DATE 12/6/02

CHIEF, DEVELOPMENT ENGINEERING DIVISION — DATE 12/2/02

Date	No.	Revision Description
5-5-05	1	REVISE PROFILES

EMERSON
(Formerly the Key Property)
Section 3, Area 1
Parcels A – I

OWNER /DEVELOPER:

THE HOWARD RESEARCH & DEVELOPMENT CORPORATION
10275 LITTLE PATUXENT PARKWAY
COLUMBIA, MARYLAND 21044

DMW
Daft·McCune·Walker, Inc.
200 East Pennsylvania Avenue
Towson, Maryland 21286
(410) 296-3333
Fax 296-4705

A Team of Land Planners, Landscape Architects, Engineers, Surveyors & Environmental Professionals

9/25/02 Date

Professional Engr. No. 10551

TITLE
FINAL PLAN
STORM DRAIN PROFILES

Des By DFM	Scale AS SHOWN	Proj. No. 01011.CO	
Drn By WDE	Date 9/25/02	6 OF 31	
Chk By	Approved		

F-02-131

Wed Sep 25 09:43:30 2002 9/25/02 9:43:28 AM

HOWARD RESEARCH
AND DEVELOPMENT CORPORATION
LIBER 3245 FOLIO 2514
LIBER 5289 FOLIO 330
PARCEL B37
ZONING: PEC-MXD-3

E 1354000
N 533000

HAMMOND BRANCH

REVITZ
F-02-111

TEMP. TURN AROUND

BASIN II

INTERIM/PROPOSED DRAINAGE AREA TO BASIN II
D.A. = 10.92 Ac
RCN = 91
Tc = 0.10 Hr.

EXISTING DRAINAGE AREA TO BASIN II
D.A. = 10.60 Ac
RCN = 67
Tc = 0.33 Hr.

Bc 362' SCF UNPAVED, 2.5%
Bc 617' SCF PAVED, 2.4%
AB 100' SF BRUSH, 3.5%
AB 100' SF BARE SOIL, 2.5%

WHISKEY BOTTOM ROAD

FOREST CONSERVATION EASEMENT 'O'

INTERIM/PROPOSED DRAINAGE AREA TO BASIN I
D.A. = 11.78 Ac
RCN = 91
Tc = 0.10 Hr.

EXISTING DRAINAGE AREA TO BASIN I
D.A. = 9.16 Ac
RCN = 65
Tc = 0.28 Hr.

CD 570' OCF 5" PIPE
Bc 1880' SCF UNPAVED, 2.5%
Bc 680' SCF PAVED, 2.5%
AB 100' SF BRUSH, 3.5%
AB 100' SF BARE SOIL, 2.5%

FOREST CONSERVATION EASEMENT 'P'
FOREST CONSERVATION EASEMENT 'R'
FOREST CONSERVATION EASEMENT 'Q'

INTERSTATE ROUTE 95 NBL
STATE ROUTE 216/ I-95 RAMP
STATE ROUTE 216

N 532000
E 1352250

Legend

- WETLAND
- WETLAND BUFFER
- WETLAND SYMBOL
- HEAD OF STREAM
- STREAM
- STREAM BUFFER
- 100 YEAR FLOOD PLAIN
- SLOPES >25%
- SLOPES 15%-25%
- PC / PT OF ARC
- CENTERLINE OF ROAD
- RADIUS OF ARC
- SF — SILT FENCE
- SSF — SUPER SILT FENCE
- EARTH DIKE
- MOUNTABLE BERM
- EXISTING DRAINAGE DIVIDE
- PROP. DRAINAGE DIVIDE
- INTERIM DRAINAGE DIVIDE
- INTERIM TC PATH
- EXISTING TC PATH
- B-10 SOIL BORING
- PROPERTY BOUNDARY

APPROVED: HOWARD COUNTY DEPT. OF PUBLIC WORKS

CHIEF, BUREAU OF HIGHWAYS MS — DATE 11-25-02

APPROVED: HOWARD COUNTY DEPT. OF PLANNING AND ZONING

CHIEF, DIVISION OF LAND DEVELOPMENT HS — DATE 12/6/02

CHIEF, DEVELOPMENT ENGINEERING DIVISION MK — DATE 12/2/02

Date	No.	Revision Description
6/3/05	1	ADD 'T' TURN AROUND

EMERSON
(Formerly the Key Property)
Section 3, Area 1
Parcels A – I

OWNER /DEVELOPER:

THE HOWARD RESEARCH & DEVELOPMENT CORPORATION
10275 LITTLE PATUXENT PARKWAY
COLUMBIA, MARYLAND 21044

DMW
Daft-McCune-Walker, Inc.
200 East Pennsylvania Avenue
Towson, Maryland 21286
(410) 296-3333
Fax 296-4705

A Team of Land Planners, Landscape Architects, Engineers, Surveyors & Environmental Professionals

10/3/02
Date

PROFESSIONAL ENGINEER NO. 10551 STATE OF MARYLAND

Professional Engr. No. 10551

F-02-131

TITLE
FINAL PLAN
SEDIMENT & EROSION CONTROL
DRAINAGE AREA MAP

Des By	MRT	Scale	1" = 100'	Proj. No.	01011.C
Drn By	MRT	Date	9/25/02		7 OF 31
Chk By		Approved			

Thu Oct 3 10:28:35 2002 M:\2001\01011\Graphics\Sediment\Drainage Area Map.dwg

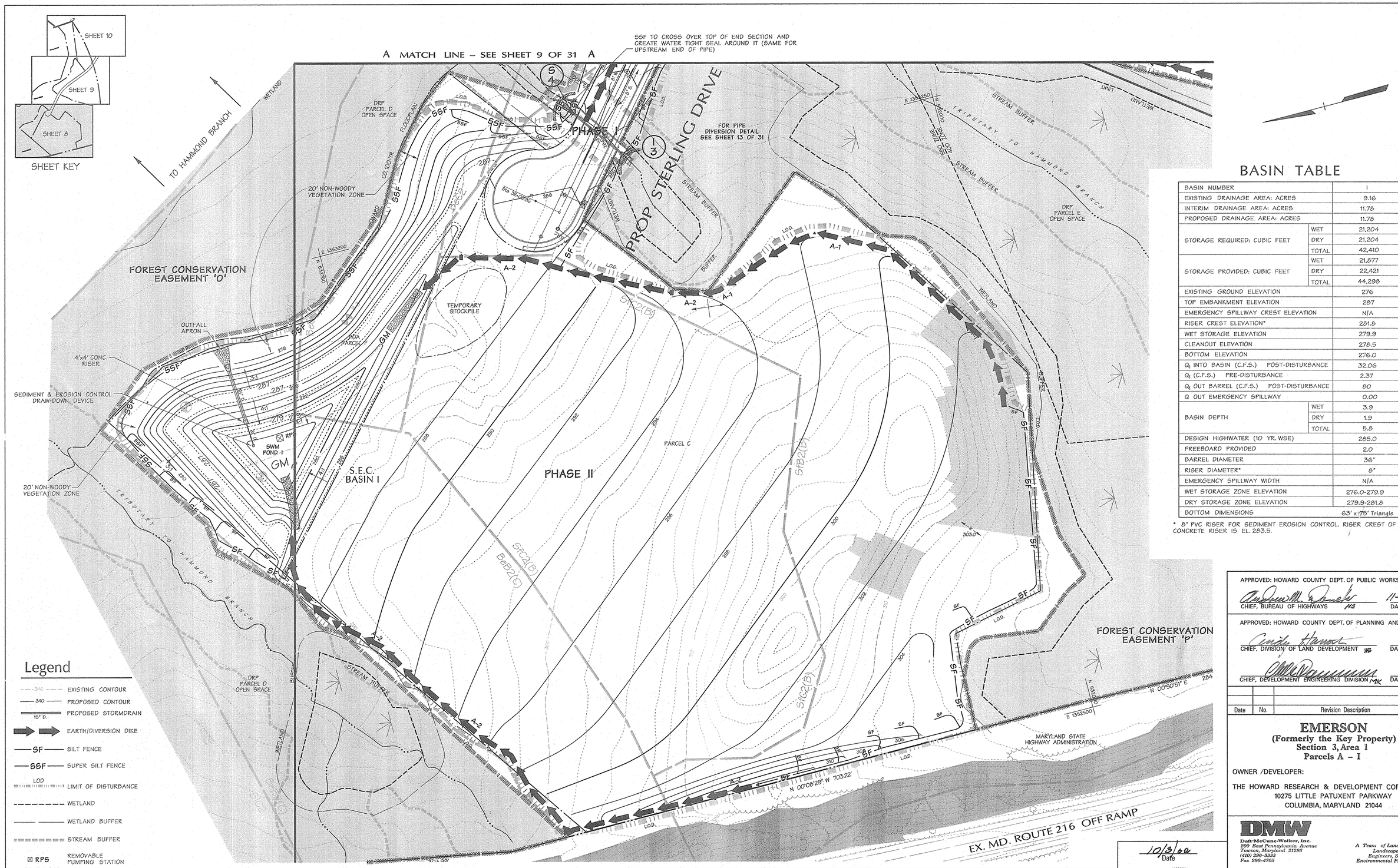

BASIN TABLE

BASIN NUMBER		1
EXISTING DRAINAGE AREA: ACRES		9.16
INTERIM DRAINAGE AREA: ACRES		11.78
PROPOSED DRAINAGE AREA: ACRES		11.78
STORAGE REQUIRED: CUBIC FEET	WET	21,204
	DRY	21,204
	TOTAL	42,410
STORAGE PROVIDED: CUBIC FEET	WET	21,877
	DRY	22,421
	TOTAL	44,298
EXISTING GROUND ELEVATION		276
TOP EMBANKMENT ELEVATION		287
EMERGENCY SPILLWAY CREST ELEVATION		N/A
RISER CREST ELEVATION*		281.8
WET STORAGE ELEVATION		279.9
CLEANOUT ELEVATION		278.5
BOTTOM ELEVATION		276.0
Q_1 INTO BASIN (C.F.S.) POST-DISTURBANCE		32.06
Q_1 (C.F.S.) PRE-DISTURBANCE		2.37
Q_1 OUT BARREL (C.F.S.) POST-DISTURBANCE		80
Q OUT EMERGENCY SPILLWAY		0.00
BASIN DEPTH	WET	3.9
	DRY	1.9
	TOTAL	5.8
DESIGN HIGHWATER (10 YR. WSE)		285.0
FREEBOARD PROVIDED		2.0
BARREL DIAMETER		36"
RISER DIAMETER*		8"
EMERGENCY SPILLWAY WIDTH		N/A
WET STORAGE ZONE ELEVATION		276.0-279.9
DRY STORAGE ZONE ELEVATION		279.9-281.8
BOTTOM DIMENSIONS		63' x 175' Triangle

* 8" PVC RISER FOR SEDIMENT EROSION CONTROL. RISER CREST OF 4'x4' CONCRETE RISER IS EL. 283.5.

MDE PERMIT AND TRACKING No. 01-NT-0222/200164079

DEVELOPER'S CERTIFICATION:

"I/WE CERTIFY THAT ALL DEVELOPMENT AND CONSTRUCTION WILL BE DONE ACCORDING TO THIS PLAN, AND THAT ANY RESPONSIBLE PERSONNEL INVOLVED IN THE CONSTRUCTION PROJECT WILL HAVE A CERTIFICATE OF ATTENDANCE AT A DEPARTMENT OF THE ENVIRONMENT APPROVED TRAINING PROGRAM FOR THE CONTROL OF SEDIMENT AND EROSION BEFORE BEGINNING THE PROJECT. I ALSO AUTHORIZE PERIODIC ON-SITE INSPECTION BY THE HOWARD SOIL CONSERVATION DISTRICT.

SIGNATURE OF DEVELOPER — 10.3.02 DATE
PRINT NAME BELOW SIGNATURE
JOSEPH NEUKER JR.

ENGINEER'S CERTIFICATION:

"I CERTIFY THAT THIS PLAN FOR EROSION AND SEDIMENT CONTROL REPRESENTS A PRACTICAL AND WORKABLE PLAN BASED ON MY PERSONAL KNOWLEDGE OF THE SITE CONDITIONS AND THAT IT WAS PREPARED IN ACCORDANCE WITH THE REQUIREMENTS OF THE HOWARD SOIL CONSERVATION DISTRICT."

SIGNATURE OF ENGINEER — 10/3/02
PRINT NAME BELOW SIGNATURE
JOHN RONOCCHIO

REVIEWED FOR HOWARD S.C.D. AND MEETS TECHNICAL REQUIREMENTS
U.S. NATURAL RESOURCE CONSERVATION SERVICE — 10/8/02 DATE

THIS DEVELOPMENT PLAN IS APPROVED FOR SOIL EROSION AND SEDIMENT CONTROL BY THE HOWARD SOIL CONSERVATION DISTRICT.
HOWARD S.C.D. — 10/8/02 DATE

10/3/02 Date

Professional Engr. No. 10551

F-02-131

APPROVED: HOWARD COUNTY DEPT. OF PUBLIC WORKS
CHIEF, BUREAU OF HIGHWAYS MS — 11-25-02 DATE

APPROVED: HOWARD COUNTY DEPT. OF PLANNING AND ZONING
CHIEF, DIVISION OF LAND DEVELOPMENT MS — 12/6/02 DATE
CHIEF, DEVELOPMENT ENGINEERING DIVISION MK — 12/2/02 DATE

Date	No.	Revision Description

EMERSON
(Formerly the Key Property)
Section 3, Area 1
Parcels A – I

OWNER /DEVELOPER:

THE HOWARD RESEARCH & DEVELOPMENT CORPORATION
10275 LITTLE PATUXENT PARKWAY
COLUMBIA, MARYLAND 21044

DMW
Daft-McCune-Walker, Inc.
200 East Pennsylvania Avenue
Towson, Maryland 21286
(410) 296-3333
Fax 296-4705

A Team of Land Planners, Landscape Architects, Engineers, Surveyors & Environmental Professionals

TITLE
FINAL PLAN
GRADING, SEDIMENT & EROSION CONTROL PLAN

Des By		Scale	1" = 50'	Proj. No.	01011.C0
Drn By	ADL	Date	9/25/02		
Chk By		Approved		8	OF 31

Thu Oct 3 10:22:15 2002 I:\2001\01011\Graphics\Grading\Grading.dwg

Legend

- EXISTING CONTOUR (342)
- PROPOSED CONTOUR (340)
- PROPOSED STORMDRAIN (15" D.)
- EARTH/DIVERSION DIKE
- SILT FENCE (SF)
- SUPER SILT FENCE (SSF)
- CLEAN WATER DIVERSION PIPE
- EROSION CONTROL MATTING
- LIMIT OF DISTURBANCE (LOD)
- WETLAND
- WETLAND BUFFER
- STREAM BUFFER
- MOUNTABLE BERM
- SANDBAG DIVERSION
- CIP CURB INLET PROTECTION
- RPS REMOVABLE PUMPING STATION
- SCE STABILIZED CONSTRUCTION ENTRANCE
- GM GABION MATTRESS INFLOW PROTECTION
- PERMANENT SWALE
- Ha(D) BeC2 SOILS LINE
- 100 YR. FLOODPLAIN
- NON-WOODY VEGETATION ZONE

B MATCH LINE – SEE SHEET 10 OF 31 B

A MATCH LINE – SEE SHEET 8 OF 31 A

PARCEL A

PHASE II

TEMPORARY STOCKPILE

SWM POND II

SEC BASIN II

PROP. STERLING DRIVE

EX. WHISKEY BOTTOM ROAD

EMERSON SECTION 3, AREA 1 PARCEL B

PHASE II

REVITZ PROPERTY F/ PARCEL M F-02-111

REVITZ PROPERTY DRP PARCEL M OPEN SPACE F-02-111

REVITZ PROPERTY DRP PARCEL M OPEN SPACE F-02-111

DRP PARCEL D OPEN SPACE

DRP PARCEL E OPEN SPACE

20' NON-WOODY VEGETATION ZONE

FOR PARCEL G

PUMP AROUND PIPE (SEE SHEET 13 OF 31 FOR DETAIL)

ESC DRAW-DOWN DEVICE SWM / DEWATER DEVICE

HOWARD CO. 100-YR

HAMMOND BRANCH

FOREST CONSERVATION EASEMENT

STREAM BUFFER

WETLAND BUFFER

FLOODPLAIN

LOD

SSF

SF

GM

BeC2 Ha(D) BeB2(C) BeB2(B)

2:1 SLOPES SHALL BE PROTECTED BY ECM (SHEET 11 OF 31) AND PERMANENT SEEDING (SHEET 12 OF 31)

SSF TO CROSS OVER TOP OF END SECTION AND CREATE WATER TIGHT SEAL AROUND IT (SAME FOR UPSTREAM END OF PIPE)

SHEET KEY

SHEET 10

SHEET 9

SHEET 8

MDE PERMIT AND TRACKING No. 01-NT-0222/200164079

BASIN TABLE

BASIN NUMBER		II
EXISTING DRAINAGE AREA: ACRES		10.60
INTERIM DRAINAGE AREA: ACRES		10.82
PROPOSED DRAINAGE AREA: ACRES		10.82
STORAGE REQUIRED: CUBIC FEET	WET	19,476
	DRY	19,476
	TOTAL	38,952
STORAGE PROVIDED: CUBIC FEET	WET	19,459
	DRY	19,307
	TOTAL	38,766
EXISTING GROUND ELEVATION		273.0
TOP EMBANKMENT ELEVATION		278.0
EMERGENCY SPILLWAY CREST ELEVATION		276.0
RISER CREST ELEVATION*		274.8
WET STORAGE ELEVATION		273.5
CLEANOUT ELEVATION		272.8
BOTTOM ELEVATION		272.0
Q_1 INTO BASIN (C.F.S.) POST-DISTURBANCE		29.45
Q_1 (C.F.S.) PRE-DISTURBANCE		3.27
Q_1 OUT BARREL (C.F.S.) POST-DISTURBANCE		0.93
Q OUT EMERGENCY SPILLWAY		0.00
BASIN DEPTH	WET	1.5
	DRY	1.3
	TOTAL	2.8
DESIGN HIGHWATER (10-YEAR)		275.7
FREEBOARD PROVIDED		2.4
BARREL DIAMETER		36"
RISER DIAMETER*		3'
EMERGENCY SPILLWAY WIDTH		12.0
WET STORAGE ZONE ELEVATION		272.0-273.5
DRY STORAGE ZONE ELEVATION		273.5-274.8
BOTTOM DIMENSIONS		30'x50'

* 8" PVC RISER FOR SEDIMENT EROSION CONTROL. RISER CREST OF 4'x4' CONCRETE RISER IS ALSO EL. 274.8.

APPROVED: HOWARD COUNTY DEPT. OF PUBLIC WORKS

CHIEF, BUREAU OF HIGHWAYS — DATE 11-25-02

APPROVED: HOWARD COUNTY DEPT. OF PLANNING AND ZONING

CHIEF, DIVISION OF LAND DEVELOPMENT — DATE 12/6/02

CHIEF, DEVELOPMENT ENGINEERING DIVISION — DATE 12/2/02

Date	No.	Revision Description
9-3-02	1	REVISE GRADING T-1 & S-2 LOCATION

EMERSON
(Formerly the Key Property)
Section 3, Area 1
Parcels A – I

OWNER /DEVELOPER:

THE HOWARD RESEARCH & DEVELOPMENT CORPORATION
10275 LITTLE PATUXENT PARKWAY
COLUMBIA, MARYLAND 21044

DMW
Daft-McCune-Walker, Inc.
200 East Pennsylvania Avenue
Towson, Maryland 21286
(410) 296-3333
Fax 296-4705

A Team of Land Planners, Landscape Architects, Engineers, Surveyors & Environmental Professionals

DEVELOPER'S CERTIFICATION:

"I/WE CERTIFY THAT ALL DEVELOPMENT AND CONSTRUCTION WILL BE DONE ACCORDING TO THIS PLAN, AND THAT ANY RESPONSIBLE PERSONNEL INVOLVED IN THE CONSTRUCTION PROJECT WILL HAVE A CERTIFICATE OF ATTENDANCE AT A DEPARTMENT OF THE ENVIRONMENT APPROVED TRAINING PROGRAM FOR THE CONTROL OF SEDIMENT AND EROSION BEFORE BEGINNING THE PROJECT. I ALSO AUTHORIZE PERIODIC ON-SITE INSPECTION BY THE HOWARD SOIL CONSERVATION DISTRICT.

SIGNATURE OF DEVELOPER — DATE 9.25.02
PRINT NAME BELOW SIGNATURE
JOSEPH NEKER JR

ENGINEER'S CERTIFICATION:

"I CERTIFY THAT THIS PLAN FOR EROSION AND SEDIMENT CONTROL REPRESENTS A PRACTICAL AND WORKABLE PLAN BASED ON MY PERSONAL KNOWLEDGE OF THE SITE CONDITIONS AND THAT IT WAS PREPARED IN ACCORDANCE WITH THE REQUIREMENTS OF THE HOWARD SOIL CONSERVATION DISTRICT."

SIGNATURE OF ENGINEER
PRINT NAME BELOW SIGNATURE
John Ranzedic

REVIEWED FOR HOWARD S.C.D. AND MEETS TECHNICAL REQUIREMENTS

U.S. NATURAL RESOURCE CONSERVATION SERVICE — DATE 10/8/02

THIS DEVELOPMENT PLAN IS APPROVED FOR SOIL EROSION AND SEDIMENT CONTROL BY THE HOWARD SOIL CONSERVATION DISTRICT.

HOWARD S.C.D. — DATE 10/8/02

9/25/02
Date

Professional Engr. No. 10551

F-02-131

TITLE
FINAL PLAN
GRADING, SEDIMENT & EROSION CONTROL PLAN

Des By	MRT	Scale	1" = 50'	Proj. No.	01011.C
Drn By	AJL	Date	9/25/02		9 OF 31
Chk By		Approved			

Wed Sep 25 10:08:56 2002 N:\projects\01011\dwg\plan\fp-grad.dwg

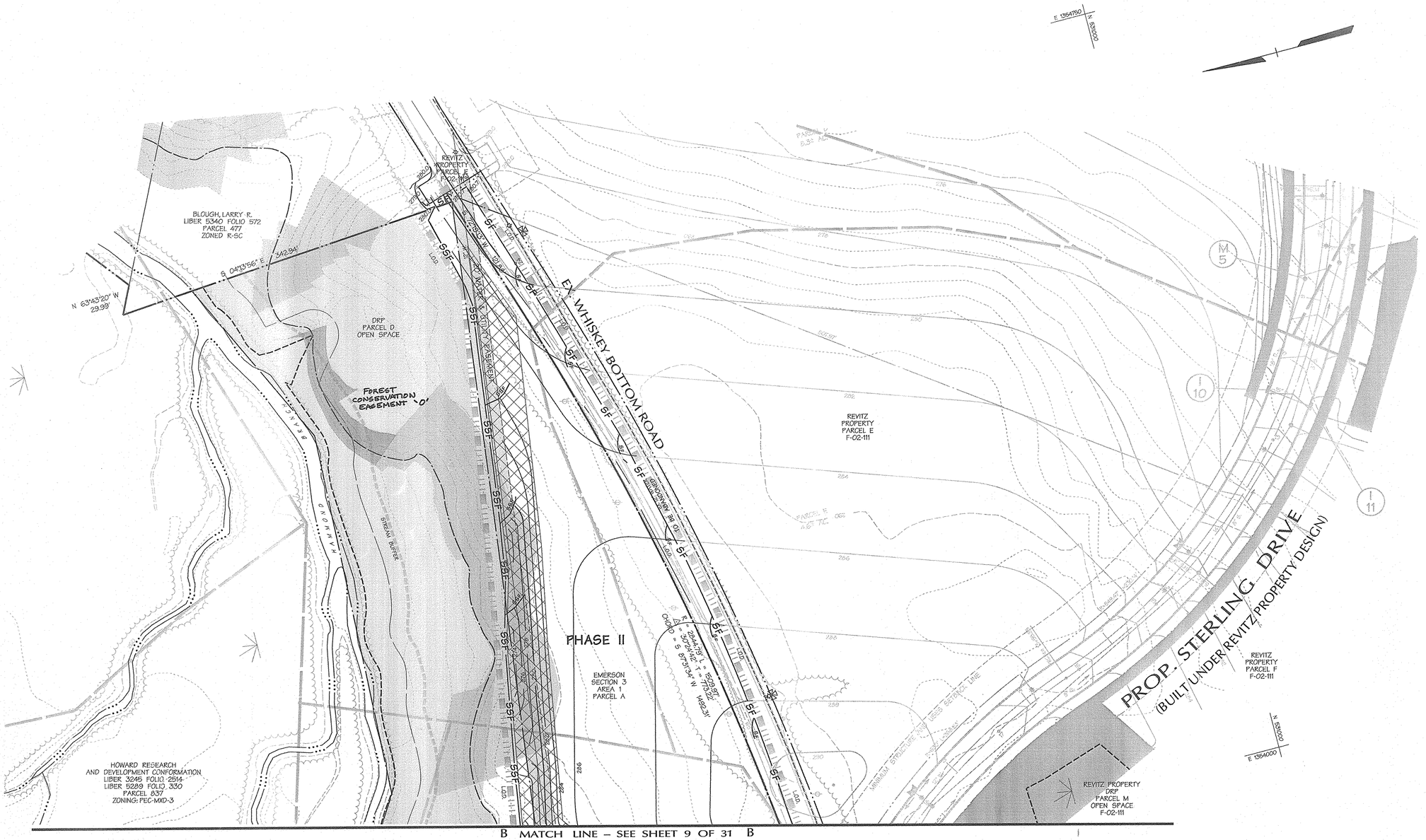

B MATCH LINE – SEE SHEET 9 OF 31 B

Legend

- EXISTING CONTOUR
- 340 PROPOSED CONTOUR
- 15" D. PROPOSED STORMDRAIN
- EARTH/DIVERSION DIKE
- SF SILT FENCE
- SSF SUPER SILT FENCE
- EROSION CONTROL MATTING
- LOD LIMIT OF DISTURBANCE
- WETLAND
- WETLAND BUFFER
- STREAM BUFFER
- SkC2(B) / BeB2(C) SOILS LINE

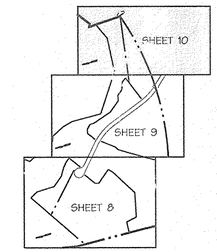

SHEET KEY

MDE PERMIT AND TRACKING No. 01-NT-0222/200164079

DEVELOPER'S CERTIFICATION:

"I/WE CERTIFY THAT ALL DEVELOPMENT AND CONSTRUCTION WILL BE DONE ACCORDING TO THIS PLAN, AND THAT ANY RESPONSIBLE PERSONNEL INVOLVED IN THE CONSTRUCTION PROJECT WILL HAVE A CERTIFICATE OF ATTENDANCE AT A DEPARTMENT OF THE ENVIRONMENT APPROVED TRAINING PROGRAM FOR THE CONTROL OF SEDIMENT AND EROSION BEFORE BEGINNING THE PROJECT. I ALSO AUTHORIZE PERIODIC ON-SITE INSPECTION BY THE HOWARD SOIL CONSERVATION DISTRICT."

SIGNATURE OF DEVELOPER — 9/25/02 DATE
PRINT NAME BELOW SIGNATURE
JOSEPH NEKER, JR.

ENGINEER'S CERTIFICATION:

"I CERTIFY THAT THIS PLAN FOR EROSION AND SEDIMENT CONTROL REPRESENTS A PRACTICAL AND WORKABLE PLAN BASED ON MY PERSONAL KNOWLEDGE OF THE SITE CONDITIONS AND THAT IT WAS PREPARED IN ACCORDANCE WITH THE REQUIREMENTS OF THE HOWARD SOIL CONSERVATION DISTRICT."

SIGNATURE OF ENGINEER — 9/25/02
PRINT NAME BELOW SIGNATURE
John Ranecchia

REVIEWED FOR HOWARD S.C.D. AND MEETS TECHNICAL REQUIREMENTS
U.S. NATURAL RESOURCE CONSERVATION SERVICE — 10/8/02 DATE

THIS DEVELOPMENT PLAN IS APPROVED FOR SOIL EROSION AND SEDIMENT CONTROL BY THE HOWARD SOIL CONSERVATION DISTRICT.
HOWARD S.C.D. — 10/8/02 DATE

9/25/02 Date

Professional Engr. No. 10557

APPROVED: HOWARD COUNTY DEPT. OF PUBLIC WORKS
CHIEF, BUREAU OF HIGHWAYS — 11-25-02 DATE

APPROVED: HOWARD COUNTY DEPT. OF PLANNING AND ZONING
CHIEF, DIVISION OF LAND DEVELOPMENT — 12/6/02 DATE
CHIEF, DEVELOPMENT ENGINEERING DIVISION — 12/2/02 DATE

Date	No.	Revision Description

EMERSON
(Formerly the Key Property)
Section 3, Area 1
Parcels A – I

OWNER /DEVELOPER:

THE HOWARD RESEARCH & DEVELOPMENT CORPORATION
10275 LITTLE PATUXENT PARKWAY
COLUMBIA, MARYLAND 21044

Daft-McCune-Walker, Inc.
200 East Pennsylvania Avenue
Towson, Maryland 21286
(410) 296-3333
Fax 296-4705

A Team of Land Planners, Landscape Architects, Engineers, Surveyors & Environmental Professionals

TITLE

FINAL PLAN
GRADING, SEDIMENT & EROSION CONTROL PLAN

Des By	MRT	Scale	1" = 50'	Proj. No.	01011
Drn By	ADL	Date	9/25/02		10 OF 31
Chk By		Approved			

F-02-131

Wed Sep 25 10:21:33 AM C:\Projects\01011\Engineering\Plans\Grading\01011GR10.dgn

RISER #	LENGTH	WET POOL ELEV.	PERF. RISER HEIGHT	DRILLED ORIFICE HOLE SIZE	PERFORATION SPACING	NUMBER OF PERFORATIONS PER VERT. FT.
BASIN I	21'	279.9	1.9'	4"	2½"	42
BASIN II	21'	272.3	1.7'	4"	2½"	42

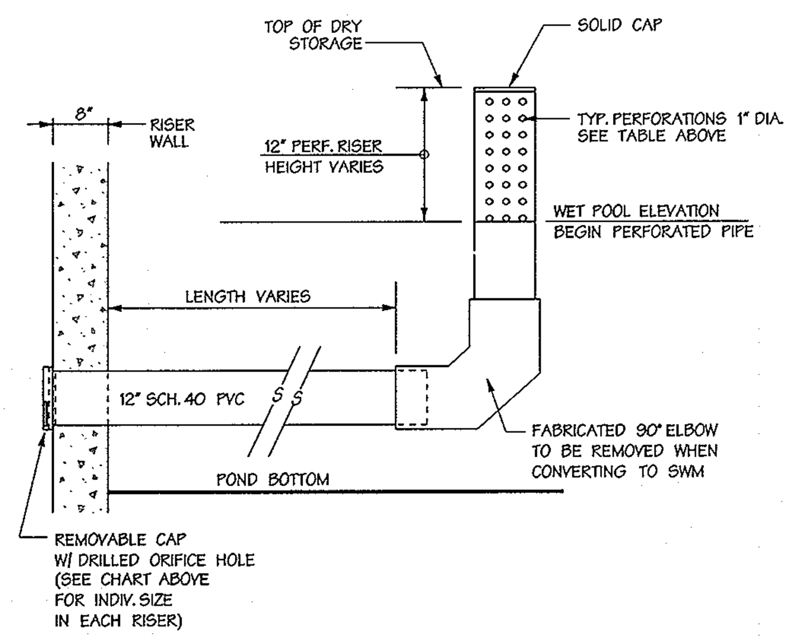

1) FOR SPECIFICATIONS ON MATERIALS, SEE "BASIN DRAWDOWN SCHEMATIC VER. DRAWDOWN DEVICE", THIS SHEET.
2) SEE SWM PROFILE ALONG RISER/BARREL (SHEETS 17,18 OF 31) FOR INCORPORATION OF THIS DETAIL INTO THE OVERALL DESIGN.

Sediment Control Draw–Down

Not To Scale

Table 28 Stone Size

	SIZE RANGE	D_{50}	D_{100}	AASHTO	WEIGHT
NUMBER 57*	⅜" - 1½"	½"	1½"	M-43	N/A
NUMBER 1	2" - 3"	2½"	3"	M-43	N/A
RIP-RAP**	4" - 7"	5½"	7"	N/A	N/A
CLASS I	N/A	9.5"	15"	N/A	150lb max.
CLASS II	N/A	16"	24"	N/A	700lb max.
CLASS III	N/A	23"	34"	N/A	2000lb max.

* This classification is to be used on the inside face of stone outlets and check dams.
** This classification is to be used when ever small rip-rap is required. The State Highway Administration designation for this stone is Stone For Gabions (905.01.04)

Stone For Gabion Baskets

BASKET THICKNESS		SIZE OF INDIVIDUAL STONES	
INCHES	MM	INCHES	MM
6	150	3 - 5	75 - 125
9	225	4 - 7	100 - 175
12	300	4 - 7	100 - 175
18	460	4 - 7	100 - 175
36	910	4 - 12	100 - 300

NOTE: Recycled concrete equivalent may be substituted for all stone classifications. Recycled concrete equivalent shall be concrete broken into the sizes meeting the appropriate classification, shall contain no steel reinforcement, and shall have a density of 150 pounds per cubic foot.

Table 27 Geotextile Fabrics

CLASS	APPARENT OPENING SIZE MM. MAX.	GRAB TENSILE STRENGTH LB. MIN.	BURST STRENGTH PSI. MIN.
A	0.30 **	250	500
B	0.60	200	320
C	0.30	200	320
D	0.60	90	145
E	0.30	90	145
F (SILT FENCE)	0.40-0.80*	90	190

* US Std. Sieve CW-02215 ** .50 mm max. for Super Silt Fence

H - 24 - 1

The properties shall be determined in accordance with the following procedures:
- Apparent opening size MSMT 323
- Grab tensile strength ASTMD 1682: 4x8" specimen, 1x2" clamps, 12"/min. strain rate in both principal directions of geotextile fabric.
- Burst strength ASTMD D 3786

The fabric shall be inert to commonly encountered chemicals and hydrocarbons, and will be rot and mildew resistant. It shall be manufactured from fibers consisting of long chain synthetic polymers, and composed of a minimum of 85% by weight of polyolephins, polyesters, or polyamides. The geotextile fabric shall resist deterioration from ultraviolet exposure.

In addition, Classes A through E shall have a 0.01 cm./sec. minimum permeability when tested in accordance with MSMT 507, and an apparent minimum elongation of 20 percent (20%) when tested in accordance with the grab tensile strength requirements listed above.

Silt Fence
Class F geotextile fabrics for silt fence shall have a 50 lb./in. minimum tensile strength and a 20 lb./in. minimum tensile modules when tested in accordance with MSMT 509. The material shall also have a 0.3 gal./ft. /min. flow rate and seventy-five percent (75%) minimum filtering efficiency when tested in accordance with MSMT 322. Geotextile fabrics used in the construction of silt fence shall resist deterioration from ultraviolet exposure. The fabric shall contain sufficient amounts of ultraviolet ray inhibitors and stabilizers to provide a minimum of 12 months of expected usable construction life at a temperature range of 0 to 120 degrees F.

Geotextile Material Specifications

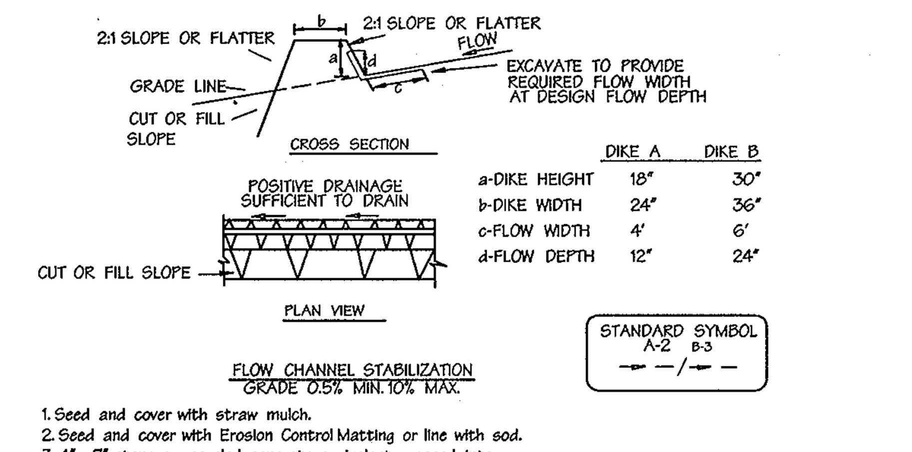

	DIKE A	DIKE B
a-DIKE HEIGHT	18"	30"
b-DIKE WIDTH	24"	36"
c-FLOW WIDTH	4'	6'
d-FLOW DEPTH	12"	24"

FLOW CHANNEL STABILIZATION
GRADE 0.5% MIN. 10% MAX.

1. Seed and cover with straw mulch.
2. Seed and cover with Erosion Control Matting or line with sod.
3. 4" - 7" stone or recycled concrete equivalent pressed into the soil 7" minimum

Construction Specifications

1. All temporary earth dikes shall have uninterrupted positive grade to an outlet. Spot elevations may be necessary for grades less than 1%.
2. Runoff diverted from a disturbed area shall be conveyed to a sediment trapping device.
3. Runoff diverted from an undisturbed area shall outlet directly into an undisturbed, stabilized area at a non-erosive velocity.
4. All trees, brush, stumps, obstructions, and other objectional material shall be removed and disposed of so as not to interfere with the proper functioning of the dike.
5. The dike shall be excavated or shaped to line, grade and cross section as required to meet the criteria specified herein and be free of bank projections or other irregularities which will impede normal flow.
6. Fill shall be compacted by earth moving equipment.
7. All earth removed and not needed for construction shall be placed so that it will not interfere with the functioning of the dike.
8. Inspection and maintenance must be provided periodically and after each rain event.

U.S. DEPARTMENT OF AGRICULTURE
SOIL CONSERVATION SERVICE

A – 1 – 6

MARYLAND DEPARTMENT OF ENVIRONMENT
WATER MANAGEMENT ADMINISTRATION

Earth Dike

Not To Scale

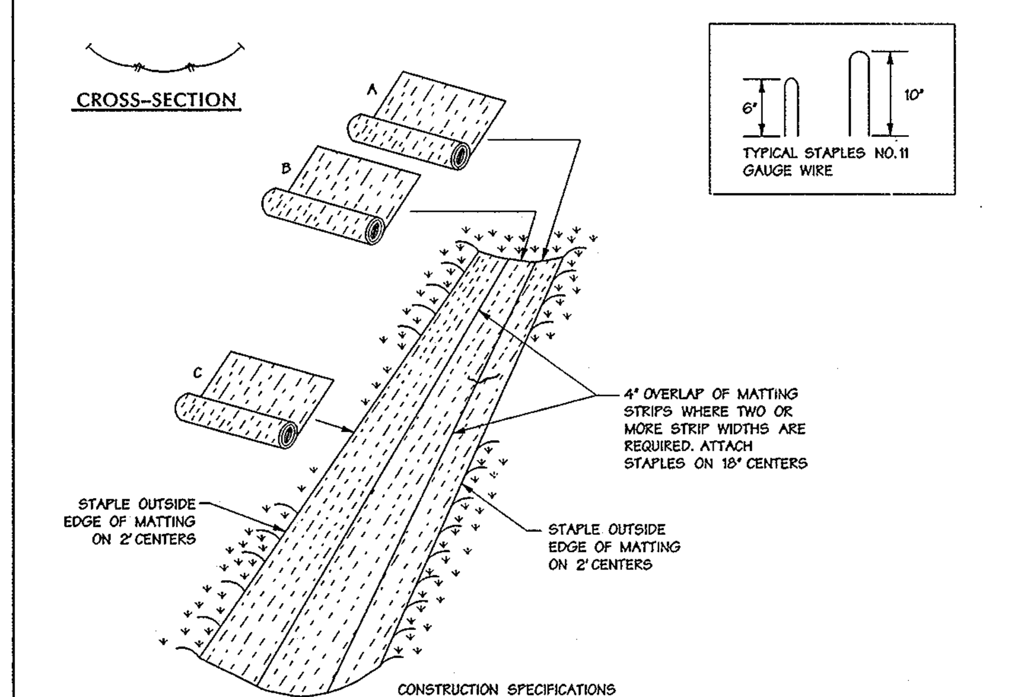

CONSTRUCTION SPECIFICATIONS

1. KEY-IN THE MATTING BY PLACING THE TOP ENDS OF THE MATTING IN A NARROW TRENCH, 6" IN DEPTH. BACKFILL THE TRENCH AND TAMP FIRMLY TO CONFORM TO THE CHANNEL CROSS-SECTION. SECURE WITH A ROW OF STAPLES ABOUT 4" DOWN SLOPE FROM THE TRENCH. SPACING BETWEEN STAPLES IN 6".
2. STAPLE THE 4" OVERLAP IN THE CHANNEL CENTER USING AN 18" SPACING BETWEEN STAPLES.
3. BEFORE STAPLING THE OUTER EDGES OF THE MATTING, MAKE SURE THE MATTING IS SMOOTH AND IN FIRM CONTACT WITH THE SOIL.
4. STAPLES SHALL BE PLACED 2' APART WITH 4 ROWS FOR EACH STRIP, 2 OUTER ROWS, AND 2 ALTERNATING ROWS DOWN THE CENTER.
5. WHERE ONE ROLL OF MATTING ENDS AND ANOTHER BEGINS, THE END OF THE TOP STRIP SHALL OVERLAP THE UPPER END OF THE LOWER STRIP BY 4", SHIPLAP FASHION. REINFORCE THE OVERLAP WITH A DOUBLE ROW OF STAPLES SPACED 6" APART IN A STAGGERED PATTERN ON EITHER SIDE.
6. THE DISCHARGE END OF THE MATTING LINER SHOULD BE SIMILARLY SECURED WITH 2 DOUBLE ROWS OF STAPLES.

NOTE: IF FLOW WILL ENTER FROM THE EDGE OF THE MATTING THEN THE AREA EFFECTED BY THE FLOW MUST BE KEYED-IN.

U.S. DEPARTMENT OF AGRICULTURE
SOIL CONSERVATION SERVICE

G - 22 - 2

MARYLAND DEPARTMENT OF ENVIRONMENT
WATER MANAGEMENT ADMINISTRATION

Erosion Control Matting

Not To Scale

NOTE: FENCE POST SPACING SHALL NOT EXCEED 10' CENTER TO CENTER.

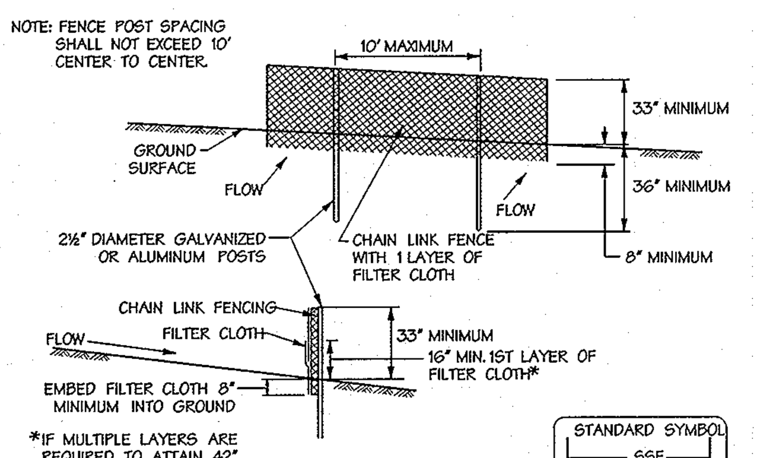

*IF MULTIPLE LAYERS ARE REQUIRED TO ATTAIN 42"

CONSTRUCTION SPECIFICATIONS

1. FENCING SHALL BE 42 INCHES IN HEIGHT AND CONSTRUCTED IN ACCORDANCE WITH THE LATEST MARYLAND STATE HIGHWAY (SHA) DETAILS FOR CHAIN LINK FENCING. THE SPECIFICATION FOR A 6' FENCE SHALL BE USED, SUBSTITUTING 42" FABRIC AND 6' LENGTH POSTS.
2. THE POSTS DO NOT NEED TO BE SET IN CONCRETE.
3. CHAIN LINK FENCE SHALL BE FASTENED SECURELY TO THE FENCE POSTS WITH WIRE TIES OR STAPLES. THE LOWER TENSION WIRE, BRACE AND TRUSS RODS, DRIVE ANCHORS AND POST CAPS ARE NOT REQUIRED EXCEPT ON THE ENDS OF THE FENCE. THE CHAIN LINK FENCING SHALL BE SIX (6) GAUGE OR HEAVIER.
4. FILTER CLOTH SHALL BE FASTENED SECURELY TO THE CHAIN LINK FENCE WITH TIES SPACED EVERY 24" AT THE TOP AND MID SECTION.
5. FILTER CLOTH SHALL BE EMBEDDED A MINIMUM OF 8" INTO THE GROUND.
6. WHEN TWO SECTIONS OF FILTER CLOTH ADJOIN EACH OTHER, THEY SHALL BE OVERLAPPED BY 6" AND FOLDED.
7. MAINTENANCE SHALL BE PERFORMED AS NEEDED AND SILT BUILDUPS REMOVED WHEN "BULGES" DEVELOP IN THE SILT FENCE, OR WHEN SILT REACHES 50% OF FENCE HEIGHT.

U.S. DEPARTMENT OF AGRICULTURE
SOIL CONSERVATION SERVICE

H - 26 - 3

MARYLAND DEPARTMENT OF ENVIRONMENT
WATER MANAGEMENT ADMINISTRATION

Super Silt Fence

Not To Scale

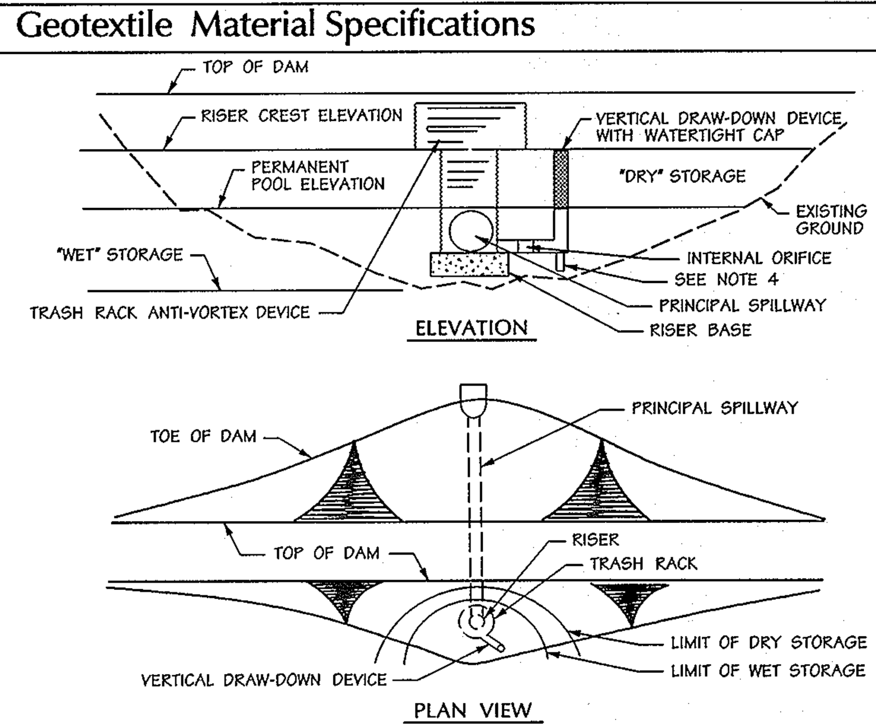

CONSTRUCTION SPECIFICATIONS

1. PERFORATIONS IN THE DRAW-DOWN DEVICE MAY NOT EXTEND INTO THE WET STORAGE.
2. THE TOTAL AREA OF THE PERFORATIONS MUST BE GREATER THAN 4 TIMES THE AREA OF THE INTERNAL ORIFICE.
3. THE PERFORATED PORTION OF THE DRAW-DOWN DEVICE SHALL BE WRAPPED WITH ½" HARDWARE CLOTH AND GEOTEXTILE FABRIC. THE GEOTEXTILE FABRIC SHALL MEET THE SPECIFICATIONS FOR GEOTEXTILE CLASS E.
4. PROVIDE SUPPORT OF DRAW-DOWN DEVICE TO PREVENT SAGGING AND FLOTATION. AN ACCEPTABLE PREVENTATIVE MEASURE IS TO STAKE BOTH SIDES OF THE DRAW-DOWN DEVICE WITH 1" STEEL ANGLE, OR 2" BY 2" SQUARE OR 2" ROUND WOODEN POSTS SET 3' MINIMUM INTO THE GROUND THEN JOINING THEM TO THE DEVICE BY WRAPPING WITH 12 GAUGE MINIMUM WIRE.

U.S. DEPARTMENT OF AGRICULTURE
SOIL CONSERVATION SERVICE

C - 10 - 30

MARYLAND DEPARTMENT OF ENVIRONMENT
WATER MANAGEMENT ADMINISTRATION

Basin Drawdown Schematic Ver. Drawdown Device

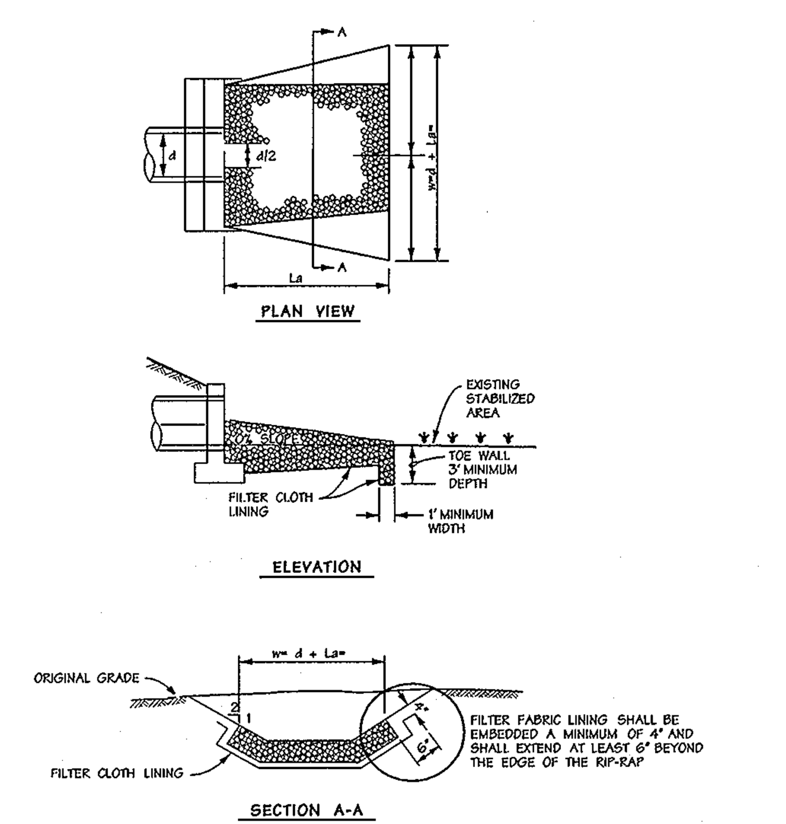

NOTE: FILTER CLOTH SHALL BE GEOTEXTILE CLASS C

F-18-10 (HEAD)

U.S. DEPARTMENT OF AGRICULTURE
SOIL CONSERVATION SERVICE

Rock Outlet Protection III

Not To Scale

CONSTRUCTION SPECIFICATIONS

1. THE SUBGRADE FOR THE FILTER, RIP-RAP, OR GABION SHALL BE PREPARED TO THE REQUIRED LINES AND GRADES. ANY FILL REQUIRED IN THE SUBGRADE SHALL BE COMPACTED TO A DENSITY OF APPROXIMATELY THAT OF THE SURROUNDING UNDISTURBED MATERIAL.

2. THE ROCK OR GRAVEL SHALL CONFORM TO THE SPECIFIED GRADING LIMITS WHEN INSTALLED RESPECTIVELY IN THE RIP-RAP OR FILTER.

3. GEOTEXTILE CLASS C SHALL BE PROTECTED FROM PUNCHING, CUTTING, OR TEARING. ANY DAMAGE OTHER THAN AN OCCASIONAL SMALL HOLE SHALL BE REPAIRED BY PLACING ANOTHER PIECE OF GEOTEXTILE OVER THE DAMAGED PART OR BY COMPLETELY REPLACING THE GEOTEXTILE. ALL OVERLAPS WHETHER FOR REPAIRS OR FOR JOINING TWO PIECES OF GEOTEXTILE SHALL BE A MINIMUM OF ONE FOOT.

4. STONE FOR THE RIP-RAP OR GABION OUTLETS MAY BE PLACED BY EQUIPMENT. THEY SHALL BE CONSTRUCTED TO THE FULL COURSE THICKNESS IN ONE OPERATION AND IN SUCH A MANNER AS TO AVOID DISPLACEMENT OF UNDERLYING MATERIALS. THE STONE FOR RIP-RAP OR GABION OUTLETS SHALL BE DELIVERED AND PLACED IN A MANNER THAT WILL ENSURE THAT IT IS REASONABLY HOMOGENEOUS WITH THE SMALLER STONES AND SPALLS FILLING THE VOIDS BETWEEN THE LARGER STONES. RIP-RAP SHALL BE PLACED IN A MANNER TO PREVENT DAMAGE TO THE FILTER BLANKET OR GEOTEXTILE. HAND PLACEMENT WILL BE REQUIRED TO THE EXTENT NECESSARY TO PREVENT DAMAGE TO THE PERMANENT WORKS.

5. THE STONE SHALL BE PLACED SO THAT IT BLENDS IN WITH THE EXISTING GROUND. IF THE STONE IS PLACED TOO HIGH THEN THE FLOW WILL BE FORCED OUT OF THE CHANNEL AND SCOUR ADJACENT TO THE STONE WILL OCCUR.

F-18-8A, 9A, 10A

MARYLAND DEPARTMENT OF ENVIRONMENT
WATER MANAGEMENT ADMINISTRATION

Rock Outlet Protection III Specifications

Not To Scale

APPROVED: HOWARD COUNTY DEPT. OF PUBLIC WORKS

[signature] 11-25-02
CHIEF, BUREAU OF HIGHWAYS HS — DATE

APPROVED: HOWARD COUNTY DEPT. OF PLANNING AND ZONING

[signature] 12/6/02
CHIEF, DIVISION OF LAND DEVELOPMENT HB — DATE

[signature] 12/2/02
CHIEF, DEVELOPMENT ENGINEERING DIVISION MK — DATE

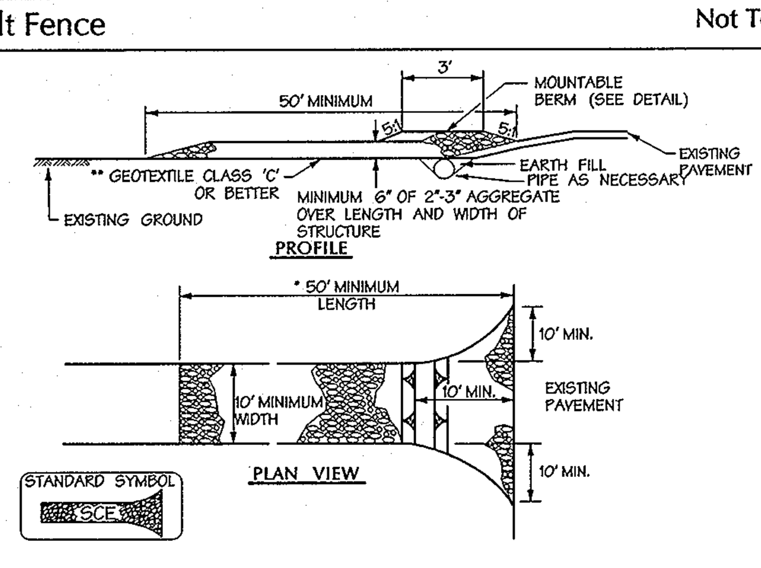

CONSTRUCTION SPECIFICATIONS

1. LENGTH - MINIMUM OF 50' (*30' FOR SINGLE RESIDENCE LOT).
2. WIDTH - 10' MINIMUM, SHOULD BE FLARED AT THE EXISTING ROAD TO PROVIDE A TURNING RADIUS.
3. GEOTEXTILE FABRIC CLASS C (FILTER CLOTH) SHALL BE PLACED OVER THE EXISTING GROUND PRIOR TO PLACING STONE. **THE PLAN APPROVAL AUTHORITY MAY NOT REQUIRE SINGLE FAMILY RESIDENCES TO USE GEOTEXTILE.
4. STONE - CRUSHED AGGREGATE (2" TO 3") OR RECLAIMED OR RECYCLED CONCRETE EQUIVALENT SHALL BE PLACED AT LEAST 6" DEEP OVER THE LENGTH AND WIDTH OF THE ENTRANCE.
5. SURFACE WATER - ALL SURFACE WATER FLOWING TO OR DIVERTED TOWARD CONSTRUCTION ENTRANCES SHALL BE PIPED THROUGH THE ENTRANCE, MAINTAINING POSITIVE DRAINAGE. PIPE INSTALLED THROUGH THE STABILIZED CONSTRUCTION ENTRANCE SHALL BE PROTECTED WITH A MOUNTABLE BERM WITH 5:1 SLOPES AND A MINIMUM OF 6" OF STONE OVER THE PIPE. PIPE HAS TO BE SIZED ACCORDING TO THE DRAINAGE. WHEN THE SCE IS LOCATED AT A HIGH SPOT AND HAS NO DRAINAGE TO CONVEY A PIPE WILL NOT BE NECESSARY. PIPE SHOULD BE SIZED ACCORDING TO THE AMOUNT OF RUNOFF TO BE CONVEYED. A 6" MINIMUM WILL BE REQUIRED.
6. LOCATION - A STABILIZED CONSTRUCTION ENTRANCE SHALL BE LOCATED AT EVERY POINT WHERE CONSTRUCTION TRAFFIC ENTERS OR LEAVES A CONSTRUCTION SITE. VEHICLES LEAVING THE SITE MUST TRAVEL OVER THE ENTIRE LENGTH OF THE STABILIZED CONSTRUCTION ENTRANCE.

U.S. DEPARTMENT OF AGRICULTURE
SOIL CONSERVATION SERVICE

F - 17 - 3

MARYLAND DEPARTMENT OF ENVIRONMENT
WATER MANAGEMENT ADMINISTRATION

Stabilized Construction Entrance

Not To Scale

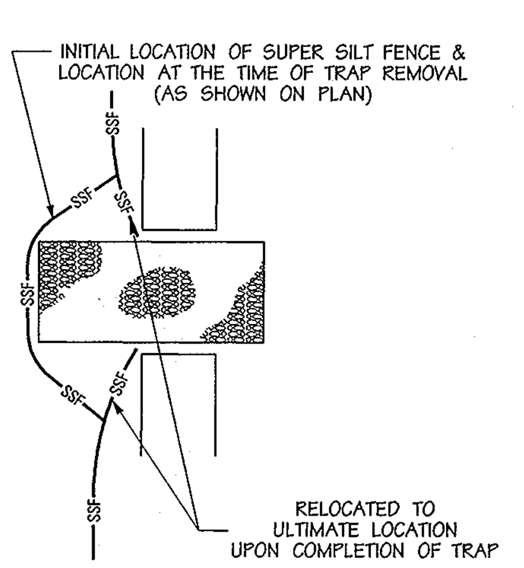

TYPICAL SUPER SILT FENCE INSTALLATION AT TRAP OUTFALL

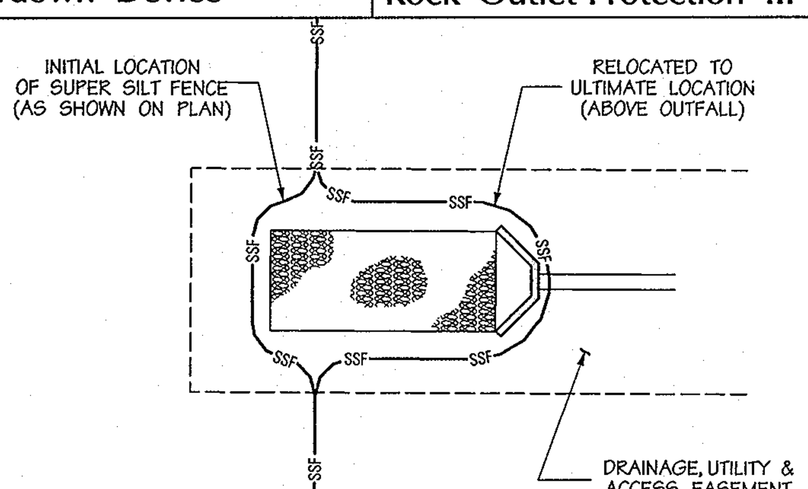

TYPICAL SUPER SILT FENCE INSTALLATION AT PIPE OUTFALL

Not To Scale

Super Silt Fence Outfall Protection

MDE PERMIT AND TRACKING No. 01-NT-0222/200164079

DEVELOPER'S CERTIFICATION:

"I/WE CERTIFY THAT ALL DEVELOPMENT AND CONSTRUCTION WILL BE DONE ACCORDING TO THIS PLAN, AND THAT ANY RESPONSIBLE PERSONNEL INVOLVED IN THE CONSTRUCTION PROJECT WILL HAVE A CERTIFICATE OF ATTENDANCE AT A DEPARTMENT OF THE ENVIRONMENT APPROVED TRAINING PROGRAM FOR THE CONTROL OF SEDIMENT AND EROSION BEFORE BEGINNING THE PROJECT. I ALSO AUTHORIZE PERIODIC ON-SITE INSPECTION BY THE HOWARD SOIL CONSERVATION DISTRICT.

[signature] 9/25/02
SIGNATURE OF DEVELOPER — DATE
PRINT NAME BELOW SIGNATURE
JOSEPH NECKER JR.

ENGINEER'S CERTIFICATION:

"I CERTIFY THAT THIS PLAN FOR EROSION AND SEDIMENT CONTROL REPRESENTS A PRACTICAL AND WORKABLE PLAN BASED ON MY PERSONAL KNOWLEDGE OF THE SITE CONDITIONS AND THAT IT WAS PREPARED IN ACCORDANCE WITH THE REQUIREMENTS OF THE HOWARD SOIL CONSERVATION DISTRICT."

[signature] 9/25/02
SIGNATURE OF ENGINEER
PRINT NAME BELOW SIGNATURE
JOHN RANOCCHIA

REVIEWED FOR HOWARD S.C.D. AND MEETS TECHNICAL REQUIREMENTS

[signature] 10/8/02
U.S. NATURAL RESOURCE CONSERVATION SERVICE — DATE

THIS DEVELOPMENT PLAN IS APPROVED FOR SOIL EROSION AND SEDIMENT CONTROL BY THE HOWARD SOIL CONSERVATION DISTRICT.

[signature] 10/8/02
HOWARD S.C.D. — DATE

9/25/02
Date

PROFESSIONAL ENGINEER — No. 10551 — JOHN W. RANOCCHIA, SR. — STATE OF MARYLAND

Professional Engr. No. 10551

Date	No.	Revision Description

EMERSON
(Formerly the Key Property)
Section 3, Area 1
Parcels A – I

OWNER /DEVELOPER:

THE HOWARD RESEARCH & DEVELOPMENT CORPORATION
10275 LITTLE PATUXENT PARKWAY
COLUMBIA, MARYLAND 21044

DMW
Daft·McCune·Walker, Inc.
200 East Pennsylvania Avenue
Towson, Maryland 21286
(410) 296-3333
Fax 296-4705

A Team of Land Planners, Landscape Architects, Engineers, Surveyors & Environmental Professionals

TITLE

FINAL PLAN
SEDIMENT & EROSION CONTROL DETAILS

Des By		Scale 1" = 50'	Proj. No. 01011.C
Drn By	ADL	Date 9/25/02	11 OF 31
Chk By		Approved	

F–02–131

Wed Sep 25 10:23:36 2002

STANDARDS AND SPECIFICATIONS FOR VEGETATIVE STABILIZATION

SECTION I - VEGETATIVE STABILIZATION METHODS AND MATERIALS

A. SITE PREPARATION

I. Install erosion and sediment control structures (either temporary or permanent) such as diversions, grade stabilization structures, berms waterways, or sediment control basins.

II. Perform all grading operations at right angles to the slope. Final grading and shaping is not usually necessary for temporary seeding.

III. Schedule required soil test to determine soil amendment composition and application rates for sites having disturbed area over 5 acres.

B. SOIL AMENDMENTS (FERTILIZER AND LIME SPECIFICATIONS)

I. Soil test must be performed to determine the exact ratios and application rates for both lime and fertilizer on sites having disturbed areas over 5 acres. Soil analysis may be performed by the University of Maryland or a recognized commercial laboratory. Soil samples taken for engineering purposes may also be used for chemical analysis.

II. Fertilizers shall be uniform in composition, free flowing and suitable for accurate application by approved equipment. Manure may be substituted for fertilizer with prior approval from the appropriate approval authority. Fertilizers shall be delivered to the site fully labeled according to the applicable state fertilizer laws and shall bear the name, trade name or trademark and warrantee of the producer.

III. Lime materials shall be ground limestone (hydrated or brunt lime may be substituted) which contains at least 50% total oxides (calcium oxide plus magnesium oxide). Limestone shall be ground to such fineness that at least 50% will pass through a #100 mesh sieve and 98 - 100% will pass through a #20 mesh sieve.

IV. Incorporate lime and fertilizer into the top 3 - 5 inches of soil by disking or other suitable means.

C. SEEDBED PREPARATION

I. TEMPORARY SEEDING

A. Seedbed preparation shall consist of loosening soil to a depth of 3 inches to 5 inches by means of suitable agricultural or construction equipment, such a disc harrows or chisel plows or rippers mounted on construction equipment. After the soil is loosened it should not be rolled or dragged smooth but left in the roughened condition. Sloped areas (greater than 3:1) should be tracked leaving the surface in an irregular condition with ridges running parallel to the counter of the slope.

B. Apply fertilizer and lime as prescribed on the plans.

C. Incorporate lime and fertilizer into the top 3 - 5 inches of soil by disking or other suitable means.

II. PERMANENT SEEDING

A. Minimum soil conditions required for permanent vegetative establishment:

1. Soil ph shall be between 6.0 and 7.0.
2. Soluble salts shall be less than 500 parts per million (PPM).
3. The soil shall contain less than 40% clay but enough fine grained material (> 30% silt plus clay) to provide the capacity to hold a moderate amount of moisture. An exception is if Lovegrass or Serecia Lespedeza is to be planted. Then a sandy soil (< 30% silt plus clay) would be acceptable.
4. Soil shall contain 1.5% minimum organic matter by weight.
5. Soil must contain sufficient pore space to permit adequate root penetration.
6. If these conditions cannot be met by the soils on site, adding topsoil is required in accordance with Section 21 - Standard and Specification for Topsoil.

B. Areas previously graded in conformance with the drawings shall be maintained in a true and even grade, then scarified or otherwise loosened to a depth of 3 - 5 inches to permit bonding of the topsoil to the surface area and to create horizontal erosion check slots to prevent topsoil from sliding down a slope.

C. Apply soil amendments as per soil test or as included on the plans.

D. Mix soil amendments into the top 3 - 5 inches of topsoil by disking or other suitable means. Lawn areas should be raked to smooth the surface, remove large objects like stones and branches, and ready the area for seed application. Where site conditions will not permit normal seedbed preparation, loosen surface soil by dragging with a heavy chain or other equipment to roughen the surface. Steep slopes (steeper than 3:1) should be tracked by a dozer leaving the soil in an irregular condition with ridges running parallel to the contour of the slope. The top 1 - 3 inches of soil should be loose and friable. Seedbed loosening may not be necessary on newly disturbed areas.

D. SEED SPECIFICATIONS

I. All seed must meet the requirements of the Maryland State Seed Law. All seed shall be subject to re-testing by a recognized seed laboratory. All seed used shall have been tested within the 6 months immediately preceding the date of sowing such material on this job.

Note: Seed tags shall be made available to the inspector to verify type and rate of seed used.

II. Inoculant - The inoculant for treating legume seed in the seed mixtures shall be a pure culture of nitrogen-fixing bacteria prepared specifically for the species. Inoculants shall not be used later than the date indicated on the container. Add fresh inoculant as directed on package. Use four times the recommended rate when hydroseeding. Note: It is very important to keep inoculant as cool as possible until used. Temperatures above 75-80 F. can weaken bacteria and make the inoculant less effective.

E. METHODS OF SEEDING

I. Hydroseeding: Apply seed uniformly with hydroseeder (slurry includes seed and fertilizer), broadcast or drop seeder, or cultipacker seeder.

A. If fertilizer is being applied at the time of seeding, the application rates amounts will not exceed the following:
Nitrogen; maximum of 100 pounds per acre total of soluble
Nitrogen; P205 (phosphorous): 200 pounds per acre; K20 (potassium): 200 pounds per acre.

B. Lime: Use only ground agricultural limestone, (up to 3 tons per acre may be applied by hydroseeding). Normally, not more than 2 tons are applied by hydroseeding at any one time. Do not use burnt or hydrated lime when hydroseeding.

C. Seed and fertilizer shall be mixed on site and seeding shall be done immediately and without interruption.

II. Dry Seeding: This includes use of conventional drop or broadcast spreaders.

A. Seed spread dry shall be incorporated into the subsoil at the rates prescribed on the temporary or permanent seeding summaries or tables 25 or 26. The seeded area shall then be rolled with a weighed roller to provide good seed soil contact.

B. Where practical, seed should be applied in two directions perpendicular to each other. Apply half the seeding rate in each direction.

III. Drill or cultipacker seeding: Mechanized seeders that apply and cover seed with soil.

A. Cultipacking seeders are required to bury the seed in such a fashion as to provide at least ¼ inch of soil covering.

Seedbed must be firm after planting.

B. Where practical, seed should be applied in two directions perpendicular to each other. Apply half the seeding rate in each direction.

F. MULCH SPECIFICATIONS (IN ORDER OF PREFERENCE)

I. Straw shall consist of thoroughly threshed wheat, rye or oat straw, reasonably bright in color, and shall not be musty, moldy, caked, decayed, or excessively dusty and shall be free of noxious weeds seeds as specified in the Maryland Seed Law.

II. Wood cellulose fiber mulch (WCFM)

A. WCFM shall consist of specially prepared wood cellulose processed into a uniform fibrous physical state.

B. WCFM shall be dyed green or contain a green dye in the package that will provide an appropriate color to facilitate visual inspection of the uniformly spread slurry.

C. WCFM, including dye shall contain no germination or growth inhibiting factors.

D. WCFM materials shall be manufactured and processed in such a manner that the wood cellulose fiber mulch will remain in uniform suspension in water under agitation and will blend with seed, fertilizer and other additives to form a homogeneous slurry. The mulch material shall form a blotter-like ground cover, on application, having moisture absorption and percolation properties and shall cover and hold grass seed in contact with the soil without inhibiting the growth of the grass seedings.

E. WCFM material shall contain no elements or compounds at concentration levels that will be phyto-toxic.

F. WCFM must conform to the following physical requirements: Fiber length to approximately 10 mm., diameter approximately 1mm., ph range of 4.0 to 8.5, ash content of 1.6% maximum and water holding capacity of 90% minimum.

Note: Only sterile straw mulch should be used in areas where one species of grass is desired.

G. MULCHING SEEDED AREAS - Mulch shall be applied to all seeded areas where one species of grass is desired.

I. If grading is completed outside of the seeding season, mulch alone shall be applied as prescribed in this section and maintained until the seeding season returns and seeding can be performed in accordance with these specifications.

II. When straw mulch is used, it shall be spread over all seeded areas at the rate of 2 tons per acre. Mulch shall be applied in a uniform loose depth of between 1inches and 2 inches. Mulch applied shall achieve a uniform distribution and depth so that the surface is not exposed. If a mulch anchoring tool is to be used, the rate should be increased to 2.5 tons per acre.

III. Wood cellulose fiber used as a mulch shall be applied at a net dry weight of 1,500 pounds per acre. The wood cellulose fiber shall be mixed with water and the mixture shall contain a maximum of 50 pounds of wood cellulose fiber per 100 gallons of water.

H. SECURING STRAW MULCH - Mulch anchoring shall be performed immediately following mulch application to minimize loss by wind or water. This may be done by one of the following methods (listed by preference), depending upon size of area and erosion hazard:

I. A mulch anchoring tool is a tractor drawn implement design to punch and anchor mulch into the soil surface a minimum of two (2) inches. This practice is most effective on large areas, but is limited to flatter slopes where equipment can operate safely. If used on sloping land, this practice should be used on the contour if possible.

II. Wood cellulose fiber may be used for anchoring straw. The fiber binder shall be applied at a net dry weight of 750 pounds per acre. The wood cellulose fiber shall be mixed with water and the mixture shall contain a maximum of 50 pounds of wood cellulose fiber per 100 gallons of water.

III. Application of liquid binders should be heavier at the edges where wind catches mulch, such as in valleys or on crest of banks. The remainder of area should appear uniform after binder application. Synthetic binders - such as Acrylic DLR (agro-tack), DCA-70, Petroset, Terra Tax II, Terra Tack AR or other approved equal may be used at rates recommended by the manufacturer to anchor mulch.

IV. Lightweight plastic netting may be stapled over the mulch according to manufacturer's recommendations. Netting is usually available in rolls 4' to 15' feet wide and 300 to 3,000 feet long.

SECTION II - TEMPORARY SEEDING

VEGETATION - Annual grass or grain used to provide cover on disturbed areas for up to 12 months. For longer duration of vegetative cover, permanent seeding is required.

Seed Mixture (Hardiness Zone 7A)					Fertilizer Rate (10-10-10)	Lime Rate
No.	Species	Application Rate (Lb./Ac.)	Seeding Dates	Seeding Depths		
1	Annual Ryegrass	50	2/1 - 4/30 8/15 - 11/1	¼"-½"	600 Lbs./Ac. (15 Lbs./1000 SF)	2 Tons/Ac. (100 Lbs./1000 SF)
2	Weeping Lovegrass	4	5/1 - 8/14	¼"-½"		

SECTION III - PERMANENT SEEDING

Seeding grass and legumes to establish ground cover for a minimum of one year on disturbed areas generally receiving low maintenance.

Seed Mixture No. 3 (Hardiness Zone 7A)					Fertilizer Rate (10-20-20)			Lime Rate
%	Species	Application Rate (Lb./Ac.)	Seeding * Dates	Seeding Depths	N	P205	K20	
85	Rebel II Tall Fescue	125	3/1 - 5/15 8/15 - 11/15	¼"-½"	90 Lb./Ac. (2 Lb./ 1000 Sq.Ft.)	175 Lb./Ac. (4 Lb./ 1000 Sq.Ft.)	175 Lb./Ac. (4 Lb./ 1000 Sq.Ft.)	2 Tons/Ac. (100 Lb./ 1000 Sq.Ft.)
10	Pennfine Perennial Ryegrass	15						
5	Kenblue Kentucky Bluegrass	10						

* For 5-16 through 8-14 add two (2) pounds of Weeping Lovegrass per acre or ten (10) pounds of Millet per acre to seed mixture (i.e. Mix #3 shown).

G - 20 - 1A

U.S. DEPARTMENT OF AGRICULTURE SOIL CONSERVATION SERVICE

MARYLAND DEPARTMENT OF ENVIRONMENT WATER MANAGEMENT ADMINISTRATION

Vegetative Stabilization

SECTION IV - SOD

To provide quick cover on disturbed areas (2:1 grade or flatter)

A. GENERAL SPECIFICATIONS

I. Class of turfgrass sod shall be Maryland or Virginia State certified or approved. Sod labels shall be made available to the job foreman and inspector.

II. Sod shall be machine cut at a uniform soil thickness of¾", plus or minus¼", at the time of cutting. Measurement for thickness shall exclude top growth and thatch. Individual pieces of sod shall be cut to the suppliers width length. Maximum allowable deviation from standard widths and lengths shall be 5 percent. Broken pads and torn or uneven ends will not be acceptable.

III. Standard size sections of sod shall be strong enough to support their own weight and retain their size and shape when suspended vertically with a firm grasp on the upper 10 percent of the section.

IV. Sod shall not be harvested or transplanted when moisture content (excessively dry or wet) may adversely affect its survival.

V. Sod shall be harvested, delivered, and installed within a period of 36 hours. Sod not transplanted within this period shall be approved by an agronomist or soil scientist prior to its installation.

B. SOD INSTALLATION

I. During periods of excessively high temperature or in areas having dry subsoil, the subsoil shall be lightly irrigated immediately prior to laying the sod.

II. The first row of sod shall be laid in a straight line with subsequent rows placed parallel to and tightly wedged against each other. Lateral joints shall be staggered to promote more uniform growth and strength. Ensure that sod is not stretched or overlapped and that all joints are butted tight in order to prevent voids which air drying of the roots.

III. Wherever possible, sod shall be laid with the long edges parallel to the contour and with staggering joints. Sod shall be rolled and tamped, pegged or otherwise secured to prevent slippage on slopes and to ensure solid contact between sod roots and the underlying soil surface.

IV. Sod shall be watered immediately following rolling or tamping until the underside of the new sod pad and soil surface below the sod are thoroughly wet. the operations laying, tamping and irrigating for any piece of sod shall be completed within eight hours.

C. SOD MAINTENANCE

I. In the absence of adequate rainfall, watering shall be performed daily or as often as necessary during the first week and in sufficient quantities to maintain moist soil to a depth of 4 inches. Watering should be done during the heat of the day to prevent wilting.

II. After the first week, sod watering is required as necessary to maintain adequate moisture content.

III. The first mowing of sod should not be attempted until the sod is firmly rooted. No more than 1/3 of the grass leaf shall be removed by the initial cutting or subsequent cuttings. Grass height shall be maintained between 2 inches and 3 inches unless otherwise specified.

SECTION V - TURFGRASS ESTABLISHMENT

Areas where turfgrass may be desired may include lawns, parks, playgrounds, and commercial sires which will receive a medium high level of maintenance. Areas to receive seed shall be tilled by disking or other approved methods to a depth of 2 to 4 inches, leveled and raked to prepare a proper seedbed. Stones and debris over 1½inches in diameter shall be removed. The resulting seedbed shall be in such condition that future mowing of grasses will pose no difficulty.

Note: Choose certified material. Certified material is the best guarantee of cultivar purity. The certification program of the Maryland Department of Agriculture, Turf and Seed Section, provides a reliable means of consumer protection and assures a pure genetic line.

A. TURFGRASS MIXTURES

I. Kentucky Bluegrass - Full sun mixture - For use in areas that receive intensive management. Irrigation required in the areas of central Maryland and Eastern Shore. Recommended certified Kentucky Bluegrass cultivars seeding rate: 1.5 to 2.0 pounds per 1000 square feet. A minimum of three Bluegrass cultivars should be chosen ranging from a minimum of 10% to a maximum of 35% of the mixture by weight.

II. Kentucky Bluegrass/Perennial Rye - Full sun mixture - For use in full sun areas where rapid establishment is necessary and when turf will receive medium to intensive management. Certified Perennial Ryegrass cultivars/certified Kentucky Bluegrass seeding rate: 2 pounds mixture per 1000 square feet. A minimum of 3 Kentucky Bluegrass cultivars must be chosen, with each cultivar ranging from 10% to 35% of the mixture by weight.

III. Tall Fescue/Kentucky Bluegrass - Full sun mixture - For use in drought prone areas and/or for areas receiving low to medium management in full sun to medium shade. Recommended mixture includes; certified Tall Fescue cultivars 95-100%, certified Kentucky Bluegrass cultivars 0 - 5%, seeding rate: 5 to 8 pounds per 1000 square feet. One or more cultivars may be blended.

IV. Kentucky Bluegrass/Fine Fescue - Shade mixture - For use in areas with shade in Bluegrass lawns. For establishment in high quality, intensively managed turf area. Mixture includes; certified Kentucky Bluegrass cultivars 30-40% and certified Fine Fescue and 60-70%. Seeding rate: 1½- 3 pounds per 1000 square feet. A minimum of 3 Kentucky Bluegrass cultivars must be chosen. With each cultivar ranging from a minimum of 10% to a maximum of 35% of the mixture by weight.

Note: Turfgrass varieties should be selected form those listed in the most current University of Maryland publication, agronomy mimeo number 77, "Turfgrass Cultivar Recommendations for Maryland".

B. IDEAL TIMES OF SEEDING

Western Maryland: March 15 - June 1, August 1 - October 1 (hardiness zones - 5B, 6A).

Central Maryland: March 1 - May 15, August 15 - October 15 (hardiness zone - 6B).

Southern Maryland, Eastern Shore: March 1 - May 15, August 15 - October 15 (hardiness zones - 7A , 7B).

C. IRRIGATION

If soil moisture is different, supply new seedlings with adequate water for plant growth (1/2" - 1" every 3 to 4 days depending on soil texture) until they are firmly established. This is especially true when seedings are made late in the planting season, in abnormally dry or hot seasons, or on adverse sites.

D. REPAIRS AND MAINTENANCE

Inspect all seeded areas for failures and make necessary repairs, replacements, and reseedings within the planting season.

I. Once the vegetation is established, the site shall have 95% groundcover to be considered adequately stabilized.

II. If the stand provides less than 40% ground coverage, re-establish following original lime, fertilizer, seedbed preparation and seeding recommendations.

III. If the stand provides between 40% and 94% ground coverage, overseeding and fertilizing using half of the rates originally applied may be necessary.

IV. Maintenance fertilizer rates for permanent seedings are shown in Table 24, for lawns and other medium high maintenance turfgrass areas, refer to the University of Maryland publication "Lawn Care in Maryland" bulletin number 171.

MDE PERMIT AND TRACKING No. 01-NT-0222/200164079

DUST CONTROL SPECIFICATIONS

Temporary methods:

1. Mulches - see standards for vegetative stabilization with mulches only. Mulch should be crimped or tacked to prevent blowing.
2. Vegetative cover - see standards for temporary vegetative cover.
3. Tillage - to roughen surface and bring clods to the surface. This is an emergency measure which should be used before soil blowing starts. Begin plowing on windward side of site. Chisel-type plows spaced about 12 inches apart, spring-toothed harrows, and similar plows are examples of equipment which may produce the desired effect.
4. Irrigation - this is generally done as an an emergency treatment. Site is sprinkled with water until the surface is moist. repeat as needed. At no time should the site be irrigated to the point the runoff begins to flow.
5. Barriers - solid board fences, snow fences, burlap fences, straw bales, and similar material can be used to control air currents and soil blowing. Barriers placed at right angles to prevailing currents at intervals of about 10 times their height are affective in controlling soil blowing.
6. Calcium chloride - apply at a rate that will keep surface moist. May need retreatment.

Permanent methods:

1. Permanent vegetation - see standards for permanent vegetative cover, and permanent stabilization with sod. Existing trees or large shrubs may afford valuable protection if left in place.
2. Topsoiling - covering with less erosive soil materials. See standards for topsoiling.
3. Stone - cover surface with crushed stone or coarse gravel.

U.S. DEPARTMENT OF AGRICULTURE SOIL CONSERVATION SERVICE

H - 30 - 1

MARYLAND DEPARTMENT OF ENVIRONMENT WATER MANAGEMENT ADMINISTRATION

Dust Control Specifications

Not To Scale

DEVELOPER'S CERTIFICATION:

"I/WE CERTIFY THAT ALL DEVELOPMENT AND CONSTRUCTION WILL BE DONE ACCORDING TO THIS PLAN, AND THAT ANY RESPONSIBLE PERSONNEL INVOLVED IN THE CONSTRUCTION PROJECT WILL HAVE A CERTIFICATE OF ATTENDANCE AT A DEPARTMENT OF THE ENVIRONMENT APPROVED TRAINING PROGRAM FOR THE CONTROL OF SEDIMENT AND EROSION BEFORE BEGINNING THE PROJECT. I ALSO AUTHORIZE PERIODIC ON-SITE INSPECTION BY THE HOWARD SOIL CONSERVATION DISTRICT.

SIGNATURE OF DEVELOPER — DATE 9/25/02

PRINT NAME BELOW SIGNATURE: JOSEPH NECKER, JR.

ENGINEER'S CERTIFICATION:

"I CERTIFY THAT THIS PLAN FOR EROSION AND SEDIMENT CONTROL REPRESENTS A PRACTICAL AND WORKABLE PLAN BASED ON MY PERSONAL KNOWLEDGE OF THE SITE CONDITIONS AND THAT IT WAS PREPARED IN ACCORDANCE WITH THE REQUIREMENTS OF THE HOWARD SOIL CONSERVATION DISTRICT."

SIGNATURE OF ENGINEER — 9/25/02

PRINT NAME BELOW SIGNATURE: JOHN RANOCCHIA

REVIEWED FOR HOWARD S.C.D. AND MEETS TECHNICAL REQUIREMENTS

U.S. NATURAL RESOURCE CONSERVATION SERVICE — DATE 10/8/02

THIS DEVELOPMENT PLAN IS APPROVED FOR SOIL EROSION AND SEDIMENT CONTROL BY THE HOWARD SOIL CONSERVATION DISTRICT.

HOWARD S.C.D. — DATE 10/8/02

APPROVED: HOWARD COUNTY DEPT. OF PUBLIC WORKS

CHIEF, BUREAU OF HIGHWAYS — DATE 11-25-02

APPROVED: HOWARD COUNTY DEPT. OF PLANNING AND ZONING

CHIEF, DIVISION OF LAND DEVELOPMENT — DATE 12/6/02

CHIEF, DEVELOPMENT ENGINEERING DIVISION — DATE 12/2/02

Date	No.	Revision Description

EMERSON
(Formerly the Key Property)
Section 3, Area 1
Parcels A – I

OWNER /DEVELOPER:

THE HOWARD RESEARCH & DEVELOPMENT CORPORATION
10275 LITTLE PATUXENT PARKWAY
COLUMBIA, MARYLAND 21044

9/25/02
Date

JOHN W. RANOCCHIA, SR. — PROFESSIONAL ENGINEER — No. 10551 — STATE OF MARYLAND

Professional Engr. No. 10551

DMW
Daft·McCune·Walker, Inc.
200 East Pennsylvania Avenue
Towson, Maryland 21286
(410) 296–3333
Fax 296–4705

A Team of Land Planners, Landscape Architects, Engineers, Surveyors & Environmental Professionals

TITLE
FINAL PLAN
SEDIMENT & EROSION CONTROL
DETAILS & SPECIFICATIONS

Des By		Scale 1" = 50'	Proj. No. 01011.C
Drn By	WDE	Date 9/25/02	12 OF 31
Chk By		Approved	

F–02–131

Wed Sep 25 10:25:33 ... 9/25/02

Sediment Control General Notes

Not To Scale

1. A MINIMUM OF 48 HOURS NOTICE MUST BE GIVEN TO THE HOWARD COUNTY DEPARTMENT OF INSPECTIONS, AND PERMITS, SEDIMENT CONTROL DIVISION PRIOR TO THE START OF ANY CONSTRUCTION (313-1855).
2. ALL VEGETATIVE AND STRUCTURAL PRACTICES ARE TO BE INSTALLED ACCORDING TO THE PROVISIONS OF THIS PLAN AND ARE TO BE IN CONFORMANCE WITH THE MOST CURRENT MARYLAND STANDARDS AND SPECIFICATIONS FOR SOIL EROSION AND SEDIMENT CONTROL" AND REVISIONS THERETO.
3. FOLLOWING INITIAL SOIL DISTURBANCE OR RE-DISTURBANCE, PERMANENT OR TEMPORARY STABILIZATION SHALL BE COMPLETED WITHIN:
   A. SEVEN CALENDAR DAYS FOR ALL PERIMETER SEDIMENT CONTROL STRUCTURES, DIKES, PERIMETER SLOPES AND ALL SLOPES STEEPER THAN 3:1.
   B. FOURTEEN DAYS AS TO ALL OTHER DISTURBED OF GRADED AREAS ON THE PROJECT SITE.
4. ALL SEDIMENT TRAPS/BASINS SHOWN MUST BE FENCED AND WARNING SIGNS POSTED AROUND THEIR PERIMETER IN ACCORDANCE WITH VOL.1, CHAPTER 12, OF THE "HOWARD COUNTY DESIGN MANUAL", STORM DRAINAGE.
5. ALL DISTURBED AREAS MUST BE STABILIZED WITHIN THE TIME PERIOD SPECIFIED ABOVE IN ACCORDANCE WITH THE "1994 MARYLAND STANDARDS AND SPECIFICATIONS FOR SOIL EROSION AND SEDIMENT CONTROL" FOR PERMANENT SEEDINGS (SEC.51), SODS (SEC.54), TEMPORARY SEEDING (SEC.50), AND MULCHING (SEC.52). TEMPORARY STABILIZATION WITH MULCH ALONE CAN ONLY BE DONE WHEN RECOMMENDED SEEDING DATES DO NOT ALLOW FOR PROPER GERMINATION AND ESTABLISHMENT OF GRASSES.
6. ALL SEDIMENT CONTROL STRUCTURES ARE TO REMAIN IN PLACE AND ARE TO BE MAINTAINED IN OPERATIVE CONDITION UNTIL PERMISSION FOR THEIR REMOVAL HAS BEEN OBTAINED FROM THE HOWARD COUNTY SEDIMENT CONTROL INSPECTOR.
7. SITE ANALYSIS:

TOTAL AREA OR SITE	= 64.9 ACRES
AREA DISTURBED	= 30 ACRES
AREA TO BE ROOFED OR PAVED	= 3 ACRES
AREA TO BE VEGETATIVELY STABILIZED	= 27 ACRES
TOTAL CUT	= 140,000 CUBIC YARDS
TOTAL FILL	= 30,000 CUBIC YARDS
BORROW AREA	*

8. ANY SEDIMENT CONTROL PRACTICE WHICH IS DISTURBED BY GRADING ACTIVITY FOR PLACEMENT OF UTILITIES MUST BE REPAIRED ON THE SAME DAY OF DISTURBANCE.
9. ADDITIONAL SEDIMENT CONTROLS MUST BE PROVIDED, IF DEEMED NECESSARY BY THE HOWARD COUNTY SEDIMENT CONTROL INSPECTOR.
10. ON ALL SITES WITH DISTURBED AREAS IN EXCESS OF 2 ACRES, APPROVAL OF THE INSPECTION AGENCY SHALL BE REQUESTED UPON COMPLETION OF INSTALLATION OF PERIMETER EROSION AND SEDIMENT CONTROLS, BUT BEFORE PROCEEDING WITH ANY OTHER EARTH DISTURBANCE OR GRADING. OTHER BUILDING OR GRADING INSPECTION APPROVALS MAY NOT BE AUTHORIZED UNTIL THIS INITIAL APPROVAL BY THE INSPECTION AGENCY IS MADE.
11. TRENCHES FOR THE CONSTRUCTION OF UTILITIES IS LIMITED TO THREE PIPE LENGTHS OR THAT WHICH SHALL BE BACK-FILLED AND STABILIZED WITHIN ONE WORKING DAY, WHICHEVER IS SHORTER.

* THERE WILL BE NO BORROW AREA NECESSARY FOR THE SITE. SHOULD A BORROW BECOME NECESSARY, CONTRACTOR SHALL SELECT A SITE APPROVED BY THE HOWARD SCD.

"Conditions and Management Practices for Working in Nontidal Wetlands and Buffers"

a) Remove excavated material, construction material or debris to an upland disposal area outside of any waterway, floodplain, nontidal wetland, or buffer;
b) If backfill is obtained, use clean material free of waste metal products, unsightly debris, toxic material, or any other deleterious substance.
c) Place materials in a location and manner which does not adversely impact surface or subsurface water flow into or out of the nontidal wetland;
d) Maintain the hydrologic regime of nontidal wetlands outside the limits of disturbance.
e) Rectify any nontidal wetlands and buffers temporarily impacted by the permitted activity. All stabilization in the wetland and buffer shall be of the following recommended species: Annual Ryegrass (Lolium multiflorum), Millet (Setaria italica), Oats (Uniola sp.) and/or Rye (Secale cereale). Other non-persistent vegetation may be acceptable, but must be approved by the Nontidal Wetlands and Waterways Division. Kentucky 31 fescue shall not be utilized in the wetland or buffer. All temporary fills shall be removed in their entirety on or before the completion of construction;
f) To protect important aquatic species, in-stream work is prohibited as determined by the classification of the stream as follows:
   Use I Waters. In-stream work may not be conducted during the period March 1 - June 15 inclusive, during any year.
g) No removal of vegetation, grading, filling, draining or other alteration of the nontidal wetlands or buffer outside the limits of disturbance shall occur without written authorization from the Water Management Administration.

At Grade Inlet Protection

Not To Scale

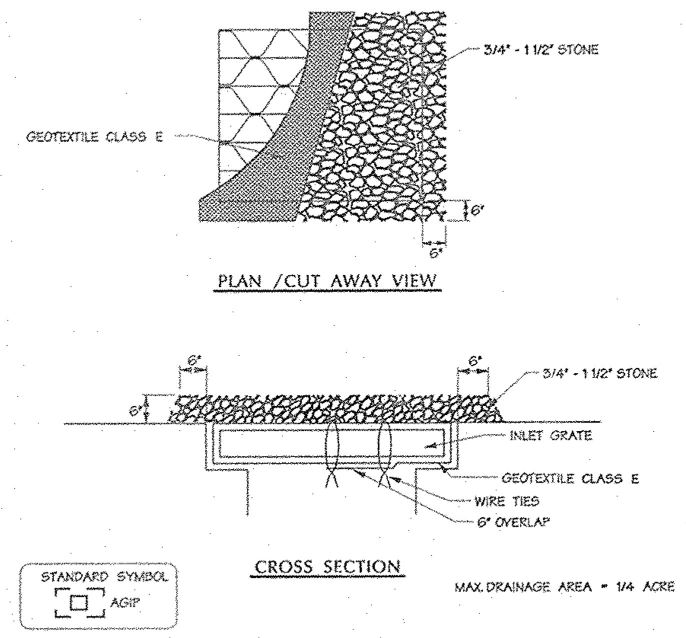

CONSTRUCTION SPECIFICATIONS

1. LIFT GRATE AND WRAP WITH GEOTEXTILE CLASS E TO COMPLETELY COVER ALL OPENINGS, THEN SET GRATE BACK IN PLACE.
2. PLACE ¾" TO 1½" STONE, 4"-6" THICK ON THE GRATE TO SECURE THE FABRIC AND PROVIDE ADDITIONAL FILTRATION.

U.S. DEPARTMENT OF AGRICULTURE SOIL CONSERVATION SERVICE — E - 10 - 5A — MARYLAND DEPARTMENT OF ENVIRONMENT WATER MANAGEMENT ADMINISTRATION

Sequence of Construction

Sequence of Operations

	Days
1. "Notify Maryland Department of Environment Nontidal Wetlands and Waterways Inspections and Compliance Section at 410-631-3510 at least five-days in advance of beginning any work in streams, 100-year floodplain, nontidal wetlands and wetlands buffers."	5
2. Notify HCD Department of Inspections 410-313-1855 at least 48 hours prior to beginning work.	2
3. Install culvert crossings. See Sequence of Operations For Culvert Crossings, sheet 14 of 31. Phase I. Fully & permanently stabilize areas around endwalls before proceeding to Phase II.	20
4. Clear and grub for sediment & erosion control measures or devices only with Sediment Control Inspector's permission. Install Sediment Basins. Do not build forebay embankments until basins are converted to SWM ponds.	10
5. Install all sediment & erosion control measures and devices, silt fence, super silt fence, earth dikes, etc.	20
6. Notify HCD Department of Inspection, upon completion of said installation.	1
7. With approval of the Sediment Control Inspector clear and grub remainder of site.	20
8. Mass grade and stabilize remainder of site. Apply dust control measures per "Dust Control Specifications" Sheet 12 of 31. Phase II.	10
9. Install water, sewer, storm drains and curb and gutter for site.	60
10. Pave site.	30
11. Upon stabilization of site with established vegetation and with permission of the Sediment Control Inspector, remove sediment control measures and stabilize those areas disturbed by the process. Convert basins to SWM ponds, including building of forebay embankments.	5

* Refer to Conditions and Management Practices for working in Nontidal Wetlands and Buffers

Diversion Pipe

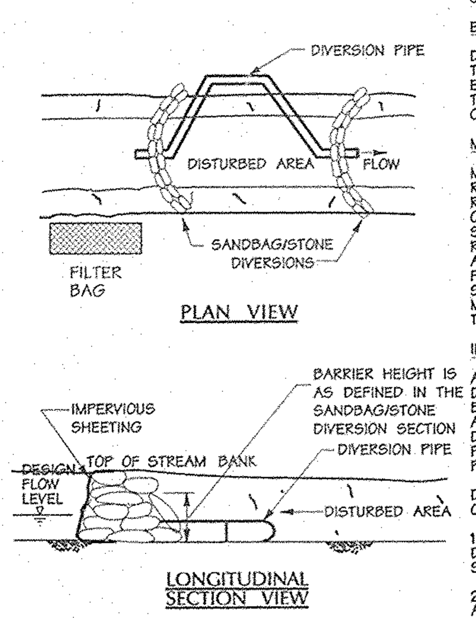

DESCRIPTION

THE WORK SHOULD CONSIST OF INSTALLING FLOW DIVERSION PIPES IN COMBINATION WITH SANDBAG OR STONE DIVERSIONS WHEN CONSTRUCTION ACTIVITIES OCCUR WITHIN THE STREAM CHANNEL.

EFFECTIVE USES & LIMITATIONS

DIVERSION PIPES WITH AN INSUFFICIENT FLOW CAPACITY CAN CAUSE THE CHANNEL DIVERSION TO FAIL THEREBY RESULTING IN SEVERE EROSION OF THE DISTURBED CHANNEL SECTION UNDER CONSTRUCTION. THEREFORE, IN-CHANNEL CONSTRUCTION ACTIVITIES SHOULD OCCUR ONLY DURING PERIODS OF LOW FLOW.

MATERIAL SPECIFICATIONS

MATERIALS FOR STREAM DIVERSIONS SHOULD MEET THE FOLLOWING REQUIREMENTS:
RIPRAP: STONE SHOULD BE WASHED AND HAVE A MINIMUM DIAMETER OF 6 INCHES (15 CENTIMETERS).
SANDBAGS: SANDBAGS SHOULD CONSIST OF MATERIALS WHICH ARE RESISTANT TO ULTRA-VIOLET RADIATION, TEARING, AND PUNCTURE AND SHOULD BE WOVEN TIGHTLY ENOUGH TO PREVENT LEAKAGE OF FILL MATERIAL (I.E., SAND, FINE GRAVEL, ETC.).
SHEETING: SHEETING SHOULD CONSIST OF POLYETHYLENE OR OTHER MATERIAL WHICH IS IMPERVIOUS AND RESISTANT TO PUNCTURE AND TEARING.

INSTALLATION GUIDELINES

ALL EROSION AND SEDIMENT CONTROL DEVICES INCLUDING MANDATORY DEWATERING BASINS SHOULD BE INSTALLED AS THE FIRST ORDER OF BUSINESS ACCORDING TO A PLAN APPROVED BY THE WMA OR LOCAL AUTHORITY. INSTALLATION SHOULD PROCEED FROM UPSTREAM TO DOWNSTREAM DURING LOW FLOW CONDITIONS. IF NECESSARY, SILT FENCE OR STRAW BALES SHOULD BE INSTALLED AROUND THE PERIMETER OF THE WORK AREA.

DIVERSION PIPES WITH SANDBAG OR STONE BARRIERS SHOULD BE COMPLETED AS FOLLOWS (REFER TO DETAIL 1.4):

1. SANDBAG/STONE BARRIERS SHOULD BE SIZED AND INSTALLED AS DETAILED IN MGWC 1.5: SANDBAG/STONE DIVERSION. THE MATERIALS SHOULD BE SIZED TO WITHSTAND BASEFLOW VELOCITIES.
2. ALL EXCAVATED MATERIAL SHOULD BE DEPOSITED AND STABILIZED IN AN APPROVED AREA OUTSIDE THE 100-YEAR FLOODPLAIN UNLESS OTHERWISE AUTHORIZED BY THE WMA.
3. SEDIMENT-LADEN WATER FROM THE CONSTRUCTION AREA SHOULD BE PUMPED TO A DEWATERING BASIN.
4. THE DIVERSION PIPE SHOULD HAVE A MINIMUM CAPACITY SUFFICIENT TO CONVEY THE 2-YEAR FLOW FOR PROJECTS WITH A DURATION OF TWO WEEKS OR GREATER. FOR PROJECTS OF SHORTER DURATION, THE CAPACITY OF THE PIPE CAN BE REDUCED ACCORDINGLY.
5. IF NECESSARY, SILT FENCE OR STRAW BALES SHOULD BE INSTALLED AROUND THE PERIMETER OF THE WORK AREA.
6. SEDIMENT CONTROL DEVICES ARE TO REMAIN IN PLACE UNTIL ALL DISTURBED AREAS ARE STABILIZED AND THE INSPECTING AUTHORITY APPROVES THEIR REMOVAL.

WATER MANAGEMENT ADMINISTRATION DETAIL MGWC 1.4

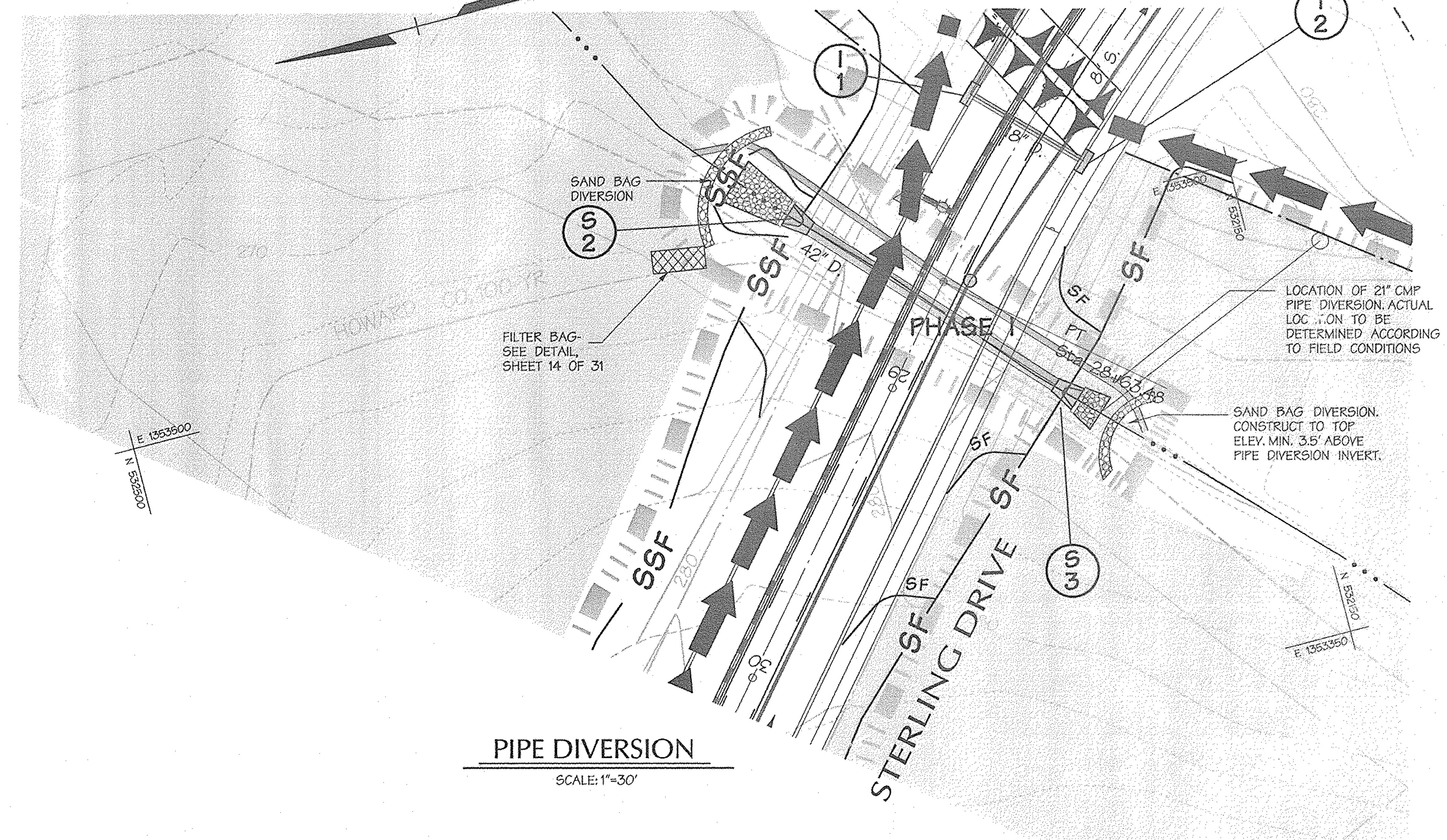

PIPE DIVERSION

SCALE: 1"=30'

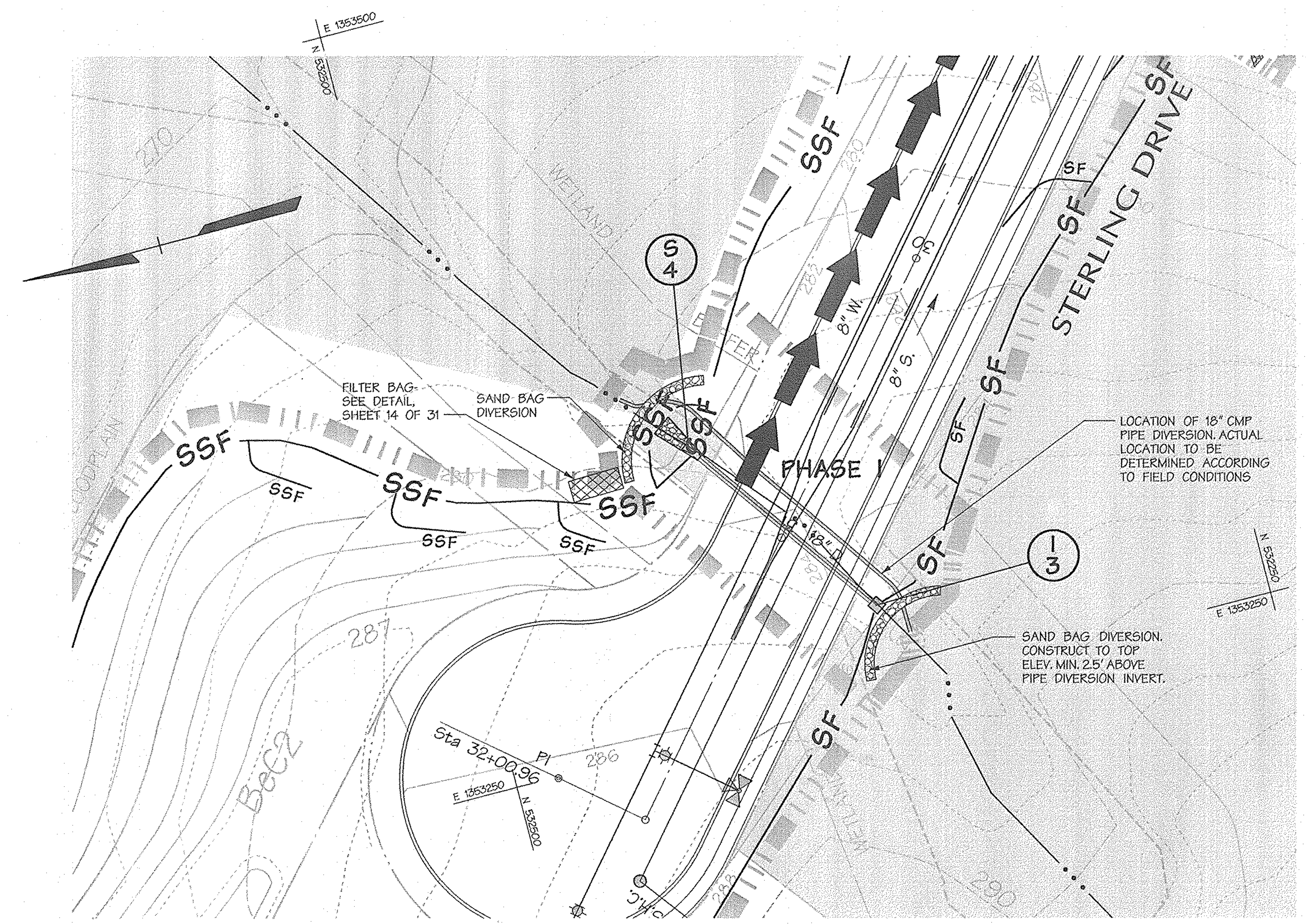

PIPE DIVERSION

SCALE: 1"=30'

MDE PERMIT AND TRACKING No. 01-NT-0222/200164079

DEVELOPER'S CERTIFICATION:

"I/WE CERTIFY THAT ALL DEVELOPMENT AND CONSTRUCTION WILL BE DONE ACCORDING TO THIS PLAN, AND THAT ANY RESPONSIBLE PERSONNEL INVOLVED IN THE CONSTRUCTION PROJECT WILL HAVE A CERTIFICATE OF ATTENDANCE AT A DEPARTMENT OF THE ENVIRONMENT APPROVED TRAINING PROGRAM FOR THE CONTROL OF SEDIMENT AND EROSION BEFORE BEGINNING THE PROJECT. I ALSO AUTHORIZE PERIODIC ON-SITE INSPECTION BY THE HOWARD SOIL CONSERVATION DISTRICT.

SIGNATURE OF DEVELOPER — DATE 9/25/02
PRINT NAME BELOW SIGNATURE
JOSEPH NECKER JR.

ENGINEER'S CERTIFICATION:

"I CERTIFY THAT THIS PLAN FOR EROSION AND SEDIMENT CONTROL REPRESENTS A PRACTICAL AND WORKABLE PLAN BASED ON MY PERSONAL KNOWLEDGE OF THE SITE CONDITIONS AND THAT IT WAS PREPARED IN ACCORDANCE WITH THE REQUIREMENTS OF THE HOWARD SOIL CONSERVATION DISTRICT."

SIGNATURE OF ENGINEER — 9/25/02
PRINT NAME BELOW SIGNATURE
JOHN RANOCCHIA

REVIEWED FOR HOWARD S.C.D. AND MEETS TECHNICAL REQUIREMENTS

U.S. NATURAL RESOURCE CONSERVATION SERVICE — DATE 10/8/02

THIS DEVELOPMENT PLAN IS APPROVED FOR SOIL EROSION AND SEDIMENT CONTROL BY THE HOWARD SOIL CONSERVATION DISTRICT.

HOWARD S.C.D. — DATE 10/8/02

9/25/02 Date

Professional Engr. No. 10551

APPROVED: HOWARD COUNTY DEPT. OF PUBLIC WORKS

CHIEF, BUREAU OF HIGHWAYS — DATE 1-25-02

APPROVED: HOWARD COUNTY DEPT. OF PLANNING AND ZONING

CHIEF, DIVISION OF LAND DEVELOPMENT — DATE 12/6/02

CHIEF, DEVELOPMENT ENGINEERING DIVISION — DATE 12/2/02

Date	No.	Revision Description

EMERSON
(Formerly the Key Property)
Section 3, Area 1
Parcels A – I

OWNER /DEVELOPER:

THE HOWARD RESEARCH & DEVELOPMENT CORPORATION
10275 LITTLE PATUXENT PARKWAY
COLUMBIA, MARYLAND 21044

DMW
Daft·McCune·Walker, Inc.
200 East Pennsylvania Avenue
Towson, Maryland 21286
(410) 296-3333
Fax 296-4705

A Team of Land Planners, Landscape Architects, Engineers, Surveyors & Environmental Professionals

TITLE **FINAL PLAN SEDIMENT & EROSION CONTROL DETAILS**

Des By	Scale AS SHOWN	Proj. No. 01011.C	
Drn By ADL	Date 9/25/02	13 OF 31	
Chk By	Approved		

F-02-131

21.0 STANDARD AND SPECIFICATIONS FOR TOPSOIL

DEFINITION

Placement of topsoil over a prepared subsoil prior to establishment of permanent vegetation.

PURPOSE

To provide a suitable soil medium for vegetative growth. Soils of concern have low moisture content, low nutrient levels, low pH, materials toxic to plants, and/or unacceptable soil gradation.

CONDITIONS WHERE PRACTICE APPLIES

I. This practice is limited to areas having 2:1 or flatter slopes where:

a. The texture of the exposed subsoil/parent material is not adequate to produce vegetative growth.

b. The soil material is so shallow that the rooting zone is not deep enough to support plants or furnish continuing supplies of moisture and plant nutrients.

c. The original soil to be vegetated contains material toxic to plant growth.

d. The soil is so acidic that treatment with limestone is not feasible.

II. For the purpose of these Standards and Specifications, areas having slopes steeper than 2:1 require special consideration and design for adequate stabilization. Areas having slopes steeper than 2:1 shall have the appropriate stabilization shown on the plans.

CONSTRUCTION AND MATERIAL SPECIFICATIONS

I. Topsoil salvages from the existing site may be used provided that is meets the standards as set forth in these specifications. Typically, the depth of topsoil to be salvaged for a given soil type can be found in the representative soil profile section in the Soil Survey published by USDA-SCS in cooperation with Maryland Agricultural Experimental Station.

II. Topsoil Specifications - Soil to be used as topsoil must meet the following:

I. Topsoil shall be a loam, sandy loam, clay loam, silt loam, sandy clay loam, loamy sand. Other soils may be used if recommended by an agronomist or soil scientist and approved by the appropriate appropriate approval authority. Regardless, topsoil shall not be a mixture of contrasting textured subsoils and shall contain less than 5% by volume of cinders, stones, slag, coarse fragments, gravel, sticks, roots, trash, or other materials larger than 1-1/2⅝₆ in diameter.

II. Topsoil must be free of plants or plant parts such as bermuda grass, quackgrass, Johnsongrass, nutsedge, poison ivy, thistle, or others as specified.

III. Where the subsoil is either highly acidic or composed of heavy clays, ground limestone shall be spread at the rate of 4-8 tons/acre (200-400 pounds per 1,000 square feet) prior to the placement of topsoil. Lime shall be distributed uniformly over designated areas and worked into the soil in conjunction with tillage operations as described in the following procedures.

II. For sites having disturbed areas under 5 acres:

I. On soil meeting Topsoil specifications, obtain test results dictating fertilizer and lime amendments required to bring the soil into compliance with the following:

a. pH for topsoil shall be between 6.0 and 7.5. If the tested soil demonstrates a pH of less than 6.0, sufficient lime shall be prescribed to raise the pH to 6.5 or higher.

b. Organic content of topsoil shall be not less than 1.5 percent by weight.

c. Topsoil having soluble salt content greater than 500 parts per million shall not be used.

d. No sod or seed shall be placed on soil which has been treated with soil sterilants or chemicals used for weed control until sufficient time has elapsed (14 days min.) to permit dissipation of phyto-toxic materials.

Note: Topsoil substitutes or amendments, as recommended by a qualified agronomist or soil scientist and approved by the appropriate approval authority, may be used in lieu of natural topsoil.

II. Place topsoil (if required) and apply soil amendments as specified in 20.0 Vegetative Stabilization - Section I - Vegetative Stabilization Methods and Materials.

V. Topsoil Application

I. When topsoiling, maintain needed erosion and sediment control practices such as diversions, Grade Stabilization Structures, Earth Dikes, Slope Silt Fence and Sediment Traps and Basins.

II. Grades on the areas to be topsoiled, which have been previously established, shall be maintained, albeit 4" - 8" higher in elevation.

III. Topsoil shall be uniformly distributed in a 4" - 8" layer and lightly compacted to a minimum thickness of 4". Spreading shall be performed in such a manner that sodding or seeding can proceed with a minimum of additional soil preparation and tillage. Any irregularities in the surface resulting from topsoiling or other operations shall be corrected in order to prevent the formation of depressions or water pockets.

IV. Topsoil shall not be placed while the topsoil or subsoil is in a frozen or muddy condition, when the subsoil is excessively wet or in a condition that may otherwise be detrimental to proper grading and seedbed preparation.

VI. Alternative for Permanent Seeding - Instead of applying the full amounts of lime and commercial fertilizer, composted sludge and amendments may be applied as specified below:

I. Composted Sludge Material for use as a soil conditioner for sites having disturbed areas over 5 acres shall be tested to prescribe amendments and for sites having disturbed areas under 5 acres shall conform to the following requirements:

a. Composted sludge shall be supplied by, or originate from, a person or persons that are permitted (at the time of acquisition of the compost) by the Maryland Department of the Environment under COMAR 26.04.06.

b. Composted sludge shall contain at least 1 percent nitrogen, 1.5 percent phosphorus, and 0.2 percent potassium and have a Ph of 7.0 to 8.0. If compost does not meet these requirements, the appropriate constituents must be added to meet the requirements prior to use.

c. Composted sludge shall be applied at a rate of 1 ton/1,000 square feet.

IV. Composted sludge shall be amended with a potassium fertilizer applied at a rate of 4 lb/1,000 square feet, and 1/3 the normal lime application rate.

References: Guidelines Specifications, Soil Preparation and Sodding. MD-VA, Pub. #1, Cooperative Extension Service, University of Maryland and Virginia Polytechnic Institutes. Revised 1973.

CONSTRUCTION OF PIPE DIVERSION

SEQUENCE — NO. OF DAYS

1. CLEAR FOR AND INSTALL SEDIMENT CONTROL DEVICES AND MEASURES, SAND BAG DIVERSION, AND RIP-RAP OUTFALL PROTECTION AND EROSION CONTROL MATTING AT DOWN STREAM END. MAINTAIN EXISTING STREAM FLOW AT ALL TIMES. ---------- 1

   a. INSTALL ONLY THAT PORTION OF SAND BAG DIVERSION EAST OF STREAM.

2. CLEAR & GRUB FOR AND BEGIN LAYING PIPE.

   a. INSTALL ONLY THAT PORTION OF PIPE THAT CAN BE CONSTRUCTED, BACKFILLED AND STABILIZED WITHIN ONE WORKING DAY.

   b. PLACE SILT FENCE ON LOW SIDE OF WORK AREA DURING PIPE EXCAVATION, IF REQUIRED.

   c. WITHIN ONE DAY CONSTRUCTION OF UPPER INVERT AND WITH THE SEDIMENT CONTROL INSPECTORS APPROVAL, CLEAR FOR AND INSTALL SAND BAG DIVERSION WITH RIP-RAP INFLOW PROTECTION AT UPPER END.

   c. MAINTAIN EXISTING STREAM FLOW AT ALL TIMES. WITH SEDIMENT CONTROL INSPECTOR APPROVAL, INSTALL LAST SECTION OF PIPE MAKE CONNECTION FOR REROUTING OF STREAM. ---------- 2

3. CLEAR & GRUB FOR AND INSTALL REMAINING SAND BAG DIVERSION TO DIVERT STREAM AT BOTH ENDS.

   a. INSTALL UPSTREAM END FIRST, THEN DOWNSTREAM. ---------- 1

4. CLEAR & GRUB REMAINING WORK AREA AND INSTALL CULVERT SYSTEM.

   a. WITH SEDIMENT CONTROL INSPECTOR APPROVAL, CONSTRUCT ENDSECTIONS AND INSTALL STREAM BOTTOM PROTECTION.

   b. WITH SEDIMENT CONTROL INSPECTOR APPROVAL, ADJUST SEDIMENT CONTROL DEVICES AND MEASURES AS PER PLAN (SHEET) FOR ROAD CONSTRUCTION (SEE MAIN SEQUENCE - SHEET 29) ---------- 1 WK.

5. UPON COMPLETION OF PIPE INSTALLATION AND WITH SEDIMENT CONTROL INSPECTOR APPROVAL, REMOVE SEDIMENT CONTROL DEVICES AND MEASURES. REMOVAL SHALL TAKE PLACE UNDER SEQ. # 8 OF THE MAIN SEQUENCE OF CONSTRUCTION, THIS SHEET. ---------- 1

NOTE:
CONTRACTOR SHALL USE EXTREME CAUTION TO PREVENT SEDIMENT FROM ENTERING THE STREAM AREA..
ALL EROSION/SEDIMENT CONTROL MEASURES SHALL BE MAINTAINED AND REPAIRED AT THE END OF EACH WORK DAY, AS REQUIRED.
ALL DISTURBED AREAS OUTSIDE OF THE LOD SHALL BE PROTECTED WITH OTHER E.S.C. DEVICES AND MEASURES AND/OR STABILIZED WITH TEMPORARY/PERMANENT SEEDING SPECIFICATIONS AT THE END OF EACH WORKING DAY, AS DIRECTED AND APPROVED BY SEDIMENT CONTROL INSPECTOR.

SECTION II - TEMPORARY SEEDING

VEGETATION - Annual grass or grain used to provide cover on disturbed areas for up to 12 months. For longer duration of vegetative cover, permanent seeding is required.

Seed Mixture (Hardiness Zone 6B)					Fertilizer Rate (10-10-10)	Lime Rate
No.	Species	Application Rate (Lb./Ac.)	Seeding Dates	Seeding Depths		
1	Annual Ryegrass	50	2/1 - 4/30 8/15 - 11/1	¼"-½"	600 Lbs./Ac. (15 Lbs./1000 SF)	2 Tons/Ac. (100 Lbs./1000 SF)
2	Weeping Lovegrass	4	5/1 - 8/14	¼"-½"		

SECTION III - PERMANENT SEEDING

Seeding grass and legumes to establish ground cover for a minimum of one year on disturbed areas generally receiving low maintenance.

Seed Mixture No. 3 (Hardiness Zone 6B)					Fertilizer Rate (10-20-20)			Lime Rate
%	Species	Application Rate (Lb./Ac.)	Seeding * Dates	Seeding Depths	N	P205	K20	
85	Rebel II Tall Fescue	125	3/1 - 5/15 8/15 - 11/15	¼"-½"	90 Lb./Ac. (2 Lb./ 1000 Sq.Ft.)	175 Lb./Ac. (4 Lb./ 1000 Sq.Ft.)	175 Lb./Ac. (4 Lb./ 1000 Sq.Ft.)	2 Tons/Ac. (100 Lb./ 1000 Sq.Ft.)
10	Pennfine Perennial Ryegrass	15						
5	Kenblue Kentucky Bluegrass	10						

* For 5-16 through 8-14 add two (2) pounds of Weeping Lovegrass per acre or ten (10) pounds of Millet per acre to seed mixture (i.e. Mix #3 shown).

G - 20 - 1A

Vegetative Stabilization — *U.S. DEPARTMENT OF AGRICULTURE SOIL CONSERVATION SERVICE* — *MARYLAND DEPARTMENT OF ENVIRONMENT WATER MANAGEMENT ADMINISTRATION*

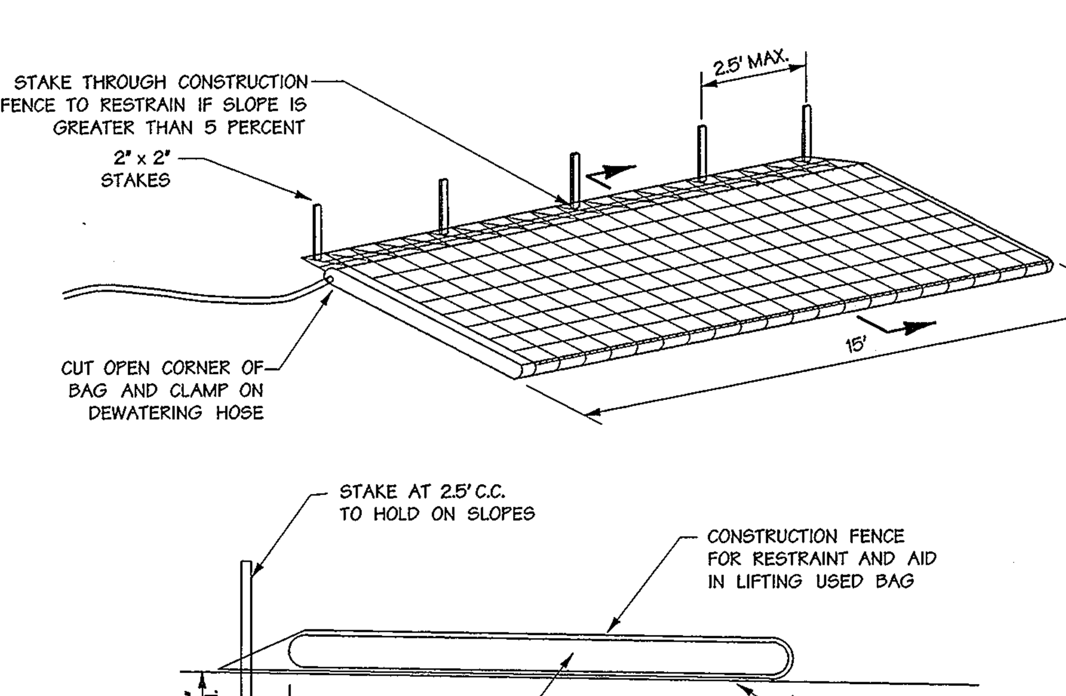

1. FILTER BAG SHALL BE PLACED ON A SLOPING OR LEVEL, WELL GRADED VEGETATED SITE SUCH THAT WATER WILL FLOW AWAY FROM DEVICE AND ANY WORK AREAS.
2. WIDTH AND LENGTH SHALL BE AS SHOWN IN THE TABLE.
3. THE FILTER BAG MUST BE STAKED IN PLACE AND SECURED TO THE PUMP DISCHARGE LINE.
4. FILTER BAG SHALL NOT BE USED FOR DISCHARGE FLOWS GREATER THAN 300 GPM.
5. DEVICE SHALL BE REMOVED AND DISPOSED OF AFTER BAG IS FILLED WITH SEDIMENT. SEDIMENT FROM BAG SHALL BE SPREAD IN AN UPLAND AREA.

Sedctrl.cel/ALFLBD

Filter Bag — Not To Scale

DESCRIPTION

THE WORK SHOULD CONSIST OF INSTALLING SANDBAG OR STONE FLOW DIVERSIONS FOR THE PURPOSE OF EROSION CONTROL WHEN CONSTRUCTION ACTIVITIES OCCUR WITHIN THE STREAM CHANNEL.

EFFECTIVE USES & LIMITATIONS

DIVERSIONS ARE USED TO ISOLATE WORK AREAS FROM FLOW DURING THE CONSTRUCTION OF IN-STREAM PROJECTS. DIVERSIONS WHICH HAVE AN INSUFFICIENT FLOW CAPACITY CAN FAIL AND SEVERELY ERODE THE DISTURBED CHANNEL SECTION UNDER CONSTRUCTION. THEREFORE, IN-CHANNEL CONSTRUCTION ACTIVITIES SHOULD OCCUR ONLY DURING PERIODS OF LOW RAINFALL. THIS TEMPORARY MEASURE MAY NOT BE PRACTICAL IN LARGE CHANNELS.

MATERIAL SPECIFICATIONS

MATERIALS FOR SANDBAG AND STONE STREAM DIVERSIONS SHOULD MEET THE FOLLOWING REQUIREMENTS:
RIPRAP: RIPRAP SHOULD BE WASHED AND HAVE A MINIMUM DIAMETER OF 6 INCHES (0.15 METERS).
SANDBAGS: SANDBAGS SHOULD CONSIST OF MATERIALS WHICH ARE RESISTANT TO ULTRA-VIOLET RADIATION, TEARING, AND PUNCTURE AND SHOULD BE WOVEN TIGHTLY ENOUGH TO PREVENT LEAKAGE OF THE FILL MATERIAL (I.E., SAND, FINE GRAVEL, ETC.).
SHEETING: SHEETING SHOULD CONSIST OF POLYETHYLENE OR OTHER MATERIALS WHICH ARE IMPERVIOUS AND RESISTANT TO PUNCTURE AND TEARING.

INSTALLATION GUIDELINES

ALL EROSION AND SEDIMENT CONTROL DEVICES, INCLUDING DEWATERING BASINS, SHOULD BE IMPLEMENTED AS THE FIRST ORDER OF BUSINESS ACCORDING TO A PLAN APPROVED BY THE WMA OR LOCAL AUTHORITY. INSTALLATION SHOULD PROCEED FROM UPSTREAM TO DOWNSTREAM DURING PERIODS OF LOW FLOW. IF NECESSARY, SILT FENCE OR STRAW BALES SHOULD BE INSTALLED AROUND THE PERIMETER OF THE WORK AREA. SANDBAG/STONE DIVERSIONS CAN BE USED INDEPENDENTLY OR AS COMPONENTS OF OTHER STREAM DIVERSION TECHNIQUES.

INSTALLATION OF THIS MEASURE SHOULD PROCEED AS FOLLOWS (REFER TO DETAIL 1.5):

1. THE DIVERSION STRUCTURE SHOULD BE INSTALLED FROM UPSTREAM TO DOWNSTREAM.
2. THE HEIGHT OF THE SANDBAG/STONE DIVERSION SHOULD BE A FUNCTION OF THE DURATION OF THE PROJECT IN THE STREAM REACH. FOR PROJECTS WITH A DURATION LESS THAN 2 WEEKS, THE HEIGHT OF THE DIVERSION SHOULD BE ONE HALF THE STREAM BANK HEIGHT, MEASURED FROM THE CHANNEL BED, PLUS 1 FOOT (0.3 METERS) OR BANK FULL HEIGHT, WHICHEVER IS GREATER. FOR PROJECTS OF LONGER DURATION, THE TOP OF THE SANDBAG OR STONE DIVERSION SHOULD CORRESPOND TO BANK FULL HEIGHT. FOR DIVERSION STRUCTURES UTILIZING SANDBAGS, THE STREAM BED SHOULD BE HAND PREPARED PRIOR TO PLACEMENT OF THE BASE LAYER OF SANDBAGS IN ORDER TO ENSURE A WATER TIGHT FIT. ADDITIONALLY, IT MAY BE NECESSARY TO PREPARE THE BANK IN A SIMILAR FASHION.
3. ALL EXCAVATED MATERIAL SHOULD BE DEPOSITED AND STABILIZED IN AN APPROVED AREA OUTSIDE THE 100-YEAR FLOODPLAIN UNLESS OTHERWISE AUTHORIZED BY THE WMA.
4. SEDIMENT-LADEN WATER FROM THE CONSTRUCTION AREA SHOULD BE PUMPED TO A FILTER BAG. TEMPORARY MEASURE FOR DEWATERING IN-CHANNEL CONSTRUCTION SITES
5. SHEETING ON THE DIVERSION SHOULD BE POSITIONED SUCH THAT THE UPSTREAM PORTION COVERS THE DOWNSTREAM PORTION WITH AT LEAST A 18-INCH (0.45 METERS) OVERLAP.
6. SANDBAG OR STONE DIVERSIONS SHOULD NOT OBSTRUCT MORE THAN 45% OF THE STREAM WIDTH. ADDITIONALLY, BANK STABILIZATION MEASURES SHOULD BE PLACED IN THE CONSTRICTED SECTION IF ACCELERATED EROSION AND BANK SCOUR ARE OBSERVED DURING THE CONSTRUCTION TIME OR IF PROJECT TIME IS EXPECTED TO LAST MORE THAN 2 WEEKS.
7. PRIOR TO REMOVAL OF THESE TEMPORARY STRUCTURES, ANY ACCUMULATED SEDIMENT SHOULD BE REMOVED, DEPOSITED AND STABILIZED IN AN APPROVED AREA OUTSIDE THE 100-YEAR FLOODPLAIN UNLESS AUTHORIZED BY THE WMA.
8. SEDIMENT CONTROL DEVICES ARE TO REMAIN IN PLACE UNTIL ALL DISTURBED AREAS ARE STABILIZED IN ACCORDANCE WITH AN APPROVED SEDIMENT AND EROSION CONTROL PLAN AND THE INSPECTING AUTHORITY APPROVES THEIR REMOVAL.

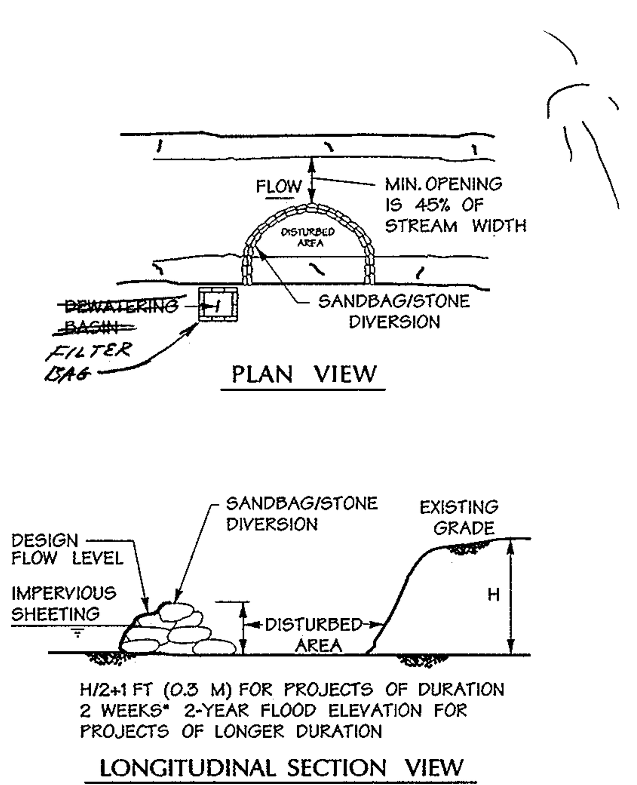

REVISED NOVEMBER 2000 MDWC 1.5

MARYLAND DEPARTMENT OF THE ENVIRONMENT WATER MANAGEMENT ADMINISTRATION

Sandbag / Stone Diversion

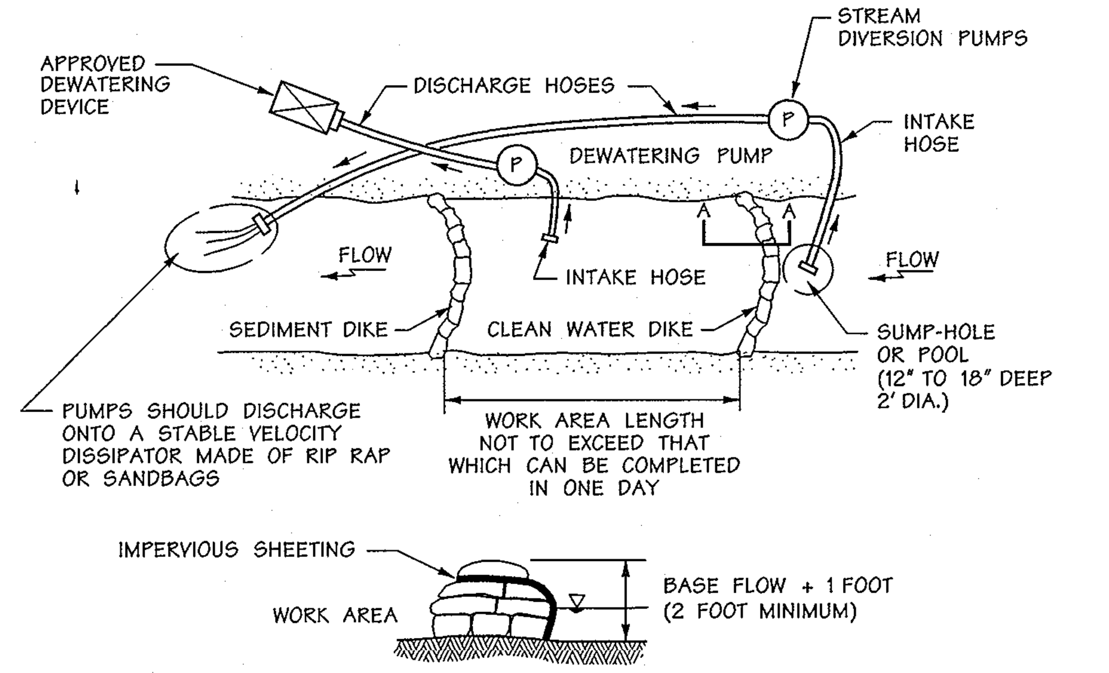

CROSS SECTION OF SANDBAG DIKE

SECTION A-A

REVISED NOVEMBER 2000
PAGE 1.2 - 3

Pump-Around Practice

MDE PERMIT AND TRACKING No. 01-NT-0222/200164079

DEVELOPER'S CERTIFICATION:

"I/WE CERTIFY THAT ALL DEVELOPMENT AND CONSTRUCTION WILL BE DONE ACCORDING TO THIS PLAN, AND THAT ANY RESPONSIBLE PERSONNEL INVOLVED IN THE CONSTRUCTION PROJECT WILL HAVE A CERTIFICATE OF ATTENDANCE AT A DEPARTMENT OF THE ENVIRONMENT APPROVED TRAINING PROGRAM FOR THE CONTROL OF SEDIMENT AND EROSION BEFORE BEGINNING THE PROJECT. I ALSO AUTHORIZE PERIODIC ON-SITE INSPECTION BY THE HOWARD SOIL CONSERVATION DISTRICT.

SIGNATURE OF DEVELOPER — DATE 9/25/02
PRINT NAME BELOW SIGNATURE
JOSEPH NELKER JR.

ENGINEER'S CERTIFICATION:

"I CERTIFY THAT THIS PLAN FOR EROSION AND SEDIMENT CONTROL REPRESENTS A PRACTICAL AND WORKABLE PLAN BASED ON MY PERSONAL KNOWLEDGE OF THE SITE CONDITIONS AND THAT IT WAS PREPARED IN ACCORDANCE WITH THE REQUIREMENTS OF THE HOWARD SOIL CONSERVATION DISTRICT."

SIGNATURE OF ENGINEER — 9/25/02
PRINT NAME BELOW SIGNATURE
John Ranocchia

REVIEWED FOR HOWARD S.C.D. AND MEETS TECHNICAL REQUIREMENTS

U.S. NATURAL RESOURCE CONSERVATION SERVICE — DATE 10/8/02

THIS DEVELOPMENT PLAN IS APPROVED FOR SOIL EROSION AND SEDIMENT CONTROL BY THE HOWARD SOIL CONSERVATION DISTRICT.

HOWARD S.C.D. — DATE 10/8/02

9/25/02
Date

Professional Engr. No. 10551

APPROVED: HOWARD COUNTY DEPT. OF PUBLIC WORKS

CHIEF, BUREAU OF HIGHWAYS HS — DATE 11-25-02

APPROVED: HOWARD COUNTY DEPT. OF PLANNING AND ZONING

CHIEF, DIVISION OF LAND DEVELOPMENT HB — DATE 12/6/02

CHIEF, DEVELOPMENT ENGINEERING DIVISION MK — DATE 12/2/02

Date	No.	Revision Description

EMERSON
(Formerly the Key Property)
Section 3, Area 1
Parcels A – I

OWNER /DEVELOPER:

THE HOWARD RESEARCH & DEVELOPMENT CORPORATION
10275 LITTLE PATUXENT PARKWAY
COLUMBIA, MARYLAND 21044

DMW

Daft·McCune·Walker, Inc.
200 East Pennsylvania Avenue
Towson, Maryland 21286
(410) 296-3333
Fax 296-4705

A Team of Land Planners, Landscape Architects, Engineers, Surveyors & Environmental Professionals

TITLE

FINAL PLAN
SEDIMENT & EROSION CONTROL
DETAILS

Des By		Scale 1" = 50'	Proj. No. 01011.C
Drn By	ADL	Date 9/25/02	14 OF 3?
Chk By		Approved	

F–02–131

Wed Sep 25 10:58:35 P003010\50scale\Emerson\04.sc7

THIS POND WILL HAVE A DAM STRUCTURE HAZARD CLASSIFICATION OF 'A'

HAMMOND BRANCH IS IN THE MIDDLE PATUXENT RIVER WATERSHED AND HAS A STREAM USAGE CLASSIFICATION OF "I-P" (WATER CONTACT RECREATION, AQUATIC LIFE PROTECTION AND PUBLIC WATER SUPPLY.

NOTE:
1. A PERMANENT RECHARGE SWALE WILL BE INSTALLED ALONG THE NORTH PROPERTY LINE OF PARCEL C WHICH DRAINS TO SWM POND 1. THE SWALE WILL TREAT THE RECHARGE REQUIREMENT FOR THE ROADS ON EMERSON SECTION 3, THE REMAINING RECHARGE REQUIREMENT FOR THE ROADS ON THE REVITZ SITE NOT YET TREATED, AND A PORTION OF THE ULTIMATE DEVELOPMENT ON PARCEL C. THE SWALE WILL TREAT RUNOFF FROM 2 ACRES OF PARCEL C. RUNOFF WILL BE CONVEYED TO THE SWALE VIA STORM DRAINS CONSTRUCTED IN THE ULTIMATE DEVELOPMENT. LANGUAGE WILL BE INCLUDED IN THE PLAT FOR PARCEL C INDICATING THE AMOUNT OF ULTIMATE DRAINAGE AREA THAT WILL BE REQUIRED TO DISCHARGE TO THE SWALE.

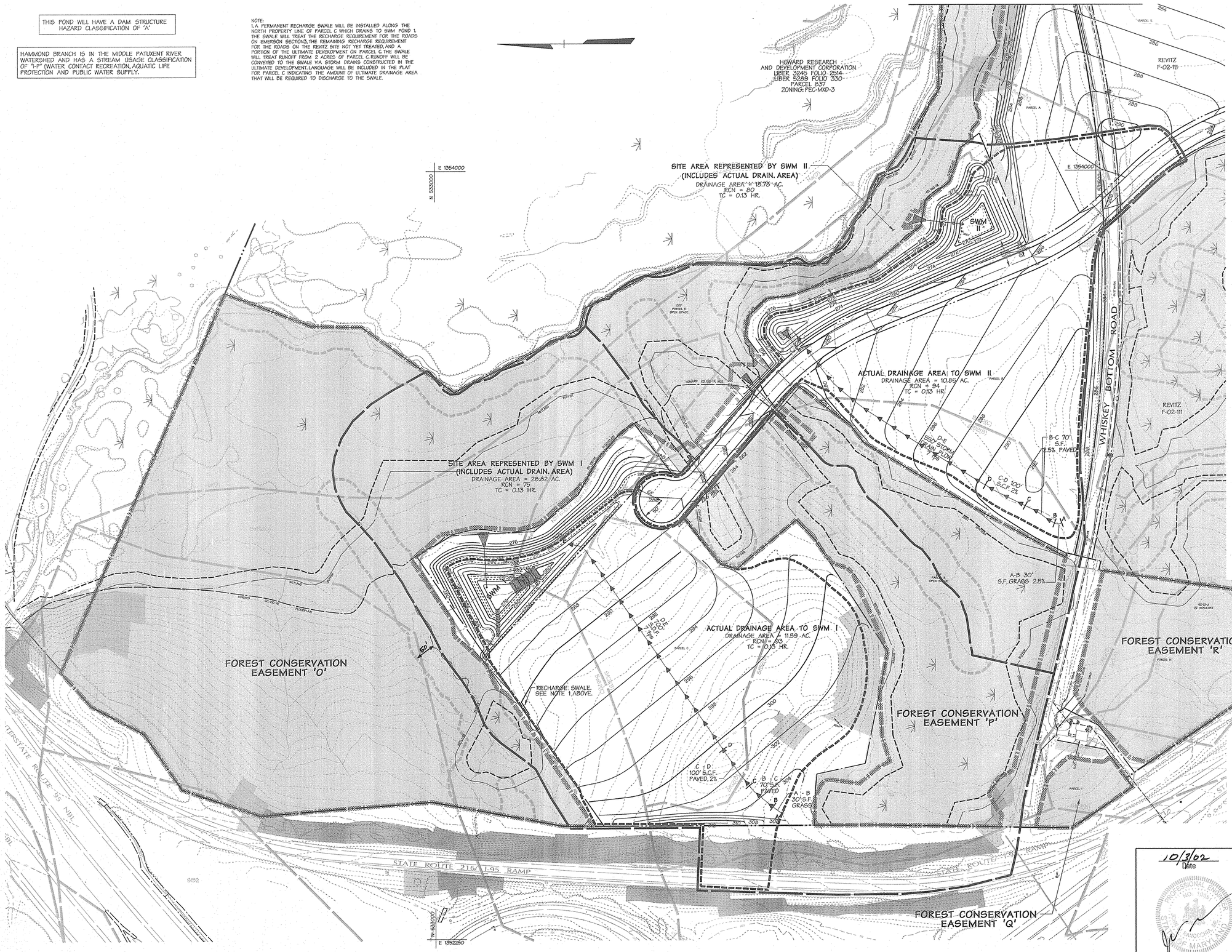

Legend

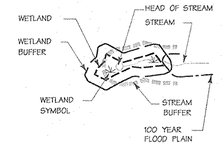

- SLOPES >25%
- SLOPES 15%-25%
- PC / PT OF ARC
- CENTERLINE OF ROAD
- RADIUS OF ARC
- PROP. DRAINAGE DIVIDE (ACTUAL DRAIN. AREA TO FACILITY)
- PROP. DRAINAGE DIVIDE (SITE AREA REPRESENTED BY SWM POND)
- PROP. TC PATH
- PROPERTY BOUNDARY
- LOT LINES AND SWM EASEMENTS
- NATURAL AREA CONSERVATION CREDIT
- SOIL TYPE BOUNDARY
- NON-WOODY VEGETATION ZONE

APPROVED: HOWARD COUNTY DEPT. OF PUBLIC WORKS

CHIEF, BUREAU OF HIGHWAYS — DATE 11-25-02

APPROVED: HOWARD COUNTY DEPT. OF PLANNING AND ZONING

CHIEF, DIVISION OF LAND DEVELOPMENT — DATE 12/6/02

CHIEF, DEVELOPMENT ENGINEERING DIVISION — DATE 12/2/02

Date	No.	Revision Description

EMERSON
(Formerly the Key Property)
Section 3, Area 1
Parcels A – I

OWNER /DEVELOPER:

THE HOWARD RESEARCH & DEVELOPMENT CORPORATION
10275 LITTLE PATUXENT PARKWAY
COLUMBIA, MARYLAND 21044

DMW
Daft-McCune-Walker, Inc.
200 East Pennsylvania Avenue
Towson, Maryland 21286
(410) 296-3333
Fax 296-4705

A Team of Land Planners, Landscape Architects, Engineers, Surveyors & Environmental Professionals

10/3/02
Date

Professional Engr. No. 10651

TITLE: **FINAL PLAN**
STORMWATER MANAGEMENT
DRAINAGE AREA MAP

Des By	MRT	Scale	1" = 100'	Proj. No.	01011.C0
Drn By	KMF	Date	9/25/02		15 OF 31
Chk By		Approved			

F–02–131

Thu Oct 3 10:23:16 2002 M:\projects\01011\Engineering\Drawings\Stormwater\01011SWM1.dwg

POND I
DESIGN FLOW SUMMARY PROPOSED CONDITIONS *

Structure Type	RETENTION
Water Quality Type	WET POND
Structure Classification	'A'
Watershed Area to Facility (SWM)	0.0450 SQ. MI.
Level of Management Required	1-YR.
Level of Management Provided	1-YR.
Top Width Provided	12'
Maximum Height of Fill	10.5'
Freeboard Required	2.0'
Freeboard Provided	2.2'
Water Quality Vol. WQ_v Required (Ac-ft)	0.187
Water Quality Vol. WQ_v Provided (Ac-ft) *	0.525
Recharge Vol. Re_v Required (Ac-ft)	See Pond II Table
Channel Protection Vol. Cp_v Required (Ac-ft)	1.146
Channel Protection Vol. Cp_v Provided (Ac-ft) *	1.169
WQ_v Water Surface Elev. = Normal Pool	280.0
Cp_v Water Surface Elev.	283.5
Riser Crest Elev.	283.5
100 Yr. Clogged Water Surface Elev.	284.8
Pond Volume Below 100 Yr. Clogged WSE (Ac-ft)	2.400

* WQ_v IS PROVIDED IN THE WET PORTION OF THE POND AND BY USE OF THE NATURAL AREA CONSERVATION CREDIT. Cp_v IS PROVIDED IN THE POND ABOVE THE WQ_v STORAGE VOLUME.

POND II
DESIGN FLOW SUMMARY PROPOSED CONDITIONS *

Structure Type	RETENTION
Water Quality Type	WET POND
Structure Classification	'A'
Watershed Area to Facility (SWM)	0.0293 SQ. MI.
Level of Management Required	1-YR.
Level of Management Provided	1-YR.
Top Width Provided	12'
Maximum Height of Fill	7.0'
Freeboard Required	1.0'
Freeboard Provided	1.8'
Water Quality Vol. WQ_v Required (Ac-ft)	0.491
Water Quality Vol. WQ_v Provided (Ac-ft) *	0.567
Recharge Required Rev (Ac)**	0.28
Recharge Provided Rev (Ac)**	0.28
Channel Protection Vol. Cp_v Required (Ac-ft)	0.995
Channel Protection Vol. Cp_v Provided (Ac-ft) *	0.995
WQ_v Water Surface Elev. = Normal Pool	272.7
Cp_v Water Surface Elev.	275.0
Riser Crest Elev.	275.0
100 Yr. Clogged Water Surface Elev.	276.2
Pond Volume Below 100 Yr. Clogged WSE (Ac-ft)	2.395

* WQ_v IS PROVIDED IN THE WET PORTION OF THE POND AND BY USE OF THE NATURAL AREA CONSERVATION CREDIT. Cp_v IS PROVIDED IN THE POND ABOVE THE WQ_v STORAGE VOLUME.

** RECHARGE IS PROVIDED WITHIN THIS DRAINAGE AREA WITH A GRASS SWALE. THIS SWALE ACCOUNTS FOR THE TOTAL SITE RECHARGE REQUIREMENT OF 0.28 Ac. THE UNTREATED REMAINDER OF THE REVITZ RECHARGE REQUIREMENT OF 0.50 Ac AND A PORTION OF THE ULTIMATE DEVELOPED LOT THAT DRAINS TO SWM 1. SEE PLAN VIEW AND NOTE 1, SHEET 15 OF 31.

NOTE:
1. ALL SWM PONDS IN THIS DESIGN ARE DESIGNATED AS "POA" (PROPERTY OWNER'S ASSOCIATION) PROPERTY AND THUS ARE PRIVATELY OWNED AND MAINTAINED.

Legend

WETLAND
WETLAND BUFFER
WETLAND SYMBOL
HEAD OF STREAM
STREAM
STREAM BUFFER
100 YEAR FLOOD PLAIN
SLOPES >25%
SLOPES 15%-25%
PC | PT OF ARC
CENTERLINE OF ROAD
RADIUS OF ARC
LOT LINES, SWM EASEMENTS
B-10 SOIL BORING
NON-WOODY VEGETATION ZONE

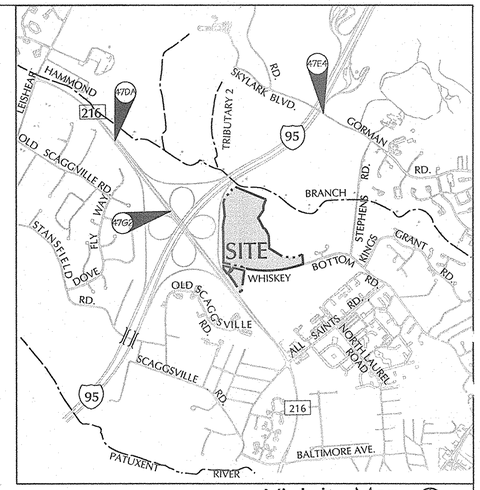

Vicinity Map
SCALE: 1"=2000' NORTH

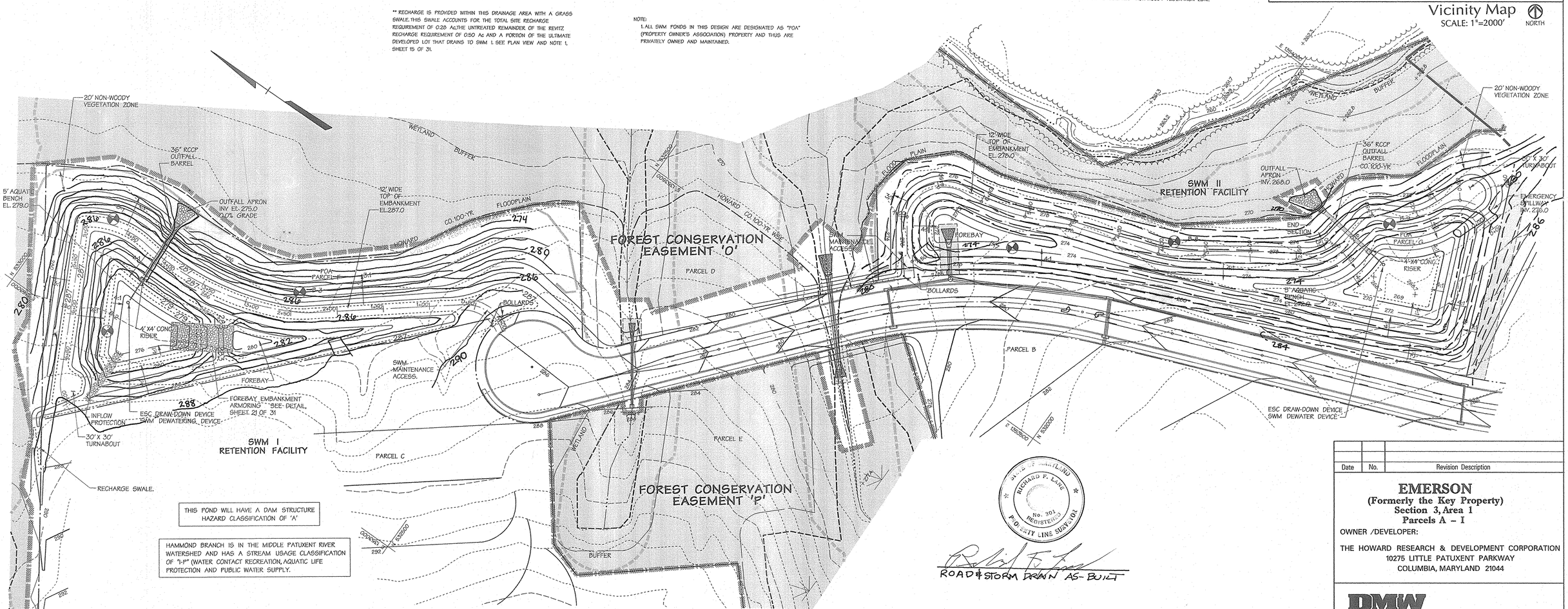

ROAD & STORM DRAIN AS-BUILT

THESE PLANS HAVE BEEN REVIEWED FOR THE HOWARD SOIL CONSERVATION DISTRICT AND MEET THE TECHNICAL REQUIREMENTS FOR SMALL POND CONSTRUCTION, SOIL EROSION AND SEDIMENT CONTROL.
U.S.D.A. NATURAL RESOURCES CONSERVATION SERVICE — 10/8/02 DATE

THESE PLANS FOR SMALL POND CONSTRUCTION, SOIL EROSION AND SEDIMENT CONTROL MEET THE REQUIREMENTS OF HOWARD SOIL CONSERVATION DISTRICT.
APPROVED: HOWARD SOIL CONSERVATION DISTRICT — 10/8/02 DATE
PLAN NUMBER _____

DEVELOPERS CERTIFICATE:

I/WE CERTIFY THAT ALL DEVELOPMENT AND/OR CONSTRUCTION WILL BE DONE ACCORDING TO THESE PLANS AND THAT ANY RESPONSIBLE PERSONNEL INVOLVED IN THE CONSTRUCTION PROJECT WILL HAVE A CERTIFICATE OF ATTENDANCE AT A DEPARTMENT OF ENVIRONMENT APPROVED TRAINING PROGRAM FOR THE CONTROL OF SEDIMENT AND EROSION BEFORE BEGINNING THE PROJECT. I SHALL ENGAGE A REGISTERED PROFESSIONAL ENGINEER TO SUPERVISE POND CONSTRUCTION AND PROVIDE THE HOWARD SOIL CONSERVATION DISTRICT WITH AN "AS-BUILT" PLAN OF THE POND WITHIN 30 DAYS OF COMPLETION. I ALSO AUTHORIZE PERIODIC ON-SITE INSPECTIONS BY THE HOWARD SOIL CONSERVATION DISTRICT.
SIGNATURE OF DEVELOPER — 10.3.02 DATE
PRINT NAME BELOW SIGNATURE
JOSEPH NEUKER JR.

ENGINEERS CERTIFICATE:

I/WE CERTIFY THAT THIS PLAN FOR POND CONSTRUCTION, EROSION AND SEDIMENT CONTROL REPRESENTS A PRACTICAL AND WORKABLE PLAN BASED ON MY PERSONAL KNOWLEDGE OF THE SITE CONDITIONS. THIS PLAN WAS PREPARED IN ACCORDANCE WITH THE REQUIREMENTS OF THE HOWARD SOIL CONSERVATION DISTRICT. I HAVE NOTIFIED THE DEVELOPER THAT HE/SHE MUST ENGAGE A REGISTERED PROFESSIONAL ENGINEER TO SUPERVISE POND CONSTRUCTION AND PROVIDE THE HOWARD SOIL CONSERVATION DISTRICT WITH AN "AS-BUILT" PLAN OF THE POND WITHIN 30 DAYS OF COMPLETION.
SIGNATURE OF ENGINEER — 10551 REG. NO. — 10/3/02 DATE
PRINT NAME BELOW SIGNATURE
John Ranocchia

APPROVED: HOWARD COUNTY DEPT. OF PUBLIC WORKS
CHIEF, BUREAU OF HIGHWAYS — 11-25-02 DATE

APPROVED: HOWARD COUNTY DEPT. OF PLANNING AND ZONING
CHIEF, DIVISION OF LAND DEVELOPMENT — 12/6/02 DATE
CHIEF, DEVELOPMENT ENGINEERING DIVISION — 12/2/02 DATE

RICHARD F. LANE No. 301 REGISTERED PROPERTY LINE SURVEYOR STATE OF MARYLAND

10/3/02 Date

PROFESSIONAL ENGINEER No. 10551 STATE OF MARYLAND JOSEPH M. NEUKER JR.

Professional Engr. No. 10551

Date	No.	Revision Description

EMERSON
(Formerly the Key Property)
Section 3, Area 1
Parcels A – I

OWNER /DEVELOPER:

THE HOWARD RESEARCH & DEVELOPMENT CORPORATION
10275 LITTLE PATUXENT PARKWAY
COLUMBIA, MARYLAND 21044

DMW
Daft-McCune-Walker, Inc.
200 East Pennsylvania Avenue
Towson, Maryland 21286
(410) 296-3333
Fax 296-4705
A Team of Land Planners, Landscape Architects, Engineers, Surveyors & Environmental Professionals

TITLE
FINAL PLAN
STORMWATER MANAGEMENT
POND PLAN VIEW

Des By	MRT	Scale	1"=50'	Proj. No.	01011.C
Drn By	KMF	Date	9/25/02		
Chk By		Approved			16 OF 31

F-02-131

Thu Oct 3 10:24:16 2002 H:\projects\01011\dwg\Final\Pond Plan View.dwg

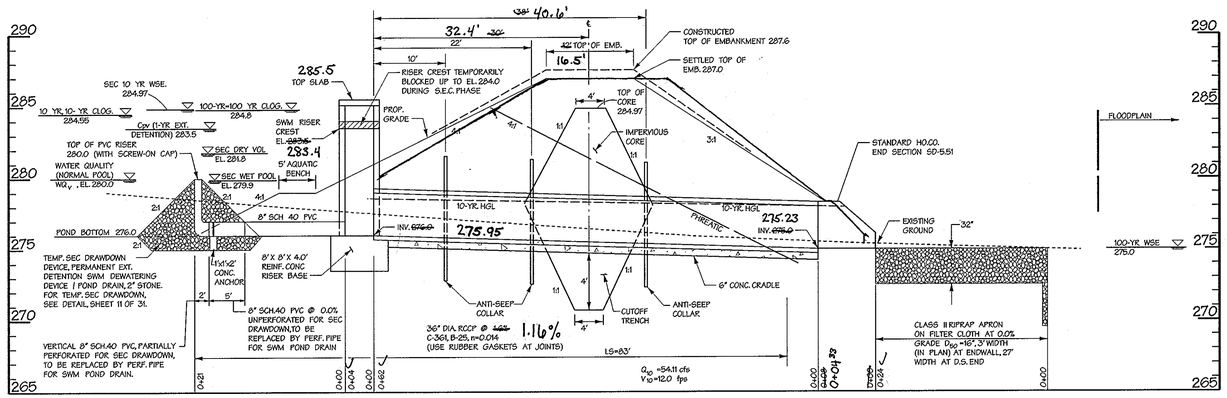

PROFILE ALONG RISER / BARREL FOR SWM I

SCALE: HORZ. 1"=10'
VERT. 1"=5'

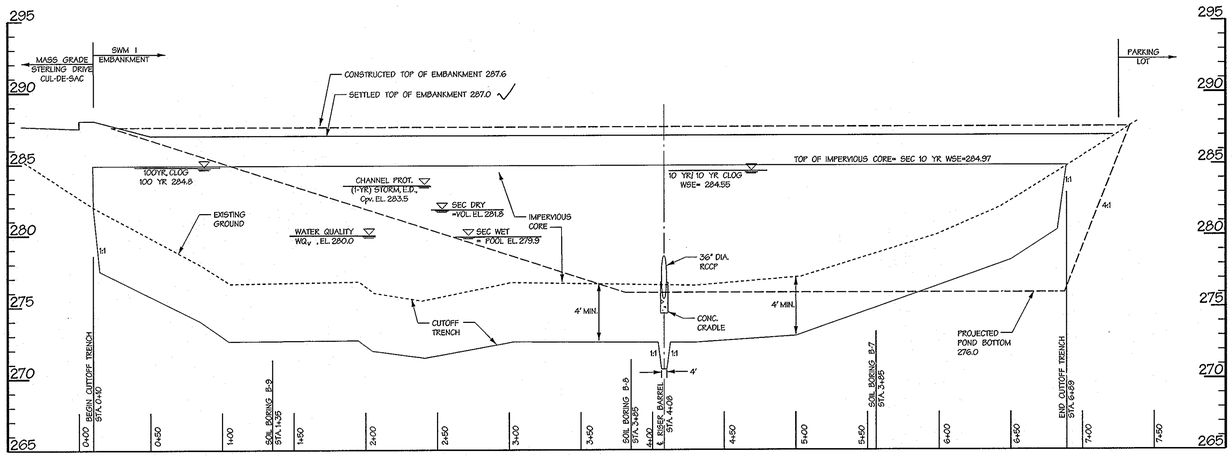

PROFILE ALONG EMBANKMENT FOR SWM I

SCALE: HORZ. 1"=50'
VERT. 1"=5'

THESE PLANS HAVE BEEN REVIEWED FOR THE HOWARD SOIL CONSERVATION DISTRICT AND MEET THE TECHNICAL REQUIREMENTS FOR SMALL POND CONSTRUCTION, SOIL EROSION AND SEDIMENT CONTROL.

U.S.D.A. NATURAL RESOURCES CONSERVATION SERVICE — 10/8/02 DATE

THESE PLANS FOR SMALL POND CONSTRUCTION, SOIL EROSION AND SEDIMENT CONTROL MEET THE REQUIREMENTS OF HOWARD SOIL CONSERVATION DISTRICT.

APPROVED: HOWARD SOIL CONSERVATION DISTRICT — 10/8/02 DATE

PLAN NUMBER _____

DEVELOPERS CERTIFICATE:

I/WE CERTIFY THAT ALL DEVELOPMENT AND/OR CONSTRUCTION WILL BE DONE ACCORDING TO THESE PLANS AND THAT ANY RESPONSIBLE PERSONNEL INVOLVED IN THE CONSTRUCTION PROJECT WILL HAVE A CERTIFICATE OF ATTENDANCE AT A DEPARTMENT OF ENVIRONMENT APPROVED TRAINING PROGRAM FOR THE CONTROL OF SEDIMENT AND EROSION BEFORE BEGINNING THE PROJECT. I SHALL ENGAGE A REGISTERED PROFESSIONAL ENGINEER TO SUPERVISE POND CONSTRUCTION AND PROVIDE THE HOWARD SOIL CONSERVATION DISTRICT WITH AN "AS-BUILT" PLAN OF THE POND WITHIN 30 DAYS OF COMPLETION. I ALSO AUTHORIZE PERIODIC ON-SITE INSPECTIONS BY THE HOWARD SOIL CONSERVATION DISTRICT.

SIGNATURE OF DEVELOPER — 9/25/02 DATE
PRINT NAME BELOW SIGNATURE
JOSEPH WERKER JR.

ENGINEERS CERTIFICATE:

I/WE CERTIFY THAT THIS PLAN FOR POND CONSTRUCTION, EROSION AND SEDIMENT CONTROL REPRESENTS A PRACTICAL AND WORKABLE PLAN BASED ON MY PERSONAL KNOWLEDGE OF THE SITE CONDITIONS. THIS PLAN WAS PREPARED IN ACCORDANCE WITH THE REQUIREMENTS OF THE HOWARD SOIL CONSERVATION DISTRICT. I HAVE NOTIFIED THE DEVELOPER THAT HE/SHE MUST ENGAGE A REGISTERED PROFESSIONAL ENGINEER TO SUPERVISE POND CONSTRUCTION AND PROVIDE THE HOWARD SOIL CONSERVATION DISTRICT WITH AN "AS-BUILT" PLAN OF THE POND WITHIN 30 DAYS OF COMPLETION.

SIGNATURE OF ENGINEER — 10551 REG. NO. — 9/25/02 DATE
PRINT NAME BELOW SIGNATURE
JOHN BENOCCI'S

RICHARD F. LANE — NO. 201 — REGISTERED PROPERTY LINE SURVEYOR

ROAD & STORM DRAIN AS-BUILT

9/25/02 Date

Professional Engr. No. / 10551

F-02-131

APPROVED: HOWARD COUNTY DEPT. OF PUBLIC WORKS

CHIEF, BUREAU OF HIGHWAYS — 11-25-02 DATE

APPROVED: HOWARD COUNTY DEPT. OF PLANNING AND ZONING

CHIEF, DIVISION OF LAND DEVELOPMENT — 12/6/02 DATE

CHIEF, DEVELOPMENT ENGINEERING DIVISION — 12/2/02 DATE

Date	No.	Revision Description

EMERSON
(Formerly the Key Property)
Section 3, Area 1
Parcels A – I

OWNER / DEVELOPER:

THE HOWARD RESEARCH & DEVELOPMENT CORPORATION
10275 LITTLE PATUXENT PARKWAY
COLUMBIA, MARYLAND 21044

DMW
Daft-McCune-Walker, Inc.
200 East Pennsylvania Avenue
Towson, Maryland 21286
(410) 296-3333
Fax 296-4705

A Team of Land Planners, Landscape Architects, Engineers, Surveyors & Environmental Professionals

TITLE
FINAL PLAN
STORMWATER MANAGEMENT PROFILES FOR SWM I

Des By	MRT	Scale	AS SHOWN	Proj. No.	01011.CO
Drn By	ADL	Date	9/25/02		17 OF 31
Chk By		Approved			

Wed Sep 25 10:43:35 2002 H:\01011\02\dwg\construction\plan1.dwg

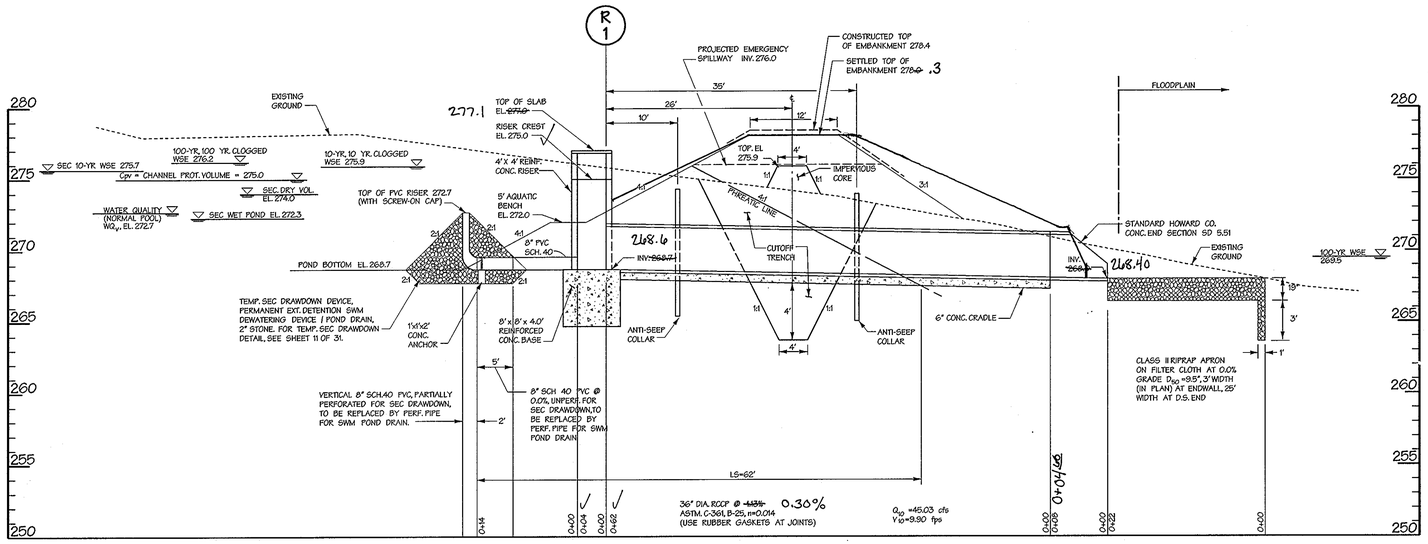

PROFILE ALONG RISER / BARREL FOR SWM II

SCALE:HORZ. 1"=10'
VERT. 1"=5'

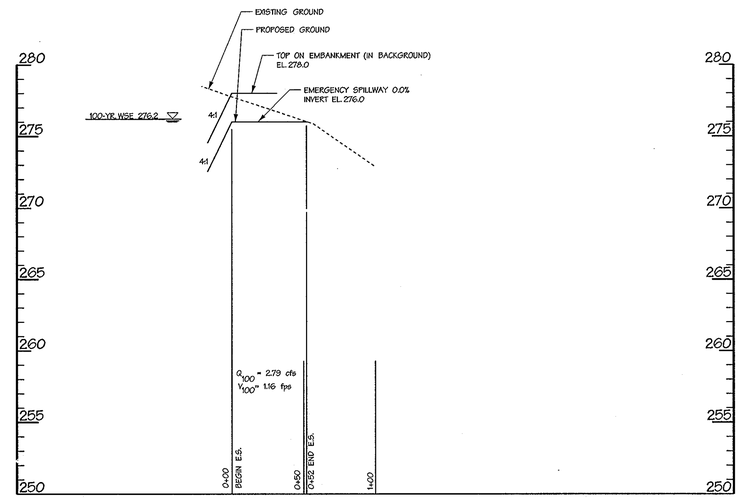

PROFILE ALONG EMERGENCY SPILLWAY FOR SWM II

SCALE:HORZ. 1"=50'
VERT. 1"=5'

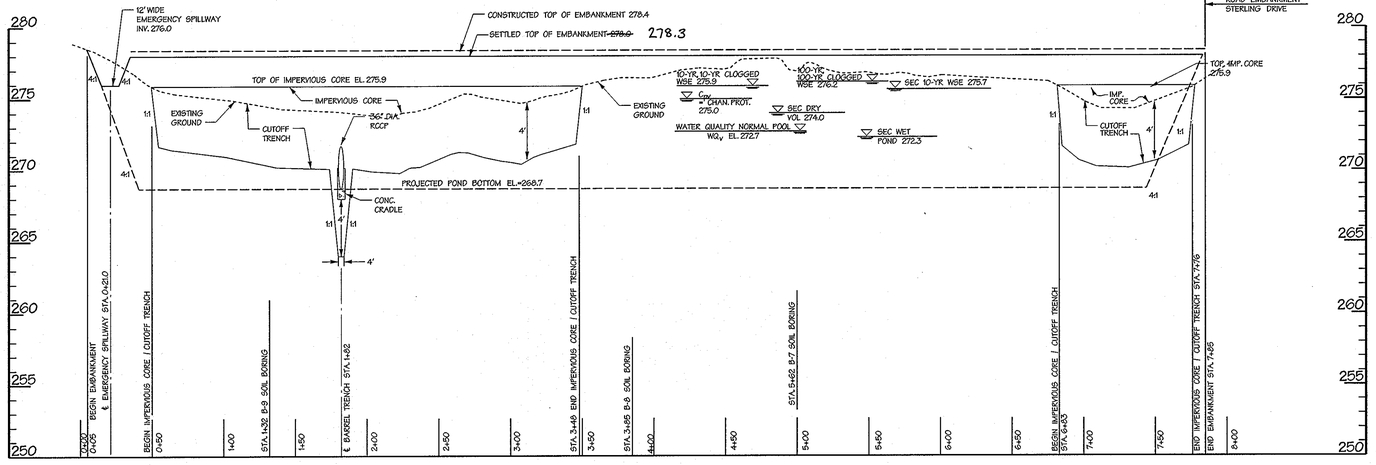

PROFILE ALONG EMBANKMENT FOR SWM II

SCALE:HORZ. 1"=50'
VERT. 1"=5'

THESE PLANS HAVE BEEN REVIEWED FOR THE HOWARD SOIL CONSERVATION DISTRICT AND MEET THE TECHNICAL REQUIREMENTS FOR SMALL POND CONSTRUCTION, SOIL EROSION AND SEDIMENT CONTROL.

U.S.D.A. NATURAL RESOURCES CONSERVATION SERVICE — DATE 10/8/02

THESE PLANS FOR SMALL POND CONSTRUCTION, SOIL EROSION AND SEDIMENT CONTROL MEET THE REQUIREMENTS OF HOWARD SOIL CONSERVATION DISTRICT.

APPROVED: HOWARD SOIL CONSERVATION DISTRICT — DATE 10/8/02

PLAN NUMBER

DEVELOPERS CERTIFICATE:

I/WE CERTIFY THAT ALL DEVELOPMENT AND/OR CONSTRUCTION WILL BE DONE ACCORDING TO THESE PLANS AND THAT ANY RESPONSIBLE PERSONNEL INVOLVED IN THE CONSTRUCTION PROJECT WILL HAVE A CERTIFICATE OF ATTENDANCE AT A DEPARTMENT OF ENVIRONMENT APPROVED TRAINING PROGRAM FOR THE CONTROL OF SEDIMENT AND EROSION BEFORE BEGINNING THE PROJECT. I SHALL ENGAGE A REGISTERED PROFESSIONAL ENGINEER TO SUPERVISE POND CONSTRUCTION AND PROVIDE THE HOWARD SOIL CONSERVATION DISTRICT WITH AN "AS-BUILT" PLAN OF THE POND WITHIN 30 DAYS OF COMPLETION. I ALSO AUTHORIZE PERIODIC ON-SITE INSPECTIONS BY THE HOWARD SOIL CONSERVATION DISTRICT.

SIGNATURE OF DEVELOPER — DATE 9/25/02
PRINT NAME BELOW SIGNATURE
JOSEPH NECKER JR.

ENGINEERS CERTIFICATE:

I/WE CERTIFY THAT THIS PLAN FOR POND CONSTRUCTION, EROSION AND SEDIMENT CONTROL REPRESENTS A PRACTICAL AND WORKABLE PLAN BASED ON MY PERSONAL KNOWLEDGE OF THE SITE CONDITIONS. THIS PLAN WAS PREPARED IN ACCORDANCE WITH THE REQUIREMENTS OF THE HOWARD SOIL CONSERVATION DISTRICT. I HAVE NOTIFIED THE DEVELOPER THAT HE/SHE MUST ENGAGE A REGISTERED PROFESSIONAL ENGINEER TO SUPERVISE POND CONSTRUCTION AND PROVIDE THE HOWARD SOIL CONSERVATION DISTRICT WITH AN "AS-BUILT" PLAN OF THE POND WITHIN 30 DAYS OF COMPLETION.

SIGNATURE OF ENGINEER — REG. NO. 10551 — DATE 9/25/02
PRINT NAME BELOW SIGNATURE
JOHN RAWOCCHIO

STATE OF MARYLAND
RICHARD F. LANE
No. 301
REGISTERED
PROPERTY LINE SURVEYOR

RICHARD F. LANE
ROAD & STORM DRAIN - AS-BUILT -

9/25/02 Date

PROFESSIONAL ENGINEER
JOHN RAWOCCHIO
No. 10551
REGISTERED
STATE OF MARYLAND

Professional Engr. No. 10551
F-02-131

APPROVED: HOWARD COUNTY DEPT. OF PUBLIC WORKS

CHIEF, BUREAU OF HIGHWAYS MS — DATE 11-25-02

APPROVED: HOWARD COUNTY DEPT. OF PLANNING AND ZONING

CHIEF, DIVISION OF LAND DEVELOPMENT MB — DATE 12/6/02

CHIEF, DEVELOPMENT ENGINEERING DIVISION MK — DATE 12/2/02

Date	No.	Revision Description

EMERSON
(Formerly the Key Property)
Section 3, Area 1
Parcels A – I

OWNER /DEVELOPER:

THE HOWARD RESEARCH & DEVELOPMENT CORPORATION
10275 LITTLE PATUXENT PARKWAY
COLUMBIA, MARYLAND 21044

DMW
Daft-McCune-Walker, Inc.
200 East Pennsylvania Avenue
Towson, Maryland 21286
(410) 296-3333
Fax 296-4705

A Team of Land Planners, Landscape Architects, Engineers, Surveyors & Environmental Professionals

TITLE
FINAL PLAN
STORMWATER MANAGEMENT PROFILES FOR SWM II

Des By	MRT	Scale	AS SHOWN	Proj. No.	01011.C9
Drn By	ADL	Date	9/25/02		
Chk By		Approved			18 OF 31

File: 1011C9 ... Wed Sep 25 10:46:15 2002 ... Plotted by: ...

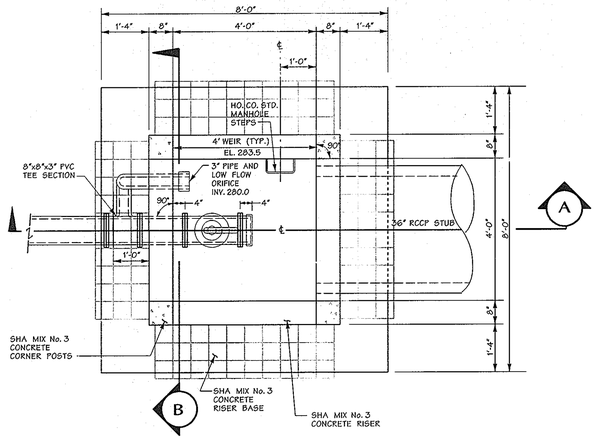

RISER PLAN (TOP SLAB REMOVED) - SWM I

Scale: ½" = 1'-0"

CAST IN PLACE

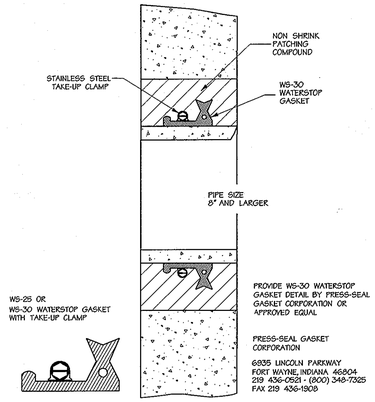

PIPE WATER STOP DETAIL

NOT TO SCALE

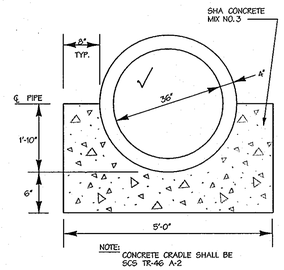

NTS

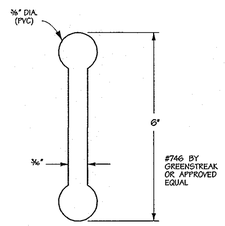

6" WATERSTOP

NOT TO SCALE

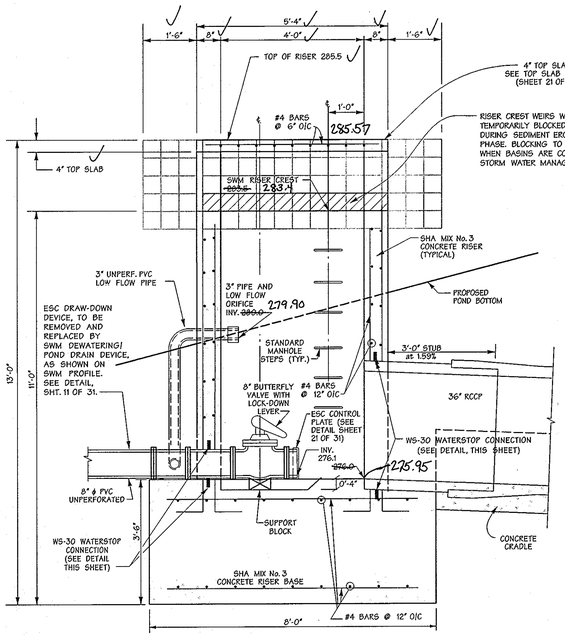

SECTION A

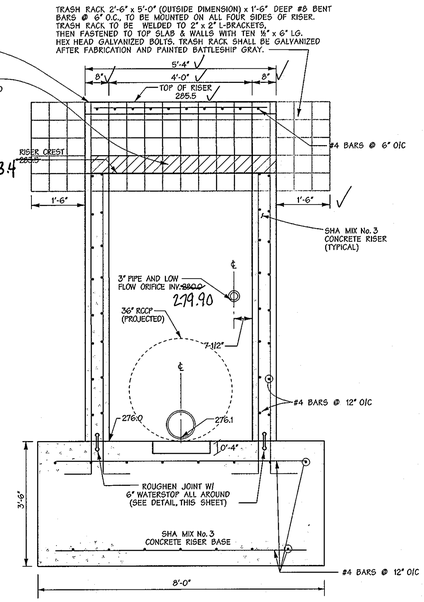

SECTION B

RISER DETAIL FOR POND - SWM I

Scale:1/2" = 1'-0"

CAST IN PLACE

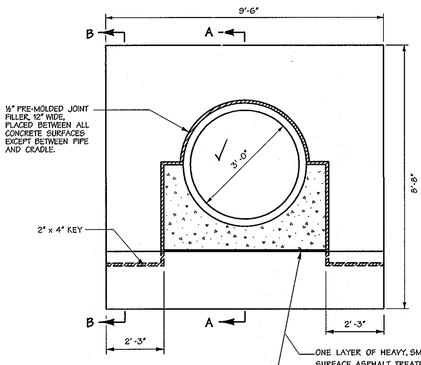

DETAIL SHOWN FOR EARTH FOUNDATION. FOR ROCK FOUNDATION, FOUND BOTTOM OF CRADLE ON ROCK LINE AND KEY COLLAR 6" INTO ROCK.

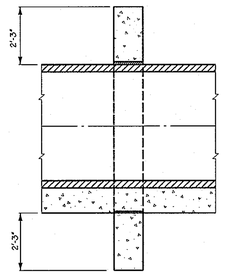

SECTION A-A

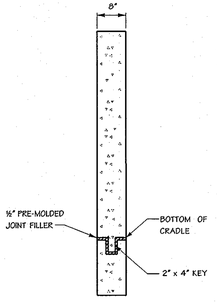

SECTION B-B

SWM I
ANTI - SEEP COLLAR DETAIL

CAST IN PLACE - NOT TO SCALE

THESE PLANS HAVE BEEN REVIEWED FOR THE HOWARD SOIL CONSERVATION DISTRICT AND MEET THE TECHNICAL REQUIREMENTS FOR SMALL POND CONSTRUCTION, SOIL EROSION AND SEDIMENT CONTROL.

U.S.D.A. NATURAL RESOURCES CONSERVATION SERVICE — 10/8/02 DATE

THESE PLANS FOR SMALL POND CONSTRUCTION, SOIL EROSION AND SEDIMENT CONTROL MEET THE REQUIREMENTS OF HOWARD SOIL CONSERVATION DISTRICT.

APPROVED: HOWARD SOIL CONSERVATION DISTRICT — 10/8/02 DATE

PLAN NUMBER _____

DEVELOPERS CERTIFICATE:

I/WE CERTIFY THAT ALL DEVELOPMENT AND/OR CONSTRUCTION WILL BE DONE ACCORDING TO THESE PLANS AND THAT ANY RESPONSIBLE PERSONNEL INVOLVED IN THE CONSTRUCTION PROJECT WILL HAVE A CERTIFICATE OF ATTENDANCE AT A DEPARTMENT OF ENVIRONMENT APPROVED TRAINING PROGRAM FOR THE CONTROL OF SEDIMENT AND EROSION BEFORE BEGINNING THE PROJECT. I SHALL ENGAGE A REGISTERED PROFESSIONAL ENGINEER TO SUPERVISE POND CONSTRUCTION AND PROVIDE THE HOWARD SOIL CONSERVATION DISTRICT WITH AN "AS-BUILT" PLAN OF THE POND WITHIN 30 DAYS OF COMPLETION. I ALSO AUTHORIZE PERIODIC ON-SITE INSPECTIONS BY THE HOWARD SOIL CONSERVATION DISTRICT.

SIGNATURE OF DEVELOPER — 9/25/02 DATE

PRINT NAME BELOW SIGNATURE

JOSEPH NEKLER JR.

ENGINEERS CERTIFICATE:

I/WE CERTIFY THAT THIS PLAN FOR POND CONSTRUCTION, EROSION AND SEDIMENT CONTROL REPRESENTS A PRACTICAL AND WORKABLE PLAN BASED ON MY PERSONAL KNOWLEDGE OF THE SITE CONDITIONS. THIS PLAN WAS PREPARED IN ACCORDANCE WITH THE REQUIREMENTS OF THE HOWARD SOIL CONSERVATION DISTRICT. I HAVE NOTIFIED THE DEVELOPER THAT HE/SHE MUST ENGAGE A REGISTERED PROFESSIONAL ENGINEER TO SUPERVISE POND CONSTRUCTION AND PROVIDE THE HOWARD SOIL CONSERVATION DISTRICT WITH AN "AS-BUILT" PLAN OF THE POND WITHIN 30 DAYS OF COMPLETION.

SIGNATURE OF ENGINEER — 10551 REG. NO. — 9/25/02 DATE

PRINT NAME BELOW SIGNATURE

John Ragnocchia

STATE OF MARYLAND — RICHARD F. LANE — No. 301 — REGISTERED — PROPERTY LINE SURVEYOR

Road + Storm Drain As-Built

9/25/02 Date

STATE OF MARYLAND — JOHN RAGNOCCHIA — No. 10551 — PROFESSIONAL ENGINEER

Professional Engr. No. 10551

F-02-131

APPROVED: HOWARD COUNTY DEPT. OF PUBLIC WORKS

CHIEF, BUREAU OF HIGHWAYS — 11-25-02 DATE

APPROVED: HOWARD COUNTY DEPT. OF PLANNING AND ZONING

CHIEF, DIVISION OF LAND DEVELOPMENT — 12/6/02 DATE

CHIEF, DEVELOPMENT ENGINEERING DIVISION — 12/2/02 DATE

Date	No.	Revision Description

EMERSON
(Formerly the Key Property)
Section 3, Area 1
Parcels A – I

OWNER /DEVELOPER:

THE HOWARD RESEARCH & DEVELOPMENT CORPORATION
10275 LITTLE PATUXENT PARKWAY
COLUMBIA, MARYLAND 21044

DMW
Daft-McCune-Walker, Inc.
200 East Pennsylvania Avenue
Towson, Maryland 21286
(410) 296-3333
Fax 296-4705

A Team of Land Planners, Landscape Architects, Engineers, Surveyors & Environmental Professionals

TITLE

FINAL PLAN
STORMWATER MANAGEMENT
DETAILS FOR SWM I

Des By	MRT	Scale	AS SHOWN	Proj. No.	01011.00
Drn By	ADL	Date	9/25/02		
Chk By		Approved			19 OF 31

Wed Sep 25 10:59:19 2002 J:\projects\01011\swm\swm1.dgn

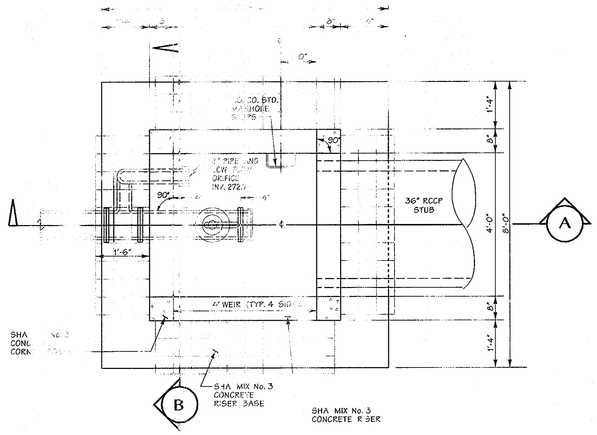

RISER PLAN (TOP SLAB REMOVED) - SWM II

Scale: ½" = 1'-0"
CAST IN PLACE

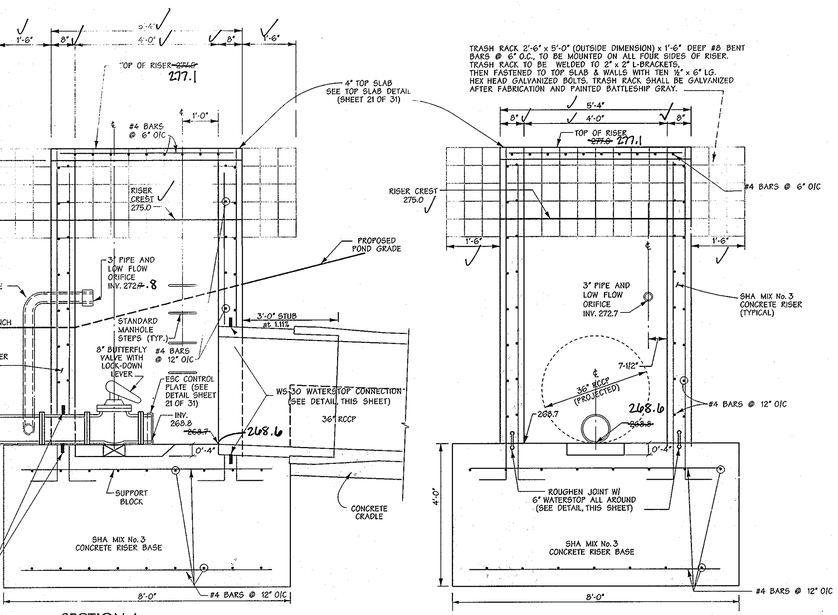

SECTION A

SECTION B

RISER DETAIL FOR POND - SWM II

Scale: 1/2" = 1'-0"
CAST IN PLACE

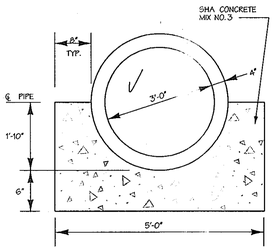

NOTE: CONCRETE CRADLE SHALL BE SCS TR-46 A-2

CONCRETE CRADLE DETAIL

NTS

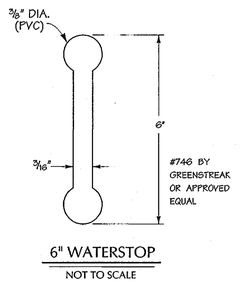

6" WATERSTOP

NOT TO SCALE

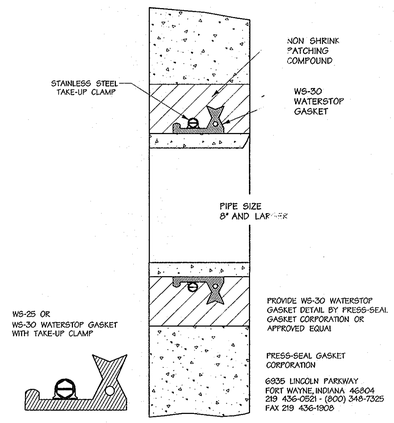

PIPE WATER STOP DETAIL

NOT TO SCALE

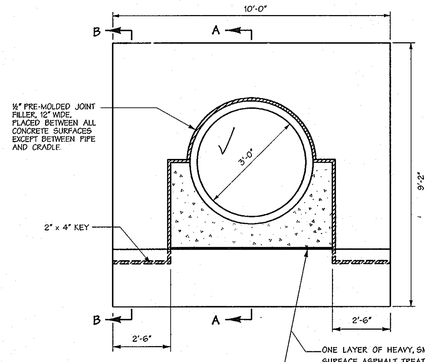

DETAIL SHOWN FOR EARTH FOUNDATION. FOR ROCK FOUNDATION, FOUND BOTTOM OF CRADLE ON ROCK LINE AND KEY COLLAR 6" INTO ROCK.

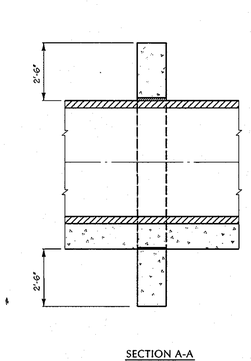

SECTION A-A

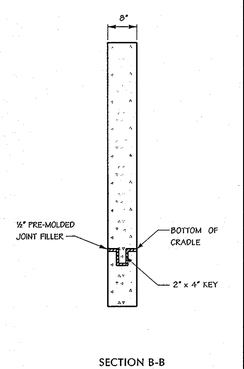

SECTION B-B

ANTI - SEEP COLLAR DETAIL - SWM II

CAST IN PLACE - NOT TO SCALE

THESE PLANS HAVE BEEN REVIEWED FOR THE HOWARD SOIL CONSERVATION DISTRICT AND MEET THE TECHNICAL REQUIREMENTS FOR SMALL POND CONSTRUCTION, SOIL EROSION AND SEDIMENT CONTROL.

U.S.D.A. NATURAL RESOURCES CONSERVATION SERVICE — 10/8/02 DATE

THESE PLANS FOR SMALL POND CONSTRUCTION, SOIL EROSION AND SEDIMENT CONTROL MEET THE REQUIREMENTS OF HOWARD SOIL CONSERVATION DISTRICT.

APPROVED: HOWARD SOIL CONSERVATION DISTRICT — 10/8/02 DATE

SWM NUMBER _____

DEVELOPERS CERTIFICATE:

I/WE CERTIFY THAT ALL DEVELOPMENT AND/OR CONSTRUCTION WILL BE DONE ACCORDING TO THESE PLANS AND THAT ANY RESPONSIBLE PERSONNEL INVOLVED IN THE CONSTRUCTION PROJECT WILL HAVE A CERTIFICATE OF ATTENDANCE AT A DEPARTMENT OF ENVIRONMENT APPROVED TRAINING PROGRAM FOR THE CONTROL OF SEDIMENT AND EROSION BEFORE BEGINNING THE PROJECT. I SHALL ENGAGE A REGISTERED PROFESSIONAL ENGINEER TO SUPERVISE POND CONSTRUCTION AND PROVIDE THE HOWARD SOIL CONSERVATION DISTRICT WITH AN "AS-BUILT" PLAN OF THE POND WITHIN 30 DAYS OF COMPLETION. I ALSO AUTHORIZE PERIODIC ON-SITE INSPECTIONS BY THE HOWARD SOIL CONSERVATION DISTRICT.

SIGNATURE OF DEVELOPER — 9/25/02 DATE
PRINT NAME BELOW SIGNATURE
JOSEPH NECKER JR.

ENGINEERS CERTIFICATE:

I/WE CERTIFY THAT THIS PLAN FOR POND CONSTRUCTION, EROSION AND SEDIMENT CONTROL REPRESENTS A PRACTICAL AND WORKABLE PLAN BASED ON MY PERSONAL KNOWLEDGE OF THE SITE CONDITIONS. THIS PLAN WAS PREPARED IN ACCORDANCE WITH THE REQUIREMENTS OF THE HOWARD SOIL CONSERVATION DISTRICT. I HAVE NOTIFIED THE DEVELOPER THAT HE/SHE MUST ENGAGE A REGISTERED PROFESSIONAL ENGINEER TO SUPERVISE POND CONSTRUCTION AND PROVIDE THE HOWARD SOIL CONSERVATION DISTRICT WITH AN "AS-BUILT" PLAN OF THE POND WITHIN 30 DAYS OF COMPLETION.

SIGNATURE OF ENGINEER — 10551 REG. NO. — 9/25/02 DATE
PRINT NAME BELOW SIGNATURE
John Bavocchia

STATE OF MARYLAND — RICHARD F. LANE — No. 301 REGISTERED PROPERTY LINE SURVEYOR

Road & Storm Drain As-Built

9/25/02
Date

Professional Engr. No. 10551

F-02-131

APPROVED: HOWARD COUNTY DEPT OF PUBLIC WORKS
CHIEF, BUREAU OF HIGHWAYS — 11-25-02 DATE

APPROVED: HOWARD COUNTY DEPT OF PLANNING AND ZONING
CHIEF, DIVISION OF LAND DEVELOPMENT — 12/6/02 DATE

CHIEF, DEVELOPMENT ENGINEERING DIVISION — 12/2/02 DATE

Date	No.	Revision Description

EMERSON
(Formerly the Key Property)
Section 3, Area 1
Parcels A – I

OWNER /DEVELOPER:

THE HOWARD RESEARCH & DEVELOPMENT CORPORATION
10275 LITTLE PATUXENT PARKWAY
COLUMBIA, MARYLAND 21044

DMW
Daft-McCune-Walker, Inc.
200 East Pennsylvania Avenue
Towson, Maryland 21286
(410) 296-3333
Fax 296-4705

A Team of Land Planners, Landscape Architects, Engineers, Surveyors, Environmental Professionals

TITLE

FINAL PLAN
STORMWATER MANAGEMENT
DETAILS FOR SWM II

Des By	RT	Scale AS SHOWN	Proj. No. 01011.C0
Drn By	ADL	Date 9/25/02	20 OF 31
Chk By		Approved	

Wed Sep 25 10:58:31 2002 M:\DATA\01011\dwg\swm\swm2.dgn

STORMWATER MANAGEMENT POND
GENERAL CONSTRUCTION SPECIFICATIONS

1. GENERAL

ALL STORMWATER MANAGEMENT FACILITIES SHALL BE CONSTRUCTED IN ACCORDANCE WITH HOWARD COUNTY'S "STANDARD SPECIFICATIONS AND DETAILS FOR CONSTRUCTION (1985)" AND THE N.R.C.S. MARYLAND "STANDARDS AND SPECIFICATIONS FOR PONDS" (MD-378, 2000).

THESE SPECIFICATIONS ARE APPROPRIATE TO ALL PONDS WITHIN THE SCOPE OF THE STANDARD PRACTICE MD-378. ALL REFERENCES TO ASTM AND AASHTO SPECIFICATIONS APPLY TO THE MOST RECENT VERSION.

2. SITE PREPARATION

AREAS DESIGNATED FOR BORROW AREAS, EMBANKMENT, AND STRUCTURAL WORKS SHALL BE CLEARED, GRUBBED AND STRIPPED OF TOPSOIL. ALL TREES, VEGETATION, ROOTS AND OTHER OBJECTIONABLE MATERIAL SHALL BE REMOVED. CHANNEL BANKS AND SHARP BREAKS SHALL BE SLOPED TO NO STEEPER THAN 1:1. ALL TREES SHALL BE CLEARED AND GRUBBED WITHIN 15 FEET OF THE TOE OF THE EMBANKMENT.

AREAS TO BE COVERED BY THE RESERVOIR WILL BE CLEARED OF ALL TREES, BRUSH, LOGS, FENCES, RUBBISH AND OTHER OBJECTIONABLE MATERIAL UNLESS OTHERWISE DESIGNATED ON THE PLANS. TREES, BRUSH AND STUMPS SHALL BE CUT APPROXIMATELY LEVEL WITH THE GROUND SURFACE. FOR DRY STORMWATER MANAGEMENT PONDS, A MINIMUM OF A 25-FOOT RADIUS AROUND THE INLET STRUCTURE SHALL BE CLEARED.

ALL CLEARED AND GRUBBED MATERIAL SHALL BE DISPOSED OF OUTSIDE AND BELOW THE LIMITS OF THE DAM AND RESERVOIR AS DIRECTED BY THE OWNER OR HIS REPRESENTATIVE. WHEN SPECIFIED, A SUFFICIENT QUANTITY OF TOPSOIL WILL BE STOCKPILED IN A SUITABLE LOCATION FOR USE ON THE EMBANKMENT AND OTHER DESIGNATED AREAS.

3. EARTH FILL

NOTE: SEE GEOTECHNICAL REPORT, 6-14-01 BY ROBERT B.BALTER AND BORING LOGS/ RECOMMENDATIONS, SHEET 22 OF 31.

MATERIAL - THE FILL MATERIAL SHALL BE TAKEN FROM APPROVED DESIGNATED BORROW AREAS. IT SHALL BE FREE OF ROOTS, STUMPS, WOOD, RUBBISH, STONES GREATER THAN 6", FROZEN OR OTHER OBJECTIONABLE MATERIALS. FILL MATERIAL FOR THE CENTER OF THE EMBANKMENT AND CUT OFF TRENCH SHALL CONFORM TO UNIFIED SOIL CLASSIFICATION GC, SC, CH, OR CL AND MUST HAVE AT LEAST 30% PASSING THE #200 SIEVE. CONSIDERATION MAY BE GIVEN TO THE USE OF OTHER MATERIALS IN THE EMBANKMENT IF DESIGNED BY A GEOTECHNICAL ENGINEER. SUCH SPECIAL DESIGNS MUST HAVE CONSTRUCTION SUPERVISED BY A GEOTECHNICAL ENGINEER.

MATERIALS USED IN THE OUTER SHELL OF THE EMBANKMENT MUST HAVE THE CAPABILITY TO SUPPORT VEGETATION OF THE QUALITY REQUIRED TO PREVENT EROSION OF THE EMBANKMENT.

PLACEMENT - AREAS ON WHICH FILL IS TO BE PLACED SHALL BE SCARIFIED PRIOR TO PLACEMENT OF FILL. FILL MATERIALS SHALL BE PLACED IN MAXIMUM 8 INCH THICK (BEFORE COMPACTION) LAYERS WHICH ARE TO BE CONTINUOUS OVER THE ENTIRE LENGTH OF THE FILL. THE MOST PERMEABLE BORROW MATERIAL SHALL BE PLACED IN THE DOWNSTREAM PORTIONS OF THE EMBANKMENT. THE PRINCIPAL SPILLWAY MUST BE INSTALLED CONCURRENTLY WITH FILL PLACEMENT AND NOT EXCAVATED INTO THE EMBANKMENT.

COMPACTION - THE MOVEMENT OF THE HAULING AND SPREADING EQUIPMENT OVER THE FILL SHALL BE CONTROLLED SO THAT THE ENTIRE SURFACE OF EACH LIFT SHALL BE TRAVERSED BY NOT LESS THAN ONE TREAD TRACK OF THE EQUIPMENT OR COMPACTION SHALL BE ACHIEVED BY A MINIMUM OF FOUR COMPLETE PASSES OF A SHEEPSFOOT, RUBBER TIRED OR VIBRATORY ROLLER. FILL MATERIAL SHALL CONTAIN SUFFICIENT MOISTURE SUCH THAT THE REQUIRED DEGREE OF COMPACTION WILL BE OBTAINED WITH THE EQUIPMENT USED. THE FILL MATERIAL SHALL CONTAIN SUFFICIENT MOISTURE SO THAT IF FORMED INTO A BALL IT WILL NOT CRUMBLE, YET NOT BE SO WET THAT WATER CAN BE SQUEEZED OUT.

WHEN REQUIRED BY THE REVIEWING AGENCY THE MINIMUM REQUIRED DENSITY SHALL NOT BE LESS THAN 95% OF THE MAXIMUM DRY DENSITY WITH A MOISTER CONTENT WITHIN +/- 2% OF THE OPTIMUM. EACH LAYER OF FILL SHALL BE COMPACTED AS NECESSARY TO OBTAIN THAT DENSITY, AND IS TO BE CERTIFIED BY THE ENGINEER AT THE TIME OF CONSTRUCTION. ALL COMPACTION IS TO BE DETERMINED BY AASHTO METHOD T-99 (STANDARD PROCTOR).

CUT OFF TRENCH - THE CUTOFF TRENCH SHALL BE EXCAVATED INTO IMPERVIOUS MATERIAL ALONG OR PARALLEL TO THE CENTERLINE OF THE EMBANKMENT AS SHOWN ON THE PLANS. THE EQUIPMENT USED FOR EXCAVATION, WITH THE MINIMUM WIDTH BEING FOUR FEET SHALL GOVERN THE BOTTOM WIDTH OF THE TRENCH. THE DEPTH SHALL BE AT LEAST 4 FEET BELOW EXISTING GRADE OR AS SHOWN ON THE PLANS. THE SIDE SLOPES OF THE TRENCH SHALL BE 1 TO 1 OR FLATTER. THE BACKFILL SHALL BE COMPACTED WITH CONSTRUCTION EQUIPMENT, ROLLERS, OR HAND TAMPERS TO ASSURE MAXIMUM DENSITY AND MINIMUM PERMEABILITY.

EMBANKMENT CORE - THE CORE SHALL BE PARALLEL TO THE CENTERLINE OF THE EMBANKMENT AS SHOWN ON THE PLANS. THE TOP WIDTH OF THE CORE SHALL BE A MINIMUM OF FOUR FEET. THE HEIGHT SHALL EXTEND UP TO AT LEAST THE 10 YEAR WATER ELEVATION OR AS SHOWN ON THE PLANS. THE SIDE SLOPES SHALL BE 1 TO 1 OR FLATTER. THE CORE SHALL BE COMPACTED WITH CONSTRUCTION EQUIPMENT, ROLLERS, OR HAND TAMPERS TO ASSURE MAXIMUM DENSITY AND MINIMUM PERMEABILITY. IN ADDITION, THE CORE SHALL BE PLACED CONCURRENTLY WITH THE OUTER SHELL OF THE EMBANKMENT.

4. STRUCTURE BACKFILL

NOTE. SEE GEOTECHNICAL REPORT, 6-14-01 BY ROBERT B.BALTER AND BORING LOGS/ RECOMMENDATIONS, SHEET 22 OF 31.

BACKFILL ADJACENT TO PIPES OR STRUCTURES SHALL BE OF THE TYPE AND QUALITY CONFORMING TO THAT SPECIFIED FOR THE ADJOINING FILL MATERIAL. THE FILL SHALL BE PLACED IN HORIZONTAL LAYERS NOT TO EXCEED 4 INCHES IN THICKNESS AND COMPACTED BY HAND TAMPERS OR OTHER MANUALLY DIRECTED COMPACTION EQUIPMENT. THE MATERIAL NEEDS TO FILL COMPLETELY ALL SPACES UNDER AND ADJACENT TO THE PIPE. AT NO TIME DURING THE BACKFILLING OPERATION SHALL DRIVEN EQUIPMENT BE ALLOWED TO OPERATE CLOSER THAN 4 FEET, MEASURED HORIZONTALLY, TO ANY PART OF A STRUCTURE. UNDER NO CIRCUMSTANCES SHALL EQUIPMENT BE DRIVEN OVER ANY PART OF A CONCRETE STRUCTURE OR PIPE, UNLESS THERE IS A COMPACTED FILL OF 24" OR GREATER OVER THE STRUCTURE OR PIPE.

STRUCTURE BACKFILL MAY BE FLOWABLE FILL MEETING THE REQUIREMENTS OF MARYLAND DEPARTMENT OF TRANSPORTATION, STATE HIGHWAY ADMINISTRATION STANDARD SPECIFICATIONS FOR CONSTRUCTION AND MATERIALS, SECTION313 AS MODIFIED. THE MIXTURE SHALL HAVE A 100-200 PSI; 28 DAY UNCONFINED COMPRESSIVE STRENGTH. THE FLOWABLE FILL SHALL HAVE A MINIMUM PH OF 4.0 AND A MINIMUM RESISTIVITY OF 2,000 OHM-CM. MATERIAL SHALL BE PLACED SUCH THAT A MINIMUM OF 6" (MEASURED PERPENDICULAR TO THE OUTSIDE OF THE PIPE) OF FLOWABLE FILL SHALL BE UNDER (BEDDING), OVER AND, ON THE SIDES OF THE PIPE. IT ONLY NEEDS TO EXTEND UP TO THE SPRING LINE FOR RIGID CONDUITS. AVERAGE SLUMP OF THE FILL SHALL BE 7" TO ASSURE FLOWABILITY OF THE MATERIAL. ADEQUATE MEASURES SHALL BE TAKEN (SAND BAGS, ETC.) TO PREVENT FLOATING THE PIPE. WHEN USING FLOWABLE FILL, ALL METAL PIPE SHALL BE BITUMINOUS COATED. ANY ADJOINING SOIL FILL SHALL BE PLACED IN HORIZONTAL LAYERS NOT TO EXCEED FUR INCHES IN THICKNESS AND COMPACTED BY HAND TAMPERS OR OTHER MANUALLY DIRECTED COMPACTION EQUIPMENT. THE MATERIAL SHALL COMPLETELY FILL ALL VOIDS ADJACENT TO THE FLOWABLE FILL ZONE. AT NO TIME DURING THE BACKFILLING OPERATION SHALL DRIVEN EQUIPMENT BE ALLOWED TO OPERATE CLOSER THAN 4 FEET, MEASURED HORIZONTALLY, TO ANY PART OF A STRUCTURE. UNDER NO CIRCUMSTANCES SHALL EQUIPMENT BE DRIVEN OVER ANY PART OF A STRUCTURE OR PIPE, UNLESS THERE IS A COMPACTED FILL OF 24" OR GREATER OVER THE STRUCTURE OR PIPE. BACKFILL MATERIAL OUTSIDE THE STRUCTURAL BACKFILL (FLOWABLE FILL) ZONE SHALL BE OF THE TYPE AND QUALITY CONFORMING TO THAT SPECIFIED FOR THE CORE OF THE EMBANKMENT OR OTHER EMBANKMENT MATERIALS.

5. REMOVAL AND REPLACEMENT OF DEFECTIVE FILL

FILL PLACED AT DENSITIES LOWER THAN SPECIFIED MINIMUM DENSITY OR AT MOISTURE CONTENTS OUTSIDE THE SPECIFIED ACCEPTABLE RANGE OF MOISTURE CONTENT OR OTHERWISE NOT CONFORMING TO THE REQUIREMENTS OF THE SPECIFICATIONS SHALL BE REWORKED TO MEET THE REQUIREMENTS OR REMOVED AND REPLACED BY ACCEPTABLE FILL. THE BOTTOMS OF SUCH EXCAVATIONS SHALL BE FINISHED FLAT OR GENTLY CURVING AND AT THE SIDES OF SUCH EXCAVATIONS THE ADJACENT SOUND FILL SHALL BE TRIMMED TO A SLOPE NOT STEEPER THAN 3 FEET HORIZONTALLY TO 1 FOOT VERTICALLY EXTENDING FROM THE BOTTOM OF THE EXCAVATION TO THE FILL SURFACE.

6. PIPE CONDUITS

ALL PIPES SHALL BE CIRCULAR IN CROSS SECTION. ALL PERFORATED PIPES SHALL HAVE A MINIMUM OF 3.31 SQUARE INCHES OF OPENING PER SQUARE FOOT OF PIPE SURFACE (EX. 30 3/8-INCH HOLES PER SQUARE FOOT). PERFORATIONS ARE TO BE UNIFORMLY SPACED AROUND THE FULL PERIPHERY OF THE PIPE. ANY HOLES BLOCKED OR PARTIALLY BLOCKED BY BITUMINOUS COATING SHALL BE OPENED PRIOR TO INSTALLATION.

REINFORCED CONCRETE PIPE - ALL OF THE FOLLOWING CRITERIA SHALL APPLY FOR REINFORCED CONCRETE PIPE:

1. MATERIALS - REINFORCED CONCRETE PIPE SHALL HAVE BELL AND SPIGOT JOINTS WITH RUBBER GASKETS AND SHALL EQUAL OR EXCEED ASTM C-361.
2. BEDDING - REINFORCED CONCRETE PIPE CONDUITS SHALL BE LAID IN A CONCRETE BEDDING FOR THEIR ENTIRE LENGTH. THIS BEDDING / CRADLE SHALL CONSIST OF HIGH SLUMP CONCRETE PLACED UNDER THE PIPE AND UP THE SIDES OF THE PIPE AT LEAST 50 PERCENT OF ITS OUTSIDE DIAMETER WITH A MINIMUM THICKNESS OF 6 INCHES. WHERE CONCRETE CRADLE IS NOT NEEDED FOR STRUCTURAL REASONS, FLOWABLE FILL MAY BE USED AS DESCRIBED IN THE "STRUCTURE BACKFILL" SECTION OF THIS STANDARD. GRAVEL BEDDING IS NOT PERMITTED.
3. LAYING PIPE - BELL AND SPIGOT PIPE SHALL BE PLACED WITH THE BELL END UPSTREAM. JOINTS SHALL BE MADE IN ACCORDANCE WITH RECOMMENDATIONS OF THE MANUFACTURER OF THE MATERIAL. AFTER THE JOINTS ARE SEALED FOR THE ENTIRE LINE, THE BEDDING SHALL BE PLACED SO THAT ALL SPACES UNDER THE PIPE ARE FILLED. CARE SHALL BE EXERCISED TO PREVENT ANY DEVIATION FROM THE ORIGINAL LINE AND GRADE OF THE PIPE. THE FIRST JOINT MUST BE LOCATED WITHIN 4 FEET FROM THE RISER.
4. BACKFILLING SHALL CONFORM TO "STRUCTURE BACKFILL".
5. CONNECTIONS - ALL CONNECTIONS (TO ANTI-SEEP COLLARS, RISER, ETC.) SHALL BE WATERTIGHT.
6. OTHER DETAILS (ANTI-SEEP COLLARS, VALVES, ETC.) SHALL BE AS SHOWN ON THE DRAWINGS.

PLASTIC PIPE - ALL OF THE FOLLOWING CRITERIA SHALL APPLY FOR PLASTIC PIPE:

1. MATERIALS - PVC PIPE SHALL BE PVC-1120 OR PVC-1220 CONFORMING TO ASTM D-1785 OR ASTM D-2241. CORRUGATED HIGH DENSITY POLYETHYLENE (HDPE), COUPLINGS AND FITTINGS SHALL CONFORM TO THE FOLLOWING; 4" - 10" INCH PIPE SHALL MEET THE REQUIREMENTS OF AASHTO M252 TYPE S, AND 12" THROUGH 24" SHALL MEET THE REQUIREMENTS OF AASHTO M294 TYPE S.
2. JOINTS AND CONNECTIONS TO ANTI-SEEP COLLARS SHALL BE COMPLETELY WATERTIGHT.
3. BEDDING - THE PIPE SHALL BE FIRMLY AND UNIFORMLY BEDDED THROUGHOUT ITS ENTIRE LENGTH. WHERE ROCK OR SOFT, SPONGY OR OTHER UNSTABLE SOIL IS ENCOUNTERED, ALL SUCH MATERIAL SHALL BE REMOVED AND REPLACED WITH SUITABLE EARTH COMPACTED TO PROVIDE ADEQUATE SUPPORT.
4. BACKFILLING SHALL CONFORM TO "STRUCTURE BACKFILL".
5. OTHER DETAILS (ANTI-SEEP COLLARS, VALVES, ETC.) SHALL BE AS SHOWN ON THE DRAWINGS.

7. CONCRETE

CONCRETE SHALL MEET THE REQUIREMENTS OF THE MARYLAND DEPARTMENT OF TRANSPORTATION, STATE HIGHWAY ADMINISTRATION STANDARD SPECIFICATIONS FOR CONSTRUCTION AND MATERIALS, SECTION 414, MIX NO. 3

CAST-IN-PLACE CONCRETE STRUCTURES

1. SPECIFICATIONS: MARYLAND DEPARTMENT OF TRANSPORTATION, STATE HIGHWAY ADMINISTRATION STANDARD SPECIFICATIONS FOR CONSTRUCTION AND MATERIALS, LATEST EDITION.

   AASHTO STANDARD SPECIFICATIONS FOR HIGHWAY BRIDGES, LATEST EDITION, FOR DESIGN. CONCRETE DESIGN BY THE "SERVICE LOAD DESIGN METHOD".
2. CONCRETE: SHALL MEET THE REQUIREMENTS OF THE MARYLAND DEPARTMENT OF TRANSPORTATION, STATE HIGHWAY ADMINISTRATION STANDARD SPECIFICATIONS FOR CONSTRUCTION AND MATERIALS, SECTION 414 AND 902, MIX NO. 3.
3. CONTRACTOR MAY ADD COLOR MIX AT PLANT IN ACCORDANCE WITH MANUFACTURES RECOMMENDATION "C-12 MESA BEIGE" AS MANUFACTURED BY L. M. SCOFIELD COMPANY (213) 723-5285.

   CONTRACTOR SHALL SUPPLY MIX DESIGN FOR APPROVAL PRIOR TO APPLICATION. LOAD AND MIX TICKETS SHALL BE SUPPLIED FOR EACH TRUCK DELIVERY. NO PARTIAL FIELD MIXES SHALL BE ALLOWED.

   ALL CONCRETE SHALL ATTAIN A MINIMUM COMPRESSIVE STRENGTH OF 3,500 PSI AT 28 DAYS. DESIGN FC = 1,200 PSI.

   ALL EXPOSED EDGES SHALL BE CHAMFERED 3/4" X 3/4". ALL CONSTRUCTION KEYS ARE SHOWN NOMINAL SIZE.
4. REINFORCING STEEL: REINFORCING STEEL SHALL CONFORM TO ASTM A-615, GRADE 60. WHERE NOT INDICATED, BAR LAP SPLICES SHALL BE IN ACCORDANCE WITH AASHTO SPECIFICATIONS. THE MINIMUM CONCRETE COVER SHALL BE 2 INCHES UNLESS OTHERWISE NOTED. DESIGN FS = 24,000 PSI.
5. FOUNDATION: PRESUMED SOIL BEARING CAPACITY = 2,500 PSF. THE ENGINEER MUST APPROVE ALL FOUNDATIONS PRIOR TO CONCRETE PLACEMENT. IF UNSUITABLE MATERIAL IS ENCOUNTERED, THE MATERIAL SHALL BE UNDERCUT AND BACKFILLED WITH STRUCTURAL BACKFILL.
6. STRUCTURAL BACKFILL: CAST-IN-PLACE CONCRETE STRUCTURES AND PIPE SHALL BE BACKFILLED WITH SELECT GRANULAR BACKFILL MEETING THE REQUIREMENTS OF SHA GRADED AGGREGATE-SUBBASE. STRUCTURAL FILL SHALL BE PLACED IN LOOSE LIFTS OF APPROXIMATELY 6 INCHES, AND COMPACTED TO 95 PERCENT OF THE STANDARD PROCTOR MAXIMUM DRY DENSITY IN ACCORDANCE WITH AASHTO T=180. THE STATIC WEIGHT OF EQUIPMENT USED ADJACENT TO WALLS SHALL NOT EXCEED 3,000 POUNDS. NO BACKFILL SHALL BE PLACED AGAINST THE CAST-IN-PLACE WALLS UNTIL THE CONCRETE HAS ATTAINED THE SPECIFIED 28 DAY STRENGTH.

PRE-CAST CONCRETE STRUCTURES

SHOP DRAWINGS FOR PRE-CAST STRUCTURES WITH SUPPORTING STRUCTURAL COMPUTATIONS (SIGNED AND SEALED BY A MARYLAND REGISTERED PROFESSIONAL ENGINEER) MEETING ASTM REQUIREMENTS FOR PRE-CAST STRUCTURES MUST BE SUBMITTED TO THE ENGINEER, AND THE APPROVING AGENCY (BALTIMORE COUNTY DEPARTMENT OF ENVIRONMENT PROTECTION AND RESOURCE MANAGEMENT) FOR APPROVAL PRIOR TO FABRICATION.

8. ROCK RIP-RAP

ROCK RIP-RAP SHALL MEET THE REQUIREMENTS OF THE MARYLAND DEPARTMENT OF TRANSPORTATION, STATE HIGHWAY ADMINISTRATION STANDARD SPECIFICATIONS FOR CONSTRUCTION AND MATERIALS, SECTION 311.

GEOTEXTILE SHALL BE PLACED UNDER ALL RIP-RAP AND SHALL MEET THE REQUIREMENTS OF THE MARYLAND DEPARTMENT OF TRANSPORTATION, STATE HIGHWAY ADMINISTRATION STANDARD SPECIFICATIONS FOR CONSTRUCTION AND MATERIALS, SECTION 921.09, CLASS C.

THE RIP-RAP SHALL BE PLACED TO THE REQUIRED THICKNESS IN ONE OPERATION. THE ROCK SHALL BE DELIVERED AND PLACED IN A MANNER THAT WILL INSURE THE RIP-RAP IN PLACE SHALL BE REASONABLY HOMOGENEOUS WITH THE LARGER ROCKS UNIFORMLY DISTRIBUTED AND FIRMLY IN CONTACT ONE TO ANOTHER WITH THE SMALLER ROCKS FILLING THE VOIDS BETWEEN THE LARGER ROCKS.

9. CARE OF WATER DURING CONSTRUCTION

ALL WORK ON PERMANENT STRUCTURES SHALL BE CARRIED OUT IN AREAS FREE FROM WATER. THE CONTRACTOR SHALL CONSTRUCT AND MAINTAIN ALL TEMPORARY DIKES, LEVEES, COFFERDAMS, DRAINAGE CHANNELS, AND STREAM DIVERSIONS NECESSARY TO PROTECT THE AREAS TO BE OCCUPIED BY THE PERMANENT WORKS. THE CONTRACTOR SHALL ALSO FURNISH, INSTALL, OPERATE, AND MAINTAIN ALL NECESSARY PUMPING AND OTHER EQUIPMENT REQUIRED FOR REMOVAL OF WATER FROM THE VARIOUS PARTS OF THE WORK AND FOR MAINTAINING THE EXCAVATIONS, FOUNDATION, AND OTHER PARTS OF THE WORK FREE FROM WATER AS REQUIRED OR DIRECTED BY THE ENGINEER FOR CONSTRUCTING EACH PART OF THE WORK. AFTER HAVING SERVED THEIR PURPOSE, ALL TEMPORARY PROTECTIVE WORKS SHALL BE REMOVED OR LEVELED AND GRADED TO THE EXTENT REQUIRED TO PREVENT OBSTRUCTION IN ANY DEGREE WHATSOEVER OF THE FLOW OF WATER TO THE SPILLWAY OR OUTLET WORKS AND SO AS NOT TO INTERFERE IN ANY WAY WITH THE OPERATION OR MAINTENANCE OF THE STRUCTURE. STREAM DIVERSIONS SHALL BE MAINTAINED UNTIL THE FULL FLOW CAN BE PASSED THROUGH THE PERMANENT WORKS. THE REMOVAL OF WATER FROM THE REQUIRED EXCAVATION AND THE FOUNDATION SHALL BE ACCOMPLISHED IN A MANNER AND TO THE EXTENT THAT WILL MAINTAIN STABILITY OF THE EXCAVATED SLOPES AND BOTTOM OF REQUIRED EXCAVATIONS AND WILL ALLOW SATISFACTORY PERFORMANCE OF ALL CONSTRUCTION OPERATIONS. DURING THE PLACING AND COMPACTING OF MATERIAL IN REQUIRED EXCAVATIONS, THE WATER LEVEL AT THE LOCATIONS BEING REFILLED SHALL BE MAINTAINED BELOW THE BOTTOM OF THE EXCAVATION AT SUCH LOCATIONS WHICH MAY REQUIRE DRAINING THE WATER TO SUMPS FROM WHICH THE WATER SHALL BE PUMPED.

10. STABILIZATION

ALL BORROW AREAS SHALL BE GRADED TO PROVIDE PROPER DRAINAGE AND LEFT IN A SIGHTLY CONDITION. ALL EXPOSED SURFACES OF THE EMBANKMENT, SPILLWAY, SPOIL AND BORROW AREAS, AND BERMS SHALL BE STABILIZED BY SEEDING, LIMING, FERTILIZING AND MULCHING IN ACCORDANCE WITH THE NATURAL RESOURCES CONSERVATION SERVICE STANDARDS AND SPECIFICATIONS FOR CRITICAL AREA PLANTING (MD-342) OR AS SHOWN ON THE ACCOMPANYING DRAWINGS.

11. EROSION AND SEDIMENT CONTROL

CONSTRUCTION OPERATIONS WILL BE CARRIED OUT IN SUCH A MANNER THAT EROSION WILL BE CONTROLLED AND WATER AND AIR POLLUTION MINIMIZED. STATE AND LOCAL LAWS CONCERNING POLLUTION ABATEMENT WILL BE FOLLOWED. CONSTRUCTION PLANS SHALL DETAIL EROSION AND SEDIMENT CONTROL MEASURES TO BE EMPLOYED DURING THE CONSTRUCTION PROCESS.

ALL DISTURBED AREAS SHALL BE CONTROLLED BY AN EROSION AND SEDIMENT CONTROL PLAN WHICH HAS BEEN APPROVED BY THE BALTIMORE COUNTY SOIL CONSERVATION DISTRICT (B. C. S. C. D.).

12. SEEDING

SEEDING, FERTILIZING AND MULCHING SHALL BE AS FOLLOWS:

SEED MIX: 50% KENBLUE KENTUCKY BLUEGRASS
40% PENNLAWN CREEPING RED FESCUE
10% STREAKER REDTOP
APPLIED AT A RATE OF 150 LBS. PER ACRE.
(OR)
REBEL II TALL FESCUE (125 LBS. PER ACRE)
PENNFINE PERENNIAL RYEGRASS (15 LBS. PER ACRE)
KENBLUE KENTUCKY BLUEGRASS (10 LBS. PER ACRE)
(OR)
PENNLAWN CREEPING RED FESCUE (70 LBS. PER ACRE)
AURORA HARD FESCUE (50 LBS. PER ACRE)
COMMON WHITE CLOVER (6 LBS. PER ACRE)
WINTER RYE (45 LBS. PER ACRE)
(OR)
70% FORAGER TALL FESCUE
30% CHEMUNG CROWNVETCH, INOCULATED
APPLIED AT A RATE OF 55 LBS. PER ACRE
OPTIMUM SEEDING DATES: MARCH 1 TO APRIL 30.

LIME: 2 TONS/ACRE DOLOMITIC LIMESTONE.

FERTILIZER: 600 LBS./ACRE 10-10-10 FERTILIZER BEFORE SEEDING,
400 LBS./ACRE 30-0-0 UREAFORM FERTILIZER AT TIME OF SEEDING.

MULCH: STRAW AT 4,000 LBS. PER ACRE.

ANCHORING: MULCHING TOOL OR WOO CELLULOSE FIBER BINDER AT A NET DRY BINDER RATE OF 750 POUNDS PER ACRE. THE WOOD CELLULOSE FIBER SHALL BE MIXED WITH WATER AND THE MIXTURE SHALL CONTAIN A MAXIMUM OF 50 POUNDS OF WOOD CELLULOSE FIBER PER 100 GALLONS OF WATER OR AT RATES RECOMMENDED BY THE MANUFACTURER.

13. FILTER CLOTH

ALL FILTER CLOTH SHALL CONFORM TO THE 1994 MARYLAND STANDARDS AND SPECIFICATIONS FOR SOIL EROSION AND SEDIMENT CONTROL, OR THE LATEST EDITION.

14. GABIONS

ALL GABIONS SHALL BE PVC COATED WOVEN WIRE BASKETS. STONE SIZE SHALL BE 4 INCHES TO 7 INCHES. (CLASS IV GABIONS).

15. CONSTRUCTION INSPECTION BY DESIGNATED ENGINEERS

THE CONSTRUCTION OF THE POND AND EMBANKMENT, AND CERTIFICATION THAT THE POND AND EMBANKMENT HAVE BEEN BUILT IN ACCORDANCE WITH THE PLANS SHALL BE UNDER THE SUPERVISION OF A REGISTERED PROFESSIONAL ENGINEER. THE ENGINEER SHALL BE NOTIFIED SUFFICIENTLY IN ADVANCE OF CONSTRUCTION IN ORDER THAT ARRANGEMENTS CAN BE MADE FOR (1) INSPECTION OF PIPE TRENCH AND BEDDING, (2) INSPECTION OF RISER AND ANTI-SEEP COLLARS AND (3) SUPERVISION OF EMBANKMENT CONSTRUCTION AND COMPACTION TESTING. THE ENGINEER SHALL DIRECT THE HANDLING OF WATER DURING CONSTRUCTION, MINOR CHANGES NOT AFFECTING THE INTEGRITY OF THE DAM IN ORDER TO COMPENSATE FOR UNUSUAL SOIL CONDITIONS, AND THE REMOVAL AND REPLACEMENT OF DEFECTIVE FILL.

16. INSPECTION SCHEDULE

1. PRIOR NOTIFICATION SHALL BE GIVEN TO THE ENGINEER SO THAT INSPECTIONS MAY BE MADE AT THE FOLLOWING STAGES:

   (1) UPON COMPLETION OF EXCAVATION TO SUBFOUNDATION AND WHERE REQUIRED, INSTALLATION OF STRUCTURAL SUPPORTS OR REINFORCEMENT FOR STRUCTURES, INCLUDING BUT NOT LIMITED TO:
   - (I) CORE TRENCHES FOR STRUCTURAL EMBANKMENTS.
   - (II) INLET-OUTLET STRUCTURES AND ANTI-SEEP STRUCTURES, WATERTIGHT CONNECTORS ON PIPES AND
   - (III) TRENCHES FOR ENCLOSED STORM DRAINAGE FACILITIES.

   (2) DURING PLACEMENT OF STRUCTURAL FILL, REINFORCING AND CONCRETE, AND INSTALLATION OF PIPING AND CATCH BASINS
   (3) DURING BACKFILL OF FOUNDATIONS AND TRENCHES
   (4) DURING EMBANKMENT CONSTRUCTION AND
   (5) UPON COMPLETION OF FINAL GRADING AND ESTABLISHMENT OF PERMANENT STABILIZATION.

   NO WORK SHALL PROCEED UNTIL THE ENGINEER INSPECTS AND APPROVES THE WORK PREVIOUSLY COMPLETED.
2. GEOTECHNICAL COMPACTION TESTING OF THE FACILITY EMBANKMENT IS REQUIRED. CERTIFICATION MUST BE PROVIDED TO THE DESIGNATED ENGINEER IN CHARGE OF THE AS-BUILT.
3. A COPY OF ALL MATERIAL SUPPLY TICKETS MUST BE GIVEN TO THE DESIGNATED ENGINEER IN CHARGE OF THE AS-BUILT.

17. MAINTENANCE SCHEDULE

1. THE FACILITY SHALL BE INSPECTED TWICE ANNUALLY, MARCH AND SEPTEMBER, IN ACCORDANCE WITH THE CHECKLIST AND REQUIREMENTS CONTAINED WITHIN USDA, SCS "STANDARDS AND SPECIFICATIONS FOR PONDS" (MD-378). THE POND OWNER(S) AND ANY HEIRS, SUCCESSORS, OR ASSIGNS SHALL BE RESPONSIBLE FOR THE SAFETY OF THE POND AND THE CONTINUED OPERATION, SURVEILLANCE, INSPECTION, AND MAINTENANCE THEREOF. THE POND OWNER(S) SHALL PROMPTLY NOTIFY THE SOIL CONSERVATION DISTRICT OF ANY UNUSUAL OBSERVATIONS THAT MAY BE INDICATIONS OF DISTRESS SUCH AS EXCESSIVE SEEPAGE, TURBID SEEPAGE, SLIDING OR SLUMPING.
2. VEGETATED COVER SHALL BE MAINTAINED AT ALL TIMES.
3. RILLS ON THE SLOPES OF THE DAM AND WASHED IN THE EARTH SPILLWAY SHALL BE FILLED WITH SUITABLE MATERIAL AND THOROUGHLY COMPACTED. THESE AREAS SHALL BE RESEEDED OR RESODDED, LIMED, AND FERTILIZED AS NEEDED.
4. ALL APPURTENANCES SHALL BE KEPT FREE OF TRASH.
5. SEDIMENT SHALL BE REMOVED FROM FOREBAYS WHEN THE DEPTH EXCEEDS 1'.
6. TRASH AND DEBRIS SHALL BE REMOVED AS NECESSARY.
7. VEGETATION ON EMBANKMENT AND ACCESS BENCH SHALL NOT EXCEED 18" IN HEIGHT.
8. TOP AND OUTSIDE SIDE SLOPE OF THE EMBANKMENT SHALL BE MOWED A MINIMUM OF TWO (2) TIMES A YEAR, ONCE IN JUNE AND ONCE IN SEPTEMBER. INSIDE SIDE SLOPE, AND MAINTENANCE ACCESS SHOULD BE MOWED AS NEEDED. CARE SHALL BE TAKEN NOT TO MOW ANY OF THE WETLAND PLANTINGS IN THE VICINITY OF THE 5' SAFETY BENCH.

18. OPERATION, MAINTENANCE AND INSPECTION

INSPECTION OF THE POND(S) SHOWN HEREON SHALL BE PERFORMED AT LEAST ANNUALLY, IN ACCORDANCE WITH THE CHECKLIST AND REQUIREMENTS CONTAINED WITHIN USDA, SCA "STANDARDS AND SPECIFICATIONS FOR PONDS" (MD-378). THE POND OWNER(S) AND ANY HEIRS, SUCCESSORS, OR ASSIGNS SHALL BE RESPONSIBLE FOR THE SAFETY OF THE POND AND THE CONTINUED OPERATION, SURVEILLANCE, INSPECTION, AND MAINTENANCE THEREOF. THE POND OWNER(S) SHALL PROMPTLY NOTIFY THE SOIL CONSERVATION DISTRICT OF ANY UNUSUAL OBSERVATIONS THAT MAY BE INDICATIONS OF DISTRESS SUCH AS EXCESSIVE SEEPAGE, TURBID SEEPAGE, SLIDING OR SLUMPING.

SWM POND	'A'	'B'
I	280.0	2"
II	272.0	2"

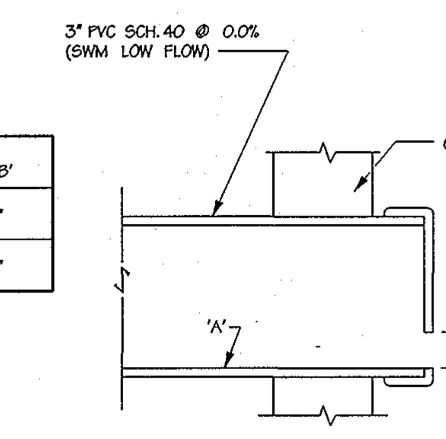

SWM LOW FLOW CONTROL PLATE DETAIL

NTS

DIMENSIONING TABLE

VARIABLE	SWM I
A	276.0
B	281.5
C	282.5
D	283.5
E	1'
F	24'
G	30'

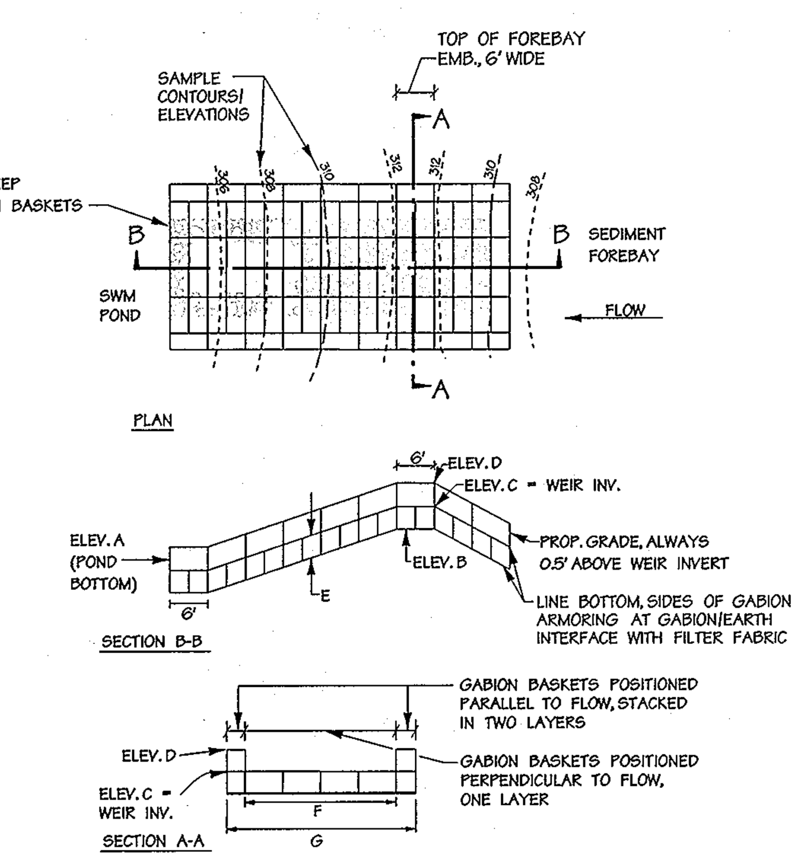

SWM FOREBAY EMBANKMENT ARMORING DETAIL

NOT TO SCALE

SWM POND	'L'
I	5'-4"
II	5'-4"

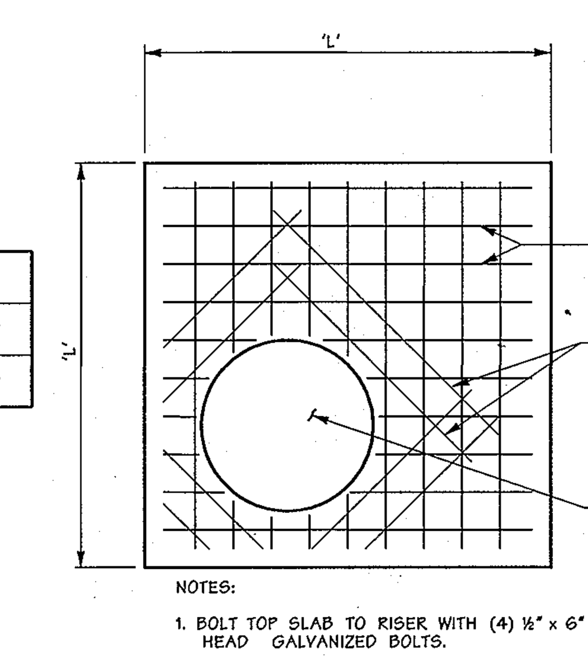

NOTES:

1. BOLT TOP SLAB TO RISER WITH (4) ½" x 6" LG. HEX. HEAD GALVANIZED BOLTS.
2. THE SIDE AND THE SLAB CLOSET TO THE FRAME AND LOVER WILL LINE UP WITH THE SIDE OF THE RISER WITH STANDARD MANHOLE STEPS.

TOP SLAB

Scale: ½" = 1'-0"
CAST IN PLACE

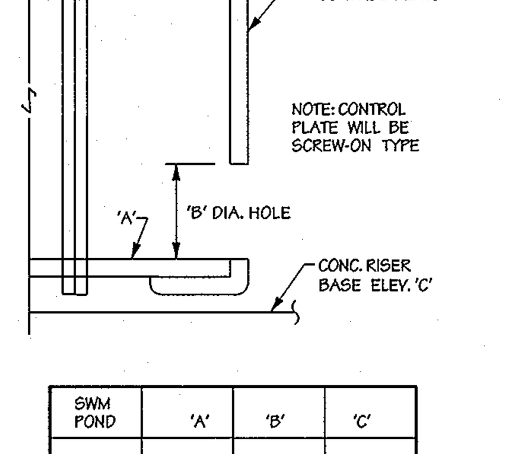

SWM POND	'A'	'B'	'C'
I	276.1	4.0"	276.0
II	267.1	4.0"	267.0

ESC CONTROL PLATE DETAIL

NTS

THESE PLANS HAVE BEEN REVIEWED FOR THE HOWARD SOIL CONSERVATION DISTRICT AND MEET THE TECHNICAL REQUIREMENTS FOR SMALL POND CONSTRUCTION, SOIL EROSION AND SEDIMENT CONTROL.

[signature] 10/8/02
U.S.D.A. NATURAL RESOURCES CONSERVATION SERVICE — DATE

THESE PLANS FOR SMALL POND CONSTRUCTION, SOIL EROSION AND SEDIMENT CONTROL MEET THE REQUIREMENTS OF HOWARD SOIL CONSERVATION DISTRICT.

APPROVED: [signature] 10/8/02
HOWARD SOIL CONSERVATION DISTRICT — DATE

PLAN NUMBER ____________

DEVELOPERS CERTIFICATE:

I/WE CERTIFY THAT ALL DEVELOPMENT AND/OR CONSTRUCTION WILL BE DONE ACCORDING TO THESE PLANS AND THAT ANY RESPONSIBLE PERSONNEL INVOLVED IN THE CONSTRUCTION PROJECT WILL HAVE A CERTIFICATE OF ATTENDANCE AT A DEPARTMENT OF ENVIRONMENT APPROVED TRAINING PROGRAM FOR THE CONTROL OF SEDIMENT AND EROSION BEFORE BEGINNING THE PROJECT. I SHALL ENGAGE A REGISTERED PROFESSIONAL ENGINEER TO SUPERVISE POND CONSTRUCTION AND PROVIDE THE HOWARD SOIL CONSERVATION DISTRICT WITH AN "AS-BUILT" PLAN OF THE POND WITHIN 30 DAYS OF COMPLETION. I ALSO AUTHORIZE PERIODIC ON-SITE INSPECTIONS BY THE HOWARD SOIL CONSERVATION DISTRICT.

[signature] 9/25/02
SIGNATURE OF DEVELOPER — DATE
PRINT NAME BELOW SIGNATURE
JOSEPH NEKER JR.

ENGINEERS CERTIFICATE:

I/WE CERTIFY THAT THIS PLAN FOR POND CONSTRUCTION, EROSION AND SEDIMENT CONTROL REPRESENTS A PRACTICAL AND WORKABLE PLAN BASED ON MY PERSONAL KNOWLEDGE OF THE SITE CONDITIONS. THIS PLAN WAS PREPARED IN ACCORDANCE WITH THE REQUIREMENTS OF THE HOWARD SOIL CONSERVATION DISTRICT. I HAVE NOTIFIED THE DEVELOPER THAT HE/SHE MUST ENGAGE A REGISTERED PROFESSIONAL ENGINEER TO SUPERVISE POND CONSTRUCTION AND PROVIDE THE HOWARD SOIL CONSERVATION DISTRICT WITH AN "AS-BUILT" PLAN OF THE POND WITHIN 30 DAYS OF COMPLETION.

[signature] 10551 9/25/02
SIGNATURE OF ENGINEER — REG. NO. — DATE
PRINT NAME BELOW SIGNATURE
John Ranocchia

APPROVED: HOWARD COUNTY DEPT. OF PUBLIC WORKS
[signature] 11-25-02
CHIEF, BUREAU OF HIGHWAYS — DATE

APPROVED: HOWARD COUNTY DEPT. OF PLANNING AND ZONING
[signature] 12/6/02
CHIEF, DIVISION OF LAND DEVELOPMENT — DATE
[signature] 12/2/02
CHIEF, DEVELOPMENT ENGINEERING DIVISION — DATE

Date	No.	Revision Description

EMERSON
(Formerly the Key Property)
Section 3, Area 1
Parcels A – I

OWNER /DEVELOPER:

THE HOWARD RESEARCH & DEVELOPMENT CORPORATION
10275 LITTLE PATUXENT PARKWAY
COLUMBIA, MARYLAND 21044

DMW
Daft·McCune·Walker, Inc.
200 East Pennsylvania Avenue
Towson, Maryland 21286
(410) 296-3333
Fax 296-4705

A Team of Land Planners, Landscape Architects, Engineers, Surveyors & Environmental Professionals

9/25/02
Date

Professional Engr. No. 10551

TITLE
FINAL PLAN
STORMWATER MANAGEMENT SPECIFICATIONS & DETAILS

Des By MRT	Scale AS SHOWN	Proj. No. 01011.C0	
Drn By ADL	Date 9/25/02	21 OF 31	
Chk By	Approved		

F-02-131

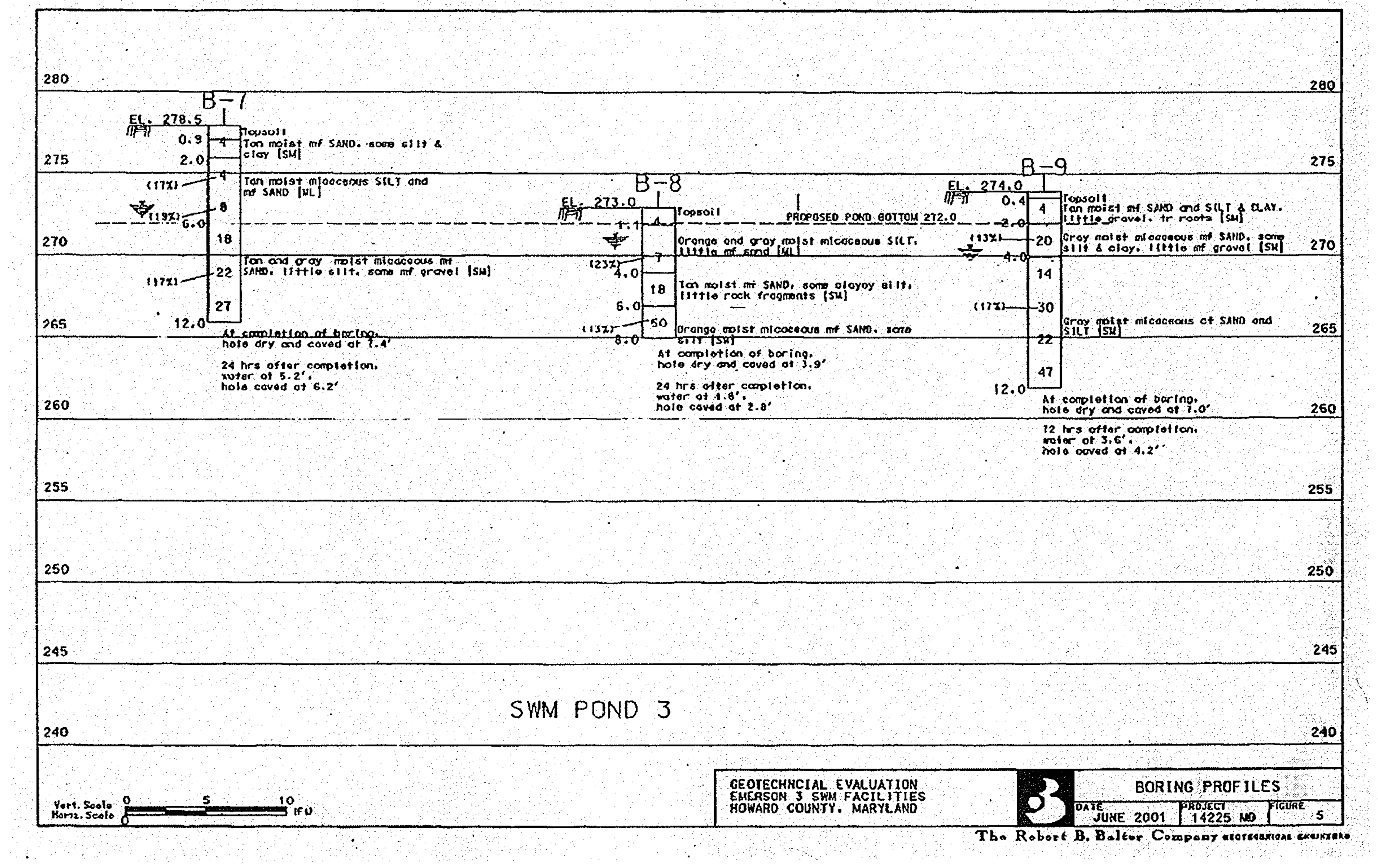

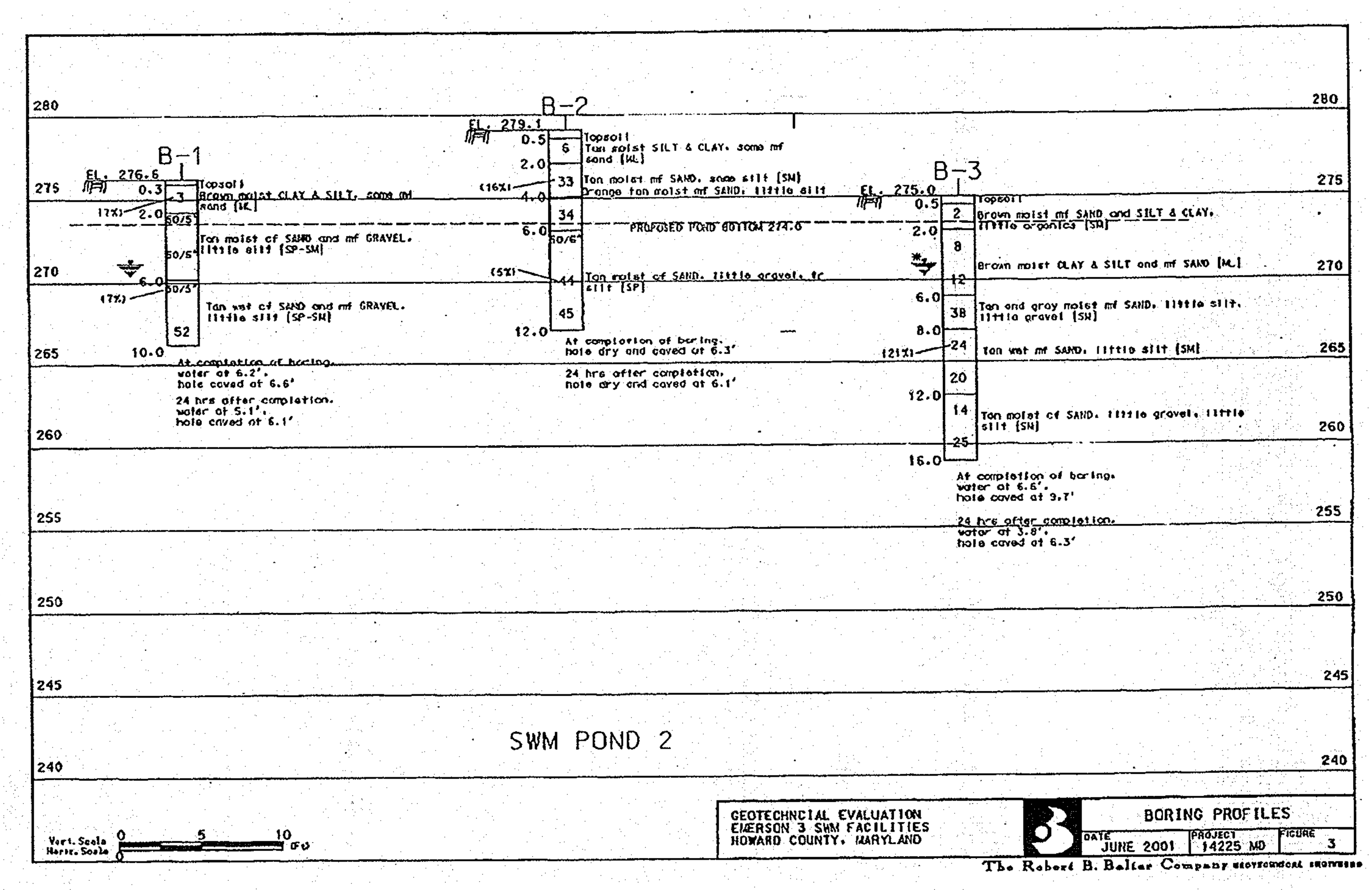

5. EVALUATIONS AND RECOMMENDATIONS

5.1. *Stormwater Management Pond*

Based upon our review of the available project plans, we understand that the three proposed SWM facilities will be constructed by excavation of the pond and construction of the embankment. The stormwater management facilities may require cuts up to 6 ft.

RBB has assumed that the embankment construction will include a cutoff trench and impermeable core. Since the depth of water impounded against the embankment at the principal spillway will be 3 feet or more, we presume the proposed facilities will be designed and constructed in accordance with the current specifications established by Maryland Soil Conservation Society (SCS) Standards and Specifications 378 for embankment ponds.

According to the "Maryland Stormwater Design Manual, Volume 1 & 2" (2000), established by the Maryland Department of Environment (MDE), it is our understanding that infiltration practices are not recommended to be utilized where the groundwater table or bedrock is within 4.0 feet of the invert level of an infiltration facility, or in materials that exhibit infiltration rates less than 0.52 inches per hour (based on field testing). Additionally, infiltration practices are not allowed on slopes greater than 15%, in fill materials or in materials with a clay content above 20% or silt and clay content above 40%.

During the geotechnical evaluation, a high water table was encountered in all of the proposed SWM facility locations. Also, the sedimentary soils at the pond bottoms exhibited silt and clay contents of 46% to 61%, which is in excess of the maximum allowable (40%). Based on these conditions, the **SWM pond bottoms will not meet the infiltration requirements outlined by MDE regulations**.

SCS criteria for embankment ponds requires installation of a cutoff trench of relatively impervious material at or upstream of the centerline of the embankment and the cutoff trench should extend into relatively impervious materials and consist of materials conforming to the Unified Soil Classification SC, CH, or CL. The required minimum depth and width of the cutoff trench is 4 feet, with side slopes not steeper than 1H: 1V. Based upon the subsurface data developed from the borings, these materials were not encountered onsite. Because of this, imported material would likely have to be used in the clay core. However, with more detailed and sophisticated stability analyses, it might be possible to demonstrate that reuse of onsite soils for the cutoff trench will result in an adequately impermeable and stable embankment. Section 6.1 General Earthwork Requirements outlines the earthwork requirements for construction of the SWM pond.

All foundations shall be constructed in accordance with the recommendations in Section 5.2 Foundations. All procedures regarding the installation of the discharge structures should be approved by SCS and Howard County.

5.2. *Drainage Structure Foundations*

Based upon the conditions indicated by the subsurface exploration program and our understanding of the proposed construction, it is our opinion that the natural soils are generally acceptable for support of typical spread footings. Based our data, and preparation of the soils surfaces as recommended later in this report, the design may proportioned for an allowable soil bearing pressure of 2,500 psf. It is noted that it is absolutely essential that the new footings bear on acceptable bearing strata. Newly excavated footings must be carefully cleaned of loosened or otherwise unsuitable materials, as verified by monitoring, testing and inspection in the field during construction.

Foundations which will be subject to the effects of freezing weather both during and following construction must bear a minimum of 30 inches below the surrounding grades to mitigate the possibility of detrimental frost action. Also, any minimum footing widths, sizes, and reinforcing required by applicable codes must be maintained. It is noted that proper construction procedures must be employed to prevent the loss of supporting capacity of the soil bearing surface once footings have been excavated. Such measures include exercising care while setting reinforcing steel, placing concrete as soon as possible after excavation, and providing protection from the weather. During cold weather, the exposed bearing surface must be protected from freezing, and in no case may concrete be placed over materials which are frozen or have been degraded by freezing.

Based on present information, groundwater will likely be encountered and impact foundation excavation and construction. However, it is important to prevent surface water or seepage from collecting in open excavations prior to concrete placement. If water does inadvertently collect in foundation excavations, it will be necessary to bail the water from the hole, remove the saturated soils, and re-test the adequacy of the bearing surface to support the design pressure prior to placing concrete.

6. CONSTRUCTION CONSIDERATIONS

6.1. *General Earthwork Requirements*

Controlled compacted fill will be required for the embankments around the SWM ponds. The fill for these areas was assumed to be obtained from the SWM pond areas as well as other nearby regions. The on-site soils as described in Section 4.0 are not suitable for use as impermeable core trench materials based on their soil classification, unless proven otherwise with a more sophisticated analysis.

The maximum dry density (AASHTO T-99) for the residual soil samples ranged from 117.0 to 135.7 pcf with optimum moisture contents ranging from 7.3% to 12.5%. Based on these conditions, significant drying of the soil by discing and aeration or other means of manipulation can be anticipated during the earthwork process. Furthermore, the micaceous component of the on-site soils makes it susceptible to loss of strength upon exposure to free water. Therefore, it would be prudent to schedule clearing and grubbing, stripping, and earthwork operations for the warmer, dryer periods of the year (if possible) so that construction schedules will not be delayed due to inclement weather.

All fill placed for the embankment, utility backfill, or any other location requiring stable support or minimal settlement shall be constructed as controlled compacted fill. Controlled compacted fill and foundations excavations shall meet the following requirements:

a) Within the described construction areas, strip the vegetation, topsoil, and any organic, contaminated, or otherwise unsuitable materials to expose clean soils. The subject area shall encompass the SWM ponds and extend outward from the edges a minimum of 5 feet plus 1 additional foot horizontally for every foot of new fill to be placed, or cut to be excavated.

b) Proofroll the stripped soil surface with a fully loaded, tandem-axle dump truck, or other approved equipment, under the observation of a geotechnical engineer or highly qualified senior level soils technician, to verify and establish a uniform, dense and stable condition. Any soft, yielding, organic, contaminated, or otherwise unacceptable spots detected shall be overexcavated and replaced with controlled compacted fill.

c) Any material used for controlled fill shall be inspected and approved for use by a geotechnical engineer or qualified soils technician prior to use on the site. All fill shall be free from topsoil, boulders, cobbles, roots, organic matter, and debris. Preliminary approval of the borrow material shall not constitute general acceptance of all materials in the deposit or source of supply, and the acceptance shall be subject to field tests taken at the discretion of the geotechnical engineer or qualified soils technician.

d) Compacted fill should be placed in horizontal, successive, uniform layers having a maximum uncompacted lift thickness of 8 inches. Each lift should be compacted uniformly to a minimum of 95 percent of the Standard Proctor maximum dry density as determined by AASHTO T-99 (ASTM D-698). The moisture content of the materials shall be maintained within ± 3% of the optimum moisture content in order to attain the required degree of compaction. Each lift should be uniformly and evenly blade mixed during spreading to ensure uniformity of the material in each layer. If the work deteriorates prior to placement of the next lift, the layer shall be recompacted and reshaped accordingly.

e) Successive lifts of compacted fill shall not be placed until the layer under construction has been compacted to the required density as measured by a geotechnical engineer or qualified soils technician. Successive runs of equipment shall be staggered over the width of each layer.

f) Where fills are to be placed on slopes, the original ground should be deeply scarified or where slopes are steeper than 5 horizontal to 1 vertical the slope should be stepped or benched, when considered necessary by the Engineer, in order that the placement of fill may be accomplished in horizontal lifts.

It is noted that this methodology is recommended both as preparation for areas to receive new fill, as well as locations where cut is required to establish the proposed grades such as foundation excavations. In cut areas, the proofrolling and selective undercutting shall be accomplished after excavation down to the proposed grades has been completed.

6.2. *Dewatering*

Groundwater measurements suggest that groundwater infiltration may be encountered in SWM facilities during construction. All excavations should be properly graded to avoid the accumulation of groundwater and surface water near foundation locations. Dewatering measures will most likely be required at these locations. Furthermore, contractors should provide suitable dewatering equipment to remove any water that has accumulated in excavations.

6.3. *Excavation Issues*

Conventional excavation methods should likely prove feasible for most of the excavations. However, it must be anticipated that dense to very dense decomposed rock or 'floating' boulders may be encountered during earthwork, possibly requiring the use of specialized excavation equipment and methods. It is our experience that the degree of difficulty in excavation can, in a general sense, be correlated to the SPT values, the physical characteristics of the materials and the material's resistance to our drilling equipment. Typically, mass excavation of strata exhibiting SPT results of less than 50 blows per 6 inches could generally be accomplished using conventional earthwork techniques. However, limited ripping or jack hammering of harder materials may be required in narrow excavations or trenches. Materials with SPT results of 50 blows per 3 inches to 6 inches, or which required very hard augering to penetrate with our drilling equipment, usually require ripping, jack hammering, or hoe ramming for removal, especially in trenches. Any excavations below the depths of auger refusal, or in materials with SPT results of 50 blows per 3 inches or less, will most likely require hard ripping, extensive jack hammering or blasting. **Table 2** presents depths of potential excavation problems at respective boring locations.

Table 2-Potential Excavation Problems

Boring	Existing Elevation	Proposed Bottom Elevation	Elevation to SPT resistances of:		
			50 blows/6 inches (1)	50 blows/3 to 6 inches (2)	50 blows/3 inches or less (3)
B-1	276.6	274	---	274	---
B-2	279.1	274	272	---	---
B-3	275.0	274	---	---	---
B-4	290.0	278	---	279	---
B-5	282.8	278	---	---	---
B-6	281.8	278	---	---	---
B-7	278.5	272	---	---	---
B-8	273.0	272	---	---	---
B-9	274.0	268	---	---	---

NOTES:

(1) Excavation of materials exhibiting this range of blow counts are typically accomplished through normal mass excavation techniques, i.e. excavation by loader, pan, backhoe, etc. Some limited ripping or jack hammering of materials may be required, especially in trenches.

(2) Excavation of materials exhibiting this range of blow counts will typically require ripping, jack hammering or hoe ramming for excavation, especially in trenches or other confined areas.

(3) Excavation of materials exhibiting this range of blow counts will typically require hard ripping or extensive jack hammering. Blasting or other hard excavation techniques may be required, especially in trenches or other confined areas.

It must be noted that the physical characteristics of the rock materials (e.g., jointing, fracturing, and foliation), along with the type of equipment used, will greatly affect difficulty of excavation. It should also be noted that the data presented on the profiles represent the general subsurface conditions at the respective boring locations. Deviations in the excavation characteristics due to differing degrees of weathering, as well as the physical characteristics of the subject materials, must be anticipated. Also, the excavation conditions, and the SPT values used to differentiate them, tend to vary and overlap. Accordingly, strata with similar SPT results may differ in excavation difficulty, and materials with similar excavation characteristics may have different SPT results.

THESE PLANS HAVE BEEN REVIEWED FOR THE HOWARD SOIL CONSERVATION DISTRICT AND MEET THE TECHNICAL REQUIREMENTS FOR SMALL POND CONSTRUCTION, SOIL EROSION AND SEDIMENT CONTROL.

U.S.D.A. NATURAL RESOURCES CONSERVATION SERVICE — DATE 10/8/02

THESE PLANS FOR SMALL POND CONSTRUCTION, SOIL EROSION AND SEDIMENT CONTROL MEET THE REQUIREMENTS OF HOWARD SOIL CONSERVATION DISTRICT

APPROVED: HOWARD SOIL CONSERVATION DISTRICT — DATE 10/8/02

PLAN NUMBER ______

DEVELOPERS CERTIFICATE:

I/WE CERTIFY THAT ALL DEVELOPMENT AND/OR CONSTRUCTION WILL BE DONE ACCORDING TO THESE PLANS AND THAT ANY RESPONSIBLE PERSONNEL INVOLVED IN THE CONSTRUCTION PROJECT WILL HAVE A CERTIFICATE OF ATTENDANCE AT A DEPARTMENT OF ENVIRONMENT APPROVED TRAINING PROGRAM FOR THE CONTROL OF SEDIMENT AND EROSION BEFORE BEGINNING THE PROJECT. I SHALL ENGAGE A REGISTERED PROFESSIONAL ENGINEER TO SUPERVISE POND CONSTRUCTION AND PROVIDE THE HOWARD SOIL CONSERVATION DISTRICT WITH AN "AS-BUILT" PLAN OF THE POND WITHIN 30 DAYS OF COMPLETION. I ALSO AUTHORIZE PERIODIC ON-SITE INSPECTIONS BY THE HOWARD SOIL CONVERVATION DISTRICT.

SIGNATURE OF DEVELOPER — DATE 9/25/02
PRINT NAME BELOW SIGNATURE
JOSEPH NECKER JR.

ENGINEERS CERTIFICATE:

I/WE CERTIFY THAT THIS PLAN FOR POND CONSTRUCTION, EROSION AND SEDIMENT CONTROL REPRESENTS A PRACTICAL AND WORKABLE PLAN BASED ON MY PERSONAL KNOWLEDGE OF THE SITE CONDITIONS. THIS PLAN WAS PREPARED IN ACCORDANCE WITH THE REQUIREMENTS OF THE HOWARD SOIL CONSERVATION DISTRICT. I HAVE NOTIFIED THE DEVELOPER THAT HE/SHE MUST ENGAGE A REGISTERED PROFESSIONAL ENGINEER TO SUPERVISE POND CONSTRUCTION AND PROVIDE THE HOWARD SOIL CONSERVATION DISTRICT WITH AN "AS-BUILT" PLAN OF THE POND WITHIN 30 DAYS OF COMPLETION.

SIGNATURE OF ENGINEER — REG. NO. 10551 — DATE 9/25/02
PRINT NAME BELOW SIGNATURE
John W. Rancocchio, Sr.

9/26/02
Date

Professional Engr. No. 10551

F-02-131

APPROVED: HOWARD COUNTY DEPT. OF PUBLIC WORKS

CHIEF, BUREAU OF HIGHWAYS — DATE 11-25-02

APPROVED: HOWARD COUNTY DEPT. OF PLANNING AND ZONING

CHIEF, DIVISION OF LAND DEVELOPMENT — DATE 12/6/02

CHIEF, DEVELOPMENT ENGINEERING DIVISION — DATE 12/2/02

Date	No.	Revision Description

EMERSON
(Formerly the Key Property)
Section 3, Area 1
Parcels A – I

OWNER /DEVELOPER:

THE HOWARD RESEARCH & DEVELOPMENT CORPORATION
10275 LITTLE PATUXENT PARKWAY
COLUMBIA, MARYLAND 21044

DMW
Daft·McCune·Walker, Inc.
200 East Pennsylvania Avenue
Towson, Maryland 21286
(410) 296-3333
Fax 296-4705

A Team of Land Planners, Landscape Architects, Engineers, Surveyors & Environmental Professionals

TITLE

FINAL PLAN
STORMWATER MANAGMENT BORING LOGS

Des By MRT	Scale AS SHOWN	Proj. No. 01011.CO
Drn By ADL	Date 9/25/02	22 OF 31
Chk By	Approved	

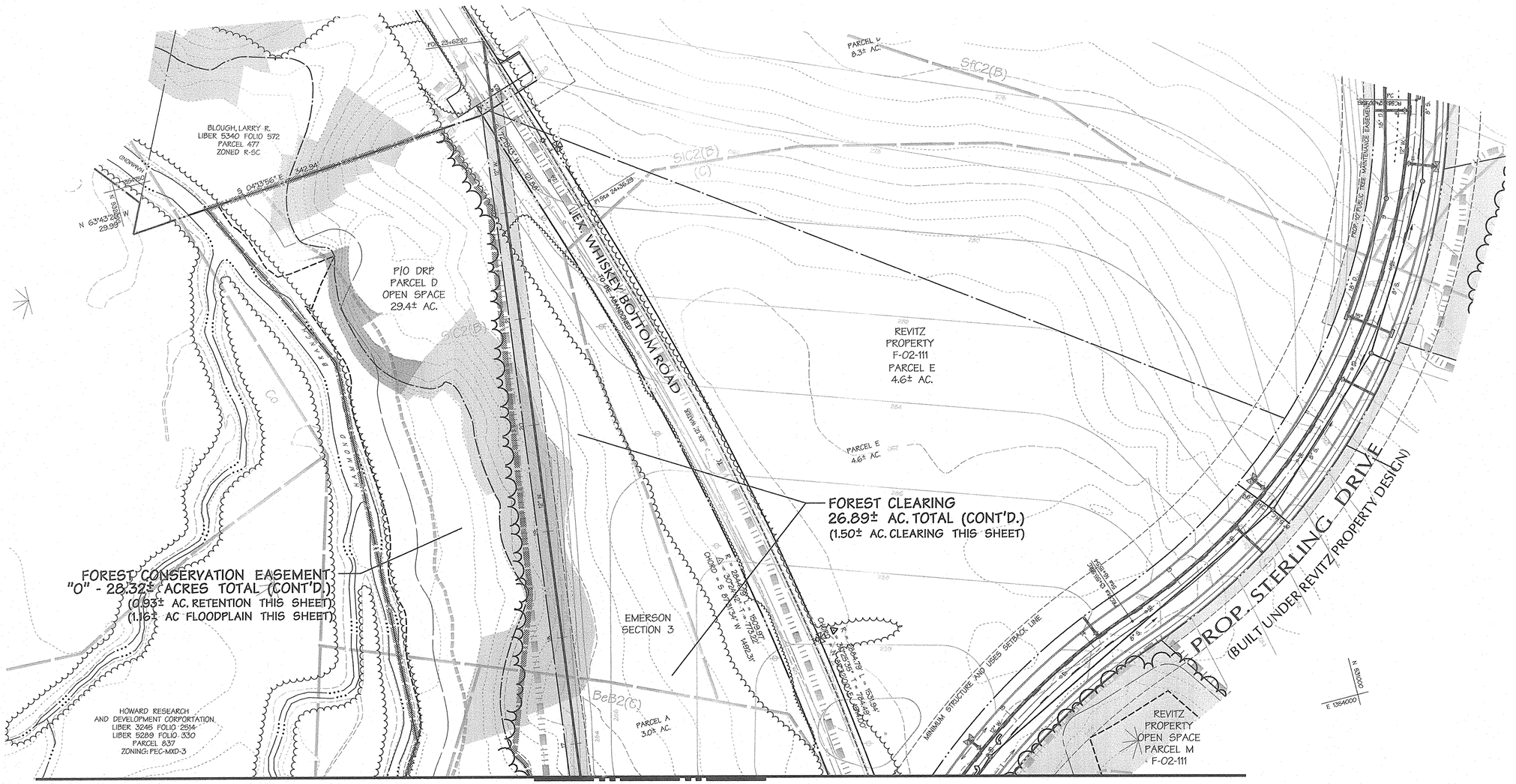

Legend

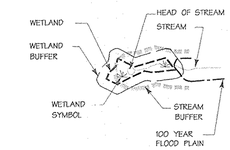

- M1C2 — SOIL LABEL
- SOIL BOUNDARY
- SLOPES >25%
- SLOPES 15%-25%
- REFORESTATION AREAS
- EX. FOREST EDGE
- SCRUB/SHRUB/HEDGEROW OR TREE GROUP
- FOREST CONSERVATION EASEMENT
- LIMIT OF DISTURBANCE
- PROPOSED WOODS EDGE
- NON-WOODY VEGETATION BUFFER

EASEMENT TABULATION CHART

Forest Conservation Easement	Gross Area	Floodplain/ Existing 55 Easement	Net Area	Retention	Unforested Acres Outside Floodplain
O	28.32 AC.	16.91 AC.	11.41 AC.	11.10 AC.	0.31 AC.
P	8.92 AC.	0.00 AC.	8.92 AC.	8.92 AC.	0.00 AC.
Q	0.54 AC.	0.00 AC.	0.54 AC.	0.52 AC.	0.02 AC.
R	3.81 AC.	0.00 AC.	3.81 AC.	3.42 AC.	0.39 AC.
TOTALS	41.59 AC.	16.91 AC.	24.68 AC.	23.96 AC.	0.72 AC.

Symbol	Soils Legend	Hydrologic Soil Group
BeB2	Beltsville silt loam/ 1 to 5% Slopes	C
BeC2	Beltsville silt loam/ 5 to 10% Slopes	C
ChC2	Chester silt loam/ 8 to 15% Slopes	B
CmC2	Chillum silt loam/ 5 to 10% Slopes	C
CnB2	Chillum-Fairfax loams/ 1 to 5% SLopes	C
Co	Codorus silt loam	C
EvC	Evesboro loamy sand/ 5 to 15% Slopes	
Ha	Hatboro silt loam	
SfB2	Sassafras gravelly sand loam/ 1 to 5% Slopes	B
SfC2	Sassafras gravelly sand loam/ 5 to 10% Slopes	B
SfC2	Sassafras loam/ 5 to 10% Slopes	B
SfD2	Sassafras loam/ 10 to 15% Slopes	B

APPROVED: HOWARD COUNTY DEPT. OF PUBLIC WORKS

CHIEF, BUREAU OF HIGHWAYS — DATE 11-25-02

APPROVED: HOWARD COUNTY DEPT. OF PLANNING AND ZONING

CHIEF, DIVISION OF LAND DEVELOPMENT — DATE 12/6/02

CHIEF, DEVELOPMENT ENGINEERING DIVISION — DATE 12/2/02

Date	No.	Revision Description

EMERSON
(Formerly the Key Property)
Section 3, Area 1
Parcels A – I

OWNER /DEVELOPER:

THE HOWARD RESEARCH & DEVELOPMENT CORPORATION
10275 LITTLE PATUXENT PARKWAY
COLUMBIA, MARYLAND 21044

DMW
Daft-McCune-Walker, Inc.
200 East Pennsylvania Avenue
Towson, Maryland 21286
(410) 296-3333
Fax 296-4705

A Team of Land Planners, Landscape Architects, Engineers, Surveyors & Environmental Professionals

9.25.02
Date

STATE OF MARYLAND — MELANIE MOSER — No. 661 — REGISTERED LANDSCAPE ARCHITECT

Landscape Architect No.

TITLE

FINAL
FOREST CONSERVATION PLAN

Des By		Scale 1" = 50'	Proj. No. 01011.C
Drn By	AJS	Date 9/25/02	23 OF 31
Chk By		Approved	

F-02-131

Wed Sep 25 11:05:21 2002 J:\01011\Engineering\Emerson Blueline.dwg

MATCH LINE – SEE SHEET 23 OF 31

MATCH LINE – SEE SHEET 25 OF 31

MATCH LINE – SEE SHEET 26 OF 31

MATCH LINE – SEE SHEET 27 OF 31

PROP. STERLING DRIVE

EX. WHISKEY BOTTOM ROAD

REVITZ PROPERTY
F-02-111

PARCEL A
3.0± AC.

POA
PARCEL G
2.1± AC.

EMERSON
SECTION 3, AREA 1
P-01-25

FOREST CLEARING
26.89± AC. TOTAL (CONT'D.)
(11.33± AC. CLEARING THIS SHEET)

FOREST CONSERVATION EASEMENT
"O" - 28.32± AC. TOTAL (CONT'D.)
(0.35± AC. RETENTION THIS SHEET)
(4.08± AC. FLOODPLAIN THIS SHEET)

FOREST CONSERVATION EASEMENT
"P" - 8.92± AC. TOTAL (CONT'D.)
(0.98± AC. RETENTION THIS SHEET)

DRP
PARCEL D
OPEN SPACE
29.4± AC.

P/O DRP
PARCEL E
OPEN SPACE
9.3± AC.

REVITZ PROPERTY
PARCEL M
OPEN SPACE
F-02-111

PARCEL B
6.4± AC.

HaD, BeC2, BeB2(C), SfB2(B), MtC2, ChC2, CnB2, SfB2, SfC2, SlC2, SlD2

E 1364250
N 532500
E 1362600
N 534250

Legend

- HEAD OF STREAM
- STREAM
- WETLAND
- WETLAND BUFFER
- WETLAND SYMBOL
- STREAM BUFFER
- 100 YEAR FLOOD PLAIN
- MtC2 — SOIL LABEL
- SOIL BOUNDARY
- SLOPES >25%
- SLOPES 15%-25%
- REFORESTATION AREAS
- EX. FOREST EDGE
- SCRUB/SHRUB/HEDGEROW OR TREE GROUP
- FOREST CONSERVATION EASEMENT
- LIMIT OF DISTURBANCE
- PROPOSED WOODS EDGE
- NON-WOODY VEGETATION BUFFER

Symbol	Soils Legend	Hydrologic Soil Group
BeB2	Beltsville silt loam/ 1 to 5% Slopes	C
BeC2	Beltsville silt loam/ 5 to 10% Slopes	C
ChC2	Chester silt loam/ 8 to 15% Slopes	B
CmC2	Chillum silt loam/ 5 to 10% Slopes	C
CnB2	Chillum-Fairfax loams/ 1 to 5% SLopes	C
Ga	Codorus silt loam	C
EvC	Evesboro loamy sand/ 5 to 15% Slopes	
Ha	Hatboro silt loam	
SfB2	Sassafras gravelly sand loam/ 1 to 5% Slopes	B
SfC2	Sassafras gravelly sand loam/ 5 to 10% Slopes	B
SlC2	Sassafras loam/ 5 to 10% Slopes	B
SlD2	Sassafras loam/ 10 to 15% Slopes	B

APPROVED: HOWARD COUNTY DEPT. OF PUBLIC WORKS

CHIEF, BUREAU OF HIGHWAYS — DATE 11-25-02

APPROVED: HOWARD COUNTY DEPT. OF PLANNING AND ZONING

CHIEF, DIVISION OF LAND DEVELOPMENT — DATE 12/6/02

CHIEF, DEVELOPMENT ENGINEERING DIVISION — DATE 12/2/02

Date	No.	Revision Description

EMERSON
(Formerly the Key Property)
Section 3, Area 1
Parcels A – I

OWNER /DEVELOPER:

THE HOWARD RESEARCH & DEVELOPMENT CORPORATION
10275 LITTLE PATUXENT PARKWAY
COLUMBIA, MARYLAND 21044

DMW
Daft-McCune-Walker, Inc.
200 East Pennsylvania Avenue
Towson, Maryland 21286
(410) 296-3333
Fax 296-4705

A Team of Land Planners, Landscape Architects, Engineers, Surveyors & Environmental Professionals

9.25.02
Date

STATE OF MARYLAND — MELANIE WALKER — No. 661 — REGISTERED LANDSCAPE ARCHITECT

Landscape Architect No.

TITLE

FINAL
FOREST CONSERVATION PLAN

Des By		Scale 1" = 50'	Proj. No. 01011.C
Drn By	AJS	Date 9/25/02	24 OF 31
Chk By		Approved	

F-02-131

Wed Sep 25 11:08:41 AM 9/25/02 [illegible]

INTERSTATE 95

N 534600 E 395050

S 24°00'00" W 1662.68'

S 24°00'00" W 1662.68'

S 24°00'00" W 1662.68'

S 24°00'00" W 1662.68'

N 24°00'00" E 1662.68'

N 24°00'00" E 1662.68'

N 24°00'00" E 1662.68'

N 24°00'00" E 1662.68'

HOWARD CO. MD.

FLOODPLAIN

WETLAND

BUFFER

EX.EPHEMERAL CHANNEL

HAMMOND BRANCH

N 533600 E 395750

EsC2

BeB2(D)

Ha(D)

P/O DRP PARCEL D OPEN SPACE 29.4± AC.

POA PARCEL 2.0± AC.

FOREST CONSERVATION EASEMENT "O" - 28.32± ACRES TOTAL
(8.48± AC. RETENTION THIS SHEET)
(10.92± AC. FLOODPLAIN THIS SHEET)
(0.31± AC. UNFORESTED AREA THIS SHEET)

FOREST CLEARING
26.89± AC. TOTAL (CONT'D.)
(1.05± AC. CLEARING THIS SHEET)

MATCH LINE – SEE SHEET 26 OF 31

MATCH LINE – SEE SHEET 24 OF 31

E 395750
N 532750

Legend

WETLAND
WETLAND BUFFER
WETLAND SYMBOL
HEAD OF STREAM
STREAM
STREAM BUFFER
100 YEAR FLOOD PLAIN

SOIL LABEL
SOIL BOUNDARY
SLOPES >25%
SLOPES 15%-25%
REFORESTATION AREAS
EX. FOREST EDGE
SCRUB/SHRUB/HEDGEROW OR TREE GROUP
FOREST CONSERVATION EASEMENT
LIMIT OF DISTURBANCE
PROPOSED WOODS EDGE
NON-WOODY VEGETATION BUFFER

Symbol	Soils Legend	Hydrologic Soil Group
BeB2	Beltsville silt loam/ 1 to 5% Slopes	C
BeC2	Beltsville silt loam/ 5 to 10% Slopes	C
ChC2	Chester silt loam/ 5 to 15% Slopes	B
CmC2	Chillum silt loam/ 5 to 10% Slopes	C
CnB2	Chillum-Fairfax loams/ 1 to 5% Slopes	C
Co	Codorus silt loam	C
EvC	Evesboro loamy sand/ 5 to 15% Slopes	
Ha	Hatboro silt loam	
SfB2	Sassafras gravelly sand loam/ 1 to 5% Slopes	B
SfC2	Sassafras gravelly sand loam/ 5 to 10% Slopes	B
SkC2	Sassafras loam/ 5 to 10% Slopes	B
SkD2	Sassafras loam/ 10 to 15% Slopes	B

APPROVED: HOWARD COUNTY DEPT. OF PUBLIC WORKS

CHIEF, BUREAU OF HIGHWAYS — DATE 11-25-02

APPROVED: HOWARD COUNTY DEPT. OF PLANNING AND ZONING

CHIEF, DIVISION OF LAND DEVELOPMENT — DATE 12/6/02

CHIEF, DEVELOPMENT ENGINEERING DIVISION — DATE 12/2/02

Date	No.	Revision Description

EMERSON
(Formerly the Key Property)
Section 3, Area 1
Parcels A – I

OWNER /DEVELOPER:

THE HOWARD RESEARCH & DEVELOPMENT CORPORATION
10275 LITTLE PATUXENT PARKWAY
COLUMBIA, MARYLAND 21044

DMW
Daft·McCune·Walker, Inc.
200 East Pennsylvania Avenue
Towson, Maryland 21286
(410) 296-3333
Fax 296-4705

A Team of Land Planners, Landscape Architects, Engineers, Surveyors & Environmental Professionals

9.25.02
Date

STATE OF MARYLAND
MELANIE MOSER
No. 951
REGISTERED
LANDSCAPE ARCHITECT

Landscape Architect No.

TITLE

FINAL FOREST CONSERVATION PLAN

Des By		Scale 1" = 50'	Proj. No. 01011.C
Drn By	AJS	Date 9/25/02	
Chk By		Approved	25 OF 31

F-02-131

Wed Sep 25 11:26:27 2002 J:\projects\01011\dwg\fcp\fcp1.dwg

MATCH LINE – SEE SHEET 24 OF 31

MATCH LINE – SEE SHEET 25 OF 31

MATCH LINE – SEE SHEET 27 OF 31

PROP. STERLING DRIVE

FOREST CONSERVATION EASEMENT "O" - 28.32± AC. TOTAL (CONT'D.)
(1.34± AC. RETENTION THIS SHEET)
(0.75± AC. FLOODPLAIN THIS SHEET)

FOREST CONSERVATION EASEMENT "P" - 8.92± ACRES TOTAL
(6.22± AC. RETENTION THIS SHEET)

FOREST CLEARING
26.89± AC. TOTAL (CONT'D.)
(12.75± AC. CLEARING THIS SHEET)

EX. MD. ROUTE 216 OFF RAMP

TRIBUTARY TO HAMMOND BRANCH

WETLAND LIMIT

BUFFER

WETLAND

FOA PARCEL F 2.01± AC.

PARCEL C 10.8± AC.

FOA PARCEL E OPEN SPACE 9.3± AC.

FIO DRP PARCEL D OPEN SPACE 29.4± AC.

1.9± AC.

N 00°50'51" E 264

N 00°09'29" W 703.22'

N 01°35'07" E 303.99'

E 1352500 N 53750

E 1352600 N 53400

Legend

- WETLAND
- WETLAND BUFFER
- WETLAND SYMBOL
- HEAD OF STREAM
- STREAM
- STREAM BUFFER
- 100 YEAR FLOOD PLAIN
- SOIL LABEL
- SOIL BOUNDARY
- SLOPES >25%
- SLOPES 15%-25%
- REFORESTATION AREAS
- EX. FOREST EDGE
- SCRUB/SHRUB HEDGEROW OR TREE GROUP
- FOREST CONSERVATION EASEMENT
- LIMIT OF DISTURBANCE
- PROPOSED WOODS EDGE
- NON-WOODY VEGETATION BUFFER

APPROVED: HOWARD COUNTY DEPT. OF PUBLIC WORKS

CHIEF, BUREAU OF HIGHWAYS — DATE 11-25-02

APPROVED: HOWARD COUNTY DEPT. OF PLANNING AND ZONING

CHIEF, DIVISION OF LAND DEVELOPMENT — DATE 12/6/02

CHIEF, DEVELOPMENT ENGINEERING DIVISION — DATE 12/2/02

Date	No.	Revision Description

EMERSON
(Formerly the Key Property)
Section 3, Area 1
Parcels A – I

OWNER /DEVELOPER:

THE HOWARD RESEARCH & DEVELOPME..T CORPORATION
10275 LITTLE PATUXENT PARKWAY
COLUMBIA, MARYLAND 21044

DMW
Daft-McCune-Walker, Inc.
200 East Pennsylvania Avenue
Towson, Maryland 21286
(410) 296-3333
Fax 296-4705

A Team of Land Planners, Landscape Architects, Engineers, Surveyors & Environmental Professionals

9.25.02
Date

STATE OF MARYLAND — MELANIE MOSER — No. 661 — LANDSCAPE ARCHITECT

Landscape Architect No.

F-02-131

TITLE

FINAL
FOREST CONSERVATION PLAN

Des By		Scale 1" = 50'	Proj. No. 01011.C
Drn By	AJS	Date 9/25/02	26 OF 31
Chk By		Approved	

Wed Sep 25 11:27:27 AM Plotted by: Andrew Sheldon C:\Projects\01011\Drawings\Plan\FCP\01011FCP.dwg 9/25/02 11:27:27

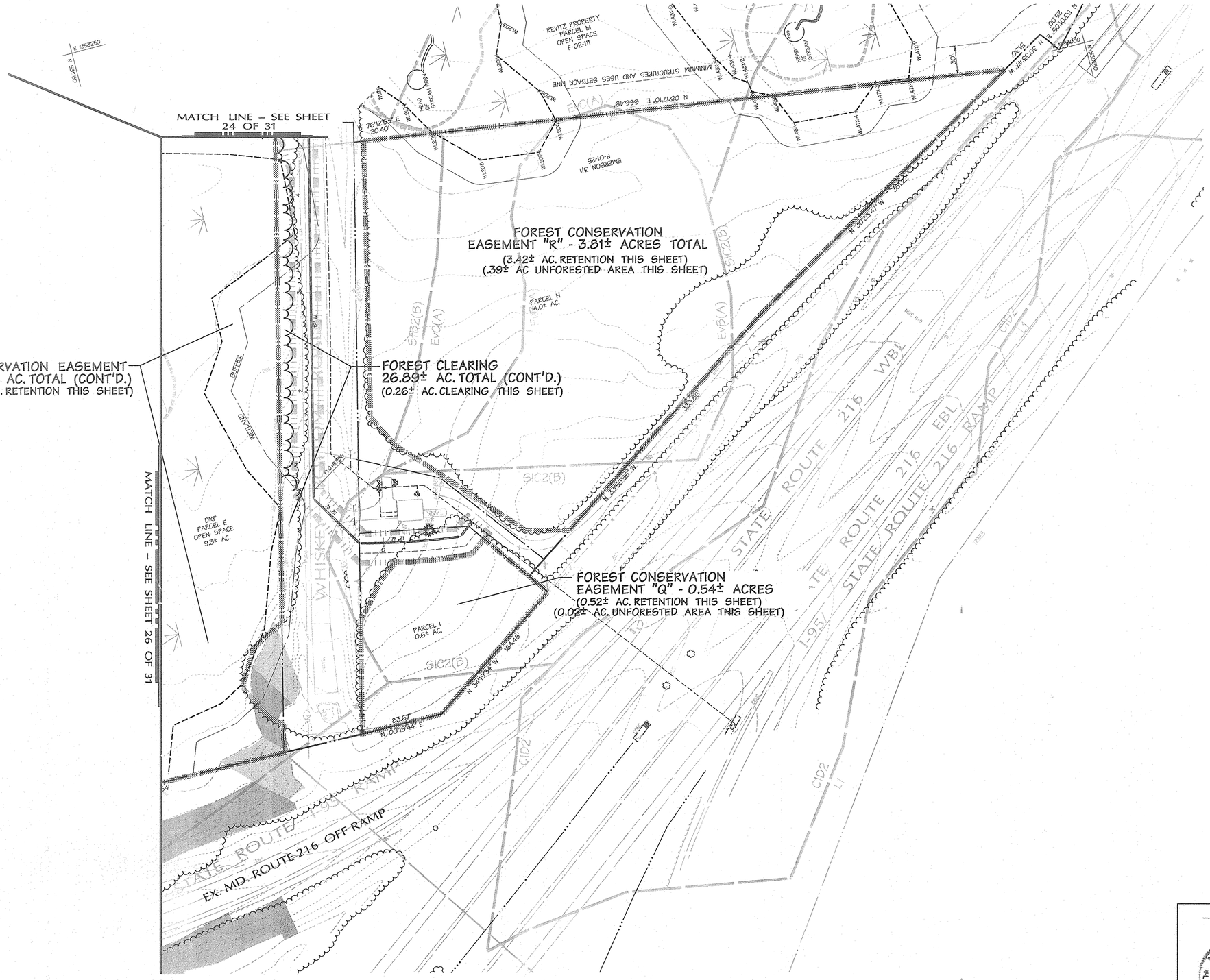

Legend

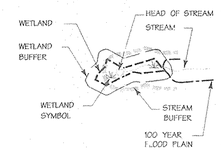

- AmA2 — SOIL LABEL
- SOIL BOUNDARY
- SLOPES >25%
- SLOPES 15%-25%
- REFORESTATION AREAS
- EX. FOREST EDGE
- SCRUB/SHRUB HEDGEROW OR TREE GROUP
- FOREST CONSERVATION EASEMENT
- LIMIT OF DISTURBANCE
- PROPOSED WOODS EDGE
- NON-WOODY VEGETATION BUFFER

Symbol	Soils Legend	Hydrologic Soil Group
BeD2	Beltsville silt loam/ 1 to 5% Slopes	C
BeC2	Beltsville silt loam/ 5 to 10% Slopes	C
ChC2	Chester silt loam/ 8 to 15% Slopes	B
CmC2	Chillum silt loam/ 5 to 10% Slopes	C
CmD2	Chillum-Fairfax loams/ 1 to 5% Slopes	C
Co	Codorus silt loam	C
EvC	Evesboro loamy sand/ 5 to 15% Slopes	
Ha	Hatboro silt loam	
SfB2	Sassafras gravelly sand loam/ 1 to 5% Slopes	B
SfC2	Sassafras gravelly sand loam/ 5 to 10% Slopes	B
SIC2	Sassafras loam/ 5 to 10% Slopes	B
SID2	Sassafras loam/ 10 to 15% Slopes	B

APPROVED: HOWARD COUNTY DEPT. OF PUBLIC WORKS

CHIEF, BUREAU OF HIGHWAYS — DATE 11-25-02

APPROVED: HOWARD COUNTY DEPT. OF PLANNING AND ZONING

CHIEF, DIVISION OF LAND DEVELOPMENT — DATE 12/6/02

CHIEF, DEVELOPMENT ENGINEERING DIVISION — DATE 12/2/02

Date	No.	Revision Description

EMERSON
(Formerly the Key Property)
Section 3, Area 1
Parcels A – I

OWNER /DEVELOPER:

THE HOWARD RESEARCH & DEVELOPMENT CORPORATION
10275 LITTLE PATUXENT PARKWAY
COLUMBIA, MARYLAND 21044

DMW
Daft·McCune·Walker, Inc.
200 East Pennsylvania Avenue
Towson, Maryland 21286
(410) 296-3333
Fax 296-4705

A Team of Land Planners, Landscape Architects, Engineers, Surveyors & Environmental Professionals

9.25.02
Date

STATE OF MARYLAND — MELANIE MOORE — 953 — REGISTERED LANDSCAPE ARCHITECT

Landscape Architect No.

TITLE

FINAL
FOREST CONSERVATION PLAN

Des By		Scale 1" = 50'	Proj. No. 01011.C
Drn By	AJS	Date 9/25/02	27 OF 31
Chk By		Approved	

F-02-131

Wed Sep 25 11:27:47 AM Plotted by: Plotted on: 9/25/02 11:27:47 AM

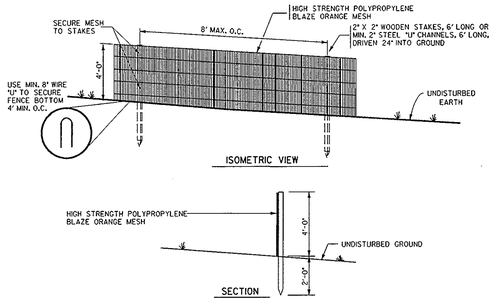

NOTES:

1. THIS DETAIL IS FOR FOREST PROTECTION DEVICE ONLY
2. FOREST RETENTION AREA WILL BE SET AS PART OF THE REVIEW PROCESS
3. BOUNDARIES OF FOREST RETENTION AREA SHOULD BE STAKED AND FLAGGED PRIOR TO INSTALLING THE DEVICE
4. ROOT DAMAGE SHALL BE AVOIDED
5. PROTECTION SIGNAGE MAY ALSO BE USED
6. FOREST PROTECTION FENCE SHALL BE MAINTAINED THROUGHOUT CONSTRUCTION

Forest Protection Fence*

Not To Scale

* WHERE SUPER SILT FENCE (S.S.F.) IS TO BE INSTALLED ADJACENT TO FOREST RETENTION AREAS, ATTACH HIGH VISIBILITY TAPE OR FLAGGING TO THE TOP EDGE OF S.S.F. AT 5' INTERVALS AND USE S.S.F. IN LIEU OF BLAZE ORANGE FENCE. TEMPORARY FOREST PROTECTION SIGNAGE MAY BE ATTACHED TO S.S.F.

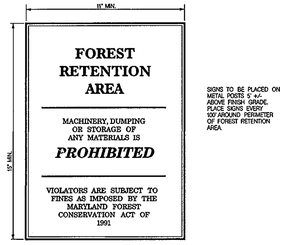

SIGNS MAY NOT BE ATTACHED TO TREES.

Temporary and Permanant Signage

Not To Scale

GOALS AND OBJECTIVES

The goals and objectives of this Forest Conservation Plan are to identify forests to be retained and cleared with the development of Emerson Section 3, Area 1 and to provide long-term protection for forests to be retained. Approximately 26.94 acres of forest clearing is proposed, and 23.96 acres of forest will be retained predominantly within and adjacent to stream and wetland resources. As this phase of the Emerson project is being evaluated cumulatively with previous phases, no reforestation is required. Forest Conservation Easements have been defined using wetland buffer limits and parcel lines where appropriate for convenience when preparing plats. These easements include all retention areas, as well as contiguous floodplain and canopy gap areas that will become "filled in" as forest regenerates in the absence of vegetation management within the easement.

FOREST RETENTION

Tree retention/Soil Protection areas will be delineated with temporary forest protection fencing and retention area signage as appropriate. See forest protection fence and temporary signage Detail prior to the beginning of any construction activity.

Attachment of signs to trees is prohibited.

PRECONSTRUCTION MEETING/CONSTRUCTION PERIOD PRACTICES

Before construction begins, a required preconstruction meeting shall be held. The principle contractors, engineer, Howard County Inspectors and a qualified forest professional familiar with the plan shall be present. All items pertaining to forest retention, tree preservation, and construction period practices shall be discussed.

Any changes to the plan due to on-site conditions must be approved by the Howard County Department of Planning and Zoning.

No grading, excavation, utility placement, sediment and erosion control activities, or vehicular traffic will occur within forest retention areas.

Storage of equipment and materials shall not be permitted in the forest retention areas.

There will be no burial or disposal of discarded material on-site within the retention area.

There will be no open burning within 100 feet of woodlands.

Temporary structures including, but not limited to construction trailers, sanitary facilities, etc. shall not be placed within the forest retention areas.

Employee parking shall not be permitted in the forest retention areas.

POST CONSTRUCTION MANAGEMENT/MAINTENANCE BY CONTRACTOR

All dead trees or tree limbs which pose an immediate safety hazard will be felled. Trees dropped within the forest retention area will not be removed.

All temporary forest protection structures will be removed after construction and permanent signage will be placed where indicated on the plan.

A 2-year Contractor's Maintenance and Monitoring Period shall begin at mobilization. Seventy five percent survivorship must be guaranteed for this period. The site shall be inspected at the end of the two year period to ascertain survivorship and provide for replacement if necessary.

The Contractor's maintenance of new planting shall consist of watering, cultivating, weeding, and mulching as necessary to insure survival.

Contractor shall protect planting areas and plants at all times against damage of all kinds for duration of maintenance period. Maintenance includes temporary protection barriers and signs as required for protection. If any plants become damaged or injured, because sufficient protection was not provided, treat or replace as directed by Landscape Architect at no additional cost to Owner.

CUMULATIVE FOREST CONSERVATION CALCULATIONS

BASIC SITE DATA	ACRES (1/10)
GROSS SITE AREA	206.85
AREA WITHIN 100 YEAR FLOODPLAIN AND EXISTING SEWER EASEMENT	21.19
AREA WITHIN AGRICULTURAL USE OR PRESERVATION PARCEL (IF APPLICABLE)	0.00
NET TRACT AREA	185.66
LAND USE CATEGORY	COMMERCIAL/INDUSTRIAL/OFFICE

INFORMATION FOR CALCULATIONS	
A. NET TRACT AREA	185.66
B. REFORESTATION THRESHOLD (15% x A)	27.85
C. AFFORESTATION MINIMUM (15% x A)	27.85
D. EXISTING FOREST ON NET TRACT AREA	85.30
E. FOREST AREAS TO BE CLEARED	39.47
F. FOREST AREAS TO BE RETAINED	45.83

REFORESTATION CALCULATIONS	
A. NET TRACT AREA	185.66
B. REFORESTATION THRESHOLD (15% x A)	27.85
C. EXISTING FOREST ON NET TRACT AREA	85.30
D. FOREST AREAS TO BE CLEARED	39.47
E. FOREST AREAS TO BE RETAINED	45.83
F. FOREST AREAS CLEARED ABOVE REFORESTATION THRESHOLD	39.47
G. FOREST AREAS CLEARED BELOW REFORESTATION THRESHOLD	0.00
H. FOREST AREAS RETAINED ABOVE REFORESTATION THRESHOLD	17.98

CLEARING ABOVE THE THRESHOLD ONLY

IF FOREST AREAS TO BE RETAINED ARE GREATER THAN THE REFORESTATION THRESHOLD (IF E IS GREATER THAN B), THE FOLLOWING CALCULATIONS APPLY:

REFORESTATION FOR CLEARING ABOVE THRESHOLD F x .14	9.87
REFORESTATION FOR CLEARING BELOW THRESHOLD G x 2	0.00
TOTAL REFORESTATION REQUIRED (F x .14) + (G x 2)	9.87
CREDIT FOR RETENTION ABOVE CONSERVATION THRESHOLD	17.98
REFORESTATION REQUIRED	0.00 ACRES
REFORESTATION PROVIDED	5.03 ACRES
TOTAL	5.03 ACRES

NOTE:

1. THE PRECISE LOCATION OF PLANT MASSINGS WILL BE LOCATED IN THE FIELD BY LANDSCAPE ARCHITECT.
2. GRID PATTERNS WILL BE AVOIDED
3. PLANT MATERIAL MAY BE GROUPED IN CLUSTERS OF NO MORE THAN 5 TO 7 WHIPS OF THE SAME PLANT. PLANTS WILL BE INSTALLED IN A RANDOM FASHION.

APPROVED: HOWARD COUNTY DEPT. OF PUBLIC WORKS

CHIEF, BUREAU OF HIGHWAYS — DATE 11-25-02

APPROVED: HOWARD COUNTY DEPT. OF PLANNING AND ZONING

CHIEF, DIVISION OF LAND DEVELOPMENT — DATE 12/6/02

CHIEF, DEVELOPMENT ENGINEERING DIVISION — DATE 12/2/02

Date	No.	Revision Description

EMERSON
(Formerly the Key Property)
Section 3, Area 1
Parcels A – I

OWNER /DEVELOPER:

THE HOWARD RESEARCH & DEVELOPMENT CORPORATION
10275 LITTLE PATUXENT PARKWAY
COLUMBIA, MARYLAND 21044

DMW
Daft·McCune·Walker, Inc.
200 East Pennsylvania Avenue
Towson, Maryland 21286
(410) 296-3333
Fax 296-4705

A Team of Land Planners, Landscape Architects, Engineers, Surveyors & Environmental Professionals

9.25.02
Date

STATE OF MARYLAND — MELANIE MOSER — No. 661 — REGISTERED LANDSCAPE ARCHITECT

Landscape Architect No.

TITLE

FINAL PLAN
FOREST CONSERVATION NOTES AND DETAILS

Des By		Scale 1" = 50'	Proj. No. 01011.C
Drn By	AJS	Date 9/25/02	28 OF 31
Chk By		Approved	

F-02-131

Wed Sep 25 11:37:48 AM /Projects/01011/Engineering/Plans/Forest Conservation/01011FC1.dwg, 9/25/02 11:37:48 AM, Melanie Moser, Daft McCune Walker, Inc.

NOTES:

1. SEE SHEET 30 OF 31 FOR LANDSCAPE NOTES AND DETAILS, PERIMETER CALCS. AND WATER QUALITY NOTES.
2. SEE SHEET 31 OF 31 FOR FUFILLMENT OF SWM PERIMETER REQUIREMENTS AND WATER QUALITY PLANTING.
3. 64 STREET TREES THIS SHEET.

Plant List (Perimeter Landscaping — This Sheet)

QTY	SYM	BOTANICAL NAME/ COMMON NAME	SIZE	REMARKS
SHADE TREES				
10	QP	QUERCUS PALUSTRIS PIN OAK	2 1/2" - 3" CAL. 12'-14' HT	B & B FULL HEAD
EVERGREEN TREES				
12	PS	PINUS STROBUS WHITE PINE	6'-8' HT.	B & B HEAVY / UNSHEARED
ORNAMENTAL TREES				
6	PS	CORNUS KOUSA KOUSA DOGWOOD	8'-10' HT.	B & B

Legend

- WETLAND
- WETLAND BUFFER
- WETLAND SYMBOL
- HEAD OF STREAM
- STREAM
- STREAM BUFFER
- 100 YEAR FLOOD PLAIN
- SLOPES >25%
- SLOPES 15%-25%
- REFORESTATION AREAS
- PROPOSED FOREST EDGE
- SCRUB/SHRUB HEDGEROW OR TREE GROUP
- FOREST CONSERVATION EASEMENT
- PROPOSED SHADE TREE
- PROPOSED FLOWERING TREE
- PROPOSED EVERGREEN TREE
- PROPOSED STREET TREE
- EXISTING SHADE TREE
- EXISTING EVERGREEN TREE
- EXISTING STREET TREE

APPROVED: HOWARD COUNTY DEPT. OF PUBLIC WORKS

CHIEF, BUREAU OF HIGHWAYS — DATE 11-25-02

APPROVED: HOWARD COUNTY DEPT. OF PLANNING AND ZONING

CHIEF, DIVISION OF LAND DEVELOPMENT — DATE 12/6/02

CHIEF, DEVELOPMENT ENGINEERING DIVISION — DATE 12/2/02

Date	No.	Revision Description

EMERSON
(Formerly the Key Property)
Section 3, Area 1
Parcels A – I

OWNER /DEVELOPER:

THE HOWARD RESEARCH & DEVELOPMENT CORPORATION
10275 LITTLE PATUXENT PARKWAY
COLUMBIA, MARYLAND 21044

DMW
Daft·McCune·Walker, Inc.
200 East Pennsylvania Avenue
Towson, Maryland 21286
(410) 296-3333
Fax 296-4705

A Team of Land Planners, Landscape Architects, Engineers, Surveyors & Environmental Professionals

10·3·02
Date

STATE OF MARYLAND — MELANIE MOORE — No. 661 — LANDSCAPE ARCHITECT

Landscape Architect No.

TITLE

FINAL PLAN
LANDSCAPE PLAN

Des By		Scale 1" = 100'	Proj. No. 01011.C
Drn By	AJS	Date 9/25/02	29 OF 31
Chk By		Approved	

F-02-131

Thu Oct 3 10:24:56 2002 — Plotted by: Melanie Moore

Landscape Notes

1. The contractor shall review architectural/engineering plans to become thoroughly familiar with grading and surface utilities.

2. All equipment and tools shall be placed so as not to interfere or hinder the pedestrian and vehicular traffic flow. See Seasonal Plant List for planting times of bulbs and seasonal plants.

3. The contractor shall coordinate with lighting and irrigation contractors regarding timing of installation of plant material.

4. The contractor shall insure that his work does not interrupt established or projected drainage patterns.

5. During planting operations, excess waste materials shall be promptly and frequently removed from the site.

6. The contractor is advised of the existence of underground utilities on the site. Their exact location shall be verified in the field with the owner or general contractor prior to the commencement of any digging operations. In the event they are uncovered, the contractor shall be held responsible for all damage to utilities and such damage shall not result in any additional expenses to the owner.

7. If utility lines are encountered in excavation of tree pits, other locations for trees shall be made by the contractor without additional compensation. No changes of location shall be made without approval of the landscape architect.

8. Maintain positive drainage out of planting beds at a minimum 2% slope. All grades, dimensions, and existing conditions shall be verified by the contractor on site before construction begins. Any discrepancies shall be brought to the attention of the landscape architect or owner.

9. Every possible safeguard shall be taken to protect building surfaces, equipment, and furnishing. The contractor shall be responsible for any damage or injury to person or property which may occur as a result of his negligence in the execution of the work.

10. In the event of variation between quantities shown on the plant list and the plans, the plans shall control. The contractor is responsible for verifying all plant quantities prior to the commencement of work. Sod quantity take-offs are the responsibility of the contractor. All discrepancies shall be reported to the landscape architect for clarification prior to bidding. The contractor shall furnish plant material in sizes as specified in plant list.

11. The contractor shall stake all material located on the site for review and/or adjustment by the landscape architect prior to planting. All locations are to be approved by the landscape architect before excavation.

12. Plants shall conform to current "American Standards for Nursery Stock" by American Association of Nurserymen (AAN), particularly with regard to size, growth, size of ball, and density of branch structure. Plant material shall be tagged at the source by the landscape architect unless this requirement is specifically waived.

13. All plants (B&B or container) shall be properly identified by weather-proof labels securely attached thereto before delivery to project site. Labels shall identify plants by name, species, and size. Labels shall not be removed until the final inspection by the landscape architect or agent in charge.

14. Any material and/or work may be rejected by the landscape architect if it does not meet the requirements of the specifications. All rejected materials shall be removed from the site by the contractor.

15. No substitutions shall be made without written consent of the owner or landscape architect.

16. The landscape architect or owner shall have the right, at any stage of the operations, to reject any and all work and material which, in his opinion, does not meet the requirements of these plans and specifications.

17. The contractor shall be wholly responsible for stability and conditions of all trees and shrubs and shall be legally liable for any damage caused by instability of any plant materials.

18. All proposed trees to be installed either entirely in or entirely out of planting beds. Planting bed lines are not to be obstructed. All shrubs and ground cover areas shall be planted in continuous prepared bed and top dressed with 3-inch shredded hardwood mulch. Mulch shall have been shredded within the last six months.

19. All planting beds adjacent to lawn, sod, or seeded areas shall be spade edged.

20. Maintenance shall begin after each plant has been installed and shall continue until 90 days after final acceptance by the architect or owner representative. Maintenance includes mowing of turf, watering, pruning, weeding, fertilizing, mulching, replacement of sick or dead plants, and any other care necessary for the proper growth of the plant material. The contractor must be able to provide continued maintenance if requested by the owner.

21. Upon completion of all landscaping, an acceptance of the work shall be held. The contractor shall notify the landscape architect or owner for scheduling the inspection at least seven (7) days prior to the anticipated inspection date.

22. All trees shall be guaranteed for 12 months from the date of acceptance. All shrubs and ground covers shall be guaranteed for 12 months from the date of acceptance.

23. The contractor is responsible for testing project soils. The contractor is to provide a certified soils report to the owner. The contractor shall verify that the soils on site are acceptable for the proper growth of the proposed plant material. Should the contractor find poor soil conditions, the contractor shall be required to provide soil amendments as necessary. These amendments shall include, but not be limited to, fertilizers, lime, and topsoil. Proper planting soils must be verified prior to planting of materials.

24. PLANTING MIX:
a. Planting mix shall be prepared at approved on-site staging area using approved on-site existing soil. Mix minimum quantities of 20 cubic yards or sufficient mix for entire job if less than 20 cubic yards is required.

b. Thoroughly mixed in the following proportions for tree and shrub planting mix:
.5 cy existing soil
.2 cy sharp sand
.3 cy wood residuals
4.5 lbs treble superphosphate
5 lbs dolmonite limestone (eliminate for acid loving plants)

c. For bed planting, shrubs and groundcover spaces 24 inches or closer, incorporate the following ingredients per 20 sf and incorporate into top 8 inches of existing soils by rototilling or similar method of incorporation.
.2 cy sharp sand
.3 cy organic material
4.5 lbs treble superphosphate
5 lbs dolmonite limestone (eliminate for acid loving plants)

25. The contractor shall dispose of stumps and major roots of all plants to be removed. Any depressions caused by removal operations shall be refilled with fertile, friable soil placed and compacted so as to reestablish proper grade for new planting and/or lawn areas.

26. The contractor shall insure adequate vertical drainage in all plant beds and planters.

27. All disturbed areas on the site not planted with shrubs or ground cover shall be fine graded and seeded or sodded as noted on landscape plan.

28. All sod shall be obtained from areas having growing conditions familiar to areas to be covered. Areas to be sodded shall be raked of stones and debris. Debris and stones over 1 inch in diameter shall be removed from the site. All damaged sod will be rejected. All sod must be placed with staggered joints, tightly butted, with no inequalities in grade. Place all sod in rows at right angles to slopes (where applicable).

29. All planting procedures shall conform to Daft McCune Walker Inc. specifications.

30. Some field located plants are not graphically shown on this plan but are within the limit of construction line. All plants (field located plants and graphically shown plants) are noted on the plant list.

Water Quality Planting Specifications

PART 1 GENERAL

1.01 DESCRIPTION: Work consists of all labor, materials, equipment and services necessary for and incidental to the execution and completion of WETLAND PLANTS as indicated on the Drawings and specified herein.

A. Include:

1. Furnishing of all plant material.

2. Soil preparation, planting operations.

3. Maintenance and guarantee.

1.02 QUALITY ASSURANCE

A. American Association of Nurserymen (A.A.N.): "American Standard for Nursery Stock", (A.N.S.I. Z60.1) as expanded herein.

B. Nomenclature: In accordance with HORTUS III by L. H. Bailey.

C. United States Department of Agriculture: Textural Classification Diagram for Soils.

1.03 STANDARD OF COMPARISON

A. When the Drawings indicate a total quantity of five (5) or more of an individual plant (other than bulbs or perennials) the Contractor shall obtain approval of a standard of comparison prior to delivery on site. Assemble samples of all plants to be evaluated as "standards" at the principal business location of the Contractor. Notify Owner to schedule an inspection for approval of "standards" and to obtain record photographs. Photographs of each "standard" shall be used for comparison of all material subsequently installed on the site.

1.04 SUBMITTALS

A. Source: Notify the Owner, in writing, of source of all material before delivery.

1.05 DELIVERY, STORAGE AND HANDLING

A. Root stock of the plant material shall be kept moist during transport from the source to the job site and until planted.

B. Transport and handle plants so that foliage, roots, or balls are protected from breakage, sun and winds. Tops or roots of plants allowed to dry out or which have been damaged or disturbed root balls will be cause for rejection.

1.06 DRAWINGS

A. The Contractor shall use quantities of wetland plants noted on the plant list.

1.07 PROJECT CONDITIONS

A. Planting shall commence following approval of the as-built certification of the subject water quality facility.

B. All emergent wetland plantings shall be installed between April 15 and June 30 or as directed by the Landscape Architect. Do not plant when ground is frozen. Do not use frozen planting soil at any time.

1.08 DEFINITIONS

A. Start of Planting: Installation of plant material into excavated pits or beds.

B. Payment Release Inspection: Conducted monthly by the Owner or designated representative to verify quantity only for partial payment to the Contractor. Payment release inspection does not waive any requirements of the standard of comparison or initial acceptance clause.

C. Initial Inspection: Conducted at the request of the Contractor and the Owner when 90% or more of all planting and related tasks are complete.

D. Initial Acceptance: Occurs when all plant material is in place in accordance with the specifications and approved by the Owner.

E. Maintenance Period: From start of planting to final acceptance.

F. Guarantee Period: From initial acceptance and continuing for 90 days thereafter, excluding the period from November 1 to April 15.

G. Final Acceptance: Occurs after Contractor has completed all outstanding items, as determined by the Owner, at the end of the maintenance and guarantee period.

1.09 GUARANTEE AND REPLACEMENT

A. All plants in an impaired, dead or dying condition prior to initial acceptance and prior to final acceptance shall be removed and replaced. Replacement materials shall be the same size as other unreplaced material considering growth that has occurred since original installation. Methods of installation shall be identical to the original. The contractor shall guarantee 85% survivorship at the end of the guarantee period.

B. Replacements shall be made between April 15 and June 30, the season following the initial planting, and shall conform to the planting specifications listed above.

C. The contractor shall notify the Landscape Architect to arrange a site meeting to determine the replacement requirements, at the end of the guarantee period.

PART 2 PRODUCTS

2.01 PLANTS

A. Sound, healthy, vigorous, free from plant diseases, insect pests or their eggs.

B. Plants cut back from larger sizes or pruned prior to delivery will not be accepted.

C. It is anticipated that these plants will need to be obtained from a nursery source. These plant species are normally unavailable from standard landscape nursery sources.

D. Shape and Form: Plant materials shall be symmetrical and typical for the variety and species.

E. Container: The soil/root masses shall be thoroughly moist upon delivery to the job site. Any dry and light weight plants shall be rejected. If not planted immediately after being delivered to the job site, the plants shall be stored out of direct exposure to the sun and wind and their root masses maintained moist, through periodic watering, until the time of planting.

Until the removal of the plants from the containers, the soil/root masses shall be the size of the specified

soil exists on the bottom of the containers, the plants will be rejected since they have not been grown sufficiently long in the containers to root into the soils contained therein.

The plants shall appear healthy with no leaf spots, leaf damage, leaf discolorations, leaf wilting, or evidence of insects on the leaves.

The container size shall be at least as large as indicated in the specifications or shown in the plant tables/lists. Plants shall not be rejected if supplied in containers larger than specified.

F. Fiber or Peat Pot: If not planted immediately after being delivered to the job site, the plants shall be stored out of direct exposure to the sun and wind and their pots and associated root masses maintained moist, through periodic watering, until the time of planting.

The plants shall be well-rooted through the sides and bottoms of the pots and firmly contained therein.

Should the plants be removed from the pots by holding them from their tops and gently pulling on the pots, the plants shall be rejected.

If growing, the plants shall appear healthy with no foliar spots, discolorations, wilting, or other evidence of the presence of disease or insects.

Plants shall not be rejected if supplied in pots larger than specified.

The number of plants, stems, or culms per pot as specified or shown in the plant tables/lists at least shall be present, on the average, or the plants shall be rejected.

G. Dormant Propagule (Herbaceous): If not planted immediately after being delivered to the job site, the dormant propagules shall be stored out of the direct exposure to the sun and wind, and they shall be protected by covering with straw, peat moss, compost, or other suitable materials and shall be maintained moist, through periodic watering, until the time of planting.

The bodies and shoots associated with the propagules shall have turgor or be rigid to the touch. If the bodies and/or shoots associated with the propagules are soft or mushy or appear rotten or decomposed, the plant materials shall be rejected.

Rhizome (stolon) sections shall provide a minimum of two shoots per section or Rhizome (stolon) sections containing at least a terminal shoot shall be a minimum of four inches in length (in order to ensure sufficient stored energy to support the new growth). Rhizome sections containing shoots that are soft or mushy or otherwise appear rotten shall not be accepted.

Suckers shall contain a terminal shoot and be a minimum of four inches in length (in order to ensure sufficient stored energy to support the new growth).

Growing Bare Root Plant (Herbaceous): The plants shall contain new roots that are clean and white in coloration.

If not planted immediately after delivery to the job site, the plants shall be stored out of direct exposure to the sun and wind and the new roots shall be protected by the use of straw, peat moss, compost, or other suitable materials and shall be maintained moist, through periodic watering, until the time of planting.

The plants shall appear healthy with no foliar spots, discolorations, wilting, or other evidence of the presence of disease or of insects.

2.02 FERTILIZER

A. Plant Fertilizer: Slow release fertilizer such as Osmocote 19-6-12 analysis (3-4 month release) or equal approved by the Landscape Architect.

B. Slow release fertilizer shall be applied at the time of planting and at the following rate:

All emergent plant material - planting pit application of 1 oz. per container or bare root plant.

C. Pesticides, herbicides and fungicides will not be used unless judged necessary by the wetland landscaper. If applied, quantities recommended by the Department of Agriculture shall not be exceeded.

D. Fertilizer shall be delivered to the site in the original unopened containers with formulas attached.

3.01 PREPARATION

A. Plant Locations: As shown on the Drawings, to dimensions if shown, to scale if not dimensioned. Locations subject to review by the Landscape Architect before starting excavation.

B. No plant material shall be installed until the Landscape Architect has approved the finish grade of the planted areas.

3.02 PLANTING PROCEDURES

A. Set plants straight and plumb.

B. Plant material shall be planted in existing soil with each planting pit excavated to size sufficient to contain the entire root stock or root mass without cramping.

C. Where water is not available on-site, the Contractor shall furnish sufficient quantities to complete the Work at no additional cost to the Owner.

3.04 CLEAN-UP

A. During planting operations, excess and waste materials shall be removed from the site on a daily basis.

B. Repair turf areas and other existing conditions damaged during planting operations, including regrading, seed, mulch and fertilization to the satisfaction of the Owner.

3.05 MAINTENANCE

A. Watering of plant material shall take place at the end of each for fourteen (14) consecutive days after planting has been completed. The watering shall completely saturate the soil and partially immerse the plant material.

B. During maintenance period, on approximately the 1st and 15th of each month, the Contractor shall provide sufficient supervision, equipment, materials and manpower to:

1. Keep all plants in a healthy growing condition by watering, when necessary, removing dead or dying branches, controlling insect infestations, removing sprouts, weeding.

2. Remove and replace dead or damaged plant material. Where replacement is not possible due to season, remove dead material, etc. and level pit until planting is possible.

B. Notify Owner for review of activities prior to initiating maintenance operations each month.

General Planting Notes

1. All plant material to meet A.A.N. Standards.
2. Landscape Contractor to follow landscape specification guidelines for Baltimore Washington Metro area approved by LCAMW.
3. No substitutions to be made without consent of Landscape Architect or Owner.
4. All beds to be topped with three inches of hardwood mulch.
5. Landscape Contractor to verify location of utilities with Owner before planting.
6. Landscape Architect/Owner shall select, verify and/or approve all plant material. At Owner's discretion, specimen and other plant material will be selected.
7. Landscape Contractor shall coordinate plant bed filling operations and plant material installation with General Contractor and Utilities Contractor. At the time of final inspection with acceptance, all electric, water, drainage, and fountain utilities, as well as all plant materials, shall remain undamaged. Likewise, Landscape Contractor and Utilities Contractor shall coordinate efforts to ensure that surface utilities are at the proper elevation relative to final grades.
8. Contractor shall notify Miss Utility 72 hours prior to construction.
9. The owner, tenant, and/or their agents shall be responsible for maintenance of the required landscaping, including both plant materials and berms, fences and walls. All plant materials shall be maintained in good growing condition, and when necessary, replaced with new materials to ensure continued compliance with applicable regulations. All other required landscaping shall be permanently maintained in good condition, and when necessary, repaired or replaced.
10. This plan has been prepared in accordance with the provisions of Section 16.124 of the Ho. Co. code. Financial surety for the required landscaping in the amount of 15,750.00 must be posted as part of the developer's agreement. (32 shade, 41 evergreens).
11. Developer's/Builder's Certificate

I/we certify that the landscaping shown on this plan will be done according to the plan, Section 16.124 of the Howard County code and the Howard County Landscape Manual. I/we further certify that upon completion, a certification of landscape installation, accompanied by an executed one-year guarantee of plant materials, will be submitted to the Department of Planning and Zoning.

NAME: [signature] DATE: 9·25·02

SCHEDULE A
PERIMETER LANDSCAPE EDGE

CATEGORY	ADJACENT to ROADWAYS				ADJACENT to PERIMETER PROPERTIES			
PERIMETER #	P1A	P1B	P1C	P3B	P2A	P2B	P3A	P4
BUFFER TYPE	B	B	B	A	C	C	A	A
LINEAR FEET OF PERIMETER	1477 LF.	477 LF.	1366 LF.	770 LF.	230 LF.	41 LF.	814 LF.	717 LF.
CREDIT FOR EXISTING VEGETATION (DESCRIBE BELOW IF NEEDED)	1477 LF.	N/A	1366 LF.	N/A	230 LF.	N/A	N/A	717 LF.
CREDIT FOR BERM (DESCRIBE BELOW IF NEEDED)	N/A	N/A	N/A	N/A	N/A	N/A	N/A	N/A
NUMBER OF PLANTS REQUIRED SHADE TREES EVERGREEN TREES SHRUBS	 0 0 0	 10* 12* 0	 0 0 0	 15* 19* 0	 0 0 0	 1 2 0	 14* 0 0	 0 0 0
NUMBER OF PLANTS PROVIDED SHADE TREES EVERGREEN TREES OTHER TREES (2 :1 SUBSTITUTION) SHRUBS (10 :1 SUBSTITUTION) (DESCRIBE PLANT SUBSTITUTION CREDITS BELOW IF NEEDED)	 0 0 0	 0 0 0	 0 0 0	 0 0 0	 0 0 0	 1 2 0	 0 0 0	 0 0 0

PERIMETERS PROVIDED BY THE DEVELOPER: 1A, 1C, 2A, 2B, 4

PERIMETERS PROVIDED BY THE BUILDER: 1B, 3A, 3B

* DEFERRED UNTIL SITE PLAN STAGE

NOTES:

1. STREET TREES WILL BE PROVIDED @ 1/40 LF.
2. PLANT MATERIAL FOR "PERIMETERS TO BE PROVIDED BY THE BUILDER" TO BE SPECIFIED AND PLACED COINCIDENT WITH THE DEVELOPMENT OF PARCELS TO INSURE RESPONSIVENESS TO THE DESIGN OF EACH PARCEL AND TO PREVENT DAMAGE TO PLANT MATERIAL DURING THE CONSTRUCTION PROCESS.

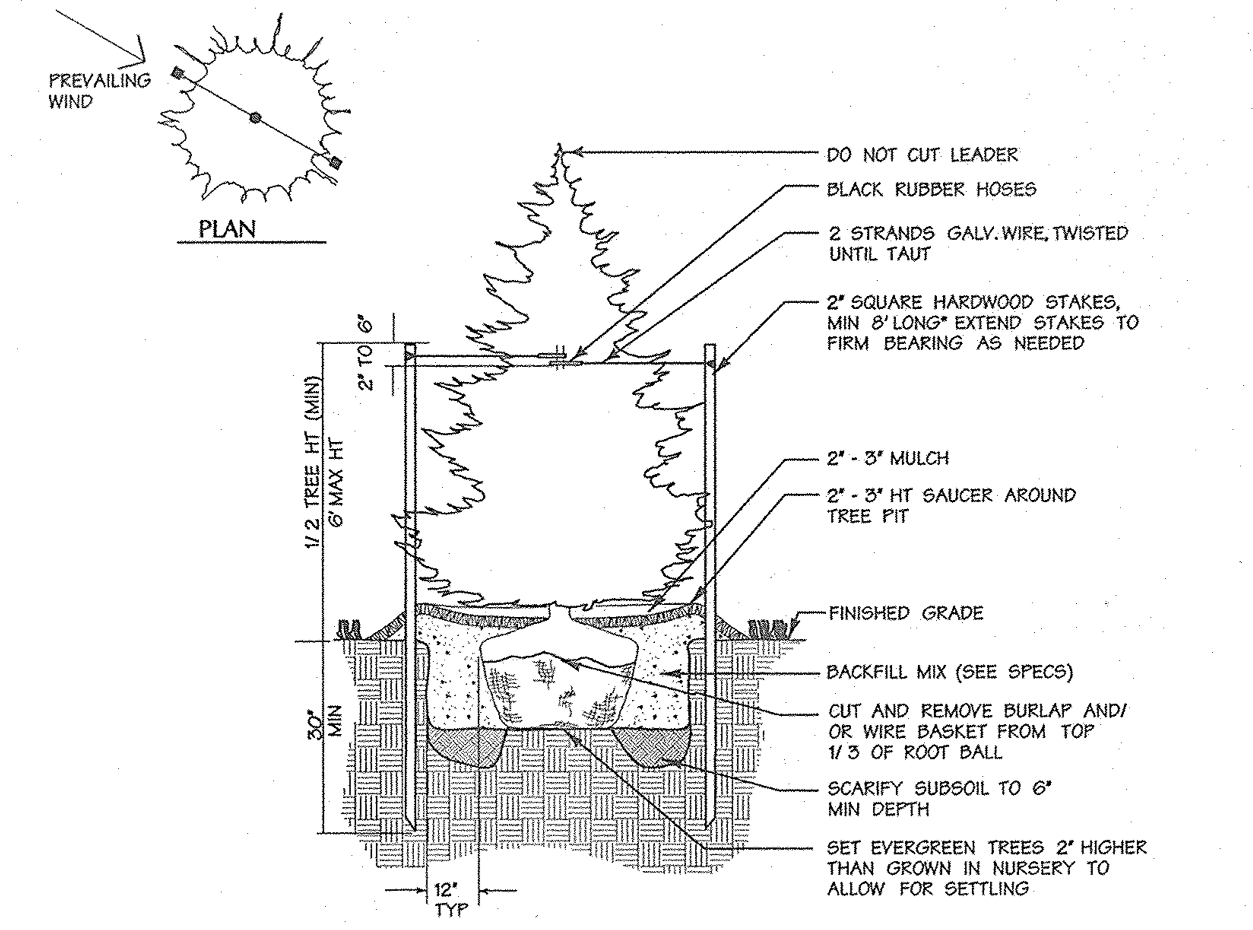

Evergreen Tree Planting
Not To Scale

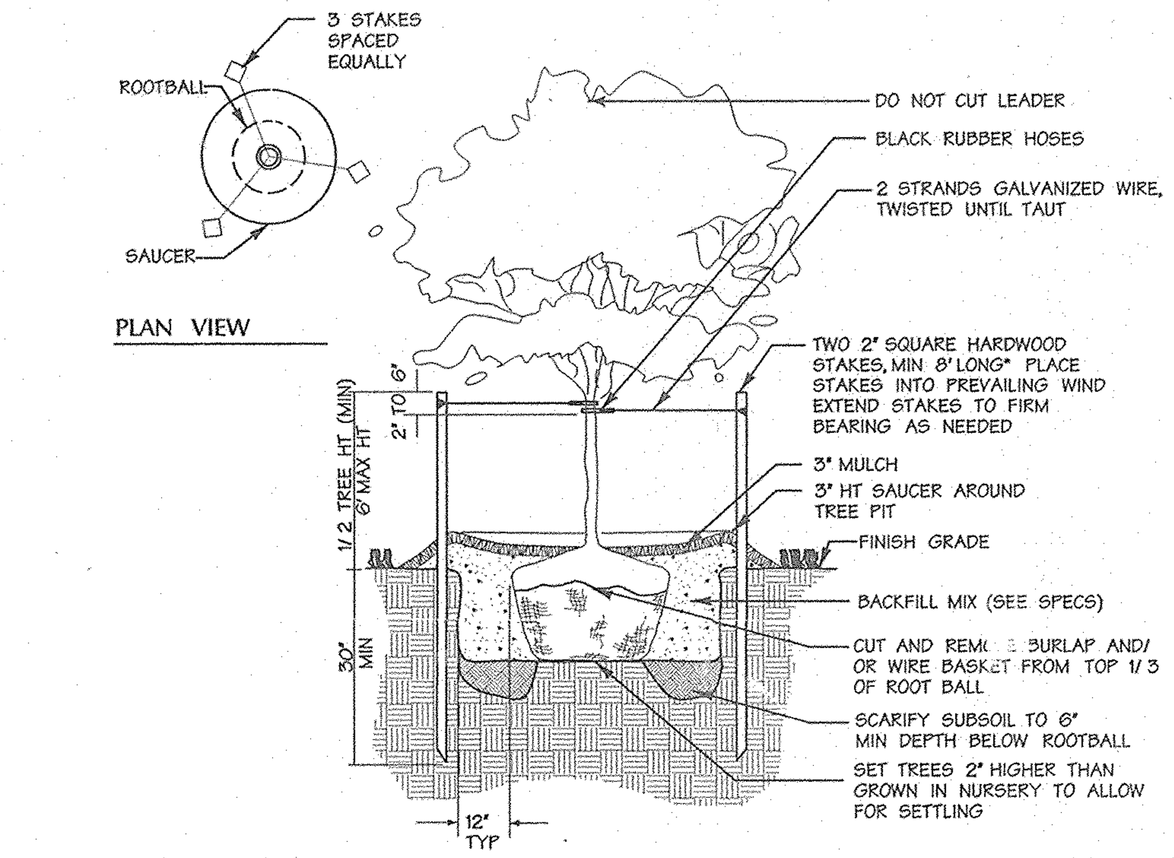

Less Than 3" Cal. Tree Planting
Not To Scale

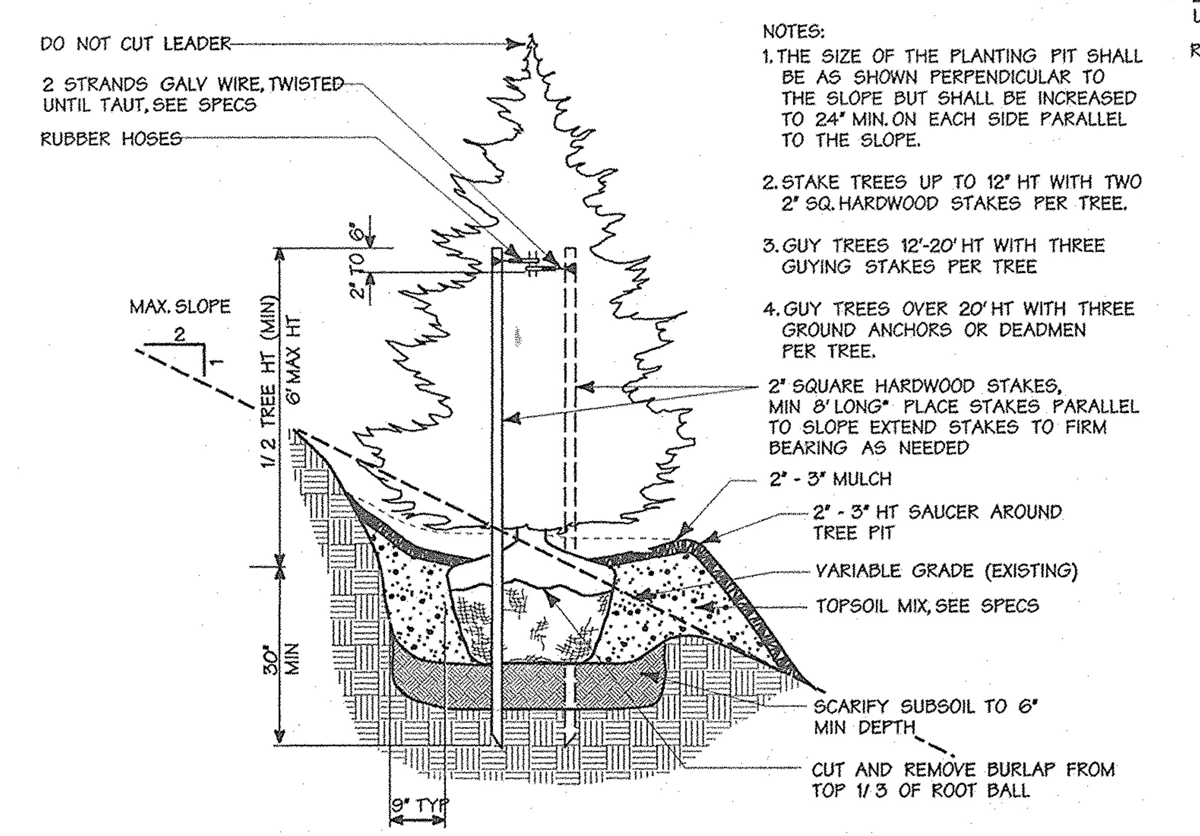

Evergreen Tree Planting on Slope
Not To Scale

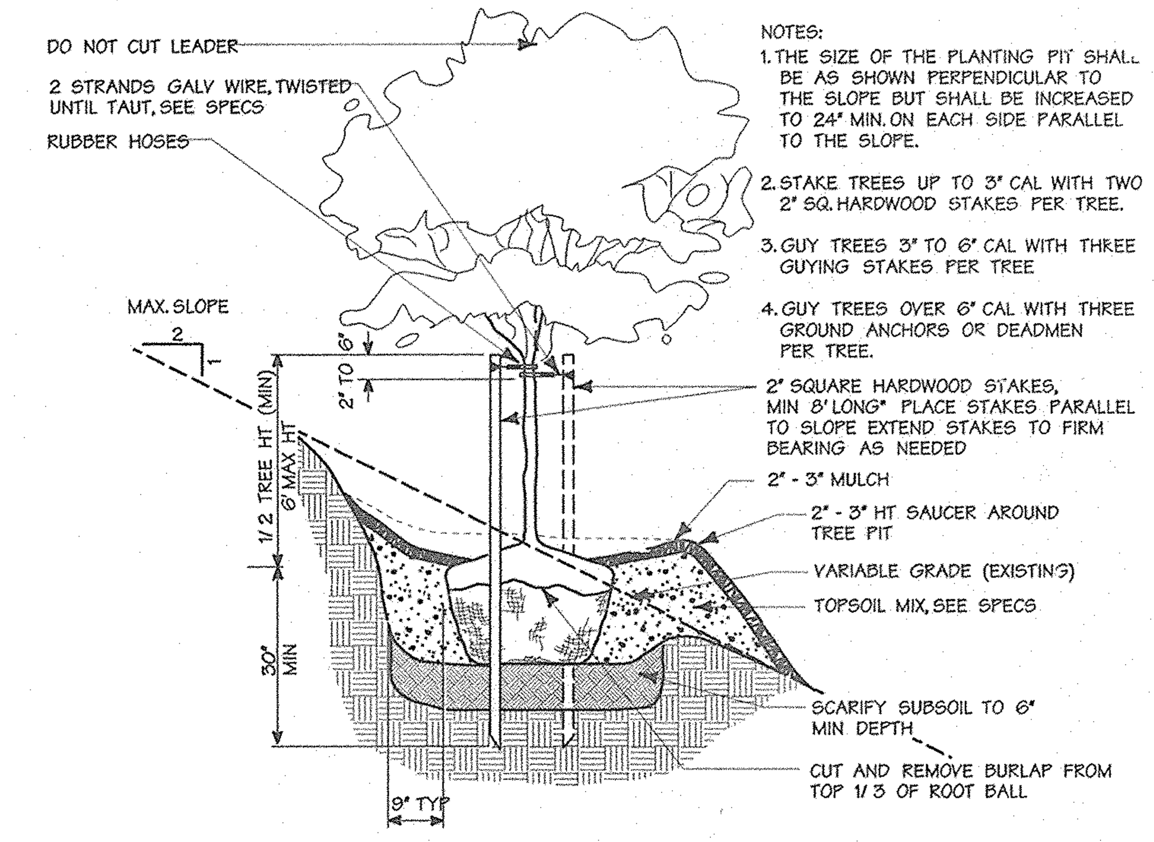

Tree Planting on Slope
Not To Scale

APPROVED: HOWARD COUNTY DEPT. OF PUBLIC WORKS

[signature] CHIEF, BUREAU OF HIGHWAYS HS — DATE 11-25-02

APPROVED: HOWARD COUNTY DEPT. OF PLANNING AND ZONING

[signature] CHIEF, DIVISION OF LAND DEVELOPMENT HB — DATE 12/6/02

[signature] CHIEF, DEVELOPMENT ENGINEERING DIVISION MK — DATE 12/2/02

Date	No.	Revision Description

EMERSON
(Formerly the Key Property)
Section 3, Area 1
Parcels A – I

OWNER /DEVELOPER:

THE HOWARD RESEARCH & DEVELOPMENT CORPORATION
10275 LITTLE PATUXENT PARKWAY
COLUMBIA, MARYLAND 21044

DMW
Daft·McCune·Walker, Inc.
200 East Pennsylvania Avenue
Towson, Maryland 21286
(410) 296-3333
Fax 296-4705
A Team of Land Planners, Landscape Architects, Engineers, Surveyors & Environmental Professionals

9·25·02
Date

STATE OF MARYLAND · MELANIE MOSER · No. 551 · REGISTERED · LANDSCAPE ARCHITECT

Landscape Architect No.

TITLE

FINAL PLAN
LANDSCAPE AND WATER
QUALITY NOTES AND DETAILS

Des By	Scale 1" = 50'	Proj. No. 01011.C
Drn By AJS	Date 9/25/02	
Chk By	Approved	30 OF 31

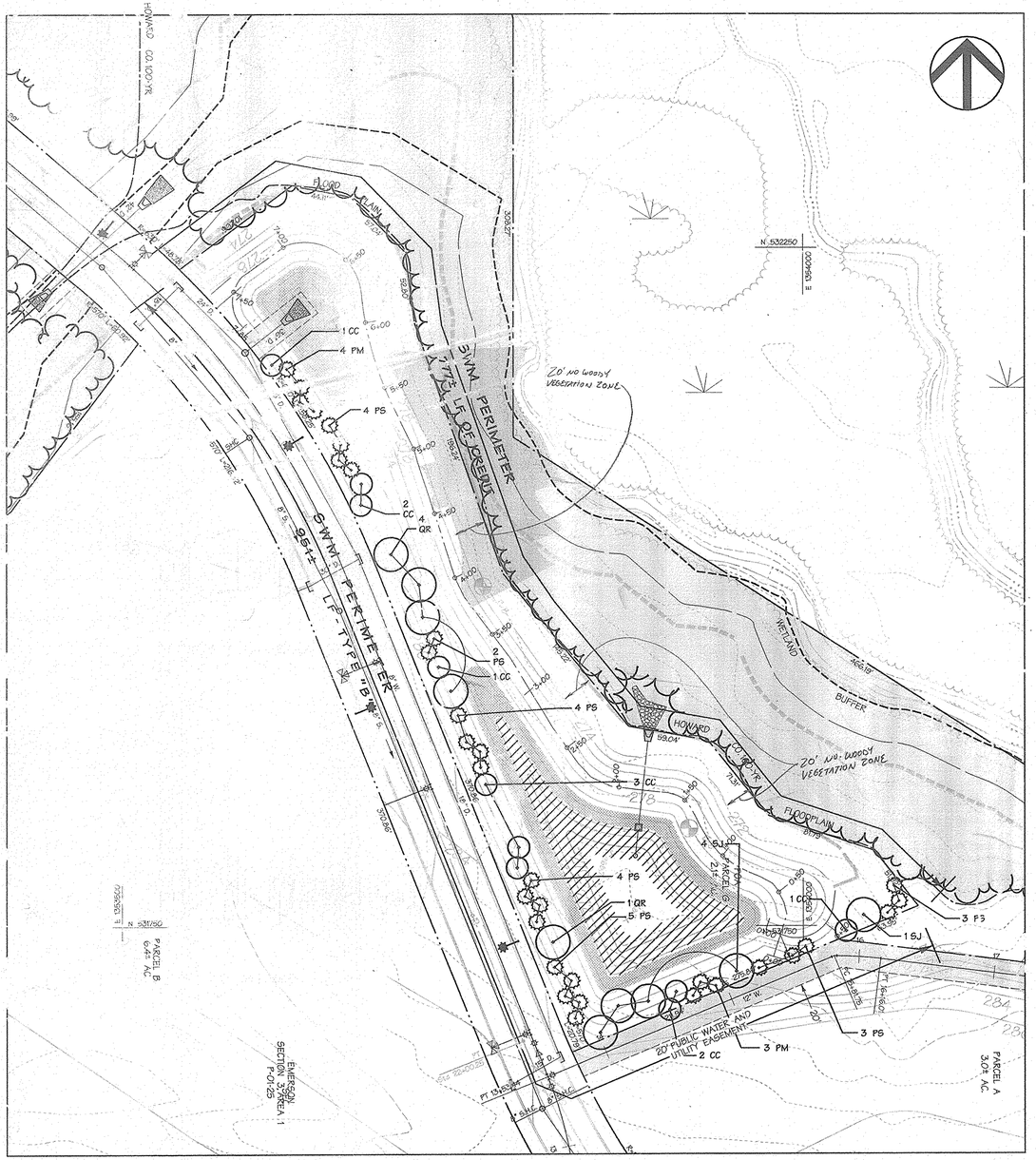

SWM POND II

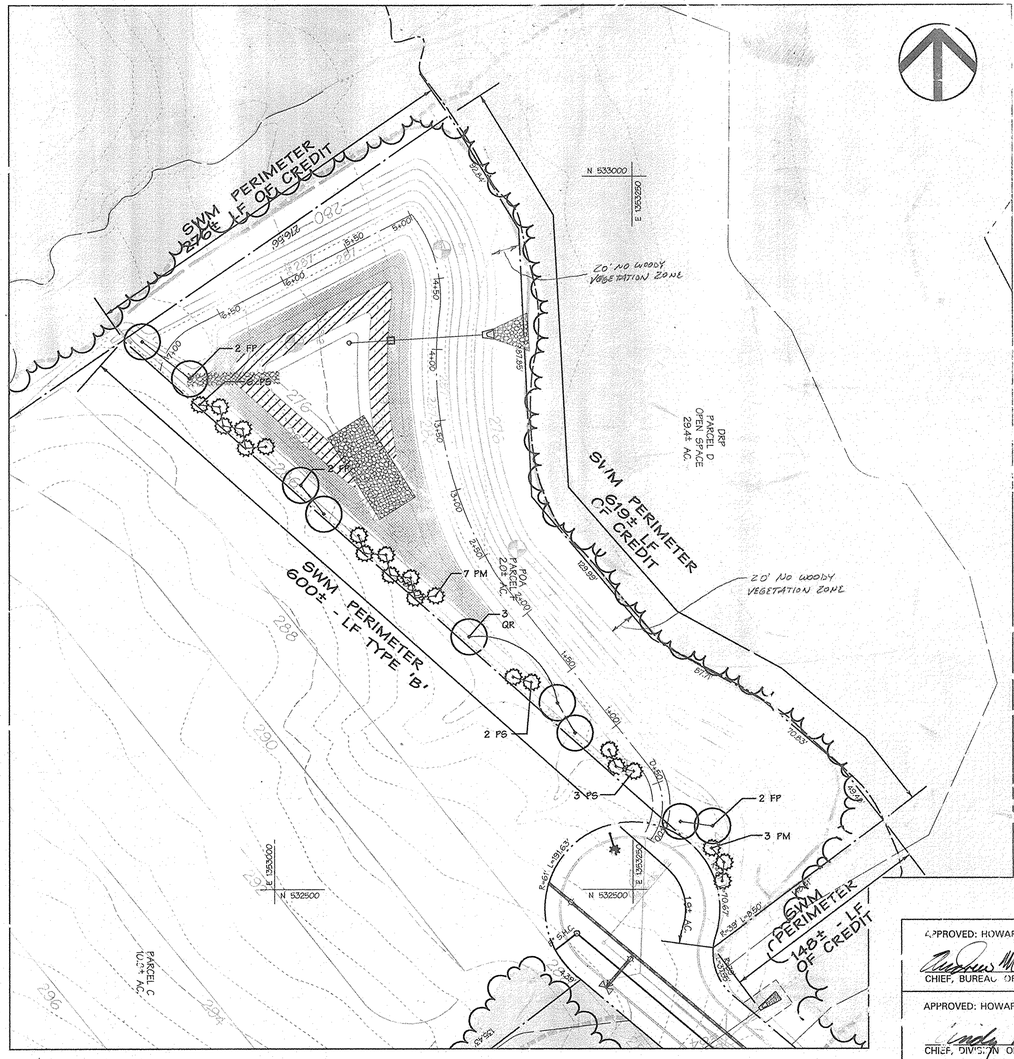

SWM POND I

SCHEDULE D
STORMWATER MANAGEMENT AREA LANDSCAPING

POND #	I	II
LINEAR FT OF PERIMETER (TYPE "B")	1643 LF	1728 LF
NUMBER OF TREES REQUIRED		
SHADE TREES @ 1/50 L.F.	12	19
EVERGREEN TREES @ 1/40 L.F.	19	24
CREDIT FOR EXISTING VEGETATION	1043 LF	777 LF
CREDIT FOR OTHER LANDSCAPING	NA	NA
NUMBER OF TREES PROVIDED		
SHADE TREES	9	13
EVERGREEN TREES	21	32
OTHER TREES		10

* THE DEVELOPER WILL PROVIDE ALL SWM LANDSCAPE OBLIGATIONS.

NOTE: PLANT SUBSTITUTIONS ARE AS FOLLOWS:
SWM POND I: 6 EVERGREEN TREES ARE SUBSTITUTED FOR 3 SHADE TREES
SWM POND II: 10 FLOWERING TREES ARE SUBSTITUTED FOR 5 SHADE TREES AND 8 EVERGREEN TREES ARE SUBSTITUTED FOR 4 SHADE TREES.

Plant List (This Sheet)

QTY	SYM	BOTANICAL NAME/ COMMON NAME	SIZE	REMARKS
SHADE TREES				
6	FP	FRAXINUS PENNSYLVANICA 'MARSHALL'S SEEDLESS' MARSHALLS' SEEDLESS GREEN ASH	2 1/2" - 3" CAL. 12'-14' HT	B & B FULL HEAD
8	QR	QUERCUS RUBRA RED OAK	2 1/2" - 3" CAL. 12'-14' HT	B & B FULL HEAD
5	SJ	SOPHORA JAPONICA JAPANESE PAGODA TREE	2 1/2" - 3" CAL. 12'-14' HT	B & B FULL HEAD
EVERGREEN TREES				
17	PM	PSEUDOTSUGA MENZIESII DOUGLASFIR	6'-8' HT.	B & B
36	PS	PINUS STROBUS WHITE PINE	6'-8' HT.	B & B HEAVY / UNSHEARED
FLOWERING TREES				
10	CC	CARPINUS CAROLINIANA AMERICAN HORNBEAM	8'-10' HT.	B & B

Water Quality Planting Plan**
Facility #1

ZONE "A" (9,530 ± s.f.)

Species	Size	Spacing	Quantity	Remarks
Scirpus tabernaemontanii	quart container*	36"	396	OBL
Panicum virgatum	quart container	36"	396	FAC
Saururus cernuus	quart container*	36"	396	OBL
TOTALS			1188	

ZONE "B" (4,250 ± s.f.)

Species	Size	Spacing	Quantity	Remarks
Sagittaria latifolia	quart container*	36"	273	OBL
Peltandra virginica	quart container*	36"	273	OBL
TOTALS			546	

Water Quality Planting Plan**
Facility #2

ZONE "A" (10,750 ± s.f.)

Species	Size	Spacing	Quantity	Remarks
Scirpus tabernaemontanii	quart container*	36"	230	OBL
Iris pseudacorii	quart container*	36"	230	OBL
Lobelia cardinalis	quart container	36"	230	FACW
Iris versicolor	quart container*	36"	230	OBL
Panicum virgatum	quart container	36"	230	FAC
Saururus cernuus	quart container*	36"	230	OBL
TOTALS			1380	

ZONE "B" (8,320 ± s.f.)

Species	Size	Spacing	Quantity	Remarks
Sagittaria latifolia	quart container*	36"	533	OBL
Peltandra virginica	quart container*	36"	533	OBL
TOTALS			1066	

*Dormant rhizomes of *Scirpus*, *Iris* and *Saururus*, dormant tubers of *Sagittaria*, and 1st year bulbs of *Peltandra* may be substituted if plantings are to be installed during dormant season.

**Alternate species and install in random pattern, distributing each species across the hydrologic gradient of each planting zone. Single species clumpings to be avoided.

Legend

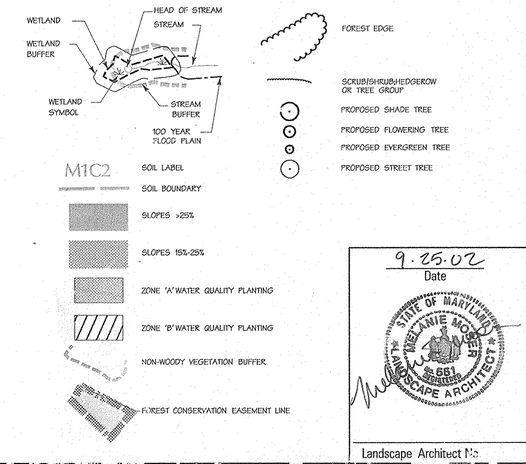

9.25.02
Date

STATE OF MARYLAND
MELANIE MOSER
551
REGISTERED
LANDSCAPE ARCHITECT

Landscape Architect No.

APPROVED: HOWARD COUNTY DEPT. OF PUBLIC WORKS

CHIEF, BUREAU OF HIGHWAYS — DATE 11-25-02

APPROVED: HOWARD COUNTY DEPT. OF PLANNING AND ZONING

CHIEF, DIVISION OF LAND DEVELOPMENT — DATE 12/6/02

CHIEF, DEVELOPMENT ENGINEERING DIVISION — DATE 12/2/02

Date	No.	Revision Description

EMERSON
(Formerly the Key Property)
Section 3, Area 1
Parcels A – I

OWNER /DEVELOPER:

THE HOWARD RESEARCH & DEVELOPMENT CORPORATION
10275 LITTLE PATUXENT PARKWAY
COLUMBIA, MARYLAND 21044

DMW
Daft/McCune/Walker, Inc.
200 East Pennsylvania Avenue
Towson, Maryland 21286
(410) 296-3313
Fax 296-4705

A Team of Land Planners, Landscape Architects, Engineers, Surveyors & Environmental Professionals

TITLE
FINAL PLAN
STORMWATER POND LANDSCAPING
& WATER QUALITY PLANTING

Des By		Scale	1" =
Drn By	AJS	Date	
Ck'd By		Approved	

Proj. No. 01011.C

SHEET 31 OF 31

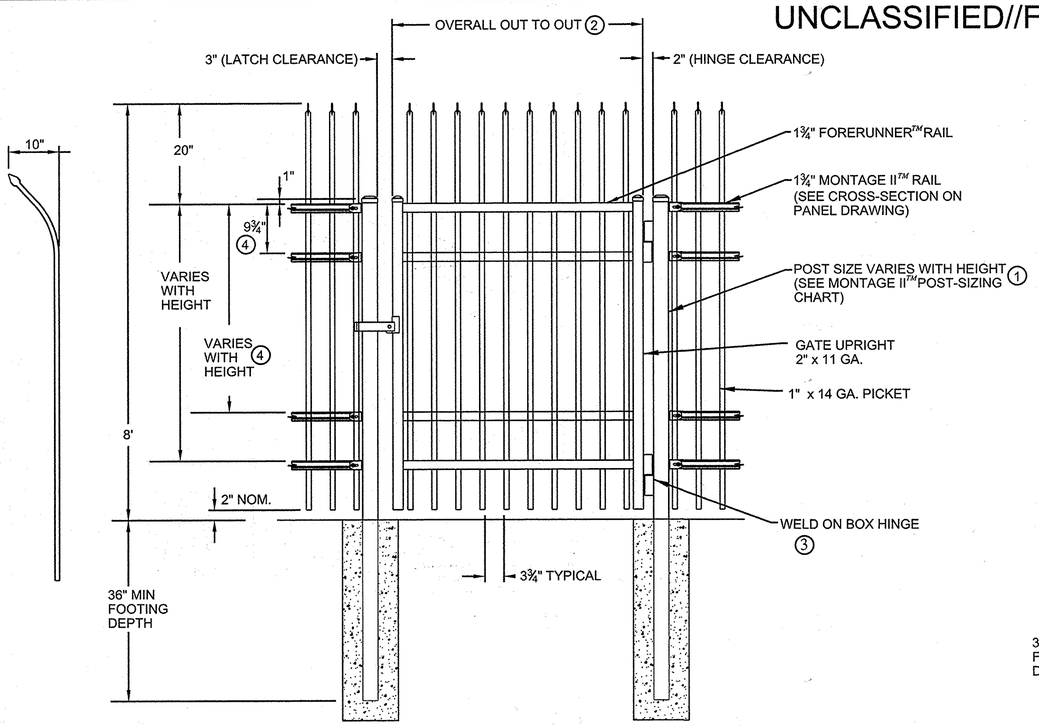

NOTES:
1.) POST SIZE DEPENDS ON FENCE HEIGHT, WEIGHT AND WIND LOADS. SEE *MONTAGE II ™* SPECIFICATIONS FOR POST SIZING CHART.
2.) SEE *AMERISTAR* GATE TABLE FOR STANDARD OUT TO OUTS. CUSTOM GATE OPENINGS AVAILABLE FOR SPECIAL OUT TO OUT/LEAF WIDTHS.
3.) ADDITIONAL STYLES OF GATE HARDWARE ARE AVAILABLE ON REQUEST THIS COULD CHANGE THE LATCH & HINGE CLEARANCE.
4.) THIRD & FORTH RAIL OPTIONAL.

2 AMERISTAR MONTAGE II ORNAMENTAL INVINCIBLE SINGLE SWING GATE

SCALE: NONE

DETAIL IS BASE DESIGN. CONCRACTOR MAY USE EQUIVALENT PRODUCT THAT MEETS PROJECT REQUIREMENTS AND SPECIFICATIONS AND AS APPROVED BY THE COR.

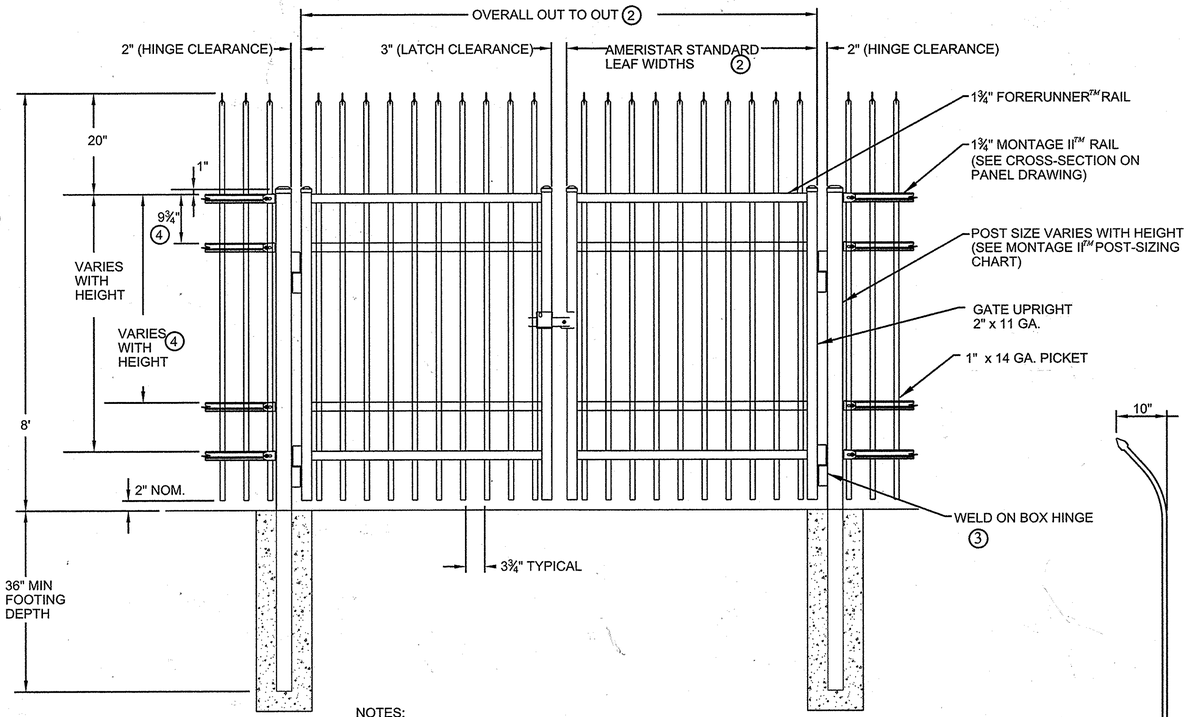

NOTES:
1.) POST SIZE DEPENDS ON FENCE HEIGHT, WEIGHT AND WIND LOADS. SEE MONTAGE II SPECIFICATIONS FOR POST SIZING CHART.
2.) SEE AMERISTAR GATE TABLE FOR STANDARD OUT TO OUTS. CUSTOM GATE OPENINGS AVAILABLE FOR SPECIAL OUT TO OUT/LEAF WIDTHS.
3.) ADDITIONAL STYLES OF GATE HARDWARE ARE AVAILABLE ON REQUEST. THIS COULD CHANGE THE LATCH AND HINGE CLEARANCE.
4.) THIRD AND FOURTH RAIL OPTIONAL.
5.) CONTRACTOR SHALL SAND DOWN END OF SCREWS ON HASPS AS NEEDED TO WELD HASP TO GATE.

3 AMERISTAR MONTAGE II ORNAMENTAL INVINCIBLE DOUBLE SWING GATE

SCALE: NONE

DETAIL IS BASE DESIGN. CONCRACTOR MAY USE EQUIVALENT PRODUCT THAT MEETS PROJECT REQUIREMENTS AND SPECIFICATIONS AND AS APPROVED BY THE COR.

GATE PLAN

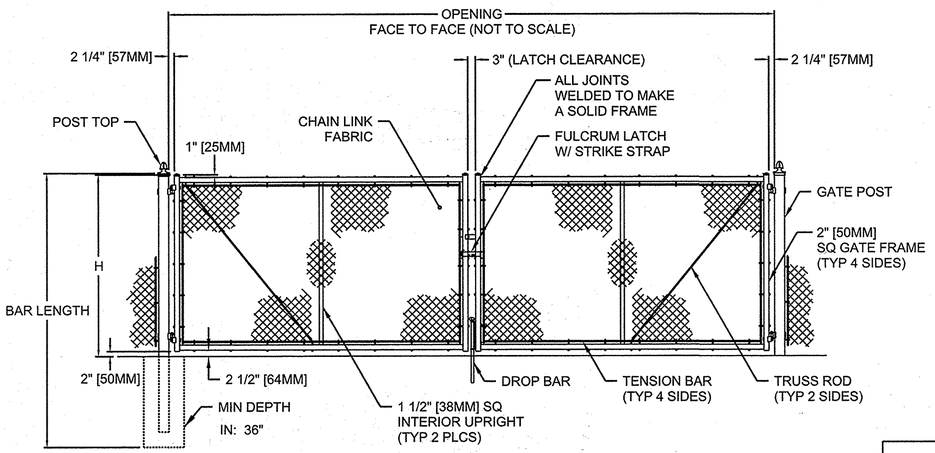

GATE ELEVATION - (4) BAYS SHOWN

NOM HEIGHT (H)
8'-0" [2438MM]

BAYS	OPENING (F/F)
4	20'-0" [6096MM]
4	22'-0" [6706MM]
4	24'-0" [7315MM]

END & CORNER POST TOP OPTIONS	
STANDARD	FLAT

GATE POST

OPENING	GATE POST (OD)	FABRIC HEIGHT	"A" DIAM	"B" DEPTH	"C" POST EMBED.
14' TO 24'	4"	3' TO 5'	12"	38"	36"
		6' TO 9'	14"	42"	40"
		10' TO 12'	16"	46"	44"

NOTES:
1. METRIC DIMENSIONS ARE NOMINAL EQUIVALENTS TO U.S. DIMENSIONS.
2. SPECIFICATIONS SHOWN CAN BE CHANGED BY MASTER-HALCO ONLY.
3. FOOTING WIDTH TO BE (4)X POST WIDTH.
4. GATES MAY BE MANUALLY OR ELECTRICALLY OPERATED. HARDWARE WILL VARY FOR ELECTRICALLY OPERATED GATES.

1 DOUBLE-LEAF DOUBLE SWING GATE

SCALE: NONE

PROFESSIONAL CERTIFICATION
I HEREBY CERTIFY THAT THESE DOCUMENTS WERE PREPARED OR APPROVED BY ME, AND THAT I AM A DULY LICENSED PROFESSIONAL ENGINEER UNDER THE LAWS OF THE STATE OF MARYLAND, LICENSE NO. 45292 EXPIRATION DATE: 05/21/2016

APPROVED: HOWARD COUNTY DEPT. OF PLANNING AND ZONING

CHIEF, DIVISION OF LAND DEVELOPMENT	DATE 10/15/14
CHIEF, DEVELOPMENT ENGINEERING DIVISION	DATE 10.10.14
DIRECTOR	DATE

Date	No.	Revision Description

EMERSON

Section 3, Area 1
Parcels A Through C and
Open Space Parcels D through I

SUBDIVISION NAME			SECTION AREA		LOT/PARCEL #
REVITZ PROPERTY					P/O PAR. 837
PLAT # OR L / F	BLOCK #	ZONE	TAX ZONE MAP	ELECT. DISTRICT	CENSUS TRACT
15828	20	PEC	47	6th	
WATER CODE			SEWER CODE		

TITLE

FENCE LAYOUT PLAN

Des. By	Scale 1"=150'	Proj. No.
Drn. By	Date 09-12-14	31D
Chk. By	Approved	

US Army Corps of Engineers
Baltimore District

REAL PROPERTY SERVICES FIELD OFFICE
ANNAPOLIS JUNCTION, MARYLAND

JACOBS
1100 N. GLEBE RD., ARLINGTON, VA. 22201

THE INFORMATION PROVIDED HEREIN IS THE PROPERTY OF THE UNITED STATES GOVERNMENT AND IS FURNISHED FOR THE PURPOSE STATED IN THE ACCOMPANYING DOCUMENT. DISTRIBUTION OF THIS DOCUMENT AND THE INFORMATION CONTAINED THEREIN TO ANY PERSON NOT DESIGNATED IN THE ACCOMPANYING DOCUMENT, REPRODUCTION OR DISSEMINATION OF THIS DOCUMENT OR OF THE INFORMATION CONTAINED THEREIN BY ANY PERSON OTHER THAN THOSE AUTHORIZED WITHOUT THE APPROVAL OF THE UNITED STATES GOVERNMENT IS STRICTLY PROHIBITED. VIOLATORS OF THIS REQUIREMENT WILL BE PROSECUTED TO THE FULLEST EXTENT OF THE LAW.

Mark	Description	Date	Appr.
1	NEW SHEET ADDED FOR REDLINE REVISION #1	10/10/2014	

Designed by: M.WERDER
Drwn by: M.WERDER
Chkd by: R.CROWLEY
FSFO Project Manager: AMY YALE
Submitted by: NATHAN JAMES, PROJECT MANAGER
Date: SEPTEMBER 19, 2014
Project No. 31435
Rev. -
File name:
Plot date:
Plot scale: AS SHOWN

EMERSON - CAMPUS FENCE
SITE DETAILS
ROOM(S) OR FLOOR
LAUREL, MD

Drawing No.
Sheet Reference No. 31D
Sheet of 006

F 02-131

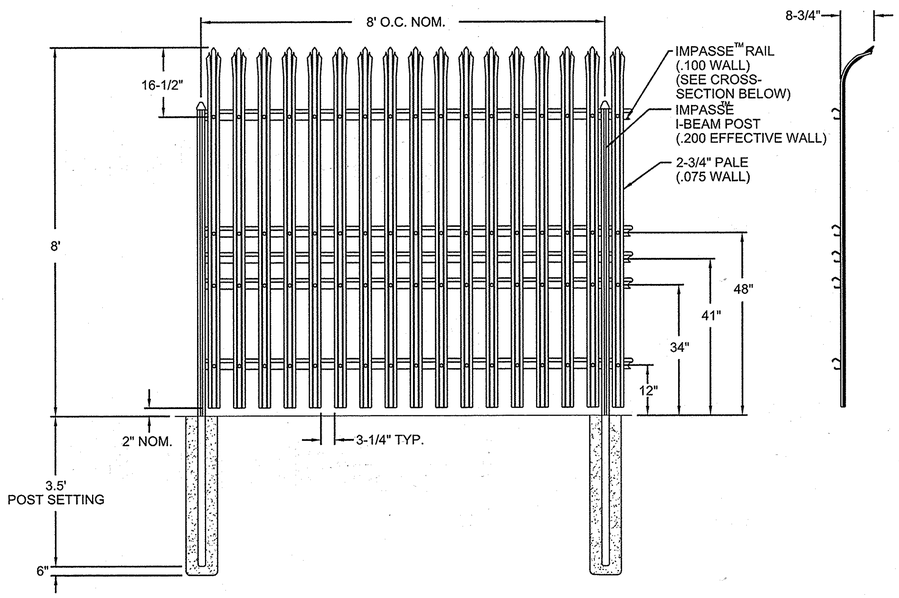

NOTES:

1. SEE DETAIL 2 ON THIS SHEET FOR K-12 ANTI-RAM CABLED STEEL BARRIER INSTALLTION FOR PORTIONS OF FENCE TO BE K-12 RATED. SEE SITE LAYOUT PLAN FOR SECTION OF FENCE THAT IS TO BE K-12 RATED.

2. IDS SYSTEM IS TO BE ATTACHED TO FENCE PICKETTS EVERY 8'. REPLACE CURVED PICKETTS WITH STRAIGHT PICKETTS AT LOCATIONS FOR IDS CONNECTIONS. FENCE HALF POSTS CAN BE USED FOR IDS CONNECTIONS. STRAIGHT PICKETTS ARE TO BE SAME HEIGHT AS CURVED PICKETTS.

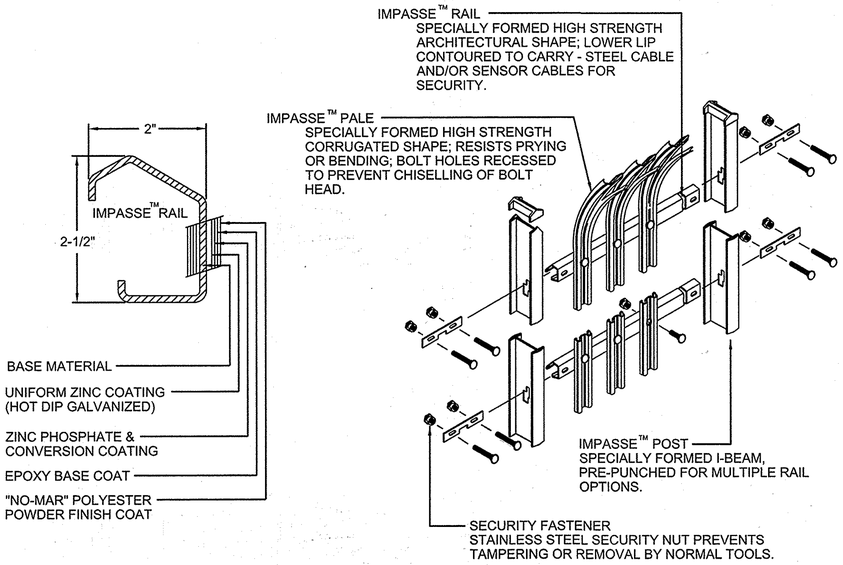

1 AMERISTAR 8' HIGH IMPASSE GAUNTLET HIGH SECURITY STEEL FENCE

SCALE: NONE

DETAIL IS BASE DESIGN. CONCRACTOR MAY USE EQUIVALENT PRODUCT THAT MEETS PROJECT REQUIREMENTS AND SPECIFICATIONS AND AS APPROVED BY THE COR.

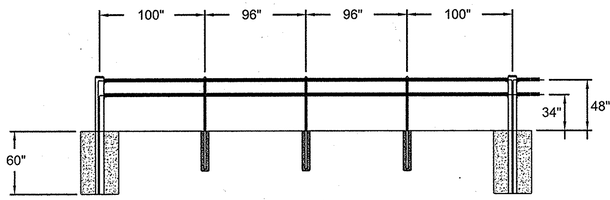

NOTE: SEE STALWART PANEL DRAWINGS FOR DETAILS OF PALES

IMPASSE PALES

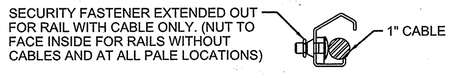

SECURITY FASTENER DETAIL

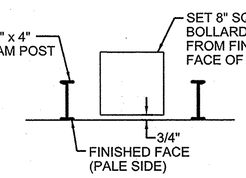

TOP VIEW POST SETTING

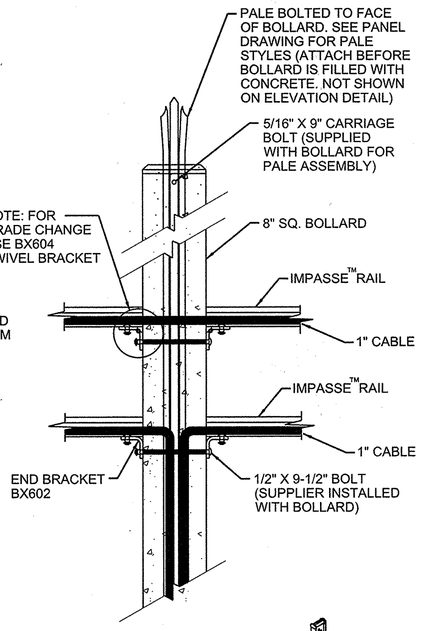

CABLE & RAIL DETAIL

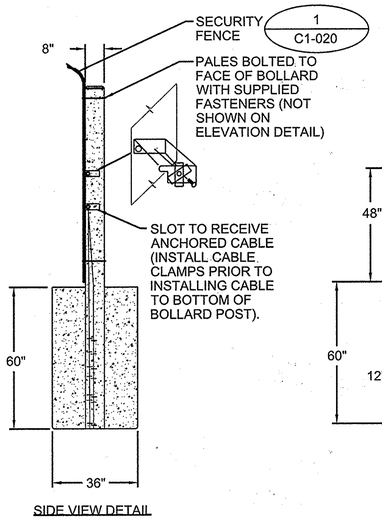

SIDE VIEW DETAIL

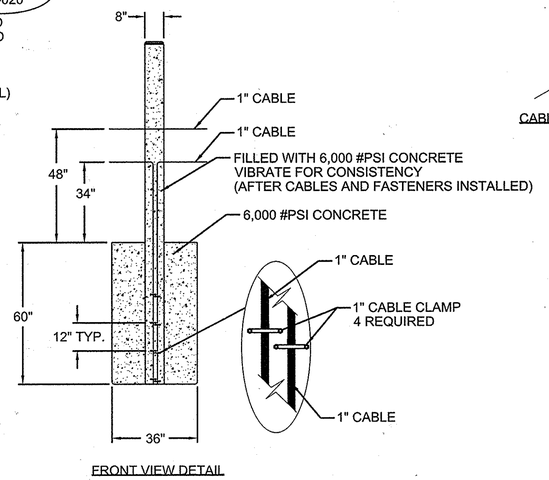

FRONT VIEW DETAIL

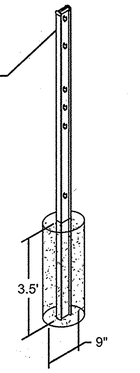

I-BEAM POST DETAIL

2 STALLWART M40 (K12) ANTI-RAM CABLED STEEL BARRIER

SCALE: NONE

DETAIL IS BASE DESIGN. CONCRACTOR MAY USE EQUIVALENT PRODUCT THAT MEETS PROJECT REQUIREMENTS AND SPECIFICATIONS AND AS APPROVED BY THE COR.

APPROVED: HOWARD COUNTY DEPT. OF PLANNING AND ZONING

CHIEF, DIVISION OF LAND DEVELOPMENT — DATE 10/15/14

CHIEF, DEVELOPMENT ENGINEERING DIVISION — DATE 10.10.14

DIRECTOR — DATE

Date	No.	Revision Description

EMERSON

Section 3, Area 1
Parcels A Through C and
Open Space Parcels D through I

SUBDIVISION NAME		SECTION AREA		LOT/PARCEL #
REVITZ PROPERTY				P/O PAR. 837
PLAT OR L. F.	BLOCK/ZONE	TAX ZONE MAP/ELEC. DISTRICT		CENSUS TRACT
15828	20 PEC	47	6th	
WATER CODE		SEWER CODE		

TITLE

FENCE LAYOUT PLAN

Des. By	Scale 1"=150'	Proj. No.
Drn. By	Date 09-12-14	31C
Chk. By	Approved	

PROFESSIONAL CERTIFICATION

I HEREBY CERTIFY THAT THESE DOCUMENTS WERE PREPARED OR APPROVED BY ME, AND THAT I AM A DULY LICENSED PROFESSIONAL ENGINEER UNDER THE LAWS OF THE STATE OF MARYLAND, LICENSE NO. 45292 EXPIRATION DATE: 05/21/2016

US Army Corps of Engineers
Baltimore District

REAL PROPERTY SERVICES FIELD OFFICE
ANNAPOLIS JUNCTION, MARYLAND

JACOBS
1100 N.GLEBE RD., ARLINGTON, VA. 22201

THE INFORMATION PROVIDED HEREIN IS THE PROPERTY OF THE UNITED STATES GOVERNMENT AND IS FURNISHED FOR THE PURPOSE STATED IN THE ACCOMPANYING DOCUMENT. DISTRIBUTION OF THIS DOCUMENT AND THE INFORMATION CONTAINED HEREIN TO ALL INTERESTED PARTIES MAY BE MADE IN THE ACCOMPANYING DOCUMENT. REPRODUCTION OR DISSEMINATION OF THIS DOCUMENT OR OF THE INFORMATION CONTAINED HEREIN IS EXPRESSLY FORBIDDEN UNLESS AUTHORIZED BY THE GOVERNMENT OR WITHOUT THE APPROVAL OF THE UNITED STATES GOVERNMENT IS STRICTLY PROHIBITED. VIOLATORS OF THIS REQUIREMENT WILL BE PROSECUTED TO THE FULLEST EXTENT OF THE LAW.

Mark	Description	Date	Appr.
1	NEW SHEET ADDED FOR REDLINE REVISION #1	10/10/2014	

Designed by: B.PARGBRIER
Drawn by: B.PARGBRIER
Chkd by: R.CROWLEY
RSFO Project Manager: AMY YALE
Submitted by: NATHAN JAMES PROJECT MANAGER
Date: SEPTEMBER 19, 2014
Project No. 31435
Rev. -
File name:
Plot date:
Plot scale: AS SHOWN

EMERSON - CAMPUS FENCE
SITE DETAILS
LAUREL, MD
ROOM(S) OR FLOOR

Drawing No.

Sheet Reference No. 31C
Sheet of 006

F 02-131

UNCLASSIFIED//FOR OFFICIAL USE ONLY

END & CORNER POST TOP OPTIONS	
STANDARD	FLAT

GATE POST

GATE LEAF WIDTH	GATE POST (OD)	FABRIC HEIGHT	"A" DIAM	"B" DEPTH	"C" POST EMBED.
3' TO 6'	2.875"	3' TO 5'	12"	38"	36"
		6' TO 9'	14"	42"	40"
		10' TO 12'	16"	46"	44"
7' TO 12'	4.000"	3' TO 5'	14"	38"	36"
		6' TO 9'	16"	42"	40"
		10' TO 12'	18"	46"	44"

NOM HEIGHT (H)
8'-0" [2438MM]

OPENING (F/F)
24' [7315MM]

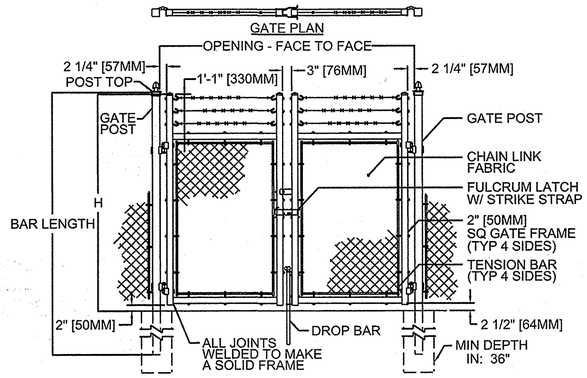

GATE ELEVATION

NOTES:
1. METRIC DIMENSIONS ARE NOMINAL EQUIVALENTS TO U.S. DIMENSIONS.
2. SPECIFICATIONS SHOWN CAN BE CHANGED BY MASTER HALCO ONLY.
3. FOOTING WIDTH TO BE (4)X POST WIDTH.
4. GATES MAY BE MANUALLY OR ELECTRICALLY OPERATED. HARDWARE WILL VARY FOR ELECTRICALLY OPERATED GATES.

2 SINGLE-LEAF DOUBLE SWING GATE
SCALE: NONE

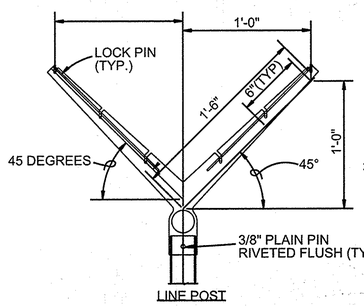

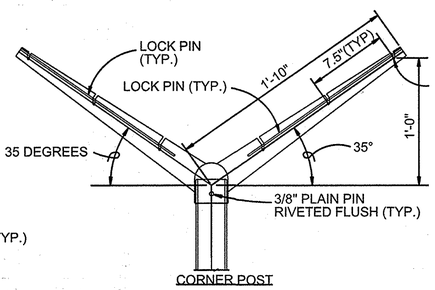

EXTENSION ARM DETAILS

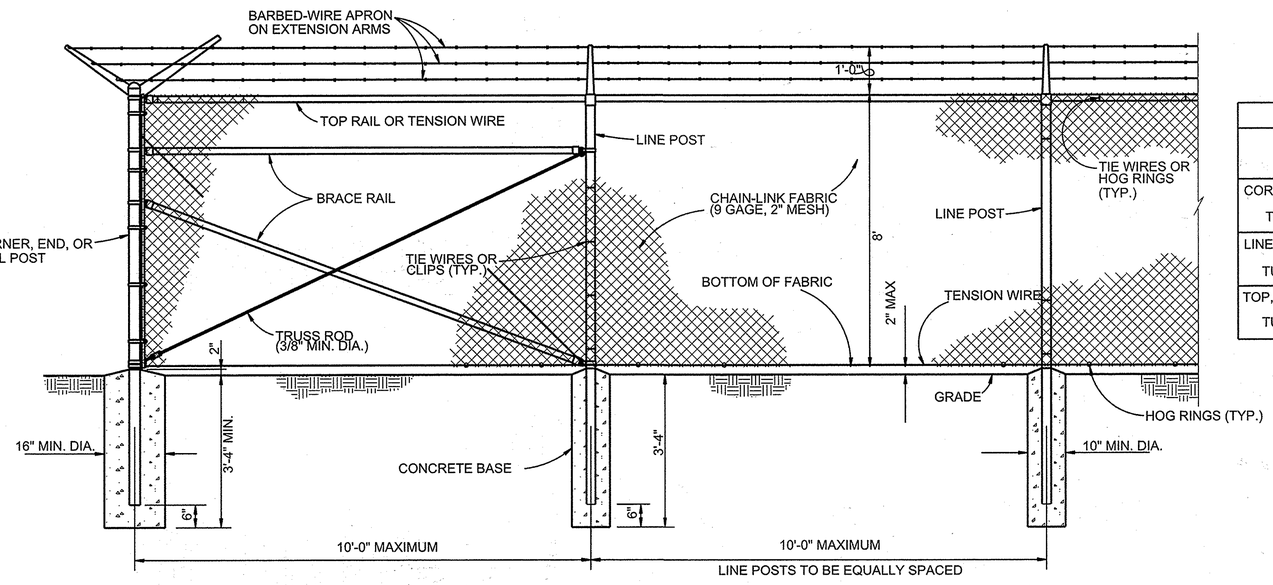

1 CHAIN LINK SECURITY FENCE
SCALE: NONE

STEEL POST SCHEDULE	
USE AND SECTION	MINIMUM OUTSIDE DIMENSIONS (NOMINAL)
	FABRIC WIDTH 84" TO 96"
CORNER, END & PULL POSTS	
TUBULAR - ROUND	2.875" O.D.
LINE POSTS	
TUBULAR - ROUND	2.375" O.D.
TOP, BOTTOM & BRACE RAILS	
TUBULAR - ROUND	1.66" O.D.

END & CORNER POST TOP OPTIONS	
STANDARD	FLAT

GATE POST

GATE LEAF WIDTH	GATE POST (OD)	FABRIC HEIGHT	"A" DIAM	"B" DEPTH	"C" POST EMBED.
3' TO 6'	2.875"	3' TO 5'	12"	38"	36"
		6' TO 9'	14"	42"	40"
		10' TO 12'	16"	46"	44"

NOM HEIGHT (H)
8'-0" [2438MM]

OPENING (F/F)
4'-0" [1219MM]

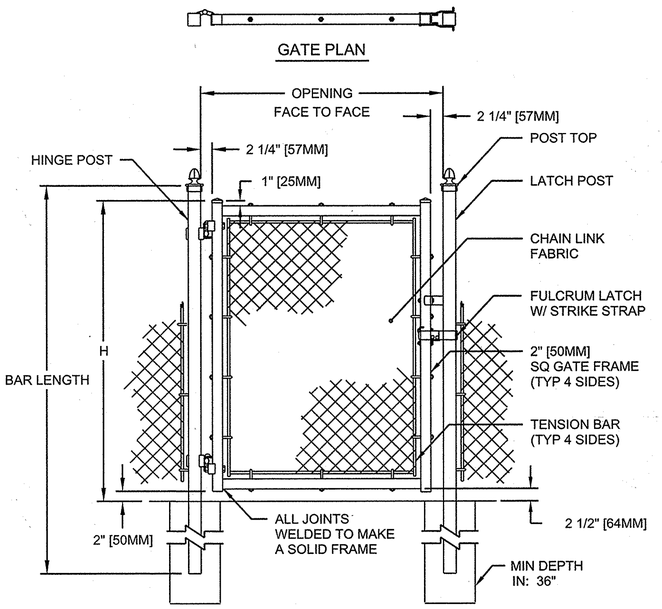

GATE ELEVATION

NOTES:
1. METRIC DIMENSIONS ARE NOMINAL EQUIVALENTS TO U.S. DIMENSIONS.
2. SPECIFICATIONS SHOWN CAN BE CHANGED BY MASTER-HALCO ONLY.
3. FOOTING WIDTH TO BE (4)X POST WIDTH.
4. GATES MAY BE MANUALLY OR ELECTRICALLY OPERATED. HARDWARE WILL VARY FOR ELECTRICALLY OPERATED GATES.

3 SINGLE SWING GATE
SCALE: NONE

STATE OF MARYLAND
ROBERT A. CROWLEY
45292
PROFESSIONAL ENGINEER
10-1-2014

PROFESSIONAL CERTIFICATION
I HEREBY CERTIFY THAT THESE DOCUMENTS WERE PREPARED OR APPROVED BY ME, AND THAT I AM A DULY LICENSED PROFESSIONAL ENGINEER UNDER THE LAWS OF THE STATE OF MARYLAND, LICENSE NO. 45292 EXPIRATION DATE: 05/21/2016

APPROVED: HOWARD COUNTY DEPT. OF PLANNING AND ZONING

CHIEF, DIVISION OF LAND DEVELOPMENT — DATE 10/15/14

CHIEF, DEVELOPMENT ENGINEERING DIVISION — DATE 10-10-14

DIRECTOR — N/A — DATE

Date	No.	Revision Description

EMERSON
Section 3, Area 1
Parcels A Through C and
Open Space Parcels D through I

SUBDIVISION NAME			SECTION AREA		LOT/PARCEL #
REVITZ PROPERTY					P/O PAR. 837
PLAT# OR L/F	BLOCK#	ZONE	TAX ZONE MAP	ELECT. DISTRICT	CENSUS TRACT
15828	20	PEC	47	6th	
WATER CODE			SEWER CODE		

TITLE
FENCE LAYOUT PLAN

Des. By	Scale 1"=150'	Proj. No.
Drn. By	Date 09-12-14	31B
Chk. By	Approved	

US Army Corps of Engineers
Baltimore District

REAL PROPERTY SERVICES
ANNAPOLIS JUNCTION, MARYLAND

JACOBS
1100 N.GLEBE RD., ARLINGTON, VA. 22201

THE INFORMATION PROVIDED HEREIN IS THE PROPERTY OF THE UNITED STATES GOVERNMENT AND IS FURNISHED FOR THE PURPOSE STATED IN THE ACCOMPANYING DOCUMENT. DISTRIBUTION OF THIS DOCUMENT AND THE INFORMATION CONTAINED HEREIN TO ALL INTERESTED PARTIES MAY BE MADE IN THE ACCOMPANYING DOCUMENT. REPRODUCTION OR DISSEMINATION OF THIS DOCUMENT OR OF THE INFORMATION CONTAINED HEREIN BEYOND THAT WHICH IS NECESSARY FOR THE STATED PURPOSE WITHOUT THE APPROVAL OF THE UNITED STATES GOVERNMENT IS STRICTLY PROHIBITED. VIOLATORS OF THIS REQUIREMENT WILL BE PROSECUTED TO THE FULLEST EXTENT OF THE LAW.

Mark	Description	Date	Appr.
1	NEW SHEET ADDED FOR REDLINE REVISION #1	10/10/2014	

Designed by: M. WERDER
Drawn by: M. WERDER
Cad by: R.CROWLEY
RSFO Project Manager: AMY YALE
Submitted by: NATHAN JAMES PROJECT MANAGER
Date: SEPTEMBER 19, 2014
Project No. 31435
File name:
Plot date:
Plot scale: AS SHOWN
Rev. -

EMERSON - CAMPUS FENCE
SITE DETAILS
ROOM(S) OR FLOOR
LAUREL, MD

Drawing No.
Sheet Reference No.
31B
Sheet of 006

UNCLASSIFIED//FOR OFFICIAL USE ONLY

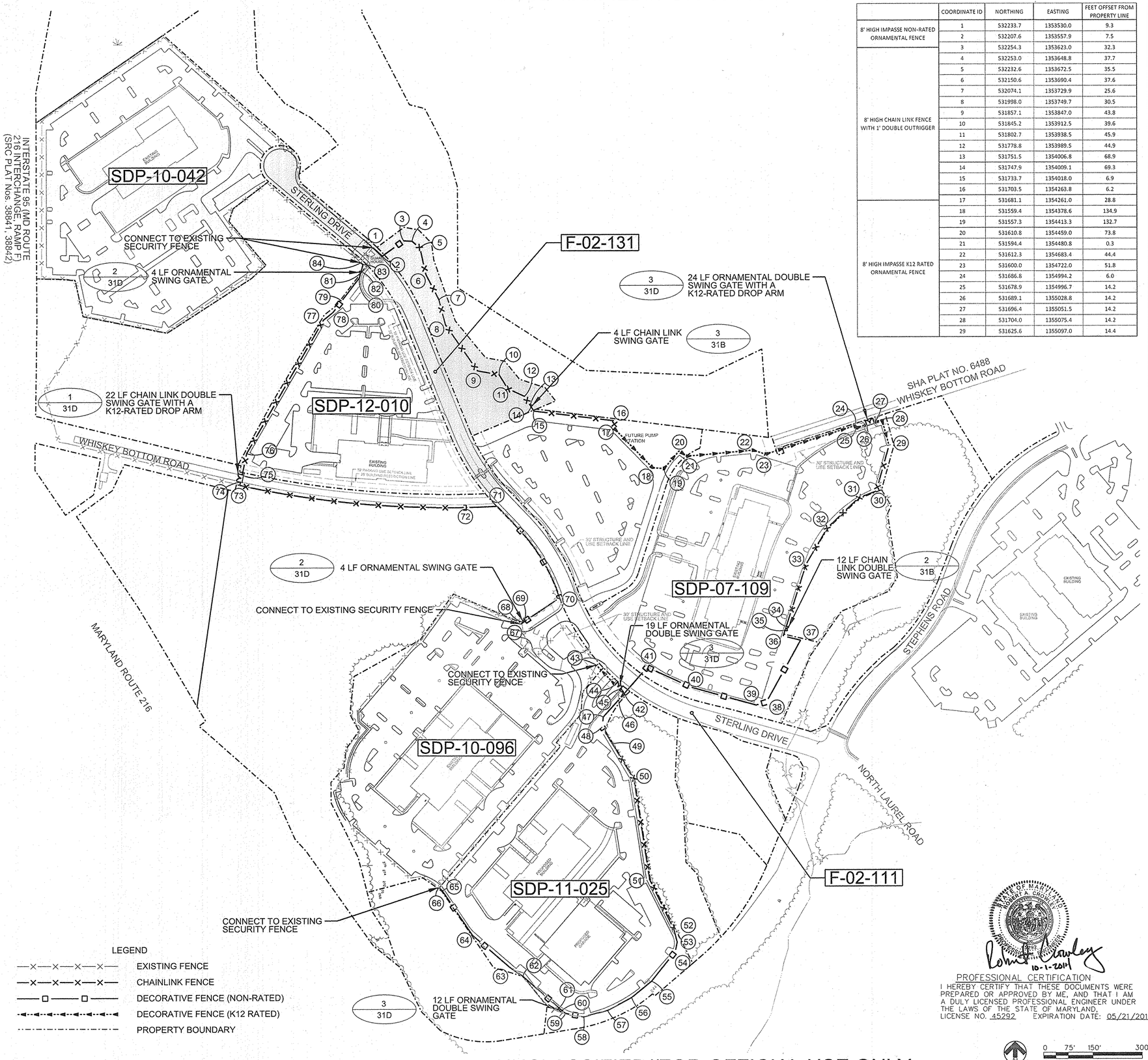

	COORDINATE ID	NORTHING	EASTING	FEET OFFSET FROM PROPERTY LINE
8' HIGH IMPASSE NON-RATED ORNAMENTAL FENCE	1	532233.7	1353530.0	9.3
	2	532207.6	1353557.9	7.5
	3	532254.3	1353623.0	32.3
8' HIGH CHAIN LINK FENCE WITH 1' DOUBLE OUTRIGGER	4	532253.0	1353648.8	37.7
	5	532232.6	1353672.5	35.5
	6	532150.6	1353690.4	37.6
	7	532074.1	1353729.9	25.6
	8	531998.0	1353749.7	30.5
	9	531857.1	1353847.0	43.8
	10	531845.2	1353912.5	39.6
	11	531802.7	1353938.5	45.9
	12	531778.8	1353989.5	44.9
	13	531751.5	1354006.8	68.9
	14	531747.9	1354009.1	69.3
	15	531733.7	1354018.0	6.9
	16	531703.5	1354263.8	6.2
8' HIGH IMPASSE K12 RATED ORNAMENTAL FENCE	17	531681.1	1354261.0	28.8
	18	531559.4	1354378.6	134.9
	19	531557.3	1354413.3	132.7
	20	531610.8	1354459.0	73.8
	21	531594.4	1354480.8	0.3
	22	531612.3	1354683.4	44.4
	23	531600.0	1354722.0	51.8
	24	531686.8	1354994.2	6.0
	25	531678.9	1354996.7	14.2
	26	531689.1	1355028.8	14.2
	27	531696.4	1355051.5	14.2
	28	531704.0	1355075.4	14.2
	29	531625.6	1355097.0	14.4

	COORDINATE ID	NORTHING	EASTING	FEET OFFSET FROM PROPERTY LINE
8' HIGH CHAIN LINK FENCE WITH 1' DOUBLE OUTRIGGER	29	531625.6	1355097.0	14.4
	30	531487.3	1355058.4	2.5
	31	531466.2	1355003.9	2.5
	32	531375.2	1354908.7	2.5
	33	531266.0	1354845.0	0.0
	34	531075.5	1354783.8	0.0
	35	531063.8	1354780.1	0.0
8' HIGH IMPASSE NON-RATED ORNAMENTAL FENCE	36	531045.8	1354774.3	6.0
	37	531033.3	1354827.1	6.0
	38	530846.1	1354723.0	50.0
	39	530837.3	1354691.9	33.0
	40	530891.5	1354495.6	34.4
	41	530953.0	1354360.7	26.5
8' HIGH IMPASSE K12 RATED ORNAMENTAL FENCE	42	530874.1	1354291.6	14.5
	43	530959.6	1354206.6	13.4
	44	530900.0	1354263.2	12.8
	45	530886.4	1354277.9	10.0
8' HIGH IMPASSE NON-RATED ORNAMENTAL FENCE	46	530854.5	1354274.0	7.5
	47	530802.1	1354227.0	20.0
	48	530771.7	1354223.7	12.3
8' HIGH CHAIN LINK FENCE WITH 1' DOUBLE OUTRIGGER	49	530720.0	1354255.0	2.0
	50	530615.3	1354318.4	2.0
	51	530308.5	1354367.5	2.0
8' HIGH IMPASSE NON-RATED ORNAMENTAL FENCE	52	530158.1	1354440.4	4.7
	53	530119.6	1354450.4	13.0
	54	530090.6	1354444.4	31.4
	55	530001.4	1354372.7	40.2
	56	529952.2	1354311.7	29.6
	57	529912.6	1354238.4	28.6
	58	529892.6	1354166.4	31.3
	59	529903.4	1354111.0	51.6
	60	529912.9	1354100.1	46.3
	61	529920.8	1354091.1	36.4
	62	530016.4	1353981.6	0.0
	63	530042.7	1353942.5	14.2
	64	530141.4	1353828.3	2.2
	65	530275.8	1353737.0	1.9
	66	530286.0	1353726.9	4.4
	67	531084.8	1353977.6	3.7
	68	531089.6	1353984.8	0.0
	69	531092.0	1353988.4	0.0
	70	531164.5	1354095.9	0.9
8' HIGH CHAIN LINK FENCE WITH 1' DOUBLE OUTRIGGER	71	531443.9	1353905.8	0.9
	72	531440.2	1353802.7	0.0
	73	531508.5	1353124.3	0.0
	74	531518.5	1353126.4	10.2
	75	531540.6	1353131.8	7.0
	76	531605.3	1353145.4	6.4
	77	532012.6	1353378.9	5.7
8' HIGH IMPASSE NON-RATED ORNAMENTAL FENCE	78	532035.8	1353407.9	10.0
	79	532070.3	1353434.3	4.4
	80	532140.6	1353488.1	4.7
	81	532155.9	1353492.3	1.1
	82	532160.1	1353493.5	2.7
	83	532181.5	1353499.4	7.9
	84	532187.4	1353492.6	8.5

APPROVED: HOWARD COUNTY DEPT. OF PLANNING AND ZONING

CHIEF, DIVISION OF LAND DEVELOPMENT — DATE 10/15/14

CHIEF, DEVELOPMENT ENGINEERING DIVISION — DATE 10.10.14

DIRECTOR N/A — DATE N/A

Date	No.	Revision Description

PROFESSIONAL CERTIFICATION

I HEREBY CERTIFY THAT THESE DOCUMENTS WERE PREPARED OR APPROVED BY ME, AND THAT I AM A DULY LICENSED PROFESSIONAL ENGINEER UNDER THE LAWS OF THE STATE OF MARYLAND, LICENSE NO. 45292 EXPIRATION DATE: 05/21/2016

10-1-2014

EMERSON

Section 3, Area 1

Parcels A Through C and

Open Space Parcels D through I

SUBDIVISION NAME			SECTION AREA			LOT/PARCEL #
REVITZ PROPERTY						P/O PAR. 837
PLAT # OR L F	BLOCK #	ZONE	TAX ZONE MAP	ELECT. DISTRICT		CENSUS TRACT
15828	20	PEC	47	6th		
WATER CODE			SEWER CODE			

TITLE

FENCE LAYOUT PLAN

Des. By	Scale 1"=150'	Proj. No.
Drn. By	Date 09-12-14	31A
Chk. By	Approved	

US Army Corps of Engineers
Baltimore District

REAL PROPERTY SERVICES
FIELD OFFICE
ANNAPOLIS JUNCTION, MARYLAND

JACOBS
1100 N GLEBE RD., ARLINGTON, VA. 22201

THE INFORMATION PROVIDED HEREIN IS THE PROPERTY OF THE UNITED STATES GOVERNMENT. IT IS PROVIDED ONLY FOR THE PURPOSE STATED IN THE DOCUMENT. FURTHER DISTRIBUTION OF THIS DOCUMENT AND THE INFORMATION CONTAINED HEREIN IS LIMITED TO THE RECIPIENT SPECIFIED IN THE DOCUMENT. REPRODUCTION OF THIS DOCUMENT AND DISSEMINATION OF THIS DOCUMENT OR OF THE INFORMATION CONTAINED HEREIN IN WHOLE OR IN PART IN ANY MEDIUM WITHOUT THE EXPRESS WRITTEN CONSENT OF THE GOVERNMENT IS STRICTLY PROHIBITED. VIOLATIONS OF THIS REQUIREMENT WILL BE PROSECUTED TO THE FULLEST EXTENT OF THE LAW.

No.	Date	Description
1	10/14	NEW SHEET ADDED FOR REDLINE REVISION #1

Designed by: M. WEBBER
Drawn by: M. WEBBER
Date: SEPTEMBER 19, 2014
Ckd by: K.CROWLEY
Project No. 31435
RSFO Project Manager AMY YALE
Submitted by: NATHAN JAMES PROJECT MANAGER
File name: Revit Plot scale: 1:150
Rev.

EMERSON - CAMPUS FENCE
FENCE LAYOUT PLAN
ROOM(S) OR FLOOR
LAUREL, MD

Drawing No.
Sheet Reference No. 31A
Sheet of 006

UNCLASSIFIED//FOR OFFICIAL USE ONLY