Final Plan for Revitz Property

Howard County Maryland

Legend

- WETLAND
- 25' WETLAND BUFFER
- WETLAND SYMBOL
- HEAD OF STREAM
- STREAM BANK
- 50' STREAM BUFFER
- PUBLIC 100 YEAR FLOOD PLAIN, DRAINAGE AND UTILITY EASEMENT
- EX. CURB & GUTTER
- EX. MAJOR CONTOURS — 400
- EX. MINOR CONTOURS — 402
- PROP. STORM DRAIN — 15" RCCP CL. IV
- PROP. SEWER — 6" S.
- PROP. WATER — 4" W.
- EX. STORM DRAIN — EX. 21" RCP
- EX. SEWER — EX. 8" S.
- EX. WATER — EX. 8" W.
- UTILITY EASEMENTS
- LIMIT OF DISTURBANCE
- PROPOSED SHADE TREE
- PROPOSED FLOWERING TREE
- PROPOSED EVERGREEN TREE
- PROPOSED STREET TREE
- SOIL LABEL — M1C2
- SOIL BOUNDARY
- SLOPES >25%
- SLOPES 15%-25%
- EX. FOREST EDGE
- SCRUB/SHRUB; HEDGEROW OR TREE GROUP
- PROPOSED WOODS EDGE
- NON-WOODY VEGETATION BUFFER
- FOREST CONSERVATION EASEMENT LINE
- REFORESTATION AREA
- EARTH/DIVERSION DIKE
- SILT FENCE — SF
- SUPER SILT FENCE — SSF
- CLEAN WATER DIVERSION PIPE
- LIMIT OF DISTURBANCE — LOD
- PROPOSED S.E.C. BASIN FACILITY — BASIN II
- PROPOSED SEDIMENT TRAP
- MOUNTABLE BERM
- SANDBAG DIVERSION
- CURB INLET PROTECTION — CIP
- REMOVABLE PUMPING STATION — RPS
- STABILIZED CONSTRUCTION ENTRANCE — SCE
- GABION MATTRESS INFLOW PROTECTION — GM
- DEWATERING BASIN
- PERMANENT SWALE
- PROPOSED SWM EASEMENT
- PROPERTY LINE
- ROADWAY RIGHT-OF-WAY
- PROPOSED LOT LINE
- EXISTING CONDITION DRAINAGE AREA TO TRAPS AND BASINS
- INTERIM CONDITION DRAINAGE AREAS
- PROPOSED CONDITION DRAINAGE AREAS
- EXISTING CONDITION Tc PATH
- PROPOSED CONDITION Tc PATH
- SOIL BORING — B-10
- EARTH DIKE
- PROPOSED SWM EASEMENT

3 THE PURPOSE OF REVISION #3 IS TO SHOW THE WORK ASSOCIATED WITH THE EMERSON CAMPUS VCP, SDP-16-005

3 PROFESSIONAL CERTIFICATION FOR REV #3

I HEREBY CERTIFY THAT THESE DOCUMENTS WERE PREPARED OR APPROVED BY ME, AND THAT I AM A DULY LICENSED PROFESSIONAL ENGINEER UNDER THE LAWS OF THE STATE OF MARYLAND, LICENSE NO. 45292 EXPIRATION DATE: 05/21/2018

11-22-16

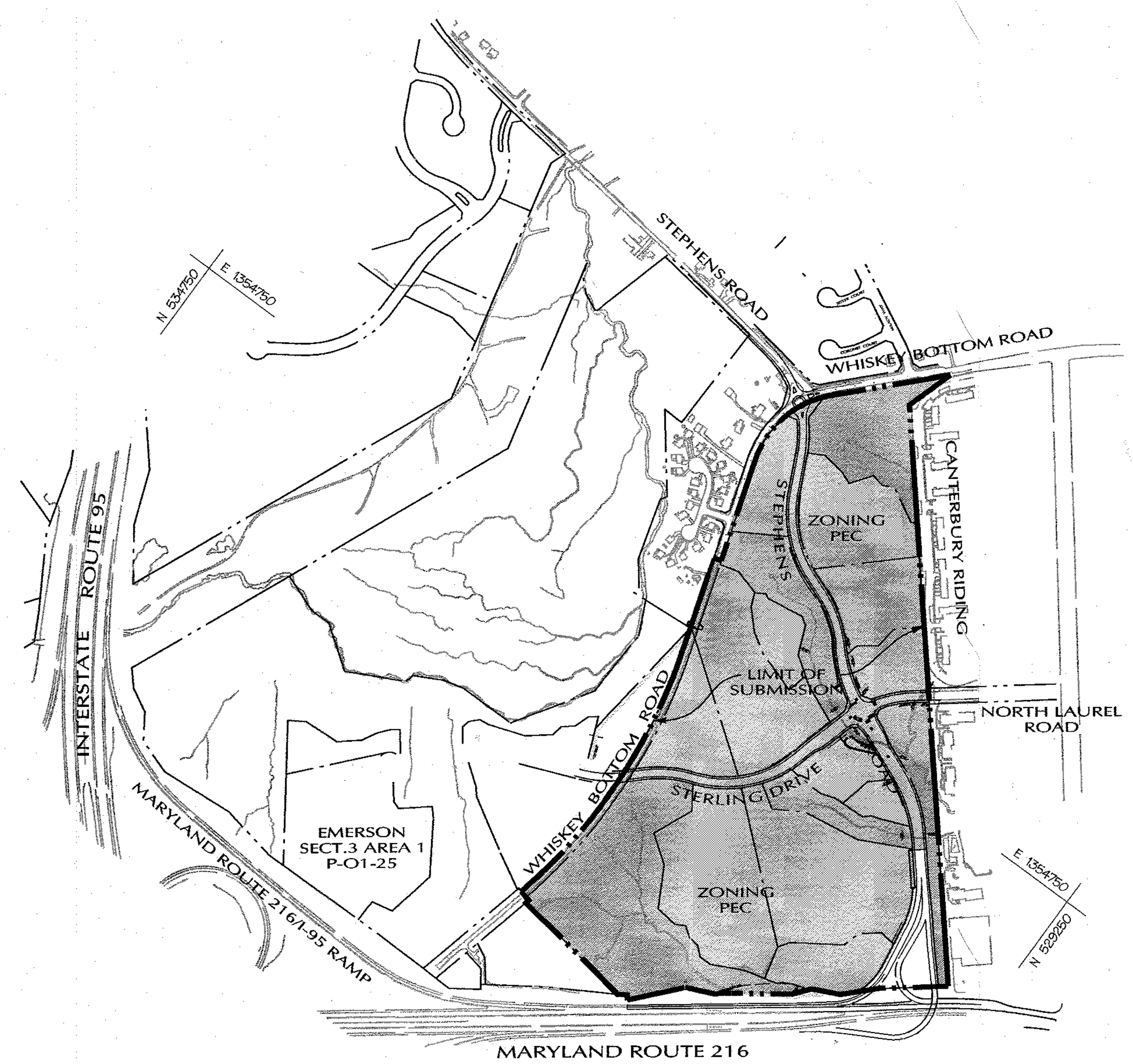

Overall Property Outline

Scale: 1"=600'

NORTH

2 THE PURPOSE OF REVISION #2 IS:
1. SHOW THE EMERSON CAMPUS SECURITY FENCE.
2. ADD ADDITIONAL DRAWING SHEETS ASSOCIATED WITH THE PROPOSED EMERSON CAMPUS SECURITY FENCE.

Sheet Index

SHEET	DESCRIPTION
1	COVER SHEET
2	ROAD CONSTRUCTION PLAN - STEPHENS ROAD ℄ STA. 0+00 - 11+00
3	ROAD CONSTRUCTION PLAN - STEPHENS ROAD ℄ STA. 11+00 - 23+50
4	ROAD CONSTRUCTION PLAN - STEPHENS ROAD ℄ STA. 23+50 - 29+00
5	ROAD CONSTRUCTION PLAN - WHISKEY BOTTOM ROAD
6	ROAD CONSTRUCTION PLAN - NORTH LAUREL ROAD ℄ STA. 0+00 - 12+00
7	ROAD CONSTRUCTION PLAN - STERLING DRIVE ℄ STA. 12+00 - 19+85.45
8	ROUNDABOUT DETAILS -
9	ROUNDABOUT CURB PROFILES
10	STEPHENS RD - STERLING DR. INTERSECTION DETAILS
11	LANE MARKING PLAN - WHISKEY BOTTOM RD - STEPHENS DR.
12	LANE MARKING PLAN - STERLING DRIVE
13	ROAD CONSTRUCTION DETAILS
14	MAINTENANCE OF TRAFFIC PLAN
15	STORM DRAIN DRAINAGE AREA MAP
16	STORM DRAIN PROFILES
17	STORM DRAIN PROFILES
18	STORM DRAIN PROFILES
19	SEDIMENT & EROSION CONTROL DRAINAGE AREA MAP
20	SEDIMENT & EROSION CONTROL DRAINAGE AREA MAP
21	GRADING, SEDIMENT & EROSION CONTROL PLAN
22	GRADING, SEDIMENT & EROSION CONTROL PLAN
23	GRADING, SEDIMENT & EROSION CONTROL PLAN
24	GRADING, SEDIMENT & EROSION CONTROL PLAN
25	GRADING, SEDIMENT & EROSION CONTROL PLAN
26	GRADING, SEDIMENT & EROSION CONTROL PLAN
27	GRADING, SEDIMENT & EROSION CONTROL - BASIN VI PLAN
28	GRADING, SEDIMENT & EROSION CONTROL - BASINS III, IV, V
29	GRADING, SEDIMENT & EROSION CONTROL DETAILS
30	GRADING, SEDIMENT & EROSION CONTROL DETAILS
31	GRADING, SEDIMENT & EROSION CONTROL DETAILS
32	GRADING, SEDIMENT & EROSION CONTROL DETAILS
33	GRADING, SEDIMENT & EROSION CONTROL SPECIFICATIONS
34	STORM WATER MANAGEMENT DRAINAGE AREA MAP
35	STORM WATER MANAGEMENT DRAINAGE AREA MAP
36	STORM WATER MANAGEMENT PLAN - PONDS III, IV, V PLAN
37	STORM WATER MANAGEMENT PLAN - POND VI PLAN
38	STORM WATER MANAGEMENT PLAN - POND III DETAILS
39	STORM WATER MANAGEMENT PLAN - POND IV DETAILS
40	STORM WATER MANAGEMENT PLAN - POND V DETAILS
41	STORM WATER MANAGEMENT PLAN - POND V DETAILS
42	STORM WATER MANAGEMENT PLAN - POND VI DETAILS
43	STORM WATER MANAGEMENT PLAN - DETAILS & SPECIFICATIONS
44	STORM WATER MANAGEMENT PLAN - BORING LOGS
45	STORM WATER MANAGEMENT PLAN - BORING LOGS
46	LANDSCAPE PLAN
47	LANDSCAPE PLAN
48	LANDSCAPE PLAN - PONDS III & IV
49	LANDSCAPE PLAN - PONDS V & VI
50	LANDSCAPE NOTES & DETAILS
51	FINAL FOREST CONSERVATION PLAN
52	FINAL FOREST CONSERVATION PLAN
53	FINAL FOREST CONSERVATION PLAN
54	FINAL FOREST CONSERVATION PLAN
55	FINAL FOREST CONSERVATION PLAN
56	FINAL FOREST CONSERVATION PLAN
57	FINAL FOREST CONSERVATION DETAILS

2 SHEET INDEX CONTINUED
57A FENCE LAYOUT PLAN
57B SITE DETAILS
57C SITE DETAILS
57D SITE DETAILS

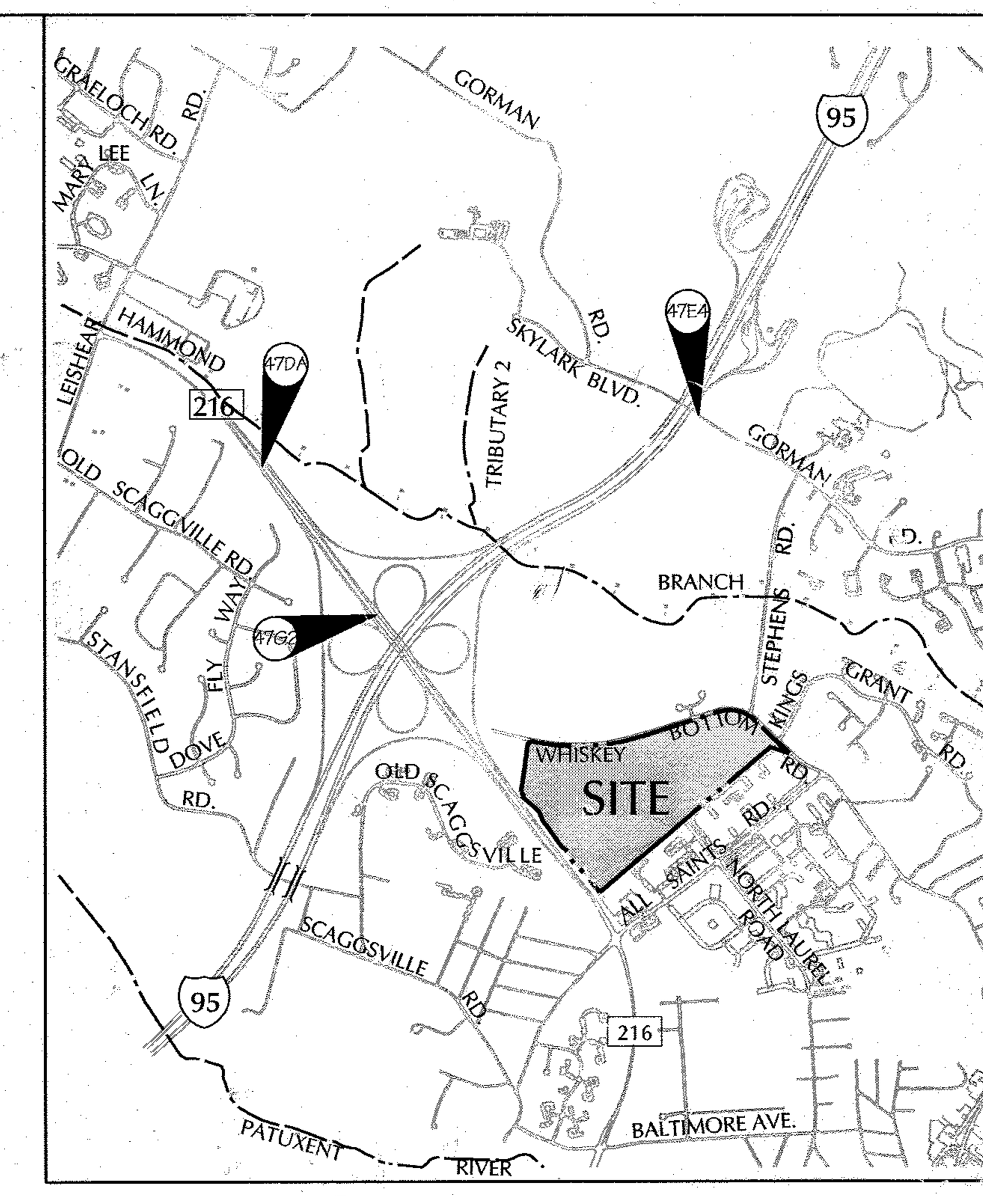

NORTH

Vicinity Map

SCALE: 1"=2000'

Benchmark

Description

COORDINATES IN MARYLAND NAD83(91) (HORIZONTAL) AND NGVD29 (VERTICAL) DATUMS.

47DA NORTHING: 163191.9104
EASTING: 4112865759
ELEVATION: 315.905 ft.

47E4 NORTHING: 163326.2295
EASTING: 413136.2550
ELEVATION: 338.909ft.

47G2 NORTHING: 162440.1212
EASTING: 4118539279
ELEVATION: 364.210ft.

2 PROFESSIONAL CERTIFICATION FOR REV. #2
I HEREBY CERTIFY THAT THESE DOCUMENTS WERE PREPARED OR APPROVED BY ME, AND THAT I AM A DULY LICENSED PROFESSIONAL ENGINEER UNDER THE LAWS OF THE STATE OF MARYLAND, LICENSE NO. 45292, EXPIRATION DATE: 05/21/2016

FOR REVISION 2

10-1-2014

The purpose of revision 1 is to show the proposed 5' sidewalk along Sterling Drive in front of Parcel D.

APPROVED: HOWARD COUNTY DEPT. OF PUBLIC WORKS

for CHIEF, BUREAU OF HIGHWAYS — DATE 10-10-02

APPROVED: HOWARD COUNTY DEPT. OF PLANNING AND ZONING

CHIEF, DIVISION OF LAND DEVELOPMENT — DATE 10/22/02

CHIEF, DEVELOPMENT ENGINEERING DIVISION MK — DATE 10/18/02

Date	No.	Revision Description
05/23/15	3	EMERSON CAMPUS VCP
10/1/14	2	CAMPUS PERIMETER SECURITY FENCE
2-7-11	1	ADD 5' CONCRETE SIDEWALK ALONG PARCEL D FRONTAGE

General Notes

1. All construction shall be in accordance with the latest standards and specifications of Howard County plus MSHA standards and specifications if applicable.

2. The contractor shall notify the Department of Public Works/Bureau of Engineering/Construction Inspection division at 410-313-1880 at least five (5) working days prior to the start of work.

3. The contractor shall notify "Miss Utility" at 1-800-257-7777 at least 48 hours prior to any excavation work being done.

4. Traffic control devices, markings and signing shall be in accordance with the latest edition of the Manual of Uniform Traffic Control Devices (MUTCD). All street and regulatory signs be in place prior to the placement of any asphalt.

5. All plan dimensions are to face of curb unless otherwise noted.

6. The existing topography is taken from aerial survey with 2' contour intervals prepared by Air Survey Corporation dated 1998.

7. The coordinates shown hereon are based upon the Howard County Geodetic Control which is based upon the Maryland State Plane Coordinate System. Howard County Monument Nos. 47E4 and 47G2 were used for this project.

8. Water is public, contract no. 24-4014D drainage area

9. Sewer is public, contract no. 24-4014D drainage area

10. Stormwater Management for this project will be addressed with the installation of four Stormwater Management Facilities which will control the runoff per the latest approved Design Standards. The facilities will be wet, extended detention ponds. They will be owned by the Property Owners Association but maintained by Howard County.

11. Existing utilities are based on Construction Plans (contract no. 2627-D), and field verified manholes.

12. The floodplain study for this project was prepared by Daft-McCune-Walker, Inc., dated June 12, 2001, and was approved in September 2001.

13. The wetlands delineation study for this project was prepared by Daft-McCune-Walker, Inc., dated September 1998, and was approved by the U.S. Army Corps of Engineers on December 19, 2001 (Assigned tracking #'s 200260639/01-NT-0500 for pending impacts to jurisdicitonial resources).

14. The traffic study for this project was prepared by Wells and Associates, and was approved on February 1, 2002.

15. Project background information:

Subdivision Name: Revitz Property
Tax Map: 47
Lot./Parcel: P/O: P.837, P.165
Zoning: PEC
Election District: 6th
Total Tract Area: 94.816± acres
Preliminary Plan Approval Date : February 14, 2002
Open Space Lots: 7
File Numbers: SP-01-12

16. Street light placement and the type of fixture and pole shall be in accordance with the Howard County Design Manual, Volume III (1993) and as modified by "Guidelines for Street Lights in Residential Developments (June 1993)." A minimum spacing of 20' shall be maintained between lights and any tree.

17. Sidewalk ramps shall meet current ADA requirements.

18. All sidewalks at intersections to have handicaps ramps, See detail on sheet 13 of 57.

19. Street trees shall be planted at least 5' from any inlet structure.

20. Storm water management facilities to be owned by the Property Owners Association (POA).

21. Maintenance Responsibility, routine and non-routine schedule are shown on sheet 43. (Routine maintenance is responsibility of POA and non-routine maintenance is responsibility of Howard County.)

22. Development of the Revitz Property under the current Forest Conservation Act requires the clearing of approximately 68.21 acres of forest, retention of approximately 26.42 acres of forest, and approximately 5.20 acres of reforestation. The entire reforestation requirement will be satisfied on-site at the locations indicated on Sheets 51 through 57.

23. A portion of Whiskey Bottom Road has been abandoned per County Council Resolution 121.2002, Dated July 29, 2002.

24. Access to each facility shall be provided across the adjoining development parcel by general easement until defined access and easement is determined at site development stage. No access will be obtained from restricted access roads or across environmental sensitive areas.

25. As a result of preliminary equivalent sketch plan, SP-01-12, being submitted to the County for review prior to 11/15/01, on 06/14/01, this subdivision is subject to compliance with the Fourth Edition of the Subdivision and Land Development Regulations. In addition, because SP-01-12 did not obtain signature approval prior to 11/01/01, this subdivision is subject to compliance with County Council Bill 50-2001 which amends the Zoning Regulations, and the amended Zoning Regulations which become effective on 01/08/02

26. 95% compaction in fill area will be in accordance with AASHTO - T180.

27. Water quality and quantity management is met for the entire Revitz site by proposed regional stormwater management ponds. The recharge requirements for the roads is met by proposed grass swales. The recharge requirement for the parcels (mass graded in this phase of design) is not yet met, and parcel developers will have to provide their own recharge treatment within their respective parcels.

28. On July 9, 2002 the Howard County Board of Appeals ordered that the Petition (BA Case No. 02-17V) of the Howard Research and Development Corporation for a variance to reduce the 30-foot structure and use setback line to 0-feet in a PEC district (on Parcel E) be granted. Subject to the following: the site is limited to the uses and structures outlined in the petition (campus-style employment center) and that Parcel E (Revitz) be combined with Parcel A (Emerson) to form a single property.

2 29. A VARIANCE (RESOLUTION NO. 118-2011) PURSUANT TO SECTIONS 16.301 AND 16.200 (a) OF THE HOWARD COUNTY CODE WAS GRANTED ON JULY 28, 2011 FOR GOVERNMENT USES FROM THE STRUCTURE AND USE SETBACK FOR A FENCE.

Professional Certification. I hereby certify that these documents were prepared or approved by me, and that I am a duly licensed professional engineer under the laws of the State of Maryland.

License No. 8061, Expiration Date: 8-26-11

FOR REVISION #1 ONLY

4-19-11
Date

Professional Engr No. 8061

F-02-111

01-NT-0500/200260639

9/20/02
Date

Professional Engr. No. 10551

REVITZ PROPERTY

OWNER /DEVELOPER:

THE HOWARD RESEARCH & DEVELOPMENT CORPORATION
10275 LITTLE PATUXENT PARKWAY
COLUMBIA, MARYLAND 21044

DMW
Daft-McCune-Walker, Inc.
200 East Pennsylvania Avenue
Towson, Maryland 21286
(410) 296-3333
Fax 296-4705

A Team of Land Planners, Landscape Architects, Engineers, Surveyors & Environmental Professionals

SUBDIVISION NAME	SECTION/AREA	LOT/PARCEL #			
REVITZ PROPERTY		165 & P/O PAR. 837			
PLAT# OR L/F	BLOCK #	ZONE	TAX/ZONE MAP	ELECT. DISTRICT	CENSUS TRACT
2267/436	20	PEC	47.	6 th	
WATER CODE	SEWER CODE				

TITLE

COVER SHEET

Des By	RBW	Scale	1" = 600'	Proj. No. 01011
Drn By	WDE	Date	9/19/02	1 OF 57
Chk By		Approved		

F-02-111

Thu Sep 19 14:05:17 2002 ...\01011\01011B

CURVE DATA						
NAME	DELTA	RADIUS	LENGTH	TANGENT	CHORD	
①	55°48'03"	600.00'	584.34'	317.69'	S 36°49'48" W	561.52'
②	43°53'55"	600.00'	459.70'	241.80'	S 42°46'52" W	448.54'

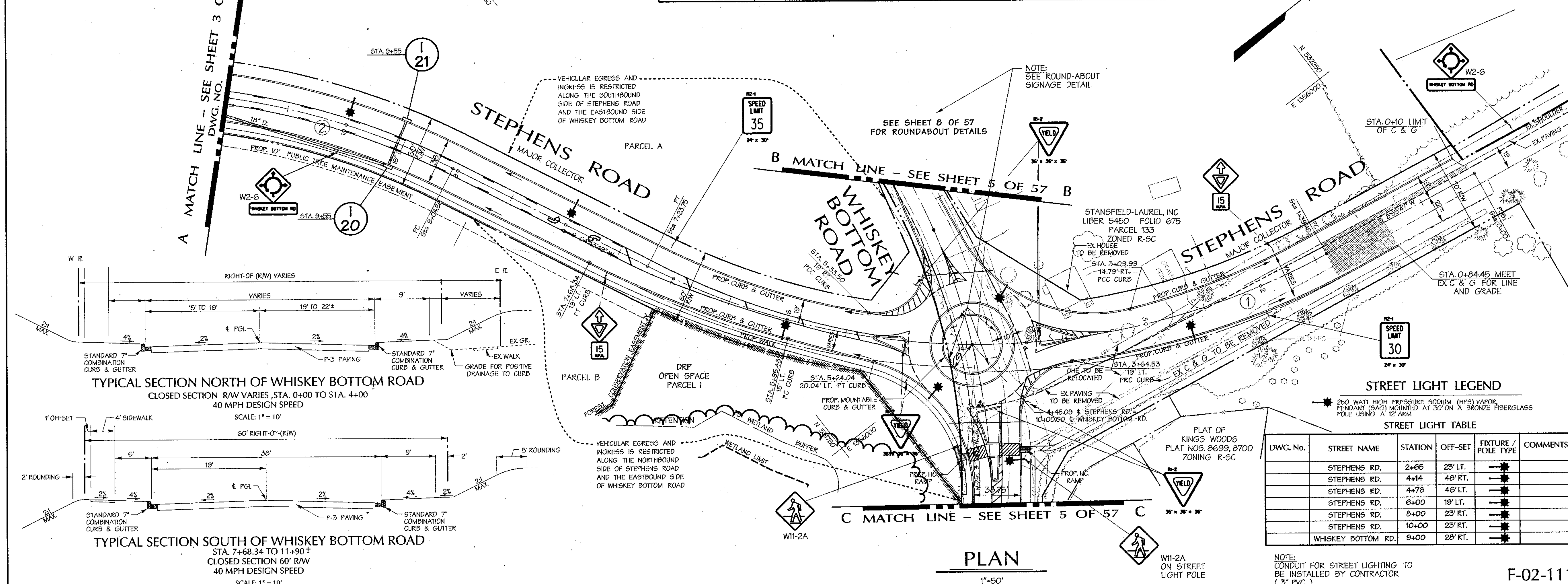

PLAN
1"=50'

STREET LIGHT LEGEND

250 WATT HIGH PRESSURE SODIUM (HPS) VAPOR, PENDANT (SAG) MOUNTED AT 30' ON A BRONZE FIBERGLASS POLE USING A 12' ARM

STREET LIGHT TABLE

DWG. No.	STREET NAME	STATION	OFF-SET	FIXTURE / POLE TYPE	COMMENTS
	STEPHENS RD.	2+65	23' LT.	✱	
	STEPHENS RD.	4+14	48' RT.	✱	
	STEPHENS RD.	4+78	46' LT.	✱	
	STEPHENS RD.	6+00	19' LT.	✱	
	STEPHENS RD.	8+00	23' RT.	✱	
	STEPHENS RD.	10+00	23' RT.	✱	
	WHISKEY BOTTOM RD.	9+00	28' RT.	✱	

NOTE: CONDUIT FOR STREET LIGHTING TO BE INSTALLED BY CONTRACTOR (3" PVC)

F-02-111

01-NT-0500/200260639

9/20/02 Date

Professional Engr. No. 10551

APPROVED: HOWARD COUNTY DEPT. OF PUBLIC WORKS
[signature] 10-10-02
CHIEF, BUREAU OF HIGHWAYS — DATE

APPROVED: HOWARD COUNTY DEPT. OF PLANNING AND ZONING
[signature] 10/22/02
CHIEF, DIVISION OF LAND DEVELOPMENT — DATE
[signature] 10/18/02
CHIEF, DEVELOPMENT ENGINEERING DIVISION MK — DATE

Date	No.	Revision Description

REVITZ PROPERTY

OWNER /DEVELOPER:
THE HOWARD RESEARCH & DEVELOPMENT CORPORATION
10275 LITTLE PATUXENT PARKWAY
COLUMBIA, MARYLAND 21044

DMW
Daft·McCune·Walker, Inc.
200 East Pennsylvania Avenue
Towson, Maryland 21286
(410) 296-3333
Fax 296-4705

A Team of Land Planners, Landscape Architects, Engineers, Surveyors & Environmental Professionals

AREA
TAX MAP 47 — PARCEL 165, 837
6th ELECTION DISTRICT OF HOWARD COUNTY, MARYLAND

TITLE
FINAL PLAN
ROAD CONSTRUCTION PLAN
STEPHENS ROAD

Des By	DFM	Scale	1" = 50'	Proj. No. 01011.B0
Drn By	WDE	Date	9/19/02	2 OF 57
Chk By		Approved		

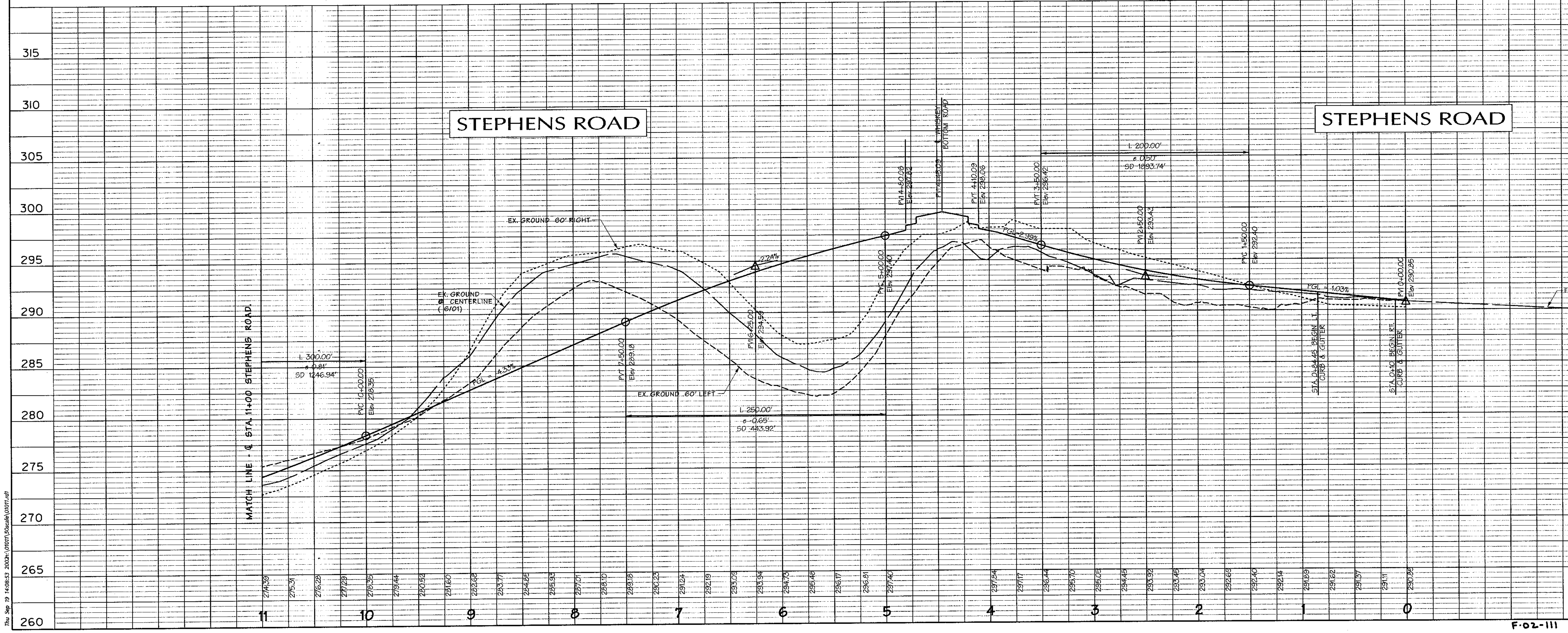

PROFILE
SCALE: HORIZ. 1"=50'
VERT. 1"=5'
DESIGN SPEED: 40 M.P.H.

F-02-111

Thu Sep 19 14:08:53 2002n:\01011\50scale\01011.rd
dermer 9/19/02 2:08:42 PM dermer c:\hpm\01011.hpm 01011.B

SEE SHEET 6 OF 57 FOR CONTINUATION

SEE SHEET 10 OF 57 FOR INTERSECTION DETAILS

CURVE DATA						
NAME	DELTA	RADIUS	LENGTH	TANGENT	CHORD	BY OF CURB & GUTTER
①	27°23'07"	STA. 7+76.08	238.98	121.79	S 00°00'30" W 236.73'	

(1) FOR CURB OPENING DETAILS SEE DWG.13 OF 57.

(2) FOR PERMANENT RECHARGE SWALE DESIGN & DETAILS SEE DWG.43 OF 57.

ON STREET LIGHT POLE

VEHICULAR INGRESS AND EGRESS IS RESTRICTED ALONG SOUTHBOUND STEPHENS ROAD AND EASTBOUND STERLING DRIVE

PROPOSED PUBLIC STORM DRAIN & UTILITY EASEMENTS

PROPOSED PUBLIC STORM DRAIN & UTILITY EASEMENT

DRP PARCEL K OPEN SPACE

DRP OPEN SPACE PARCEL G

DRP PARCEL L OPEN SPACE

POA OPEN SPACE PARCEL I STORMWATER MANAGEMENT IV (FACILITY IV)

PARCEL C

PARCEL H

PARCEL A

PARCEL D

PARCEL E

PARCEL F

PARCEL J

PARCEL O

RETENTION

STEPHENS ROAD
MAJOR COLLECTOR

STERLING DRIVE
COLLECTOR

NORTH LAUREL ROAD
MAJOR COLLECTOR

B MATCH LINE - SEE SHEET 4 OF 57

A MATCH LINE - SEE SHEET 2 OF 57

50' STREAM BUFFER

100 YR. F.P. W.S.E.

100 YR. FLOOD PLAIN

WETLAND BUFFER

FOREST CONSERVATION EASEMENT

VEHICULAR INGRESS AND EGRESS IS RESTRICTED ALONG NORTHBOUND STEPHENS ROAD AND EASTBOUND NORTH LAUREL ROAD

VEHICULAR INGRESS AND EGRESS IS RESTRICTED ALONG SOUTHBOUND STEPHENS ROAD AND WESTBOUND SIDE OF STERLING DRIVE

VEHICULAR INGRESS AND EGRESS IS RESTRICTED ALONG SOUTHBOUND STEPHENS ROAD

VEHICULAR EGRESS AND INGRESS IS RESTRICTED ALONG NORTHBOUND STEPHENS ROAD

OPEN SPACE - RETENTION VEHICULAR INGRESS AND EGRESS IS RESTRICTED ALONG NORTHBOUND STEPHENS ROAD AND WESTBOUND NORTH LAUREL ROAD

25 KW TRANSFORMER & CONDUIT (FINAL LOCATION TO BE DETERMINED BY BGE)

3" PVC CONDUIT (TYP.) SCHEDULE 80 ELECTRICAL FOR FUTURE SIGNALIZATION

NOTE: CONDUIT FOR STREET LIGHTING TO BE INSTALLED BY CONTRACTOR (3" PVC)

PERMANENT RECHARGE SWALE FOR DESIGN AND DETAIL SEE DWG.23 OF 57

STANDARD 7" COMBINATION CURB & GUTTER

F-3 PAVING

SEE DETAIL SHT.13 OF 57 FOR DIMENSIONS

CURVE DATA						
NAME	DELTA	RADIUS	LENGTH	TANGENT	CHORD	BY OF CURB & GUTTER
②	43°53'39"	STA. 2+00.00	466.70'	241.80	S 42°46'52" W 448.54'	
③	25°01'41"	STERLING DRIVE	262.09'	133.17'	S 33°20'45" W 260.01'	
④	23°33'38"	STA. 2+00.00	STA 29+46.73'	125.13'	S 34°04'46" W 244.99'	

MODIFIED ROAD SECTION

TYPICAL SECTION STEPHENS ROAD
STA. 11+90± TO 17+61.36
CLOSED SECTION 60' R/W
40 MPH DESIGN SPEED
SCALE: 1" = 10'

PLAN
1"=50'

STREET LIGHT LEGEND

250 WATT HIGH PRESSURE SODIUM (HPS) VAPOR, PENDANT MAG) MOUNTED AT 30'ON A BRONZE FIBERGLASS POLE (MINI) & 15' ARM

STREET LIGHT TABLE

DWG. No.	STREET NAME	STATION	OFF-SET	FIXTURE / POLE TYPE	COMMENTS
26	STEPHENS RD.	12+00	23' RT.		
	STEPHENS RD.	14+00	23' RT.		
	STEPHENS RD.	16+00	23' LT.		
	STEPHENS RD.	17+50	25' RT.		
	STEPHENS RD.	19+00	29' RT.		
	STEPHENS RD.	20+29	30' LT.		
	STEPHENS RD.	21+81	53' RT.		
	STEPHENS RD.	22+50	41' LT.		
	STEPHENS RD.	23+27	42' RT.		

F-02-111

STREET LIGHT LEGEND

250 WATT HIGH PRESSURE SODIUM (HPS) VAPOR, PENDANT (MAG) MOUNTED AT 30'ON A BRONZE FIBERGLASS POLE (MINI) & 15' ARM

STREET LIGHT TABLE

DWG. No.	STREET NAME	STATION	OFF-SET	FIXTURE / POLE TYPE	COMMENTS
26	STEPHENS RD.	24+00	29' LT.		
	STEPHENS RD.	26+00	29' LT.		
	STEPHENS RD.	28+00	29' LT.		

NOTE: PARCEL CUT FOR STREET LIGHTING TO BE INSTALLED BY CONTRACTOR (3" PVC)

F-02-111
01-NT-0508/200260039
9/30/02
Date

Professional Engr. No. 12551

APPROVED: HOWARD COUNTY DEPT. OF PUBLIC WORKS

CHIEF, BUREAU OF HIGHWAYS — DATE 10-10-02

APPROVED: HOWARD COUNTY DEPT. OF PLANNING AND ZONING

CHIEF, DIVISION OF LAND DEVELOPMENT — DATE 10/22/02

CHIEF, DEVELOPMENT ENGINEERING DIVISION MK — DATE 10/22/02

Date	No.	Revision Description

REVITZ PROPERTY

OWNER /DEVELOPER:
THE HOWARD RESEARCH & DEVELOPMENT CORPORATION
10275 LITTLE PATUXENT PARKWAY
COLUMBIA, MARYLAND 21044

DMW
Dash-McCune-Walker, Inc.
200 East Pennsylvania Avenue
Towson, Maryland 21286
(410) 296-3333
Fax 296-4705

A Team of Land Planners, Landscape Architects, Engineers, Surveyors & Environmental Professionals

AREA
TAX MAP 47 PARCEL 165, 837
6th ELECTION DISTRICT OF HOWARD COUNTY, MARYLAND

TITLE
FINAL PLAN
ROAD CONSTRUCTION PLAN
STEPHENS ROAD

Des By	DFM/FM	Scale	1" = 50'	Proj. No.	01011.B0
Dm By	WW/DE	Date	9/19/02		
Chk By		Approved			

SHEET 3 OF 57

PROFILE
SCALE: HORIZ. 1"=50'
VERT. 1"=5'
DESIGN SPEED: 40 M.P.H.

F-02-111

CURVE DATA					
NAME	DELTA	RADIUS	LENGTH	TANGENT	CHORD
⑤	27°25'07"	700.00'	334.98'	170.76'	S 36°00'30" W 331.79'

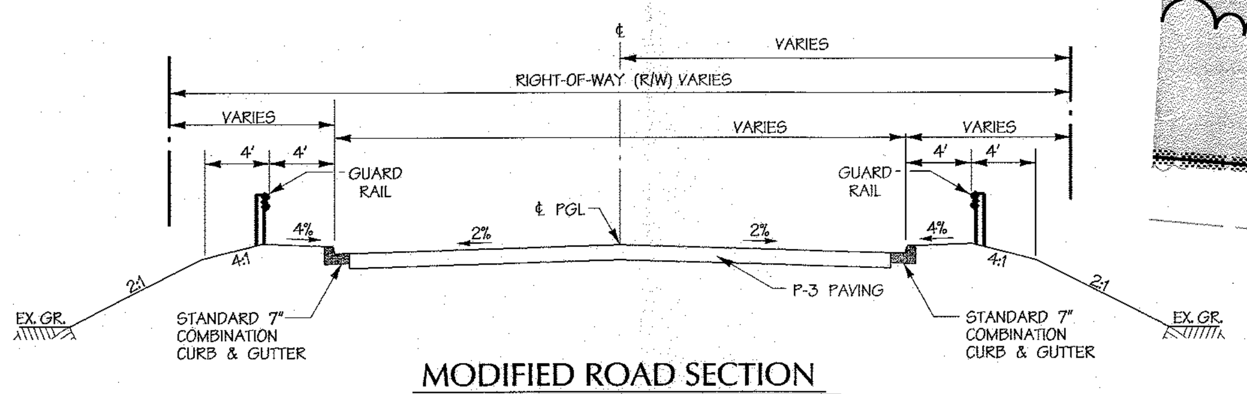

MODIFIED ROAD SECTION

STEPHENS ROAD
STA. 22+00 TO STA 29+00
NOT TO SCALE

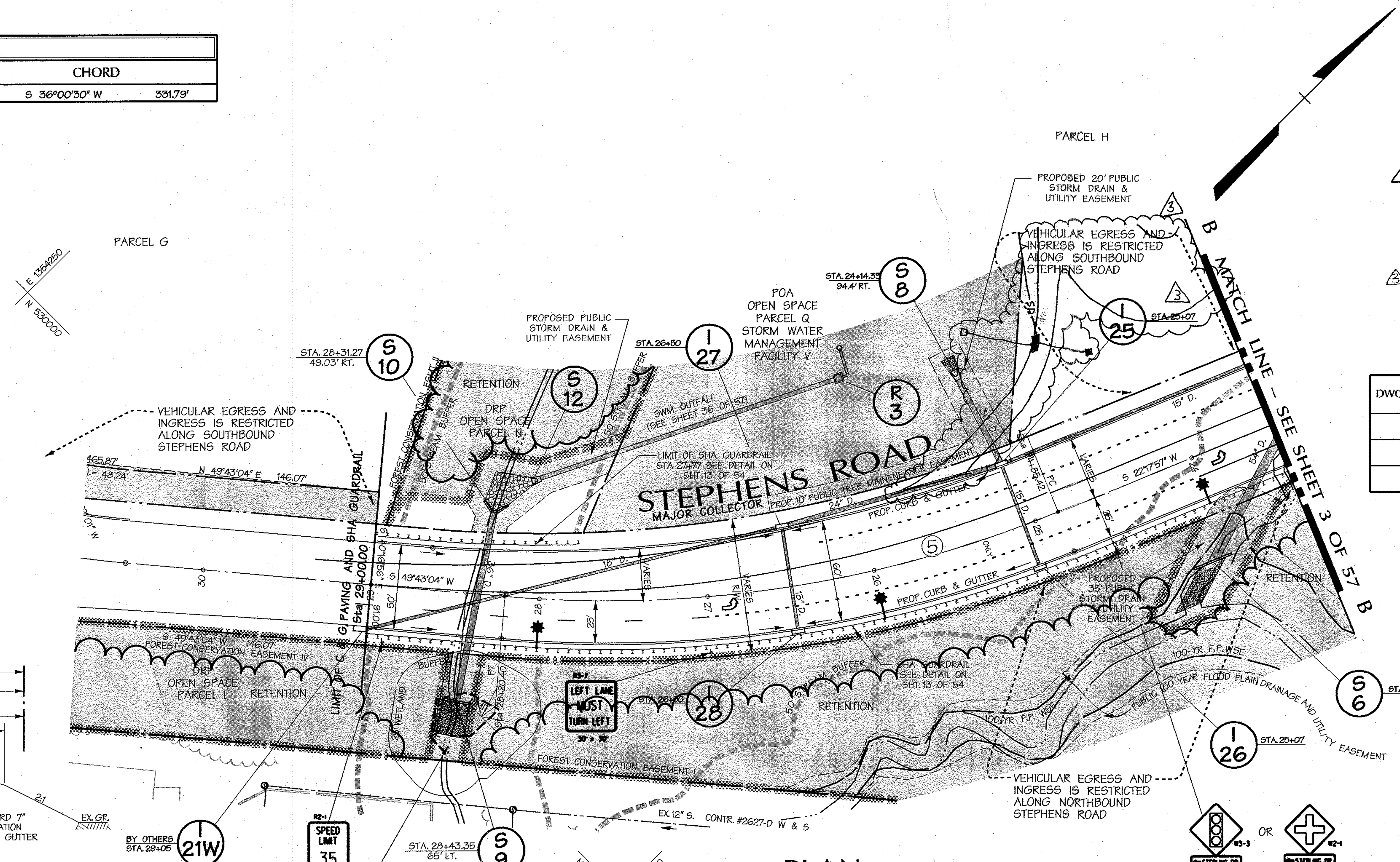

PLAN

1"=50'

E 1354750
N 530750

△3 PROFESSIONAL CERTIFICATION FOR REV #3

I HEREBY CERTIFY THAT THESE DOCUMENTS WERE PREPARED OR APPROVED BY ME, AND THAT I AM A DULY LICENSED PROFESSIONAL ENGINEER UNDER THE LAWS OF THE STATE OF MARYLAND, LICENSE NO 45292 EXPIRATION DATE: 05/21/2018

△3 THE PURPOSE OF REV. 3 IS TO SHOW THE WORK ASSOCIATED WITH EMERSON CAMPUS VCP SDP-16-005.

STREET LIGHT LEGEND

250 WATT HIGH PRESSURE SODIUM (HPS) VAPOR, PENDANT (SAG) MOUNTED AT 30' ON A BRONZE FIBERGLASS POLE USING A 12' ARM

STREET LIGHT TABLE

DWG. No.	STREET NAME	STATION	OFF-SET	FIXTURE / POLE TYPE	COMMENTS
	STEPHENS RD.	24+00	29' LT	—✱	
	STEPHENS RD.	26+00	29' LT	—✱	
	STEPHENS RD.	28+00	29' LT	—✱	

NOTE:
CONDUIT FOR STREET LIGHTING TO BE INSTALLED BY CONTRACTOR (3" PVC)

APPROVED: HOWARD COUNTY DEPT. OF PUBLIC WORKS

for CHIEF, BUREAU OF HIGHWAYS — DATE 10-10-02

APPROVED: HOWARD COUNTY DEPT. OF PLANNING AND ZONING

CHIEF, DIVISION OF LAND DEVELOPMENT — DATE 10/22/02

CHIEF, DEVELOPMENT ENGINEERING DIVISION MK — DATE 10/18/02

Date	No.	Revision Description
05/23/15	3	EMERSON CAMPUS VCP

REVITZ PROPERTY

OWNER /DEVELOPER:
THE HOWARD RESEARCH & DEVELOPMENT CORPORATION
10275 LITTLE PATUXENT PARKWAY
COLUMBIA, MARYLAND 21044

DMW
Daft·McCune·Walker, Inc.
200 East Pennsylvania Avenue
Towson, Maryland 21286
(410) 296-3333
Fax 296-4705

A Team of Land Planners, Landscape Architects, Engineers, Surveyors & Environmental Professionals

01-NT-0500/200260639

9/20/02 Date

Professional Engr. No. 10551

AREA
TAX MAP 47 PARCEL 165, 837
6th ELECTION DISTRICT OF HOWARD COUNTY, MARYLAND

TITLE
FINAL PLAN
ROAD CONSTRUCTION PLAN
STEPHENS ROAD

Des By	DFM	Scale	1" = 50'	Proj. No.	01011.B0
Drn By	WDE	Date	9/19/02	4 OF 57	
Chk By		Approved			

F-02-111

PROFILE

SCALE: HORIZ. 1"=50'
VERT. 1"=5'
DESIGN SPEED: 40 M.P.H.

Thu Sep 19 14:20:58 2002n:\01011\50scale\01011.rd3

F-02-111

dermer 9/19/02 2:20:47 PM dermer c:\hpm\01011.hpm 01011.B

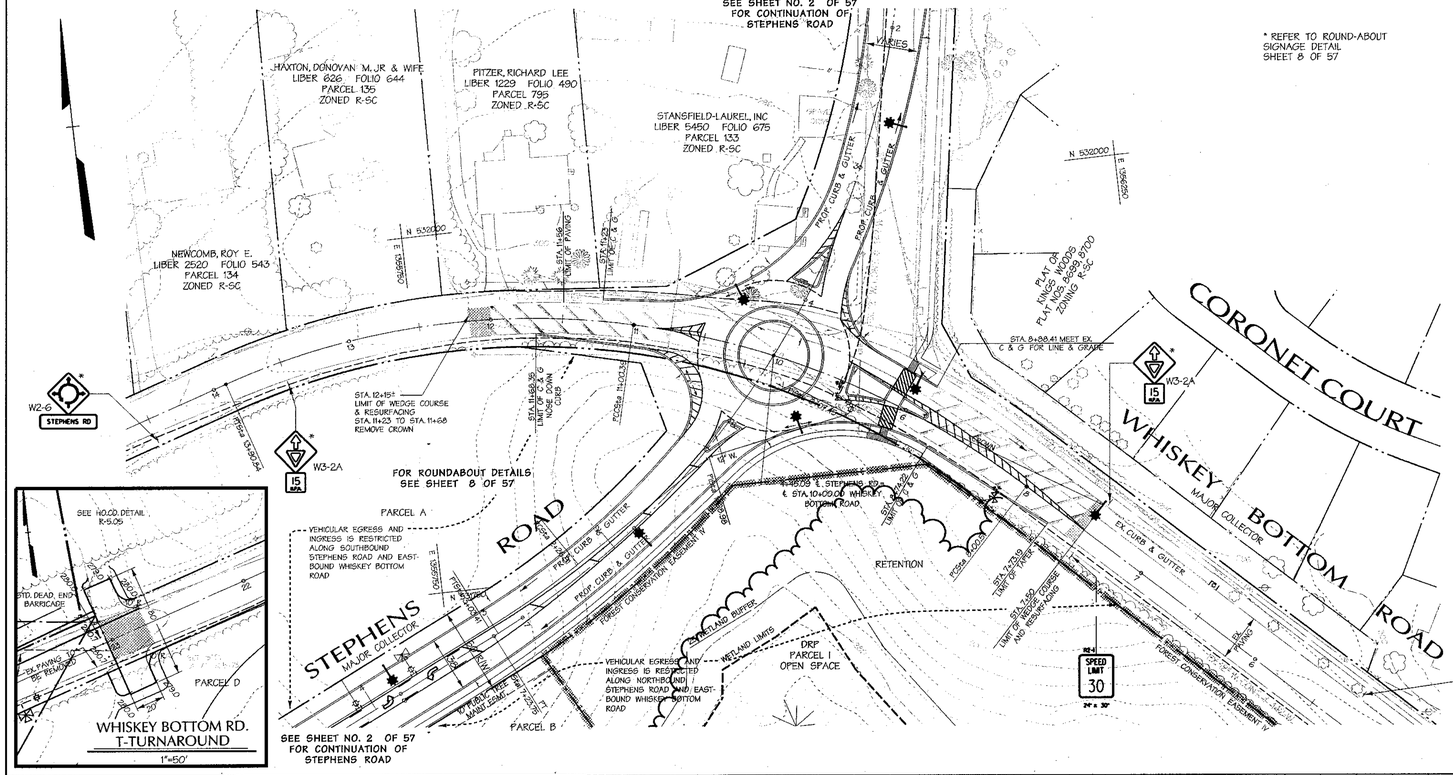

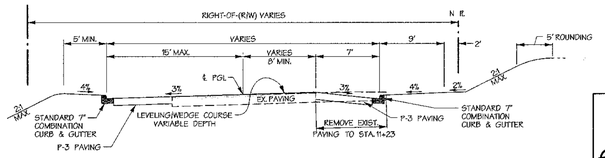

TYPICAL SECTION WEST OF STEPHENS ROAD (LOOKING WEST)
CLOSED SECTION 60' R/W STA. 10+74 TO STA. 11+68
40 MPH DESIGN SPEED
N.T.S.

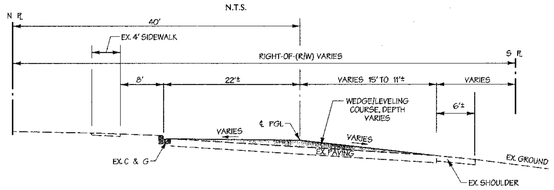

TYPICAL SECTION EAST OF STEPHENS ROAD (LOOKING EAST)
CLOSED SECTION 60' R/W STA. 7+50 TO STA. 8+88
40 MPH DESIGN SPEED
N.T.S.

STREET LIGHT LEGEND

250 WATT HIGH PRESSURE SODIUM (HPS) VAPOR, PENDANT (SAG) MOUNTED AT 30'ON A BRONZE FIBERGLASS POLE USING A 12' ARM

STREET LIGHT TABLE

DWG. No.	STREET NAME	STATION	OFF-SET	FIXTURE / POLE TYPE	COMMENTS
	WHISKEY BOTTOM RD	7+50	25' RT	—●	
	WHISKEY BOTTOM RD	9+00	28' RT	—●	

NOTE:
CONDUIT FOR STREET LIGHTING TO BE INSTALLED BY CONTRACTOR (3" PVC)

F-02-111

EXISTING PAVING TO BE REMOVED
WEDGE/LEVELING COURSE
BIT. CONC. RESURFACING

APPROVED: HOWARD COUNTY DEPT. OF PUBLIC WORKS
William F. Mahan Jr. 10-10-02
for CHIEF, BUREAU OF HIGHWAYS DATE

APPROVED: HOWARD COUNTY DEPT. OF PLANNING AND ZONING
Cindy Hanna 10/22/02
CHIEF, DIVISION OF LAND DEVELOPMENT DATE
Chad Edmondson 10/18/02
CHIEF, DEVELOPMENT ENGINEERING DIVISION MK DATE

Date	No.	Revision Description

REVITZ PROPERTY

OWNER /DEVELOPER:
THE HOWARD RESEARCH & DEVELOPMENT CORPORATION
10275 LITTLE PATUXENT PARKWAY
COLUMBIA, MARYLAND 21044

DMW
Daft-McCune-Walker, Inc.
200 East Pennsylvania Avenue
Towson, Maryland 21286
(410) 296-3333
Fax 296-4705

A Team of Land Planners, Landscape Architects, Engineers, Surveyors & Environmental Professionals

01-NT-0500/200260639
9/26/02 Date

Professional Engr. No. 10551

AREA
TAX MAP 47 PARCEL 165, 837
6th ELECTION DISTRICT OF HOWARD COUNTY, MARYLAND

TITLE
FINAL PLAN
ROAD CONSTRUCTION PLAN
WHISKEY BOTTOM ROAD
STEPHENS ROAD INTERSECTION

Des By	DFM	Scale	1" = 50'	Proj. No.	01011.B0
Drn By	WDE	Date	9/19/02		
Chk By		Approved			5 OF 57

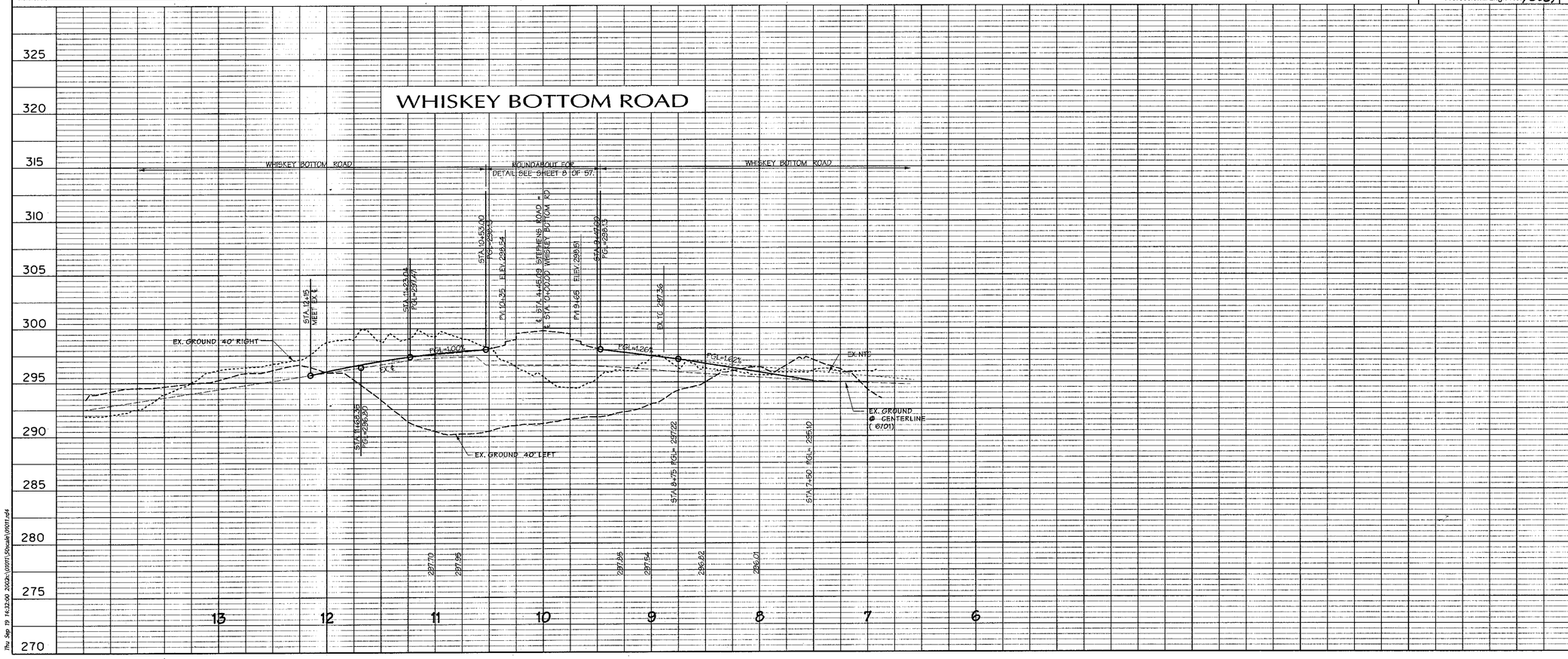

PROFILE
SCALE: HORIZ. 1"=50'
VERT. 1"=5'
DESIGN SPEED: 40 M.P.H.

F-02-111

Thu Sep 19 14:32:00 2002 \\DM1\Docs\01011.B0 01011.B0.dgn

drmer 9/19/02 2:31:48 PM drmer c:\tmp\01011.tmp 01011.B

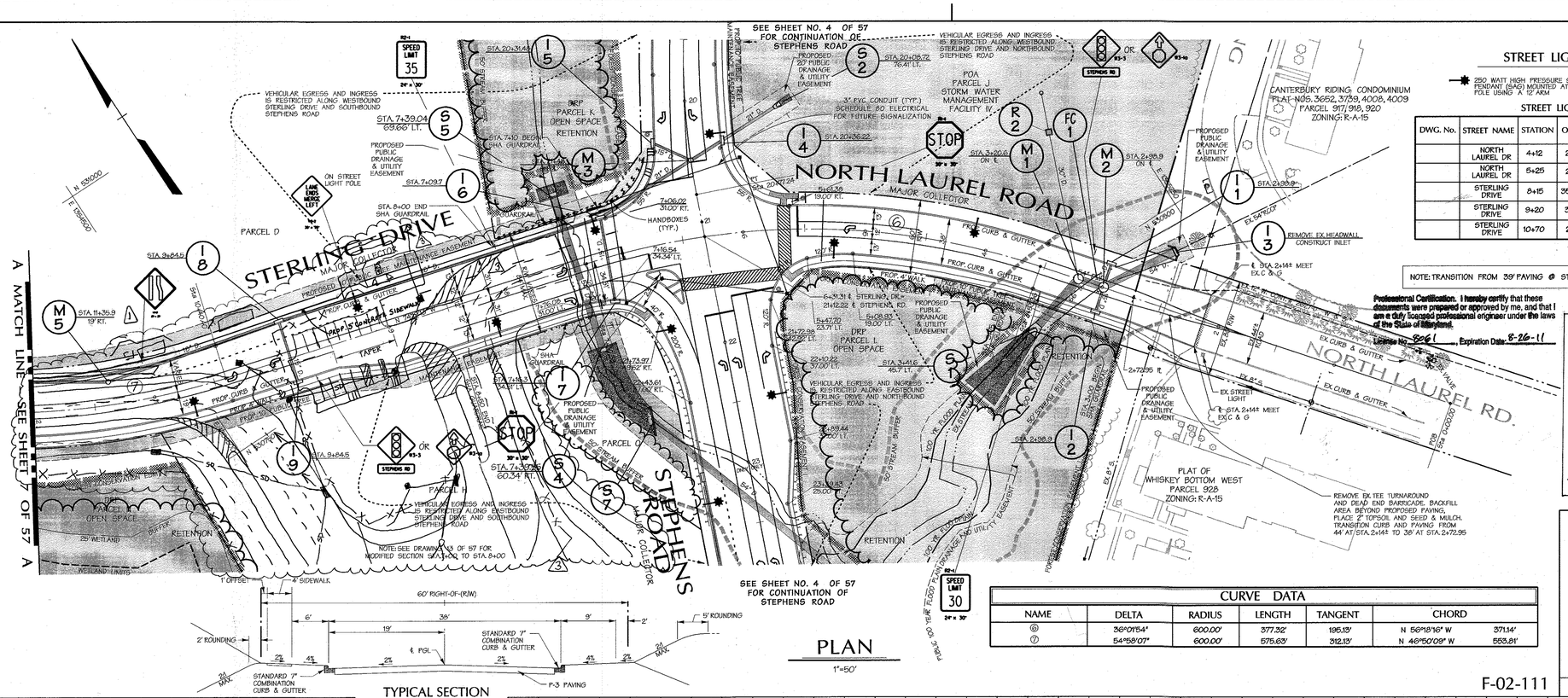

STREET LIGHT LEGEND

250 WATT HIGH PRESSURE SODIUM (HPS) VAPOR, PENDANT (SAG) MOUNTED AT 30' ON A BRONZE FIBERGLASS POLE USING A 12' ARM

STREET LIGHT TABLE

DWG. No.	STREET NAME	STATION	OFF-SET	FIXTURE / POLE TYPE	COMMENTS
	NORTH LAUREL DR	4+12	24' RT.	✱	
	NORTH LAUREL DR	5+25	23' LT.	✱	
	STERLING DRIVE	8+15	35' LT.	✱	
	STERLING DRIVE	9+20	35' RT.	✱	
	STERLING DRIVE	10+70	23' LT.	✱	

NOTE: TRANSITION FROM 39' PAVING @ STA. 2+73 TO 44' PAVING @ STA. 2+14±

CURVE DATA						
NAME	DELTA	RADIUS	LENGTH	TANGENT	CHORD	
⑥	36°01'54"	600.00'	377.32'	195.13'	N 56°18'16" W	371.14'
⑦	54°58'07"	600.00'	575.63'	312.13'	N 46°50'09" W	553.51'

APPROVED: HOWARD COUNTY DEPT. OF PUBLIC WORKS

CHIEF, BUREAU OF HIGHWAYS — DATE 10-10-02

APPROVED: HOWARD COUNTY DEPT. OF PLANNING AND ZONING

CHIEF, DIVISION OF LAND DEVELOPMENT — DATE 10/22/02

CHIEF, DEVELOPMENT ENGINEERING DIVISION MK — DATE 10/18/02

Date	No.	Revision Description
05/23/15	3	EMERSON CAMPUS VCP
2-7-11	1	ADD 5' CONCRETE SIDEWALK ALONG PARCEL D FRONTAGE

REVITZ PROPERTY

OWNER /DEVELOPER:
THE HOWARD RESEARCH & DEVELOPMENT CORPORATION
10275 LITTLE PATUXENT PARKWAY
COLUMBIA, MARYLAND 21044

Professional Certification. I hereby certify that these documents were prepared or approved by me, and that I am a duly licensed professional engineer under the laws of the State of Maryland. License No. 8061, Expiration Date: 8-26-11

FOR REVISION #1 ONLY
4-19-11

STATE OF MARYLAND — PAUL LEE WHITMORE — NO. 8061 — REGISTERED PROFESSIONAL ENGINEER

Professional Engr. No. 01-NT-0500/200260639

9/20/02 Date

PROFESSIONAL ENGINEER — No. 10651 — STATE OF MARYLAND — TIMOTHY RANDOLPH SHEARER

Professional Engr. No. 10651

DMW
Daft-McCune-Walker, Inc.
200 East Pennsylvania Avenue
Towson, Maryland 21286
(410) 296-3333
Fax 296-4705

A Team of Land Planners, Landscape Architects, Engineers, Surveyors & Environmental Professionals

AREA
TAX MAP 47 PARCEL 165, 837
6th ELECTION DISTRICT OF HOWARD COUNTY, MARYLAND

TITLE
FINAL PLAN
ROAD CONSTRUCTION PLAN
NORTH LAUREL ROAD /STERLING DRIVE

Des By	DFM	Scale	1" = 50'	Proj. No.	01011.B0
Drn By	WDE	Date	9/19/02		6 OF 57
Chk By		Approved			

F-02-111

PROFESSIONAL CERTIFICATION FOR REV #3

I HEREBY CERTIFY THAT THESE DOCUMENTS WERE PREPARED OR APPROVED BY ME AND THAT I AM A DULY LICENSED PROFESSIONAL ENGINEER UNDER THE LAWS OF THE STATE OF MARYLAND
LICENSE NO 45242
EXPIRATION DATE: 05/21/2018

11-23-16

THE PURPOSE OF REVISION 3 IS TO SHOW THE WORK ASSOCIATED WITH EMERSON CAMPUS VCP SDP-16-005

F-02-111

Thu Sep 19 14:39:00 2002h:\01011.50\dwk\01011.mdl

9/19/02 2:38:49 PM dgarner c:\hpm\01011.hpm 01011.8

STREET LIGHT LEGEND

250 WATT HIGH PRESSURE SODIUM (HPS) VAPOR, PENDANT (SAS) MOUNTED AT 30' ON A BRONZE FIBERGLASS POLE USING A 12' ARM

STREET LIGHT TABLE

DWG. No.	STREET NAME	STATION	OFF-SET	FIXTURE / POLE TYPE	COMMENTS
	STERLING DRIVE	12+70	23' LT.		
	STERLING DRIVE	14+70	23' LT.		
	STERLING DRIVE	16+70	23' RT.		
	STERLING DRIVE	18+70	23' RT.		

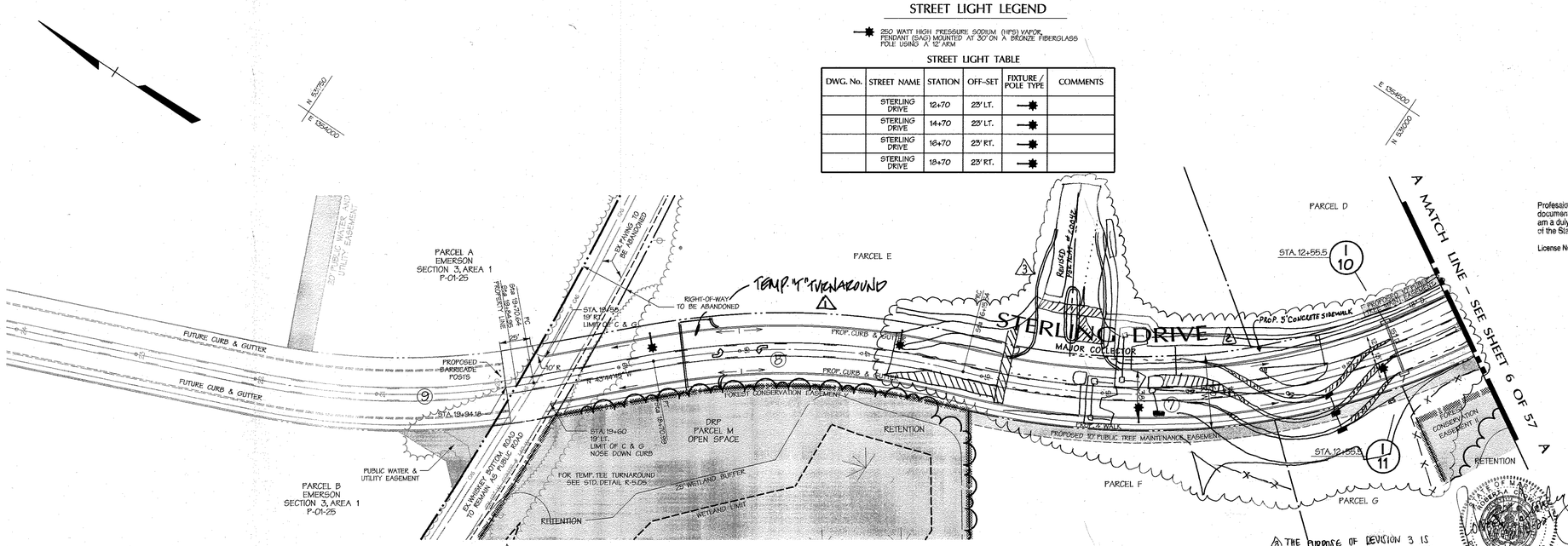

PLAN

1"=50'

CURVE DATA						
NAME	DELTA	RADIUS	LENGTH	TANGENT	CHORD	
⑦	54°58'07"	600.00'	575.63'	312.13'	N 46°50'09" W	553.81'
⑧	24°25'39"	600.00'	255.46'	129.68'	N 31°52'55" W	253.53'
⑨	21°55'35"	600.00'	229.61'	116.23'	N 32°46'57" W	228.21'

Professional Certification. I hereby certify that these documents were prepared or approved by me, and that I am a duly licensed professional engineer under the laws of the State of Maryland.

License No. 8061, Expiration Date: 8-26-11

FOR REVISION "2" ONLY

4-19-11
Date

STATE OF MARYLAND — PAUL LEE HOWARD — No. 8061 — REGISTERED PROFESSIONAL ENGINEER

Professional Engr. No.

01-NT-0500/200260639

9/20/02
Date

STATE OF MARYLAND — PROFESSIONAL ENGINEER — No. 16272 — RANDOLPH W. DEAN

Professional Engr. No. 10551

⑥ THE PURPOSE OF REVISION 3 IS TO SHOW THE WORK ASSOCIATED WITH EMERSON CAMPUS VCP. SDP-06-005

③ PROFESSIONAL CERTIFICATION FOR REV #3

I HEREBY CERTIFY THAT THESE DOCUMENTS WERE PREPARED OR APPROVED BY ME, AND THAT I AM A DULY LICENSED PROFESSIONAL ENGINEER UNDER THE LAWS OF THE STATE OF MARYLAND, LICENSE NO 46272 EXPIRATION DATE 05/21/2018

F-02-111

APPROVED: HOWARD COUNTY DEPT. OF PUBLIC WORKS

CHIEF, BUREAU OF HIGHWAYS — DATE 10-10-02

APPROVED: HOWARD COUNTY DEPT. OF PLANNING AND ZONING

CHIEF, DIVISION OF LAND DEVELOPMENT — DATE 11/22/02

CHIEF, DEVELOPMENT ENGINEERING DIVISION MK — DATE 10/8/02

Date	No.	Revision Description
05/23/13	3	EMERSON CAMPUS VCP
2-7-11	2	ADD 5' CONCRETE SIDEWALK ALONG PARCEL D FRONTAGE
5-3-10	1	ADD "T" TURNAROUND

REVITZ PROPERTY

OWNER /DEVELOPER:
THE HOWARD RESEARCH & DEVELOPMENT CORPORATION
10275 LITTLE PATUXENT PARKWAY
COLUMBIA, MARYLAND 21044

DMW
Daft-McCune-Walker, Inc.
200 East Pennsylvania Avenue
Towson, Maryland 21286
(410) 296-3333
Fax 296-4705

A Team of Land Planners, Landscape Architects, Engineers, Surveyors & Environmental Professionals

AREA

TAX MAP 47 PARCEL 165, 837
6th ELECTION DISTRICT OF HOWARD COUNTY, MARYLAND

TITLE

FINAL PLAN
ROAD CONSTRUCTION PLAN
STERLING DRIVE

Des By	DFM	Scale	1" = 50'	Proj. No.	01011.B0
Drn By	WDE	Date	9/19/02		7 OF 57
Chk By		Approved			

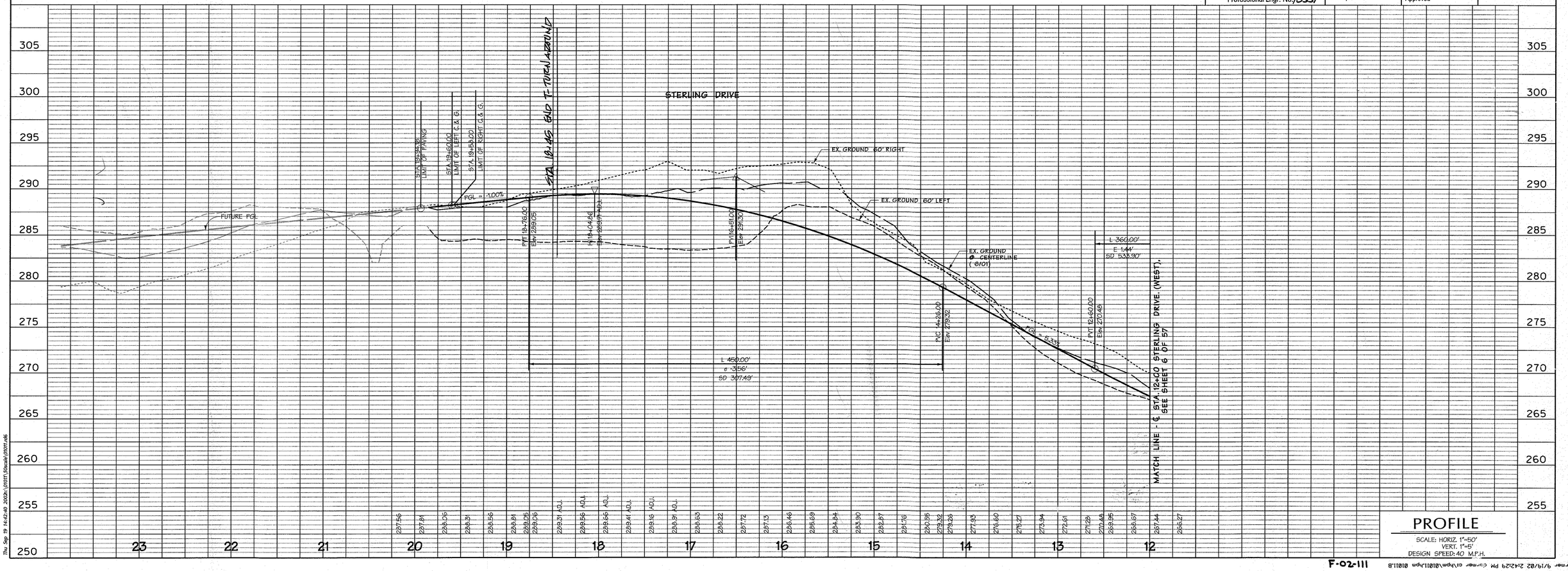

PROFILE

SCALE: HORIZ. 1"=50'
VERT. 1"=5'
DESIGN SPEED: 40 M.P.H.

F-02-111

Thu Sep 19 14:42:40 2002h:\01011\50scale\01011.mfs

prnam 9/19/02 2:42:29 PM c:\hpm\01011.hpm 01011.B

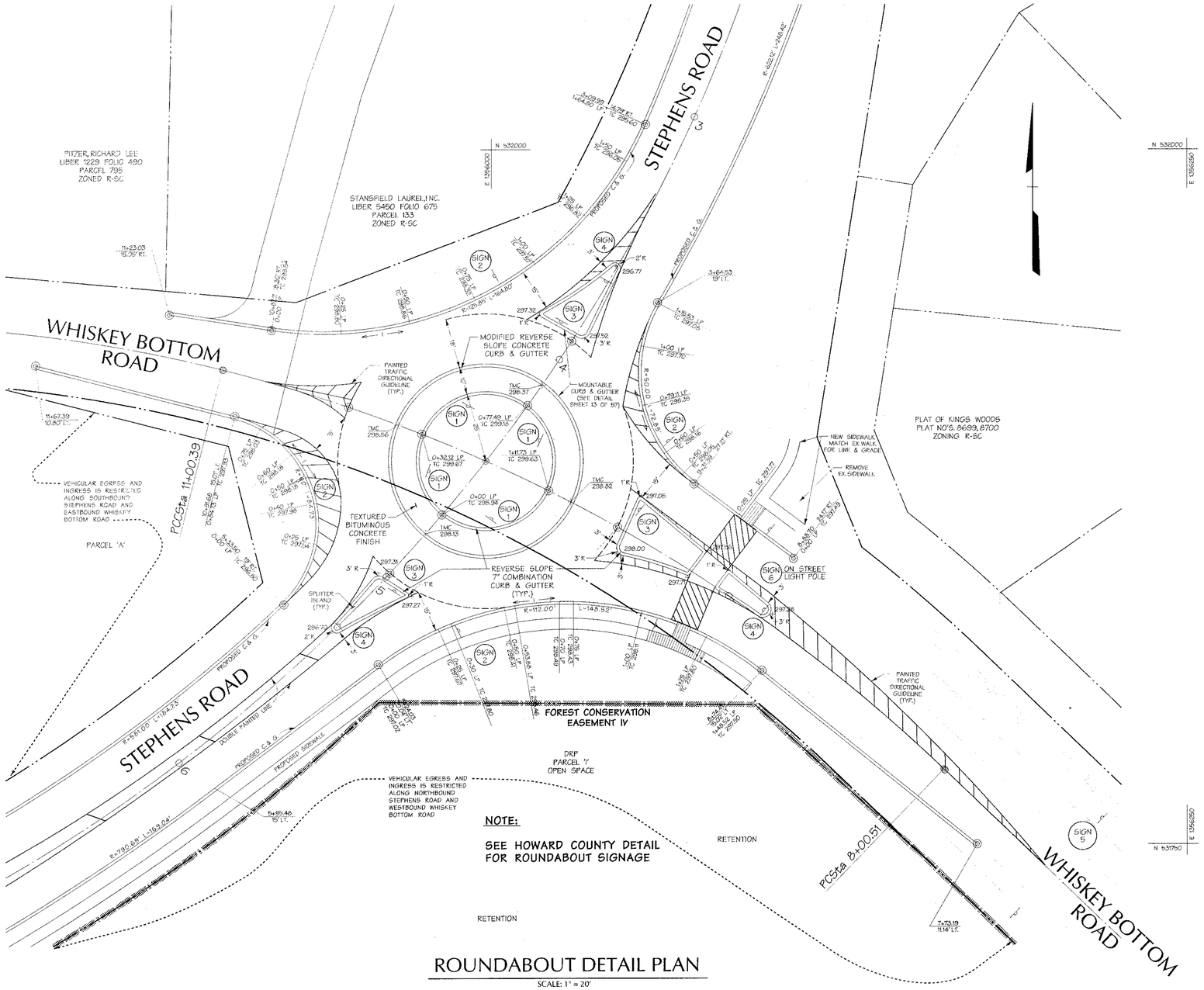

ROUNDABOUT DETAIL PLAN

SCALE: 1" = 20'

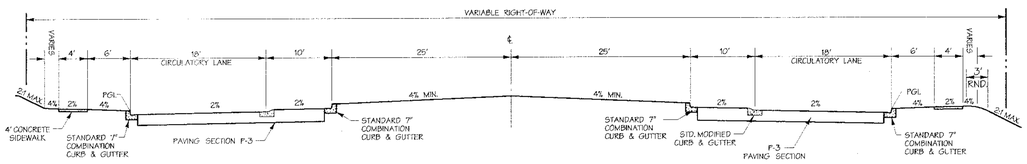

ROUNDABOUT PAVING SECTION

SCALE: 1" = 10'

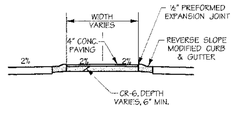

SPLITTER ISLAND DETAIL

SCALE: 1" = 10'

SIGN 1 — ONE WAY, R6-1R, 36" × 12"

SIGN 2 — R1-2, 36" × 36" × 36", YIELD, STREET NAME

SIGN 3 — R1-2, 36" × 36" × 36", YIELD, TO TRAFFIC IN CIRCLE

SIGN 4 — W6-1, 36" × 36"

SIGN 5 — W2-6, 25 M.P.H., W8-1, 24" × 24"

SIGN 6 — W11A-2

TYPICAL SINGLE LANE ROUNDABOUT

NOTES:

MARKINGS

SHARK TEETH (IF USED) AND 3' X 12' SKIPS SHALL BE WHITE THERMO PLASTIC OR INLAID TAPE.

STRIPING AROUND THE TRUCK APRON OR CENTRAL CIRCLE IS NOT REQUIRED.

A DOUBLE YELLOW CENTERLINE SHALL BE USED ON THE APPROACH ROADWAYS FOR A MINIMUM OF 200'± IN ADVANCE OF THE SPLITTER ISLAND.

CROSS WALKS (IF USED) SHALL BE THERMO PLASTIC OR INLAID TAPE.

CURBS

SPLITTER ISLAND CURBING SHALL BE HOWARD COUNTY MODIFIED COMBINATION CURB AND GUTTER OR SHA TYPE C CURB AND GUTTER. IF THE SPLITTER IS AND ALSO SERVES AS A PEDESTRIAN REFUGE ISLAND, BARRIER CURBING SHOULD BE CONSIDERED.

CENTRAL ISLAND CURBING SHALL BE HOWARD COUNTY COMBINATION CURB AND GUTTER OR SHA TYPE A CURB AND GUTTER.

RIGHT EDGE OF ROUNDABOUT AND APPROACH ROADWAY SHALL USE HOWARD COUNTY COMBINATION CURB AND GUTTER OR SHA TYPE A CURB AND GUTTER.

SIGNING

SIGN 1 CONSISTS OF ONE 12" X 36" R6-1 AND THREE 12" X 18" W1-8'S OR AN EQUIVALENT SINGLE 36" X 30" SIGN PANEL. BOTTOM OF SIGN ASSEMBLY SHALL BE 7' ABOVE GROUND (TO TOP OF SIGN).

SIGN 2 IS 36" X 36" R1-2. THE STREET NAME SIGN SHALL BE MOUNTED ON THE BACK SIDE OF THE POST.

SIGN 3 IS 36" X 36" R1-2 WITH 18" X 30" SUPPLEMENTAL PLATE AS SHOWN.

SIGN 4 IS ON ROUTINE SPLITTER ISLANDS. A GROUND MOUNTED AMBER ON YELLOW FLEX POST ON LARGER SPLITTER ISLANDS WHERE THE DISTANCE BETWEEN SIGNS 2 AND 4 IS IN EXCESS OF 30', AN R4-7 STANDARD SIZE AND MOUNTING SHALL BE USED IN LIEU OF THE FLEX POST.

SIGN 5 IS A 36" X 36" W2-6 WITH SUPPLEMENTAL SPEED PLATE AS SHOWN.

SIGN 6 IS A 36" X 36" W11A-2 CROSSING SIGN.

APPROVED: HOWARD COUNTY DEPT. OF PUBLIC WORKS

CHIEF, BUREAU OF HIGHWAYS — DATE 10-10-02

APPROVED: HOWARD COUNTY DEPT. OF PLANNING AND ZONING

CHIEF, DIVISION OF LAND DEVELOPMENT — DATE 10/22/02

CHIEF, DEVELOPMENT ENGINEERING DIVISION MK — DATE 10/10/02

Date	No.	Revision Description

REVITZ PROPERTY

OWNER /DEVELOPER:

THE HOWARD RESEARCH & DEVELOPMENT CORPORATION
10275 LITTLE PATUXENT PARKWAY
COLUMBIA, MARYLAND 21044

DMW
Daft-McCune-Walker, Inc.
200 East Pennsylvania Avenue
Towson, Maryland 21286
(410) 296-3333
Fax 296-4705

A Team of Land Planners, Landscape Architects, Engineers, Surveyors & Environmental Professionals

SUBDIVISION NAME: REVITZ PROPERTY	SECTION/PHASE		LOT/PARCEL #: 165 & P/O PAR. 837
PLAT # OR L# 2261/436	BLOCK # 20	ZONE PEC	TAX/ZONE MAP 47
ELECT. DISTRICT 6 th	CENSUS TRACT		
WATER CODE	SEWER CODE		

TITLE

FINAL PLAN
ROUNDABOUT DETAILS

Des By	DFM	Scale	AS SHOWN	Proj. No	01011.B
Drn By	WDE	Date	9/19/02		
Chk By		Approved			8 OF 57

01-NT-0500/200260639

9/20/02
Date

Professional Engr. No. 10551

F-02-111

Thu Sep 19 2:48:18 PM 2002 C:\Projects\01011\Graphics\Drawings\...

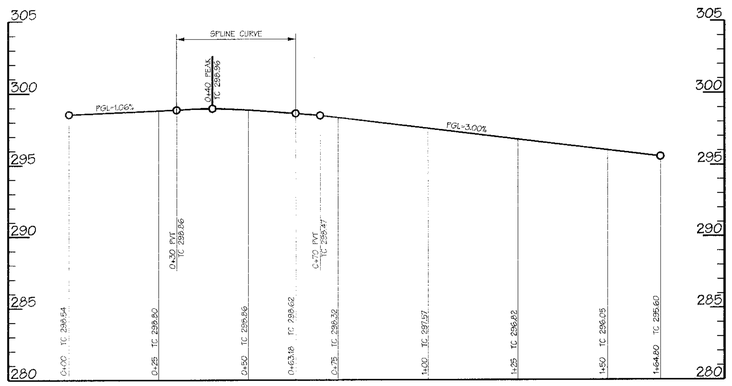

LINEAR PROFILE - NW CURB RETURN

SCALE: HORZ. 1" = 20'
VERT. 1" = 5'

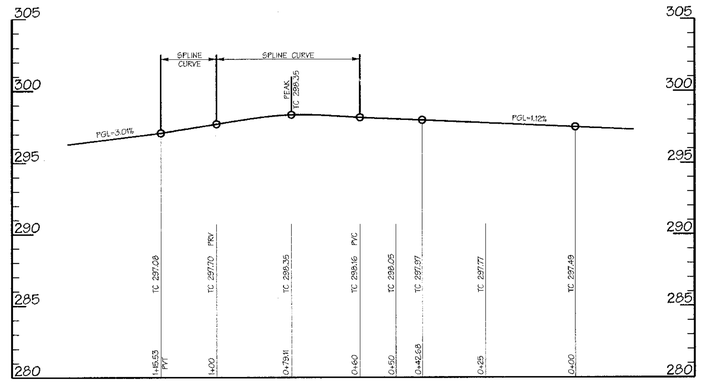

LINEAR PROFILE - NE CURB RETURN

SCALE: HORZ. 1" = 20'
VERT. 1" = 5'

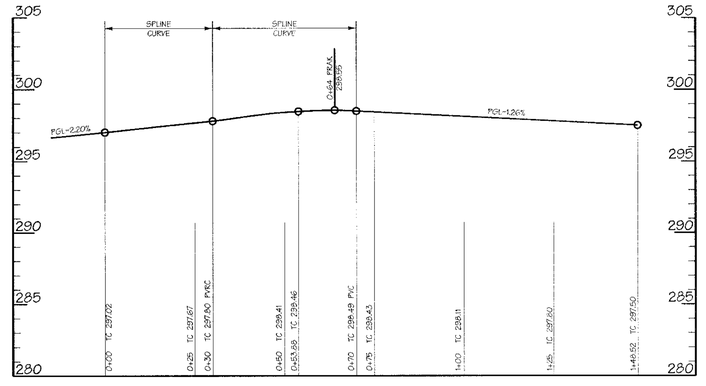

LINEAR PROFILE - SE CURB RETURN

SCALE: HORZ. 1" = 20'
VERT. 1" = 5'

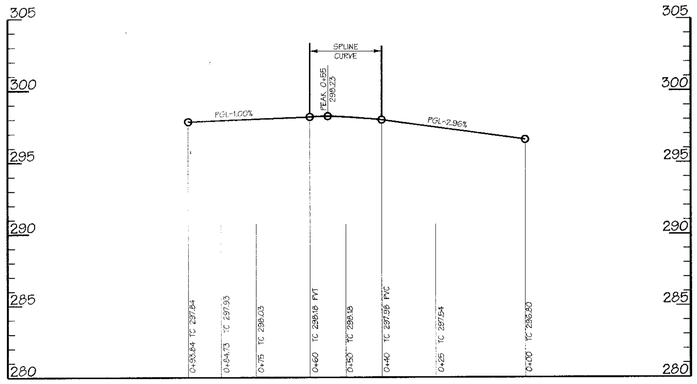

LINEAR PROFILE - SW CURB RETURN

SCALE: HORZ. 1" = 20'
VERT. 1" = 5'

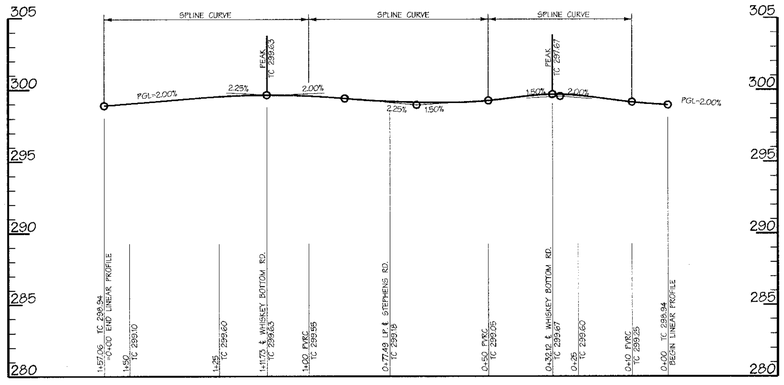

CENTER ISLAND - LINEAR PROFILE

SCALE: HORZ. 1" = 20'
VERT. 1" = 5'

APPROVED: HOWARD COUNTY DEPT. OF PUBLIC WORKS

CHIEF, BUREAU OF HIGHWAYS — DATE 10-10-02

APPROVED: HOWARD COUNTY DEPT. OF PLANNING AND ZONING

CHIEF, DIVISION OF LAND DEVELOPMENT — DATE 10/22/02

CHIEF, DEVELOPMENT ENGINEERING DIVISION MK — DATE 10/10/02

Date	No.	Revision Description

REVITZ PROPERTY

OWNER /DEVELOPER:

THE HOWARD RESEARCH & DEVELOPMENT CORPORATION
10275 LITTLE PATUXENT PARKWAY
COLUMBIA, MARYLAND 21044

DMW
Daft·McCune·Walker, Inc.
200 East Pennsylvania Avenue
Towson, Maryland 21286
(410) 296-3333
Fax 296-4705

A Team of Land Planners, Landscape Architects, Engineers, Surveyors & Environmental Professionals

SUBDIVISION NAME		SECTION/AREA		LOT/PARCEL #
REVITZ PROPERTY				165 & PO PAR 837
PLAT# OR L/F	BLOCK # / ZONE	TAX/ZONE MAP	ELECT. DISTRICT	CENSUS TRACT
22674 36	20 / PEC	47	6 th	
WATER CODE		SEWER CODE		

TITLE

FINAL PLAN
ROUNDABOUT CURB PROFILES

Des By	RBW	Scale	AS SHOWN	Proj. No.	01011.B
Drn By	WDE	Date	9/19/02		9 OF 57
Chk By		Approved			

01-NT-0500/200260639

9/20/02
Date

Professional Engr. No. 10551

F-02-111

Thu Sep 19 11:10:04 2002 P:\2000\01011B\Engineering\Drawings\Roundabout Curb Profiles.dgn 9/19/02 2:15:32 PM

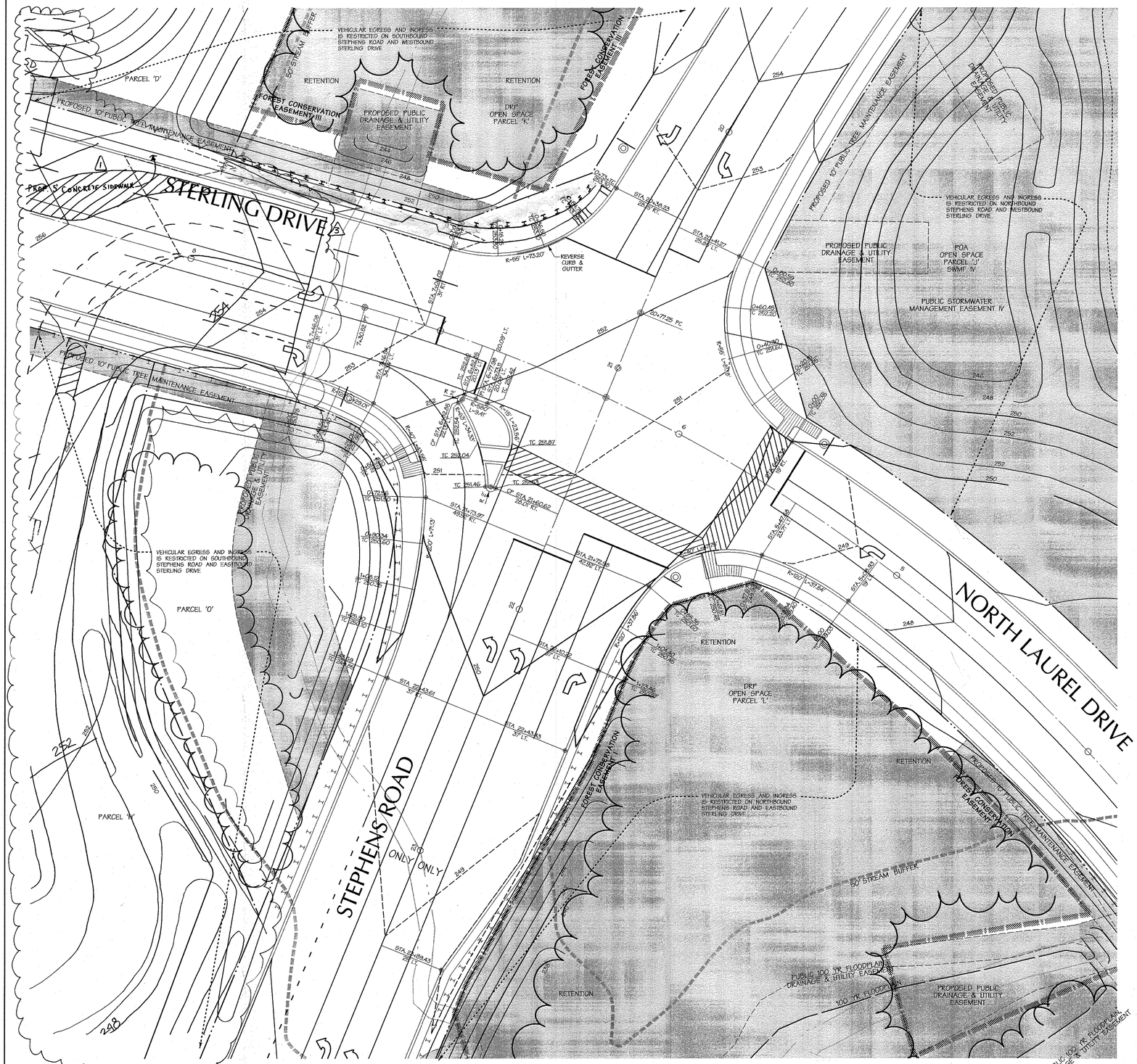

3 THE PURPOSE OF REVISION 3 IS TO SHOW THE WORK ASSOCIATED WITH EMERSON CAMPUS VCP SDP-10-005

3 PROFESSIONAL CERTIFICATION FOR REV #3

I HEREBY CERTIFY THAT THESE DOCUMENTS WERE PREPARED OR APPROVED BY ME, AND THAT I AM A DULY LICENSED PROFESSIONAL ENGINEER UNDER THE LAWS OF THE STATE OF MARYLAND, LICENSE NO 45292 EXPIRATION DATE: 05/21/2018

APPROVED: HOWARD COUNTY DEPT. OF PUBLIC WORKS

for CHIEF, BUREAU OF HIGHWAYS — 10-10-02 DATE

APPROVED: HOWARD COUNTY DEPT. OF PLANNING AND ZONING

CHIEF, DIVISION OF LAND DEVELOPMENT — 10/22/02 DATE

CHIEF, DEVELOPMENT ENGINEERING DIVISION MK — 10/18/02 DATE

Date	No.	Revision Description
05/23/15	3	EMERSON CAMPUS VCP
2-7-11	1	ADD 5' CONCRETE SIDEWALK ALONG PARCEL D FRONTAGE

REVITZ PROPERTY

OWNER /DEVELOPER:

THE HOWARD RESEARCH & DEVELOPMENT CORPORATION
10275 LITTLE PATUXENT PARKWAY
COLUMBIA, MARYLAND 21044

DMW
Daft-McCune-Walker, Inc.
200 East Pennsylvania Avenue
Towson, Maryland 21286
(410) 296-3333
Fax 296-4705

A Team of Land Planners, Landscape Architects, Engineers, Surveyors & Environmental Professionals

SUBDIVISION NAME: REVITZ PROPERTY		SECTION/AREA	LOT/PARCEL #: 165 & BO PAR. 837
PLAT# OR L# 22674&6	BLOCK # 20	ZONE PEC	TAX/ZONE MAP 47
ELECT. DISTRICT 6 th	CENSUS TRACT	WATER CODE	SEWER CODE

TITLE

FINAL PLAN
STEPHENS ROAD – STERLING DRIVE
INTERSECTION DETAIL

Des By	RBW	Scale	1" = 20'	Proj. No.	01011.B
Drn By	WDE	Date	9/19/02	10 OF 57	
Chk By		Approved			

FOR REVISION #1 ONLY
4-19-11
Date
PAUL LEE HUDNUT No. 8061 REGISTERED PROFESSIONAL ENGINEER
Professional Engr. No. 8061

01-NT-0500/200260639
9/20/02
Date
PROFESSIONAL ENGINEER No. 10557 STATE OF MARYLAND
Professional Engr. No. 10557

Professional Certification. I hereby certify that these documents were prepared or approved by me, and that I am a duly licensed professional engineer under the laws of the State of Maryland.
License No. 8061, Expiration Date: 8-26-11

F-02-111

Thu Sep 19 09:25:31 2002 C:\Projects\01011\Engineering\Drawings\Revitz Plan.dgn

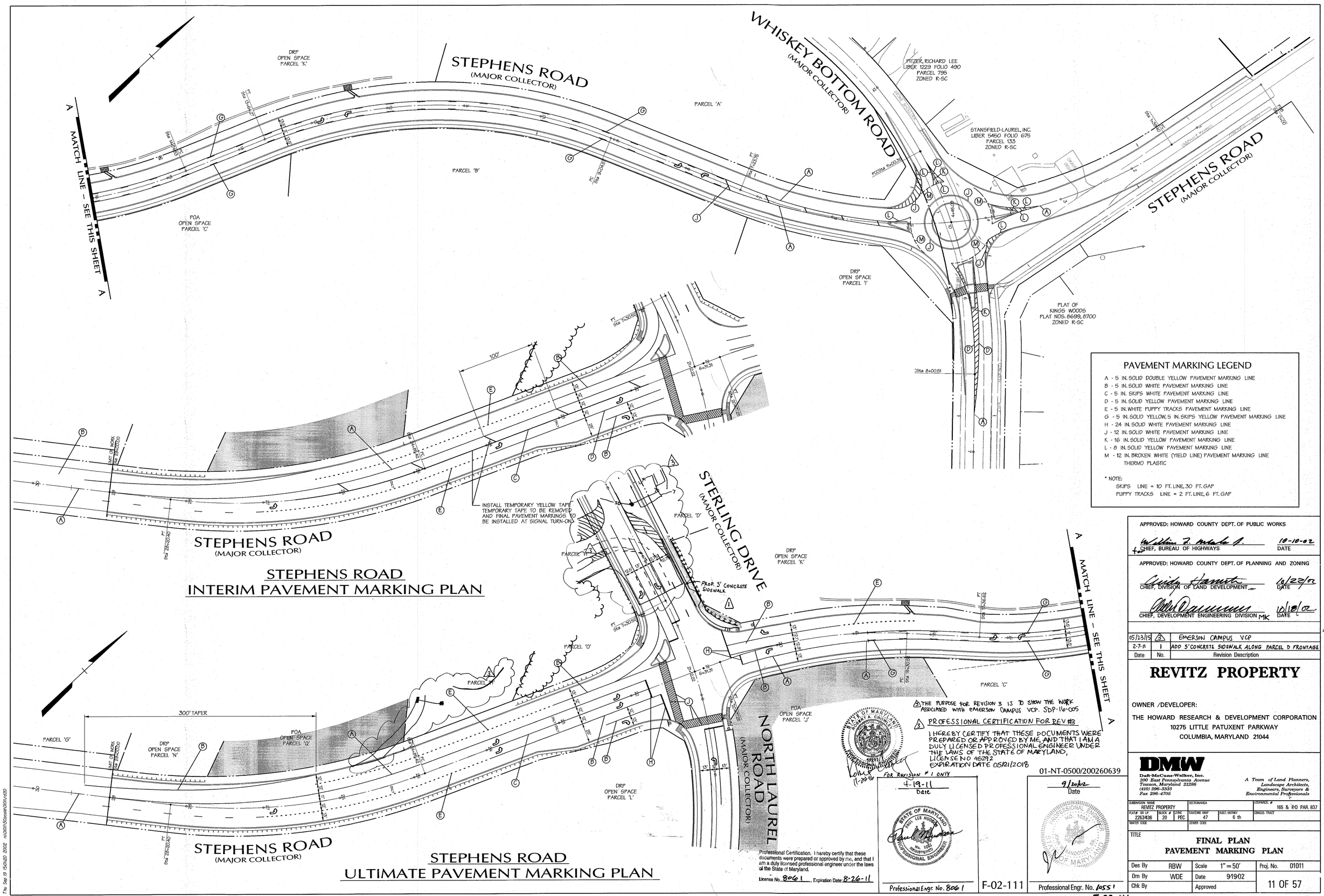

STEPHENS ROAD
INTERIM PAVEMENT MARKING PLAN

STEPHENS ROAD
ULTIMATE PAVEMENT MARKING PLAN

PAVEMENT MARKING LEGEND

- A - 5 IN. SOLID DOUBLE YELLOW PAVEMENT MARKING LINE
- B - 5 IN. SOLID WHITE PAVEMENT MARKING LINE
- C - 5 IN. SKIPS WHITE PAVEMENT MARKING LINE
- D - 5 IN. SOLID YELLOW PAVEMENT MARKING LINE
- E - 5 IN. WHITE PUPPY TRACKS PAVEMENT MARKING LINE
- G - 5 IN. SOLID YELLOW, 5 IN. SKIPS YELLOW PAVEMENT MARKING LINE
- H - 24 IN. SOLID WHITE PAVEMENT MARKING LINE
- J - 12 IN. SOLID WHITE PAVEMENT MARKING LINE
- K - 16 IN. SOLID YELLOW PAVEMENT MARKING LINE
- L - 8 IN. SOLID YELLOW PAVEMENT MARKING LINE
- M - 12 IN. BROKEN WHITE (YIELD LINE) PAVEMENT MARKING LINE THERMO PLASTIC

* NOTE:
SKIPS LINE = 10 FT. LINE, 30 FT. GAP
PUPPY TRACKS LINE = 2 FT. LINE, 6 FT. GAP

APPROVED: HOWARD COUNTY DEPT. OF PUBLIC WORKS

William J. Mackey Jr. for — CHIEF, BUREAU OF HIGHWAYS — 10-10-02 DATE

APPROVED: HOWARD COUNTY DEPT. OF PLANNING AND ZONING

CHIEF, DIVISION OF LAND DEVELOPMENT — 10/22/02 DATE

CHIEF, DEVELOPMENT ENGINEERING DIVISION MK — 10/18/02 DATE

Date	No.	Revision Description
05/23/19	3	EMERSON CAMPUS VCP
2-7-11	1	ADD 5' CONCRETE SIDEWALK ALONG PARCEL D FRONTAGE

REVITZ PROPERTY

OWNER /DEVELOPER:
THE HOWARD RESEARCH & DEVELOPMENT CORPORATION
10275 LITTLE PATUXENT PARKWAY
COLUMBIA, MARYLAND 21044

3 THE PURPOSE FOR REVISION 3 IS TO SHOW THE WORK ASSOCIATED WITH EMERSON CAMPUS VCP. SDP-16-005

3 PROFESSIONAL CERTIFICATION FOR REV #3

I HEREBY CERTIFY THAT THESE DOCUMENTS WERE PREPARED OR APPROVED BY ME, AND THAT I AM A DULY LICENSED PROFESSIONAL ENGINEER UNDER THE LAWS OF THE STATE OF MARYLAND, LICENSE NO 46292 EXPIRATION DATE 05/21/2018

STATE OF MARYLAND — ROBERT A. CROCKETT — No. 46292 — REGISTERED PROFESSIONAL ENGINEER

11-29-18

FOR Revision # 1 ONLY

4-19-11 Date

STATE OF MARYLAND — PAUL LEE HUDSON — No. 8061 — REGISTERED PROFESSIONAL ENGINEER

Professional Certification. I hereby certify that these documents were prepared or approved by me, and that I am a duly licensed professional engineer under the laws of the State of Maryland.
License No. 8061, Expiration Date 8-26-11

Professional Engr. No. 8061

F-02-111

01-NT-0500/200260639

9/20/02 Date

STATE OF MARYLAND — ANTHONY M. MANOCCHIA — No. 10551 — PROFESSIONAL ENGINEER

Professional Engr. No. 10551

F-02-111

DMW
Daft-McCune-Walker, Inc.
200 East Pennsylvania Avenue
Towson, Maryland 21286
(410) 296-3333
Fax 296-4705

A Team of Land Planners, Landscape Architects, Engineers, Surveyors & Environmental Professionals

SUBDIVISION NAME: REVITZ PROPERTY		SECTION/AREA			LOT/PARCEL #: 165 & P/O PAR. 837
PLAT# OR L/F: 22614/436	BLOCK #: 20	ZONE: PEC	TAX/ZONE MAP: 47	ELECT. DISTRICT: 6 th	CENSUS TRACT
WATER CODE		SEWER CODE			

TITLE
FINAL PLAN
PAVEMENT MARKING PLAN

Des By	RBW	Scale	1" = 50'	Proj. No.	01011
Drn By	WDE	Date	9/19/02		11 OF 57
Chk By		Approved			

Thu Sep 19 15:02:20 2002 n:\001\50scale\001r28

Thu Sep 19 15:02:20 2002 n:\001\50scale\001r28

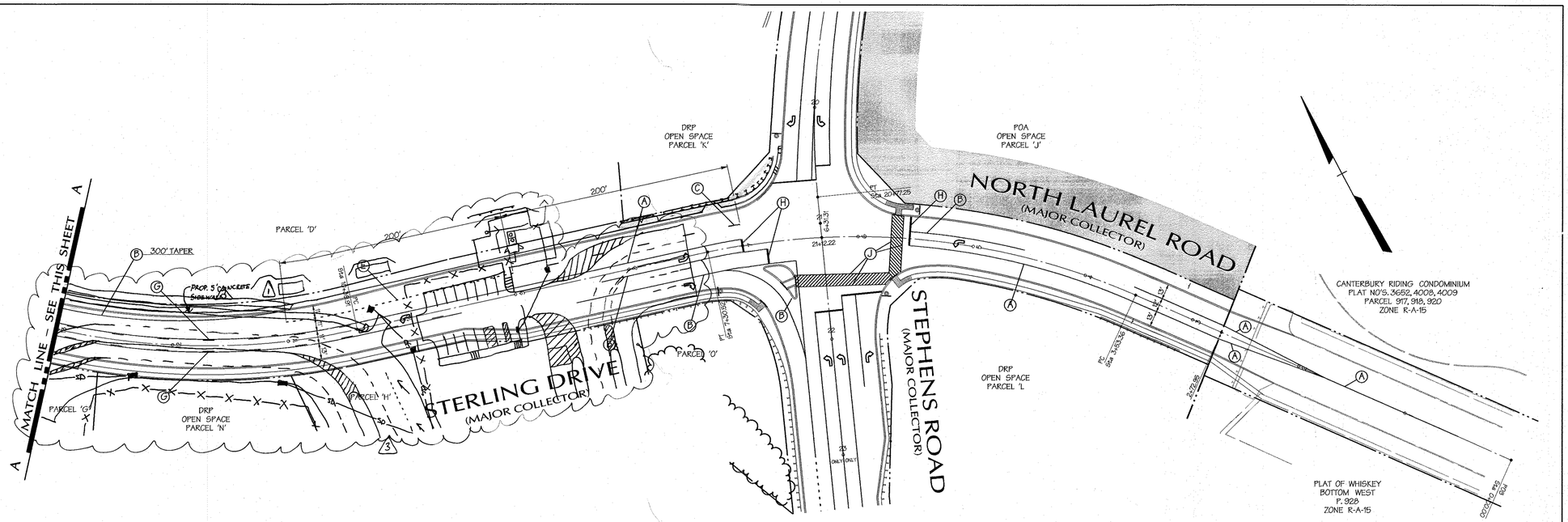

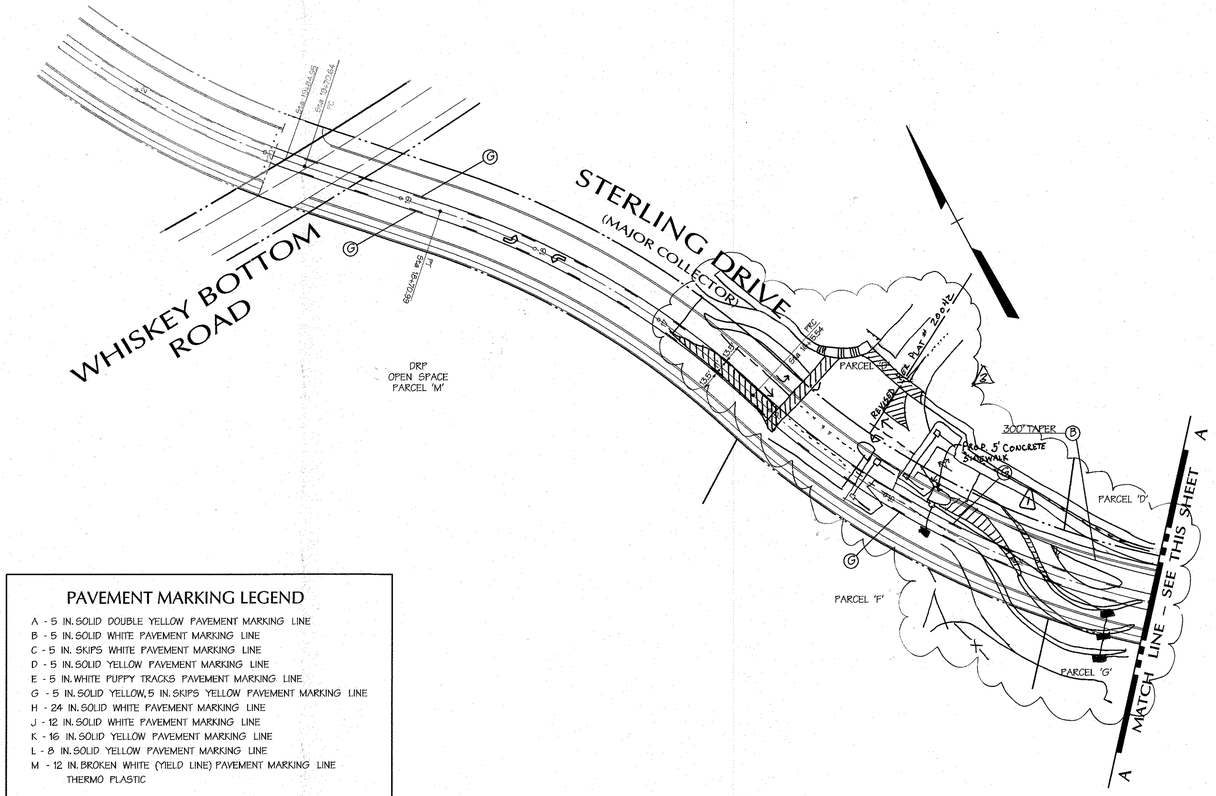

PAVEMENT MARKING LEGEND

A - 5 IN. SOLID DOUBLE YELLOW PAVEMENT MARKING LINE
B - 5 IN. SOLID WHITE PAVEMENT MARKING LINE
C - 5 IN. SKIPS WHITE PAVEMENT MARKING LINE
D - 5 IN. SOLID YELLOW PAVEMENT MARKING LINE
E - 5 IN. WHITE PUPPY TRACKS PAVEMENT MARKING LINE
G - 5 IN. SOLID YELLOW, 5 IN. SKIPS YELLOW PAVEMENT MARKING LINE
H - 24 IN. SOLID WHITE PAVEMENT MARKING LINE
J - 12 IN. SOLID WHITE PAVEMENT MARKING LINE
K - 16 IN. SOLID YELLOW PAVEMENT MARKING LINE
L - 8 IN. SOLID YELLOW PAVEMENT MARKING LINE
M - 12 IN. BROKEN WHITE (YIELD LINE) PAVEMENT MARKING LINE
THERMO PLASTIC

* NOTE:
SKIPS LINE = 10 FT. LINE, 30 FT. GAP
PUPPY TRACKS LINE = 2 FT. LINE, 6 FT. GAP

APPROVED: HOWARD COUNTY DEPT. OF PUBLIC WORKS

for CHIEF, BUREAU OF HIGHWAYS — DATE 10-10-02

APPROVED: HOWARD COUNTY DEPT. OF PLANNING AND ZONING

CHIEF, DIVISION OF LAND DEVELOPMENT — DATE 10/22/02

CHIEF, DEVELOPMENT ENGINEERING DIVISION MK — DATE 10/8/02

Date	No.	Revision Description
05/23/15	3	EMERSON CAMPUS VCP
2-7-11	1	ADD 5' CONCRETE SIDEWALK ALONG PARCEL D FRONTAGE

REVITZ PROPERTY

OWNER /DEVELOPER:

THE HOWARD RESEARCH & DEVELOPMENT CORPORATION
10275 LITTLE PATUXENT PARKWAY
COLUMBIA, MARYLAND 21044

DMW
Daft-McCune-Walker, Inc.
200 East Pennsylvania Avenue
Towson, Maryland 21286
(410) 296-3333
Fax 296-4705

A Team of Land Planners, Landscape Architects, Engineers, Surveyors & Environmental Professionals

SUBDIVISION NAME			SECTION/AREA		LOT/PARCEL #
REVITZ PROPERTY					165 & PO PAR. 837
PLAT# OR L/F	BLOCK #	ZONE	TAX/ZONE MAP	ELECT. DISTRICT	CENSUS TRACT
22614/436	20	PEC	47	6 th	
WATER CODE			SEWER CODE		

TITLE

FINAL PLAN
PAVEMENT MARKING PLAN

Des By	RBW	Scale	1" = 50'	Proj. No.	01011
Drn By	WDE	Date	9/9/02		
Chk By		Approved			12 OF 57

3 THE PURPOSE OF REVISION 3 IS TO SHOW THE WORK ASSOCIATED WITH THE EMERSON CAMPUS VCP. SDP-16-005

2 PROFESSIONAL CERTIFICATION FOR REV #3

I HEREBY CERTIFY THAT THESE DOCUMENTS WERE PREPARED OR APPROVED BY ME, AND THAT I AM A DULY LICENSED PROFESSIONAL ENGINEER UNDER THE LAWS OF THE STATE OF MARYLAND, LICENSE NO 45292 EXPIRATION DATE 05/21/2018

STATE OF MARYLAND — ROBERT A. CROWLEY — No. 45292 — REGISTERED PROFESSIONAL ENGINEER

11-29-16

FOR REVISION # 1 ONLY

4-19-11
Date

STATE OF MARYLAND — KARL LEE HUDSON — No. 30611 — REGISTERED PROFESSIONAL ENGINEER

Professional Engr. No 30611

Professional Certification. I hereby certify that these documents were prepared or approved by me, and that I am a duly licensed professional engineer under the laws of the State of Maryland.

License No. 30611, Expiration Date: 8-26-11

F-02-111

01-NT-0500/200260639

9/20/02
Date

STATE OF MARYLAND — JOHN PANOCCIA, JR. — No. 10551 — PROFESSIONAL ENGINEER

Professional Engr. No. 10551

F-02-111

Thu Sep 19 15:03:40 2002 n:\2001\50ssw\dgn\r-fp01

Thu Sep 19 15:03:31 2002 n:\2001\50ssw\dgn\r-fp01

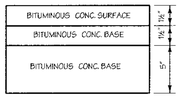

PAVING SECTION P-3
MINOR & MAJOR COLLECTORS

NO SCALE

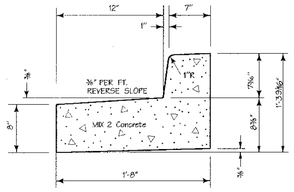

REVERSE 7" COMBINATION CURB & GUTTER

NO SCALE

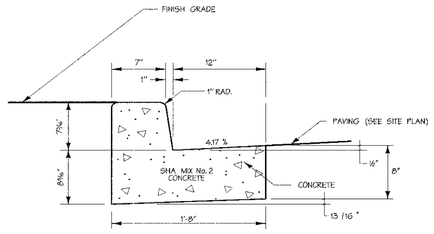

SECTION

TYPE "A" CURB AND GUTTER

NO SCALE

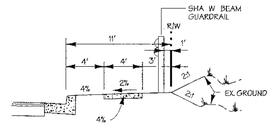

LOCATION PLAN
W BEAM GUARDRAIL

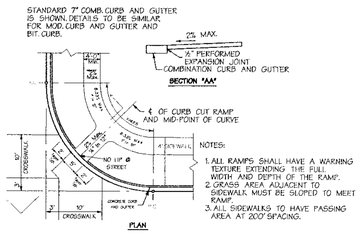

SIDEWALK RAMP

TYPE "A"

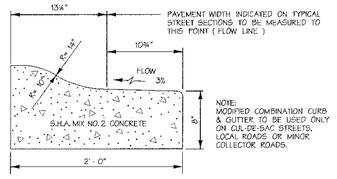

MODIFIED REVERSE SLOPE MOUNTABLE CONCRETE CURB & GUTTER

NO SCALE

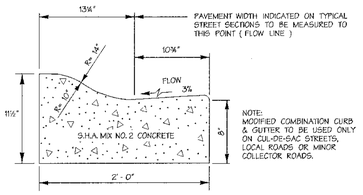

MODIFIED MOUNTABLE CONCRETE CURB & GUTTER

NO SCALE

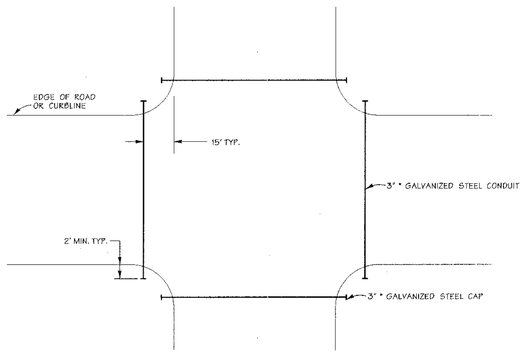

* LARGER CONDUITS SHALL BE INSTALLED WHEN SO DIRECTED BY THE DEPARTMENT OF PUBLIC WORKS.

NOTES:

1. CONDUITS SHALL BE INSTALLED WHEN DIRECTED BY THE DEPT. OF PUBLIC WORKS
2. CONDUITS SHALL BE LAID AT A DEPTH OF 18", SLOPED TO DRAIN, AND THE ENDS CAPPED.
3. SEE FIGURES 2.18 AND 2.19 OF DESIGN MANUAL FOR LOCATION OF UTILITIES.

HOWARD COUNTY DETAIL R-9.01

NO SCALE

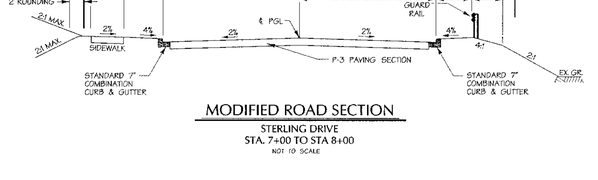

MODIFIED ROAD SECTION

STERLING DRIVE
STA. 7+00 TO STA 8+00
NOT TO SCALE

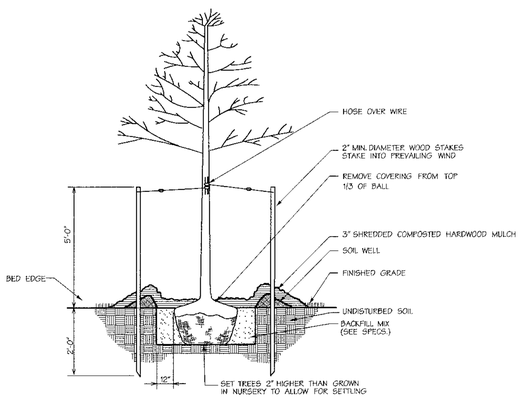

DECIDUOUS TREE DETAIL

(TO 3" CALIPER)

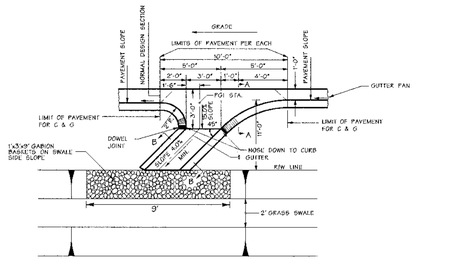

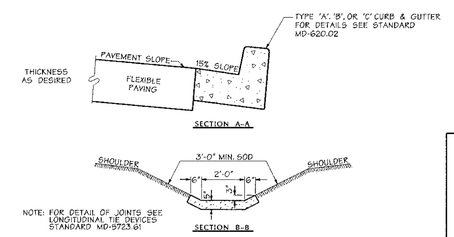

STANDARD CURB OPENING DETAIL
CURB & GUTTER SECTION

NOT TO SCALE

F-02-111

APPROVED: HOWARD COUNTY DEPT. OF PUBLIC WORKS

CHIEF, BUREAU OF HIGHWAYS — DATE 10-10-02

APPROVED: HOWARD COUNTY DEPT. OF PLANNING AND ZONING

CHIEF, DIVISION OF LAND DEVELOPMENT — DATE 10/22/02

CHIEF, DEVELOPMENT ENGINEERING DIVISION MK — DATE 10/8/02

Date	No.	Revision Description

REVITZ PROPERTY

OWNER /DEVELOPER:

THE HOWARD RESEARCH & DEVELOPMENT CORPORATION
10275 LITTLE PATUXENT PARKWAY
COLUMBIA, MARYLAND 21044

DMW

Daft·McCune·Walker, Inc.
200 East Pennsylvania Avenue
Towson, Maryland 21286
(410) 296-3333
Fax 296-4705

A Team of Land Planners, Landscape Architects, Engineers, Surveyors & Environmental Professionals

SUBDIVISION NAME		SECTION/AREA		LOT/PARCEL #
REVITZ PROPERTY				185 & P/O PAR. 837
PLAT # OR L/F	BLOCK #	ZONE	TAX/ZONE MAP	ELECT. DISTRICT	CENSUS TRACT
22624.36	20	PEC	47	6 TH	
WATER CODE		SEWER CODE			

TITLE

FINAL PLAN
ROAD CONSTRUCTION DETAILS

Des By	RBW	Scale	AS SHOWN	Proj. No.	01011
Drn By	WDE	Date	91902		13 OF 57
Chk By		Approved			

01-NT-0500/200260639

9/24/02
Date

Professional Engr. No. 10551

F-02-111

Thu Sep 19 [illegible] 2002 [illegible] 9/19/02 3:08:04 PM

NOTE:

CONTRACTOR TO MAKE ADJUSTMENTS TO PLAN IN FIELD AS REQUIRED.

APPROVED: HOWARD COUNTY DEPT. OF PUBLIC WORKS

for William L. Malone Jr. — CHIEF, BUREAU OF HIGHWAYS — DATE 10-10-02

APPROVED: HOWARD COUNTY DEPT. OF PLANNING AND ZONING

Cindy Hamilton — CHIEF, DIVISION OF LAND DEVELOPMENT — DATE 10/22/02

[signature] — CHIEF, DEVELOPMENT ENGINEERING DIVISION MK — DATE 10/18/02

Date	No.	Revision Description

REVITZ PROPERTY

OWNER /DEVELOPER:

THE HOWARD RESEARCH & DEVELOPMENT CORPORATION
10275 LITTLE PATUXENT PARKWAY
COLUMBIA, MARYLAND 21044

DMW
Daft-McCune-Walker, Inc.
200 East Pennsylvania Avenue
Towson, Maryland 21286
(410) 296-3333
Fax 296-4705

A Team of Land Planners, Landscape Architects, Engineers, Surveyors & Environmental Professionals

SUBDIVISION NAME			SECTION AREA		LOT/PARCEL #
					165 & P/O PAR. 837
PLAT # OR LF 2267/436	BLOCK # 20	ZONE PEC	TAX ZONE MAP 47	ELECT. DISTRICT 6 th	CENSUS TRACT
WATER CODE			SEWER CODE		

TITLE

FINAL PLAN
MAINTENANCE OF TRAFFIC PLAN

Des By	DFM	Scale	1" = 50'	Proj. No.	01011
Dm By	KDE	Date	9/19/02		14 OF 57
Chk By		Approved			

9/20/02
Date

Professional Engr. No. 10551

F-02-111

F-02-111

CANTERBURY RIDING CONDOMINIUM
PLAT NOS. 3662, 3739, 4008, 4009
PARCEL 317, 916, 920
ZONING: R-A-15

CANTERBURY RIDING

FOREST CONSERVATION EASEMENT IV

FOREST CONSERVATION EASEMENT V

FOREST CONSERVATION EASEMENT III

FOREST CONSERVATION EASEMENT I

FOREST CONSERVATION EASEMENT II

EXISTING 15" CULVERT INLET

NORTH LAUREL RD.

STEPHENS ROAD

STERLING DRIVE

PROMISE COURT

WHISKEY BOTTOM ROAD

KINGS CONTRIVE ROAD

PLAT OF KINGS WOODS
PLAT NOS. 8699, 8700

PLAT OF WHISKEY BOTTOM WEST
PARCEL 922
ZONING: R-A-15

VEHICULAR EGRESS AND INGRESS IS RESTRICTED ALONG NORTHBOUND STEPHENS ROAD AND WESTBOUND NORTH LAUREL RD.

VEHICULAR EGRESS AND INGRESS IS RESTRICTED ALONG NORTHBOUND STEPHENS ROAD AND WESTBOUND NORTH LAUREL ROAD

VEHICULAR EGRESS AND INGRESS IS RESTRICTED ALONG SOUTHBOUND STEPHENS ROAD AND EASTBOUND WHISKEY BOTTOM ROAD

VEHICULAR EGRESS AND INGRESS IS RESTRICTED ALONG SOUTHBOUND STEPHENS ROAD AND WESTBOUND STERLING DRIVE

VEHICULAR EGRESS AND INGRESS IS RESTRICTED ALONG SOUTHBOUND STEPHENS ROAD AND WESTBOUND STERLING DRIVE

VEHICULAR EGRESS AND INGRESS IS RESTRICTED ALONG THE LOOP ROAD PARCEL AND MD RTE. 216

SEE INSERT

SEE WALLACE MONTGOMERY PLANS

PUBLIC STORMWATER MANAGEMENT EASEMENT
SWM IV
RETENTION FACILITY
DRP
OPEN SPACE
PARCEL 'J'

PUBLIC STORMWATER MANAGEMENT EASEMENT
SWM V
RETENTION FACILITY
POA
OPEN SPACE
PARCEL 'G'

PUBLIC STORMWATER MANAGEMENT EASEMENT III
SWM III
RETENTION FACILITY
POA
OPEN SPACE
PARCEL 'K'

PUBLIC STORMWATER MANAGEMENT EASEMENT
SWM II
RETENTION FACILITY
POA
OPEN SPACE
PARCEL 'F'

DRP
OPEN SPACE
PARCEL 'I'

DRP
OPEN SPACE
PARCEL 'L'

DRP
OPEN SPACE
PARCEL 'N'

DRP
OPEN SPACE
PARCEL 'M'

PARCEL 'A'

PARCEL 'B'

PARCEL 'C'

PARCEL 'D'

PARCEL 'E'

PARCEL 'F'

PARCEL 'G'

PARCEL 'H'

25' WETLAND BUFFER

WETLAND LIMIT

25' STREAM BUFFER

PROP. 5' CONCRETE SIDEWALK

THIS SECTION OF WHISKEY BOTTOM ROAD TO BE ABANDONED

THIS SECTION OF WHISKEY BOTTOM ROAD TO REMAIN AS A PUBLIC ROAD

REVISED PER PLAT # 20042

STANSFIELD LAUREL, INC.
LIBER 5460 FOLIO 675
PARCEL 133
ZONED: R-SC

NEWCOMB, ROY E.
LIBER 2520 FOLIO 543
PARCEL 134
ZONED R-SC

HAMMONDS PROMISE
PARCEL 478, LOTS 1-21
PLAT # 6131, MAP #47
ZONED R-SC

HAMMONDS PROMISE
PARCEL 478, LOTS 1-21
PLAT # 6131, MAP #47
ZONED R-SC

BLOUGH, LARRY R.
LIBER 15346 FOLIO 572
PARCEL 477
ZONED R-SC

EMERSON
3/1
P-01-25

HOWARD RESEARCH
AND DEVELOPMENT CORPORATION
LIBER 3245 FOLIO 251
LIBER 5229 FOLIO 330
PARCEL 837
ZONING: PEC-MXD-3

AA	A=30.62ac C=0.75 %IMP=75%
AB	A=0.40ac C=0.20 %IMP=0%
AC	A=0.69ac C=0.63 %IMP=57%
AD	A=0.73ac C=0.55 %IMP=47%
AE	C=0.87 %IMP=88%
BA	A=0.46ac C=0.78 %IMP=70%
BB	A=0.48ac C=0.64 %IMP=50%
BC	A=0.92ac C=0.73 %IMP=70%
BD	A=0.37ac C=0.52 %IMP=43%
BE	A=0.39ac C=0.64 %IMP=50%
BF	A=0.39ac C=0.64 %IMP=50%
BG	A=0.28ac C=0.64 %IMP=50%
BH	A=0.22ac C=0.87 %IMP=88%
CA	A=0.46ac C=0.64 %IMP=50%
CB	A=0.39ac C=0.50 %IMP=40%
CC	A=2.78ac C=0.87 %IMP=88%
CD	A=1.05ac C=0.50 %IMP=40%
CE	A=5.45ac C=0.87 %IMP=88%
CF	A=0.26ac C=0.73 %IMP=70%
CG	A=0.26ac C=0.73 %IMP=70%
CH	A=0.26ac C=0.73 %IMP=70%
CI	A=3.42ac C=0.87 %IMP=88%
CJ	A=0.23ac C=0.73 %IMP=70%
DA	A=0.29ac C=0.73 %IMP=70%
DB	A=0.56ac C=0.56 %IMP=47%
DC	A=0.37ac C=0.77 %IMP=76%
DD	A=1.46ac C=0.79 %IMP=79%
DE	A=0.35ac C=0.76 %IMP=75%
L-Q	A=0.37ac C=0.61 %IMP=42%

OFFSITE DRAINAGE AREA 1
DRAINAGE AREA = 31.05 AC.
RCN = 67
TC = 0.24 HR.

ALL SAINTS RD.

WHISKEY BOTTOM ROAD

NORTH LAUREL RD.

CANTERBURY RIDING

CANTERBURY RIDING CONDOMINIUM
PLAT NOS. 3662, 3739, 4008, 4009
PARCEL 317, 916, 920
ZONING: R-A-15

INSERT

DRAINAGE AREA MAP
SCALE: 1"=200'

Legend

- 240 — EXISTING CONTOUR
- 240 — PROPOSED POND CONTOUR
- 15" D — PROPOSED STORMDRAIN
- PROPOSED DRAINAGE AREA LIMIT
- A=0.46ac BA C=0.78 %IMP=70% — PROPOSED DRAINAGE AREA LABEL
- I-28 — PROPOSED STORMDRAIN CALL OUT LABEL

DRAINAGE AREA MAP
SCALE: 1"=100'

3 THE PURPOSE OF REVISION 3 IS TO SHOW THERE WORK ASSOCIATED WITH EMERSON CAMPUS VCP. SDP-16-005

3 PROFESSIONAL CERTIFICATION FOR REV #3

I HEREBY CERTIFY THAT THESE DOCUMENTS WERE PREPARED OR APPROVED BY ME, AND THAT I AM A DULY LICENSED PROFESSIONAL ENGINEER UNDER THE LAWS OF THE STATE OF MARYLAND
LICENSE NO 19272
EXPIRATION DATE: 05/21/2018

Professional Certification. I hereby certify that these documents were prepared or approved by me, and that I am a duly licensed professional engineer under the laws of the State of Maryland.
License No. 8061, Expiration Date: 8-26-11

FOR REVISION #1 ONLY
4/19/11
Date
Professional Engr No. 8061
F-02-111

9/20/02
Date
Professional Engr. No. 10551

01-NT-0500/200260639

Date	No.	Revision Description
06/23/15	4	EMERSON CAMPUS VCP
2-7-11	1	ADD 5' CONCRETE SIDEWALK ALONG PARCEL D FRONTAGE

REVITZ PROPERTY

OWNER /DEVELOPER:

THE HOWARD RESEARCH & DEVELOPMENT CORPORATION
10275 LITTLE PATUXENT PARKWAY
COLUMBIA, MARYLAND 21044

DMW
Daft·McCune·Walker, Inc.
200 East Pennsylvania Avenue
Towson, Maryland 21286
(410) 296-3333
Fax 296-4705

A Team of Land Planners, Landscape Architects, Engineers, Surveyors & Environmental Professionals

APPROVED: HOWARD COUNTY DEPT. OF PUBLIC WORKS
CHIEF, BUREAU OF HIGHWAYS — DATE 10-10-02

APPROVED: HOWARD COUNTY DEPT. OF PLANNING AND ZONING
CHIEF, DIVISION OF LAND DEVELOPMENT — DATE 10/22/02
CHIEF, DEVELOPMENT ENGINEERING DIVISION MK — DATE 10/10/02

SUBDIVISION NAME		SECTION/AREA	LOT/PARCEL #
REVITZ PROPERTY			165 & PO PAR. 837
PLAT# OR L#	BLOCK #	ZONE	TAX/ZONE MAP	ELECT. DISTRICT	CENSUS TRACT
22674/436	20	PEC	47, GRID 20	6 th	
WATER CODE			SEWER CODE		

TITLE
FINAL PLAN
STORM DRAIN DRAINAGE AREA MAP

Des By	DFM	Scale 1" = 100'	Proj. No. 01011.B
Drn By		Date 9/19/02	15 OF 57
Chk By		Approved	

SP-01-17 F-02-111

Thu Sep 19 [illegible] PM 20/61/6

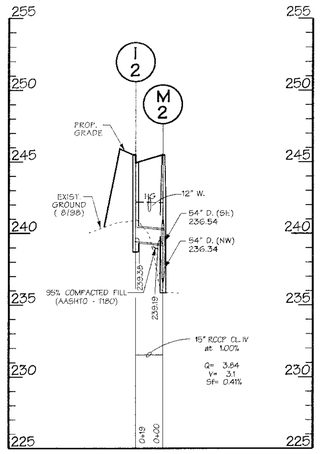

STORM DRAIN PROFILE
SCALE: HOR. 1" = 50'
VER. 1" = 5'

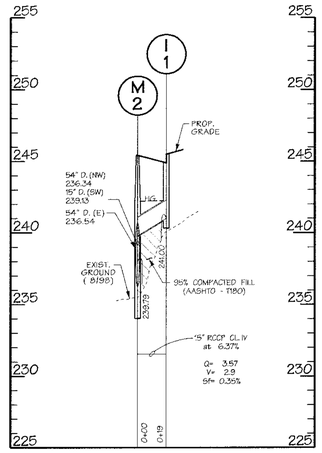

STORM DRAIN PROFILE
SCALE: HOR. 1" = 50'
VER. 1" = 5'

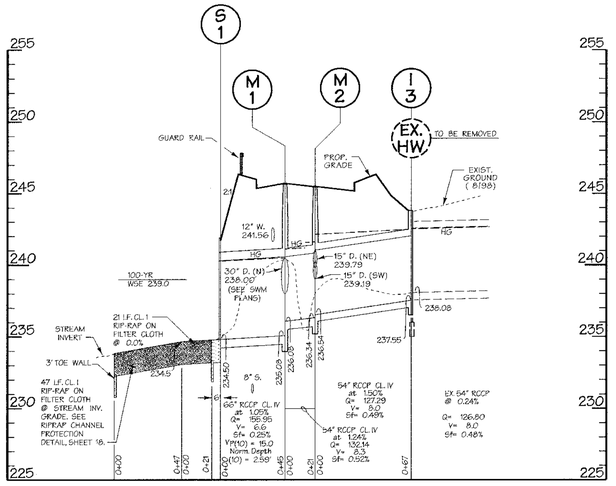

STORM DRAIN PROFILE
SCALE: HOR. 1" = 50'
VER. 1" = 5'

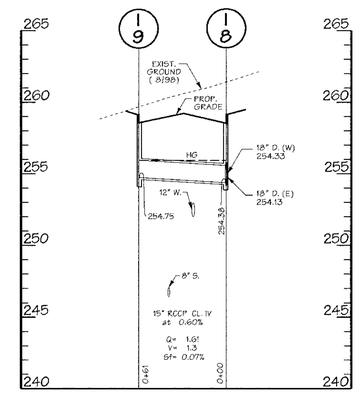

STORM DRAIN PROFILE
SCALE: HOR. 1" = 50'
VER. 1" = 5'

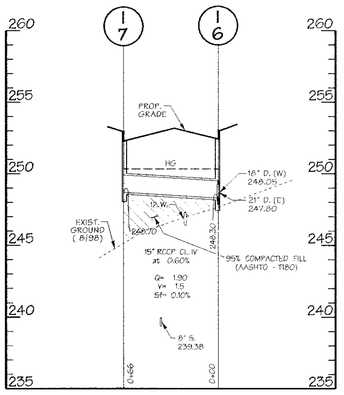

STORM DRAIN PROFILE
SCALE: HOR. 1" = 50'
VER. 1" = 5'

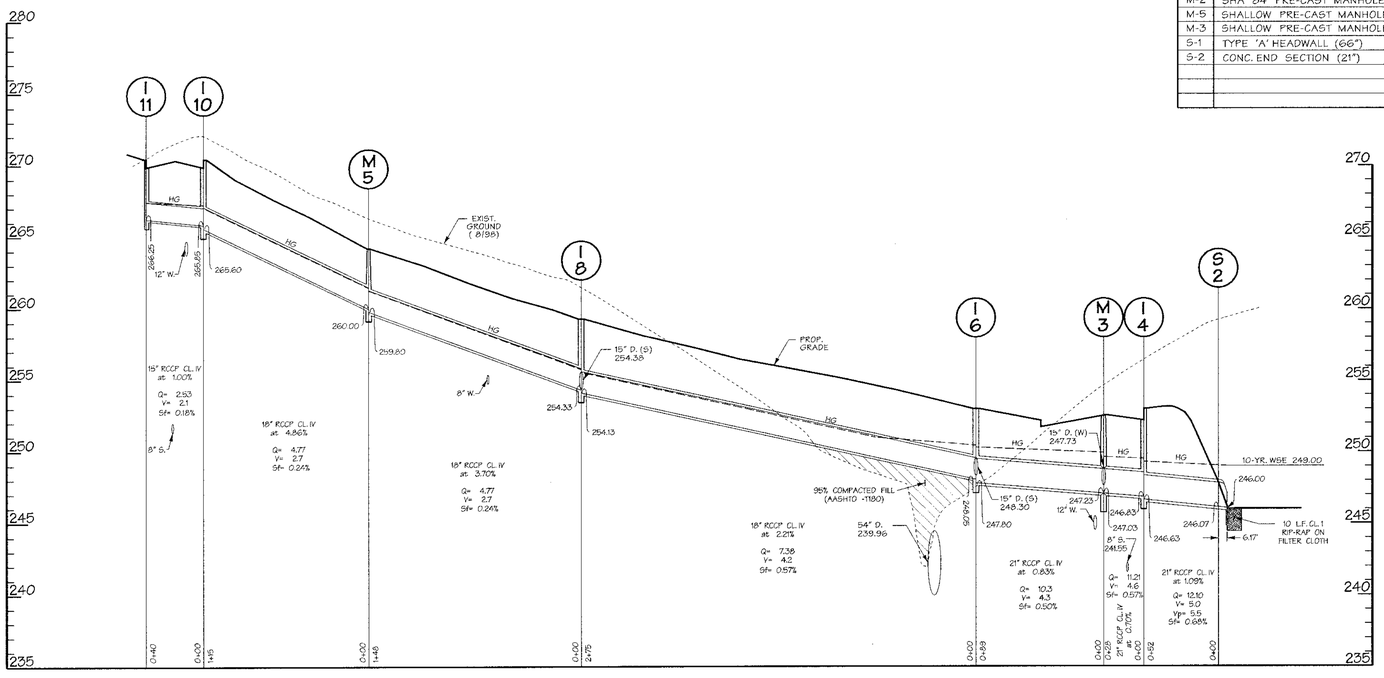

STORM DRAIN PROFILE
SCALE: HOR. 1" = 50'
VER. 1" = 5'

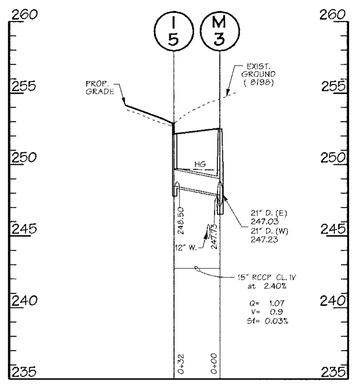

STORM DRAIN PROFILE
SCALE: HOR. 1" = 50'
VER. 1" = 5'

STRUCTURE SCHEDULE

NO.	TYPE	INV. IN	INV. OUT	TOP ELEV.	REMARKS	LOCATION
I-1	A-5 W=2'-6"		241.00	245.69	HO. CO. STD. SD 4.01	NORTH LAUREL DR. STA. 2+99.36
I-2	A-5 W=2'-6"		239.38	245.69	HO. CO. STD. SD 4.01	NORTH LAUREL DR. STA. 2+99.36
I-3	DBL. '5' INLET	238.08	237.55	243.80	HO. CO. STD. SD 4.23	NORTH LAUREL DR.
I-4	A-5 W=2'-6"	246.83	246.63	253.00	HO. CO. STD. SD 4.01	STEPHENS RD. STA. 20+36.22
I-5	A-5 W=2'-6"		248.50	253.40	HO. CO. STD. SD 4.01	STEPHENS RD. STA. 20+31.48
I-6	A-10 W=3'-0"	248.05	247.80	253.40	HO. CO. STD. SD 4.02	STERLING DR. STA. 7+10.00
I-7	A-10 W=2'-6"		248.70	252.95	HO. CO. STD. SD 4.02	STERLING DR. STA. 7+17.00
I-8	A-10 W=2'-6"	254.33	254.13	259.17	HO. CO. STD. SD 4.02	STERLING DR. STA. 9+85.00
I-9	A-10 W=2'-6"		254.74	259.14	HO. CO. STD. SD 4.02	STERLING DR. STA. 9+85.00
I-10	A-10 W=2'-6"	265.85	265.60	270.44	HO. CO. STD. SD 4.02	STERLING DR. STA. 12+56.00
I-11	A-10 W=2'-6"		266.25	270.44	HO. CO. STD. SD 4.02	STERLING DR. STA. 12+56.00
M-1	SHA 120" PRE-CAST MANHOLE	236.08	235.08	245.70	SHA STD. MD-384.11	NORTH LAUREL DR. STA. 2+99.36
M-2	SHA 84" PRE-CAST MANHOLE	236.54	236.34	245.49	SHA STD. MD-384.07	NORTH LAUREL DR. STA. 3+21.00
M-5	SHALLOW PRE-CAST MANHOLE (48" DIA.)	260.00	259.80	264.21	HO. CO. STD. G 5.12	STERLING DR. STA. 11+37.00
M-3	SHALLOW PRE-CAST MANHOLE (48" DIA.)	247.23	247.03	252.54	HO. CO. STD. G 5.12	STEPHENS RD. STA. 20+48.00
S-1	TYPE 'A' HEADWALL (66")		234.50	241.50	HO. CO. STD. SD 5.11	
S-2	CONC. END SECTION (21")		246.00		HO. CO. STD. SD 5.51	

PIPE SCHEDULE

SIZE (IN.)	CATEGORY	L (FT.)
15	RCCP CL. IV	708
18	RCCP CL. IV	951
21	RCCP CL. IV	169
24	RCCP CL. IV	312
27	RCCP CL. IV	10
30	RCCP CL. IV	74
36	RCCP CL. IV	653
42	RCCP CL. IV	148
54	RCCP CL. IV	426
66	RCCP CL. IV	45

APPROVED: HOWARD COUNTY DEPT. OF PUBLIC WORKS

CHIEF, BUREAU OF HIGHWAYS — DATE 10-10-02

APPROVED: HOWARD COUNTY DEPT. OF PLANNING AND ZONING

CHIEF, DIVISION OF LAND DEVELOPMENT — DATE 10/22/02

CHIEF, DEVELOPMENT ENGINEERING DIVISION MK — DATE 10/18/02

Date	No.	Revision Description

REVITZ PROPERTY

OWNER /DEVELOPER:

THE HOWARD RESEARCH & DEVELOPMENT CORPORATION
10275 LITTLE PATUXENT PARKWAY
COLUMBIA, MARYLAND 21044

DMW
Daft-McCune-Walker, Inc.
200 East Pennsylvania Avenue
Towson, Maryland 21286
(410) 296-3333
Fax 296-4705

A Team of Land Planners, Landscape Architects, Engineers, Surveyors & Environmental Professionals

SUBDIVISION NAME		SECTION/AREA		LOT/PARCEL #
REVITZ PROPERY				165 & P/O PAR. 837
PLAT# OR L#	BLOCK #	ZONE	TAX/ZONE MAP	ELEC. DISTRICT	CENSUS TRACT
2267436	20	PEC	47	6 th	
WATER CODE		SEWER CODE		

TITLE

FINAL PLAN
STORM DRAIN PROFILES

Des By	DFM	Scale	AS SHOWN	Proj. No.	01011
Drn By	WDE	Date	9/19/02		16 OF 57
Chk By		Approved			

01-NT-0500/200260639
9/20/02 Date

Professional Engr. No. 10551

F-02-111

F-02-111

Thu Sep 19 Engineering\Projects\01011\Drawings\Plan\01011_PROFILES.dwg 9/19/02 3:18:46 PM

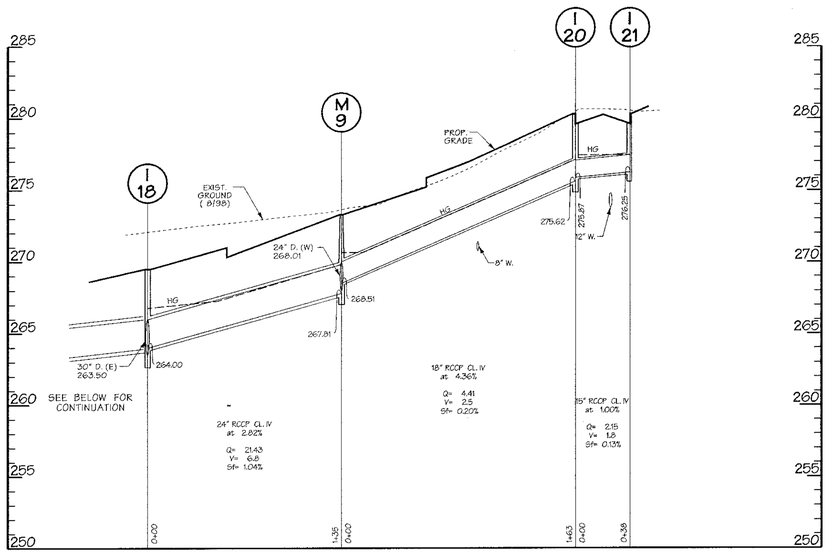

STORM DRAIN PROFILE
SCALE: HOR. 1" = 50'
VER. 1" = 5'

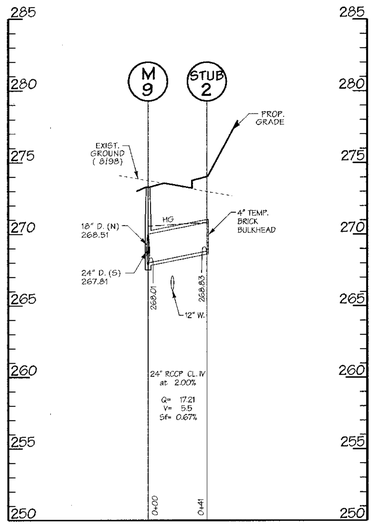

STORM DRAIN PROFILE
SCALE: HOR. 1" = 50'
VER. 1" = 5'

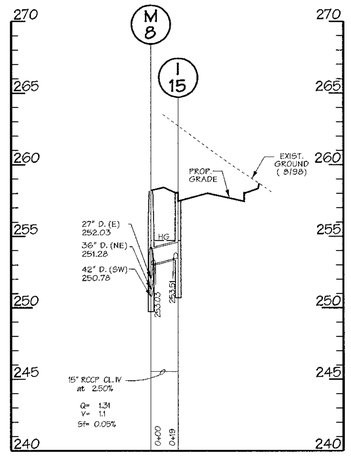

STORM DRAIN PROFILE
SCALE: HOR. 1" = 50'
VER. 1" = 5'

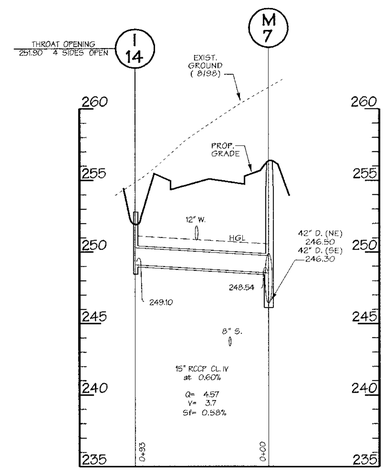

STORM DRAIN PROFILE
SCALE: HOR. 1" = 50'
VER. 1" = 5'

STRUCTURE SCHEDULE

NO.	TYPE	INV. IN	INV. OUT	TOP ELEV.	REMARKS	LOCATION
I-14	TYPE 'D' INLET		249.10	251.90	HO. CO. STD. SD 4.11	STEPHENS RD. STA. 19+39.25
I-15	A-10 W=2'-6"		253.51	258.18	HO. CO. STD. SD 4.02	STEPHENS RD. STA. 17+93.00
I-16	A-10 W=4'-0"	256.00	255.80	262.63	HO. CO. STD. SD 4.02	STEPHENS RD. STA. 15+87.00
I-18	A-10 W=4'-0"	264.00	263.00	269.74	HO. CO. STD. SD 4.02	STEPHENS RD. STA. 12+60.00
I-20	A-10 W=2'-6"	275.87	275.62	280.50	HO. CO. STD. SD 4.02	STEPHENS RD. STA. 9+55.00
I-21	A-10 W=2'-6"		276.25	280.50	HO. CO. STD. SD 4.02	STEPHENS RD. STA. 9+55.00
M-7	SHA 96" DIA. PRECAST MANHOLE	246.50	246.30	256.50	STD. DETAIL MD-384.09	
M-8	SHA 96" DIA. PRECAST MANHOLE	251.28	250.78	258.50	STD. DETAIL MD-384.09	
M-9	SHALLOW PRECAST MANHOLE (48" DIA.)	268.01	267.81	273.36	STD. DETAIL 6.5.12	STEPHENS RD. STA. 11+23.00
S-3	CONC. END SECTION (42")		246.06		STD. DETAIL 5D.5.51	

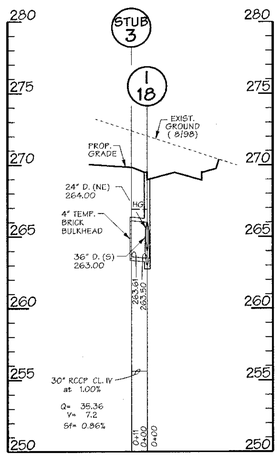

STORM DRAIN PROFILE
SCALE: HOR. 1" = 50'
VER. 1" = 5'

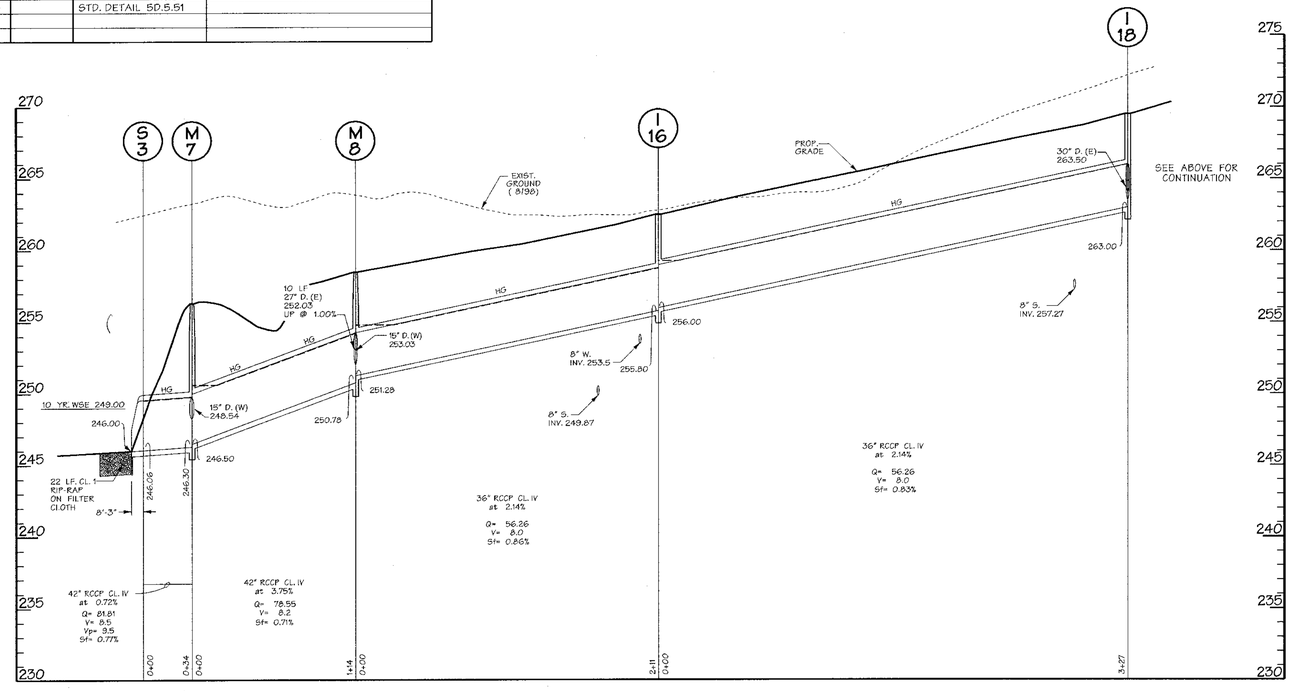

STORM DRAIN PROFILE
SCALE: HOR. 1" = 50'
VER. 1" = 5'

APPROVED: HOWARD COUNTY DEPT. OF PUBLIC WORKS

for CHIEF, BUREAU OF HIGHWAYS — DATE 10-10-02

APPROVED: HOWARD COUNTY DEPT. OF PLANNING AND ZONING

CHIEF, DIVISION OF LAND DEVELOPMENT — DATE 10/22/02

CHIEF, DEVELOPMENT ENGINEERING DIVISION MK — DATE 10/9/02

Date	No.	Revision Description

REVITZ PROPERTY

OWNER /DEVELOPER:

THE HOWARD RESEARCH & DEVELOPMENT CORPORATION
10275 LITTLE PATUXENT PARKWAY
COLUMBIA, MARYLAND 21044

DMW
Daft·McCune·Walker, Inc.
200 East Pennsylvania Avenue
Towson, Maryland 21286
(410) 296-3333
Fax 296-4705

A Team of Land Planners, Landscape Architects, Engineers, Surveyors & Environmental Professionals

SUBDIVISION NAME		SECTION/AREA		LOT/PARCEL #
REVITZ PROPERTY				165 & BO PAR. 837
PLAT # OR L#	BLOCK #	ZONE	TAX/ZONE MAP	ELECT. DISTRICT	CENSUS TRACT
22614436	20	PEC	47	6 th	
WATER CODE		SEWER CODE		

TITLE

FINAL PLAN
STORM DRAIN PROFILES

Des By	DFM	Scale	AS SHOWN	Proj. No.	01011
Drn By	WDE	Date	91902		17 OF 57
Chk By		Approved			

01-NT-0500/200260639

9/20/02
Date

Professional Engr. No. (0555)

F-02-111

F-02-111

Thu Sep 19 [illegible] PM 20/61/6

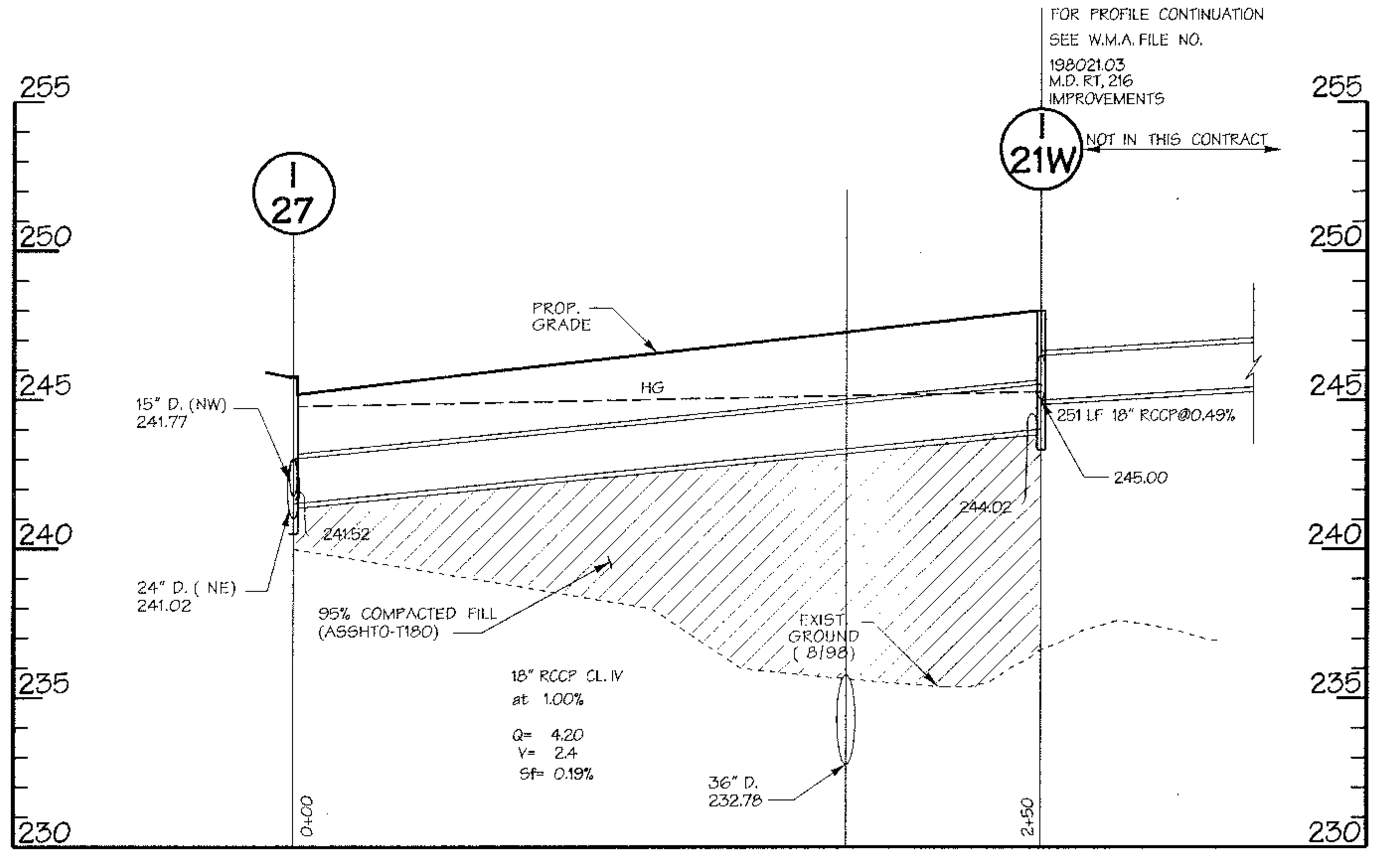

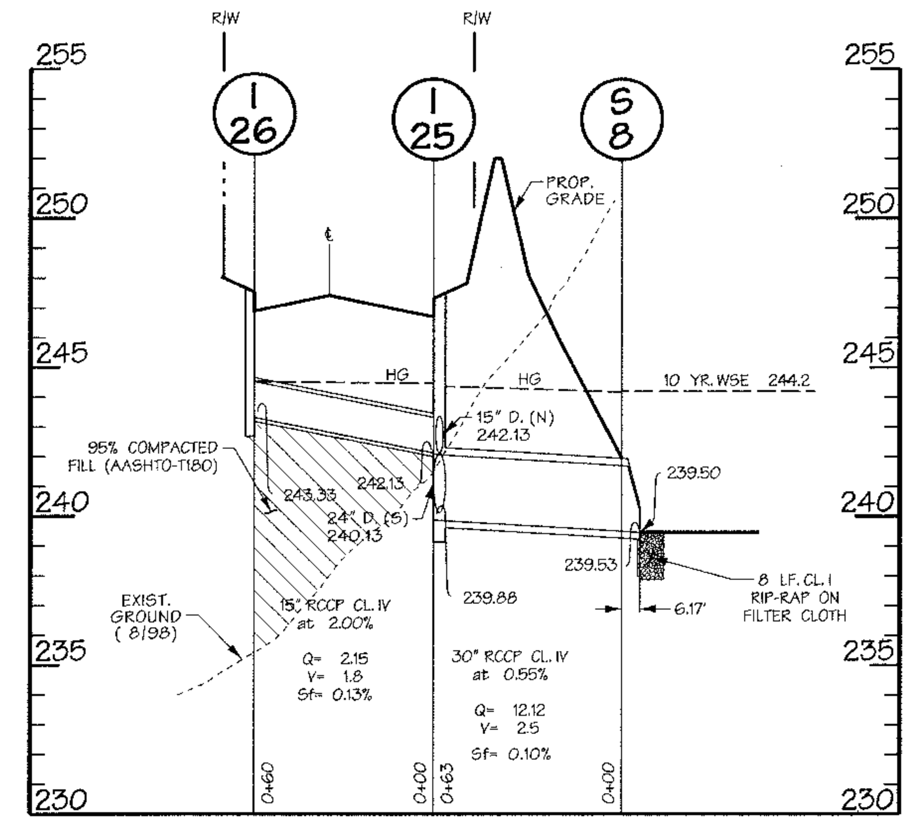

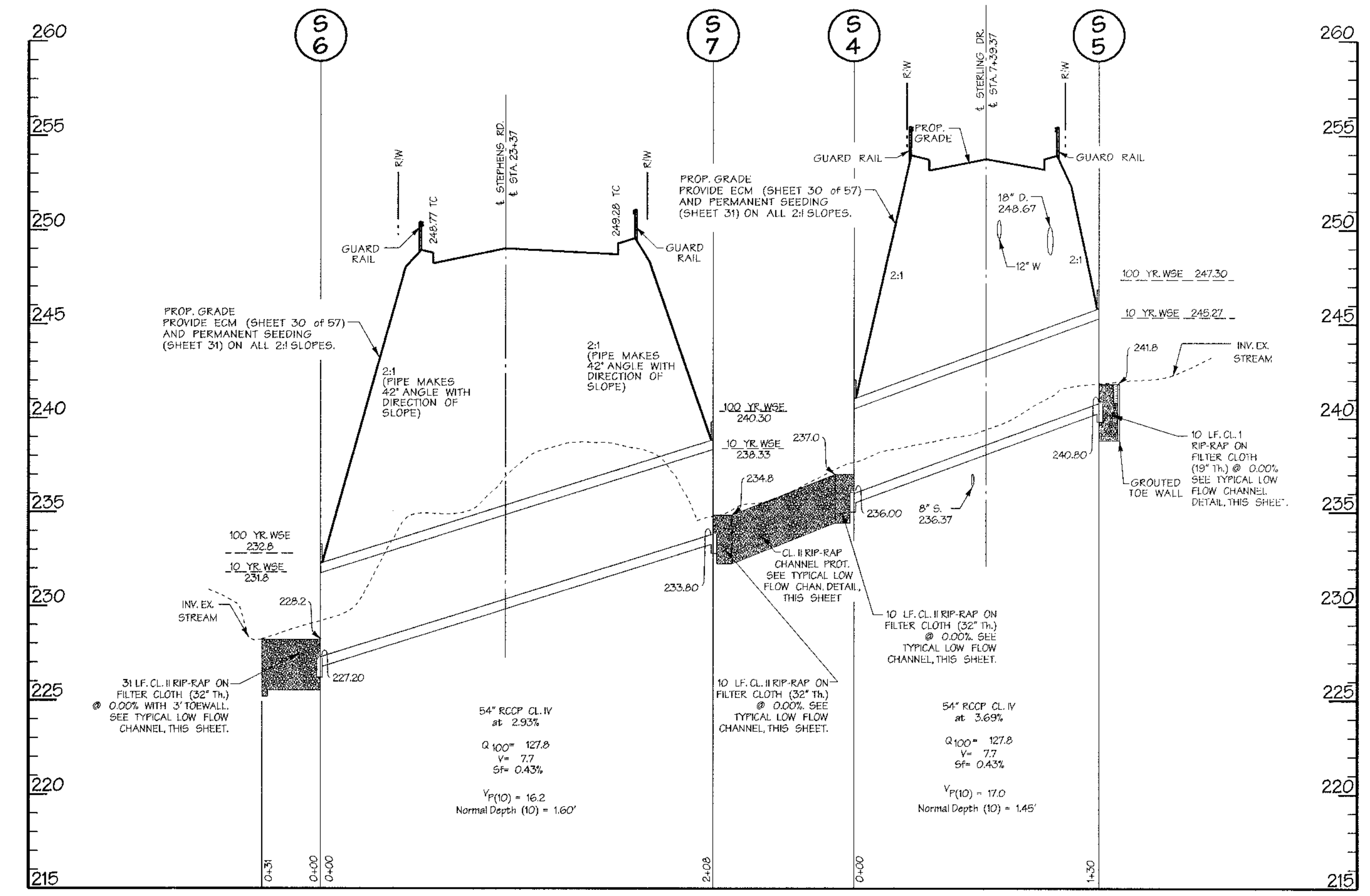

STORM DRAIN PROFILE

SCALE: HOR. 1" = 50'
VER. 1" = 5'

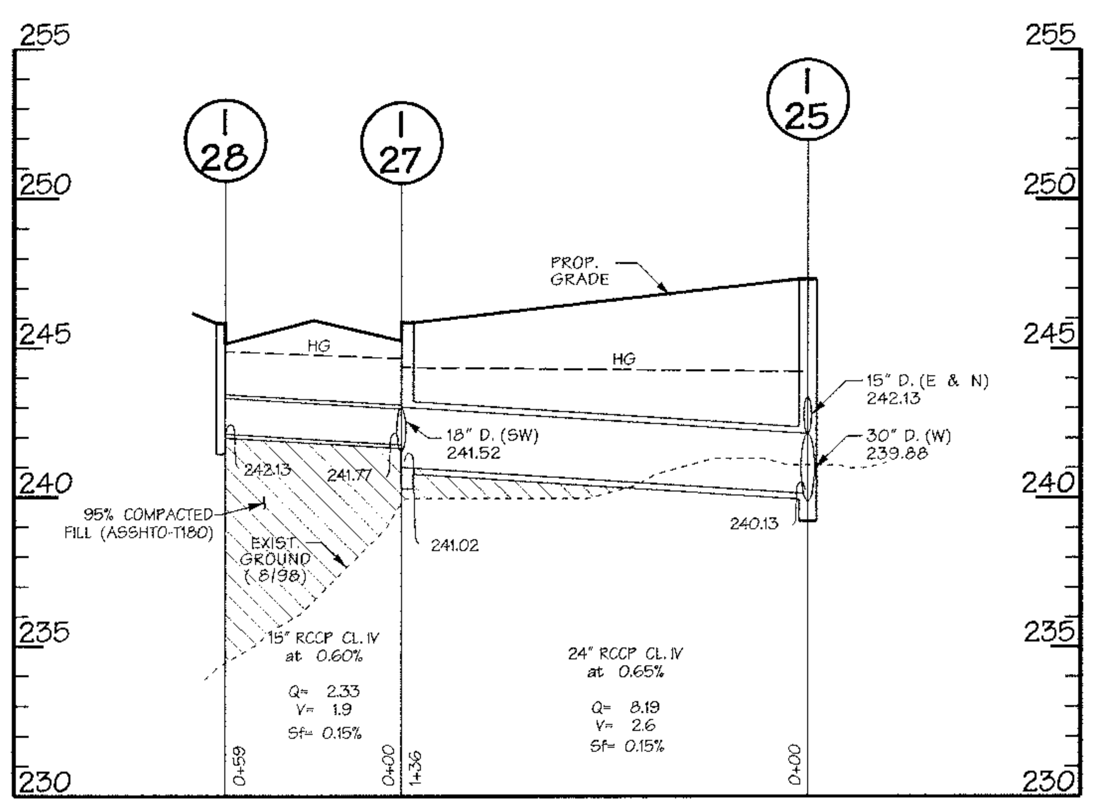

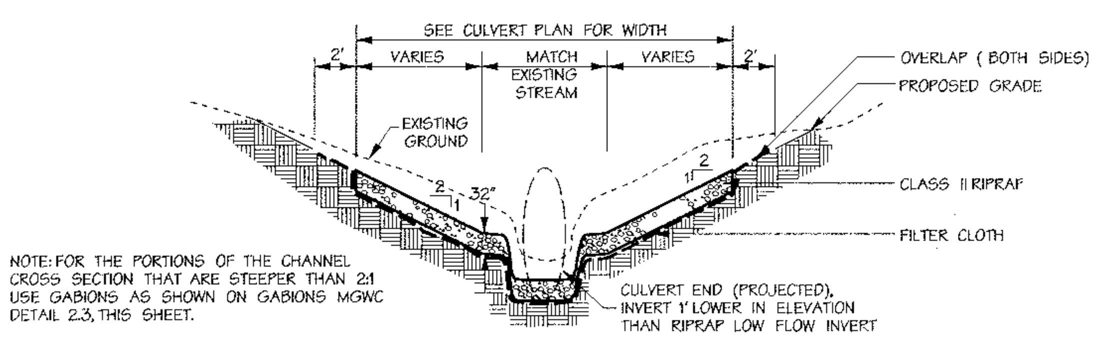

NOTE: FOR THE PORTIONS OF THE CHANNEL CROSS SECTION THAT ARE STEEPER THAN 2:1 USE GABIONS AS SHOWN ON GABIONS MGWC DETAIL 2.3, THIS SHEET.

TYPICAL LOW FLOW CHANNEL

Not To Scale

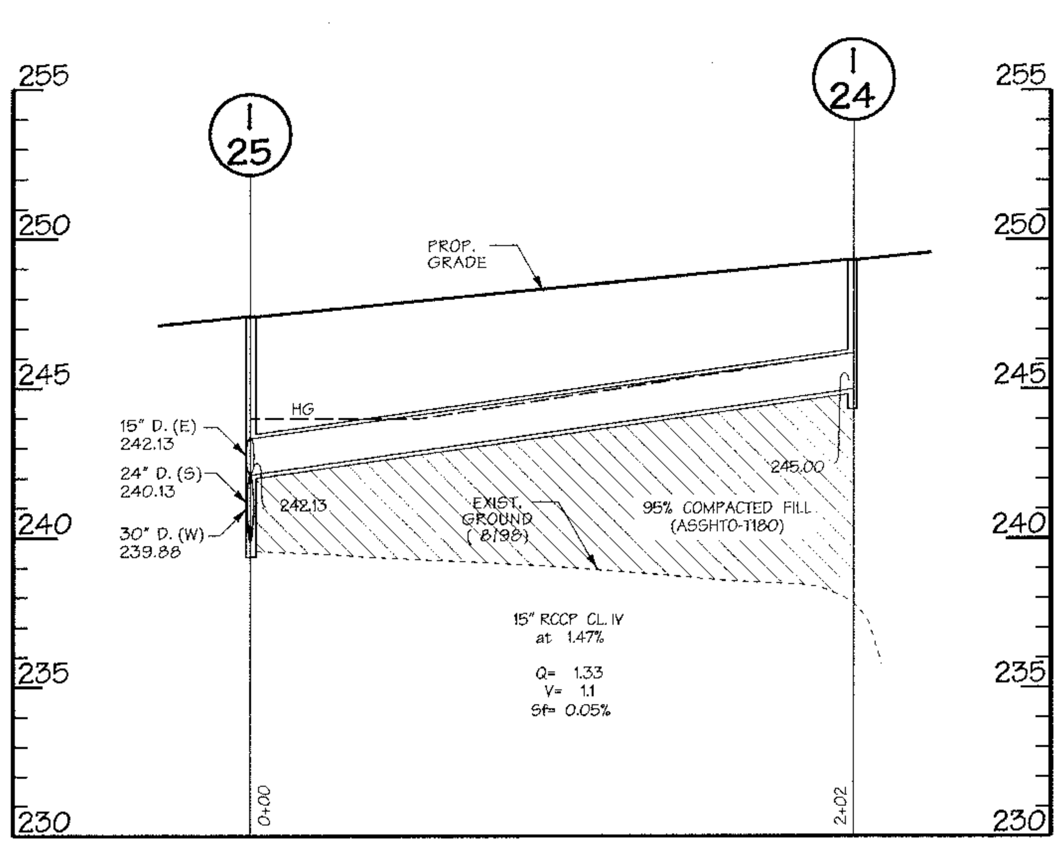

STORM DRAIN PROFILE

SCALE: HOR. 1" = 50'
VER. 1" = 5'

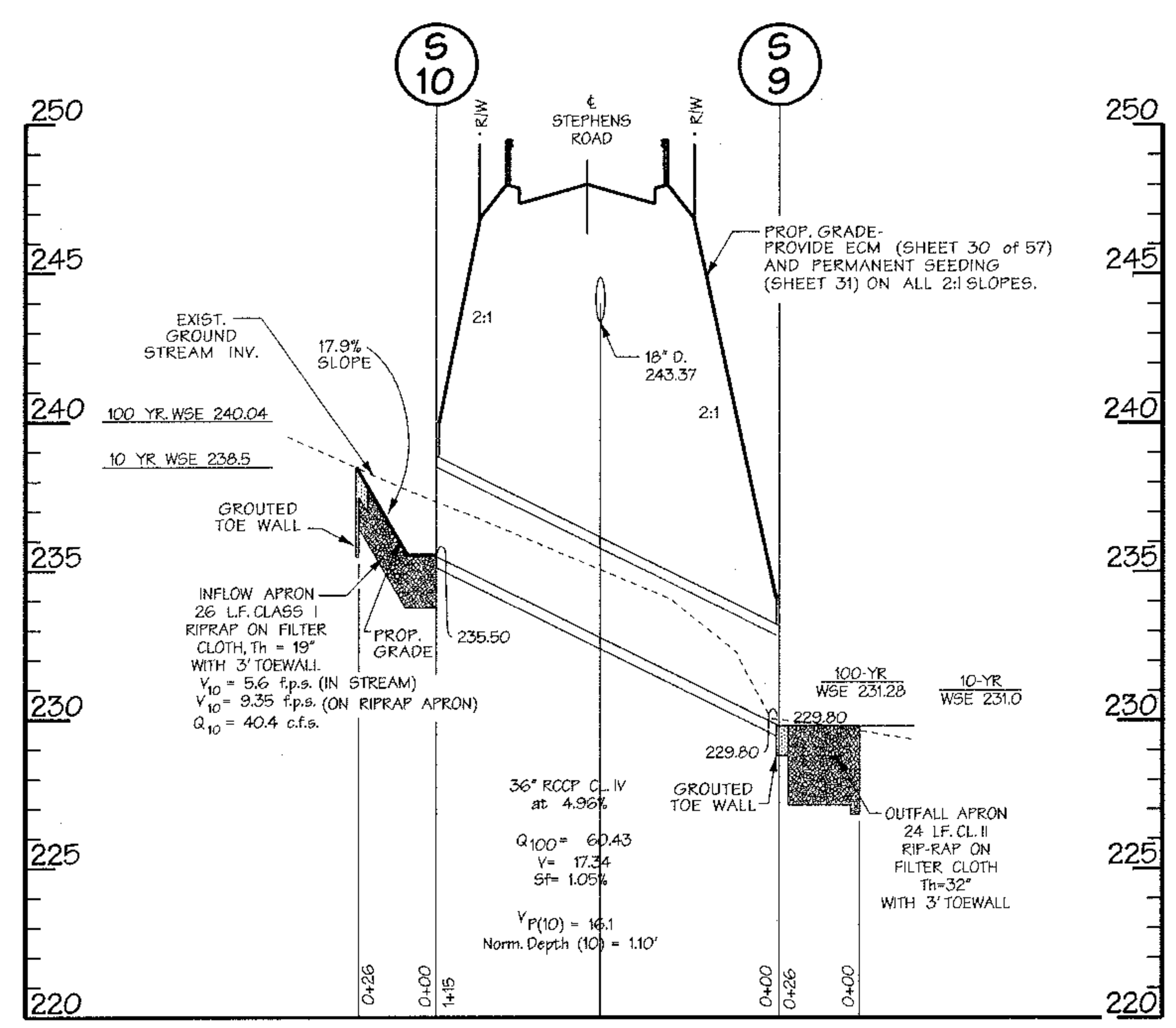

STORM DRAIN PROFILE

SCALE: HOR. 1" = 50'
VER. 1" = 5'

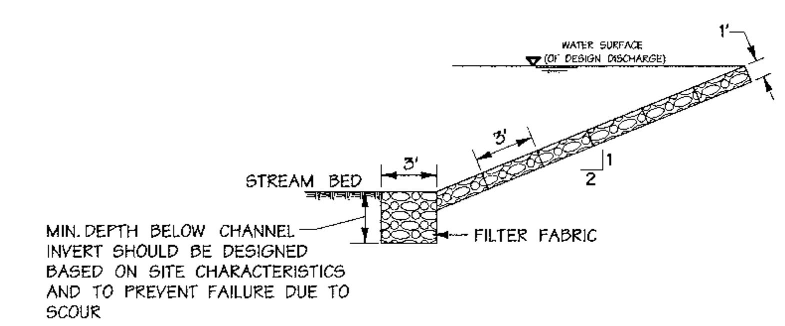

CROSS SECTION

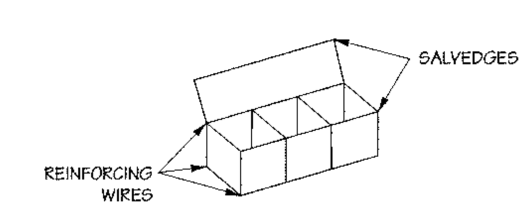

BASKET DETAILS

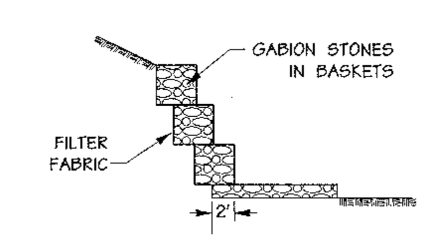

ALTERNATE SECTION

I. DESCRIPTION
THIS WORK SHALL CONSIST OF PROTECTING STREAM SLOPES AND CHANNELS WITH STONE-FILLED WIRE BASKETS IN ORDER TO PROVIDE STABILIZATION FOR STREAM CHANNELS AND BANKS. BASKETS SHALL BE PLACED IN SUCH A MANNER AS TO PREVENT UNDERMINING FROM WATER VELOCITIES AND OVERTURNING FROM LATERAL EARTH PRESSURES.

II. MATERIAL SPECIFICATIONS
1. FILTER FABRIC
FILTER FABRIC SHALL BE CAREFULLY AND LOOSELY PLACED ON THE PREPARED SUBGRADE AND HELD IN PLACE. ADJACENT STRIPS SHALL BE OVERLAPPED BY A MINIMUM OF 8 INCHES. CARE SHALL BE EXERCISED IN PLACING, STRETCHING AND HOLDING THE EMPTY BASKET UNITS IN GOOD ALIGNMENT IN ORDER TO AVOID DAMAGE TO THE CLOTH. IF THE FILTER FABRIC SHOULD BE TORN OR DAMAGED, IT SHALL MEET THE FOLLOWING REQUIREMENTS:

TENSILE STRENGTH	200 LBS.
BURST STRENGTH	350 LBS.
PUNCTURE STRENGTH	70 LBS.
PERMEABILITY	.02 CM/SEC
ELONGATION AT FAILURE	30%
MINIMUM LAP LENGTH	24 IN.

2. WIRE BASKETS
THE PLACEMENT OF THE WIRE BASKET UNITS SHALL BEGIN WITH THE CUTOFF WALLS. THE EMPTY WIRE BASKET UNITS SHALL BE SET ON THE PREPARED SUBGRADE AND THE VERTICAL ENDS BOUND TOGETHER WITH WIRE TIES AT SPACINGS THAT ARE ADEQUATE TO PERMIT STRETCHING OF THE UNITS TO REMOVE KINKS. THE USE OF STAKES, PINS OR OTHER ACCEPTABLE METHODS SHALL BE USED TO INSURE A GOOD ALIGNMENT OF THE EMPTY WIRE BASKET UNITS. TIE BACKS MAY BE REQUIRED TO INSURE STABILITY OF THE STREAM BANK FROM ROTATIONAL OVERTURNING.
3. STONE:
STONE FOR GABIONS, FOR WHICH THE SIZE OF PARTICLES WILL BE DETERMINED VISUALLY, SHALL MEET THE FOLLOWING REQUIREMENTS:

BASKET IN	THICKNESS MM	SIZE OF INDIVIDUAL PARTICLES IN
6	150	3 - 5
9	225	4 - 7
12	300	4 - 7
18	460	4 - 7
36	910	4 - 12

III. CONSTRUCTION REQUIREMENTS
1. THE CONTRACTOR SHALL INSTALL ALL SEDIMENT AND EROSION CONTROL DEVICES AS A FIRST ORDER OF BUSINESS.
2. EXCAVATION, INCLUDING CUTOFF WALLS, SHALL BE MADE IN REASONABLY CLOSE CONFORMITY WITH THE EXISTING STREAM SLOPE. THE SUBGRADE SHALL BE SMOOTH, FIRM AND FREE FROM PROTRUDING OBJECTS OR VOIDS THAT WOULD AFFECT THE PROPER PLACEMENT OF THE WIRE BASKETS OR DAMAGE THE FILTER CLOTH.
3. THE EMPTY BASKET UNITS SHALL BE FILLED CAREFULLY WITH STONE PLACED BY HAND OR MACHINE TO ASSURE GOOD ALIGNMENT WITH A MINIMUM OF VOIDS BETWEEN STONES AND TO AVOID BULGING OF MESH. THE MAXIMUM HEIGHT FROM WHICH THE STONE MAY BE DROPPED INTO THE UNITS SHALL BE 36 INCHES. THE STONE SHALL BE SO PLACED AS TO PROVIDE A MINIMUM OF TWO COURSES. CARE SHALL BE TAKEN IN PLACING THE TOP LAYER OF STONE TO ASSURE A UNIFORM SURFACE THUS AVOIDING ANY BULGING OF THE LID MESH. AFTER A BASKET UNIT HAS BEEN FILLED, IT'S LID SHALL BE BENT OVER UNTIL IT MEETS THE END OF THE UNIT. THE LID SHALL THEN BE SECURED TO THE SIDES AND ENDS WITH WIRE TIES. WHEN A COMPLETE BASKET UNIT CANNOT BE INSTALLED ON SLOPES OR CHANNELS BECAUSE OF SPACE LIMITATIONS, THE BASKET UNIT SHALL BE CUT TO FIT IN A MANNER APPROVED BY THE WRA.
4. ANY EXCAVATION VOIDS EXISTING ALONG THE EDGES OF THE COMPLETED GABIONS SHALL BE BACKFILLED AND PERMANENTLY STABILIZED IN ACCORDANCE WITH AN APPROVED SEDIMENT AND EROSION CONTROL PLAN.

DETAIL 2.3 - GABIONS

REVISED 11/2000 PAGE 2.3-3 *MD DEPARTMENT OF THE ENVIRONMENT WATER MANAGEMENT ADMINISTRATION*

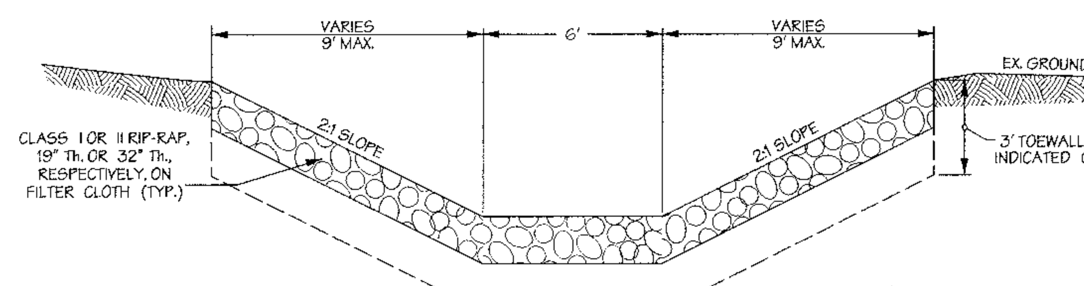

CLASS I AND II RIP-RAP CHANNEL PROTECTION

NTS

STRUCTURE SCHEDULE

NO.	TYPE	INV. IN	INV. OUT	TOP ELEV.	REMARKS	LOCATION
I-24	A-5 W=2'-6"		245.00	249.31	HO. CO. STD. SD 4.01	STEPHENS RD. STA. 23+05.00
I-25	A-10 W=3'-6"	242.13	239.88	247.19	HO. CO. STD. SD 4.02	STEPHENS RD. STA. 25+07.00
I-26	A-10 W=2'-6"		243.33	247.37	HO. CO. STD. SD 4.02	STEPHENS RD. STA. 25+07.00
I-27	A-5 W=3'-0"	241.77	241.02	245.86	HO. CO. STD. SD 4.01	STEPHENS RD. STA. 26+50.00
I-28	A-5 W=2'-6"		242.13	245.84	HO. CO. STD. SD 4.01	STEPHENS RD. STA. 26+50.00
S-4	TYPE 'C' ENDWALL (54")		236.00	241.50	S.H.A. STD. NO. MD-354.01	STEPHENS RD. STA. 21+95.93
S-5	TYPE 'C' ENDWALL (54")	240.80		246.30	S.H.A. STD. NO. MD-354.01	STERLING DR. STA. 20+59.91
S-6	TYPE 'C' ENDWALL (54")		227.70	233.20	S.H.A. STD. NO. MD-354.01	STEPHENS RD. STA. 24+11.85
S-7	TYPE 'C' ENDWALL (54")	233.80		239.30	S.H.A. STD. NO. MD-354.01	STEPHENS RD. STA. 22+51.59
S-8	CONC. END SECTION (30")		239.53		STD. DETAIL SD.5.51	STEPHENS RD. STA. 24+14.33
S-9	TYPE 'C' ENDWALL (36")		229.80	233.80	STD. DETAIL SD.5.21	STEPHENS RD. STA. 28+43.35
S-10	TYPE 'A' HEADWALL (36")	235.50		240.00	STD. DETAIL SD.5.11	STEPHENS RD. STA. 28+31.28

APPROVED: HOWARD COUNTY DEPT. OF PUBLIC WORKS

For CHIEF, BUREAU OF HIGHWAYS — DATE 10-10-02

APPROVED: HOWARD COUNTY DEPT. OF PLANNING AND ZONING

CHIEF, DIVISION OF LAND DEVELOPMENT — DATE 10/22/02

CHIEF, DEVELOPMENT ENGINEERING DIVISION MK — DATE 10/18/02

Date	No.	Revision Description

REVITZ PROPERTY

OWNER /DEVELOPER:

THE HOWARD RESEARCH & DEVELOPMENT CORPORATION
10275 LITTLE PATUXENT PARKWAY
COLUMBIA, MARYLAND 21044

DMW
Daft·McCune·Walker, Inc.
200 East Pennsylvania Avenue
Towson, Maryland 21286
(410) 296-3333
Fax 296-4705
A Team of Land Planners, Landscape Architects, Engineers, Surveyors & Environmental Professionals

SUBDIVISION NAME	SECTION/AREA	LOT/PARCEL #
REVITZ PROPERTY		165 & P/O PAR. 837

PLAT# OR L/F	BLOCK #	ZONE	TAX/ZONE MAP	ELECT. DISTRICT	CENSUS TRACT
2267/436	20	PEC	47	6 th	

WATER CODE — SEWER CODE

TITLE

FINAL PLAN
STORM DRAIN PROFILES

Des By DFM	Scale AS SHOWN	Proj. No. 01011
Drn By	Date 9/19/02	18 OF 57
Chk By	Approved	

01-NT-0500/200260639

9/20/02 Date

Professional Engr. No. 10551

F-02-111

F-02-111

NOTE:

1) 5' CONTOURS ARE SHOWN SOUTH-EAST OF THE SITE, 2' CONTOURS ELSEWHERE.

FOR REVISION #1 ONLY

4-19-11
Date

STATE OF MARYLAND — PAUL LEE REVITZ — No. 8061 — REGISTERED PROFESSIONAL ENGINEER

Professional Engr No. 8061

Professional Certification. I hereby certify that these documents were prepared or approved by me, and that I am a duly licensed professional engineer under the laws of the State of Maryland.

License No. 8061, Expiration Date: 8-26-11

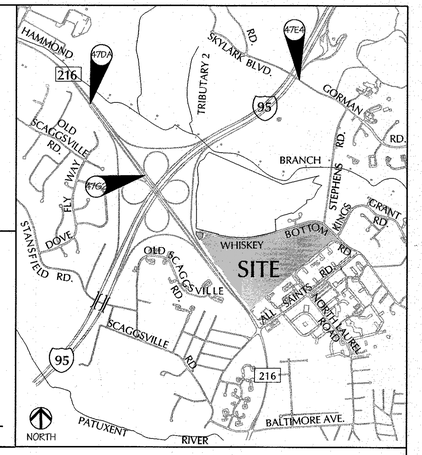

Vicinity Map

SCALE: 1"=2000'

Legend

- SWM II — PROPOSED SWM FACILITY/ EASEMENT
- EXISTING CONDITIONS DRAINAGE AREAS
- INTERIM CONDITION DRAINAGE AREAS
- INTERIM CONDITION DRAINAGE AREAS
- EXISTING Tc PATH
- PROPOSED Tc PATH
- B-10 — SOIL BORING
- PROPERTY BOUNDARY
- EARTH DIKE
- LIMIT OF DISTURBANCE

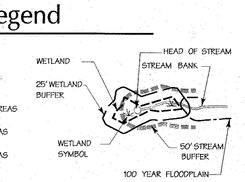

- SLOPES >25%
- SLOPES 15%-25%
- PC / PT OF ARC
- CENTERLINE OF ROAD
- RADIUS OF ARC

3 PROFESSIONAL CERTIFICATION FOR REV #3

I HEREBY CERTIFY THAT THESE DOCUMENTS WERE PREPARED OR APPROVED BY ME, AND THAT I AM A DULY LICENSED PROFESSIONAL ENGINEER UNDER THE LAWS OF THE STATE OF MARYLAND, LICENSE NO. 45292 EXPIRATION DATE: 05/21/2018

STATE OF MARYLAND — COLIN T. CARLSON — 45292 — REGISTERED PROFESSIONAL ENGINEER

11-20-14

3 THE PURPOSE OF REVISION 3 IS TO SHOW THE WORK ASSOCIATED WITH EMERSON CAMPUS VCP. SDP-14-005

APPROVED: HOWARD COUNTY DEPT. OF PUBLIC WORKS

CHIEF, BUREAU OF HIGHWAYS — 10-10-02 DATE

APPROVED: HOWARD COUNTY DEPT. OF PLANNING AND ZONING

CHIEF, DIVISION OF LAND DEVELOPMENT — 10/22/02 DATE

CHIEF, DEVELOPMENT ENGINEERING DIVISION MK — 10/8/02 DATE

Date	No.	Revision Description
05/23/15	3	EMERSON CAMPUS VCP
2-7-11	1	ADD 5' CONCRETE SIDEWALK ALONG PARCEL D FRONTAGE

REVITZ PROPERTY

OWNER /DEVELOPER:

THE HOWARD RESEARCH & DEVELOPMENT CORPORATION
10275 LITTLE PATUXENT PARKWAY
COLUMBIA, MARYLAND 21044

DMW
Daft-McCune-Walker, Inc.
200 East Pennsylvania Avenue
Towson, Maryland 21286
(410) 296-3333
Fax 296-4705

A Team of Land Planners, Landscape Architects, Engineers, Surveyors & Environmental Professionals

9/20/02
Date

PROFESSIONAL ENGINEER — No. 10551 — ANNOCHIA R. MOTSKO — STATE OF MARYLAND

Professional Engr. No. 10551

SUBDIVISION NAME			SECTION/AREA		LOT/PARCEL #
					165 & 80 PAR. B37
PLAT# OR L#	BLOCK #	ZONE	TAX/ZONE MAP	ELECT. DISTRICT	CENSUS TRACT
22614/36	20	PEC	47, GRID 20	5 th	
WATER CODE			SEWER CODE		

TITLE

FINAL PLAN SEDIMENT AND EROSION CONTROL DRAINAGE AREA MAP

Des By	MRT	Scale	1" = 100'	Proj. No.	01011
Drn By	MRT	Date	9/19/02		19 OF 57
Chk By		Approved			

F-02-111

A MATCH LINE – SEE SHEET 20 OF 57 A
DWG. NO.

F-02-111

Thu Sep 19 09:03:03 2002 C:\Projects\01011\Dwg\Grading\Grading.dwg

A MATCH LINE – SEE SHEET 19 OF 57 A
DWG. NO.

EXISTING CONDITION
DRAINAGE AREA TO BASIN VI
AREA = 14.40 AC.
RCN = 58
Tc = 0.41 Hr.

INTERIM/PROPOSED CONDITION
DRAINAGE AREA TO BASIN VI
AREA = 21.97 AC.
RCN = 91
Tc = 0.10 Hr.

EXIST. D.A. TO TRAP I
AREA = 2.35 AC.
RCN = 55
Tc = 0.26 Hr.

INT./PROP. D.A. TO TRAP I
AREA = 2.35 AC.
RCN = 91
Tc = 0.10 Hr.

EXISTING D.A. TO TRAP II
AREA = 2.90 AC.
RCN = 55
Tc = 0.32 Hr.

INT./PROP. D.A. TO TRAP II
AREA = 2.90 AC.
RCN = 91
Tc = 0.10 Hr.

TRAP I

TRAP II

BASIN VI
(WITH SEDIMENT & STORMWATER MANAGEMENT EASEMENT)

FOREST CONSERVATION EASEMENT V

FOREST CONSERVATION EASEMENT VI

OPEN SPACE LOT 'N'

OPEN SPACE LOT 'L'

DRP OPEN SPACE PARCEL 'M'

PARCEL 'F'

PARCEL 'G'

PROP. 5' CONCRETE SIDEWALK

REVISED PER FLAT-SLOPED PARCEL 'F'

TEMP. T-TURN AROUND

THIS SECTION OF WHISKEY BOTTOM ROAD TO BE ABANDONED

THIS SECTION OF WHISKEY BOTTOM ROAD TO REMAIN AS A PUBLIC ROAD

VEHICULAR EGRESS AND INGRESS IS RESTRICTED ALONG THE LOOP ROAD, PARCEL 'N' AND MD. RTE. 216

VEHICULAR INGRESS & EGRESS RESTRICTED

EXISTING 48" CMP HEADWALL TO BE REPLACED BY MANHOLE AND INCOMING 48" EXTENSION AND 36" STUB (BY OTHERS). THE EX. 48" CMP PASSES UNDER MD. ROUTE 216 AND HAS U.S. INVERT EL. 235.46

LOOP ROAD CONNECTION PER AGREEMENT WITH MD SHA, HOWARD COUNTY AND HOWARD RESEARCH & DEVELOPMENT CORP. SHA B-HO-7794-00

WHISKEY BOTTOM ROAD

STERLING DRIVE

STATE ROUTE 216 WEST

STATE ROUTE 216 EAST

STATE ROUTE 216 RAMP

STATE ROUTE 95 – STATE ROUTE 216 RAMP

N 530250
E 1354000

N 530250
E 1352500

Vicinity Map
SCALE: 1"=2000'

HAMMOND, 216, 97D, 97E, SKYLARK BLVD., TRIBUTARY 2, 95, GORMAN RD., OLD SCAGGSVILLE RD., FIFTH AVENUE, 97G, BRANCH RD., STEPHENS, WINDS, GRANT RD., DOVE, STANSFIELD RD., WHISKEY BOTTOM RD., SITE, OLD SCAGGSVILLE RD., ALL SAINTS RD., NORTH LAUREL, SCAGGSVILLE RD., 95, 216, NORTH, PATUXENT RIVER, BALTIMORE AVE.

Legend

- EXISTING CONDITION DRAINAGE AREA TO TRAPS AND BASINS
- INTERIM CONDITION DRAINAGE AREAS
- PROPOSED CONDITION DRAINAGE AREAS
- EXISTING CONDITION Tc PATH
- PROPOSED CONDITION Tc PATH
- PROPERTY BOUNDARY
- EARTH DIKE
- LIMIT OF DISTURBANCE
- WETLAND
- 25' WETLAND BUFFER
- WETLAND SYMBOL
- HEAD OF STREAM
- STREAM BANK
- 50' STREAM BUFFER
- 100 YEAR FLOODPLAIN
- SLOPES >25%
- SLOPES 15%-25%
- PC / PT OF ARC
- CENTERLINE OF ROAD
- RADIUS OF ARC

APPROVED: HOWARD COUNTY DEPT. OF PUBLIC WORKS

for CHIEF, BUREAU OF HIGHWAYS — DATE 10-10-07

APPROVED: HOWARD COUNTY DEPT. OF PLANNING AND ZONING

CHIEF, DIVISION OF LAND DEVELOPMENT — DATE 10/22/02

CHIEF, DEVELOPMENT ENGINEERING DIVISION — DATE 10/8/02

05/23/11 S CAMPUS VCP

Date	No.	Revision Description
2-7-11	2	ADD 5' CONCRETE SIDEWALK ALONG PARCEL D FRONTAGE
9-3-05	1	ADD "T" TURN AROUND

REVITZ PROPERTY

OWNER /DEVELOPER:

THE HOWARD RESEARCH & DEVELOPMENT CORPORATION
10275 LITTLE PATUXENT PARKWAY
COLUMBIA, MARYLAND 21044

3 THE PURPOSE OF REVISION 3 IS TO SHOW THE WORK ASSOCIATED WITH THE EMERSON CAMPUS VCP. SDP-16-005

3 PROFESSIONAL CERTIFICATION FOR REV #3

I HEREBY CERTIFY THAT THESE DOCUMENTS WERE PREPARED OR APPROVED BY ME, AND THAT I AM A DULY LICENSED PROFESSIONAL ENGINEER UNDER THE LAWS OF THE STATE OF MARYLAND
LICENSE NO 45292
EXPIRATION DATE: 05/21/2018

STATE OF MARYLAND — ROBERT A. CROWLEY — 45292 — PROFESSIONAL ENGINEER
11-22-16

FOR REVISION #2 ONLY
4-19-11
Date

STATE OF MARYLAND — PAUL LEE HUDSON — No. 8061 — REGISTERED PROFESSIONAL ENGINEER

Professional Certification. I hereby certify that these documents were prepared or approved by me, and that I am a duly licensed professional engineer under the laws of the State of Maryland.
License No. 8061, Expiration Date: 8-26-11

Professional Engr. No. 8061

F-02-111

9/20/02
Date

PROFESSIONAL ENGINEER — No. 19551 — ROBERT J. RAUSCHER — STATE OF MARYLAND

Professional Engr. No. 19551

DMW
Daft·McCune·Walker, Inc.
200 East Pennsylvania Avenue
Towson, Maryland 21286
(410) 296-3333
Fax 296-4705

A Team of Land Planners, Landscape Architects, Engineers, Surveyors & Environmental Professionals

SUBDIVISION NAME			SECTION/AREA		LOT/PARCEL #
					165 & 80 PAR. B37
PLAT# OR L#	BLOCK #	ZONE	TAX/ZONE MAP	ELECT. DISTRICT	CENSUS TRACT
22674/436	20	PEC	47, GRID 20	6 th	
WATER CODE			SEWER CODE		

TITLE
FINAL PLAN SEDIMENT AND EROSION CONTROL DRAINAGE AREA MAP

Des By	MRT	Scale	1" = 100'	Proj. No.	01011
Drn By	MRT	Date	9/19/02		
Chk By		Approved			20 OF 57

F-02-111

Thu Sep 19 2002 13:36:36 PM dgrimes C:\Projects\01011\Drawings\Drainage\DRAINAGE.dgn

MDE PERMIT AND TRACKING No. 01-NT-0500/200260639

DEVELOPER'S CERTIFICATION:

"I/WE CERTIFY THAT ALL DEVELOPMENT AND CONSTRUCTION WILL BE DONE ACCORDING TO THIS PLAN, AND THAT ANY RESPONSIBLE PERSONNEL INVOLVED IN THE CONSTRUCTION PROJECT WILL HAVE A CERTIFICATE OF ATTENDANCE AT A DEPARTMENT OF THE ENVIRONMENT APPROVED TRAINING PROGRAM FOR THE CONTROL OF SEDIMENT AND EROSION BEFORE BEGINNING THE PROJECT. I ALSO AUTHORIZE PERIODIC ON-SITE INSPECTION BY THE HOWARD SOIL CONSERVATION DISTRICT."

Robert A. Jenkins — 9/20/02
SIGNATURE OF DEVELOPER — DATE
PRINT NAME BELOW SIGNATURE
Robert A. Jenkins

ENGINEER'S CERTIFICATION:

"I CERTIFY THAT THIS PLAN FOR EROSION AND SEDIMENT CONTROL REPRESENTS A PRACTICAL AND WORKABLE PLAN BASED ON MY PERSONAL KNOWLEDGE OF THE SITE CONDITIONS AND THAT IT WAS PREPARED IN ACCORDANCE WITH THE REQUIREMENTS OF THE HOWARD SOIL CONSERVATION DISTRICT."

9/20/02
SIGNATURE OF ENGINEER — DATE
PRINT NAME BELOW SIGNATURE
John Ranocchio

REVIEWED FOR HOWARD S.C.D. AND MEETS TECHNICAL REQUIREMENTS

U.S. NATURAL RESOURCE CONSERVATION SERVICE — 9/30/02 DATE

THIS DEVELOPMENT PLAN IS APPROVED FOR SOIL EROSION AND SEDIMENT CONTROL BY THE HOWARD SOIL CONSERVATION DISTRICT.

HOWARD S.C.D. — 9/30/02 DATE

Legend

- EXISTING CONTOUR
- 340 — PROPOSED CONTOUR
- 15" D. — PROPOSED STORMDRAIN
- EARTH/DIVERSION DIKE
- SF — SILT FENCE
- SSF — SUPER SILT FENCE
- CLEAN WATER DIVERSION PIPE
- LOD — LIMIT OF DISTURBANCE
- WETLAND
- 25' WETLAND BUFFER
- 50' STREAM BUFFER
- FOREST CONSERVATION EASEMENT
- MOUNTABLE BERM
- CIP — CURB INLET PROTECTION
- RPS — REMOVABLE PUMPING STATION
- SCE — STABILIZED CONSTRUCTION ENTRANCE
- PERMANENT SWALE
- EARTH/DIVERSION DIKE/SWALE
- PROPOSED WOODS EDGE
- HIGHLY VISIBLE ORANGE SAFETY FENCE

SHEET KEY

APPROVED: HOWARD COUNTY DEPT. OF PUBLIC WORKS

CHIEF, BUREAU OF HIGHWAYS — 10-10-02 DATE

APPROVED: HOWARD COUNTY DEPT. OF PLANNING AND ZONING

CHIEF, DIVISION OF LAND DEVELOPMENT — 10/2/02 DATE

CHIEF, DEVELOPMENT ENGINEERING DIVISION MK — 10/8/02 DATE

Date	No.	Revision Description

REVITZ PROPERTY

OWNER /DEVELOPER:

THE HOWARD RESEARCH & DEVELOPMENT CORPORATION
10275 LITTLE PATUXENT PARKWAY
COLUMBIA, MARYLAND 21044

DMW
Daft-McCune-Walker, Inc.
200 East Pennsylvania Avenue
Towson, Maryland 21286
(410) 296-3333
Fax 296-4705

A Team of Land Planners, Landscape Architects, Engineers, Surveyors & Environmental Professionals

9/20/02 Date

Professional Engr. No. 10551

SUBDIVISION NAME			SECTION/AREA		LOT/PARCEL # 165 & BO PAR. 837
PLAT# OR L# 2267/436	BLOCK # 20	ZONE PEC	TAX/ZONE MAP 47	ELEC. DISTRICT 6 th	CENSUS TRACT
WATER CODE			SEWER CODE		

TITLE
FINAL PLAN
GRADING & SEDIMENT AND EROSION CONTROL PLAN

Des By DFM	Scale 1" = 50'	Proj. No. 01011	
Drn By	Date 9/9/02	21 OF 57	
Chk By	Approved		

F-02-111

F-02-111

Thu Sep 19 [illegible] 9/19/02 3:43:17 PM dmorgan [illegible]

MATCH LINE – SEE SHEET 21 OF 57

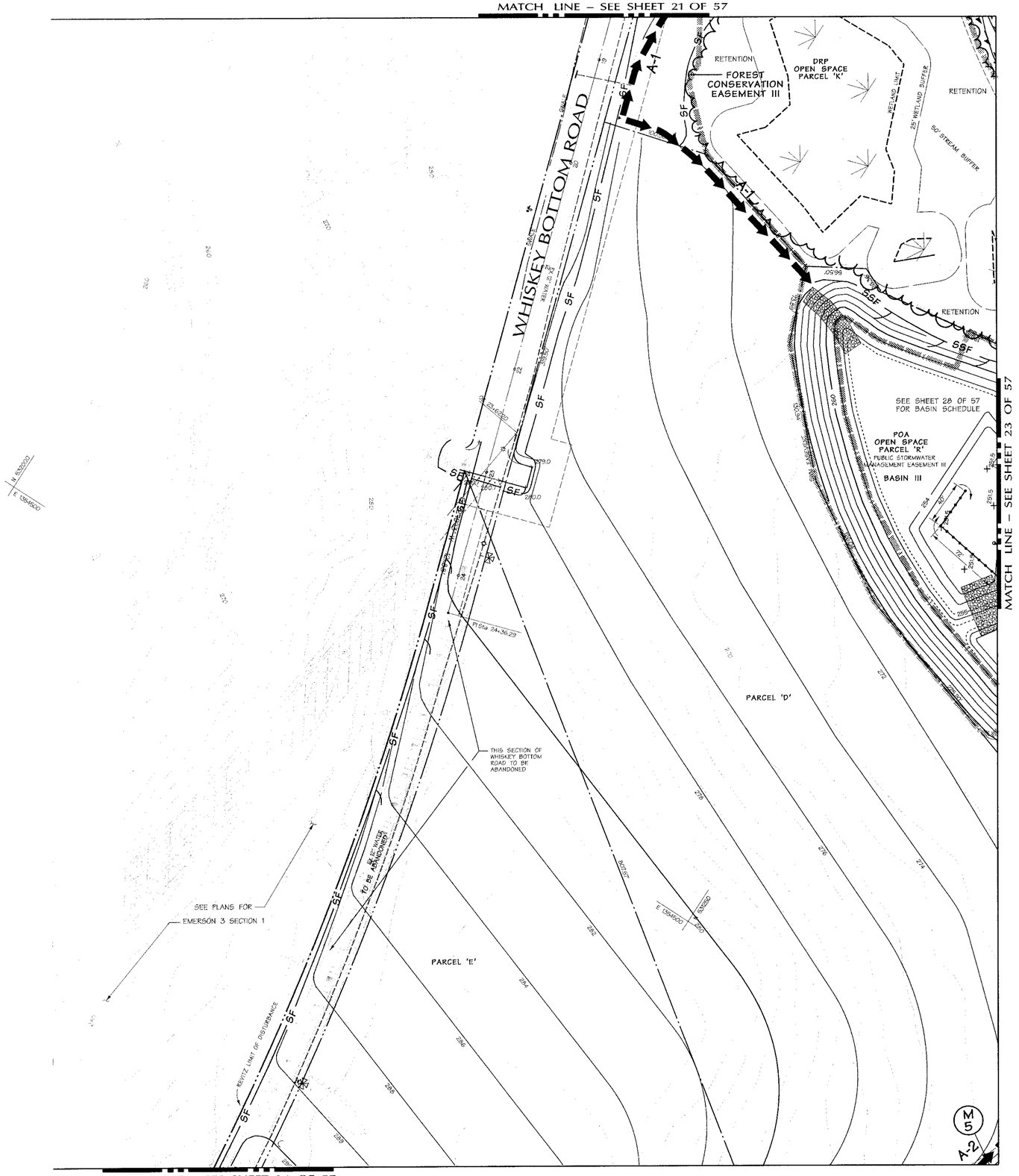

Legend

- EXISTING CONTOUR
- 340 — PROPOSED CONTOUR
- 15" D. PROPOSED STORMDRAIN
- EARTH/DIVERSION DIKE
- SF — SILT FENCE
- SSF — SUPER SILT FENCE
- CLEAN WATER DIVERSION PIPE
- LOD — LIMIT OF DISTURBANCE
- WETLAND
- 25' WETLAND BUFFER
- 50' STREAM BUFFER
- CIP — CURB INLET PROTECTION
- RPS — REMOVABLE PUMPING STATION
- GM — GABION MATTRESS INFLOW PROTECTION
- PERMANENT SWALE
- PROPOSED WOODS EDGE

MDE PERMIT AND TRACKING No. 01-NT-0500/200260639

DEVELOPER'S CERTIFICATION:

"I/WE CERTIFY THAT ALL DEVELOPMENT AND CONSTRUCTION WILL BE DONE ACCORDING TO THIS PLAN, AND THAT ANY RESPONSIBLE PERSONNEL INVOLVED IN THE CONSTRUCTION PROJECT WILL HAVE A CERTIFICATE OF ATTENDANCE AT A DEPARTMENT OF THE ENVIRONMENT APPROVED TRAINING PROGRAM FOR THE CONTROL OF SEDIMENT AND EROSION BEFORE BEGINNING THE PROJECT. I ALSO AUTHORIZE PERIODIC ON-SITE INSPECTION BY THE HOWARD SOIL CONSERVATION DISTRICT.

Robert A. Jenkins — 9/20/02
SIGNATURE OF DEVELOPER — DATE
PRINT NAME BELOW SIGNATURE
Robert A. Jenkins

ENGINEER'S CERTIFICATION:

"I CERTIFY THAT THIS PLAN FOR EROSION AND SEDIMENT CONTROL REPRESENTS A PRACTICAL AND WORKABLE PLAN BASED ON MY PERSONAL KNOWLEDGE OF THE SITE CONDITIONS AND THAT IT WAS PREPARED IN ACCORDANCE WITH THE REQUIREMENTS OF THE HOWARD SOIL CONSERVATION DISTRICT."

9/20/02
SIGNATURE OF ENGINEER — DATE
PRINT NAME BELOW SIGNATURE
John Ranecchia

REVIEWED FOR HOWARD S.C.D. AND MEETS TECHNICAL REQUIREMENTS

Jim Myers/CB — 9/30/02
U.S. NATURAL RESOURCE CONSERVATION SERVICE — DATE

THIS DEVELOPMENT PLAN IS APPROVED FOR SOIL EROSION AND SEDIMENT CONTROL BY THE HOWARD SOIL CONSERVATION DISTRICT.

9/30/02
HOWARD S.C.D. — DATE

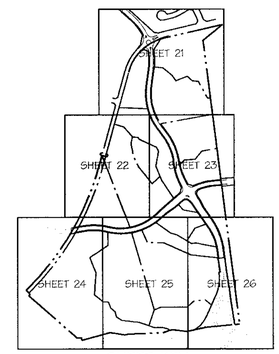

SHEET KEY

APPROVED: HOWARD COUNTY DEPT. OF PUBLIC WORKS

for CHIEF, BUREAU OF HIGHWAYS — 10-10-02 DATE

APPROVED: HOWARD COUNTY DEPT. OF PLANNING AND ZONING

CHIEF, DIVISION OF LAND DEVELOPMENT — 10/28/02 DATE

CHIEF, DEVELOPMENT ENGINEERING DIVISION MK — 10/8/02 DATE

Date	No.	Revision Description

REVITZ PROPERTY

OWNER /DEVELOPER:

THE HOWARD RESEARCH & DEVELOPMENT CORPORATION
10275 LITTLE PATUXENT PARKWAY
COLUMBIA, MARYLAND 21044

9/20/02
Date

F-02-111

Professional Engr. No. 10551

DMW
Daft-McCune-Walker, Inc.
200 East Pennsylvania Avenue
Towson, Maryland 21286
(410) 296-3333
Fax 296-4705

A Team of Land Planners, Landscape Architects, Engineers, Surveyors & Environmental Professionals

SUBDIVISION NAME				SECTION/AREA			TAX/PARCEL #
							165 & PO PAR 837
PLAT # OR L#	BLOCK #	ZONE	TAX/ZONE MAP	ELECT. DISTRICT			CENSUS TRACT
2264/436	20	PEC	47	6 th			
WATER CODE			SEWER CODE				

TITLE

FINAL PLAN GRADING & SEDIMENT AND EROSION CONTROL PLAN

Des By	DFM	Scale 1" = 50'	Proj. No. 01011
Drn By		Date 9/19/02	22 OF 57
Chk By		Approved	

F-02-111

Thu Sep 19 [illegible] 2002 3:45:57 PM

MATCH LINE – SEE SHEET 21 OF 57

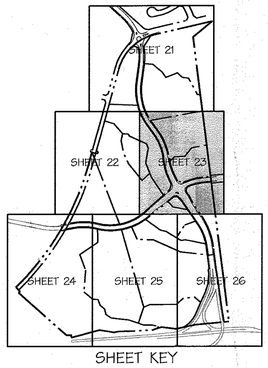

SHEET KEY

Legend

- EXISTING CONTOUR
- PROPOSED CONTOUR
- PROPOSED STORMDRAIN
- EARTH/DIVERSION DIKE
- SF — SILT FENCE
- SSF — SUPER SILT FENCE
- CLEAN WATER DIVERSION PIPE
- LOD — LIMIT OF DISTURBANCE
- WETLAND
- 25' WETLAND BUFFER
- 50' STREAM BUFFER
- MOUNTABLE BERM
- SANDBAG DIVERSION
- CIP — CURB INLET PROTECTION
- RPS — REMOVABLE PUMPING STATION
- SCE — STABILIZED CONSTRUCTION ENTRANCE
- GM — GABION MATTRESS INFLOW PROTECTION
- FILTER BAG
- PERMANENT SWALE, TO BE USED IN SEC AND SWM PHASES
- DIKE/SWALE
- TOE OF BASIN EMBANKMENT SLOPE
- NON-WOODY VEGETATION ZONE
- HIGHLY VISIBLE ORANGE SAFETY FENCE
- PROPOSED WOODS EDGE

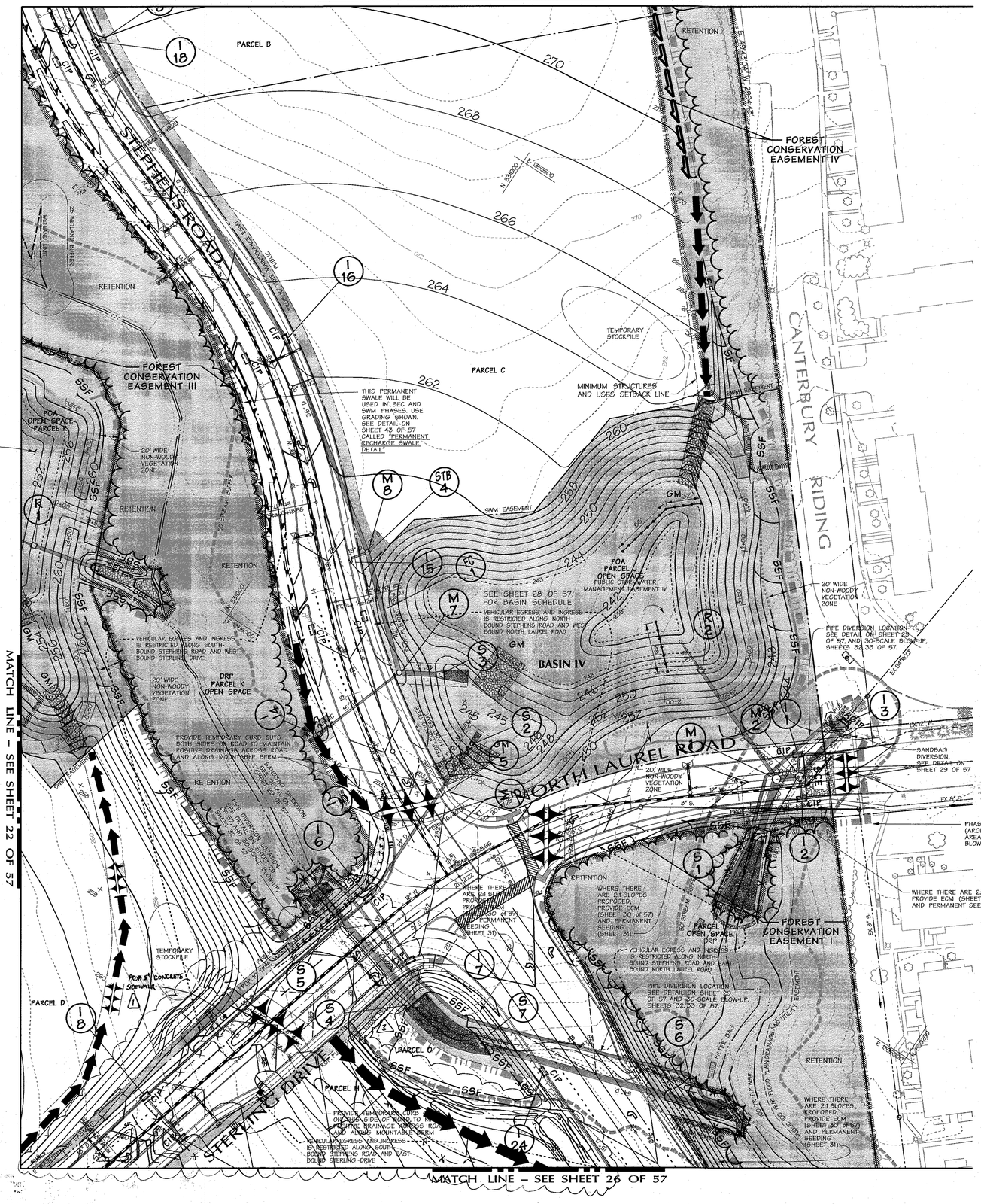

MDE PERMIT AND TRACKING No. 01-NT-0500/200260639

DEVELOPER'S CERTIFICATION:

"I/WE CERTIFY THAT ALL DEVELOPMENT AND CONSTRUCTION WILL BE DONE ACCORDING TO THIS PLAN, AND THAT ANY RESPONSIBLE PERSONNEL INVOLVED IN THE CONSTRUCTION PROJECT WILL HAVE A CERTIFICATE OF ATTENDANCE AT A DEPARTMENT OF THE ENVIRONMENT APPROVED TRAINING PROGRAM FOR THE CONTROL OF SEDIMENT AND EROSION BEFORE BEGINNING THE PROJECT. I ALSO AUTHORIZE PERIODIC ON-SITE INSPECTION BY THE HOWARD SOIL CONSERVATION DISTRICT.

Robert A. Jenkins — 9/20/02
SIGNATURE OF DEVELOPER — DATE
PRINT NAME BELOW SIGNATURE
Robert A. Jenkins

ENGINEER'S CERTIFICATION:

"I CERTIFY THAT THIS PLAN FOR EROSION AND SEDIMENT CONTROL REPRESENTS A PRACTICAL AND WORKABLE PLAN BASED ON MY PERSONAL KNOWLEDGE OF THE SITE CONDITIONS AND THAT IT WAS PREPARED IN ACCORDANCE WITH THE REQUIREMENTS OF THE HOWARD SOIL CONSERVATION DISTRICT."

9/20/02
SIGNATURE OF ENGINEER — DATE
PRINT NAME BELOW SIGNATURE
John Ganocchia

REVIEWED FOR HOWARD S.C.D. AND MEETS TECHNICAL REQUIREMENTS

U.S. NATURAL RESOURCE CONSERVATION SERVICE — 9/30/02 DATE

THIS DEVELOPMENT PLAN IS APPROVED FOR SOIL EROSION AND SEDIMENT CONTROL BY THE HOWARD SOIL CONSERVATION DISTRICT.

HOWARD S.C.D. — 9/30/02 DATE

STATE OF MARYLAND — ROBERT A. CROKER — No. 45292 — REGISTERED PROFESSIONAL ENGINEER

3 THE PURPOSE OF REVISION 3 IS TO SHOW THE WORK ASSOCIATED WITH THE EMERSON CAMPUS VCP. SDP-16-005 — 11-23-16

3 PROFESSIONAL CERTIFICATION FOR REV #3

I HEREBY CERTIFY THAT THESE DOCUMENTS WERE PREPARED OR APPROVED BY ME, AND THAT I AM A DULY LICENSED PROFESSIONAL ENGINEER UNDER THE LAWS OF THE STATE OF MARYLAND, LICENSE NO 45292, EXPIRATION DATE: 06/21/2018

APPROVED: HOWARD COUNTY DEPT. OF PUBLIC WORKS

for CHIEF, BUREAU OF HIGHWAYS — 10-10-02 DATE

APPROVED: HOWARD COUNTY DEPT. OF PLANNING AND ZONING

CHIEF, DIVISION OF LAND DEVELOPMENT — 10/22/02 DATE

CHIEF, DEVELOPMENT ENGINEERING DIVISION MK — 10/18/02 DATE

Professional Certification. I hereby certify that these documents were prepared or approved by me, and that I am a duly licensed professional engineer under the laws of the State of Maryland. License No. 8061, Expiration Date: 8-26-11

FOR REVISION #1 ONLY
4-19-11 Date

STATE OF MARYLAND — PAUL LEE HUMPHREY — No. 19261 — REGISTERED PROFESSIONAL ENGINEER

Professional Engr. No. 8061

9/20/02 Date

STATE OF MARYLAND — PROFESSIONAL ENGINEER — No. 10551 — ANOCHIA

Professional Engr. No. 10551

Date	No.	Revision Description
10/23/15	3	EMERSON CAMPUS VCP
2-7-11	1	ADD 5' CONCRETE SIDEWALK ALONG PARCEL D FRONTAGE

REVITZ PROPERTY

OWNER /DEVELOPER:

THE HOWARD RESEARCH & DEVELOPMENT CORPORATION
10275 LITTLE PATUXENT PARKWAY
COLUMBIA, MARYLAND 21044

DMW
Daft-McCune-Walker, Inc.
200 East Pennsylvania Avenue
Towson, Maryland 21286
(410) 296-3333
Fax 296-4705
A Team of Land Planners, Landscape Architects, Engineers, Surveyors & Environmental Professionals

SUBDIVISION NAME		SECTION/AREA				LOT/PARCEL #
						165 & PO PAR. 837
PLAT# OR L/F	BLOCK #	ZONE	TAX/ZONE MAP	ELECT. DISTRICT	CENSUS TRACT	
22674/36	20	PEC	47, GRID 20	6 th		
WATER CODE			SEWER CODE			

TITLE
FINAL PLAN GRADING & SEDIMENT AND EROSION CONTROL PLAN

Des By	DFM	Scale	1" = 50'	Proj. No.	01011
Drn By	WDE	Date	9/19/02	23 OF 57	
Chk By		Approved			

F-02-111

F-02-111

Thu Sep 19 9:19:02 2002 N:\Projects\01011\Graphics\Drawings\Grading\Grading.dwg 9/19/02 3:48:18 PM dgreene

STATE ROUTE 216 WBL

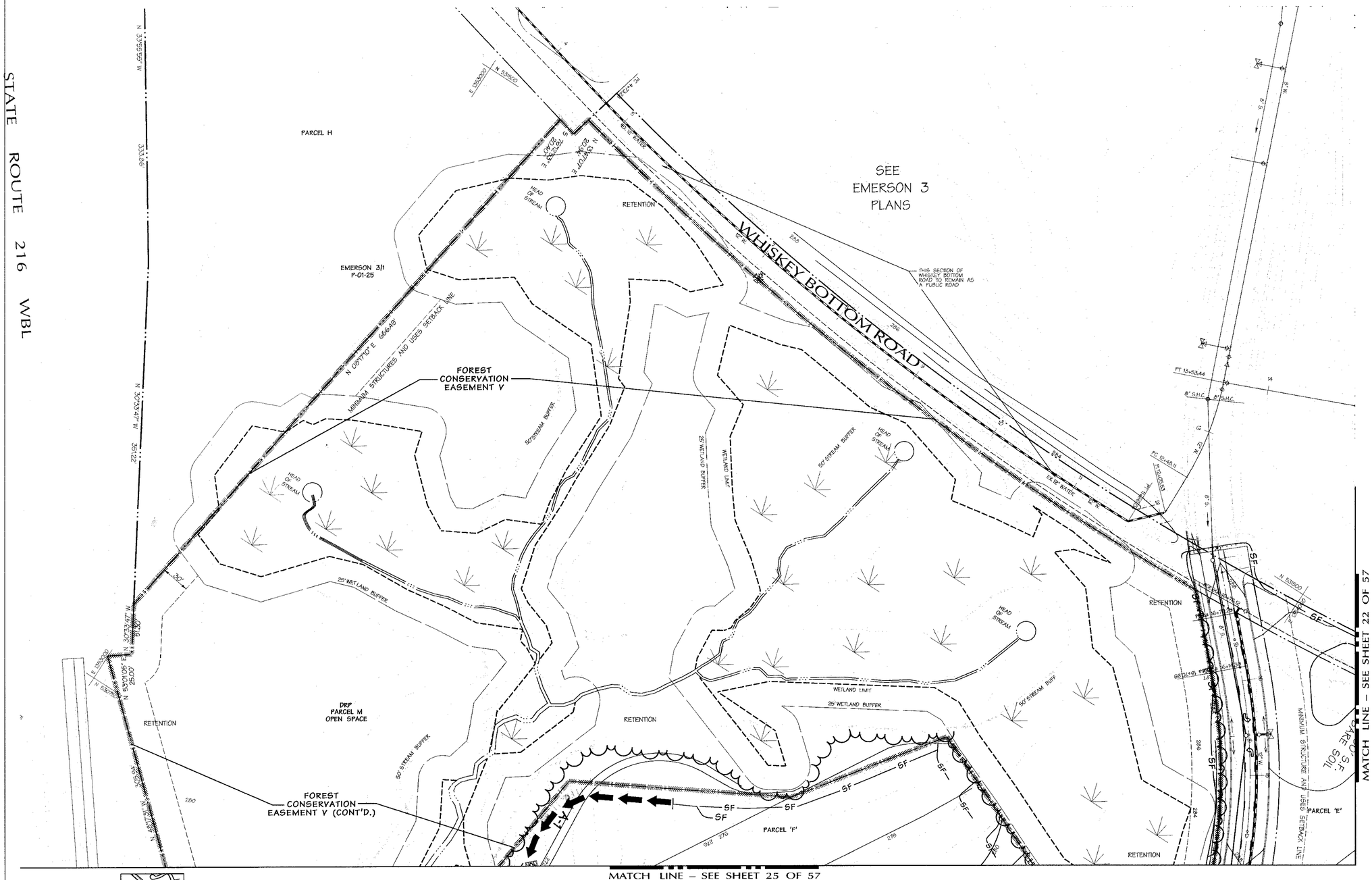

Legend

- EXISTING CONTOUR
- 340 — PROPOSED CONTOUR
- 15" D. PROPOSED STORMDRAIN
- EARTH/DIVERSION DIKE
- SF — SILT FENCE
- SSF — SUPER SILT FENCE
- CLEAN WATER DIVERSION PIPE
- LOD LIMIT OF DISTURBANCE
- WETLAND
- 25' WETLAND BUFFER
- 50' STREAM BUFFER
- CIP CURB INLET PROTECTION
- RPS REMOVABLE PUMPING STATION
- PROPOSED WOODS EDGE

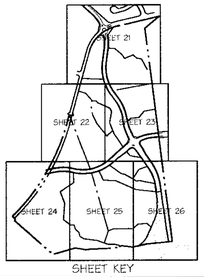

SHEET KEY

MDE PERMIT AND TRACKING No. 01-NT-0500/200260639

F-02-111

9/20/02
Date

Professional Engr. No. 10551

DEVELOPER'S CERTIFICATION:

"I/WE CERTIFY THAT ALL DEVELOPMENT AND CONSTRUCTION WILL BE DONE ACCORDING TO THIS PLAN, AND THAT ANY RESPONSIBLE PERSONNEL INVOLVED IN THE CONSTRUCTION PROJECT WILL HAVE A CERTIFICATE OF ATTENDANCE AT A DEPARTMENT OF THE ENVIRONMENT APPROVED TRAINING PROGRAM FOR THE CONTROL OF SEDIMENT AND EROSION BEFORE BEGINNING THE PROJECT. I ALSO AUTHORIZE PERIODIC ON-SITE INSPECTION BY THE HOWARD SOIL CONSERVATION DISTRICT.

Robt A. Jenkins — 9/20/02
SIGNATURE OF DEVELOPER — DATE
PRINT NAME BELOW SIGNATURE
Robert A. Jenkins

ENGINEER'S CERTIFICATION:

"I CERTIFY THAT THIS PLAN FOR EROSION AND SEDIMENT CONTROL REPRESENTS A PRACTICAL AND WORKABLE PLAN BASED ON MY PERSONAL KNOWLEDGE OF THE SITE CONDITIONS AND THAT IT WAS PREPARED IN ACCORDANCE WITH THE REQUIREMENTS OF THE HOWARD SOIL CONSERVATION DISTRICT."

9/20/02
SIGNATURE OF ENGINEER — DATE
PRINT NAME BELOW SIGNATURE
Bola Rasocchia

REVIEWED FOR HOWARD S.C.D. AND MEETS TECHNICAL REQUIREMENTS

U.S. NATURAL RESOURCE CONSERVATION SERVICE — 9/20/02 DATE

THIS DEVELOPMENT PLAN IS APPROVED FOR SOIL EROSION AND SEDIMENT CONTROL BY THE HOWARD SOIL CONSERVATION DISTRICT.

HOWARD S.C.D. — 9/20/02 DATE

APPROVED: HOWARD COUNTY DEPT. OF PUBLIC WORKS

for CHIEF, BUREAU OF HIGHWAYS — 10-10-02 DATE

APPROVED: HOWARD COUNTY DEPT. OF PLANNING AND ZONING

CHIEF, DIVISION OF LAND DEVELOPMENT — 10/22/02 DATE

CHIEF, DEVELOPMENT ENGINEERING DIVISION MK — 10/8/02 DATE

Date	No.	Revision Description

REVITZ PROPERTY

OWNER /DEVELOPER:

THE HOWARD RESEARCH & DEVELOPMENT CORPORATION
10275 LITTLE PATUXENT PARKWAY
COLUMBIA, MARYLAND 21044

DMW
Daft-McCune-Walker, Inc.
200 East Pennsylvania Avenue
Towson, Maryland 21286
(410) 296-3333
Fax 296-4705

A Team of Land Planners, Landscape Architects, Engineers, Surveyors & Environmental Professionals

SUBDIVISION NAME			SECTION/AREA		PARCEL # / LOT #
					165 & P/O PAR. 837
PLAT # OR L/F	BLOCK #	ZONE	TAX/ZONE MAP	ELECT. DISTRICT	CENSUS TRACT
22624/36	20	PEC	47	6 th	
WATER CODE			SEWER CODE		

TITLE
FINAL PLAN
GRADING & SEDIMENT AND EROSION CONTROL PLAN

Des By	DFM	Scale 1" = 50'	Proj. No. 01011
Drn By		Date 9/9/02	24 OF 57
Chk By		Approved	

F-02-111

Thu Sep 19 09:58:35 2002 M:\projects\01011\Engineering\Grading\01011-GR-FP.dwg

MATCH LINE – SEE SHEET 24 OF 57

MATCH LINE – SEE SHEET 22 OF 57

MATCH LINE – SEE SHEET 23 OF 57

MATCH LINE – SEE SHEET 26 OF 57

MARYLAND ROUTE 216

24' EX PAVING

100 YR F.P. WATER SURF. ELEV.

RETENTION

50' STREAM BUFFER

WETLAND LIMIT

25' WETLAND BUFFER

DRP OPEN SPACE PARCEL 'M'

FOREST CONSERVATION EASEMENT V

TRAP II
SEE SHEET 27 OF 57 FOR TRAP SCHEDULE

P/O FOREST CONSERVATION EASEMENT V

DRP OPEN SPACE PARCEL 'M'

PARCEL 'F'

PARCEL 'E'

PARCEL 'D'

PROP. 5' CONCRETE SIDEWALK

STERLING DRIVE

RETENTION

DRP OPEN SPACE PARCEL 'N'

FOREST CONSERVATION EASEMENT II

PARCEL 'H'

PARCEL 'G'

PROPOSED S.E.C. BASIN F

PROPOSED S.E.C. BASIN E

PROPOSED S.E.C. BASIN D

PROPOSED S.E.C. BASIN C

PROPOSED S.E.C. BASIN B

PROPOSED S.E.C. BASIN A

PROPOSED S.E.C. BASIN G

PROPOSED S.E.C. BASIN H

PROPOSED S.E.C. BASIN I

PROPOSED S.E.C. BASIN J

PROPOSED S.E.C. BASIN K

PROPOSED S.E.C. BASIN L

PROPOSED S.E.C. BASIN M

PROPOSED S.E.C. BASIN N

PROPOSED S.E.C. BASIN O

PROPOSED S.E.C. BASIN P

PROPOSED S.E.C. BASIN Q

PROPOSED S.E.C. BASIN R

PROPOSED S.E.C. BASIN S

PROPOSED S.E.C. BASIN T

PROPOSED S.E.C. BASIN U

PROPOSED S.E.C. BASIN V

PROPOSED S.E.C. BASIN W

PROPOSED S.E.C. BASIN X

PROPOSED S.E.C. BASIN Y

PROPOSED S.E.C. BASIN Z

PROPOSED S.E.C. BASIN AA

PROPOSED S.E.C. BASIN BB

PROPOSED S.E.C. BASIN CC

PROPOSED S.E.C. BASIN DD

PROPOSED S.E.C. BASIN EE

PROPOSED S.E.C. BASIN FF

PROPOSED S.E.C. BASIN GG

PROPOSED S.E.C. BASIN HH

PROPOSED S.E.C. BASIN II

PROPOSED S.E.C. BASIN JJ

PROPOSED S.E.C. BASIN KK

PROPOSED S.E.C. BASIN LL

PROPOSED S.E.C. BASIN MM

PROPOSED S.E.C. BASIN NN

PROPOSED S.E.C. BASIN OO

PROPOSED S.E.C. BASIN PP

PROPOSED S.E.C. BASIN QQ

PROPOSED S.E.C. BASIN RR

PROPOSED S.E.C. BASIN SS

PROPOSED S.E.C. BASIN TT

PROPOSED S.E.C. BASIN UU

PROPOSED S.E.C. BASIN VV

PROPOSED S.E.C. BASIN WW

PROPOSED S.E.C. BASIN XX

PROPOSED S.E.C. BASIN YY

PROPOSED S.E.C. BASIN ZZ

PROPOSED S.E.C. BASIN AAA

PROPOSED S.E.C. BASIN BBB

PROPOSED S.E.C. BASIN CCC

PROPOSED S.E.C. BASIN DDD

PROPOSED S.E.C. BASIN EEE

PROPOSED S.E.C. BASIN FFF

PROPOSED S.E.C. BASIN GGG

PROPOSED S.E.C. BASIN HHH

PROPOSED S.E.C. BASIN III

PROPOSED S.E.C. BASIN JJJ

PROPOSED S.E.C. BASIN KKK

PROPOSED S.E.C. BASIN LLL

PROPOSED S.E.C. BASIN MMM

PROPOSED S.E.C. BASIN NNN

PROPOSED S.E.C. BASIN OOO

PROPOSED S.E.C. BASIN PPP

PROPOSED S.E.C. BASIN QQQ

PROPOSED S.E.C. BASIN RRR

PROPOSED S.E.C. BASIN SSS

PROPOSED S.E.C. BASIN TTT

PROPOSED S.E.C. BASIN UUU

PROPOSED S.E.C. BASIN VVV

PROPOSED S.E.C. BASIN WWW

PROPOSED S.E.C. BASIN XXX

PROPOSED S.E.C. BASIN YYY

PROPOSED S.E.C. BASIN ZZZ

PROPOSED S.E.C. BASIN AAAA

PROPOSED S.E.C. BASIN BBBB

PROPOSED S.E.C. BASIN CCCC

PROPOSED S.E.C. BASIN DDDD

PROPOSED S.E.C. BASIN EEEE

PROPOSED S.E.C. BASIN FFFF

PROPOSED S.E.C. BASIN GGGG

PROPOSED S.E.C. BASIN HHHH

PROPOSED S.E.C. BASIN IIII

PROPOSED S.E.C. BASIN JJJJ

PROPOSED S.E.C. BASIN KKKK

PROPOSED S.E.C. BASIN LLLL

PROPOSED S.E.C. BASIN MMMM

PROPOSED S.E.C. BASIN NNNN

PROPOSED S.E.C. BASIN OOOO

PROPOSED S.E.C. BASIN PPPP

PROPOSED S.E.C. BASIN QQQQ

PROPOSED S.E.C. BASIN RRRR

PROPOSED S.E.C. BASIN SSSS

PROPOSED S.E.C. BASIN TTTT

PROPOSED S.E.C. BASIN UUUU

PROPOSED S.E.C. BASIN VVVV

PROPOSED S.E.C. BASIN WWWW

PROPOSED S.E.C. BASIN XXXX

PROPOSED S.E.C. BASIN YYYY

PROPOSED S.E.C. BASIN ZZZZ

PROPOSED S.E.C. BASIN AAAAA

PROPOSED S.E.C. BASIN BBBBB

PROPOSED S.E.C. BASIN CCCCC

PROPOSED S.E.C. BASIN DDDDD

PROPOSED S.E.C. BASIN EEEEE

PROPOSED S.E.C. BASIN FFFFF

PROPOSED S.E.C. BASIN GGGGG

PROPOSED S.E.C. BASIN HHHHH

PROPOSED S.E.C. BASIN IIIII

PROPOSED S.E.C. BASIN JJJJJ

PROPOSED S.E.C. BASIN KKKKK

PROPOSED S.E.C. BASIN LLLLL

PROPOSED S.E.C. BASIN MMMMM

PROPOSED S.E.C. BASIN NNNNN

PROPOSED S.E.C. BASIN OOOOO

PROPOSED S.E.C. BASIN PPPPP

PROPOSED S.E.C. BASIN QQQQQ

PROPOSED S.E.C. BASIN RRRRR

PROPOSED S.E.C. BASIN SSSSS

PROPOSED S.E.C. BASIN TTTTT

PROPOSED S.E.C. BASIN UUUUU

PROPOSED S.E.C. BASIN VVVVV

PROPOSED S.E.C. BASIN WWWWW

PROPOSED S.E.C. BASIN XXXXX

PROPOSED S.E.C. BASIN YYYYY

PROPOSED S.E.C. BASIN ZZZZZ

PROPOSED S.E.C. BASIN AAAAAA

PROPOSED S.E.C. BASIN BBBBBB

PROPOSED S.E.C. BASIN CCCCCC

PROPOSED S.E.C. BASIN DDDDDD

PROPOSED S.E.C. BASIN EEEEEE

PROPOSED S.E.C. BASIN FFFFFF

PROPOSED S.E.C. BASIN GGGGGG

PROPOSED S.E.C. BASIN HHHHHH

PROPOSED S.E.C. BASIN IIIIII

PROPOSED S.E.C. BASIN JJJJJJ

PROPOSED S.E.C. BASIN KKKKKK

PROPOSED S.E.C. BASIN LLLLLL

PROPOSED S.E.C. BASIN MMMMMM

PROPOSED S.E.C. BASIN NNNNNN

PROPOSED S.E.C. BASIN OOOOOO

PROPOSED S.E.C. BASIN PPPPPP

PROPOSED S.E.C. BASIN QQQQQQ

PROPOSED S.E.C. BASIN RRRRRR

PROPOSED S.E.C. BASIN SSSSSS

PROPOSED S.E.C. BASIN TTTTTT

PROPOSED S.E.C. BASIN UUUUUU

PROPOSED S.E.C. BASIN VVVVVV

PROPOSED S.E.C. BASIN WWWWWW

PROPOSED S.E.C. BASIN XXXXXX

PROPOSED S.E.C. BASIN YYYYYY

PROPOSED S.E.C. BASIN ZZZZZZ

PROPOSED S.E.C. BASIN AAAAAAA

PROPOSED S.E.C. BASIN BBBBBBB

PROPOSED S.E.C. BASIN CCCCCCC

PROPOSED S.E.C. BASIN DDDDDDD

PROPOSED S.E.C. BASIN EEEEEEE

PROPOSED S.E.C. BASIN FFFFFFF

PROPOSED S.E.C. BASIN GGGGGGG

PROPOSED S.E.C. BASIN HHHHHHH

PROPOSED S.E.C. BASIN IIIIIII

PROPOSED S.E.C. BASIN JJJJJJJ

PROPOSED S.E.C. BASIN KKKKKKK

PROPOSED S.E.C. BASIN LLLLLLL

PROPOSED S.E.C. BASIN MMMMMMM

PROPOSED S.E.C. BASIN NNNNNNN

PROPOSED S.E.C. BASIN OOOOOOO

PROPOSED S.E.C. BASIN PPPPPPP

PROPOSED S.E.C. BASIN QQQQQQQ

PROPOSED S.E.C. BASIN RRRRRRR

PROPOSED S.E.C. BASIN SSSSSSS

PROPOSED S.E.C. BASIN TTTTTTT

PROPOSED S.E.C. BASIN UUUUUUU

PROPOSED S.E.C. BASIN VVVVVVV

PROPOSED S.E.C. BASIN WWWWWWW

PROPOSED S.E.C. BASIN XXXXXXX

PROPOSED S.E.C. BASIN YYYYYYY

PROPOSED S.E.C. BASIN ZZZZZZZ

PROPOSED S.E.C. BASIN AAAAAAAA

PROPOSED S.E.C. BASIN BBBBBBBB

PROPOSED S.E.C. BASIN CCCCCCCC

PROPOSED S.E.C. BASIN DDDDDDDD

PROPOSED S.E.C. BASIN EEEEEEEE

PROPOSED S.E.C. BASIN FFFFFFFF

PROPOSED S.E.C. BASIN GGGGGGGG

PROPOSED S.E.C. BASIN HHHHHHHH

PROPOSED S.E.C. BASIN IIIIIIII

PROPOSED S.E.C. BASIN JJJJJJJJ

PROPOSED S.E.C. BASIN KKKKKKKK

PROPOSED S.E.C. BASIN LLLLLLLL

PROPOSED S.E.C. BASIN MMMMMMMM

PROPOSED S.E.C. BASIN NNNNNNNN

PROPOSED S.E.C. BASIN OOOOOOOO

PROPOSED S.E.C. BASIN PPPPPPPP

PROPOSED S.E.C. BASIN QQQQQQQQ

PROPOSED S.E.C. BASIN RRRRRRRR

PROPOSED S.E.C. BASIN SSSSSSSS

PROPOSED S.E.C. BASIN TTTTTTTT

PROPOSED S.E.C. BASIN UUUUUUUU

PROPOSED S.E.C. BASIN VVVVVVVV

PROPOSED S.E.C. BASIN WWWWWWWW

PROPOSED S.E.C. BASIN XXXXXXXX

PROPOSED S.E.C. BASIN YYYYYYYY

PROPOSED S.E.C. BASIN ZZZZZZZZ

PROPOSED S.E.C. BASIN AAAAAAAAA

PROPOSED S.E.C. BASIN BBBBBBBBB

PROPOSED S.E.C. BASIN CCCCCCCCC

PROPOSED S.E.C. BASIN DDDDDDDDD

PROPOSED S.E.C. BASIN EEEEEEEEE

PROPOSED S.E.C. BASIN FFFFFFFFF

PROPOSED S.E.C. BASIN GGGGGGGGG

PROPOSED S.E.C. BASIN HHHHHHHHH

PROPOSED S.E.C. BASIN IIIIIIIII

PROPOSED S.E.C. BASIN JJJJJJJJJ

PROPOSED S.E.C. BASIN KKKKKKKKK

PROPOSED S.E.C. BASIN LLLLLLLLL

PROPOSED S.E.C. BASIN MMMMMMMMM

PROPOSED S.E.C. BASIN NNNNNNNNN

PROPOSED S.E.C. BASIN OOOOOOOOO

PROPOSED S.E.C. BASIN PPPPPPPPP

PROPOSED S.E.C. BASIN QQQQQQQQQ

PROPOSED S.E.C. BASIN RRRRRRRRR

PROPOSED S.E.C. BASIN SSSSSSSSS

PROPOSED S.E.C. BASIN TTTTTTTTT

PROPOSED S.E.C. BASIN UUUUUUUUU

PROPOSED S.E.C. BASIN VVVVVVVVV

PROPOSED S.E.C. BASIN WWWWWWWWW

PROPOSED S.E.C. BASIN XXXXXXXXX

PROPOSED S.E.C. BASIN YYYYYYYYY

PROPOSED S.E.C. BASIN ZZZZZZZZZ

PROPOSED S.E.C. BASIN AAAAAAAAAA

PROPOSED S.E.C. BASIN BBBBBBBBBB

PROPOSED S.E.C. BASIN CCCCCCCCCC

PROPOSED S.E.C. BASIN DDDDDDDDDD

PROPOSED S.E.C. BASIN EEEEEEEEEE

PROPOSED S.E.C. BASIN FFFFFFFFFF

PROPOSED S.E.C. BASIN GGGGGGGGGG

PROPOSED S.E.C. BASIN HHHHHHHHHH

PROPOSED S.E.C. BASIN IIIIIIIIII

PROPOSED S.E.C. BASIN JJJJJJJJJJ

PROPOSED S.E.C. BASIN KKKKKKKKKK

PROPOSED S.E.C. BASIN LLLLLLLLLL

PROPOSED S.E.C. BASIN MMMMMMMMMM

PROPOSED S.E.C. BASIN NNNNNNNNNN

PROPOSED S.E.C. BASIN OOOOOOOOOO

PROPOSED S.E.C. BASIN PPPPPPPPPP

PROPOSED S.E.C. BASIN QQQQQQQQQQ

PROPOSED S.E.C. BASIN RRRRRRRRRR

PROPOSED S.E.C. BASIN SSSSSSSSSS

PROPOSED S.E.C. BASIN TTTTTTTTTT

PROPOSED S.E.C. BASIN UUUUUUUUUU

PROPOSED S.E.C. BASIN VVVVVVVVVV

PROPOSED S.E.C. BASIN WWWWWWWWWW

PROPOSED S.E.C. BASIN XXXXXXXXXX

PROPOSED S.E.C. BASIN YYYYYYYYYY

PROPOSED S.E.C. BASIN ZZZZZZZZZZ

PROPOSED S.E.C. BASIN AAAAAAAAAAA

PROPOSED S.E.C. BASIN BBBBBBBBBBB

PROPOSED S.E.C. BASIN CCCCCCCCCCC

PROPOSED S.E.C. BASIN DDDDDDDDDDD

PROPOSED S.E.C. BASIN EEEEEEEEEEE

PROPOSED S.E.C. BASIN FFFFFFFFFFF

PROPOSED S.E.C. BASIN GGGGGGGGGGG

PROPOSED S.E.C. BASIN HHHHHHHHHHH

PROPOSED S.E.C. BASIN IIIIIIIIIII

PROPOSED S.E.C. BASIN JJJJJJJJJJJ

PROPOSED S.E.C. BASIN KKKKKKKKKKK

PROPOSED S.E.C. BASIN LLLLLLLLLLL

PROPOSED S.E.C. BASIN MMMMMMMMMMM

PROPOSED S.E.C. BASIN NNNNNNNNNNN

PROPOSED S.E.C. BASIN OOOOOOOOOOO

PROPOSED S.E.C. BASIN PPPPPPPPPPP

PROPOSED S.E.C. BASIN QQQQQQQQQQQ

PROPOSED S.E.C. BASIN RRRRRRRRRRR

PROPOSED S.E.C. BASIN SSSSSSSSSSS

PROPOSED S.E.C. BASIN TTTTTTTTTTT

PROPOSED S.E.C. BASIN UUUUUUUUUUU

PROPOSED S.E.C. BASIN VVVVVVVVVVV

PROPOSED S.E.C. BASIN WWWWWWWWWWW

PROPOSED S.E.C. BASIN XXXXXXXXXXX

PROPOSED S.E.C. BASIN YYYYYYYYYYY

PROPOSED S.E.C. BASIN ZZZZZZZZZZZ

PROPOSED S.E.C. BASIN AAAAAAAAAAAA

PROPOSED S.E.C. BASIN BBBBBBBBBBBB

PROPOSED S.E.C. BASIN CCCCCCCCCCCC

PROPOSED S.E.C. BASIN DDDDDDDDDDDD

PROPOSED S.E.C. BASIN EEEEEEEEEEEE

PROPOSED S.E.C. BASIN FFFFFFFFFFFF

PROPOSED S.E.C. BASIN GGGGGGGGGGGG

PROPOSED S.E.C. BASIN HHHHHHHHHHHH

PROPOSED S.E.C. BASIN IIIIIIIIIIII

PROPOSED S.E.C. BASIN JJJJJJJJJJJJ

PROPOSED S.E.C. BASIN KKKKKKKKKKKK

PROPOSED S.E.C. BASIN LLLLLLLLLLLL

PROPOSED S.E.C. BASIN MMMMMMMMMMMM

PROPOSED S.E.C. BASIN NNNNNNNNNNNN

PROPOSED S.E.C. BASIN OOOOOOOOOOOO

PROPOSED S.E.C. BASIN PPPPPPPPPPPP

PROPOSED S.E.C. BASIN QQQQQQQQQQQQ

PROPOSED S.E.C. BASIN RRRRRRRRRRRR

PROPOSED S.E.C. BASIN SSSSSSSSSSSS

PROPOSED S.E.C. BASIN TTTTTTTTTTTT

PROPOSED S.E.C. BASIN UUUUUUUUUUUU

PROPOSED S.E.C. BASIN VVVVVVVVVVVV

PROPOSED S.E.C. BASIN WWWWWWWWWWWW

PROPOSED S.E.C. BASIN XXXXXXXXXXXX

PROPOSED S.E.C. BASIN YYYYYYYYYYYY

PROPOSED S.E.C. BASIN ZZZZZZZZZZZZ

PROPOSED S.E.C. BASIN AAAAAAAAAAAAA

PROPOSED S.E.C. BASIN BBBBBBBBBBBBB

PROPOSED S.E.C. BASIN CCCCCCCCCCCCC

PROPOSED S.E.C. BASIN DDDDDDDDDDDDD

PROPOSED S.E.C. BASIN EEEEEEEEEEEEE

PROPOSED S.E.C. BASIN FFFFFFFFFFFFF

PROPOSED S.E.C. BASIN GGGGGGGGGGGGG

PROPOSED S.E.C. BASIN HHHHHHHHHHHHH

PROPOSED S.E.C. BASIN IIIIIIIIIIIII

PROPOSED S.E.C. BASIN JJJJJJJJJJJJJ

PROPOSED S.E.C. BASIN KKKKKKKKKKKKK

PROPOSED S.E.C. BASIN LLLLLLLLLLLLL

PROPOSED S.E.C. BASIN MMMMMMMMMMMMM

PROPOSED S.E.C. BASIN NNNNNNNNNNNNN

PROPOSED S.E.C. BASIN OOOOOOOOOOOOO

PROPOSED S.E.C. BASIN PPPPPPPPPPPPP

PROPOSED S.E.C. BASIN QQQQQQQQQQQQQ

PROPOSED S.E.C. BASIN RRRRRRRRRRRRR

PROPOSED S.E.C. BASIN SSSSSSSSSSSSS

PROPOSED S.E.C. BASIN TTTTTTTTTTTTT

PROPOSED S.E.C. BASIN UUUUUUUUUUUUU

PROPOSED S.E.C. BASIN VVVVVVVVVVVVV

PROPOSED S.E.C. BASIN WWWWWWWWWWWWW

PROPOSED S.E.C. BASIN XXXXXXXXXXXXX

PROPOSED S.E.C. BASIN YYYYYYYYYYYYY

PROPOSED S.E.C. BASIN ZZZZZZZZZZZZZ

PROPOSED S.E.C. BASIN AAAAAAAAAAAAAA

PROPOSED S.E.C. BASIN BBBBBBBBBBBBBB

PROPOSED S.E.C. BASIN CCCCCCCCCCCCCC

PROPOSED S.E.C. BASIN DDDDDDDDDDDDDD

PROPOSED S.E.C. BASIN EEEEEEEEEEEEEE

PROPOSED S.E.C. BASIN FFFFFFFFFFFFFF

PROPOSED S.E.C. BASIN GGGGGGGGGGGGGG

PROPOSED S.E.C. BASIN HHHHHHHHHHHHHH

PROPOSED S.E.C. BASIN IIIIIIIIIIIIII

PROPOSED S.E.C. BASIN JJJJJJJJJJJJJJ

PROPOSED S.E.C. BASIN KKKKKKKKKKKKKK

PROPOSED S.E.C. BASIN LLLLLLLLLLLLLL

PROPOSED S.E.C. BASIN MMMMMMMMMMMMMM

PROPOSED S.E.C. BASIN NNNNNNNNNNNNNN

PROPOSED S.E.C. BASIN OOOOOOOOOOOOOO

PROPOSED S.E.C. BASIN PPPPPPPPPPPPPP

PROPOSED S.E.C. BASIN QQQQQQQQQQQQQQ

PROPOSED S.E.C. BASIN RRRRRRRRRRRRRR

PROPOSED S.E.C. BASIN SSSSSSSSSSSSSS

PROPOSED S.E.C. BASIN TTTTTTTTTTTTTT

PROPOSED S.E.C. BASIN UUUUUUUUUUUUUU

PROPOSED S.E.C. BASIN VVVVVVVVVVVVVV

PROPOSED S.E.C. BASIN WWWWWWWWWWWWWW

PROPOSED S.E.C. BASIN XXXXXXXXXXXXXX

PROPOSED S.E.C. BASIN YYYYYYYYYYYYYY

PROPOSED S.E.C. BASIN ZZZZZZZZZZZZZZ

PROPOSED S.E.C. BASIN AAAAAAAAAAAAAAA

PROPOSED S.E.C. BASIN BBBBBBBBBBBBBBB

PROPOSED S.E.C. BASIN CCCCCCCCCCCCCCC

PROPOSED S.E.C. BASIN DDDDDDDDDDDDDDD

PROPOSED S.E.C. BASIN EEEEEEEEEEEEEEE

PROPOSED S.E.C. BASIN FFFFFFFFFFFFFFF

PROPOSED S.E.C. BASIN GGGGGGGGGGGGGGG

PROPOSED S.E.C. BASIN HHHHHHHHHHHHHHH

PROPOSED S.E.C. BASIN IIIIIIIIIIIIIII

PROPOSED S.E.C. BASIN JJJJJJJJJJJJJJJ

PROPOSED S.E.C. BASIN KKKKKKKKKKKKKKK

PROPOSED S.E.C. BASIN LLLLLLLLLLLLLLL

PROPOSED S.E.C. BASIN MMMMMMMMMMMMMMM

PROPOSED S.E.C. BASIN NNNNNNNNNNNNNNN

PROPOSED S.E.C. BASIN OOOOOOOOOOOOOOO

PROPOSED S.E.C. BASIN PPPPPPPPPPPPPPP

PROPOSED S.E.C. BASIN QQQQQQQQQQQQQQQ

PROPOSED S.E.C. BASIN RRRRRRRRRRRRRRR

PROPOSED S.E.C. BASIN SSSSSSSSSSSSSSS

PROPOSED S.E.C. BASIN TTTTTTTTTTTTTTT

PROPOSED S.E.C. BASIN UUUUUUUUUUUUUUU

PROPOSED S.E.C. BASIN VVVVVVVVVVVVVVV

PROPOSED S.E.C. BASIN WWWWWWWWWWWWWWW

PROPOSED S.E.C. BASIN XXXXXXXXXXXXXXX

PROPOSED S.E.C. BASIN YYYYYYYYYYYYYYY

PROPOSED S.E.C. BASIN ZZZZZZZZZZZZZZZ

PROPOSED S.E.C. BASIN AAAAAAAAAAAAAAAA

PROPOSED S.E.C. BASIN BBBBBBBBBBBBBBBB

PROPOSED S.E.C. BASIN CCCCCCCCCCCCCCCC

PROPOSED S.E.C. BASIN DDDDDDDDDDDDDDDD

PROPOSED S.E.C. BASIN EEEEEEEEEEEEEEEE

PROPOSED S.E.C. BASIN FFFFFFFFFFFFFFFF

PROPOSED S.E.C. BASIN GGGGGGGGGGGGGGGG

PROPOSED S.E.C. BASIN HHHHHHHHHHHHHHHH

PROPOSED S.E.C. BASIN IIIIIIIIIIIIIIII

PROPOSED S.E.C. BASIN JJJJJJJJJJJJJJJJ

PROPOSED S.E.C. BASIN KKKKKKKKKKKKKKKK

PROPOSED S.E.C. BASIN LLLLLLLLLLLLLLLL

PROPOSED S.E.C. BASIN MMMMMMMMMMMMMMMM

PROPOSED S.E.C. BASIN NNNNNNNNNNNNNNNN

PROPOSED S.E.C. BASIN OOOOOOOOOOOOOOOO

PROPOSED S.E.C. BASIN PPPPPPPPPPPPPPPP

PROPOSED S.E.C. BASIN QQQQQQQQQQQQQQQQ

PROPOSED S.E.C. BASIN RRRRRRRRRRRRRRRR

PROPOSED S.E.C. BASIN SSSSSSSSSSSSSSSS

PROPOSED S.E.C. BASIN TTTTTTTTTTTTTTTT

PROPOSED S.E.C. BASIN UUUUUUUUUUUUUUUU

PROPOSED S.E.C. BASIN VVVVVVVVVVVVVVVV

PROPOSED S.E.C. BASIN WWWWWWWWWWWWWWWW

PROPOSED S.E.C. BASIN XXXXXXXXXXXXXXXX

PROPOSED S.E.C. BASIN YYYYYYYYYYYYYYYY

PROPOSED S.E.C. BASIN ZZZZZZZZZZZZZZZZ

PROPOSED S.E.C. BASIN AAAAAAAAAAAAAAAAA

PROPOSED S.E.C. BASIN BBBBBBBBBBBBBBBBB

PROPOSED S.E.C. BASIN CCCCCCCCCCCCCCCCC

PROPOSED S.E.C. BASIN DDDDDDDDDDDDDDDDD

PROPOSED S.E.C. BASIN EEEEEEEEEEEEEEEEE

PROPOSED S.E.C. BASIN FFFFFFFFFFFFFFFFF

PROPOSED S.E.C. BASIN GGGGGGGGGGGGGGGGG

PROPOSED S.E.C. BASIN HHHHHHHHHHHHHHHHH

PROPOSED S.E.C. BASIN IIIIIIIIIIIIIIIII

PROPOSED S.E.C. BASIN JJJJJJJJJJJJJJJJJ

PROPOSED S.E.C. BASIN KKKKKKKKKKKKKKKKK

PROPOSED S.E.C. BASIN LLLLLLLLLLLLLLLLL

PROPOSED S.E.C. BASIN MMMMMMMMMMMMMMMMM

PROPOSED S.E.C. BASIN NNNNNNNNNNNNNNNNN

PROPOSED S.E.C. BASIN OOOOOOOOOOOOOOOOO

PROPOSED S.E.C. BASIN PPPPPPPPPPPPPPPPP

PROPOSED S.E.C. BASIN QQQQQQQQQQQQQQQQQ

PROPOSED S.E.C. BASIN RRRRRRRRRRRRRRRRR

PROPOSED S.E.C. BASIN SSSSSSSSSSSSSSSSS

PROPOSED S.E.C. BASIN TTTTTTTTTTTTTTTTT

PROPOSED S.E.C. BASIN UUUUUUUUUUUUUUUUU

PROPOSED S.E.C. BASIN VVVVVVVVVVVVVVVVV

PROPOSED S.E.C. BASIN WWWWWWWWWWWWWWWWW

PROPOSED S.E.C. BASIN XXXXXXXXXXXXXXXXX

PROPOSED S.E.C. BASIN YYYYYYYYYYYYYYYYY

PROPOSED S.E.C. BASIN ZZZZZZZZZZZZZZZZZ

PROPOSED S.E.C. BASIN AAAAAAAAAAAAAAAAAA

PROPOSED S.E.C. BASIN BBBBBBBBBBBBBBBBBB

PROPOSED S.E.C. BASIN CCCCCCCCCCCCCCCCCC

PROPOSED S.E.C. BASIN DDDDDDDDDDDDDDDDDD

PROPOSED S.E.C. BASIN EEEEEEEEEEEEEEEEEE

PROPOSED S.E.C. BASIN FFFFFFFFFFFFFFFFFF

PROPOSED S.E.C. BASIN GGGGGGGGGGGGGGGGGG

PROPOSED S.E.C. BASIN HHHHHHHHHHHHHHHHHH

PROPOSED S.E.C. BASIN IIIIIIIIIIIIIIIIII

PROPOSED S.E.C. BASIN JJJJJJJJJJJJJJJJJJ

PROPOSED S.E.C. BASIN KKKKKKKKKKKKKKKKKK

PROPOSED S.E.C. BASIN LLLLLLLLLLLLLLLLLL

PROPOSED S.E.C. BASIN MMMMMMMMMMMMMMMMMM

PROPOSED S.E.C. BASIN NNNNNNNNNNNNNNNNNN

PROPOSED S.E.C. BASIN OOOOOOOOOOOOOOOOOO

PROPOSED S.E.C. BASIN PPPPPPPPPPPPPPPPPP

PROPOSED S.E.C. BASIN QQQQQQQQQQQQQQQQQQ

PROPOSED S.E.C. BASIN RRRRRRRRRRRRRRRRRR

PROPOSED S.E.C. BASIN SSSSSSSSSSSSSSSSSS

PROPOSED S.E.C. BASIN TTTTTTTTTTTTTTTTTT

PROPOSED S.E.C. BASIN UUUUUUUUUUUUUUUUUU

PROPOSED S.E.C. BASIN VVVVVVVVVVVVVVVVVV

PROPOSED S.E.C. BASIN WWWWWWWWWWWWWWWWWW

PROPOSED S.E.C. BASIN XXXXXXXXXXXXXXXXXX

PROPOSED S.E.C. BASIN YYYYYYYYYYYYYYYYYY

PROPOSED S.E.C. BASIN ZZZZZZZZZZZZZZZZZZ

PROPOSED S.E.C. BASIN AAAAAAAAAAAAAAAAAAA

PROPOSED S.E.C. BASIN BBBBBBBBBBBBBBBBBBB

PROPOSED S.E.C. BASIN CCCCCCCCCCCCCCCCCCC

PROPOSED S.E.C. BASIN DDDDDDDDDDDDDDDDDDD

PROPOSED S.E.C. BASIN EEEEEEEEEEEEEEEEEEE

PROPOSED S.E.C. BASIN FFFFFFFFFFFFFFFFFFF

PROPOSED S.E.C. BASIN GGGGGGGGGGGGGGGGGGG

PROPOSED S.E.C. BASIN HHHHHHHHHHHHHHHHHHH

PROPOSED S.E.C. BASIN IIIIIIIIIIIIIIIIIII

PROPOSED S.E.C. BASIN JJJJJJJJJJJJJJJJJJJ

PROPOSED S.E.C. BASIN KKKKKKKKKKKKKKKKKKK

PROPOSED S.E.C. BASIN LLLLLLLLLLLLLLLLLLL

PROPOSED S.E.C. BASIN MMMMMMMMMMMMMMMMMMM

PROPOSED S.E.C. BASIN NNNNNNNNNNNNNNNNNNN

PROPOSED S.E.C. BASIN OOOOOOOOOOOOOOOOOOO

PROPOSED S.E.C. BASIN PPPPPPPPPPPPPPPPPPP

PROPOSED S.E.C. BASIN QQQQQQQQQQQQQQQQQQQ

PROPOSED S.E.C. BASIN RRRRRRRRRRRRRRRRRRR

PROPOSED S.E.C. BASIN SSSSSSSSSSSSSSSSSSS

PROPOSED S.E.C. BASIN TTTTTTTTTTTTTTTTTTT

PROPOSED S.E.C. BASIN UUUUUUUUUUUUUUUUUUU

PROPOSED S.E.C. BASIN VVVVVVVVVVVVVVVVVVV

PROPOSED S.E.C. BASIN WWWWWWWWWWWWWWWWWWW

PROPOSED S.E.C. BASIN XXXXXXXXXXXXXXXXXXX

PROPOSED S.E.C. BASIN YYYYYYYYYYYYYYYYYYY

PROPOSED S.E.C. BASIN ZZZZZZZZZZZZZZZZZZZ

PROPOSED S.E.C. BASIN AAAAAAAAAAAAAAAAAAAA

PROPOSED S.E.C. BASIN BBBBBBBBBBBBBBBBBBBB

PROPOSED S.E.C. BASIN CCCCCCCCCCCCCCCCCCCC

PROPOSED S.E.C. BASIN DDDDDDDDDDDDDDDDDDDD

PROPOSED S.E.C. BASIN EEEEEEEEEEEEEEEEEEEE

PROPOSED S.E.C. BASIN FFFFFFFFFFFFFFFFFFFF

PROPOSED S.E.C. BASIN GGGGGGGGGGGGGGGGGGGG

PROPOSED S.E.C. BASIN HHHHHHHHHHHHHHHHHHHH

PROPOSED S.E.C. BASIN IIIIIIIIIIIIIIIIIIII

PROPOSED S.E.C. BASIN JJJJJJJJJJJJJJJJJJJJ

PROPOSED S.E.C. BASIN KKKKKKKKKKKKKKKKKKKK

PROPOSED S.E.C. BASIN LLLLLLLLLLLLLLLLLLLL

PROPOSED S.E.C. BASIN MMMMMMMMMMMMMMMMMMMM

PROPOSED S.E.C. BASIN NNNNNNNNNNNNNNNNNNNN

PROPOSED S.E.C. BASIN OOOOOOOOOOOOOOOOOOOO

PROPOSED S.E.C. BASIN PPPPPPPPPPPPPPPPPPPP

PROPOSED S.E.C. BASIN QQQQQQQQQQQQQQQQQQQQ

PROPOSED S.E.C. BASIN RRRRRRRRRRRRRRRRRRRR

PROPOSED S.E.C. BASIN SSSSSSSSSSSSSSSSSSSS

PROPOSED S.E.C. BASIN TTTTTTTTTTTTTTTTTTTT

PROPOSED S.E.C. BASIN UUUUUUUUUUUUUUUUUUUU

PROPOSED S.E.C. BASIN VVVVVVVVVVVVVVVVVVVV

PROPOSED S.E.C. BASIN WWWWWWWWWWWWWWWWWWWW

PROPOSED S.E.C. BASIN XXXXXXXXXXXXXXXXXXXX

PROPOSED S.E.C. BASIN YYYYYYYYYYYYYYYYYYYY

PROPOSED S.E.C. BASIN ZZZZZZZZZZZZZZZZZZZZ

PROPOSED S.E.C. BASIN AAAAAAAAAAAAAAAAAAAAA

PROPOSED S.E.C. BASIN BBBBBBBBBBBBBBBBBBBBB

PROPOSED S.E.C. BASIN CCCCCCCCCCCCCCCCCCCCC

PROPOSED S.E.C. BASIN DDDDDDDDDDDDDDDDDDDDD

PROPOSED S.E.C. BASIN EEEEEEEEEEEEEEEEEEEEE

PROPOSED S.E.C. BASIN FFFFFFFFFFFFFFFFFFFFF

PROPOSED S.E.C. BASIN GGGGGGGGGGGGGGGGGGGGG

PROPOSED S.E.C. BASIN HHHHHHHHHHHHHHHHHHHHH

PROPOSED S.E.C. BASIN IIIIIIIIIIIIIIIIIIIII

PROPOSED S.E.C. BASIN JJJJJJJJJJJJJJJJJJJJJ

PROPOSED S.E.C. BASIN KKKKKKKKKKKKKKKKKKKKK

PROPOSED S.E.C. BASIN LLLLLLLLLLLLLLLLLLLLL

PROPOSED S.E.C. BASIN MMMMMMMMMMMMMMMMMMMMM

PROPOSED S.E.C. BASIN NNNNNNNNNNNNNNNNNNNNN

PROPOSED S.E.C. BASIN OOOOOOOOOOOOOOOOOOOOO

PROPOSED S.E.C. BASIN PPPPPPPPPPPPPPPPPPPPP

PROPOSED S.E.C. BASIN QQQQQQQQQQQQQQQQQQQQQ

PROPOSED S.E.C. BASIN RRRRRRRRRRRRRRRRRRRRR

PROPOSED S.E.C. BASIN SSSSSSSSSSSSSSSSSSSSS

PROPOSED S.E.C. BASIN TTTTTTTTTTTTTTTTTTTTT

PROPOSED S.E.C. BASIN UUUUUUUUUUUUUUUUUUUUU

PROPOSED S.E.C. BASIN VVVVVVVVVVVVVVVVVVVVV

PROPOSED S.E.C. BASIN WWWWWWWWWWWWWWWWWWWWW

PROPOSED S.E.C. BASIN XXXXXXXXXXXXXXXXXXXXX

PROPOSED S.E.C. BASIN YYYYYYYYYYYYYYYYYYYYY

PROPOSED S.E.C. BASIN ZZZZZZZZZZZZZZZZZZZZZ

PROPOSED S.E.C. BASIN AAAAAAAAAAAAAAAAAAAAAA

PROPOSED S.E.C. BASIN BBBBBBBBBBBBBBBBBBBBBB

PROPOSED S.E.C. BASIN CCCCCCCCCCCCCCCCCCCCCC

PROPOSED S.E.C. BASIN DDDDDDDDDDDDDDDDDDDDDD

PROPOSED S.E.C. BASIN EEEEEEEEEEEEEEEEEEEEEE

PROPOSED S.E.C. BASIN FFFFFFFFFFFFFFF

MATCH LINE – SEE SHEET 25 OF 57

MATCH LINE – SEE SHEET 23 OF 57

MARYLAND ROUTE 216

N 39°31'49" W 356.23'

LOOP ROAD PARCEL

WORK TO BE PERFORMED BY OTHERS

VEHICULAR EGRESS AND INGRESS IS RESTRICTED ALONG THE LOOP ROAD PARCEL AND MD RTE. 216

THIS GRADING TO BE DONE BY OTHERS IN THE RTE 216 INTERCHANGE PORTION OF THIS DESIGN.

FOREST CONSERVATION EASEMENT V

FOREST CONSERVATION EASEMENT VI

FOREST CONSERVATION EASEMENT II

FOREST CONSERVATION EASEMENT I

BASIN VI

FOA OPEN SPACE PARCEL 'P'

SEE SHEET 27 FOR BASIN SCHEDULE

PUBLIC STORMWATER MANAGEMENT EASEMENT VI

DRP OPEN SPACE PARCEL 'L'

DRP OPEN SPACE PARCEL 'N'

FOA OPEN SPACE PARCEL 'O'

PUBLIC STORMWATER MANAGEMENT EASEMENT V

SEE SHEET 28 FOR BASIN SCHEDULE

PARCEL 'G'

TRAP 1

SEE SHEET 27 OF 57 FOR TRAP SCHEDULE

INTERIM CONDITIONS TRAP GRADING

246.7

RIPRAP STONE OUTLET

WHERE THERE ARE 2:1 SLOPES PROPOSED, PROVIDE ECM (SHEET 30 OF 57) AND PERMANENT SEEDING (SHEET 31)

MINIMUM STRUCTURES AND USES SETBACK LINE

STEPHEN ROAD

RETENTION

BASIN V

BASIN II

NON-WOODY VEGETATION ZONE

25' WETLAND BUFFER

50' STREAM BUFFER

SAVANNA OVERLOOK SEE SHEET 29 OF 57

PIPE DIVERSION LOCATION- SEE DETAIL ON SHEET 29 AND 30 SCALE BLOW-UP SHEET 32 OF 57.

SANDBAG DIVERSION SEE SHEET 29 OF 57

PHASE II L.O.D. FOR PHASE I L.O.D.'S, (AROUND STREAM DIVERSION PRACTICE AREAS ONLY), SEE 30-SCALE BLOW-UPS, SHEETS 32 AND 33 OF 57.

WHERE THERE ARE 2:1 SLOPES PROPOSED, PROVIDE ECM (SHEET 30 OF 57) AND PERMANENT SEEDING (SHEET 31)

POOL

FINAL GRADING

INITIAL CONDITIONS TRAP GRADING

Legend

- EXISTING CONTOUR
- PROPOSED CONTOUR
- PROPOSED STORMDRAIN
- EARTH/DIVERSION DIKE
- SF — SILT FENCE
- SSF — SUPER SILT FENCE
- CLEAN WATER DIVERSION PIPE
- LOD — LIMIT OF DISTURBANCE
- WETLAND
- WETLAND BUFFER
- STREAM BUFFER
- PROPOSED S.E.C. BASIN FACILITY
- MOUNTABLE BERM
- SANDBAG DIVERSION
- CIP — CURB INLET PROTECTION
- RPS — REMOVABLE PUMPING STATION
- SCE — STABILIZED CONSTRUCTION ENTRANCE
- GM — GABION MATTRESS INFLOW PROTECTION
- FILTER BAG
- NON-WOODY VEGETATION ZONE

SHEET KEY

SHEET 21 | SHEET 22 | SHEET 23 | SHEET 24 | SHEET 25 | SHEET 26

APPROVED: HOWARD COUNTY DEPT. OF PUBLIC WORKS

CHIEF, BUREAU OF HIGHWAYS — DATE 10-10-02

APPROVED: HOWARD COUNTY DEPT. OF PLANNING AND ZONING

CHIEF, DIVISION OF LAND DEVELOPMENT — DATE 10/22/02

CHIEF, DEVELOPMENT ENGINEERING DIVISION MK — DATE 10/18/02

Date	No.	Revision Description
05/23/15	3	EMERSON CAMPUS VCP

REVITZ PROPERTY

OWNER /DEVELOPER:

THE HOWARD RESEARCH & DEVELOPMENT CORPORATION
10275 LITTLE PATUXENT PARKWAY
COLUMBIA, MARYLAND 21044

DMW
Daft-McCune-Walker, Inc.
200 East Pennsylvania Avenue
Towson, Maryland 21286
(410) 296-3333
Fax 296-4705

A Team of Land Planners, Landscape Architects, Engineers, Surveyors & Environmental Professionals

SUBDIVISION NAME			SECTION/AREA		LOT/PARCEL #
					165 & BO PAR. 837
PLAT# OR L#	BLOCK #	ZONE	TAX/ZONE MAP	ELEC. DISTRICT	CENSUS TRACT
22611436	20	PEC	47	6 th	
WATER CODE			SEWER CODE		

TITLE: **FINAL PLAN GRADING & SEDIMENT AND EROSION CONTROL PLAN**

Des By DFM	Scale 1" = 50'	Proj. No. 01011	
Drn By	Date 9/19/02		
Chk By	Approved	26 OF 57	

3 THE PURPOSE OF REVISION 3 IS TO SHOW THE WORK ASSOCIATED WITH THE EMERSON CAMPUS VCP. SDP-16-005

3 PROFESSIONAL CERTIFICATION FOR REV #3

I HEREBY CERTIFY THAT THESE DOCUMENTS WERE PREPARED OR APPROVED BY ME, AND THAT I AM A DULY LICENSED PROFESSIONAL ENGINEER UNDER THE LAWS OF THE STATE OF MARYLAND, LICENSE NO 16292 EXPIRATION DATE 05/21/2018

11-30-16

MDE PERMIT AND TRACKING No. 01-NT-0500/200260639

F-02-111

9/30/02 Date

Professional Engr. No. 10551

DEVELOPER'S CERTIFICATION:

"I/WE CERTIFY THAT ALL DEVELOPMENT AND CONSTRUCTION WILL BE DONE ACCORDING TO THIS PLAN, AND THAT ANY RESPONSIBLE PERSONNEL INVOLVED IN THE CONSTRUCTION PROJECT WILL HAVE A CERTIFICATE OF ATTENDANCE AT A DEPARTMENT OF THE ENVIRONMENT APPROVED TRAINING PROGRAM FOR THE CONTROL OF SEDIMENT AND EROSION BEFORE BEGINNING THE PROJECT. I ALSO AUTHORIZE PERIODIC ON-SITE INSPECTION BY THE HOWARD SOIL CONSERVATION DISTRICT.

Robert A. Jenkins — SIGNATURE OF DEVELOPER — 9/20/02 DATE

PRINT NAME BELOW SIGNATURE: Robert A. Jenkins

ENGINEER'S CERTIFICATION:

"I CERTIFY THAT THIS PLAN FOR EROSION AND SEDIMENT CONTROL REPRESENTS A PRACTICAL AND WORKABLE PLAN BASED ON MY PERSONAL KNOWLEDGE OF THE SITE CONDITIONS AND THAT IT WAS PREPARED IN ACCORDANCE WITH THE REQUIREMENTS OF THE HOWARD SOIL CONSERVATION DISTRICT."

9/20/02 — SIGNATURE OF ENGINEER

PRINT NAME BELOW SIGNATURE: John Banacchia

REVIEWED FOR HOWARD S.C.D. AND MEETS TECHNICAL REQUIREMENTS

U.S. NATURAL RESOURCE CONSERVATION SERVICE — 9/30/02 DATE

THIS DEVELOPMENT PLAN IS APPROVED FOR SOIL EROSION AND SEDIMENT CONTROL BY THE HOWARD SOIL CONSERVATION DISTRICT.

HOWARD S.C.D. — 9/30/02 DATE

THESE PLANS HAVE BEEN REVIEWED FOR THE HOWARD SOIL CONSERVATION DISTRICT AND MEET THE TECHNICAL REQUIREMENTS FOR SMALL POND CONSTRUCTION, SOIL EROSION AND SEDIMENT CONTROL.

U.S.D.A. NATURAL RESOURCES CONSERVATION SERVICE — 9/30/02 DATE

THESE PLANS FOR SMALL POND CONSTRUCTION, SOIL EROSION AND SEDIMENT CONTROL MEET THE REQUIREMENTS OF HOWARD SOIL CONSERVATION DISTRICT.

APPROVED: HOWARD SOIL CONSERVATION DISTRICT — 9/30/02 DATE

PLAN NUMBER _____

DEVELOPERS CERTIFICATE:

I/WE CERTIFY THAT ALL DEVELOPMENT AND/OR CONSTRUCTION WILL BE DONE ACCORDING TO THESE PLANS AND THAT ANY RESPONSIBLE PERSONNEL INVOLVED IN THE CONSTRUCTION PROJECT WILL HAVE A CERTIFICATE OF ATTENDANCE AT A DEPARTMENT OF ENVIRONMENT APPROVED TRAINING PROGRAM FOR THE CONTROL OF SEDIMENT AND EROSION BEFORE BEGINNING THE PROJECT. I SHALL ENGAGE A REGISTERED PROFESSIONAL ENGINEER TO SUPERVISE POND CONSTRUCTION AND PROVIDE THE HOWARD SOIL CONSERVATION DISTRICT WITH AN "AS-BUILT" PLAN OF THE POND WITHIN 30 DAYS OF COMPLETION. I ALSO AUTHORIZE PERIODIC ON-SITE INSPECTIONS BY THE HOWARD SOIL CONSERVATION DISTRICT.

SIGNATURE OF DEVELOPER — 9/26/02 DATE
PRINT NAME BELOW SIGNATURE
Robert A. Jenkins

ENGINEERS CERTIFICATE:

I/WE CERTIFY THAT THIS PLAN FOR POND CONSTRUCTION, EROSION AND SEDIMENT CONTROL REPRESENTS A PRACTICAL AND WORKABLE PLAN BASED ON MY PERSONAL KNOWLEDGE OF THE SITE CONDITIONS. THIS PLAN WAS PREPARED IN ACCORDANCE WITH THE REQUIREMENTS OF THE HOWARD SOIL CONSERVATION DISTRICT. I HAVE NOTIFIED THE DEVELOPER THAT HE/SHE MUST ENGAGE A REGISTERED PROFESSIONAL ENGINEER TO SUPERVISE POND CONSTRUCTION AND PROVIDE THE HOWARD SOIL CONSERVATION DISTRICT WITH AN "AS-BUILT" PLAN OF THE POND WITHIN 30 DAYS OF COMPLETION.

SIGNATURE OF ENGINEER — 10551 REG. NO. — 9/20/02 DATE
PRINT NAME BELOW SIGNATURE
John Kanouba

TRAP TABLE

		I	II
TRAP NUMBER		I	II
TRAP TYPE		II	II
EXISTING DRAINAGE AREA: ACRES		2.35	2.90
INTERIM DRAINAGE AREA: ACRES		2.35	2.90
PROPOSED DRAINAGE AREA: ACRES		2.35	2.35
STORAGE REQUIRED: CUBIC FEET	WET	4,225	5,227
	DRY	4,225	5,227
	TOTAL	8,450	10,454
STORAGE PROVIDED: CUBIC FEET	WET	11,552	16,128
	DRY	14,172	18,528
	TOTAL	25,724	34,656
EXISTING GROUND ELEVATION		242.0	262.0
TOP EMBANKMENT ELEVATION		246.0	266.0
WEIR CREST ELEVATION		245.0	265.0
WET STORAGE ELEVATION = STONE OUTLET BOTTOM		242.0	262.0
CLEANOUT ELEVATION		240.0	260.0
TRAP BOTTOM ELEVATION		238.0	258.0
DEPTH OF STONE OUTLET WEIR CHANNEL (a)		1.0	1.0
STONE OUTLET WEIR WIDTH (b)		12.0	12.0
BOTTOM DIMENSION		26 x 76	32 x 92
TRAP SIDESLOPES		2:1	2:1
TRAP DEPTH	WET	4.0	4.0
	DRY	3.0	3.0
	TOTAL	7.0	7.0
BARREL DIAMETER		N/A	N/A
RISER DIAMETER		N/A	N/A
WET STORAGE ZONE ELEVATION		238.0 - 242.0	258.0 - 262.0
*DRY STORAGE ZONE ELEVATION		242.0 - 245.0	262.0 - 265.0

* THE EXISTING 2-YEAR DISCHARGE WILL BE EQUAL TO THE PROPOSED 2-YEAR DISCHARGE IN BOTH TRAPS. THE UPSTREAM FACE OF THE RIPRAP OUTLET STRUCTURE WILL BE PROTECTED BY FILTER FABRIC.

BASIN TABLE

		VI
BASIN NUMBER		VI
EXISTING DRAINAGE AREA: ACRES		14.40
INTERIM DRAINAGE AREA: ACRES		21.97
PROPOSED DRAINAGE AREA: ACRES		21.97
STORAGE REQUIRED: CUBIC FEET	WET	39,550
	DRY	39,550
	TOTAL	79,090
STORAGE PROVIDED: CUBIC FEET	WET	40,116
	DRY	40,397
	TOTAL	80,513
EXISTING GROUND ELEVATION		251.0
TOP EMBANKMENT ELEVATION		282.0
EMERGENCY SPILLWAY CREST ELEVATION		N/A
RISER CREST ELEVATION		246.0
WET STORAGE ELEVATION		241.6
CLEANOUT ELEVATION		240.3
BOTTOM ELEVATION		237.0
Q_2 EXISTING (C.F.S.)		3.01
Q_2 INTO BASIN (C.F.S.)		70.03
Q_2 OUT BARREL (C.F.S.)		2.14
Q OUT EMERGENCY SPILLWAY		N/A
BASIN DEPTH	WET	4.6
	DRY	1.7
	TOTAL	6.3
DESIGN HIGHWATER		247.6
FREEBOARD PROVIDED		4.4
BARREL DIAMETER		36 in.
RISER DIAMETER		4' x 4'
EMERGENCY SPILLWAY WIDTH		N/A
WET STORAGE ZONE ELEVATION		237.0 - 241.6
DRY STORAGE ZONE ELEVATION		241.6 - 243.3
BOTTOM DIMENSIONS		SEE PLAN
S.E.C. CONTROL PLATE ORIFICE SIZE (in.)		4.0

Legend

- EXISTING CONTOUR
- 340 — PROPOSED CONTOUR
- 15" D. — PROPOSED STORMDRAIN
- EARTH/DIVERSION DIKE
- SF — SILT FENCE
- SSF — SUPER SILT FENCE
- CLEAN WATER DIVERSION PIPE
- LOD — LIMIT OF DISTURBANCE
- WETLAND
- WETLAND BUFFER
- STREAM BUFFER
- CIP — CURB INLET PROTECTION
- RPS — REMOVABLE PUMPING STATION
- GM — GABION MATTRESS INFLOW PROTECTION

Legend

- WETLAND
- HEAD OF STREAM
- STREAM BANK
- 25' WETLAND BUFFER
- WETLAND SYMBOL
- 50' STREAM BUFFER
- 100 YEAR FLOODPLAIN
- SLOPES >25%
- SLOPES 15%-25%
- PC / PT OF ARC
- CENTERLINE OF ROAD
- RADIUS OF ARC
- PROPOSED SWM EASEMENT
- B-10 — SOIL BORING

FOREST CONSERVATION EASEMENT II

FOREST CONSERVATION EASEMENT VI

FOREST CONSERVATION EASEMENT V

DRP OPEN SPACE PARCEL H

DRP OPEN SPACE PARCEL L

DRP OPEN SPACE PARCEL M (CONT'D.)

DRP OPEN SPACE PARCEL M

DRP OPEN SPACE PARCEL N

PARCEL F

PARCEL G

STEPHENS ROAD

TRAP I

TRAP II

BASIN VI

RETENTION

INFLOW PROTECTION (TYP.)

STONE OUTFALL, WEIR INV. 246.0, BOTTOM INV. 243.0 WEIR & BOTTOM BOTH 12' WIDE

STONE OUTFALL, WEIR INV. 265.0, BOTTOM INV. 262.0 WEIR & BOTTOM BOTH 12' WIDE

WHERE THERE ARE 2:1 SLOPES PROPOSED, PROVIDE ECM (SEE SHEET 30 OF 57) AND PERMANENT SEEDING (SHEET 31).

TEMPORARY STOCKPILE

VEHICULAR EGRESS AND INGRESS IS RESTRICTED ALONG THE LOOP ROAD PARCEL AND MD RTE. 216

GABION INFLOW PROTECTION

MAINTENANCE ACCESS

FOREBAY EMBANKMENT SEE NOTE 1, SHEET 28 OF 57

FOREBAY

SEDIMENT BAFFLES EXTENDING TO 88' SOUTH OF DRAWDOWN DEVICE IN 8' SECTIONS

ESC DRAWDOWN DEVICE

4'x4' CONC. RISER

9' WIDE BENCH/ SWALE

INFLOW PROTECTION TEMPORARILY GRADED FOR SEDIMENT AND EROSION CONTROL PHASE

20'x30' TURN-ABOUT

36" OUTFLOW BARREL

36" RCCP CONNECTS TO 36" STUB AT STATE RIGHT-OF-WAY LINE. THIS STUB, MANHOLE AND 48" EXTENSION ARE CONSTRUCTED UNDER SEPARATE CONTRACT BETWEEN WALLACE MONTGOMERY & ASSOC. AND THE STATE OF MARYLAND (RTE. 216 INTERCHANGE).

EXISTING 48" CMP HEADWALL TO BE REPLACED BY MANHOLE AND INCOMING 48" EXTENSION (BY OTHERS). THE EX. 48" SMP PASSES UNDER MD. ROUTE 216 AND HAS U.S. INVERT EL. 235.48

ROUTE 216

APPROVED: HOWARD COUNTY DEPT. OF PUBLIC WORKS

CHIEF, BUREAU OF HIGHWAYS — 10-10-02 DATE

APPROVED: HOWARD COUNTY DEPT. OF PLANNING AND ZONING

CHIEF, DIVISION OF LAND DEVELOPMENT — 10/22/02 DATE

CHIEF, DEVELOPMENT ENGINEERING DIVISION MK — 10/8/02 DATE

Date	No.	Revision Description

REVITZ PROPERTY

OWNER /DEVELOPER:

THE HOWARD RESEARCH & DEVELOPMENT CORPORATION
10275 LITTLE PATUXENT PARKWAY
COLUMBIA, MARYLAND 21044

DMW
Daft-McCune-Walker, Inc.
200 East Pennsylvania Avenue
Towson, Maryland 21286
(410) 296-3333
Fax 296-4705

A Team of Land Planners, Landscape Architects, Engineers, Surveyors & Environmental Professionals

9/23/02 Date

Professional Engr. No. 10551

SUBDIVISION NAME		SECTION/AREA	LOT/PARCEL #
			165 & P/O PAR. B37
PLAT # OR L/F	BLOCK #	ZONE	TAX/ZONE MAP	ELECT. DISTRICT	CENSUS TRACT
22674/36	20	PEC	47, GRID 20	6 th	
WATER CODE			SEWER CODE		

TITLE

FINAL PLAN SEDIMENT AND EROSION CONTROL BASIN VI PLAN

Des By	MRT	Scale	1" = 50'	Proj. No.	01011
Dm By	MRT	Date	9/9/02		
Chk By		Approved			27 OF 57

F-02-111

F-02-111

Thu Sep 19 [illegible] 9/19/02 4:08:28 PM

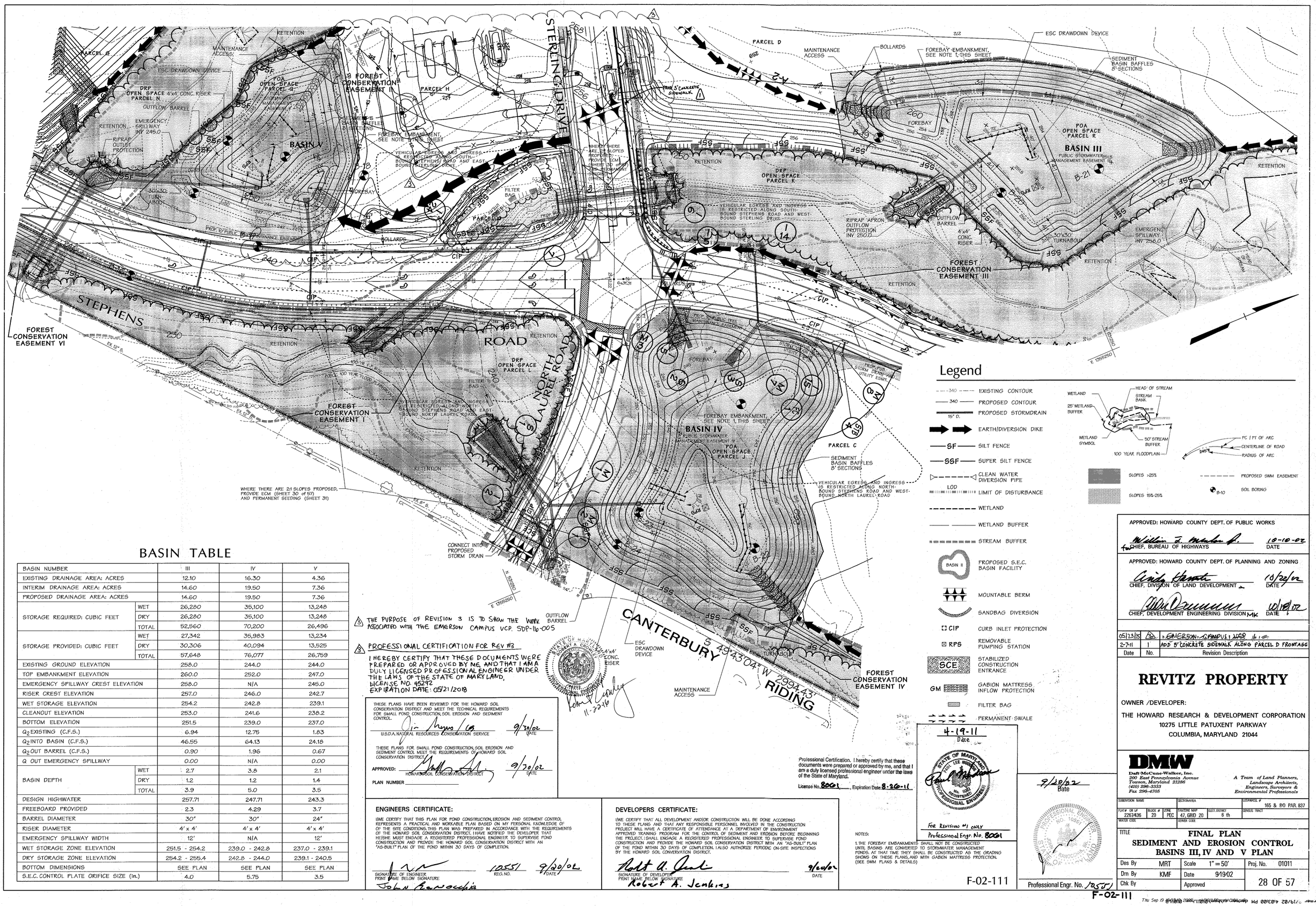

BASIN TABLE

BASIN NUMBER		III	IV	V
EXISTING DRAINAGE AREA: ACRES		12.10	16.30	4.36
INTERIM DRAINAGE AREA: ACRES		14.60	19.50	7.36
PROPOSED DRAINAGE AREA: ACRES		14.60	19.50	7.36
STORAGE REQUIRED: CUBIC FEET	WET	26,280	35,100	13,248
	DRY	26,280	35,100	13,248
	TOTAL	52,560	70,200	26,496
STORAGE PROVIDED: CUBIC FEET	WET	27,342	35,983	13,234
	DRY	30,306	40,094	13,525
	TOTAL	57,648	76,077	26,759
EXISTING GROUND ELEVATION		258.0	244.0	244.0
TOP EMBANKMENT ELEVATION		260.0	252.0	247.0
EMERGENCY SPILLWAY CREST ELEVATION		258.0	N/A	245.0
RISER CREST ELEVATION		257.0	246.0	242.7
WET STORAGE ELEVATION		254.2	242.8	239.1
CLEANOUT ELEVATION		253.0	241.6	238.2
BOTTOM ELEVATION		251.5	239.0	237.0
Q_2 EXISTING (C.F.S.)		6.94	12.75	1.83
Q_2 INTO BASIN (C.F.S.)		46.55	64.13	24.18
Q_2 OUT BARREL (C.F.S.)		0.90	1.96	0.67
Q OUT EMERGENCY SPILLWAY		0.00	N/A	0.00
BASIN DEPTH	WET	2.7	3.8	2.1
	DRY	1.2	1.2	1.4
	TOTAL	3.9	5.0	3.5
DESIGN HIGHWATER		257.71	247.71	243.3
FREEBOARD PROVIDED		2.3	4.29	3.7
BARREL DIAMETER		30"	30"	24"
RISER DIAMETER		4' x 4'	4' x 4'	4' x 4'
EMERGENCY SPILLWAY WIDTH		12'	N/A	12'
WET STORAGE ZONE ELEVATION		251.5 - 254.2	239.0 - 242.8	237.0 - 239.1
DRY STORAGE ZONE ELEVATION		254.2 - 255.4	242.8 - 244.0	239.1 - 240.5
BOTTOM DIMENSIONS		SEE PLAN	SEE PLAN	SEE PLAN
S.E.C. CONTROL PLATE ORIFICE SIZE (in.)		4.0	5.75	3.5

3 THE PURPOSE OF REVISION 3 IS TO SHOW THE WORK ASSOCIATED WITH THE EMERSON CAMPUS VCP. SDP-16-005

2 PROFESSIONAL CERTIFICATION FOR REV #3

I HEREBY CERTIFY THAT THESE DOCUMENTS WERE PREPARED OR APPROVED BY ME, AND THAT I AM A DULY LICENSED PROFESSIONAL ENGINEER UNDER THE LAWS OF THE STATE OF MARYLAND, LICENSE NO. 15292 EXPIRATION DATE: 05/21/2018

THESE PLANS HAVE BEEN REVIEWED FOR THE HOWARD SOIL CONSERVATION DISTRICT AND MEET THE TECHNICAL REQUIREMENTS FOR SMALL POND CONSTRUCTION, SOIL EROSION AND SEDIMENT CONTROL.

U.S.D.A. NATURAL RESOURCES CONSERVATION SERVICE — DATE 9/20/02

THESE PLANS FOR SMALL POND CONSTRUCTION, SOIL EROSION AND SEDIMENT CONTROL MEET THE REQUIREMENTS OF HOWARD SOIL CONSERVATION DISTRICT.

APPROVED: HOWARD SOIL CONSERVATION DISTRICT — DATE 9/20/02

PLAN NUMBER

ENGINEERS CERTIFICATE:

I/WE CERTIFY THAT THIS PLAN FOR POND CONSTRUCTION, EROSION AND SEDIMENT CONTROL REPRESENTS A PRACTICAL AND WORKABLE PLAN BASED ON MY PERSONAL KNOWLEDGE OF THE SITE CONDITIONS. THIS PLAN WAS PREPARED IN ACCORDANCE WITH THE REQUIREMENTS OF THE HOWARD SOIL CONSERVATION DISTRICT. I HAVE NOTIFIED THE DEVELOPER THAT HE/SHE MUST ENGAGE A REGISTERED PROFESSIONAL ENGINEER TO SUPERVISE POND CONSTRUCTION AND PROVIDE THE HOWARD SOIL CONSERVATION DISTRICT WITH AN "AS-BUILT" PLAN OF THE POND WITHIN 30 DAYS OF COMPLETION.

SIGNATURE OF ENGINEER — REG. NO. 12551 — DATE 9/20/02
PRINT NAME BELOW SIGNATURE
John Ranocchia

DEVELOPERS CERTIFICATE:

I/WE CERTIFY THAT ALL DEVELOPMENT AND/OR CONSTRUCTION WILL BE DONE ACCORDING TO THESE PLANS AND THAT ANY RESPONSIBLE PERSONNEL INVOLVED IN THE CONSTRUCTION PROJECT WILL HAVE A CERTIFICATE OF ATTENDANCE AT A DEPARTMENT OF ENVIRONMENT APPROVED TRAINING PROGRAM FOR THE CONTROL OF SEDIMENT AND EROSION BEFORE BEGINNING THE PROJECT. I SHALL ENGAGE A REGISTERED PROFESSIONAL ENGINEER TO SUPERVISE POND CONSTRUCTION AND PROVIDE THE HOWARD SOIL CONSERVATION DISTRICT WITH AN "AS-BUILT" PLAN OF THE POND WITHIN 30 DAYS OF COMPLETION. I ALSO AUTHORIZE PERIODIC ON-SITE INSPECTIONS BY THE HOWARD SOIL CONVERSATION DISTRICT.

SIGNATURE OF DEVELOPER — DATE 9/20/02
PRINT NAME BELOW SIGNATURE
Robert A. Jenkins

Legend

- EXISTING CONTOUR
- PROPOSED CONTOUR
- PROPOSED STORMDRAIN 15" D.
- EARTH/DIVERSION DIKE
- SF — SILT FENCE
- SSF — SUPER SILT FENCE
- CLEAN WATER DIVERSION PIPE
- LOD — LIMIT OF DISTURBANCE
- WETLAND
- WETLAND BUFFER
- STREAM BUFFER
- BASIN — PROPOSED S.E.C. BASIN FACILITY
- MOUNTABLE BERM
- SANDBAG DIVERSION
- CIP — CURB INLET PROTECTION
- RPS — REMOVABLE PUMPING STATION
- SCE — STABILIZED CONSTRUCTION ENTRANCE
- GM — GABION MATTRESS INFLOW PROTECTION
- FILTER BAG
- PERMANENT SWALE

WETLAND, WETLAND SYMBOL, 25' WETLAND BUFFER, HEAD OF STREAM, STREAM BANK, 50' STREAM BUFFER, 100 YEAR FLOODPLAIN

PC | PT OF ARC, CENTERLINE OF ROAD, RADIUS OF ARC

SLOPES >25%
SLOPES 15%-25%
PROPOSED SWM EASEMENT
B-10 SOIL BORING

Professional Certification. I hereby certify that these documents were prepared or approved by me, and that I am a duly licensed professional engineer under the laws of the State of Maryland.
License No. 8001, Expiration Date: 8-26-11

4-19-11 Date

STATE OF MARYLAND — PHILIP LEE HIGGINS — No. 8001 — REGISTERED PROFESSIONAL ENGINEER

FOR REVISION #1 ONLY
Professional Engr. No. 8001

NOTES:
1. THE FOREBAY EMBANKMENTS SHALL NOT BE CONSTRUCTED UNTIL BASINS ARE CONVERTED TO STORMWATER MANAGEMENT PONDS. AT THAT TIME THEY SHALL BE CONSTRUCTED AS THE GRADING SHOWS ON THESE PLANS, AND WITH GABION MATTRESS PROTECTION. (SEE SWM PLANS & DETAILS)

F-02-111

9/20/02 Date

STATE OF MARYLAND — JOHN RANOCCHIA — No. 12551 — PROFESSIONAL ENGINEER

Professional Engr. No. 12551

F-02-111

APPROVED: HOWARD COUNTY DEPT. OF PUBLIC WORKS

for CHIEF, BUREAU OF HIGHWAYS — DATE 10-10-02

APPROVED: HOWARD COUNTY DEPT. OF PLANNING AND ZONING

CHIEF, DIVISION OF LAND DEVELOPMENT — DATE 10/22/02

CHIEF, DEVELOPMENT ENGINEERING DIVISION MK — DATE 10/18/02

Date	No.	Revision Description
05/23/15	3	EMERSON CAMPUS 1 VCP
2-7-11	1	ADD 5' CONCRETE SIDEWALK ALONG PARCEL D FRONTAGE

REVITZ PROPERTY

OWNER /DEVELOPER:

THE HOWARD RESEARCH & DEVELOPMENT CORPORATION
10275 LITTLE PATUXENT PARKWAY
COLUMBIA, MARYLAND 21044

DMW
Daft-McCune-Walker, Inc.
200 East Pennsylvania Avenue
Towson, Maryland 21286
(410) 296-3333
Fax 296-4705

A Team of Land Planners, Landscape Architects, Engineers, Surveyors & Environmental Professionals

SUBDIVISION NAME		SECTION/AREA		LOT/PARCEL #
				165 & 190 PAR. B37
PLAT # OR L/F	BLOCK #	ZONE	TAX/ZONE MAP	ELECT. DISTRICT	CENSUS TRACT
22624/36	20	PEC	47, GRID 20	6 th	
WATER CODE		SEWER CODE		

TITLE
FINAL PLAN
SEDIMENT AND EROSION CONTROL BASINS III, IV AND V PLAN

Des By	MRT	Scale	1" = 50'	Proj. No.	01011
Drn By	KMF	Date	9/19/02		28 OF 57
Chk By		Approved			

Thu Sep 19 07:10:2002 4:03:00 PM

Working in Nontidal Wetlands & Buffers

"CONDITIONS AND MANAGEMENT PRACTICES FOR WORKING IN NONTIDAL WETLANDS AND BUFFERS"

A) REMOVE EXCAVATED MATERIAL, CONSTRUCTION MATERIAL OR DEBRIS TO AN UPLAND DISPOSAL AREA OUTSIDE OF ANY WATERWAY, FLOODPLAIN, NONTIDAL WETLAND, OR BUFFER;

B) IF BACKFILL IS OBTAINED, USE CLEAN MATERIAL FREE OF WASTE METAL PRODUCTS, UNSIGHTLY DEBRIS, TOXIC MATERIAL, OR ANY OTHER DELETERIOUS SUBSTANCE;

C) PLACE MATERIALS IN A LOCATION AND MANNER WHICH DOES NOT ADVERSELY IMPACT SURFACE OR SUBSURFACE WATER FLOW INTO OR OUT OF THE NONTIDAL WETLAND;

D) MAINTAIN THE HYDROLOGIC REGIME OF NONTIDAL WETLANDS OUTSIDE THE LIMITS OF DISTURBANCE.

E) RECTIFY ANY NONTIDAL WETLANDS AND BUFFERS TEMPORARILY IMPACTED BY THE PERMITTED ACTIVITY. ALL STABILIZATION IN THE WETLAND AND BUFFER SHALL BE OF THE FOLLOWING RECOMMENDED SPECIES: ANNUAL RYEGRASS (LOLIUM MULTIFLORUM), MILLET (SETARIA ITALICA), OATS (UNIOLA SP.), AND/OR RYE (SECALE CEREALE). OTHER NON-PERSISTENT VEGETATION MAY BE ACCEPTABLE, BUT MUST BE APPROVED BY THE NONTIDAL WETLANDS AND WATERWAYS DIVISION. KENTUCKY 31 FESCUE SHALL NOT BE UTILIZED IN THE WETLAND OR BUFFER. ALL TEMPORARY FILLS SHALL BE REMOVED IN THEIR ENTIRETY ON OR BEFORE THE COMPLETION OF CONSTRUCTION;

F) TO PROTECT IMPORTANT AQUATIC SPECIES, IN-STREAM WORK IS PROHIBITED AS DETERMINED BY THE CLASSIFICATION OF THE STREAM AS FOLLOWS:

USE I WATERS: IN-STREAM WORK MAY NOT BE CONDUCTED DURING THE PERIOD MARCH 1 - JUNE 15 INCLUSIVE, DURING ANY YEAR.

G) NO REMOVAL OF VEGETATION, GRADING, FILLING, DRAINING OR OTHER ALTERATION OF THE NONTIDAL WETLANDS OR BUFFER OUTSIDE THE LIMITS OF DISTURBANCE SHALL OCCUR WITHOUT WRITTEN AUTHORIZATION FROM THE WATER MANAGEMENT ADMINISTRATION.

Diversion Pipe

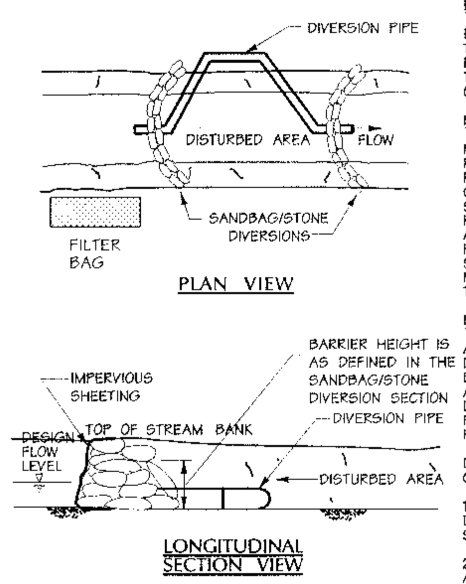

DESCRIPTION

THE WORK SHOULD CONSIST OF INSTALLING FLOW DIVERSION PIPES IN COMBINATION WITH SANDBAG OR STONE DIVERSIONS WHEN CONSTRUCTION ACTIVITIES OCCUR WITHIN THE STREAM CHANNEL.

EFFECTIVE USES & LIMITATIONS

DIVERSION PIPES WITH AN INSUFFICIENT FLOW CAPACITY CAN CAUSE THE CHANNEL DIVERSION TO FAIL THEREBY RESULTING IN SEVERE EROSION OF THE DISTURBED CHANNEL SECTION UNDER CONSTRUCTION. THEREFORE, IN-CHANNEL CONSTRUCTION ACTIVITIES SHOULD OCCUR ONLY DURING PERIODS OF LOW FLOW.

MATERIAL SPECIFICATIONS

MATERIALS FOR STREAM DIVERSIONS SHOULD MEET THE FOLLOWING REQUIREMENTS:
RIPRAP: STONE SHOULD BE WASHED AND HAVE A MINIMUM DIAMETER OF 6 INCHES (15 CENTIMETERS).
SANDBAGS: SANDBAGS SHOULD CONSIST OF MATERIALS WHICH ARE RESISTANT TO ULTRA-VIOLET RADIATION, TEARING, AND PUNCTURE AND SHOULD BE WOVEN TIGHTLY ENOUGH TO PREVENT LEAKAGE OF FILL MATERIAL (I.E., SAND, FINE GRAVEL, ETC.).
SHEETING: SHEETING SHOULD CONSIST OF POLYETHYLENE OR OTHER MATERIAL WHICH IS IMPERVIOUS AND RESISTANT TO PUNCTURE AND TEARING.

INSTALLATION GUIDELINES

ALL EROSION AND SEDIMENT CONTROL DEVICES INCLUDING MANDATORY DEWATERING BASINS SHOULD BE INSTALLED AS THE FIRST ORDER OF BUSINESS ACCORDING TO A PLAN APPROVED BY THE WMA OR LOCAL AUTHORITY. INSTALLATION SHOULD PROCEED FROM UPSTREAM TO DOWNSTREAM DURING LOW FLOW CONDITIONS. IF NECESSARY, SILT FENCE OR STRAW BALES SHOULD BE INSTALLED AROUND THE PERIMETER OF THE WORK AREA.

DIVERSION PIPES WITH SANDBAG OR STONE BARRIERS SHOULD BE COMPLETED AS FOLLOWS (REFER TO DETAIL 1.4):

1. SANDBAG/STONE BARRIERS SHOULD BE SIZED AND INSTALLED AS DETAILED IN MGWC 1.5: SANDBAG/STONE DIVERSION. THE MATERIALS SHOULD BE SIZED TO WITHSTAND BASEFLOW VELOCITIES.

2. ALL EXCAVATED MATERIAL SHOULD BE DEPOSITED AND STABILIZED IN AN APPROVED AREA OUTSIDE THE 100-YEAR FLOODPLAIN UNLESS OTHERWISE AUTHORIZED BY THE WMA.

3. SEDIMENT-LADEN WATER FROM THE CONSTRUCTION AREA SHOULD BE PUMPED TO A DEWATERING BASIN.

4. THE DIVERSION PIPE SHOULD HAVE A MINIMUM CAPACITY SUFFICIENT TO CONVEY THE 2-YEAR FLOW FOR PROJECTS WITH A DURATION OF TWO WEEKS OR GREATER. FOR PROJECTS OF SHORTER DURATION, THE CAPACITY OF THE PIPE CAN BE REDUCED ACCORDINGLY.

5. IF NECESSARY, SILT FENCE OR STRAW BALES SHOULD BE INSTALLED AROUND THE PERIMETER OF THE WORK AREA.

6. SEDIMENT CONTROL DEVICES ARE TO REMAIN IN PLACE UNTIL ALL DISTURBED AREAS ARE STABILIZED AND THE INSPECTING AUTHORITY APPROVES THEIR REMOVAL.

WATER MANAGEMENT ADMINISTRATION DETAIL MGWC 1.4

Filter Bag

Not To Scale

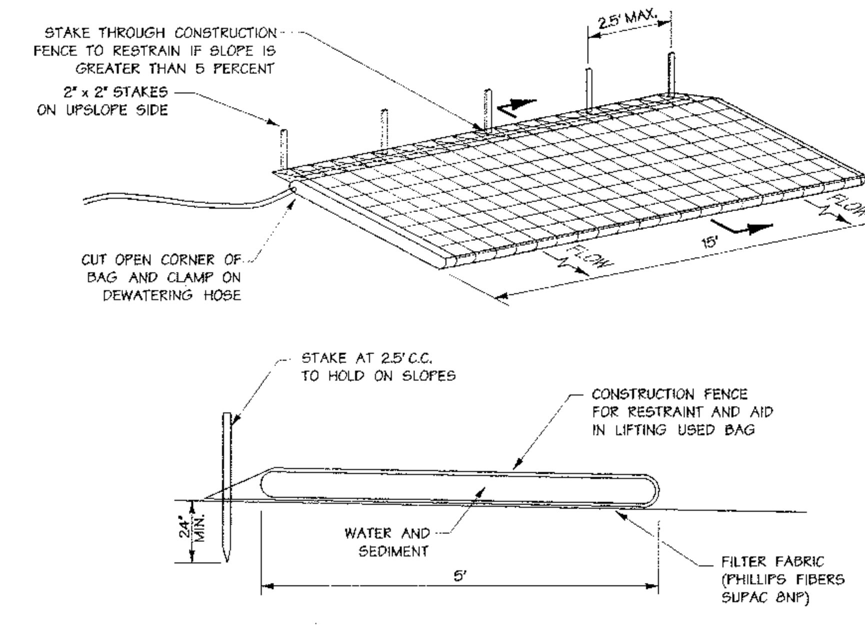

1. FILTER BAG SHALL BE PLACED ON A SLOPING OR LEVEL, WELL GRADED VEGETATED SITE SUCH THAT WATER WILL FLOW AWAY FROM DEVICE AND ANY WORK AREAS.
2. WIDTH AND LENGTH SHALL BE AS SHOWN IN THE TABLE.
3. THE FILTER BAG MUST BE STAKED IN PLACE AND SECURED TO THE PUMP DISCHARGE LINE.
4. FILTER BAG SHALL NOT BE USED FOR DISCHARGE FLOWS GREATER THAN 300 GPM.
5. DEVICE SHALL BE REMOVED AND DISPOSED OF AFTER BAG IS FILLED WITH SEDIMENT. SEDIMENT FROM BAG SHALL BE SPREAD IN AN UPLAND AREA.

STANDARD SYMBOL

Sedctrl.cel/ALFLBD

Basin Drawdown Schematic Ver. Drawdown Device

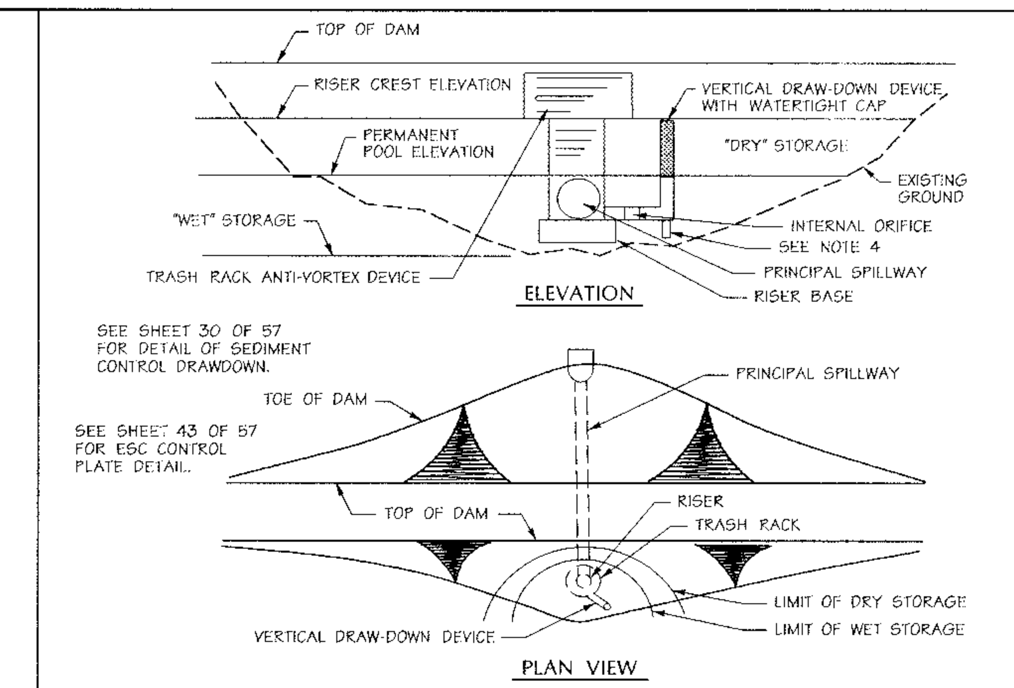

CONSTRUCTION SPECIFICATIONS

1. PERFORATIONS IN THE DRAW-DOWN DEVICE MAY NOT EXTEND INTO THE WET STORAGE.
2. THE TOTAL AREA OF THE PERFORATIONS MUST BE GREATER THAN 4 TIMES THE AREA OF THE INTERNAL ORIFICE.
3. THE PERFORATED PORTION OF THE DRAW-DOWN DEVICE SHALL BE WRAPPED WITH ½" HARDWARE CLOTH AND GEOTEXTILE FABRIC. THE GEOTEXTILE FABRIC SHALL MEET THE SPECIFICATIONS FOR GEOTEXTILE CLASS E.
4. PROVIDE SUPPORT OF DRAW-DOWN DEVICE TO PREVENT SAGGING AND FLOTATION. AN ACCEPTABLE PREVENTATIVE MEASURE IS TO STAKE BOTH SIDES OF THE DRAW-DOWN DEVICE WITH 1" STEEL ANGLE, OR 2" BY 2" SQUARE OR 2" ROUND WOODEN POSTS SET 3' MINIMUM INTO THE GROUND THEN JOINING THEM TO THE DEVICE BY WRAPPING WITH 12 GAUGE MINIMUM WIRE.

U.S. DEPARTMENT OF AGRICULTURE SOIL CONSERVATION SERVICE C - 10 - 30 *MARYLAND DEPARTMENT OF ENVIRONMENT WATER MANAGEMENT ADMINISTRATION*

Dust Control Specifications

DUST CONTROL SPECIFICATIONS

TEMPORARY METHODS:
1. MULCHES - SEE STANDARDS FOR VEGETATIVE STABILIZATION WITH MULCHES ONLY. MULCH SHOULD BE CRIMPED OR TACKED TO PREVENT BLOWING.
2. VEGETATIVE COVER - SEE STANDARDS FOR TEMPORARY VEGETATIVE COVER.
3. TILLAGE - TO ROUGHEN SURFACE AND BRING CLODS TO THE SURFACE. THIS IS AN EMERGENCY MEASURE WHICH SHOULD BE USED BEFORE SOIL BLOWING STARTS. BEGIN PLOWING ON WINDWARD SIDE OF SITE. CHISEL-TYPE PLOWS SPACED ABOUT 12 INCHES APART, SPRING-TOOTHED HARROWS, AND SIMILAR PLOWS ARE EXAMPLES OF EQUIPMENT WHICH MAY PRODUCE THE DESIRED EFFECT.
4. IRRIGATION - THIS IS GENERALLY DONE AS AN AN EMERGENCY TREATMENT. SITE IS SPRINKLED WITH WATER UNTIL THE SURFACE IS MOIST. REPEAT AS NEEDED. AT NO TIME SHOULD THE SITE BE IRRIGATED TO THE POINT THE RUNOFF BEGINS TO FLOW.
5. BARRIERS - SOLID BOARD FENCES, SNOW FENCES, BURLAP FENCES, STRAW BALES, AND SIMILAR MATERIAL CAN BE USED TO CONTROL AIR CURRENTS AND SOIL BLOWING. BARRIERS PLACED AT RIGHT ANGLES TO PREVAILING CURRENTS AT INTERVALS OF ABOUT 10 TIMES THEIR HEIGHT ARE AFFECTIVE IN CONTROLLING SOIL BLOWING.
6. CALCIUM CHLORIDE - APPLY AT A RATE THAT WILL KEEP SURFACE MOIST. MAY NEED RETREATMENT.

PERMANENT METHODS:
1. PERMANENT VEGETATION - SEE STANDARDS FOR PERMANENT VEGETATIVE COVER, AND PERMANENT STABILIZATION WITH SOD. EXISTING TREES OR LARGE SHRUBS MAY AFFORD VALUABLE PROTECTION IF LEFT IN PLACE.
2. TOPSOILING - COVERING WITH LESS EROSIVE SOIL MATERIALS. SEE STANDARDS FOR TOPSOILING.
3. STONE - COVER SURFACE WITH CRUSHED STONE OR COARSE GRAVEL.

U.S. DEPARTMENT OF AGRICULTURE SOIL CONSERVATION SERVICE H - 30 - 1 *MARYLAND DEPARTMENT OF ENVIRONMENT WATER MANAGEMENT ADMINISTRATION*

Earth Dike /Swale

Not to Scale

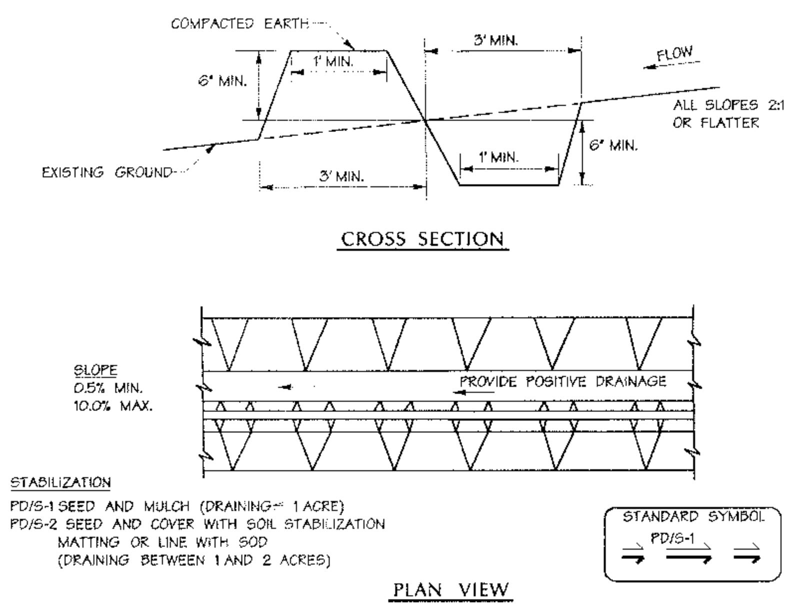

STABILIZATION

PD/S-1 SEED AND MULCH (DRAINING < 1 ACRE)
PD/S-2 SEED AND COVER WITH SOIL STABILIZATION MATTING OR LINE WITH SOD (DRAINING BETWEEN 1 AND 2 ACRES)

STANDARD SYMBOL PD/S-1

PLAN VIEW

CONSTRUCTION SPECIFICATIONS

1. ALL PERIMETER DIKE/SWALES SHALL HAVE AN UNINTERRUPTED POSITIVE GRADE TO AN OUTLET. SPOT ELEVATIONS MAY BE NECESSARY FOR GRADES LESS THAN 1%.
2. RUNOFF DIVERTED FROM A DISTURBED AREA SHALL BE CONVEYED TO A SEDIMENT TRAPPING DEVICE.
3. RUNOFF DIVERTED FROM AN UNDISTURBED AREA SHALL OUTLET INTO AN UNDISTURBED STABILIZED AREA AT A NON-EROSIVE VELOCITY.
4. THE SWALE SHALL BE EXCAVATED OR SHAPED TO LINE, GRADE, AND CROSS-SECTION AS REQUIRED TO MEET THE CRITERIA SPECIFIED IN THE STANDARD.
5. FILL SHALL BE COMPACTED BY EARTH MOVING EQUIPMENT.
6. STABILIZATION WITH SEED AND MULCH OR AS SPECIFIED OF THE AREA DISTURBED BY THE DIKE AND SWALE SHALL BE COMPLETED WITHIN 7 DAYS UPON REMOVAL.
7. INSPECTION AND REQUIRED MAINTENANCE SHALL BE PROVIDED AFTER EACH RAIN EVENT.

NOTE: THE MAXIMUM DRAINAGE AREA FOR THIS PRACTICE IS 2 ACRES.

U.S. DEPARTMENT OF AGRICULTURE SOIL CONSERVATION SERVICE A - 5 - 5 *MARYLAND DEPARTMENT OF ENVIRONMENT WATER MANAGEMENT ADMINISTRATION*

Sediment Basin Baffles

Not to Scale

PLAN VIEWS

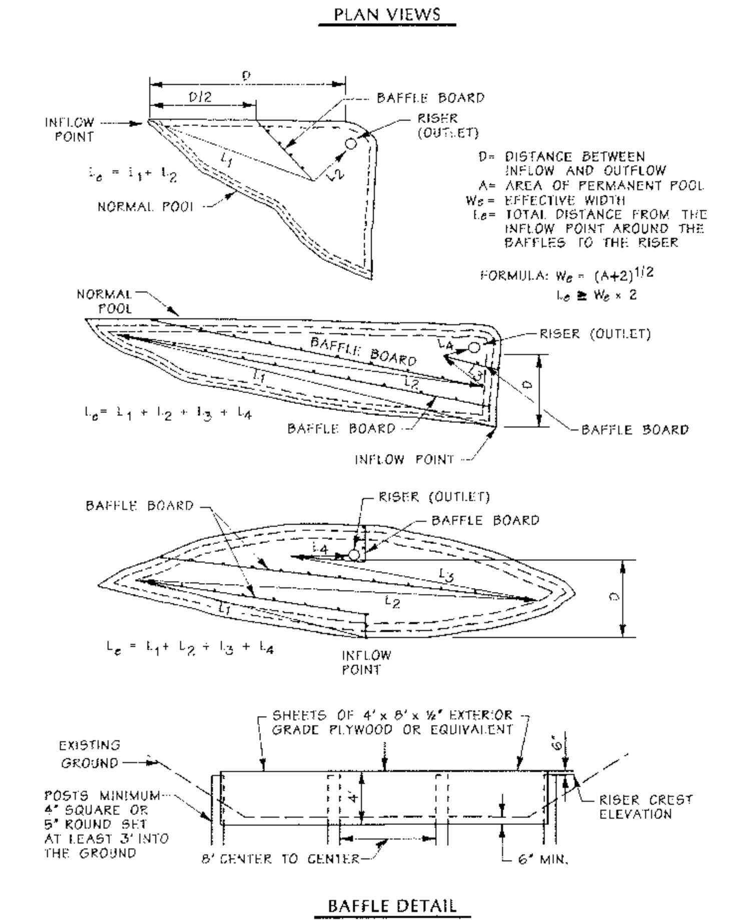

U.S. DEPARTMENT OF AGRICULTURE SOIL CONSERVATION SERVICE C - 10 - 28 *MARYLAND DEPARTMENT OF ENVIRONMENT WATER MANAGEMENT ADMINISTRATION*

Rip-Rap Inflow Protection

Not to Scale

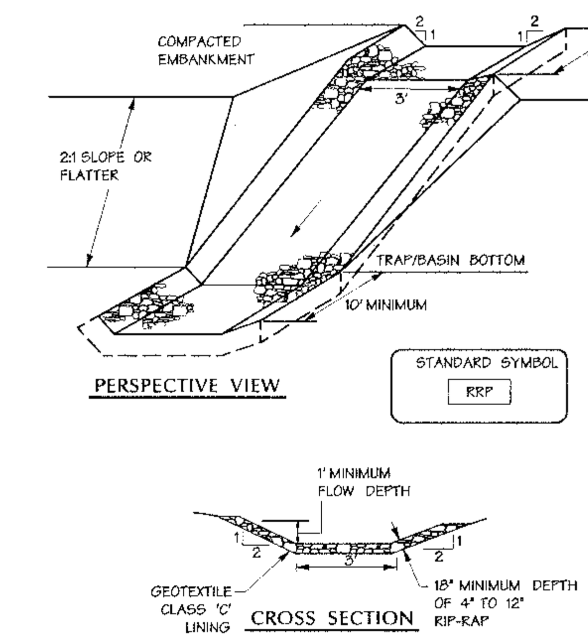

CONSTRUCTION SPECIFICATIONS

1. RIP-RAP LINED INFLOW CHANNELS SHALL BE 1' IN DEPTH, HAVE A TRAPEZOIDAL CROSS SECTION WITH 2:1 OR FLATTER SIDE SLOPES AND 3' (MIN.) BOTTOM WIDTH. THE CHANNEL SHALL BE LINED WITH 4" TO 12" RIP-RAP TO A DEPTH OF 18".
2. FILTER CLOTH SHALL BE INSTALLED UNDER ALL RIP-RAP. FILTER CLOTH SHALL BE GEOTEXTILE CLASS C.
3. ENTRANCE AND EXIT SECTIONS SHALL BE INSTALLED AS SHOWN ON THE DETAIL SECTION.
4. RIP-RAP USED FOR THE LINING MAY BE RECYCLED FOR PERMANENT OUTLET PROTECTION IF THE BASIN IS TO BE CONVERTED TO A STORMWATER MANAGEMENT FACILITY.
5. GABION INFLOW PROTECTION MAY BE USED IN LIEU OF RIP-RAP INFLOW PROTECTION.
6. RIP-RAP SHOULD BLEND INTO EXISTING GROUND.
7. RIP-RAP INFLOW PROTECTION SHALL BE USED WHERE THE SLOPE IS BETWEEN 4:1 AND 10:1. FOR SLOPES FLATTER THAN 10:1 USE EARTH DIKE OR TEMPORARY SWALE LINING CRITERIA.

U.S. DEPARTMENT OF AGRICULTURE SOIL CONSERVATION SERVICE B - 6 - 2 *MARYLAND DEPARTMENT OF ENVIRONMENT WATER MANAGEMENT ADMINISTRATION*

Removable Pumping Station

Not To Scale

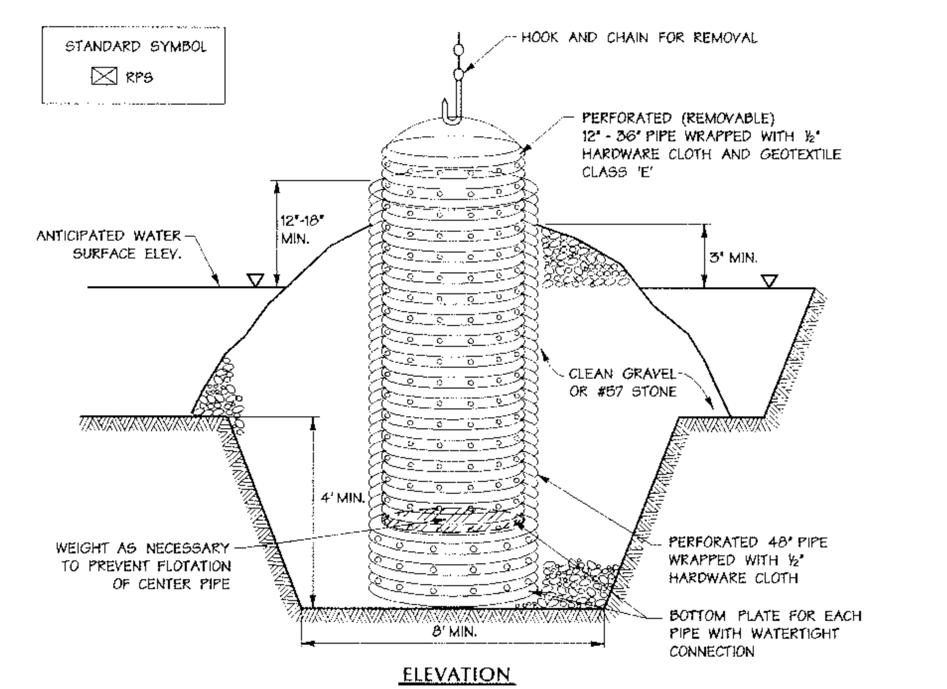

CONSTRUCTION SPECIFICATIONS

1. THE OUTER PIPE SHOULD BE 48" DIAMETER OR SHALL, IN ANY CASE, BE AT LEAST 4" GREATER IN DIAMETER THAN THE CENTER PIPE. THE OUTER PIPE SHALL BE WRAPPED WITH ½" HARDWARE CLOTH TO PREVENT BACKFILL MATERIAL FROM ENTERING THE PERFORATIONS.
2. AFTER INSTALLING THE OUTER PIPE, BACKFILL AROUND OUTER PIPE WITH 2" AGGREGATE OR CLEAN GRAVEL.
3. THE INSIDE STAND PIPE (CENTER PIPE) SHOULD BE CONSTRUCTED BY PERFORATING A CORRUGATED OR PVC PIPE BETWEEN 12" AND 36" IN DIAMETER. THE PERFORATIONS SHALL BE ½" x 6" SLITS OR 1" DIAMETER HOLES 6" ON CENTER. THE CENTER PIPE SHALL BE WRAPPED WITH ½" HARDWARE CLOTH FIRST, THEN WRAPPED AGAIN WITH GEOTEXTILE CLASS E.
4. THE CENTER PIPE SHOULD EXTEND 12" TO 18" ABOVE THE ANTICIPATED WATER SURFACE ELEVATION OR RISER CREST ELEVATION WHEN DEWATERING A BASIN.

U.S. DEPARTMENT OF AGRICULTURE SOIL CONSERVATION SERVICE D - 12 - 5 *MARYLAND DEPARTMENT OF ENVIRONMENT WATER MANAGEMENT ADMINISTRATION*

Temporary Swale

Not To Scale

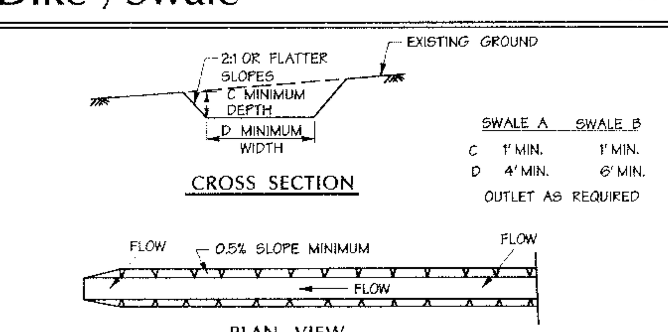

	SWALE A	SWALE B
C	1' MIN.	1' MIN.
D	4' MIN.	6' MIN.

OUTLET AS REQUIRED

DRAINAGE AREA = 10 ac (MAX)
SLOPE = 10% (MAX)

STANDARD SYMBOL A - 2 / B - 3

FLOW CHANNEL STABILIZATION
GRADE 0.5% MIN. 10% MAX.

1. SEED AND COVER WITH STRAW MULCH.
2. SEED AND COVER WITH EROSION CONTROL MATTING OR LINE WITH SOD.
3. 4"-7" STONE OR RECYCLED CONCRETE EQUIVALENT PRESSED INTO SOIL IN A MINIMUM 7" LAYER.

CONSTRUCTION SPECIFICATIONS

1. ALL TEMPORARY SWALES SHALL HAVE UNINTERRUPTED POSITIVE GRADE TO AN OUTLET. SPOT ELEVATIONS MAY BE NECESSARY FOR GRADES LESS THAN 1%
2. RUNOFF DIVERTED FROM A DISTURBED AREA SHALL BE CONVEYED TO A SEDIMENT TRAPPING DEVICE.
3. RUNOFF DIVERTED FROM AN UNDISTURBED AREA SHALL OUTLET DIRECTLY INTO AN UNDISTURBED STABILIZED AREA AT A NON-EROSIVE VELOCITY.
4. ALL TREES, BRUSH, STUMPS, OBSTRUCTIONS, AND OTHER OBJECTIONAL MATERIAL SHALL BE REMOVED AND DISPOSED OF SO AS NOT TO INTERFERE WITH THE PROPER FUNCTIONING OF THE SWALE.
5. THE SWALE SHALL BE EXCAVATED OR SHAPED TO LINE, GRADE AND CROSS SECTION AS REQUIRED TO MEET THE CRITERIA SPECIFIED HEREIN AND BE FREE OF BANK PROJECTIONS OR OTHER IRREGULARITIES WHICH WILL IMPEDE NORMAL FLOW.
6. FILL, IF NECESSARY, SHALL BE COMPACTED BY EARTH MOVING EQUIPMENT.
7. ALL EARTH REMOVED AND NOT NEEDED FOR CONSTRUCTION SHALL BE PLACED SO THAT IT WILL NOT INTERFERE WITH THE FUNCTIONING OF THE SWALE.
8. INSPECTION AND MAINTENANCE MUST BE PROVIDED PERIODICALLY AND AFTER EACH RAIN EVENT.

U.S. DEPARTMENT OF AGRICULTURE SOIL CONSERVATION SERVICE A - 2 - 4 *MARYLAND DEPARTMENT OF ENVIRONMENT WATER MANAGEMENT ADMINISTRATION*

MDE PERMIT AND TRACKING No. 01-NT-0500/200260639

DEVELOPER'S CERTIFICATION:

"I/WE CERTIFY THAT ALL DEVELOPMENT AND CONSTRUCTION WILL BE DONE ACCORDING TO THIS PLAN, AND THAT ANY RESPONSIBLE PERSONNEL INVOLVED IN THE CONSTRUCTION PROJECT WILL HAVE A CERTIFICATE OF ATTENDANCE AT A DEPARTMENT OF THE ENVIRONMENT APPROVED TRAINING PROGRAM FOR THE CONTROL OF SEDIMENT AND EROSION BEFORE BEGINNING THE PROJECT. I ALSO AUTHORIZE PERIODIC ON-SITE INSPECTION BY THE HOWARD SOIL CONSERVATION DISTRICT.

[signature] 9/20/02
SIGNATURE OF DEVELOPER — DATE
PRINT NAME BELOW SIGNATURE
Robert A. Jenkins

ENGINEER'S CERTIFICATION:

"I CERTIFY THAT THIS PLAN FOR EROSION AND SEDIMENT CONTROL REPRESENTS A PRACTICAL AND WORKABLE PLAN BASED ON MY PERSONAL KNOWLEDGE OF THE SITE CONDITIONS AND THAT IT WAS PREPARED IN ACCORDANCE WITH THE REQUIREMENTS OF THE HOWARD SOIL CONSERVATION DISTRICT."

[signature] 9/20/02
SIGNATURE OF ENGINEER
PRINT NAME BELOW SIGNATURE
John Benocchia

REVIEWED FOR HOWARD S.C.D. AND MEETS TECHNICAL REQUIREMENTS

[signature] 9/30/02
U.S. NATURAL RESOURCE CONSERVATION SERVICE — DATE

THIS DEVELOPMENT PLAN IS APPROVED FOR SOIL EROSION AND SEDIMENT CONTROL BY THE HOWARD SOIL CONSERVATION DISTRICT.

[signature] 9/30/02
HOWARD S.C.D. — DATE

F-02-111

9/20/02
Date

Professional Engr. No. 18551

F-02-111

APPROVED: HOWARD COUNTY DEPT. OF PUBLIC WORKS

[signature] 10-10-02
CHIEF, BUREAU OF HIGHWAYS — DATE

APPROVED: HOWARD COUNTY DEPT. OF PLANNING AND ZONING

[signature] 10/22/02
CHIEF, DIVISION OF LAND DEVELOPMENT — DATE

[signature] 10/18/02
CHIEF, DEVELOPMENT ENGINEERING DIVISION MK — DATE

Date	No.	Revision Description

REVITZ PROPERTY

OWNER /DEVELOPER:

THE HOWARD RESEARCH & DEVELOPMENT CORPORATION
10275 LITTLE PATUXENT PARKWAY
COLUMBIA, MARYLAND 21044

DMW
Daft·McCune·Walker, Inc.
200 East Pennsylvania Avenue
Towson, Maryland 21286
(410) 296-3333
Fax 296-4705
A Team of Land Planners, Landscape Architects, Engineers, Surveyors & Environmental Professionals

SUBDIVISION NAME			SECTION AREA		LOT/PARCEL # 165 & P/O PAR. 837
PLAT# OR L/F 2267/436	BLOCK # 20	ZONE PEC	TAX/ZONE MAP 47	ELECT. DISTRICT 6 th	CENSUS TRACT
WATER CODE			SEWER CODE		

TITLE
FINAL PLAN
SEDIMENT AND EROSION CONTROL DETAILS

Des By	DFM	Scale 1" = 50'	Proj. No. 01011
Drn By	WDE	Date 9/19/02	29 OF 57
Chk By		Approved	

Thu Sep 19 16:05:39 2002 ... 9/19/02 4:05:36 PM

RISER #	LENGTH	WET POOL ELEV.	PERF. RISER HEIGHT	ORIFICE DRILLED HOLE SIZE	PERFORATION SPACING	PERFORATIONS PER VERT. FT.
R-3	13'	254.2	1.2'	4"	2"	70
R-4	30'	242.8	2.4'	5.75"	2"	140
R-5	45'	239.1	1.4'	3.5"	2 ½"	50
R-6	58'	241.6	1.7'	4"	2 ½"	64

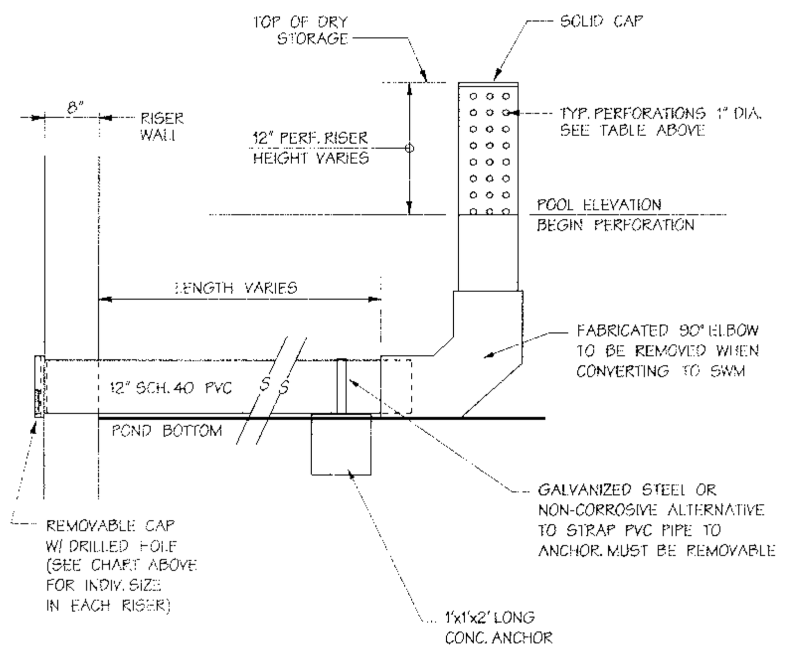

SEE SHEET 29 OF 57 FOR BASIN DRAWDOWN DEVICE SPECIFICATIONS

SEE SHEET 43 OF 57 FOR ESC CONTROL PLATE DETAIL

Sediment Control Draw–Down

Not To Scale

Table 28 Stone Size

	SIZE RANGE	D_{50}	D_{100}	AASHTO	WEIGHT
NUMBER 57*	⅜" - 1½"	½"	1½"	M-43	N/A
NUMBER 1	2" - 3"	2½"	3"	M-43	N/A
RIP-RAP**	4" - 7"	5½"	7"	N/A	N/A
CLASS I	N/A	9.5"	15"	N/A	150lb max.
CLASS II	N/A	16"	24"	N/A	700lb max.
CLASS III	N/A	23"	34"	N/A	2000lb max.

* This classification is to be used on the inside face of stone outlets and check dams.

** This classification is to be used when ever small rip-rap is required. The State Highway Administration designation for this stome is Stone For Gabions (905.01.04)

Stone For Gabion Baskets

BASKET THICKNESS		SIZE OF INDIVIDUAL STONES	
INCHES	MM	INCHES	MM
6	150	3 - 5	75 - 125
9	225	4 - 7	100 - 175
12	300	4 - 7	100 - 175
18	460	4 - 7	100 - 175
36	910	4 - 12	100 - 300

NOTE: Recycled concrete equivalent may be substituted for all stone classifications. Recycled concrete equivalent shall be concrete broken into the sizes meeting the appropriate classification, shall contain no steel reinforcement, and shall have a density of 150 pounds per cubic foot.

Table 27 Geotextile Fabrics

CLASS	APPARENT OPENING SIZE MM. MAX.	GRAB TENSILE STRENGTH LB. MIN.	BURST STRENGTH PSI. MIN.
A	0.30 **	250	500
B	0.60	200	320
C	0.30	200	320
D	0.60	90	145
E	0.30	90	145
F (SILT FENCE)	0.40-0.80*	90	190

* US Std. Sieve CW-02215   ** .50 mm max. for Super Silt Fence

H - 24 - 1

The properties shall be determined in accordance with the following procedures:
- Apparent opening size MSMT 323
- Grab tensile strength ASTMD 1682: 4x8" specimen, 1x2" clamps, 12"/min. strain rate in both principal directions of geotextile fabric.
- Burst strength ASTMD D 3786

The fabric shall be inert to commonly encountered chemicals and hydrocarbons, and will be rot and mildew resistant. It shall be manufactured from fibers consisting of long chain synthetic polymers, and composed of a minimum of 85% by weight of polyolephins, polyesters, or polyamides. The geotextile fabric shall resist deterioration from ultraviolet exposure.

In addition, Classes A through E shall have a 0.01 cm./sec. minimum permeability when tested in accordance with MSMT 507, and an apparent minimum elongation of 20 percent (20%) when tested in accordance with the grab tensile strength requirements listed above.

Silt Fence
Class F geotextile fabrics for silt fence shall have a 50 lb./in. minimum tensile strength and a 20 lb./in. minimum tensile modules when tested in accordance with MSMT 509. The material shall also have a 0.3 gal./ft. /min. flow rate and seventy-five percent (75%) minimum filtering efficiency when tested in accordance with MSMT 322. Geotextile fabrics used in the construction of silt fence shall resist deterioration from ultraviolet exposure. The fabric shall contain sufficient amounts of ultraviolet ray inhibitors and stabilizers to provide a minimum of 12 months of expected usable construction life at a temperature range of 0 to 120 degrees F.

Geotextile Material Specifications

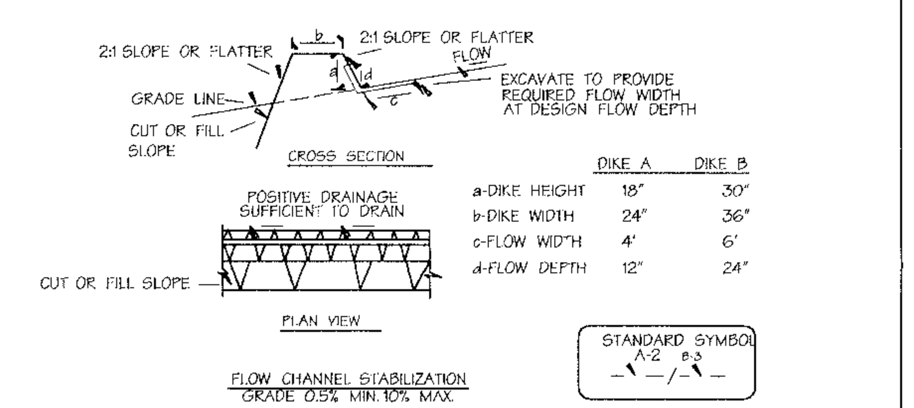

	DIKE A	DIKE B
a-DIKE HEIGHT	18"	30"
b-DIKE WIDTH	24"	36"
c-FLOW WIDTH	4'	6'
d-FLOW DEPTH	12"	24"

1. Seed and cover with straw mulch.
2. Seed and cover with Erosion Control Matting or line with sod.
3. 4" - 7" stone or recycled concrete equivalent pressed into the soil 7" minimum

Construction Specifications

1. All temporary earth dikes shall have uninterrupted positive grade to an outlet. Spot elevations may be necessary for grades less than 1%.
2. Runoff diverted from a disturbed area shall be conveyed to a sediment trapping device.
3. Runoff diverted from an undisturbed area shall outlet directly into an undisturbed, stabilized area at a non-erosive velocity.
4. All trees, brush, stumps, obstructions, and other objectional material shall be removed and disposed of so as not to interfere with the proper functioning of the dike.
5. The dike shall be excavated or shaped to line, grade and cross section as required to meet the criteria specified herein and be free of bank projections or other irregularities which will impede normal flow.
6. Fill shall be compacted by earth moving equipment.
7. All earth removed and not needed for construction shall be placed so that it will not interfere with the functioning of the dike.
8. Inspection and maintenance must be provided periodically and after each rain event.

U.S. DEPARTMENT OF AGRICULTURE
SOIL CONSERVATION SERVICE

A - 1 - 6

MARYLAND DEPARTMENT OF ENVIRONMENT
WATER MANAGEMENT ADMINISTRATION

Earth Dike

Not To Scale

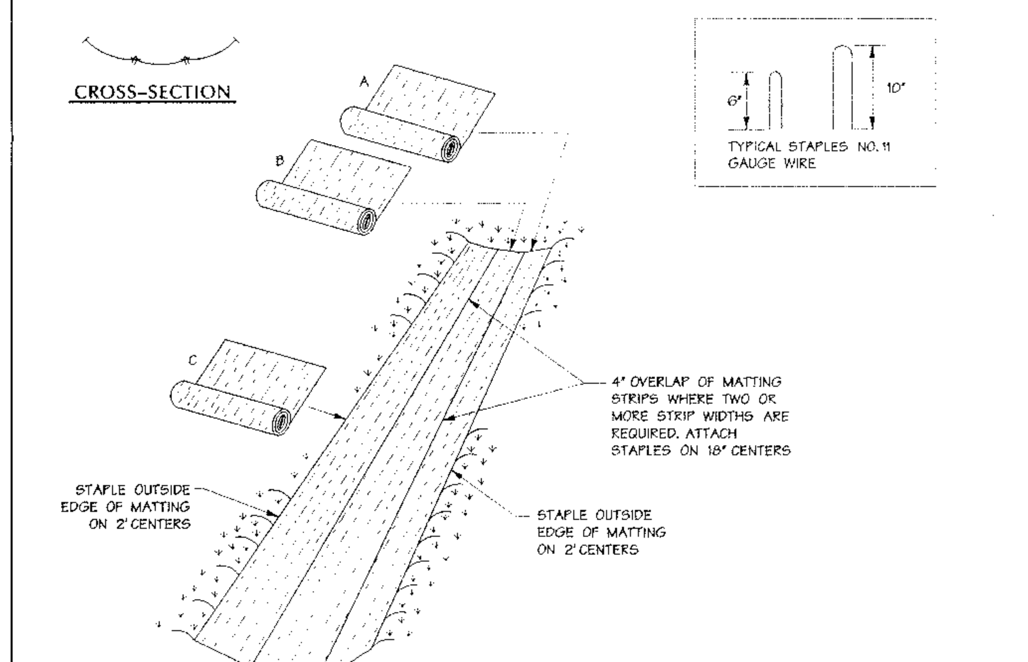

CONSTRUCTION SPECIFICATIONS

1. KEY-IN THE MATTING BY PLACING THE TOP ENDS OF THE MATTING IN A NARROW TRENCH, 6" IN DEPTH. BACKFILL THE TRENCH AND TAMP FIRMLY TO CONFORM TO THE CHANNEL CROSS-SECTION. SECURE WITH A ROW OF STAPLES ABOUT 4" DOWN SLOPE FROM THE TRENCH. SPACING BETWEEN STAPLES IN 6".
2. STAPLE THE 4" OVERLAP IN THE CHANNEL CENTER USING AN 18" SPACING BETWEEN STAPLES.
3. BEFORE STAPLING THE OUTER EDGES OF THE MATTING, MAKE SURE THE MATTING IS SMOOTH AND IN FIRM CONTACT WITH THE SOIL.
4. STAPLES SHALL BE PLACED 2' APART WITH 4 ROWS FOR EACH STRIP, 2 OUTER ROWS, AND 2 ALTERNATING ROWS DOWN THE CENTER.
5. WHERE ONE ROLL OF MATTING ENDS AND ANOTHER BEGINS, THE END OF THE TOP STRIP SHALL OVERLAP THE UPPER END OF THE LOWER STRIP BY 4", SHIPLAP FASHION. REINFORCE THE OVERLAP WITH A DOUBLE ROW OF STAPLES SPACED 6" APART IN A STAGGERED PATTERN ON EITHER SIDE.
6. THE DISCHARGE END OF THE MATTING LINER SHOULD BE SIMILARLY SECURED WITH 2 DOUBLE ROWS OF STAPLES.

NOTE: IF FLOW WILL ENTER FROM THE EDGE OF THE MATTING THEN THE AREA EFFECTED BY THE FLOW MUST BE KEYED-IN.

U.S. DEPARTMENT OF AGRICULTURE
SOIL CONSERVATION SERVICE

G - 22 - 2

MARYLAND DEPARTMENT OF ENVIRONMENT
WATER MANAGEMENT ADMINISTRATION

Erosion Control Matting

Not To Scale

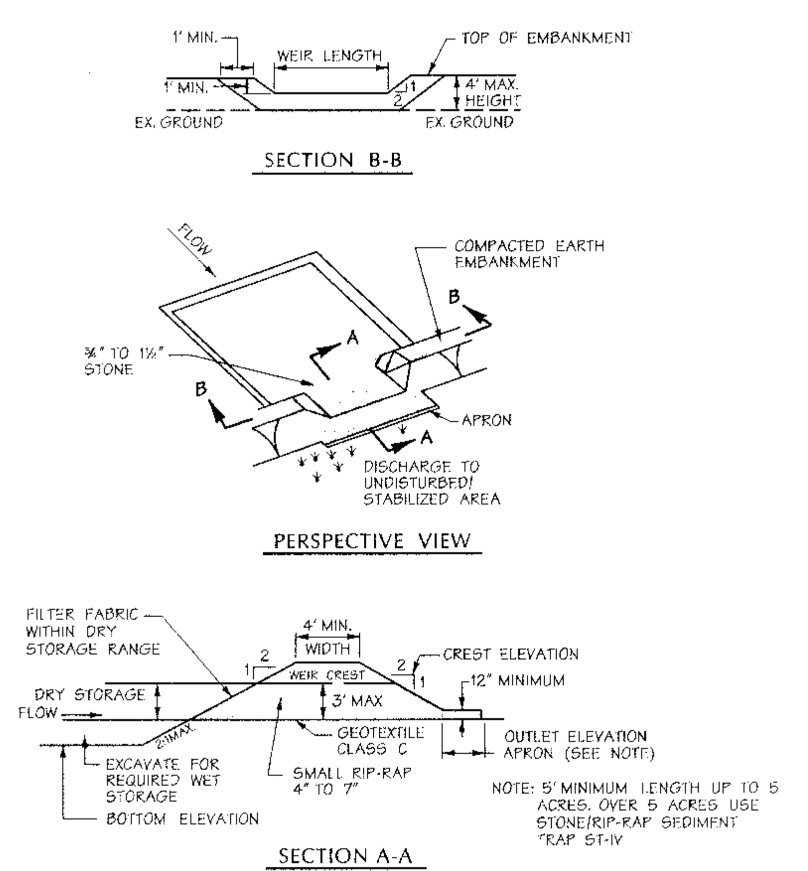

NOTE: 5' MINIMUM LENGTH UP TO 5 ACRES. OVER 5 ACRES USE STONE/RIP-RAP SEDIMENT TRAP ST-IV

U.S. DEPARTMENT OF AGRICULTURE
SOIL CONSERVATION SERVICE

C - 9 - 10

MARYLAND DEPARTMENT OF ENVIRONMENT
WATER MANAGEMENT ADMINISTRATION

Stone Outlet Sediment Trap - ST II

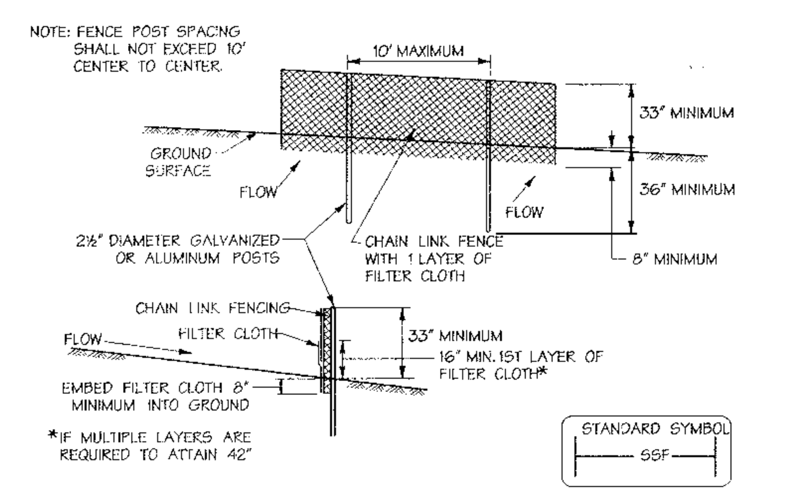

CONSTRUCTION SPECIFICATIONS

1. FENCING SHALL BE 42 INCHES IN HEIGHT AND CONSTRUCTED IN ACCORDANCE WITH THE LATEST MARYLAND STATE HIGHWAY (SHA) DETAILS FOR CHAIN LINK FENCING. THE SPECIFICATION FOR A 6' FENCE SHALL BE USED, SUBSTITUTING 42" FABRIC AND 6' LENGTH POSTS.
2. THE POSTS DO NOT NEED TO BE SET IN CONCRETE.
3. CHAIN LINK FENCE SHALL BE FASTENED SECURELY TO THE FENCE POSTS WITH WIRE TIES OR STAPLES. THE LOWER TENSION WIRE, BRACE AND TRUSS RODS, DRIVE ANCHORS AND POST CAPS ARE NOT REQUIRED EXCEPT ON THE ENDS OF THE FENCE. THE CHAIN LINK FENCING SHALL BE SIX (6) GAUGE OR HEAVIER.
4. FILTER CLOTH SHALL BE FASTENED SECURELY TO THE CHAIN LINK FENCE WITH TIES SPACED EVERY 24" AT THE TOP AND MID SECTION.
5. FILTER CLOTH SHALL BE EMBEDDED A MINIMUM OF 8" INTO THE GROUND.
6. WHEN TWO SECTIONS OF FILTER CLOTH ADJOIN EACH OTHER, THEY SHALL BE OVERLAPPED BY 6" AND FOLDED.
7. MAINTENANCE SHALL BE PERFORMED AS NEEDED AND SILT BUILDUPS REMOVED WHEN "BULGES" DEVELOP IN THE SILT FENCE, OR WHEN SILT REACHES 50% OF FENCE HEIGHT.

U.S. DEPARTMENT OF AGRICULTURE
SOIL CONSERVATION SERVICE

H - 26 - 3

MARYLAND DEPARTMENT OF ENVIRONMENT
WATER MANAGEMENT ADMINISTRATION

Super Silt Fence

Not To Scale

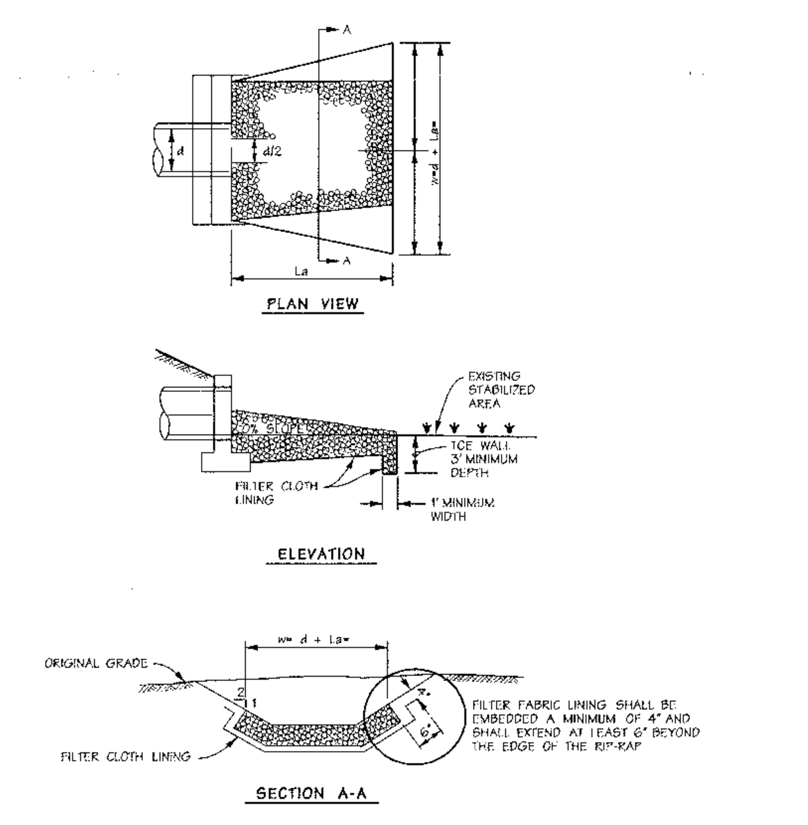

NOTE: FILTER CLOTH SHALL BE GEOTEXTILE CLASS C

F-18-10 (HEAD)

U.S. DEPARTMENT OF AGRICULTURE
SOIL CONSERVATION SERVICE

MARYLAND DEPARTMENT OF ENVIRONMENT
WATER MANAGEMENT ADMINISTRATION

Rock Outlet Protection III

Not To Scale

CONSTRUCTION SPECIFICATIONS

1. THE SUBGRADE FOR THE FILTER, RIP-RAP, OR GABION SHALL BE PREPARED TO THE REQUIRED LINES AND GRADES. ANY FILL REQUIRED IN THE SUBGRADE SHALL BE COMPACTED TO A DENSITY OF APPROXIMATELY THAT OF THE SURROUNDING UNDISTURBED MATERIAL.

2. THE ROCK OR GRAVEL SHALL CONFORM TO THE SPECIFIED GRADING LIMITS WHEN INSTALLED RESPECTIVELY IN THE RIP-RAP OR FILTER.

3. GEOTEXTILE CLASS C SHALL BE PROTECTED FROM PUNCHING, CUTTING, OR TEARING. ANY DAMAGE OTHER THAN AN OCCASIONAL SMALL HOLE SHALL BE REPAIRED BY PLACING ANOTHER PIECE OF GEOTEXTILE OVER THE DAMAGED PART OR BY COMPLETELY REPLACING THE GEOTEXTILE. ALL OVERLAPS WHETHER FOR REPAIRS OR FOR JOINING TWO PIECES OF GEOTEXTILE SHALL BE A MINIMUM OF ONE FOOT.

4. STONE FOR THE RIP-RAP OR GABION OUTLETS MAY BE PLACED BY EQUIPMENT. THEY SHALL BE CONSTRUCTED TO THE FULL COURSE THICKNESS IN ONE OPERATION AND IN SUCH A MANNER AS TO AVOID DISPLACEMENT OF UNDERLYING MATERIALS. THE STONE FOR RIP-RAP OR GABION OUTLETS SHALL BE DELIVERED AND PLACED IN A MANNER THAT WILL ENSURE THAT IT IS REASONABLY HOMOGENEOUS WITH THE SMALLER STONES AND SPALLS FILLING THE VOIDS BETWEEN THE LARGER STONES. RIP-RAP SHALL BE PLACED IN A MANNER TO PREVENT DAMAGE TO THE FILTER BLANKET OR GEOTEXTILE. HAND PLACEMENT WILL BE REQUIRED TO THE EXTENT NECESSARY TO PREVENT DAMAGE TO THE PERMANENT WORKS.

5. THE STONE SHALL BE PLACED SO THAT IT BLENDS IN WITH THE EXISTING GROUND. IF THE STONE IS PLACED TOO HIGH THEN THE FLOW WILL BE FORCED OUT OF THE CHANNEL AND SCOUR ADJACENT TO THE STONE WILL OCCUR.

U.S. DEPARTMENT OF AGRICULTURE
SOIL CONSERVATION SERVICE

F-18-8A, 9A, 10A

MARYLAND DEPARTMENT OF ENVIRONMENT
WATER MANAGEMENT ADMINISTRATION

Rock Outlet Protection Specifications

Not To Scale

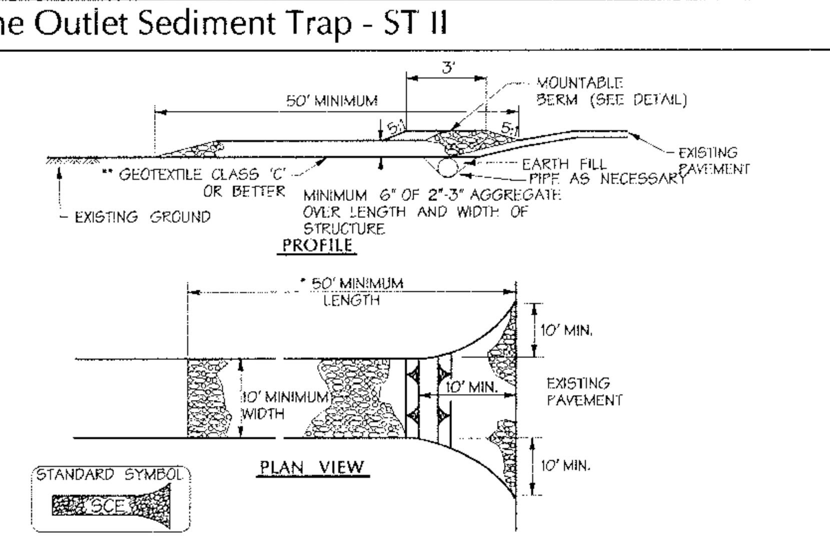

CONSTRUCTION SPECIFICATIONS

1. LENGTH - MINIMUM OF 50' (*30' FOR SINGLE RESIDENCE LOT).
2. WIDTH - 10' MINIMUM, SHOULD BE FLARED AT THE EXISTING ROAD TO PROVIDE A TURNING RADIUS.
3. GEOTEXTILE FABRIC CLASS C (FILTER CLOTH) SHALL BE PLACED OVER THE EXISTING GROUND PRIOR TO PLACING STONE. **THE PLAN APPROVAL AUTHORITY MAY NOT REQUIRE SINGLE FAMILY RESIDENCES TO USE GEOTEXTILE.
4. STONE - CRUSHED AGGREGATE (2" TO 3") OR RECLAIMED OR RECYCLED CONCRETE EQUIVALENT SHALL BE PLACED AT LEAST 6" DEEP OVER THE LENGTH AND WIDTH OF THE ENTRANCE.
5. SURFACE WATER - ALL SURFACE WATER FLOWING TO OR DIVERTED TOWARD CONSTRUCTION ENTRANCES SHALL BE PIPED THROUGH THE ENTRANCE, MAINTAINING POSITIVE DRAINAGE. PIPE INSTALLED THROUGH THE STABILIZED CONSTRUCTION ENTRANCE SHALL BE PROTECTED WITH A MOUNTABLE BERM WITH 5:1 SLOPES AND A MINIMUM OF 6" OF STONE OVER THE PIPE. PIPE HAS TO BE SIZED ACCORDING TO THE DRAINAGE. WHEN THE SCE IS LOCATED AT A HIGH SPOT AND HAS NO DRAINAGE TO CONVEY A PIPE WILL NOT BE NECESSARY. PIPE SHOULD BE SIZED ACCORDING TO THE AMOUNT OF RUNOFF TO BE CONVEYED. A 6" MINIMUM WILL BE REQUIRED.
6. LOCATION - A STABILIZED CONSTRUCTION ENTRANCE SHALL BE LOCATED AT EVERY POINT WHERE CONSTRUCTION TRAFFIC ENTERS OR LEAVES A CONSTRUCTION SITE. VEHICLES LEAVING THE SITE MUST TRAVEL OVER THE ENTIRE LENGTH OF THE STABILIZED CONSTRUCTION ENTRANCE.

U.S. DEPARTMENT OF AGRICULTURE
SOIL CONSERVATION SERVICE

F - 17 - 3

MARYLAND DEPARTMENT OF ENVIRONMENT
WATER MANAGEMENT ADMINISTRATION

Stabilized Construction Entrance

Not To Scale

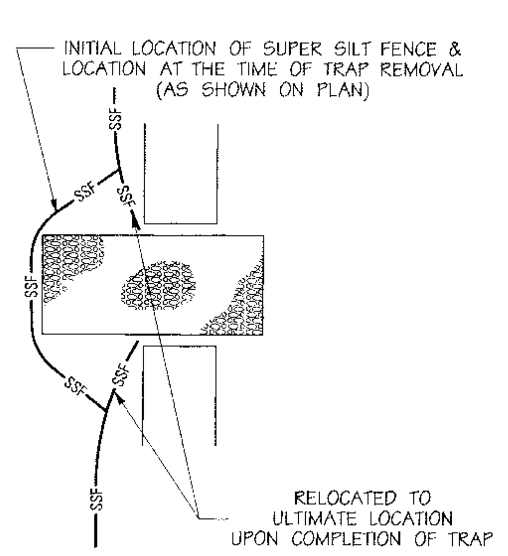

TYPICAL SUPER SILT FENCE INSTALLATION AT TRAP OUTFALL

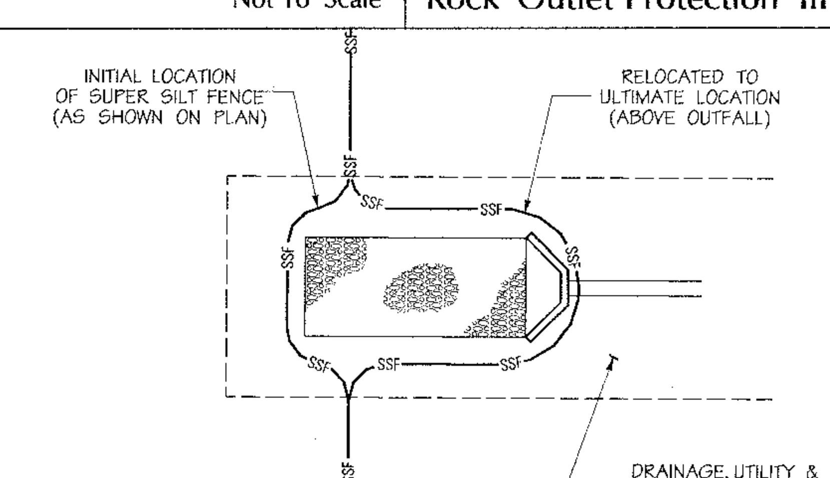

TYPICAL SUPER SILT FENCE INSTALLATION AT PIPE OUTFALL

Not To Scale

Super Silt Fence Outfall Protection

MDE PERMIT AND TRACKING No. 01-NT-0500/200260639

DEVELOPER'S CERTIFICATION:

"I/WE CERTIFY THAT ALL DEVELOPMENT AND CONSTRUCTION WILL BE DONE ACCORDING TO THIS PLAN, AND THAT ANY RESPONSIBLE PERSONNEL INVOLVED IN THE CONSTRUCTION PROJECT WILL HAVE A CERTIFICATE OF ATTENDANCE AT A DEPARTMENT OF THE ENVIRONMENT APPROVED TRAINING PROGRAM FOR THE CONTROL OF SEDIMENT AND EROSION BEFORE BEGINNING THE PROJECT. I ALSO AUTHORIZE PERIODIC ON-SITE INSPECTION BY THE HOWARD SOIL CONSERVATION DISTRICT.

[signature] 9/20/02
SIGNATURE OF DEVELOPER   DATE
PRINT NAME BELOW SIGNATURE
Robert A. Jenkins

ENGINEER'S CERTIFICATION:

"I CERTIFY THAT THIS PLAN FOR EROSION AND SEDIMENT CONTROL REPRESENTS A PRACTICAL AND WORKABLE PLAN BASED ON MY PERSONAL KNOWLEDGE OF THE SITE CONDITIONS AND THAT IT WAS PREPARED IN ACCORDANCE WITH THE REQUIREMENTS OF THE HOWARD SOIL CONSERVATION DISTRICT."

[signature] 9/20/02
SIGNATURE OF ENGINEER
PRINT NAME BELOW SIGNATURE
John Ranocchio

REVIEWED FOR HOWARD S.C.D. AND MEETS TECHNICAL REQUIREMENTS

[signature] 9/30/02
U.S. NATURAL RESOURCE CONSERVATION SERVICE   DATE

THIS DEVELOPMENT PLAN IS APPROVED FOR SOIL EROSION AND SEDIMENT CONTROL BY THE HOWARD SOIL CONSERVATION DISTRICT.

[signature] 9/30/02
HOWARD S.C.D.   DATE

F-02-111

9/20/02
Date

[signature]

Professional Engr. No. 10551

APPROVED: HOWARD COUNTY DEPT. OF PUBLIC WORKS

William L. Malone Jr. 10-10-02
CHIEF, BUREAU OF HIGHWAYS   DATE

APPROVED: HOWARD COUNTY DEPT. OF PLANNING AND ZONING

[signature] 10/22/02
CHIEF, DIVISION OF LAND DEVELOPMENT   DATE

[signature] 10/18/02
CHIEF, DEVELOPMENT ENGINEERING DIVISION MK   DATE

Date	No.	Revision Description

REVITZ PROPERTY

OWNER /DEVELOPER:

THE HOWARD RESEARCH & DEVELOPMENT CORPORATION
10275 LITTLE PATUXENT PARKWAY
COLUMBIA, MARYLAND 21044

DMW
Daft·McCune·Walker, Inc.
200 East Pennsylvania Avenue
Towson, Maryland 21286
(410) 296-3333
Fax 296-4705

A Team of Land Planners, Landscape Architects, Engineers, Surveyors & Environmental Professionals

SUBDIVISION NAME			SECTION/AREA		LOT/PARCEL # 165 & P/O PAR. 837
PLAT# OR L/F 2267/436	BLOCK # 20	ZONE PEC	TAX/ZONE MAP 47	ELECT. DISTRICT 6 th	CENSUS TRACT
WATER CODE			SEWER CODE		

TITLE
FINAL PLAN
SEDIMENT AND EROSION CONTROL DETAILS

Des By DFM	Scale 1" = 50'	Proj. No. 01011
Drn By WDE	Date 9/19/02	30 OF 57
Chk By	Approved	

F-02-111

Thu Sep 19 2002

STANDARDS AND SPECIFICATIONS FOR VEGETATIVE STABILIZATION

SECTION I - VEGETATIVE STABILIZATION METHODS AND MATERIALS

A. SITE PREPARATION

I. Install erosion and sediment control structures (either temporary or permanent) such as diversions, grade stabilization structures, berms waterways, or sediment control basins.

II. Perform all grading operations at right angles to the slope. Final grading and shaping is not usually necessary for temporary seeding.

III. Schedule required soil test to determine soil amendment composition and application rates for sites having disturbed area over 5 acres.

B. SOIL AMENDMENTS (FERTILIZER AND LIME SPECIFICATIONS)

I. Soil test must be performed to determine the exact ratios and application rates for both lime and fertilizer on sites having disturbed areas over 5 acres. Soil analysis may be performed by the University of Maryland or a recognized commercial laboratory. Soil samples taken for engineering purposes may also be used for chemical analysis.

II. Fertilizers shall be uniform in composition, free flowing and suitable for accurate application by approved equipment. Manure may be substituted for fertilizer with prior approval from the appropriate approval authority. Fertilizers shall be delivered to the site fully labeled according to the applicable state fertilizer laws and shall bear the name, trade name or trademark and warrantee of the producer.

III. Lime materials shall be ground limestone (hydrated or brunt lime may be substituted) which contains at least 50% total oxides (calcium oxide plus magnesium oxide). Limestone shall be ground to such fineness that at least 50% will pass through a #100 mesh sieve and 98 - 100% will pass through a #20 mesh sieve.

IV. Incorporate lime and fertilizer into the top 3 - 5 inches of soil by disking or other suitable means.

C. SEEDBED PREPARATION

I. TEMPORARY SEEDING

A. Seedbed preparation shall consist of loosening soil to a depth of 3 inches to 5 inches by means of suitable agricultural or construction equipment, such a disc harrows or chisel plows or rippers mounted on construction equipment. After the soil is loosened it should not be rolled or dragged smooth but left in the roughened condition. Sloped areas (greater than 3:1) should be tracked leaving the surface in an irregular condition with ridges running parallel to the counter of the slope.

B. Apply fertilizer and lime as prescribed on the plans.

C. Incorporate lime and fertilizer into the top 3 - 5 inches of soil by disking or other suitable means.

II. PERMANENT SEEDING

A. Minimum soil conditions required for permanent vegetative establishment:

1. Soil ph shall be between 6.0 and 7.0.
2. Soluble salts shall be less than 500 parts per million (PPM).
3. The soil shall contain less than 40% clay but enough fine grained material (> 30% silt plus clay) to provide the capacity to hold a moderate amount of moisture. An exception is if Lovegrass or Serecia Lespedeza is to be planted. Then a sandy soil (< 30% silt plus clay) would be acceptable.
4. Soil shall contain 1.5% minimum organic matter by weight.
5. Soil must contain sufficient pore space to permit adequate root penetration.
6. If these conditions cannot be met by the soils on site, adding topsoil is required in accordance with Section 21 - Standard and Specification for Topsoil.

B. Areas previously graded in conformance with the drawings shall be maintained in a true and even grade, then scarified or otherwise loosened to a depth of 3 - 5 inches to permit bonding of the topsoil to the surface area and to create horizontal erosion check slots to prevent topsoil from sliding down a slope.

C. Apply soil amendments as per soil test or as included on the plans.

D. Mix soil amendments into the top 3 - 5 inches of topsoil by disking or other suitable means. Lawn areas should be raked to smooth the surface, remove large objects like stones and branches, and ready the area for seed application. Where site conditions will not permit normal seedbed preparation, loosen surface soil by dragging with a heavy chain or other equipment to roughen the surface. Steep slopes (steeper than 3:1) should be tracked by a dozer leaving the soil in an irregular condition with ridges running parallel to the contour of the slope. The top 1 - 3 inches of soil should be loose and friable. Seedbed loosening may not be necessary on newly disturbed areas.

D. SEED SPECIFICATIONS

I. All seed must meet the requirements of the Maryland State Seed Law. All seed shall be subject to re-testing by a recognized seed laboratory. All seed used shall have been tested within the 6 months immediately preceding the date of sowing such material on this job.

Note: Seed tags shall be made available to the inspector to verify type and rate of seed used.

II. Inoculant - The inoculant for treating legume seed in the seed mixtures shall be a pure culture of nitrogen-fixing bacteria prepared specifically for the species. Inoculants shall not be used later than the date indicated on the container. Add fresh inoculant as directed on package. Use four times the recommended rate when hydroseeding. Note: It is very important to keep inoculant as cool as possible until used. Temperatures above 75-80° F. can weaken bacteria and make the inoculant less effective.

E. METHODS OF SEEDING

I. Hydroseeding: Apply seed uniformly with hydroseeder (slurry includes seed and fertilizer), broadcast or drop seeder, or cultipacker seeder.

A. If fertilizer is being applied at the time of seeding, the application rates amounts will not exceed the following:
Nitrogen; maximum of 100 pounds per acre total of soluble
Nitrogen; P205 (phosphorous): 200 pounds per acre; K20 (potassium): 200 pounds per acre.

B. Lime: Use only ground agricultural limestone, (up to 3 tons per acre may be applied by hydroseeding). Normally, not more than 2 tons are applied by hydroseeding at any one time. Do not use burnt or hydrated lime when hydroseeding.

C. Seed and fertilizer shall be mixed on site and seeding shall be done immedlately and without interruption.

II. Dry Seeding: This includes use of conventional drop or broadcast spreaders.

A. Seed spread dry shall be incorporated into the subsoil at the rates prescribed on the temporary or permanent seeding summaries or tables 25 or 26. The seeded area shall then be rolled with a weighed roller to provide good seed soil contact.

B. Where practical, seed should be applied in two directions perpendicular to each other. Apply half the seeding rate in each direction.

III. Drill or cultipacker seeding: Mechanized seeders that apply and cover seed with soil.

A. Cultipacking seeders are required to bury the seed in such a fashion as to provide at least ¼ inch of soil covering.

Seedbed must be firm after planting.

B. Where practical, seed should be applied in two directions perpendicular to each other. Apply half the seeding rate in each direction.

F. MULCH SPECIFICATIONS (IN ORDER OF PREFERENCE)

I. Straw shall consist of thoroughly threshed wheat, rye or oat straw, reasonably bright in color, and shall not be musty, moldy, caked, decayed, or excessively dusty and shall be free of noxious weeds seeds as specified in the Maryland Seed Law.

II. Wood cellulose fiber mulch (WCFM)

A. WCFM shall consist of specially prepared wood cellulose processed into a uniform fibrous physical state.

B. WCFM shall be dyed green or contain a green dye in the package that will provide an appropriate color to facilitate visual inspection of the uniformly spread slurry.

C. WCFM, including dye shall contain no germination or growth inhibiting factors.

D. WCFM materials shall be manufactured and processed in such a manner that the wood cellulose fiber mulch will remain in uniform suspension in water under agitation and will blend with seed, fertilizer and other additives to form a homogeneous slurry. The mulch material shall form a blotter-like ground cover, on application, having moisture absorption and percolation properties and shall cover and hold grass seed in contact with the soil without inhibiting the growth of the grass seedings.

E. WCFM material shall contain no elements or compounds at concentration levels that will be phyto-toxic.

F. WCFM must conform to the following physical requirements: Fiber length to approximately 10 mm., diameter approximately 1mm., ph range of 4.0 to 8.5, ash content of 1.6% maximum and water holding capacity of 90% minimum.

Note: Only sterile straw mulch should be used in areas where one species of grass is desired.

G. MULCHING SEEDED AREAS - Mulch shall be applied to all seeded areas where one species of grass is desired.

I. If grading is completed outside of the seeding season, mulch alone shall be applied as prescribed in this section and maintained until the seeding season returns and seeding can be performed in accordance with these specifications.

II. When straw mulch is used, it shall be spread over all seeded areas at the rate of 2 tons per acre. Mulch shall be applied in a uniform loose depth of between 1inches and 2 inches. Mulch applied shall achieve a uniform distribution and depth so that the surface is not exposed. If a mulch anchoring tool is to be used, the rate should be increased to 2.5 tons per acre.

III. Wood cellulose fiber used as a mulch shall be applied at a net dry weight of 1,500 pounds per acre. The wood cellulose fiber shall be mixed with water and the mixture shall contain a maximum of 50 pounds of wood cellulose fiber per 100 gallons of water.

H. SECURING STRAW MULCH - Mulch anchoring shall be performed immediately following mulch application to minimize loss by wind or water. This may be done by one of the following methods (listed by preference), depending upon size of area and erosion hazard:

I. A mulch anchoring tool is a tractor drawn implement design to punch and anchor mulch into the soil surface a minimum of two (2) inches. This practice is most effective on large areas, but is limited to flatter slopes where equipment can operate safely. If used on sloping land, this practice should be used on the contour if possible.

II. Wood cellulose fiber may be used for anchoring straw. The fiber binder shall be applied at a net dry weight of 750 pounds per acre. The wood cellulose fiber shall be mixed with water and the mixture shall contain a maximum of 50 pounds of wood cellulose fiber per 100 gallons of water.

III. Application of liquid binders should be heavier at the edges where wind catches mulch, such as in valleys or on crest of banks. The remainder of area should appear uniform after binder application. Synthetic binders - such as Acrylic DLR (agro-tack), DCA-70, Petroset, Terra Tax II, Terra Tack AR or other approved equal may be used at rates recommended by the manufacturer to anchor mulch.

IV. Lightweight plastic netting may be stapled over the mulch according to manufacturer's recommendations. Netting is usually available in rolls 4' to 15' feet wide and 300 to 3,000 feet long.

SECTION II - TEMPORARY SEEDING

VEGETATION - Annual grass or grain used to provide cover on disturbed areas for up to 12 months. For longer duration of vegetative cover, permanent seeding is required.

Seed Mixture (Hardiness Zone 6B)					Fertilizer Rate (10-10-10)	Lime Rate
No.	Species	Application Rate (Lb./Ac.)	Seeding Dates	Seeding Depths		
1	Annual Ryegrass	50	2/1 - 4/30 8/15 - 11/1	¼"-½"	600 Lbs./Ac. (15 Lbs./1000 SF)	2 Tons/Ac. (100 Lbs./1000 SF)
2	Weeping Lovegrass	4	5/1 - 8/14	¼"-½"		

SECTION III - PERMANENT SEEDING

Seeding grass and legumes to establish ground cover for a minimum of one year on disturbed areas generally receiving low maintenance.

Seed Mixture No. 3 (Hardiness Zone 6B)					Fertilizer Rate (10-20-20)			Lime Rate
%	Species	Application Rate (Lb./Ac.)	Seeding * Dates	Seeding Depths	N	P205	K20	
85	Rebel II Tall Fescue	125	3/1 - 5/15 8/15 - 11/15	¼"-½"	90 Lb./Ac. (2 Lb./ 1000 Sq.Ft.)	175 Lb./Ac. (4 Lb./ 1000 Sq.Ft.)	175 Lb./Ac. (4 Lb./ 1000 Sq.Ft.)	2 Tons/Ac. (100 Lb./ 1000 Sq.Ft.)
10	Pennfine Perennial Ryegrass	15						
5	Kenblue Kentucky Bluegrass	10						

* For 5-16 through 8-14 add two (2) pounds of Weeping Lovegrass per acre or ten (10) pounds of Millet per acre to seed mixture (i.e. Mix #3 shown).

G - 20 - 1A

Vegetative Stabilization

U.S. DEPARTMENT OF AGRICULTURE SOIL CONSERVATION SERVICE

MARYLAND DEPARTMENT OF ENVIRONMENT WATER MANAGEMENT ADMINISTRATION

SECTION IV - SOD

To provide quick cover on disturbed areas (2:1 grade or flatter)

A. GENERAL SPECIFICATIONS

I. Class of turfgrass sod shall be Maryland or Virginia State certified or approved. Sod labels shall be made available to the job foreman and inspector.

II. Sod shall be machine cut at a uniform soil thickness of¾", plus or minus¼", at the time of cutting. Measurement for thickness shall exclude top growth and thatch. Individual pieces of sod shall be cut to the suppliers width length. Maximum allowable deviation from standard widths and lengths shall be 5 percent. Broken pads and torn or uneven ends will not be acceptable.

III. Standard size sections of sod shall be strong enough to support their own weight and retain their size and shape when suspended vertically with a firm grasp on the upper 10 percent of the section.

IV. Sod shall not be harvested or transplanted when moisture content (excessively dry or wet) may adversely affect its survival.

V. Sod shall be harvested, delivered, and installed within a period of 36 hours. Sod not transplanted within this period shall be approved by an agronomist or soil scientist prior to its installation.

B. SOD INSTALLATION

I. During periods of excessively high temperature or in areas having dry subsoil, the subsoil shall be lightly irrigated immediately prior to laying the sod.

II. The first row of sod shall be laid in a straight line with subsequent rows placed parallel to and tightly wedged against each other. Lateral joints shall be staggered to promote more uniform growth and strength. Ensure that sod is not stretched or overlapped and that all joints are butted tight in order to prevent voids which air drying of the roots.

III. Wherever possible, sod shall be laid with the long edges parallel to the contour and with staggering joints. Sod shall be rolled and tamped, pegged or otherwise secured to prevent slippage on slopes and to ensure solid contact between sod roots and the underlying soil surface.

IV. Sod shall be watered immediately following rolling or tamping until the underside of the new sod pad and soil surface below the sod are thoroughly wet. the operations laying, tamping and irrigating for any piece of sod shall be completed within eight hours.

C. SOD MAINTENANCE

I. In the absence of adequate rainfall, watering shall be performed daily or as often as necessary during the first week and in sufficient quantities to maintain moist soil to a depth of 4 inches. Watering should be done during the heat of the day to prevent wilting.

II. After the first week, sod watering is required as necessary to maintain adequate moisture content.

III. The first mowing of sod should not be attempted until the sod is firmly rooted. No more than 1/3 of the grass leaf shall be removed by the initial cutting or subsequent cuttings. Grass height shall be maintained between 2 inches and 3 inches unless otherwise specified.

SECTION V - TURFGRASS ESTABLISHMENT

Areas where turfgrass may be desired may include lawns, parks, playgrounds, and commercial sires which will receive a medium high level of maintenance. Areas to receive seed shall be tilled by disking or other approved methods to a depth of 2 to 4 inches, leveled and raked to prepare a proper seedbed. Stones and debris over 1½inches in diameter shall be removed. The resulting seedbed shall be in such condition that future mowing of grasses will pose no difficulty.

Note: Choose certified material. Certified material is the best guarantee of cultivar purity. The certification program of the Maryland Department of Agriculture, Turf and Seed Section, provides a reliable means of consumer protection and assures a pure genetic line.

A. TURFGRASS MIXTURES

I. Kentucky Bluegrass - Full sun mixture - For use in areas that receive intensive management. Irrigation required in the areas of central Maryland and Eastern Shore. Recommended certified Kentucky Bluegrass cultivars seeding rate: 1.5 to 2.0 pounds per 1000 square feet. A minimum of three Bluegrass cultivars should be chosen ranging from a minimum of 10% to a maximum of 35% of the mixture by weight.

II. Kentucky Bluegrass/Perennial Rye - Full sun mixture - For use in full sun areas where rapid establishment is necessary and when turf will receive medium to intensive management. Certified Perennial Ryegrass cultivars/certified Kentucky Bluegrass seeding rate: 2 pounds mixture per 1000 square feet. A minimum of 3 Kentucky Bluegrass cultivars must be chosen, with each cultivar ranging from 10% to 35% of the mixture by weight.

III. Tall Fescue/Kentucky Bluegrass - Full sun mixture - For use in drought prone areas and/or for areas receiving low to medium management in full sun to medium shade. Recommended mixture includes; certified Tall Fescue cultivars 95-100%, certified Kentucky Bluegrass cultivars 0 - 5%, seeding rate: 5 to 8 pounds per 1000 square feet. One or more cultivars may be blended.

IV. Kentucky Bluegrass/Fine Fescue - Shade mixture - For use in areas with shade in Bluegrass lawns. For establishment in high quality, intensively managed turf area. Mixture includes; certified Kentucky Bluegrass cultivars 30-40% and certified Fine Fescue and 60-70%. Seeding rate: 1½- 3 pounds per 1000 square feet. A minimum of 3 Kentucky Bluegrass cultivars must be chosen. With each cultivar ranging from a minimum of 10% to a maximum of 35% of the mixture by weight.

Note: Turfgrass varieties should be selected form those listed in the most current University of Maryland publication, agronomy mimeo number 77, "Turfgrass Cultivar Recommendations for Maryland".

B. IDEAL TIMES OF SEEDING

Western Maryland: March 15 - June 1, August 1 - October 1 (hardiness zones - 5B, 6A).

Central Maryland: March 1 - May 15, August 15 - October 15 (hardiness zone - 6B).

Southern Maryland, Eastern Shore: March 1 - May 15, August 15 - October 15 (hardiness zones - 7A , 7B).

C. IRRIGATION

If soil moisture is different, supply new seedlings with adequate water for plant growth (1/2" - 1" every 3 to 4 days depending on soil texture) until they are firmly established. This is especially true when seedings are made late in the planting season, in abnormally dry or hot seasons, or on adverse sites.

D. REPAIRS AND MAINTENANCE

Inspect all seeded areas for failures and make necessary repairs, replacements, and reseedings within the planting season.

I. Once the vegetation is established, the site shall have 95% groundcover to be considered adequately stabilized.

II. If the stand provides less than 40% ground coverage, re-establish following original lime, fertilizer, seedbed preparation and seeding recommendations.

III. If the stand provides between 40% and 94% ground coverage, overseeding and fertilizing using half of the rates originally applied may be necessary.

IV. Maintenance fertilizer rates for permanent seedings are shown in Table 24, for lawns and other medium high maintenance turfgrass areas, refer to the University of Maryland publication "Lawn Care in Maryland" bulletin number 171.

21.0 STANDARD AND SPECIFICATIONS FOR TOPSOIL

DEFINITION

Placement of topsoil over a prepared subsoil prior to establishment of permanent vegetation.

PURPOSE

To provide a suitable soil medium for vegetative growth. Soils of concern have low moisture content, low nutrient levels, low pH, materials toxic to plants, and/or unacceptable soil gradation.

CONDITIONS WHERE PRACTICE APPLIES

I. This practice is limited to areas having 2:1 or flatter slopes where:

a. The texture of the exposed subsoil/parent material is not adequate to produce vegetative growth.

b. The soil material is so shallow that the rooting zone is not deep enough to support plants or furnish continuing supplies of moisture and plant nutrients.

c. The original soil to be vegetated contains material toxic to plant growth.

d. The soil is so acidic that treatment with limestone is not feasible.

II. For the purpose of these Standards and Specifications, areas having slopes steeper than 2:1 require special consideration and design for adequate stabilization. Areas having slopes steeper than 2:1 shall have the appropriate stabilization shown on the plans.

CONSTRUCTION AND MATERIAL SPECIFICATIONS

I. Topsoil salvages from the existing site may be used provided that is meets the standards as set forth in these specifications. Typically, the depth of topsoil to be salvaged for a given soil type can be found in the representative soil profile section in the Soil Survey published by USDA-SCS in cooperation with Maryland Agricultural Experimental Station.

II. Topsoil Specifications - Soil to be used as topsoil must meet the following:

I. Topsoil shall be a loam, sandy loam, clay loam, silt loam, sandy clay loam, loamy sand. Other soils may be used if recommended by an agronomist or soil scientist and approved by the appropriate appropriate approval authority. Regardless, topsoil shall not be a mixture of contrasting textured subsoils and shall contain less than 5% by volume of cinders, stones, slag, coarse fragments, gravel, sticks, roots, trash, or other materials larger than 1-1/2³⁄₁₆ in diameter.

II. Topsoil must be free of plants or plant parts such as bermuda grass, quackgrass, Johnsongrass, nutsedge, poison ivy, thistle, or others as specified.

III. Where the subsoil is either highly acidic or composed of heavy clays, ground limestone shall be spread at the rate of 4-8 tons/acre (200-400 pounds per 1,000 square feet) prior to the placement of topsoil. Lime shall be distributed uniformly over designated areas and worked into the soil in conjunction with tillage operations as described in the following procedures.

II. For sites having disturbed areas under 5 acres:

i. On soil meeting Topsoil specifications, obtain test results dictating fertilizer and lime amendments required to bring the soil into compliance with the following:

a. pH for topsoil shall be between 6.0 and 7.5. If the tested soil demonstrates a pH of less than 6.0, sufficient lime shall be prescribed to raise the pH to 6.5 or higher.

b. Organic content of topsoil shall be not less than 1.5 percent by weight.

c. Topsoil having soluble salt content greater than 500 parts per million shall not be used.

d. No sod or seed shall be placed on soil which has been treated with soil sterilants or chemicals used for weed control until sufficient time has elapsed (14 days min.) to permit dissipation of phyto-toxic materials.

Note: Topsoil substitutes or amendments, as recommended by a qualified agronomist or soil scientist and approved by the appropriate approval authority, may be used in lieu of natural topsoil.

ii. Place topsoil (if required) and apply soil amendments as specified in 20.0 Vegetative Stabilization - Section I - Vegetative Stabilization Methods and Materials.

V. Topsoil Application

I. When topsoiling, maintain needed erosion and sediment control practices such as diversions, Grade Stabilization Structures, Earth Dikes, Slope Silt Fence and Sediment Traps and Basins.

II. Grades on the areas to be topsoiled, which have been previously established, shall be maintained, albeit 4³⁄₁₆ - 8³⁄₁₆ higher in elevation.

III. Topsoil shall be uniformly distributed in a 4³⁄₁₆ - 8³⁄₁₆ layer and lightly compacted to a minimum thickness of 4³⁄₁₆. Spreading shall be performed in such a manner that sodding or seeding can proceed with a minimum of additional soil preparation and tillage. Any irregularities in the surface resulting from topsoiling or other operations shall be corrected in order to prevent the formation of depressions or water pockets.

iv. Topsoil shall not be placed while the topsoil or subsoil is in a frozen or muddy condition, when the subsoil is excessively wet or in a condition that may otherwise be detrimental to proper grading and seedbed preparation.

VI. Alternative for Permanent Seeding - Instead of applying the full amounts of lime and commercial fertilizer, composted sludge and amendments may be applied as specified below:

i. Composted Sludge Material for use as a soil conditioner for sites having disturbed areas over 5 acres shall be tested to prescribe amendments and for sites having disturbed areas under 5 acres shall conform to the following requirements:

a. Composted sludge shall be supplied by, or originate from, a person or persons that are permitted (at the time of acquisition of the compost) by the Maryland Department of the Environment under COMAR 26.04.06.

b. Composted sludge shall contain at least 1 percent nitrogen, 1.5 percent phosphorus, and 0.2 percent potassium and have a Ph of 7.0 to 8.0. If compost does not meet these requirements, the appropriate constituents must be added to meet the requirements prior to use.

c. Composted sludge shall be applied at a rate of 1 ton/1,000 square feet.

iv. Composted sludge shall be amended with a potassium fertilizer applied at a rate of 4 lb/1,000 square feet, and 1/3 the normal lime application rate.

9/20/02

References: Guidelines Specifications, Soil Preparation and Sodding. MD-VA, Pub. #1, Cooperative Extension Service, University of Maryland and Virginia Polytechnic Institutes. Revised 1973.

DEVELOPER'S CERTIFICATION:

"I/WE CERTIFY THAT ALL DEVELOPMENT AND CONSTRUCTION WILL BE DONE ACCORDING TO THIS PLAN, AND THAT ANY RESPONSIBLE PERSONNEL INVOLVED IN THE CONSTRUCTION PROJECT WILL HAVE A CERTIFICATE OF ATTENDANCE AT A DEPARTMENT OF THE ENVIRONMENT APPROVED TRAINING PROGRAM FOR THE CONTROL OF SEDIMENT AND EROSION BEFORE BEGINNING THE PROJECT. I ALSO AUTHORIZE PERIODIC ON-SITE INSPECTION BY THE HOWARD SOIL CONSERVATION DISTRICT.

Robt A. Jenkins 9/20/02
SIGNATURE OF DEVELOPER — DATE
PRINT NAME BELOW SIGNATURE
Robert A Jenkins

ENGINEER'S CERTIFICATION:

"I CERTIFY THAT THIS PLAN FOR EROSION AND SEDIMENT CONTROL REPRESENTS A PRACTICAL AND WORKABLE PLAN BASED ON MY PERSONAL KNOWLEDGE OF THE SITE CONDITIONS AND THAT IT WAS PREPARED IN ACCORDANCE WITH THE REQUIREMENTS OF THE HOWARD SOIL CONSERVATION DISTRICT."

[signature] 9/20/02
SIGNATURE OF ENGINEER
PRINT NAME BELOW SIGNATURE
John Ronocchia

REVIEWED FOR HOWARD S.C.D. AND MEETS TECHNICAL REQUIREMENTS

[signature] 9/30/02
U.S. NATURAL RESOURCE CONSERVATION SERVICE — DATE

THIS DEVELOPMENT PLAN IS APPROVED FOR SOIL EROSION AND SEDIMENT CONTROL BY THE HOWARD SOIL CONSERVATION DISTRICT.

[signature] 9/30/02
HOWARD S.C.D. — DATE

Date

F-02-111

Professional Engr. No.

APPROVED: HOWARD COUNTY DEPT. OF PUBLIC WORKS

[signature] 10-10-02
for CHIEF, BUREAU OF HIGHWAYS — DATE

APPROVED: HOWARD COUNTY DEPT. OF PLANNING AND ZONING

[signature] 10/24/02
CHIEF, DIVISION OF LAND DEVELOPMENT — DATE

[signature] 10/18/02
CHIEF, DEVELOPMENT ENGINEERING DIVISION MK — DATE

Date	No.	Revision Description

REVITZ PROPERTY

OWNER /DEVELOPER:

THE HOWARD RESEARCH & DEVELOPMENT CORPORATION
10275 LITTLE PATUXENT PARKWAY
COLUMBIA, MARYLAND 21044

DMW
Daft·McCune·Walker, Inc.
200 East Pennsylvania Avenue
Towson, Maryland 21286
(410) 296-3333
Fax 296-4705

A Team of Land Planners, Landscape Architects, Engineers, Surveyors & Environmental Professionals

SUBDIVISION NAME			SECTION/AREA		LOT/PARCEL #
					165 & P/O PAR. 837
PLAT# OR LF	BLOCK #	ZONE	TAX/ZONE MAP	ELECT. DISTRICT	CENSUS TRACT
2267/436	20	PEC	47	6 th	
WATER CODE			SEWER CODE		

TITLE
FINAL PLAN
SEDIMENT AND EROSION CONTROL DETAILS

Des By DFM	Scale 1" = 50'	Proj. No. 01011
Drn By WDE	Date 9/19/02	31 OF 57
Chk By	Approved	

1055/
F-02-111

Thu Sep 19 16:18:58 2002

Sediment Control General Notes

Not To Scale

1. A MINIMUM OF 48 HOURS NOTICE MUST BE GIVEN TO THE HOWARD COUNTY DEPARTMENT OF INSPECTIONS, AND PERMITS, SEDIMENT CONTROL DIVISION PRIOR TO THE START OF ANY CONSTRUCTION (313-1855).
2. ALL VEGETATIVE AND STRUCTURAL PRACTICES ARE TO BE INSTALLED ACCORDING TO THE PROVISIONS OF THIS PLAN AND ARE TO BE IN CONFORMANCE WITH THE MOST CURRENT MARYLAND STANDARDS AND SPECIFICATIONS FOR SOIL EROSION AND SEDIMENT CONTROL AND REVISIONS THERETO.
3. FOLLOWING INITIAL SOIL DISTURBANCE OR RE-DISTURBANCE, PERMANENT OR TEMPORARY STABILIZATION SHALL BE COMPLETED WITHIN:
   A. SEVEN CALENDAR DAYS FOR ALL PERIMETER SEDIMENT CONTROL STRUCTURES, DIKES, PERIMETER SLOPES AND ALL SLOPES STEEPER THAN 3:1.
   B. FOURTEEN DAYS AS TO ALL OTHER DISTURBED OR GRADED AREAS ON THE PROJECT SITE.
4. ALL SEDIMENT TRAPS/BASINS SHOWN MUST BE FENCED AND WARNING SIGNS POSTED AROUND THEIR PERIMETER IN ACCORDANCE WITH VOL. I, CHAPTER 12, OF THE "HOWARD COUNTY DESIGN MANUAL", STORM DRAINAGE.
5. ALL DISTURBED AREAS MUST BE STABILIZED WITHIN THE TIME PERIOD SPECIFIED ABOVE IN ACCORDANCE WITH THE "1994 MARYLAND STANDARDS AND SPECIFICATIONS FOR SOIL EROSION AND SEDIMENT CONTROL" FOR PERMANENT SEEDINGS (SEC. 51), SODS (SEC. 54), TEMPORARY SEEDING (SEC. 50), AND MULCHING (SEC. 52). TEMPORARY STABILIZATION WITH MULCH ALONE CAN ONLY BE DONE WHEN RECOMMENDED SEEDING DATES DO NOT ALLOW FOR PROPER GERMINATION AND ESTABLISHMENT OF GRASSES.
6. ALL SEDIMENT CONTROL STRUCTURES ARE TO REMAIN IN PLACE AND ARE TO BE MAINTAINED IN OPERATIVE CONDITION UNTIL PERMISSION FOR THEIR REMOVAL HAS BEEN OBTAINED FROM THE HOWARD COUNTY SEDIMENT CONTROL INSPECTOR.
7. SITE ANALYSIS:

TOTAL AREA OF SITE	= 96 ACRES
AREA DISTURBED	= 40 ACRES
AREA TO BE ROOFED OR PAVED	= 7 ACRES
AREA TO BE VEGETATIVELY STABILIZED	= 33 ACRES
TOTAL CUT	= 250,000 CUBIC YARDS
TOTAL FILL	= 250,000 CUBIC YARDS
WASTE/ BORROW AREA	= NOT REQUIRED*

* ANY WASTE/BORROW ISSUES THAT MAY ARISE DURING CONSTRUCTION CAN BE TAKEN CARE OF ON-SITE.

8. ANY SEDIMENT CONTROL PRACTICE WHICH IS DISTURBED BY GRADING ACTIVITY FOR PLACEMENT OF UTILITIES MUST BE REPAIRED ON THE SAME DAY OF DISTURBANCE.
9. ADDITIONAL SEDIMENT CONTROLS MUST BE PROVIDED, IF DEEMED NECESSARY BY THE HOWARD COUNTY SEDIMENT CONTROL INSPECTOR.
10. ON ALL SITES WITH DISTURBED AREAS IN EXCESS OF 2 ACRES, APPROVAL OF THE INSPECTION AGENCY SHALL BE REQUESTED UPON COMPLETION OF INSTALLATION OF PERIMETER EROSION AND SEDIMENT CONTROLS, BUT BEFORE PROCEEDING WITH ANY OTHER EARTH DISTURBANCE OR GRADING. OTHER BUILDING OR GRADING INSPECTION APPROVALS MAY NOT BE AUTHORIZED UNTIL THIS INITIAL APPROVAL BY THE INSPECTION AGENCY IS MADE.
11. TRENCHES FOR THE CONSTRUCTION OF UTILITIES IS LIMITED TO THREE PIPE LENGTHS OR THAT WHICH SHALL BE BACK-FILLED AND STABILIZED WITHIN ONE WORKING DAY, WHICHEVER IS SHORTER.

Stone Outlet Sediment Trap - ST II

Not To Scale

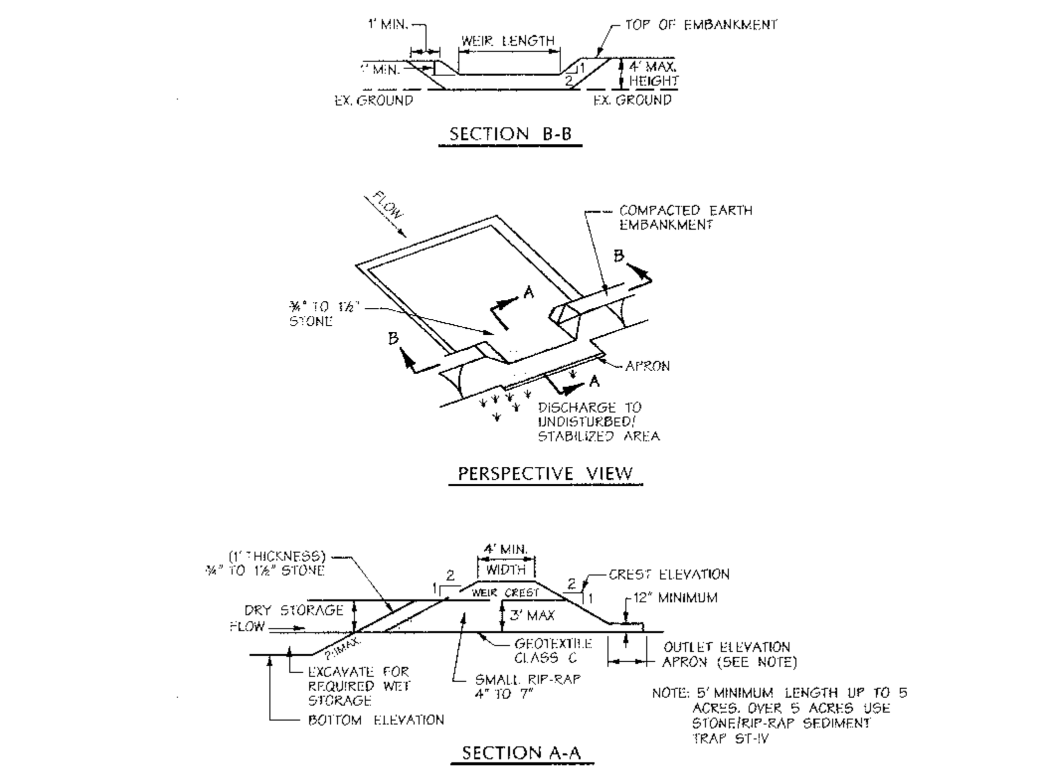

U.S. DEPARTMENT OF AGRICULTURE SOIL CONSERVATION SERVICE

C - 9 - 10

MARYLAND DEPARTMENT OF ENVIRONMENT WATER MANAGEMENT ADMINISTRATION

Standard Inlet Protection

Not To Scale

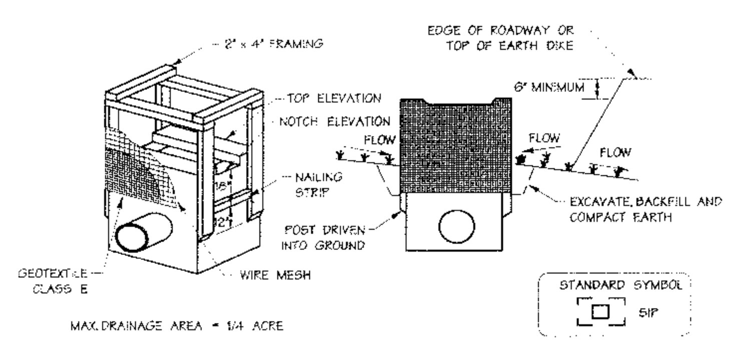

MAX. DRAINAGE AREA = 1/4 ACRE

CONSTRUCTION SPECIFICATIONS

1. EXCAVATE COMPLETELY AROUND THE INLET TO A DEPTH OF 18" BELOW THE NOTCH ELEVATION.
2. DRIVE THE 2" x 4" CONSTRUCTION GRADE LUMBER POSTS 1' INTO THE GROUND AT EACH CORNER OF THE INLET. PLACE NAIL STRIPS BETWEEN THE POSTS ON THE ENDS OF THE INLET. ASSEMBLE THE TOP PORTION OF THE 2" x 4" FRAME USING THE OVERLAP JOINT SHOWN ON DETAIL. THE TOP OF THE FRAME (WEIR) MUST BE 6" BELOW ADJACENT ROADWAYS WHERE FLOODING AND SAFETY ISSUES MAY ARISE.
3. STRETCH THE ½" x ½" WIRE MESH TIGHTLY AROUND THE FRAME AND FASTEN SECURELY. THE ENDS MUST MEET AND OVERLAP AT A POST.
4. STRETCH THE GEOTEXTILE CLASS E TIGHTLY OVER THE WIRE MESH WITH THE GEOTEXTILE EXTENDING FROM THE TOP OF THE FRAME TO 18" BELOW THE INLET NOTCH ELEVATION. FASTEN THE GEOTEXTILE FIRMLY TO THE FRAME. THE ENDS OF THE GEOTEXTILE MUST MEET AT A POST, BE OVERLAPPED AND FOLDED, THEN FASTENED DOWN.
5. BACKFILL AROUND THE INLET IN COMPACTED 6" LAYERS UNTIL THE LAYER OF EARTH IS LEVEL WITH THE NOTCH ELEVATION ON THE ENDS AND TOP ELEVATION ON THE SIDES.
6. IF THE INLET IS NOT IN A SUMP, CONSTRUCT A COMPACTED EARTH DIKE ACROSS THE DITCH LINE DIRECTLY BELOW IT. THE TOP OF THE EARTH DIKE SHOULD BE AT LEAST 6" HIGHER THAN THE TOP OF THE FRAME.
7. THE STRUCTURE MUST BE INSPECTED PERIODICALLY AND AFTER EACH RAIN AND THE GEOTEXTILE REPLACED WHEN IT BECOMES CLOGGED.

U.S. DEPARTMENT OF AGRICULTURE SOIL CONSERVATION SERVICE

E - 16 - 5

MARYLAND DEPARTMENT OF ENVIRONMENT WATER MANAGEMENT ADMINISTRATION

At Grade Inlet Protection

Not To Scale

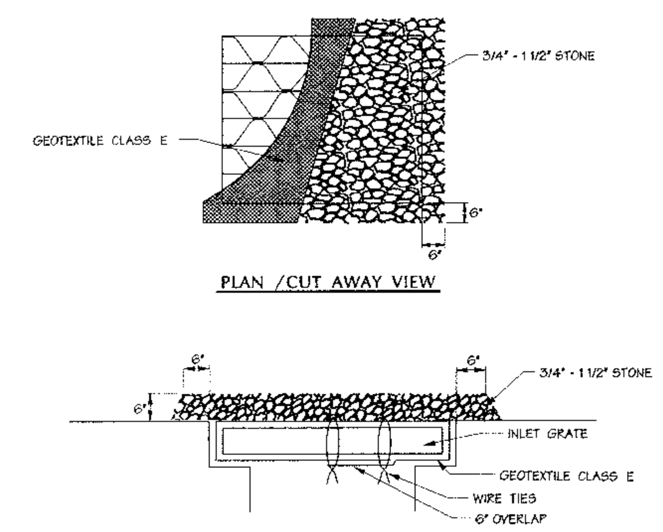

MAX. DRAINAGE AREA = 1/4 ACRE

CONSTRUCTION SPECIFICATIONS

1. LIFT GRATE AND WRAP WITH GEOTEXTILE CLASS E TO COMPLETELY COVER ALL OPENINGS, THEN SET GRATE BACK IN PLACE.
2. PLACE ¾" TO 1½" STONE, 4"-6" THICK ON THE GRATE TO SECURE THE FABRIC AND PROVIDE ADDITIONAL FILTRATION.

U.S. DEPARTMENT OF AGRICULTURE SOIL CONSERVATION SERVICE

E - 16 - 5A

MARYLAND DEPARTMENT OF ENVIRONMENT WATER MANAGEMENT ADMINISTRATION

Curb Inlet Protection (COG or COS Inlets)

Not To Scale

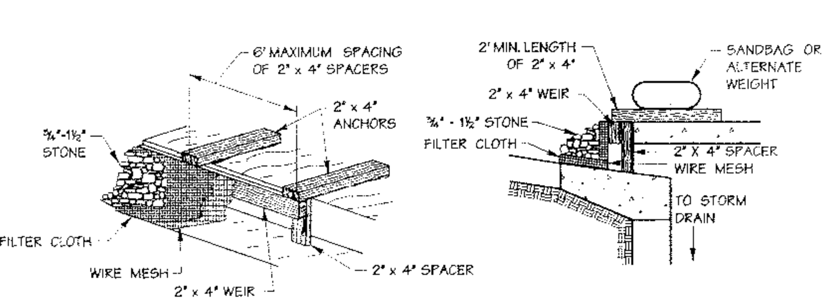

MAX. DRAINAGE AREA = 1/4 ACRE

CONSTRUCTION SPECIFICATIONS

1. ATTACH A CONTINUOUS PIECE OF ½" x ½" WIRE MESH (30" MINIMUM WIDTH BY THROAT LENGTH PLUS 4') TO THE 2" x 4" WEIR (MEASURING THROAT LENGTH PLUS 2') AS SHOWN ON THE STANDARD DRAWING.
2. PLACE A CONTINUOUS PIECE OF GEOTEXTILE CLASS E THE SAME DIMENSIONS AS THE WIRE MESH OVER THE WIRE MESH AND SECURELY ATTACH IT TO THE 2" x 4" WEIR.
3. SECURELY NAIL THE 2" x 4" WEIR TO A 9" LONG VERTICAL SPACER TO BE LOCATED BETWEEN THE WEIR AND THE INLET FACE (MAX. 4' APART).
4. PLACE THE ASSEMBLY AGAINST THE INLET THROAT AND NAIL (MINIMUM 2' LENGTHS OF 2" x 4" TO THE TOP OF THE WEIR AT SPACER LOCATIONS). THESE 2" x 4" ANCHORS SHALL EXTEND ACROSS THE INLET TOP AND BE HELD IN PLACE BY SANDBAGS OR ALTERNATE WEIGHT.
5. THE ASSEMBLY SHALL BE PLACED SO THAT THE END SPACERS ARE A MINIMUM 1' BEYOND BOTH ENDS OF THE THROAT OPENING.
6. FORM THE ½" x ½" WIRE MESH AND THE GEOTEXTILE FABRIC TO THE CONCRETE GUTTER AND AGAINST THE FACE OF THE CURB ON BOTH SIDES OF THE INLET. PLACE CLEAN ¾" X 1½" STONE OVER THE WIRE MESH AND GEOTEXTILE IN SUCH A MANNER TO PREVENT WATER FROM ENTERING THE INLET UNDER OR AROUND THE GEOTEXTILE.
7. THIS TYPE OF PROTECTION MUST BE INSPECTED FREQUENTLY AND THE FILTER CLOTH AND STONE REPLACED WHEN CLOGGED WITH SEDIMENT.
8. ASSURE THAT STORM FLOW DOES NOT BYPASS THE INLET BY INSTALLING A TEMPORARY EARTH OR ASPHALT DIKE TO DIRECT THE FLOW OF THE INLET.

U.S. DEPARTMENT OF AGRICULTURE SOIL CONSERVATION SERVICE

E - 16 - 5B

MARYLAND DEPARTMENT OF ENVIRONMENT WATER MANAGEMENT ADMINISTRATION

Sequence of Operations

1. Notify Maryland Department of Environment Nontidal Wetlands and Waterways Inspections and Compliance Sections at 410 631 3510 at least five days in advance of beginning any work in streams, 100 year Flood Plain, Nontidal Wetlands and Wetlands Buffers.
2. Notify HCD Department of Inspections 410 313 1855 at least 48 hours prior to beginning work.
3. If applicable, orange high visibility fence shall be manually installed along the limit of disturbance, where the limit is within 50 feet of the forest conservation easement, 100 year flood plain, wetlands, wetlands buffer or stream buffer. This shall be completed by and inspected at the pre-construction meeting.
4. Clear and grub for sediment and erosion control measures or devices only with the Sediment Control Inspector's permission.

5(a). Install sediment control for culvert crossings, install culvert crossings, stabilize with ECM/seed. Observe the Phase I L.O.D.(for stream diversion practices at stream crossings only). Phase I L.O.D. is shown on sheets 32 and 33 of 57. Upon completion of the crossings, the portions of proposed 2:1 slopes that have been constructed in this phase shall be protected with ECM (sheet 30 of 57) and permanent seeding (sheet 31).

(b). With permission from the inspector, install remainder of sediment control measures and devices ie. Sediment basins, sediment traps, silt fence, super silt fence, earth dikes, etc with the exception of the earth dike running east along the north side of Sterling Drive to SWM III. Observe the Phase II L.O.D., shown on SEC plan sheets. There will be no in-stream work between March 1st through June 15th. For conditions of MDE Permit see Tracking number 01-NT-0500/200260639.

6. Notify HCD Department of Inspection, upon completion of said installation.
7. With the approval of the Sediment Control Inspector clear and grub remainder of site. Execute, maintain dust control per dust control specifications, sheet 29.
8. Mass grade north of Sterling Drive until contour 270 is reached. Install remainder of earth dike draining to Basin 3 on Parcel "D". Mass grade remainder of site with the exception of the portion north of Stephens at Trap 1.
9. Mass grade and stabilize remainder of site.
10. Install water, sewer, storm drains and curb and gutter for site.
11. For Round-about please see Traffic Maintenance Plan.
12. Pave site.
13. Upon stabilization of site with established vegetation and with permission of the Sediment Control Inspector, remove Trap 1 and grade remainder of site. Stabilize this section. Flush storm drain system. Remove sediment control measures and stabilize. Convert SEC basins to SWM facilities, with the exception of Basin III, which shall be converted in the Emerson Section 3 phase of this project once all of it's drainage area is stabilized.

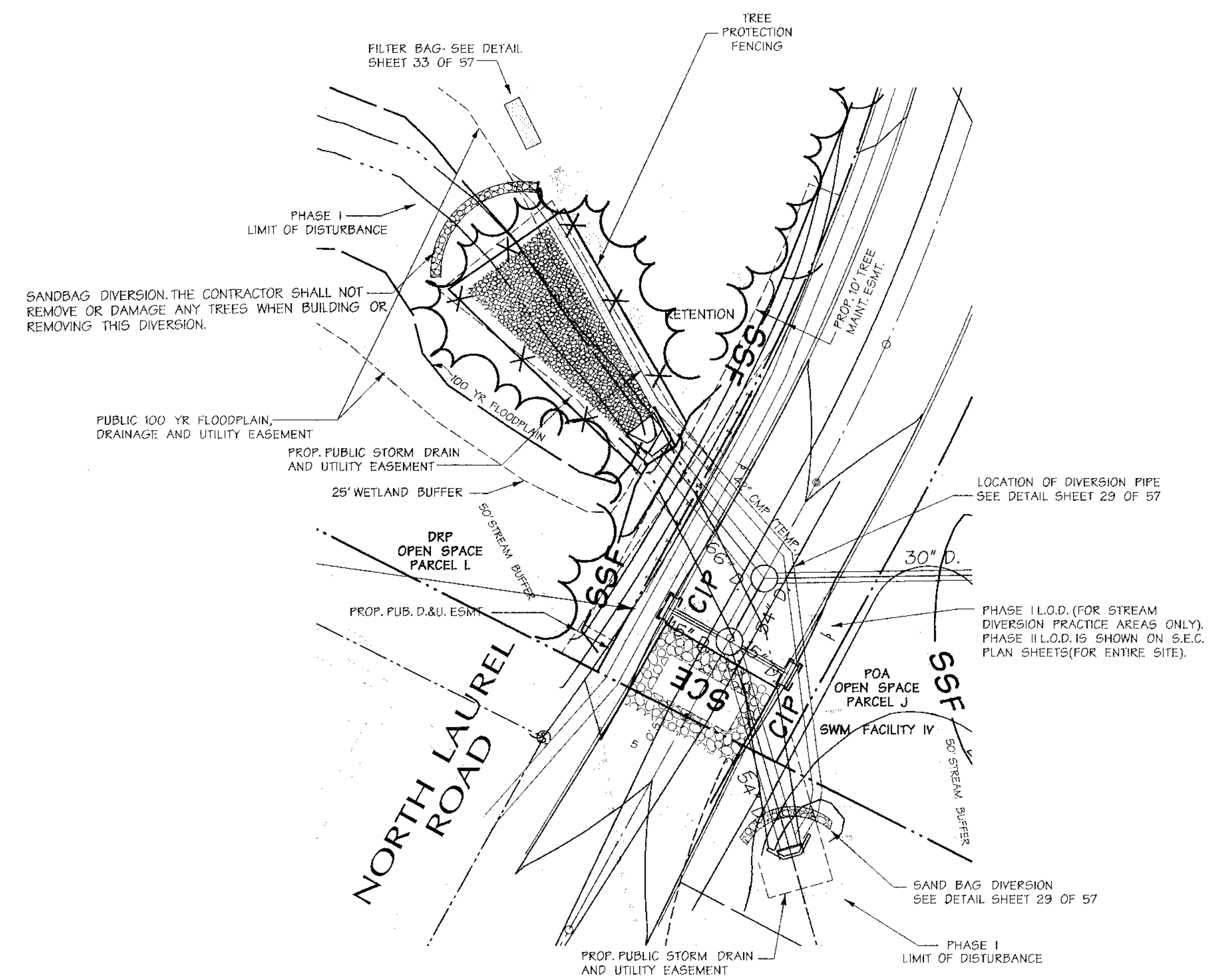

PIPE DIVERSION
(NORTH LAUREL ROAD)

SCALE: 1"=30'

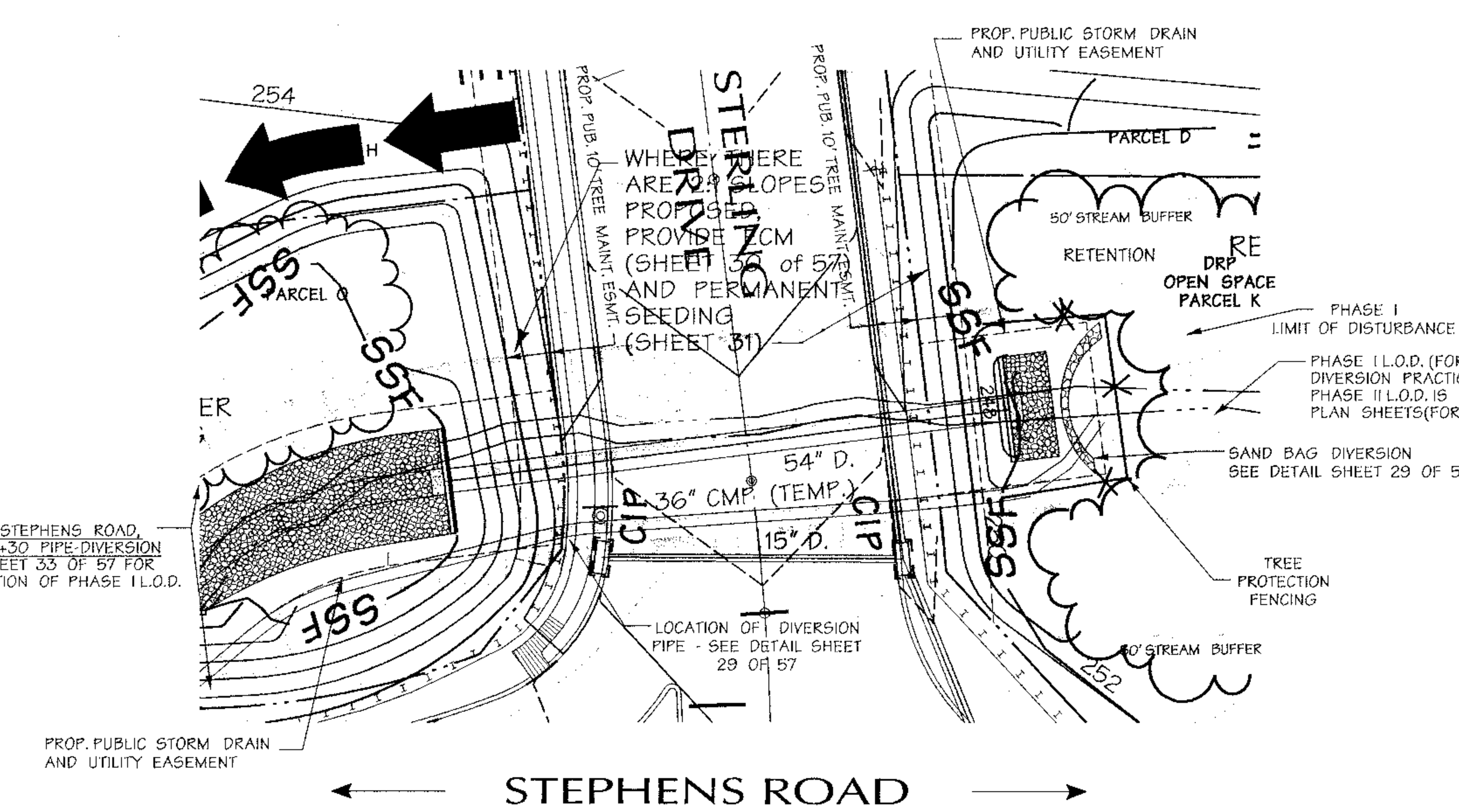

PIPE DIVERSION
(STERLING DRIVE)

SCALE: 1"=30'

MDE PERMIT AND TRACKING No. 01-NT-0500/200260639

F-02-111

DEVELOPER'S CERTIFICATION:

"I/WE CERTIFY THAT ALL DEVELOPMENT AND CONSTRUCTION WILL BE DONE ACCORDING TO THIS PLAN, AND THAT ANY RESPONSIBLE PERSONNEL INVOLVED IN THE CONSTRUCTION PROJECT WILL HAVE A CERTIFICATE OF ATTENDANCE AT A DEPARTMENT OF THE ENVIRONMENT APPROVED TRAINING PROGRAM FOR THE CONTROL OF SEDIMENT AND EROSION BEFORE BEGINNING THE PROJECT. I ALSO AUTHORIZE PERIODIC ON-SITE INSPECTION BY THE HOWARD SOIL CONSERVATION DISTRICT."

[signature] 9/20/02
SIGNATURE OF DEVELOPER — DATE
PRINT NAME BELOW SIGNATURE
Robert A. Jenkins

ENGINEER'S CERTIFICATION:

"I CERTIFY THAT THIS PLAN FOR EROSION AND SEDIMENT CONTROL REPRESENTS A PRACTICAL AND WORKABLE PLAN BASED ON MY PERSONAL KNOWLEDGE OF THE SITE CONDITIONS AND THAT IT WAS PREPARED IN ACCORDANCE WITH THE REQUIREMENTS OF THE HOWARD SOIL CONSERVATION DISTRICT."

[signature] 9/20/02
SIGNATURE OF ENGINEER
PRINT NAME BELOW SIGNATURE
John W. Ranocchia, Sr.

REVIEWED FOR HOWARD S.C.D. AND MEETS TECHNICAL REQUIREMENTS

[signature] 9/30/02
U.S. NATURAL RESOURCE CONSERVATION SERVICE — DATE

THIS DEVELOPMENT PLAN IS APPROVED FOR SOIL EROSION AND SEDIMENT CONTROL BY THE HOWARD SOIL CONSERVATION DISTRICT.

[signature] 9/30/02
HOWARD S.C.D. — DATE

9/20/02
Date

Professional Engr. No. 10557

APPROVED: HOWARD COUNTY DEPT. OF PUBLIC WORKS

[signature] 10-10-02
for CHIEF, BUREAU OF HIGHWAYS — DATE

APPROVED: HOWARD COUNTY DEPT. OF PLANNING AND ZONING

[signature] 10/22/02
CHIEF, DIVISION OF LAND DEVELOPMENT — DATE

[signature] 10/18/02
CHIEF, DEVELOPMENT ENGINEERING DIVISION MK — DATE

Date	No.	Revision Description

REVITZ PROPERTY

OWNER /DEVELOPER:

THE HOWARD RESEARCH & DEVELOPMENT CORPORATION
10275 LITTLE PATUXENT PARKWAY
COLUMBIA, MARYLAND 21044

DMW
Daft·McCune·Walker, Inc.
200 East Pennsylvania Avenue
Towson, Maryland 21286
(410) 296-3333
Fax 296-4705

A Team of Land Planners, Landscape Architects, Engineers, Surveyors & Environmental Professionals

SUBDIVISION NAME			SECTION/AREA		LOT/PARCEL # 165 & P/O PAR. 837
PLAT# OR L/F 2267/436	BLOCK # 20	ZONE PEC	TAX/ZONE MAP 47	ELECT. DISTRICT 6 th	CENSUS TRACT
WATER CODE			SEWER CODE		

TITLE
FINAL PLAN
SEDIMENT AND EROSION CONTROL DETAILS

Des By DFM	Scale 1" = 50'	Proj. No. 01011	
Drn By WDE	Date 9/19/02	32 OF 57	
Chk By	Approved		

F-02-111

Thu Sep 19 16:09:09 2002 ... 01011 ... 9/19/02 4:08:57 PM

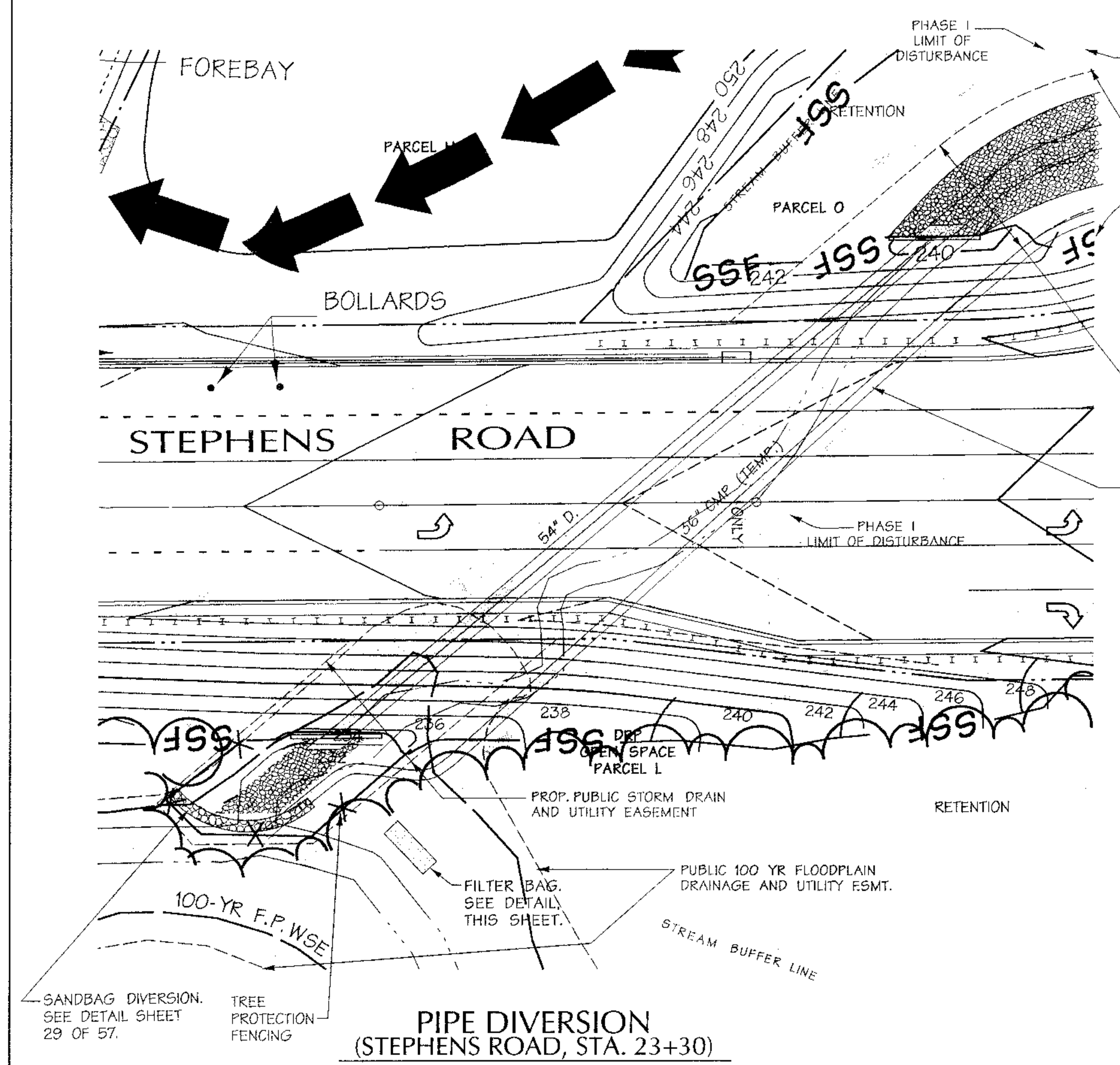

PIPE DIVERSION
(STEPHENS ROAD, STA. 23+30)

SCALE: 1"=30'

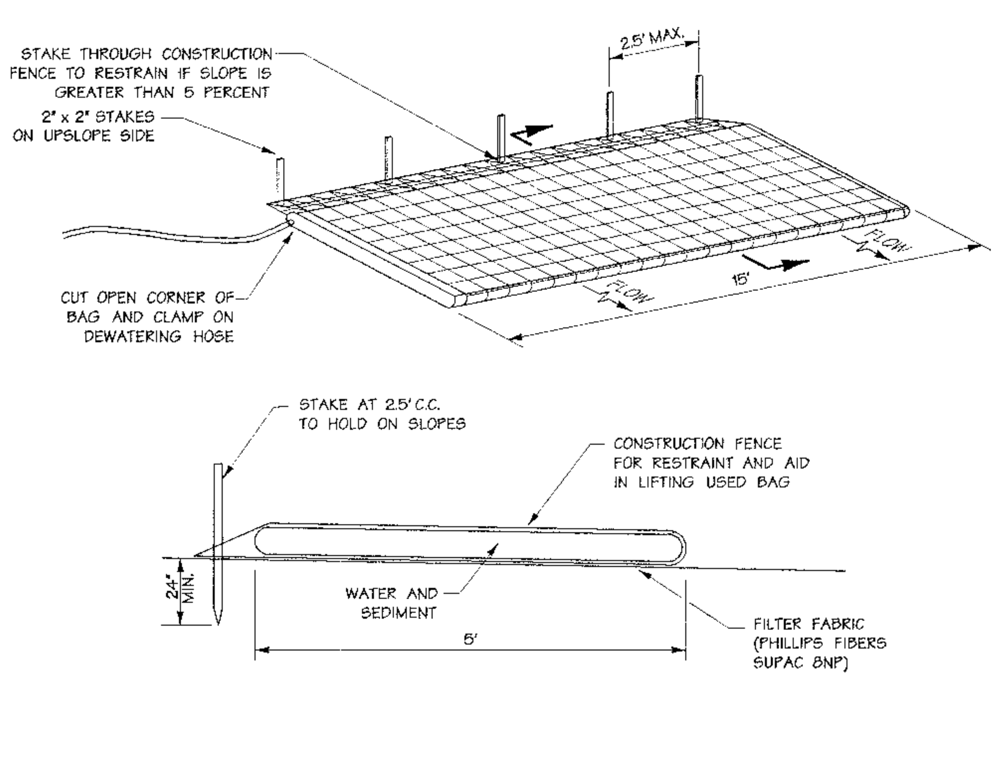

1. FILTER BAG SHALL BE PLACED ON A SLOPING OR LEVEL, WELL GRADED VEGETATED SITE SUCH THAT WATER WILL FLOW AWAY FROM DEVICE AND ANY WORK AREAS.
2. WIDTH AND LENGTH SHALL BE AS SHOWN IN THE TABLE.
3. THE FILTER BAG MUST BE STAKED IN PLACE AND SECURED TO THE PUMP DISCHARGE LINE.
4. FILTER BAG SHALL NOT BE USED FOR DISCHARGE FLOWS GREATER THAN 300 GPM.
5. DEVICE SHALL BE REMOVED AND DISPOSED OF AFTER BAG IS FILLED WITH SEDIMENT. SEDIMENT FROM BAG SHALL BE SPREAD IN AN UPLAND AREA.

STANDARD SYMBOL

Sedctrl.cel/ALFLBD

Filter Bag

Not To Scale

DESCRIPTION

THE WORK SHOULD CONSIST OF INSTALLING DEWATERING BASINS JOINTLY WITH CHANNEL DIVERSION MEASURES TO FILTER SEDIMENT LADEN WATER FROM IN-STREAM CONSTRUCTION SITES BEFORE THE WATER RE-ENTERS THE DOWNSTREAM REACH.

EFFECTIVE USES & LIMITATIONS

UNDERSIZED DEWATERING BASINS WILL NOT ADEQUATELY FILTER SEDIMENT LADEN WATER FROM THE CONSTRUCTION SITE.

MATERIAL SPECIFICATIONS

MATERIALS FOR DEWATERING BASINS SHOULD MEET THE FOLLOWING REQUIREMENTS: RIPRAP: RIPRAP SHOULD BE WASHED AND HAVE A DIAMETER RANGING FROM 4 TO 6 INCHES (10 TO 15 CENTIMETERS). FILTER CLOTH: FILTER CLOTH SHOULD BE A WOVEN OR NON WOVEN FABRIC CONSISTING ONLY OF CONTINUOUS CHAIN POLYMERIC FILAMENTS OR YARNS OF POLYESTER. THE FABRIC SHOULD BE INERT TO COMMONLY ENCOUNTERED CHEMICALS, HYDRO-CARBONS, ULTRAVIOLET LIGHT, AND MILDEW AND SHOULD BE ROT RESISTANT. STRAW BALES/SILT FENCE: STRAW BALES SHOULD MEET THE CRITERIA AS SPECIFIED IN THE 1994 MARYLAND STANDARDS AND SPECIFICATIONS FOR SOIL EROSION AND SEDIMENT CONTROL.

INSTALLATION GUIDELINES

DUE TO THE DANGER OF OVERTOPPING BY EVENTS GREATER THAN THE DESIGN FLOW, DEWATERING BASINS REQUIRE A VEGETATIVE BUFFER STRIP TO FILTER SEDIMENT-LADEN OVERFLOW. A 50-FOOT (15-METER) MINIMUM GRASS COVERED BUFFER WIDTH IS REQUIRED FOR SLOPES LESS THAN 20 DEGREES (1:2.7) WHEN RIGHT-OF-WAY IS NOT LIMITED. FOR SLOPES GREATER THAN 20 DEGREES, BASINS SHOULD HAVE A 100 FOOT (30-METER) MINIMUM BUFFER WIDTH WHEN PRACTICAL. ALL EROSION AND SEDIMENT CONTROL DEVICES SHOULD BE INSTALLED AS THE FIRST ORDER OF BUSINESS ACCORDING TO A PLAN APPROVED BY THE WATER MANAGEMENT ADMINISTRATION (WMA) OR LOCAL AUTHORITY. DEWATERING BASINS SHOULD BE CONSTRUCTED AS FOLLOWS (REFER TO DETAIL 1.1):

1. EXCAVATED SUBSOIL AND TOPSOIL SHOULD BE STORED SEPARATELY AND REPLACED IN THEIR NATURAL ORDER. ADDITIONALLY, THE EXCAVATED SEDIMENTS SHOULD BE PREVENTED FROM ENTERING THE WATERWAY BY USING SEDIMENT PERIMETER CONTROLS OR OTHER MEASURES.

2. THE DEWATERING BASINS SHOULD HAVE A MINIMUM DEPTH OF 3 FEET (1 METER) WHERE BASIN DEPTH IS MEASURED FROM THE TOP OF THE STRAW TO THE TO THE BOTTOM OF THE EXCAVATION.

3. ONCE THE DEWATERING BASIN BECOMES FILLED TO ONE-HALF OF THE EXCAVATED DEPTH, ACCUMULATED SEDIMENT SHOULD BE REMOVED AND DISPOSED OF IN A APPROVED AREA OUTSIDE THE 100-YEAR FLOODPLAIN UNLESS OTHERWISE AUTHORIZED BY THE WMA.

4. SEDIMENT CONTROL DEVICES SHOULD REMAIN IN PLACE UNTIL ALL DISTURBED AREAS ARE STABILIZED AND THE INSPECTING AUTHORITY APPROVES THEIR REMOVAL. ALL DISTURBED GROUND CONTOURS SHOULD BE RETURNED TO THEIR ORIGINAL CONDITION UNLESS OTHERWISE APPROVED BY THE WMA OR LOCAL AUTHORITY.

MARYLAND DEPARTMENT OF THE ENVIRONMENT
WATER MANAGEMENT ADMINISTRATION

DESCRIPTION

THE WORK SHOULD CONSIST OF INSTALLING SANDBAG OR STONE FLOW DIVERSIONS FOR THE PURPOSE OF EROSION CONTROL WHEN CONSTRUCTION ACTIVITIES OCCUR WITHIN THE STREAM CHANNEL.

EFFECTIVE USES & LIMITATIONS

DIVERSIONS ARE USED TO ISOLATE WORK AREAS FROM FLOW DURING THE CONSTRUCTION OF IN-STREAM PROJECTS. DIVERSIONS WHICH HAVE AN INSUFFICIENT FLOW CAPACITY CAN FAIL AND SEVERELY ERODE THE DISTURBED CHANNEL SECTION UNDER CONSTRUCTION. THEREFORE, IN-CHANNEL CONSTRUCTION ACTIVITIES SHOULD OCCUR ONLY DURING PERIODS OF LOW RAINFALL. THIS TEMPORARY MEASURE MAY NOT BE PRACTICAL IN LARGE CHANNELS.

MATERIAL SPECIFICATIONS

MATERIALS FOR SANDBAG AND STONE STREAM DIVERSIONS SHOULD MEET THE FOLLOWING REQUIREMENTS:
RIPRAP: RIPRAP SHOULD BE WASHED AND HAVE A MINIMUM DIAMETER OF 6 INCHES (0.15 METERS).
SANDBAGS: SANDBAGS SHOULD CONSIST OF MATERIALS WHICH ARE RESISTANT TO ULTRA-VIOLET RADIATION, TEARING, AND PUNCTURE AND SHOULD BE WOVEN TIGHTLY ENOUGH TO PREVENT LEAKAGE OF THE FILL MATERIAL (I.E., SAND, FINE GRAVEL, ETC.).
SHEETING: SHEETING SHOULD CONSIST OF POLYETHYLENE OR OTHER MATERIALS WHICH ARE IMPERVIOUS AND RESISTANT TO PUNCTURE AND TEARING.

INSTALLATION GUIDELINES

ALL EROSION AND SEDIMENT CONTROL DEVICES, INCLUDING DEWATERING BASINS, SHOULD BE IMPLEMENTED AS THE FIRST ORDER OF BUSINESS ACCORDING TO A PLAN APPROVED BY THE WMA OR LOCAL AUTHORITY. INSTALLATION SHOULD PROCEED FROM UPSTREAM TO DOWNSTREAM DURING PERIODS OF LOW FLOW. IF NECESSARY, SILT FENCE OR STRAW BALES SHOULD BE INSTALLED AROUND THE PERIMETER OF THE WORK AREA. SANDBAG/STONE DIVERSIONS CAN BE USED INDEPENDENTLY OR AS COMPONENTS OF OTHER STREAM DIVERSION TECHNIQUES.

INSTALLATION OF THIS MEASURE SHOULD PROCEED AS FOLLOWS (REFER TO DETAIL 1.5):

1. THE DIVERSION STRUCTURE SHOULD BE INSTALLED FROM UPSTREAM TO DOWNSTREAM.
2. THE HEIGHT OF THE SANDBAG/STONE DIVERSION SHOULD BE A FUNCTION OF THE DURATION OF THE PROJECT IN THE STREAM REACH. FOR PROJECTS WITH A DURATION LESS THAN 2 WEEKS, THE HEIGHT OF THE DIVERSION SHOULD BE ONE HALF THE STREAM BANK HEIGHT, MEASURED FROM THE CHANNEL BED, PLUS 1 FOOT (0.3 METERS) OR BANK FULL HEIGHT, WHICHEVER IS GREATER. FOR PROJECTS OF LONGER DURATION, THE TOP OF THE SANDBAG OR STONE DIVERSION SHOULD CORRESPOND TO BANK FULL HEIGHT. FOR DIVERSION STRUCTURES UTILIZING SANDBAGS, THE STREAM BED SHOULD BE HAND PREPARED PRIOR TO PLACEMENT OF THE BASE LAYER OF SANDBAGS IN ORDER TO ENSURE A WATER TIGHT FIT. ADDITIONALLY, IT MAY BE NECESSARY TO PREPARE THE BANK IN A SIMILAR FASHION.
3. ALL EXCAVATED MATERIAL SHOULD BE DEPOSITED AND STABILIZED IN AN APPROVED AREA OUTSIDE THE 100-YEAR FLOODPLAIN UNLESS OTHERWISE AUTHORIZED BY THE WMA.
4. SEDIMENT-LADEN WATER FROM THE CONSTRUCTION AREA SHOULD BE PUMPED TO A DEWATERING BASIN. TEMPORARY MEASURE FOR DEWATERING IN-CHANNEL CONSTRUCTION SITES
5. SHEETING ON THE DIVERSION SHOULD BE POSITIONED SUCH THAT THE UPSTREAM PORTION COVERS THE DOWNSTREAM PORTION WITH AT LEAST A 18-INCH (0.45 METERS) OVERLAP.
6. SANDBAG OR STONE DIVERSIONS SHOULD NOT OBSTRUCT MORE THAN 45% OF THE STREAM WIDTH. ADDITIONALLY, BANK STABILIZATION MEASURES SHOULD BE PLACED IN THE CONSTRICTED SECTION IF ACCELERATED EROSION AND BANK SCOUR ARE OBSERVED DURING THE CONSTRUCTION TIME OR IF PROJECT TIME IS EXPECTED TO LAST MORE THAN 2 WEEKS.
7. PRIOR TO REMOVAL OF THESE TEMPORARY STRUCTURES, ANY ACCUMULATED SEDIMENT SHOULD BE REMOVED, DEPOSITED AND STABILIZED IN AN APPROVED AREA OUTSIDE THE 100-YEAR FLOODPLAIN UNLESS AUTHORIZED BY THE WMA.
8. SEDIMENT CONTROL DEVICES ARE TO REMAIN IN PLACE UNTIL ALL DISTURBED AREAS ARE STABILIZED IN ACCORDANCE WITH AN APPROVED SEDIMENT AND EROSION CONTROL PLAN AND THE INSPECTING AUTHORITY APPROVES THEIR REMOVAL.

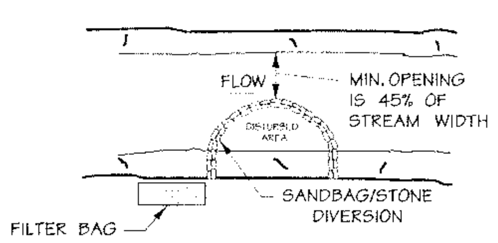

PLAN VIEW

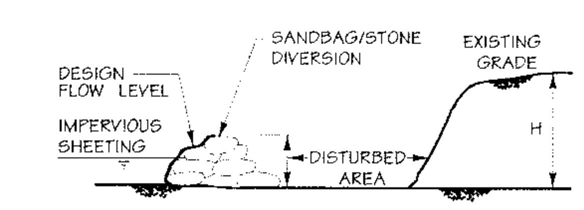

H/2+1 FT (0.3 M) FOR PROJECTS OF DURATION 2 WEEKS* 2-YEAR FLOOD ELEVATION FOR PROJECTS OF LONGER DURATION

LONGITUDINAL SECTION VIEW

MARYLAND DEPARTMENT OF THE ENVIRONMENT
WATER MANAGEMENT ADMINISTRATION

REVISED NOVEMBER 2000 MDWT 1.5

Sandbag / Stone Diversion

CONSTRUCTION OF PIPE DIVERSION

SEQUENCE — NO. OF DAYS

1. CLEAR FOR AND INSTALL SEDIMENT CONTROL DEVICES AND MEASURES, SAND BAG DIVERSION, AND RIP-RAP OUTFALL PROTECTION AND EROSION CONTROL MATTING AT DOWN STREAM END. MAINTAIN EXISTING STREAM FLOW AT ALL TIMES. 1
   a. INSTALL ONLY THAT PORTION OF SAND BAG DIVERSION EAST OF STREAM.
2. CLEAR & GRUB FOR AND BEGIN LAYING PIPE.
   a. INSTALL ONLY THAT PORTION OF PIPE THAT CAN BE CONSTRUCTED, BACKFILLED AND STABILIZED WITHIN ONE WORKING DAY.
   b. PLACE SILT FENCE ON LOW SIDE OF WORK AREA DURING PIPE EXCAVATION, IF REQUIRED.
   c. WITHIN ONE DAYS CONSTRUCTION OF UPPER INVERT AND WITH THE SEDIMENT CONTROL INSPECTORS APPROVAL, CLEAR FOR AND INSTALL SAND BAG DIVERSION WITH RIP-RAP INFLOW PROTECTION AT UPPER END.
   c. MAINTAIN EXISTING STREAM FLOW AT ALL TIMES. WITH SEDIMENT CONTROL INSPECTOR APPROVAL, INSTALL LAST SECTION OF PIPE MAKE CONNECTION FOR REROUTING OF STREAM. 2
3. CLEAR & GRUB FOR AND INSTALL REMAINING SAND BAG DIVERSION TO DIVERT STREAM AT BOTH ENDS.
   a. INSTALL UPSTREAM END FIRST, THEN DOWNSTREAM. 1
4. CLEAR & GRUB REMAINING WORK AREA AND INSTALL TWIN CULVERT SYSTEM.
   a. WITH SEDIMENT CONTROL INSPECTOR APPROVAL, CONSTRUCT HEADWALLS AND INSTALL STREAM BOTTOM PROTECTION.
   b. WITH SEDIMENT CONTROL INSPECTOR APPROVAL, ADJUST SEDIMENT CONTROL DEVICES AND MEASURES AS PER PLAN (SHEET) FOR ROAD CONSTRUCTION (SEE MAIN SEQUENCE - SHEET 29) .... 1 WK.
5. UPON COMPLETION OF PIPE INSTALLATION AND WITH SEDIMENT CONTROL INSPECTOR APPROVAL, REMOVE SEDIMENT CONTROL DEVICES AND MEASURES. REMOVAL SHALL TAKE PLACE UNDER SEQ. # 8 OF THE MAIN SEQUENCE OF CONSTRUCTION, THIS SHEET. 1

NOTE:
CONTRACTOR SHALL USE EXTREME CAUTION TO PREVENT SEDIMENT FROM ENTERING THE STREAM AREA..
ALL EROSION/SEDIMENT CONTROL MEASURES SHALL BE MAINTAIN AND REPAIRED AT THE END OF EACH WORK DAY, AS REQUIRED.
ALL DISTURBED AREAS OUTSIDE OF THE LOD SHALL BE PROTECTED WITH OTHER E.S.C. DEVICES AND MEASURES AND/OR STABILIZED WITH TEMPORARY/PERMANENT SEEDING SPECIFICATIONS AT THE END OF EACH WORKING DAY, AS DIRECTED AND APPROVED BY SEDIMENT CONTROL INSPECTOR.

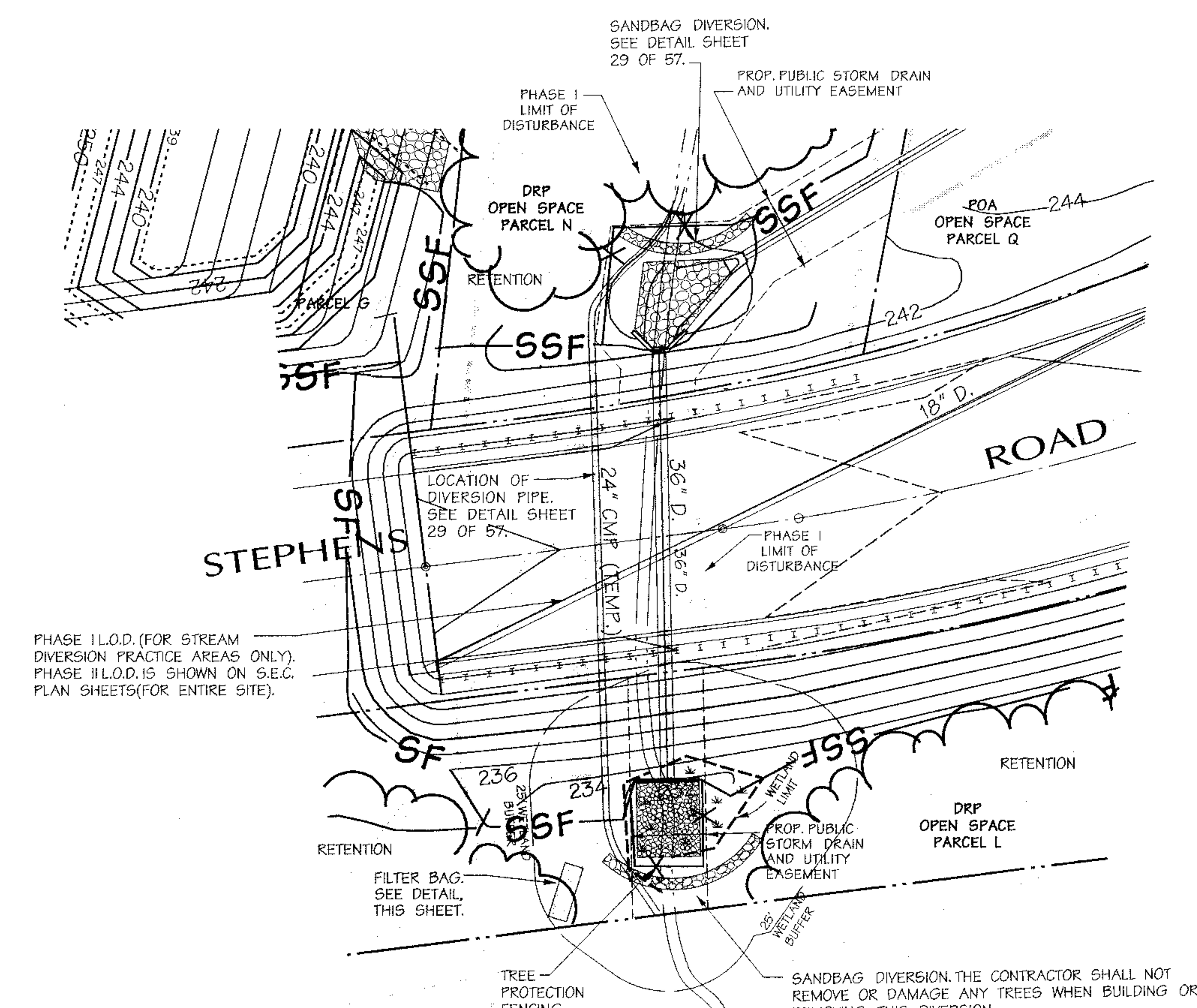

PIPE DIVERSION
(STEPHENS ROAD, STA. 28+40)

SCALE: 1"=30'

PLAN VIEW

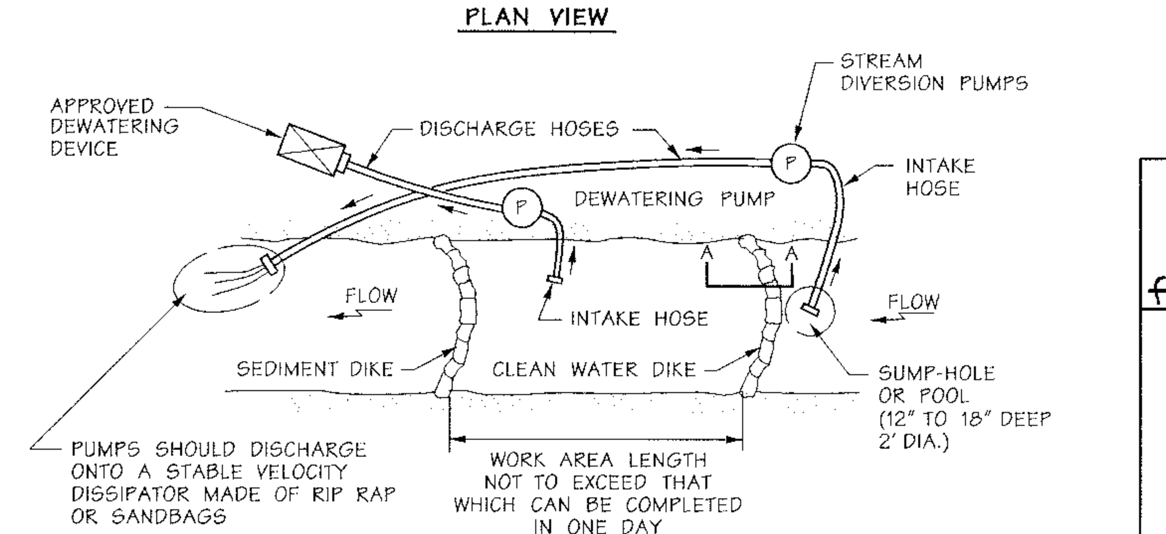

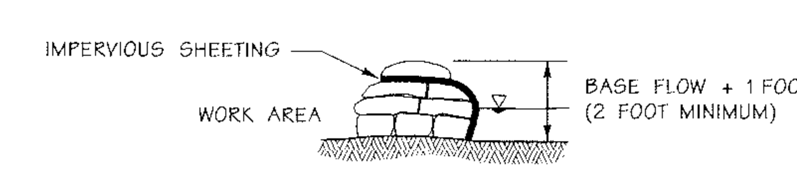

CROSS SECTION OF SANDBAG DIKE

SECTION A-A

REVISED NOVEMBER 2000
PAGE 1.2 - 3

Pump-Around Practice

MDE PERMIT AND TRACKING No. 01-NT-0500/200260639

DEVELOPER'S CERTIFICATION:

"I/WE CERTIFY THAT ALL DEVELOPMENT AND CONSTRUCTION WILL BE DONE ACCORDING TO THIS PLAN, AND THAT ANY RESPONSIBLE PERSONNEL INVOLVED IN THE CONSTRUCTION PROJECT WILL HAVE A CERTIFICATE OF ATTENDANCE AT A DEPARTMENT OF THE ENVIRONMENT APPROVED TRAINING PROGRAM FOR THE CONTROL OF SEDIMENT AND EROSION BEFORE BEGINNING THE PROJECT. I ALSO AUTHORIZE PERIODIC ON-SITE INSPECTION BY THE HOWARD SOIL CONSERVATION DISTRICT."

[signature] 9/20/02
SIGNATURE OF DEVELOPER — DATE
PRINT NAME BELOW SIGNATURE
Robert A. Jenkins

ENGINEER'S CERTIFICATION:

"I CERTIFY THAT THIS PLAN FOR EROSION AND SEDIMENT CONTROL REPRESENTS A PRACTICAL AND WORKABLE PLAN BASED ON MY PERSONAL KNOWLEDGE OF THE SITE CONDITIONS AND THAT IT WAS PREPARED IN ACCORDANCE WITH THE REQUIREMENTS OF THE HOWARD SOIL CONSERVATION DISTRICT."

[signature] 9/20/02
SIGNATURE OF ENGINEER
PRINT NAME BELOW SIGNATURE
John W. Ramacchia, Sr.

REVIEWED FOR HOWARD S.C.D. AND MEETS TECHNICAL REQUIREMENTS

[signature] 9/30/02
U.S. NATURAL RESOURCE CONSERVATION SERVICE — DATE

THIS DEVELOPMENT PLAN IS APPROVED FOR SOIL EROSION AND SEDIMENT CONTROL BY THE HOWARD SOIL CONSERVATION DISTRICT.

[signature] 9/30/02
HOWARD S.C.D. — DATE

F-02-111

9/20/02
Date

Professional Engr. No. 10551

APPROVED: HOWARD COUNTY DEPT. OF PUBLIC WORKS

[signature] 10-10-02
for CHIEF, BUREAU OF HIGHWAYS — DATE

APPROVED: HOWARD COUNTY DEPT. OF PLANNING AND ZONING

[signature] 10/22/02
CHIEF, DIVISION OF LAND DEVELOPMENT — DATE

[signature] 10/18/02
CHIEF, DEVELOPMENT ENGINEERING DIVISION MK — DATE

Date	No.	Revision Description

REVITZ PROPERTY

OWNER /DEVELOPER:

THE HOWARD RESEARCH & DEVELOPMENT CORPORATION
10275 LITTLE PATUXENT PARKWAY
COLUMBIA, MARYLAND 21044

DMW
Daft·McCune·Walker, Inc.
200 East Pennsylvania Avenue
Towson, Maryland 21286
(410) 296-3333
Fax 296-4705

A Team of Land Planners, Landscape Architects, Engineers, Surveyors & Environmental Professionals

SUBDIVISION NAME			SECTION/AREA		LOT/PARCEL #
					165 & P/O PAR. 837
PLAT# OR L/F	BLOCK #	ZONE	TAX ZONE MAP	ELECT. DISTRICT	CENSUS TRACT
2267/436	20	PEC	47	6 th	
WATER CODE			SEWER CODE		

TITLE

FINAL PLAN
SEDIMENT AND EROSION CONTROL DETAILS

Des By	DFM	Scale	1" = 50'	Proj. No.	01011
Drn By	WDE	Date	9/19/02		33 OF 57
Chk By		Approved			

F-02-111

Thu Sep 19 16:33:26 2002 ... 9/19/02 4:22:16 PM

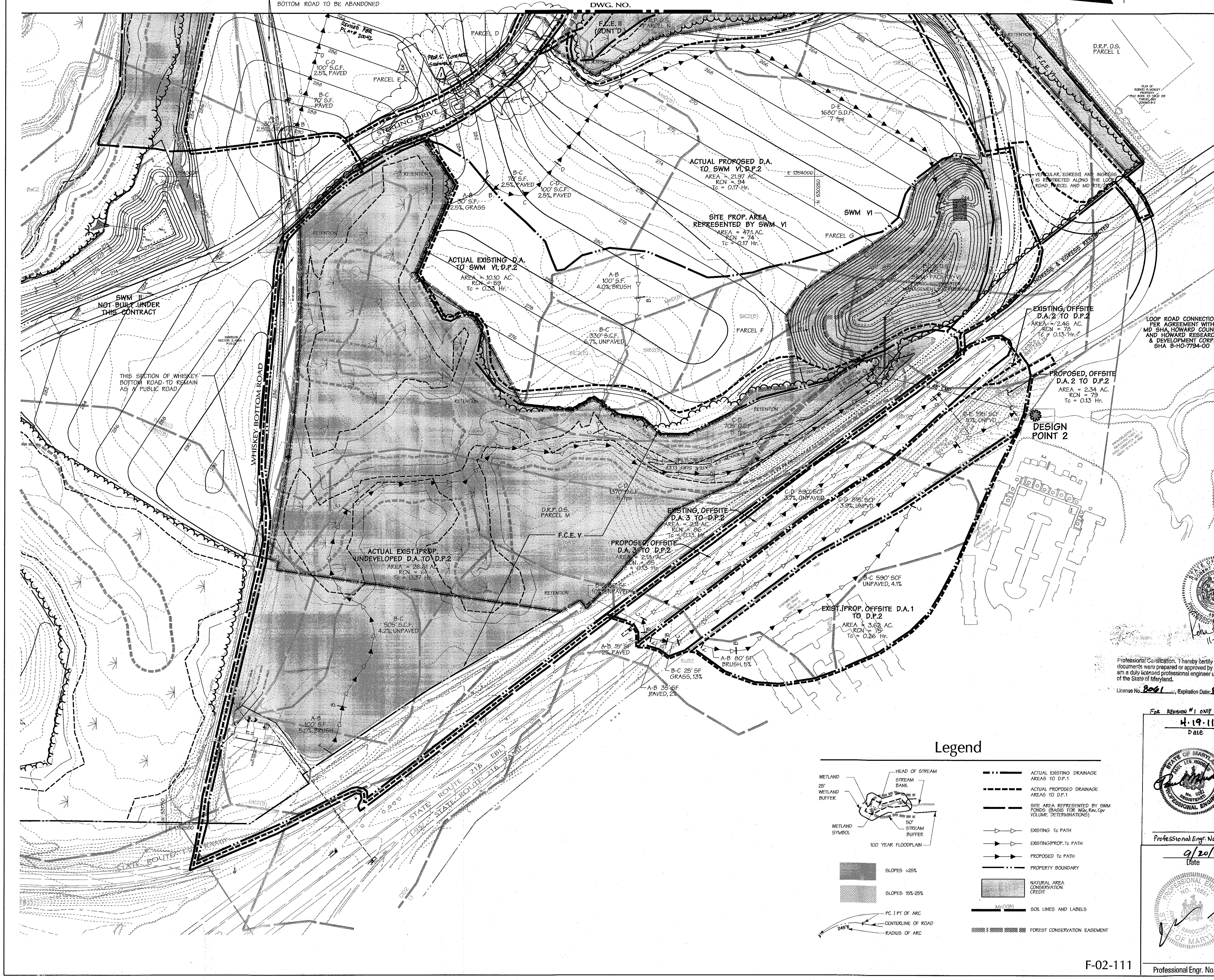

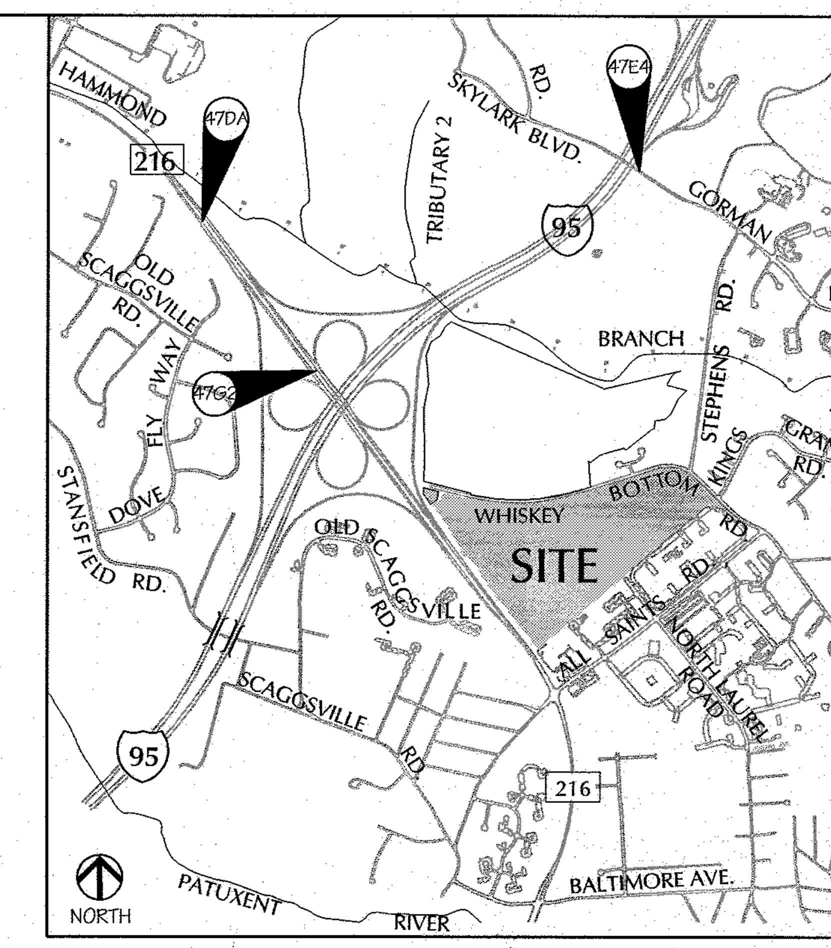

Vicinity Map
SCALE: 1"=2000'

NOTES:

1. THE HYDROLOGY FOR SWM POND VI CONSISTS OF ACTUAL EXISTING DRAINAGE AREAS, ACTUAL PROPOSED DRAINAGE AREAS AND A SITE PROPOSED AREA. THE ACTUAL EXISTING AND ACTUAL PROPOSED AREAS ARE ROUTED TO DESIGN POINT 2 (TR-20 HYDRAULIC MODEL) TO DETERMINE POND AND RISER SIZE NEEDED FOR 10-YEAR MANAGEMENT. THE SITE PROPOSED AREA, WHICH CONSISTS OF SITE AREA THAT IS REPRESENTED BY THE POND, IS USED FOR DETERMINATION OF THE WQv (WATER QUALITY) AND Cpv (CHANNEL PROTECTION) VOLUMES IN ACCORDANCE WITH THE 2000 MDE SWM REGULATIONS.

2. THE SELECTED DESIGN POINT FOR THE STORM ROUTING IS TAKEN AT THE DOWNSTREAM END OF THE EXISTING 48" CMP THAT PASSES UNDER MD. ROUTE 216 AND IS CALLED DESIGN POINT 2.

(3) THE PURPOSE OF REVISION 3 IS TO SHOW THE WORK ASSOCIATED WITH THE EMERSON CAMPUS VCP. SDP-16-005

(3) PROFESSIONAL CERTIFICATION FOR REV#3

I HEREBY CERTIFY THAT THESE DOCUMENTS WERE PREPARED OR APPROVED BY ME, AND THAT I AM A DULY LICENSED PROFESSIONAL ENGINEER UNDER THE LAWS OF THE STATE OF MARYLAND, LICENSE NO. 45292 EXPIRATION DATE 05/21/2018

STATE OF MARYLAND ROBERT A. CROWLEY 45292 PROFESSIONAL ENGINEER — 11-22-16

Professional Certification. I hereby certify that these documents were prepared or approved by me, and that I am a duly licensed professional engineer under the laws of the State of Maryland.

License No. 8061, Expiration Date: 8-26-11

FOR REVISION #1 ONLY

4-19-11
Date

STATE OF MARYLAND PAUL LEE HUDSON No. 8061 REGISTERED PROFESSIONAL ENGINEER

Professional Engr. No. 8061

9/20/02
Date

PROFESSIONAL ENGINEER NO. 10551 JOHN RANOCCHIA, SR. STATE OF MARYLAND

Professional Engr. No. 10551

APPROVED: HOWARD COUNTY DEPT. OF PUBLIC WORKS

for CHIEF, BUREAU OF HIGHWAYS — DATE 10-10-02

APPROVED: HOWARD COUNTY DEPT. OF PLANNING AND ZONING

CHIEF, DIVISION OF LAND DEVELOPMENT — DATE 10/22/02

CHIEF, DEVELOPMENT ENGINEERING DIVISION MK — DATE 10/18/02

Date	No.	Revision Description
05/23/15	3	EMERSON CAMPUS VCP
2-7-11	1	ADD 5' CONCRETE SIDEWALK ALONG PARCEL D FRONTAGE

REVITZ PROPERTY

OWNER /DEVELOPER:

THE HOWARD RESEARCH & DEVELOPMENT CORPORATION
10275 LITTLE PATUXENT PARKWAY
COLUMBIA, MARYLAND 21044

DMW
Daft·McCune·Walker, Inc.
200 East Pennsylvania Avenue
Towson, Maryland 21286
(410) 296-3333
Fax 296-4705

A Team of Land Planners, Landscape Architects, Engineers, Surveyors & Environmental Professionals

SUBDIVISION NAME	SECTION/AREA		LOT/PARCEL #
			165 & P/O PAR. 837
PLAT# OR L/F 2267/436 · BLOCK # 20 · ZONE PEC	TAX/ZONE MAP 47, GRID 20	ELECT. DISTRICT 6 th	CENSUS TRACT
WATER CODE	SEWER CODE		

TITLE

FINAL PLAN
SWM DRAINAGE AREA MAP

Des By	MRT	Scale	1" = 100'	Proj. No.	01011
Drn By	KMF	Date	9/19/02		
Chk By		Approved		34 OF 57	

F-02-111

F-02-111

Thu Sep 19 16:30:57 2002 ... 01011.dgn

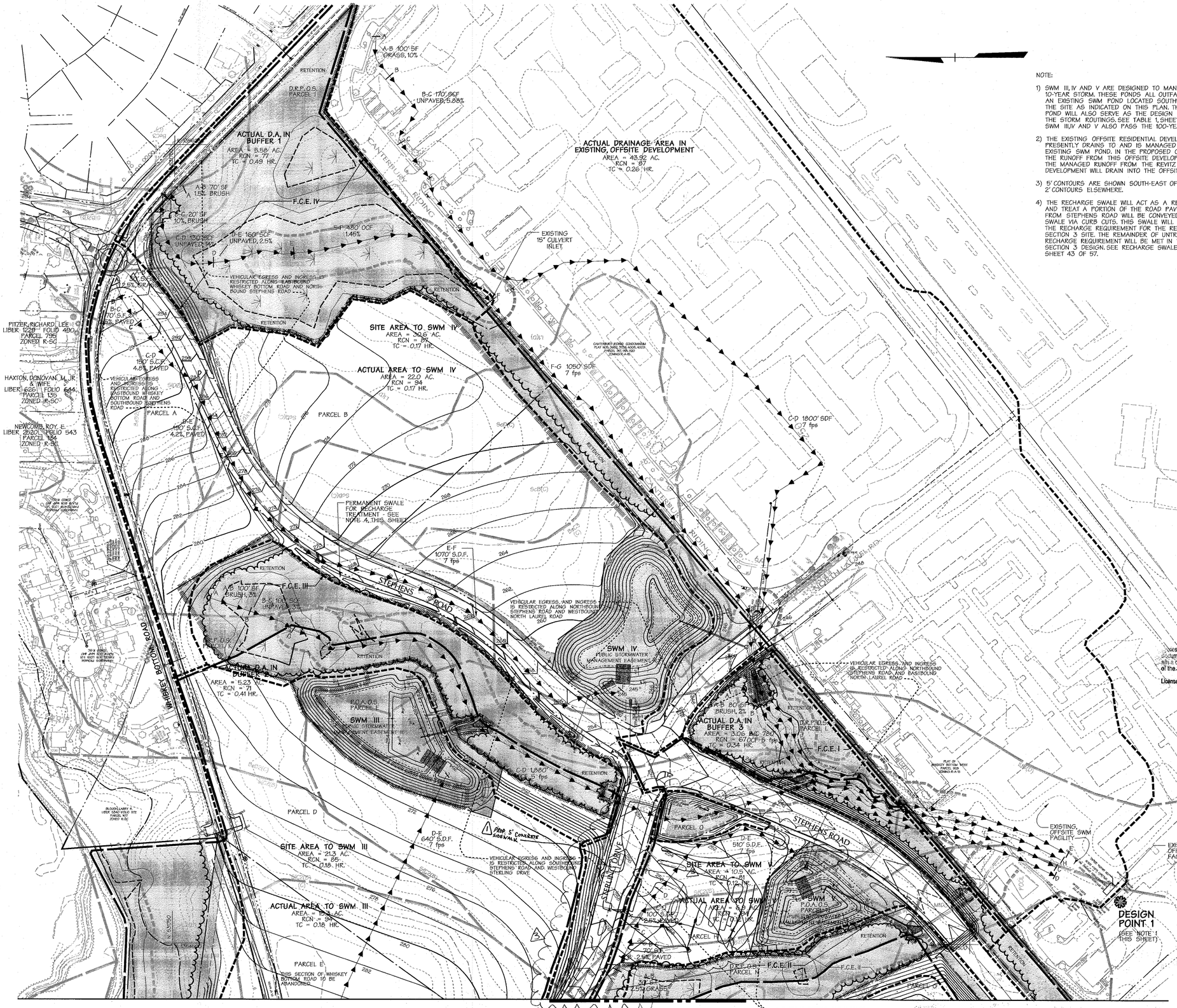

NOTE:

1) SWM III, IV AND V ARE DESIGNED TO MANAGE THE 10-YEAR STORM. THESE PONDS ALL OUTFALL INTO AN EXISTING SWM POND LOCATED SOUTHWEST OF THE SITE AS INDICATED ON THIS PLAN. THE OFFSITE POND WILL ALSO SERVE AS THE DESIGN POINT FOR THE STORM ROUTINGS. SEE TABLE 1, SHEET 36. SWM III, IV AND V ALSO PASS THE 100-YEAR STORM.

2) THE EXISTING OFFSITE RESIDENTIAL DEVELOPMENT PRESENTLY DRAINS TO AND IS MANAGED BY THE EXISTING SWM POND. IN THE PROPOSED CONDITION, THE RUNOFF FROM THIS OFFSITE DEVELOPMENT AND THE MANAGED RUNOFF FROM THE REVITZ PROPERTY DEVELOPMENT WILL DRAIN INTO THE OFFSITE POND.

3) 5' CONTOURS ARE SHOWN SOUTH-EAST OF THE SITE, 2' CONTOURS ELSEWHERE.

4) THE RECHARGE SWALE WILL ACT AS A RECHARGE CREDIT AND TREAT A PORTION OF THE ROAD PAVEMENT. RUNOFF FROM STEPHENS ROAD WILL BE CONVEYED TO THE SWALE VIA CURB CUTS. THIS SWALE WILL PARTIALLY MEET THE RECHARGE REQUIREMENT FOR THE REVITZ/EMERSON SECTION 3 SITE. THE REMAINDER OF UNTREATED RECHARGE REQUIREMENT WILL BE MET IN THE EMERSON SECTION 3 DESIGN. SEE RECHARGE SWALE DETAIL, SHEET 43 OF 57.

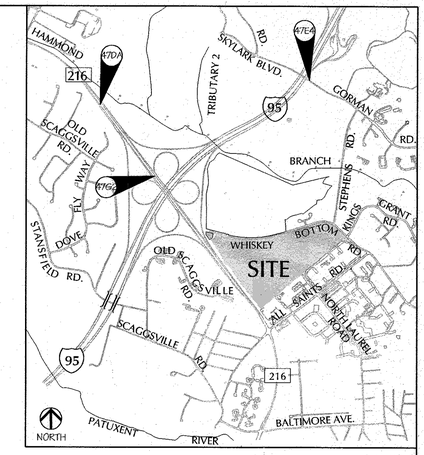

Vicinity Map

SCALE: 1"=2000'

Legend

- ACTUAL DRAINAGE AREA TO SWM PONDS (BASIS FOR 10- AND 100-YEAR STORM FLOW DETERMINATIONS)
- SITE AREA REPRESENTED BY SWM PONDS (BASIS FOR WQv, Rev, Cpv VOLUME DETERMINATIONS)
- PROP. TC PATH
- PROPERTY BOUNDARY
- NATURAL AREA CONSERVATION CREDIT
- WETLAND
- WETLAND BUFFER
- WETLAND SYMBOL
- HEAD OF STREAM
- STREAM BANK
- STREAM BUFFER
- 100 YEAR FLOODPLAIN
- SLOPES >25%
- SLOPES 15%-25%
- PC \ PT OF ARC
- CENTERLINE OF ROAD
- RADIUS OF ARC

3 PROFESSIONAL CERTIFICATION FOR REV #3.

I HEREBY CERTIFY THAT THESE DOCUMENTS WERE PREPARED OR APPROVED BY ME, AND THAT I AM A DULY LICENSED PROFESSIONAL ENGINEER UNDER THE LAWS OF THE STATE OF MARYLAND, LICENSE NO 45292 EXPIRATION DATE: 05/21/2018

3 THE PURPOSE OF REVISION 3 IS TO SHOW THE WORK ASSOCIATED WITH EMERSON CAMPUS VCP. SDP-16-005

STATE OF MARYLAND — MARK R. MCCANNA — 19297 — PROFESSIONAL ENGINEER

Professional Certification. I hereby certify that these documents were prepared or approved by me, and that I am a duly licensed professional engineer under the laws of the State of Maryland.
License No. 8061, Expiration Date: 8-26-17

FOR REVISION #1 ONLY
4-19-11
Date

STATE OF MARYLAND — PAUL LEE WISER — No. 8061 — REGISTERED PROFESSIONAL ENGINEER

Professional Engr. No. 8061

9/2/02
Date

PROFESSIONAL ENGINEER — No. 10557 — MARK R. MCCANNA — STATE OF MARYLAND

Professional Engr. No. 10557

APPROVED: HOWARD COUNTY DEPT. OF PUBLIC WORKS

for CHIEF, BUREAU OF HIGHWAYS — 10-10-02 DATE

APPROVED: HOWARD COUNTY DEPT. OF PLANNING AND ZONING

CHIEF, DIVISION OF LAND DEVELOPMENT — 10/22/02 DATE

CHIEF, DEVELOPMENT ENGINEERING DIVISION MK — 10/18/02 DATE

Date	No.	Revision Description
05/23/15	3	EMERSON CAMPUS VCP
2-7-11	1	ADD 5' CONCRETE SIDEWALK ALONG PARCEL D FRONTAGE

REVITZ PROPERTY

OWNER /DEVELOPER:

THE HOWARD RESEARCH & DEVELOPMENT CORPORATION
10275 LITTLE PATUXENT PARKWAY
COLUMBIA, MARYLAND 21044

DMW
Daft-McCune-Walker, Inc.
200 East Pennsylvania Avenue
Towson, Maryland 21286
(410) 296-3333
Fax 296-4705

A Team of Land Planners, Landscape Architects, Engineers, Surveyors & Environmental Professionals

SUBDIVISION NAME			SECTION/AREA		LOT/PARCEL #
					165 & P/O PAR. 837
PLAT# OR L#	BLOCK #	ZONE	TAX/ZONE MAP	ELEC. DISTRICT	CENSUS TRACT
22619436	20	PEC	47, GRID 20	6 th	
WATER CODE			SEWER CODE		

TITLE

FINAL PLAN SWM DRAINAGE AREA MAP

Des By	MRT	Scale	1" = 100'	Proj. No.	01011
Drn By	KMF	Date	9/19/02		
Chk By		Approved			35 OF 57

F-02-111

Thu Sep 19 2002 - 11:01:08 - C:\Projects\01011\Drawings\Plan\Revitz\Revitz.dwg
Plotted: 9/19/02 4:44:06 PM

3 THE PURPOSE OF REVISION 3 IS TO SHOW THE WORK ASSOCIATED WITH EMERSON CAMPUS VCP. SDP-16-005

3 PROFESSIONAL CERTIFICATION FOR REV #3

I HEREBY CERTIFY THAT THESE DOCUMENTS WERE PREPARED OR APPROVED BY ME, AND THAT I AM A DULY LICENSED PROFESSIONAL ENGINEER UNDER THE LAWS OF THE STATE OF MARYLAND, LICENSE NO 45292 EXPIRATION DATE: 05/21/2018

(Seal: STATE OF MARYLAND ROBERT A. CROWLEY PROFESSIONAL ENGINEER 45292) 11-22-16

POND III

DESIGN FLOW SUMMARY PROPOSED CONDITIONS

Structure Type	RETENTION
Water Quality Type	WET POND
Structure Classification	'A'
Watershed Area to Facility	0.0239 SQ. MI.
Level of Management Required	1-YR.
Level of Management Provided **	10-YR.
Top Width Provided	12'
Maximum Height of Fill	2.0'
Freeboard Required	1.0'
Freeboard Provided	1.3'
Water Quality Vol. WQ_v Required (Ac-ft)	0.760
Water Quality Vol. WQ_v Provided (Ac-ft)	1.139
Recharge Vol. Re_v Provided (Ac-ft)	SEE SWM IV CHART
Channel Protection Vol. Cp_v Required (Ac-ft)	1.44
Channel Protection Vol. Cp_v Provided (Ac-ft)	1.44
WQ_v Water Surface Elev. = Normal Pool	255.0
Cp_v Water Surface Elev.	257.0
16' Weir = Riser Crest Elev.	257.0
100 Yr. Clogged Water Surface Elev.	258.7
Pond Volume Below 100 Yr. Clogged WSE (Ac-ft)	4.05

** SEE NOTE AT BOTTOM OF POND IV TABLE.

POND V

DESIGN FLOW SUMMARY PROPOSED CONDITIONS

Structure Type	RETENTION
Water Quality Type	WET POND
Structure Classification	'A'
Watershed Area to Facility	0.0108 SQ. MI.
Level of Management Required	1-YR.
Level of Management Provided **	10-YR.
Top Width Provided	12'
Maximum Height of Fill	3.0'
Freeboard Required	1.0'
Freeboard Provided	2.1'
Water Quality Vol. WQ_v Required (Ac-ft)	0.32
Water Quality Vol. WQ_v Provided (Ac-ft)	0.60
Recharge Vol. Re_v Provided (Ac-ft)	SEE SWM IV CHART
Channel Protection Vol. Cp_v Required (Ac-ft)	0.575
Channel Protection Vol. Cp_v Provided (Ac-ft)	0.575
WQ_v Water Surface Elev. = Normal Pool	241.0
Cp_v Water Surface Elev.	242.7
4' Weir = Riser Crest Elev.	242.7
12' Weir = Top Riser Weirs	244.5
100 Yr. Clogged Water Surface Elev.	244.9
Pond Volume Below 100 Yr. Clogged WSE (Ac-ft)	2.300

** SEE NOTE AT BOTTOM OF POND IV TABLE.

POND IV

DESIGN FLOW SUMMARY PROPOSED CONDITIONS

Structure Type	RETENTION
Water Quality Type	WET POND
Structure Classification	'A'
Watershed Area to Facility	0.0311 SQ. MI.
Level of Management Required	1-YR.
Level of Management Provided **	10-YR.
Top Width Provided	12'
Maximum Height of Fill	8.0'
Freeboard Required	2.0'
Freeboard Provided	2.4'
Water Quality Vol. WQ_v Required (Ac-ft)	0.924
Water Quality Vol. WQ_v Provided (Ac-ft)	0.964
Recharge Vol. Re_v Required (Ac) TOTAL SITE	1.10
Recharge Vol. Re_v Provided (Ac) TOTAL SITE *	1.10
Channel Protection Vol. Cp_v Required (Ac-ft)	2.32
Channel Protection Vol. Cp_v Provided (Ac-ft)	2.37
WQ_v Water Surface Elev. = Normal Pool	243.0
Cp_v Water Surface Elev.	245.8
2' Weir = Riser Crest Elev.	245.8
14' Weir = Top Riser Weir	249.0
100 Yr. Clogged Water Surface Elev.	249.6
Pond Volume Below 100 Yr. Clogged WSE (Ac-ft)	8.0

* RECHARGE IS PROVIDED FOR THE ENTIRE REVITZ SITE (ROADS ONLY) WITHIN THIS DRAINAGE AREA BY USE OF A GRASS SWALE CREDIT.

** SWM PONDS III, IV AND V ARE OVERSIZED SO THAT 10-YEAR MANAGEMENT WILL BE OBTAINED. THESE THREE PONDS DRAIN TO AN EXISTING, OFFSITE SWM POND. THE 10, 100-YEAR WATER SURFACE ELEVATIONS IN THE OFFSITE POND (RESULTING FROM POND III, IV AND V RUNOFF) ARE LOWER THAN THE DESIGN ELEVATIONS FOR THE OFFSITE POND, AS SHOWN IN TABLE 1 ON THIS SHEET, THEREFORE 10-YEAR MANAGEMENT IS OBTAINED.

NOTE: THESE FACILITIES WILL HAVE A DAM HAZARD CLASSIFICATION OF 'A'.

NOTE:

1. THE RECHARGE TREATMENT SHOWN IN THIS DESIGN (GRASS SWALE CREDIT) ACCOUNTS FOR NEW IMPERVIOUS FROM PROP. ROADS ONLY. RECHARGE REQUIREMENT FOR NEW IMPERVIOUS CREATED WITHIN THE INDIVIDUAL LOTS SHALL BE TREATED WITHIN THE INDIVIDUAL LOTS BY THE LOT OWNER.
2. ALL SWM PONDS IN THIS DESIGN ARE DESIGNATED AS "POA" (PROPERTY OWNER'S ASSOCIATION) OPEN SPACE PROPERTY AND THUS ARE PRIVATELY OWNED AND MAINTAINED.
3. ACCESS TO EACH FACILITY SHALL BE PROVIDED ACROSS THE ADJOINING DEVELOPMENT PARCEL BY GENERAL EASEMENT UNTIL DEFINED ACCESS AND EASEMENT IS DETERMINED AT SITE DEVELOPMENT STAGE. NO ACCESS WILL BE OBTAINED FROM RESTRICTED ACCESS ROADS OR ACROSS ENVIRONMENTAL SENSITIVE AREAS.

TABLE 1

EXISTING OFFSITE SWM POND / DESIGN POINT 1

EXISTING CONDITIONS (REVITZ SITE UNDEVELOPED) WATER SURFACE ELEVATIONS TAKEN FROM "WHISKEY BOTTOM WEST" PLANS, SDP-78-71, APPROVED 7-5-78.	10 YR. = 226.33	100 YR. = 226.83
PROPOSED CONDITIONS (REVITZ SITE DEVELOPED) WATER SURFACE ELEVATIONS TAKEN FROM REVITZ SWM REPORT TR-20 ROUTING OUTPUT	10 YR. = 226.23	100 YR. = 226.75

Legend

- WETLAND
- 25' WETLAND ZONE
- HEAD OF STREAM
- STREAM BANK
- WETLAND SYMBOL
- 50' STREAM BUFFER
- 100 YEAR FLOOD PLAIN
- PROPOSED SWM EASEMENT
- B-10 SOIL BORING
- EXISTING MINOR CONTOURS
- EXISTING MAJOR CONTOURS
- PROPOSED MINOR CONTOURS
- PROPOSED MAJOR CONTOURS
- PROPERTY LINE
- ROADWAY RIGHT-OF-WAY
- EXISTING STORM DRAIN
- TOE OF POND EMBANKMENT SLOPE
- NON-WOODY VEGETATION ZONE LINE

THESE PLANS HAVE BEEN REVIEWED FOR THE HOWARD SOIL CONSERVATION DISTRICT AND MEET THE TECHNICAL REQUIREMENTS FOR SMALL POND CONSTRUCTION, SOIL EROSION AND SEDIMENT CONTROL.

Jim Myers / DS — 9/30/02
U.S.D.A. NATURAL RESOURCES CONSERVATION SERVICE — DATE

THESE PLANS FOR SMALL POND CONSTRUCTION, SOIL EROSION AND SEDIMENT CONTROL MEET THE REQUIREMENTS OF HOWARD SOIL CONSERVATION DISTRICT.

APPROVED: [signature] — 9/30/02
HOWARD SOIL CONSERVATION DISTRICT — DATE

PLAN NUMBER ____

DEVELOPERS CERTIFICATE:

I/WE CERTIFY THAT ALL DEVELOPMENT AND/OR CONSTRUCTION WILL BE DONE ACCORDING TO THESE PLANS AND THAT ANY RESPONSIBLE PERSONNEL INVOLVED IN THE CONSTRUCTION PROJECT WILL HAVE A CERTIFICATE OF ATTENDANCE AT A DEPARTMENT OF ENVIRONMENT APPROVED TRAINING PROGRAM FOR THE CONTROL OF SEDIMENT AND EROSION BEFORE BEGINNING THE PROJECT. I SHALL ENGAGE A REGISTERED PROFESSIONAL ENGINEER TO SUPERVISE POND CONSTRUCTION AND PROVIDE THE HOWARD SOIL CONSERVATION DISTRICT WITH AN "AS-BUILT" PLAN OF THE POND WITHIN 30 DAYS OF COMPLETION. I ALSO AUTHORIZE PERIODIC ON-SITE INSPECTIONS BY THE HOWARD SOIL CONSERVATION DISTRICT.

[signature] — 9/20/02
SIGNATURE OF DEVELOPER PRINT NAME BELOW SIGNATURE — DATE
Robert A. Jenkins

ENGINEERS CERTIFICATE:

I/WE CERTIFY THAT THIS PLAN FOR POND CONSTRUCTION, EROSION AND SEDIMENT CONTROL REPRESENTS A PRACTICAL AND WORKABLE PLAN BASED ON MY PERSONAL KNOWLEDGE OF OF THE SITE CONDITIONS. THIS PLAN WAS PREPARED IN ACCORDANCE WITH THE REQUIREMENTS OF THE HOWARD SOIL CONSERVATION DISTRICT. I HAVE NOTIFIED THE DEVELOPER THAT HE/SHE MUST ENGAGE A REGISTERED PROFESSIONAL ENGINEER TO SUPERVISE POND CONSTRUCTION AND PROVIDE THE HOWARD SOIL CONSERVATION DISTRICT WITH AN "AS-BUILT" PLAN OF THE POND WITHIN 30 DAYS OF COMPLETION.

[signature] — 10551 — 9/20/02
SIGNATURE OF ENGINEER PRINT NAME BELOW SIGNATURE — REG. NO. — DATE
John W. Ranocchia Sr.

Professional Certification. I hereby certify that these documents were prepared or approved by me, and that I am a duly licensed professional engineer under the laws of the State of Maryland.
License No. 8061, Expiration Date: 8-26-11

FOR REVISION #1 ONLY
4-19-11
Date
(Seal: STATE OF MARYLAND PAUL LEE HUDSON No. 8061 REGISTERED PROFESSIONAL ENGINEER)
Professional Engr. No. 8061

F-02-111

9/20/02
Date
(Seal: STATE OF MARYLAND JOHN W. RANOCCHIA, SR. PROFESSIONAL ENGINEER NO. 10551)
Professional Engr. No. 10551

APPROVED: HOWARD COUNTY DEPT. OF PUBLIC WORKS
William T. Malone Jr. — 10-10-02
for CHIEF, BUREAU OF HIGHWAYS — DATE

APPROVED: HOWARD COUNTY DEPT. OF PLANNING AND ZONING
[signature] — 10/22/02
CHIEF, DIVISION OF LAND DEVELOPMENT — DATE
[signature] — 10/18/02
CHIEF, DEVELOPMENT ENGINEERING DIVISION MK — DATE

Date	No.	Revision Description
05/23/15	3	EMERSON CAMPUS VCP
2-7-11	1	ADD 5' CONCRETE SIDEWALK ALONG PARCEL D FRONTAGE

REVITZ PROPERTY

OWNER /DEVELOPER:

THE HOWARD RESEARCH & DEVELOPMENT CORPORATION
10275 LITTLE PATUXENT PARKWAY
COLUMBIA, MARYLAND 21044

DMW
Daft·McCune·Walker, Inc.
200 East Pennsylvania Avenue
Towson, Maryland 21286
(410) 296-3333
Fax 296-4705

A Team of Land Planners, Landscape Architects, Engineers, Surveyors & Environmental Professionals

SUBDIVISION NAME		SECTION/AREA		LOT/PARCEL #
				165 & P/O PAR. 837
PLAT# OR L/F: 2267/436	BLOCK #: 20	ZONE: PEC	TAX/ZONE MAP: 47, GRID 20	ELECT. DISTRICT: 6 th
WATER CODE		SEWER CODE		CENSUS TRACT

TITLE

FINAL PLAN
SWM III, IV AND V PLAN

Des By	MRT	Scale	1" = 50'	Proj. No. 01011
Drn By	MRT	Date	9/19/02	36 OF 57
Chk By		Approved		

F-02-111

Thu Sep 19 16:47:18 2002 n:\0101\50scale\0101l.m4

POND VI
DESIGN FLOW SUMMARY PROPOSED CONDITIONS *

Structure Type	RETENTION
Water Quality Type	WET POND
Structure Classification	'A'
Watershed Area to Facility	0.0343 SQ MI.
Level of Management Required **	10-YR.
Level of Management Provided	10-YR.
Top Width Provided	12'
Maximum Height of Fill	2.0'
Freeboard Required	2.0'
Freeboard Provided	2.0'
Water Quality Vol. WQ_v Required (Ac-ft)	0.680
Water Quality Vol. WQ_v Provided (Ac-ft)	0.683
Recharge Vol. Re_v Provided (Ac-ft) *	SEE SWM IV
Channel Protection Vol. Cp_v Required (Ac-ft)	1.680
Channel Protection Vol. Cp_v Provided (Ac-ft) ***	3.091
WQ_v Water Surface Elev. = Normal Pool	241.0
Cp_v Water Surface Elev.	245.5
Riser Crest Elev.	249.5
100 Yr. Clogged Water Surface Elev.	250.5
Pond Volume Below 100 Yr. Clogged WSE (Ac-ft)	8.7

* RECHARGE VOLUME IS PROVIDED FOR THE ENTIRE SITE (FOR ROADS ONLY) IN SWM IV DRAINAGE AREA - SEE SWM IV CHART

** THIS POND OUTFALLS IMMEDIATELY UPSTREAM OF AN EXISTING 48" CMP. PROVISION OF 10-YR MANAGEMENT IS NECESSARY.

*** THIS VOLUME ACCOUNTS FOR EXTENDED DETENTION OF THE 1 YR. STORM

NOTE:

1. THE RECHARGE TREATMENT SHOWN IN THIS DESIGN (GRASS SWALE CREDIT) ACCOUNTS FOR NEW IMPERVIOUS FROM PROP. ROADS ONLY. RECHARGE REQUIREMENT FOR NEW IMPERVIOUS CREATED WITHIN THE INDIVIDUAL LOTS SHALL BE TREATED WITHIN THE INDIVIDUAL LOTS BY THE LOT OWNER.

2. ALL SWM PONDS IN THIS DESIGN ARE DESIGNATED AS "POA" (PROPERTY OWNER'S ASSOCIATION) OPEN SPACE PROPERTY AND THUS ARE PRIVATELY OWNED AND MAINTAINED.

3. ACCESS TO EACH FACILITY SHALL BE PROVIDED ACROSS THE ADJOINING DEVELOPMENT PARCEL BY GENERAL EASEMENT UNTIL DEFINED ACCESS AND EASEMENT IS DETERMINED AT SITE DEVELOPMENT STAGE. NO ACCESS WILL BE OBTAINED FROM RESTRICTED ACCESS ROADS OR ACROSS ENVIRONMENTAL SENSITIVE AREAS.

THESE FACILITIES WILL HAVE A DAM HAZARD CLASSIFICATION OF 'A'.

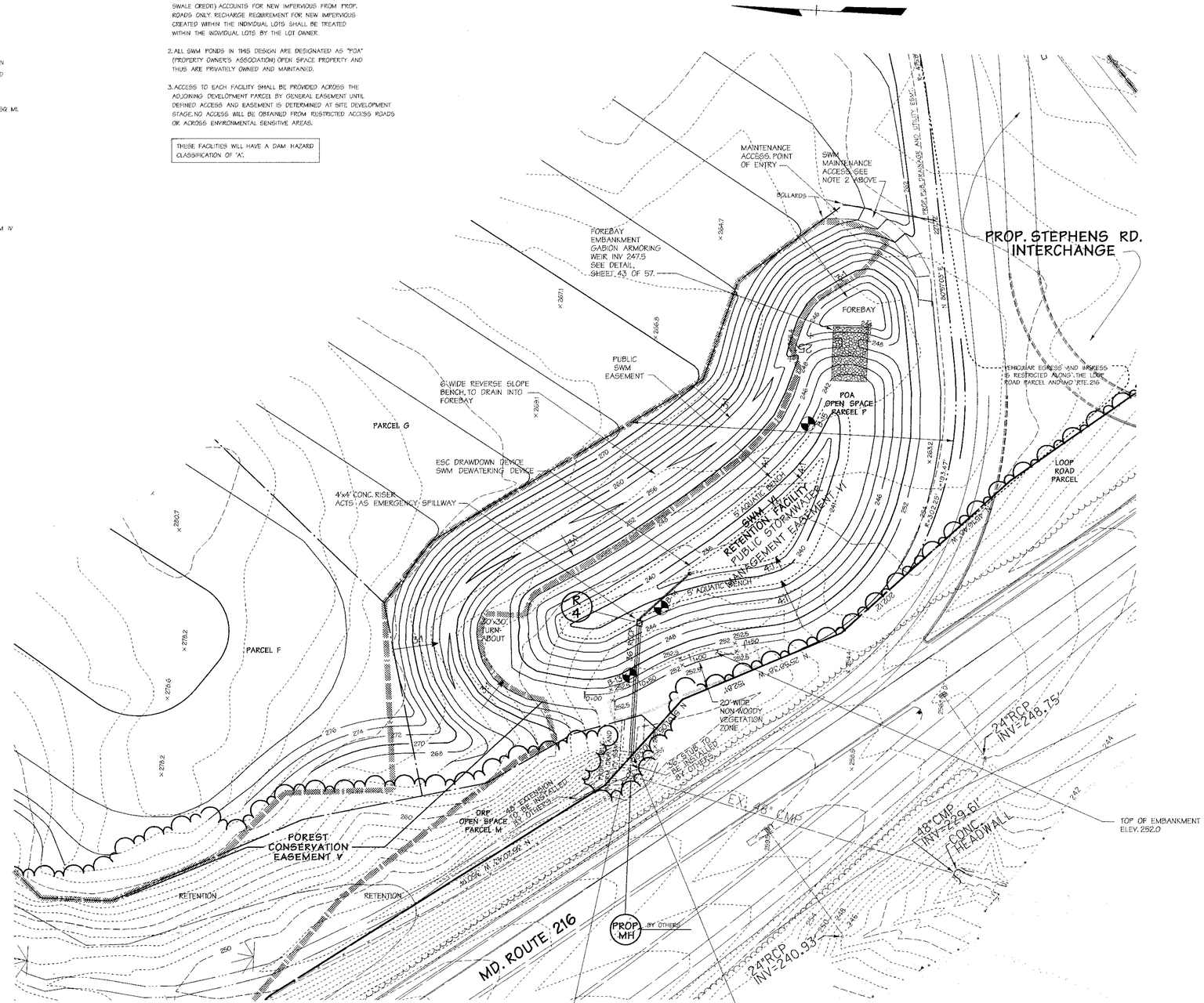

Legend

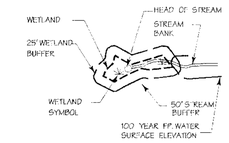

- EXISTING MINOR CONTOURS
- EXISTING MAJOR CONTOURS
- PROPOSED MINOR CONTOURS
- PROPOSED MAJOR CONTOURS
- PROPOSED SWM EASEMENT
- B-10 SOIL BORING
- PROPERTY LINE
- ROADWAY RIGHT-OF-WAY
- EXISTING STORM DRAIN
- TOE OF EMBANKMENT SLOPE DELINEATOR LINE
- NON-WOODY VEGETATION ZONE LINE

APPROVED: HOWARD COUNTY DEPT. OF PUBLIC WORKS

for CHIEF, BUREAU OF HIGHWAYS — DATE 10-10-02

APPROVED: HOWARD COUNTY DEPT. OF PLANNING AND ZONING

CHIEF, DIVISION OF LAND DEVELOPMENT — DATE 10/22/02

CHIEF, DEVELOPMENT ENGINEERING DIVISION MK — DATE 10/18/02

Date	No.	Revision Description

REVITZ PROPERTY

OWNER /DEVELOPER:

THE HOWARD RESEARCH & DEVELOPMENT CORPORATION
10275 LITTLE PATUXENT PARKWAY
COLUMBIA, MARYLAND 21044

DMW
Daft-McCune-Walker, Inc.
200 East Pennsylvania Avenue
Towson, Maryland 21286
(410) 296-3333
Fax 296-4705

A Team of Land Planners, Landscape Architects, Engineers, Surveyors & Environmental Professionals

SUBDIVISION NAME		SECTION/PHASE			LOT/PARCEL # 165 & P/O PAR. B37
PLAT# OR L# 22674&6	BLOCK # 20	ZONE PEC	TAX/ZONE MAP 47 GRID 20	ELECT DISTRICT 6 th	CENSUS TRACT
WATER CODE			SEWER CODE		

TITLE

FINAL PLAN SWM VI PLAN

Des By	MRT	Scale	1" = 50'	Proj. No.	01011
Drn By	MRT	Date	9/9/02		
Chk By		Approved			37 OF 57

F-02-111

THESE PLANS HAVE BEEN REVIEWED FOR THE HOWARD SOIL CONSERVATION DISTRICT AND MEET THE TECHNICAL REQUIREMENTS FOR SMALL POND CONSTRUCTION, SOIL EROSION AND SEDIMENT CONTROL.

U.S.D.A. NATURAL RESOURCES CONSERVATION SERVICE — DATE 9/30/02

THESE PLANS FOR SMALL POND CONSTRUCTION, SOIL EROSION AND SEDIMENT CONTROL MEET THE REQUIREMENTS OF HOWARD SOIL CONSERVATION DISTRICT.

APPROVED: HOWARD SOIL CONSERVATION DISTRICT — DATE 9/30/02

PLAN NUMBER _____

DEVELOPERS CERTIFICATE:

I/WE CERTIFY THAT ALL DEVELOPMENT AND/OR CONSTRUCTION WILL BE DONE ACCORDING TO THESE PLANS AND THAT ANY RESPONSIBLE PERSONNEL INVOLVED IN THE CONSTRUCTION PROJECT WILL HAVE A CERTIFICATE OF ATTENDANCE AT A DEPARTMENT OF ENVIRONMENT APPROVED TRAINING PROGRAM FOR THE CONTROL OF SEDIMENT AND EROSION BEFORE BEGINNING THE PROJECT. I SHALL ENGAGE A REGISTERED PROFESSIONAL ENGINEER TO SUPERVISE POND CONSTRUCTION AND PROVIDE THE HOWARD SOIL CONSERVATION DISTRICT WITH AN "AS-BUILT" PLAN OF THE POND WITHIN 30 DAYS OF COMPLETION. I ALSO AUTHORIZE PERIODIC ON-SITE INSPECTIONS BY THE HOWARD SOIL CONSERVATION DISTRICT.

SIGNATURE OF DEVELOPER — DATE 9/20/02
PRINT NAME BELOW SIGNATURE
Robert A. Jenkins

ENGINEERS CERTIFICATE:

I/WE CERTIFY THAT THIS PLAN FOR POND CONSTRUCTION, EROSION AND SEDIMENT CONTROL REPRESENTS A PRACTICAL AND WORKABLE PLAN BASED ON MY PERSONAL KNOWLEDGE OF OF THE SITE CONDITIONS. THIS PLAN WAS PREPARED IN ACCORDANCE WITH THE REQUIREMENTS OF THE HOWARD SOIL CONSERVATION DISTRICT. I HAVE NOTIFIED THE DEVELOPER THAT HE/SHE MUST ENGAGE A REGISTERED PROFESSIONAL ENGINEER TO SUPERVISE POND CONSTRUCTION AND PROVIDE THE HOWARD SOIL CONSERVATION DISTRICT WITH AN "AS-BUILT" PLAN OF THE POND WITHIN 30 DAYS OF COMPLETION.

SIGNATURE OF ENGINEER — REG. NO. 10551 — DATE 9/20/02
PRINT NAME BELOW SIGNATURE
John Lee Ramacciotti

9/20/02
Date

Professional Engr. No. 10551

F-02-111

Thu Sep 19 [illegible] 9/19/02 5:07:21 PM

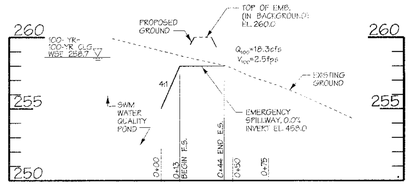

PROFILE ALONG EMERGENCY SPILLWAY

Scale: Hor.: 1"=50'
Ver.: 1"=5'

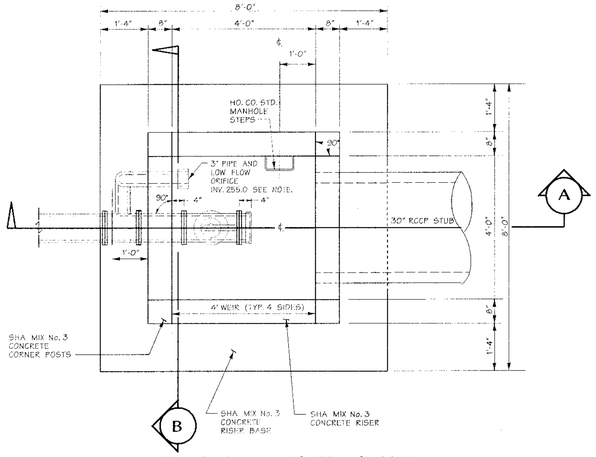

RISER PLAN (TOP SLAB REMOVED) - SWM III

Scale: ½" = 1'-0"
CAST IN PLACE

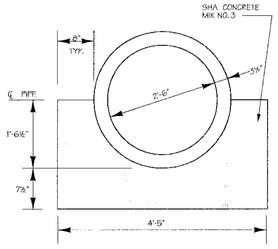

NOTE:
CONCRETE CRADLE SHALL BE SCD TR-46 A-2

CONCRETE CRADLE DETAIL

NTS

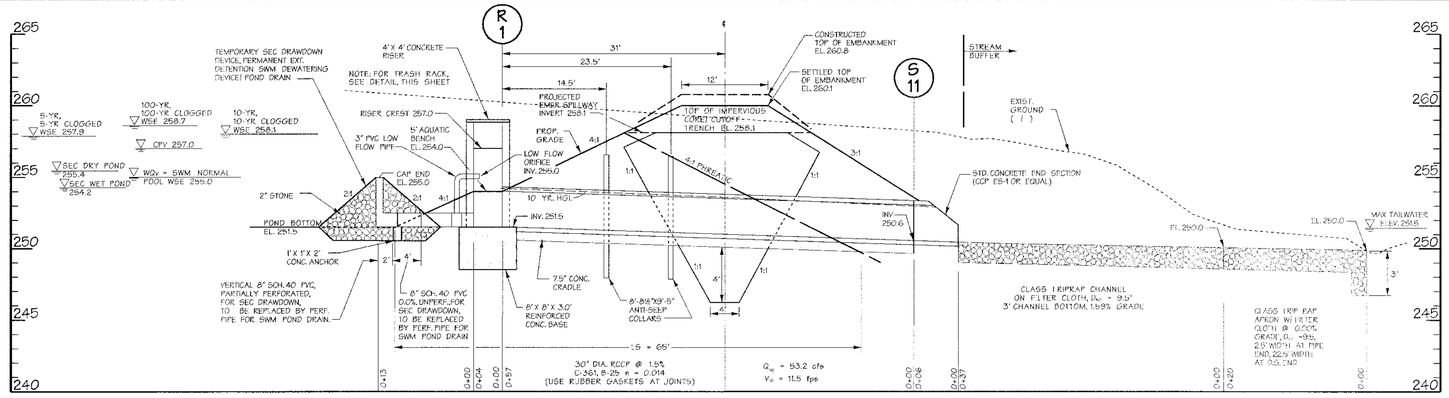

PROFILE THROUGH POND/ RISER/ BARREL

Scale: Hor.: 1"=10'
Ver.: 1"=5'

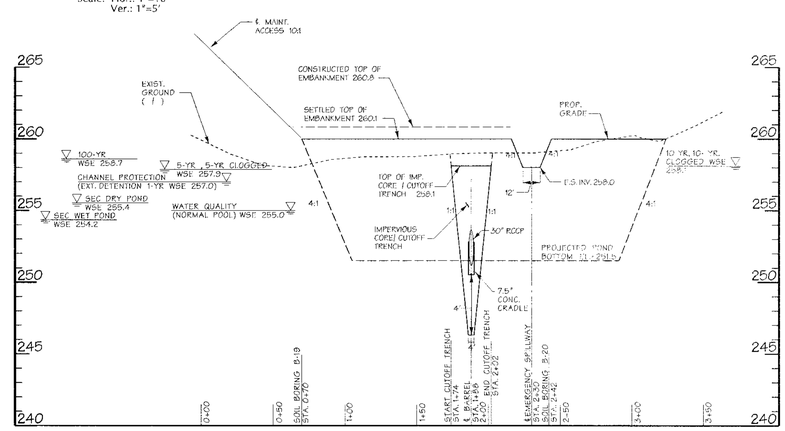

PROFILE ALONG EMBANKMENT

Scale: Hor.: 1"=50'
Ver.: 1"=5'

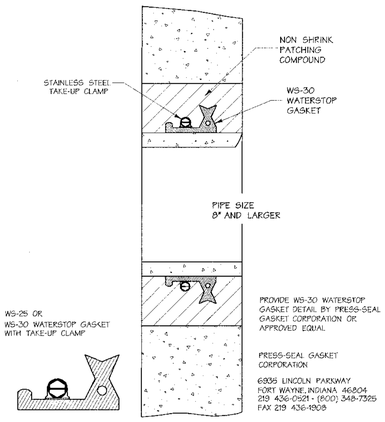

PIPE WATER STOP DETAIL

NOT TO SCALE

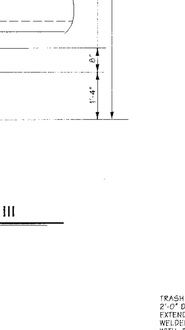

6" WATERSTOP

NOT TO SCALE

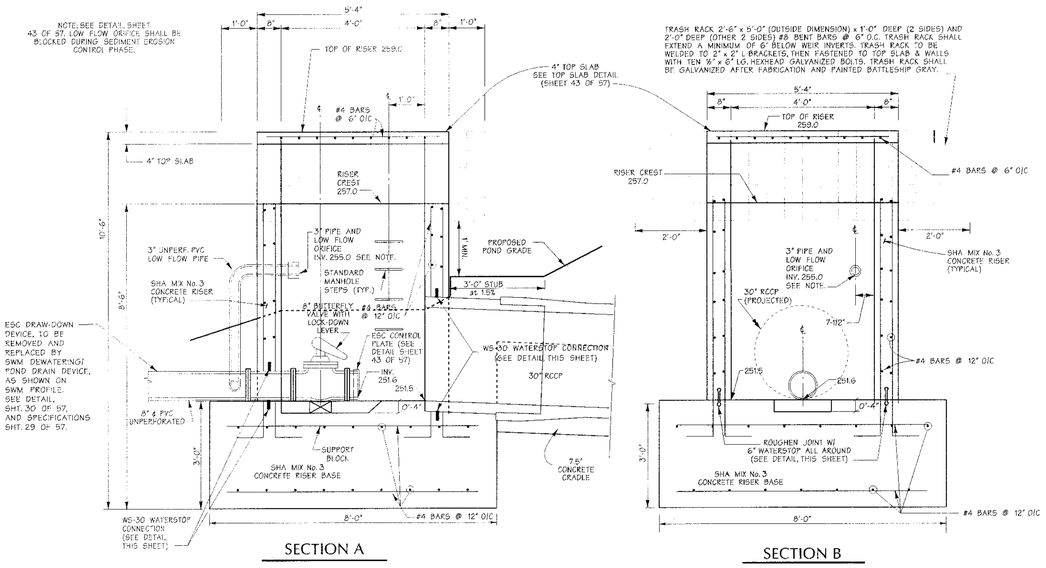

R-3 RISER DETAIL FOR POND - SWM III

Scale:1/2" = 1'-0"
CAST IN PLACE

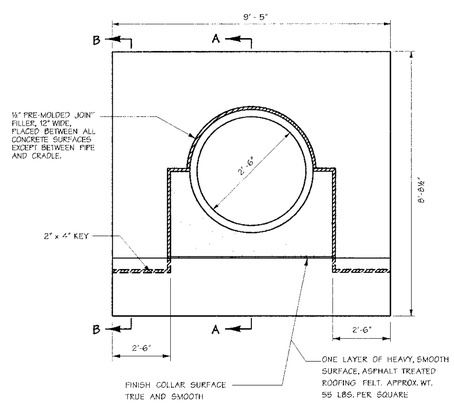

DETAIL SHOWN FOR EARTH FOUNDATION. FOR ROCK FOUNDATION, FOUND BOTTOM OF CRADLE ON ROCK LINE AND KEY COLLAR 6" INTO ROCK.

ANTI - SEEP COLLAR DETAIL - SWM III

CAST IN PLACE - NOT TO SCALE

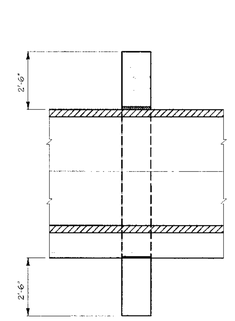

SECTION A-A

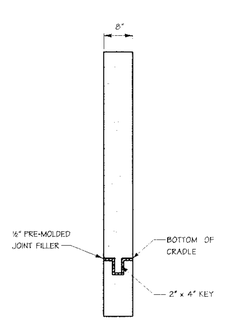

SECTION B-B

APPROVED: HOWARD COUNTY DEPT. OF PUBLIC WORKS

for CHIEF, BUREAU OF HIGHWAYS — 10-10-02 DATE

APPROVED: HOWARD COUNTY DEPT. OF PLANNING AND ZONING

CHIEF, DIVISION OF LAND DEVELOPMENT — 10/22/02 DATE

CHIEF, DEVELOPMENT ENGINEERING DIVISION MK — 10/18/02 DATE

Date	No.	Revision Description

REVITZ PROPERTY

OWNER /DEVELOPER:

THE HOWARD RESEARCH & DEVELOPMENT CORPORATION
10275 LITTLE PATUXENT PARKWAY
COLUMBIA, MARYLAND 21044

DMW
Daft-McCune-Walker, Inc.
200 East Pennsylvania Avenue
Towson, Maryland 21286
(410) 296-3333
Fax 296-4705

A Team of Land Planners, Landscape Architects, Engineers, Surveyors & Environmental Professionals

SUBDIVISION NAME		SECTION/AREA		LOT/PARCEL #
				165 & P/O PAR. B27
PLAT# OR L. 2262&36	BLOCK # 20	ZONE PEC	TAX/ZAC MAP 47, GRID 20	ELECT. DISTRICT 6 th	CENSUS TRACT
WATER CODE		SEWER CODE		

TITLE

FINAL PLAN SWM III DETAIL SHEET

Des By	MRT	Scale	1" = 50'	Proj. No.	01011.B
Drn By	KMF	Date	9/9/02		
Chk By		Approved		38	OF 57

THESE PLANS HAVE BEEN REVIEWED FOR THE HOWARD SOIL CONSERVATION DISTRICT AND MEET THE TECHNICAL REQUIREMENTS FOR SMALL POND CONSTRUCTION, SOIL EROSION AND SEDIMENT CONTROL.

U.S.D.A. NATURAL RESOURCES CONSERVATION SERVICE — 9/30/02 DATE

THESE PLANS FOR SMALL POND CONSTRUCTION, SOIL EROSION AND SEDIMENT CONTROL MEET THE REQUIREMENTS OF HOWARD SOIL CONSERVATION DISTRICT.

APPROVED: HOWARD SOIL CONSERVATION DISTRICT — 9/30/02 DATE

PLAN NUMBER _____

DEVELOPERS CERTIFICATE:

I/WE CERTIFY THAT ALL DEVELOPMENT AND/OR CONSTRUCTION WILL BE DONE ACCORDING TO THESE PLANS AND THAT ANY RESPONSIBLE PERSONNEL INVOLVED IN THE CONSTRUCTION PROJECT WILL HAVE A CERTIFICATE OF ATTENDANCE AT A DEPARTMENT OF ENVIRONMENT APPROVED TRAINING PROGRAM FOR THE CONTROL OF SEDIMENT AND EROSION BEFORE BEGINNING THE PROJECT. I SHALL ENGAGE A REGISTERED PROFESSIONAL ENGINEER TO SUPERVISE POND CONSTRUCTION AND PROVIDE THE HOWARD SOIL CONSERVATION DISTRICT WITH AN "AS-BUILT" PLAN OF THE POND WITHIN 30 DAYS OF COMPLETION. I ALSO AUTHORIZE PERIODIC ON-SITE INSPECTIONS BY THE HOWARD SOIL CONSERVATION DISTRICT.

SIGNATURE OF DEVELOPER — 9/20/02 DATE
PRINT NAME BELOW SIGNATURE
Robert A. Jenkins

ENGINEERS CERTIFICATE:

I/WE CERTIFY THAT THIS PLAN FOR POND CONSTRUCTION, EROSION AND SEDIMENT CONTROL REPRESENTS A PRACTICAL AND WORKABLE PLAN BASED ON MY PERSONAL KNOWLEDGE OF OF THE SITE CONDITIONS. THIS PLAN WAS PREPARED IN ACCORDANCE WITH THE REQUIREMENTS OF THE HOWARD SOIL CONSERVATION DISTRICT. I HAVE NOTIFIED THE DEVELOPER THAT HE/SHE MUST ENGAGE A REGISTERED PROFESSIONAL ENGINEER TO SUPERVISE POND CONSTRUCTION AND PROVIDE THE HOWARD SOIL CONSERVATION DISTRICT WITH AN "AS-BUILT" PLAN OF THE POND WITHIN 30 DAYS OF COMPLETION.

SIGNATURE OF ENGINEER — 10551 REG. NO. — 9/20/02 DATE
PRINT NAME BELOW SIGNATURE
John W. Renwehin

9/20/02
Date

Professional Engr. No. 10551

F-02-111

F-02-111

Thu Sep 19 [illegible] 2002 11:08:[illegible] C:\Projects\01011\Dwg\[illegible] 9/19/02 4:48:47 PM [illegible]

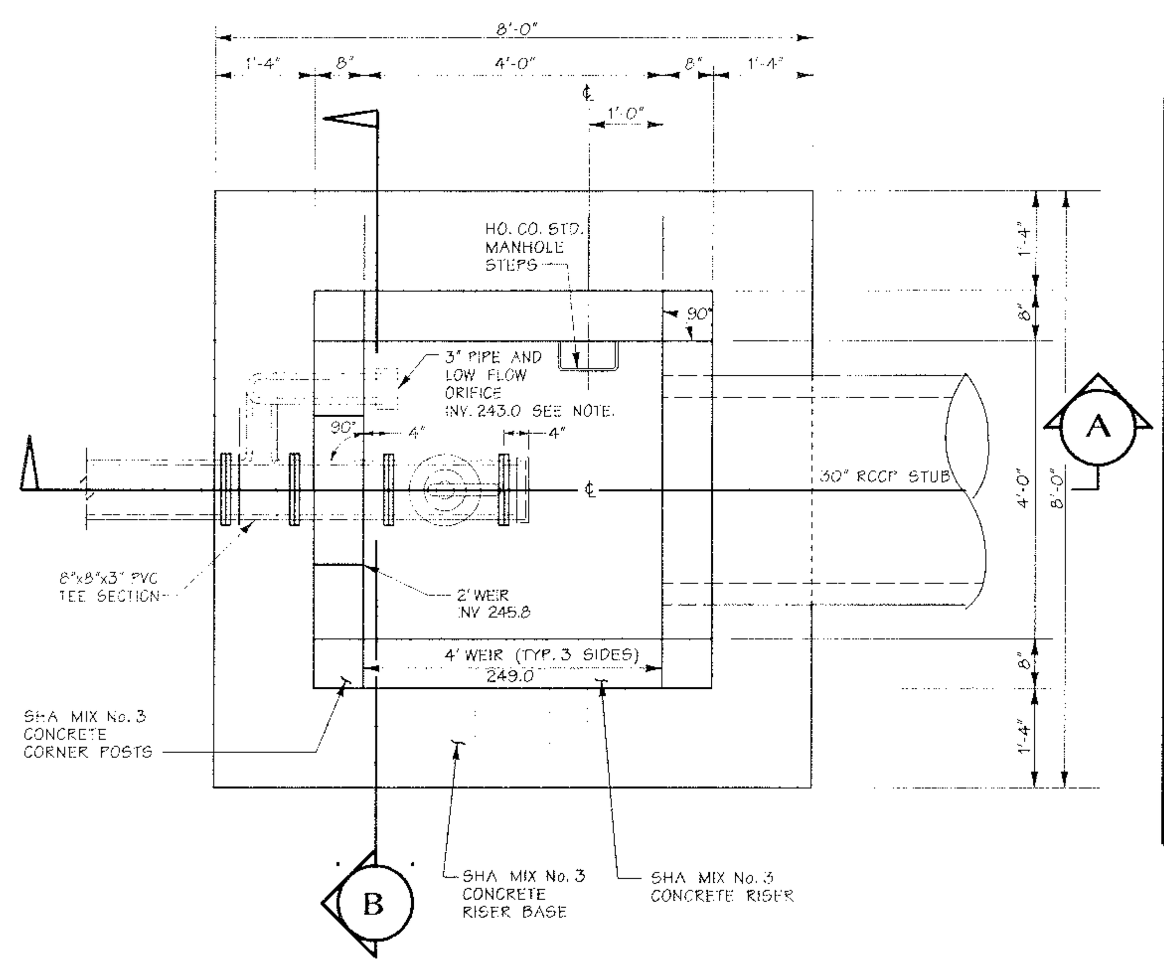

R-4 RISER PLAN (TOP SLAB REMOVED) - SWM IV

Scale: ½" = 1'-0"
CAST IN PLACE

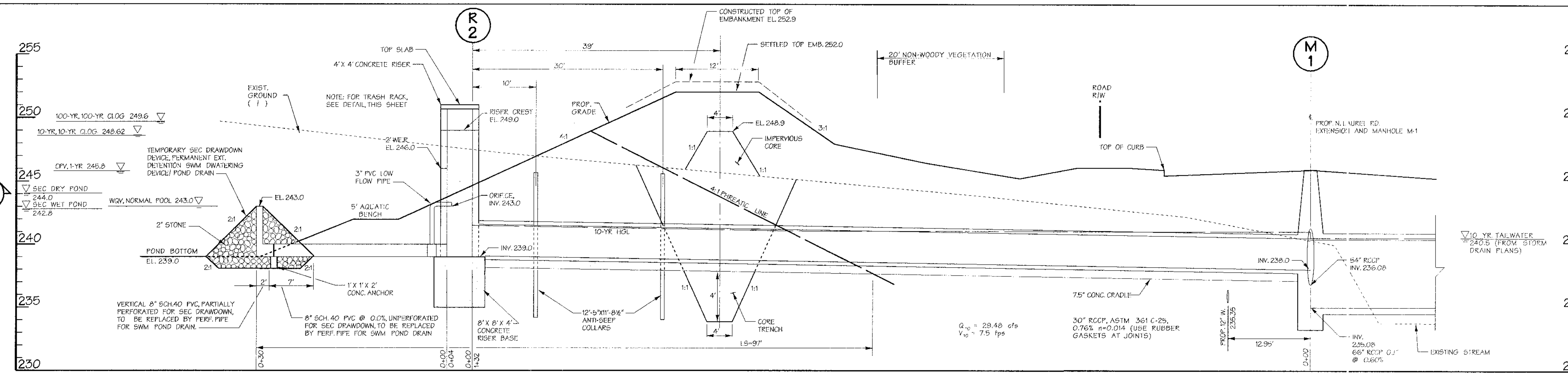

PROFILE THROUGH POND/ RISER/ BARREL

Scale: Hor.: 1"=10'
Ver.: 1"=5'

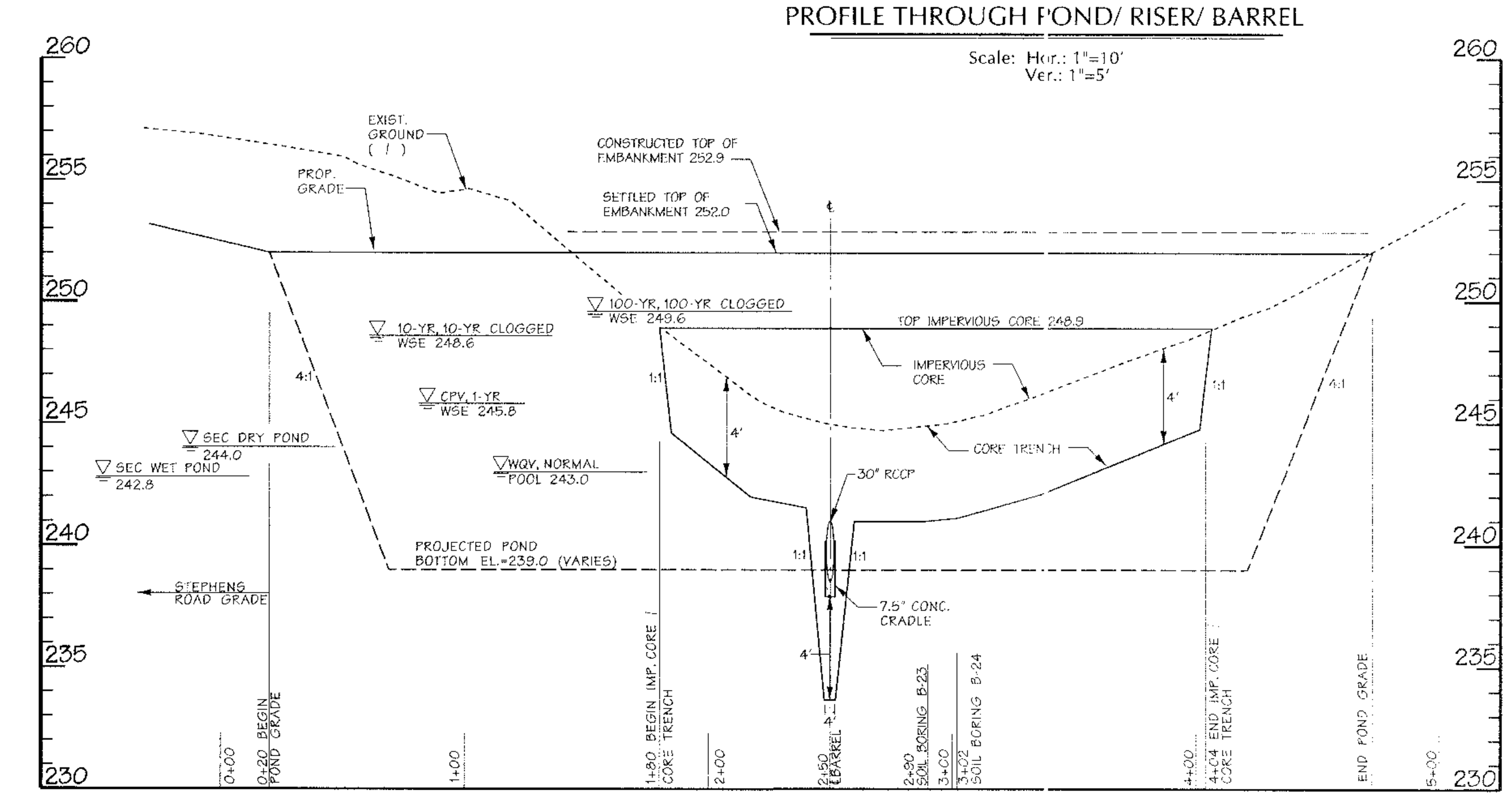

PROFILE ALONG EMBANKMENT

Scale: Hor.: 1"=50'
Ver.: 1"=5'

NOTE: SEE DETAIL, SHEET 43 OF 57
LOW FLOW ORIFICE SHALL BE BLOCKED DURING SEDIMENT EROSION CONTROL PHASE.

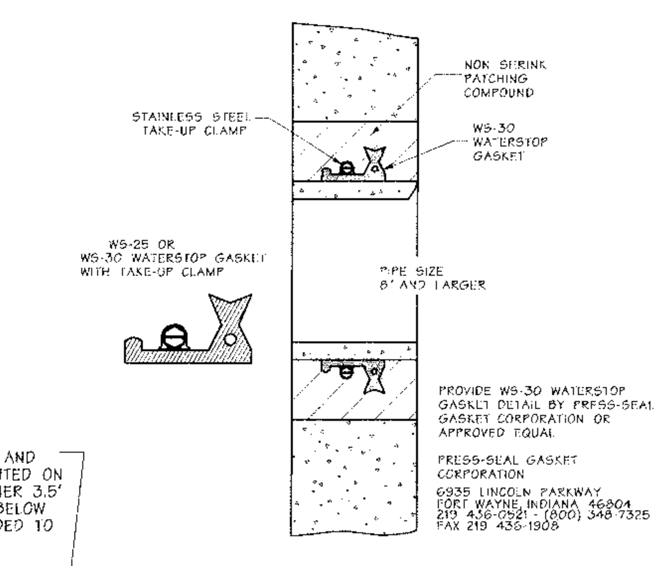

PIPE WATER STOP DETAIL

NOT TO SCALE

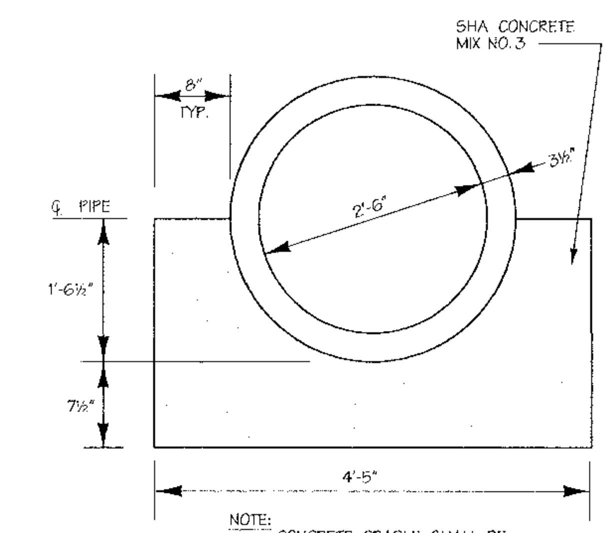

NOTE: CONCRETE CRADLE SHALL BE SCS TR-46 A-2

CONCRETE CRADLE DETAIL

NTS

TRASH RACK 2'-6" x 5'-0" (OUTSIDE DIMENSION) x 1'-0" DEEP (3 SIDES) AND 2'-0" DEEP (OTHER 2' WEIR SIDE). #8 BENT BARS @ 6" O.C. TO BE MOUNTED ON ALL FOUR SIDES OF RISER. THE TRASH RACK WILL EXTEND DOWN ANOTHER 3.5' ON THE 2' WEIR SIDE. THE TRASH RACK SHALL EXTEND A MINIMUM 8" BELOW THE WEIR INVERT ON ANY GIVEN SIDE. THE TRASH RACK IS TO BE WELDED TO 2" x 2" L-BRACKETS, THEN FASTENED TO TOP SLAB & WALLS WITH TEN ½" x 6" LG. HEXHEAD GALVANIZED BOLTS. THE TRASH RACK SHALL BE GALVANIZED AFTER FABRICATION AND PAINTED BATTLESHIP GRAY.

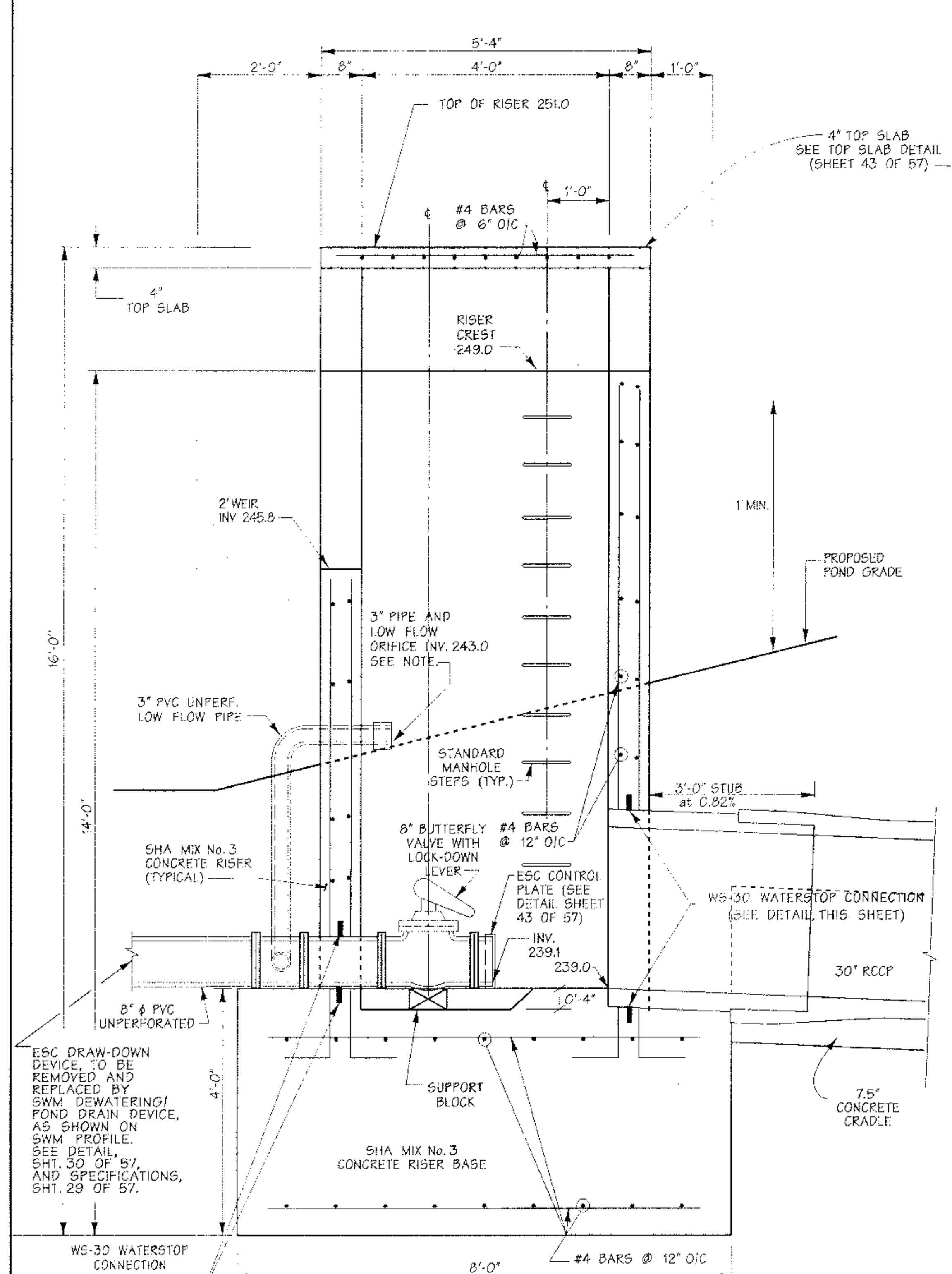

SECTION A

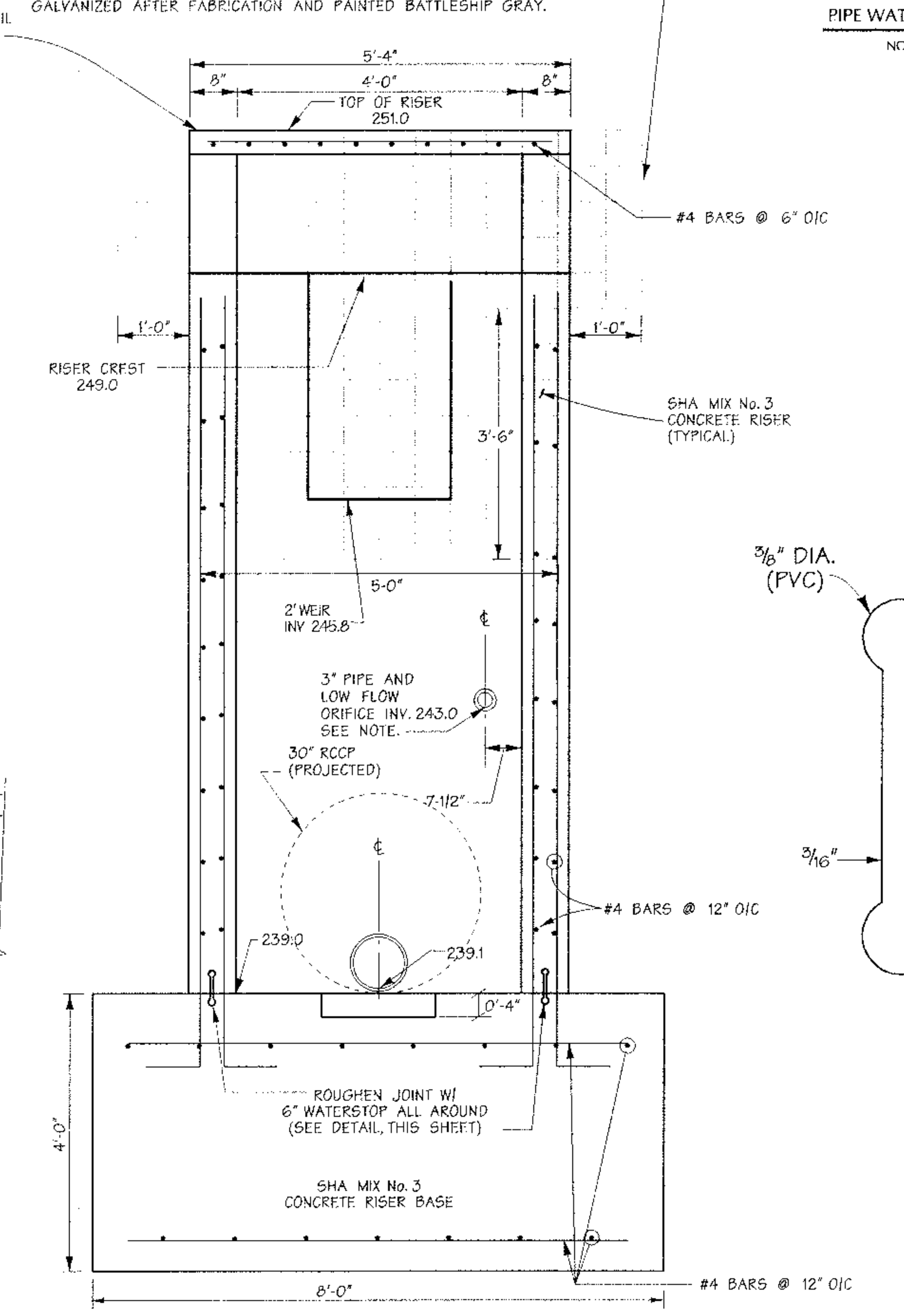

SECTION B

R-4 RISER DETAIL FOR POND - SWM IV

Scale: 1/2" = 1'-0"
CAST IN PLACE

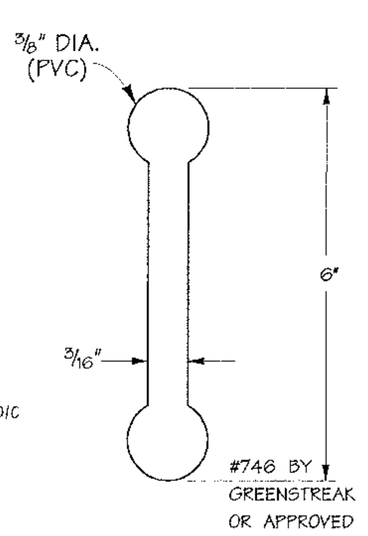

6" WATERSTOP

NOT TO SCALE

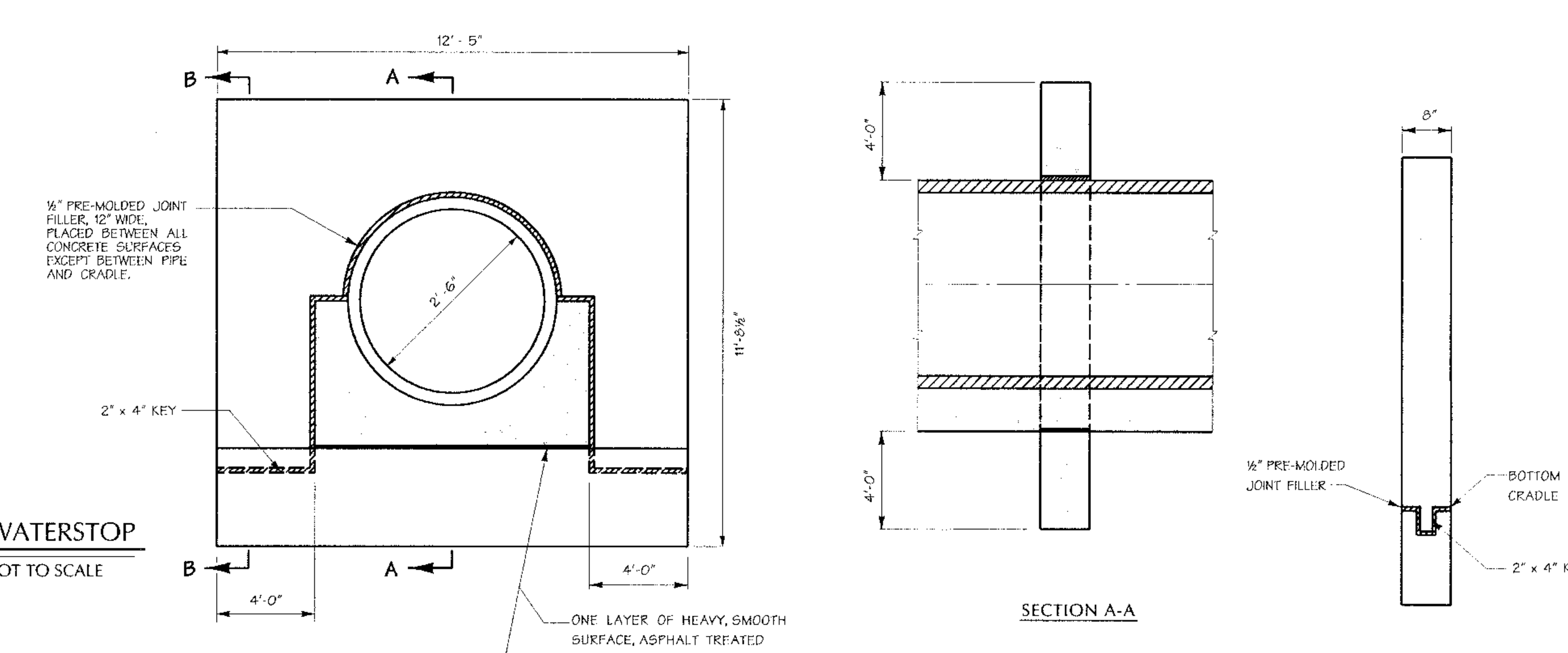

DETAIL SHOWN FOR EARTH FOUNDATION. FOR ROCK FOUNDATION, FOUND BOTTOM OF CRADLE ON ROCK LINE AND KEY COLLAR 6" INTO ROCK.

ANTI - SEEP COLLAR DETAIL - SWM IV

CAST IN PLACE - NOT TO SCALE

THESE PLANS HAVE BEEN REVIEWED FOR THE HOWARD SOIL CONSERVATION DISTRICT AND MEET THE TECHNICAL REQUIREMENTS FOR SMALL POND CONSTRUCTION, SOIL EROSION AND SEDIMENT CONTROL.

Jim Myers /US. — U.S.D.A. NATURAL RESOURCES CONSERVATION SERVICE — 9/30/02 DATE

THESE PLANS FOR SMALL POND CONSTRUCTION, SOIL EROSION AND SEDIMENT CONTROL MEET THE REQUIREMENTS OF HOWARD SOIL CONSERVATION DISTRICT.

APPROVED: [signature] HOWARD SOIL CONSERVATION DISTRICT — 9/30/02 DATE

PLAN NUMBER ________

DEVELOPERS CERTIFICATE:

I/WE CERTIFY THAT ALL DEVELOPMENT AND/OR CONSTRUCTION WILL BE DONE ACCORDING TO THESE PLANS AND THAT ANY RESPONSIBLE PERSONNEL INVOLVED IN THE CONSTRUCTION PROJECT WILL HAVE A CERTIFICATE OF ATTENDANCE AT A DEPARTMENT OF ENVIRONMENT APPROVED TRAINING PROGRAM FOR THE CONTROL OF SEDIMENT AND EROSION BEFORE BEGINNING THE PROJECT. SHALL ENGAGE A REGISTERED PROFESSIONAL ENGINEER TO SUPERVISE POND CONSTRUCTION AND PROVIDE THE HOWARD SOIL CONSERVATION DISTRICT WITH AN "AS-BUILT" PLAN OF THE POND WITHIN 30 DAYS OF COMPLETION. I ALSO AUTHORIZE PERIODIC ON-SITE INSPECTIONS BY THE HOWARD SOIL CONVERVATION DISTRICT.

[signature] 9/20/02
SIGNATURE OF DEVELOPER — DATE
PRINT NAME BELOW SIGNATURE
Robert A. Jenkins

ENGINEERS CERTIFICATE:

I/WE CERTIFY THAT THIS PLAN FOR POND CONSTRUCTION, EROSION AND SEDIMENT CONTROL REPRESENTS A PRACTICAL AND WORKABLE PLAN BASED ON MY PERSONAL KNOWLEDGE OF OF THE SITE CONDITIONS. THIS PLAN WAS PREPARED IN ACCORDANCE WITH THE REQUIREMENTS OF THE HOWARD SOIL CONSERVATION DISTRICT. I HAVE NOTIFIED THE DEVELOPER THAT HE/SHE MUST ENGAGE A REGISTERED PROFESSIONAL ENGINEER TO SUPERVISE POND CONSTRUCTION AND PROVIDE THE HOWARD SOIL CONSERVATION DISTRICT WITH AN "AS-BUILT" PLAN OF THE POND WITHIN 30 DAYS OF COMPLETION.

[signature] 10551 9/20/02
SIGNATURE OF ENGINEER — REG. NO. — DATE
PRINT NAME BELOW SIGNATURE
John W. Ranocchia, Sr.

F-02-111

9/20/02
Date

Professional Engr. No. 10551

APPROVED: HOWARD COUNTY DEPT. OF PUBLIC WORKS

for William F. Malone Jr. — CHIEF, BUREAU OF HIGHWAYS — 10-10-02 DATE

APPROVED: HOWARD COUNTY DEPT. OF PLANNING AND ZONING

Cindy Hamilton — CHIEF, DIVISION OF LAND DEVELOPMENT — 10/22/02 DATE

[signature] — CHIEF, DEVELOPMENT ENGINEERING DIVISION MK — 10/18/02 DATE

Date	No.	Revision Description

REVITZ PROPERTY

OWNER /DEVELOPER:

THE HOWARD RESEARCH & DEVELOPMENT CORPORATION
10275 LITTLE PATUXENT PARKWAY
COLUMBIA, MARYLAND 21044

DMW
Daft·McCune·Walker, Inc.
200 East Pennsylvania Avenue
Towson, Maryland 21286
(410) 296-3333
Fax 296-4705

A Team of Land Planners, Landscape Architects, Engineers, Surveyors & Environmental Professionals

SUBDIVISION NAME			SECTION/AREA		LOT/PARCEL # 165 & P/O PAR. 837
PLAT OR LF 267/436	BLOCK # 20	ZONE PEC	TAX/ZONE MAP 47, GRID 20	ELECT. DISTRICT 6 th	CENSUS TRACT
WATER CODE			SEWER CODE		

TITLE

FINAL PLAN
SWM IV DETAIL SHEET

Des By	MRT	Scale	1" = 50'	Proj. No. 01011.B
Drn By	KMF	Date	9/19/02	39 OF 57
Chk By		Approved		

F-02-111

Thu Sep 19 ... 2002 ... 9/19/02 4:51:47 PM

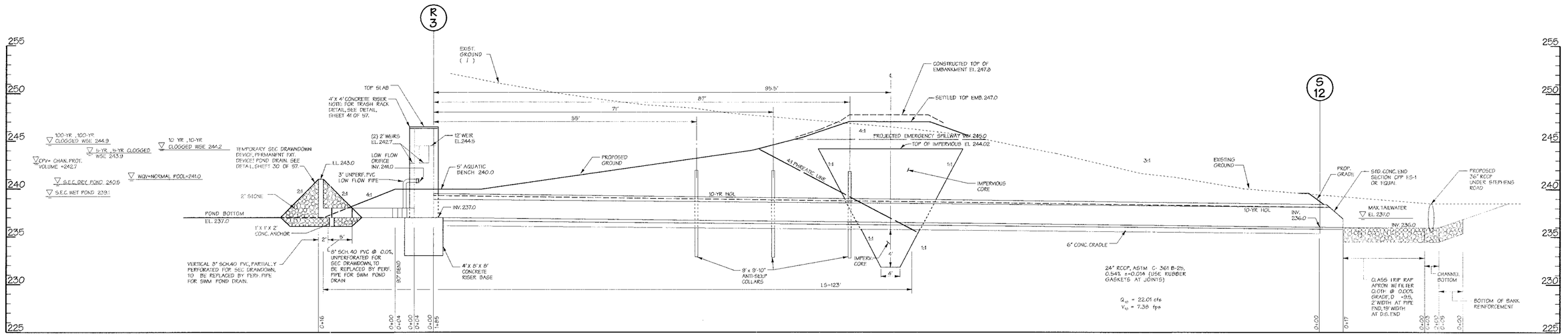

PROFILE THROUGH POND/ RISER/ BARREL

Scale: Hor.: 1"=10'
Ver.: 1"=5'

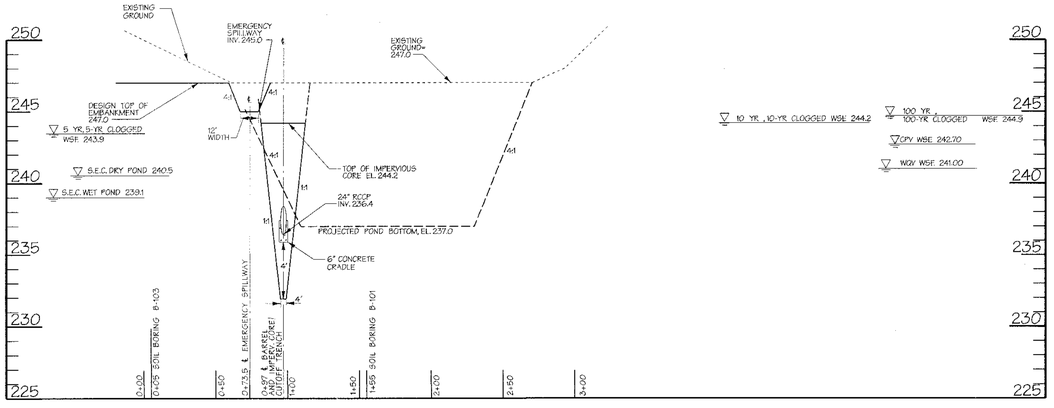

PROFILE ALONG EMBANKMENT

Scale: Hor.: 1"=50'
Ver.: 1"=5'

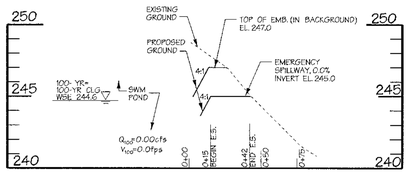

PROFILE ALONG EMERGENCY SPILLWAY

Scale: Hor.: 1"=50'
Ver.: 1"=5'

APPROVED: HOWARD COUNTY DEPT. OF PUBLIC WORKS

CHIEF, BUREAU OF HIGHWAYS — DATE 10-10-02

APPROVED: HOWARD COUNTY DEPT. OF PLANNING AND ZONING

CHIEF, DIVISION OF LAND DEVELOPMENT — DATE 10/22/02

CHIEF, DEVELOPMENT ENGINEERING DIVISION MK — DATE 10/8/02

Date	No.	Revision Description

REVITZ PROPERTY

OWNER /DEVELOPER:

THE HOWARD RESEARCH & DEVELOPMENT CORPORATION
10275 LITTLE PATUXENT PARKWAY
COLUMBIA, MARYLAND 21044

DMW
Daft-McCune-Walker, Inc.
200 East Pennsylvania Avenue
Towson, Maryland 21286
(410) 296-3333
Fax 296-4705

A Team of Land Planners, Landscape Architects, Engineers, Surveyors & Environmental Professionals

SUBDIVISION NAME		SECTION/AREA		LOT/PARCEL #
				165 & P/O PAR. 837
PLAT# OR ℓ# 22634&36	BLOCK # 20	ZONE PEC	TAX/ZONE MAP 47, GRID 20	ELEC. DISTRICT 6 th	CENSUS TRACT
WATER CODE			SEWER CODE	

TITLE

FINAL PLAN
SWM V DETAIL SHEET

Des By	MRT	Scale	1" = 50'	Proj. No.	01011.B
Drn By	KMF	Date	9/19/02		
Chk By		Approved		40 OF 57	

THESE PLANS HAVE BEEN REVIEWED FOR THE HOWARD SOIL CONSERVATION DISTRICT AND MEET THE TECHNICAL REQUIREMENTS FOR SMALL POND CONSTRUCTION, SOIL EROSION AND SEDIMENT CONTROL.

U.S.D.A. NATURAL RESOURCES CONSERVATION SERVICE — 9/30/02 DATE

THESE PLANS FOR SMALL POND CONSTRUCTION, SOIL EROSION AND SEDIMENT CONTROL MEET THE REQUIREMENTS OF HOWARD SOIL CONSERVATION DISTRICT.

APPROVED: HOWARD SOIL CONSERVATION DISTRICT — 9/30/02 DATE

PLAN NUMBER _____

DEVELOPERS CERTIFICATE:

I/WE CERTIFY THAT ALL DEVELOPMENT AND/OR CONSTRUCTION WILL BE DONE ACCORDING TO THESE PLANS AND THAT ANY RESPONSIBLE PERSONNEL INVOLVED IN THE CONSTRUCTION PROJECT WILL HAVE A CERTIFICATE OF ATTENDANCE AT A DEPARTMENT OF ENVIRONMENT APPROVED TRAINING PROGRAM FOR THE CONTROL OF SEDIMENT AND EROSION BEFORE BEGINNING THE PROJECT. I SHALL ENGAGE A REGISTERED PROFESSIONAL ENGINEER TO SUPERVISE POND CONSTRUCTION AND PROVIDE THE HOWARD SOIL CONSERVATION DISTRICT WITH AN "AS-BUILT" PLAN OF THE POND WITHIN 30 DAYS OF COMPLETION. I ALSO AUTHORIZE PERIODIC ON-SITE INSPECTIONS BY THE HOWARD SOIL CONSERVATION DISTRICT.

SIGNATURE OF DEVELOPER — 9/20/02 DATE
PRINT NAME BELOW SIGNATURE
Robert A. Jenkins

ENGINEERS CERTIFICATE:

I/WE CERTIFY THAT THIS PLAN FOR POND CONSTRUCTION, EROSION AND SEDIMENT CONTROL REPRESENTS A PRACTICAL AND WORKABLE PLAN BASED ON MY PERSONAL KNOWLEDGE OF OF THE SITE CONDITIONS. THIS PLAN WAS PREPARED IN ACCORDANCE WITH THE REQUIREMENTS OF THE HOWARD SOIL CONSERVATION DISTRICT. I HAVE NOTIFIED THE DEVELOPER THAT HE/SHE MUST ENGAGE A REGISTERED PROFESSIONAL ENGINEER TO SUPERVISE POND CONSTRUCTION AND PROVIDE THE HOWARD SOIL CONSERVATION DISTRICT WITH AN "AS-BUILT" PLAN OF THE POND WITHIN 30 DAYS OF COMPLETION.

SIGNATURE OF ENGINEER — 10551 REG. NO. — 9/20/02 DATE
PRINT NAME BELOW SIGNATURE
John A. Manocchia, Jr.

9/20/02
Date

Professional Engr. No. 10551

F-02-111

F-02-111

Thu Sep 19 9:19:02 2002 11010\dwg\sheets\swm detail sheet.dwg

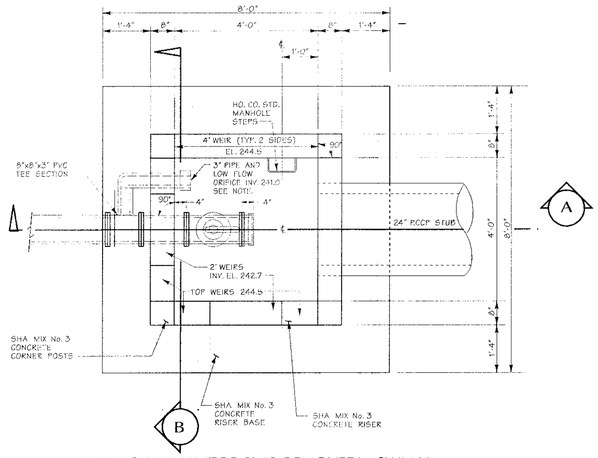

R-5 RISER PLAN (TOP SLAB REMOVED) - SWM V

Scale: ½" = 1'-0"

CAST IN PLACE

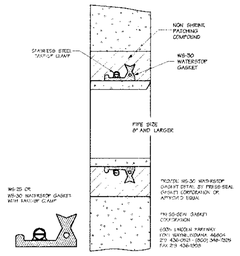

PIPE WATER STOP DETAIL

NOT TO SCALE

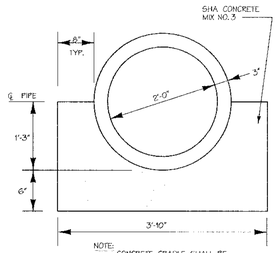

NTS

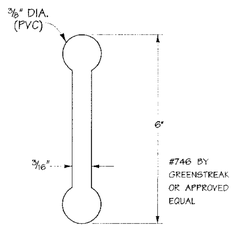

6" WATERSTOP

NOT TO SCALE

NOTE: SEE DETAIL SHEET 43 OF 57. LOW FLOW ORIFICE SHALL BE BLOCKED DURING SEDIMENT EROSION CONTROL PHASE.

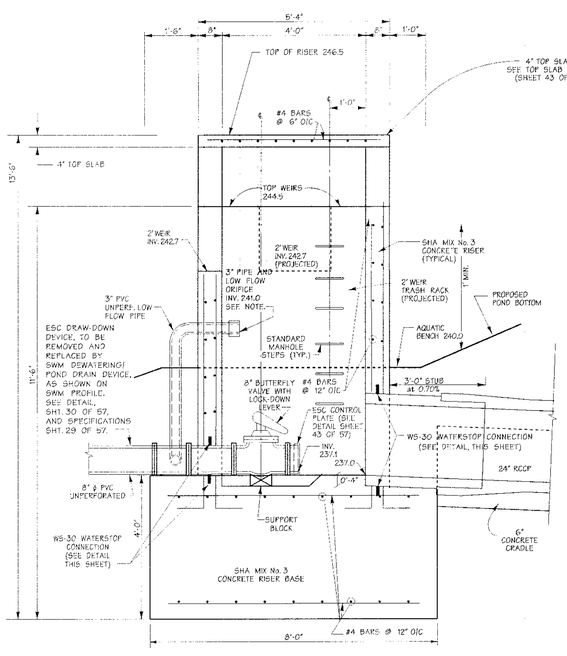

SECTION A

THE TRASH RACK 2'-6" x 5'-0" (OUTSIDE DIMENSION) x 1'-0" (NON-2' WEIR SIDES) AND 1'-6"(2' WEIR SIDES)DEEP, #8 BENT BARS @ 6" O.C., TO BE MOUNTED ON ALL FOUR SIDES, OR RISER. THE TRASH RACK SHALL EXTEND A MINIMUM OF 6" BELOW THE WEIR INVERT ON ANY GIVEN SIDE. THE TRASH RACK WILL EXTEND DOWN ANOTHER 2'-0" TO COVER 2' WEIRS. THE TRASH RACK IS TO BE WELDED TO 2" x 2" L-BRACKETS, THEN FASTENED TO TOP SLAB & WALLS WITH TEN ½" x 6" LG. HEXHEAD GALVANIZED BOLTS. THE TRASH RACK SHALL BE GALVANIZED AFTER FABRICATION AND PAINTED BATTLESHIP GRAY.

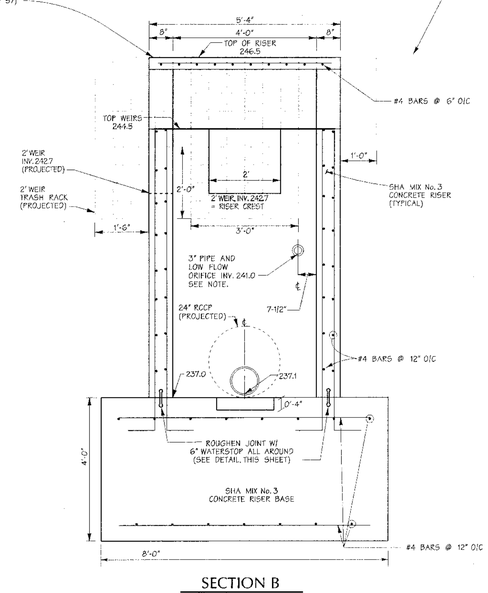

SECTION B

R-5 RISER DETAIL FOR POND - SWM V

Scale: 1/2" = 1'-0"

CAST IN PLACE

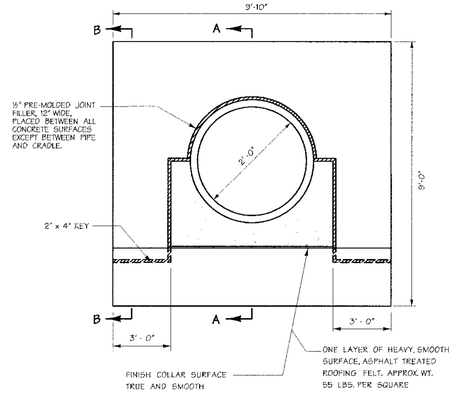

DETAIL SHOWN FOR EARTH FOUNDATION. FOR ROCK FOUNDATION, FOUND BOTTOM OF CRADLE ON ROCK LINE AND KEY COLLAR 6" INTO ROCK.

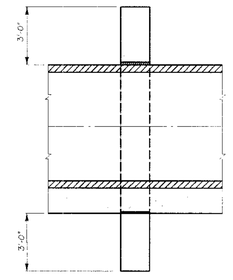

SECTION A-A

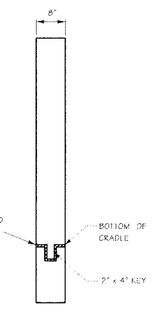

SECTION B-B

SWM V

ANTI - SEEP COLLAR DETAIL

CAST IN PLACE - NOT TO SCALE

THESE PLANS HAVE BEEN REVIEWED FOR THE HOWARD SOIL CONSERVATION DISTRICT AND MEET THE TECHNICAL REQUIREMENTS FOR SMALL POND CONSTRUCTION, SOIL EROSION AND SEDIMENT CONTROL.

U.S.D.A. NATURAL RESOURCES CONSERVATION SERVICE — 9/30/02 DATE

THESE PLANS FOR SMALL POND CONSTRUCTION, SOIL EROSION AND SEDIMENT CONTROL MEET THE REQUIREMENTS OF HOWARD SOIL CONSERVATION DISTRICT.

APPROVED: _____ (HOWARD SOIL CONSERVATION DISTRICT) — 9/20/02 DATE

PLAN NUMBER _____

DEVELOPERS CERTIFICATE:

I/WE CERTIFY THAT ALL DEVELOPMENT AND/OR CONSTRUCTION WILL BE DONE ACCORDING TO THESE PLANS AND THAT ANY RESPONSIBLE PERSONNEL INVOLVED IN THE CONSTRUCTION PROJECT WILL HAVE A CERTIFICATE OF ATTENDANCE AT A DEPARTMENT OF ENVIRONMENT APPROVED TRAINING PROGRAM FOR THE CONTROL OF SEDIMENT AND EROSION BEFORE BEGINNING THE PROJECT. I SHALL ENGAGE A REGISTERED PROFESSIONAL ENGINEER TO SUPERVISE POND CONSTRUCTION AND PROVIDE THE HOWARD SOIL CONSERVATION DISTRICT WITH AN "AS-BUILT" PLAN OF THE POND WITHIN 30 DAYS OF COMPLETION. I ALSO AUTHORIZE PERIODIC ON-SITE INSPECTIONS BY THE HOWARD SOIL CONSERVATION DISTRICT.

Robert A. Jenkins — 9/24/02 DATE

SIGNATURE OF DEVELOPER
PRINT NAME BELOW SIGNATURE
Robert A. Jenkins

ENGINEERS CERTIFICATE:

I/WE CERTIFY THAT THIS PLAN FOR POND CONSTRUCTION, EROSION AND SEDIMENT CONTROL REPRESENTS A PRACTICAL AND WORKABLE PLAN BASED ON MY PERSONAL KNOWLEDGE OF OF THE SITE CONDITIONS. THIS PLAN WAS PREPARED IN ACCORDANCE WITH THE REQUIREMENTS OF THE HOWARD SOIL CONSERVATION DISTRICT. I HAVE NOTIFIED THE DEVELOPER THAT HE/SHE MUST ENGAGE A REGISTERED PROFESSIONAL ENGINEER TO SUPERVISE POND CONSTRUCTION AND PROVIDE THE HOWARD SOIL CONSERVATION DISTRICT WITH AN "AS-BUILT" PLAN OF THE POND WITHIN 30 DAYS OF COMPLETION.

SIGNATURE OF ENGINEER — 10551 REG. NO. — 9/20/02 DATE

PRINT NAME BELOW SIGNATURE
John W. Newcomer, Jr.

F-02-111

9/20/02 Date

Professional Engr. No. 10551

APPROVED: HOWARD COUNTY DEPT. OF PUBLIC WORKS

CHIEF, BUREAU OF HIGHWAYS — 10-10-02 DATE

APPROVED: HOWARD COUNTY DEPT. OF PLANNING AND ZONING

CHIEF, DIVISION OF LAND DEVELOPMENT — 10/22/02 DATE

CHIEF, DEVELOPMENT ENGINEERING DIVISION MK — 10/18/02 DATE

Date	No.	Revision Description

REVITZ PROPERTY

OWNER /DEVELOPER:

THE HOWARD RESEARCH & DEVELOPMENT CORPORATION
10275 LITTLE PATUXENT PARKWAY
COLUMBIA, MARYLAND 21044

DMW
Daft-McCune-Walker, Inc.
200 East Pennsylvania Avenue
Towson, Maryland 21286
(410) 296-3333
Fax 296-4705

A Team of Land Planners, Landscape Architects, Engineers, Surveyors & Environmental Professionals

SUBDIVISION NAME			SECTION/AREA		LOT/PARCEL #
					165 & P/O PAR. 837
PLAT# OR L#	BLOCK #	ZONE	TAX/ZONE MAP	ELECT. DISTRICT	CENSUS TRACT
22624/436	20	PEC	47, GRID 20	6 th	
WATER CODE			SEWER CODE		

TITLE

FINAL PLAN
SWM V DETAIL SHEET

Des By	MRT	Scale	1" = 50'	Proj. No.	01011.B
Drn By	KMF	Date	9/9/02	41	OF 57
Chk By		Approved			

F-02-111

Thu Sep 19 9/19/02 4:53:48 PM C:\Projects\01011\Drawings\01011B-SWMV-DETAILS.dwg

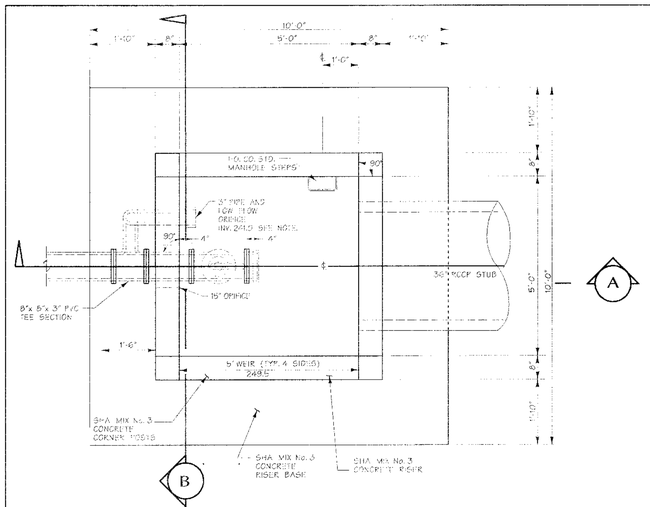

R-6 RISER PLAN (TOP SLAB REMOVED) - SWM VI

Scale: ½" = 1'-0"
CAST IN PLACE

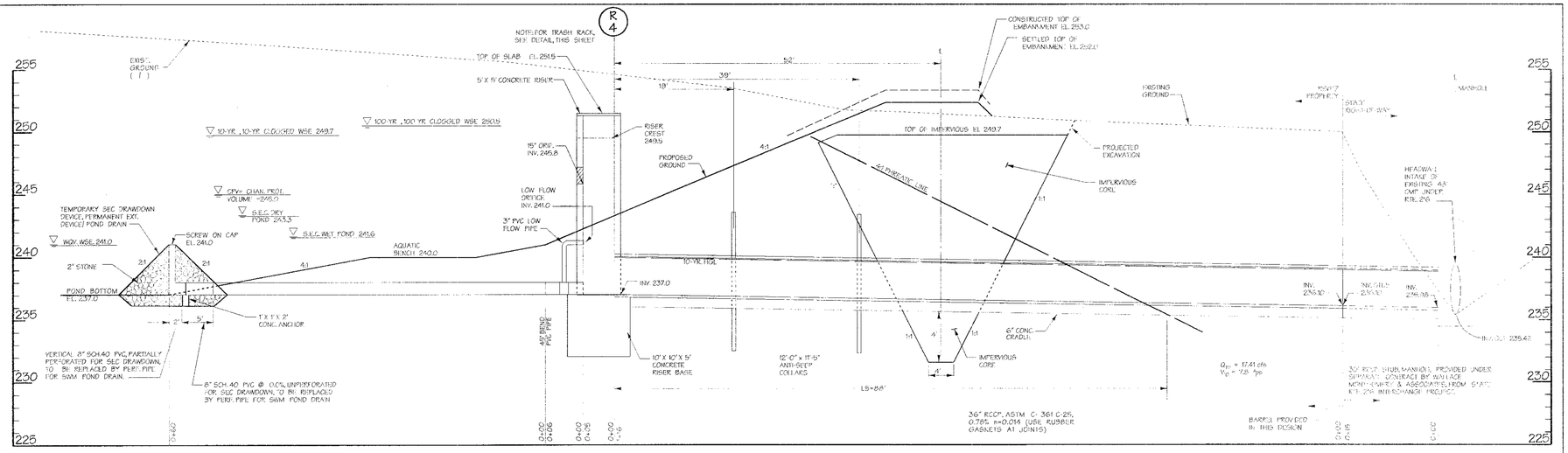

PROFILE THROUGH POND/ RISER/ BARREL

Scale: Hor.: 1"=10'
Ver.: 1"=5'

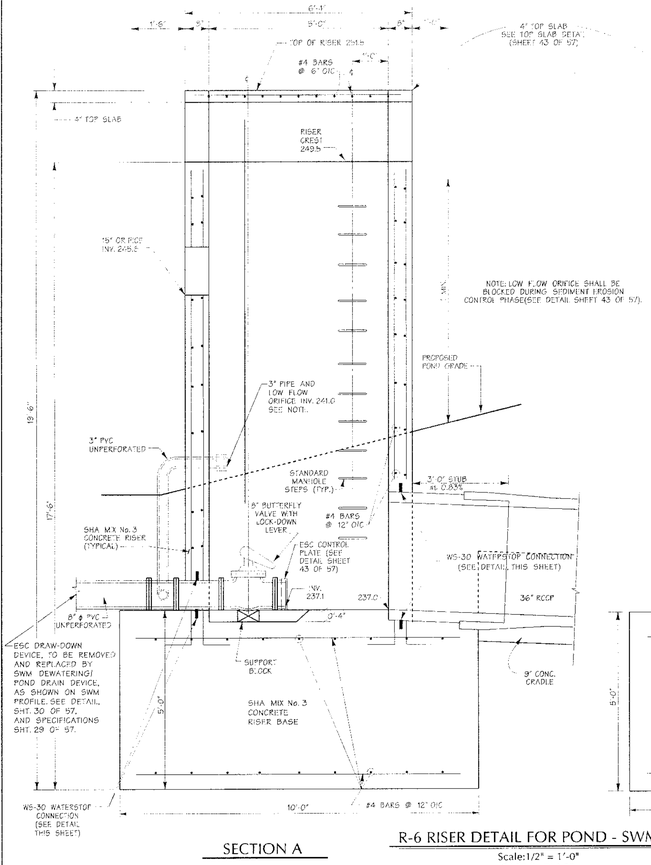

SECTION A

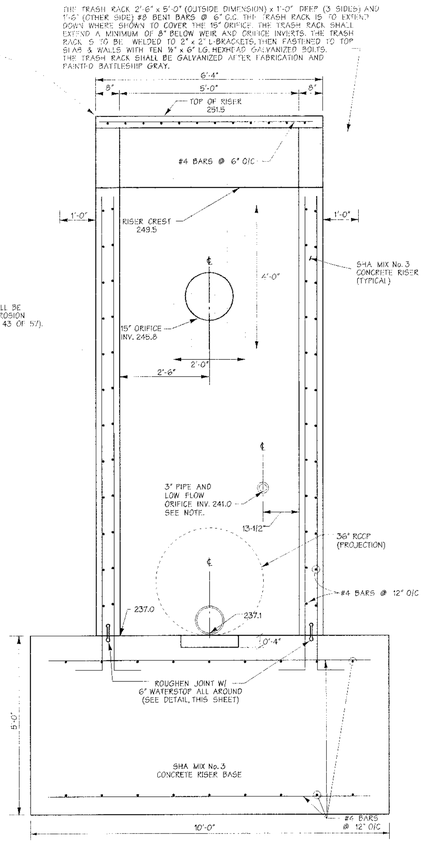

R-6 RISER DETAIL FOR POND - SWM VI

Scale:1/2" = 1'-0"
CAST IN PLACE

SECTION B

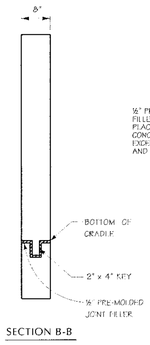

SECTION B-B

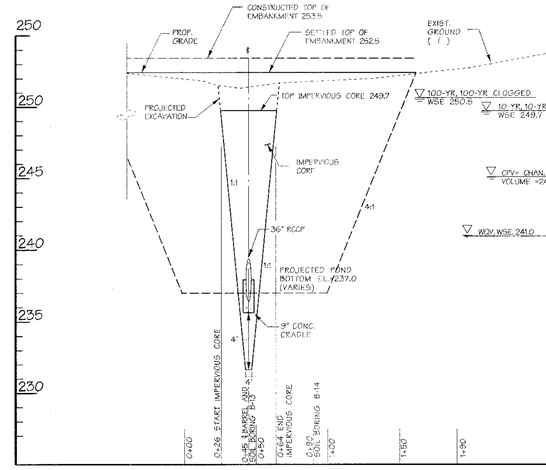

PROFILE ALONG EMBANKMENT

Scale: Hor.: 1"=50'
Ver.: 1"=5'

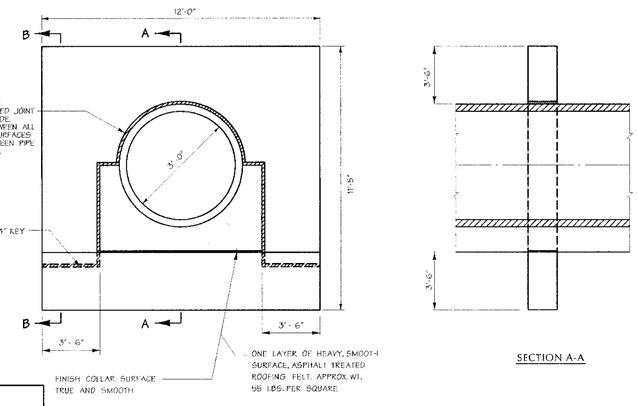

DETAIL SHOWN FOR EARTH FOUNDATION. FOR ROCK FOUNDATION, FOUND BOTTOM OF CRADLE ON ROCK LINE AND KEY COLLAR 6" INTO ROCK.

ANTI - SEEP COLLAR DETAIL - SWM VI

CAST IN PLACE - NOT TO SCALE

SECTION A-A

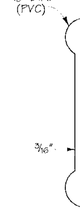

6" WATERSTOP

NOT TO SCALE

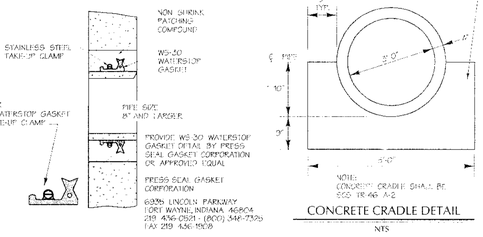

PIPE WATER STOP DETAIL

NTS

CONCRETE CRADLE DETAIL

NTS

THESE PLANS HAVE BEEN REVIEWED FOR THE HOWARD SOIL CONSERVATION DISTRICT AND MEET THE TECHNICAL REQUIREMENTS FOR SMALL POND CONSTRUCTION, SOIL EROSION AND SEDIMENT CONTROL.

U.S.D.A. NATURAL RESOURCES CONSERVATION SERVICE — 9/30/02 DATE

THESE PLANS FOR SMALL POND CONSTRUCTION, SOIL EROSION AND SEDIMENT CONTROL MEET THE REQUIREMENTS OF HOWARD SOIL CONSERVATION DISTRICT.

APPROVED: HOWARD SOIL CONSERVATION DISTRICT — 9/20/02 DATE

PLAN NUMBER _____

DEVELOPERS CERTIFICATE:

I/WE CERTIFY THAT ALL DEVELOPMENT AND/OR CONSTRUCTION WILL BE DONE ACCORDING TO THESE PLANS AND THAT ANY RESPONSIBLE PERSONNEL INVOLVED IN THE CONSTRUCTION PROJECT WILL HAVE A CERTIFICATE OF ATTENDANCE AT A DEPARTMENT OF ENVIRONMENT APPROVED TRAINING PROGRAM FOR THE CONTROL OF SEDIMENT AND EROSION BEFORE BEGINNING THE PROJECT. I SHALL ENGAGE A REGISTERED PROFESSIONAL ENGINEER TO SUPERVISE POND CONSTRUCTION AND PROVIDE THE HOWARD SOIL CONSERVATION DISTRICT WITH AN "AS-BUILT" PLAN OF THE POND WITHIN 30 DAYS OF COMPLETION. I ALSO AUTHORIZE PERIODIC ON-SITE INSPECTIONS BY THE HOWARD SOIL CONVERSATION DISTRICT.

Robert A. Jenkins — 9/20/02 DATE

SIGNATURE OF DEVELOPER
PRINT NAME BELOW SIGNATURE
Robert A. Jenkins

ENGINEERS CERTIFICATE:

I/WE CERTIFY THAT THIS PLAN FOR POND CONSTRUCTION, EROSION AND SEDIMENT CONTRO., REPRESENTS A PRACTICAL AND WORKABLE PLAN BASED ON MY PERSONAL KNOWLEDGE OF OF THE SITE CONDITIONS. THIS PLAN WAS PREPARED IN ACCORDANCE WITH T-HE REQUIREMENTS OF THE HOWARD SOIL CONSERVATION DISTRICT. I HAVE NOTIFIED THE DEVELOPER THAT HE/SHE MUST ENGAGE A REGISTERED PROFESSIONAL ENGINEER TO SUPERVISE POND CONSTRUCTION AND PROVIDE THE HOWARD SOIL CONSERVATION DISTRICT WITH AN "AS-BUILT" PLAN OF THE POND WITHIN 30 DAYS OF COMPLETION.

SIGNATURE OF ENGINEER
PRINT NAME BELOW SIGNATURE
John W. Manocchia, Jr. — 10551 REG. NO. — 9/23/02 DATE

F-02-111

9/23/02 Date

Professional Engr. No. 10551

APPROVED: HOWARD COUNTY DEPT. OF PUBLIC WORKS

CHIEF, BUREAU OF HIGHWAYS — 10-10-02 DATE

APPROVED: HOWARD COUNTY DEPT. OF PLANNING AND ZONING

CHIEF, DIVISION OF LAND DEVELOPMENT — 9/22/02 DATE

CHIEF, DEVELOPMENT ENGINEERING DIVISION MK — 10/8/02 DATE

Date	No.	Revision Description

REVITZ PROPERTY

OWNER /DEVELOPER:

THE HOWARD RESEARCH & DEVELOPMENT CORPORATION
10275 LITTLE PATUXENT PARKWAY
COLUMBIA, MARYLAND 21044

DMW
Daft-McCune-Walker, Inc.
200 East Pennsylvania Avenue
Towson, Maryland 21286
(410) 296-3333
Fax 296-4705

A Team of Land Planners, Landscape Architects, Engineers, Surveyors & Environmental Professionals

SUBDIVISION NAME		SECTION/AREA		LOT/PARCEL #	
				165 & 80 PAR. B37	
PLAT # OR L#	BLOCK #	ZONE	TAX/ZONE MAP	ELEC. DISTRICT	CENSUS TRACT
22678436	20	PEC	47, GRID 20	6 th	
WATER CODE		SEWER CODE			

TITLE

FINAL PLAN
SWM VI DETAIL SHEET

Des By	MRT	Scale	1" = 50'	Proj. No.	01011.B
Drn By	KMF	Date	9/9/02	42	OF 57
Chk By		Approved			

F-02-111

Fri Sep 20 07:11:06 2002 C:\Projects\01011B\Cadd\Plan\SWM VI DETAIL SHEET.dwg MRT 7252149 20/09/26 Model

STORMWATER MANAGEMENT POND
GENERAL CONSTRUCTION SPECIFICATIONS

1. GENERAL

ALL STORMWATER MANAGEMENT FACILITIES SHALL BE CONSTRUCTED IN ACCORDANCE WITH HOWARD COUNTY'S "STANDARD SPECIFICATIONS AND DETAILS FOR CONSTRUCTION (1981)" AND THE N.R.C.S. MARYLAND "STANDARDS AND SPECIFICATIONS FOR PONDS" (MD-378, 2000)

THESE SPECIFICATIONS ARE APPROPRIATE TO ALL PONDS WITHIN THE SCOPE OF THE STANDARD PRACTICE MD-378. ALL REFERENCES TO ASTM AND AASHTO SPECIFICATIONS APPLY TO THE MOST RECENT VERSION.

2. SITE PREPARATION

AREAS DESIGNATED FOR BORROW AREAS, EMBANKMENT, AND STRUCTURAL WORKS SHALL BE CLEARED, GRUBBED AND STRIPPED OF TOPSOIL. ALL TREES, VEGETATION, ROOTS AND OTHER OBJECTIONABLE MATERIAL SHALL BE REMOVED. CHANNEL BANKS AND SHARP BREAKS SHALL BE SLOPED TO NO STEEPER THAN 1:1. ALL TREES SHALL BE CLEARED AND GRUBBED WITHIN 15 FEET OF THE TOE OF THE EMBANKMENT.

AREAS TO BE COVERED BY THE RESERVOIR WILL BE CLEARED OF ALL TREES, BRUSH, LOGS, FENCES, RUBBISH AND OTHER OBJECTIONABLE MATERIAL UNLESS OTHERWISE DESIGNATED ON THE PLANS. TREES, BRUSH AND STUMPS SHALL BE CUT APPROXIMATELY LEVEL WITH THE GROUND SURFACE. FOR DRY STORMWATER MANAGEMENT PONDS, A MINIMUM OF A 25-FOOT RADIUS AROUND THE INLET STRUCTURE SHALL BE CLEARED.

ALL CLEARED AND GRUBBED MATERIAL SHALL BE DISPOSED OF OUTSIDE AND BELOW THE LIMITS OF THE DAM AND RESERVOIR AS DIRECTED BY THE OWNER OR HIS REPRESENTATIVE. WHEN SPECIFIED, A SUFFICIENT QUANTITY OF TOPSOIL WILL BE STOCKPILED IN A SUITABLE LOCATION FOR USE ON THE EMBANKMENT AND OTHER DESIGNATED AREAS.

3. EARTH FILL

MATERIAL - THE FILL MATERIAL SHALL BE TAKEN FROM APPROVED DESIGNATED BORROW AREAS. IT SHALL BE FREE OF ROOTS, STUMPS, WOOD, RUBBISH, STONES GREATER THAN 6", FROZEN OR OTHER OBJECTIONABLE MATERIALS. FILL MATERIAL FOR THE CENTER OF THE EMBANKMENT AND CUT OFF TRENCH SHALL CONFORM TO UNIFIED SOIL CLASSIFICATION GC, SC, CH, OR CL AND MUST HAVE AT LEAST 30% PASSING THE #200 SIEVE. CONSIDERATION MAY BE GIVEN TO THE USE OF OTHER MATERIALS IN THE EMBANKMENT IF DESIGNED BY A GEOTECHNICAL ENGINEER. SUCH SPECIAL DESIGNS MUST HAVE CONSTRUCTION SUPERVISED BY A GEOTECHNICAL ENGINEER.

MATERIALS USED IN THE OUTER SHELL OF THE EMBANKMENT MUST HAVE THE CAPABILITY TO SUPPORT VEGETATION OF THE QUALITY REQUIRED TO PREVENT EROSION OF THE EMBANKMENT.

PLACEMENT - AREAS ON WHICH FILL IS TO BE PLACED SHALL BE SCARIFIED PRIOR TO PLACEMENT OF FILL. FILL MATERIALS SHALL BE PLACED IN MAXIMUM 8 INCH THICK (BEFORE COMPACTION) LAYERS WHICH ARE TO BE CONTINUOUS OVER THE ENTIRE LENGTH OF THE FILL. THE MOST PERMEABLE BORROW MATERIAL SHALL BE PLACED IN THE DOWNSTREAM PORTIONS OF THE EMBANKMENT. THE PRINCIPAL SPILLWAY MUST BE INSTALLED CONCURRENTLY WITH FILL PLACEMENT AND NOT EXCAVATED INTO THE EMBANKMENT.

COMPACTION - THE MOVEMENT OF THE HAULING AND SPREADING EQUIPMENT OVER THE FILL SHALL BE CONTROLLED SO THAT THE ENTIRE SURFACE OF EACH LIFT SHALL BE TRAVERSED BY NOT LESS THAN ONE TREAD TRACK OF THE EQUIPMENT OR COMPACTION SHALL BE ACHIEVED BY A MINIMUM OF FOUR COMPLETE PASSES OF A SHEEPSFOOT, RUBBER TIRED OR VIBRATORY ROLLER. FILL MATERIAL SHALL CONTAIN SUFFICIENT MOISTURE SUCH THAT THE REQUIRED DEGREE OF COMPACTION WILL BE OBTAINED WITH THE EQUIPMENT USED. THE FILL MATERIAL SHALL CONTAIN SUFFICIENT MOISTURE SO THAT IF FORMED INTO A BALL IT WILL NOT CRUMBLE, YET NOT BE SO WET THAT WATER CAN BE SQUEEZED OUT.

WHEN REQUIRED BY THE REVIEWING AGENCY THE MINIMUM REQUIRED DENSITY SHALL NOT BE LESS THAN 95% OF THE MAXIMUM DRY DENSITY WITH A MOISTURE CONTENT WITHIN ±2% OF THE OPTIMUM. EACH LAYER OF FILL SHALL BE COMPACTED AS NECESSARY TO OBTAIN THAT DENSITY, AND IS TO BE CERTIFIED BY THE ENGINEER AT THE TIME OF CONSTRUCTION. ALL COMPACTION IS TO BE DETERMINED BY AASHTO METHOD T 99 (STANDARD PROCTOR).

CUT OFF TRENCH - THE CUTOFF TRENCH SHALL BE EXCAVATED INTO IMPERVIOUS MATERIAL ALONG OR PARALLEL TO THE CENTERLINE OF THE EMBANKMENT AS SHOWN ON THE PLANS. THE EQUIPMENT USED FOR EXCAVATION, WITH THE MINIMUM WIDTH BEING FOUR FEET SHALL GOVERN THE BOTTOM WIDTH OF THE TRENCH. THE DEPTH SHALL BE AT LEAST 4 FEET BELOW EXISTING GRADE OR AS SHOWN ON THE PLANS. THE SIDE SLOPES OF THE TRENCH SHALL BE 1 TO 1 OR FLATTER. THE BACKFILL SHALL BE COMPACTED WITH CONSTRUCTION EQUIPMENT, ROLLERS, OR HAND TAMPERS TO ASSURE MAXIMUM DENSITY AND MINIMUM PERMEABILITY.

EMBANKMENT CORE - THE CORE SHALL BE PARALLEL TO THE CENTERLINE OF THE EMBANKMENT AS SHOWN ON THE PLANS. THE TOP WIDTH OF THE CORE SHALL BE A MINIMUM OF FOUR FEET. THE HEIGHT SHALL EXTEND UP TO AT LEAST THE 10 YEAR WATER ELEVATION OR AS SHOWN ON THE PLANS. THE SIDE SLOPES SHALL BE 1 TO 1 OR FLATTER. THE CORE SHALL BE COMPACTED WITH CONSTRUCTION EQUIPMENT, ROLLERS, OR HAND TAMPERS TO ASSURE MAXIMUM DENSITY AND MINIMUM PERMEABILITY. IN ADDITION, THE CORE SHALL BE PLACED CONCURRENTLY WITH THE OUTER SHELL OF THE EMBANKMENT.

4. STRUCTURE BACKFILL

BACKFILL ADJACENT TO PIPES OR STRUCTURES SHALL BE OF THE TYPE AND QUALITY CONFORMING TO THAT SPECIFIED FOR THE ADJOINING FILL MATERIAL. THE FILL SHALL BE PLACED IN HORIZONTAL LAYERS NOT TO EXCEED 4 INCHES IN THICKNESS AND COMPACTED BY HAND TAMPERS OR OTHER MANUALLY DIRECTED COMPACTION EQUIPMENT. THE MATERIAL NEEDS TO FILL COMPLETELY ALL SPACES UNDER AND ADJACENT TO THE PIPE. AT NO TIME DURING THE BACKFILLING OPERATION SHALL DRIVEN EQUIPMENT BE ALLOWED TO OPERATE CLOSER THAN 4 FEET, MEASURED HORIZONTALLY, TO ANY PART OF A STRUCTURE. UNDER NO CIRCUMSTANCES SHALL EQUIPMENT BE DRIVEN OVER ANY PART OF A CONCRETE STRUCTURE OR PIPE, UNLESS THERE IS A COMPACTED FILL OF 24" OR GREATER OVER THE STRUCTURE OR PIPE.

STRUCTURE BACKFILL MAY BE FLOWABLE FILL MEETING THE REQUIREMENTS OF MARYLAND DEPARTMENT OF TRANSPORTATION, STATE HIGHWAY ADMINISTRATION STANDARD SPECIFICATIONS FOR CONSTRUCTION AND MATERIALS, SECTION313 AS MODIFIED. THE MIXTURE SHALL HAVE A 100-200 PSI, 28 DAY UNCONFINED COMPRESSIVE STRENGTH. THE FLOWABLE FILL SHALL HAVE A MINIMUM PH OF 4.0 AND A MINIMUM RESISTIVITY OF 2,000 OHM-CM. MATERIAL SHALL BE PLACED SUCH THAT A MINIMUM OF 6" (MEASURED PERPENDICULAR TO THE OUTSIDE OF THE PIPE) OF FLOWABLE FILL SHALL BE UNDER (BEDDING), OVER AND, ON THE SIDES OF THE PIPE. IT ONLY NEEDS TO EXTEND UP TO THE SPRING LINE FOR RIGID CONDUITS. AVERAGE SLUMP OF THE FILL SHALL BE 7" TO ASSURE FLOWABILITY OF THE MATERIAL. ADEQUATE MEASURES SHALL BE TAKEN (SAND BAGS, ETC.) TO PREVENT FLOATING THE PIPE. WHEN USING FLOWABLE FILL, ALL METAL PIPE SHALL BE BITUMINOUS COATED. ANY ADJOINING SOIL FILL SHALL BE PLACED IN HORIZONTAL LAYERS NOT TO EXCEED FUR INCHES IN THICKNESS AND COMPACTED BY HAND TAMPERS OR OTHER MANUALLY DIRECTED COMPACTION EQUIPMENT. THE MATERIAL SHALL COMPLETELY FILL ALL VOIDS ADJACENT TO THE FLOWABLE FILL ZONE. AT NO TIME DURING THE BACKFILLING OPERATION SHALL DRIVEN EQUIPMENT BE ALLOWED TO OPERATE CLOSER THAN 4 FEET, MEASURED HORIZONTALLY, TO ANY PART OF A STRUCTURE. UNDER NO CIRCUMSTANCES SHALL EQUIPMENT BE DRIVEN OVER ANY PART OF A STRUCTURE OR PIPE, UNLESS THERE IS A COMPACTED FILL OF 24" OR GREATER OVER THE STRUCTURE OR PIPE. BACKFILL MATERIAL OUTSIDE THE STRUCTURAL BACKFILL (FLOWABLE FILL) ZONE SHALL BE OF THE TYPE AND QUALITY CONFORMING TO THAT SPECIFIED FOR THE CORE OF THE EMBANKMENT OR OTHER EMBANKMENT MATERIALS.

5. REMOVAL AND REPLACEMENT OF DEFECTIVE FILL

FILL PLACED AT DENSITIES LOWER THAN SPECIFIED MINIMUM DENSITY OR AT MOISTURE CONTENTS OUTSIDE THE SPECIFIED ACCEPTABLE RANGE OF MOISTURE CONTENT OR OTHERWISE NOT CONFORMING TO THE REQUIREMENTS OF THE SPECIFICATIONS SHALL BE REWORKED TO MEET THE REQUIREMENTS OR REMOVED AND REPLACED BY ACCEPTABLE FILL. THE BOTTOMS OF SUCH EXCAVATIONS SHALL BE FINISHED FLAT OR GENTLY CURVING AND AT THE SIDES OF SUCH EXCAVATIONS THE ADJACENT SOUND FILL SHALL BE TRIMMED TO A SLOPE NOT STEEPER THAN 3 FEET HORIZONTALLY TO 1 FOOT VERTICALLY EXTENDING FROM THE BOTTOM OF THE EXCAVATION TO THE FILL SURFACE.

6. PIPE CONDUITS

ALL PIPES SHALL BE CIRCULAR IN CROSS SECTION. ALL PERFORATED PIPES SHALL HAVE A MINIMUM OF 3.31 SQUARE INCHES OF OPENING PER SQUARE FOOT OF PIPE SURFACE (EX. 30 3/8-INCH HOLES PER SQUARE FOOT). PERFORATIONS ARE TO BE UNIFORMLY SPACED AROUND THE FULL PERIPHERY OF THE PIPE. ANY HOLES BLOCKED OR PARTIALLY BLOCKED BY BITUMINOUS COATING SHALL BE OPENED PRIOR TO INSTALLATION.

REINFORCED CONCRETE PIPE - ALL OF THE FOLLOWING CRITERIA SHALL APPLY FOR REINFORCED CONCRETE PIPE:

1. MATERIALS - REINFORCED CONCRETE PIPE SHALL HAVE BELL AND SPIGOT JOINTS WITH RUBBER GASKETS AND SHALL EQUAL OR EXCEED ASTM C-361.
2. BEDDING - REINFORCED CONCRETE PIPE CONDUITS SHALL BE LAID IN A CONCRETE BEDDING FOR THEIR ENTIRE LENGTH. THIS BEDDING / CRADLE SHALL CONSIST OF HIGH SLUMP CONCRETE PLACED UNDER THE PIPE AND UP THE SIDES OF THE PIPE AT LEAST 50 PERCENT OF ITS OUTSIDE DIAMETER WITH A MINIMUM THICKNESS OF 6 INCHES. WHERE CONCRETE CRADLE IS NOT NEEDED FOR STRUCTURAL REASONS, FLOWABLE FILL MAY BE USED AS DESCRIBED IN THE "STRUCTURE BACKFILL" SECTION OF THIS STANDARD. GRAVEL BEDDING IS NOT PERMITTED.
3. LAYING PIPE - BELL AND SPIGOT PIPE SHALL BE PLACED WITH THE BELL END UPSTREAM. JOINTS SHALL BE MADE IN ACCORDANCE WITH RECOMMENDATIONS OF THE MANUFACTURER OF THE MATERIAL. AFTER THE JOINTS ARE SEALED FOR THE ENTIRE LINE, THE BEDDING SHALL BE PLACED SO THAT ALL SPACES UNDER THE PIPE ARE FILLED. CARE SHALL BE EXERCISED TO PREVENT ANY DEVIATION FROM THE ORIGINAL LINE AND GRADE OF THE PIPE. THE FIRST JOINT MUST BE LOCATED WITHIN 4 FEET FROM THE RISER.
4. BACKFILLING SHALL CONFORM TO "STRUCTURE BACKFILL".
5. CONNECTIONS - ALL CONNECTIONS (TO ANTI-SEEP COLLARS, RISER, ETC.) SHALL BE WATERTIGHT.
6. OTHER DETAILS (ANTI-SEEP COLLARS, VALVES, ETC.) SHALL BE AS SHOWN ON THE DRAWINGS.

PLASTIC PIPE - ALL OF THE FOLLOWING CRITERIA SHALL APPLY FOR PLASTIC PIPE:

1. MATERIALS - PVC PIPE SHALL BE PVC-1120 OR PVC-1220 CONFORMING TO ASTM D-1785 OR ASTM D-2241. CORRUGATED HIGH DENSITY POLYETHYLENE (HDPE), COUPLINGS AND FITTINGS SHALL CONFORM TO THE FOLLOWING; 4" - 10" INCH PIPE SHALL MEET THE REQUIREMENTS OF AASHTO M252 TYPE S, AND 12" THROUGH 24" SHALL MEET THE REQUIREMENTS OF AASHTO M294 TYPE S.
2. JOINTS AND CONNECTIONS TO ANTI-SEEP COLLARS SHALL BE COMPLETELY WATERTIGHT.
3. BEDDING - THE PIPE SHALL BE FIRMLY AND UNIFORMLY BEDDED THROUGHOUT ITS ENTIRE LENGTH. WHERE ROCK OR SOFT, SPONGY OR OTHER UNSTABLE SOIL IS ENCOUNTERED, ALL SUCH MATERIAL SHALL BE REMOVED AND REPLACED WITH SUITABLE EARTH COMPACTED TO PROVIDE ADEQUATE SUPPORT.
4. BACKFILLING SHALL CONFORM TO "STRUCTURE BACKFILL".
5. OTHER DETAILS (ANTI-SEEP COLLARS, VALVES, ETC.) SHALL BE AS SHOWN ON THE DRAWINGS.

7. CONCRETE

CONCRETE SHALL MEET THE REQUIREMENTS OF THE MARYLAND DEPARTMENT OF TRANSPORTATION, STATE HIGHWAY ADMINISTRATION STANDARD SPECIFICATIONS FOR CONSTRUCTION AND MATERIALS, SECTION 414, MIX NO. 3

CAST-IN-PLACE CONCRETE STRUCTURES

1. SPECIFICATIONS: MARYLAND DEPARTMENT OF TRANSPORTATION, STATE HIGHWAY ADMINISTRATION STANDARD SPECIFICATIONS FOR CONSTRUCTION AND MATERIALS, LATEST EDITION.

   AASHTO STANDARD SPECIFICATIONS FOR HIGHWAY BRIDGES, LATEST EDITION, FOR DESIGN. CONCRETE DESIGN BY THE "SERVICE LOAD DESIGN METHOD".
2. CONCRETE: SHALL MEET THE REQUIREMENTS OF THE MARYLAND DEPARTMENT OF TRANSPORTATION, STATE HIGHWAY ADMINISTRATION STANDARD SPECIFICATIONS FOR CONSTRUCTION AND MATERIALS, SECTION 414 AND 902, MIX NO. 3.
3. CONTRACTOR MAY ADD COLOR MIX AT PLANT IN ACCORDANCE WITH MANUFACTURES RECOMMENDATION "C-12 MESA BEIGE" AS MANUFACTURED BY L. M. SCOFIELD COMPANY (213) 723-5285.

   CONTRACTOR SHALL SUPPLY MIX DESIGN FOR APPROVAL PRIOR TO APPLICATION. LOAD AND MIX TICKETS SHALL BE SUPPLIED FOR EACH TRUCK DELIVERY. NO PARTIAL FIELD MIXES SHALL BE ALLOWED.

   ALL CONCRETE SHALL ATTAIN A MINIMUM COMPRESSIVE STRENGTH OF 3,500 PSI AT 28 DAYS. DESIGN FC = 1,200 PSI.

   ALL EXPOSED EDGES SHALL BE CHAMFERED 3/4" X 3/4". ALL CONSTRUCTION KEYS ARE SHOWN NOMINAL SIZE.
4. REINFORCING STEEL: REINFORCING STEEL SHALL CONFORM TO ASTM A-615, GRADE 60. WHERE NOT INDICATED, BAR LAP SPLICES SHALL BE IN ACCORDANCE WITH AASHTO SPECIFICATIONS. THE MINIMUM CONCRETE COVER SHALL BE 2 INCHES UNLESS OTHERWISE NOTED. DESIGN FS = 24,000 PSI.
5. FOUNDATION: PRESUMED SOIL BEARING CAPACITY = 2,500 PSF. THE ENGINEER MUST APPROVE ALL FOUNDATIONS PRIOR TO CONCRETE PLACEMENT. IF UNSUITABLE MATERIAL IS ENCOUNTERED, THE MATERIAL SHALL BE UNDERCUT AND BACKFILLED WITH STRUCTURAL BACKFILL.
6. STRUCTURAL BACKFILL: CAST-IN-PLACE CONCRETE STRUCTURES AND PIPE SHALL BE BACKFILLED WITH SELECT GRANULAR BACKFILL MEETING THE REQUIREMENTS OF SHA GRADED AGGREGATE-SUBBASE. STRUCTURAL FILL SHALL BE PLACED IN LOOSE LIFTS OF APPROXIMATELY 6 INCHES, AND COMPACTED TO 95 PERCENT OF THE STANDARD PROCTOR MAXIMUM DRY DENSITY IN ACCORDANCE WITH AASHTO T-180. THE STATIC WEIGHT OF EQUIPMENT USED ADJACENT TO WALLS SHALL NOT EXCEED 3,000 POUNDS. NO BACKFILL SHALL BE PLACED AGAINST THE CAST-IN-PLACE WALLS UNTIL THE CONCRETE HAS ATTAINED THE SPECIFIED 28 DAY STRENGTH.

PRE-CAST CONCRETE STRUCTURES

SHOP DRAWINGS FOR PRE-CAST STRUCTURES WITH SUPPORTING STRUCTURAL COMPUTATIONS (SIGNED AND SEALED BY A MARYLAND REGISTERED PROFESSIONAL ENGINEER) MEETING ASTM REQUIREMENTS FOR PRE-CAST STRUCTURES MUST BE SUBMITTED TO THE ENGINEER, AND THE APPROVING AGENCY (HOWARD COUNTY DEVELOPMENT ENGINEERING DIVISION) FOR APPROVAL PRIOR TO FABRICATION.

8. ROCK RIP-RAP

ROCK RIP-RAP SHALL MEET THE REQUIREMENTS OF THE MARYLAND DEPARTMENT OF TRANSPORTATION, STATE HIGHWAY ADMINISTRATION STANDARD SPECIFICATIONS FOR CONSTRUCTION AND MATERIALS, SECTION 311.

GEOTEXTILE SHALL BE PLACED UNDER ALL RIP-RAP AND SHALL MEET THE REQUIREMENTS OF THE MARYLAND DEPARTMENT OF TRANSPORTATION, STATE HIGHWAY ADMINISTRATION STANDARD SPECIFICATIONS FOR CONSTRUCTION AND MATERIALS, SECTION 921.09, CLASS C.

THE RIP-RAP SHALL BE PLACED TO THE REQUIRED THICKNESS IN ONE OPERATION. THE ROCK SHALL BE DELIVERED AND PLACED IN A MANNER THAT WILL INSURE THE RIP-RAP IN PLACE SHALL BE REASONABLY HOMOGENEOUS WITH THE LARGER ROCKS UNIFORMLY DISTRIBUTED AND FIRMLY IN CONTACT ONE TO ANOTHER WITH THE SMALLER ROCKS FILLING THE VOIDS BETWEEN THE LARGER ROCKS.

DIMENSIONING TABLE

VARIABLE	SWM III	SWM IV	SWM V	SWM VI
A	251.5	243.0	237.0	242.0
B	255.5	246.5	241.5	246.5
C	256.5	247.5	242.5	247.5
D	257.5	248.5	243.5	248.5
E	1'	1'	1'	1'
F	24'	24'	18'	24'
G	30'	30'	24'	30'

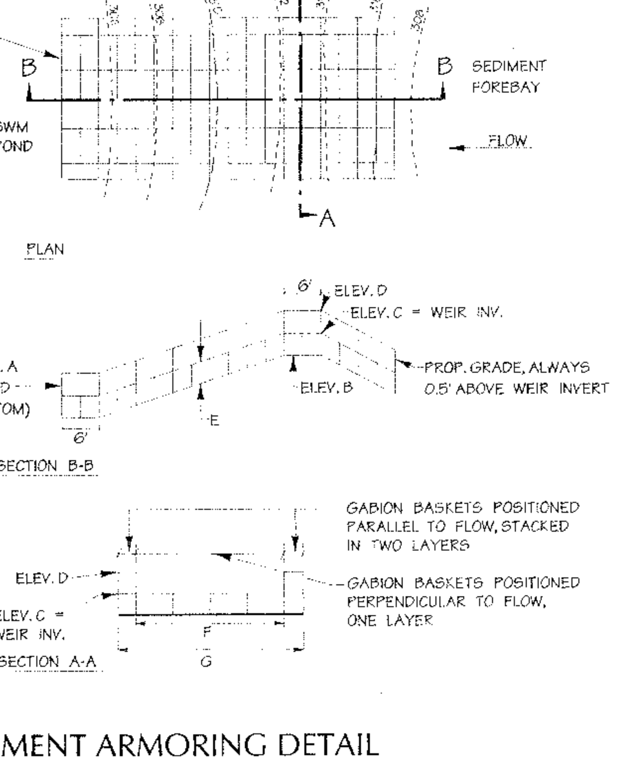

SWM FOREBAY EMBANKMENT ARMORING DETAIL

NOT TO SCALE

9. CARE OF WATER DURING CONSTRUCTION

ALL WORK ON PERMANENT STRUCTURES SHALL BE CARRIED OUT IN AREAS FREE FROM WATER. THE CONTRACTOR SHALL CONSTRUCT AND MAINTAIN ALL TEMPORARY DIKES, LEVEES, COFFERDAMS, DRAINAGE CHANNELS, AND STREAM DIVERSIONS NECESSARY TO PROTECT THE AREAS TO BE OCCUPIED BY THE PERMANENT WORKS. THE CONTRACTOR SHALL ALSO FURNISH, INSTALL, OPERATE, AND MAINTAIN ALL NECESSARY PUMPING AND OTHER EQUIPMENT REQUIRED FOR REMOVAL OF WATER FROM THE VARIOUS PARTS OF THE WORK AND FOR MAINTAINING THE EXCAVATIONS, FOUNDATION, AND OTHER PARTS OF THE WORK FREE FROM WATER AS REQUIRED OR DIRECTED BY THE ENGINEER FOR CONSTRUCTING EACH PART OF THE WORK. AFTER HAVING SERVED THEIR PURPOSE, ALL TEMPORARY PROTECTIVE WORKS SHALL BE REMOVED OR LEVELED AND GRADED TO THE EXTENT REQUIRED TO PREVENT OBSTRUCTION IN ANY DEGREE WHATSOEVER OF THE FLOW OF WATER TO THE SPILLWAY OR OUTLET WORKS AND SO AS NOT TO INTERFERE IN ANY WAY WITH THE OPERATION OR MAINTENANCE OF THE STRUCTURE. STREAM DIVERSIONS SHALL BE MAINTAINED UNTIL THE FULL FLOW CAN BE PASSED THROUGH THE PERMANENT WORKS. THE REMOVAL OF WATER FROM THE REQUIRED EXCAVATION AND THE FOUNDATION SHALL BE ACCOMPLISHED IN A MANNER AND TO THE EXTENT THAT WILL MAINTAIN STABILITY OF THE EXCAVATED SLOPES AND BOTTOM OF REQUIRED EXCAVATIONS AND WILL ALLOW SATISFACTORY PERFORMANCE OF ALL CONSTRUCTION OPERATIONS. DURING THE PLACING AND COMPACTING OF MATERIAL IN REQUIRED EXCAVATIONS, THE WATER LEVEL AT THE LOCATIONS BEING REFILLED SHALL BE MAINTAINED BELOW THE BOTTOM OF THE EXCAVATION AT SUCH LOCATIONS WHICH MAY REQUIRE DRAINING THE WATER TO SUMPS FROM WHICH THE WATER SHALL BE PUMPED.

10. STABILIZATION

ALL BORROW AREAS SHALL BE GRADED TO PROVIDE PROPER DRAINAGE AND LEFT IN A SIGHTLY CONDITION. ALL EXPOSED SURFACES OF THE EMBANKMENT, SPILLWAY, SPOIL AND BORROW AREAS, AND BERMS SHALL BE STABILIZED BY SEEDING, LIMING, FERTILIZING AND MULCHING IN ACCORDANCE WITH THE NATURAL RESOURCES CONSERVATION SERVICE STANDARDS AND SPECIFICATIONS FOR CRITICAL AREA PLANTING (MD-342) OR AS SHOWN ON THE ACCOMPANYING DRAWINGS.

11. EROSION AND SEDIMENT CONTROL

CONSTRUCTION OPERATIONS WILL BE CARRIED OUT IN SUCH A MANNER THAT EROSION WILL BE CONTROLLED AND WATER AND AIR POLLUTION MINIMIZED. STATE AND LOCAL LAWS CONCERNING POLLUTION ABATEMENT WILL BE FOLLOWED. CONSTRUCTION PLANS SHALL DETAIL EROSION AND SEDIMENT CONTROL MEASURES TO BE EMPLOYED DURING THE CONSTRUCTION PROCESS.

ALL DISTURBED AREAS SHALL BE CONTROLLED BY AN EROSION AND SEDIMENT CONTROL PLAN WHICH HAS BEEN APPROVED BY THE HOWARD SOIL CONSERVATION DISTRICT (H. S. C. D.).

12. SEEDING

SEEDING, FERTILIZING AND MULCHING SHALL BE AS FOLLOWS:

SEED MIX: 50% KENBLUE KENTUCKY BLUEGRASS
40% PENNLAWN CREEPING RED FESCUE
10% STREAKER REDTOP
APPLIED AT A RATE OF 150 LBS. PER ACRE.
(OR)
REBEL II TALL FESCUE (125 LBS. PER ACRE)
PENNFINE PERENNIAL RYEGRASS (15 LBS. PER ACRE)
KENBLUE KENTUCKY BLUEGRASS (10 LBS. PER ACRE)
(OR)
PENNLAWN CREEPING RED FESCUE (70 LBS. PER ACRE)
AURORA HARD FESCUE (50 LBS. PER ACRE)
COMMON WHITE CLOVER (6 LBS. PER ACRE)
WINTER RYE (45 LBS. PER ACRE)
(OR)
70% FORAGER TALL FESCUE
30% CHEMUNG CROWNVETCH, INOCULATED
APPLIED AT A RATE OF 55 LBS. PER ACRE
OPTIMUM SEEDING DATES: MARCH 1 TO APRIL 30.

LIME: 2 TONS/ACRE DOLOMITIC LIMESTONE.

FERTILIZER: 600 LBS./ACRE 10-10-10 FERTILIZER BEFORE SEEDING,
400 LBS./ACRE 30-0-0 UREAFORM FERTILIZER AT TIME OF SEEDING.

MULCH: STRAW AT 4,000 LBS. PER ACRE.

ANCHORING: MULCHING TOOL OR WOOD CELLULOSE FIBER BINDER AT A NET DRY BINDER RATE OF 750 POUNDS PER ACRE. THE WOOD CELLULOSE FIBER SHALL BE MIXED WITH WATER AND THE MIXTURE SHALL CONTAIN A MAXIMUM OF 50 POUNDS OF WOOD CELLULOSE FIBER PER 100 GALLONS OF WATER OR AT RATES RECOMMENDED BY THE MANUFACTURER.

SWM POND	'A'	'B'
III	255.0	2½"
IV	243.0	3"
V	241.0	2"
VI	241.0	3"

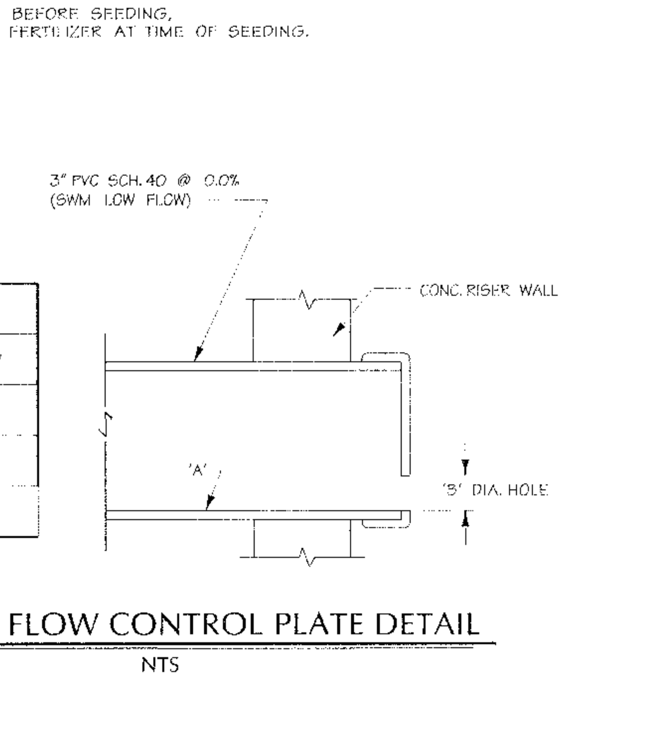

SWM LOW FLOW CONTROL PLATE DETAIL

NTS

SWM POND	'L'
III	5'-4"
IV	5'-4"
V	5'-4"
VI	5'-4"

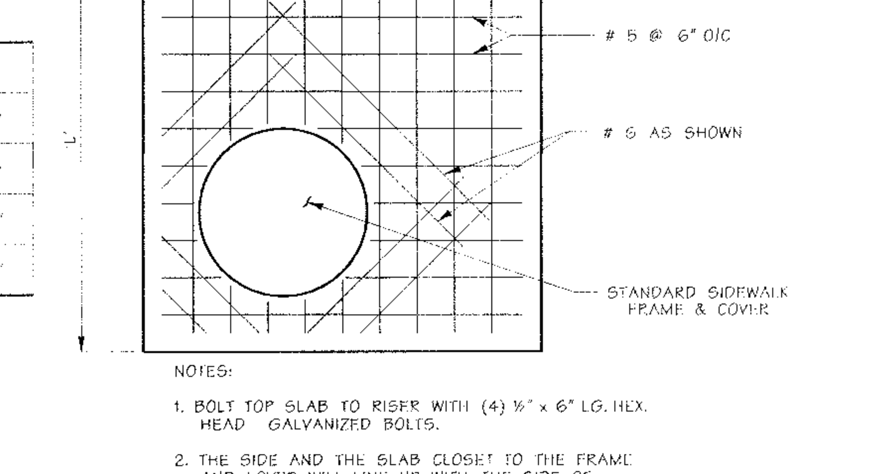

NOTES:

1. BOLT TOP SLAB TO RISER WITH (4) ½" x 6" LG. HEX. HEAD GALVANIZED BOLTS.
2. THE SIDE AND THE SLAB CLOSET TO THE FRAME AND LOVER WILL LINE UP WITH THE SIDE OF THE RISER WITH STANDARD MANHOLE STEPS.

TOP SLAB

Scale: ½" = 1'-0"
CAST IN PLACE

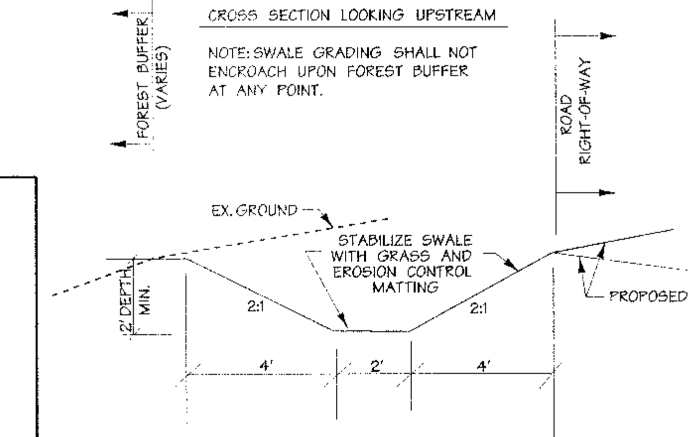

PERMANENT RECHARGE SWALE DETAIL

NOT TO SCALE

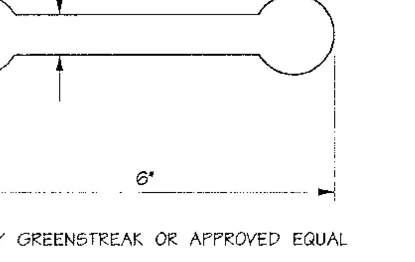

#746 BY GREENSTREAK OR APPROVED EQUAL

6" WATERSTOP

NOT TO SCALE

13. FILTER CLOTH

ALL FILTER CLOTH SHALL CONFORM TO THE 1994 MARYLAND STANDARDS AND SPECIFICATIONS FOR SOIL EROSION AND SEDIMENT CONTROL, OR THE LATEST EDITION.

14. GABIONS

ALL GABIONS SHALL BE PVC COATED WOVEN WIRE BASKETS. STONE SIZE SHALL BE 4 INCHES - 6 INCHES. (CLASS IV GABIONS).

15. CONSTRUCTION INSPECTION BY DESIGNATED ENGINEERS

THE CONSTRUCTION OF THE POND AND EMBANKMENT, AND CERTIFICATION THAT THE POND AND EMBANKMENT HAVE BEEN BUILT IN ACCORDANCE WITH THE PLANS SHALL BE UNDER THE SUPERVISION OF A REGISTERED PROFESSIONAL ENGINEER. THE ENGINEER SHALL BE NOTIFIED SUFFICIENTLY IN ADVANCE OF CONSTRUCTION IN ORDER THAT ARRANGEMENTS CAN BE MADE FOR (1) INSPECTION OF PIPE TRENCH AND BEDDING, (2) INSPECTION OF RISER AND ANTI-SEEP COLLARS AND (3) SUPERVISION OF EMBANKMENT CONSTRUCTION AND COMPACTION TESTING. THE ENGINEER SHALL DIRECT THE HANDLING OF WATER DURING CONSTRUCTION, MINOR CHANGES NOT AFFECTING THE INTEGRITY OF THE DAM IN ORDER TO COMPENSATE FOR UNUSUAL SOIL CONDITIONS, AND THE REMOVAL AND REPLACEMENT OF DEFECTIVE FILL.

16. INSPECTION SCHEDULE

1. PRIOR NOTIFICATION SHALL BE GIVEN TO THE ENGINEER SO THAT INSPECTIONS MAY BE MADE AT THE FOLLOWING STAGES:
   - (1) UPON COMPLETION OF EXCAVATION TO SUBFOUNDATION AND WHERE REQUIRED, INSTALLATION OF STRUCTURAL SUPPORTS OR REINFORCEMENT FOR STRUCTURES, INCLUDING BUT NOT LIMITED TO:
     - (i) CORE TRENCHES FOR STRUCTURAL EMBANKMENTS.
     - (ii) INLET-OUTLET STRUCTURES AND ANTI SEEP STRUCTURES, WATERTIGHT CONNECTORS ON PIPES AND
     - (iii) TRENCHES FOR ENCLOSED STORM DRAINAGE FACILITIES.
   - (2) DURING PLACEMENT OF STRUCTURAL FILL, REINFORCING AND CONCRETE, AND INSTALLATION OF PIPING AND CATCH BASINS
   - (3) DURING BACKFILL OF FOUNDATIONS AND TRENCHES
   - (4) DURING EMBANKMENT CONSTRUCTION AND
   - (5) UPON COMPLETION OF FINAL GRADING AND ESTABLISHMENT OF PERMANENT STABILIZATION.

   NO WORK SHALL PROCEED UNTIL THE ENGINEER INSPECTS AND APPROVES THE WORK PREVIOUSLY COMPLETED.
2. GEOTECHNICAL COMPACTION TESTING OF THE FACILITY EMBANKMENT IS REQUIRED. CERTIFICATION MUST BE PROVIDED TO THE DESIGNATED ENGINEER IN CHARGE OF THE AS-BUILT.
3. A COPY OF ALL MATERIAL SUPPLY TICKETS MUST BE GIVEN TO THE DESIGNATED ENGINEER IN CHARGE OF THE AS-BUILT.

17. MAINTENANCE SCHEDULE

ROUTINE MAINTENANCE: (BY POA)

1. THE FACILITY SHALL BE INSPECTED TWICE ANNUALLY, MARCH AND SEPTEMBER, IN ACCORDANCE WITH THE CHECKLIST AND REQUIREMENTS CONTAINED WITHIN USDA, SCS "STANDARDS AND SPECIFICATIONS FOR PONDS" (MD-378).
2. VEGETATED COVER SHALL BE MAINTAINED AT ALL TIMES.
3. SEDIMENT SHALL BE REMOVED FROM FOREBAYS WHEN THE DEPTH EXCEEDS 1'.
4. VEGETATION ON EMBANKMENT AND ACCESS BENCH SHALL NOT EXCEED 18" IN HEIGHT.
5. TOP AND OUTSIDE SIDE SLOPE OF THE EMBANKMENT SHALL BE MOWED A MINIMUM OF TWO (2) TIMES A YEAR, ONCE IN JUNE AND ONCE IN SEPTEMBER.

NON-ROUTINE MAINTENANCE: (BY HOWARD COUNTY)

1. THE POND OWNER(S) AND ANY HEIRS, SUCCESSORS, OR ASSIGNS SHALL BE RESPONSIBLE FOR THE SAFETY OF THE POND AND THE CONTINUED OPERATION, SURVEILLANCE, INSPECTION, AND MAINTENANCE THEREOF. THE POND OWNER(S) SHALL PROMPTLY NOTIFY THE SOIL CONSERVATION DISTRICT OF ANY UNUSUAL OBSERVATIONS THAT MAY BE INDICATIONS OF DISTRESS SUCH AS EXCESSIVE SEEPAGE, TURBID SEEPAGE, SLIDING OR SLUMPING.
2. RILLS ON THE SLOPES OF THE DAM AND WASHED IN THE EARTH SPILLWAY SHALL BE FILLED WITH SUITABLE MATERIAL AND THOROUGHLY COMPACTED. THESE AREAS SHALL BE RESEEDED OR RESODDED, LIMED, AND FERTILIZED AS NEEDED.
3. ALL APPURTENANCES SHALL BE KEPT FREE OF TRASH.
4. TRASH AND DEBRIS SHALL BE REMOVED AS NECESSARY.
5. INSIDE SIDE SLOPE AND MAINTENANCE ACCESS SHOULD BE MOWED AS NEEDED. CARE SHALL BE TAKEN NOT TO MOW ANY OF THE WETLAND PLANTINGS IN THE VICINITY OF THE 5' SAFETY BENCH.

18. OPERATION, MAINTENANCE AND INSPECTION

INSPECTION OF PONDS SHOWN HEREON SHALL BE PERFORMED AT LEAST TWICE ANNUALLY, IN ACCORDANCE WITH THE CHECKLIST AND REQUIREMENTS CONTAINED WITHIN USDA, SCS "STANDARDS AND SPECIFICATIONS FOR PONDS" (MD-378). THE POND OWNER(S) AND ANY HEIRS, SUCCESSORS, OR ASSIGNS SHALL BE RESPONSIBLE FOR THE SAFETY OF THE POND AND THE CONTINUED OPERATION, SURVEILLANCE, INSPECTION, AND MAINTENANCE THEREOF. THE POND OWNER(S) SHALL PROMPTLY NOTIFY THE SOIL CONSERVATION DISTRICT OF ANY UNUSUAL OBSERVATIONS THAT MAY BE INDICATIONS OF DISTRESS SUCH AS EXCESSIVE SEEPAGE, TURBID SEEPAGE, SLIDING OR SLUMPING.

19. UTILITIES

NO UTILITIES MAY BE CONSTRUCTED WITHIN/ALONG ANY MD 378 EMBANKMENT.

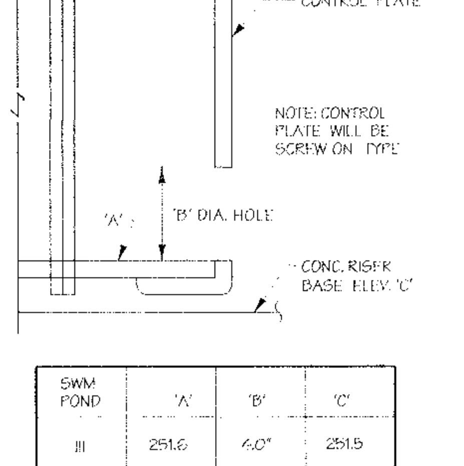

SWM POND	'A'	'B'	'C'
III	251.6	4.0"	251.5
IV	239.1	5.75"	239.0
V	237.1	3.5"	237.0
VI	237.1	4.0"	237.0

ESC CONTROL PLATE DETAIL

NTS

THESE PLANS HAVE BEEN REVIEWED FOR THE HOWARD SOIL CONSERVATION DISTRICT AND MEET THE TECHNICAL REQUIREMENTS FOR SMALL POND CONSTRUCTION, SOIL EROSION AND SEDIMENT CONTROL.

Jim Myers / CS 9/30/02
U.S.D.A. NATURAL RESOURCES CONSERVATION SERVICE DATE

THESE PLANS FOR SMALL POND CONSTRUCTION, SOIL EROSION AND SEDIMENT CONTROL MEET THE REQUIREMENTS OF HOWARD SOIL CONSERVATION DISTRICT.

APPROVED: [signature] 9/30/02
HOWARD SOIL CONSERVATION DISTRICT DATE

PLAN NUMBER ______

DEVELOPERS CERTIFICATE:

I/WE CERTIFY THAT ALL DEVELOPMENT AND/OR CONSTRUCTION WILL BE DONE ACCORDING TO THESE PLANS AND THAT ANY RESPONSIBLE PERSONNEL INVOLVED IN THE CONSTRUCTION PROJECT WILL HAVE A CERTIFICATE OF ATTENDANCE AT A DEPARTMENT OF ENVIRONMENT APPROVED TRAINING PROGRAM FOR THE CONTROL OF SEDIMENT AND EROSION BEFORE BEGINNING THE PROJECT. I SHALL ENGAGE A REGISTERED PROFESSIONAL ENGINEER TO SUPERVISE POND CONSTRUCTION AND PROVIDE THE HOWARD SOIL CONSERVATION DISTRICT WITH AN "AS-BUILT" PLAN OF THE POND WITHIN 30 DAYS OF COMPLETION. I ALSO AUTHORIZE PERIODIC ON-SITE INSPECTIONS BY THE HOWARD SOIL CONSERVATION DISTRICT.

[signature] 9/20/02
SIGNATURE OF DEVELOPER DATE
PRINT NAME BELOW SIGNATURE
Robert A. Jenkins

ENGINEERS CERTIFICATE:

I/WE CERTIFY THAT THIS PLAN FOR POND CONSTRUCTION, EROSION AND SEDIMENT CONTROL REPRESENTS A PRACTICAL AND WORKABLE PLAN BASED ON MY PERSONAL KNOWLEDGE OF THE SITE CONDITIONS. THIS PLAN WAS PREPARED IN ACCORDANCE WITH THE REQUIREMENTS OF THE HOWARD SOIL CONSERVATION DISTRICT. I HAVE NOTIFIED THE DEVELOPER THAT HE/SHE MUST ENGAGE A REGISTERED PROFESSIONAL ENGINEER TO SUPERVISE POND CONSTRUCTION AND PROVIDE THE HOWARD SOIL CONSERVATION DISTRICT WITH AN "AS-BUILT" PLAN OF THE POND WITHIN 30 DAYS OF COMPLETION.

[signature] 10551 9/20/02
SIGNATURE OF ENGINEER REG. NO. DATE
PRINT NAME BELOW SIGNATURE
John W. Ranocchia, Jr.

F-02-111

9/20/02
Date

Professional Engr. No. 10551

F-02-111

APPROVED: HOWARD COUNTY DEPT. OF PUBLIC WORKS

for [signature] 10-10-02
CHIEF, BUREAU OF HIGHWAYS DATE

APPROVED: HOWARD COUNTY DEPT. OF PLANNING AND ZONING

Cindy Hamilton 10/22/02
CHIEF, DIVISION OF LAND DEVELOPMENT DATE

[signature] 10/18/02
CHIEF, DEVELOPMENT ENGINEERING DIVISION MK DATE

Date	No.	Revision Description

REVITZ PROPERTY

OWNER /DEVELOPER:

THE HOWARD RESEARCH & DEVELOPMENT CORPORATION
10275 LITTLE PATUXENT PARKWAY
COLUMBIA, MARYLAND 21044

DMW
Daft·McCune·Walker, Inc.
200 East Pennsylvania Avenue
Towson, Maryland 21286
(410) 296-3333
Fax 296-4705

A Team of Land Planners, Landscape Architects, Engineers, Surveyors & Environmental Professionals

SUBDIVISION NAME			SECTION/AREA		LOT/PARCEL #
					165 & P/O PAR. 837
PLAT # OR L/F	BLOCK #	ZONE	TAX/ZONE MAP	ELECT. DISTRICT	CENSUS TRACT
2267/436	20	PEC	47, GRID 20	6 th	
WATER CODE			SEWER CODE		

TITLE

FINAL PLAN
SWM GENERAL DETAILS &
SPECIFICATIONS SHEET

Des By	MRT	Scale	1" = 50'	Proj. No.	01011.B
Drn By	KMF	Date	9/19/02	43 OF 57	
Chk By		Approved			

Fri Sep 20 07:54:50 2002 I:\01011B\dwgs\sw\swm.dwg

The Robert B. Balter Company
BORING LOG

Contract No 14287 MD Sheet 1 of 1

Project & Location	Revitz Property - Additional SWM Facilities, Howard County, Maryland	Begin 9/10/01	Complete 9/11/01

Boring No. B-101 — Surf. Elev. 247.5

Elev.	Depth	Identification of Materials	No.	N bpf	Remarks
247.5	0.3	Topsoil	S1	13	
		Brown, moist, micaceous Clayey Silt, some mf sand (ML)	S2	29	
	5		S3	28	
			S4	58	Prop. FG Elev. = 249.0 ft.
			S5	55	
	10	Dark brown, moist, micaceous mf SAND, some silt, trace rock fragments (SM) (Decomposed Rock)	S6	50/5"	
			S7	66	
	15		S8	50/5"	
232.1		Boring Terminated at 15.4 ft.			

Water Levels
At boring completion (9/11/01)
Water at: Dry
Caved at: 12.0'

24 hours after completion (9/11/01)
Water at: Dry
Caved at: 11.3'

The Robert B. Balter Company
18 Music Fair Road
Owings Mills, Maryland 21117

Scale 1"=5'

The Robert B. Balter Company
BORING LOG

Contract No 14287 MD Sheet 1 of 1

Project & Location	Revitz Property - Additional SWM Facilities, Howard County, Maryland	Begin 9/10/01	Complete 9/11/01

Boring No. B-102 — Surf. Elev. 256.8

Elev.	Depth	Identification of Materials	No.	N bpf	Remarks
256.8	0.8	Topsoil	S1	28	
		Brown, moist, SILT, some mf sand, trace roots (ML)	S2	35	
	5		S3	30	
		Gray & red-brown, moist, micaceous, mf SAND, and Clayey SILT (SM)	S4	33	
			S5	51	
	10	Red-brown, moist, micaceous, mf SAND, and Clayey SILT (SM) (Decomposed Rock)	S6	56	
			S7	50/4"	
	15	Gray & red-brown, moist, micaceous, mf SAND, some silt and rock fragments (SM) (Decomposed Rock)	S8	50/5"	Prop. FG Elev. = 240.8 ft.
			S9	50/4"	
			S10	50/4"	
238		Boring Terminated at 18.8 ft.			

Water Levels
At boring completion (9/12/01)
Water at: Dry
Caved at: 15.2'

24 hours after completion (9/13/01)
Water at: Dry
Caved at: 14.0'

The Robert B. Balter Company
18 Music Fair Road
Owings Mills, Maryland 21117

Scale 1"=5'

The Robert B. Balter Company
BORING LOG

Contract No 14287 MD Sheet 1 of 1

Project & Location	Revitz Property - Additional SWM Facilities, Howard County, Maryland	Begin 9/11/01	Complete 9/11/01

Boring No. B-103 — Surf. Elev. 251.0

Elev.	Depth	Identification of Materials	No.	N bpf	Remarks
251.0	0.3	Topsoil	S1	16	
		Gray & red-brown, moist, micaceous, mf SAND and Clayey SILT (SM-ML)	S2	46	Prop. FG Elev. = 249 ft.
	5		S3	43	
	6	Gray & red-brown, moist, micaceous, mf SAND, some clayey silt (SM) (Decomposed Rock)	S4	50/6"	
			S5	71	
241.1	10	Boring Terminated at 9.9 ft.			

Water Levels
At boring completion (9/11/01)
Water at: Dry
Caved at: 8.8'

48 hours after completion (9/13/01)
Water at: Dry
Caved at: 8.6'

The Robert B. Balter Company
BORING LOG

Contract No 14287 MD Sheet 1 of 1

Project & Location	Revitz Property - Additional SWM Facilities, Howard County, Maryland	Begin 9/10/01	Complete 9/10/01

Boring No. B-104 — Surf. Elev. 252.0

Elev.	Depth	Identification of Materials	No.	N bpf	Remarks
252.0	0.3	Topsoil	S1	37	
		Brown, moist, Clayey SILT, some mf sand (ML)	S2	23	
	4		S3	12	
	5	Gray & tan, moist, micaceous, Clayey SILT some mf sand (ML)	S4	28	
			S5	27	
	10		S6	40	
	12		S7	50/4"	
		Gray & red-brown, moist, micaceous, mf SAND and Clayey SILT (SM) (Decomposed Rock)	S8	75	
	15		S9	84	
			S10	50/5"	
242.8	20	Boring Terminated at 13.4 ft.			Prop. FG Elev. = 240.0 ft.

Water Levels
At boring completion (9/10/01)
Water at: Dry
Caved at: 16.2'

The Robert B. Balter Company
18 Music Fair Road
Owings Mills, Maryland 21117

Scale 1"=5'

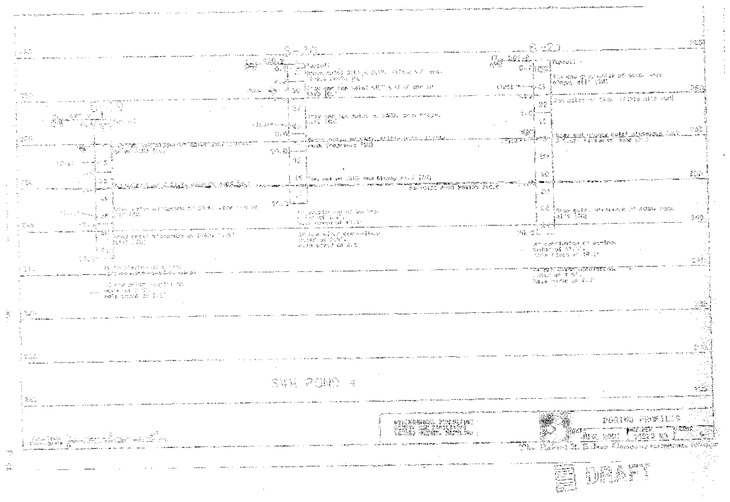

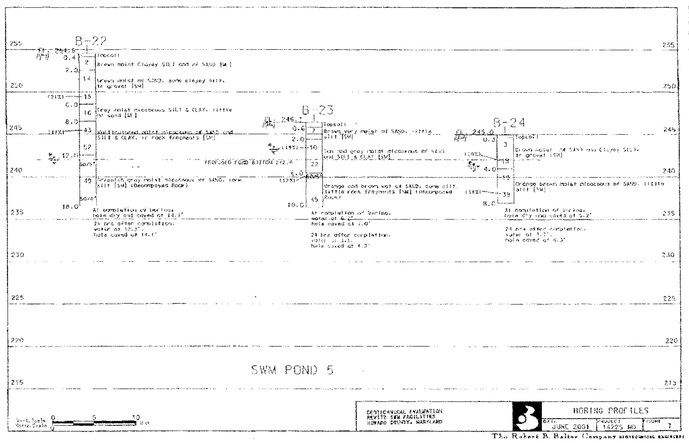

The Robert B. Balter Company

THESE PLANS HAVE BEEN REVIEWED FOR THE HOWARD SOIL CONSERVATION DISTRICT AND MEET THE TECHNICAL REQUIREMENTS OF SMALL POND CONSTRUCTION, SOIL EROSION AND SEDIMENT CONTROL.

USDA-NATURAL RESOURCES CONSERVATION SERVICE — DATE 9/20/02

THESE PLANS FOR SMALL POND CONSTRUCTION, SOIL EROSION AND SEDIMENT CONTROL MEET THE REQUIREMENTS OF HOWARD SOIL CONSERVATION DISTRICT.

APPROVED: HOWARD SOIL CONSERVATION DISTRICT — DATE 9/30/02

PLAN NUMBER _____

DEVELOPERS CERTIFICATE:

I/WE CERTIFY THAT ALL DEVELOPMENT AND/OR CONSTRUCTION WILL BE DONE ACCORDING TO THESE PLANS AND THAT ANY RESPONSIBLE PERSONNEL INVOLVED IN THE CONSTRUCTION PROJECT WILL HAVE A CERTIFICATE OF ATTENDANCE AT A DEPARTMENT OF ENVIRONMENT APPROVED "E&S/NPDES PROGRAM" FOR THE CONTROL OF SEDIMENT AND EROSION BEFORE BEGINNING THIS PROJECT. I/WE SHALL ENGAGE A REGISTERED PROFESSIONAL ENGINEER TO SUPERVISE POND CONSTRUCTION AND PROVIDE THE HOWARD SOIL CONSERVATION DISTRICT WITH AN "AS-BUILT" PLAN OF THE POND WITHIN 30 DAYS OF COMPLETION. I ALSO AUTHORIZE PERIODIC ON-SITE INSPECTIONS BY THE HOWARD SOIL CONSERVATION DISTRICT.

Robert A. Jenkins — 9/20/02
SIGNATURE OF DEVELOPER / PRINT NAME BELOW SIGNATURE / DATE

Robert A. Jenkins

ENGINEERS CERTIFICATE:

I/WE CERTIFY THAT THIS PLAN FOR POND CONSTRUCTION, EROSION AND SEDIMENT CONTROL REPRESENTS A PRACTICAL AND WORKABLE PLAN BASED ON MY PERSONAL KNOWLEDGE OF THE SITE CONDITIONS. THIS PLAN WAS "PREPARED IN ACCORDANCE WITH THE REQUIREMENTS OF THE HOWARD SOIL CONSERVATION DISTRICT. I HAVE NOTIFIED THE DEVELOPER THAT I/HE/SHE MUST ENGAGE A REGISTERED PROFESSIONAL ENGINEER TO SUPERVISE POND CONSTRUCTION AND PROVIDE THE HOWARD SOIL CONSERVATION DISTRICT WITH AN "AS-BUILT" PLAN OF THE POND WITHIN 30 DAYS OF COMPLETION.

SIGNATURE OF ENGINEER / PRINT NAME BELOW SIGNATURE — 10551 REG. NO. — 9/20/02 DATE

John W. Ranocchia, Jr.

9/20/02
Date

Professional Engr. No. 10551

F-02-111

APPROVED: HOWARD COUNTY DEPT. OF PUBLIC WORKS

for William F. Mahone Jr. — CHIEF, BUREAU OF HIGHWAYS — 10-10-02 DATE

APPROVED: HOWARD COUNTY DEPT. OF PLANNING AND ZONING

Linda Hamada — CHIEF, DIVISION OF LAND DEVELOPMENT — 10/22/02 DATE

CHIEF, DEVELOPMENT ENGINEERING DIVISION MK — 10/8/02 DATE

Date	No.	Revision Description

REVITZ PROPERTY

OWNER /DEVELOPER:

THE HOWARD RESEARCH & DEVELOPMENT CORPORATION
10275 LITTLE PATUXENT PARKWAY
COLUMBIA, MARYLAND 21044

DMW
Daft-McCune-Walker, Inc.
200 East Pennsylvania Avenue
Towson, Maryland 21286
(410) 296-3333
Fax 296-4705

A Team of Land Planners, Landscape Architects, Engineers, Surveyors & Environmental Professionals

SUBDIVISION NAME		SEC/AREA		LOT/PARCEL #	
				165 & P/O PAR. 837	
TAX MAP OR GRID	BLOCK #	ZONE	TAXZONE MAP	ELECT. DISTRICT	CENSUS TRACT
22/24/36	20	MEC	47, GRID 20	6 th	
WATER CODE			SEWER CODE		

TITLE
FINAL PLAN
STORM WATER MANAGEMENT
BORING LOGS

Des By	MRT	Scale	1" = 50'	Proj. No.	01011
Drn By	MRT	Date	9/19/02	44	OF 57
Chk By		Approved			

F-02-111

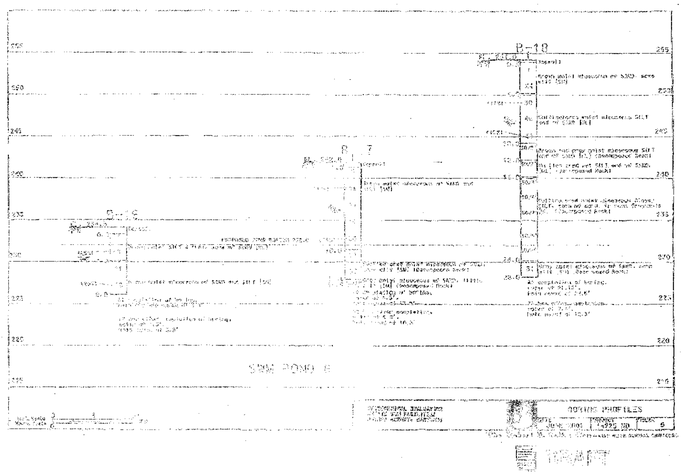

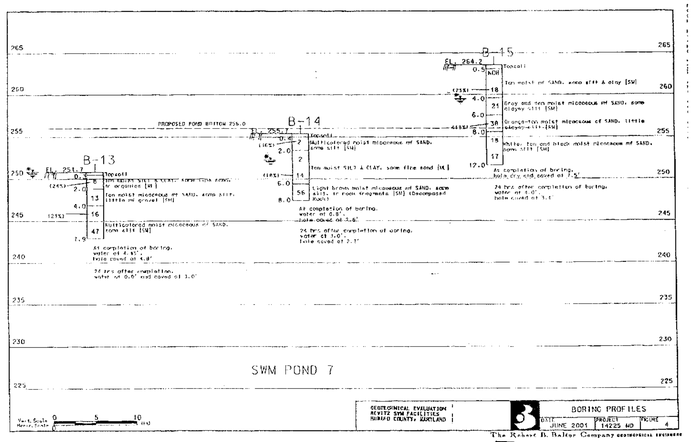

GEOTECHNICAL EVALUATION
REVITZ SWM FACILITIES
HOWARD COUNTY, MARYLAND

3 BORING PROFILES
SCALE: AS SHOWN | DATE: JUNE 2001 | PROJECT NO.: 14225.40 | PHONE: 4

The Robert B. Balter Company GEOTECHNICAL ENGINEERS

DRAFT

THESE PLANS HAVE BEEN REVIEWED FOR THE HOWARD SOIL CONSERVATION DISTRICT AND MEET THE TECHNICAL REQUIREMENTS FOR SMALL POND CONSTRUCTION, SOIL EROSION AND SEDIMENT CONTROL.

U.S.D.A. NATURAL RESOURCES CONSERVATION SERVICE — 9/30/02 DATE

THESE PLANS FOR SMALL POND CONSTRUCTION, SOIL EROSION AND SEDIMENT CONTROL MEET THE REQUIREMENTS OF HOWARD SOIL CONSERVATION DISTRICT.

APPROVED: HOWARD SOIL CONSERVATION DISTRICT — 9/30/02 DATE

PLAN NUMBER _____

DEVELOPERS CERTIFICATE:

I/WE CERTIFY THAT ALL DEVELOPMENT AND/OR CONSTRUCTION WILL BE DONE ACCORDING TO THESE PLANS AND THAT ANY RESPONSIBLE PERSONNEL INVOLVED IN THE CONSTRUCTION PROJECT WILL HAVE A CERTIFICATE OF ATTENDANCE AT A DEPARTMENT OF ENVIRONMENT APPROVED TRAINING PROGRAM FOR THE CONTROL OF SEDIMENT AND EROSION BEFORE BEGINNING THE PROJECT. SHALL ENGAGE A REGISTERED PROFESSIONAL ENGINEER TO SUPERVISE POND CONSTRUCTION AND PROVIDE THE HOWARD SOIL CONSERVATION DISTRICT WITH AN "AS-BUILT" PLAN OF THE POND WITHIN 30 DAYS OF COMPLETION. I ALSO AUTHORIZE PERIODIC ON-SITE INSPECTIONS BY THE HOWARD SOIL CONSERVATION DISTRICT.

Robert A. Jenkins — 9/20/02 DATE
SIGNATURE OF DEVELOPER
PRINT NAME BELOW SIGNATURE
Robert A. Jenkins

ENGINEERS CERTIFICATE:

I/WE CERTIFY THAT THIS PLAN FOR POND CONSTRUCTION, EROSION AND SEDIMENT CONTROL REPRESENTS A PRACTICAL AND WORKABLE PLAN BASED ON MY PERSONAL KNOWLEDGE OF THE SITE CONDITIONS. THIS PLAN WAS PREPARED IN ACCORDANCE WITH THE REQUIREMENTS OF THE HOWARD SOIL CONSERVATION DISTRICT. I HAVE NOTIFIED THE DEVELOPER THAT HE/SHE MUST ENGAGE A REGISTERED PROFESSIONAL ENGINEER TO SUPERVISE POND CONSTRUCTION AND PROVIDE THE HOWARD SOIL CONSERVATION DISTRICT WITH AN "AS-BUILT" PLAN OF THE POND WITHIN 30 DAYS OF COMPLETION.

SIGNATURE OF ENGINEER — 10551 REG. NO. — 9/20/02 DATE
PRINT NAME BELOW SIGNATURE
John W. Ramuchaz, Jr.

9/20/02
Date

Professional Engr. No. 10551

F-02-111

APPROVED: HOWARD COUNTY DEPT. OF PUBLIC WORKS

CHIEF, BUREAU OF HIGHWAYS — 10-10-02 DATE

APPROVED: HOWARD COUNTY DEPT. OF PLANNING AND ZONING

CHIEF, DIVISION OF LAND DEVELOPMENT — 10/22/02 DATE

CHIEF, DEVELOPMENT ENGINEERING DIVISION MK — 10/8/02 DATE

Date	No.	Revision Description

REVITZ PROPERTY

OWNER /DEVELOPER:

THE HOWARD RESEARCH & DEVELOPMENT CORPORATION
10275 LITTLE PATUXENT PARKWAY
COLUMBIA, MARYLAND 21044

DMW
Daft-McCune-Walker, Inc.
200 East Pennsylvania Avenue
Towson, Maryland 21286
(410) 296-3333
Fax 296-4705

A Team of Land Planners, Landscape Architects, Engineers, Surveyors & Environmental Professionals

SUBDIVISION NAME			SECTION/AREA			LOT/PARCEL #
						155 & P/O PAR. 837
PLAT # OR L/F	BOOK #	FOLIO	ZONING MAP	ELECT. DISTRICT	CENSUS TRACT	
22674/436	20	FEC	47, GRID 20	6 th		
WATER CODE			TAX ID #			

TITLE

FINAL PLAN STORM WATER MANAGEMENT BORING LOGS

Des By	MRT	Scale	1" = 50'	Proj. No.	01011
Drn By	MRT	Date	9/19/02		
Chk By		Approved			45 OF 57

F-02-111

Fri Sep 20 07:05:02 2002 I:\projects\01011\engineering\design\swm\swm_bor.dgn 9/20/02 8:01:18 AM

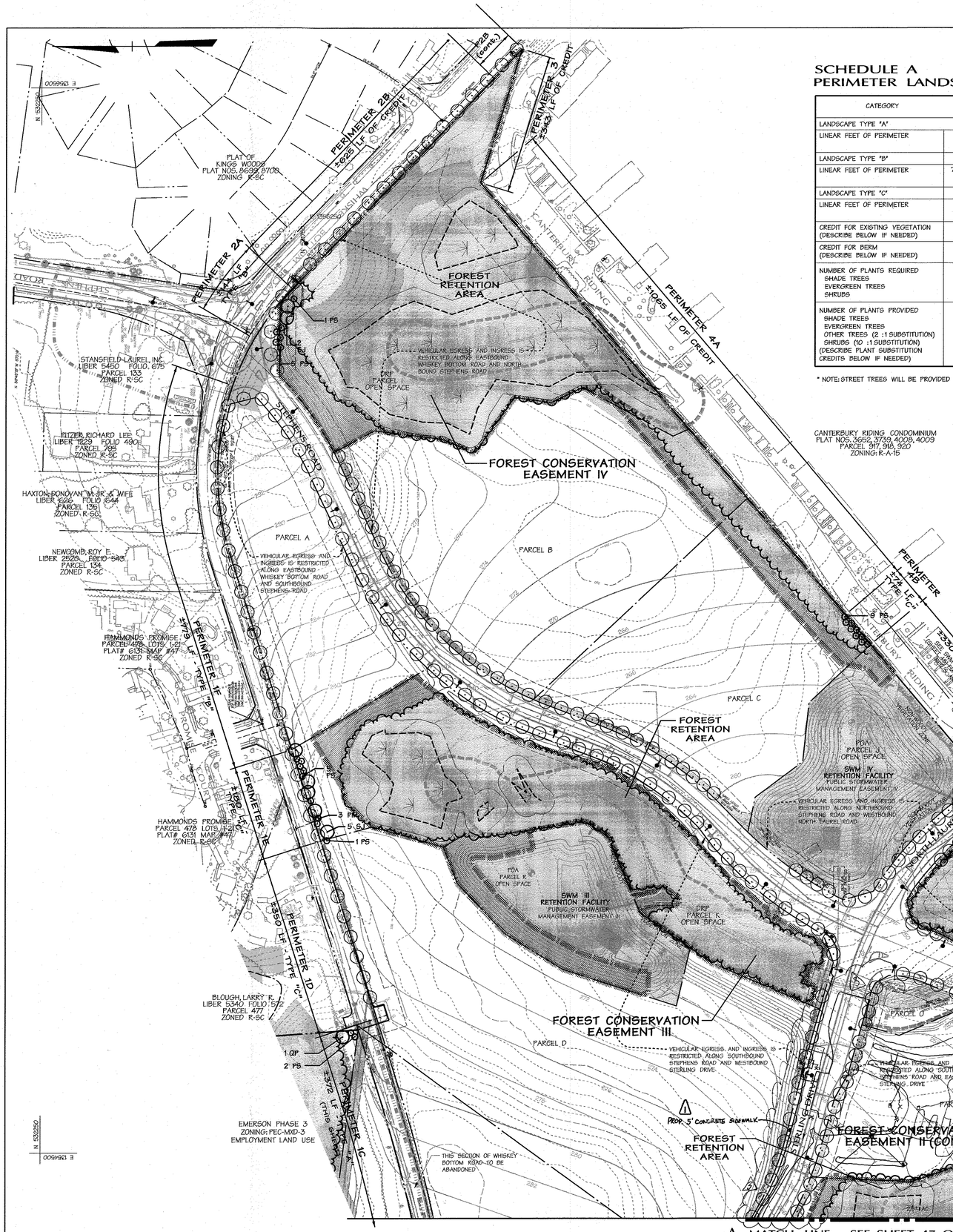

SCHEDULE A
PERIMETER LANDSCAPE EDGE

CATEGORY	ADJACENT to ROADWAYS							ADJACENT to PERIMETER PROPERTIES										
LANDSCAPE TYPE "A"								P 1B ▲	P 1C ▲						P 4F			
LINEAR FEET OF PERIMETER								375 LF.	433 LF.						205 LF.			
LANDSCAPE TYPE "B"	P 1A	P 1F ▲	P 2A	P 2B	P 5A	P 5B	P 5C											
LINEAR FEET OF PERIMETER	748 LF.	779 LF.	144 LF.	625 LF.	51 LF.	295 LF.	977 LF.											
LANDSCAPE TYPE "C"										P 1D ▲	P 1E	P 3	P 4A	P 4B	P 4C	P 4D	P 4E		P 6
LINEAR FEET OF PERIMETER										350 LF.	180 LF.	343 LF.	1085 LF.	74 LF.	330 LF.	781 LF.	481 LF.		667 LF.
CREDIT FOR EXISTING VEGETATION (DESCRIBE BELOW IF NEEDED)	748	N/A	N/A	625 LF.	N/A	295	977 LF.	N/A	N/A	N/A	N/A	343 LF.	1065 LF.	N/A	330 LF.	781 LF.	481 LF.	N/A	667 LF.
CREDIT FOR BERM (DESCRIBE BELOW IF NEEDED)	N/A	N/A	N/A	N/A	N/A	N/A	N/A	N/A	N/A	N/A	N/A	N/A	N/A	N/A	N/A	N/A	N/A	N/A	N/A
NUMBER OF PLANTS REQUIRED SHADE TREES EVERGREEN TREES SHRUBS	0 0 0	16 19 0	3 4 0	0 0 0	1 1 0	0 0 0	0 0 0	6 0 0	7 0 0	9 18 0	5 9 0	0 0 0	0 0 0	2 4 0	0 0 0	0 0 0	0 0 0	3 0 0	0 0 0
NUMBER OF PLANTS PROVIDED SHADE TREES EVERGREEN TREES OTHER TREES (2 :1 SUBSTITUTION) SHRUBS (10 :1 SUBSTITUTION) (DESCRIBE PLANT SUBSTITUTION CREDITS BELOW IF NEEDED)	0 0 0	0 0 0	2 6 0	0 0 0	1 1 0	0 0 0	0 0 0	0 0 0	0 0 0	0 0 0	5 9 0	0 0 0	0 0 0	0 9 0	0 0 0	0 0 0	0 0 0	6 0 0	0 0 0

* NOTE: STREET TREES WILL BE PROVIDED @ 1/40 LF, 209 THIS SHEET, 34 SHEET 47, 243 TOTAL.

PERIMETERS PROVIDED BY THE DEVELOPER: 1A, 1E, 2A, 2B, 3, 4A, 4B, 4C, 4D, 4E, 4F, 5A, 5B, 5C, 6

PERIMETERS TO BE PROVIDED BY THE BUILDER: 1B ▲, 1C, 1D, 1F

NOTES:

1. PLANT SUBSTITUTIONS ARE AS FOLLOWS:

   PERIM. 2A: 2 EG. TREES SUBSTITUTED FOR 1 SHADE TREE.
   PERIM. 4B: 4 EG. TREES SUBSTITUTED FOR 2 SHADE TREES.
   PERIM. 4F: 6 EG. TREES SUBSTITUTED FOR 3 SHADE TREES.

2. PERIMETERS 4B AND 5C SUPERCEDED BY SWM PLANTING REQUIREMENTS. SEE SHEETS 48 AND 49 FOR STORMWATER MANAGEMENT LANDSCAPING.

3. PLANT MATERIAL FOR "PERIMETERS TO BE PROVIDED BY THE BUILDER" TO BE SPECIFIED AND PLACED COINCIDENT WITH THE DEVELOPMENT OF PARCELS TO INSURE RESPONSIVENESS TO THE DESIGN OF EACH PARCEL AND TO PREVENT DAMAGE TO PLANT MATERIAL DURING THE CONSTRUCTION PROCESS.

4. SEE SHEET 50 FOR LANDSCAPE NOTES AND DETAILS.

Plant List (Perimeter Landscaping—Sheets 46 & 47)

QTY	SYM	BOTANICAL NAME/ COMMON NAME	SIZE	REMARKS
SHADE TREES				
1	QR	QUERCUS RUBRA RED OAK	2 1/2" - 3" CAL. 12'-14' HT	B & B FULL HEAD
7	SJ	SOPHORA JAPONICA JAPANESE PAGODA TREE	2 1/2" - 3" CAL. 12'-14' HT	B & B FULL HEAD
EVERGREEN TREES				
3	PM	PSEUDOTSUGA MENZIESII DOUGLASFIR	6'-8' HT.	B & B
28	PS	PINUS STROBUS WHITE PINE	6'-8' HT.	B & B HEAVY / UNSHEARED

Legend

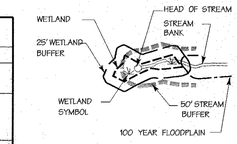

EX. FOREST EDGE

SCRUB/SHRUB HEDGEROW OR TREE GROUP

SLOPES >25%

SLOPES 15%-25%

REFORESTATION AREAS

FOREST CONSERVATION EASEMENT

LIMIT OF DISTURBANCE

PROPOSED WOODS EDGE

PROPOSED SHADE TREE

PROPOSED FLOWERING TREE

PROPOSED EVERGREEN TREE

PROPOSED STREET TREE (THE MINIMUM SPACING BETWEEN STREET TREES AND LIGHTS SHALL BE TWENTY FEET)

NON-WOODY VEGETATION ZONE

05/23/15	3	EMERSON CAMPUS VCP
2-7-11	1	ADD 5' CONCRETE SIDEWALK ALONG PARCEL D FRONTAGE
Date	No.	Revision Description

3 THE PURPOSE OF REVISION 3 IS TO SHOW THE WORK ASSOCIATED WITH THE EMERSON CAMPUS VCP. SDP-16-005

2 PROFESSIONAL CERTIFICATION FOR REV #3

I HEREBY CERTIFY THAT THESE DOCUMENTS WERE PREPARED OR APPROVED BY ME, AND THAT I AM A DULY LICENSED PROFESSIONAL ENGINEER UNDER THE LAWS OF THE STATE OF MARYLAND, LICENSE NO 45292 EXPIRATION DATE: 05/21/2018

11-22-16

APPROVED: HOWARD COUNTY DEPT. OF PUBLIC WORKS

CHIEF, BUREAU OF HIGHWAYS — DATE 10-10-02

APPROVED: HOWARD COUNTY DEPT. OF PLANNING & ZONING

CHIEF, DEVELOPMENT ENGINEERING DIVISION MK — DATE 10/18/02

CHIEF, DIVISION OF LAND DEVELOPMENT — DATE 10/22/02

DIRECTOR — DATE

FOR REVISION #1 ONLY

4-19-11
Date

Landscape Architect No. 3357

F-02-111

4-20-02
Date

Landscape Architect No.

REVITZ PROPERTY

OWNER / DEVELOPER
THE HOWARD RESEARCH & DEVELOPMENT CORPORATION
10275 LITTLE PATUXENT PARKWAY
COLUMBIA, MARYLAND 21044

DMW
Daft-McCune-Walker, Inc.
200 East Pennsylvania Avenue
Towson, Maryland 21286
(410) 296-3333
Fax 296-4705

A Team of Land Planners, Landscape Architects, Golf Course Architects, Engineers, Surveyors & Environmental Professionals

SUBDIVISION NAME		SECTION/AREA		LOT/PARCEL # 165 & P/O PAR. 837
PLAT# OR L/F 22674,36	BLOCK# 20	ZONE PEC	TAX/ZONE MAP 47, GRID 20	ELECT. DISTRICT 6 th	CENSUS TRACT
WATER CODE		SEWER CODE		

TITLE

PERIMETER LANDSCAPE AND STREET TREE PLAN

Des By	MM	Scale	1" = 100'	Proj. No.	01011
Drn By	AJS	Date	9/19/02		
Chk By		Approved		46 OF 57	

F-02-111

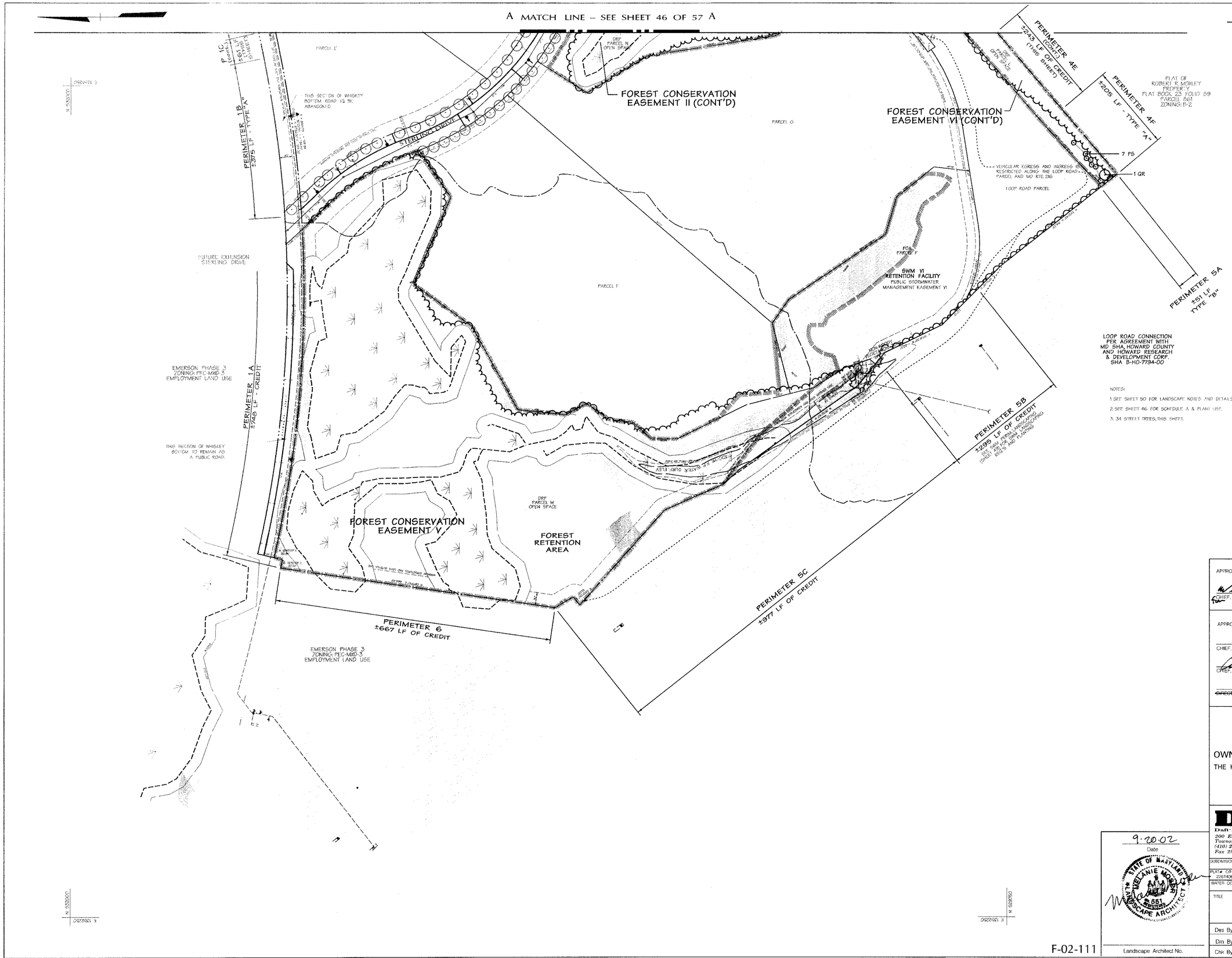

NOTES:

1. SEE SHEET 50 FOR LANDSCAPE NOTES AND DETAILS.
2. SEE SHEET 46 FOR SCHEDULE A & PLANT LIST.
3. 34 STREET TREES, THIS SHEET.

Legend

WETLAND
25' WETLAND BUFFER
WETLAND SYMBOL
HEAD OF STREAM
STREAM BANK
50' STREAM BUFFER
100 YEAR FLOOD PLAIN
EX. FOREST EDGE
SCRUBS/SHRUBS/EDGEROW OR TREE GROUP
SLOPES >25%
SLOPES 15%-25%
REFORESTATION AREAS
LIMIT OF DISTURBANCE
PROPOSED WOODS EDGE
FOREST CONSERVATION EASEMENT
PROPOSED SHADE TREE
PROPOSED FLOWERING TREE
PROPOSED EVERGREEN TREE
PROPOSED STREET TREE (THE MINIMUM SPACING BETWEEN STREET TREES AND LIGHTS SHALL BE TWENTY FEET)
NON-WOODY VEGETATION ZONE

APPROVED: HOWARD COUNTY DEPT. OF PUBLIC WORKS

William J. Mulder Jr. — 10-10-02
CHIEF, BUREAU OF HIGHWAYS — DATE

APPROVED: HOWARD COUNTY DEPT. OF PLANNING & ZONING

[signature] — 10/18/02
CHIEF, DEVELOPMENT ENGINEERING DIVISION MK — DATE

Lindy Hamilton — 10/22/02
CHIEF, DIVISION OF LAND DEVELOPMENT — DATE

N/A
~~DIRECTOR~~ — ~~DATE~~

REVITZ PROPERTY

OWNER / DEVELOPER
THE HOWARD RESEARCH & DEVELOPMENT CORPORATION
10275 LITTLE PATUXENT PARKWAY
COLUMBIA, MARYLAND 21044

DMW
Daft·McCune·Walker, Inc.
200 East Pennsylvania Avenue
Towson, Maryland 21286
(410) 296-3333
Fax 296-4705

A Team of Land Planners, Landscape Architects, Golf Course Architects, Engineers, Surveyors & Environmental Professionals

SUBDIVISION NAME			SECTION/AREA		LOT/PARCEL #
PLAT# OR LF 2267/436	BLOCK# 20	ZONE PEC	TAX/ZONE MAP 47, GRID 20	ELECT. DISTRICT 6 th	165 & P.O. PAR. 837
WATER CODE			SEWER CODE		CENSUS TRACT

9-20-02
Date

STATE OF MARYLAND — MELANIE MOSER — 551 — REGISTERED LANDSCAPE ARCHITECT

Landscape Architect No.

TITLE
PERIMETER LANDSCAPE AND STREET TREE PLAN

Des By	MM	Scale	1"=100'	Proj. No.	01011
Drn By	AJS	Date	9/19/02	47 OF 57	
Chk By		Approved			

F-02-111

F-02-111

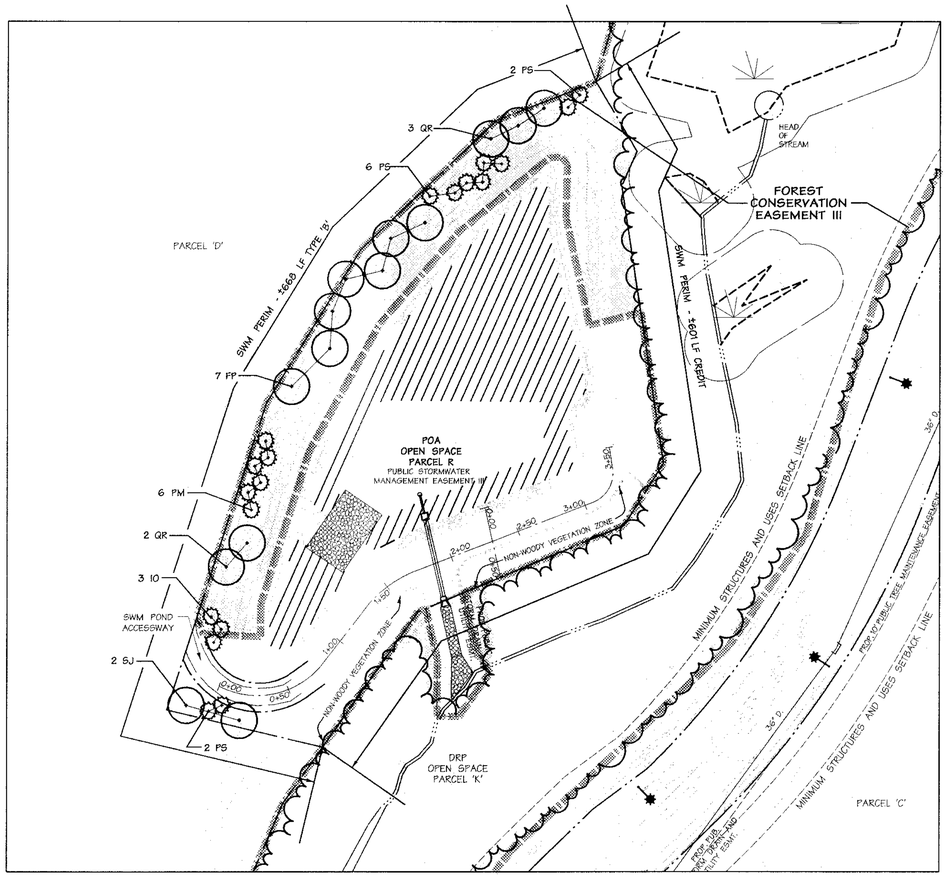

STORMWATER MANAGEMENT POND III
SCALE 1"=50'

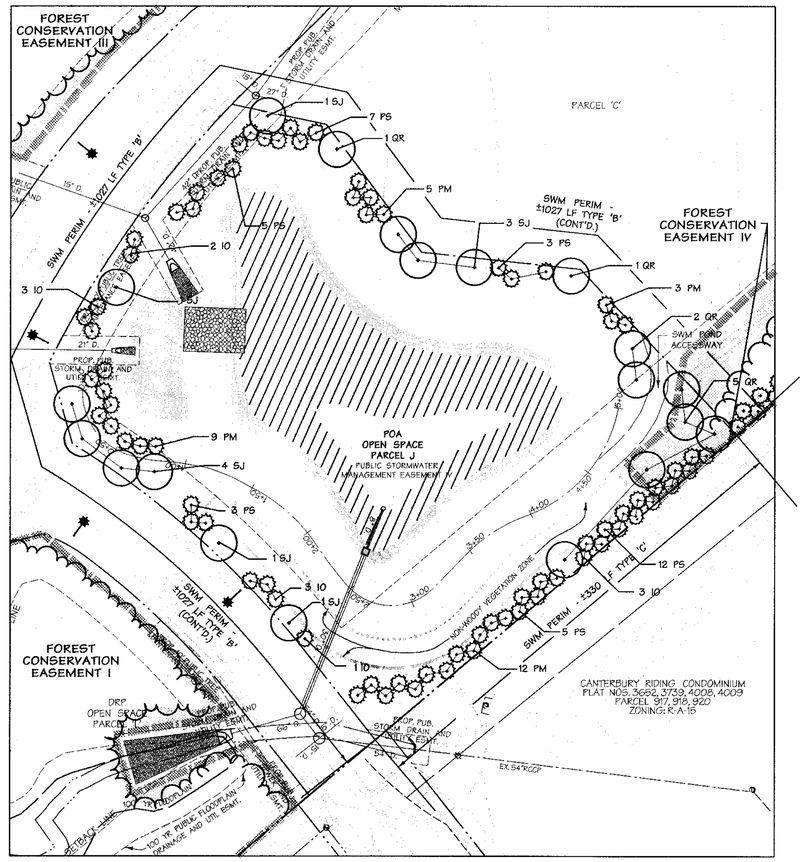

STORMWATER MANAGEMENT POND IV
SCALE 1"=50'

LEGEND

EX. CURB & GUTTER
EX. MAJOR CONTOURS
EX. MINOR CONTOURS
PROP. STORM DRAIN
PROP. SEWER
PROP. WATER
EX. STORM DRAIN — EX. 21" RCP
EX. SEWER — EX. 8" S.
EX. WATER — EX. 8" W.
UTILITY EASEMENTS
PROPOSED SHADE TREE
PROPOSED FLOWERING TREE
PROPOSED EVERGREEN TREE
ZONE 'A' WATER QUALITY PLANTING
ZONE 'B' WATER QUALITY PLANTING
TOE-OF-SLOPE
NON-WOODY VEGETATION BUFFER
FOREST CONSERVATION EASEMENT LINE
REFORESTATION AREA
PROPOSED WOODS EDGE

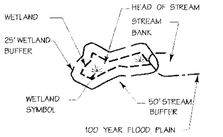

SCHEDULE D
STORMWATER MANAGEMENT AREA LANDSCAPING

STORMWATER MANAGEMENT AREA	III	IV
LANDSCAPE TYPE "B" (LINEAR FT OF PERIMETER)	1269 LF	1027 LF
LANDSCAPE TYPE "C" (LINEAR FT OF PERIMETER)	N/A	330 LF
NUMBER OF TREES REQUIRED		
SHADE TREES @ 1/50 L.F.(1/40 TYPE 'C')	13	28
EVERGREEN TREES @ 1/40 L.F.(1/20 TYPE 'C')	17	42
CREDIT FOR EXISTING VEGETATION	601 LF	N/A
CREDIT FOR OTHER LANDSCAPING	N/A	N/A
PLANTING DEFERRED UNTIL LATER PHASE	N/A	
NUMBER OF TREES PROVIDED		
SHADE TREES	14	20*
FLOWERING TREES	N/A	N/A
EVERGREEN TREES	19	76

* 18 EVERGREEN TREES SUBSTITUTED FOR 9 SHADE TREES

NOTE: SEE SHEET 50 FOR LANDSCAPE NOTES AND DETAILS.

Plant List (This Sheet)

QTY	SYM	BOTANICAL NAME/ COMMON NAME	SIZE	REMARKS
SHADE TREES				
7	FP	FRAXINUS PENNSYLVANICA 'MARSHALL'S SEEDLESS' MARSHALLS' SEEDLESS GREEN ASH	2 1/2" - 3" CAL. 12'-14' HT	B & B FULL HEAD
14	QR	QUERCUS RUBRA RED OAK	2 1/2" - 3" CAL. 12'-14' HT	B & B FULL HEAD
13	SJ	SOPHORA JAPONICA JAPANESE PAGODA TREE	2 1/2" - 3" CAL. 12'-14' HT	B & B FULL HEAD
EVERGREEN TREES				
15	10	ILEX OPACA AMERICAN HOLLY	6'-8' HT.	B & B (ONE MALE)
35	PM	PSEUDOTSUGA MENZIESII DOUGLASFIR	6'-8' HT.	B & B
45	PS	PINUS STROBUS WHITE PINE	6'-8' HT.	B & B HEAVY / UNSHEARED

Water Quality Planting Plan**
Facility #III

ZONE "A" (6,880 ± s.f.)

Species	Size	Spacing	Quantity	Remarks
Scirpus tabernaemontanii	quart container*	36"	221	OBL
Panicum virgatum	quart container	36"	442	FAC
Saururus cernuus	quart container*	36"	221	OBL
TOTALS			884	

ZONE "B" (19,830 ± s.f.)

Species	Size	Spacing	Quantity	Remarks
Sagittaria latifolia	quart container*	36"	1272	OBL
Peltandra virginica	quart container*	36"	1272	OBL
TOTALS			2544	

* Dormant rhizomes of *Scirpus* and *Saururus*, dormant tubers of *Sagittaria*, and 1st year bulbs of *Peltandra* may be substituted if plantings are to be installed during dormant season.

** Alternate species and install in random pattern, distributing each species across the hydrologic gradient of each planting zone. Single species massings to be avoided.

Water Quality Planting Plan**
Facility #IV

ZONE "A" (9,600 ± s.f.)

Species	Size	Spacing	Quantity	Remarks
Scirpus tabernaemontanii	quart container*	36"	398	OBL
Panicum virgatum	quart container	36"	616	FAC
Saururus cernuus	quart container*	36"	398	OBL
TOTALS			820	

ZONE "B" (19,900 ± s.f.)

Species	Size	Spacing	Quantity	Remarks
Sagittaria latifolia	quart container*	36"	1272	OBL
Peltandra virginica	quart container*	36"	1272	OBL
TOTALS			2544	

* Dormant rhizomes of *Scirpus* and *Saururus*, dormant tubers of *Sagittaria*, and 1st year bulbs of *Peltandra* may be substituted if plantings are to be installed during dormant season.

** Alternate species and install in random patterns, distributing each species across the hydrologic gradient of each planting zone. Single species massings to be avoided.

APPROVED: HOWARD COUNTY DEPT. OF PUBLIC WORKS

CHIEF, BUREAU OF HIGHWAYS — DATE 10-10-02

APPROVED: HOWARD COUNTY DEPT. OF PLANNING & ZONING

CHIEF, DEVELOPMENT ENGINEERING DIVISION — DATE 10/8/02

CHIEF, DIVISION OF LAND DEVELOPMENT — DATE 10/22/02

~~DIRECTOR~~ N/A — ~~DATE~~

REVITZ PROPERTY

OWNER / DEVELOPER
THE HOWARD RESEARCH & DEVELOPMENT CORPORATION
10275 LITTLE PATUXENT PARKWAY
COLUMBIA, MARYLAND 21044

DMW
Daft·McCune·Walker, Inc.
200 East Pennsylvania Avenue
Towson, Maryland 21286
(410) 296-3333
Fax 296-4705
A Team of Land Planners, Landscape Architects, Golf Course Architects, Engineers, Surveyors & Environmental Professionals

SUBDIVISION NAME		SECTION/AREA		LOT/PARCEL #
				165 & P/O PAR 837
PLAT # OR L/F	BLOCK #	ZONE	TAX/ZONE MAP	ELECT. DISTRICT	CENSUS TRACT
22624/436	20	PEC	47, GRID 20	6 th	
WATER CODE		SEWER CODE			

9·20·02
Date

STATE OF MARYLAND — MELANIE MOSER — No. 581 — REGISTERED LANDSCAPE ARCHITECT

Landscape Architect No.

TITLE
LANDSCAPE PLAN
SWM PONDS III AND IV

Des By	MM	Scale	1"=50'	Proj. No.	01011
Drn By	AJS	Date	9/19/02	48 OF 57	
Chk By		Approved			

F-02-111

F-02-111

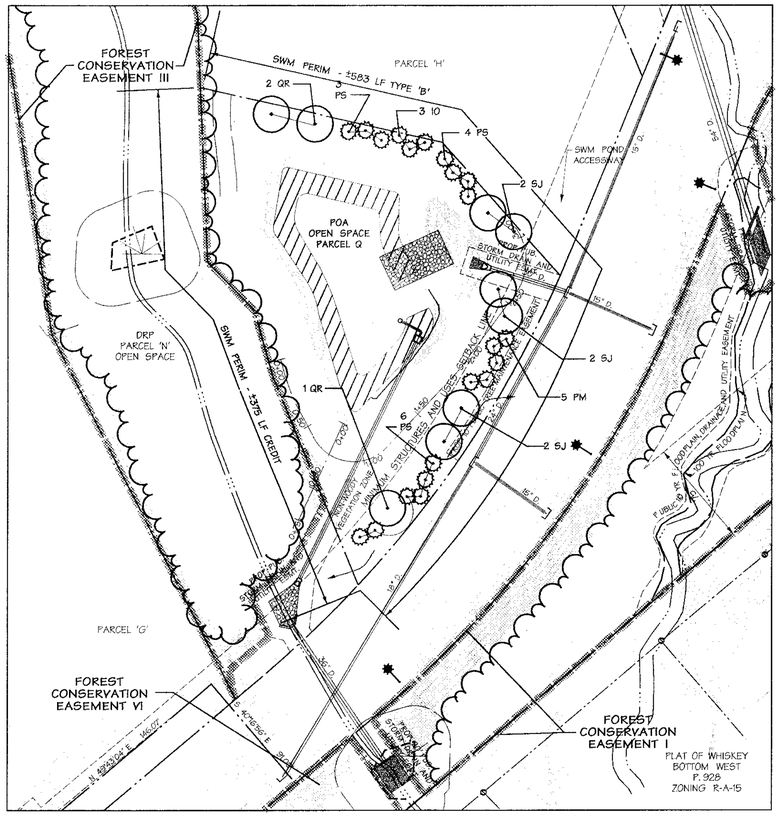

STORMWATER MANAGEMENT POND V
SCALE 1"=50'

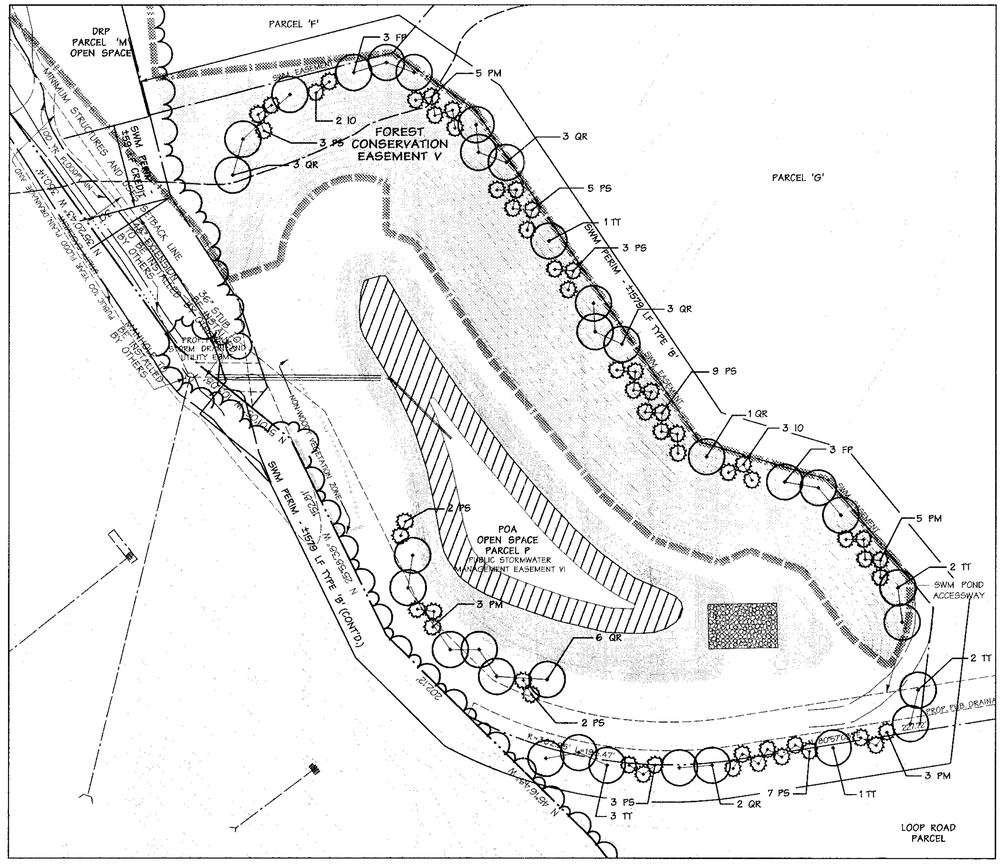

STORMWATER MANAGEMENT POND VI
SCALE 1"=50'

LEGEND

- EX. CURB & GUTTER
- EX. MAJOR CONTOURS
- EX. MINOR CONTOURS
- PROP. STORM DRAIN
- PROP. SEWER
- PROP. WATER
- EX. STORM DRAIN — EX. 21" RCP
- EX. SEWER — EX. 8" S.
- EX. WATER — EX. 8" W.
- UTILITY EASEMENTS
- PROPOSED SHADE TREE
- PROPOSED FLOWERING TREE
- PROPOSED EVERGREEN TREE
- ZONE 'A' WATER QUALITY PLANTING
- ZONE 'B' WATER QUALITY PLANTING
- TOE-OF-SLOPE NON-WOODY VEGETATION BUFFER
- FOREST CONSERVATION EASEMENT LINE REFORESTATION AREA
- PROPOSED WOODS EDGE

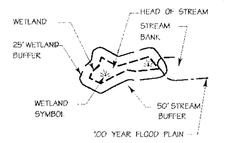

SCHEDULE D
STORMWATER MANAGEMENT AREA LANDSCAPING

STORMWATER MANAGEMENT AREA	V	VI
LANDSCAPE TYPE "B" (LINEAR FT OF PERIMETER)	958 LF	1638 LF
LANDSCAPE TYPE "C" (LINEAR FT OF PERIMETER)	N/A	N/A
NUMBER OF TREES REQUIRED SHADE TREES @ 1/50 L.F.(1/40 TYPE 'C') EVERGREEN TREES @ 1/40 L.F.(1/20 TYPE 'C')	 12 15	 32 39
CREDIT FOR EXISTING VEGETATION	375 LF	59 LF
CREDIT FOR OTHER LANDSCAPING	N/A	N/A
PLANTING DEFERRED UNTIL LATER PHASE	N/A	
NUMBER OF TREES PROVIDED SHADE TREES FLOWERING TREES EVERGREEN TREES	 9* N/A 21	 33 N/A 55

* POND V: 6 EVERGREEN TREES SUBSTITUTED FOR 3 SHADE TREES

NOTE: SEE SHEET 50 FOR LANDSCAPE NOTES AND DETAILS.

Plant List (This Sheet)

QTY	SYM	BOTANICAL NAME/ COMMON NAME	SIZE	REMARKS
SHADE TREES				
6	FP	FRAXINUS PENNSYLVANICA 'MARSHALL'S SEEDLESS' MARSHALLS' SEEDLESS GREEN ASH	2 1/2" - 3" CAL. 12'-14' HT	B & B FULL HEAD
21	QR	QUERCUS RUBRA RED OAK	2 1/2" - 3" CAL. 12'-14' HT	B & B FULL HEAD
6	SJ	SOPHORA JAPONICA JAPANESE PAGODA TREE	2 1/2" - 3" CAL. 12'-14' HT	B & B FULL HEAD
9	TT	TILIA TOMENTOSA 'GREEN MOUNTAIN' GREEN MOUNTAIN SILVER LINDEN	2 1/2" - 3" CAL. 12'-14' HT	B & B FULL HEAD
EVERGREEN TREES				
8	IO	ILEX OPACA AMERICAN HOLLY	6'-8' HT.	B & B ONE MALE
21	PM	PSEUDOTSUGA MENZIESII DOUGLASFIR	6'-8' HT.	B & B
47	PS	PINUS STROBUS WHITE PINE	6'-8' HT.	B & B HEAVY / UNSHEARED

Water Quality Planting Plan**
Facility #V

ZONE "A" (5,924 ± s.f.)

Species	Size	Spacing	Quantity	Remarks
Scirpus tabernaemontani	quart container*	36"	190	OBL
Panicum virgatum	quart container	36"	380	FAC
Saururus cernuus	quart container*	36"	190	OBL
TOTALS			760	

ZONE "B" (5,118 ± s.f.)

Species	Size	Spacing	Quantity	Remarks
Sagittaria latifolia	quart container*	36"	328	OBL
Peltandra virginica	quart container*	36"	328	OBL
TOTALS			656	

* Dormant rhizomes of *Scirpus* and *Saururus*, dormant tubers of *Sagittaria*, and 1st year bulbs of *Peltandra* may be substituted if plantings are to be installed during dormant season.

** Alternate species and install in random pattern, distributing each species across the hydrologic gradient of each planting zone. Single species massings to be avoided.

Water Quality Planting Plan**
Facility #VI

ZONE "A" (15,300 ± s.f.)

Species	Size	Spacing	Quantity	Remarks
Scirpus tabernaemontani	quart container*	36"	412	OBL
Iris pseudacoris	quart container*	36"	412	OBL
Lobelia cardinalis	quart container	36"	412	FACW
Iris versicolor	quart container*	36"	412	OBL
Panicum virgatum	quart container	36"	412	FAC
Saururus cernuus	quart container*	36"	412	OBL
TOTALS			2472	

ZONE "B" (11,549 ± s.f.)

Species	Size	Spacing	Quantity	Remarks
Sagittaria latifolia	quart container*	36"	740	OBL
Peltandra virginica	quart container*	36"	740	OBL
TOTALS			1480	

* Dormant rhizomes of *Scirpus*, *Iris* and *Saururus*, dormant tubers of *Sagittaria*, and 1st year bulbs of *Peltandra* may be substituted if plantings are to be installed during dormant season.

** Alternate species and install in random pattern, distributing each species across the hydrologic gradient of each planting zone. Single species massings to be avoided.

APPROVED: HOWARD COUNTY DEPT. OF PUBLIC WORKS

CHIEF, BUREAU OF HIGHWAYS — DATE 10-10-02

APPROVED: HOWARD COUNTY DEPT. OF PLANNING & ZONING

CHIEF, DEVELOPMENT ENGINEERING DIVISION MK — DATE 10/8/02

CHIEF, DIVISION OF LAND DEVELOPMENT — DATE 10/22/02

~~DIRECTOR~~ N/A — ~~DATE~~

REVITZ PROPERTY

OWNER / DEVELOPER
THE HOWARD RESEARCH & DEVELOPMENT CORPORATION
10275 LITTLE PATUXENT PARKWAY
COLUMBIA, MARYLAND 21044

DMW
Daft·McCune·Walker, Inc.
200 East Pennsylvania Avenue
Towson, Maryland 21286
(410) 296-3333
Fax 296-4705
A Team of Land Planners, Landscape Architects, Golf Course Architects, Engineers, Surveyors & Environmental Professionals

9.20.02
Date

STATE OF MARYLAND — MELANIE M. BYER — No. 661 — REGISTERED LANDSCAPE ARCHITECT

Landscape Architect No.

SUBDIVISION NAME		SECTION/AREA			LOT/PARCEL # 165 & P/O PAR. 837
PLAT# OR L/F 22674/96	BLOCK# 20	ZONE PEC	TAX/ZONE MAP 47, GRID 20	ELECT. DISTRICT 6 th	CENSUS TRACT
WATER CODE		SEWER CODE			

TITLE
LANDSCAPE PLAN
SWM PONDS V AND VI

Des. By	MM	Scale	1" = 50'	Proj. No.	01011
Drn. By	AJS	Date	9/9/02	49 OF 57	
Chk. By		Approved			

F-02-111

F-02-111

Landscape Notes

1. The contractor shall review architectural/engineering plans to become thoroughly familiar with grading and surface utilities.

2. All equipment and tools shall be placed so as not to interfere or hinder the pedestrian and vehicular traffic flow. See Seasonal Plant List for planting times of bulbs and seasonal plants.

3. The contractor shall coordinate with lighting and irrigation contractors regarding timing of installation of plant material.

4. The contractor shall insure that his work does not interrupt established or projected drainage patterns.

5. During planting operations, excess waste materials shall be promptly and frequently removed from the site.

6. The contractor is advised of the existence of underground utilities on the site. Their exact location shall be verified in the field with the owner or general contractor prior to the commencement of any digging operations. In the event they are uncovered, the contractor shall be held responsible for all damage to utilities and such damage shall not result in any additional expenses to the owner.

7. If utility lines are encountered in excavation of tree pits, other locations for trees shall be made by the contractor without additional compensation. No changes of location shall be made without approval of the landscape architect.

8. Maintain positive drainage out of planting beds at a minimum 2% slope. All grades, dimensions, and existing conditions shall be verified by the contractor on site before construction begins. Any discrepancies shall be brought to the attention of the landscape architect or owner.

9. Every possible safeguard shall be taken to protect building surfaces, equipment, and furnishing. The contractor shall be responsible for any damage or injury to person or property which may occur as a result of his negligence in the execution of the work.

10. In the event of variation between quantities shown on the plant list and the plans, the plans shall control. The contractor is responsible for verifying all plant quantities prior to the commencement of work. Sod quantity take-offs are the responsibility of the contractor. All discrepancies shall be reported to the landscape architect for clarification prior to bidding. The contractor shall furnish plant material in sizes as specified in plant list.

11. The contractor shall stake all material located on the site for review and/or adjustment by the landscape architect prior to planting. All locations are to be approved by the landscape architect before excavation.

12. Plants shall conform to current "American Standards for Nursery Stock" by American Association of Nurserymen (AAN), particularly with regard to size, growth, size of ball, and density of branch structure. Plant material shall be tagged at the source by the landscape architect unless this requirement is specifically waived.

13. All plants (B&B or container) shall be properly identified by weather-proof labels securely attached thereto before delivery to project site. Labels shall identify plants by name, species, and size. Labels shall not be removed until the final inspection by the landscape architect or agent in charge.

14. Any material and/or work may be rejected by the landscape architect if it does not meet the requirements of the specifications. All rejected materials shall be removed from the site by the contractor.

15. No substitutions shall be made without written consent of the owner or landscape architect.

16. The landscape architect or owner shall have the right, at any stage of the operations, to reject any and all work and material which, in his opinion, does not meet the requirements of these plans and specifications.

17. The contractor shall be wholly responsible for stability and conditions of all trees and shrubs and shall be legally liable for any damage caused by instability of any plant materials.

18. All proposed trees to be installed either entirely in or entirely out of planting beds. Planting bed lines are not to be obstructed. All shrubs and ground cover areas shall be planted in continuous prepared bed and top dressed with 3-inch shredded hardwood mulch. Mulch shall have been shredded within the last six months.

19. All planting beds adjacent to lawn, sod, or seeded areas shall be spade edged.

20. Maintenance shall begin after each plant has been installed and shall continue until 90 days after final acceptance by the architect or owner representative. Maintenance includes mowing of turf, watering, pruning, weeding, fertilizing, mulching, replacement of sick or dead plants, and any other care necessary for the proper growth of the plant material. The contractor must be able to provide continued maintenance if requested by the owner.

21. Upon completion of all landscaping, an acceptance of the work shall be held. The contractor shall notify the landscape architect or owner for scheduling the inspection at least seven (7) days prior to the anticipated inspection date.

22. All trees shall be guaranteed for 12 months from the date of acceptance. All shrubs and ground covers shall be guaranteed for 12 months from the date of acceptance.

23. The contractor is responsible for testing project soils. The contractor is to provide a certified soils report to the owner. The contractor shall verify that the soils on site are acceptable for the proper growth of the proposed plant material. Should the contractor find poor soil conditions, the contractor shall be required to provide soil amendments as necessary. These amendments shall include, but not be limited to, fertilizers, lime, and topsoil. Proper planting soils must be verified prior to planting of materials.

24. PLANTING MIX:
a. Planting mix shall be prepared at approved on-site staging area using approved on-site existing soil. Mix minimum quantities of 20 cubic yards or sufficient mix for entire job if less than 20 cubic yards is required.

b. Thoroughly mixed in the following proportions for tree and shrub planting mix:
.5 cy existing soil
.2 cy sharp sand
.3 cy wood residuals
4.5 lbs treble superphosphate
5 lbs dolomite limestone (eliminate for acid loving plants)

c. For bed planting, shrubs and groundcover spaces 24 inches or closer, incorporate the following ingredients per 20 sf and incorporate into top 8 inches of existing soils by rototilling or similar method of incorporation.
.2 cy sharp sand
.3 cy organic material
4.5 lbs treble superphosphate
5 lbs dolomite limestone (eliminate for acid loving plants)

25. The contractor shall dispose of stumps and major roots of all plants to be removed. Any depressions caused by removal operations shall be refilled with fertile, friable soil placed and compacted so as to reestablish proper grade for new planting and/or lawn areas.

26. The contractor shall insure adequate vertical drainage in all plant beds and planters.

27. All disturbed areas on the site not planted with shrubs or ground cover shall be fine graded and seeded or sodded as noted on landscape plan.

28. All sod shall be obtained from areas having growing conditions familiar to areas to be covered. Areas to be sodded shall be raked of stones and debris. Debris and stones over 1 inch in diameter shall be removed from the site. All damaged sod will be rejected. All sod must be placed with staggered joints, tightly butted, with no inequalities in grade. Place all sod in rows at right angles to slopes (where applicable).

29. All planting procedures shall conform to Daft McCune Walker Inc. specifications.

30. Some field located plants are not graphically shown on this plan but are within the limit of construction line. All plants (field located plants and graphically shown plants) are noted on the plant list.

Water Quality Planting Specifications

PART 1 GENERAL

1.01 DESCRIPTION: Work consists of all labor, materials, equipment and services necessary for and incidental to the execution and completion of WETLAND PLANTS as indicated on the Drawings and specified herein.

A. Include:

1. Furnishing of all plant material.

2. Soil preparation, planting operations.

3. Maintenance and guarantee.

1.02 QUALITY ASSURANCE

A. American Association of Nurserymen (A.A.N.): "American Standard for Nursery Stock", (A.N.S.I. Z60.1) as expanded herein.

B. Nomenclature: In accordance with HORTUS III by L. H. Bailey.

C. United States Department of Agriculture: Textural Classification Diagram for Soils.

1.03 STANDARD OF COMPARISON

A. When the Drawings indicate a total quantity of five (5) or more of an individual plant (other than bulbs or perennials) the Contractor shall obtain approval of a standard of comparison prior to delivery on site. Assemble samples of all plants to be evaluated as "standards" at the principal business location of the Contractor. Notify Owner to schedule an inspection for approval of "standards" and to obtain record photographs. Photographs of each "standard" shall be used for comparison of all material subsequently installed on the site.

1.04 SUBMITTALS

A. Source: Notify the Owner, in writing, of source of all material before delivery.

1.05 DELIVERY, STORAGE AND HANDLING

A. Root stock of the plant material shall be kept moist during transport from the source to the job site and until planted.

B. Transport and handle plants so that foliage, roots, or balls are protected from breakage, sun and winds. Tops or roots of plants allowed to dry out or which have been damaged or disturbed root balls will be cause for rejection.

1.06 DRAWINGS

A. The Contractor shall use quantities of wetland plants noted on the plant list.

1.07 PROJECT CONDITIONS

A. Planting shall commence following approval of the as-built certification of the subject water quality facility.

B. All emergent wetland plantings shall be installed between April 15 and June 30 or as directed by the Landscape Architect. Do not plant when ground is frozen. Do not use frozen planting soil at any time.

1.08 DEFINITIONS

A. Start of Planting: Installation of plant material into excavated pits or beds.

B. Payment Release Inspection: Conducted monthly by the Owner or designated representative to verify quantity only for partial payment to the Contractor. Payment release inspection does not waive any requirements of the standard of comparison or initial acceptance clause.

C. Initial Inspection: Conducted at the request of the Contractor and the Owner when 90% or more of all planting and related tasks are complete.

D. Initial Acceptance: Occurs when all plant material is in place in accordance with the specifications and approved by the Owner.

E. Maintenance Period: From start of planting to final acceptance.

F. Guarantee Period: From initial acceptance and continuing for 90 days thereafter, excluding the period from November 1 to April 15.

G. Final Acceptance: Occurs after Contractor has completed all outstanding items, as determined by the Owner, at the end of the maintenance and guarantee period.

1.09 GUARANTEE AND REPLACEMENT

A. All plants in an impaired, dead or dying condition prior to initial acceptance and prior to final acceptance shall be removed and replaced. Replacement materials shall be the same size as other unreplaced material considering growth that has occurred since original installation. Methods of installation shall be identical to the original. The contractor shall guarantee 85% survivorship at the end of the guarantee period.

B. Replacements shall be made between April 15 and June 30, the season following the initial planting, and shall conform to the planting specifications listed above.

C. The contractor shall notify the Landscape Architect to arrange a site meeting to determine the replacement requirements, at the end of the guarantee period.

PART 2 PRODUCTS

2.01 PLANTS

A. Sound, healthy, vigorous, free from plant diseases, insect pests or their eggs.

B. Plants cut back from larger sizes or pruned prior to delivery will not be accepted.

C. It is anticipated that these plants will need to be obtained from a nursery source. These plant species are normally unavailable from standard landscape nursery sources.

D. Shape and Form: Plant materials shall be symmetrical and typical for the variety and species.

E. Container: The soil/root masses shall be thoroughly moist upon delivery to the job site. Any dry and light weight plants shall be rejected. If not planted immediately after being delivered to the job site, the plants shall be stored out of direct exposure to the sun and wind and their root masses maintained moist, through periodic watering, until the time of planting.

Until the removal of the plants from the containers, the soil/root masses shall be the size of the specified

soil exists on the bottom of the containers, the plants will be rejected since they have not been grown sufficiently long in the containers to root into the soils contained therein.

The plants shall appear healthy with no leaf spots, leaf damage, leaf discolorations, leaf wilting, or evidence of insects on the leaves.

The container size shall be at least as large as indicated in the specifications or shown in the plant tables/lists. Plants shall not be rejected if supplied in containers larger than specified.

F. Fiber or Peat Pot: If not planted immediately after being delivered to the job site, the plants shall be stored out of direct exposure to the sun and wind and their pots and associated root masses maintained moist, through periodic watering, until the time of planting.

The plants shall be well-rooted through the sides and bottoms of the pots and firmly contained therein.

Should the plants be removed from the pots by holding them from their tops and gently pulling on the pots, the plants shall be rejected.

If growing, the plants shall appear healthy with no foliar spots, discolorations, wilting, or other evidence of the presence of disease or insects.

Plants shall not be rejected if supplied in pots larger than specified.

The number of plants, stems, or culms per pot as specified or shown in the plant tables/lists at least shall be present, on the average, or the plants shall be rejected.

G. Dormant Propagule (Herbaceous): If not planted immediately after being delivered to the job site, the dormant propagules shall be stored out of the direct exposure to the sun and wind, and they shall be protected by covering with straw, peat moss, compost, or other suitable materials and shall be maintained moist, through periodic watering, until the time of planting.

The bodies and shoots associated with the propagules shall have turgor or be rigid to the touch. If the bodies and/or shoots associated with the propagules are soft or mushy or appear rotten or decomposed, the plant materials shall be rejected.

Rhizome (stolon) sections shall provide a minimum of two shoots per section or Rhizome (stolon) sections containing at least a terminal shoot shall be a minimum of four inches in length (in order to ensure sufficient stored energy to support the new growth). Rhizome sections containing shoots that are soft or mushy or otherwise appear rotten shall not be accepted.

Suckers shall contain a terminal shoot and be a minimum of four inches in length (in order to ensure sufficient stored energy to support the new growth).

Growing Bare Root Plant (Herbaceous): The plants shall contain new roots that are clean and white in coloration.

If not planted immediately after delivery to the job site, the plants shall be stored out of direct exposure to the sun and wind and the new roots shall be protected by the use of straw, peat moss, compost, or other suitable materials and shall be maintained moist, through periodic watering, until the time of planting.

The plants shall appear healthy with no foliar spots, discolorations, wilting, or other evidence of the presence of disease or of insects.

2.02 FERTILIZER

A. Plant Fertilizer: Slow release fertilizer such as Osmocote 19-6-12 analysis (3-4 month release) or equal approved by the Landscape Architect.

B. Slow release fertilizer shall be applied at the time of planting and at the following rate:

All emergent plant material - planting pit application of 1 oz. per container or bare root plant.

C. Pesticides, herbicides and fungicides will not be used unless judged necessary by the wetland landscaper. If applied, quantities recommended by the Department of Agriculture shall not be exceeded.

D. Fertilizer shall be delivered to the site in the original unopened containers with formulas attached.

3.01 PREPARATION

A. Plant Locations: As shown on the Drawings, to dimensions if shown, to scale if not dimensioned. Locations subject to review by the Landscape Architect before starting excavation.

B. No plant material shall be installed until the Landscape Architect has approved the finish grade of the planted areas.

3.02 PLANTING PROCEDURES

A. Set plants straight and plumb.

B. Plant material shall be planted in existing soil with each planting pit excavated to size sufficient to contain the entire root stock or root mass without cramping.

C. Where water is not available on-site, the Contractor shall furnish sufficient quantities to complete the Work at no additional cost to the Owner.

3.04 CLEAN-UP

A. During planting operations, excess and waste materials shall be removed from the site on a daily basis.

B. Repair turf areas and other existing conditions damaged during planting operations, including regrading, seed, mulch and fertilization to the satisfaction of the Owner.

3.05 MAINTENANCE

A. Watering of plant material shall take place at the end of each for fourteen (14) consecutive days after planting has been completed. The watering shall completely saturate the soil and partially immerse the plant material.

B. During maintenance period, on approximately the 1st and 15th of each month, the Contractor shall provide sufficient supervision, equipment, materials and manpower to:

1. Keep all plants in a healthy growing condition by watering, when necessary, removing dead or dying branches, controlling insect infestations, removing sprouts, weeding.

2. Remove and replace dead or damaged plant material. Where replacement is not possible due to season, remove dead material, etc. and level pit until planting is possible.

B. Notify Owner for review of activities prior to initiating maintenance operations each month.

General Planting Notes

1. All plant material to meet A.A.N. Standards.
2. Landscape Contractor to follow landscape specification guidelines for Baltimore Washington Metro area approved by LCAMW.
3. No substitutions to be made without consent of Landscape Architect or Owner.
4. All beds to be topped with three inches of hardwood mulch.
5. Landscape Contractor to verify location of utilities with Owner before planting.
6. Landscape Architect/Owner shall select, verify and/or approve all plant material. At Owner's discretion, specimen and other plant material will be selected.
7. Landscape Contractor shall coordinate plant bed filling operations and plant material installation with General Contractor and Utilities Contractor. At the time of final inspection with acceptance, all electric, water, drainage, and fountain utilities, as well as all plant materials, shall remain undamaged. Likewise, Landscape Contractor and Utilities Contractor shall coordinate efforts to ensure that surface utilities are at the proper elevation relative to final grades.
8. Contractor shall notify Miss Utility 72 hours prior to construction.
9. The owner, tenant, and/or their agents shall be responsible for maintenance of the required landscaping, including both plant materials and berms, fences and walls. All plant materials shall be maintained in good growing condition, and when necessary, replaced with new materials to ensure continued compliance with applicable regulations. All other required landscaping shall be permanently maintained in good condition, and when necessary, repaired or replaced.
10. This plan has been prepared in accordance with the provisions of Section 16.124 of the Ho. Co. code. Financial surety for the required landscaping in the amount of $49,650.00 must be posted as part of the developer's agreement. (100 shade, 131 evergreens).
11. Developer's/Builder's Certificate

I/we certify that the landscaping shown on this plan will be done according to the plan, Section 16.124 of the Howard County code and the Howard County Landscape Manual. I/we further certify that upon completion, a certification of landscape installation, accompanied by an executed one-year guarantee of plant materials, will be submitted to the Department of Planning and Zoning.

NAME: (signature) Robert A. Jenkins — DATE: 9/20/02

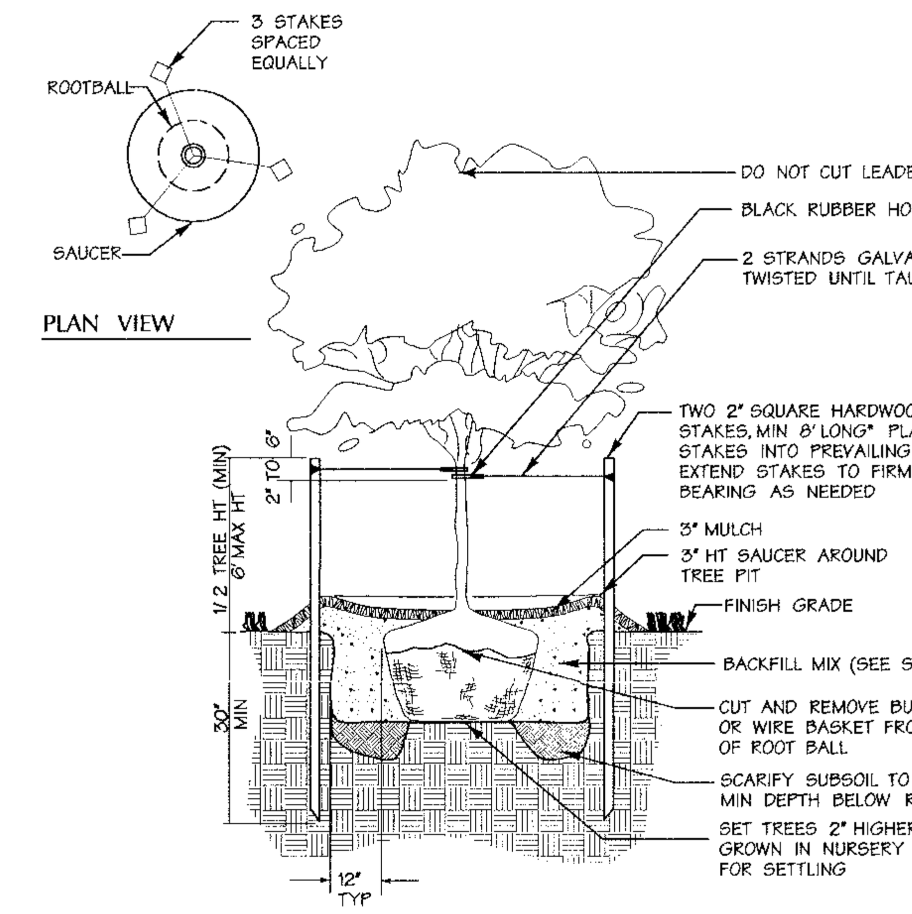

Less Than 3" Cal. Tree Planting
Not To Scale

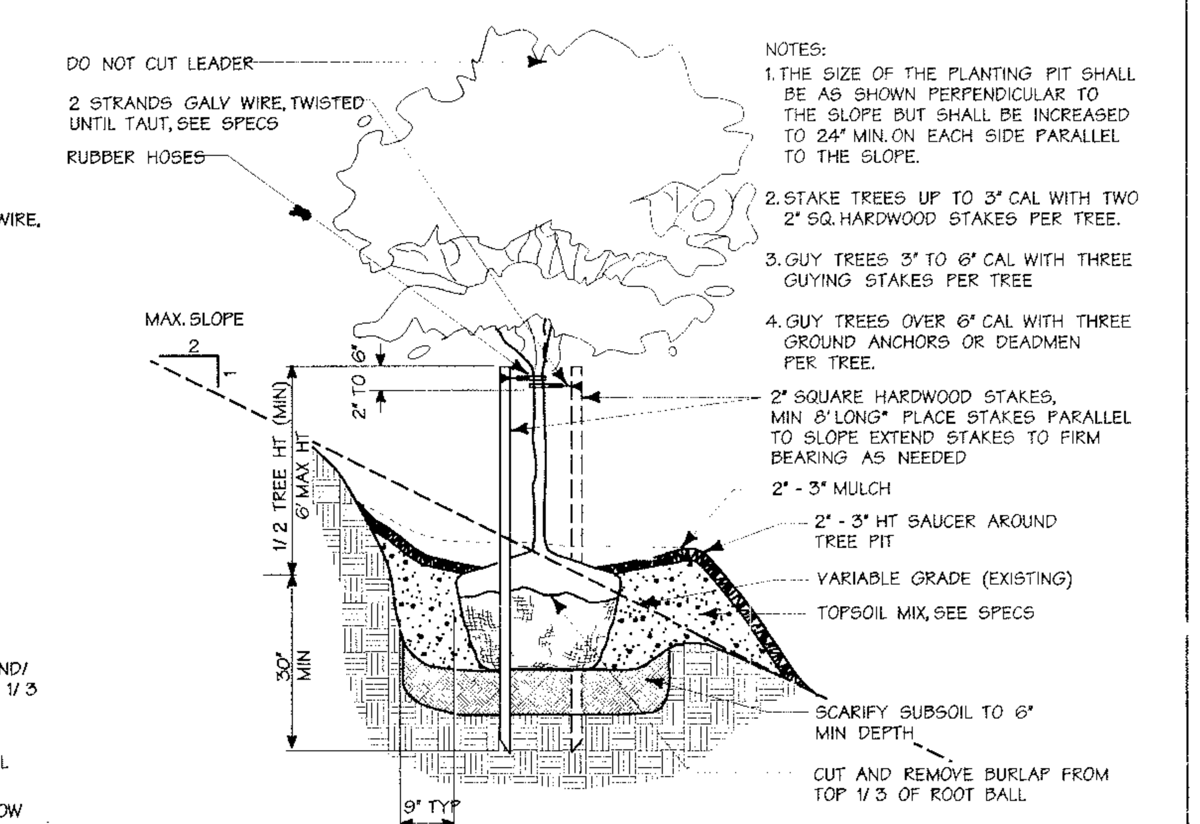

Tree Planting on Slope
Not To Scale

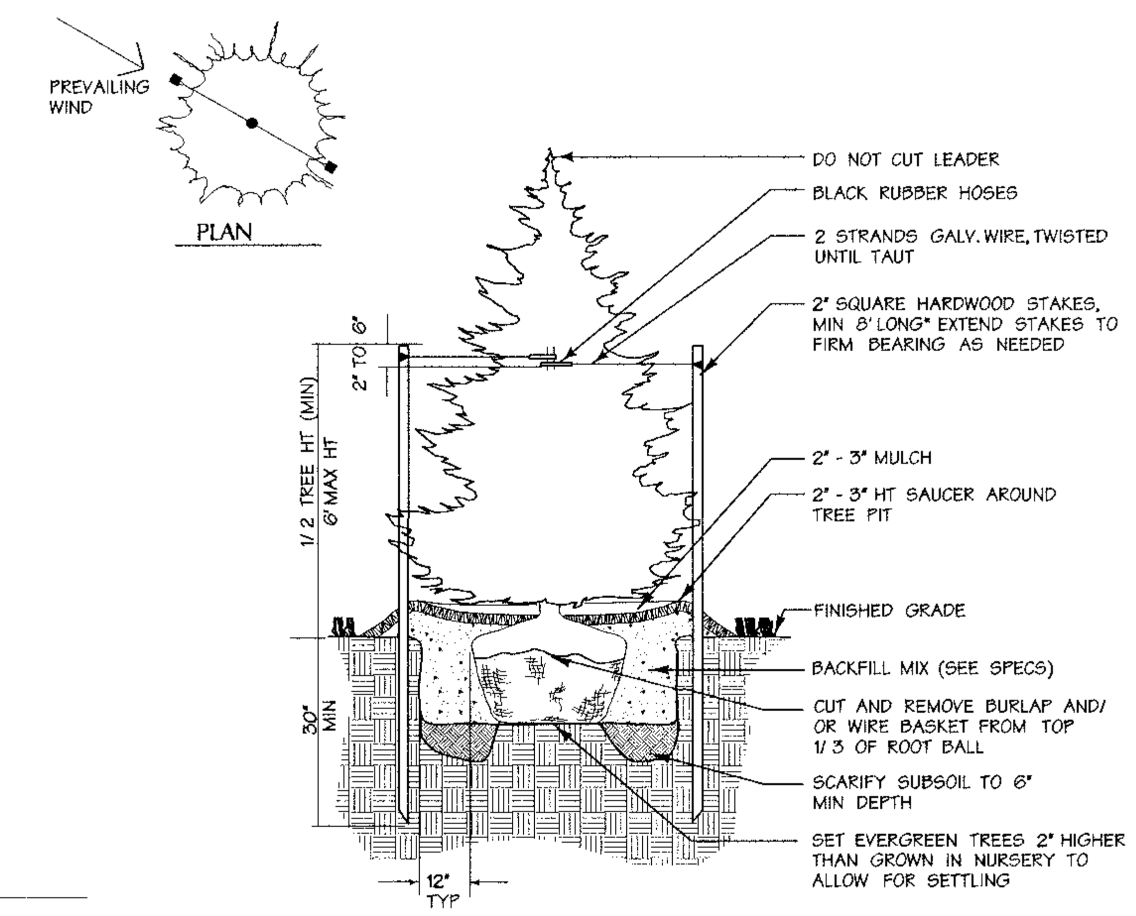

Evergreen Tree Planting
Not To Scale

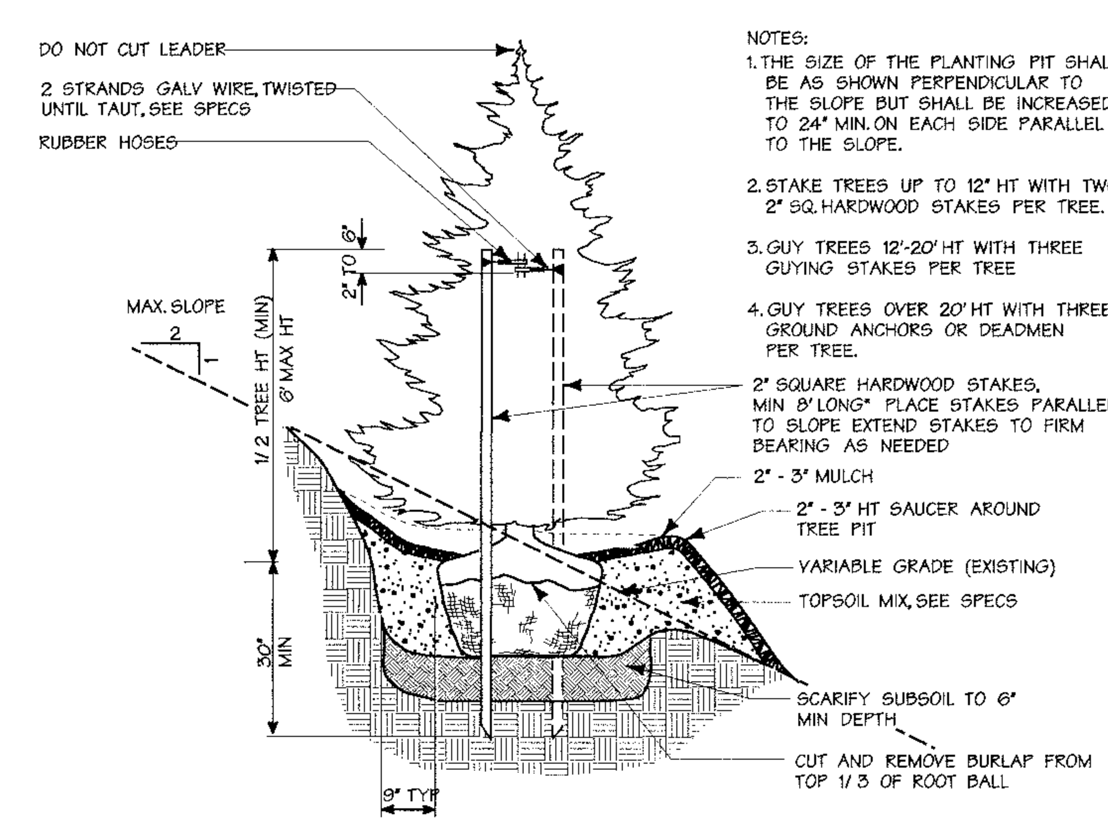

Evergreen Tree Planting on Slope
Not To Scale

F-02-111

9.20.02
Date

STATE OF MARYLAND — MELANIE MOSER — No. 551 REGISTERED — LANDSCAPE ARCHITECT

Landscape Architect No.

APPROVED: HOWARD COUNTY DEPT. OF PUBLIC WORKS

CHIEF, BUREAU OF HIGHWAYS — DATE 10-10-02

APPROVED: HOWARD COUNTY DEPT. OF PLANNING & ZONING

CHIEF, DEVELOPMENT ENGINEERING DIVISION MK — DATE 10/18/02

CHIEF, DIVISION OF LAND DEVELOPMENT — DATE 10/22/02

N/A
~~DIRECTOR~~ — ~~DATE~~

REVITZ PROPERTY

OWNER / DEVELOPER
THE HOWARD RESEARCH & DEVELOPMENT CORPORATION
10275 LITTLE PATUXENT PARKWAY
COLUMBIA, MARYLAND 21044

DMW
Daft·McCune·Walker, Inc.
200 East Pennsylvania Avenue
Towson, Maryland 21286
(410) 296-3333
Fax 296-4705

A Team of Land Planners, Landscape Architects, Golf Course Architects, Engineers, Surveyors & Environmental Professionals

SUBDIVISION NAME			SECTION/AREA		LOT/PARCEL # 165 & P/O PAR. 837
PLAT# OR L/F 2267/436	BLOCK# 20	ZONE PEC	TAX/ZONE MAP 47, GRID 20	ELECT. DISTRICT 6 th	CENSUS TRACT
WATER CODE			SEWER CODE		

TITLE
LANDSCAPE NOTES AND DETAILS

Des By		Scale	AS NOTED	Proj. No.	01011
Drn By	AJS	Date	91902		
Chk By		Approved		50 OF 57	

F-02-111

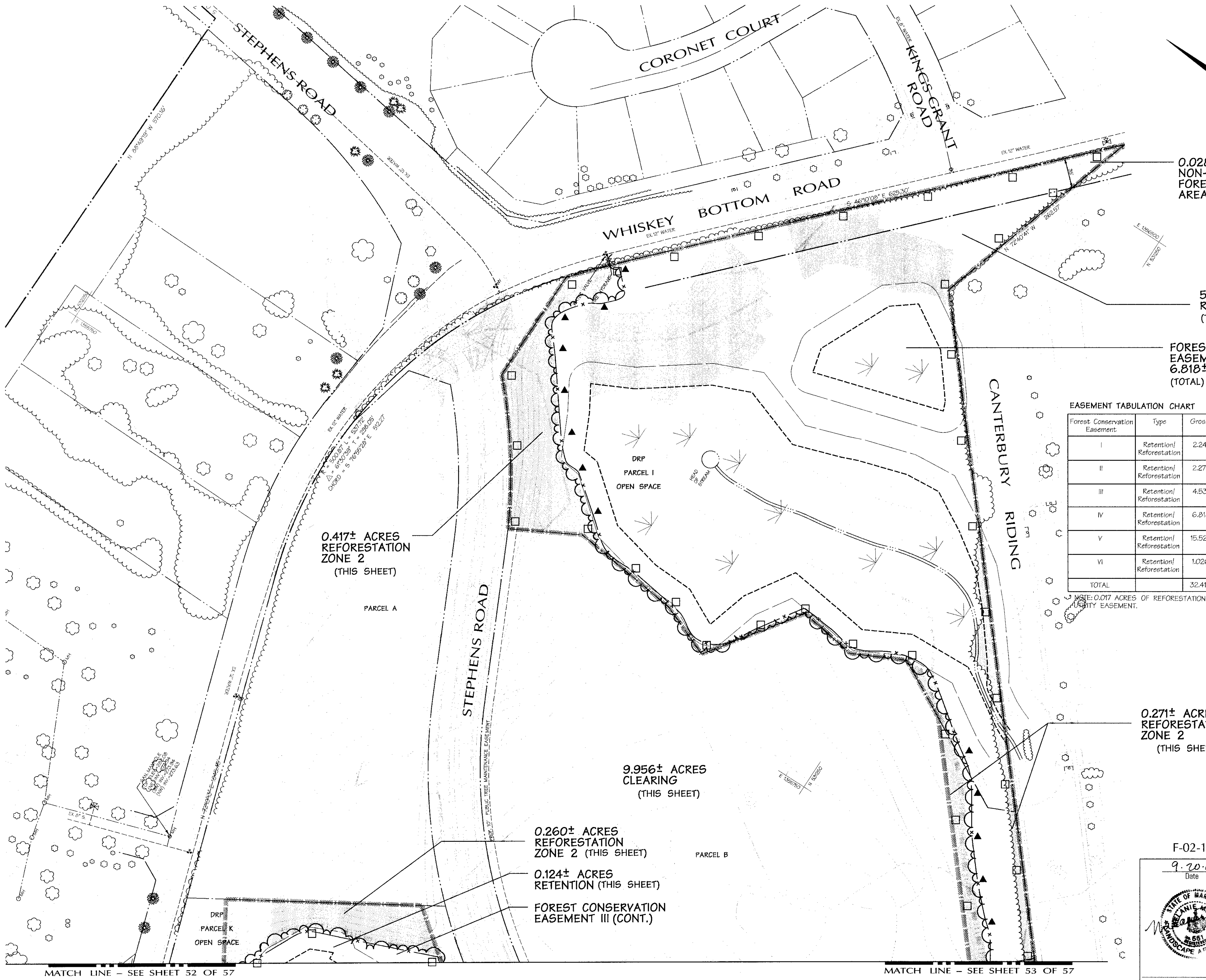

Legend

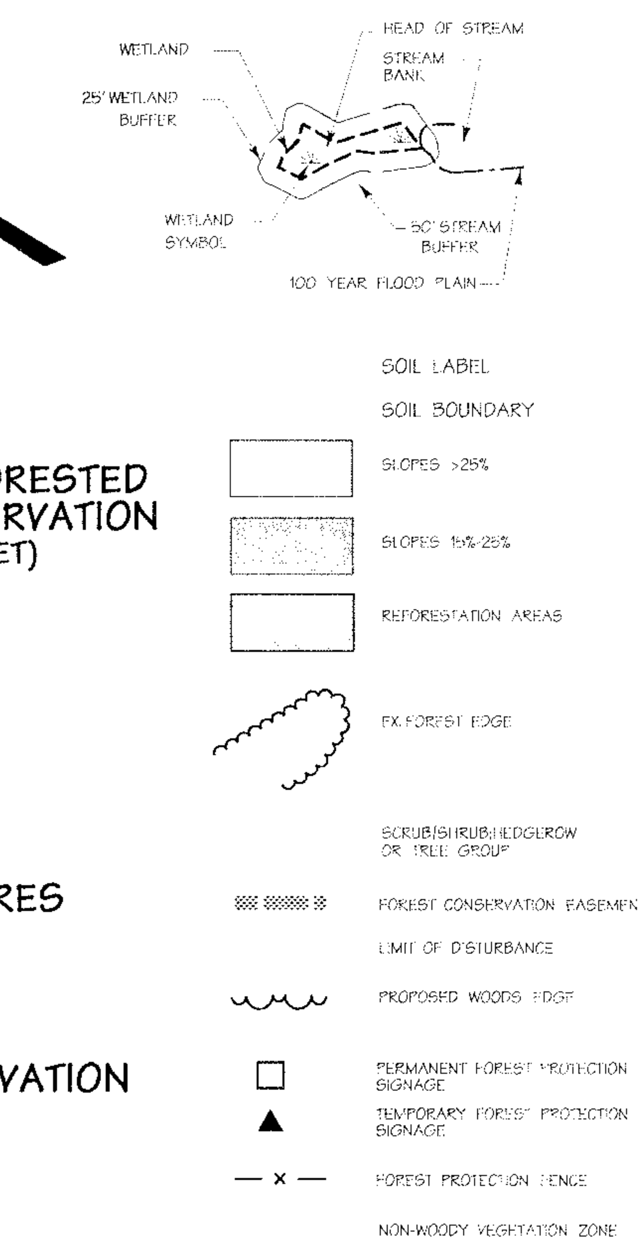

EASEMENT TABULATION CHART

Forest Conservation Easement	Type	Gross Area	Public 100 yr Floodplain D&U Easement	Net Retention Area	Reforestation Area	NON-Credit FCE Area
I	Retention/ Reforestation	2.244 AC	0.506 AC	1.353 AC	0.391 AC *	0.011 AC
II	Retention/ Reforestation	2.270 AC	0.000 AC	1.934 AC	0.336 AC.	0.000 AC.
III	Retention/ Reforestation	4.537 AC	0.000 AC.	3.596 AC.	0.941 AC	0.000 AC
IV	Retention/ Reforestation	6.818 AC	0.000 AC	5.748 AC	1.042 AC	0.028 AC
V	Retention/ Reforestation	15.523 AC	0.274 AC	13.138 AC	2.111 AC	0.000 AC
VI	Retention/ Reforestation	1.026 AC	0.000 AC	0.651 AC	0.375 AC	0.000 AC
TOTAL		32.418 AC	0.780 AC.	26.420 AC	5.196 AC *	0.039 AC

* NOTE: 0.017 ACRES OF REFORESTATION WILL BE LOCATED IN THE PUBLIC 100 YR FLOODPLAIN DRAINAGE AND UTILITY EASEMENT.

APPROVED: HOWARD COUNTY DEPT. OF PLANNING & ZONING

[signature] 10/18/02
CHIEF, DEVELOPMENT ENGINEERING DIVISION MK — DATE

[signature] 10/22/02
CHIEF, DIVISION OF LAND DEVELOPMENT — DATE

N/A
~~DIRECTOR~~ — ~~DATE~~

Date	No.	Revision Description

REVITZ PROPERTY

OWNER /DEVELOPER:

THE HOWARD RESEARCH & DEVELOPMENT CORPORATION
10275 LITTLE PATUXENT PARKWAY
COLUMBIA, MARYLAND 21044

F-02-111

9.20.02
Date

Landscape Architect

DMW
Daft·McCune·Walker, Inc.
200 East Pennsylvania Avenue
Towson, Maryland 21286
(410) 296-3333
Fax 296-4705

A Team of Land Planners, Landscape Architects, Engineers, Surveyors & Environmental Professionals

SUBDIVISION NAME	SECTION/AREA	LOT/PARCEL # 165 & P/O PAR. 837
PLAT# OR L/F 2267/436 · BLOCK # 20 · ZONE PEC	TAX/ZONE MAP 47 · ELECT. DISTRICT 6 th	CENSUS TRACT
WATER CODE	SEWER CODE	

TITLE

FINAL FOREST CONSERVATION PLAN

Des By MM	Scale 1" = 50'	Proj. No. 01011
Drn By BKC	Date 9/19/02	51 OF 57
Chk By	Approved	

F-02-111

Fri Sep 20 08:59:26 2002 ...\01011\Forest\51.dgn

MATCH LINE – SEE SHEET 51 OF 57

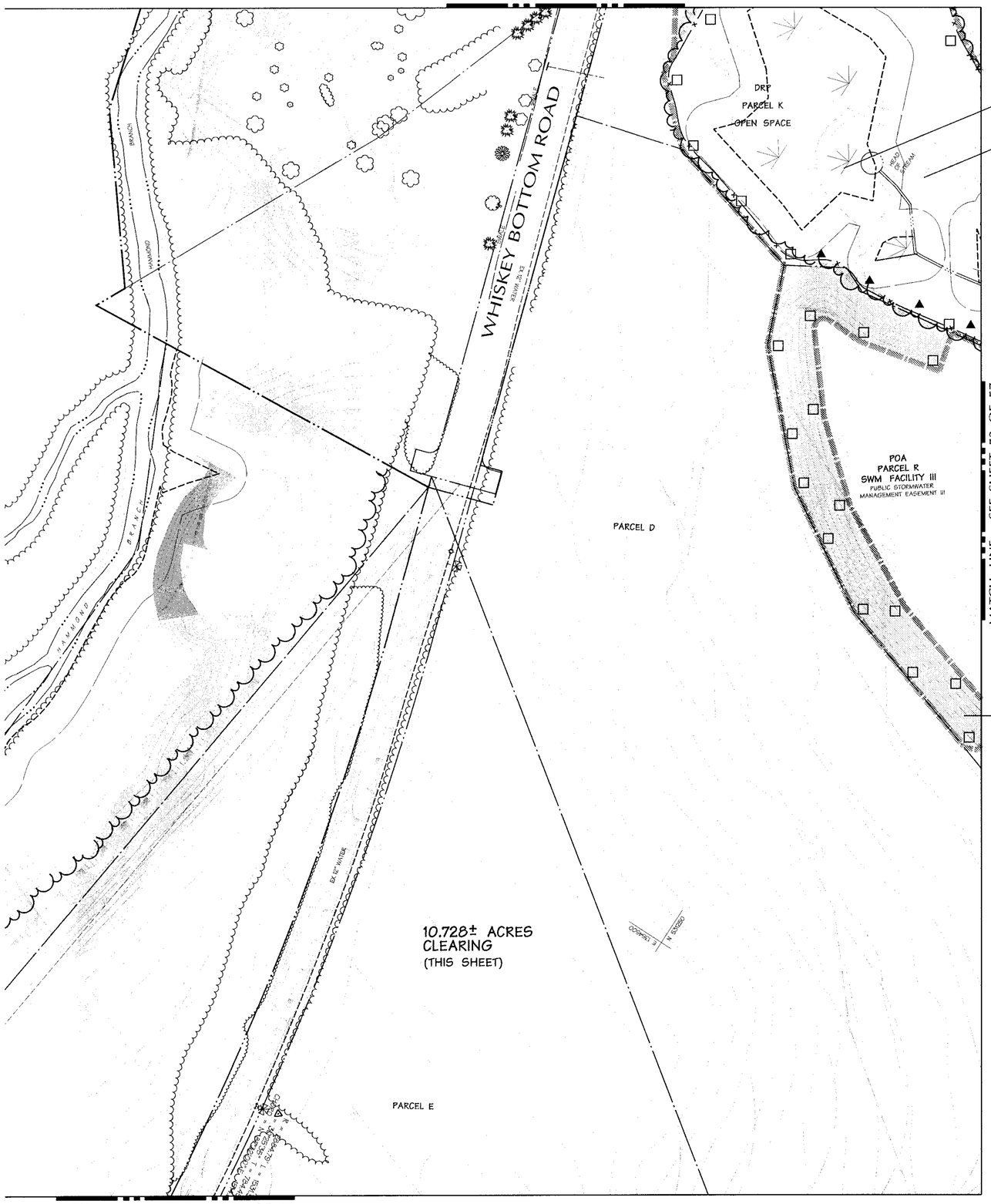

Legend

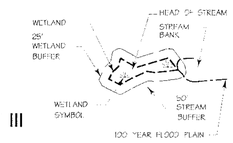

SOIL LABEL

SOIL BOUNDARY

SLOPES >25%

SLOPES 15%-25%

REFORESTATION AREAS

EX. FOREST EDGE

SCRUB/SHRUB/HEDGEROW OR TREE GROUP

FOREST CONSERVATION EASEMENT

LIMIT OF DISTURBANCE

PROPOSED WOODS EDGE

PERMANENT FOREST PROTECTION SIGNAGE

TEMPORARY FOREST PROTECTION SIGNAGE

FOREST PROTECTION FENCE

NON-WOODY VEGETATION ZONE

APPROVED: HOWARD COUNTY DEPT. OF PLANNING & ZONING

CHIEF, DEVELOPMENT ENGINEERING DIVISION MK — DATE 10/22/02

CHIEF, DIVISION OF LAND DEVELOPMENT — DATE 10/22/02

~~DIRECTOR~~ N/A — ~~DATE~~

Date	No.	Revision Description

REVITZ PROPERTY

OWNER /DEVELOPER:

THE HOWARD RESEARCH & DEVELOPMENT CORPORATION
10275 LITTLE PATUXENT PARKWAY
COLUMBIA, MARYLAND 21044

DMW
Daft-McCune-Walker, Inc.
200 East Pennsylvania Avenue
Towson, Maryland 21286
(410) 296-3333
Fax 296-4705

A Team of Land Planners, Landscape Architects, Engineers, Surveyors & Environmental Professionals

SUBDIVISION NAME			SECTION/AREA		LOT/PARCEL #
					165 & P/O PAR. 837
PLAT # OR L#	BLOCK #	ZONE	TAX/ZONE MAP	ELECT. DISTRICT	CENSUS TRACT
22674/436	20	PEC	47	6 th	
WATER CODE			SEWER CODE		

9.20.02
Date

STATE OF MARYLAND — MELANIE D. WALKER — No. 561 — REGISTERED LANDSCAPE ARCHITECT

Landscape Architect

TITLE

FINAL FOREST CONSERVATION PLAN

Des By	MM	Scale	1" = 50'	Proj. No.	01011
Drn By	BKC	Date	9/19/02		
Chk By		Approved			52 OF 57

F-02-111

F-02-111

Fri Sep 20 09:57:03 2002 I:\01011\Dwg\Plan\FCP\FCP1.dwg

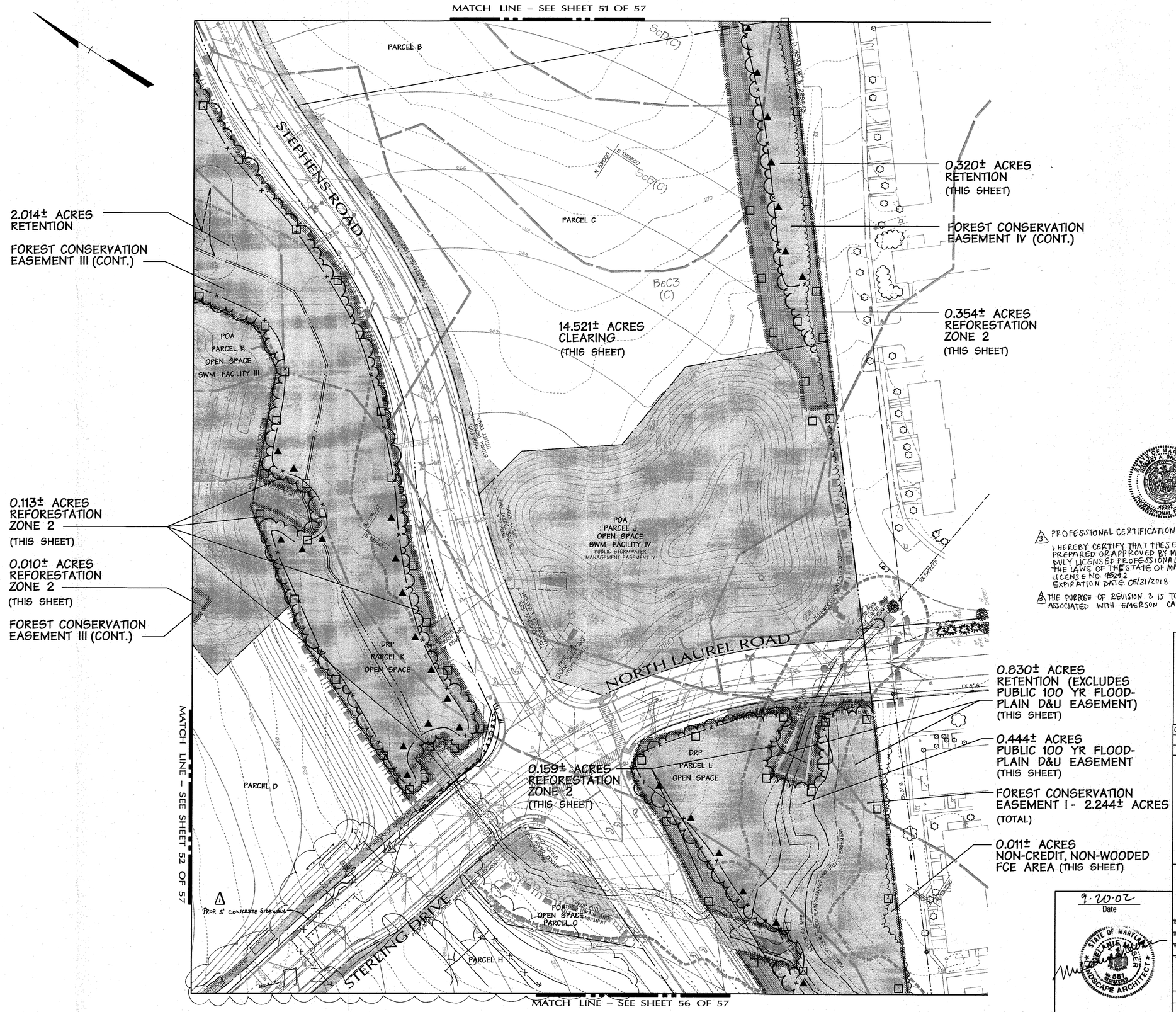

Legend

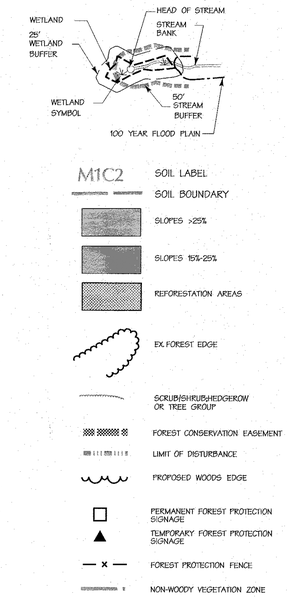

STATE OF MARYLAND ROBERT A. GROWLEY 45292 PROFESSIONAL ENGINEER

11-22-16

FOR REVISION # 1 ONLY

4·19·11
Date

STATE OF MARYLAND LANDSCAPE ARCHITECT

Landscape Architect No.

3 PROFESSIONAL CERTIFICATION FOR REV #3

I HEREBY CERTIFY THAT THESE DOCUMENTS WERE PREPARED OR APPROVED BY ME, AND THAT I AM A DULY LICENSED PROFESSIONAL ENGINEER UNDER THE LAWS OF THE STATE OF MARYLAND, LICENSE NO. 45292 EXPIRATION DATE: 05/21/2018

3 THE PURPOSE OF REVISION 3 IS TO SHOW THE WORK ASSOCIATED WITH EMERSON CAMPUS VCP. SDP-16-005

APPROVED: HOWARD COUNTY DEPT. OF PLANNING & ZONING

CHIEF, DEVELOPMENT ENGINEERING DIVISION MK — DATE 10/18/02

CHIEF, DIVISION OF LAND DEVELOPMENT — DATE 10/23/02

~~DIRECTOR~~ N/A — ~~DATE~~

Date	No.	Revision Description
05/23/15	3	EMERSON CAMPUS VCP
2-7-11	1	ADD 5' CONCRETE SIDEWALK ALONG PARCEL D FRONTAGE

REVITZ PROPERTY

OWNER /DEVELOPER:

THE HOWARD RESEARCH & DEVELOPMENT CORPORATION
10275 LITTLE PATUXENT PARKWAY
COLUMBIA, MARYLAND 21044

9·20·02
Date

STATE OF MARYLAND MELANIE MOSER 551 REGISTERED LANDSCAPE ARCHITECT

Landscape Architect

DMW
Daft·McCune·Walker, Inc.
200 East Pennsylvania Avenue
Towson, Maryland 21286
(410) 296-3333
Fax 296-4705

A Team of Land Planners, Landscape Architects, Engineers, Surveyors & Environmental Professionals

SUBDIVISION NAME			SECTION/AREA		LOT/PARCEL #
					165 & P/O PAR. 837
PLAT # OR L/F 2267436	BLOCK # 20	ZONE PEC	TAX/ZONE MAP 47	ELECT. DISTRICT 6 th	CENSUS TRACT
WATER CODE			SEWER CODE		

TITLE

FINAL FOREST CONSERVATION PLAN

Des By	MM	Scale	1" = 50'	Proj. No.	01011
Drn By	BKC	Date	9/19/02	53 OF 57	
Chk By		Approved			

F-02-111

F-02-111

STATE ROUTE 216 WBL

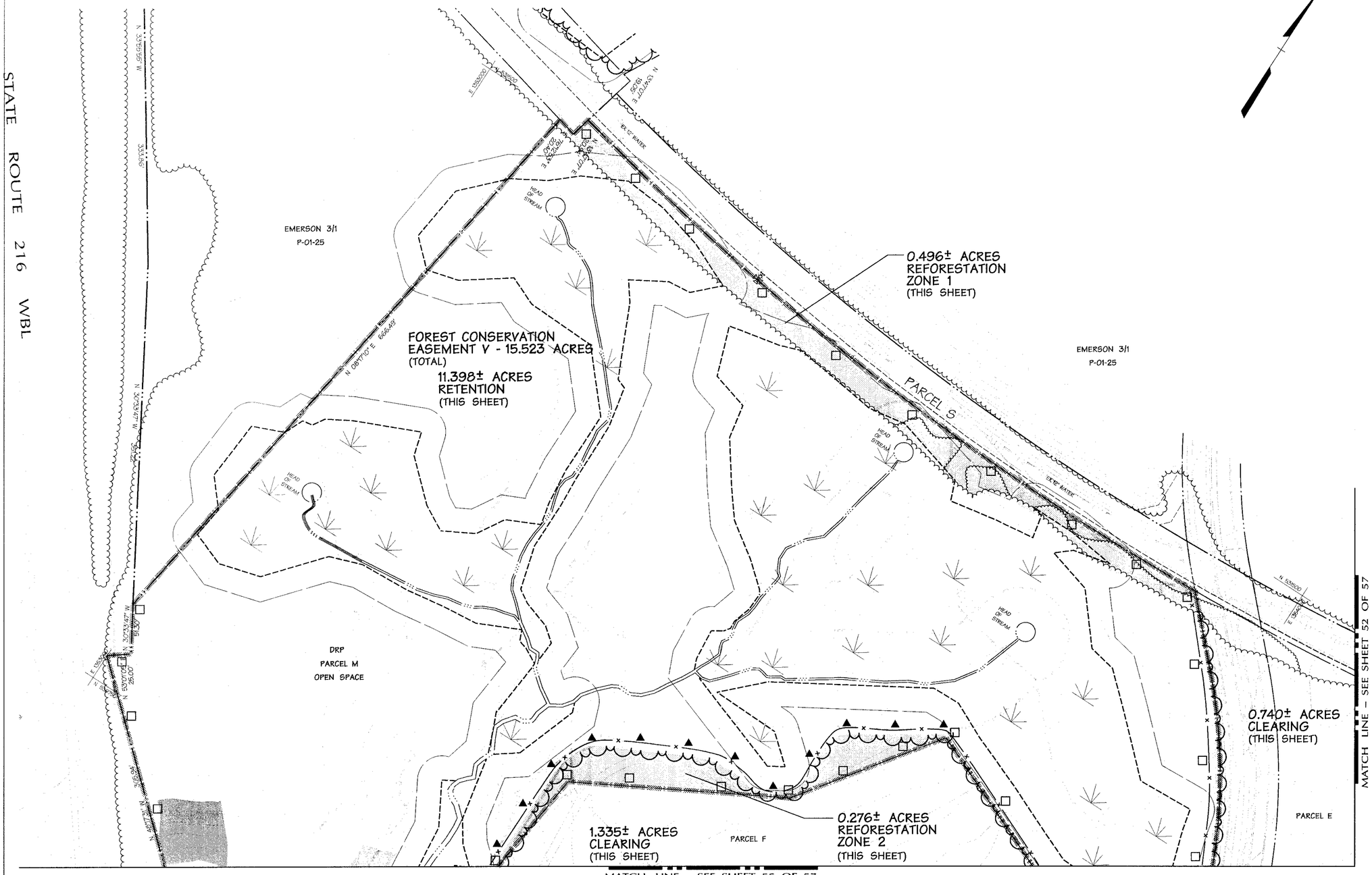

Legend

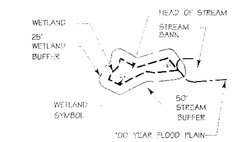

SOIL LABEL
SOIL BOUNDARY
SLOPES >25%
SLOPES 15%-25%
REFORESTATION AREAS
EX FOREST EDGE
SCRUB/SHRUB/HEDGEROW OR TREE GROUP
FOREST CONSERVATION EASEMENT
LIMIT OF DISTURBANCE
PROPOSED WOODS EDGE
PERMANENT FOREST PROTECTION SIGNAGE
TEMPORARY FOREST PROTECTION SIGNAGE
FOREST PROTECTION FENCE
NON-WOODY VEGETATION ZONE

APPROVED: HOWARD COUNTY DEPT. OF PLANNING & ZONING

CHIEF, DEVELOPMENT ENGINEERING DIVISION MK — DATE 10/10/02

CHIEF, DIVISION OF LAND DEVELOPMENT — DATE 10/22/02

~~DIRECTOR~~ N/A — ~~DATE~~

Date	No.	Revision Description

REVITZ PROPERTY

OWNER /DEVELOPER:

THE HOWARD RESEARCH & DEVELOPMENT CORPORATION
10275 LITTLE PATUXENT PARKWAY
COLUMBIA, MARYLAND 21044

DMW
Daft·McCune·Walker, Inc.
200 East Pennsylvania Avenue
Towson, Maryland 21286
(410) 296-3333
Fax 296-4705

A Team of Land Planners, Landscape Architects, Engineers, Surveyors & Environmental Professionals

SUBDIVISION NAME			SECTION/AREA			LOT/PARCEL #
						165 & P/O PAR. B37
PLAT # OR L/F	BLOCK #	ZONE	TAX/ZONE MAP	ELEC. DISTRICT	CENSUS TRACT	
22674/436	20	PEC	47	6 th		
WATER CODE			SEWER CODE			

TITLE

FINAL FOREST CONSERVATION PLAN

Des By	MM	Scale	1" = 50'	Proj. No.	01011
Drn By	BKC	Date	9/19/02		54 OF 57
Chk By		Approved			

9.20.02
Date

STATE OF MARYLAND
MELANIE MILLER
No. 551
REGISTERED
LANDSCAPE ARCHITECT

Landscape Architect

F-02-111

F-02-111

Fri Sep 20 09:08:11 2002 C:\Projects\01011\Cadd\Sheets\01011FC54.dgn 9/20/02 12:41:24 AM dgnmgr acadpltcfg

MATCH LINE – SEE SHEET 54 OF 57

MATCH LINE – SEE SHEET 52 OF 57

MATCH LINE – SEE SHEET 53 OF 57

MATCH LINE – SEE SHEET 56 OF 57

FOREST CONSERVATION EASEMENT V (CONT.)

0.173± ACRES RETENTION (THIS SHEET)

0.030± ACRES REFORESTATION ZONE 2 (THIS SHEET)

FOREST CONSERVATION EASEMENT V (CONT.)

1.567± ACRES RETENTION (EXCLUDING PUBLIC 100 YR FLOODPLAIN D&U EASEMENT) (THIS SHEET)

0.274± ACRE PUBLIC 100 YR FLOODPLAIN D&U EASEMENT (THIS SHEET)

20.938± ACRES CLEARING (THIS SHEET)

0.147± ACRES REFORESTATION ZONE 1 (THIS SHEET)

1.282± ACRES RETENTION (THIS SHEET)

FOREST CONSERVATION EASEMENT II - 2.270± ACRES (TOTAL)

1.001± ACRES REFORESTATION ZONE 2 (THIS SHEET)

0.076± ACRES REFORESTATION ZONE 2 (THIS SHEET)

DRP PARCEL M OPEN SPACE

PARCEL E

PARCEL F

PARCEL G

PARCEL D

PARCEL H

PARCEL N

POA OPEN SPACE PARCEL P SWM FACILITY VI PUBLIC STORMWATER MANAGEMENT EASEMENT VI

STERLING DRIVE

ROUTE 216

24' EX PAVING

100 YR E.P. WATER SURF. ELEV.

REVISED PER PLAT # 20041

PROP. 5' CONCRETE SIDEWALK

Legend

WETLAND
25' WETLAND BUFFER
WETLAND SYMBOL
HEAD OF STREAM
STREAM BANK
50' STREAM BUFFER
100 YEAR FLOOD PLAIN

M1C2 SOIL LABEL
SOIL BOUNDARY
SLOPES >25%
SLOPES 15%-25%
REFORESTATION AREAS
EX. FOREST EDGE
SCRUB/SHRUB/HEDGEROW OR TREE GROUP
FOREST CONSERVATION EASEMENT
LIMIT OF DISTURBANCE
PROPOSED WOODS EDGE
PERMANENT FOREST PROTECTION SIGNAGE
TEMPORARY FOREST PROTECTION SIGNAGE
FOREST PROTECTION FENCE
NON-WOODY VEGETATION ZONE

APPROVED: HOWARD COUNTY DEPT. OF PLANNING & ZONING

CHIEF, DEVELOPMENT ENGINEERING DIVISION MK — DATE 10/19/12

CHIEF, DIVISION OF LAND DEVELOPMENT — DATE 10/22/12

~~DIRECTOR~~ N/A — ~~DATE~~

Date	No.	Revision Description
05/23/15	3	EMERSON CAMPUS VCP
2-7-11	1	ADD 5' CONCRETE SIDEWALK ALONG PARCEL D FRONTAGE

REVITZ PROPERTY

OWNER /DEVELOPER:

THE HOWARD RESEARCH & DEVELOPMENT CORPORATION
10275 LITTLE PATUXENT PARKWAY
COLUMBIA, MARYLAND 21044

DMW
Daft-McCune-Walker, Inc.
200 East Pennsylvania Avenue
Towson, Maryland 21286
(410) 296-3333
Fax 296-4705

A Team of Land Planners, Landscape Architects, Engineers, Surveyors & Environmental Professionals

SUBDIVISION NAME		SECTION/AREA		LOT/PARCEL #
				165 & P/O PAR. 837
PLAT# OR L#	BLOCK #	ZONE	TAX/ZONE MAP	ELECT. DISTRICT	CENSUS TRACT
22614/436	20	PEC	47	6 th	
WATER CODE		SEWER CODE			

TITLE

FINAL FOREST CONSERVATION PLAN

Des By	MM	Scale	1" = 50'	Proj. No.	01011
Drn By	BKC	Date	9/19/02		
Chk By		Approved			55 OF 57

3 THE PURPOSE FOR REVISION 3 IS TO SHOW THE WORK ASSOCIATED WITH THE EMERSON CAMPUS VCP, SDP-16-005

3 PROFESSIONAL CERTIFICATION FOR REV #3

I HEREBY CERTIFY THAT THESE DOCUMENTS WERE PREPARED OR APPROVED BY ME, AND THAT I AM A DULY LICENSED PROFESSIONAL ENGINEER UNDER THE LAWS OF THE STATE OF MARYLAND, LICENSE NO. 45292 EXPIRATION DATE: 05/21/2018

11-22-16

FOR REVISION # 1 ONLY
4.19.11
Date

Landscape Architect No. 3357

9.20.02
Date

Landscape Architect

F-02-111

F-02-111

Fri Sep 20 2002 11:01:06 W:\projects\01011\dwg\plan\fcp.dwg

MATCH LINE – SEE SHEET 55 OF 57

RTE 216

FOREST CONSERVATION EASEMENT V (CONT.)

0.308± ACRES REFORESTATION ZONE 2 (THIS SHEET)

POA PARCEL P OPEN SPACE SWM FACILITY VI
PUBLIC STORMWATER MANAGEMENT EASEMENT VI

PARCEL G

9.991± ACRES CLEARING (THIS SHEET)

0.100± ACRES REFORESTATION ZONE 2 (THIS SHEET)

FOREST CONSERVATION EASEMENT II (CONT.)

0.652± ACRES RETENTION (THIS SHEET)

DRP OPEN SPACE PARCEL N

POA OPEN SPACE PARCEL Q SWM FACILITY V
PUBLIC STORMWATER MANAGEMENT EASEMENT V

PARCEL H

0.013± ACRES REFORESTATION ZONE 2 (THIS SHEET)

PROP. 10' PUBLIC STORM DRAIN UTILITY ESMT.

PROP. 10' PUBLIC ACCESS MAINTENANCE EASEMENT

NON-WOODY VEGETATION ZONE

STEPHENS ROAD

MATCH LINE – SEE SHEET 53 OF 57

0.232± ACRES REFORESTATION ZONE 2 (THIS SHEET)

0.062± ACRES PUBLIC 100 YR FLOODPLAIN D&U EASEMENT (THIS SHEET)

0.523± ACRES RETENTION (EXCLUDING PUBLIC 100 YR FLOODPLAIN D&U EASEMENT) (THIS SHEET)

LOOP ROAD PARCEL

DRP OPEN SPACE PARCEL L

FOREST CONSERVATION EASEMENT I (CONT.)

0.155± ACRES REFORESTATION ZONE 2 (THIS SHEET)

FOREST CONSERVATION EASEMENT VI 1.026 AC (TOTAL)

0.220± ACRES REFORESTATION ZONE 2 (THIS SHEET)

0.651± ACRES RETENTION (THIS SHEET)

INV. 3" PVC ELEV.= 226.16

INV. 3" PVC ELEV.= 225.85

TOP SPILLWAY ELEV.= 225.10
0.25'WIDE/0.01'HIGH OPENING INV.ELEV.= 217.93
TOP SPILLWAY ELEV.= 225.15
TOP GRATE= 226.40

Legend

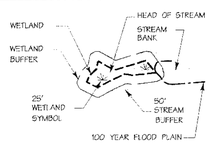

SOIL LABEL

SOIL BOUNDARY

SLOPES >25%

SLOPES 15%-25%

REFORESTATION AREAS

PERMANENT FOREST PROTECTION SIGNAGE

TEMPORARY FOREST PROTECTION SIGNAGE

FOREST PROTECTION FENCE

EX.FOREST EDGE

SCRUB/SHRUB/HEDGEROW OR TREE GROUP

FOREST CONSERVATION EASEMENT

LIMIT OF DISTURBANCE

PROPOSED WOODS EDGE

NON-WOODY VEGETATION ZONE

APPROVED: HOWARD COUNTY DEPT. OF PLANNING & ZONING

CHIEF, DEVELOPMENT ENGINEERING DIVISION MK — DATE 10/8/02

CHIEF, DIVISION OF LAND DEVELOPMENT — DATE 10/22/02

~~DIRECTOR~~ N/A — ~~DATE~~

Date	No.	Revision Description

REVITZ PROPERTY

OWNER /DEVELOPER:

THE HOWARD RESEARCH & DEVELOPMENT CORPORATION
10275 LITTLE PATUXENT PARKWAY
COLUMBIA, MARYLAND 21044

DMW
Daft-McCune-Walker, Inc.
200 East Pennsylvania Avenue
Towson, Maryland 21286
(410) 296-3333
Fax 296-4705

A Team of Land Planners, Landscape Architects, Engineers, Surveyors & Environmental Professionals

SUBDIVISION NAME			SECTION/AREA			LOT/PARCEL #
						165 & P/O PAR 837
PLAT# OR L/F 2291/436	BLOCK # 20	ZONE PEC	TAX/ZONE MAP 47	ELEC. DISTRICT 6 th		CENSUS TRACT
WATER CODE			SEWER CODE			

TITLE

FINAL FOREST CONSERVATION PLAN

Des By	MM	Scale	1" = 50'	Proj. No.	01011
Drn By	BKC	Date	9/19/02		56 OF 57
Chk By		Approved			

9.20.02
Date

STATE OF MARYLAND — DELANIE M. WALKER — No. 661 — LANDSCAPE ARCHITECT

Landscape Architect

F-02-111

F-02-111

Fri Sep 20 09:[illegible] C:\Projects\01011\Cadd\Plan\Sheet\01011FCP.dwg 9/19/02

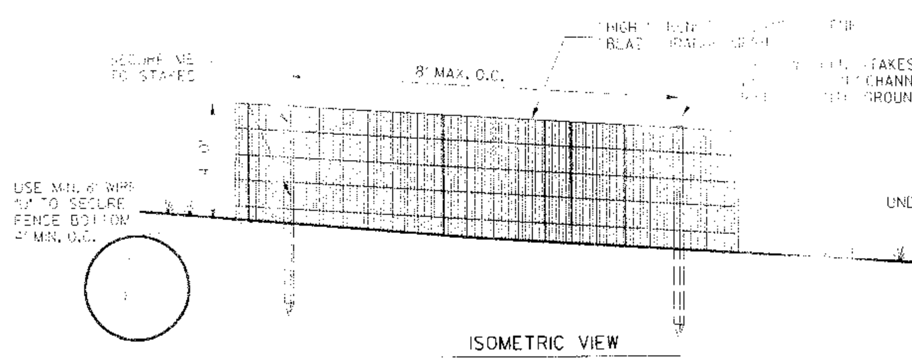

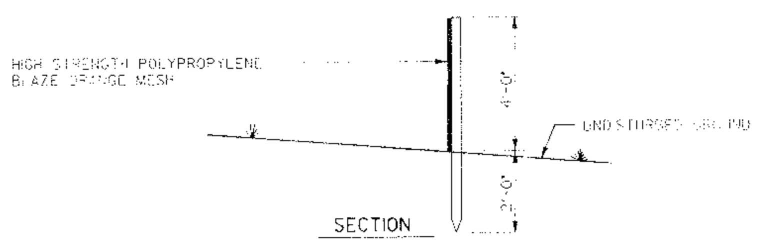

NOTES:
1. THIS DETAIL IS FOR FOREST PROTECTION DEVICE ONLY
2. FOREST RETENTION AREA WILL BE SET AS PART OF THE REVIEW PROCESS
3. BOUNDARIES OF FOREST RETENTION AREA SHOULD BE STAKED AND FLAGGED PRIOR TO INSTALLING THE DEVICE
4. ROOT DAMAGE SHALL BE AVOIDED
5. PROTECTION SIGNAGE MAY ALSO BE USED
6. FOREST PROTECTION FENCE SHALL BE MAINTAINED THROUGHOUT CONSTRUCTION

Forest Protection Fence *

Not To Scale

* WHERE SUPER SILT FENCE (S.S.F.) IS TO BE INSTALLED ADJACENT TO FOREST RETENTION AREAS, ATTACH HIGH VISIBILITY TAPE OR FLAGGING TO THE TOP EDGE OF S.S.F. AT 5' INTERVALS AND USE S.S.F. IN LIEU OF BLAZE ORANGE FENCE. TEMPORARY FOREST PROTECTION SIGNAGE MAY BE ATTACHED TO S.S.F.

PLANTING PROCEDURES FOR ALL CONTAINER GROWN TREES AND SHRUBS

1 REMOVE THE PLANT FROM BY CUTTING OR INVERTING THE CONTAINER

2 GENTLY LOOSEN ROOTS FROM SOILS. ROOTS MAY NOT BE CUT OR TRIMMED ON SITE

3 PLANT SHRUB OR TREE TO 2 INCHES ABOVE THE EXISTING GRADE

4 APPLY 2 TO 3 INCH THICK LAYER OF SHREDDED HARDWOOD MULCH

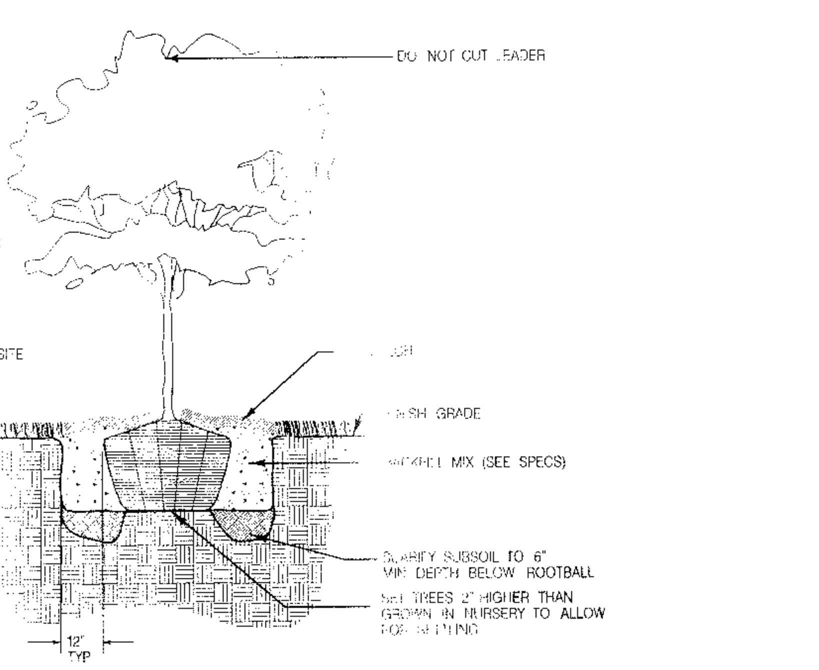

Typical Tree Planting (For container grown)

Not To Scale

GRID PATTERN WILL BE AVOIDED

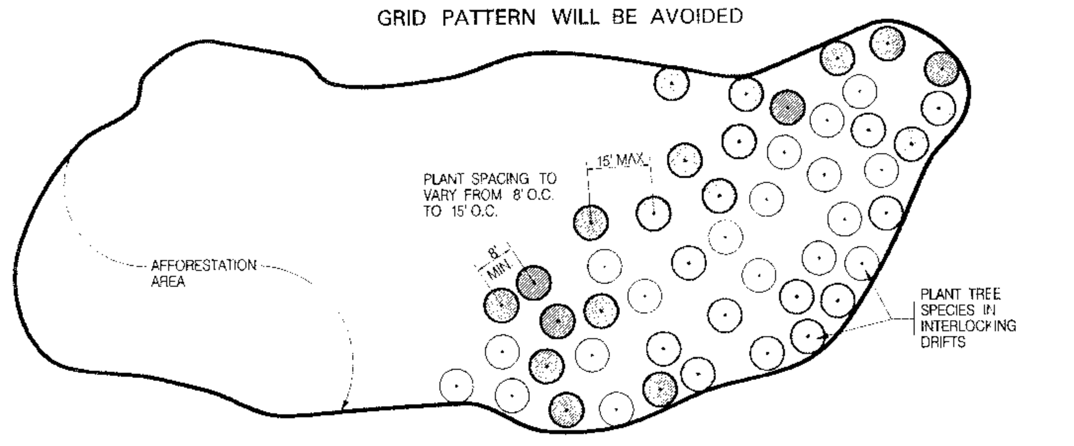

Planting Design Schematic

Not To Scale

Forest Conservation Area

AFFORESTATION / REFORESTATION PROJECT

Trees for Your Future

11" MIN. / 15" MIN.

SIGNS TO BE PLACED ON METAL POSTS 5' +/- ABOVE FINISH GRADE PRIOR TO PLANTING. PLACE SIGNS EVERY 100' AROUND PERIMETER OF FOREST CONSERVATION AREA.

Permanent Signage

Not To Scale

FOREST RETENTION AREA

MACHINERY, DUMPING OR STORAGE OF ANY MATERIALS IS

PROHIBITED

VIOLATORS ARE SUBJECT TO FINES AS IMPOSED BY THE MARYLAND FOREST CONSERVATION ACT OF 1991

11" MIN. / 15" MIN.

SIGNS TO BE PLACED ON METAL POSTS 5 +/- ABOVE FINISH GRADE. PLACE SIGNS EVERY 100' AROUND PERIMETER OF FOREST RETENTION AREA.

SIGNS MAY NOT BE ATTACHED TO TREES.

Temporary Signage

Not To Scale

FOREST CONSERVATION CALCULATIONS

BASIC SITE DATA	ACRES (+/-)
GROSS SITE AREA	97.53
AREA WITHIN 100 YEAR FLOODPLAIN	1.17
AREA WITHIN AGRICULTURAL USE OR PRESERVATION PARCEL (IF APPLICABLE)	0.0
NET TRACT AREA	96.36
LAND USE CATEGORY	CIA
INFORMATION FOR CALCULATIONS	
A. NET TRACT AREA	96.36
B. REFORESTATION THRESHOLD (15% x A)	14.45
C. AFFORESTATION MINIMUM (15% x A)	14.45
D. EXISTING FOREST ON NET TRACT AREA	94.63
E. FOREST AREAS TO BE CLEARED	68.21
F. FOREST AREAS TO BE RETAINED	26.42
REFORESTATION CALCULATIONS	
A. NET TRACT AREA	96.36
B. REFORESTATION THRESHOLD (15% x A)	14.45
C. EXISTING FOREST ON NET TRACT AREA	94.63
D. FOREST AREAS TO BE CLEARED	68.21
E. FOREST AREAS TO BE RETAINED	26.42
F. FOREST AREAS CLEARED ABOVE REFORESTATION THRESHOLD	68.21
G. FOREST AREAS CLEARED BELOW REFORESTATION THRESHOLD	0.0
H. FOREST AREAS RETAINED ABOVE REFORESTATION THRESHOLD	11.97

CLEARING ABOVE THE THRESHOLD ONLY

IF FOREST AREAS TO BE RETAINED ARE GREATER THAN THE REFORESTATION THRESHOLD (IF E IS GREATER THAN B), THE FOLLOWING CALCULATIONS APPLY:

REFORESTATION FOR CLEARING ABOVE THRESHOLD Fx1/4	17.05
REFORESTATION FOR CLEARING BELOW THRESHOLD Gx2	0.0
TOTAL REFORESTATION REQUIRED (Fx1/4) + (Gx2)	17.05
CREDIT FOR RETENTION ABOVE CONSERVATION THRESHOLD	11.97
REFORESTATION REQUIRED	5.08 ACRES
REFORESTATION PROVIDED	5.20 ACRES

FOREST CONSERVATION SURETY NOTE:

A total of 26.42 acres of forest retention, and 5.20 acres of reforestation are proposed under this plan. As such, the required surety amount for the retention acreage is $230,171.04, and the required surety amount for the reforestation is $113,256.00. The total amount of the required Forest conservation Act surety is $343,427.04.

GOALS AND OBJECTIVES

Development of the Revitz Property proposes approximately 68.21 acres of forest clearing. Under the current Forest Conservation Act, 5.08 acres reforestation are required to mitigate for this proposed clearing. The goal of this Forest Conservation Plan is to address reforestation requirements for the proposed development by establishing forest in priority reforestation areas which are located on-site. This plan proposes to plant a mix of fast-growing native tree species to establish viable forest cover in these areas as quickly as possible. Reforestation of these areas as proposed will provide resource protection for the adjacent streams and wetlands and will enhance the functional value and quality of the existing habitat. A total of 5.20 acres of priority reforestation will occur on portions of the site. This reforestation will satisfy the reforestation obligation and will provide an excess 0.12 acres of reforestation that may be used to offset reforestation requirements for off-site development.

Please note that the total site acreage of 97.53 includes the MD RTE 216 Loop Road Parcel and addresses Forest Conservation Act Compliance associated with the conveyance of this property to the State Highway Administration.

FOREST RETENTION

Tree retention/Soil Protection areas will be delineated with temporary forest protection fencing and retention area signage as appropriate. See forest protection fence and temporary signage Detail prior to the beginning of any construction activity.

Attachment of signs to trees is prohibited.

PRECONSTRUCTION MEETING/CONSTRUCTION PERIOD PRACTICES

Before construction begins, a required preconstruction meeting shall be held. The principle contractors, engineer, Howard County Inspectors and a qualified forest professional familiar with the plan shall be present. All items pertaining to forest retention, tree preservation, and construction period practices shall be discussed.

Any changes to the plan due to on-site conditions must be approved by the Howard County Department of Planning and Zoning.

No grading, excavation, utility placement, sediment and erosion control activities, or vehicular traffic will occur within forest retention areas.

Storage of equipment and materials shall not be permitted in the forest retention areas.

There will be no burial or disposal of discarded material on-site within the retention area.

There will be no open burning within 100 feet of woodlands.

Temporary structures including, but not limited to construction trailers, sanitary facilities, etc. shall not be placed within the forest retention areas.

Employee parking shall not be permitted in the forest retention areas.

POST CONSTRUCTION MANAGEMENT/MAINTENANCE BY CONTRACTOR

All dead trees or tree limbs which pose an immediate safety hazard will be felled. Trees dropped within the forest retention area will not be removed.

All temporary forest protection structures will be removed after construction and permanent signage will be placed where indicated on the plan.

A 2-year Contractor's Maintenance and Monitoring Period shall begin at mobilization. Seventy five percent survivorship must be guaranteed for this period. The site shall be inspected at the end of the two year period to ascertain survivorship and provide for replacement if necessary.

The Contractor's maintenance of new planting shall consist of watering, cultivating, weeding, and mulching as necessary to insure survival.

Contractor shall protect planting areas and plants at all times against damage of all kinds for duration of maintenance period. Maintenance includes temporary protection barriers and signs as required for protection. If any plants become damaged or injured, because sufficient protection was not provided, treat or replace as directed by Landscape Architect at no additional cost to Owner.

ALL FOREST RETENTION & REFORESTATION AREAS SHOWN ON THIS PLAN TO BE PLACED IN FOREST CONSERVATION EASEMENT

STANDARDS AND SPECIFICATIONS FOR PLANTING

1. PLANT MATERIAL SELECTION

A. Nursery grown plant materials greater than 1" caliper should meet or exceed the requirements of the American Nurserymen Specifications, i.e. should be typical of the species and variety, have a normal habit of growth, be first quality, sound, vigorous, well-branched, have healthy, well furnished root systems, and be free of disease, insect pests and mechanical injuries.

B. Planting stock less than 1" caliper should meet the following standards:

Seedling/whips:

Hardwoods - 1/4" to 1/2" caliper with roots not less than 8" long
Shrubs - 1/8" or larger caliper with 8" root system.

2. PLANTING SITE PREPARATION

Soils shall not be disturbed outside the area necessary for planting individual specimens and the removal of exotic invasive plant material. These areas should be stabilized as shown on the temporary seeding notes on sheet 8.

3. PLANTING PERIOD

All material shall be planted between September 15 and May 31. Material shall not be installed when ground is frozen.

4. PLANT MATERIAL STORAGE

Plants should be planted within 24 hours of delivery if possible. Plant material which are left unplanted for more than 24 hours shall be protected from direct sun and weather and kept moist. Nursery stock should not be left unplanted for more than two weeks.

5. ON-SITE INSPECTION

Prior to planting, planting stock shall be inspected by the landscape architect or other qualified professional familiar with this plan. Plant material not conforming to standard nurseryman specifications for size, form, vigor, roots, trunk wounds, insects and disease should be replaced.

6. TOPSOIL FOR PLANTING SOIL

A. On-site material or imported from same source as topsoil used on site for finish grading.

1. Uniform composition, free of subsoil, clay lumps, stones, stumps, roots or similar objects larger than 1 inch.

2. Topsoil must be free of plants or plant parts of bermudagrass, quackgrass, Johnsongrass, nutsedge, poison ivy, Canada thistle, or others as specified.

3. All topsoil shall be tested by a recognized laboratory for pH and soluble salts. A pH of 4.5 to 7.5 is required. Soluble salts shall not be higher than 500 parts per million.

7. ADDITIVE FOR BACKFILL MIX

A. Wood Residuals:

1. Source shall be well composted, not chemically treated.

2. Physical properties - grading:

U.S. Sieve	Dry Weight Percent Passing
3/8"	100
1/4"	90 - 100
No. 8	70 - 100
No. 35	0 - 30

3. Organic content by ash analysis: 90 - 100 percent dry weight

4. Chemistry:

Range

a. Saturation Extract Conductivity (EC) — Nil - 3.5
b. Reaction (pH) — 3.0 - 5.5

5 Salinity: Maximum saturation extract conductivity 1.0 millimhos per cm at 25 degrees centigrade.

B. Sand

1 Physical Properties - Grading:

U.S. Sieve	Dry Weight Percent Passing
No. 4	100
No. 10	95 - 100
No. 18	90 - 100
No. 35	65 - 100
No. 60	0 - 50
No. 140	0 - 20
No. 270	0 - 7

2. Chemistry:

Saturation Extract Conductivity (EC) — Nil - 3.0
Sodium Absorption Ratio (SAR) — Nil - 6.0
Boron - ppm in saturation extract solution — Nil - 1.0
Reaction (pH) — 6.0 - 7.5
Available calcium - sodium acetate extractable - ppm dry weight — Nil - 2000

C. Treble Superphosphate: Commercial product containing 19 to 20 percent available phosphoric acid.

8. MULCH

A. Shredded long fiber hardwood.

B. Mulch shall have been shredded within the last six (6) months.

9. PLANTING MIX

A. Planting mix shall be prepared at approved on-site staging area using approved on-site existing soil. Mix minimum quantities of 20 cubic yards or sufficient mix for entire job if less than 20 cubic yards is required.

B. Thoroughly mixed in the following proportions for tree and shrub planting mix:

.5 cy Existing soil
.2 cy Sharp sand
.3 cy Wood residuals
4.5 lbs. Treble superphosphate
5 lbs. Dolomite limestone (eliminate for acid loving plants)

10. LAYOUT AND EXCAVATION OF PLANTING AREAS

A. Plants shall be placed in each zone at random locations shown at spacing as indicated on the plan.

B. The Landscape Architect or qualified professional will check location of plants in the field and shall adjust to exact position before planting begins.

C. Subsoil shall not be worked when moisture content is so great that excessive compaction will occur nor when it is so dry that clods will not readily break. Water shall be applied, if necessary, to bring soil to an optimum moisture content before tilling and planting.

D. Tree pits shall not be excavated more than 24 hours in advance of planting operation. Tree pits shall be excavated to the following dimensions:

Excavation for	Width	Depth
Canned Trees	Can + 12 in	Can + 4 in.
B&B Trees	Ball + 12 in.	Ball + 4 in.

E. Excavate shrub pits to the following depths:

Excavation for	Width	Depth
Shrubs	Ball or Can + 8 in.	Can + 4 in., not less than 12 in.

11. PREPARING PLANT MATERIALS FOR PLANTING

A. Container stock shall be removed carefully after cans have been cut on two sides with approved cutter. Do not use spade to cut cans. Do not lift or handle container plants by tops, stems or trunks at any time.

B. Do not bind or handle any plant with wire or rope at any time so as to damage bark or break branches. Lift and handle plants only from bottom of ball.

C. Balled and burlapped (B&B) plants shall have firm balls of earth. Plants moved with a ball will not be accepted if the ball is cracked or broken before or during planting operations. B&B material shall be dug only when dormant. Pre-dug stored B&B material shall be inspected and approved at the storage site.

D. Do not force roots for bare rooted trees into excavated pits - custom dig pits to receive roots without deformation.

12. MIXING

A. Mix soil base, amendments and chemical additives by mechanical means.

B. Soil and sand bases shall be completely pulverized and free of lumps or aggregated material. Moisture content of base materials shall not be such that chemical granular or pelletized additives become dissolved during the mixing process.

C. Mix media in quantities of not less than 20 cubic yards or mix total quantity required if less than 50 cubic yards. The Contractor shall be responsible for uniformity between batches.

D. Contaminating backfill mix with unmixed soil in backfill mixing lots shall be avoided.

13. INSTALLATION OF CONTAINERIZED PLANT MATERIAL

A. Scarify the walls and bottom of all plant pits immediately prior to the placement of plant and backfill mix. The Contractor shall remove all glazing of soil caused by an auger or mechanical hole digger.

B. Wells around trees and shrubs: after planting is complete, form a soil well 3 inches high around each plant, extending to the outer limit of the plant pit in accordance with planting details shown on the Drawings.

C. Smooth planted areas to conform to specified grades after full settlement as occurred. Contractor shall bear final responsibility for proper surface drainage of planted areas. Any discrepancy in the drawings or specifications, obstructions on the site, or prior work done by another party which Contractor feels precludes establishing proper drainage, shall be brought to the attention of the Landscape Architect in writing.

D. Water all plants immediately again after planting.

E. Spread mulch in required areas to the compacted depth of 2 inches.

F. Install tree shelters around new plantings.

GUARANTEE:

A MINIMUM SURVIVAL RATE OF 75% IS TO BE GUARANTEED BY THE DEVELOPER AT THE END OF THE TWO YEAR MAINTENANCE PERIOD.

Reforestation Area Planting Plan

Zone I

# of whips req'd = 225   Acreage to be planted: 0.643

Common Name	Species	Size	Spacing	Quantity	[illegible]	Remarks
Tulip Poplar	Liriodendron tulipifera	Container grown whip	11' o.c./mdm	30		[illegible]
Red Maple	Acer rubrum	Container grown whip	11' o.c./mdm	30	[illegible]	
Green Ash	Fraxinus pennsylvanicum	Container grown whip	11' o.c./mdm	20	[illegible]	FA[illegible]
White Oak	Quercus alba	Container grown whip	11' o.c./mdm	20		FA[illegible]
American Sycamore	Platanus occidentalis	Container grown whip	11' o.c./mdm	20		FA[illegible]
Black Gum	Nyssa sylvatica	Container grown whip	11' o.c./mdm	20		FA[illegible]
Shadblow Serviceberry	Amelanchier canadensis	Container grown whip	11' o.c./mdm	3[illegible]		[illegible]
Common Persimmon	Diospyros virginiana	Container grown whip	11' o.c./mdm	2[illegible]		FA[illegible]
Sweet Gum	Liquidambar styraciflua	Container grown whip	11' o.c./mdm	[illegible]		[illegible]
Pin Oak	Quercus palustris	Container grown whip	11' o.c./mdm	1[illegible]		FACW
	TOTALS			225		

ALL WHIPS SHALL BE INSTALLED WITH TREE SHELTERS

Zone II

# of whips req'd = 1,594   Acreage to be planted: 4.553

Common Name	Species	Size	Spacing	Quantity	[illegible]	Remarks
Tulip Poplar	Liriodendron tulipifera	Container grown whip	11' o.c./mdm	222	[illegible]	FA[illegible]
Red Maple	Acer rubrum	Container grown whip	11' o.c./mdm	220	[illegible]	[illegible]
Scarlett Oak	Quercus coccinea	Container grown whip	11' o.c./mdm	100	[illegible]	N/A
White Oak	Quercus alba	Container grown whip	11' o.c./mdm	100	[illegible]	FACU
Sassafras	Sassafras albidum	Container grown whip	11' o.c./mdm	122		[illegible]
Black Gum	Nyssa sylvatica	Container grown whip	11' o.c./mdm	130		[illegible]
White Fringe Tree	Chionanthus virginicus	Container grown whip	11' o.c./mdm	130	VI	FAC+
Green Ash	Fraxinus americana	Container grown whip	11' o.c./mdm	100	MI	FACU
Southern Red Oak	Quercus falcata	Container grown whip	11' o.c./mdm	100	MI	FACU
Blackhaw Viburnum	Viburnum prunifolium	Container grown whip	11' o.c./mdm	130	I	FACU
Red Bud	Cercis canadensis	Container grown whip	11' o.c./mdm	120	I	FACU
White Pine	Pinus strobus	Container grown whip	11' o.c./mdm	120	MI	FACU
	TOTALS			1,594		

ALL WHIPS SHALL BE INSTALLED WITH TREE SHELTERS

NOTE:

1. THE PRECISE LOCATION OF PLANT MASSINGS WILL BE LOCATED IN THE FIELD BY LANDSCAPE ARCHITECT.

2. GRID PATTERNS WILL BE AVOIDED

3. PLANT MATERIAL MAY BE GROUPED IN CLUSTERS OF NO MORE THAN 5 TO 7 WHIPS OF THE SAME PLANT. PLANTS WILL BE INSTALLED IN A RANDOM FASHION.

4. ALL PROPOSED SPECIES ARE TREES. NO SHRUBS SHALL BE PLANTED

APPROVED: HOWARD COUNTY DEPT. OF PLANNING & ZONING

CHIEF, DEVELOPMENT ENGINEERING DIVISION MK — DATE 10/18/02

CHIEF, DIVISION OF LAND DEVELOPMENT — DATE 10/24/02

~~DIRECTOR~~ N/A — ~~DATE~~

Date	No.	Revision Description

REVITZ PROPERTY

OWNER /DEVELOPER:

THE HOWARD RESEARCH & DEVELOPMENT CORPORATION
10275 LITTLE PATUXENT PARKWAY
COLUMBIA, MARYLAND 21044

Daft·McCune·Walker, Inc.
200 East Pennsylvania Avenue
Towson, Maryland 21286
(410) 296-3333
Fax 296-4705

A Team of Land Planners, Landscape Architects, Engineers, Surveyors & Environmental Professionals

9.20.02 Date

Landscape Architect

SUBDIVISION NAME	SECTION/AREA	LOT/PARCEL # 165 & P/O PAR. 837
PLAT# OR L/F 2267/436 / BLOCK # 20 / ZONE PEC	TAX/ZONE MAP 47 / ELECT. DISTRICT 6 th	CENSUS TRACT
WATER CODE	SEWER CODE	

TITLE

FINAL FOREST CONSERVATION PLAN

Des By MM	Scale 1" = 50'	Proj. No. 01011
Drn By BKC	Date 9/19/02	57 OF 57
Chk By	Approved	

F-02-111

F-02-111

1. A MINIMUM OF 48 HOURS NOTICE MUST BE GIVEN TO THE HOWARD COUNTY DEPARTMENT OF INSPECTIONS, AND PERMITS, SEDIMENT CONTROL DIVISION PRIOR TO THE START OF ANY CONSTRUCTION (313-1855).
2. ALL VEGETATIVE AND STRUCTURAL PRACTICES ARE TO BE INSTALLED ACCORDING TO THE PROVISIONS OF THIS PLAN AND ARE TO BE IN CONFORMANCE WITH THE MOST CURRENT MARYLAND STANDARDS AND SPECIFICATIONS FOR SOIL EROSION AND SEDIMENT CONTROL" AND REVISIONS THERETO.
3. FOLLOWING INITIAL SOIL DISTURBANCE OR RE-DISTURBANCE, PERMANENT OR TEMPORARY STABILIZATION SHALL BE COMPLETED WITHIN:
   A. SEVEN CALENDAR DAYS FOR ALL PERIMETER SEDIMENT CONTROL STRUCTURES, DIKES, PERIMETER SLOPES AND ALL SLOPES STEEPER THAN 3:1.
   B. FOURTEEN DAYS AS TO ALL OTHER DISTURBED OF GRADED AREAS ON THE PROJECT SITE.
4. ALL SEDIMENT TRAPS/BASINS SHOWN MUST BE FENCED AND WARNING SIGNS POSTED AROUND THEIR PERIMETER IN ACCORDANCE WITH VOL. 1, CHAPTER 12, OF THE "HOWARD COUNTY DESIGN MANUAL", STORM DRAINAGE.
5. ALL DISTURBED AREAS MUST BE STABILIZED WITHIN THE TIME PERIOD SPECIFIED ABOVE IN ACCORDANCE WITH THE "1994 MARYLAND STANDARDS AND SPECIFICATIONS FOR SOIL EROSION AND SEDIMENT CONTROL" FOR PERMANENT SEEDINGS (SEC. 51), SODS (SEC. 54), TEMPORARY SEEDING (SEC. 50), AND MULCHING (SEC. 52). TEMPORARY STABILIZATION WITH MULCH ALONE CAN ONLY BE DONE WHEN RECOMMENDED SEEDING DATES DO NOT ALLOW FOR PROPER GERMINATION AND ESTABLISHMENT OF GRASSES.
6. ALL SEDIMENT CONTROL STRUCTURES ARE TO REMAIN IN PLACE AND ARE TO BE MAINTAINED IN OPERATIVE CONDITION UNTIL PERMISSION FOR THEIR REMOVAL HAS BEEN OBTAINED FROM THE HOWARD COUNTY SEDIMENT CONTROL INSPECTOR.
7. SITE ANALYSIS:

TOTAL AREA OR SITE	= 98 ACRES
AREA DISTURBED	= 40 ACRES
AREA TO BE ROOFED OR PAVED	= 7 ACRES
AREA TO BE VEGETATIVELY STABILIZED	= 33 ACRES
TOTAL CUT	= 250,000 CUBIC YARDS
TOTAL FILL	= 250,000 CUBIC YARDS
WASTE/ BORROW AREA	= NOT REQUIRED*

* ANY WASTE/BORROW ISSUES THAT MAY ARISE DURING CONSTRUCTION CAN BE TAKEN CARE OF ON-SITE.

8. ANY SEDIMENT CONTROL PRACTICE WHICH IS DISTURBED BY GRADING ACTIVITY FOR PLACEMENT OF UTILITIES MUST BE REPAIRED ON THE SAME DAY OF DISTURBANCE.
9. ADDITIONAL SEDIMENT CONTROLS MUST BE PROVIDED, IF DEEMED NECESSARY BY THE HOWARD COUNTY SEDIMENT CONTROL INSPECTOR.
10. ON ALL SITES WITH DISTURBED AREAS IN EXCESS OF 2 ACRES, APPROVAL OF THE INSPECTION AGENCY SHALL BE REQUESTED UPON COMPLETION OF INSTALLATION OF PERIMETER EROSION AND SEDIMENT CONTROLS, BUT BEFORE PROCEEDING WITH ANY OTHER EARTH DISTURBANCE OR GRADING. OTHER BUILDING OR GRADING INSPECTION APPROVALS MAY NOT BE AUTHORIZED UNTIL THIS INITIAL APPROVAL BY THE INSPECTION AGENCY IS MADE.
11. TRENCHES FOR THE CONSTRUCTION OF UTILITIES IS LIMITED TO THREE PIPE LENGTHS OR THAT WHICH SHALL BE BACK-FILLED AND STABILIZED WITHIN ONE WORKING DAY, WHICHEVER IS SHORTER.

Sediment Control General Notes
Not To Scale

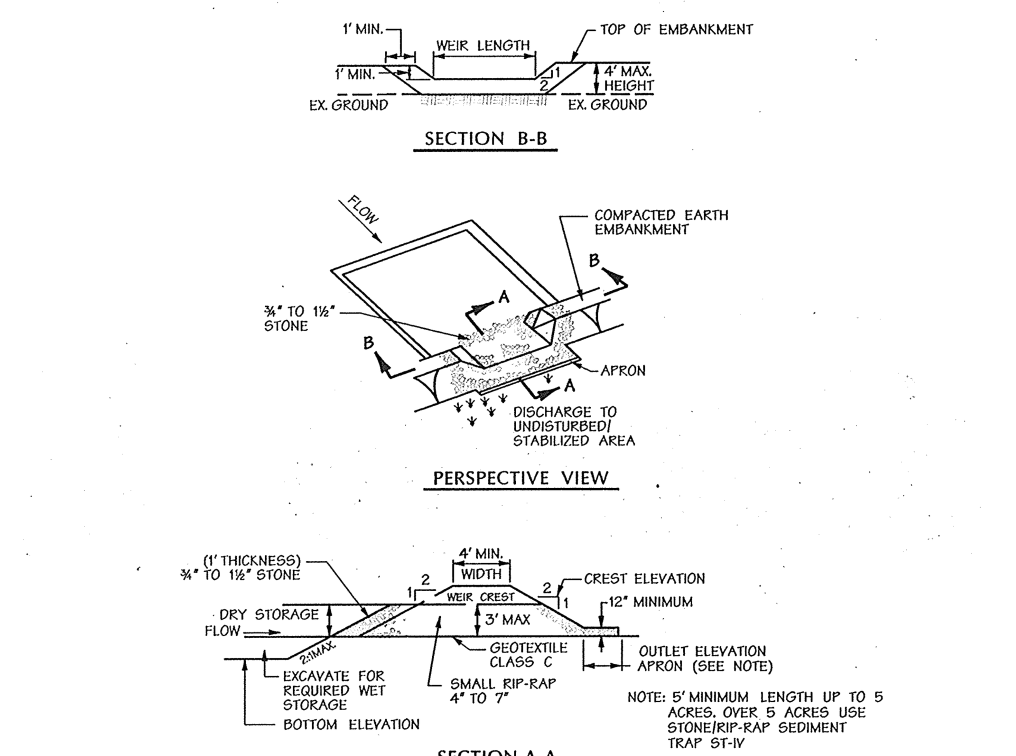

U.S. DEPARTMENT OF AGRICULTURE SOIL CONSERVATION SERVICE

C - 9 - 10

MARYLAND DEPARTMENT OF ENVIRONMENT WATER MANAGEMENT ADMINISTRATION

Stone Outlet Sediment Trap - ST II
Not To Scale

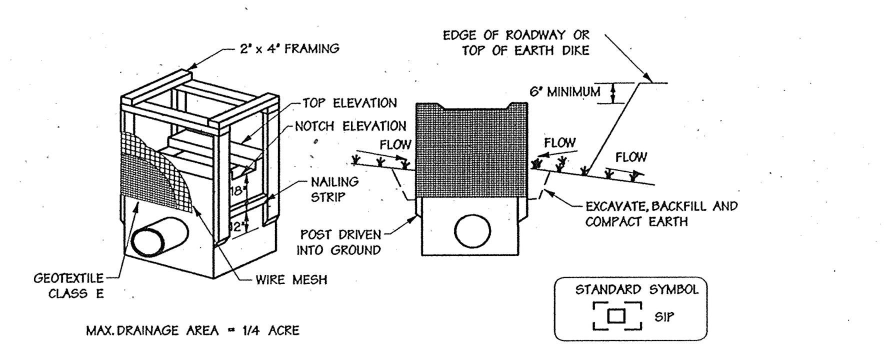

MAX. DRAINAGE AREA = 1/4 ACRE

CONSTRUCTION SPECIFICATIONS

1. EXCAVATE COMPLETELY AROUND THE INLET TO A DEPTH OF 18" BELOW THE NOTCH ELEVATION.
2. DRIVE THE 2" x 4" CONSTRUCTION GRADE LUMBER POSTS 1' INTO THE GROUND AT EACH CORNER OF THE INLET. PLACE NAIL STRIPS BETWEEN THE POSTS ON THE ENDS OF THE INLET. ASSEMBLE THE TOP PORTION OF THE 2" x 4" FRAME USING THE OVERLAP JOINT SHOWN ON DETAIL. THE TOP OF THE FRAME (WEIR) MUST BE 6" BELOW ADJACENT ROADWAYS WHERE FLOODING AND SAFETY ISSUES MAY ARISE.
3. STRETCH THE ½" x ½" WIRE MESH TIGHTLY AROUND THE FRAME AND FASTEN SECURELY. THE ENDS MUST MEET AND OVERLAP AT A POST.
4. STRETCH THE GEOTEXTILE CLASS E TIGHTLY OVER THE WIRE MESH WITH THE GEOTEXTILE EXTENDING FROM THE TOP OF THE FRAME TO 18" BELOW THE INLET NOTCH ELEVATION. FASTEN THE GEOTEXTILE FIRMLY TO THE FRAME. THE ENDS OF THE GEOTEXTILE MUST MEET AT A POST, BE OVERLAPPED AND FOLDED, THEN FASTENED DOWN.
5. BACKFILL AROUND THE INLET IN COMPACTED 6" LAYERS UNTIL THE LAYER OF EARTH IS LEVEL WITH THE NOTCH ELEVATION ON THE ENDS AND TOP ELEVATION ON THE SIDES.
6. IF THE INLET IS NOT IN A SUMP, CONSTRUCT A COMPACTED EARTH DIKE ACROSS THE DITCH LINE DIRECTLY BELOW IT. THE TOP OF THE EARTH DIKE SHOULD BE AT LEAST 6" HIGHER THAN THE TOP OF THE FRAME.
7. THE STRUCTURE MUST BE INSPECTED PERIODICALLY AND AFTER EACH RAIN AND THE GEOTEXTILE REPLACED WHEN IT BECOMES CLOGGED.

U.S. DEPARTMENT OF AGRICULTURE SOIL CONSERVATION SERVICE

MARYLAND DEPARTMENT OF ENVIRONMENT WATER MANAGEMENT ADMINISTRATION

E - 16 - 5

Standard Inlet Protection
Not To Scale

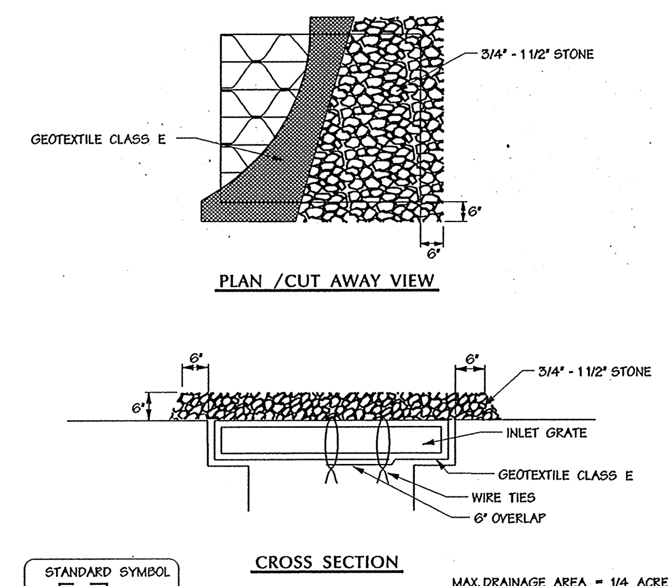

MAX. DRAINAGE AREA = 1/4 ACRE

CONSTRUCTION SPECIFICATIONS

1. LIFT GRATE AND WRAP WITH GEOTEXTILE CLASS E TO COMPLETELY COVER ALL OPENINGS, THEN SET GRATE BACK IN PLACE.
2. PLACE ¾" TO 1½" STONE, 4"-6" THICK ON THE GRATE TO SECURE THE FABRIC AND PROVIDE ADDITIONAL FILTRATION.

U.S. DEPARTMENT OF AGRICULTURE SOIL CONSERVATION SERVICE

E - 16 - 5A

MARYLAND DEPARTMENT OF ENVIRONMENT WATER MANAGEMENT ADMINISTRATION

At Grade Inlet Protection
Not To Scale

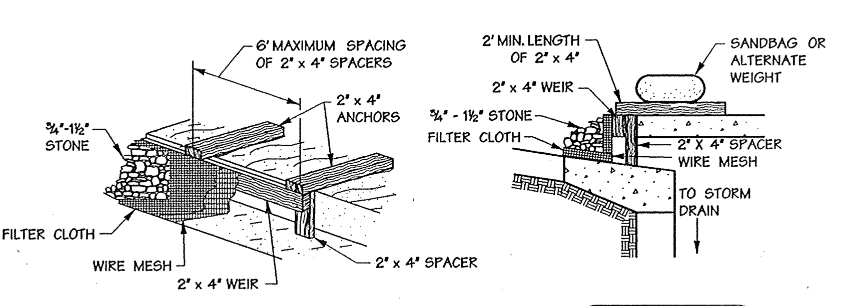

MAX. DRAINAGE AREA = 1/4 ACRE

CONSTRUCTION SPECIFICATIONS

1. ATTACH A CONTINUOUS PIECE OF ½" x ½" WIRE MESH (30" MINIMUM WIDTH BY THROAT LENGTH PLUS 4') TO THE 2" x 4" WEIR (MEASURING THROAT LENGTH PLUS 2') AS SHOWN ON THE STANDARD DRAWING.
2. PLACE A CONTINUOUS PIECE OF GEOTEXTILE CLASS E THE SAME DIMENSIONS AS THE WIRE MESH OVER THE WIRE MESH AND SECURELY ATTACH IT TO THE 2" x 4" WEIR.
3. SECURELY NAIL THE 2" x 4" WEIR TO A 9" LONG VERTICAL SPACER TO BE LOCATED BETWEEN THE WEIR AND THE INLET FACE (MAX. 4' APART).
4. PLACE THE ASSEMBLY AGAINST THE INLET THROAT AND NAIL (MINIMUM 2' LENGTHS OF 2" x 4" TO THE TOP OF THE WEIR AT SPACER LOCATIONS). THESE 2" x 4" ANCHORS SHALL EXTEND ACROSS THE INLET TOP AND BE HELD IN PLACE BY SANDBAGS OR ALTERNATE WEIGHT.
5. THE ASSEMBLY SHALL BE PLACED SO THAT THE END SPACERS ARE A MINIMUM 1' BEYOND BOTH ENDS OF THE THROAT OPENING.
6. FORM THE ½" x ½" WIRE MESH AND THE GEOTEXTILE FABRIC TO THE CONCRETE GUTTER AND AGAINST THE FACE OF THE CURB ON BOTH SIDES OF THE INLET. PLACE CLEAN ¾" X 1½" STONE OVER THE WIRE MESH AND GEOTEXTILE IN SUCH A MANNER TO PREVENT WATER FROM ENTERING THE INLET UNDER OR AROUND THE GEOTEXTILE.
7. THIS TYPE OF PROTECTION MUST BE INSPECTED FREQUENTLY AND THE FILTER CLOTH AND STONE REPLACED WHEN CLOGGED WITH SEDIMENT.
8. ASSURE THAT STORM FLOW DOES NOT BYPASS THE INLET BY INSTALLING A TEMPORARY EARTH OR ASPHALT DIKE TO DIRECT THE FLOW OF THE INLET.

U.S. DEPARTMENT OF AGRICULTURE SOIL CONSERVATION SERVICE

E - 16 - 5B

MARYLAND DEPARTMENT OF ENVIRONMENT WATER MANAGEMENT ADMINISTRATION

Curb Inlet Protection (COG or COS Inlets)
Not To Scale

1. Notify Maryland Department of Environment Nontidal Wetlands and Waterways Inspections and Compliance Sections at 410 631 3510 at least five days in advance of beginning any work in streams, 100 year Flood Plain, Nontidal Wetlands and Wetlands Buffers.
2. Notify HCD Department of Inspections 410 313 1855 at least 48 hours prior to beginning work.
3. If applicable, orange high visibility fence shall be manually installed along the limit of disturbance, where the limit is within 50 feet of the forest conservation easement, 100 year flood plain, wetlands, wetlands buffer or stream buffer. This shall be completed by and inspected at the pre-construction meeting.
4. Clear and grub for sediment and erosion control measures or devices only with the Sediment Control Inspector's permission.

5(a). Install sediment control for culvert crossings, install culvert crossings, stabilize with ECM/seed. Observe the Phase I L.O.D.(for stream diversion practices at stream crossings only). Phase I L.O.D. is shown on sheets 32 and 33 of 57. Upon completion of the crossings, the portions of proposed 2:1 slopes that have been constructed in this phase shall be protected with ECM (sheet 30 of 57) and permanent seeding (sheet 31).

(b). With permission from the Inspector, install remainder of sediment control measures and devices ie. Sediment basins, sediment traps, silt fence, super silt fence, earth dikes, etc with the exception of the earth dike running east along the north side of Sterling Drive to SWM III. Observe the Phase II L.O.D., shown on SEC plan sheets. There will be no in-stream work between March 1st through June 15th. For conditions of MDE Permit see Tracking number 01-NT-0500/200260639.

6. Notify HCD Department of Inspection, upon completion of said installation.
7. With the approval of the Sediment Control Inspector clear and grub remainder of site. Execute, maintain dust control per dust control specifications, sheet 29.
8. Mass grade north of Sterling Drive until contour 270 is reached. Install remainder of earth dike draining to Basin 3 on Parcel "D". Mass grade remainder of site with the exception of the portion north of Stephens at Trap 1.
9. Mass grade and stabilize remainder of site.
10. Install water, sewer, storm drains and curb and gutter for site.
11. For Round-about please see Traffic Maintenance Plan.
12. Pave site.
13. Upon stabilization of site with established vegetation and with permission of the Sediment Control Inspector, remove Trap 1 and grade remainder of site. Stabilize this section. Flush storm drain system. Remove sediment control measures and stabilize. Convert SEC basins to SWM facilities.

Sequence of Operations

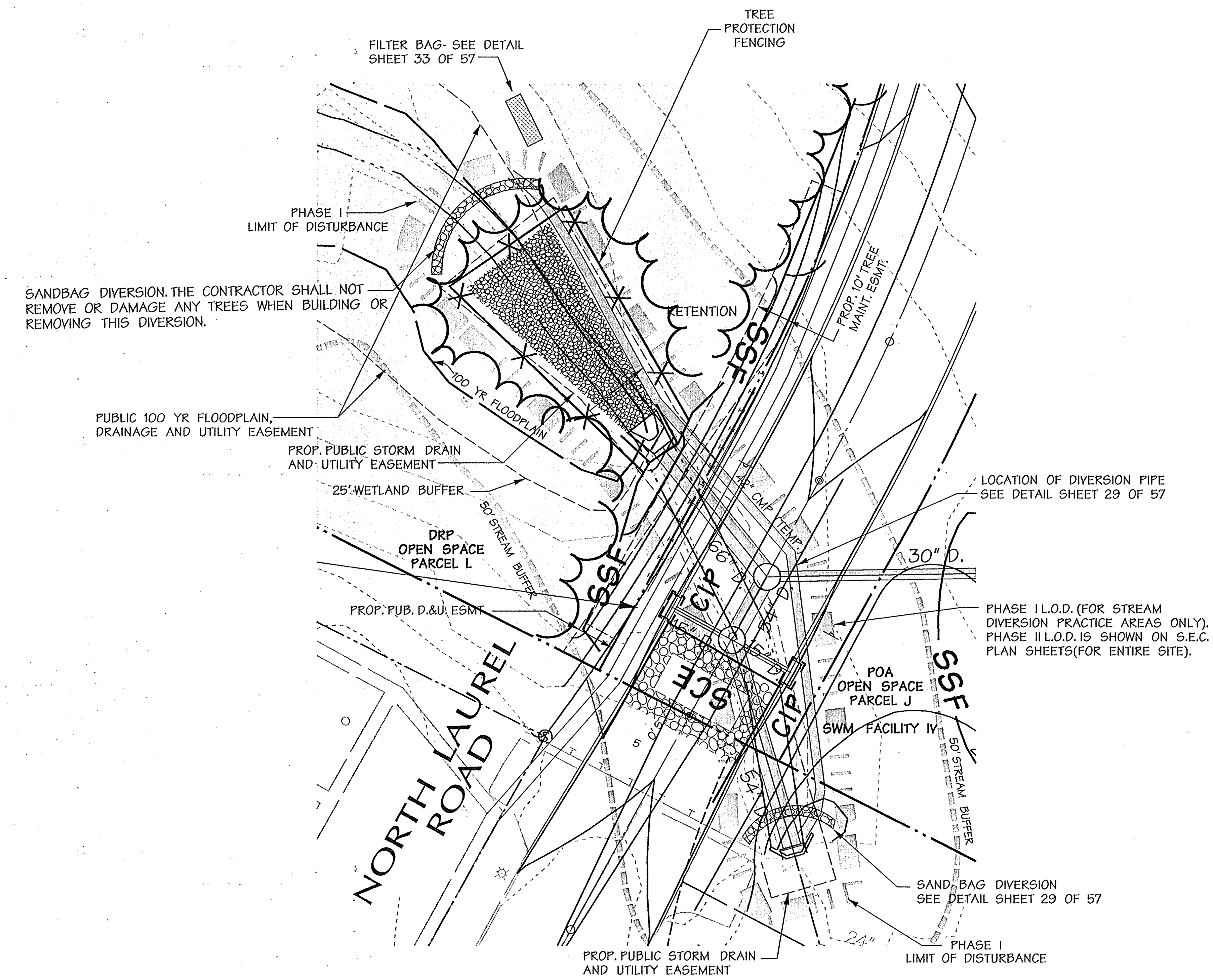

PIPE DIVERSION
(NORTH LAUREL ROAD)
SCALE: 1"=30'

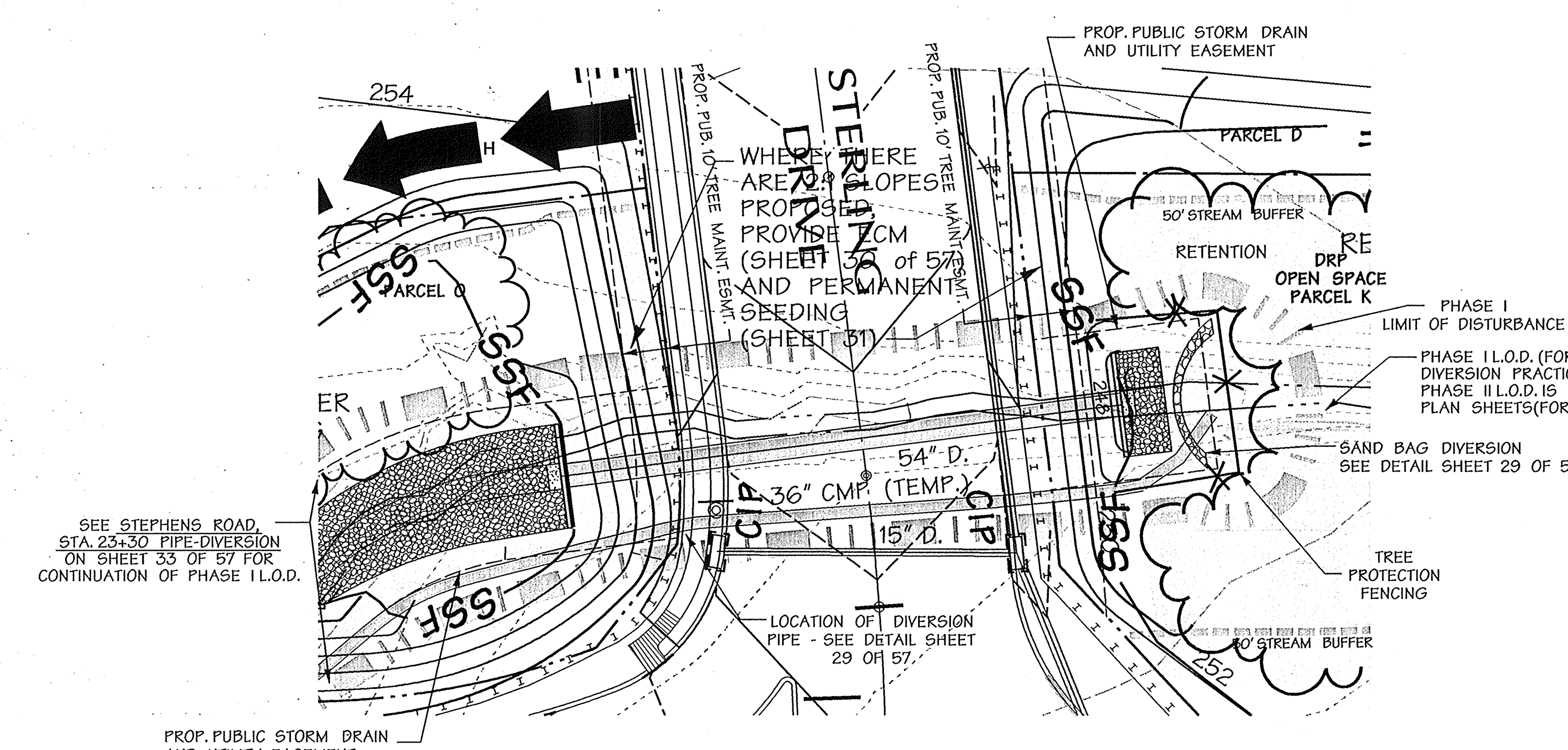

PIPE DIVERSION
(STERLING DRIVE)
SCALE: 1"=30'

MDE PERMIT AND TRACKING No. 01-NT-0500/200260639

DEVELOPER'S CERTIFICATION:

"I/WE CERTIFY THAT ALL DEVELOPMENT AND CONSTRUCTION WILL BE DONE ACCORDING TO THIS PLAN, AND THAT ANY RESPONSIBLE PERSONNEL INVOLVED IN THE CONSTRUCTION PROJECT WILL HAVE A CERTIFICATE OF ATTENDANCE AT A DEPARTMENT OF THE ENVIRONMENT APPROVED TRAINING PROGRAM FOR THE CONTROL OF SEDIMENT AND EROSION BEFORE BEGINNING THE PROJECT. I ALSO AUTHORIZE PERIODIC ON-SITE INSPECTION BY THE HOWARD SOIL CONSERVATION DISTRICT.

[signature] 9/20/02
SIGNATURE OF DEVELOPER — DATE
PRINT NAME BELOW SIGNATURE
Robert A. Jenkins

ENGINEER'S CERTIFICATION:

"I CERTIFY THAT THIS PLAN FOR EROSION AND SEDIMENT CONTROL REPRESENTS A PRACTICAL AND WORKABLE PLAN BASED ON MY PERSONAL KNOWLEDGE OF THE SITE CONDITIONS AND THAT IT WAS PREPARED IN ACCORDANCE WITH THE REQUIREMENTS OF THE HOWARD SOIL CONSERVATION DISTRICT."

[signature] 9/20/02
SIGNATURE OF ENGINEER
PRINT NAME BELOW SIGNATURE
John H. Ranocchia, Sr.

REVIEWED FOR HOWARD S.C.D. AND MEETS TECHNICAL REQUIREMENTS

[signature] 9/30/02
U.S. NATURAL RESOURCE CONSERVATION SERVICE — DATE

THIS DEVELOPMENT PLAN IS APPROVED FOR SOIL EROSION AND SEDIMENT CONTROL BY THE HOWARD SOIL CONSERVATION DISTRICT.

[signature] 9/30/02
HOWARD S.C.D. — DATE

F-02-111

9/20/02
Date

PROFESSIONAL ENGINEER NO. 10551 JOHN H. RANOCCHIA, SR. STATE OF MARYLAND

Professional Engr. No. 10551

F-02-111

APPROVED: HOWARD COUNTY DEPT. OF PUBLIC WORKS

[signature] 10-10-02
for CHIEF, BUREAU OF HIGHWAYS — DATE

APPROVED: HOWARD COUNTY DEPT. OF PLANNING AND ZONING

[signature] 10/22/02
CHIEF, DIVISION OF LAND DEVELOPMENT — DATE

[signature] 10/18/02
CHIEF, DEVELOPMENT ENGINEERING DIVISION MK — DATE

Date	No.	Revision Description
5-05-05	1	REVISE SEQUENCE NOTE #13

REVITZ PROPERTY

OWNER /DEVELOPER:

THE HOWARD RESEARCH & DEVELOPMENT CORPORATION
10275 LITTLE PATUXENT PARKWAY
COLUMBIA, MARYLAND 21044

DMW
Daft·McCune·Walker, Inc.
200 East Pennsylvania Avenue
Towson, Maryland 21286
(410) 296-3333
Fax 296-4705

A Team of Land Planners, Landscape Architects, Engineers, Surveyors & Environmental Professionals

SUBDIVISION NAME	SECTION/AREA	LOT/PARCEL #
		165 & P/O PAR. 837

PLAT# OR L/F	BLOCK #	ZONE	TAX/ZONE MAP	ELECT. DISTRICT	CENSUS TRACT
2267/436	20	PEC	47	6 th	

WATER CODE — SEWER CODE

TITLE
FINAL PLAN
SEDIMENT AND EROSION CONTROL DETAILS

Des By	DFM	Scale 1" = 50'		Proj. No. 01011
Drn By	WDE	Date	9/19/02	32 OF 57
Chk By		Approved		

Thu Sep 19 16:09:09 2002 ...\01011\50scale\01011d5p.dgn 9/19/02 4:08:57 PM

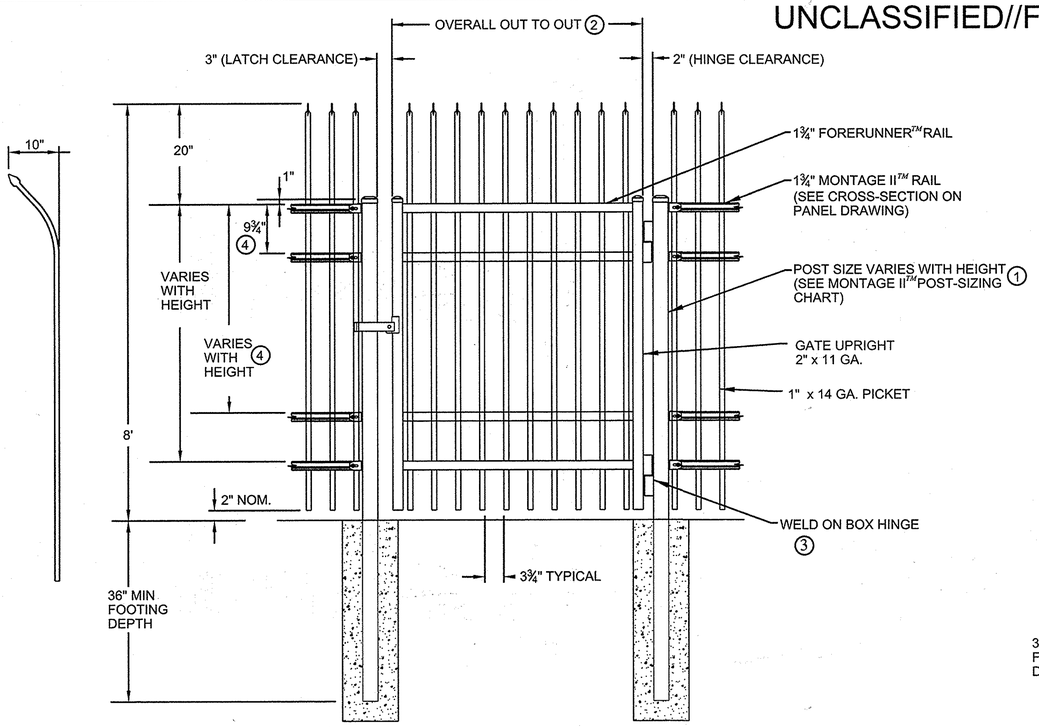

NOTES:
1.) POST SIZE DEPENDS ON FENCE HEIGHT, WEIGHT AND WIND LOADS. SEE *MONTAGE II ™* SPECIFICATIONS FOR POST SIZING CHART.
2.) SEE *AMERISTAR* GATE TABLE FOR STANDARD OUT TO OUTS. CUSTOM GATE OPENINGS AVAILABLE FOR SPECIAL OUT TO OUT/LEAF WIDTHS.
3.) ADDITIONAL STYLES OF GATE HARDWARE ARE AVAILABLE ON REQUEST THIS COULD CHANGE THE LATCH & HINGE CLEARANCE.
4.) THIRD & FORTH RAIL OPTIONAL.

2 AMERISTAR MONTAGE II ORNAMENTAL INVINCIBLE SINGLE SWING GATE

SCALE: NONE

DETAIL IS BASE DESIGN. CONCRACTOR MAY USE EQUIVALENT PRODUCT THAT MEETS PROJECT REQUIREMENTS AND SPECIFICATIONS AND AS APPROVED BY THE COR.

GATE PLAN

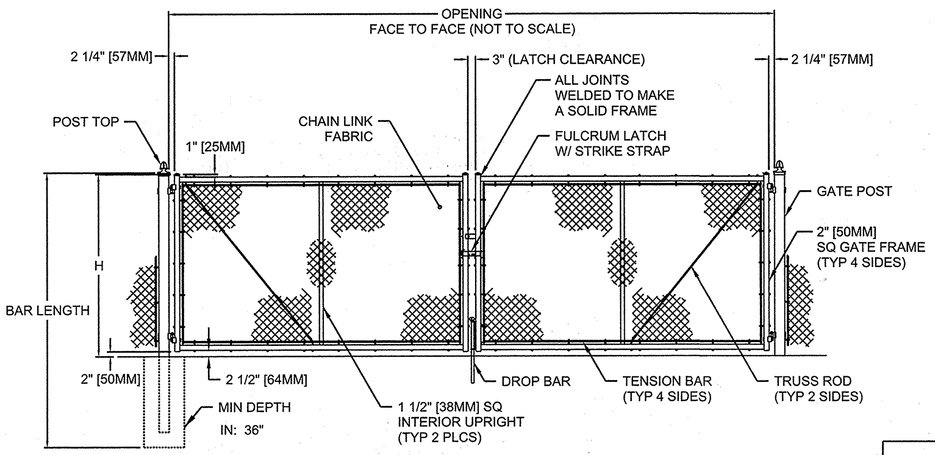

GATE ELEVATION - (4) BAYS SHOWN

NOTES:
1. METRIC DIMENSIONS ARE NOMINAL EQUIVALENTS TO U.S. DIMENSIONS.
2. SPECIFICATIONS SHOWN CAN BE CHANGED BY MASTER-HALCO ONLY.
3. FOOTING WIDTH TO BE (4)X POST WIDTH.
4. GATES MAY BE MANUALLY OR ELECTRICALLY OPERATED. HARDWARE WILL VARY FOR ELECTRICALLY OPERATED GATES.

NOM HEIGHT (H)
8'-0" [2438MM]

BAYS	OPENING (F/F)
4	20'-0" [6096MM]
4	22'-0" [6706MM]
4	24'-0" [7315MM]

END & CORNER POST TOP OPTIONS	
STANDARD	FLAT

GATE POST

OPENING	GATE POST (OD)	FABRIC HEIGHT	"A" DIAM	"B" DEPTH	"C" POST EMBED.
14' TO 24'	4"	3' TO 5'	12"	38"	36"
		6' TO 9'	14"	42"	40"
		10' TO 12'	16"	46"	44"

1 DOUBLE-LEAF DOUBLE SWING GATE

SCALE: NONE

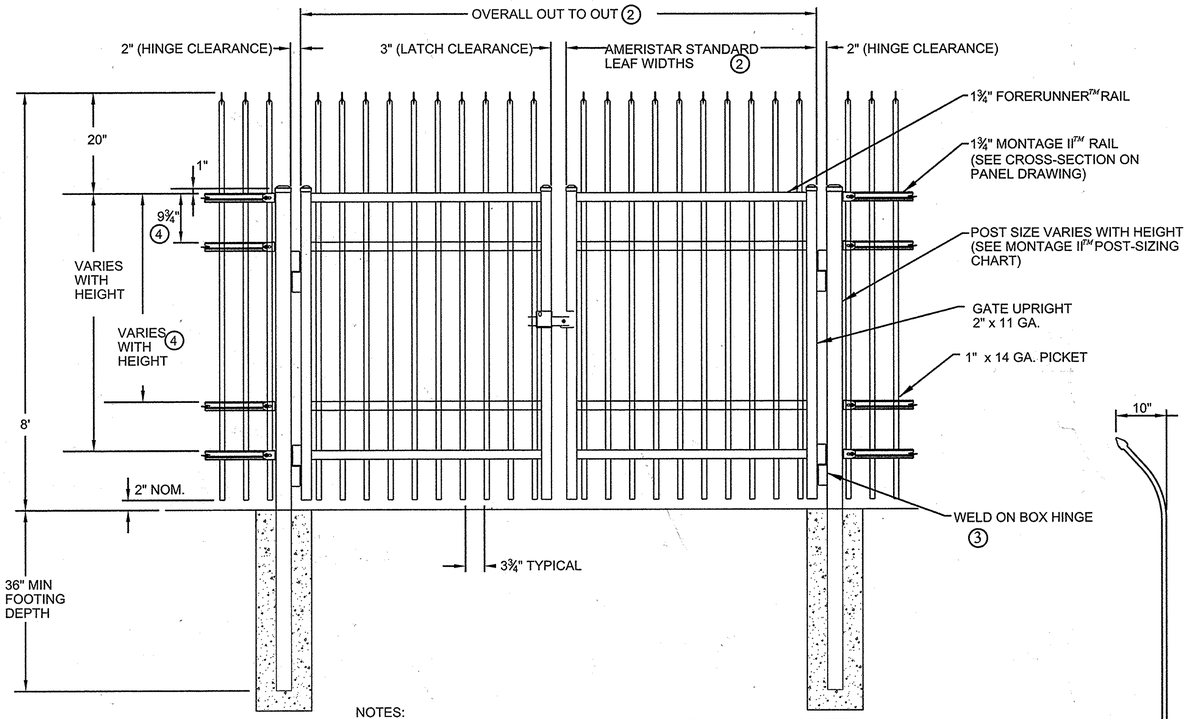

NOTES:
1.) POST SIZE DEPENDS ON FENCE HEIGHT, WEIGHT AND WIND LOADS. SEE MONTAGE II SPECIFICATIONS FOR POST SIZING CHART.
2.) SEE AMERISTAR GATE TABLE FOR STANDARD OUT TO OUTS. CUSTOM GATE OPENINGS AVAILABLE FOR SPECIAL OUT TO OUT/LEAF WIDTHS.
3.) ADDITIONAL STYLES OF GATE HARDWARE ARE AVAILABLE ON REQUEST. THIS COULD CHANGE THE LATCH AND HINGE CLEARANCE.
4.) THIRD AND FOURTH RAIL OPTIONAL.
5.) CONTRACTOR SHALL SAND DOWN END OF SCREWS ON HASPS AS NEEDED TO WELD HASP TO GATE.

3 AMERISTAR MONTAGE II ORNAMENTAL INVINCIBLE DOUBLE SWING GATE

SCALE: NONE

DETAIL IS BASE DESIGN. CONCRACTOR MAY USE EQUIVALENT PRODUCT THAT MEETS PROJECT REQUIREMENTS AND SPECIFICATIONS AND AS APPROVED BY THE COR.

US Army Corps of Engineers
Baltimore District

REAL PROPERTY SERVICES FIELD OFFICE
ANNAPOLIS JUNCTION, MARYLAND

JACOBS
1100 N GLEBE RD., ARLINGTON, VA. 22201

THE INFORMATION PROVIDED HEREIN IS THE PROPERTY OF THE UNITED STATES GOVERNMENT AND IS FURNISHED FOR THE PURPOSE STATED IN THE ACCOMPANYING DOCUMENT. DISTRIBUTION OF THIS DOCUMENT AND THE INFORMATION CONTAINED HEREIN TO ANY PERSON OR ENTITY NOT REQUIRED IN THE ACCOMPANYING DOCUMENT, REPRODUCTION OR DISSEMINATION OF THIS DOCUMENT OR OF THE INFORMATION CONTAINED HEREIN BY ANY PERSON OR ENTITY NOT AUTHORIZED WITHOUT THE APPROVAL OF THE UNITED STATES GOVERNMENT IS STRICTLY PROHIBITED. VIOLATORS OF THIS REQUIREMENT WILL BE PROSECUTED TO THE FULLEST EXTENT OF THE LAW.

Rev.	Description	Date	Appr.
1	NEW SHEET ADDED FOR REDLINE REVISION #2	10/1/2014	

Designed by:	M.WERDER
Drwn by:	M.WERDER
Chkd by:	R.CROWLEY
RSFO Project Manager	AMY YALE
Submitted by:	NATHAN JAMES PROJECT MANAGER
Date:	SEPTEMBER 19, 2014
Project No.	31435
File name:	
Plot date:	
Plot scale:	AS SHOWN

APPROVED: HOWARD COUNTY DEPT. OF PLANNING AND ZONING

CHIEF, DIVISION OF LAND DEVELOPMENT — DATE 10/15/14

CHIEF, DEVELOPMENT ENGINEERING DIVISION — DATE 10.10.14

DIRECTOR — DATE

Date	No.	Revision Description

REVITZ PROPERTY

OWNER DEVELOPER:
THE HOWARD RESEARCH & DEVELOPMENT CORPORATION
10275 LITTLE PATUXENT PARKWAY
COLUMBIA, MARYLAND 21044

SUBDIVISION NAME			SECTION AREA		LOT/PARCEL #
REVITZ PROPERTY					165 & P/O PAR. 837
PLAT OR L F	BLOCK	ZONE	TAX ZONE MAP	ELECT. DISTRICT	CENSUS TRACT
2267/436	20	PEC	47	6th	
WATER CODE			SEWER CODE		

TITLE

FENCE LAYOUT PLAN

Des. By	Scale 1"=150'	Proj. No. 01011	
Drn. By	Date 09-12-14	57D	
Chk. By	Approved		

EMERSON - CAMPUS FENCE — SITE DETAILS — LAUREL, MD — ROOM(S) OR FLOOR

Drawing No.

Sheet Reference No. 57D
Sheet of 006

PROFESSIONAL CERTIFICATION
I HEREBY CERTIFY THAT THESE DOCUMENTS WERE PREPARED OR APPROVED BY ME, AND THAT I AM A DULY LICENSED PROFESSIONAL ENGINEER UNDER THE LAWS OF THE STATE OF MARYLAND, LICENSE NO. 45292 EXPIRATION DATE: 05/21/2016

STATE OF MARYLAND — ROBERT A. CROWLEY — 45292 — PROFESSIONAL ENGINEER

10-1-2014

UNCLASSIFIED//FOR OFFICIAL USE ONLY

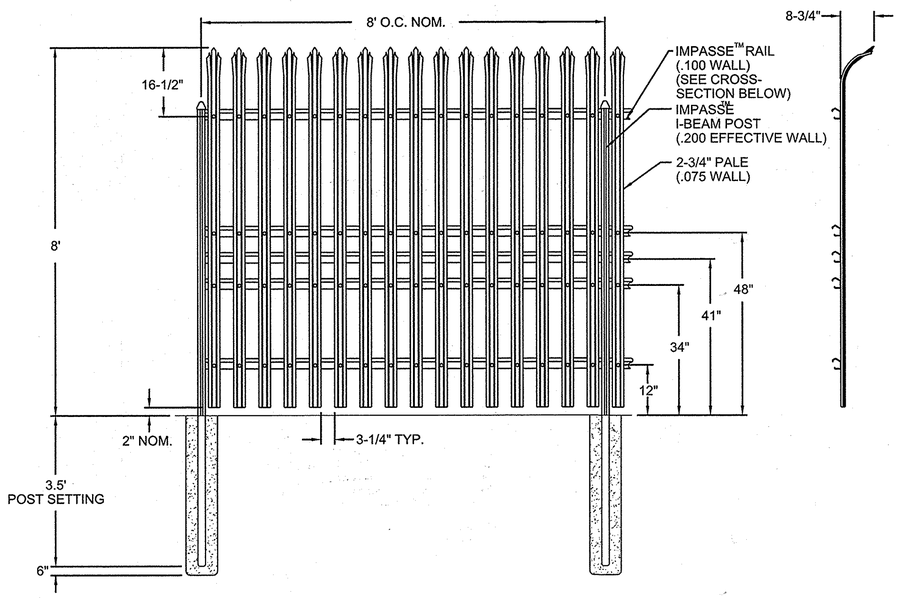

NOTES:

1. SEE DETAIL 2 ON THIS SHEET FOR K-12 ANTI-RAM CABLED STEEL BARRIER INSTALLTION FOR PORTIONS OF FENCE TO BE K-12 RATED. SEE SITE LAYOUT PLAN FOR SECTION OF FENCE THAT IS TO BE K-12 RATED.

2. IDS SYSTEM IS TO BE ATTACHED TO FENCE PICKETTS EVERY 8'. REPLACE CURVED PICKETTS WITH STRAIGHT PICKETTS AT LOCATIONS FOR IDS CONNECTIONS. FENCE HALF POSTS CAN BE USED FOR IDS CONNECTIONS. STRAIGHT PICKETTS ARE TO BE SAME HEIGHT AS CURVED PICKETTS.

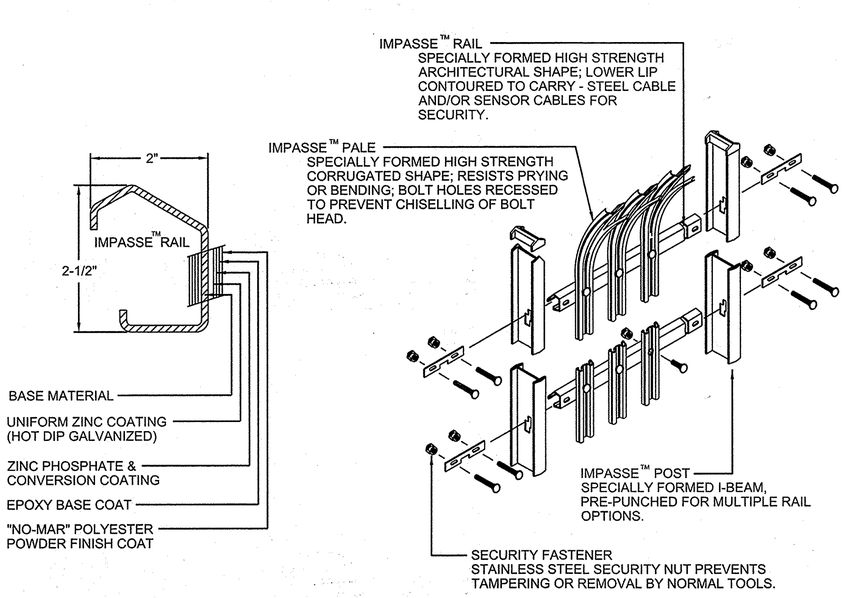

1 AMERISTAR 8' HIGH IMPASSE GAUNTLET HIGH SECURITY STEEL FENCE

SCALE: NONE

DETAIL IS BASE DESIGN. CONCRACTOR MAY USE EQUIVALENT PRODUCT THAT MEETS PROJECT REQUIREMENTS AND SPECIFICATIONS AND AS APPROVED BY THE COR.

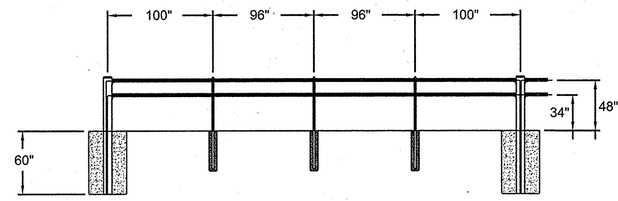

NOTE: SEE STALWART PANEL DRAWINGS FOR DETAILS OF PALES

IMPASSE PALES

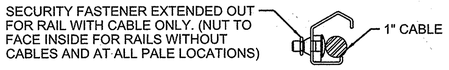

SECURITY FASTENER DETAIL

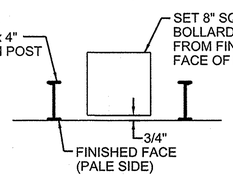

TOP VIEW POST SETTING

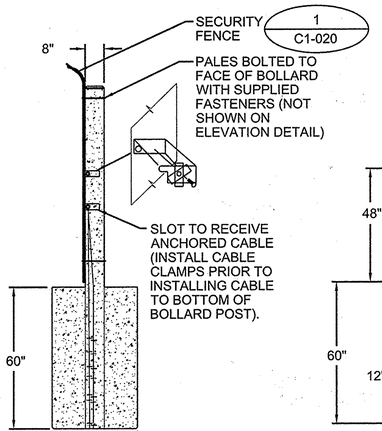

SIDE VIEW DETAIL

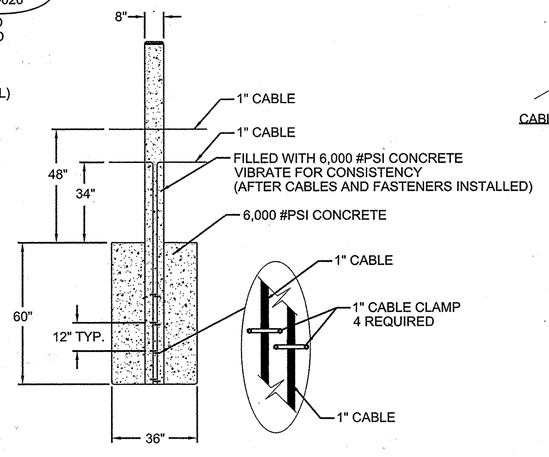

FRONT VIEW DETAIL

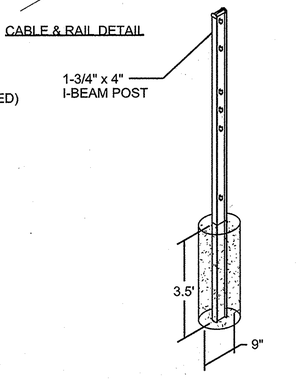

I-BEAM POST DETAIL

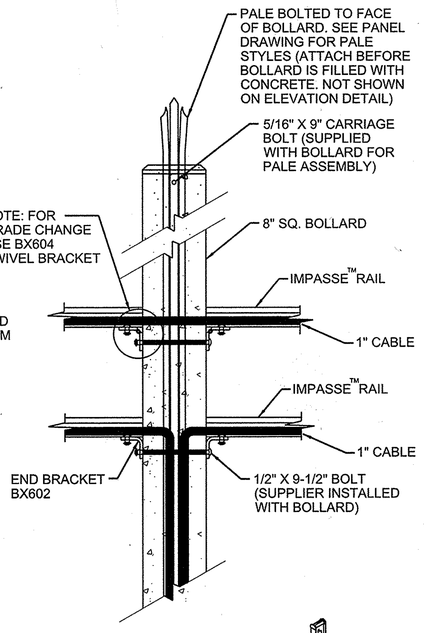

CABLE & RAIL DETAIL

2 STALLWART M40 (K12) ANTI-RAM CABLED STEEL BARRIER

SCALE: NONE

DETAIL IS BASE DESIGN. CONCRACTOR MAY USE EQUIVALENT PRODUCT THAT MEETS PROJECT REQUIREMENTS AND SPECIFICATIONS AND AS APPROVED BY THE COR.

APPROVED: HOWARD COUNTY DEPT. OF PLANNING AND ZONING

CHIEF, DIVISION OF LAND DEVELOPMENT — DATE 10/15/14

CHIEF, DEVELOPMENT ENGINEERING DIVISION — DATE 10.10.14

DIRECTOR — DATE

Date	No.	Revision Description

REVITZ PROPERTY

OWNER DEVELOPER:

THE HOWARD RESEARCH & DEVELOPMENT CORPORATION

10275 LITTLE PATUXENT PARKWAY

COLUMBIA, MARYLAND 21044

SUBDIVISION NAME			SECTION AREA		LOT/PARCEL #
REVITZ PROPERTY					165 & P/O PAR. 837
PLAT# OR L F	BLOCK#	ZONE	TAX ZONE MAP	ELECT. DISTRICT	CENSUS TRACT
2267/435	20	PEC	47	6th	
WATER CODE			SEWER CODE		

TITLE

FENCE LAYOUT PLAN

Des. By	Scale 1"=150'	Proj. No. 01011
Drn. By	Date 09-12-14	57C
Chk. By	Approved	

STATE OF MARYLAND — ROBERT A. CROWLEY — REGISTERED PROFESSIONAL ENGINEER

10-1-2014

PROFESSIONAL CERTIFICATION

I HEREBY CERTIFY THAT THESE DOCUMENTS WERE PREPARED OR APPROVED BY ME, AND THAT I AM A DULY LICENSED PROFESSIONAL ENGINEER UNDER THE LAWS OF THE STATE OF MARYLAND, LICENSE NO. 45292 EXPIRATION DATE: 05/21/2016

US Army Corps of Engineers
Baltimore District

REAL PROPERTY SERVICES
FIELD OFFICE
ANNAPOLIS JUNCTION, MARYLAND

JACOBS
1100 N.GLEBE RD., ARLINGTON, VA. 22201

THE INFORMATION PROVIDED HEREIN IS THE PROPERTY OF THE UNITED STATES GOVERNMENT AND IS FURNISHED FOR THE PURPOSE STATED IN THE ACCOMPANYING DOCUMENT. DISTRIBUTION OF THIS DOCUMENT AND THE INFORMATION CONTAINED HEREIN TO ANY PARTY OTHER THAN THOSE IDENTIFIED IN THE ACCOMPANYING DOCUMENT, REPRODUCTION OR DISSEMINATION OF THIS DOCUMENT OR OF THE INFORMATION CONTAINED HEREIN BEYOND THAT REQUIRED BY THE ACCOMPANYING DOCUMENT IS NOT AUTHORIZED WITHOUT THE APPROVAL OF THE UNITED STATES GOVERNMENT AGENCY. ANY UNAUTHORIZED USE OF THIS INFORMATION IS STRICTLY PROHIBITED. VIOLATORS OF THIS REQUIREMENT WILL BE PROSECUTED TO THE FULLEST EXTENT OF THE LAW.

Rev.	Date	Description	By	Appr.
1	10/10/2014	NEW SHEET ADDED FOR REDLINE REVISION #2.		

Designed by: BPARSEGIER
Dwn by: BPARSEGIER
Chkd by: R.CROWLEY
RSFO Project Manager: AMY YALE
Submitted by: NATHAN JAMES, PROJECT MANAGER
Date: SEPTEMBER 19, 2014
Project No. 31435
File name:
Plot date:
Plot scale: AS SHOWN

EMERSON - CAMPUS FENCE
SITE DETAILS
LAUREL, MD
ROOM(S) OR FLOOR

Drawing No.

Sheet Reference No.
57C
Sheet of 006

UNCLASSIFIED//FOR OFFICIAL USE ONLY

F 02-111

END & CORNER POST TOP OPTIONS	
STANDARD	FLAT

GATE POST

GATE LEAF WIDTH	GATE POST (OD)	FABRIC HEIGHT	"A" DIAM	"B" DEPTH	"C" POST EMBED.
3' TO 6'	2.875"	3' TO 5'	12"	38"	36"
		6' TO 9'	14"	42"	40"
		10' TO 12'	16"	46"	44"
7' TO 12'	4.000"	3' TO 5'	14"	38"	36"
		6' TO 9'	16"	42"	40"
		10' TO 12'	18"	46"	44"

NOM HEIGHT (H)
8'-0" [2438MM]

OPENING (F/F)
24' [7315MM]

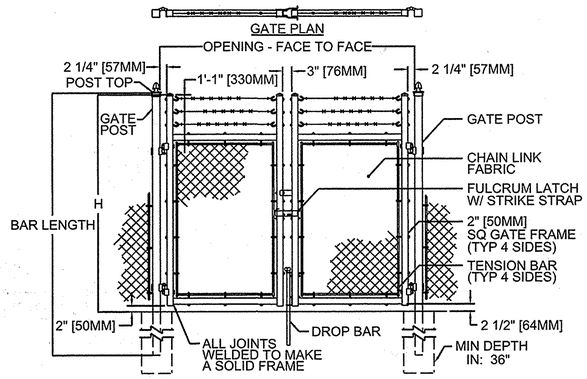

GATE ELEVATION

NOTES:
1. METRIC DIMENSIONS ARE NOMINAL EQUIVALENTS TO U.S. DIMENSIONS.
2. SPECIFICATIONS SHOWN CAN BE CHANGED BY MASTER HALCO ONLY.
3. FOOTING WIDTH TO BE (4)X POST WIDTH.
4. GATES MAY BE MANUALLY OR ELECTRICALLY OPERATED. HARDWARE WILL VARY FOR ELECTRICALLY OPERATED GATES.

2 SINGLE-LEAF DOUBLE SWING GATE
SCALE: NONE

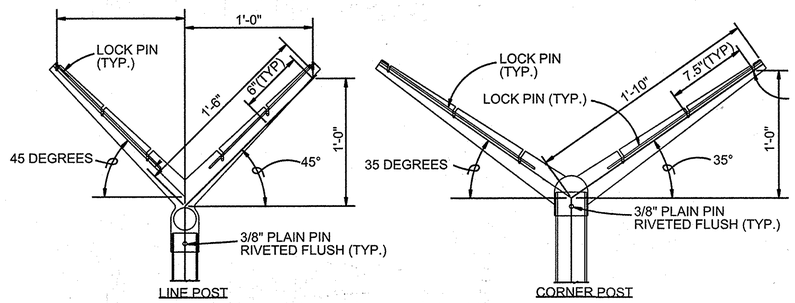

EXTENSION ARM DETAILS

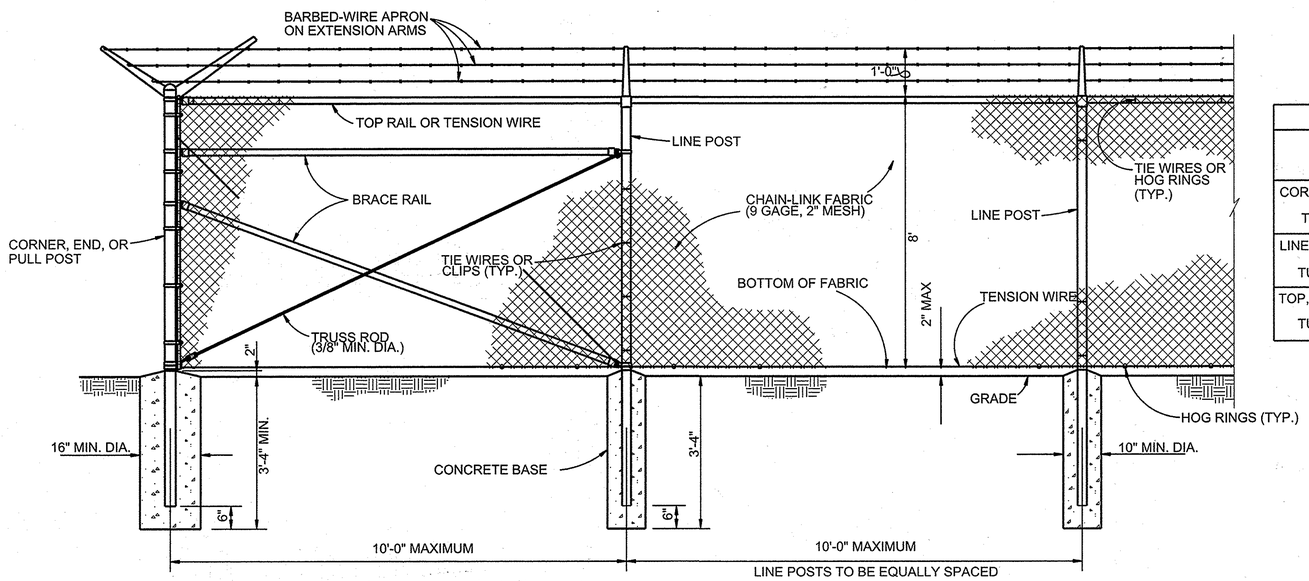

1 CHAIN LINK SECURITY FENCE
SCALE: NONE

END & CORNER POST TOP OPTIONS	
STANDARD	FLAT

GATE POST

GATE LEAF WIDTH	GATE POST (OD)	FABRIC HEIGHT	"A" DIAM	"B" DEPTH	"C" POST EMBED.
3' TO 6'	2.875"	3' TO 5'	12"	38"	36"
		6' TO 9'	14"	42"	40"
		10' TO 12'	16"	46"	44"

NOM HEIGHT (H)
8'-0" [2438MM]

OPENING (F/F)
4'-0" [1219MM]

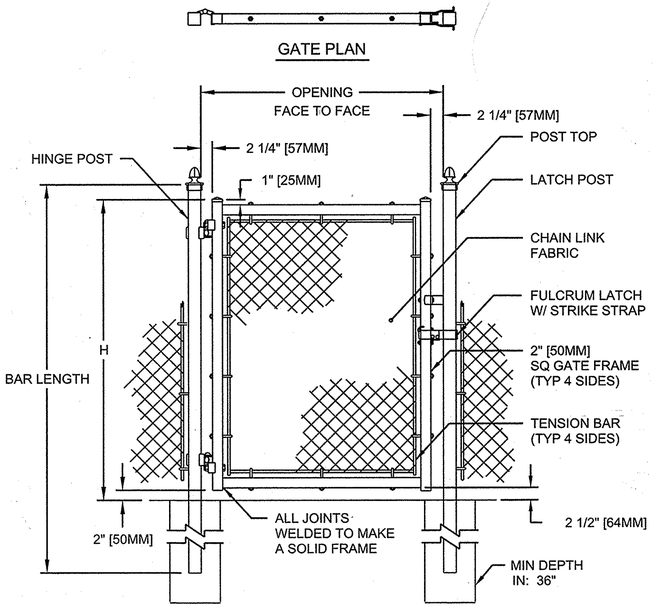

GATE ELEVATION

NOTES:
1. METRIC DIMENSIONS ARE NOMINAL EQUIVALENTS TO U.S. DIMENSIONS.
2. SPECIFICATIONS SHOWN CAN BE CHANGED BY MASTER-HALCO ONLY.
3. FOOTING WIDTH TO BE (4)X POST WIDTH.
4. GATES MAY BE MANUALLY OR ELECTRICALLY OPERATED. HARDWARE WILL VARY FOR ELECTRICALLY OPERATED GATES.

3 SINGLE SWING GATE
SCALE: NONE

STEEL POST SCHEDULE	
USE AND SECTION	MINIMUM OUTSIDE DIMENSIONS (NOMINAL) FABRIC WIDTH 84" TO 96"
CORNER, END & PULL POSTS TUBULAR - ROUND	2.875" O.D.
LINE POSTS TUBULAR - ROUND	2.375" O.D.
TOP, BOTTOM & BRACE RAILS TUBULAR - ROUND	1.66" O.D.

PROFESSIONAL CERTIFICATION
I HEREBY CERTIFY THAT THESE DOCUMENTS WERE PREPARED OR APPROVED BY ME, AND THAT I AM A DULY LICENSED PROFESSIONAL ENGINEER UNDER THE LAWS OF THE STATE OF MARYLAND, LICENSE NO. 45292 EXPIRATION DATE: 05/21/2016

APPROVED: HOWARD COUNTY DEPT. OF PLANNING AND ZONING

CHIEF, DIVISION OF LAND DEVELOPMENT	DATE 10/5/14
CHIEF, DEVELOPMENT ENGINEERING DIVISION	DATE 10.10.14
DIRECTOR X	DATE X

Date	No.	Revision Description

REVITZ PROPERTY

OWNER DEVELOPER:
THE HOWARD RESEARCH & DEVELOPMENT CORPORATION
10275 LITTLE PATUXENT PARKWAY
COLUMBIA, MARYLAND 21044

SUBDIVISION NAME	SECTION AREA	LOT/PARCEL #
REVITZ PROPERTY		165 & P/O PAR. 837
PLAT OR L. F. / BLOCK # / ZONE	TAX ZONE MAP / ELECT. DISTRICT	CENSUS TRACT
2267/436 / 20 / PEC	47 / 6th	
WATER CODE	SEWER CODE	

TITLE
FENCE LAYOUT PLAN

Des. By	Scale 1"=150'	Proj. No. 01011
Drn. By	Date 09-12-14	57B
Chk. By	Approved	

US Army Corps of Engineers
Baltimore District

REAL PROPERTY SERVICES FIELD OFFICE
ANNAPOLIS JUNCTION, MARYLAND

JACOBS
1100 N.GLEBE RD., ARLINGTON, VA. 22201

THE INFORMATION PROVIDED HEREIN IS THE PROPERTY OF THE UNITED STATES GOVERNMENT AND IS FURNISHED FOR THE PURPOSE STATED IN THE ACCOMPANYING DOCUMENT. DISTRIBUTION OF THIS DOCUMENT AND THE INFORMATION CONTAINED HEREIN TO ANY INDIVIDUAL OR ENTITY NOT NEEDED IN THE ACCOMPANYING DOCUMENT, REPRODUCTION OR DISSEMINATION OF THIS DOCUMENT OR OF THE INFORMATION CONTAINED HEREIN BY ANY MEANS OR IN ANY FORM OTHER THAN WITHOUT THE APPROVAL OF THE UNITED STATES GOVERNMENT IS STRICTLY PROHIBITED. VIOLATORS OF THIS REQUIREMENT WILL BE PROSECUTED TO THE FULLEST EXTENT OF THE LAW.

Mark	Date	Description
1	10/1/2014	NEW SHEET ADDED FOR REDLINE REVISION #2

Designed by: M. WERDER
Drawn by: M. WERDER
Ckd by: R.CROWLEY
RSFO Project Manager: AMY YALE
Submitted by: NATHAN JAMES PROJECT MANAGER
Date: SEPTEMBER 19, 2014
Project No. 31435
Rev. -
File name:
Plot date:
Plot scale: AS SHOWN

EMERSON - CAMPUS FENCE
SITE DETAILS
LAUREL, MD
ROOM(S) OR FLOOR

Drawing No.
Sheet Reference No. 57B
Sheet of 006

F 02-111

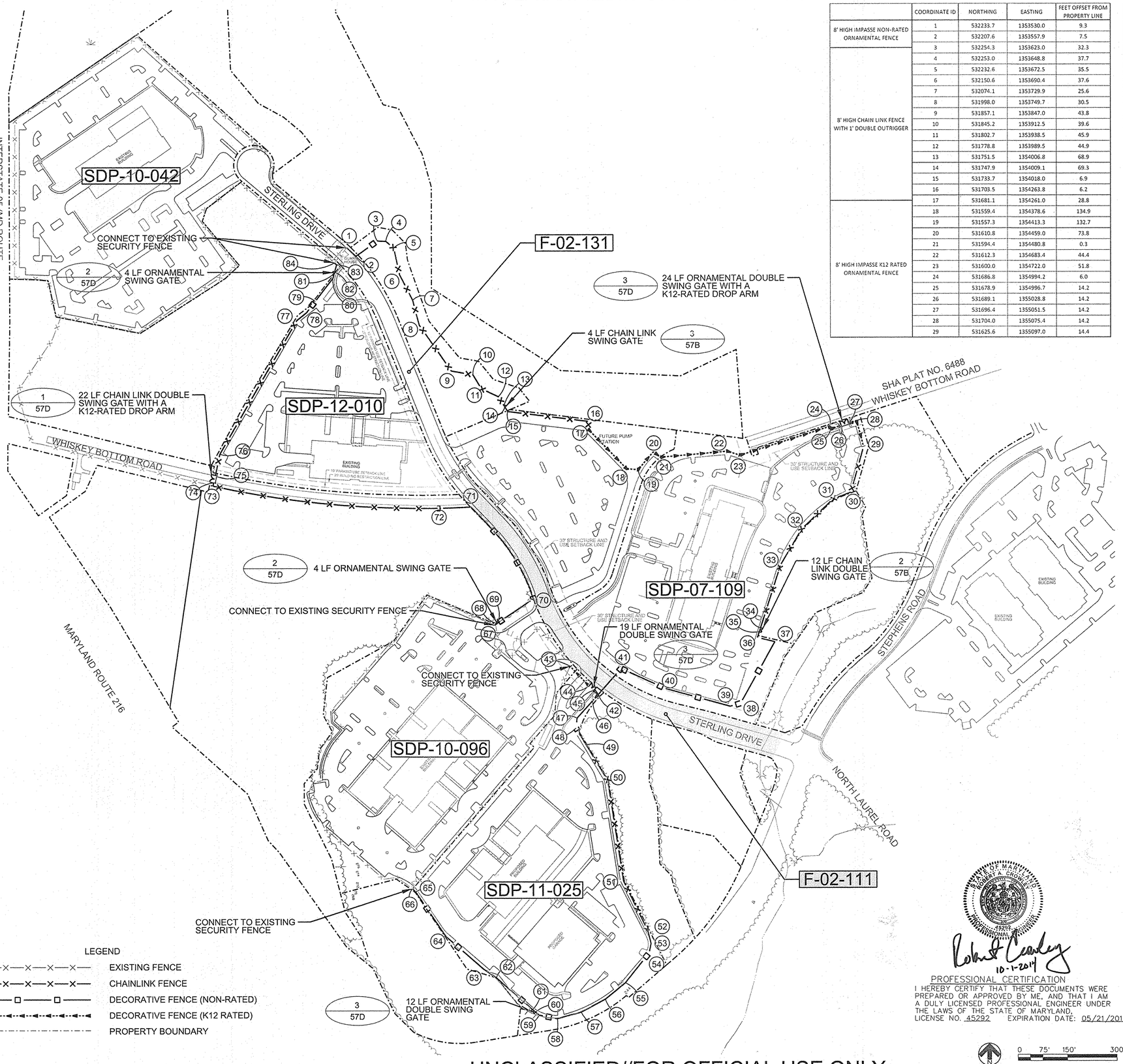

	COORDINATE ID	NORTHING	EASTING	FEET OFFSET FROM PROPERTY LINE
8' HIGH IMPASSE NON-RATED ORNAMENTAL FENCE	1	532233.7	1353530.0	9.3
	2	532207.6	1353557.9	7.5
8' HIGH CHAIN LINK FENCE WITH 1' DOUBLE OUTRIGGER	3	532254.3	1353623.0	32.3
	4	532253.0	1353648.8	37.7
	5	532232.6	1353672.5	35.5
	6	532150.6	1353690.4	37.6
	7	532074.1	1353729.9	25.6
	8	531998.0	1353749.7	30.5
	9	531857.1	1353847.0	43.8
	10	531845.2	1353912.5	39.6
	11	531802.7	1353938.5	45.9
	12	531778.8	1353989.5	44.9
	13	531751.5	1354006.8	68.9
	14	531747.9	1354009.1	69.3
	15	531733.7	1354018.0	6.9
	16	531703.5	1354263.8	6.2
	17	531681.1	1354261.0	28.8
8' HIGH IMPASSE K12 RATED ORNAMENTAL FENCE	18	531559.4	1354378.6	134.9
	19	531557.3	1354413.3	132.7
	20	531610.8	1354459.0	73.8
	21	531594.4	1354480.8	0.3
	22	531612.3	1354683.4	44.4
	23	531600.0	1354722.0	51.8
	24	531686.8	1354994.2	6.0
	25	531678.9	1354996.7	14.2
	26	531689.1	1355028.8	14.2
	27	531696.4	1355051.5	14.2
	28	531704.0	1355075.4	14.2
	29	531625.6	1355097.0	14.4

	COORDINATE ID	NORTHING	EASTING	FEET OFFSET FROM PROPERTY LINE
8' HIGH CHAIN LINK FENCE WITH 1' DOUBLE OUTRIGGER	29	531625.6	1355097.0	14.4
	30	531487.3	1355058.4	2.5
	31	531466.2	1355003.9	2.5
	32	531375.2	1354908.7	2.5
8' HIGH IMPASSE NON-RATED ORNAMENTAL FENCE	33	531266.0	1354845.0	0.0
	34	531075.5	1354783.8	0.0
	35	531063.8	1354780.1	0.0
	36	531045.8	1354774.3	6.0
	37	531033.3	1354827.1	6.0
	38	530846.1	1354723.0	50.0
	39	530837.3	1354691.9	33.0
	40	530891.5	1354495.6	34.4
	41	530953.0	1354360.7	26.5
8' HIGH IMPASSE K12 RATED ORNAMENTAL FENCE	42	530874.1	1354291.6	14.5
	43	530959.6	1354206.6	13.4
	44	530900.0	1354263.2	12.8
	45	530886.4	1354277.9	10.0
8' HIGH IMPASSE NON-RATED ORNAMENTAL FENCE	46	530854.5	1354274.0	7.5
	47	530802.1	1354227.0	20.0
	48	530771.7	1354223.7	12.3
	49	530720.0	1354255.0	2.0
8' HIGH CHAIN LINK FENCE WITH 1' DOUBLE OUTRIGGER	50	530615.3	1354318.4	2.0
	51	530308.5	1354367.5	2.0
	52	530158.1	1354440.4	4.7
8' HIGH IMPASSE NON-RATED ORNAMENTAL FENCE	53	530119.6	1354450.4	13.0
	54	530090.6	1354444.4	31.4
	55	530001.4	1354372.7	40.2
	56	529952.2	1354311.7	29.6
	57	529912.6	1354238.4	28.6
	58	529892.6	1354166.4	31.3
	59	529903.4	1354111.0	51.6
	60	529912.9	1354100.1	46.3
	61	529920.8	1354091.1	36.4
	62	530016.4	1353981.6	0.0
	63	530042.7	1353942.5	14.2
	64	530141.4	1353828.3	2.2
	65	530275.8	1353737.0	1.9
	66	530286.0	1353726.9	4.4
	67	531084.8	1353977.6	3.7
	68	531089.6	1353984.8	0.0
	69	531092.0	1353988.4	0.0
	70	531164.5	1354095.9	0.9
	71	531443.9	1353905.8	0.9
8' HIGH CHAIN LINK FENCE WITH 1' DOUBLE OUTRIGGER	72	531440.2	1353802.7	0.0
	73	531508.5	1353124.3	0.0
	74	531518.5	1353126.4	10.2
	75	531540.6	1353131.8	7.0
	76	531605.3	1353145.4	6.4
	77	532012.6	1353378.9	5.7
8' HIGH IMPASSE NON-RATED ORNAMENTAL FENCE	78	532035.8	1353407.9	10.0
	79	532070.3	1353434.3	4.4
	80	532140.6	1353488.1	4.7
	81	532155.9	1353492.3	1.1
	82	532160.1	1353493.5	2.7
	83	532181.5	1353499.4	7.9
	84	532187.4	1353492.6	8.5

THE INFORMATION PROVIDED HEREIN IS THE PROPERTY OF THE UNITED STATES GOVERNMENT. IT IS PROVIDED ONLY FOR OFFICIAL USE AND MAY BE RESTRICTED FROM FURTHER DISTRIBUTION OF THIS DOCUMENT AND THE INFORMATION CONTAINED HEREIN IS LIMITED TO THE RECIPIENT SPECIFIED IN ACCOMPANYING TRANSMITTAL. FURTHER DISCLOSURE OR DISSEMINATION OF THIS DOCUMENT OR OF THE INFORMATION CONTAINED HEREIN IN WHOLE OR IN PART IN ANY MEDIUM WITHOUT THE CONSENT OF THE ORIGINATING GOVERNMENT AGENCY IS STRICTLY PROHIBITED. VIOLATORS OF THIS REQUIREMENT WILL BE PROSECUTED TO THE FULLEST EXTENT OF THE LAW.

US Army Corps of Engineers
Baltimore District

REAL PROPERTY SERVICES
FIELD OFFICE
ANNAPOLIS JUNCTION, MARYLAND

JACOBS
1100 NCLEBE RD., ARLINGTON, VA. 22201

Mark	Description	Date	Appr
1	NEW SHEET ADDED FOR HEDLINE REVISION #12		

APPROVED: HOWARD COUNTY DEPT. OF PLANNING AND ZONING

CHIEF, DIVISION OF LAND DEVELOPMENT — DATE 10/15/14

CHIEF, DEVELOPMENT ENGINEERING DIVISION — DATE 10.10.14

DIRECTOR — DATE N/A

Date	No.	Revision Description

Designed by: M. WERDER
Drawn by: M. WERDER
Chd by: R.CROWLEY
RSFO Project Manager: AMY YALE
Submitted by: NATHAN JAMES, PROJECT MANAGER
Date: SEPTEMBER 19, 2014
Project No. 31435
Rev.: 1
File name:
Plot date:
Plot scale: 1:150

REVITZ PROPERTY

OWNER DEVELOPER:

THE HOWARD RESEARCH & DEVELOPMENT CORPORATION
10275 LITTLE PATUXENT PARKWAY
COLUMBIA, MARYLAND 21044

SUBDIVISION NAME			SECTION AREA		LOT/PARCEL #
REVITZ PROPERTY					165 & P/O PAR. 837
PLAT # OR L F	BLOCK #	ZONE	TAX ZONE MAP	ELECT. DISTRICT	CENSUS TRACT
2267/436	20	PEC	47	6th	
WATER CODE			SEWER CODE		

TITLE **FENCE LAYOUT PLAN**

Des. By	Scale 1"=150'	Proj. No. 01011
Drn. By	Date 09-12-14	57A
Chk. By	Approved	

PROFESSIONAL CERTIFICATION
I HEREBY CERTIFY THAT THESE DOCUMENTS WERE PREPARED OR APPROVED BY ME, AND THAT I AM A DULY LICENSED PROFESSIONAL ENGINEER UNDER THE LAWS OF THE STATE OF MARYLAND, LICENSE NO. 45292 EXPIRATION DATE: 05/21/2016

STATE OF MARYLAND — ROBERT A. CROWLEY — 45292 — PROFESSIONAL ENGINEER
10-1-2014

0 75' 150' 300'

EMERSON - CAMPUS FENCE
FENCE LAYOUT PLAN
LAUREL, MD
ROOM(S) OR FLOOR

Drawing No.
Sheet Reference No. 57A
Sheet of 006

UNCLASSIFIED//FOR OFFICIAL USE ONLY

F 02-111

Legend

- EXISTING CONTOUR
- 340 — PROPOSED CONTOUR
- 15" D. — PROPOSED STORMDRAIN
- EARTH/DIVERSION DIKE
- SF — SILT FENCE
- SSF — SUPER SILT FENCE
- CLEAN WATER DIVERSION PIPE
- LOD — LIMIT OF DISTURBANCE
- WETLAND
- 25' WETLAND BUFFER
- 50' STREAM BUFFER
- CIP — CURB INLET PROTECTION
- RPS — REMOVABLE PUMPING STATION
- PROPOSED WOODS EDGE

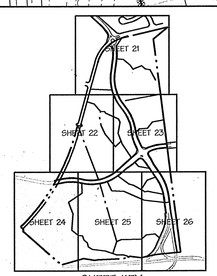

SHEET KEY

MDE PERMIT AND TRACKING No. 01-NT-0500/200260639

F-02-111

9/20/02
Date

Professional Engr. No. 10551

DEVELOPER'S CERTIFICATION:

"I/WE CERTIFY THAT ALL DEVELOPMENT AND CONSTRUCTION WILL BE DONE ACCORDING TO THIS PLAN, AND THAT ANY RESPONSIBLE PERSONNEL INVOLVED IN THE CONSTRUCTION PROJECT WILL HAVE A CERTIFICATE OF ATTENDANCE AT A DEPARTMENT OF THE ENVIRONMENT APPROVED TRAINING PROGRAM FOR THE CONTROL OF SEDIMENT AND EROSION BEFORE BEGINNING THE PROJECT. I ALSO AUTHORIZE PERIODIC ON-SITE INSPECTION BY THE HOWARD SOIL CONSERVATION DISTRICT.

Robt A. Jenkins — 9/20/02
SIGNATURE OF DEVELOPER — DATE
PRINT NAME BELOW SIGNATURE
Robert A. Jenkins

ENGINEER'S CERTIFICATION:

"I CERTIFY THAT THIS PLAN FOR EROSION AND SEDIMENT CONTROL REPRESENTS A PRACTICAL AND WORKABLE PLAN BASED ON MY PERSONAL KNOWLEDGE OF THE SITE CONDITIONS AND THAT IT WAS PREPARED IN ACCORDANCE WITH THE REQUIREMENTS OF THE HOWARD SOIL CONSERVATION DISTRICT."

9/20/02
SIGNATURE OF ENGINEER — DATE
PRINT NAME BELOW SIGNATURE
John Rapacchia

REVIEWED FOR HOWARD S.C.D. AND MEETS TECHNICAL REQUIREMENTS

U.S. NATURAL RESOURCE CONSERVATION SERVICE — 9/30/02 DATE

THIS DEVELOPMENT PLAN IS APPROVED FOR SOIL EROSION AND SEDIMENT CONTROL BY THE HOWARD SOIL CONSERVATION DISTRICT.

HOWARD S.C.D. — 9/30/02 DATE

APPROVED: HOWARD COUNTY DEPT. OF PUBLIC WORKS

for William F. Mahler P.E. — CHIEF, BUREAU OF HIGHWAYS — 10-10-02 DATE

APPROVED: HOWARD COUNTY DEPT. OF PLANNING AND ZONING

Cindy Hassett — CHIEF, DIVISION OF LAND DEVELOPMENT — 10/22/02 DATE

CHIEF, DEVELOPMENT ENGINEERING DIVISION MK — 10/10/02 DATE

Date	No.	Revision Description
9/19/02	1	ADD "T" TURNAROUND

REVITZ PROPERTY

OWNER /DEVELOPER:

THE HOWARD RESEARCH & DEVELOPMENT CORPORATION
10275 LITTLE PATUXENT PARKWAY
COLUMBIA, MARYLAND 21044

DMW
Daft-McCune-Walker, Inc.
200 East Pennsylvania Avenue
Towson, Maryland 21286
(410) 296-3333
Fax 296-4705

A Team of Land Planners, Landscape Architects, Engineers, Surveyors & Environmental Professionals

SUBDIVISION NAME			SECTION/AREA			LOT/PARCEL #
						165 & BO PAR. 837
PLAT # OR L#	BLOCK #	ZONE	TAX/ZONE MAP	ELECT. DISTRICT	CENSUS TRACT	
22674 36	20	PEC	47	6 th		
WATER CODE			SEWER CODE			

TITLE

FINAL PLAN
GRADING & SEDIMENT AND EROSION CONTROL PLAN

Des By	DFM	Scale	1" = 50'	Proj. No.	01011
Drn By		Date	9/19/02		24 OF 57
Chk By		Approved			

F-02-111

Thu Sep 19 09:58:58 2002 I:\Projects\01011\Engineering\Grading\Grading.dwg
plotted: 9/19/02 3:58:58 PM

A MATCH LINE – SEE SHEET 19 OF 57 A
DWG. NO.

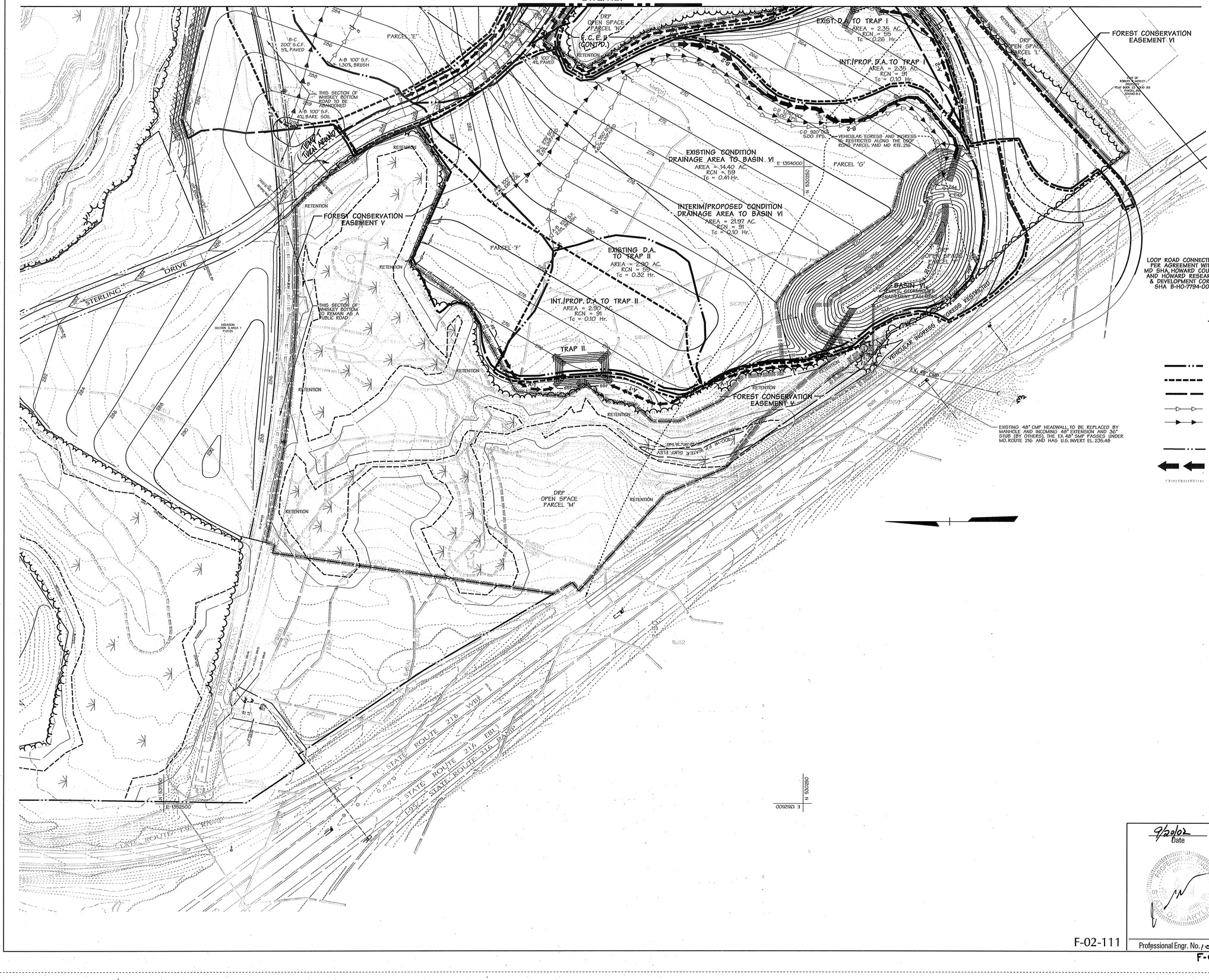

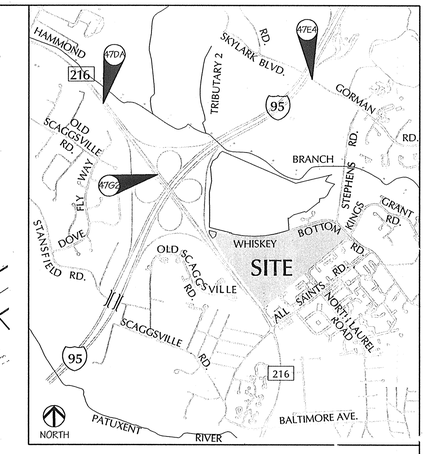

Vicinity Map
SCALE: 1"=2000'

Legend

- EXISTING CONDITION DRAINAGE AREA TO TRAPS AND BASINS
- INTERIM CONDITION DRAINAGE AREAS
- PROPOSED CONDITION DRAINAGE AREAS
- EXISTING CONDITION Tc PATH
- PROPOSED CONDITION Tc PATH
- PROPERTY BOUNDARY
- EARTH DIKE
- LIMIT OF DISTURBANCE

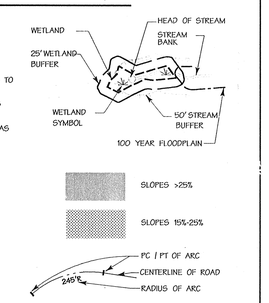

APPROVED: HOWARD COUNTY DEPT. OF PUBLIC WORKS

for CHIEF, BUREAU OF HIGHWAYS — DATE 10-10-02

APPROVED: HOWARD COUNTY DEPT. OF PLANNING AND ZONING

CHIEF, DIVISION OF LAND DEVELOPMENT — DATE: 10/22/02

CHIEF, DEVELOPMENT ENGINEERING DIVISION MK — DATE 10/8/02

Date	No.	Revision Description
6-3-05	1	ADD "T" TURN AROUND

REVITZ PROPERTY

OWNER /DEVELOPER:

THE HOWARD RESEARCH & DEVELOPMENT CORPORATION
10275 LITTLE PATUXENT PARKWAY
COLUMBIA, MARYLAND 21044

DMW
Daft·McCune·Walker, Inc.
200 East Pennsylvania Avenue
Towson, Maryland 21286
(410) 296-3333
Fax 296-4705

A Team of Land Planners, Landscape Architects, Engineers, Surveyors & Environmental Professionals

9/20/02
Date

PROFESSIONAL ENGINEER — STATE OF MARYLAND

Professional Engr. No. 10551

SUBDIVISION NAME		SECTION/AREA			LOT/PARCEL #
					165 & BO PAR. 837
PLAT# OR L#	BLOCK #	ZONE	TAX/ZONE MAP	ELECT. DISTRICT	CENSUS TRACT
22674/436	20	PEC	47, GRID 20	6 th	
WATER CODE			SEWER CODE		

TITLE

FINAL PLAN SEDIMENT AND EROSION CONTROL DRAINAGE AREA MAP

Des By	MRT	Scale	1" = 100'	Proj. No.	01011
Drn By	MRT	Date	9/19/02		
Chk By		Approved			20 OF 57

F-02-111

F-02-111

Thu Sep 19 C:\Projects 2002\01011\Drawings\Grading\01011GRD.dgn 9/19/02 3:30:36 PM

STREET LIGHT LEGEND

250 WATT HIGH PRESSURE SODIUM (HPS) VAPOR PENDANT (SAG) MOUNTED AT 30' ON A BRONZE FIBERGLASS POLE USING A 12' ARM

STREET LIGHT TABLE

DWG. No.	STREET NAME	STATION	OFF-SET	FIXTURE / POLE TYPE	COMMENTS
	STERLING DRIVE	12+70	23' LT.	—✱—	
	STERLING DRIVE	14+70	23' LT.	—✱—	
	STERLING DRIVE	16+70	23' RT.	—✱—	
	STERLING DRIVE	18+70	23' RT.	—✱—	

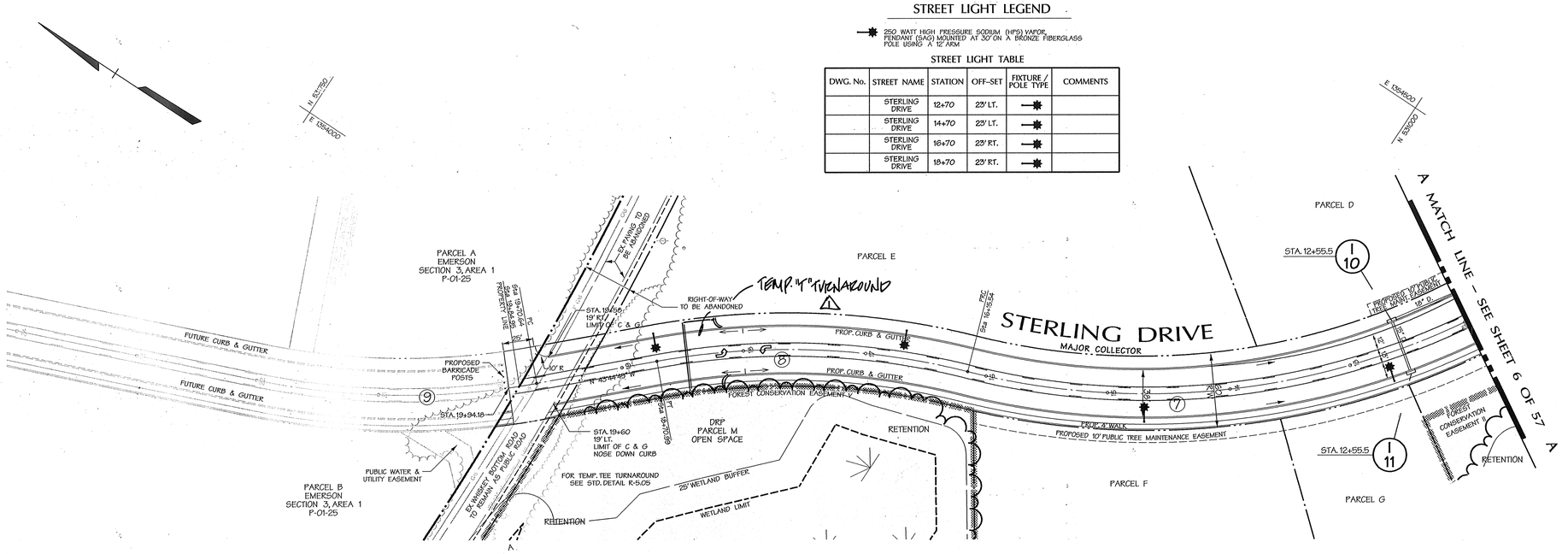

PLAN

1"=50'

CURVE DATA

NAME	DELTA	RADIUS	LENGTH	TANGENT	CHORD	
⑦	54°58'07"	600.00'	575.63'	312.13'	N 46°50'03" W	553.81'
⑧	24°23'39"	600.00'	255.46'	129.69'	N 31°32'55" W	253.53'
⑨	21°55'35"	600.00'	229.61'	116.23'	N 32°46'57" W	228.21'

F-02-111

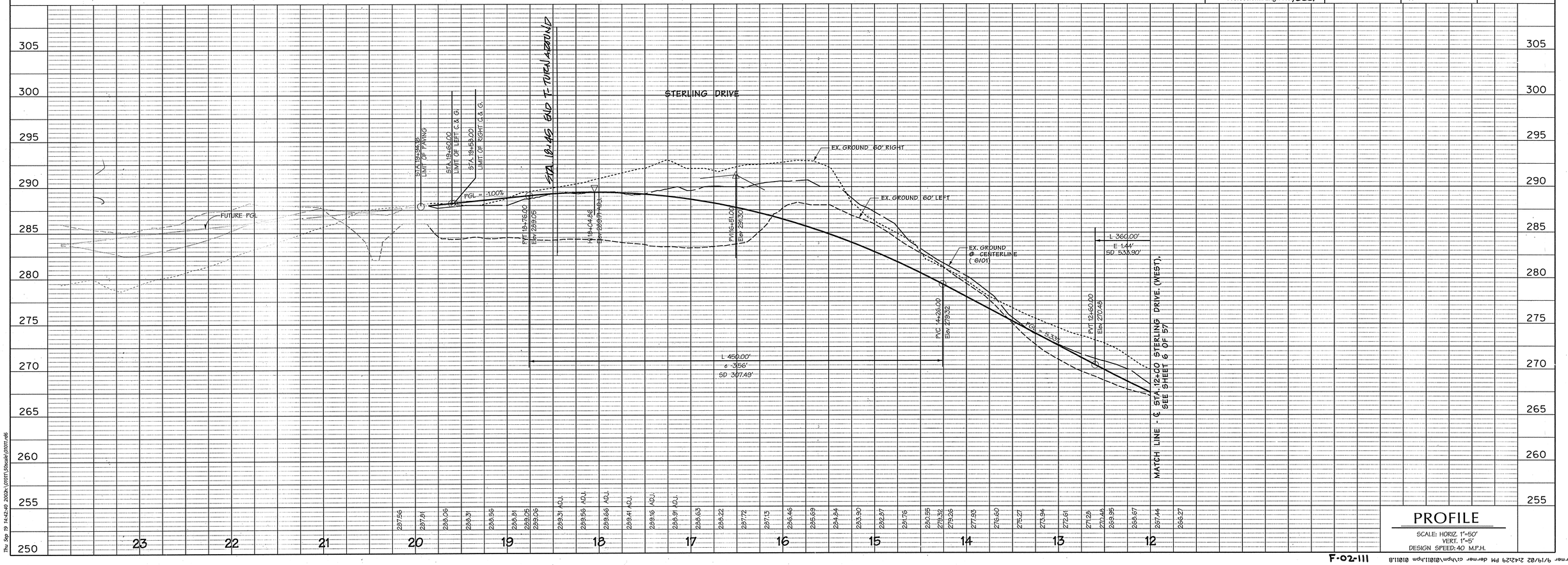

PROFILE

SCALE: HORIZ. 1"=50'
VERT. 1"=5'
DESIGN SPEED: 40 M.P.H.

F-02-111

APPROVED: HOWARD COUNTY DEPT. OF PUBLIC WORKS

for CHIEF, BUREAU OF HIGHWAYS — DATE 10-10-02

APPROVED: HOWARD COUNTY DEPT. OF PLANNING AND ZONING

CHIEF, DIVISION OF LAND DEVELOPMENT — DATE 11/22/02

CHIEF, DEVELOPMENT ENGINEERING DIVISION MK — DATE 10/8/02

Date	No.	Revision Description
5-3-05	1	ADD "T" TURNAROUND

REVITZ PROPERTY

OWNER /DEVELOPER:
THE HOWARD RESEARCH & DEVELOPMENT CORPORATION
10275 LITTLE PATUXENT PARKWAY
COLUMBIA, MARYLAND 21044

DMW
Daft-McCune-Walker, Inc.
200 East Pennsylvania Avenue
Towson, Maryland 21286
(410) 296-3333
Fax 296-4705

A Team of Land Planners, Landscape Architects, Engineers, Surveyors & Environmental Professionals

01-NT-0500/200260639

9/20/02 Date

Professional Engr. No. 10551

AREA

TAX MAP 47 PARCEL 165, 837
6th ELECTION DISTRICT OF HOWARD COUNTY, MARYLAND

TITLE

FINAL PLAN
ROAD CONSTRUCTION PLAN
STERLING DRIVE

Des By	DFM	Scale 1" = 50'	Proj. No. 01011.B0
Drn By	WDE	Date 9/19/02	7 OF 57
Chk By		Approved	

Thu Sep 19 14:42:49 2002h:\01011\00cadk\01011.mt6
9/19/02 2:42:29 PM dermer c:\hpm\01011.hpm 01011.8

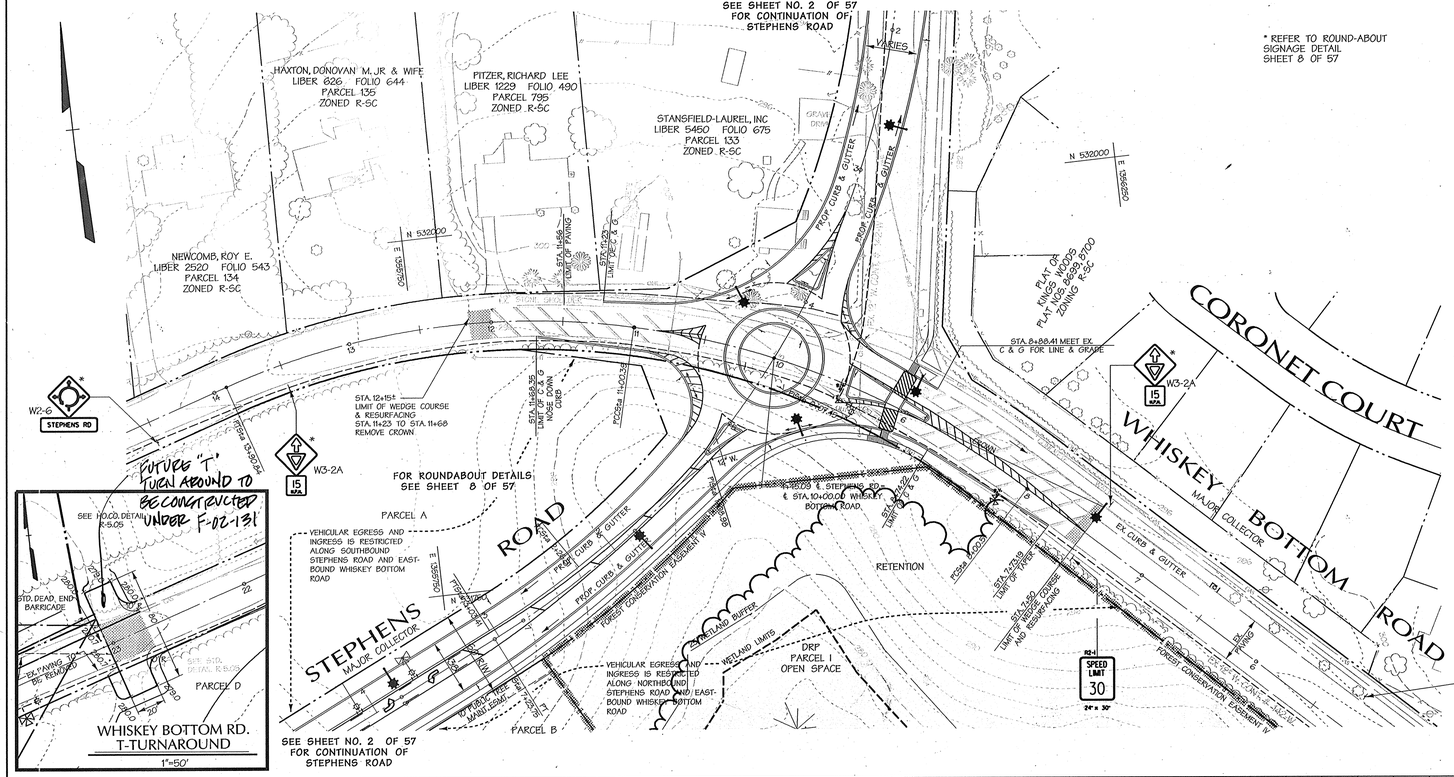

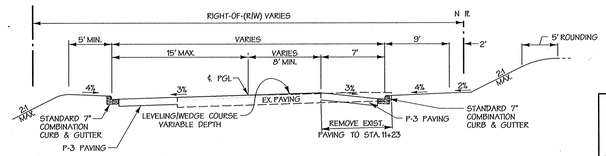

TYPICAL SECTION WEST OF STEPHENS ROAD (LOOKING WEST)
CLOSED SECTION 60' R/W STA. 10+74 TO STA. 11+68
40 MPH DESIGN SPEED

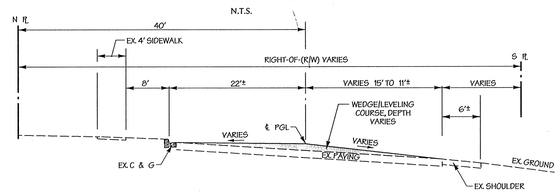

TYPICAL SECTION EAST OF STEPHENS ROAD (LOOKING EAST)
CLOSED SECTION 60' R/W STA. 7+50 TO STA. 8+88
40 MPH DESIGN SPEED
N.T.S.

STREET LIGHT LEGEND

250 WATT HIGH PRESSURE SODIUM (HPS) VAPOR PENDANT (SAG) MOUNTED AT 30'ON A BRONZE FIBERGLASS POLE USING A 12' ARM

STREET LIGHT TABLE

DWG. No.	STREET NAME	STATION	OFF-SET	FIXTURE / POLE TYPE	COMMENTS
	WHISKEY BOTTOM RD	7+50	25' RT		
	WHISKEY BOTTOM RD	9+00	28' RT		

NOTE:
CONDUIT FOR STREET LIGHTING TO BE INSTALLED BY CONTRACTOR (3" PVC)

EXISTING PAVING TO BE REMOVED
WEDGE/LEVELING COURSE
BIT. CONC. RESURFACING

APPROVED: HOWARD COUNTY DEPT. OF PUBLIC WORKS
CHIEF, BUREAU OF HIGHWAYS — DATE 10-10-02

APPROVED: HOWARD COUNTY DEPT. OF PLANNING AND ZONING
CHIEF, DIVISION OF LAND DEVELOPMENT — DATE 10/22/02
CHIEF, DEVELOPMENT ENGINEERING DIVISION MK — DATE 10/18/02

Date	No.	Revision Description
9-03-02	1	NOTE ADDED TO DETAIL

REVITZ PROPERTY

OWNER /DEVELOPER:
THE HOWARD RESEARCH & DEVELOPMENT CORPORATION
10275 LITTLE PATUXENT PARKWAY
COLUMBIA, MARYLAND 21044

DMW
Daft McCune Walker, Inc.
300 East Pennsylvania Avenue
Towson, Maryland 21286
(410) 296-3333
Fax 296-4705

A Team of Land Planners, Landscape Architects, Engineers, Surveyors & Environmental Professionals

01-NT-0500/200260639

9/26/02 Date

PROFESSIONAL ENGINEER No. 10551 STATE OF MARYLAND

Professional Engr. No. 10551

AREA
TAX MAP 47 PARCEL 165, 837
6th ELECTION DISTRICT OF HOWARD COUNTY, MARYLAND

TITLE
FINAL PLAN
ROAD CONSTRUCTION PLAN
WHISKEY BOTTOM ROAD
STEPHENS ROAD INTERSECTION

Des By	DFM	Scale 1"=50'	Proj. No. 01C 1.B0
Drn By	WDE	Date 9/9/02	
Chk By		Approved	5 OF 57

F-02-111

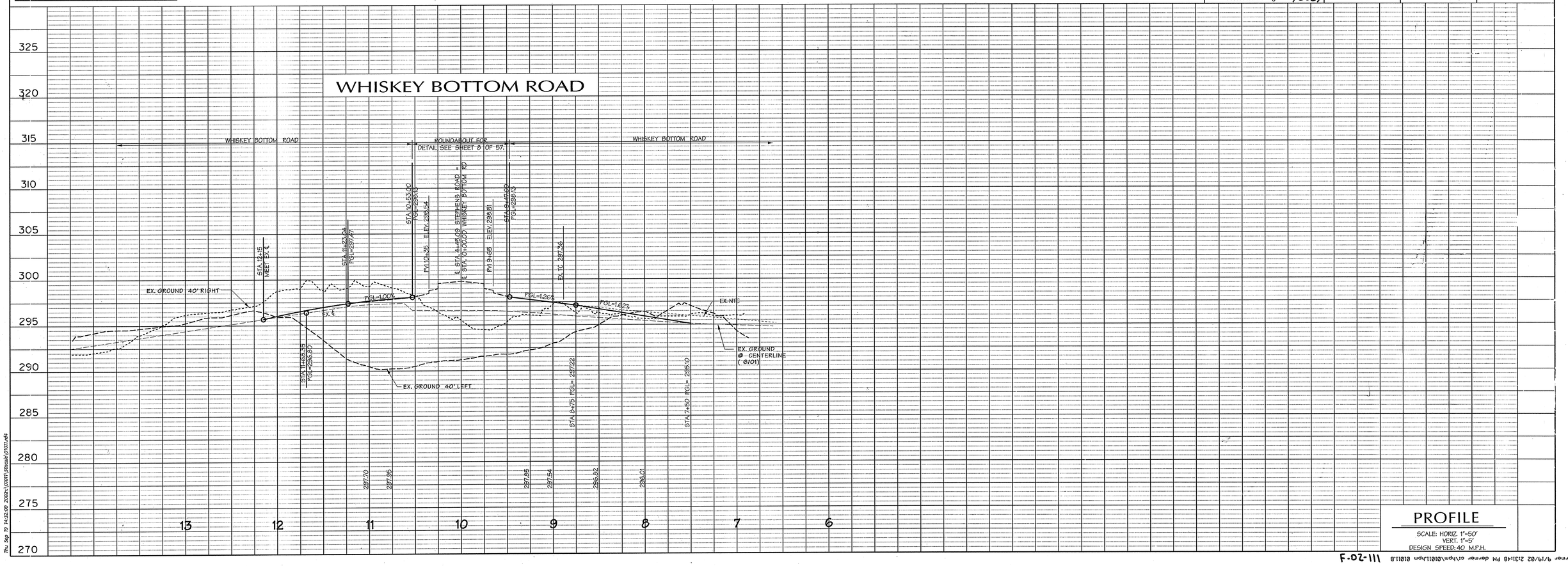

PROFILE
SCALE: HORIZ. 1"=50'
VERT. 1"=5'
DESIGN SPEED: 40 M.P.H.

F-02-111

Thu Sep 19 14:32:00 2002h:\0101\58scale\01011.dd

dermer 9/19/02 2:31:48 PM d:\hpm\0101\hpm 01011.8