STORMWATER MANAGEMENT CONSTRUCTION PLANS

BONNIELASS

LOTS 1-4

SHEET INDEX	
SHEET	DESCRIPTION
1	COVER SHEET
2	SITE DEVELOPMENT PLAN, STORMWATER MANAGEMENT PLAN AND GRADING PLAN
3	SEDIMENT EROSION CONTROL PLAN
4	SEDIMENT AND EROSION CONTROL DETAILS
5	STORM DRAIN AND PAVING DETAILS
6	STORMWATER MANAGEMENT POND DETAILS
7	SURFACE SAND FILTER DETAILS
8	LANDSCAPE PLAN
9	DRAINAGE AREA MAP
10	FOREST STAND DELINEATION (EXISTING CONDITIONS)
11	BORING LOGS AND STORMWATER POND LANDSCAPE PLAN
12	WALL ELEVATION AND RETAINING WALL DESIGN
13	WALL ELEVATION AND ROAD PROFILE
14	FOREST CONSERVATION PLAN
15	REFORESTATION PLANTING PLAN

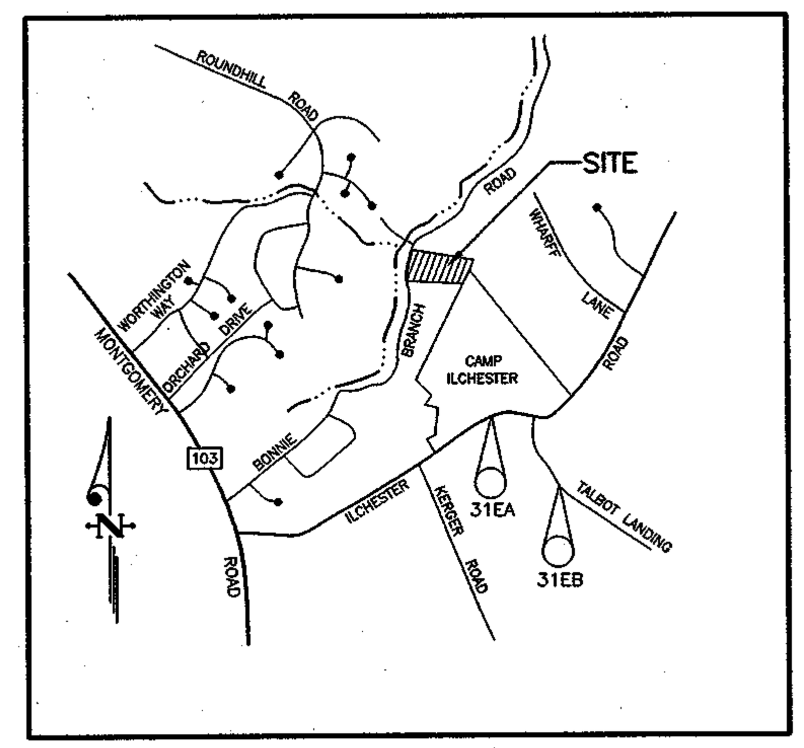

VICINITY MAP
SCALE: 1" = 2000'

BENCH MARKS

MONUMENT	DESCRIPTION	ELEVATION	NORTHING	EASTING
31EA	MONUMENT	469.603	569641.123	1,374,815.935
31EB	MONUMENT	453.396	568730.984	1,376,273.491

SITE ANALYSIS DATA CHART

a. Total Project Area: 5.6308 acres or 245,277 square feet
b. Area of Plan Submission: 5.6308 acres
c. Limit of Disturbed Area: 2.81 acres
d. Present Zoning: R-20
e. Proposed Uses for Site and Structures: Residential
f. Open Space: Lot 1 = 1.2634 AC.
Lot 4 = 1.0000 AC.
TOTAL = 2.2634 AC.

GENERAL NOTES:

1. ALL CONSTRUCTION SHALL BE IN ACCORDANCE WITH THE LATEST STANDARDS AND SPECIFICATIONS OF HOWARD COUNTY PLUS MSHA STANDARDS AND SPECIFICATIONS, IF APPLICABLE.
2. THE CONTRACTOR SHALL NOTIFY THE DEPARTMENT OF PUBLIC WORKS/BUREAU OF ENGINEERING, CONSTRUCTION INSPECTION DIVISION AT (410) 313-1880 AT LEAST FIVE (5) WORKING DAYS PRIOR TO THE START OF WORK.
3. THE CONTRACTOR SHALL NOTIFY "MISS UTILITY" AT 1-800-257-7777 AT LEAST 48 HOURS PRIOR TO ANY EXCAVATION WORK.
4. PROJECT BACKGROUND:
   ZONING: R-20
   TOTAL TRACT AREA: 5.6308 AC
   NUMBER OF PROPOSED LOTS: 2 BUILDABLE, 2 OPEN SPACE
5. TRAFFIC CONTROL DEVICES, MARKINGS, AND SIGNING SHALL BE IN ACCORDANCE WITH THE LATEST EDITION OF THE MANUAL ON UNIFORM TRAFFIC CONTROL DEVICES (MUTCD). ALL STREET AND REGULATORY SIGNS SHALL BE IN PLACE PRIOR TO THE PLACEMENT OF ANY ASPHALT.
6. TOPOGRAPHIC SURVEY WAS FIELD RUN AT 2' CONTOUR INTERVALS BY CLARK, FINEFROCK & SACKETT, INC., DATED FEBRUARY, 2001.
7. HORIZONTAL AND VERTICAL CONTROL BASED ON HOWARD COUNTY CONTROL STATIONS 31EA-ELEV. 469.603 AND 31EB-ELEV. 453.396.
8. STREET LIGHTS WILL NOT BE REQUIRED IN THIS DEVELOPMENT IN ACCORDANCE WITH THE DESIGN MANUAL.
9. PUBLIC WATER AND SEWER ARE TO BE UTILIZED.
10. STORMWATER MANAGEMENT FOR THIS PROJECT IS BEING PROVIDED ON SITE FOR QUANTITY AND QUALITY. QUALITY CONTROL FOR THIS SITE IS A SURFACE SAND FILTER. QUANTITY CONTROL FOR THIS SITE IS EXTENDED DETENTION. THE STORM-WATER MANAGEMENT FACILITY WILL BE PRIVATELY OWNED AND MAINTAINED BY THE HOMEOWNER'S ASSOCIATION.
11. THE FOLLOWING STUDIES WERE PREPARED:
   A. FOREST STAND DELINEATION BY THE GREENFIELDS COMPANY, DATED 5/18/01
   B. WETLAND CERTIFICATION BY THE GREENFIELDS COMPANY, DATED 11/10/01
   C. GEOTECHNICAL REPORT BY HERBST/BENSON ASSOCIATES, DATED MAY 31, 2001
12. EXISTING UTILITIES AND IMPROVEMENTS SHOWN ARE TAKEN FROM AVAILABLE RECORDS, WHERE NOT VISIBLY EVIDENT FROM FIELD SURVEY.
13. TRENCH COMPACTION FOR STORM DRAINS WITHIN THE ROAD OR STREET RIGHTS OF WAY LIMITS SHALL BE IN ACCORDANCE WITH "HOWARD COUNTY DESIGN MANUAL", VOL IV, STD. NO. G-2.01
14. ALL COMPACTED FILL SHALL BE IN ACCORDANCE WITH AASHTO T-180 REQUIRE-MENTS.
15. ALL FILLET RADII ARE 5 FT. UNLESS INDICATED OTHERWISE.
16. SAG AND CREST VERTICAL CURVES WERE DESIGNED IN ACCORDANCE WITH THE "HOWARD COUNTY DESIGN MANUAL", VOL. III.
17. BONNIE BRANCH ROAD IS A SCENIC ROAD.
18. WAIVER PETITION, WP-01-139, WAS GRANTED PER LETTER DATED AUG. 2, 2001. ACTION WAS TAKEN TO WAIVE SECTION 16.121(E), REQUIRING 40' FRONTAGE ON A PUBLIC ROAD FOR OPEN SPACE LOTS.
19. STORMWATER MANAGEMENT FACILITIES WILL BE REQUIRED ON THE PARCELS SHOWN ON THIS PLAN IN ACCORDANCE WITH THE DESIGN MANUALS. PRIOR TO SIGNATURE APPROVAL OF THE SITE DEVELOPMENT PLAN, THE DEVELOPER WILL BE REQUIRED TO EXECUTE THE DEVELOPER'S AGREEMENT FOR THE CONSTRUCTION OF THE STORMWATER MANAGEMENT FACILITY AND A MAINTENANCE AGREEMENT. THE STORMWATER MANAGEMENT FACILITIES AREA TO BE CONSTRUCTED AS A PART OF THIS SUBDIVISION. CONSTRUCTION MAY ONLY BEGIN AFTER THE APPROVAL OF THE CONSTRUCTION DRAWINGS FOR THE FURTHER SUBDIVISION OF LOT 3.
20. "THE GRANTOR ACKNOWLEDGES THAT THE DEDICATION OF THE EASEMENT AREA TO THE COUNTY HAS BENEFITTED THE GRANTOR BY REDUCING THE SIZE OF THE STORM WATER MANAGEMENT FACILITY REQUIRED BY THE DEVELOPMENT OF THE PROPERTY ASSOCIATED WITH THE EASEMENT AREA. ACCORDINGLY, THE GRANTOR FOR ITSELF AND ITS SUCCESSORS AND ASSIGNS, SHALL NOT PERMIT OTHERS TO GRADE WITHIN THE EASEMENT AREA OR MOW GRASSY VEGETATION WITHIN THE EASEMENT AREA. THE GRANTOR AND ITS SUCCESSORS AND ASSIGNS SHALL PERIODICALLY INSPECT THE EASEMENT AREA AND TAKE NECESSARY STEPS TO REMOVE DEBRIS AND TRASH, AND CONTROL THE GROWTH OF NOXIOUS WEEDS. THE GRANTOR SHALL POST AND MAINTAIN MARKERS AT REGULAR INTERVALS NO MORE THAN FIFTY (50) FEET APART IDENTIFYING THE BOUNDARY OF THE EASEMENT AREA. THE MARKERS SHALL CONTAIN A STATEMENT OF THE PROHIBITED ACTIVITIES WITHIN THE EASEMENT AREA. THE PENALTIES FOR A VIOLATIONS OF THE TERMS OF THIS EASEMENT ARE SET FORTH IN HOWARD COUNTY CODE SECTION 18.907".
21. A NATURAL AREA CONSERVATION AND STORMWATER MANAGEMENT CREDIT EASEMENT, OF 0.6535 AC. HAS REDUCED THE REQUIRED WQv BY 0.013 AC.-FT.
22. THE FOREST CONSERVATION EASEMENT HAS BEEN ESTABLISHED TO FULFILL THE REQUIREMENTS OF SECTION 16.1200 OF THE HOWARD COUNTY CODE AND FOREST CONSERVATION ACT. NO CLEARING, GRADING OR CONSTRUCTION IS PERMITTED WITHIN THE FOREST CONSERVATION EASEMENT; HOWEVER, FOREST MANAGEMENT PRACTICES AS DEFINED IN THE DEED OF FOREST CONSERVATION EASEMENT ARE ALLOWED.
23. THE FOREST CONSERVATION REQUIREMENT OF SECTION 16.1200 OF THE HOWARD COUNTY CODE: FOREST CONSERVATION ACT, HAS BEEN MET BY THE REFORESTATION OF 1.26 ACRES OFFSITE. FINANCIAL SURETY FOR THE ONSITE FOREST CONSERVATION OBLIGATIONS FOR THIS SUBDIVISION ARE $8,189.00 FOR RETENTION OF 0.94 ACRES OF FOREST AND $2,396.00 FOR ONSITE REFORESTATION OF 0.11 ACRES. FINANCIAL SURETY FOR THE OFF-SITE REFORESTATION IS $27,443.00.
24. LANDSCAPING FOR LOTS 1 THRU 4 IS PROVIDED IN ACCORDANCE WITH THE LANDSCAPE PLAN INCLUDED WITH THE CONSTRUCTION PLANS FOR THIS PROJECT. LANDSCAPING IS IN ACCORDANCE WITH SECTION 16.124 OF THE HOWARD COUNTY CODE AND LANDSCAPE MANUAL. SURETY FOR THE REQUIRED PLANT MATERIALS ($12,180.00) HAS BEEN POSTED AS PART OF THE DEVELOPER'S AGREEMENT.
25. RETAINING WALLS SHALL ONLY BE CONSTRUCTED UNDER THE OBSERVATION OF A REGISTERED PROFESSIONAL ENGINEER AND UNDER THE SUPERVISION OF A CERTIFIED GEOTECHNICAL PROFESSIONAL.
26. DESIGN MANUAL WAIVER WAS GRANTED FOR INTERSECTION SIGHT DISTANCE OF DESIGN MANUAL, VOLUME III, SECTION 2.5.2.H.3 ON NOVEMBER 1, 2002.
27. IMPROVEMENTS FOR EXISTING BONNIE BRANCH ROAD FROM STATION 0+50 TO 2+90 INCLUDE LOWERING OF THE ROAD TO PROVIDE PROPER SIGHT DISTANCE AND THE ADDITION OF A 3' SHOULDER ALONG THE FRONTAGE OF THE SITE.

OPTION 5:		FOREST CONSERVATION DATA SUMMARY			
File Number: F-01-208		Project/Subdivision Name: **Bonnielass, Lots 1 thru 4**			
Land Use **Residential**	Subwatershed Number 2130906	On-site MD Grid N (1) **511,400**	On-site MD Grid E (1) **862,000**	Net Tract Area (Acs.) **5.63**	Total Site Disturbance (Acs.) **4.69**
Priority Disturbance within Total Disturbed Area (2) N/A	% of Priority Disturbance (3) N/A	Existing Forest (Acs.) (4) **5.13**	On-site Retention (Acs.) **0.94**	Off-site Retention (Acs.) (5) N/A	Cleared Forest (Acs.) (4) **4.19**
On-site Reforestation (Acs.) **0.11**	Off-site Reforestation (Acs.) (5) **1.26**	On-site Afforestation (Acs.) N/A	Off-site Afforestation (Acs.) (5) N/A	Off-site MD Grid N (1) **528,000**	Off-site MD Grid E (1) **828,000**
Total Acres in Easement 2.32	Total Acres of Priority Area Within Total Easement N/A	% of Priority Area Within Total Easement N/A	Amount of Surety Posted $38,028	Amount of Fee-in-Lieu N/A	Cash Receipt No. for Fee (6) N/A / Off-site Subwatershed Number 2131106

(1) - These 6 digit coordinates can be taken from ADC's Street Map of Howard County.
(2) - Provide the acreage of the total site disturbance which occurs in priority areas (wetlands, wetland buffers, stream buffers, steep slopes, floodplain).
(3) - Provide the percentage of the total site disturbance which occurs within priority areas.
(4) - These figures apply to the acreage of existing forest in the Net Tract Area and to the acreage of the forest which will be cleared.
(5) - These figures apply to off-site planting and/or retention not associated with a Forest Conservation Bank
(6) - This receipt number is completed by DPZ staff.

APPROVED: DEPARTMENT OF PUBLIC WORKS N/A
CHIEF, BUREAU OF HIGHWAYS — DATE

APPROVED: DEPARTMENT OF PLANNING & ZONING
CHIEF, DIVISION OF LAND DEVELOPMENT — DATE 8/15/03
CHIEF, DEVELOPMENT ENGINEERING DIVISION MAJ — DATE 8/13/03

OWNER / DEVELOPER
BONNIELASS LLC
8835-P COLUMBIA 100 PARKWAY
COLUMBIA, MARYLAND 21045

STATE OF MARYLAND — G. NELSON CLARK — PROFESSIONAL ENGINEER — 6-25-03

#6 D:\DRAWINGS\00098-BONNIELASS\1ST-RE-SUB\S01-COVER.DWG

CLARK · FINEFROCK & SACKETT, INC.
ENGINEERS · PLANNERS · SURVEYORS
7135 MINSTREL WAY · COLUMBIA, MD 21045 · (410) 381-7500 BALT. · (301) 621-8100 WASH.

DESIGNED PC	COVER SHEET	SCALE AS SHOWN
DRAWN ZAH/CRH2	BONNIELASS	DRAWING 1 of 15
CHECKED AS	TAX MAP 31 PARCEL 254 GRID 9 ZONING R-20 FIRST (1ST) ELECTION DISTRICT HOWARD COUNTY, MARYLAND	JOB NO. 00-098
DATE 6-23-03		FILE NO. 00-098-D

F-01-208

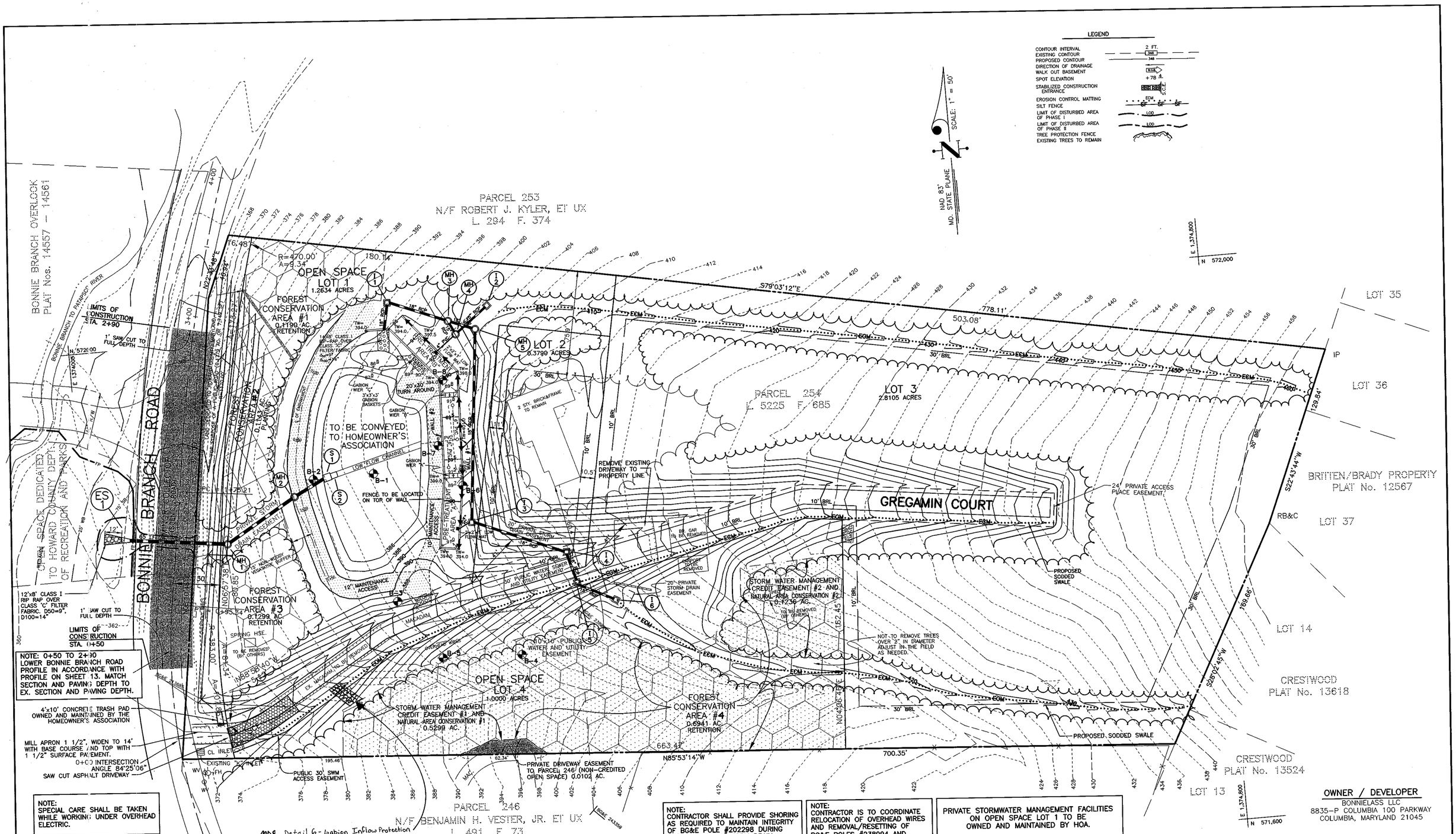

OWNER / DEVELOPER
BONNIELASS LLC.
8835-P COLUMBIA 100 PARKWAY
COLUMBIA, MARYLAND 21045

APPROVED: DEPARTMENT OF PUBLIC WORKS — N/A
CHIEF, BUREAU OF HIGHWAYS — DATE

APPROVED: DEPARTMENT OF PLANNING & ZONING
CHIEF, DIVISION OF LAND DEVELOPMENT — DATE 8/15/03
CHIEF, DEVELOPMENT ENGINEERING DIVISION — DATE 8/13/03

By The Developer:

"I/We certify that all development and/or construction will be done according to these plans, and that any responsible personnel involved in the construction project will have a Certificate of Attendance at a Department of the Environment Approved Training Program for the Control of Sediment and Erosion before beginning the project. I shall engage a registered professional engineer to supervise pond construction and provide the Howard Soil Conservation District with an "as-built" plan of the pond within 30 days of completion. I also authorize periodic on-site inspections by the Howard Soil Conservation District."

Signature of Developer — 7.1.03 Date

By the Engineer:

"I certify that this plan for pond construction, erosion and sediment control represents a practical and workable plan based on my personal knowledge of the site conditions. This plan was prepared in accordance with the requirements of the Howard Soil Conservation District. I have notified the developer that he/she must engage a registered professional engineer to supervise pond construction and provide the Howard Soil Conservation District with an "as-built" plan of the pond within 30 days of completion."

Signature of Engineer — 6-25-03 Date

STATE OF MARYLAND — ALLISON CLARK — No. 17126 — REGISTERED PROFESSIONAL ENGINEER

2-10-03

#6 D:\DRAWINGS\00098-BONNIELASS\1ST-RE-SUB\S02-SDP-SWM-GRAD.DWG

CLARK · FINEFROCK & SACKETT, INC.
ENGINEERS · PLANNERS · SURVEYORS
7135 MINSTREL WAY · COLUMBIA, MD 21045 · (410) 381-7500 BALT. · (301) 621-8100 WASH.

DESIGNED PC/AS	SITE DEVELOPMENT, STORMWATER MANAGEMENT AND GRADING PLAN	SCALE 1"=30'
DRAWN ZAH/CRH2	BONNIELASS	DRAWING 2 of 15
CHECKED AS	TAX MAP 31 PARCEL 254 GRID 9 ZONING R-20 FIRST (1ST) ELECTION DISTRICT HOWARD COUNTY, MARYLAND	JOB NO. 00-098
DATE 2-10-03		FILE NO. 00-098-D

F-01-208

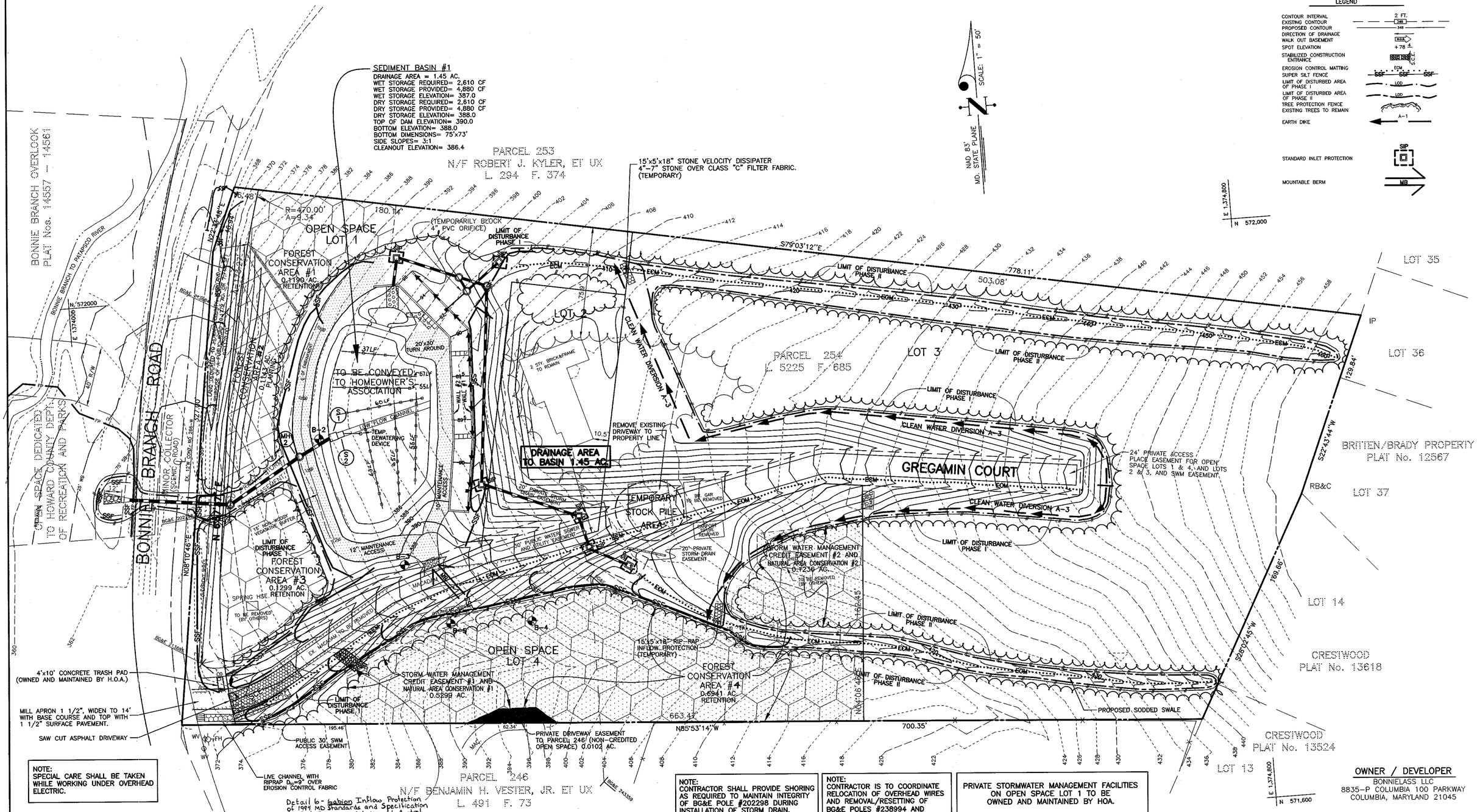

NOTE:
SPECIAL CARE SHALL BE TAKEN WHILE WORKING UNDER OVERHEAD ELECTRIC.

NOTE:
CONTRACTOR SHALL PROVIDE SHORING AS REQUIRED TO MAINTAIN INTEGRITY OF BG&E POLE #202298 DURING INSTALLATION OF STORM DRAIN.

NOTE:
CONTRACTOR IS TO COORDINATE RELOCATION OF OVERHEAD WIRES AND REMOVAL/RESETTING OF BG&E POLES #238994 AND #213685 WITH UTILITY COMPANY

PRIVATE STORMWATER MANAGEMENT FACILITIES ON OPEN SPACE LOT 1 TO BE OWNED AND MAINTAINED BY HOA.

Reviewed for HOWARD S.C.D. and meets Technical Requirements
Signature 7/31/03 Date
U.S. Natural Resources Conservation Service

THIS DEVELOPMENT PLAN IS APPROVED FOR SOIL EROSION AND SEDIMENT CONTROL BY THE HOWARD SOIL CONSERVATION DISTRICT.
Howard S.C.D. 7/31/03 Date

APPROVED: DEPARTMENT OF PUBLIC WORKS N/A
CHIEF, BUREAU OF HIGHWAYS DATE

APPROVED: DEPARTMENT OF PLANNING & ZONING
CHIEF, DIVISION OF LAND DEVELOPMENT 8/15/03 DATE
CHIEF, DEVELOPMENT ENGINEERING DIVISION 8/13/03 DATE

By The Developer:

"I/We certify that all development and/or construction will be done according to these plans, and that any responsible personnel involved in the construction project will have a Certificate of Attendance at a Department of the Environment Approved Training Program for the Control of Sediment and Erosion before beginning the project. I shall engage a registered professional engineer to supervise pond construction and provide the Howard Soil Conservation District with an "as-built" plan of the pond within 30 days of completion. I also authorize periodic on-site inspections by the Howard Soil Conservation District."

Signature of Developer 7-1-03 Date

By the Engineer:

"I certify that this plan for pond construction, erosion and sediment control represents a practical and workable plan based on my personal knowledge of the site conditions. This plan was prepared in accordance with the requirements of the Howard Soil Conservation District. I have notified the developer that he/she must engage a registered professional engineer to supervise pond construction and provide the Howard Soil Conservation District with an "as-built" plan of the pond within 30 days of completion."

Signature of Engineer 6-25-03 Date

STATE OF MARYLAND G. NELSON CLARK NO. 11988 REGISTERED PROFESSIONAL ENGINEER
2-10-03

OWNER / DEVELOPER
BONNIELASS LLC
8835-P COLUMBIA 100 PARKWAY
COLUMBIA, MARYLAND 21045

CLARK · FINEFROCK & SACKETT, INC.
ENGINEERS · PLANNERS · SURVEYORS
7135 MINSTREL WAY · COLUMBIA, MD 21045 · (410) 381-7500 BALT. · (301) 621-8100 WASH.

DESIGNED PC/AS	SEDIMENT AND EROSION CONTROL PLAN	SCALE 1"=30'
DRAWN CRH2	BONNIELASS	DRAWING 3 of 15
CHECKED AS	TAX MAP 31 PARCEL 254 GRID 9 ZONING R-20 FIRST (1ST) ELECTION DISTRICT HOWARD COUNTY, MARYLAND	JOB NO. 00-098
DATE 2-10-03		FILE NO. 00-098-D

#6 D:\DRAWINGS\00098-BONNIELASS\1ST-RE-SUB\S03-SEC-PLAN.DWG

F-01-208

DETAIL 24 – STABILIZED CONSTRUCTION ENTRANCE

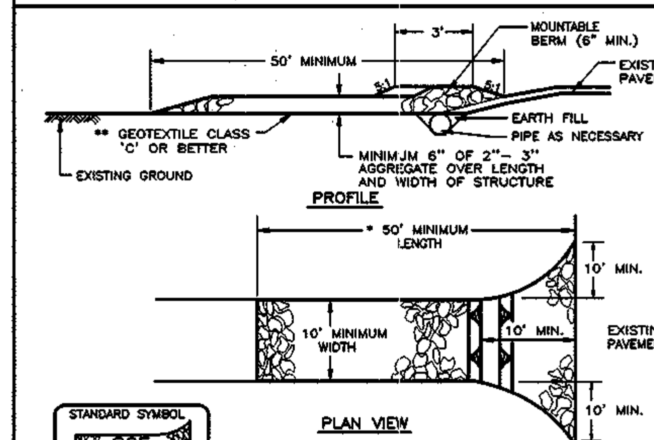

Construction Specification

1. Length – minimum of 50' (* 30' for a single residence lot).
2. Width – 10' minimum, should be flared at the existing road to provide a turning radius.
3. Geotextile fabric (filter cloth) shall be placed over the existing ground prior to placing stone. ** The plan approval authority may not require single family residences to use geotextile.
4. Stone – crushed aggregate (2" to 3") or reclaimed or recycled concrete equivalent shall be placed at least 6" deep over the length and width of the entrance.
5. Surface Water – all surface water flowing to or diverted toward construction entrances shall be piped through the entrance, maintaining positive drainage. Pipe installed through the stabilized construction entrance shall be protected with a mountable berm with 5:1 slopes and a minimum of 6" of stone over the pipe. Pipe has to be sized according to the drainage. When the SCE is located at a high spot and has no drainage to convey, a pipe will not be necessary. Pipe should be sized according to the amount of runoff to be conveyed. A 6" minimum will be required.
6. Location – A stabilized construction entrance shall be located at every point where construction traffic enters or leaves a construction site. Vehicles leaving the site must travel over the entire length of the stabilized construction entrance.

U.S. DEPARTMENT OF AGRICULTURE SOIL CONSERVATION SERVICE	PAGE F - 17 - 3	MARYLAND DEPARTMENT OF ENVIRONMENT WATER MANAGEMENT ADMINISTRATION

DETAIL 22 – SILT FENCE

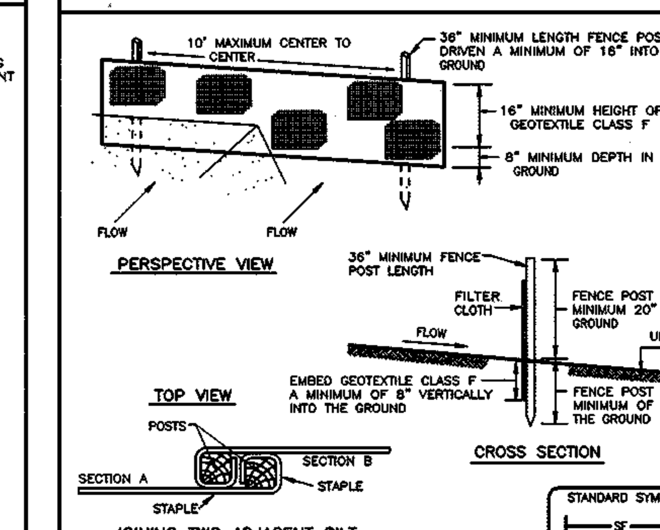

Construction Specifications

1. Fence posts shall be a minimum of 36" long, driven 16" minimum into the ground. Wood posts shall be 1 1/2" x 1 1/2" square (minimum) cut, or 1 3/4" diameter (minimum) round and shall be of sound quality hardwood. Steel posts will be standard T or U section weighing not less than 1.00 pound per linear foot.
2. Geotextile shall be fastened securely to each fence post with wire ties or staples at top and mid-section and shall meet the following requirements for Geotextile Class F:

Tensile Strength	50 lbs/in (min.)	Test: MSMT 509
Tensile Modulus	20 lbs/in (min.)	Test: MSMT 509
Flow Rate	0.3 gal ft²/minute (max.)	Test: MSMT 322
Filtering Efficiency	75% (min.)	Test: MSMT 322

3. Where ends of geotextile fabric come together, they shall be overlapped, folded and stapled to prevent sediment bypass.
4. Silt Fence shall be inspected after each rainfall event and maintained when bulges occur or when sediment accumulation reaches 50% of the fabric height.

U.S. DEPARTMENT OF AGRICULTURE SOIL CONSERVATION SERVICE	PAGE E - 15 - 3	MARYLAND DEPARTMENT OF ENVIRONMENT WATER MANAGEMENT ADMINISTRATION

DETAIL 1 – EARTH DIKE

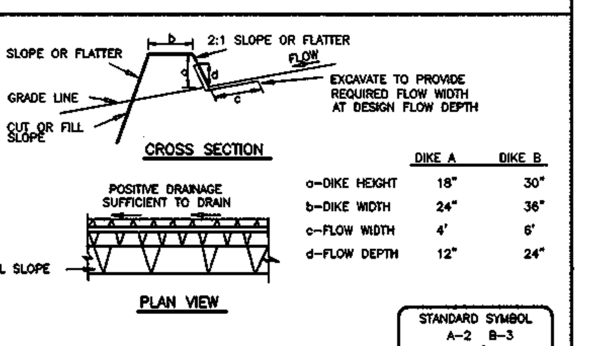

	DIKE A	DIKE B
a–DIKE HEIGHT	18"	30"
b–DIKE WIDTH	24"	36"
c–FLOW WIDTH	4'	6'
d–FLOW DEPTH	12"	24"

1. Seed and cover with straw mulch.
2. Seed and cover with Erosion Control Matting or line with sod.
3. 4" – 7" stone or recycled concrete equivalent pressed into the soil 7" minimum

Construction Specifications

1. All temporary earth dikes shall have uninterrupted positive grade to an outlet. Spot elevations may be necessary for grades less than 1%.
2. Runoff diverted from a disturbed area shall be conveyed to a sediment trapping device.
3. Runoff diverted from an undisturbed area shall outlet directly into an undisturbed, stabilized area at a non-erosive velocity.
4. All trees, brush, stumps, obstructions, and other objectional material shall be removed and disposed of so as not to interfere with the proper functioning of the dike.
5. The dike shall be excavated or shaped to line, grade and cross section as required to meet the criteria specified herein and be free of bank projections or other irregularities which will impede normal flow.
6. Fill shall be compacted by earth moving equipment.
7. All earth removed and not needed for construction shall be placed so that it will not interfere with the functioning of the dike.
8. Inspection and maintenance must be provided periodically and after each rain event.

U.S. DEPARTMENT OF AGRICULTURE SOIL CONSERVATION SERVICE	PAGE A - 1 - 6	MARYLAND DEPARTMENT OF ENVIRONMENT WATER MANAGEMENT ADMINISTRATION

DETAIL 18 – SEDIMENT BASIN BAFFLES

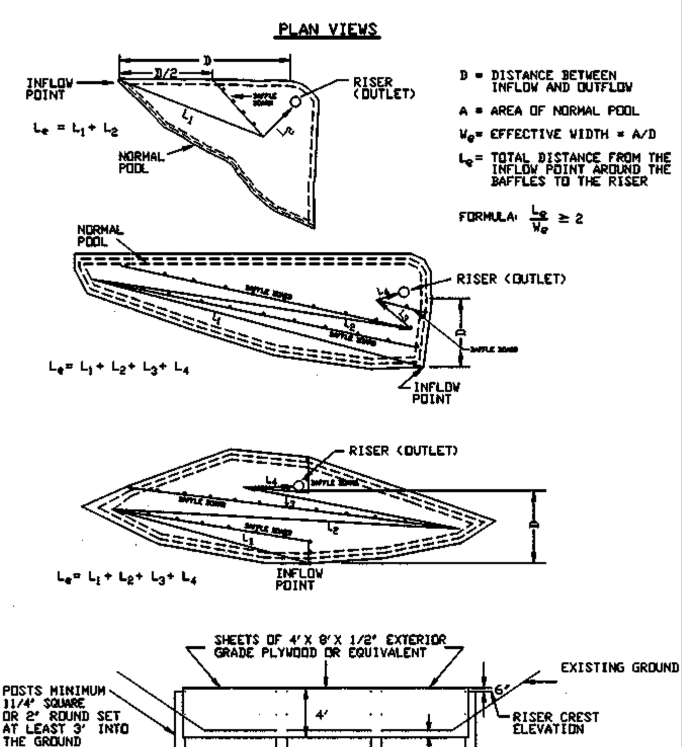

U.S. DEPARTMENT OF AGRICULTURE SOIL CONSERVATION SERVICE	PAGE C - 10 - 28	MARYLAND DEPARTMENT OF ENVIRONMENT WATER MANAGEMENT ADMINISTRATION

SEQUENCE OF CONSTRUCTION

PHASE I:

1. Obtain grading permit.	7 days
2. Install tree protection fence.	5 days
3. Clear and grub for installation of perimeter sediment and erosion control devices, within Phase I limit of disturbance, install super silt fence, silt fence, and construction entrance and stabilize.	5 days
4. Clear and grub within perimeter controls and remove structures as indicated.	5 days
5. With a dry weather forcast and super silt fence installed for construction of storm drain and outfall construct storm drain from ES–1 to MH–1. The contractor shall maintain one lane of traffic during construction of the storm drainage crossing the road. All traffic control measures shall be in accordance with MSHA standards and specifications and comply with the manual on uniform traffic control devices (MUTCD).	5 days
6. Reconstruct Bonnie Branch Road from stations 0+50 to 2+90 as shown, keeping one lane of traffic open at all times. All traffic control measures shall be in accordance with MSHA standards and specifications and comply with the manual on uniform traffic control devices (MUTCD).	? days
7. Rough grade site as required for the installation of storm drain from MH–1 to S–1. Install clean water diversion dikes and stone pads.	15 days
8. With permission from the sediment control inspector, construct pond to ultimate conditions, and construct storm drain from MH–1 to S–1. Close off perimeter super silt fence. Block low weir (#1) to be equal with high weir (#2) and install sediment dewatering devices. Construct concrete retaining walls.	50 days
9. Stablize grades above sand filter and install silt fence and super silt to protect sand filter.	3 days
10. Install 6" PVC, 6" perforated PVC. Install gabion weir "A" & "B", and low flow mats.	10 days
11. With permission from sediment control inspector, rough grade site as required for the installation of the driveway.	5 days
12. Install storm drain system MH3, MH4, MH5, I1, I2, FS1, & I3. Temporarily block 4" PVC outlet at I1 and FS1.	25 days
13. Install base pavement and sodded side channel. Fine grade and seed and mulch disturbed area.	5 days

PHASE II:

14. With permission of the Sediment Control Inspector, clear and grub within Phase II limit of disturbance for installation of sodded channels. Remove clean water diversion dikes.	5 days
15. Excavate channel in increments which can be stabilized with sod and erosion controll matting in one day.	5 days
16. When site has thriving vegetation and with permission of the Sediment Control Inspector flush storm drain pipes and drain bottom of I1 and FS1. Clean out sediment and return pond to ultimate conditions. Install surface sand filter.	15 days
17. Convert riser to ultimate conditions. Cut 6" PVC and install removable cap with 2" orifice. Install S–2 such that 6" PVC cap may be removed. Install low flow channel. Remove blocking from weir #1 and install all trash racks. Install 4" PVC low flow pipes to sand filter.	5 days
18. With permission of Sediment Control Inspector, install surface course on driveway and remove all remaining sediment controls and stabilize.	3 days

PERMANENT SEEDING NOTES

APPLY TO GRADED OR CLEARED AREAS NOT SUBJECT TO IMMEDIATE FURTHER DISTURBANCE WHERE A PERMANENT LONG-LIVED VEGETATIVE COVER IS NEEDED.

SEEDBED PREPARATION: Loosen upper three inches of soil by raking, discing or other acceptable means before seeding, if not previously loosened.

SOIL AMENDMENTS: In lieu of soil test recommendations, use one of the following schedules:

1) Preferred–Apply 2 tons per acre dolomitic limestone (92 lbs/100 sq.ft.) and 600 lbs per acre 10–10–10 fertilizer (14 lbs./1000 sq.ft.) before seeding. Harrow or disc into upper three inches of soil. At the time of seeding, apply 400 lbs. per acre 30–0–0 ureaform fertilizer (9 lbs/1000 sq.ft.)
2) Acceptable–Apply 2 tons per acre dolomatic limestone (92 lbs/1000 sq.ft.) and apply 1000 lbs. per acre 10–10–10– fertilizer (23 lbs./1000 sq.ft.) before seeding. Harrow or disc into upper three inches of soil.

SEEDING: For the periods March 1 thru April 30, and August 1 thru October 15, seed with 60 lbs. per acre (1.4 lbs/1000 sq.ft.) of Kentucky 31 Tall Fescue. For the period May 1 thru July 31, seed with 60 lbs. Kentucky 31 Tall Fescue per acre and 2 lbs. per acre (.05 lbs./1000 sq.ft.) of weeping lovegrass. During the period of October 16 thru February 28, protect site by: Option (1) 2 tons per acre well anchored straw mulch and seed as soon as possible in the spring. Option (2) Use sod. Option (3) Seed with 60 lbs/acre Kentucky 31 Tall Fescue and mulch with 2 tons/acre well anchored straw.

MULCHING: Apply 1 1/2 to 2 tons per acre (70 to 90 lbs/1000 sq. ft.) of unrotted small grain straw immediately after seeding. Anchor mulch immediately after application using mulch anchoring tool or 218 gallons per acre (5 gal/1000 sq.ft.) of emulsified asphalt on flat areas. On slopes 8 feet or higher, use 348 gallons per acre (8 gal/1000 sq.ft.) for anchoring.

MAINTENANCE: Inspect all seeded areas and make needed repairs, replacements and reseedings.

TEMPORARY SEEDING NOTES

SEEDBED PREPARATION: Loosen upper three inches of soil by raking, discing or other acceptable means before seeding, if not previously loosened.

SOIL AMENDMENTS: Apply 600 lbs. per acre 10–10–10 fertilizer (14 lbs./1000 sq.ft).

SEEDING: For periods March 1 thru April 30 and from August 15 thru November 15, seed with 2 1/2 bushel per acre of annual rye (3.2 lbs./1000 sq.ft.) For the period May 1 thru August 14, seed with 3 lbs. per acre of weeping lovegrass (.07 lbs./1000 sq.ft.). For the period November 1 thru February 28, protect site by applying 2 tons per acre of well anchored straw mulch and seed as soon as possible in the spring, or use sod.

MULCHING: Apply 1 1/2 to 2 tons per acre (70 to 90 lbs./1000 sq.ft.) of unrotted small grain straw immediately after seeding. Anchor mulch immediately after application using mulch anchoring tool or 218 gallons per acre (5 gal/1000 sq.ft.) of emulsified asphalt on flat areas. On slopes 8 feet or higher, use 348 gallons per acre (8 gal/1000 sq.ft.) for anchoring.

REFER TO THE 1994 MARYLAND STANDARDS AND SPECIFICATIONS FOR SOIL EROSION AND SEDIMENT CONTROL FOR RATE AND METHODS NOT COVERED.

SEDIMENT AND EROSION CONTROL NOTES

1. A minimum of 48 hours notice must be given to the Howard County Department of Inspections, Licenses and Permits, Sediment Control Division prior to the start of any construction (313–1855).
2. All vegetative and structural practices are to be installed according to the provisions of this plan and are to be in conformance with the 1994 MARYLAND STANDARDS AND SPECS. FOR SOIL EROSION AND SEDIMENT CONTROL and revisions thereto.
3. Following initial soil disturbance or redisturbance, permanent or temporary stabilization shall be completed within:
   a) 7 calendar days for all perimeter sediment control stuctures, dikes, perimeter slopes and all slopes greater than 3:1
   b) 14 days as to all other disturbed or graded areas on the project site.
4. All sediment traps/basins shown must be fenced and warning signs posted around their perimeters in accordance with Vol.1, Chapter 7, of the HOWARD COUNTY DESIGN MANUAL, Storm Drainage.
5. All disturbed areas must be stabilized within the time period specified above, in accordance with the 1994 MARYLAND STANDARDS AND SPECIFICATIONS FOR SOIL EROSION AND SEDIMENT CONTROL for permanent seedings, sod, temporary seeding and mulching (Sec G). Temporary stabilization with mulch alone can only be done when recommended seeding dates do not allow for proper germination and establishment of grasses.
6. All sediment control structures are to remain in place and are to be maintained in operative condition until permission for their removal has been obtained from the Howard County Sediment Control Inspector.
7. SITE ANALYSIS:

Total Area of Site:	5.63 Acres
Area Disturbed:	1.73 Acres
Area to be roofed or paved:	0.20 Acres
Area to be vegetatively stabilized:	1.53 Acres
Total Cut:	2,720 CY
Total Fill:	120 CY
Offsite Waste/Borrow Area Location:	*

8. Any sediment control practice which is disturbed by grading activity for placement of utilities must be repaired on the same day of disturbance.
9. Additional sediment control must be provided, if deemed necessary by the Howard County DPW Sediment Control Inspector.
10. On all sites with disturbed areas in excess of 2 acres, approval of the inspection agency shall be requested upon completion of installation of perimeter erosion and sediment controls, but before proceeding with any other earth disturbance or grading. Other building or grading inspection approvals may not be authorized until this initial approval by the inspection agency is made.
11. Trenches for the construction of utilities shall be backfilled and stabilized within one working day, or is limited to three pipe lengths.
12. The total amount of earth dike = 950 LF
13. The total amount of super silt fence = 890 LF
14. The total amount of super silt fence = 117 LF

* It is the responsibility of the contractor to identify the spoil/borrow site and notify and gain approval from the sediment control inspector of the site and it's grading permit number at the time of construction.

ALL CUT/FILL QUANTITIES SHOWN ARE FOR THE REVIEWING AGENCIES ONLY. THE CONTRACTOR IS RESPONSIBLE FOR VERIFYING ALL CALCULATIONS TO HIS OWN SATISFACTION FOR BID/CONTRACT PURPOSES.

DETAIL 33 – SUPER SILT FENCE

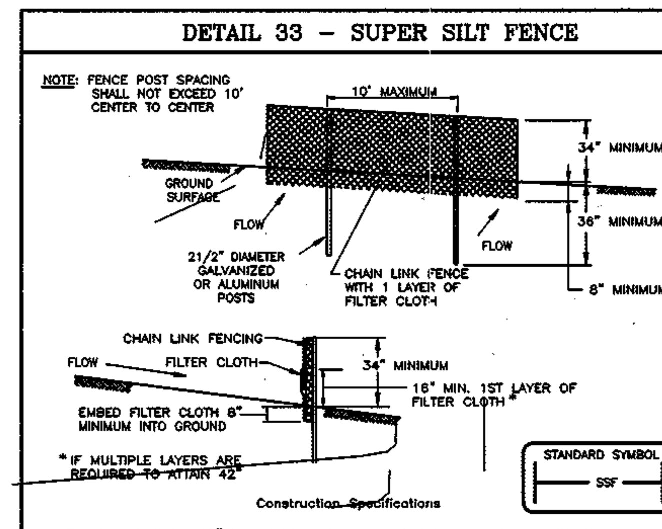

Construction Specifications

1. Fencing shall be 42" in height and constructed in accordance with the latest Maryland State Highway Details for Chain Link Fencing. The specification for a 6' fence shall be used, substituting 42" fabric and 6' length posts.
2. Chain link fence shall be fastened securely to the fence posts with wire ties. The lower tension wire, brace and truss rods, drive anchors and post caps are not required except on the ends of the fence.
3. Filter cloth shall be fastened securely to the chain link fence with ties spaced every 24" at the top and mid section.
4. Filter cloth shall be embedded a minimum of 8" into the ground.
5. When two sections of filter cloth adjoin each other, they shall be overlapped by 6" and folded.
6. Maintenance shall be performed as needed and silt buildups removed when "bulges" develop in the silt fence, or when silt reaches 50% of fence height
7. Filter cloth shall be fastened securely to each fence post with wire ties or staples at top and mid section and shall meet the following requirements for Geotextile Class F:

Tensile Strength	50 lbs/in (min.)	Test: MSMT 509
Tensile Modulus	20 lbs/in (min.)	Test: MSMT 509
Flow Rate	0.3 gal/ft²/minute (max.)	Test: MSMT 322
Filtering Efficiency	75% (min.)	Test: MSMT 322

U.S. DEPARTMENT OF AGRICULTURE SOIL CONSERVATION SERVICE	PAGE H - 26 - 3	MARYLAND DEPARTMENT OF ENVIRONMENT WATER MANAGEMENT ADMINISTRATION

DETAIL 30 – EROSION CONTROL MATTING

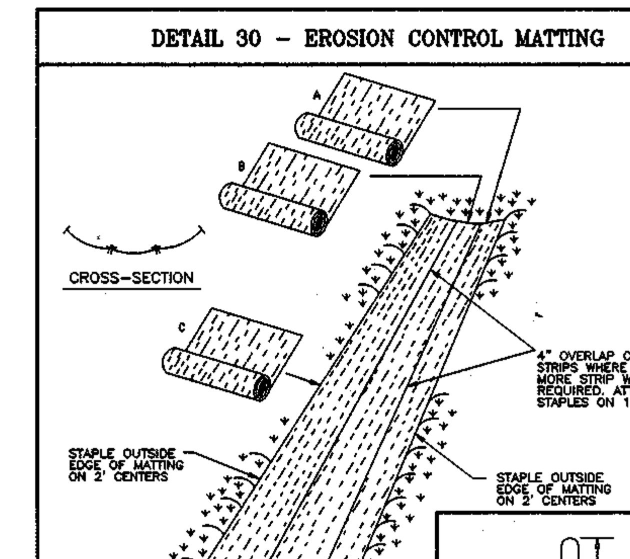

Construction Specifications

1. Key-in the matting by placing the top ends of the matting in a narrow trench, 6" in depth. Backfill the trench and tamp firmly to conform to the channel cross-section. Secure with a row of staples about 4" down slope from the trench. Spacing between staples is 6".
2. Staple the 4" overlap in the channel center using an 18" spacing between staples.
3. Before stapling the outer edges of the matting, make sure the matting is smooth and in firm contact with the soil.
4. Staples shall be placed 2' apart with 4 rows for each strip, 2 outer rows, and 2 alternating rows down the center.
5. Where one roll of matting ends and another begins, the end of the top strip shall overlap the upper end of the lower strip by 4", shiplap fashion. Reinforce the overlap with a double row of staples spaced 6" apart in a staggered pattern on either side.
6. The discharge end of the matting liner should be similarly secured with 2 double rows of staples.

Note: If flow will enter from the edge of the matting then the area effected by the flow must be keyed-in.

U.S. DEPARTMENT OF AGRICULTURE SOIL CONSERVATION SERVICE	PAGE G - 22 - 2	MARYLAND DEPARTMENT OF ENVIRONMENT WATER MANAGEMENT ADMINISTRATION

DETAIL 5 – RIP-RAP INFLOW PROTECTION

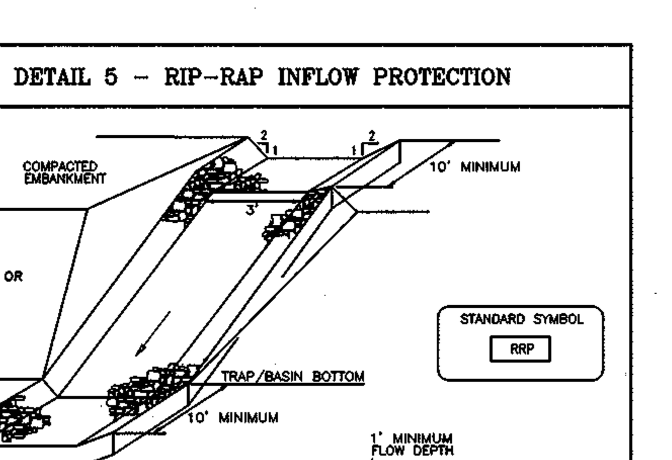

Construction Specifications

1. Rip-rap lined inflow channels shall be 1' in depth, have a trapezoidal cross section with 2:1 or flatter side slopes and 3' (min.) bottom width. The channel shall be lined with 4" to 12" rip- rap to a depth of 18".
2. Filter cloth shall be installed under all rip-rap. Filter cloth shall be Geotextile Class C.
3. Entrance and exit sections shall be installed as shown on the detail section.
4. Rip-rap used for the lining may be recycled for permanent outlet protection if the basin is to be converted to a stormwater management facility.
5. Gabion Inflow Protection may be used in lieu of Rip-rap Inflow Protection.
6. Rip-rap should blend into existing ground.
7. Rip-rap Inflow Protection shall be used where the slope is between 4:1 and 10:1, for slopes flatter than 10:1 use Earth Dike or Temporary Swale lining criteria.

U.S. DEPARTMENT OF AGRICULTURE SOIL CONSERVATION SERVICE	PAGE B - 6 - 2	MARYLAND DEPARTMENT OF ENVIRONMENT WATER MANAGEMENT ADMINISTRATION

DETAIL 23A – STANDARD INLET PROTECTION

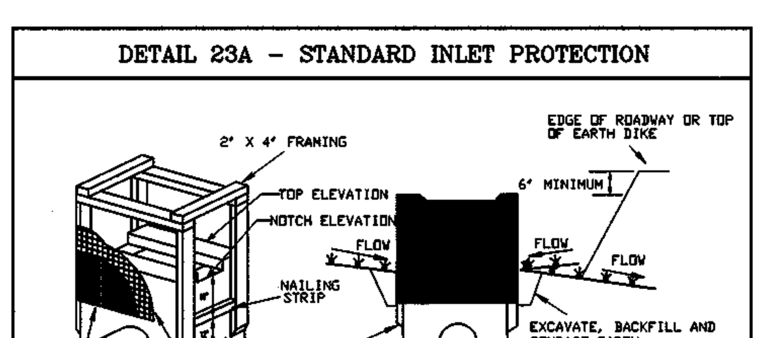

MAX. DRAINAGE AREA = 1/4 ACRE

Construction Specifications

1. Excavate completely around the inlet to a depth of 18' below the notch elevation.
2. Drive the 2' x 4' construction grade lumber posts 1' into the ground at each corner of the inlet. Place nail strips between the posts on the ends of the inlet. Assemble the top portion of the 2' x 4' frame using the overlap joint shown on Detail 23A. The top of the frame (weir) must be 6' below adjacent roadways where flooding and safety issues may arise.
3. Stretch the 1/2' x 1/2' wire mesh tightly around the frame and fasten securely. The ends must meet and overlap at a post.
4. Stretch the Geotextile Class E tightly over the wire mesh with the geotixtile extending from the top of the frame to 18' below the inlet notch elevation. Fasten the geotextile firmly to the frame. The ends of the geotextile must meet at a post, be overlapped and folded, then fastened down.
5. Backfill around the inlet in compacted 6' layers until the layer of earth is level with the notch elevation on the ends and top elevation on the sides.
6. If the inlet is not in a sump, construct a compacted earth dike across the ditch line directly below it. The top of the earth dike should be at least 6' higher than the top of the frame.
7. The structure must be inspected periodically and after each rain and the geotextile replaced when it becomes clogged.

U.S. DEPARTMENT OF AGRICULTURE SOIL CONSERVATION SERVICE	PAGE E - 16 - 5	MARYLAND DEPARTMENT OF ENVIRONMENT WATER MANAGEMENT ADMINISTRATION

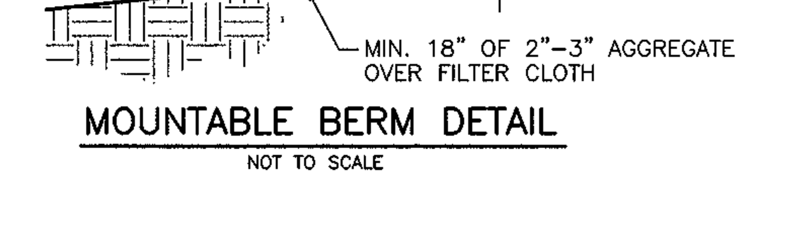

MOUNTABLE BERM DETAIL

NOT TO SCALE

21.0 STANDARDS AND SPECIFICATIONS FOR TOPSOIL

Definition

Placement of topsoil over a prepared subsoil prior to establishment of permanent vegetation.

Purpose

To provide a suitable soil medium for vegetable growth. Soils of concern have low moisture content, low nutrient levels, low pH, materials toxic to plants, and/or unacceptable soil gradation.

Conditions Where Practice Applies

I. This practice is limited to areas having 2:1 or flatter slopes where:
   a. The texture of the exposed subsoil/parent material is not adequate to produce vegetative growth.
   b. The soil material is so shallow that the rooting zone is not deep enough to support plants or furnish continuing supplies of moisture and plant nutrients.
   c. The original soil to be vegetated contains material toxic to plant growth.
   d. The soil is so acidic that treatment with limestone is not feasible.

II. For the purpose of these Standards and Specifications, areas having slopes steeper than 2:1 require special consideration and design for adequate stabilization. Areas having slopes steeper than 2:1 shall have the appropriate stabilization shown on the plans.

Construction and Material Specifications

I. Topsoil salvaged from the existing site may be used provided that it meets the standards as set forth in these specifications. Typically, the depth of topsoil to be salvaged for a given soil type can be found in the representative soil profile section in the Soil Survey published by USDA-SCS in cooperation with Maryland Agricultural Experimental Station.

II. Topsoil Specifications – Soil to be used as topsoil must meet the following:
   i. Topsoil shall be a loam, sandy loam, clay loam, silt loam, sandy clay loam, loamy sand. Other soils may be used if recommended by an agronomist or a soil scientist and approved by the appropriate approval authority. Regardless, topsoil shall not be a mixture of contrasting textured subsoils and shall contain less than 5% by volume of cinders, stones, slag, coarse fragments, gravel, sticks, roots, trash, or other materials larger than 1 1/2" in diameter.
   ii. Topsoil must be free of plants or plant parts such as Bermuda grass, quackgrass, Johnsongrass, nutsedge, poison ivy, thistle, or others as specified.
   iii. Where the subsoil is either highly acidic or composed of heavy clays, ground limestone shall be spread at the rate of 4–8 tons/acre (200–400 pounds per 1,000 square feet) prior to the placement of topsoil. Lime shall be distributed uniformly over designated areas and worked into the soil in conjunction with tillage operations as described in the following procedures.

III. For sites having disturbed areas under 5 acres:
   i. Place topsoil (if required) and apply soil amendments as specified in 20.0 Vegetative Stabilization – Section I – Vegetative Stabilization Methods and Materials.

IV. For sites having disturbed areas over 5 acres:
   i. On soil meeting topsoil specifications, obtain test results dictating fertilizer and lime amendments required to bring the soil into compliance with the following:
      a. pH for topsoil shall be between 6.0 and 7.5. If the tested soil demonstrates a pH of less than 6.0, sufficient lime shall be prescribed to raise the pH to 6.5 or higher.
      b. Organic content of topsoil shall be not less than 1.5 percent by weight.
      c. Topsoil having soluble salt content greater than 500 parts per million shall not be used.
      d. No sod or seed shall be placed on soil which has been treated with soil sterilants or chemicals used for weed control until sufficient time has elapsed (14 days min.) to permit dissipation of phyto-toxic materials.

   NOTE: Topsoil substitutes or amendments, as recommended by a qualified agronomist or soil scientist and approved by the appropriate approval authority, may be used in lieu of natural topsoil.

   ii. Place topsoil (if required) and apply soil amendments specified in 20.0 Vegetative Stabilization–Section I–Vegetative Stabilization Methods and Materials.

V. Topsoil Application
   i. When topsoiling, maintain needed erosion and sediment control practices such as diversions, Grade Stabilization Structures, Earth Dikes, Slope Silt Fence and Sediment Traps and Basins.
   ii. Grades on the areas to be topsoiled, which have been previously established, shall be maintained, albeit 4"– 8" higher in elevation.
   iii. Topsoil shall be uniformly distributed in a 4"–8" layer and lightly compacted to a minimum thickness of 4". Spreading shall be performed in such a manner that sodding or seeding can proceed with a minimum of additional soil preparation and tillage. Any irregularities in the surface resulting from topsoiling or other operations shall be corrected in order to prevent the formation of depressions or water pockets.
   iv. Topsoil shall not be place while the topsoil or subsoil is in a frozen or muddy condition, when the subsoil is excessively wet or in a condition that may otherwise be detrimental to proper grading and seedbed preparation.

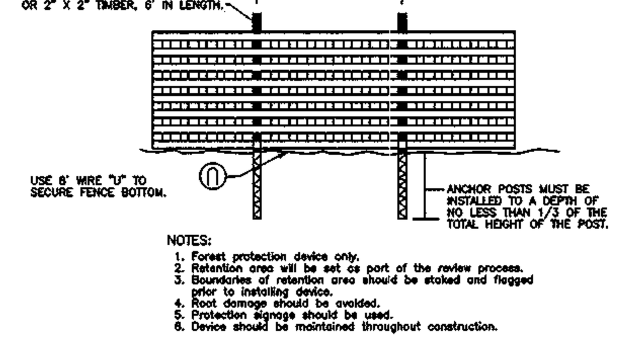

NOTES:
1. Forest protection device only.
2. Retention area will be set as part of the review process.
3. Boundaries of retention area should be staked and flagged prior to installing device.
4. Root damage should be avoided.
5. Protection signage should be used.
6. Device should be maintained throughout construction.

BLAZE ORANGE PLASTIC MESH
TYPICAL TREE PROTECTION FENCE DETAIL
NO SCALE

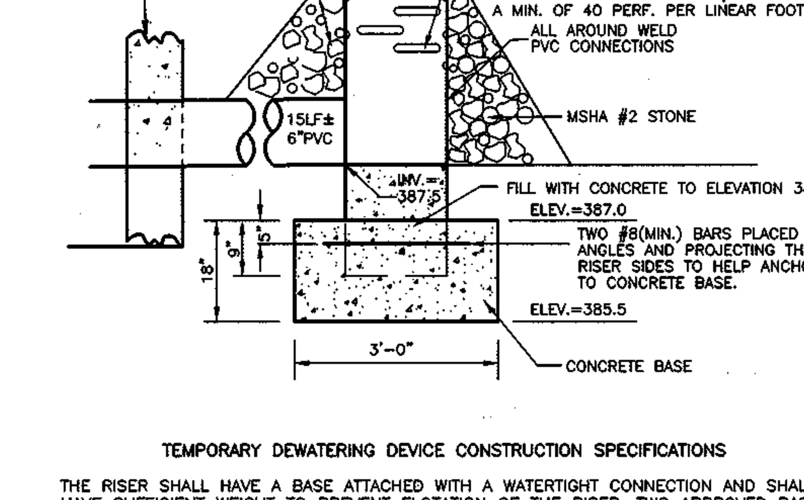

TEMPORARY DEWATERING DEVICE CONSTRUCTION SPECIFICATIONS

THE RISER SHALL HAVE A BASE ATTACHED WITH A WATERTIGHT CONNECTION AND SHALL HAVE SUFFICIENT WEIGHT TO PREVENT FLOTATION OF THE RISER. TWO APPROVED BASES FOR RISERS 10' OR LESS IN HEIGHT ARE:

1. A CONCRETE BASE 18" THICK WITH THE RISER EMBEDDED 9" IN THE BASE.
2. A 1/4" MINIMUM THICKNESS STEEL PLATE ATTACHED TO THE RISER BY A CONTINUOUS WELD AROUND THE CIRCUMFERENCE OF THE RISER TO FORM A WATERTIGHT CONNECTION. THE PLATE SHALL HAVE 2' OF STONE, GRAVEL, OR COMPACTED EARTH PLACED ON IT TO PREVENT FLOTATION. IN EITHER CASE, EACH SIDE OF THE SQUARE BASE SHALL BE TWICE THE RISER DIAMETER.

NOTE: FOR RISERS GREATER THAN TEN FEET HIGH COMPUTATIONS SHALL BE MADE TO DESIGN A BASE WHICH WILL PREVENT FLOATATION. THE MINIMUM FACTOR OF SAFETY SHALL BE 1.20 (DOWNWARD FORCES = 1.20 X UPWARD FORCES).

18" PVC RISER WITH CONCRETE BASE HAS BEEN SHOWN. THE CONTRACTOR MAY PROVIDE AN EQUIVALENT CMP RISER WITH STEEL PLATE, PROVIDING A WATER TIGHT COUPLING IS INSTALLED WHEN CONNECTING RISER TO 6" PVC OUTFALL.

TEMPORARY DEWATERING DEVICE

NOT TO SCALE

SEDIMENT BASIN CONSTRUCTION SPECIFICATIONS

1. Site Preparation: Perimeter sediment control devices must be installed prior to clearing and grubbing. Areas where the embankment is to be placed shall be cleared, grubbed, and stripped of topsiol to remove trees, vegetation, roots or other objectionable material. The pool area shall not be cleared until completion of the dam embankment unless the pool area is to be used for borrow. In order to facilitate clean-out and restoration, the pool area (measured at the top of the pipe spillway) shall be cleared of all brush, trees and other objectionable materials.

2. Cut-off Trench: A cut-off trench shall be excavated along the centerline of earth fill embankments. The minimum depth shall be four feet. The cut-off trench shall extend up both abutments to the riser crest elevation. The minimum bottom width shall be two feet, but wide enough to permit operation of excavation and compaction equipment. The side slopes shall be no steeper than 1:1. Compaction requirements shall be the same as those for the embankment. The trench shall be dewatered during the backfilling–compaction operations. For dewatering see Section D.

3. Embankment: The fill material shall be taken from approved areas shown on the plans. It shall be clean mineral soil free of roots, woody vegetation, oversized stones, rocks, or other objectionable material. Relatively pervious materials such as sand or gravel (Unified Soil Classes GW, GP, SW & SP) or organic materials (Unified Soil Classes OL and OH) shall not be placed in the embankment. Areas on which fill is to be placed shall be scarified prior to placement of fill. The fill material shall contain sufficient moisture so that it can be formed by hand into a ball without crumbling. If water can be squeezed out of the ball, it is too wet for proper compaction. Fill material shall be placed in six-inch to eight-inch thick continuous lifts over the entire length of the fill. Compaction shall be obtained by routing and hauling the construction equipment over the fill so that the entire surface of each layer of the fill is traversed by at least one wheel or tread track of the equipment or by the use of a compactor. The embankment shall be constructed to an elevation 10 percent higher than the design height to allow for settlement.

4. Principal Spillway: Steel risers shall be securely attached to the barrel or barrel stub by welding the full circumference making a watertight structural connection. Concrete risers shall be poured with the principal spillway in place or precast with voids around the principal spillway filled with concrete or shrink proof grout for watertight connection. The barrel stub must be attached to the riser at the same percent (angle) of grade as the outlet conduit. The connection between the riser and the riser base shall be watertight. All connections between barrel sections must be achieved by approved watertight band assemblies. The barrel and riser shall be placed on a firm, smooth foundation of impervious soil as the embankment is constructed. Breaching the embankment to install the barrel is unacceptable. Pervious materials such as sand, gravel, or crushed stone shall not be used as backfill around the pipe or anti-seep collars. The fill material around the pipe spillway shall be placed in four-inch lifts and hand compacted under and around the pipe to at least the same density as the adjacent embankment. A depth of 1.5 times the pipe diameter (minimum) shall be backfilled over the principal spillway and hand compacted before crossing it with construction equipment.

5. Emergency Spillway: The emergency spillway shall be installed in undisturbed ground. The achievement of planned elevations, grades, design width, entrance and exit channel slopes are critical to the successful operation of the emergency spillway and must be constructed within a tolerance of +/– 0.2 feet.

6. Vegetative Treatment: Stabilize the embankment in accordance with the appropriate vegetative Standard and Specifications immediately following construction. In no case shall the embankment remain unstabilized for more than seven (7) days. Once constructed, the top and outside face of the embankment shall be stabilized with seed and mulch. The remainder of the interior slopes should be stabilized (one time) with seed and mulch upon basin completion and monitored and maintained erosion free during the life of the basin.

7. Safety: Local requirements concerning fencing and signs shall be met, warning the public of hazards of soft sediment and floodwater.

8. Maintenance: Repair all damage caused by soil erosion and construction equipment at or before the end of each working day. Sediment shall be removed from the basin when it reaches the specified distance below the top of the riser as shown on the riser. This sediment shall be placed in such a manner that it will not erode from the site. The sediment shall not be deposited downstream from the embankment, adjacent to a stream or floodplain. Disposal areas must be stabilized.

9. Final Disposal: When temporary structures have served their intended purpose and the contributing drainage area has been properly stabilized, the embankment and resulting sediment deposits are to be leveled or otherwise disposed of in accordance with the approved sediment control plan. The proposed use of a sediment basin site will often dictate final disposition of the basin and any sediment contained therein. If the site is scheduled for future construction, then the basin material and trapped sediments must be removed and safely disposed of and the basin shall be backfilled with a structural fill. When the basin area is to remain open space, the pond may be pumped dry (using methods in Section D – Dewatering), graded and backfilled.

10. Conversion to Stormwater Management Structure: After permanent stabilization of all disturbed contributory drainage areas, temporary sediment basins, if initially built and certified to meet permanent standards, may be converted to permanent stormwater management structures. To convert the basin from temporary to permanent use, the outlet structure must be modified in accordance with approved stormwater management design plans. Additional grading may also be necessary to provide the required storage volume in the basin. Conversion can only take place after all disturbed area have been permanently stabilized to the satisfaction of the inspection authority and storm drains have been flushed.

APPROVED: DEPARTMENT OF PUBLIC WORKS

~~CHIEF, BUREAU OF HIGHWAYS~~ N/A DATE

APPROVED: DEPARTMENT OF PLANNING & ZONING

CHIEF, DIVISION OF LAND DEVELOPMENT [signature] 8/15/03 DATE

CHIEF, DEVELOPMENT ENGINEERING DIVISION MB [signature] 8/13/03 DATE

Reviewed for HOWARD S.C.D. and meets Technical Requirements
[signature] 7/21/03
Signature Date
U.S. Natural Resources Conservation Service

THIS DEVELOPMENT PLAN IS APPROVED FOR SOIL EROSION AND SEDIMENT CONTROL BY THE HOWARD SOIL CONSERVATION DISTRICT.

[signature] 7/31/03
HOWARD S.C.D. DATE

DEVELOPER'S/BUILDER'S CERTIFICATE

"I/We certify that all development and construction will be done according to this plan of development and plan for sediment and erosion control and that all responsible personnel involved in the construction project will have a Certificate of Attendance at a Department of the Environment Approved Training Program for the Control of Sediment and Erosion before beginning the project. I also authorize periodic on-site inspection by the Howard Soil Conservation District or their authorized agents, as are deemed necessary".

[signature] 7-1-03
NAME DATE

ENGINEER'S CERTIFICATE

I hereby certify that this plan for Sediment and Erosion Control represents a practical and workable plan based on my personal knowledge of the site conditions and that it was prepared in accordance with the requirements of the Howard Soil Conservation District.

[signature] 6-30-03
G. NELSON CLARK DATE

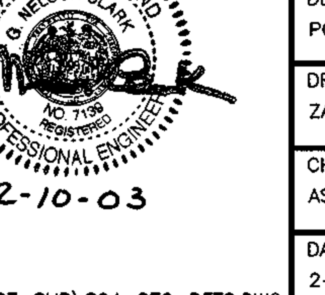

2-10-03

OWNER / DEVELOPER

BONNIELASS LLC
8835–P COLUMBIA 100 PARKWAY
COLUMBIA, MARYLAND 21045

CLARK · FINEFROCK & SACKETT, INC.
ENGINEERS · PLANNERS · SURVEYORS
7135 MINSTREL WAY · COLUMBIA, MD 21045 · (410) 381–7500 BALT. · (301) 621–8100 WASH.

DESIGNED PC/AS	SEDIMENT AND EROSION CONTROL DETAILS	SCALE
DRAWN ZAH/CRH2	**BONNIELASS**	DRAWING 4 of 15
CHECKED AS	TAX MAP 31 PARCEL 254 GRID 9 ZONING R–20 FIRST (1ST) ELECTION DISTRICT HOWARD COUNTY, MARYLAND	JOB NO. 00–098
DATE 2–10–03		FILE NO. 00–098–D

#6 D:\DRAWINGS\00098-BONNIELASS\1ST-RE-SUB\S04-SEC-DETS.DWG

F–01–208

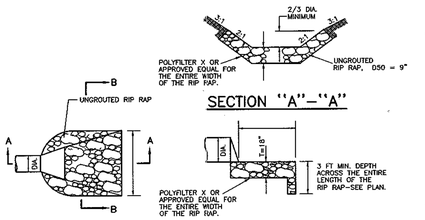

RIP RAP SCHEDULE

	WIDTH 'W'	LENGTH 'L'
ES–1	8'	12'
FOREBAY	8'	14'

UNGROUTED RIP RAP DETAIL

NO SCALE

Construction Specifications

1. The subgrade for the filter, rip–rap, or gabion shall be prepared to the required lines and grades. Any fill required in the subgrade shall be compacted to a density of approximately that of the surrounding undisturbed material.

2. The rock or gravel shall conform to the specified grading limits when installed respectively in the rip–rap or filter.

3. Geotextile shall be protected from punching, cutting, or tearing. Any damage other than an occasional small hole shall be repaired by placing another piece of geotextile over the damaged part or by completely replacing the geotextile. All overlaps whether for repairs or for joining two pieces of geotextile shall be a minimum of one foot.

4. Stone for the rip–rap or gabion outlets may be placed by equipment. They shall be constructed to the full course thickness in one operation and in such a manner as to avoid displacement of underlying materials. The stone for rip–rap or gabion outlets shall be delivered and placed in a manner that will ensure that it is reasonably homogeneous with the smaller stones and spalls filling the voids between the larger stones. Rip–rap shall be placed in a manner to prevent damage to the filter blanket or geotextile. Hand placement will be required to the extent necessary to prevent damage to the permanent works.

5. The stone shall be placed so that it blends in with the existing ground. If the stone is placed too high then the flow will be forced out of the channel and scour adjacent to the stone will occur.

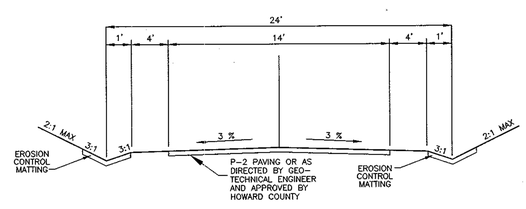

TYPICAL SECTION
PRIVATE ACCESS PLACE

NO SCALE

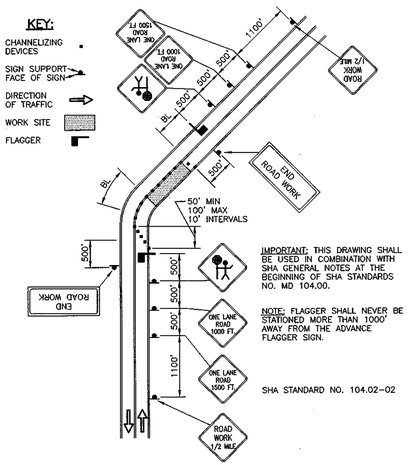

IMPORTANT: THIS DRAWING SHALL BE USED IN COMBINATION WITH SHA GENERAL NOTES AT THE BEGINNING OF SHA STANDARDS NO. MD 104.00.

NOTE: FLAGGER SHALL NEVER BE STATIONED MORE THAN 1000' AWAY FROM THE ADVANCE FLAGGER SIGN.

SHA STANDARD NO. 104.02–02

TRAFFIC CONTROL DETAIL

NO SCALE

1–1/2" SURFACE COURSE
2–1/2" BASE COURSE
6" AGGREGATE BASE

P–2 PAVING SECTION

NO SCALE

STRUCTURE SCHEDULE

NO.	TYPE	INVERT IN	INVERT OUT	REMARKS	LOCATION
ES–1	24" RCP END SECTION	359.6	359.2	HO. CO. STD. SD 5.52	N. 571865.15, E. 1374031.67
MH–1	MANHOLE 48" DIA.	363.5	376.0	HO. CO. STD. S 1.32	N. 571856.65, E. 1374150.36
MH–2	MANHOLE 48" DIA.	383.2	384.7	HO. CO. STD. S 1.32	N. 571886.48, E. 1374148.86
MH–3	MANHOLE 48" DIA	388.24	388.14	HO. CO. STD. S 1.32	N. 572000.60, E. 1374268.75
MH–4	MANHOLE 48" DIA	394.25	394.0	HO. CO. STD. S 1.32	N. 571991.01, E. 1374273.00
MH–5	MANHOLE 48" DIA	388.66	388.56	HO. CO. STD. S 1.32	N. 571993.74, E. 1374286.98
S–1	CONCRETE RISER	385.5	385.0	REFER TO DETAIL– SHEET 6	N. 571897.20, E. 1374169.42
S–2	TRASH RACK BASE	–	–	REFER TO DETAIL– SHEET 6	SEE PLAN
I–1	TYPE 'S' INLET	387.42	387.32	HO. CO. STD SD 4.22\4.23 MODIFIED TO INCLUDE ALUMINUM GRATE REFER TO SHT 7 OF FOR ADD. DETAILS	N. 572016.69, E. 1374226.94
I–2	TYPE 'DOUBLE S' INLET	–	398.25	HO. CO. STD. SD 4.22\4.23	N. 572008.54, E. 1374295.64
I–3	TYPE 'S' INLET	390.70	390.60	HO. CO. STD. SD 4.12\4.13	N. 571857.33, E. 1374272.94
I–4	TYPE 'DOUBLE S' INLET	392.8	392.6	HO. CO. STD SD 4.22\4.23	N. 571829.91, E. 1374338.18
I–5	TYPE 'S' INLET	393.25	393.00	HO. CO. STD SD 4.22\4.23	N. 571808.63 E. 1374343.47
I–6	TYPE 'S' INLET	–	403.66	HO. CO. STD SD 4.22\4.23	N. 571793.23 E. 1374369.82

PIPE SCHEDULE

SIZE	TYPE	LENGTH
4"	PVC	25 LF
15"	RCP	80 LF
18"	RCP	316 LF
24"	RCPR	20 LF
24"	RCP	113 LF

RCPR – REINFORCED CONCRETE PIPE WITH RUBBER GASKET.
RCP – REINFORCED CONCRETE PIPE.

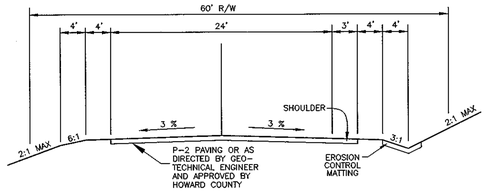

PROPOSED CROSS–SECTION FOR
BONNIE BRANCH ROAD IMPROVEMENTS
MINOR COLLECTOR

NO SCALE

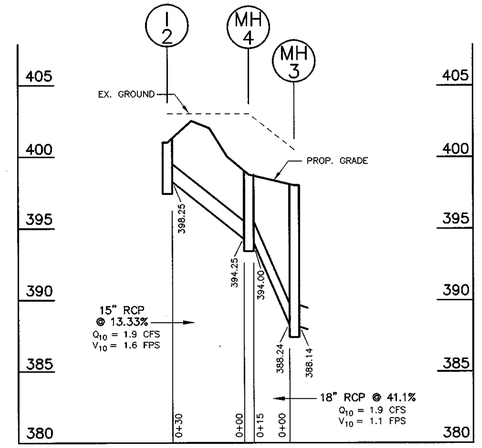

STORM DRAIN SYSTEM
SCALE: HOR. 1"=30'
VER. 1"=5'

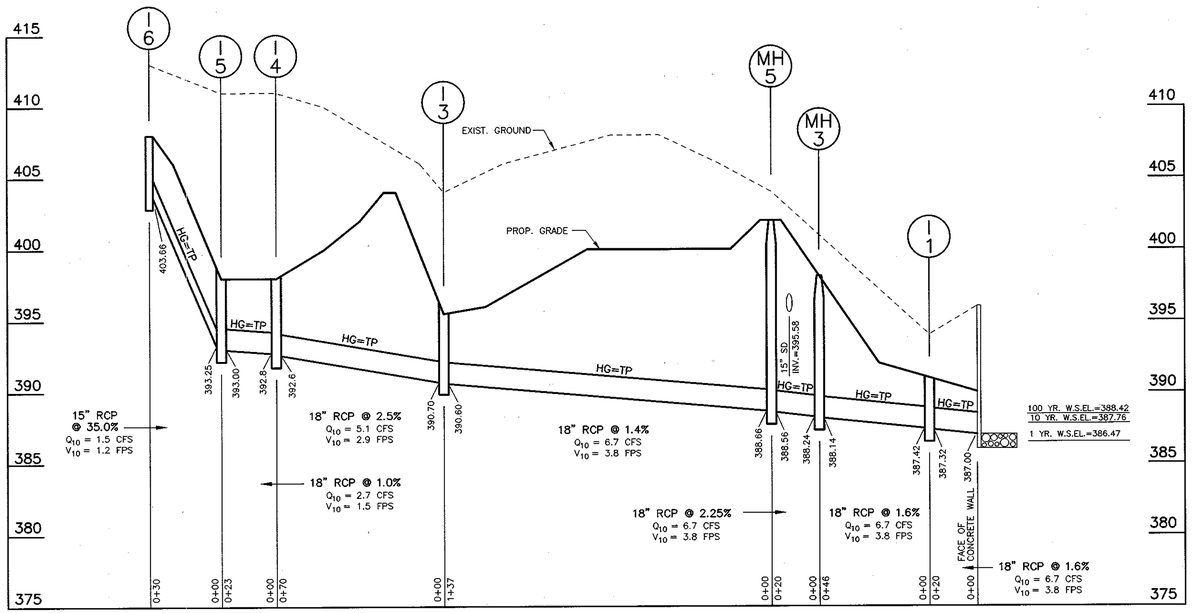

STORM DRAIN SYSTEM
SCALE: HOR. 1"=30'
VER. 1"=5'

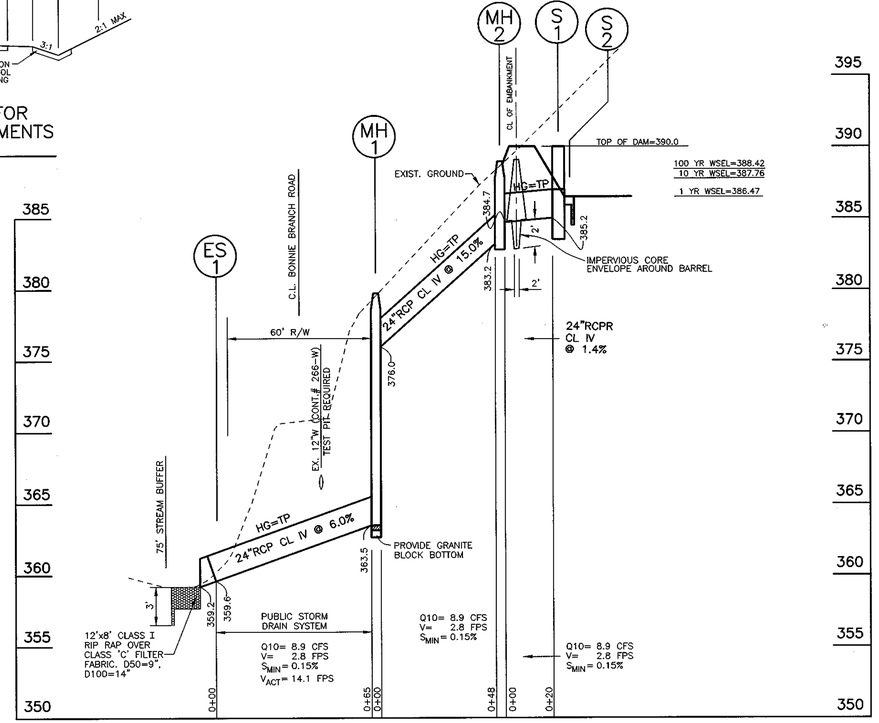

PRINCIPLE SPILLWAY
SCALE: HOR. 1"=30'
VER. 1"=5'

OWNER / DEVELOPER
BONNIELASS LLC.
8835–P COLUMBIA 100 PARKWAY
COLUMBIA, MARYLAND 21045

APPROVED: DEPARTMENT OF PUBLIC WORKS
CHIEF, BUREAU OF HIGHWAYS — DATE N/A

APPROVED: DEPARTMENT OF PLANNING & ZONING
CHIEF, DIVISION OF LAND DEVELOPMENT — DATE 8/15/03
CHIEF, DEVELOPMENT ENGINEERING DIVISION — DATE 8/18/03

Reviewed for HOWARD S.C.D. and meets Technical Requirements
U.S. Natural Resources Conservation Service — Signature — Date 7/31/03

THIS DEVELOPMENT PLAN IS APPROVED FOR SOIL EROSION AND SEDIMENT CONTROL BY THE HOWARD SOIL CONSERVATION DISTRICT.

HOWARD S.C.D. — DATE 7/31/03

DEVELOPER'S/BUILDER'S CERTIFICATE

"I/We certify that all development and construction will be done according to this plan of development and plan for sediment and erosion control and that all responsible personnel involved in the construction project will have a Certificate of Attendance at a Department of the Environment Approved Training Program for the Control of Sediment and Erosion before beginning the project. I also authorize periodic on–site inspection by the Howard Soil Conservation District or their authorized agents, as are deemed necessary".

NAME — DATE 7.3.03

ENGINEER'S CERTIFICATE

I hereby certify that this plan for Sediment and Erosion Control represents a practical and workable plan based on my personal knowledge of the site conditions and that it was prepared in accordance with the requirements of the Howard Soil Conservation District.

G. NELSON CLARK — DATE 6-25-03

STATE OF MARYLAND — G. NELSON CLARK — No. 10193 — REGISTERED PROFESSIONAL ENGINEER
2-10-03

#6 D:\DRAWINGS\00098–BONNIELASS\1ST–RE–SUB\S05–SD–PROF–PAV–DETS.DWG

CLARK · FINEFROCK & SACKETT, INC.
ENGINEERS · PLANNERS · SURVEYORS
7135 MINSTREL WAY · COLUMBIA, MD 21045 · (410) 381–7500 BALT. · (301) 621–8100 WASH.

DESIGNED	PC/AS
DRAWN	ZAH/CRH2
CHECKED	AS
DATE	2–10–03

STORM DRAIN PROFILES AND PAVING DETAILS
BONNIELASS
TAX MAP 31 PARCEL 254
GRID 9 ZONING R–20
FIRST (1ST) ELECTION DISTRICT
HOWARD COUNTY, MARYLAND

SCALE	1"=30'
DRAWING	5 of 15
JOB NO.	00–098
FILE NO.	00–098–D

F–01–208

on 4/4/2003 2:23:53 PM by jwb [web plot–job–log–out–to–hp–3si–800/dpi–3si–12x18/landscape–08000/dpi–600/0]

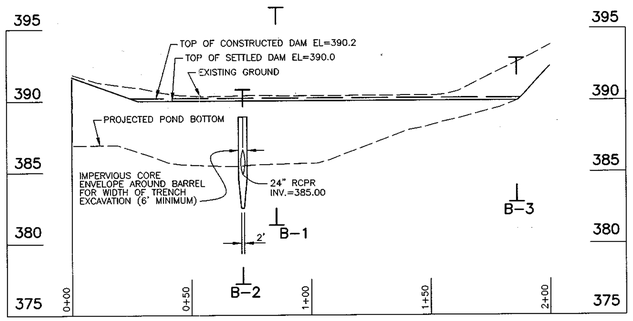

CENTERLINE OF EMBANKMENT PROFILE POND

SCALE: HOR. 1"=30' VER. 1"=5'

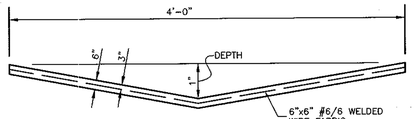

NOTE:
CONCRETE SHALL BE S.H.A. MIX NO.2

LOW FLOW CHANNEL

NO SCALE

SWM POND DESIGN SUMMARY					
DESIGN STORM	ALLOWABLE RELEASE RATE	FACILITY IN FLOW	FACILITY DISCHARGE	WATER SURFACE ELEVATION	STORAGE VOLUME (AC. FT.)
1 YEAR	1.02 CFS	4.12 CFS	1.02 CFS	386.47 FT.	0.18 ac-ft
10 YEAR	4.71 CFS	14.57 CFS	4.69 CFS	387.76 FT	0.29 ac-ft
100 YEAR	21.42 CFS	24.26 CFS	17.25 CFS	388.42 FT	0.44 ac-ft

HAZARD CLASSIFICATION: A
STORAGE - HEIGHT PRODUCT (392.0-387.5)(0.58)=2.6 ac-ft
WATERSHED AREA TO FACILITY (ACRES): 4.08 AC
LEVEL OF MANAGEMENT PROVIDED BY FACILITY: QUALITY MANAGEMENT TO TREAT 90% OF RUNOFF
QUALITY MANAGEMENT: SURFACE SAND FILTER

GENERAL SWM POND STORAGE REQUIREMENTS			
STEP	REQUIREMENT	VOLUME REQUIRED	NOTES
1	Water Quality Volume (WQv)	0.078 ac-ft	Provided by surface sand filter
2	Recharge Volume (Rev)	0.017 ac-ft	Treated non-structurally via grass channels
3	Channel Protection Volume (Cpv)	0.14 ac-ft	Cpv release rate is 0.1 CFS WSEL.=386.76
4	Overbank Flood Protection Volume (Qp)	13.8 CFS	10-year Protection Volume (Qp)
5	Extreme Flood volume (Qf)	N/A	safe passage for the 100 year event provided.

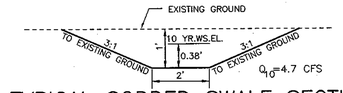

Q_{10}=4.7 CFS

TYPICAL SODDED SWALE SECTION

NO SCALE

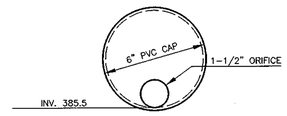

REMOVABLE 6" PVC CAP WITH 1.5" ORIFICE

NO SCALE

HOME OWNERS' ASSOCIATION MAINTENANCE SCHEDULE FOR SWM FACILITY

A. FACILITY IS TO BE INSPECTED ONCE A MONTH AND EXCESSIVE GROWTH CUT OR MOVED AS REQUIRED. NO GROWTH ABOVE 18" ALLOWED DURING GROWING SEASON. BOTTOM TO BE MOVED AS NEEDED.

B. POND SLOPES, TOP & BENCH ARE TO BE MOWED ONCE EVERY MONTH DURING GROWN SEASON.

C. TRASH TO BE REMOVED AFTER EACH MAJOR STORM OR EVERY MONTH, AND DURING REGULAR MOWING OPERATIONS.

D. AN ANNUAL INSPECTION OF THE POND IS TO BE DONE.

E. REMOVE SEDIMENT WHEN DEPTH EXCEEDS 2".

F. CORRECTIVE MAINTENANCE IS TO BE DONE AS NEEDED IF THE POND IS FOUND TO BE UNFUNCTIONAL. WATER DOES NOT DRAIN WITHIN 60 HOURS. INSPECTIONS SHOULD BE PERFORMED DURING WET WEATHER TO DETERMINE IF THE POND IS FUNCTIONING PROPERLY.

G. VISIBLE SIGNS OF EROSION IN THE POND AS WELL AS RIP-RAP OUTLET AREA SHALL BE REPAIRED AS SOON AS IT IS NOTICED.

OPERATION, MAINTENANCE & INSPECTION

INSPECTION OF THE POND SHOWN SHALL BE PERFORMED AT LEAST ANNUALLY, IN ACCORDANCE WITH THE CHECKLIST AND REQUIREMENT CONTAINED WITHIN USDA, SCS "STANDARDS AND SPECIFICATION FOR PONDS" (MD-378). THE POND OWNER(S) AND ANY HEIRS, SUCCESSORS OR ASSIGNS SHALL BE RESPONSIBLE FOR THE SAFETY OF THE POND AND THE CONTINUED OPERATION, SURVEILLANCE, INSPECTION, AND MAINTENANCE THEREOF. THE POND OWNER(S) SHALL PROMPTLY NOTIFY THE SOIL CONSERVATION DISTRICT OF ANY UNUSUAL OBSERVATIONS THAT MAY BE INDICATIONS OF DISTRESS SUCH AS EXCESSIVER SEEPAGE, TURBID SEEPAGE, SLIDING OR SLUMPING. IT SHOULD BE NOTED THAT THIS STRUCTURE DOES NOT MEET THE DEFINITION OF A MD-378 POND. HOWEVER THIS DOES NOT EXEMPT THE OWNER FROM FOLLOWING THE ABOVE REFERENCED MAINTENANCE INSPECTION.

NON-ROUTINE MAINTENANCE

1. STRUCTURAL COMPONENTS OF THE POND SUCH AS THE DAM, THE RISER, AND THE PIPES SHALL BE REPAIRED UPON THE DETECTION OF ANY DAMAGE. THE COMPONENTS SHOULD BE INSPECTED DURING ROUTINE MAINTENANCE OPERATIONS.

2. SEDIMENT SHOULD BE REMOVED WHEN ITS ACCUMULATION SIGNIFICANTLY REDUCES THE DESIGN STORAGE, INTERFERES WITH THE FUNCTION OF THE RISER, WHEN DEEMED NECESSARY FOR AESTHETIC REASONS, OR WHEN DEEMED NECESSARY BY THE HOWARD COUNTY'S DEPARTMENT OF PUBLIC WORKS.

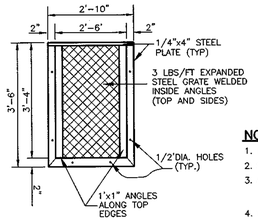

TOP VIEW

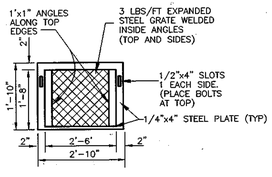

FRONT VIEW

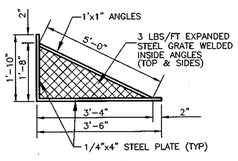

SIDE VIEW

LOW FLOW TRASH RACK

NO SCALE

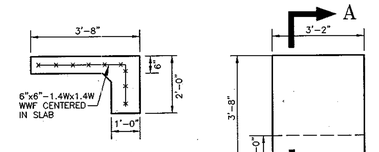

SECTION A-A

PLAN VIEW

NO TRASH RACK SHOWN

S-2 LOW FLOW TRASH RACK BASE

NO SCALE

NOTES FOR TRASH RACK

1. TRASH RACK TO BE CENTERED OVER OPENING.
2. STEEL TO CONFORM TO ASTM-A36.
3. ALL SURFACES TO BE COATED WITH ZRC COLD GALVANIZING COMPOUND AFTER WELDING AND PAINTED WITH 2 COATS OF BATTLESHIP GREY.
4. TRASH RACK TO BE FASTENED TO THE WALL AND BASE WITH 1/2" MASONRY ANCHORS. TRASH RACK TO BE REMOVABLE.

S-1 RISER DETAIL

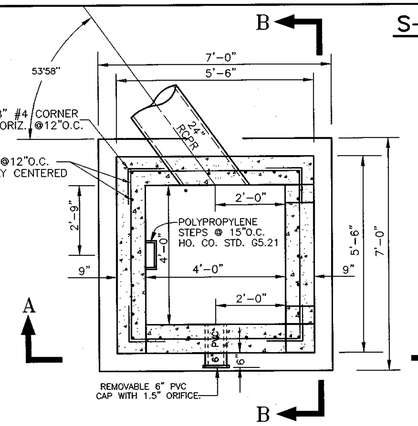

PLAN VIEW WITHOUT TOP SLAB

NOT TO SCALE
(TRASH RACKS NOT SHOWN FOR CLARITY)

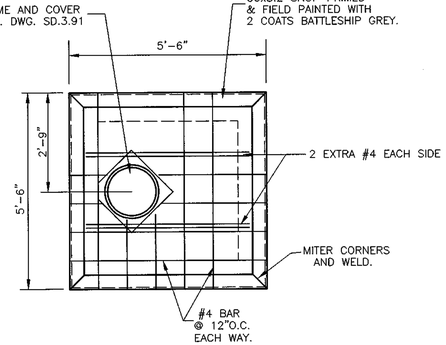

PLAN VIEW OF TOP SLAB

NOT TO SCALE

NOTE:
1. ALL WORK SHALL BE SUPERVISED BY A QUALIFIED GEOTECHNICAL ENGINEER.
2. ALL CONCRETE TO BE 3500 PSI @ 28 WITH AIR ENTRAINMENT.
3. ALL REINFORCING STEEL SHALL BE ASTM 615 GRADE 60.
4. STRUCTURE MAYBE PRECAST. SHOP DRAWINGS SHALL BE SUBMITTED AND APPROVED BY ENGINEER PRIOR TO FABRICATION.
5. RISER SHALL BE PLACE ON APPROVED SUBGRADE. NO STONE IS PERMITTED UNDER RISER.
6. ANY OVER EXCAVATION SHALL BE A MINIMUM OF 4" AND FILLED WITH CONCRETE AS APPROVED BY ON-SITE GEOTECHNICAL ENGINEER. FOR PRECAST STRUCTURE 8'x8'x4" MIN., 2000 PSI MUD MAT SHALL REPLACE ANY REQUIRED OVER EXCAVATION.

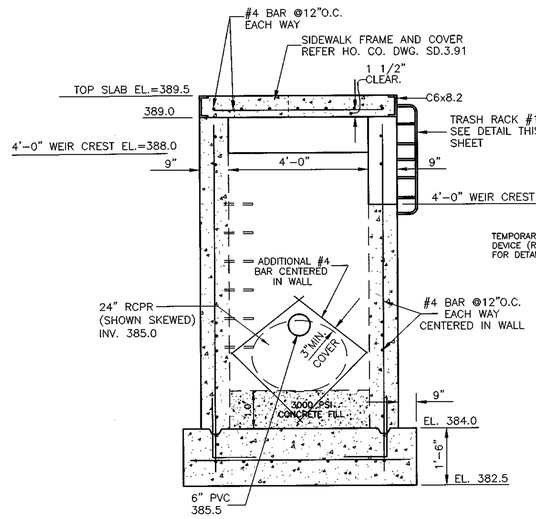

SECTION 'A-A'

NOT TO SCALE

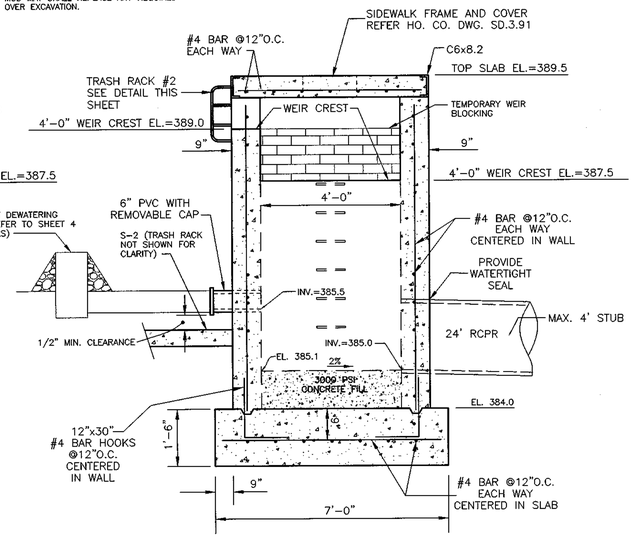

SECTION 'B-B'

NOT TO SCALE

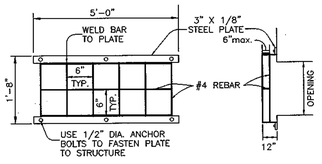

GALVANIZE RACK AFTER FABRICATION. RACK TO BE PAINTED WITH 2 COATS OF BATTLESHIP GRAY.

TRASH RACK #2 DETAIL

NO SCALE

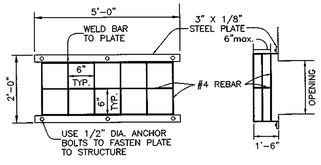

GALVANIZE RACK AFTER FABRICATION. RACK TO BE PAINTED WITH 2 COATS OF BATTLESHIP GRAY.

TRASH RACK #1 DETAIL

NO SCALE

APPROVED: DEPARTMENT OF PUBLIC WORKS

CHIEF, BUREAU OF HIGHWAYS — DATE N/A

APPROVED: DEPARTMENT OF PLANNING & ZONING

CHIEF, DIVISION OF LAND DEVELOPMENT — DATE 8/15/03

CHIEF, DEVELOPMENT ENGINEERING DIVISION — DATE 8/13/03

Reviewed for HOWARD S.C.D. and meets Technical Requirements

Signature — Date 7/31/03

U.S. Natural Resources Conservation Service

THIS DEVELOPMENT PLAN IS APPROVED FOR SOIL EROSION AND SEDIMENT CONTROL BY THE HOWARD SOIL CONSERVATION DISTRICT.

HOWARD S.C.D. — DATE 7/31/03

By The Developer:

"I/We certify that all development and/or construction will be done according to these plans, and that any responsible personnel involved in the construction project will have a Certificate of Attendance at a Department of the Environment Approved Training Program for the Control of Sediment and Erosion before beginning the project. I shall engage a registered professional engineer to supervise pond construction and provide the Howard Soil Conservation District with an "as-built" plan of the pond within 30 days of completion. I also authorize periodic on-site inspections by the Howard Soil Conservation District."

Signature of Developer — Date 7.1.03

By the Engineer:

"I certify that this plan for pond construction, erosion and sediment control represents a practical and workable plan based on my personal knowledge of the site conditions. This plan was prepared in accordance with the requirements of the Howard Soil Conservation District. I have notified the developer that he/she must engage a registered professional engineer to supervise pond construction and provide the Howard Soil Conservation District with an "as-built" plan of the pond within 30 days of completion."

Signature of Engineer — Date 6-25-03

STATE OF MARYLAND — ROBERT NELSON CLARK — NO. 11,385 — REGISTERED PROFESSIONAL ENGINEER — 2-10-03

#6 D:\DRAWINGS\00098-BONNIELASS\1ST-RE-SUB\S06-SWM-POND-DETS.DWG

CLARK · FINEFROCK & SACKETT, INC.
ENGINEERS · PLANNERS · SURVEYORS
7135 MINSTREL WAY · COLUMBIA, MD 21045 · (410) 381-7500 BALT. · (301) 621-8100 WASH.

DESIGNED PC/AS	STORMWATER MANAGEMENT POND DETAILS STRUCTURE S-1 **BONNIELASS** TAX MAP 31 PARCEL 254 GRID 9 ZONING R-20 FIRST (1ST) ELECTION DISTRICT HOWARD COUNTY, MARYLAND	SCALE AS SHOWN
DRAWN ZAH/CRH2		DRAWING 6 OF 15
CHECKED AS		JOB NO. 000-98
DATE 2-10-03		FILE NO. 00-098-D

F-01-208

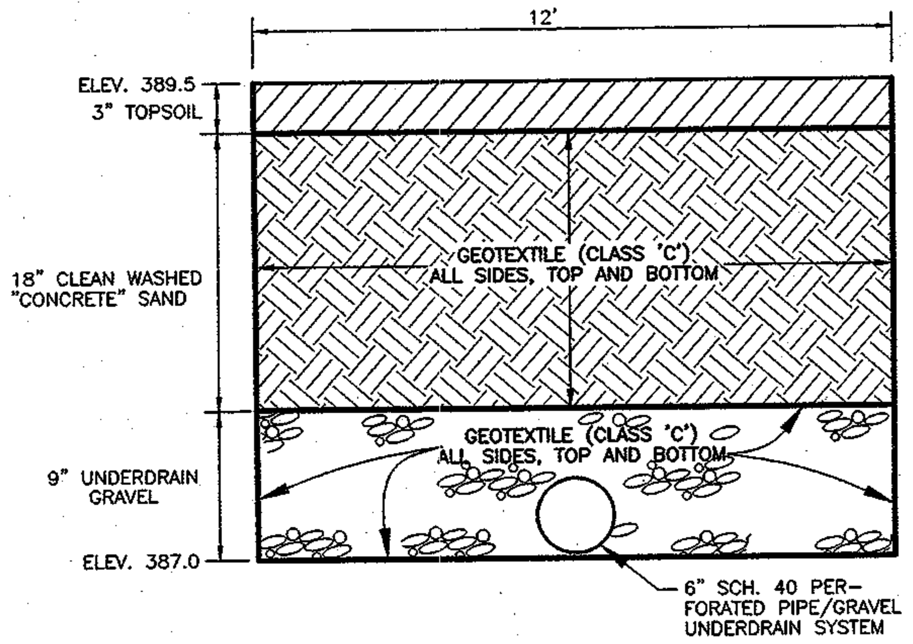

NOTE:
SURFACE AREA SHALL MATCH THE PLAN VIEW. (30'x12')

MATERIAL SPECIFICATIONS FOR SAND FILTERS

THE ALLOWABLE MATERIALS FOR SAND FILTER CONSTRUCTION ARE DETAILED IN TABLE B.3.1

SAND FILTER TESTING SPECIFICATIONS

1. UNDERGROUND SAND FILTERS, FACILITIES WITHIN SENSITIVE GROUNDWATER AQUIFERS, AND FILTERS DESIGNED TO SERVE URBAN HOT SPOTS ARE TO BE TESTED FOR WATER TIGHTNESS PRIOR TO PLACEMENT OF FILTER MEDIA. ENTRANCES AND EXITS SHOULD BE PLUGGED AND THE SYSTEM COMPLETELY FILLED WITH WATER TO DEMONSTRATE WATER TIGHTNESS. WATER TIGHTNESS MEANS NO LEAKAGE FOR A PERIOD OF 8 HOURS.
2. ALL OVERFLOW WEIRS, MULTIPLE ORIFICES AND FLOW DISTRIBUTION SLOTS ARE TO BE FIELD TESTED TO VERIFY ADEQUATE DISTRIBUTION OF FLOWS.

SAND FILTER CONSTRUCTION SPECIFICATIONS

1. ABSOLUTELY NO RUNOFF IS TO ENTER THE FILTER UNTIL ALL CONTRIBUTING DRAINAGE AREAS HAVE BEEN STABILIZED.
2. SURFACE OF FILTER BED IS TO BE LEVEL.
3. ALL UNDERGROUND SAND FILTERS SHOULD BE CLEARLY DELINEATED WITH SIGNS SO THAT THEY MAY BE LOCATED WHEN MAINTENANCE IS DUE.
4. SURFACE SAND FILTERS SHALL BE PLANTED WITH APPROPRIATE GRASSES, CRESTED SEDGE OR APPROVED EQUAL.

FILTERING MAINTENANCE CRITERIA

1. THE SEDIMENT CHAMBER OUTLET DEVICES SHALL BE CLEANED/REPAIRED WHEN DRAWDOWN TIMES WITHIN THE CHAMBER EXCEED 36 HOURS. TRASH AND DEBRIS TO BE REMOVED AS NECESSARY.
2. SEDIMENT SHOULD BE CLEANED OUT OF THE SEDIMENTATION CHAMBER WHEN IT ACCUMULATES TO A DEPTH OF MORE THAN SIX INCHES. VEGETATION WITHIN THE SEDIMENTATION CHAMBER SHOULD BE LIMITED TO A HEIGHT OF 18 INCHES.
3. WHEN THE FILTERING CAPACITY OF THE FILTER DIMINISHES SUBSTANTIALLY (e.g., WHEN WATER PONDS ON THE SURFACE OF THE FILTER BED FOR MORE THAN 72 HOURS), THE TOP FEW INCHES OF DISCOLORED MATERIAL SHALL BE REMOVED AND SHALL BE REPLACE WITH FRESH MATERIAL. THE REMOVED SEDIMENTS SHOULD BE DISPOSED IN AN ACCEPTABLE MANNER (e.g., LANDFILL). SILT/SEDIMENT SHOULD BE REMOVED FROM THE FILTER BED WHEN THE ACCUMULATION EXCEEDS ONE INCH.
4. ORGANIC FILTERS (F-4) OR SURFACE SAND FILTERS (F-1) THAT HAVE A GRASS COVER SHOULD BE MOWED A MINIMUM OF 3 TIMES PER GROWING SEASON TO MAINTAIN MAXIMUM GRASS HEIGHTS LESS THAN 12 INCHES.
5. A DROP OF AT LEAST 6 INCHES SHALL BE PROVIDED AT THE INLET OF BIORETENTION FACILITIES (F-6) (STONE DIAPHRAGM). DEAD OR DISEASED PLANT MATERIAL SHALL BE REPLACED. AREAS DEVOID OF MULCH SHOULD BE RE-MULCHED ON AN ANNUAL BASIS.

SAND FILTER DETAIL

NO SCALE

TABLE B.3.1 MATERIAL SPECIFICATIONS FOR SAND FILTERS

Material	Specification/Test Method	Size	Notes
sand	clean AASHTO-M-6 or ASTM-C-33 concrete sand	0.02" to 0.04"	Sand substitutions such as Diabase and Graystone #10 are not acceptable. No calcium carbonated or dolomitic sand substitutions are acceptable. No "rock dust" can be used for sand.
peat	ash content: < 15% pH range: 5.2 to 4.9 loose bulk density 0.12 to 0.15 g/cc	n/a	The material must be reed-sedge hemic peat, shredded, uncompacted, uniform and clean.
leaf compost		n/a	
underdrain gravel	AASHTO-M-43	0.375" to 0.75"	
geotextile fabric (if required)	ASTM-D-4833 (puncture strength-125 lb.) ASTM-D-4632 (Tensile Strength-300 lb.)	0.08" thick equivalent opening size of #80 sieve	Must maintain 125 gpm per sq. ft. flow rate. Note: a 4" pea gravel layer may be substituted for geotextiles meant to "seperate" sand filter layers.
impermeable liner (if required)	ASTM-D-4833 (thickness) ASTM-D-412 (tensile strength) 1,100 lb., elongation 200%) ASTM-D-624 (Tear resistence - 150 lb./in) ASTM-D-471 (water adsorption: +8 to -2% mass)	30 mil thickness	Liner to be ultraviolet resistant. A geotextile fabric should be used to protect the liner from puncture.
underdrain piping	F 758, Type PS 28 or AASHTO-M-278	4" - 6" rigid schedule 40 PVC or SDR35	3/8" perf. @ 6" o.c., 4 holes per row; minimum of 3" of gravel over pipes; not necessary underneath pipes
concrete (cast-in-place)	MSHA Standards and Specs. Section 902, Mix No. 3, f'c =3500 psi, normal weight, air entrained; re-inforcing to meet ASTM-615-60	n/a	on-site testing of poured-in-place concrete required: 28 day strength and slump test; all concrete design (cast-in-place or pre-cast) not using previously approved State or local standards requires design drawings sealed and approved by a professional structural engineer licensed in the State of maryland
concrete (pre-cast)	per pre-cast manufacturer	n/a	SEE ABOVE NOTE
non-rebar steel	ASTM A-36	n/a	structural steel to be hot-dipped galvanized ASTM-A-123

APPROVED: DEPARTMENT OF PUBLIC WORKS
N/A
CHIEF, BUREAU OF HIGHWAYS — DATE

APPROVED: DEPARTMENT OF PLANNING & ZONING
Cindy Hamilton — 8/15/03
CHIEF, DIVISION OF LAND DEVELOPMENT — DATE
0/13/03
CHIEF, DEVELOPMENT ENGINEERING DIVISION MAJ — DATE

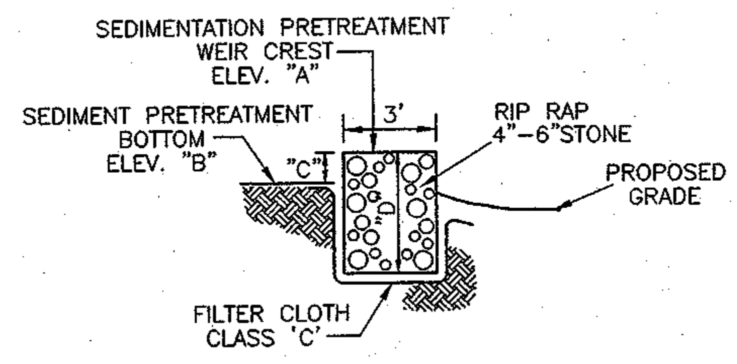

GABION BASKET DETAIL

GABION BASKET SCHEDULE

	ELEV. "A"	ELEV. "B"	HEIGHT "C"	MIN. HEIGHT "D"	LOCATION
GABION WEIR "A"	391.5	389.7	1.8'	4.8'	PRE-TREATMENT AREA "A"
GABION WEIR "B"	391.5	389.8	1.7'	4.7'	PRE-TREATMENT AREA "B"
GABION WEIR "C"	387.8	386.8	1.0'	4.0'	FOREBAY

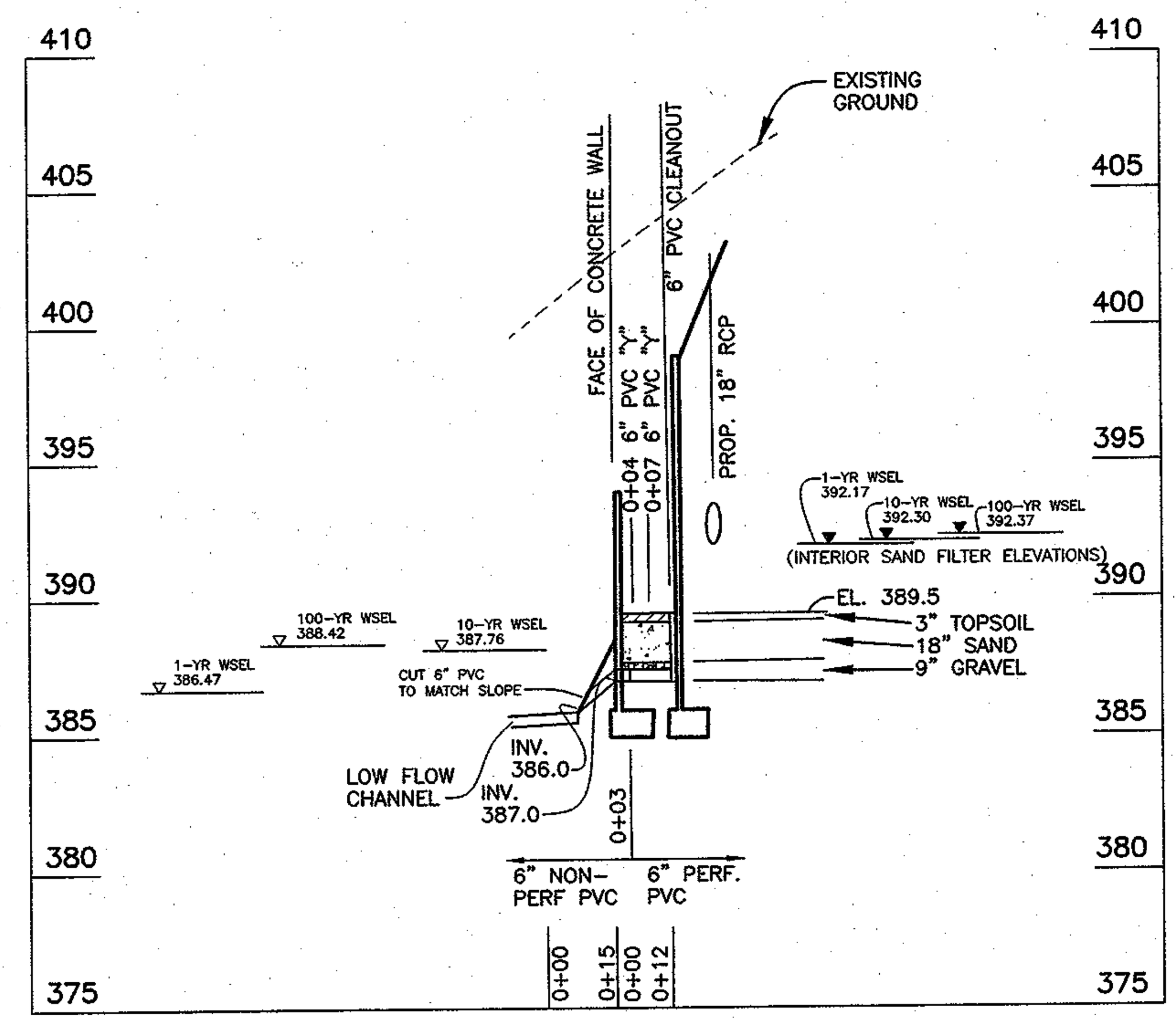

CROSS-SECTION THROUGH SAND FILTER

SCALE: HOR. 1"=30' VER. 1'=5'

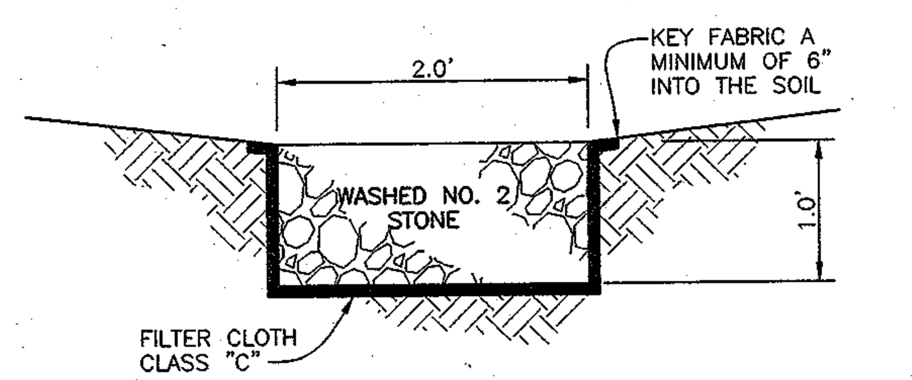

LOW FLOW MAT DETAIL

SCALE: NTS

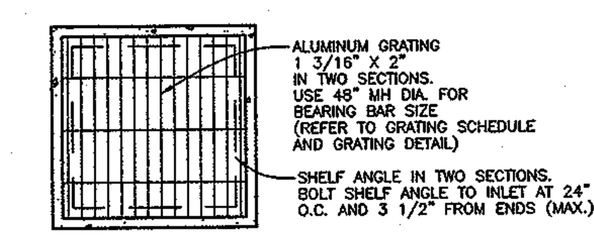

GRATING PLAN

N.T.S.

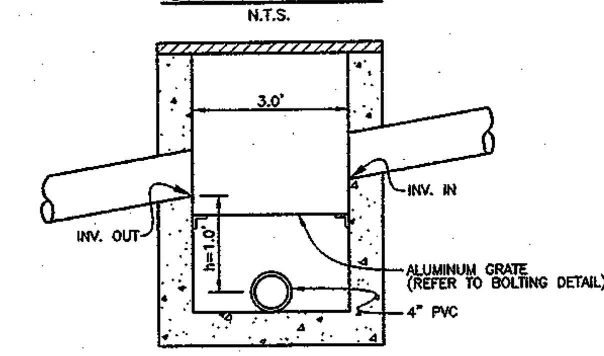

MODIFIED TYPE "S" INLET

N.T.S.

FLOW SPLITTER SCHEDULE

STRUCTURE	ACTUAL DIMENSION BETWEEN OVERFLOW PIPE ELEVATION AND LOW FLOW PIPE INVERT (PVC)
I-3	1'-2"
MH-4	1'-2"

THE CONTRACTOR IS TO VERIFY THE DIMENSION BETWEEN THE LOW FLOW PIPE AND THE OVERFLOW SLOT PRIOR TO BACKFILLING AROUND THE STRUCTURE. NOTIFY THE DESIGN ENGINEER IMEDIATELY IF THERE IS A DISCREPANCY.

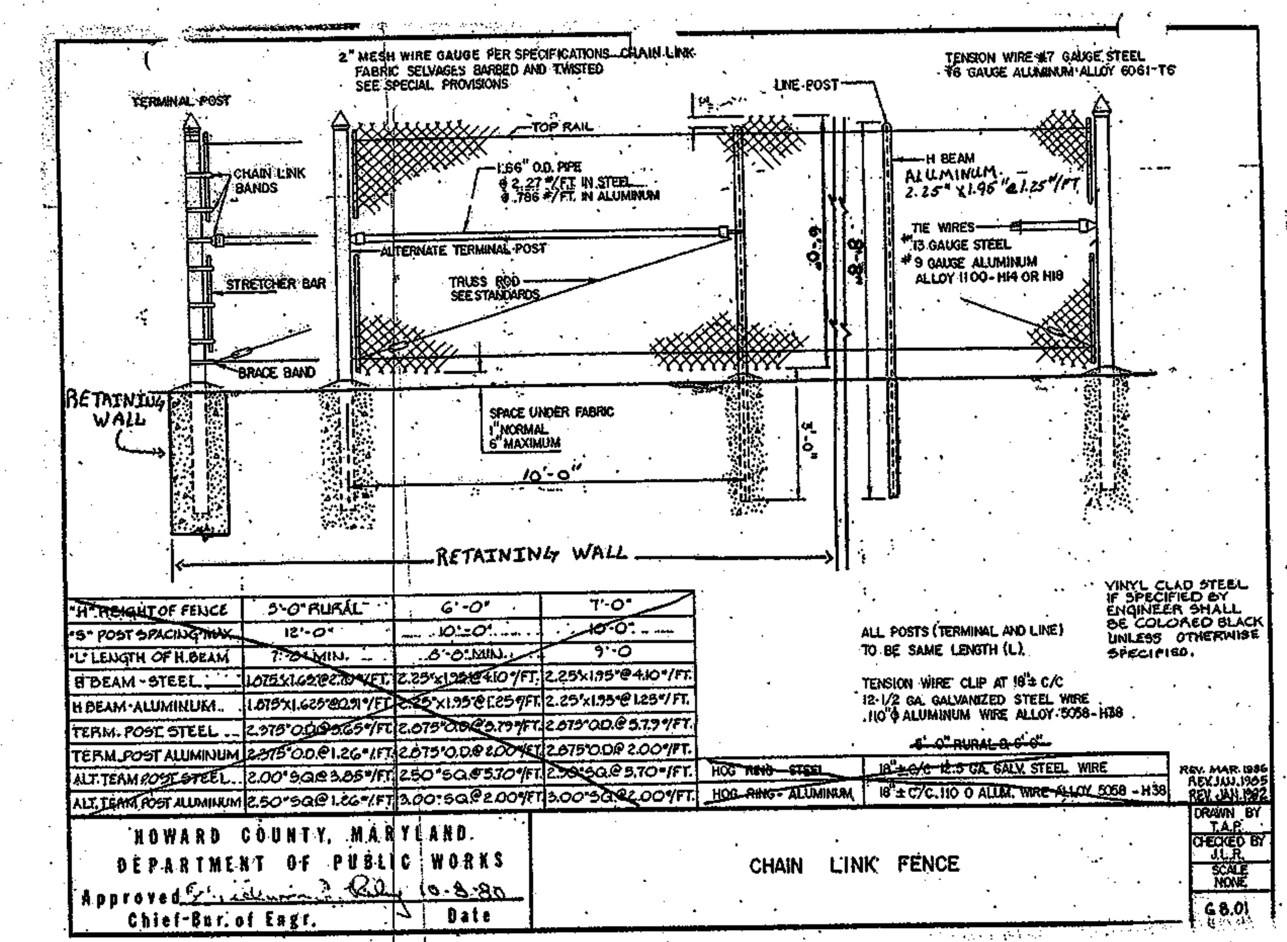

CHAIN LINK FENCE DETAIL

SCALE: NTS

GRATING SCHEDULE

MH DIA.	BEARING BAR
48", 54"	1-1/4" x 1/8"
60", 66", 72"	1-1/4" x 3/16"
78"	1-1/2" x 3/16"
84"	1-3/4" x 3/16"
96"	2" x 3/16"

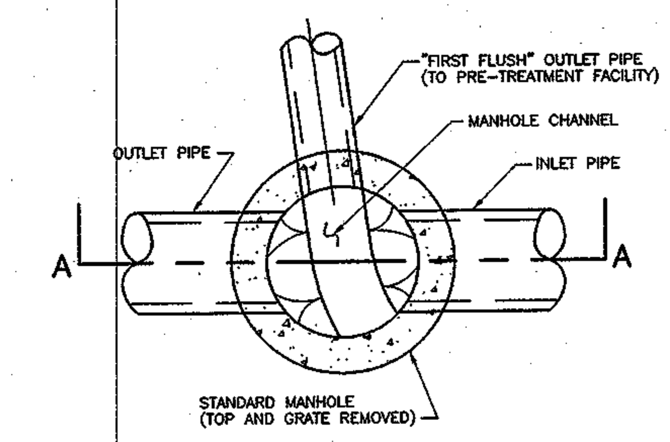

PLAN VIEW

N.T.S.

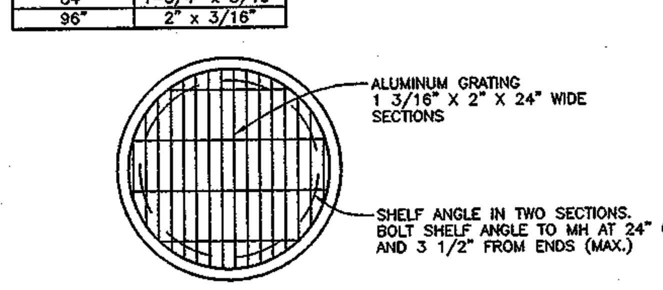

GRATING PLAN

N.T.S.

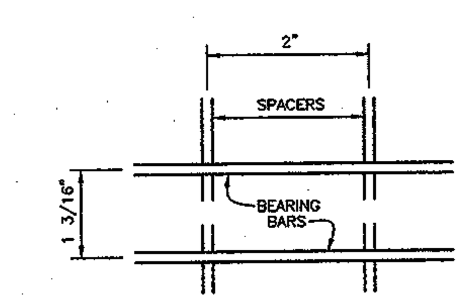

GRATING DETAIL

N.T.S.

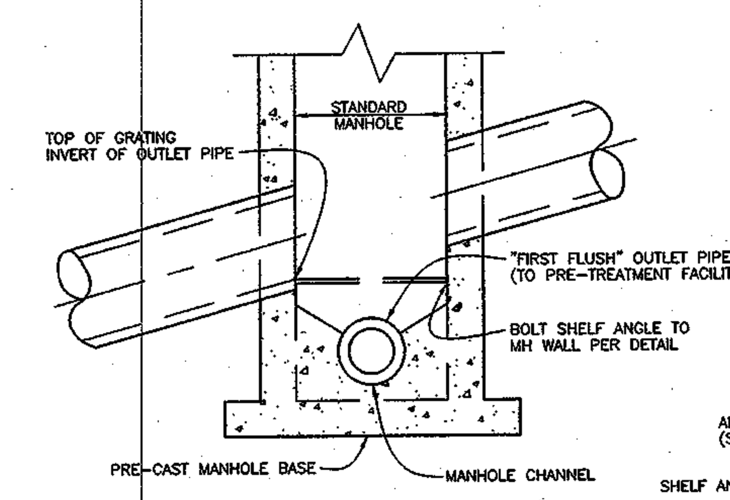

SECTION A-A

N.T.S.

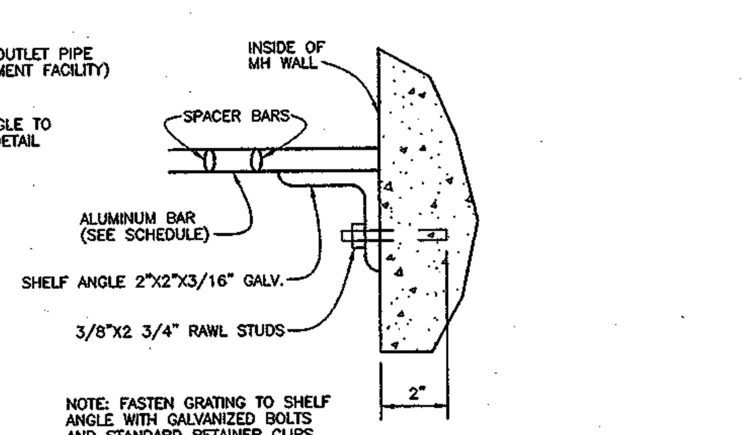

NOTE: FASTEN GRATING TO SHELF ANGLE WITH GALVANIZED BOLTS AND STANDARD RETAINER CLIPS

BOLTING DETAIL

N.T.S.

OWNER / DEVELOPER
BONNIELASS LLC
8835-P COLUMBIA 100 PARKWAY
COLUMBIA, MARYLAND 21045

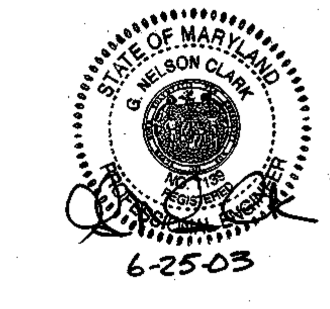

#6 D:\DRAWINGS\00098-BONNIELASS\1ST-RE-SUB\S07-SAND-FILT-DETS.DWG

CLARK · FINEFROCK & SACKETT, INC.
ENGINEERS · PLANNERS · SURVEYORS
7135 MINSTREL WAY · COLUMBIA, MD 21045 · (410) 381-7500 BALT. · (301) 621-8100 WASH.

DESIGNED PC/AS	SURFACE SAND FILTER DETAILS	SCALE 1"=30'
DRAWN ZAH/CRH2	BONNIELASS	DRAWING 7 OF 15
CHECKED AS	TAX MAP 31 PARCEL 254 GRID 9 ZONING R-20 FIRST (1ST) ELECTION DISTRICT HOWARD COUNTY, MARYLAND	JOB NO. 00-098
DATE 2-10-03		FILE NO. 00-098-D

F-01-208

D:/Drawings/00098-Bonnielass/1ST-RE-SUB/S07-sand-filt-dets.dwg Sun Feb 09 12:25:50 2003 CFS Computer #6

BONDING NOTE:

THIS PLAN HAS BEEN PREPARED IN ACCORDANCE WITH THE PROVISIONS OF SECTION 16.124 OF THE HOWARD COUNTY CODE AND LANDSCAPE MANUAL.

FINANCIAL SURETY FOR THE TREES IN SCHEDULE D, TRASH PAD SCREENING, AND STREET TREES IN THE AMOUNT OF $12,180.00 SHALL BE PART OF THE DEVELOPERS AGREEMENT.

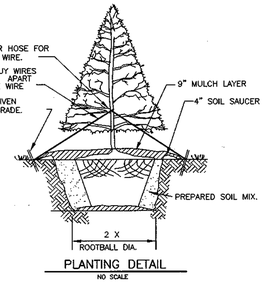

PLANTING DETAIL

NO SCALE

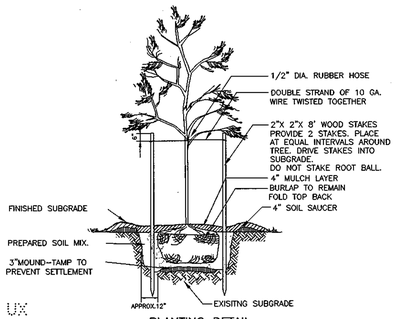

PLANTING DETAIL

NO SCALE

NOTES:

1. ALL PLANT MATERIALS SHALL BE FULL AND HEAVY, BE WELL FORMED AND SYMMETRICAL, CONFORM TO THE MOST CURRENT AAN SPECIFICATIONS AND BE INSTALLED IN ACCORDNACE WITH HRD PLANTING SPECIFICATIONS.
2. CONTRACTOR SHALL VERIFY LOCATION OF ALL UNDERGROUND UTILITIES PRIOR TO DIGGING.
3. FINAL LOCATION OF PLANT MATERIAL MAY NEED TO VARY TO MEET FINAL FIELD CONDITIONS. TREES SHALL NOT BE PLANTED IN THE BOTTOM OF DRAINAGE SWALES.
4. AT THE TIME OF INSTALLMENT, ALL SHRUBS AND OTHER PLANTINGS HEREWITH LISTED AND APPROVED FOR THIS SITE, SHALL BE OF THE PROPER HEIGHT REQUIREMENTS IN ACCORDANCE WITH THE HOWARD COUNTY LANDSCAPE MANUAL. IN ADDITION, NO SUBSTITUTIONS OR RELOCATION OF REQUIRED PLANTINGS MAY BE MADE WITHOUT PRIOR REVIEW AND APPROVAL FROM THE DEPARTMENT OF PLANNING AND ZONING. ANY DEVIATION FROM THIS APPROVED LANDSCAPE PLAN MAY RESULT IN DENIAL OR DELAY IN THE RELEASE OF LANDSCAPE SURETY UNTIL SUCH TIME AS ALL REQUIRED MATERIALS ARE PLANTED AND/OR REVISIONS ARE MADE TO APPLICABLE PLANS AND CERTIFICATES.

SCHEDULE A
PERIMETER LANDSCAPE EDGE

Category — Adjacent Perimeter Properties		PERIMETER 1	PERIMETER 2	PERIMETER 3
Landscape Type		A	A	A
Frontage/Perimeter		581.49'	299.50'	353.47'
Number of Plants Required				
Shade Trees	(1/50)	0 *	0 *	0 *
Evergreen Trees	(1/40)	0 *	0 *	0 *
Shrubs				
Number of Plants Provided				
Shade Trees		0	0	0
Evergreen Trees				
Surety Amounts		0	0	0

* 100% credit for existing vegetation to remain.

Total Surety= $0,000.00

PLANT SCHEDULE

KEY	PLANT NAME	SIZE	QUAN.	REMARK
AR	ACER RUBRUM 'OCTOBER GLORY' OCTOBER GLORY RED MAPLE	2 1/2"-3" CAL. 12-14' HT.	6	B&B
PS	PINUS STROBUS WHITE PINE	6'-8' HT.	6	B&B
AS	ACER SACCHARUM 'GREEN MOUNTAIN' GREEN MOUNTAIN SUGAR MAPLE	2 1/2" - 3" CAL. 12-14' HT.	29	B&B

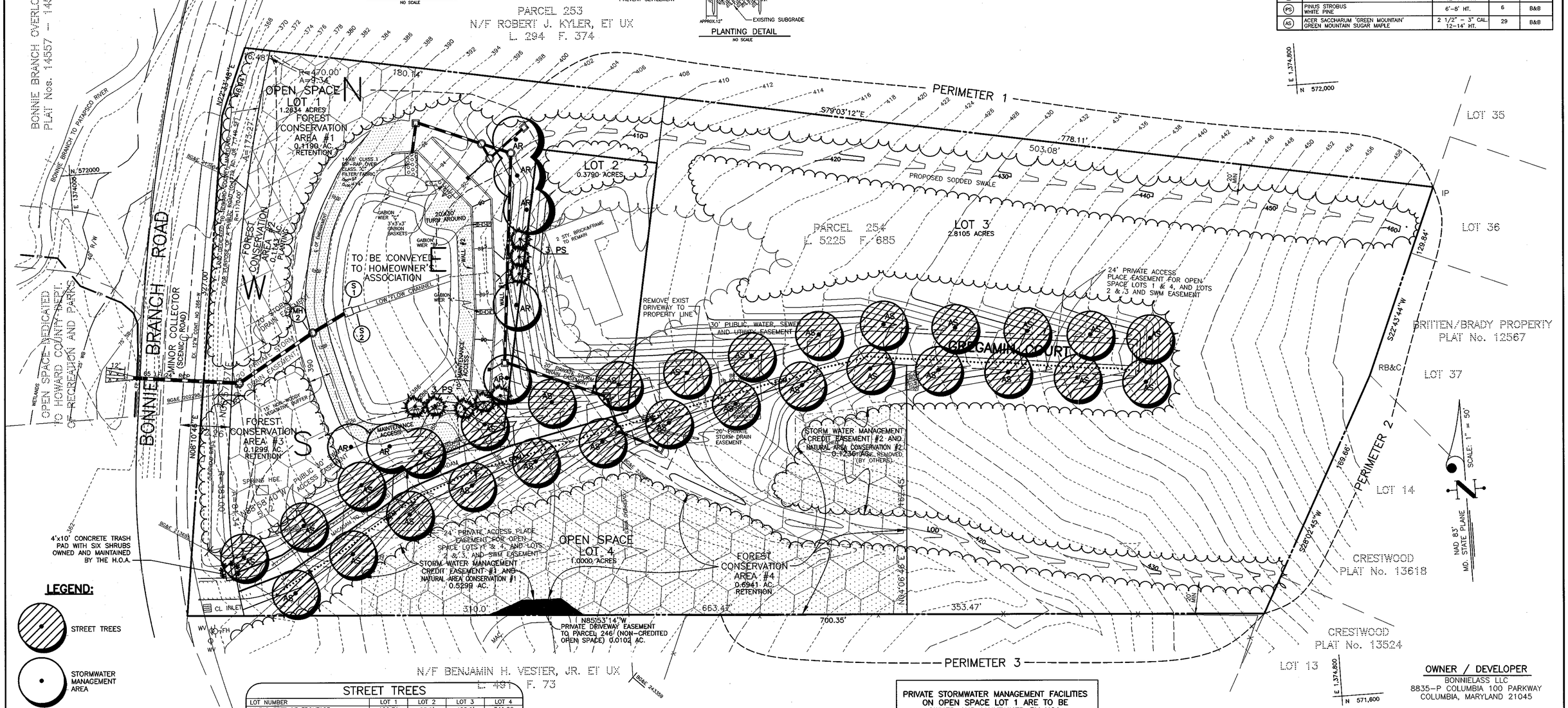

LEGEND:

STREET TREES

STORMWATER MANAGEMENT AREA

STORMWATER MANAGEMENT AREA

STREET TREES

LOT NUMBER	LOT 1	LOT 2	LOT 3	LOT 4
LINEAR FEET OF FRONTAGE	199.71	85.0'	485.0'	341.22
NUMBER OF TREES REQUIRED @ 1/40	5	2	12	9
NUMBER OF TREES PROPOSED	5	2	12	10
SURETY AMOUNT	$1,500	$600	$3,600	$3,000

SCHEDULE D
STORMWATER MANAGEMENT AREA LANDSCAPING

EDGE	N	E	S	W	TOTAL
LINEAR FEET OF PERIMETER	180.00	227.15	199.71	342.86	949.72
NUMBER OF TREES REQUIRED					
SHADE TREES @ 1/50	4	5	4	7	19
EVERGREEN TREES @1/40	4	6	5	9	24
CREDIT FOR EXISTING VEGETATION (NO, YES, AND %)	YES, 100%	YES, 8.8%	YES, 45%	YES, 100%	YES, 66.2%
CREDIT FOR OTHER LANDSCAPING (NO, YES, AND %)	NO	NO	NO	NO	YES, 9.6%
NUMBER OF TREES PROVIDED					
SHADE TREES	–	5	2	–	7
EVERGREEN TREES	–	5	3	–	8
SURETY AMOUNT					$3,300

TRASH PAD PLANTING SCHEDULE

QUANTITY	SYMBOL	PLANT NAME	SIZE
6	VW	VIBURNUM x RHYTIDOPHYLLOIDES 'WILLOWWOOD' WILLOWWOOD VIBURNUM	2-3" B&B

PRIVATE STORMWATER MANAGEMENT FACILITIES ON OPEN SPACE LOT 1 ARE TO BE OWNED AND MAINTAINED BY HOA.

APPROVED: DEPARTMENT OF PUBLIC WORKS

CHIEF, BUREAU OF HIGHWAYS — DATE N/A

APPROVED: DEPARTMENT OF PLANNING & ZONING

CHIEF, DIVISION OF LAND DEVELOPMENT — DATE 8/15/03

CHIEF, DEVELOPMENT ENGINEERING DIVISION — DATE 8/13/03

DEVELOPER'S/BUILDERS CERTIFICATE

I/We certify that the landscaping shown on this plan will be done according to plan, section 16.124 of the Howard County Code and the Howard County Landscape Manual. I/We further certify that upon completion a Certificate of Landscape Installation, accompanied by an executed one year guarantee of plant materials, will be submitted to the Department of Planning and Zoning.

Name — Date 7.1.03

STATE OF MARYLAND — G. NELSON CLARK — No. 7168 — REGISTERED LANDSCAPE ARCHITECT

6-25-03

OWNER / DEVELOPER
BONNIELASS LLC
8835-P COLUMBIA 100 PARKWAY
COLUMBIA, MARYLAND 21045

CLARK · FINEFROCK & SACKETT, INC.
ENGINEERS · PLANNERS · SURVEYORS
7135 MINSTREL WAY · COLUMBIA, MD 21045 · (410) 381-7500 BALT. · (301) 621-8100 WASH.

DESIGNED DAR	LANDSCAPING PLAN	SCALE 1"=30'
DRAWN ZAH/CRH2	**BONNIELASS**	DRAWING 8 of 15
CHECKED AS	TAX MAP 31 PARCEL 254 GRID 9 ZONING R-20 FIRST (1ST) ELECTION DISTRICT HOWARD COUNTY, MARYLAND	JOB NO. 00-098
DATE 4-1-03		FILE NO. 00-098LS

#6 D:\DRAWINGS\00098-BONNIELASS\1ST-RE-SUB\S08-LANDSCAPE.DWG

F-01-208

C:\Jobs\00098\Drawings\1st-re-sub\s08-landscape.dwg, 8/13/2003 10:53:36 AM, DAR

SOILS LEGEND

SYMBOL	NAME / DESCRIPTION	TYPE
SsE	SASSAFRAS SOILS, 15 TO 40 PERCENT SLOPE	B
MrE	MONTALTO AND RELAY SOILS, 15 TO 45 PERCENT SLOPES LESS SEVERELY ERODED	C
BeC2	BELTSVILLE SILT LOAM, 5 TO 10 PERCENT SLOPES MODERATELY ERODED	C
BeD2	BELTSVILLE SILT LOAM, 10 TO 15 PERCENT SLOPES MODERATELY ERODED	C

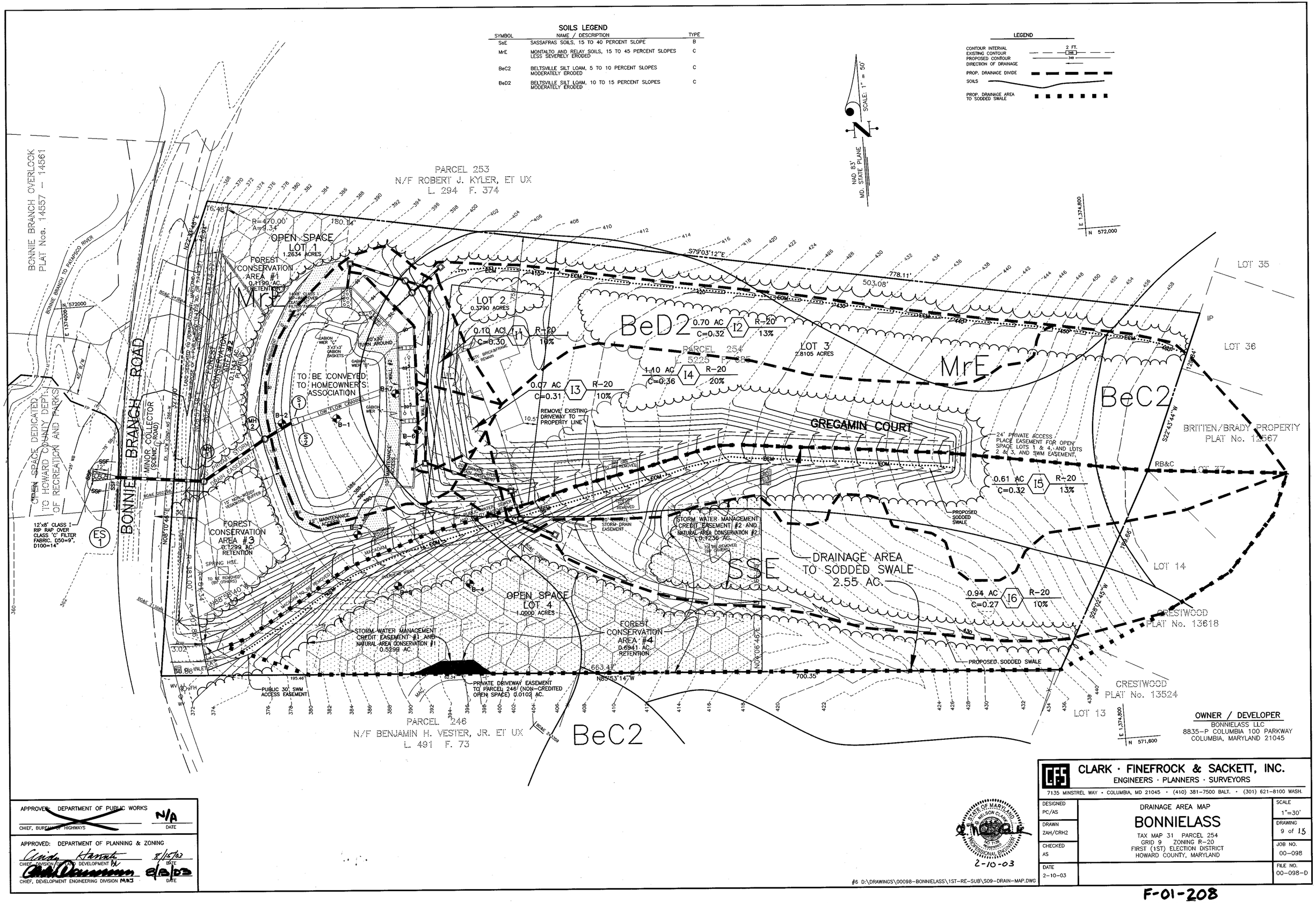

OWNER / DEVELOPER
BONNIELASS LLC
8835-P COLUMBIA 100 PARKWAY
COLUMBIA, MARYLAND 21045

APPROVED: DEPARTMENT OF PUBLIC WORKS — N/A
CHIEF, BUREAU OF HIGHWAYS — DATE

APPROVED: DEPARTMENT OF PLANNING & ZONING
Cindy Hannah — 8/15/03
CHIEF, DIVISION OF LAND DEVELOPMENT — DATE
8/13/03
CHIEF, DEVELOPMENT ENGINEERING DIVISION MAJ — DATE

STATE OF MARYLAND — WELSON CLARK — NO. 7139 — REGISTERED PROFESSIONAL ENGINEER
2-10-03

CLARK · FINEFROCK & SACKETT, INC.
ENGINEERS · PLANNERS · SURVEYORS
7135 MINSTREL WAY · COLUMBIA, MD 21045 · (410) 381-7500 BALT. · (301) 621-8100 WASH.

DESIGNED PC/AS	DRAINAGE AREA MAP	SCALE 1"=30'
DRAWN ZAH/CRH2	**BONNIELASS**	DRAWING 9 of 15
CHECKED AS	TAX MAP 31 PARCEL 254 GRID 9 ZONING R-20 FIRST (1ST) ELECTION DISTRICT HOWARD COUNTY, MARYLAND	JOB NO. 00-098
DATE 2-10-03		FILE NO. 00-098-D

#6 D:\DRAWINGS\00098-BONNIELASS\1ST-RE-SUB\S09-DRAIN-MAP.DWG

F-01-208

BONNIE BRANCH ROAD
MINOR COLLECTOR
(SCENIC ROAD)

PARCEL 253
N/F ROBERT J. KYLER, ET UX
294 F. 374

PARCEL 254
N/F BENJAMIN H. VEST, ET UX
L. 491 F. 73
ZONED: R-20

LOT 35

LOT 36

BRITTEN/BRADY PROPERTY
PLAT No. 12567
ZONED: R-20

LOT 37

CRESTWOOD
PLAT No. 13824
ZONED: R-20

LOT 13

LOT 14

CRESTWOOD
PLAT No. 1
CONTAINED
TRUNK
DISTRESSED

#1 32" N.E. OAK
#2 30" N.E. OAK
#3 30" OAK
#4 30" TULIP POP.
#5 30" A. BEECH
#6 30" N.E. OAK
#7 30" TULIP POP.
#8 36" N.E. OAK
#9 30" TULIP POP.
#10 33" POP
#11 36" A. BEECH
#12 30" ASH
#13 30" N.E. OAK
#14 30" N.E. OAK

+27" N.E. OAK
+22" A. BEECH

STAND "F" FULL CANOPY
STAND "T" PARTIAL CANOPY 404'±
STAND "L" OPEN HOWN
STAND "T" PARTIAL CANOPY TO BE REMOVED (BY OTHERS)
STAND "F" FULL CANOPY

2 sty. brick & frames (TO REMAIN)
spring hse. TO BE REMOVED (BY OTHERS)
spring hse.
shed TO BE REMOVED
br. gar TO BE REMOVED
carport
shed

MtE: Soils
MtE: Montalto & Relay Soils

ETHEMERAL RUN OFF SWALE
ETHEMERAL SWALE

macadam
mdc.

N85°53'14"W 700.35'
S79°03'12"E 778.11'
N22°33'48"E 381.99'
N08°10'46"E 380.98'
S22°43'44"W 129.84'
S58°02'45"W 169.66'

E 1,374,800 N 572,000
E 1,374,800 N 571,600

BC&E 213684
BC&E 213685
BC&E 213687
BC&E 213688
BC&E 243359
BC&E 238994

RB&C
WV
FH
IP

209 234 263 262 231 261 208 113 6

SCALE: 1" = 50'
NAD 83' MD. STATE PLANE

VICINITY MAP
SCALE: 1" = 2000'

SITE
ROUNDHILL ROAD
WARFIELD LANE
BRANCH
CAMP ILCHESTER
ILCHESTER ROAD
TALBOT LANDING ROAD
31EA
31EB
103

+ OTHER SIGNIFICANT TREES
⊕ SPECIMEN TREES (SEE LIST)
EX. CANOPY EDGE - TREES
MtE: Montalto & Relay Soils
STAND BOUNDARIES SEE "FOREST STAND NARRATIVE"
STEEP SLOPES 15-25%
STEEP SLOPES >25%

APPROVED: DEPARTMENT OF PUBLIC WORKS
CHIEF, BUREAU OF ENGINEERING — N/A DATE

APPROVED: DEPARTMENT OF PLANNING & ZONING
CHIEF, DIVISION OF LAND DEVELOPMENT — 8/15/03 DATE
CHIEF, DEVELOPMENT ENGINEERING DIVISION — 8/18/03 DATE

By The Developer:
"I/We certify that all development and/or construction will be done according to these plans, and that any responsible personnel involved in the construction project will have a Certificate of Attendance at a Department of the Environment Approved Training Program for the Control of Sediment and Erosion before beginning the project. I shall engage a registered professional engineer to supervise pond construction and provide the Howard Soil Conservation District with an "as-built" plan of the pond within 30 days of completion. I also authorize periodic on-site inspections by the Howard Soil Conservation District."
Signature of Developer — Date

By the Engineer:
"I certify that this plan for pond construction, erosion and sediment control represents a practical and workable plan based on my personal knowledge of the site conditions. This plan was prepared in accordance with the requirements of the Howard Soil Conservation District. I have notified the developer that he/she must engage a registered professional engineer to supervise pond construction and provide the Howard Soil Conservation District with an "as-built" plan of the pond within 30 days of completion."
Signature of Engineer — Date

NOTE: THERE ARE NO WETLANDS OR WATERS OF THE U.S. IN PARCEL 254

CLARK · FINEFROCK & SACKETT, INC.
ENGINEERS · PLANNERS · SURVEYORS
7135 MINSTREL WAY · COLUMBIA, MD 21045 · (410) 381-7500 BALT. · (301) 621-8100 WASH.

DESIGNED BHK	A SIMPLIFIED FOREST STAND DELINEATION (EXISTING CONDITIONS)	SCALE 1" = 30'
DRAWN CFS/BHK	BONNIELASS TAX MAP 31 PARCEL 254	DRAWING 10 of 15
CHECKED BHK	5.0 ACRES/ 217,800 SF. FIRST (1st) ELECTION DISTRICT HOWARD COUNTY, MARYLAND	JOB NO. 00-098
DATE 4/20/01 3/8/01 10-10-02	FOR : BRANTLY DEVELOPMENT GROUP	FILE NO. 00-098-D

F-01-208

(#6) D:\00098\

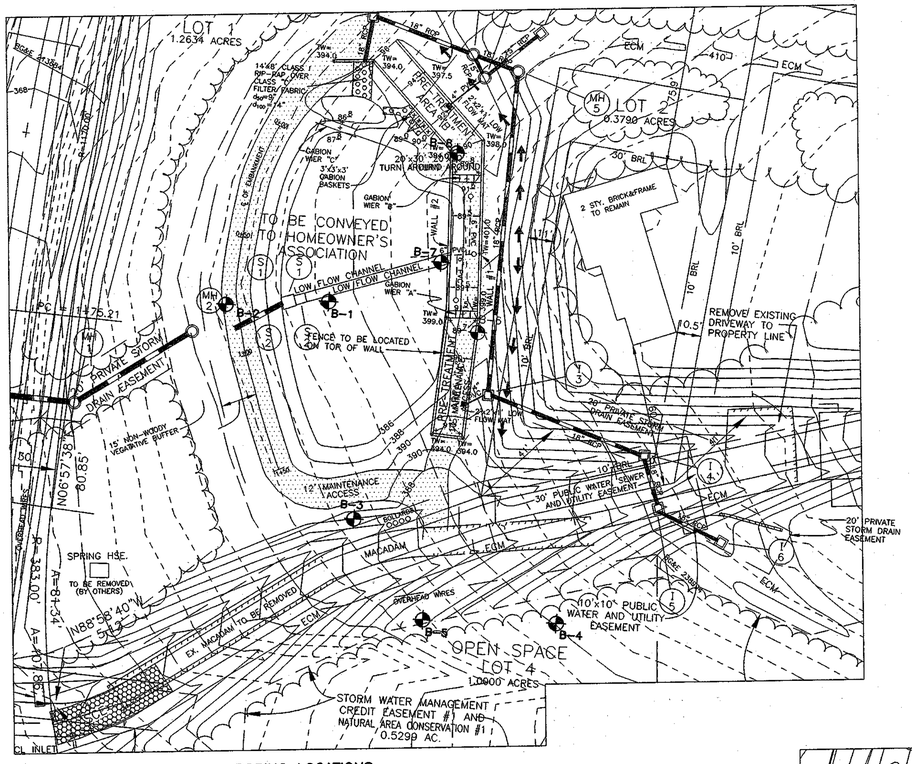

BORING LOCATIONS
SCALE: 1" = 30'

HERBST/BENSON & ASSOCIATES Geotechnical Engineers

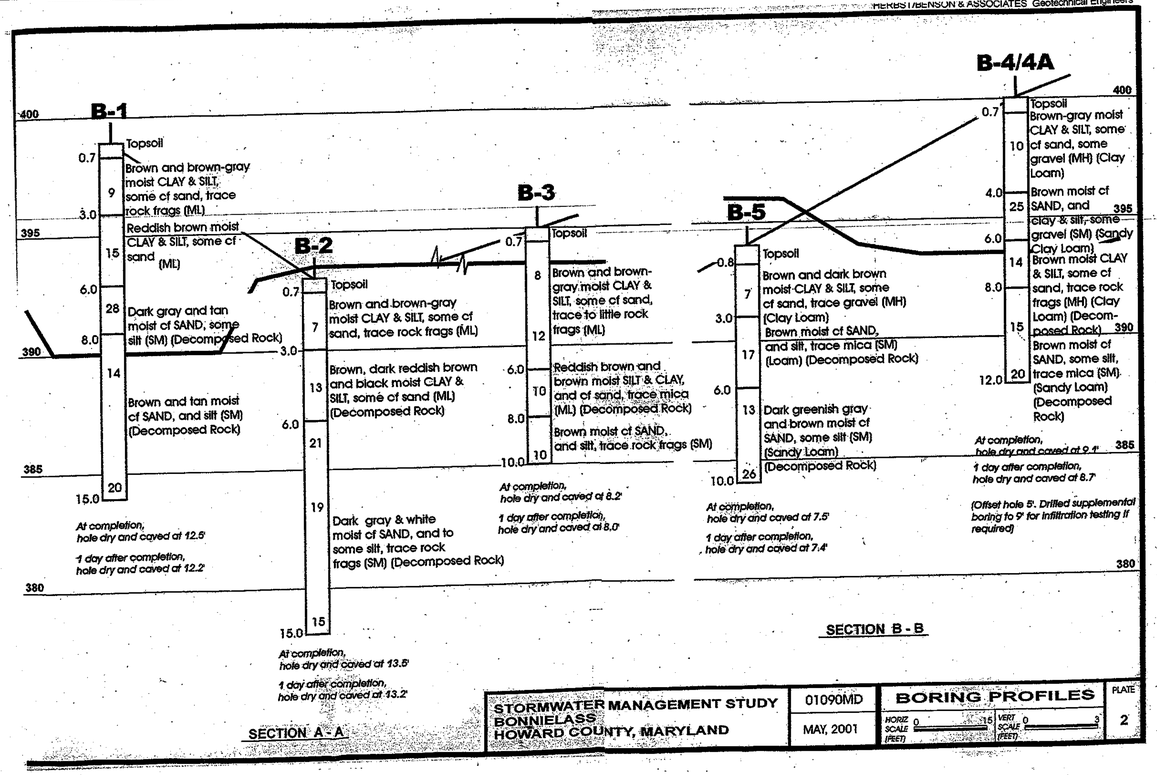

STORMWATER MANAGEMENT STUDY BONNIELASS HOWARD COUNTY, MARYLAND	01090MD MAY, 2001	BORING PROFILES HORIZ SCALE (FEET) 0 15 VERT SCALE (FEET) 0 3	PLATE 2

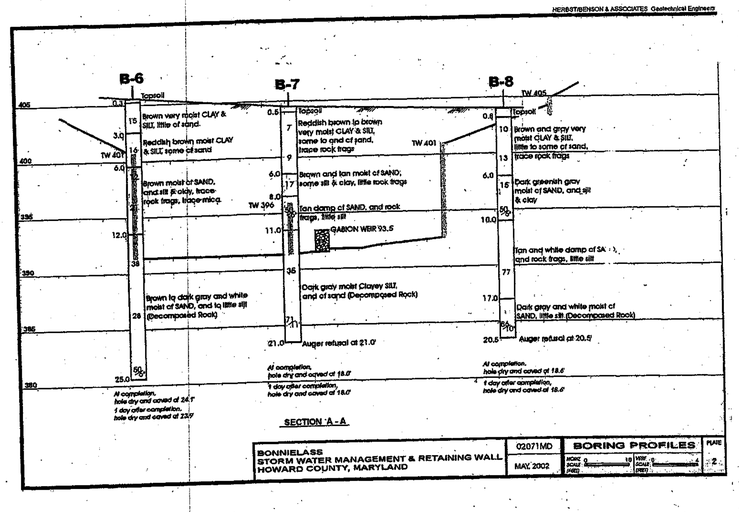

BONNIELASS STORM WATER MANAGEMENT & RETAINING WALL HOWARD COUNTY, MARYLAND	02071MD MAY, 2002	BORING PROFILES HORIZ SCALE (FEET) 0 15 VERT SCALE (FEET) 0 3	PLATE 2

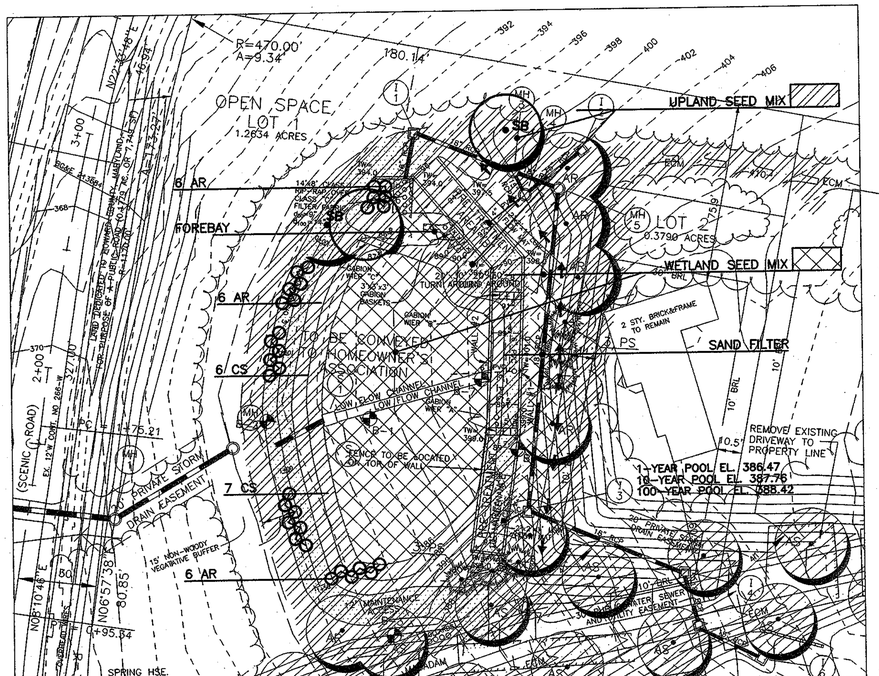

STORMWATER POND LANDSCAPE PLAN
SCALE: 1" = 30'

OWNER / DEVELOPER
BONNIELASS LLC
8835-P COLUMBIA 100 PARKWAY
COLUMBIA, MARYLAND 21045

WETLAND SEED MIX		
SPECIES	COMMON NAME	RATE
ELYMUS VIRGINICUS	VIRGINIA WILD RYE	2 LBS. / AC.
ELYMUS RIPARIUS	RIVERBANK WILD RYE	1 LBS. / AC.
CAREX VULPINOIDEA	FOX SEDGE	1 LBS. / AC.
BIDENS FRONDOSA	BEGGAR-TICKS	1 LBS. / AC.
POA TRIVIALIS	ROUGH BLUEGRASS	10 LBS. / AC.
LOLIUM MULTIFLORUM	ANNUAL RYEGRASS	10 LBS. / AC.
GLYCERIA STRIATA	FOWL MANNAGRASS	2 LBS. / AC.
ASTER NOVAE ANGLIAE	NEW ENGLAND ASTER	1/2 LBS. / AC.

UPLAND GRASS SEED MIX		
SPECIES	COMMON NAME	RATE
PERMANENT HERBACEOUS		
AGROSTIS PALUSTRIS (SEE NOTE 1)	CREEPING BENTGRASS	2 LBS. / AC.
FESTUCA ARUNDINACEA	TALL FESCUE	40 LBS. / AC.
FESTUCA RUBRA VAR. RUBRA (SEE NOTE 2)	CREEPING RED FESCUE	20 LBS. / AC.
LOLIUM PERENNE (SEE NOTE 3)	PERENNIAL RYGRASS	25 LBS. / AC.
PANICUM VIRGATUM (SEE NOTE 4)	SWITCHGRASS	10 LBS. / AC.
POA TRIVIALIS	ROUGH BLUEGRASS	15 LBS. / AC.
TRIFOLIUM REPENS	WHITE CLOVER	5 LBS. / AC.
NURSE CROP FOR SITE STABILIZATION		
AVENA SATIVA	OATS	28 LBS. / AC.
LOLIUM PERENNE SSP. MULTIFLORUM	ANNUAL RYGRASS	5 LBS. / AC.
SETARIA ITALICA	FOXTAIL MILLET	5 LBS. / AC.

NOTES:
1. RECOMMENDED CULTIVAR: SEASIDE
2. RECOMMENDED CULTIVARS: PENNLAWN, FLYER, FORTESS, RUBY, OR SALEM.
3. RECOMMENDED CULTIVARS: BLAZER(II) OR PENNFINE
4. RECOMMENDED CULTIVARS: BLACKWELL, CARTHAGE, CAVE-IN-ROCK, OR SHELTER

STORMWATER POND PLANT SCHEDULE

KEY	QTY	BOTANICAL NAME	COMMON NAME	WATER DEPTH	INDICATOR STATUS	ROOT	SPACING	SIZE
SHRUBS								
AR	18	ARONIA ARBUTIFOLIA	RED CHOKEBERRY	IRREGULARLY INUNDATED	FACW	CONT.	CLUMPS	18-24"
CS	13	CORNUS SERICEA	RED-OSIER DOGWOOD	IRREGULARLY INUNDATED	FACW+	CONT.	CLUMPS	18-24"
TREES								
SB	2	SALIX BABYLONICA	WEEPING WILLOW	IRREGULARLY INUNDATED	FACW	B&B	30' O.C.	2 1/2 - 3" CAL

APPROVED: DEPARTMENT OF PUBLIC WORKS — N/A
CHIEF, BUREAU OF HIGHWAYS — DATE

APPROVED: DEPARTMENT OF PLANNING & ZONING
CHIEF, DIVISION OF LAND DEVELOPMENT — DATE 8/15/03
CHIEF, DEVELOPMENT ENGINEERING DIVISION — DATE 8/13/03

STATE OF MARYLAND — WILSON CLARK — No. 7708 — REGISTERED PROFESSIONAL ENGINEER
6-25-03

CLARK · FINEFROCK & SACKETT, INC.
ENGINEERS · PLANNERS · SURVEYORS
7135 MINSTREL WAY · COLUMBIA, MD 21045 · (410) 381-7500 BALT. · (301) 621-8100 WASH.

DESIGNED PC/AS	BORING LOGS AND STORMWATER POND LANDSCAPE PLAN BONNIELASS TAX MAP 31 PARCEL 254 GRID 9 ZONING R-20 FIRST (1ST) ELECTION DISTRICT HOWARD COUNTY, MARYLAND	SCALE 1"=30'
DRAWN CRH2		DRAWING 11 of 15
CHECKED AS		JOB NO. 00-098
DATE 2-10-03		FILE NO. 00-098-D

#6 D:\DRAWINGS\00098-BONNIELASS\1ST-RE-SUB\S11-LOGS.DWG

F-01-208

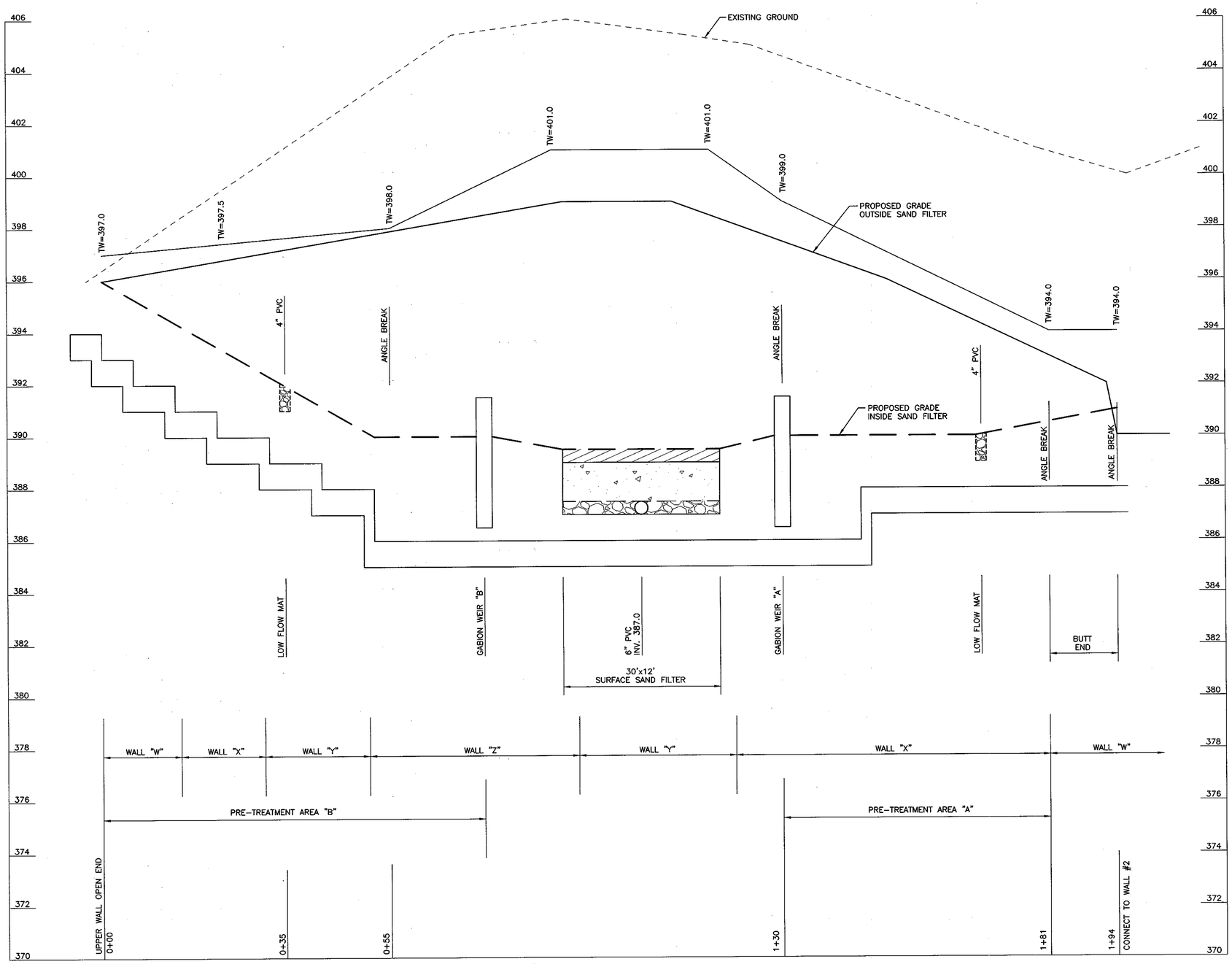

SURFACE SAND FILTER WALL #1 ELEVATION

SCALE: HOR. 1"=10'
VER. 1"=2'

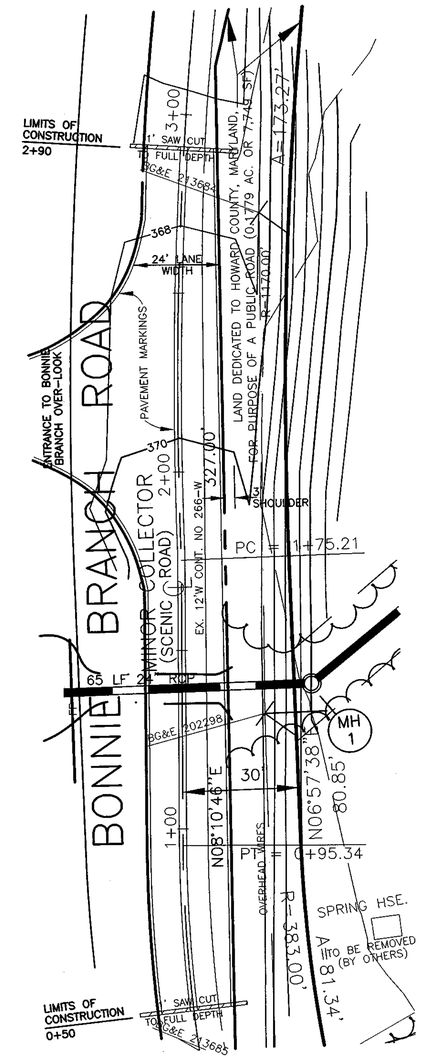

ROAD CONSTRUCTION ENLARGED PLAN

SCALE: 1" = 20'

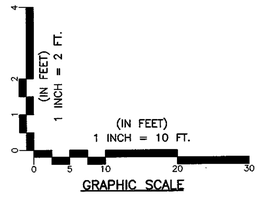

GRAPHIC SCALE

APPROVED: DEPARTMENT OF PUBLIC WORKS — N/A
CHIEF, BUREAU OF HIGHWAYS — DATE

APPROVED: DEPARTMENT OF PLANNING & ZONING
CHIEF, DIVISION OF LAND DEVELOPMENT — DATE 8/15/03
CHIEF, DEVELOPMENT ENGINEERING DIVISION MRJ — DATE 8/13/03

NOTE: THE SUITABILITY OF FILL MATERIAL MUST BE CONFIRMED BY THE ON-SITE GEOTECHNICAL PROFESSIONAL. EACH 8 INCH LIFT MUST BE COMPACTED TO 95% STANDARD PROCTOR DENSITY AND A TESTING REPORT SHALL BE MADE AVAILABLE TO THE HOWARD COUNTY INSPECTOR UPON COMPLETION OF CONSTRUCTION.

NOTE: THE REQUIRED BEARING PRESSURE BENEATH THE FOOTING OF THE WALL SHALL BE VERIFIED IN THE FIELD BY A GEOTECHNICAL PROFESSIONAL. TESTING DOCUMENTATION MUST BE PROVIDED TO THE HOWARD COUNTY INSPECTOR PRIOR TO THE START OF CONSTRUCTION.

STATE OF MARYLAND — G. NELSON CLARK — NO. 7195 — REGISTERED PROFESSIONAL ENGINEER — 4-29-03

OWNER / DEVELOPER
BONNIELASS LLC
8835-P COLUMBIA 100 PARKWAY
COLUMBIA, MARYLAND 21045

#6 D:\DRAWINGS\00098-BONNIELASS\1ST-RE-SUB\S12-STRUCTURE-DETS.DWG

CLARK · FINEFROCK & SACKETT, INC.
ENGINEERS · PLANNERS · SURVEYORS
7135 MINSTREL WAY · COLUMBIA, MD 21045 · (410) 381-7500 BALT. · (301) 621-8100 WASH.

DESIGNED PC/AS	WALL ELEVATION AND ROAD DETAIL **BONNIELASS** TAX MAP 31 PARCEL 254 GRID 9 ZONING R-20 FIRST (1ST) ELECTION DISTRICT HOWARD COUNTY, MARYLAND	SCALE AS SHOWN
DRAWN CRH2		DRAWING 12 OF 15
CHECKED AS		JOB NO. 00-098
DATE 4-1-03		FILE NO. 00-098-D

F-01-208

E:\BONNIELASS\12\215-5\00098-5\12-5\00098-5\12-5 Dwg, 4/29/2003 2:32:20 PM, HP DesignJet 230

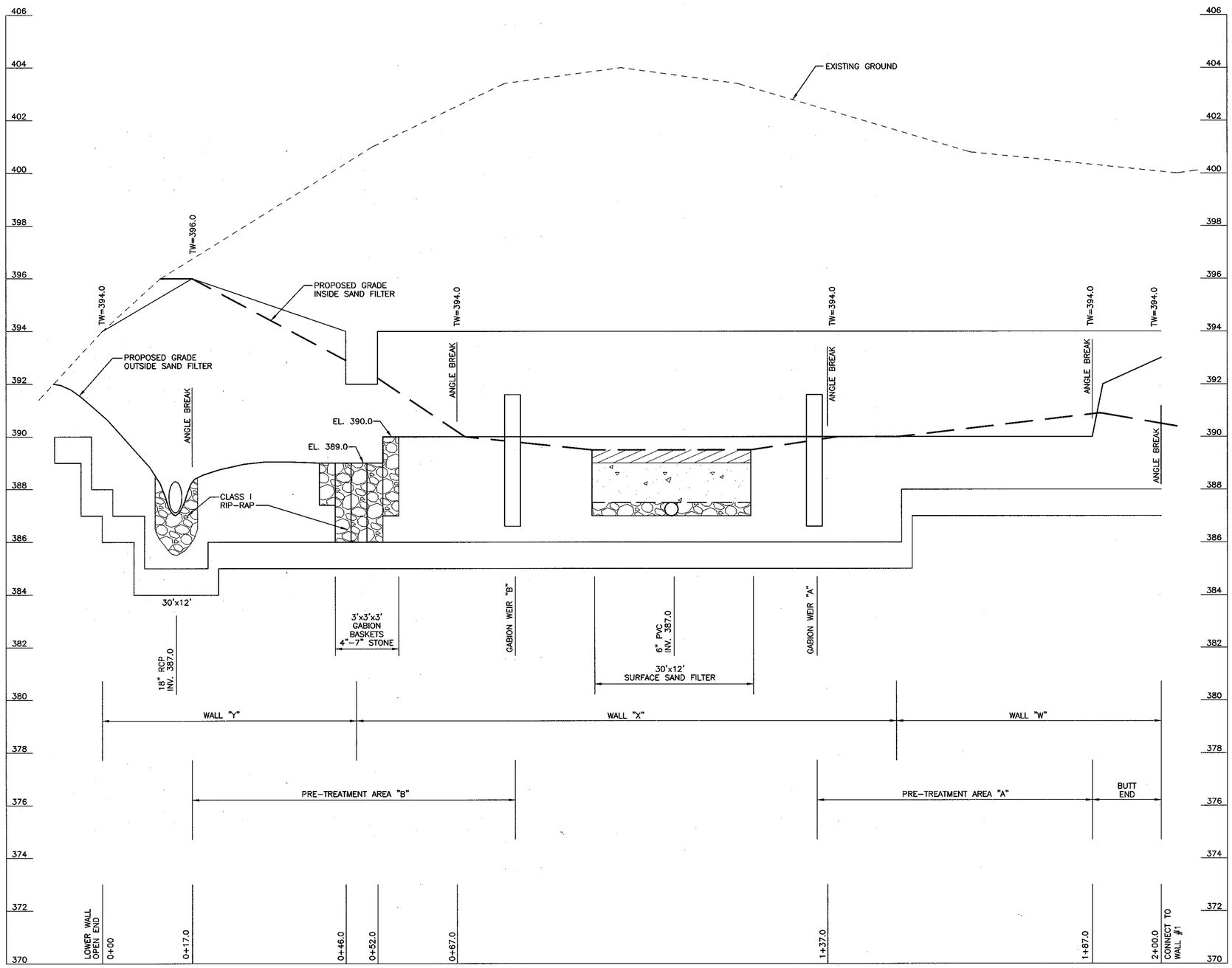

SURFACE SAND FILTER WALL #2 ELEVATION

SCALE: HOR. 1"=10'
VER. 1"=2'

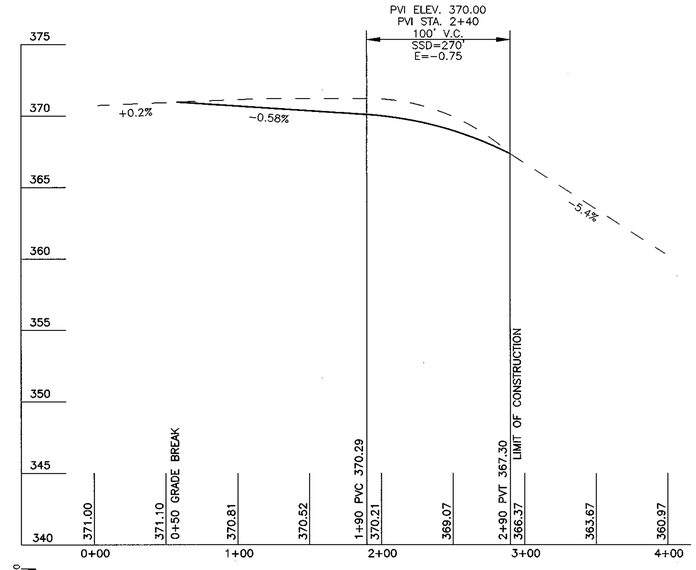

PROFILE- BONNIE BRANCH ROAD CONSTRUCTION

SCALE: HOR. 1"=50'
VER. 1'=5'

(IN FEET)
1 INCH = 5 FT.
0 2.5 5 10

(IN FEET)
1 INCH = 50 FT.
0 25 50 100 150 200

GRAPHIC SCALE

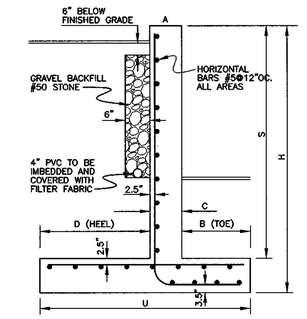

RETAINING WALL SCHEMATIC (TYP.)

NO SCALE

CHART FOR RETAINING WALLS

DIM. / WALL	H	A	B	C	D	S	T	U	STEM & TOE REINFORCING	HEEL REINFORCING	MIN. SOIL BEARING
W	7'	8"	12"	8"	3'	6'	12"	4.67'	#5@18"	#5@12"	3000 psf
X	9'	8"	1.33'	8"	4'	8'	12"	6.0'	#5@12"	#5@12"	3000 psf
Y	11'	12"	1.5'	12"	4.9'	10'	12"	7.4'	#8@15"	#5@8"	3000 psf
Z	16.5'	12"	2.33'	12"	9.5'	15'	18"	12.83'	#8@8"O.C.	#8@6"O.C.	3000 psf

NOTES:
1. SOME WALL TOPS SLOPE (NO SLOPE ON FOOTING)
2. USE PROFILE TO SET ELEVATIONS OF FOOTING AND WALL TOP (AS MAXIMUM) USE APPROPRIATE BAR LENGTHS.
3. THE MAXIMUM SLOPE ABOVE & BELOW WALLS IS 2:1
4. THE MINIMUM BEARING STRENGTH SHALL HAVE S.F.=3
5. PROVIDE A 4" DRAIN & GRAVEL BEHIND THE UPPER WALL AND DRAINED TO DAYLIGHT AT EACH END.

APPROVED: DEPARTMENT OF PUBLIC WORKS
CHIEF, BUREAU OF HIGHWAYS — DATE N/A

APPROVED: DEPARTMENT OF PLANNING & ZONING
CHIEF, DIVISION OF LAND DEVELOPMENT — DATE 5/15/03
CHIEF, DEVELOPMENT ENGINEERING DIVISION — DATE 5/12/03

(IN FEET)
1 INCH = 2 FT.
0 1 2 4

(IN FEET)
1 INCH = 10 FT.
0 5 10 20 30

GRAPHIC SCALE

NOTE: THE SUITABILITY OF FILL MATERIAL MUST BE CONFIRMED BY THE ON-SITE GEOTECHNICAL PROFESSIONAL. EACH 8 INCH LEFT MUST BE COMPACTED TO 95% STANDARD PROCTOR DENSITY AND A TESTING REPORT SHALL BE MADE AVAILABLE TO THE HOWARD COUNTY INSPECTOR UPON COMPLETION OF CONSTRUCTION.

NOTE: THE REQUIRED BEARING PRESSURE BENEATH THE FOOTING OF THE WALL SHALL BE VERIFIED IN THE FIELD BY A GEOTECHNICAL PROFESSIONAL. TESTING DOCUMENTATION MUST BE PROVIDED TO THE HOWARD COUNTY INSPECTOR PRIOR TO THE START OF CONSTRUCTION.

OWNER / DEVELOPER
BONNIELASS LLC
8835-P COLUMBIA 100 PARKWAY
COLUMBIA, MARYLAND 21045

STATE OF MARYLAND — G. NELSON CLARK — NO. 7199 — REGISTERED PROFESSIONAL ENGINEER
4-23-03

#6 D:\DRAWINGS\00098-BONNIELASS\1ST-RE-SUB\S13-STRUCTURE-DETS.DWG

CLARK · FINEFROCK & SACKETT, INC.
ENGINEERS · PLANNERS · SURVEYORS
7135 MINSTREL WAY · COLUMBIA, MD 21045 · (410) 381-7500 BALT. · (301) 621-8100 WASH.

DESIGNED PC/AS	WALL ELEVATION AND ROAD PROFILE BONNIELASS TAX MAP 31 PARCEL 254 GRID 9 ZONING R-20 FIRST (1ST) ELECTION DISTRICT HOWARD COUNTY, MARYLAND	SCALE AS SHOWN
DRAWN CRH2		DRAWING 13 OF 15
CHECKED AS		JOB NO. 00-098
DATE 4-1-03		FILE NO. 00-098-D

F01-208

E:\BONNIELASS\22\2003 Ch2 2E PSF 05 09 pwb.dwg 24 replaced

HANDLING AND PLANTING OF SEEDLING(1)

HEELING IN BARE ROOT STOCK

Bare root seedling and slip stock should be heeled in, if left unplanted for more than 24 hours.

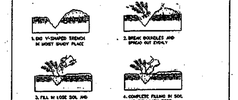

TREE BANKING

Tree banking should be used, when bare root trees must be held in the open for longer than a few days.

PLACE TREES IN AN EAST WEST TRENCH WITH THE TOPS OF THE TREES POINTING TOWARD THE AFTERNOON SUN. SPREAD OUT THE ROOTS TO COVER THEM AND MOUND OR POINTS RIGHT ONCE SOIL TO AVOID THE ATTENTION OF ANIMALS. THE TOPS OF THE SEEDLINGS TO BE SOIL OR THE ROOT WILL BE LESS LIKELY TO BEGIN GROWTH.

N/F ROBERT L. KYLER ET UX
L. 284 F. 374

HANDLING AND PLANTING OF SEEDLING(2)

HANDLING SEEDLINGS IN THE FIELD

NOTE:
Seedlings dry out very quickly and, once dry, often are not usable even after rehydration.

SEEDLING PLANTING METHODS

A. DIBBLE PLANTING

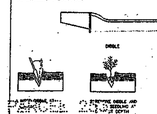

HANDLING AND PLANTING OF SEEDLING(3)

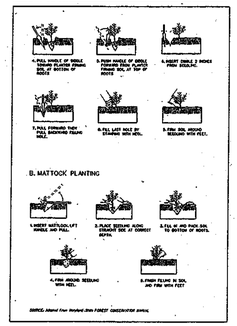

HANDLING AND PLANTING OF SEEDLING(4)

C. CORRECT AND INCORRECT PLANTING DEPTH

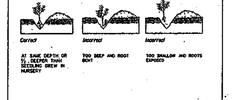

SEEDLING AND WHIP PLANTING SPECIFICATION

NOTE:
Mulching newly planted seedlings helps the soil retain moisture and it protects the seedling from compaction and stem injuries.

SOURCE: Manual from Maryland State FOREST CONSERVATION MANUAL

FOREST CONSERVATION WORKSHEET

NET TRACT AREA:
- A. TOTAL TRACT AREA.....5.63 AC
- B. AREA IN 100 YR FLOODPLAIN.....0.00
- C. NET TRACT AREA.....5.63

LAND USE CATEGORY:
- D. AFFORESTATION THRESHOLD.....(15 % X D).....0.84
- E. CONSERVATION THRESHOLD.....(20 % X D).....1.13

EXISTING FOREST COVER
- F. Existing forest cover (excluding floodplain).....5.13
- G. Forest area above conservation threshold.....4.00

BREAK EVEN POINT:
- H. Min. Forest Retention with no mitigation.....1.93
- I. Max. clearing with no mitigation.....3.20

PROPOSED CLEARING
- J. Total Forest area to be cleared.....4.19
- K. Total Forest area to be retained.....0.94

PLANTING REQUIREMENTS:
- L. Reforestation for clearing ABOVE threshold.....1.00
- M. Reforestation for clearing BELOW threshold.....0.37
- N. Credit for RETENTION above threshold.....0.00
- P. Total REFORESTATION required.....1.37
- Q. Total AFFORESTATION required.....0.00
- R. TOTAL PLANTING REQUIREMENT.....1.37 AC
- S. Total onsite planting.....0.11 AC
- T. Total offsite planting required.....1.26 AC

THE FOREST CONSERVATION REQUIREMENT OF SECTION 16.1200 OF THE HOWARD COUNTY CODE: FOREST CONSERVATION ACT, HAS BEEN MET BY THE REFORESTATION OF 1.26 ACRES OFFSITE. FINANCIAL SURETY FOR THE ONSITE FOREST CONSERVATION OBLIGATIONS FOR THIS SUBDIVISION ARE $8,189.00 FOR RETENTION OF 0.94 ACRES OF FOREST AND $2,396.00 FOR ONSITE REFORESTATION OF 0.11 ACRES. FINANCIAL SURETY FOR THE OFF-SITE REFORESTATION IS $27,443.00.

FOREST RETENTION AREA – SIGN

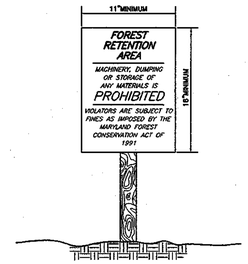

SIGNS SHALL BE POSTED AT 50' INTERVALS

NO SCALE

BONNIE BRANCH OVERLOOK
PLAT Nos. 14557 – 14561

FOREST CONSERVATION AREA #2
0.1143 AC.
PLANTING
4,979 SF

OPEN SPACE LOT 1
1.2634 ACRES

FOREST CONSERVATION AREA #1
0.1180 AC.
RETENTION

LOT 2
0.3790 ACRES

LOT 3
2.8105 ACRES

PARCEL 254
L. 5225 F. 685

OPEN SPACE LOT 4
1.0000 ACRES

FOREST CONSERVATION AREA #3
0.1299 AC.
RETENTION

FOREST CONSERVATION AREA #4
0.6941 AC.
RETENTION

BONNIE BRANCH ROAD
MINOR COLLECTOR (SCENIC ROAD)
Ex. 12"W CONC. MD 20" & 24" I.D.

GREGAMIN COURT

TO BE CONVEYED TO HOMEOWNER'S ASSOCIATION

REMOVE EXIST DRIVEWAY TO PROPERTY LINE

2 STY. BRICK&FRAME TO REMAIN

PROPOSED SODDED SWALE

LOW FLOW CHANNEL

30' PUBLIC WATER, SEWER AND UTILITY EASEMENT

24' PRIVATE ACCESS EASEMENT FOR OPEN SPACE LOTS 1 & 4, AND LOTS 2 & 3 AND SWM EASEMENT

20' PRIVATE STORM DRAIN EASEMENT

STORM WATER MANAGEMENT CREDIT EASEMENT #2 AND NATURAL AREA CONSERVATION #2
0.1236 AC.

STORM WATER MANAGEMENT CREDIT EASEMENT #1 AND NATURAL AREA CONSERVATION #1
0.5295 AC.

PRIVATE DRIVEWAY EASEMENT TO PARCEL 246 (NON-CREDITED OPEN SPACE) 0.0102 AC.

PUBLIC ACCESS EASEMENT

12" MAINTENANCE ACCESS

15' NON-WOODY VEGETATIVE BUFFER

MACADAM ACCESS

CL INLET

BIG GAR TO BE REMOVED

RIPRAP TO BE REMOVED

LOT 35

LOT 36

LOT 37

LOT 14

LOT 13

IP

BRITTEN/BRADY PROPERTY
PLAT No. 12567

RB&C

CRESTWOOD
PLAT No. 13618

CRESTWOOD
PLAT No. 13524

N/F BENJAMIN H. VESTER, JR. ET UX
L. 481 F. 73

N/F ROBERT L. KYLER ET UX
L. 284 F. 374

N 572,000
E 1,374,800

N 571,600
E 1,374,600

SCALE: 1" = 50'

NAD 83 MD. STATE PLANE

S79°03'12"E 778.11'

S22°43'44"W 128.84'

S25°04'49"W 168.66'

N04°06'46"E 353.47'

N85°53'14"W 700.35'

663.47'

310.0'

503.08'

R=470.00'
A=9.34'

R=80.00'
A=84.34'

180.14'

N22°48'48"E 46.98'

N08°10'46"E 30.00'

TREE PLANTING AND MAINTENANCE CALENDAR

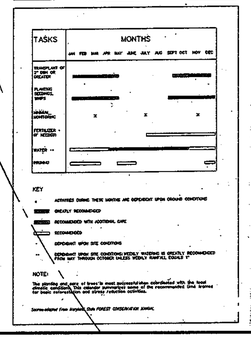

PLANT NAME		SIZE	QUANTITY	SPACING
Acer Rubrum	Red Maple	¾ - 1" cal.	20% 5	75'
Cercis Canadensis	Eastern Redbud	¾ - 1" cal.	20% 5	75'
Liriodendron Tulipifera	Tulip Poplar	¾ - 1" cal.	20% 5	75'
Nyssa Sylvatica	Black Gum	¾ - 1" cal.	20% 5	75'
Quercus Rubra	Northern Red Oak	¾ - 1" cal.	20% 5	75'

TREE SUBSTITUTES

Cornus Florida – Flowering Dogwood
Fraxinus Pennsylvanica – Green Ash
Sassafras Albidum – Sassafras

NOTE

Deer protection shall be provided for all planted trees to prevent damage from rubbing and browsing. Specific measures to be determined.

PRIVATE STORMWATER MANAGEMENT FACILITIES ON OPEN SPACE LOT 1 ARE TO BE OWNED AND MAINTAINED BY HOA.

DEVELOPER'S/BUILDERS CERTIFICATE

I/We certify that the landscaping shown on this plan will be done according to plan, section 16.124 of the Howard County Code and the Howard County Landscape Manual. I/We further certify that upon completion a Certificate of Landscape Installation, accompanied by an executed one year guarantee of plant materials, will be submitted to the Department of Planning and Zoning.

Name

7-1-03
Date

APPROVED: DEPARTMENT OF PUBLIC WORKS

CHIEF, BUREAU OF HIGHWAYS — DATE N/A

APPROVED: DEPARTMENT OF PLANNING & ZONING

CHIEF, DIVISION OF LAND DEVELOPMENT — DATE 8/15/03

CHIEF, DEVELOPMENT ENGINEERING DIVISION MRJ — DATE 8/13/03

STATE OF MARYLAND
THOMAS H. THEISEN
No. 10436
REGISTERED PROFESSIONAL ENGINEER
7-8-03

STATE OF MARYLAND
C. NELSON CLARK
No. 7138
REGISTERED PROFESSIONAL LANDSCAPE ARCHITECT
6-23-03

OWNER / DEVELOPER
BONNIELASS LLC
8835-P COLUMBIA 100 PARKWAY
COLUMBIA, MARYLAND 21045

CLARK · FINEFROCK & SACKETT, INC.
ENGINEERS · PLANNERS · SURVEYORS
7135 MINSTREL WAY · COLUMBIA, MD 21045 · (410) 381-7500 BALT. · (301) 621-8100 WASH.

DESIGNED TD/AS	FOREST CONSERVATION PLAN	SCALE 1"=30'
DRAWN CRH2	BONNIELASS	DRAWING 14 of 15
CHECKED AS	TAX MAP 31 PARCEL 254 GRID 9 ZONING R-20 FIRST (1ST) ELECTION DISTRICT HOWARD COUNTY, MARYLAND	JOB NO. 00-098
DATE 2-10-03		FILE NO. 00-098LS

#6 D:\DRAWINGS\00098-BONNIELASS\1ST-RE-SUB\S14-FORCON.DWG

F-01-208

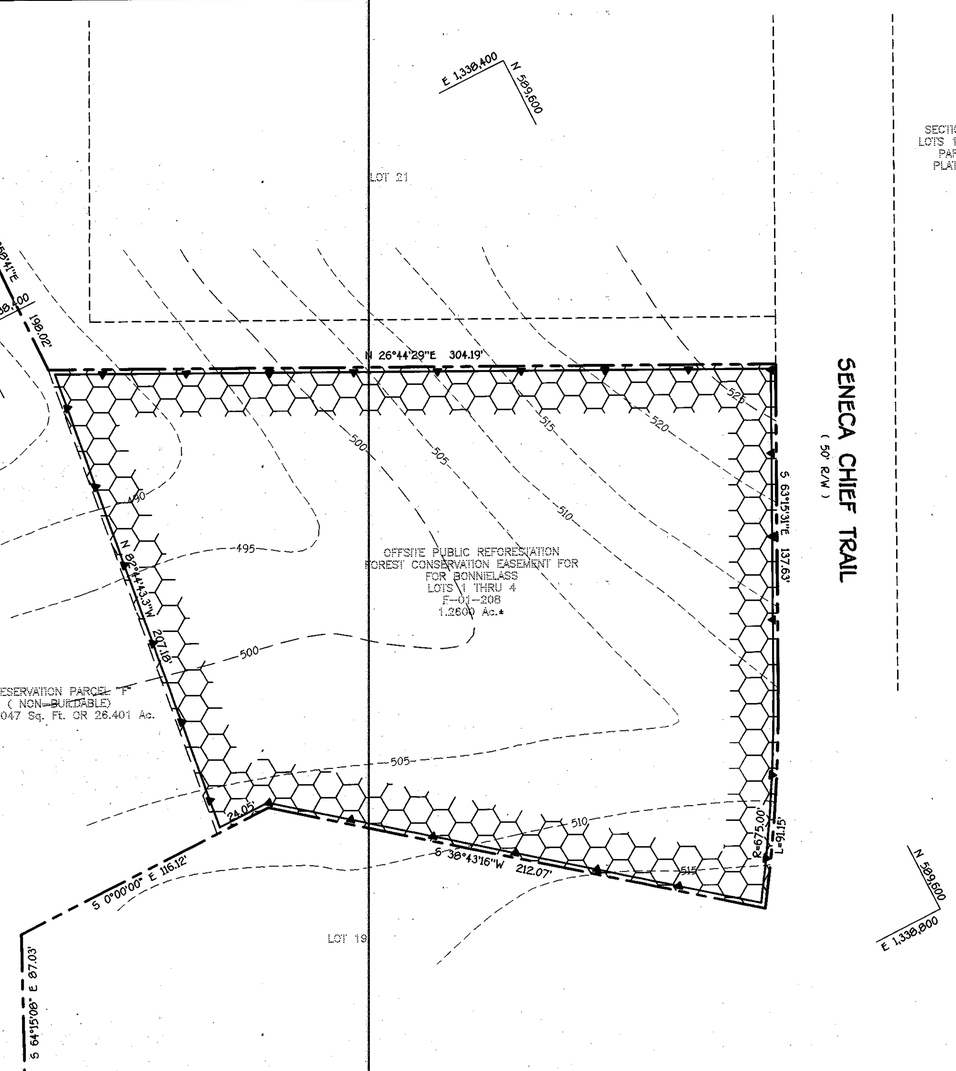

SENECA CHIEF TRAIL
(50' R/W)

BRANTWOOD
SECTION TWO – AREA ONE
LOTS 1–30 & PRESERVATION
PARCELS "E" AND "F"
PLAT No. 14132–14135

PLANTING SPECIFICATIONS AND NOTES

SITE PREPARATION AND SOILS

1. PROTECTION FENCING AND SILT FENCES FOR SEDIMENT AND EROSION CONTROL ARE TO BE INSTALLED AS A FIRST ORDER OF BUSINESS. SEE PLAN FOR LOCATIONS.
2. DISTURBANCE OF SOILS SHOULD BE LIMITED TO THE PLANTING FIELD FOR EACH PLANT. AS SHOWN ON THE DETAIL VIEW, A PLANTING FIELD OF RADIUS = 5 X DIAMETER OF THE ROOT BALL OR CONTAINER IS RECOMMENDED.
3. SOIL MIX FOR ALL PLANTS EXCEPT ERICACEOUS MATERIAL: SOIL MIX SHALL CONSIST OF EXISTING NATIVE TOPSOIL MIXTURE AT EACH PLANTING FIELD LOCATION INTO WHICH THE CONTRACTOR SHALL THOROUGHLY INCORPORATE 25% BY VOLUME OF COMPOSTED SLUDGE.
4. SOIL MIX FOR ERICACEOUS MATERIAL: SOIL MIX SHALL CONSIST OF EXISTING NATIVE TOPSOIL MIXTURE AT EACH PLANTING FIELD LOCATION INTO WHICH THE CONTRACTOR SHALL THOROUGHLY INCORPORATE 25% BY VOLUME PEAT MOSS.
5. ALL MIXING IN 3 AND 4 SHALL BE LIMITED TO CONTAINER GROWN OR BALL AND BURLAP STOCK ONLY AND CONFINED TO THE PLANTING FIELD AND IMMEDIATE ADJACENT SOIL SURFACE AREA AND SHALL BE DONE TO THE SATISFACTION OF THE DESIGN TEAM OR ENGINEER.

PLANT STORAGE AND INSPECTION

1. FOR CONTAINER GROWN NURSERY STOCK, PLANTING SHOULD OCCUR WITHIN 2 WEEKS AFTER DELIVERY TO THE SITE.
2. FOR BALL AND BURLAP NURSERY STOCK, PLANTING SHOULD OCCUR WITHIN THREE DAYS AFTER DELIVERY TO THE SITE.
3. PLANTING STOCK SHOULD BE INSPECTED PRIOR TO PLANTING. PLANTS NOT CONFORMING TO STANDARD NURSERYMAN SPECIFICATIONS FOR SIZE, FORM, VIGOR, ROOTS, TRUNK WOUNDS, INSECTS AND DISEASE SHOULD BE REPLACED.
4. UNTIL PLANTED, ALL PLANT STOCK SHALL BE KEPT IN A SHADED, COOL, AND MOISTENED ENVIRONMENT .

PLANT INSTALLATION

1. THE PLANTING FIELD SHOULD BE PREPARED AS SPECIFIED (SEE DETAIL). NATIVE STOCKPILED SOILS SHOULD BE USED FOR SOIL MIX AND BACKFILL FOR PLANTING FIELD. AFTER PLANT INSTALLATION, RAKE SOILS EVENLY OVER THE PLANTING FIELD AND COVER WITH AT LEAST 4 INCHES OF MULCH. WATER, GENEROUSLY, TO SETTLE SOIL BACKFILLED AROUND TREES.
2. PLANTING FIELD DIAMETERS SHOULD BE REDUCED OR PLANTING FIELD MOVED IF IT APPEARS THAT EXCESSIVE EXISTING ROOT DAMAGE MAY OCCUR DURING DIGGING OPERATION NEAR EXISTING FOREST.
3. CARE SHALL BE TAKEN WHEN DIGGING PLANTING FIELDS NOT TO CHOP THRU LARGER EXISTING ROOTS FROM EXISTING MATURE TREES. IF ROOTS GREATER THAN 1/2 INCH ARE ENCOUNTERED PLEASE TRY TO DIG AROUND THEM AS MUCH AS POSSIBLE TO MINIMIZE IMPACT TO EXISTING TREES. THEY WERE HERE FIRST.
4. CONTAINER GROWN STOCK SHOULD BE REMOVED FROM THE CONTAINER AND ROOTS GENTLY LOOSENED FROM THE SOIL. IF THE ROOTS ENCIRCLE THE ROOT BALL, SUBSTITUTION IS STRONGLY RECOMMENDED. J-SHAPED OR KINKED ROOT SYSTEMS SHOULD ALSO BE NOTED. ROOTS MAY NOT BE TRIMMED ON SITE, DUE TO THE INCREASED CHANCES OF SOIL BORNE DISEASES.
5. FOR BALL AND BURLAP STOCK, PLACE TREE IN PREPARED PLANTING FIELD AND REMOVE WIRE AND/OR STRING FROM ROOT BALL. THEN PEEL BACK BURLAP TO BASE OF ROOT BALL AND COVER ENTIRE ROOT BALL WITH TOPSOIL MIXTURE INDICATED ABOVE AND WATER GENEROUSLY.
6. FOR TREES PLANTED IN THE AFFORESTATION AREA, CONTRACTOR SHALL EVENLY DISPERSE SPECIES IN GROUPS OF TWO (2) TO FOUR (4), PER SPECIES, OVER THE ENTIRE DESIGNATED AREA TO BE PLANTED WHILE MAINTAINING AN AVERAGE RANDOM SPACING OF INDIVIDUAL TREES AT PROPER SPACING INDICATED ON PLANT LIST.
7. AVOID PLANTING IN A STRAIGHT GRID PATTERN. TREES SHALL BE PLANTED ON AN AVERAGE SPACING AS INDICATED ON PLANT LISTS TO OBTAIN A MORE NATURAL APPEARANCE.
8. NEWLY PLANTED TREES MAY NEED WATERING AS MUCH AS ONCE A WEEK FOR THE ENTIRE GROWING SEASON, DUE TO THE WELL DRAINED NATIVE SOILS FOUND ON THIS SITE COMBINED WITH THE LOOSENESS OF THE BACKFILLED AREA WITHIN THE PLANTING FIELD. THE NEXT TWO YEARS MAY REQUIRE WATERING ONLY A FEW TIMES A YEAR DURING SUMMER AND DRY MONTHS. AFTER THAT PERIOD, TREES SHOULD ONLY NEED WATER IN SEVERE DROUGHTS. ANY WATERING PLAN SHOULD COMPENSATE FOR RECENT RAINFALL PATTERNS.

FERTILIZING

1. DO NOT FERTILIZE NEWLY PLANTED TREES WITHIN THE FIRST GROWING SEASON AFTER PLANTING. DOING SO MAY CAUSE A SPURT OF CANOPY GROWTH WHICH THE ROOTS CANNOT SUPPORT AND ADD ADDITIONAL SHOCK TO THE ALREADY DISTURBED PLANT.
2. NOTHING SHOULD BE ADDED TO THE SOIL WITHOUT TESTING IT FIRST TO DETERMINE ITS NEEDS.
3. IF AND WHEN IT IS TIME TO FERTILIZE, ORGANIC FERTILIZERS ARE PREFERRED TO SYNTHETIC FERTILIZERS. BONE MEAL OR SEAWEED BASED PRODUCTS ARE AVAILABLE COMMERCIALLY AND ARE RECOMMENDED. THEY HAVE THE ABILITY TO SUPPLY NUTRIENTS TO THE PLANT AS NEEDED WHILE MINIMIZING THE RISK OF EXCESS NUTRIENTS ENTERING THE FOREST SYSTEM AND WATER SUPPLY.

MAINTENANCE SCHEDULE

1. ANNUAL MAINTENANCE DURING THE GROWING SEASON, FOR A THREE YEAR PERIOD.
2. ASSESS TREE MORTALITY OF PLANTING STOCK, REMOVE AND REPLACE ANY DEAD OR DISEASED PLANTINGS.
3. VOLUNTEER SEEDING OF NATIVE, LOCAL AND ENDEMIC VEGETATION IS TO BE EXPECTED. DO NOT DISCOURAGE THIS EFFORT UNLESS IT IS NEGATIVELY EFFECTING THE PLANTED STOCK.
4. REMOVE THROUGH MANUAL MEANS (GRUBBING, PULLING, CUTTING) AGGRESSIVE, NOXIOUS, INVASIVE SPECIES AND ALL HERBACEOUS VEGETATION WITHIN A 3-FOOT RADIUS SURROUNDING THE PLANTED WOODY NURSERY STOCK.
5. REMOVE AND DISPOSE OF MAN-MADE TRASH, INCLUDING ITEMS CONTAINED WITHIN ENTIRE PLANTING AREA. DO NOT REMOVE DOWN AND DEAD MATERIAL NATURALLY OCCURRING OR ACCUMULATING, UNLESS IT IS SMOTHERING PLANTING STOCK.
6. A 75 PERCENT SURVIVAL OF PLANTED STOCK MUST BE ACHIEVED AT THE END OF THE 24 MONTH MANAGEMENT PERIOD. IF NOT, ADDITIONAL PLANTINGS MAY BE REQUIRED TO ACHIEVE THIS GOAL.

SUPERVISION

1. ALL FOREST CONSERVATION ACTIVITIES SHALL BY DONE UNDER THE DIRECT SUPERVISION OF SOMEONE FROM THE DESIGN TEAM OR OTHER "QUALIFIED PROFESSIONAL" AS DETERMINED BY THE REQUIREMENTS OF COMAR 08.19.06.01 AND THE MARYLAND DEPARTMENT OF NATURAL RESOURCES, PUBLIC LANDS AND FORESTRY DIVISION.

REFORESTATION PLANT LIST

QTY.	SPECIES	SHADE TOL.	MOIST. REGIME	WET. STATUS	MIN.O.C. SPACING	SIZE & REMARKS
50	Prunus serotina Wild Black Cherry	I	M	FACU	11'	CONT/BROOT 3'-5' HEIGHT
50	Robinia pseudoacacia Black Locust	VI	D-M	FACU-	11'	CONT/BROOT 3'-5' HEIGHT
50	Liriodendron tulipifera Tulip Poplar	I	D-M	FAC	11'	CONT/BROOT 3'-5' HEIGHT
50	Quercus rubra Red Oak	MT	D-M	UPL	11'	CONT/BROOT 3'-5' HEIGHT
50	Fraxinus americana White Ash	MT	D-M	FACU	11'	CONT/BROOT 3'-5' HEIGHT
50	Nyssa sylvatica Black Gum	T	M-W	FAC	11'	CONT/BROOT 3'-5' HEIGHT
50	Juglans nigra Black Walnut	VT	M	FACU	11'	CONT/BROOT 3'-5' HEIGHT
50	Acer rubrum Red Maple	VT	D-W	FAC	11'	CONT/BROOT 3'-5' HEIGHT
50	Cercis canadensis Eastern Redbud	T	M	UPL	11'	CONT/BROOT 3'-5' HEIGHT
50	Diospyros virginiana Persimmon	I	D-M	UPL	11'	CONT/BROOT 3'-5' HEIGHT

Quantities Of Individual Species And Species Composition May Change Depending On Availability At Time Of Planting. Total Quantity Of Trees For Entire Easement Area Will Not Change. Any Species Substitutions Must Be Listed On The Howard County Forest Association List And Must Have A Minimum Of Five (5) Different Species As Indicated On The Howard County Forest Association List.

General Notes

1) The Forest Conservation Easement Has Been Established As An Offsite Forest Mitigation Area, Per Section 16.1216 Of The Howard County Forest Conservation Act. No Clearing, Grading Or Construction Is Permitted Within The Forest Conservation Easement; However, Forest Management Practices As Defined In The Deed Of Forest Conservation easement Are Allowed.

2) Denotes Forest Conservation Easement.

3) Denotes Protective Fence and Signs.

APPROVED: DEPARTMENT OF PUBLIC WORKS — N/A
CHIEF, BUREAU OF HIGHWAYS — DATE

APPROVED: DEPARTMENT OF PLANNING & ZONING
CHIEF, DIVISION OF LAND DEVELOPMENT, PLC — DATE 8/15/03
CHIEF, DEVELOPMENT ENGINEERING DIVISION, MPO — DATE 8/15/03

DATE	NO.	REVISION

PROJECT:
BONNIELASS
LOTS 1 THRU 4
F-01-208
*** ELECTION DISTRICT
HOWARD COUNTY, MARYLAND

TITLE:
OFF-SITE FOREST MITIGATION PLAN

AREA: BRANTWOOD
SECTION TWO - AREA ONE PRESERVATION PARCEL "G"
TAX MAP NO's 16 & 23 -PARCEL "F"- PLAT NO's 14132-14135
3 rd (THIRD) ELECTION DISTRICT HOWARD COUNTY, MARYLAND

TITLE:
REFORESTATION PLANTING PLAN

WILDMAN
ENVIRONMENTAL SERVICES
4747 BONNIE BRANCH RD.
ELLICOTT CITY, MD. 21043
PHONE: (410) 869-9999
FAX: (410) 869-9901
Ronald B. Wildman 5/30/03

DESIGNED BY: R.B.W.	
DRAWN BY: J.E.P.	
PROJECT NO.	
DATE: 4/18/03	
SCALE: 1"= 30'	
SHEET NO. 15 OF 15	

DEVELOPER

BONNIELASS, LLC.
8835 P – COLUMBIA 100 PARKWAY
COLUMBIA, MARYLAND 21045
410-730-0810

OWNER/GRANTOR

BRANTWOOD, LLC
8835 P – COLUMBIA 100 PARKWAY
COLUMBIA, MARYLAND 21045
410-730-0810

THIS PLAN IS FOR
FOREST CONSERVATION EASEMENT
PLANTING PURPOSES ONLY

PROTECTIVE FENCE DETAIL
TWO STRAND SMOOTH WIRE

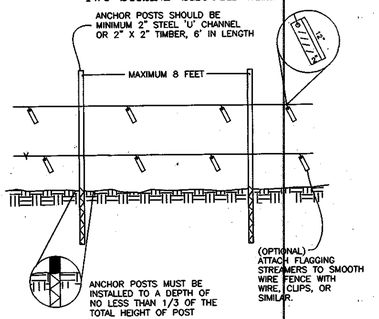

1. FOREST PROTECTION DEVICE ONLY.
2. RETENTION AREA WILL BE SET AS PART OF THE REVIEW PROCESS.
3. BOUNDARIES OF AREA SHOULD BE STAKED AND FLAGGED PRIOR TO INSTALLING DEVICE.
4. ROOT DAMAGE SHOULD BE AVOIDED.
5. PROTECTIVE SIGNAGE MAY ALSO BE USED.
6. DEVICE SHOULD BE MAINTAINED THROUGHOUT CONSTRUCTION.
7. SMOOTH WIRE SHOULD BE ATTACHED SECURELY TO POSTS.

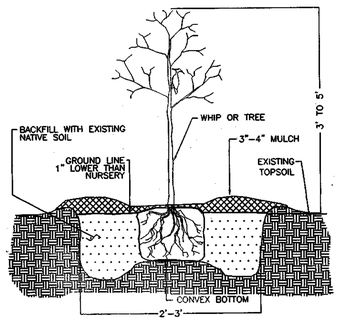

TREE PLANTING DETAIL
CONTAINER GROWN

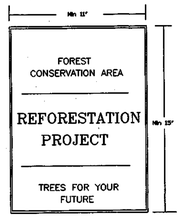

SIGNAGE DETAIL
NOT TO SCALE

AUTOCAD FILE NAME C:\Land Projects\Brantwood\dwg\Planting Plan.dwg

NO	REVISION	DATE
1	REV. PROPOSED STREET GRADES, ADD RET. WALLS TO STORMWATER POND	6-16-03

LEGEND

CONTOUR INTERVAL 2 FT.
EXISTING CONTOUR 348
PROPOSED CONTOUR 348
DIRECTION OF DRAINAGE
WALK OUT BASEMENT WOB
SPOT ELEVATION +78
STABILIZED CONSTRUCTION ENTRANCE SCE
EROSION CONTROL MATTING ECM
SILT FENCE SF SF SF
LIMIT OF DISTURBED AREA OF PHASE I LOD
LIMIT OF DISTURBED AREA OF PHASE II LOD
TREE PROTECTION FENCE
EXISTING TREES TO REMAIN

SCALE: 1" = 50'

NAD 83' MD. STATE PLANE

E 1,374,800
N 572,000

NOTE: THE HEIGHT OF THE L RETAINING WALLS SHALL NOT EXCEED 3 FEET AT ANY POINT.

BONNIE BRANCH OVERLOOK
PLAT Nos. 14557 - 14561

BONNIE BRANCH ROAD

BONNIE BRANCH TO PATAPSCO RIVER

PARCEL 253
N/F ROBERT J. KYLER, ET UX
L. 294 F. 374

OPEN SPACE LOT 1
1.2834 ACRES

FOREST CONSERVATION AREA #1
0.1190 AC.
RETENTION

FOREST CONSERVATION AREA #2
0.1143 AC.
PLANTING

FOREST CONSERVATION AREA #3
0.1299 AC.
RETENTION

FOREST CONSERVATION AREA #4
0.6941 AC.
RETENTION

LOT 2
0.3790 ACRES

LOT 3
2.8105 ACRES

PARCEL 254
L. 5225 F. 685

OPEN SPACE LOT 4
1.0000 ACRES

STORM WATER MANAGEMENT CREDIT EASEMENT #1 AND NATURAL AREA CONSERVATION #1
0.5299 AC.

STORM WATER MANAGEMENT CREDIT EASEMENT #2 AND NATURAL AREA CONSERVATION #2
0.1236 AC.

TO BE CONVEYED TO HOMEOWNER'S ASSOCIATION

LIMITS OF CONSTRUCTION STA. 2+90

1' SAW CUT TO FULL DEPTH

LIMITS OF CONSTRUCTION STA. 0+50

NOTE: 0+50 TO 2+90 LOWER BONNIE BRANCH ROAD PROFILE IN ACCORDANCE WITH PROFILE ON SHEET 13. MATCH SECTION AND PAVING DEPTH TO EX. SECTION AND PAVING DEPTH.

12'x8' CLASS I RIP RAP OVER CLASS 'C' FILTER FABRIC. D50=9", D100=14"

4'x10' CONCRETE TRASH PAD OWNED AND MAINTAINED BY THE HOMEOWNER'S ASSOCIATION

MILL APRON 1 1/2", WIDEN TO 14' WITH BASE COURSE AND TOP WITH 1 1/2" SURFACE PAVEMENT.

0+00 INTERSECTION ANGLE 84°25'06"

SAW CUT ASPHALT DRIVEWAY

REMOVE EXISTING DRIVEWAY TO PROPERTY LINE

FENCE TO BE LOCATED ON TOP OF WALL

20' PRIVATE STORM DRAIN EASEMENT

10'x10' PUBLIC WATER AND UTILITY EASEMENT

30' PUBLIC WATER, SEWER AND UTILITY EASEMENT

12' MAINTENANCE ACCESS

24' PRIVATE ACCESS PLACE EASEMENT

GREGAMIN COURT

PROPOSED SODDED SWALE

NOT TO REMOVE TREES OVER 2" IN DIAMETER ADJUST IN THE FIELD AS NEEDED.

PUBLIC 30' SWM ACCESS EASEMENT

PRIVATE DRIVEWAY EASEMENT TO PARCEL 246 (NON-CREDITED OPEN SPACE) 0.0102 AC.

PARCEL 246
N/F BENJAMIN H. VESTER, JR. ET UX
L. 481 F. 73

MDE Detail 6 - Gabion Inflow Protection

LOT 35

LOT 36

BRITTEN/BRADY PROPERTY
PLAT No. 12567

RB&C

LOT 37

LOT 14

CRESTWOOD
PLAT No. 13618

CRESTWOOD
PLAT No. 13524

LOT 13

E 1,374,800
N 571,600

NOTE:
SPECIAL CARE SHALL BE TAKEN WHILE WORKING UNDER OVERHEAD ELECTRIC.

NOTE:
CONTRACTOR SHALL PROVIDE SHORING AS REQUIRED TO MAINTAIN INTEGRITY OF BG&E POLE #202298 DURING INSTALLATION OF STORM DRAIN.

NOTE:
CONTRACTOR IS TO COORDINATE RELOCATION OF OVERHEAD WIRES AND REMOVAL/RESETTING OF BG&E POLES #238994 AND #213685 WITH UTILITY COMPANY

PRIVATE STORMWATER MANAGEMENT FACILITIES ON OPEN SPACE LOT 1 TO BE OWNED AND MAINTAINED BY HOA.

OWNER / DEVELOPER
BONNIELASS LLC
8835-P COLUMBIA 100 PARKWAY
COLUMBIA, MARYLAND 21045

APPROVED: DEPARTMENT OF PUBLIC WORKS — N/A
CHIEF, BUREAU OF HIGHWAYS — DATE

APPROVED: DEPARTMENT OF PLANNING & ZONING
CHIEF, DIVISION OF LAND DEVELOPMENT — DATE 8/15/03
CHIEF, DEVELOPMENT ENGINEERING DIVISION — DATE 8/15/03

By The Developer:

"I/We certify that all development and/or construction will be done according to these plans, and that any responsible personnel involved in the construction project will have a Certificate of Attendance at a Department of the Environment Approved Training Program for the Control of Sediment and Erosion before beginning the project. I shall engage a registered professional engineer to supervise pond construction and provide the Howard Soil Conservation District with an "as-built" plan of the pond within 30 days of completion. I also authorize periodic on-site inspections by the Howard Soil Conservation District."

Signature of Developer — 7.1.03 Date

By the Engineer:

"I certify that this plan for pond construction, erosion and sediment control represents a practical and workable plan based on my personal knowledge of the site conditions. This plan was prepared in accordance with the requirements of the Howard Soil Conservation District. I have notified the developer that he/she must engage a registered professional engineer to supervise pond construction and provide the Howard Soil Conservation District with an "as-built" plan of the pond within 30 days of completion."

Signature of Engineer — 6-25-03 Date

STATE OF MARYLAND — ROBERT CLARK — No. 15824 — REGISTERED PROFESSIONAL ENGINEER

2-10-03

CLARK · FINEFROCK & SACKETT, INC.
ENGINEERS · PLANNERS · SURVEYORS
7135 MINSTREL WAY · COLUMBIA, MD 21045 · (410) 381-7500 BALT. · (301) 621-8100 WASH.

DESIGNED PC/AS	SITE DEVELOPMENT, STORMWATER MANAGEMENT AND GRADING PLAN	SCALE 1"=30'
DRAWN ZAH/CRH2	BONNIELASS	DRAWING 2 of 15
CHECKED AS	TAX MAP 31 PARCEL 254 GRID 9 ZONING R-20 FIRST (1ST) ELECTION DISTRICT HOWARD COUNTY, MARYLAND	JOB NO. 00-098
DATE 2-10-03		FILE NO. 00-098-D

#6 D:\DRAWINGS\00098-BONNIELASS\1ST-RE-SUB\SU2-SDP-SWM-GRAD.DWG

F-01-208

NO	REVISION	DATE
1	REV. PROP. STREETAREA, ADD RETAINING WALLS TO STORMWATER POND	5-22-03

SEDIMENT BASIN #1

DRAINAGE AREA = 1.45 AC.
WET STORAGE REQUIRED= 2,610 CF
WET STORAGE PROVIDED= 4,880 CF
WET STORAGE ELEVATION= 387.0
DRY STORAGE REQUIRED= 2,610 CF
DRY STORAGE PROVIDED= 4,880 CF
DRY STORAGE ELEVATION= 388.0
TOP OF DAM ELEVATION= 390.0
BOTTOM ELEVATION= 388.0
BOTTOM DIMENSIONS= 75'x73'
SIDE SLOPES= 3:1
CLEANOUT ELEVATION= 386.4

15'x5'x18" STONE VELOCITY DISSIPATER
4"-7" STONE OVER CLASS "C" FILTER FABRIC.
(TEMPORARY)

(TEMPORARILY BLOCK 4" PVC ORIFICE)

LEGEND

CONTOUR INTERVAL 2 FT.
EXISTING CONTOUR 348
PROPOSED CONTOUR 348
DIRECTION OF DRAINAGE
WALK OUT BASEMENT BOTTOM
SPOT ELEVATION +78.4
STABILIZED CONSTRUCTION ENTRANCE SCE
EROSION CONTROL MATTING ECM
SUPER SILT FENCE SSF
LIMIT OF DISTURBED AREA OF PHASE I LOD
LIMIT OF DISTURBED AREA OF PHASE II LOD
TREE PROTECTION FENCE
EXISTING TREES TO REMAIN
EARTH DIKE A-1
STANDARD INLET PROTECTION SIP
MOUNTABLE BERM MB

NAD 83' MD. STATE PLANE
SCALE: 1" = 50'

E 1,374,800 N 572,000

BONNIE BRANCH OVERLOOK
PLAT Nos. 14557 - 14561

PARCEL 253
N/F ROBERT J. KYLER, ET UX
L. 284 F. 374

OPEN SPACE LOT 1

FOREST CONSERVATION AREA #1
0.1190 AC.
RETENTION

FOREST CONSERVATION AREA #2
0.1143 AC.
PLANTING

FOREST CONSERVATION AREA #3
0.1299 AC.
RETENTION

FOREST CONSERVATION AREA #4
0.6941 AC.
RETENTION

OPEN SPACE LOT 4

STORM WATER MANAGEMENT CREDIT EASEMENT #1 AND NATURAL AREA CONSERVATION #1
0.5299 AC.

STORM WATER MANAGEMENT CREDIT EASEMENT #2 AND NATURAL AREA CONSERVATION #2
0.1236 AC.

TO BE CONVEYED TO 'HOMEOWNER'S ASSOCIATION

LOT 2
LOT 3
LOT 4

PARCEL 254
L. 5225 F. 685

LOT 35
LOT 36
LOT 37
LOT 14
LOT 13

BRITTEN/BRADY PROPERTY
PLAT No. 12567

CRESTWOOD
PLAT No. 13618

CRESTWOOD
PLAT No. 13524

PARCEL 246
N/F BENJAMIN H. VESTER, JR. ET UX
L. 481 F. 73

BONNIE BRANCH ROAD
MINOR COLLECTOR
(SCENIC ROAD)

GREGAMIN COURT

24' PRIVATE ACCESS PLACE EASEMENT FOR OPEN SPACE LOTS 1 & 4 AND LOTS 2 & 3, AND SWM EASEMENT.

20' PRIVATE STORM DRAIN EASEMENT

30' PUBLIC WATER SERVICE AND UTILITY EASEMENT

PUBLIC 30' SWM ACCESS EASEMENT

PRIVATE DRIVEWAY EASEMENT TO PARCEL 246 (NON-CREDITED OPEN SPACE) 0.0102 AC.

DRAINAGE AREA TO BASIN 1.45 AC.

REMOVE EXISTING DRIVEWAY TO PROPERTY LINE

TEMP. DEWATERING DEVICE

LOW FLOW CHANNEL

20'x80' TURN AROUND

12' MAINTENANCE ACCESS

15' NON-WOODY VEGETATIVE BUFFER

LIMIT OF DISTURBANCE PHASE I

LIMIT OF DISTURBANCE PHASE II

CLEAN WATER DIVERSION A-3

TEMPORARY STOCK PILE AREA

4'x10' CONCRETE TRASH PAD (OWNED AND MAINTAINED BY H.O.A.)

MILL APRON 1 1/2", WIDEN TO 14' WITH BASE COURSE AND TOP WITH 1 1/2" SURFACE PAVEMENT.

SAW CUT ASPHALT DRIVEWAY

LIVE CHANNEL WITH RIPRAP D_{50}=9" OVER EROSION CONTROL FABRIC

Detail 6- Gabion Inflow Protection of 1994 MD Standards and Specification for Soil Erosion and Sediment Control. Locate upstream toe and center to existing swale.

16'x5'x18" RIP-RAP INFLOW PROTECTION (TEMPORARY)

PROPOSED SODDED SWALE

S79°03'12"E 778.11'
S22°43'44"W 129.84'
S28°02'45"W 169.66'
N85°53'14"W 700.35'
N04°06'46"W 162.45'
N22°43'44"E 96.48'
N08°10'46"E 327.00'
663.43'
503.08'
180.14'
R=470.00'
A=9.34'

NOTE:
SPECIAL CARE SHALL BE TAKEN WHILE WORKING UNDER OVERHEAD ELECTRIC.

NOTE:
CONTRACTOR SHALL PROVIDE SHORING AS REQUIRED TO MAINTAIN INTEGRITY OF BG&E POLE #202298 DURING INSTALLATION OF STORM DRAIN.

NOTE:
CONTRACTOR IS TO COORDINATE RELOCATION OF OVERHEAD WIRES AND REMOVAL/RESETTING OF BG&E POLES #238994 AND #213685 WITH UTILITY COMPANY

PRIVATE STORMWATER MANAGEMENT FACILITIES ON OPEN SPACE LOT 1 TO BE OWNED AND MAINTAINED BY HOA.

Reviewed for HOWARD S.C.D.
and meets Technical Requirements
Signature 7/31/03 Date
U.S. Natural Resources Conservation Service

THIS DEVELOPMENT PLAN IS APPROVED FOR SOIL EROSION AND SEDIMENT CONTROL BY THE HOWARD SOIL CONSERVATION DISTRICT.
Howard S.C.D. 7/31/03 Date

APPROVED: DEPARTMENT OF PUBLIC WORKS
CHIEF, BUREAU OF HIGHWAYS N/A DATE

APPROVED: DEPARTMENT OF PLANNING & ZONING
CHIEF, DIVISION OF LAND DEVELOPMENT 8/15/03 DATE
CHIEF, DEVELOPMENT ENGINEERING DIVISION 8/13/03 DATE

By The Developer:

"I/We certify that all development and/or construction will be done according to these plans, and that any responsible personnel involved in the construction project will have a Certificate of Attendance at a Department of the Environment Approved Training Program for the Control of Sediment and Erosion before beginning the project. I shall engage a registered professional engineer to supervise pond construction and provide the Howard Soil Conservation District with an "as-built" plan of the pond within 30 days of completion. I also authorize periodic on-site inspections by the Howard Soil Conservation District."

Signature of Developer 7.1.03 Date

By the Engineer:

"I certify that this plan for pond construction, erosion and sediment control represents a practical and workable plan based on my personal knowledge of the site conditions. This plan was prepared in accordance with the requirements of the Howard Soil Conservation District. I have notified the developer that he/she must engage a registered professional engineer to supervise pond construction and provide the Howard Soil Conservation District with an "as-built" plan of the pond within 30 days of completion."

Signature of Engineer 6-25-03 Date

STATE OF MARYLAND — G. NELSON CLARK — No. 10787 — PROFESSIONAL ENGINEER
2-10-03

OWNER / DEVELOPER
BONNIELASS LLC
8835-P COLUMBIA 100 PARKWAY
COLUMBIA, MARYLAND 21045

CLARK · FINEFROCK & SACKETT, INC.
ENGINEERS · PLANNERS · SURVEYORS
7135 MINSTREL WAY · COLUMBIA, MD 21045 · (410) 381-7500 BALT. · (301) 621-8100 WASH.

DESIGNED PC/AS	SEDIMENT AND EROSION CONTROL PLAN	SCALE 1"=30'
DRAWN CRH2	BONNIELASS	DRAWING 3 of 15
CHECKED AS	TAX MAP 31 PARCEL 254 GRID 9 ZONING R-20 FIRST (1ST) ELECTION DISTRICT HOWARD COUNTY, MARYLAND	JOB NO. 00-098
DATE 2-10-03		FILE NO. 00-098-D

#6 D:\DRAWINGS\00098-BONNIELASS\1ST-RE-SUB\S03-SEC-PLAN.DWG

D:\DWG\00098\00098-BONNIELASS\121-HEC-2DB\203-SEC-PLAN.DWG Thu Feb 06 12:01:29 2003

F-01-208

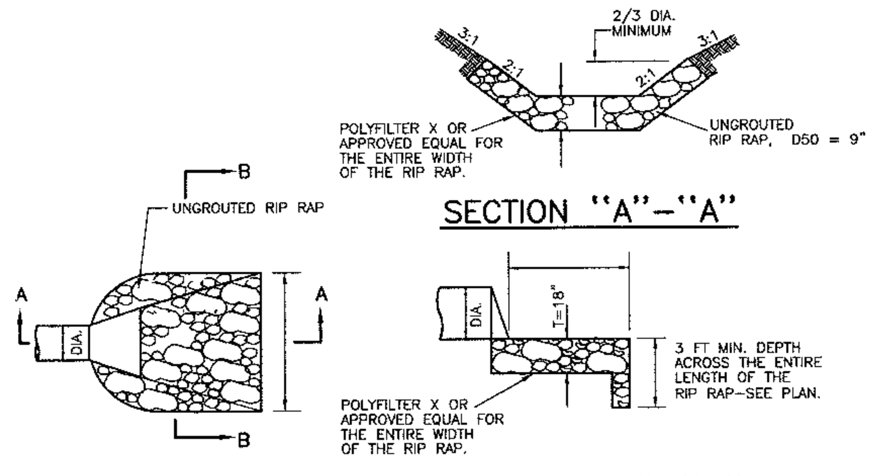

RIP RAP SCHEDULE

	WIDTH 'W'	LENGTH 'L'
ES-1	8'	12'
FOREBAY	8'	14'

UNGROUTED RIP RAP DETAIL

NO SCALE

Construction Specifications

1. The subgrade for the filter, rip-rap, or gabion shall be prepared to the required lines and grades. Any fill required in the subgrade shall be compacted to a density of approximately that of the surrounding undisturbed material.

2. The rock or gravel shall conform to the specified grading limits when installed respectively in the rip-rap or filter.

3. Geotextile shall be protected from punching, cutting, or tearing. Any damage other than an occasional small hole shall be repaired by placing another piece of geotextile over the damaged part or by completely replacing the geotextile. All overlaps whether for repairs or for joining two pieces of geotextile shall be a minimum of one foot.

4. Stone for the rip-rap or gabion outlets may be placed by equipment. They shall be constructed to the full course thickness in one operation and in such a manner as to avoid displacement of underlying materials. The stone for rip-rap or gabion outlets shall be delivered and placed in a manner that will ensure that it is reasonably homogeneous with the smaller stones and spalls filling the voids between the larger stones. Rip-rap shall be placed in a manner to prevent damage to the filter blanket or geotextile. Hand placement will be required to the extent necessary to prevent damage to the permanent works.

5. The stone shall be placed so that it blends in with the existing ground. If the stone is placed too high then the flow will be forced out of the channel and scour adjacent to the stone will occur.

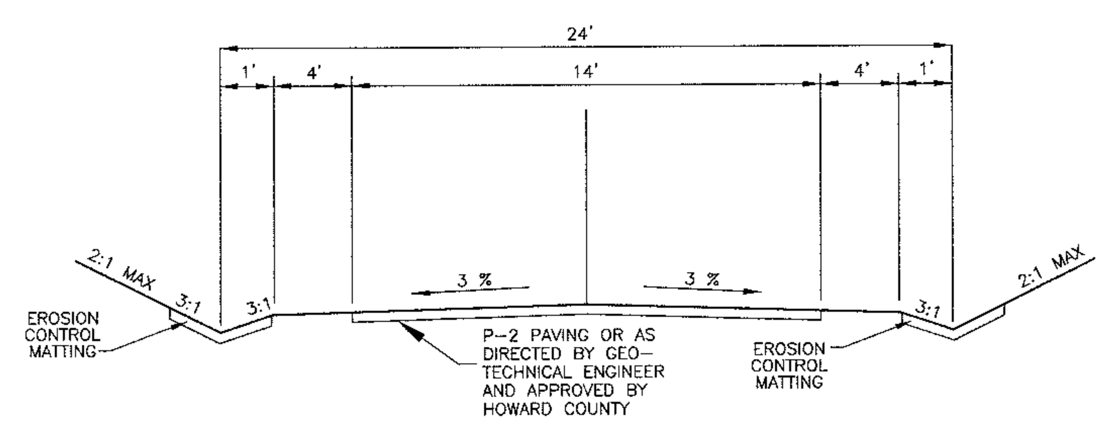

TYPICAL SECTION
PRIVATE ACCESS PLACE

NO SCALE

1-1/2" SURFACE COURSE
2-1/2" BASE COURSE
6" AGGREGATE BASE

P-2 PAVING SECTION

NO SCALE

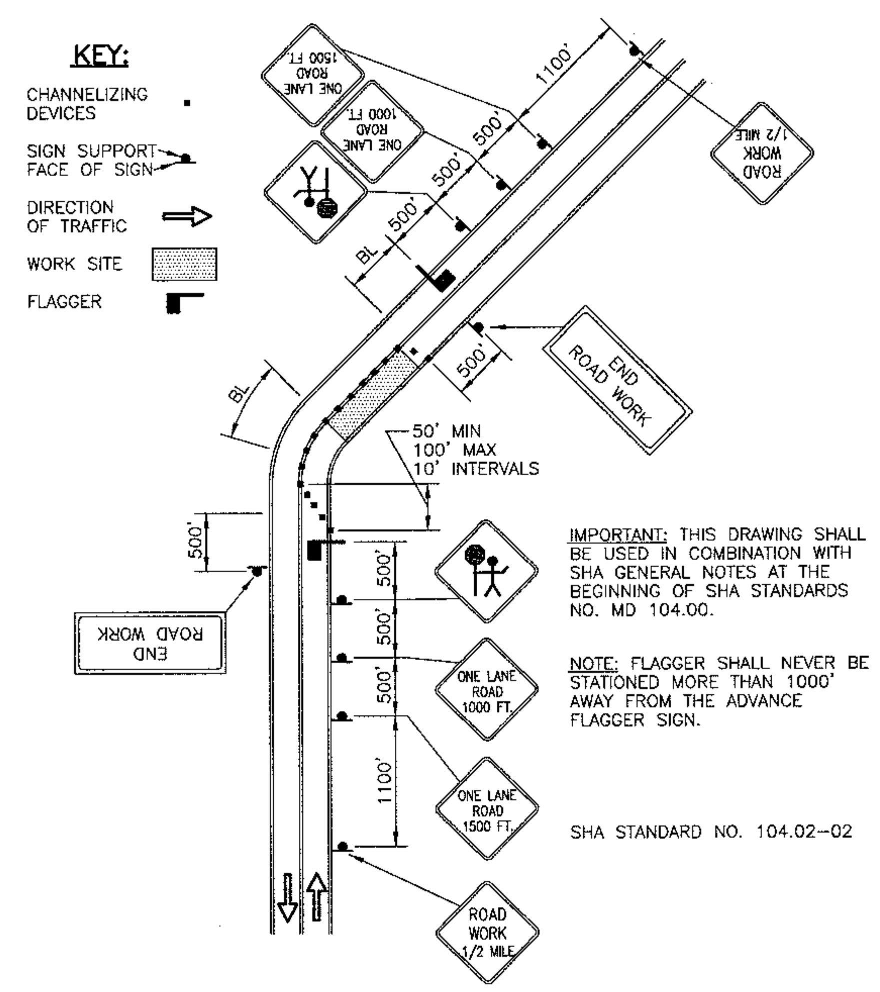

TRAFFIC CONTROL DETAIL

NO SCALE

STRUCTURE SCHEDULE

NO.	TYPE	TOP OF STRUCTURE ELEVATION	INVERT IN	INVERT OUT	REMARKS	LOCATION
ES-1	24" RCP END SECTION		359.6	359.2	HO. CO. STD. SD 5.52	N. 571865.15, E. 1374031.67
MH-1	MANHOLE 48" DIA.	379.80	363.5	376.0	HO. CO. STD. S 1.32	N. 571856.65, E. 1374150.36
MH-2	MANHOLE 48" DIA.	389.00	383.2	384.7	HO. CO. STD. S 1.32	N. 571886.48, E. 1374148.86
MH-3	MANHOLE 48" DIA	396.80	388.24	388.14	HO. CO. STD. S 1.32	N. 572000.60, E. 1374268.75
MH-4	MANHOLE 48" DIA	396.50	393.60	393.40	HO. CO. STD. S 1.32	N. 571991.01, E. 1374273.00
MH-5	MANHOLE 48" DIA	398.70	388.66	388.56	HO. CO. STD. S 1.32	N. 571993.74, E. 1374286.98
S-1	CONCRETE RISER	390.00	385.5	385.0	REFER TO DETAIL- SHEET 6	N. 571897.20, E. 1374169.42
S-2	TRASH RACK BASE		-	-	REFER TO DETAIL- SHEET 6	SEE PLAN
I-1	TYPE 'S' INLET	393.70	387.42	387.32	HO. CO. STD SD 4.22\4.23 MODIFIED TO INCLUDE ALUMINUM GRATE REFER TO SHT 7 OF FOR ADD. DETAILS	N. 572016.69, E. 1374226.94
I-2	TYPE 'DOUBLE S' INLET	401.60	-	397.60	HO. CO. STD. SD 4.22\4.23	N. 572008.54, E. 1374296.64
I-3	TYPE 'S' INLET	393.40	390.70	390.03	HO. CO. STD. SD 4.12\4.13	N. 571857.33, E. 1374272.94
I-4	TYPE 'DOUBLE S' INLET	403.00	392.8	392.6	HO. CO. STD SD 4.22\4.23	N. 571829.91, E. 1374338.18
I-5	TYPE 'S' INLET	403.20	393.25	393.00	HO. CO. STD SD 4.22\4.23	N. 571808.63 E. 1374343.47
I-6	TYPE 'S' INLET	407.80	-	403.66	HO. CO. STD SD 4.22\4.23	N. 571793.23 E. 1374369.82

PIPE SCHEDULE

SIZE	TYPE	LENGTH
4"	PVC	25 LF
15"	RCP	80 LF
18"	RCP	316 LF
24"	RCPR	20 LF
24"	RCP	113 LF

RCPR - REINFORCED CONCRETE PIPE WITH RUBBER GASKET.
RCP - REINFORCED CONCRETE PIPE.

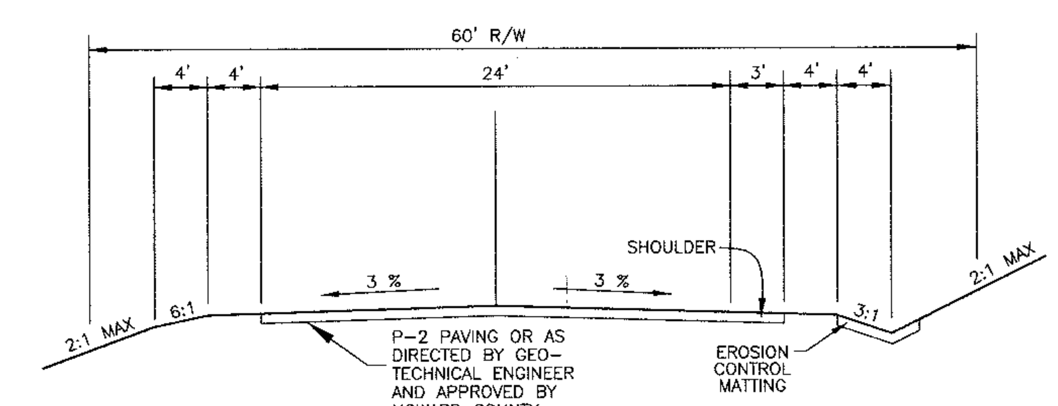

PROPOSED CROSS-SECTION FOR
BONNIE BRANCH ROAD IMPROVEMENTS

MINOR COLLECTOR

NO SCALE

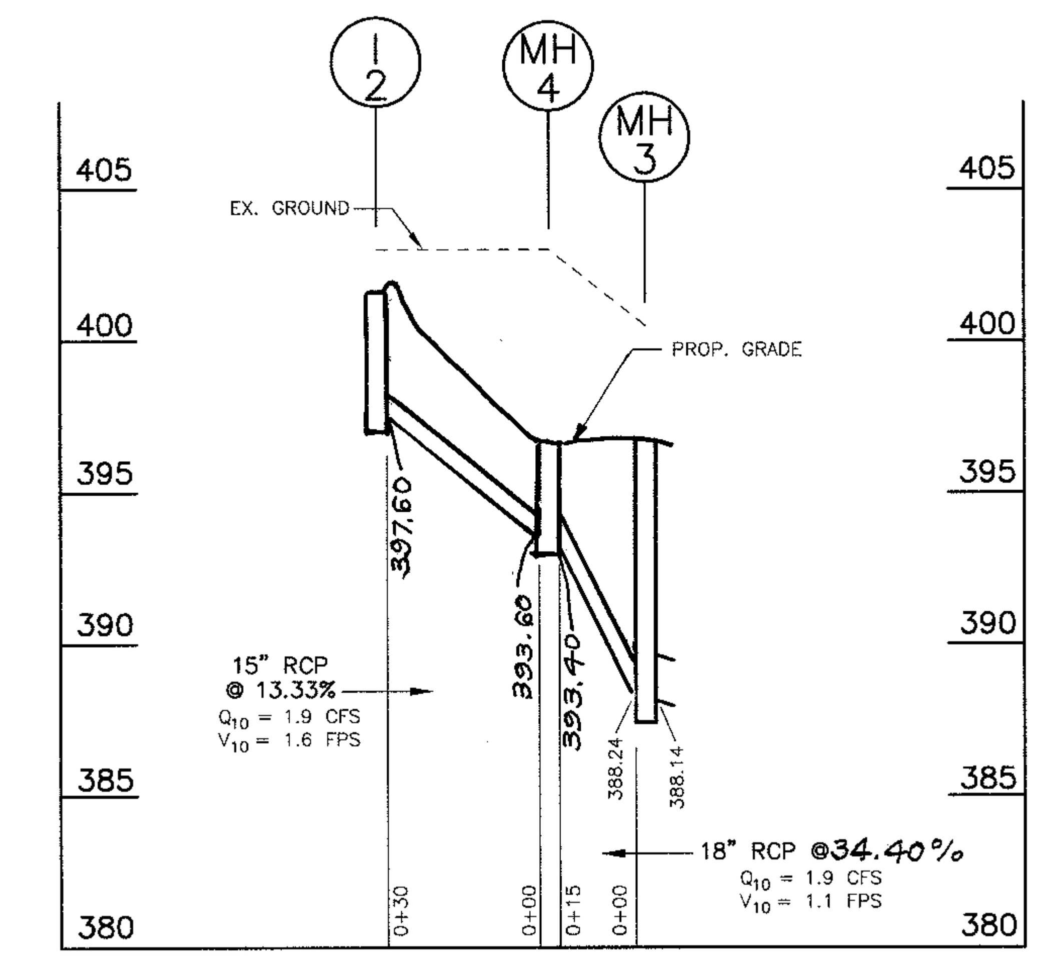

STORM DRAIN SYSTEM

SCALE: HOR. 1"=30' VER. 1'=5'

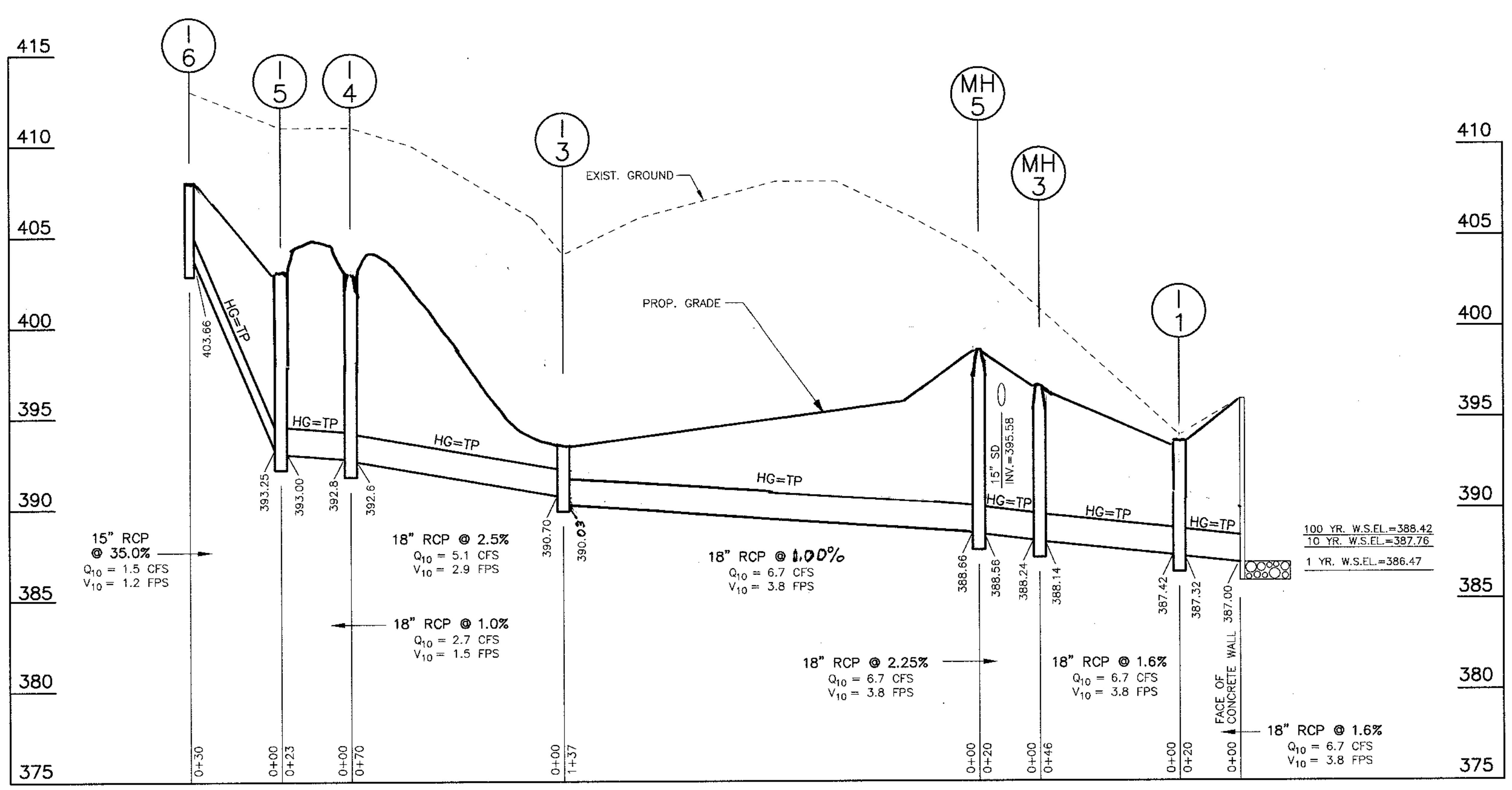

STORM DRAIN SYSTEM

SCALE: HOR. 1"=30' VER. 1'=5'

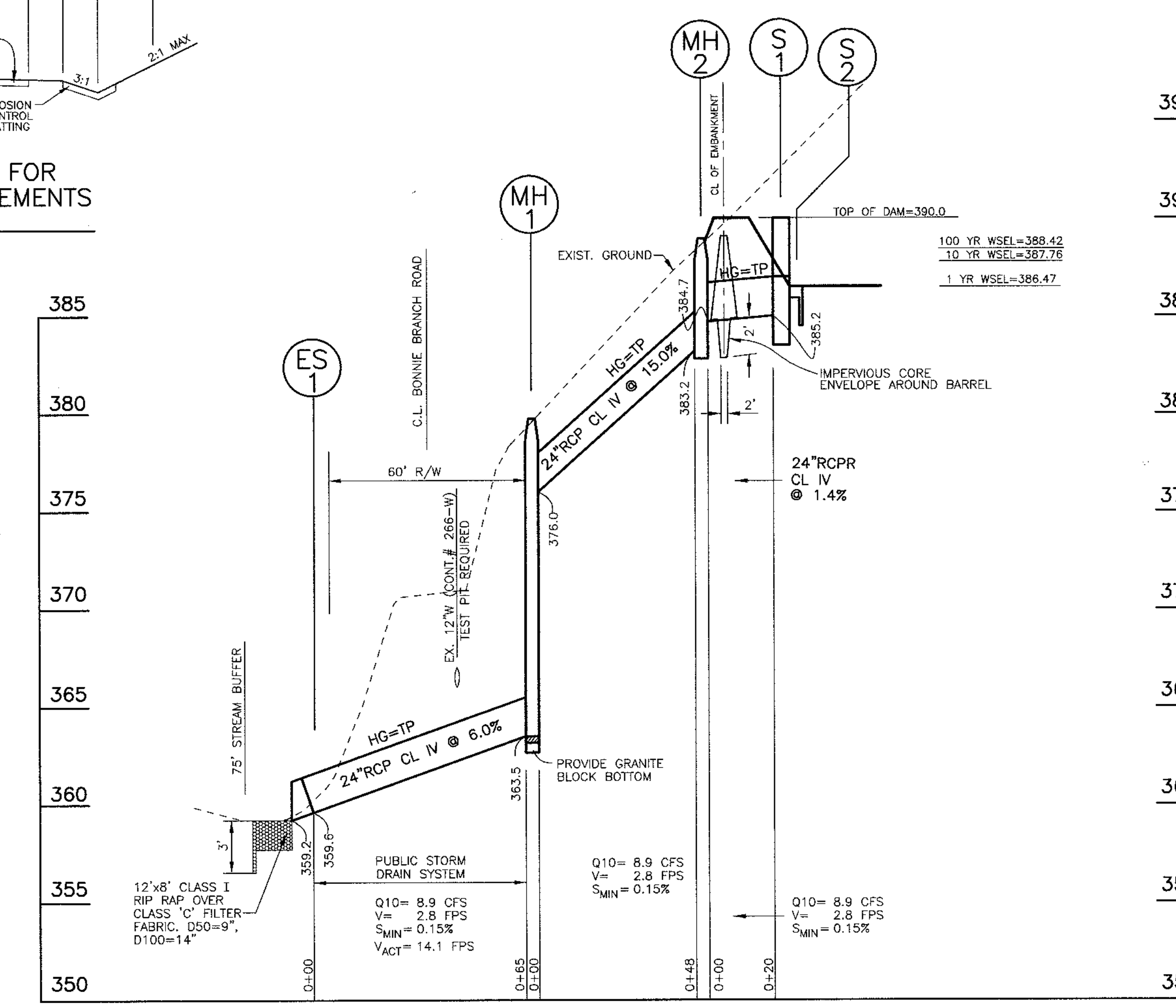

PRINCIPLE SPILLWAY

SCALE: HOR. 1"=30' VER. 1'=5'

OWNER / DEVELOPER

BONNIELASS LLC.
8835-P COLUMBIA 100 PARKWAY
COLUMBIA, MARYLAND 21045

Nº	REVISION	DATE
1	REVISE STORM DRAIN SYSTEM PROFILE	3-18-04

APPROVED: DEPARTMENT OF PUBLIC WORKS

CHIEF, BUREAU OF HIGHWAYS — N/A — DATE

APPROVED: DEPARTMENT OF PLANNING & ZONING

CHIEF, DIVISION OF LAND DEVELOPMENT — 8/15/03 — DATE

CHIEF, DEVELOPMENT ENGINEERING DIVISION MAJ — 8/13/03 — DATE

Reviewed for HOWARD S.C.D. and meets Technical Requirements

Signature — 7/31/03 Date

U.S. Natural Resources Conservation Service

THIS DEVELOPMENT PLAN IS APPROVED FOR SOIL EROSION AND SEDIMENT CONTROL BY THE HOWARD SOIL CONSERVATION DISTRICT.

HOWARD S.C.D. — 7/31/03 DATE

DEVELOPER'S/BUILDER'S CERTIFICATE

"I/We certify that all development and construction will be done according to this plan of development and plan for sediment and erosion control and that all responsible personnel involved in the construction project will have a Certificate of Attendance at a Department of the Environment Approved Training Program for the Control of Sediment and Erosion before beginning the project. I also authorize periodic on-site inspection by the Howard Soil Conservation District or their authorized agents, as are deemed necessary".

NAME — 7.3.03 DATE

ENGINEER'S CERTIFICATE

I hereby certify that this plan for Sediment and Erosion Control represents a practical and workable plan based on my personal knowledge of the site conditions and that it was prepared in accordance with the requirements of the Howard Soil Conservation District.

G. NELSON CLARK — 6-25-03 DATE

STATE OF MARYLAND — G. NELSON CLARK — NO. 7139 REGISTERED — PROFESSIONAL ENGINEER — 2-10-03

#6 D:\DRAWINGS\00098-BONNIELASS\1ST-RE-SUB\S05-SD-PROF-PAV-DETS.DWG

CLARK · FINEFROCK & SACKETT, INC.
ENGINEERS · PLANNERS · SURVEYORS
7135 MINSTREL WAY · COLUMBIA, MD 21045 · (410) 381-7500 BALT. · (301) 621-8100 WASH.

DESIGNED PC/AS	STORM DRAIN PROFILES AND PAVING DETAILS	SCALE 1"=30'
DRAWN ZAH/CRH2	BONNIELASS	DRAWING 5 of 15
CHECKED AS	TAX MAP 31 PARCEL 254 GRID 9 ZONING R-20 FIRST (1ST) ELECTION DISTRICT HOWARD COUNTY, MARYLAND	JOB NO. 00-098
DATE 2-10-03		FILE NO. 00-098-D

F-01-208

D:/Drawings/00098-Bonnielass/1st-RE-SUB/s05-sd-prof-pav-dets.dwg Jun Feb 09 15:13:53 2005 CFS Computer #6

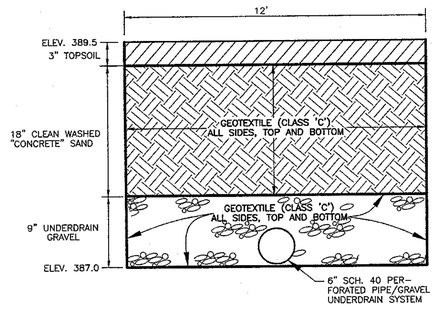

NOTE:
SURFACE AREA SHALL MATCH THE PLAN VIEW. (30'x12')

MATERIAL SPECIFICATIONS FOR SAND FILTERS

THE ALLOWABLE MATERIALS FOR SAND FILTER CONSTRUCTION ARE DETAILED IN TABLE B.3.1

SAND FILTER TESTING SPECIFICATIONS

1. UNDERGROUND SAND FILTERS, FACILITIES WITHIN SENSITIVE GROUNDWATER AQUIFERS, AND FILTERS DESIGNED TO SERVE URBAN HOT SPOTS ARE TO BE TESTED FOR WATER TIGHTNESS PRIOR TO PLACEMENT OF FILTER MEDIA. ENTRANCES AND EXITS SHOULD BE PLUGGED AND THE SYSTEM COMPLETELY FILLED WITH WATER TO DEMONSTRATE WATER TIGHTNESS. WATER TIGHTNESS MEANS NO LEAKAGE FOR A PERIOD OF 8 HOURS.
2. ALL OVERFLOW WEIRS, MULTIPLE ORIFICES AND FLOW DISTRIBUTION SLOTS ARE TO BE FIELD TESTED TO VERIFY ADEQUATE DISTRIBUTION OF FLOWS.

SAND FILTER CONSTRUCTION SPECIFICATIONS

1. ABSOLUTELY NO RUNOFF IS TO ENTER THE FILTER UNTIL ALL CONTRIBUTING DRAINAGE AREAS HAVE BEEN STABILIZED.
2. SURFACE OF FILTER BED IS TO BE LEVEL.
3. ALL UNDERGROUND SAND FILTERS SHOULD BE CLEARLY DELINEATED WITH SIGNS SO THAT THEY MAY BE LOCATED WHEN MAINTENANCE IS DUE.
4. SURFACE SAND FILTERS SHALL BE PLANTED WITH APPROPRIATE GRASSES, CRESTED SEDGE OR APPROVED EQUAL.

FILTERING MAINTENANCE CRITERIA

1. THE SEDIMENT CHAMBER OUTLET DEVICES SHALL BE CLEANED/REPAIRED WHEN DRAWDOWN TIMES WITHIN THE CHAMBER EXCEED 36 HOURS. TRASH AND DEBRIS TO BE REMOVED AS NECESSARY.
2. SEDIMENT SHOULD BE CLEANED OUT OF THE SEDIMENTATION CHAMBER WHEN IT ACCUMULATES TO A DEPTH OF MORE THAN SIX INCHES. VEGETATION WITHIN THE SEDIMENTATION CHAMBER SHOULD BE LIMITED TO A HEIGHT OF 18 INCHES.
3. WHEN THE FILTERING CAPACITY OF THE FILTER DIMINISHES SUBSTANTIALLY (e.g., WHEN WATER PONDS ON THE SURFACE OF THE FILTER BED FOR MORE THAN 72 HOURS), THE TOP FEW INCHES OF DISCOLORED MATERIAL SHALL BE REMOVED AND SHALL BE REPLACE WITH FRESH MATERIAL. THE REMOVED SEDIMENTS SHOULD BE DISPOSED IN AN ACCEPTABLE MANNER (e.g., LANDFILL). SILT/SEDIMENT SHOULD BE REMOVED FROM THE FILTER BED WHEN THE ACCUMULATION EXCEEDS ONE INCH.
4. ORGANIC FILTERS (F-4) OR SURFACE SAND FILTERS (F-1) THAT HAVE A GRASS COVER SHOULD BE MOWED A MINIMUM OF 3 TIMES PER GROWING SEASON TO MAINTAIN MAXIMUM GRASS HEIGHTS LESS THAN 12 INCHES.
5. A DROP OF AT LEAST 6 INCHES SHALL BE PROVIDED AT THE INLET OF BIORETENTION FACILITIES (F-6) (STONE DIAPHRAGM). DEAD OR DISEASED PLANT MATERIAL SHALL BE REPLACED. AREAS DEVOID OF MULCH SHOULD BE RE-MULCHED ON AN ANNUAL BASIS.

SAND FILTER DETAIL
NO SCALE

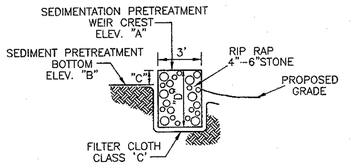

GABION BASKET DETAIL

GABION BASKET SCHEDULE

	ELEV. "A"	ELEV. "B"	HEIGHT "C"	MIN. HEIGHT "D"	LOCATION
GABION WEIR "A"	391.5	389.7	1.8'	4.8'	PRE-TREATMENT AREA "A"
GABION WEIR "B"	391.5	389.8	1.7'	4.7'	PRE-TREATMENT AREA "B"
GABION WEIR "C"	387.8	386.8	1.0'	4.0'	FOREBAY

CROSS-SECTION THROUGH SAND FILTER
SCALE: HOR. 1"=30'
VER. 1"=5'

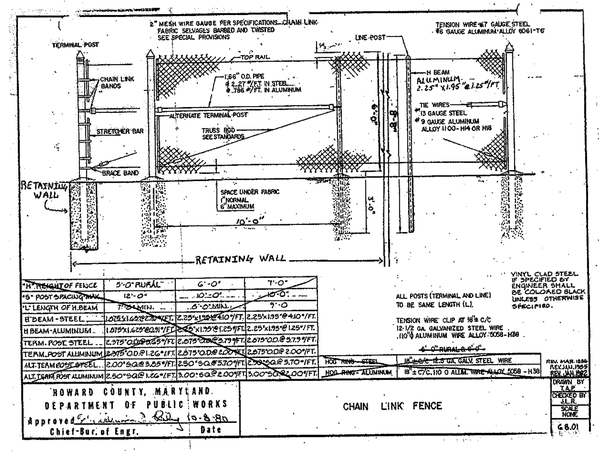

CHAIN LINK FENCE DETAIL
SCALE: NTS

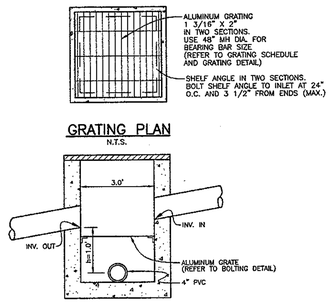

GRATING PLAN
N.T.S.

MODIFIED TYPE "S" INLET
N.T.S.

FLOW SPLITTER SCHEDULE

STRUCTURE	ACTUAL DIMENSION BETWEEN OVERFLOW PIPE ELEVATION AND LOW FLOW PIPE INVERT (PVC)
I-3	1'-2"
MH-4	1'-2"

THE CONTRACTOR IS TO VERIFY THE DIMENSION BETWEEN THE LOW FLOW PIPE AND THE OVERFLOW SLOT PRIOR TO BACKFILLING AROUND THE STRUCTURE. NOTIFY THE DESIGN ENGINEER IMEDIATELY IF THERE IS A DISCREPANCY.

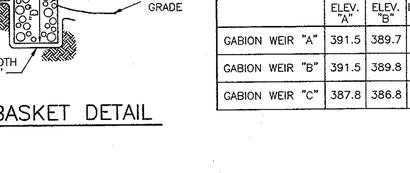

LOW FLOW MAT DETAIL
SCALE: NTS

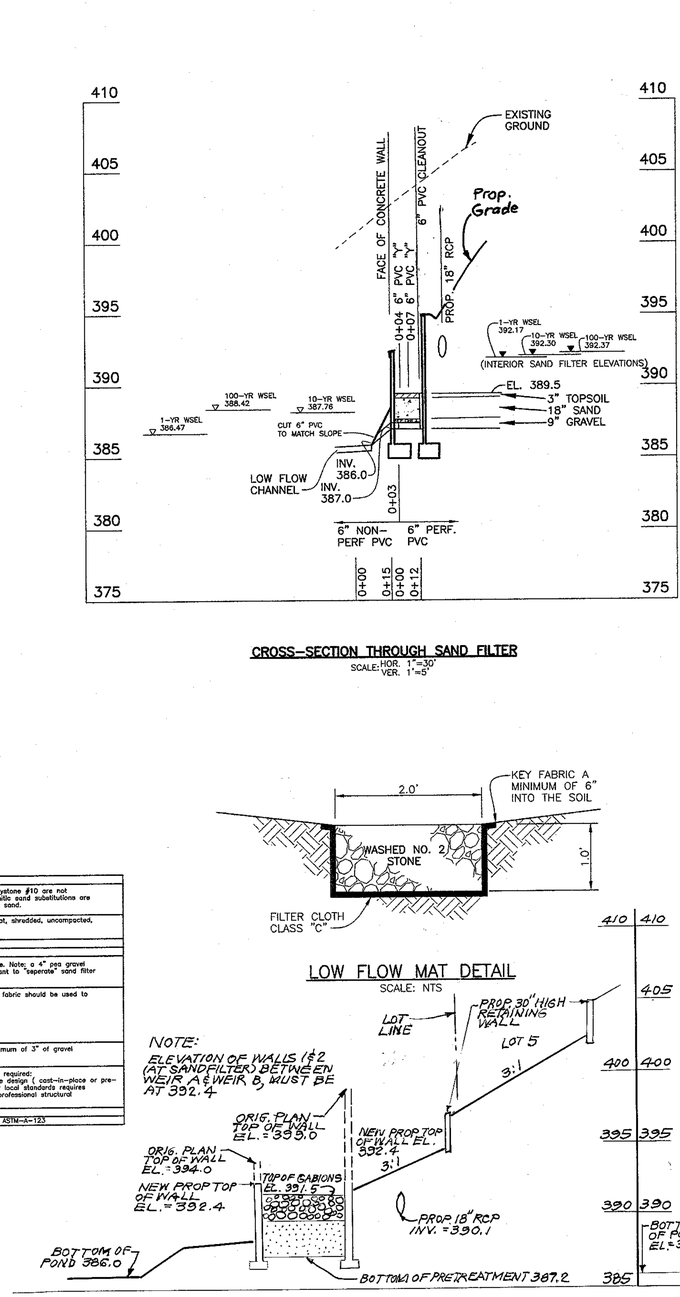

SECTION A-A

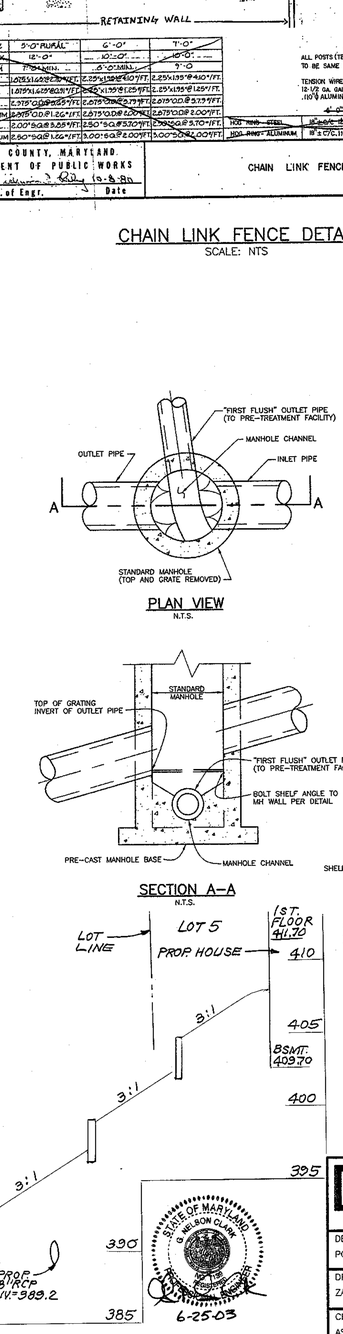

SECTION B-B

SCALE: HORIZ: 1"=10'
VERT: 1"=5'

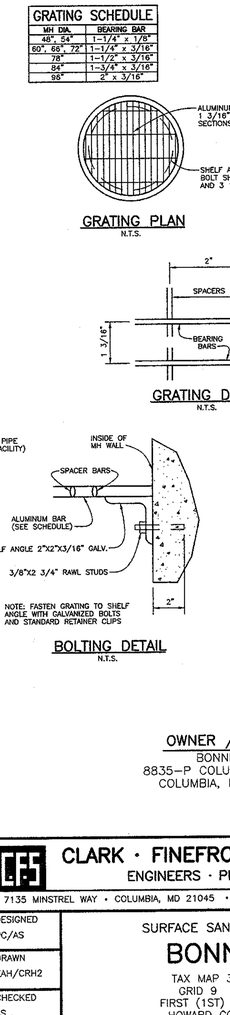

TABLE B.3.1 MATERIAL SPECIFICATIONS FOR SAND FILTERS

Material	Specification/Test Method	Size	Notes
sand	clean AASHTO-M-6 or ASTM-C-33 concrete sand	0.02" to 0.04"	Sand substitutions such as Diabase and Greystone #10 are not acceptable. No calcium carbonated or dolomitic sand substitutions are acceptable. No "rock dust" can be used for sand.
peat	ash content: < 15% pH range: 5.2 to 4.9 loose bulk density 0.12 to 0.15 g/cc	n/a	The material must be reed-sedge hemic peat, shredded, uncompacted, uniform and clean.
leaf compost		n/a	
underdrain gravel	AASHTO-M-43	0.375" to 0.75"	
geotextile fabric (if required)	ASTM-D-4833 (puncture strength-125 lb.) ASTM-D-4632 (Tensile Strength-200 lb.)	0.08" thick equivalent opening size of #80 sieve	Must maintain 125 gpm per sq. ft. flow rate. Note: a 4" pea gravel layer may be substituted for geotextiles meant to "separate" sand filter layers.
impermeable liner (if required)	ASTM-D-4833 (thickness) ASTM-D-412 (tensile strength) 1,100 lb., elongation 200%) ASTM-D-824 (Tear resistence - 150 lb./in) ASTM-D-471 (water adsorption: +8 to -2% mass)	30 mil thickness	Liner to be ultraviolet resistant. A geotextile fabric should be used to protect the liner from puncture.
underdrain piping	F 758, Type PS 28 or AASHTO-M-278	4" - 6" rigid schedule 40 PVC or SDR35	3/8" perf. @ 6" o.c., 4 holes per row; minimum of 3" of gravel over pipes; not necessary underneath pipes
concrete (cast-in-place)	MSHA Standards and Specs. Section 902, Mix No. 3, f'c =3500 psi, normal weight, air entrained; re-inforcing to meet ASTM-615-60	n/a	on-site testing of poured-in-place concrete required; 28 day strength and slump test; all concrete design (cast-in-place or pre-cast) not using previously approved State or local standards requires design drawings sealed and approved by a professional structural engineer licensed in the State of maryland
concrete (pre-cast)	per pre-cast manufacturer	n/a	SEE ABOVE NOTE
non-rebar steel	ASTM A-36	n/a	structural steel to be hot-dipped galvanized ASTM-A-123

GRATING SCHEDULE

MH DIA.	BEARING BAR
48", 54"	1-1/4" x 1/8"
60", 66", 72"	1-1/4" x 3/16"
78"	1-1/2" x 3/16"
84"	1-3/4" x 3/16"
96"	2" x 3/16"

PLAN VIEW
N.T.S.

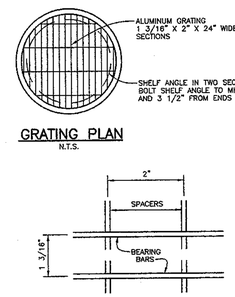

GRATING PLAN
N.T.S.

GRATING DETAIL
N.T.S.

SECTION A-A
N.T.S.

NOTE: FASTEN GRATING TO SHELF ANGLE WITH GALVANIZED BOLTS AND STANDARD RETAINER CLIPS

BOLTING DETAIL
N.T.S.

OWNER / DEVELOPER
BONNIELASS LLC
8835-P COLUMBIA 100 PARKWAY
COLUMBIA, MARYLAND 21045

APPROVED: DEPARTMENT OF PUBLIC WORKS
CHIEF, BUREAU OF HIGHWAYS — DATE N/A

APPROVED: DEPARTMENT OF PLANNING & ZONING
CHIEF, DIVISION OF LAND DEVELOPMENT — DATE 5/15/03
CHIEF, DEVELOPMENT ENGINEERING DIVISION — DATE 6/6/03

CLARK · FINEFROCK & SACKETT, INC.
ENGINEERS · PLANNERS · SURVEYORS
7135 MINSTREL WAY · COLUMBIA, MD 21045 · (410) 381-7500 BALT. · (301) 621-8100 WASH.

DESIGNED PC/AS	SURFACE SAND FILTER DETAILS BONNIELASS TAX MAP 31 PARCEL 254 GRID 9 ZONING R-20 FIRST (1ST) ELECTION DISTRICT HOWARD COUNTY, MARYLAND	SCALE 1"=30'
DRAWN ZAH/CRH2		DRAWING 7 OF 15
CHECKED AS		JOB NO. 00-098
DATE 2-10-03		FILE NO. 00-098-D

#6 D:\DRAWINGS\00098-BONNIELASS\1ST-RE-SUB\S07-SAND-FILT-DETS.DWG

F-01-208

1 | 4/8 | ADD GARAGE & PAVILION | 5/7/03

Copyright 2002 CLARK-FINEFROCK-SACKETT-ENGINEERS-PLANNERS-SURVEYORS

BONDING NOTE:

THIS PLAN HAS BEEN PREPARED IN ACCORDANCE WITH THE PROVISIONS OF SECTION 16.124 OF THE HOWARD COUNTY CODE AND LANDSCAPE MANUAL.

FINANCIAL SURETY FOR THE TREES IN SCHEDULE D, TRASH PAD SCREENING, AND STREET TREES IN THE AMOUNT OF $12,180.00 SHALL BE PART OF THE DEVELOPERS AGREEMENT.

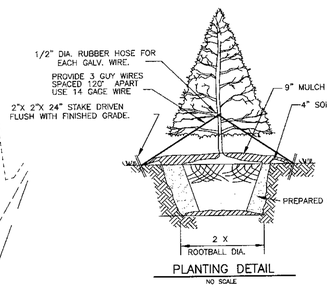

PLANTING DETAIL
NO SCALE

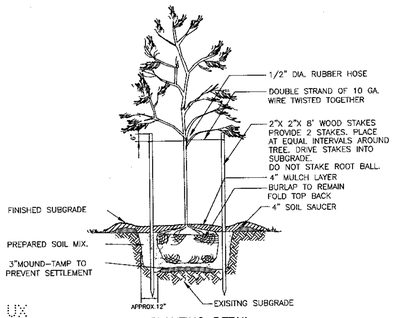

PLANTING DETAIL
NO SCALE

NOTES:

1. ALL PLANT MATERIALS SHALL BE FULL AND HEAVY, BE WELL FORMED AND SYMMETRICAL, CONFORM TO THE MOST CURRENT AAN SPECIFICATIONS AND BE INSTALLED IN ACCORDNACE WITH HRD PLANTING SPECIFICATIONS.
2. CONTRACTOR SHALL VERIFY LOCATION OF ALL UNDERGROUND UTILITIES PRIOR TO DIGGING.
3. FINAL LOCATION OF PLANT MATERIAL MAY NEED TO VARY TO MEET FINAL FIELD CONDITIONS. TREES SHALL NOT BE PLANTED IN THE BOTTOM OF DRAINAGE SWALES.
4. AT THE TIME OF INSTALLMENT, ALL SHRUBS AND OTHER PLANTINGS HEREWITH LISTED AND APPROVED FOR THIS SITE, SHALL BE OF THE PROPER HEIGHT REQUIREMENTS IN ACCORDANCE WITH THE HOWARD COUNTY LANDSCAPE MANUAL. IN ADDITION, NO SUBSTITUTIONS OR RELOCATION OF REQUIRED PLANTINGS MAY BE MADE WITHOUT PRIOR REVIEW AND APPROVAL FROM THE DEPARTMENT OF PLANNING AND ZONING. ANY DEVIATION FROM THIS APPROVED LANDSCAPE PLAN MAY RESULT IN DENIAL OR DELAY IN THE RELEASE OF LANDSCAPE SURETY UNTIL SUCH TIME AS ALL REQUIRED MATERIALS ARE PLANTED AND/OR REVISIONS ARE MADE TO APPLICABLE PLANS AND CERTIFICATES.

SCHEDULE A
PERIMETER LANDSCAPE EDGE

Category — Adjacent Perimeter Properties		PERIMETER 1	PERIMETER 2	PERIMETER 3
Landscape Type		A	A	A
Frontage/Perimeter		581.49'	299.50'	353.47'
Number of Plants Required				
Shade Trees	(1/50)	0 *	0 *	0 *
Evergreen Trees	(1/40)	0 *	0 *	0 *
Shrubs				
Number of Plants Provided				
Shade Trees		0	0	0
Evergreen Trees				
Surety Amounts		0	0	0

* 100% credit for existing vegetation to remain.

Total Surety= $0,000.00

PLANT SCHEDULE

KEY	PLANT NAME	SIZE	QUAN.	REMARK
AR	ACER RUBRUM 'OCTOBER GLORY' OCTOBER GLORY RED MAPLE	2 1/2"-3" CAL. 12-14' HT.	6	B&B
PS	PINUS STROBUS WHITE PINE	6'-8' HT.	6	B&B
AS	ACER SACCHARUM 'GREEN MOUNTAIN' GREEN MOUNTAIN SUGAR MAPLE	2 1/2" - 3" CAL. 12-14' HT.	29	B&B

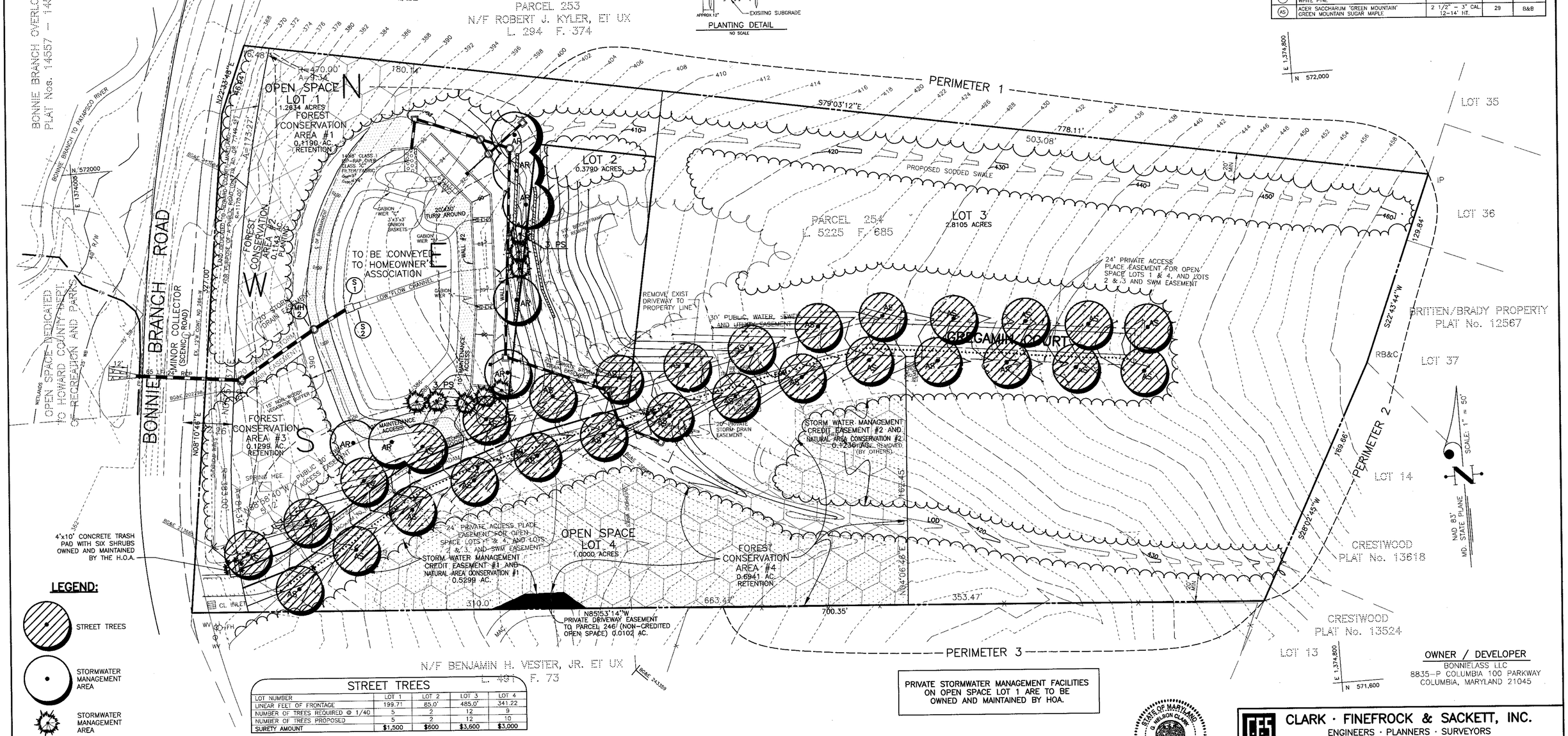

LEGEND:

STREET TREES

STORMWATER MANAGEMENT AREA

STORMWATER MANAGEMENT AREA

STREET TREES

LOT NUMBER	LOT 1	LOT 2	LOT 3	LOT 4
LINEAR FEET OF FRONTAGE	199.71	85.0'	485.0'	341.22
NUMBER OF TREES REQUIRED @ 1/40	5	2	12	9
NUMBER OF TREES PROPOSED	5	2	12	10
SURETY AMOUNT	$1,500	$600	$3,600	$3,000

SCHEDULE D
STORMWATER MANAGEMENT AREA LANDSCAPING

EDGE	N	E	S	W	TOTAL
LINEAR FEET OF PERIMETER	180.00	227.15	199.71	342.86	949.72
NUMBER OF TREES REQUIRED					
SHADE TREES @ 1/50	4	5	4	7	19
EVERGREEN TREES @1/40	4	6	5	9	24
CREDIT FOR EXISTING VEGETATION (NO, YES, AND %)	YES, 100%	YES, 8.8%	YES, 45%	YES, 100%	YES, 66.2%
CREDIT FOR OTHER LANDSCAPING (NO, YES, AND %)	NO	NO	NO	NO	YES, 9.6%
NUMBER OF TREES PROVIDED					
SHADE TREES	–	5	2	–	7
EVERGREEN TREES	–	5	3	–	8
SURETY AMOUNT					$3,300

TRASH PAD PLANTING SCHEDULE

QUANTITY	SYMBOL	PLANT NAME	SIZE
6	VW	VIBURNUM x RHYTDOPHYLLOIDES 'WILLOWWOOD' WILLOWWOOD VIBURNUM	2-3' B&B

PRIVATE STORMWATER MANAGEMENT FACILITIES ON OPEN SPACE LOT 1 ARE TO BE OWNED AND MAINTAINED BY HOA.

OWNER / DEVELOPER
BONNIELASS LLC
8835-P COLUMBIA 100 PARKWAY
COLUMBIA, MARYLAND 21045

APPROVED: DEPARTMENT OF PUBLIC WORKS

CHIEF, BUREAU OF HIGHWAYS — DATE N/A

APPROVED: DEPARTMENT OF PLANNING & ZONING

CHIEF, DIVISION OF LAND DEVELOPMENT — DATE 8/15/03

CHIEF, DEVELOPMENT ENGINEERING DIVISION MAJ — DATE 8/13/03

NO.	REVISION	DATE
1	REV. PROP. STREET GRADES, ADD RETAINING WALLS TO STORMWATER POND	6-18-04

DEVELOPER'S/BUILDERS CERTIFICATE

I/We certify that the landscaping shown on this plan will be done according to plan, section 16.124 of the Howard County Code and the Howard County Landscape Manual. I/We further certify that upon completion a Certificate of Landscape Installation, accompanied by an executed one year guarantee of plant materials, will be submitted to the Department of Planning and Zoning.

Name — Date 7.1.03

STATE OF MARYLAND — G. NELSON CLARK — No. 10955 — REGISTERED PROFESSIONAL ENGINEER

6-25-03

CLARK · FINEFROCK & SACKETT, INC.
ENGINEERS · PLANNERS · SURVEYORS
7135 MINSTREL WAY • COLUMBIA, MD 21045 • (410) 381-7500 BALT. • (301) 621-8100 WASH.

DESIGNED DAR	LANDSCAPING PLAN	SCALE 1"=30'
DRAWN ZAH/CRH2	**BONNIELASS**	DRAWING 8 of 15
CHECKED AS	TAX MAP 31 PARCEL 254 GRID 9 ZONING R-20 FIRST (1ST) ELECTION DISTRICT HOWARD COUNTY, MARYLAND	JOB NO. 00-098
DATE 4-1-03		FILE NO. 00-098LS

#6 D:\DRAWINGS\00098-BONNIELASS\1ST-RE-SUB\S08-LANDSCAPE.DWG

F-01-708

© Maryland 2003 BY CLARK FINEFROCK & SACKETT, INC. ALL RIGHTS RESERVED

SOILS LEGEND

SYMBOL	NAME / DESCRIPTION	TYPE
SsE	SASSAFRAS SOILS, 15 TO 40 PERCENT SLOPE	B
MrE	MONTALTO AND RELAY SOILS, 15 TO 45 PERCENT SLOPES LESS SEVERELY ERODED	C
BeC2	BELTSVILLE SILT LOAM, 5 TO 10 PERCENT SLOPES MODERATELY ERODED	C
BeD2	BELTSVILLE SILT LOAM, 10 TO 15 PERCENT SLOPES MODERATELY ERODED	C

LEGEND
CONTOUR INTERVAL 2 FT.
EXISTING CONTOUR 348
PROPOSED CONTOUR 348
DIRECTION OF DRAINAGE
PROP. DRAINAGE DIVIDE
SOILS
PROP. DRAINAGE AREA TO SODDED SWALE

NAD 83' MD. STATE PLANE
SCALE: 1" = 50'
E 1,374,800
N 572,000

PARCEL 253
N/F ROBERT J. KYLER, ET UX
L. 294 F. 374

BONNIE BRANCH OVERLOOK
PLAT Nos. 14557 - 14561

BONNIE BRANCH TO PATAPSCO RIVER

OPEN SPACE LOT 1
1.2634 ACRES

FOREST CONSERVATION AREA #1
0.1190 AC.
RETENTION

FOREST CONSERVATION AREA #2
0.1143 AC.
PLANTING

FOREST CONSERVATION AREA #3
0.1299 AC.
RETENTION

OPEN SPACE LOT 4
1.0000 ACRES

FOREST CONSERVATION AREA #4
0.6941 AC.
RETENTION

LOT 2
0.3790 ACRES

LOT 3
2.8105 ACRES

PARCEL 254
L. 5225 F. 267

TO BE CONVEYED TO HOMEOWNER'S ASSOCIATION

BONNIE BRANCH ROAD
MINOR COLLECTOR (SCENIC LOCAL ROAD)

GREGAMIN COURT

REMOVE EXISTING DRIVEWAY TO PROPERTY LINE

24' PRIVATE ACCESS PLACE EASEMENT FOR OPEN SPACE LOTS 1 & 4, AND LOTS 2 & 3, AND SWM EASEMENT

PROPOSED SODDED SWALE

DRAINAGE AREA TO SODDED SWALE
2.55 AC.

STORM WATER MANAGEMENT CREDIT EASEMENT #1 AND NATURAL AREA CONSERVATION #1
0.5298 AC.

STORM WATER MANAGEMENT CREDIT EASEMENT #2 AND NATURAL AREA CONSERVATION #2
0.1236 AC.

PUBLIC 30' SWM ACCESS EASEMENT

PRIVATE DRIVEWAY EASEMENT TO PARCEL 246 (NON-CREDITED OPEN SPACE) 0.0102 AC.

PARCEL 246
N/F BENJAMIN H. VESTER, JR. ET UX
L. 481 F. 73

BRITTEN/BRADY PROPERTY
PLAT No. 12567

CRESTWOOD
PLAT No. 13618

CRESTWOOD
PLAT No. 13524

LOT 35
LOT 36
LOT 14
LOT 13
LOT 37

BeD2	0.70 AC, C=0.32	I2, R-20, 13%
	0.10 AC, C=0.30	I1, R-20, 10%
MrE	1.10 AC, C=0.36	I4, R-20, 20%
	0.07 AC, C=0.31	I3, R-20, 10%
BeC2	0.61 AC, C=0.32	I5, R-20, 13%
	0.94 AC, C=0.27	I6, R-20, 10%

12'x8' CLASS I RIP RAP OVER CLASS 'C' FILTER FABRIC, D50=9", D100=14"

OWNER / DEVELOPER
BONNIELASS LLC
8835-P COLUMBIA 100 PARKWAY
COLUMBIA, MARYLAND 21045

APPROVED: DEPARTMENT OF PUBLIC WORKS
CHIEF, BUREAU OF HIGHWAYS — DATE N/A

APPROVED: DEPARTMENT OF PLANNING & ZONING
CHIEF, DIVISION OF LAND DEVELOPMENT — DATE 5/15/03
CHIEF, DEVELOPMENT ENGINEERING DIVISION — DATE 4/8/03

NO.	REVISION	DATE
1	REV. PROF. STREET GRDS, ADD RETAINING WALLS TO STORMWATER POND	5-23-03

#6 D:\DRAWINGS\00098-BONNIELASS\1ST-RE-SUB\S09-DRAIN-MAP.DWG

STATE OF MARYLAND — DAVID SCOTT MASON — No. 21787 — PROFESSIONAL ENGINEER
2-10-03

CLARK · FINEFROCK & SACKETT, INC.
ENGINEERS · PLANNERS · SURVEYORS
7135 MINSTREL WAY · COLUMBIA, MD 21045 · (410) 381-7500 BALT. · (301) 621-8100 WASH.

DESIGNED PC/AS	DRAINAGE AREA MAP BONNIELASS TAX MAP 31 PARCEL 254 GRID 9 ZONING R-20 FIRST (1ST) ELECTION DISTRICT HOWARD COUNTY, MARYLAND	SCALE 1"=30'
DRAWN ZAH/CRH2		DRAWING 9 of 15
CHECKED AS		JOB NO. 00-098
DATE 2-10-03		FILE NO. 00-098-D

F-01-208

Plotted: 23 Jun 2003 12:32:00 by zhu
D:\DRAWINGS\00098-BONNIELASS\1ST-RE-SUB\S09-DRAIN-MAP.DWG

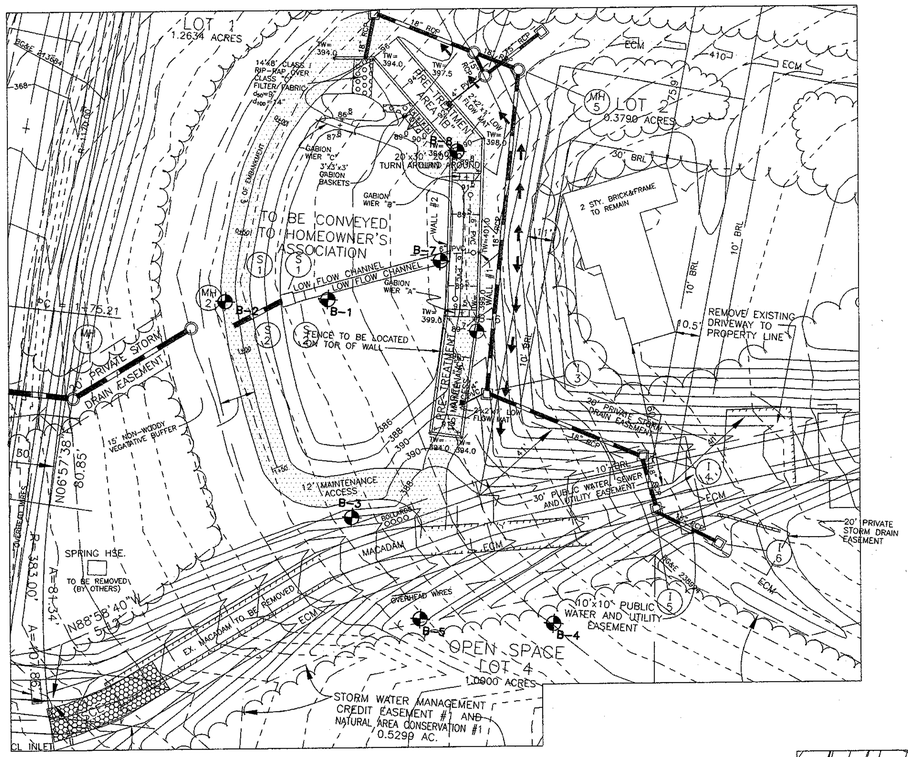

BORING LOCATIONS
SCALE: 1" = 30'

HERBST/BENSON & ASSOCIATES Geotechnical Engineers

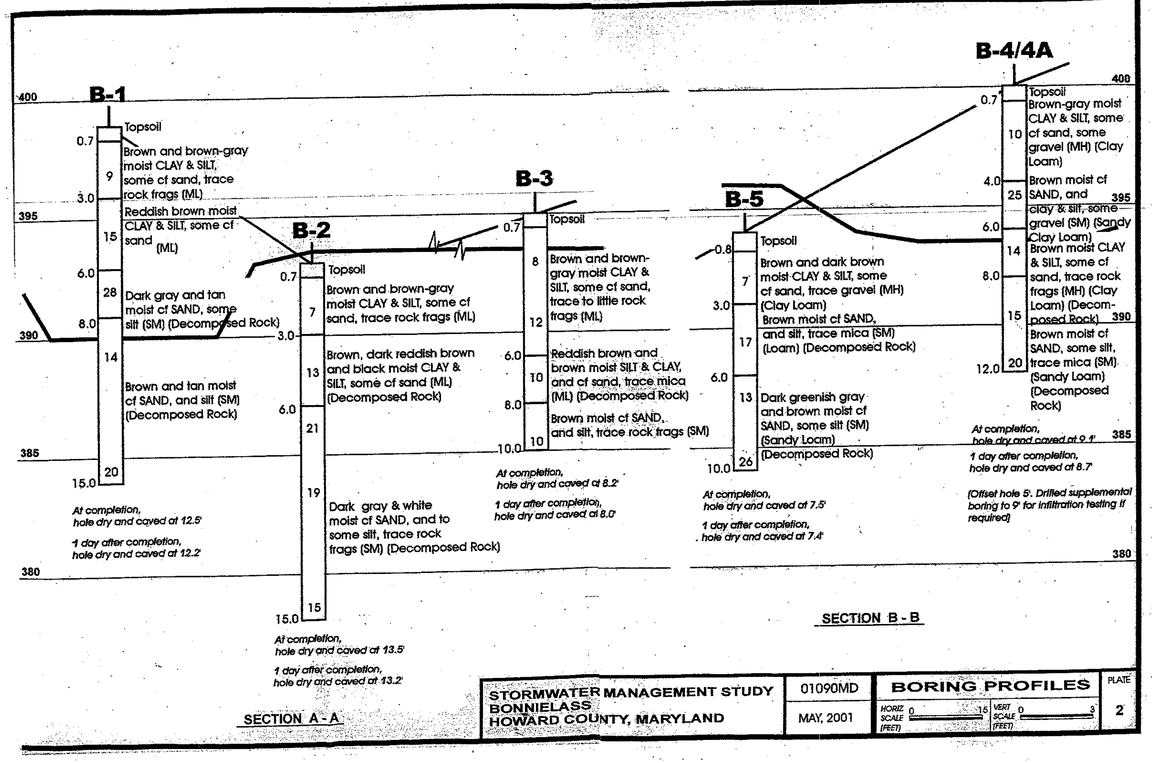

SECTION A - A

SECTION B - B

STORMWATER MANAGEMENT STUDY BONNIELASS HOWARD COUNTY, MARYLAND	01090MD MAY, 2001	BORING PROFILES HORIZ SCALE (FEET) 0 — 15 VERT SCALE (FEET) 0 — 3	PLATE 2

HERBST/BENSON & ASSOCIATES Geotechnical Engineers

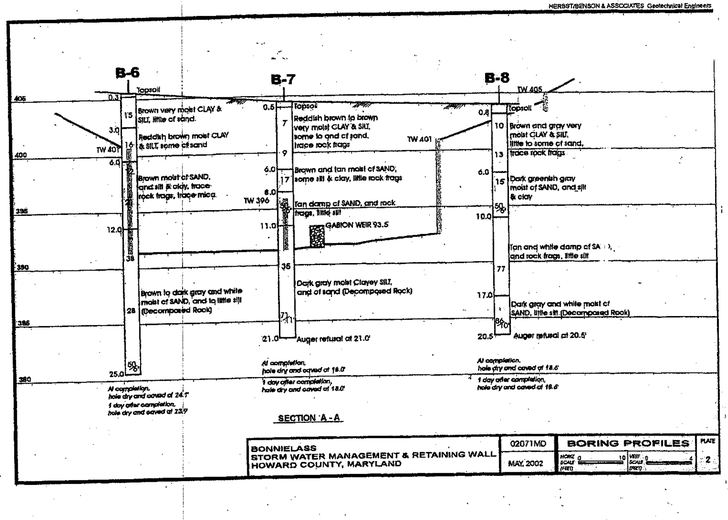

SECTION A - A

BONNIELASS STORM WATER MANAGEMENT & RETAINING WALL HOWARD COUNTY, MARYLAND	02071MD MAY, 2002	BORING PROFILES HORIZ SCALE (FEET) 0 — 15 VERT SCALE (FEET) 0 — 4	PLATE 2

APPROVED: DEPARTMENT OF PUBLIC WORKS

CHIEF, BUREAU OF HIGHWAYS — DATE N/A

APPROVED: DEPARTMENT OF PLANNING & ZONING

CHIEF, DIVISION OF LAND DEVELOPMENT — DATE 8/15/03

CHIEF, DEVELOPMENT ENGINEERING DIVISION — DATE 8/12/03

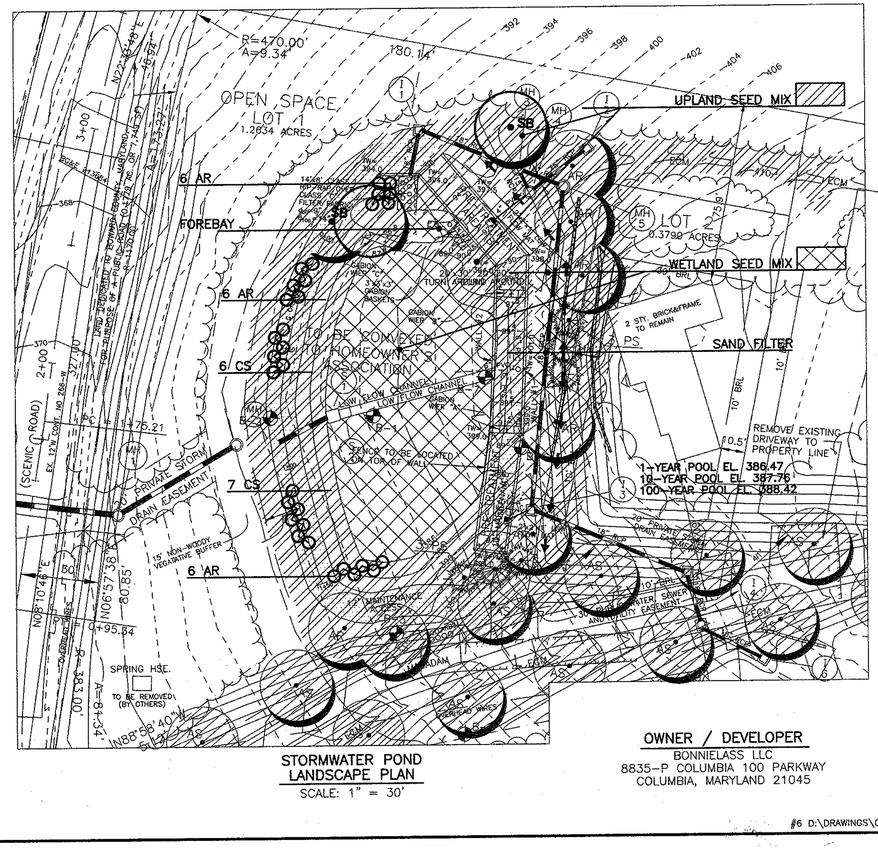

STORMWATER POND LANDSCAPE PLAN
SCALE: 1" = 30'

WETLAND SEED MIX		
SPECIES	COMMON NAME	RATE
ELYMUS VIRGINICUS	VIRGINIA WILD RYE	2 LBS. / AC.
ELYMUS RIPARIUS	RIVERBANK WILD RYE	1 LBS. / AC.
CAREX VULPINOIDEA	FOX SEDGE	1 LBS. / AC.
BIDENS FRONDOSA	BEGGAR-TICKS	1 LBS. / AC.
POA TRIVIALIS	ROUGH BLUEGRASS	10 LBS. / AC.
LOLIUM MULTIFLORUM	ANNUAL RYEGRASS	10 LBS. / AC.
GLYCERIA STRIATA	FOWL MANNAGRASS	2 LBS. / AC.
ASTER NOVAE ANGLIAE	NEW ENGLAND ASTER	1/2 LBS. / AC.

UPLAND GRASS SEED MIX		
SPECIES	COMMON NAME	RATE
PERMANENT HERBACEOUS		
AGROSTIS PALUSTRIS (SEE NOTE 1)	CREEPING BENTGRASS	2 LBS. / AC.
FESTUCA ARUNDINACEA	TALL FESCUE	40 LBS. / AC.
FESTUCA RUBRA VAR. RUBRA (SEE NOTE 2)	CREEPING RED FESCUE	20 LBS. / AC.
LOLIUM PERENNE (SEE NOTE 3)	PERENNIAL RYGRASS	25 LBS. / AC.
PANICUM VIRGATUM (SEE NOTE 4)	SWITCHGRASS	10 LBS. / AC.
POA TRIVIALIS	ROUGH BLUEGRASS	15 LBS. / AC.
TRIFOLIUM REPENS	WHITE CLOVER	5 LBS. / AC.
NURSE CROP FOR SITE STABILIZATION		
AVENA SATIVA	OATS	28 LBS. / AC.
LOLIUM PERENNE SSP. MULTIFLORUM	ANNUAL RYGRASS	5 LBS. / AC.
SETARIA ITALICA	FOXTAIL MILLET	5 LBS. / AC.

NOTES:
1. RECOMMENDED CULTIVAR: SEASIDE
2. RECOMMENDED CULTIVARS: PENNLAWN, FLYER, FORTESS, RUBY, OR SALEM.
3. RECOMMENDED CULTIVARS: BLAZER(II) OR PENNFINE
4. RECOMMENDED CULTIVARS: BLACKWELL, CARTHAGE, CAVE-IN-ROCK, OR SHELTER

STORMWATER POND PLANT SCHEDULE								
KEY	QTY	BOTANICAL NAME	COMMON NAME	WATER DEPTH	INDICATOR STATUS	ROOT	SPACING	SIZE
SHRUBS								
AR	18	ARONIA ARBUTIFOLIA	RED CHOKEBERRY	IRREGULARLY INUNDATED	FACW	CONT.	CLUMPS	18-24"
CS	13	CORNUS SERICEA	RED-OSIER DOGWOOD	IRREGULARLY INUNDATED	FACW+	CONT.	CLUMPS	18-24"
TREES								
SB	2	SALIX BABYLONICA	WEEPING WILLOW	IRREGULARLY INUNDATED	FACW	B&B	30' O.C.	2 1/2 - 3" CAL

OWNER / DEVELOPER
BONNIELASS LLC
8835-P COLUMBIA 100 PARKWAY
COLUMBIA, MARYLAND 21045

STATE OF MARYLAND — O. NELSON CLARK — NO. 7138 — REGISTERED PROFESSIONAL ENGINEER
6-25-03

#6 D:\DRAWINGS\00098-BONNIELASS\1ST-RE-SUB\S11-LOGS.DWG

CLARK · FINEFROCK & SACKETT, INC.
ENGINEERS · PLANNERS · SURVEYORS
7135 MINSTREL WAY · COLUMBIA, MD 21045 · (410) 381-7500 BALT. · (301) 621-8100 WASH.

DESIGNED PC/AS	BORING LOGS AND STORMWATER POND LANDSCAPE PLAN BONNIELASS TAX MAP 31 PARCEL 254 GRID 9 ZONING R-20 FIRST (1ST) ELECTION DISTRICT HOWARD COUNTY, MARYLAND	SCALE 1"=30'
DRAWN CRH2		DRAWING 11 of 15
CHECKED AS		JOB NO. 00-098
DATE 2-10-03		FILE NO. 00-098-D

F-01-208

1 | 6/25 | ADD BONNIELASS ROAD LANDSCAPE PLAN | CRH2 | 6/17/03

C:\Documents and Settings\crh2\Desktop\00098-BONNIELASS\1ST-RE-SUB\S11-LOGS.dwg 6/25/03 10:14:10 AM

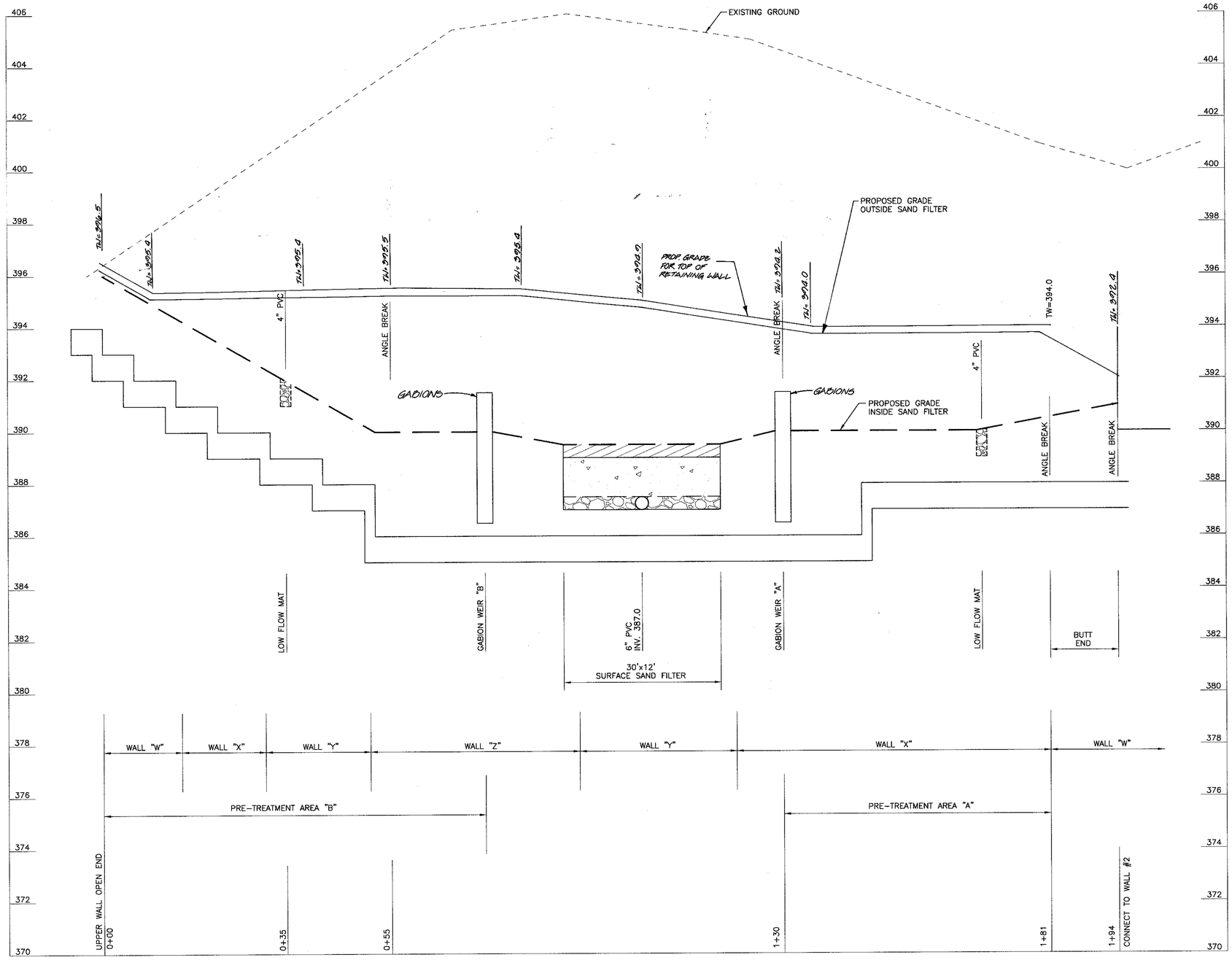

SURFACE SAND FILTER WALL #1 ELEVATION

SCALE: HOR. 1"=10'
VER. 1"=2'

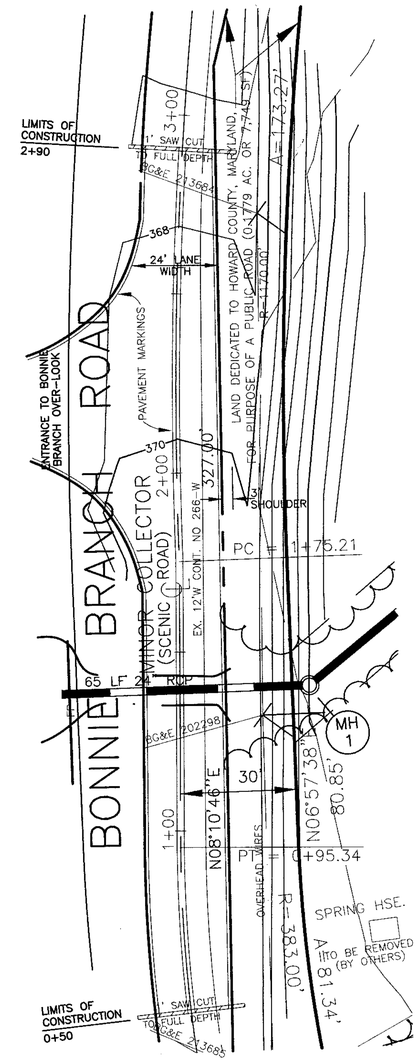

ROAD CONSTRUCTION ENLARGED PLAN

SCALE: 1" = 20'

APPROVED: DEPARTMENT OF PUBLIC WORKS

CHIEF, BUREAU OF HIGHWAYS — DATE N/A

APPROVED: DEPARTMENT OF PLANNING & ZONING

CHIEF, DIVISION OF LAND DEVELOPMENT — DATE 8/15/03

CHIEF, DEVELOPMENT ENGINEERING DIVISION MBJ — DATE 8/13/03

(IN FEET)
1 INCH = 2 FT.

(IN FEET)
1 INCH = 10 FT.

GRAPHIC SCALE

NOTE: THE SUITABILITY OF FILL MATERIAL MUST BE CONFIRMED BY THE ON-SITE GEOTECHNICAL PROFESSIONAL. EACH 8 INCH LEFT MUST BE COMPACTED TO 95% STANDARD PROCTOR DENSITY AND A TESTING REPORT SHALL BE MADE AVAILABLE TO THE HOWARD COUNTY INSPECTOR UPON COMPLETION OF CONSTRUCTION.

NOTE: THE REQUIRED BEARING PRESSURE BENEATH THE FOOTING OF THE WALL SHALL BE VERIFIED IN THE FIELD BY A GEOTECHNICAL PROFESSIONAL. TESTING DOCUMENTATION MUST BE PROVIDED TO THE HOWARD COUNTY INSPECTOR PRIOR TO THE START OF CONSTRUCTION.

OWNER / DEVELOPER

BONNIELASS LLC
8835-P COLUMBIA 100 PARKWAY
COLUMBIA, MARYLAND 21045

STATE OF MARYLAND — O. NELSON OLIVER — NO. 9198 — REGISTERED PROFESSIONAL ENGINEER — 4-25-03

#6 D:\DRAWINGS\00098-BONNIELASS\1ST-RE-SUB\S12-STRUCTURE-DETS.DWG

NO.	REVISIONS	DATE
1	REV. PROP. GRADES FOR TOP OF RETAINING WALL	5-16-04

CLARK · FINEFROCK & SACKETT, INC.
ENGINEERS · PLANNERS · SURVEYORS
7135 MINSTREL WAY · COLUMBIA, MD 21045 · (410) 381-7500 BALT. · (301) 621-8100 WASH.

DESIGNED PC/AS	WALL ELEVATION AND ROAD DETAIL BONNIELASS TAX MAP 31 PARCEL 254 GRID 9 ZONING R-20 FIRST (1ST) ELECTION DISTRICT HOWARD COUNTY, MARYLAND	SCALE AS SHOWN
DRAWN CRH2		DRAWING 12 OF 15
CHECKED AS		JOB NO. 00-098
DATE 4-1-03		FILE NO. 00-098-D

F-01-208

E:\BOWLEY\2003\215-21\ENG\S-DET2.DWG 8x11 Vm: 05:03:20 20 5003 CL22 Columbia, MD

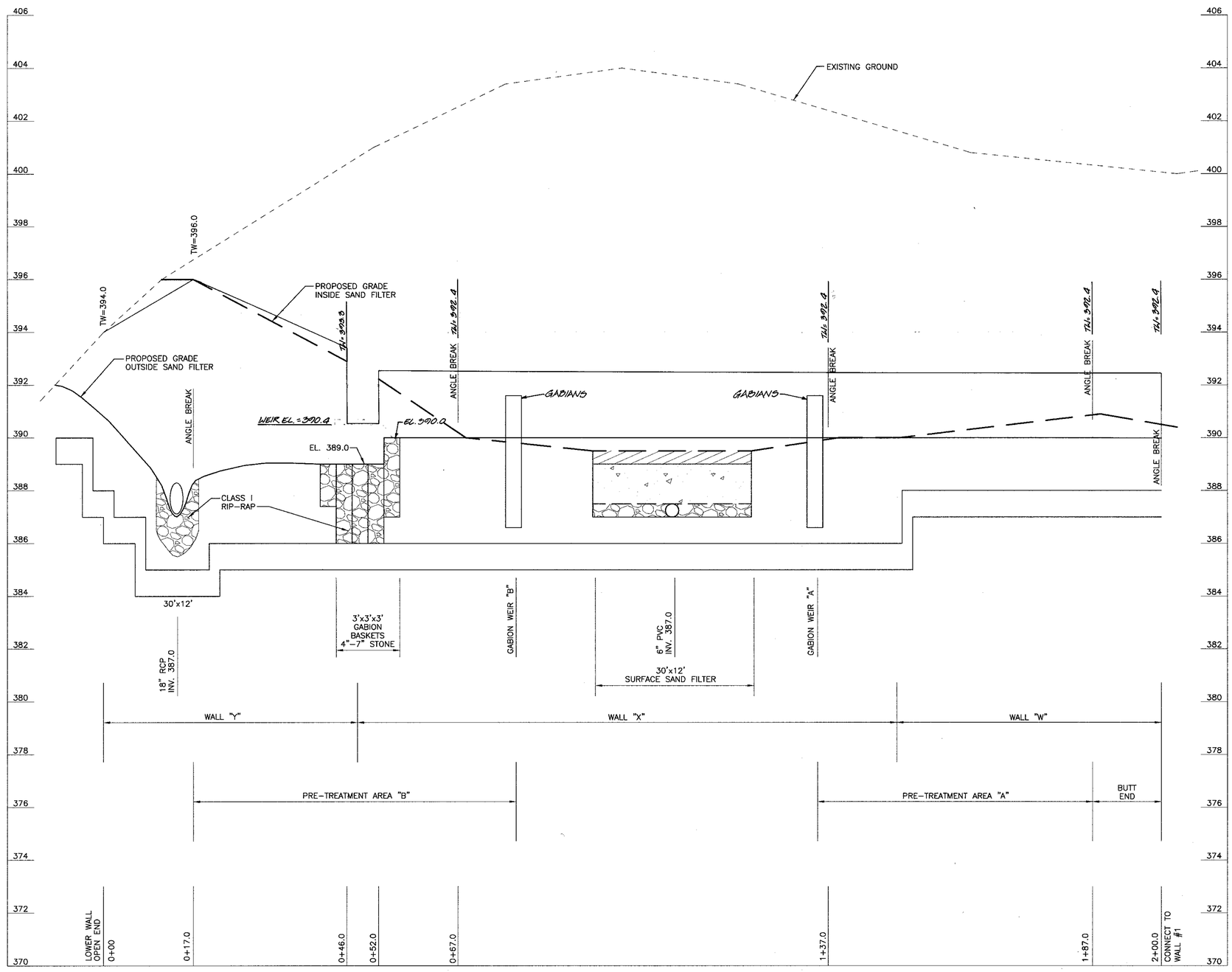

SURFACE SAND FILTER WALL #2 ELEVATION

SCALE: HOR. 1"=10'
VER. 1"=2'

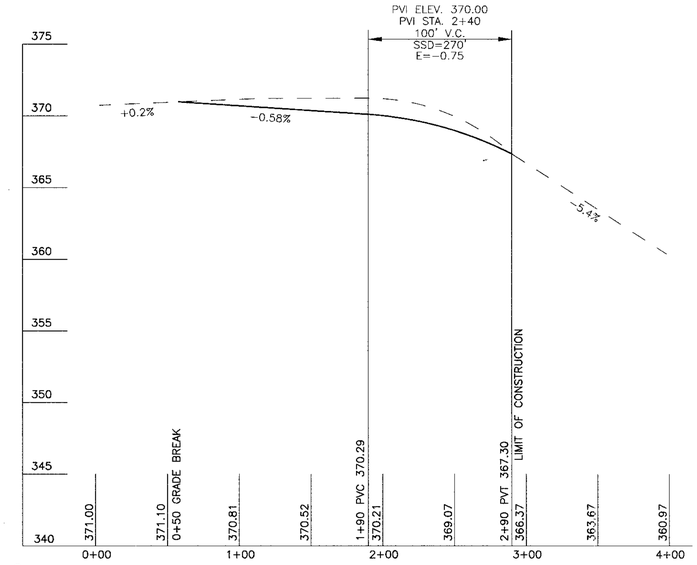

PROFILE- BONNIE BRANCH ROAD CONSTRUCTION

SCALE: HOR. 1"=50'
VER. 1"=5'

(IN FEET) 1 INCH = 5 FT. (0, 2.5, 5, 10)

(IN FEET) 1 INCH = 50 FT. (0, 25, 50, 100, 150, 200)

GRAPHIC SCALE

1	REV. PROF. GRADE FOR TOP OF RETAINING WALL	3-16-03
N/A	REVISIONS	DATE

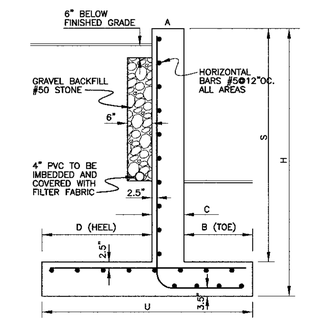

RETAINING WALL SCHEMATIC (TYP.)

NO SCALE

CHART FOR RETAINING WALLS

DIM. WALL	H	A	B	C	D	S	T	U	STEM & TOE REINFORCING	HEEL REINFORCING	MIN. SOIL BEARING
W	7'	8"	12"	8"	3'	6'	12"	4.67'	#5@18"	#5@12"	3000 psf
X	9'	8"	1.33'	8"	4'	8'	12"	6.0'	#5@12"	#5@12"	3000 psf
Y	11'	12"	1.5'	12"	4.9'	10'	12"	7.4'	#8@15"	#5@8"	3000 psf
Z	16.5'	12"	2.33'	12"	9.5'	15'	18"	12.83'	#8@8"O.C.	#8@6"O.C.	3000 psf

NOTES:
1. SOME WALL TOPS SLOPE (NO SLOPE ON FOOTING)
2. USE PROFILE TO SET ELEVATIONS OF FOOTING AND WALL TOP (AS MAXIMUM) USE APPROPRIATE BAR LENGTHS.
3. THE MAXIMUM SLOPE ABOVE & BELOW WALLS IS 2:1
4. THE MINIMUM BEARING STRENGTH SHALL HAVE S.F.=3
5. PROVIDE A 4" DRAIN & GRAVEL BEHIND THE UPPER WALL AND DRAINED TO DAYLIGHT AT EACH END.

APPROVED: DEPARTMENT OF PUBLIC WORKS
CHIEF, BUREAU OF HIGHWAYS — DATE N/A

APPROVED: DEPARTMENT OF PLANNING & ZONING
CHIEF, DIVISION OF LAND DEVELOPMENT — DATE 5/15/03
CHIEF, DEVELOPMENT ENGINEERING DIVISION — DATE 5/13/03

(IN FEET) 1 INCH = 2 FT. (0, 1, 2, 4)

(IN FEET) 1 INCH = 10 FT. (0, 5, 10, 20, 30)

GRAPHIC SCALE

NOTE: THE SUITABILITY OF FILL MATERIAL MUST BE CONFIRMED BY THE ON-SITE GEOTECHNICAL PROFESSIONAL. EACH 8 INCH LEFT MUST BE COMPACTED TO 95% STANDARD PROCTOR DENSITY AND A TESTING REPORT SHALL BE MADE AVAILABLE TO THE HOWARD COUNTY INSPECTOR UPON COMPLETION OF CONSTRUCTION.

NOTE: THE REQUIRED BEARING PRESSURE BENEATH THE FOOTING OF THE WALL SHALL BE VERIFIED IN THE FIELD BY A GEOTECHNICAL PROFESSIONAL. TESTING DOCUMENTATION MUST BE PROVIDED TO THE HOWARD COUNTY INSPECTOR PRIOR TO THE START OF CONSTRUCTION.

OWNER / DEVELOPER
BONNIELASS LLC
8835-P COLUMBIA 100 PARKWAY
COLUMBIA, MARYLAND 21045

STATE OF MARYLAND — G. NELSON CLARK — No. 21424 — REGISTERED PROFESSIONAL ENGINEER — 4-23-03

#6 D:\DRAWINGS\00098-BONNIELASS\1ST-RE-SUB\S13-STRUCTURE-DETS.DWG

CLARK · FINEFROCK & SACKETT, INC.
ENGINEERS · PLANNERS · SURVEYORS
7135 MINSTREL WAY · COLUMBIA, MD 21045 · (410) 381-7500 BALT. · (301) 621-8100 WASH.

DESIGNED PC/AS	WALL ELEVATION AND ROAD PROFILE	SCALE AS SHOWN
DRAWN CRH2	BONNIELASS	DRAWING 13 OF 15
CHECKED AS	TAX MAP 31 PARCEL 254 GRID 9 ZONING R-20 FIRST (1ST) ELECTION DISTRICT HOWARD COUNTY, MARYLAND	JOB NO. 00-098
DATE 4-1-03		FILE NO. 00-098-D

F01-208

E:\DRAWINGS\213-planning-plat-plans\plan 00-098-D.dwg Plan 05 Apr 2003 08:32:52 CLP2

№	REVISIONS	DATE
1	REV. PROP. STREET GRD. ADD RET. WALLS TO STORMWATER POND	3-20-04

HANDLING AND PLANTING OF SEEDLING(1)

HANDLING AND PLANTING OF SEEDLING(2)

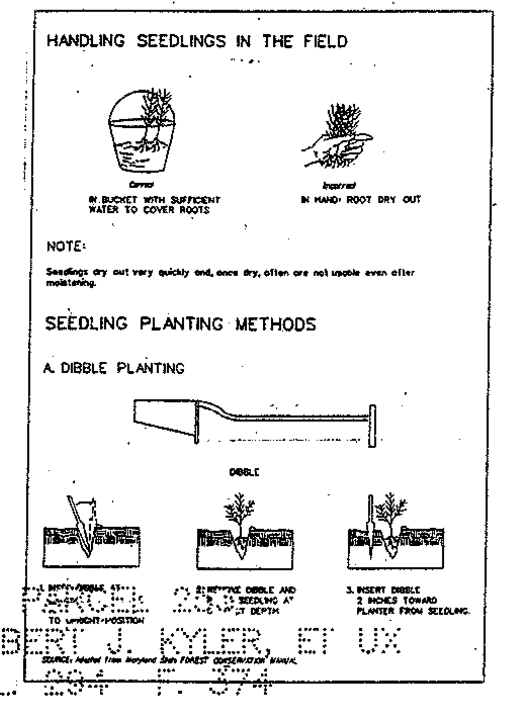

HANDLING AND PLANTING OF SEEDLING(3)

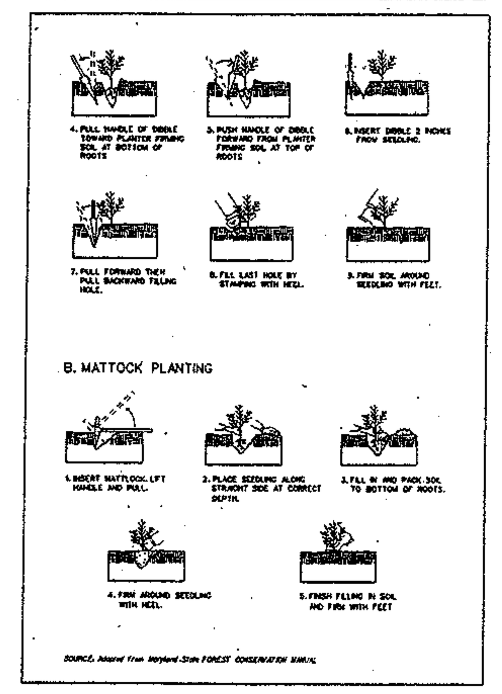

HANDLING AND PLANTING OF SEEDLING(4)

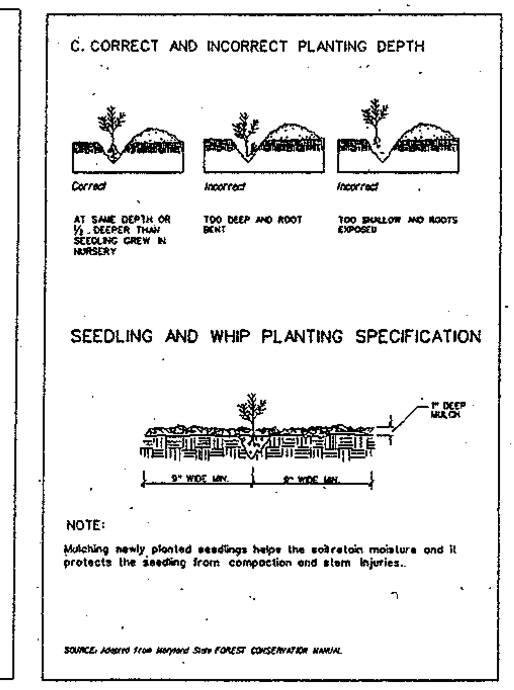

FOREST CONSERVATION WORKSHEET

NET TRACT AREA:
A. TOTAL TRACT AREA....................5.63 AC
B. AREA IN 100 YR FLOODPLAIN....................0.00
C. NET TRACT AREA....................5.63
LAND USE CATEGORY:
D. AFFORESTATION THRESHOLD.....(15 % X D)....................0.84
E. CONSERVATION THRESHOLD.....(20 % X D)....................1.13
EXISTING FOREST COVER
F. Existing forest cover (excluding floodplain)....................5.13
G. Forest area above conservation threshold....................4.00
BREAK EVEN POINT:
H. Min. Forest Retention with no mitigation....................1.93
I. Max. clearing with no mitigation....................3.20
PROPOSED CLEARING
J. Total Forest area to be cleared....................4.19
K. Total Forest area to be retained....................0.94
PLANTING REQUIREMENTS:
L. Reforestation for clearing ABOVE threshold....................1.00
M. Reforestation for clearing BELOW threshold....................0.37
N. Credit for RETENTION above threshold....................0.00
P. Total REFORESTATION required....................1.37
Q. Total AFFORESTATION required....................0.00
R. TOTAL PLANTING REQUIREMENT....................1.37 AC
S. Total onsite planting....................0.11 AC
T. Total offsite planting required....................1.26 AC

THE FOREST CONSERVATION REQUIREMENT OF SECTION 16.1200 OF THE HOWARD COUNTY CODE: FOREST CONSERVATION ACT, HAS BEEN MET BY THE REFORESTATION OF 1.26 ACRES OFFSITE. FINANCIAL SURETY FOR THE ONSITE FOREST CONSERVATION OBLIGATIONS FOR THIS SUBDIVISION ARE $8,189.00 FOR RETENTION OF 0.94 ACRES OF FOREST AND $2,396.00 FOR ONSITE REFORESTATION OF 0.11 ACRES.
FINANCIAL SURETY FOR THE OFF-SITE REFORESTATION IS $27,443.00.

FOREST RETENTION AREA – SIGN

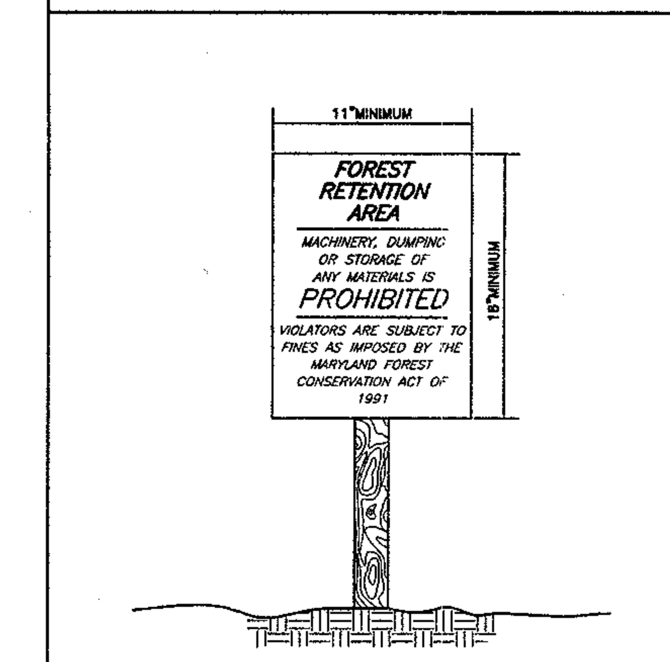

SIGNS SHALL BE POSTED AT 50' INTERVALS

NO SCALE

TREE PLANTING AND MAINTENANCE CALENDAR

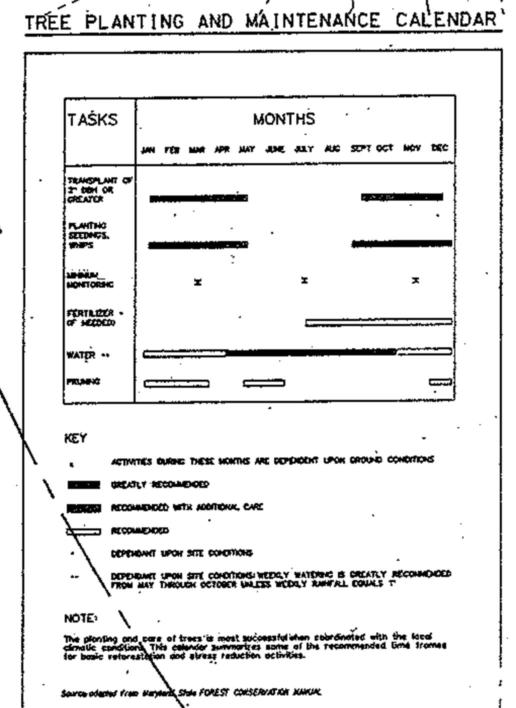

PLANT NAME		SIZE	QUANTITY	SPACING
Acer Rubrum	Red Maple	¾ - 1" cal.	20% 5	15'
Cercis Canadensis	Eastern Redbud	¾ - 1" cal.	20% 5	15'
Liriodendron Tulipifera	Tulip Poplar	¾ - 1" cal.	20% 5	15'
Nyssa Sylvatica	Black Gum	¾ - 1" cal.	20% 5	15'
Quercus Rubra	Northern Red Oak	¾ - 1" cal.	20% 5	15'

TREE SUBSTITUTES

Cornus Florida – Flowering Dogwood
Fraxinus Pennsylvanica – Green Ash
Sassafras Albidum – Sassafras

NOTE

Deer protection shall be provided for all planted trees to prevent damage from rubbing and browsing. Specific measures to be determined.

PRIVATE STORMWATER MANAGEMENT FACILITIES ON OPEN SPACE LOT 1 ARE TO BE OWNED AND MAINTAINED BY HOA.

DEVELOPER'S/BUILDERS CERTIFICATE

I/We certify that the landscaping shown on this plan will be done according to plan, section 16.124 of the Howard County Code and the Howard County Landscape Manual. I/We further certify that upon completion a Certificate of Landscape Installation, accompanied by an executed one year guarantee of plant materials, will be submitted to the Department of Planning and Zoning.

Name [signature] Date 7-1-03

APPROVED: DEPARTMENT OF PUBLIC WORKS
CHIEF, BUREAU OF HIGHWAYS — N/A DATE

APPROVED: DEPARTMENT OF PLANNING & ZONING
[signature] CHIEF, DIVISION OF LAND DEVELOPMENT — 8/15/03 DATE
[signature] CHIEF, DEVELOPMENT ENGINEERING DIVISION MAJ — 8/13/03 DATE

STATE OF MARYLAND — WIGAND H. THEIME — 434 — REGISTERED LANDSCAPE ARCHITECT 7-8-03
STATE OF MARYLAND — G. NELSON CLARK — NO. 7138 — REGISTERED PROFESSIONAL ENGINEER 6-25-03

OWNER / DEVELOPER
BONNIELASS LLC
8835-P COLUMBIA 100 PARKWAY
COLUMBIA, MARYLAND 21045

CLARK · FINEFROCK & SACKETT, INC.
ENGINEERS · PLANNERS · SURVEYORS
7135 MINSTREL WAY · COLUMBIA, MD 21045 · (410) 381-7500 BALT. · (301) 621-8100 WASH.

DESIGNED TD/AS	FOREST CONSERVATION PLAN	SCALE 1"=30'
DRAWN CRH2	BONNIELASS	DRAWING 14 of 15
CHECKED AS	TAX MAP 31 PARCEL 254 GRID 9 ZONING R-20 FIRST (1ST) ELECTION DISTRICT HOWARD COUNTY, MARYLAND	JOB NO. 00-098
DATE 2-10-03		FILE NO. 00-098LS

#6 D:\DRAWINGS\00098-BONNIELASS\1ST-RE-SUB\S14-FORCON.DWG

F-01-208

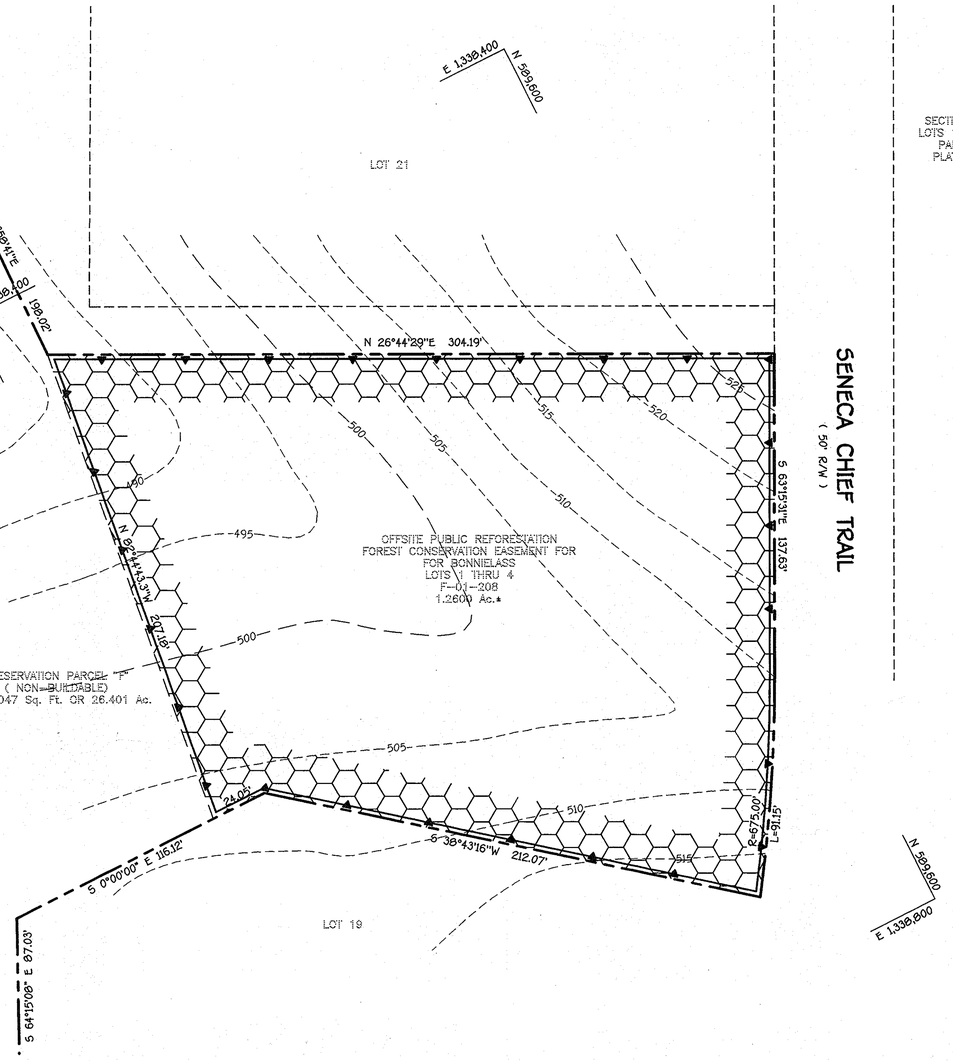

BRANTWOOD
SECTION TWO – AREA ONE
LOTS 1–30 & PRESERVATION
PARCELS "E" AND "F"
PLAT No. 14132–14135

PLANTING SPECIFICATIONS AND NOTES

SITE PREPARATION AND SOILS

1. PROTECTION FENCING AND SILT FENCES FOR SEDIMENT AND EROSION CONTROL ARE TO BE INSTALLED AS A FIRST ORDER OF BUSINESS. SEE PLAN FOR LOCATIONS.
2. DISTURBANCE OF SOILS SHOULD BE LIMITED TO THE PLANTING FIELD FOR EACH PLANT. AS SHOWN ON THE DETAIL VIEW, A PLANTING FIELD OF RADIUS = 5 X DIAMETER OF THE ROOT BALL OR CONTAINER IS RECOMMENDED.
3. SOIL MIX FOR ALL PLANTS EXCEPT ERICACEOUS MATERIAL: SOIL MIX SHALL CONSIST OF EXISTING NATIVE TOPSOIL MIXTURE AT EACH PLANTING FIELD LOCATION INTO WHICH THE CONTRACTOR SHALL THOROUGHLY INCORPORATE 25% BY VOLUME OF COMPOSTED SLUDGE.
4. SOIL MIX FOR ERICACEOUS MATERIAL: SOIL MIX SHALL CONSIST OF EXISTING NATIVE TOPSOIL MIXTURE AT EACH PLANTING FIELD LOCATION INTO WHICH THE CONTRACTOR SHALL THOROUGHLY INCORPORATE 25% BY VOLUME PEAT MOSS.
5. ALL MIXING IN 3 AND 4 SHALL BE LIMITED TO CONTAINER GROWN OR BALL AND BURLAP STOCK ONLY AND CONFINED TO THE PLANTING FIELD AND IMMEDIATE ADJACENT SOIL SURFACE AREA AND SHALL BE DONE TO THE SATISFACTION OF THE DESIGN TEAM OR ENGINEER.

PLANT STORAGE AND INSPECTION

1. FOR CONTAINER GROWN NURSERY STOCK, PLANTING SHOULD OCCUR WITHIN 2 WEEKS AFTER DELIVERY TO THE SITE.
2. FOR BALL AND BURLAP NURSERY STOCK, PLANTING SHOULD OCCUR WITHIN THREE DAYS AFTER DELIVERY TO THE SITE.
3. PLANTING STOCK SHOULD BE INSPECTED PRIOR TO PLANTING. PLANTS NOT CONFORMING TO STANDARD NURSERYMAN SPECIFICATIONS FOR SIZE, FORM, VIGOR, ROOTS, TRUNK WOUNDS, INSECTS AND DISEASE SHOULD BE REPLACED.
4. UNTIL PLANTED, ALL PLANT STOCK SHALL BE KEPT IN A SHADED, COOL, AND MOISTENED ENVIRONMENT .

PLANT INSTALLATION

1. THE PLANTING FIELD SHOULD BE PREPARED AS SPECIFIED (SEE DETAIL). NATIVE STOCKPILED SOILS SHOULD BE USED FOR SOIL MIX AND BACKFILL FOR PLANTING FIELD. AFTER PLANT INSTALLATION, RAKE SOILS EVENLY OVER THE PLANTING FIELD AND COVER WITH AT LEAST 4 INCHES OF MULCH. WATER, GENEROUSLY, TO SETTLE SOIL BACKFILLED AROUND TREES.
2. PLANTING FIELD DIAMETERS SHOULD BE REDUCED OR PLANTING FIELD MOVED IF IT APPEARS THAT EXCESSIVE EXISTING ROOT DAMAGE MAY OCCUR DURING DIGGING OPERATION NEAR EXISTING FOREST.
3. CARE SHALL BE TAKEN WHEN DIGGING PLANTING FIELDS NOT TO CHOP THRU LARGER EXISTING ROOTS FROM EXISTING MATURE TREES. IF ROOTS GREATER THAN 1/2 INCH ARE ENCOUNTERED PLEASE TRY TO DIG AROUND THEM AS MUCH AS POSSIBLE TO MINIMIZE IMPACT TO EXISTING TREES. THEY WERE HERE FIRST.
4. CONTAINER GROWN STOCK SHOULD BE REMOVED FROM THE CONTAINER AND ROOTS GENTLY LOOSENED FROM THE SOIL. IF THE ROOTS ENCIRCLE THE ROOT BALL, SUBSTITUTION IS STRONGLY RECOMMENDED. J-SHAPED OR KINKED ROOT SYSTEMS SHOULD ALSO BE NOTED. ROOTS MAY NOT BE TRIMMED ON SITE, DUE TO THE INCREASED CHANCES OF SOIL BORNE DISEASES.
5. FOR BALL AND BURLAP STOCK, PLACE TREE IN PREPARED PLANTING FIELD AND REMOVE WIRE AND/OR STRING FROM ROOT BALL. THEN PEEL BACK BURLAP TO BASE OF ROOT BALL AND COVER ENTIRE ROOT BALL WITH TOPSOIL MIXTURE INDICATED ABOVE AND WATER GENEROUSLY.
6. FOR TREES PLANTED IN THE AFFORESTATION AREA, CONTRACTOR SHALL EVENLY DISPERSE SPECIES IN GROUPS OF TWO (2) TO FOUR (4), PER SPECIES, OVER THE ENTIRE DESIGNATED AREA TO BE PLANTED WHILE MAINTAINING AN AVERAGE RANDOM SPACING OF INDIVIDUAL TREES AT PROPER SPACING INDICATED ON PLANT LIST.
7. AVOID PLANTING IN A STRAIGHT GRID PATTERN. TREES SHALL BE PLANTED ON AN AVERAGE SPACING AS INDICATED ON PLANT LISTS TO OBTAIN A MORE NATURAL APPEARANCE.
8. NEWLY PLANTED TREES MAY NEED WATERING AS MUCH AS ONCE A WEEK FOR THE ENTIRE GROWING SEASON, DUE TO THE WELL DRAINED NATIVE SOILS FOUND ON THIS SITE COMBINED WITH THE LOOSENESS OF THE BACKFILLED AREA WITHIN THE PLANTING FIELD. THE NEXT TWO YEARS MAY REQUIRE WATERING ONLY A FEW TIMES A YEAR DURING SUMMER AND DRY MONTHS. AFTER THAT PERIOD, TREES SHOULD ONLY NEED WATER IN SEVERE DROUGHTS. ANY WATERING PLAN SHOULD COMPENSATE FOR RECENT RAINFALL PATTERNS.

FERTILIZING

1. DO NOT FERTILIZE NEWLY PLANTED TREES WITHIN THE FIRST GROWING SEASON AFTER PLANTING. DOING SO MAY CAUSE A SPURT OF CANOPY GROWTH WHICH THE ROOTS CANNOT SUPPORT AND ADD ADDITIONAL SHOCK TO THE ALREADY DISTURBED PLANT.
2. NOTHING SHOULD BE ADDED TO THE SOIL WITHOUT TESTING IT FIRST TO DETERMINE ITS NEEDS.
3. IF AND WHEN IT IS TIME TO FERTILIZE, ORGANIC FERTILIZERS ARE PREFERRED TO SYNTHETIC FERTILIZERS. BONE MEAL OR SEAWEED BASED PRODUCTS ARE AVAILABLE COMMERCIALLY AND ARE RECOMMENDED. THEY HAVE THE ABILITY TO SUPPLY NUTRIENTS TO THE PLANT AS NEEDED WHILE MINIMIZING THE RISK OF EXCESS NUTRIENTS ENTERING THE FOREST SYSTEM AND WATER SUPPLY.

MAINTENANCE SCHEDULE

1. ANNUAL MAINTENANCE DURING THE GROWING SEASON, FOR A THREE YEAR PERIOD.
2. ASSESS TREE MORTALITY OF PLANTING STOCK, REMOVE AND REPLACE ANY DEAD OR DISEASED PLANTINGS.
3. VOLUNTEER SEEDING OF NATIVE, LOCAL AND ENDEMIC VEGETATION IS TO BE EXPECTED. DO NOT DISCOURAGE THIS EFFORT UNLESS IT IS NEGATIVELY EFFECTING THE PLANTED STOCK.
4. REMOVE THROUGH MANUAL MEANS (GRUBBING, PULLING, CUTTING) AGGRESSIVE, NOXIOUS, INVASIVE SPECIES AND ALL HERBACEOUS VEGETATION WITHIN A 3-FOOT RADIUS SURROUNDING THE PLANTED WOODY NURSERY STOCK.
5. REMOVE AND DISPOSE OF MAN-MADE TRASH, INCLUDING ITEMS CONTAINED WITHIN ENTIRE PLANTING AREA. DO NOT REMOVE DOWN AND DEAD MATERIAL NATURALLY OCCURRING OR ACCUMULATING, UNLESS IT IS SMOTHERING PLANTING STOCK.
6. A 75 PERCENT SURVIVAL OF PLANTED STOCK MUST BE ACHIEVED AT THE END OF THE 24 MONTH MANAGEMENT PERIOD. IF NOT, ADDITIONAL PLANTINGS MAY BE REQUIRED TO ACHIEVE THIS GOAL.

SUPERVISION

1. ALL FOREST CONSERVATION ACTIVITIES SHALL BY DONE UNDER THE DIRECT SUPERVISION OF SOMEONE FROM THE DESIGN TEAM OR OTHER "QUALIFIED PROFESSIONAL" AS DETERMINED BY THE REQUIREMENTS OF COMAR 08.19.06.01 AND THE MARYLAND DEPARTMENT OF NATURAL RESOURCES, PUBLIC LANDS AND FORESTRY DIVISION.

REFORESTATION PLANT LIST

QTY.	SPECIES	SHADE TOL.	MOIST. REGIME	WET. STATUS	MIN.O.C. SPACING	SIZE & REMARKS
50	Prunus serotina Wild Black Cherry	I	M	FACU	11'	CONT/BROOT 3'–5' HEIGHT
50	Robinia pseudoacacia Black Locust	VI	D–M	FACU–	11'	CONT/BROOT 3'–5' HEIGHT
50	Liriodendron tulipifera Tulip Poplar	I	D–M	FAC	11'	CONT/BROOT 3'–5' HEIGHT
50	Quercus rubra Red Oak	MT	D–M	UPL	11'	CONT/BROOT 3'–5' HEIGHT
50	Fraxinus americana White Ash	MT	D–M	FACU	11'	CONT/BROOT 3'–5' HEIGHT
50	Nyssa sylvatica Black Gum	T	M–W	FAC	11'	CONT/BROOT 3'–5' HEIGHT
50	Juglans nigra Black Walnut	VT	M	FACU	11'	CONT/BROOT 3'–5' HEIGHT
50	Acer rubrum Red Maple	VT	D–W	FAC	11'	CONT/BROOT 3'–5' HEIGHT
50	Cercis canadensis Eastern Redbud	T	M	UPL	11'	CONT/BROOT 3'–5' HEIGHT
50	Diospyros virginiana Persimmon	I	D–M	UPL	11'	CONT/BROOT 3'–5' HEIGHT

Quantities Of Individual Species And Species Composition May Change Depending On Availability At Time Of Planting. Total Quantity Of Trees For Entire Easement Area Will Not Change. Any Species Substitutions Must Be Listed On The Howard County Forest Association List And Must Have A Minimum Of Five (5) Different Species As Indicated On The Howard County Forest Association List.

General Notes

1) The Forest Conservation Easement Has Been Established As An Offsite Forest Mitigation Area, Per Section 16.1216 Of The Howard County Forest Conservation Act. No Clearing, Grading Or Construction Is Permitted Within The Forest Conservation Easement; However, Forest Management Practices As Defined In The Deed Of Forest Conservation easement Are Allowed.

2) Denotes Forest Conservation Easement.

3) Denotes Protective Fence and Signs.

PROTECTIVE FENCE DETAIL

TWO STRAND SMOOTH WIRE

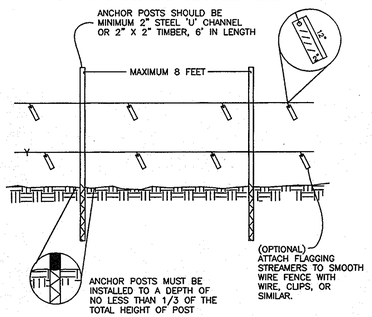

1. FOREST PROTECTION DEVICE ONLY.
2. RETENTION AREA WILL BE SET AS PART OF THE REVIEW PROCESS.
3. BOUNDARIES OF AREA SHOULD BE STAKED AND FLAGGED PRIOR TO INSTALLING DEVICE.
4. ROOT DAMAGE SHOULD BE AVOIDED.
5. PROTECTIVE SIGNAGE MAY ALSO BE USED.
6. DEVICE SHOULD BE MAINTAINED THROUGHOUT CONSTRUCTION.
7. SMOOTH WIRE SHOULD BE ATTACHED SECURELY TO POSTS.

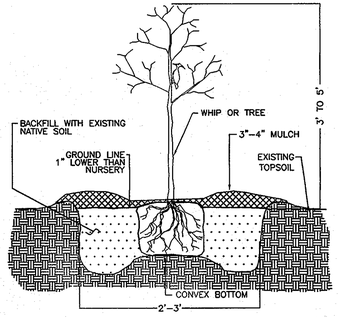

TREE PLANTING DETAIL
CONTAINER GROWN

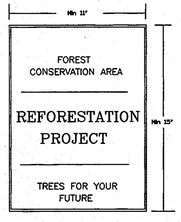

SIGNAGE DETAIL
NOT TO SCALE

APPROVED: DEPARTMENT OF PUBLIC WORKS
CHIEF, BUREAU OF HIGHWAYS — DATE N/A

APPROVED: DEPARTMENT OF PLANNING & ZONING
CHIEF, DIVISION OF LAND DEVELOPMENT — DATE 8/15/03
CHIEF, DEVELOPMENT ENGINEERING DIVISION — DATE 8/15/03

DATE	NO.	REVISION
8/7/03	1	REV. SHEET NUMBER 15 of 15 TO 15 of 17

PROJECT:
BONNIELASS
LOTS 1 THRU 4
F-01-208
*** ELECTION DISTRICT
HOWARD COUNTY, MARYLAND

TITLE:
OFF-SITE FOREST MITIGATION PLAN

AREA:
BRANTWOOD
SECTION TWO – AREA ONE PRESERVATION PARCEL "G"
TAX MAP NO's 16 & 23 –PARCEL "F"– PLAT NO's 14132–14135
3 rd (THIRD) ELECTION DISTRICT HOWARD COUNTY, MARYLAND

TITLE:
REFORESTATION PLANTING PLAN

DEVELOPER
BONNIELASS, LLC.
8835 P – COLUMBIA 100 PARKWAY
COLUMBIA, MARYLAND 21045
410–730–0810

OWNER/GRANTOR
BRANTWOOD, LLC
8835 P – COLUMBIA 100 PARKWAY
COLUMBIA, MARYLAND 21045
410–730–0810

THIS PLAN IS FOR
FOREST CONSERVATION EASEMENT
PLANTING PURPOSES ONLY

WILDMAN
ENVIRONMENTAL SERVICES
4747 BONNIE BRANCH RD.
ELLICOTT CITY, MD. 21043
PHONE: (410) 869-9999
FAX: (410) 869-9901
Ronald R. Wildman 5/30/03

DESIGNED BY:	R.B.W.
DRAWN BY:	J.E.P.
PROJECT NO.	
DATE:	4/16/03
SCALE:	1"= 30'
SHEET NO.	15 OF 17

AUTOCAD FILE NAME C:\Land Projects\Brantwood\dwg\Planting Plan.dwg

NO	REVISIONS	DATE
1	REV. PROP STREET GRD. ADD RET. WALLS TO STORM/WATER, REVISED	3-20-04
2	REV. TO SHOW PROP. 10' TREE MAINTENANCE EASEMENT AND PROP. 60'x 20' TEE TURNAROUND PER SDP-05-014. REV. PROP STREET GRADES.	9-31-05

HANDLING AND PLANTING OF SEEDLING(1)

HEELING IN BARE ROOT STOCK

Bare root seedling and slip stock should be heeled in, if left unplanted for more than 24 hours.

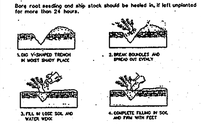

TREE BANKING

Tree banking should be used, when bare root trees must be held in the open for longer than a few days.

PLACE TREES IN AN EAST WEST TRENCH WITH TOPS ON THE SOUTH SIDE PARTIAL SHADE DURING THE AFTERNOON SUN MOST OF SOIL SHOULD BE WORKED AROUND THE ROOTS TO ENSURE THAT NO AIR POCKETS REMAIN AROUND TREE ROOTS DURING THE AFTERNOON SUN TO EXPOSE THE LEAST AMOUNT OF ROOT SURFACE AREA. THE TREES WILL BE MOST LIKELY TO BEGIN GROWTH.

SOURCE: Adapted from Maryland State FOREST CONSERVATION MANUAL

HANDLING AND PLANTING OF SEEDLING(2)

HANDLING SEEDLINGS IN THE FIELD

NOTE:
Seedlings dry out very quickly and, once dry, often are not usable even after rehydrating.

SEEDLING PLANTING METHODS

A. DIBBLE PLANTING

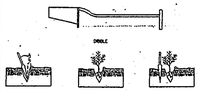

SOURCE: Adapted from Maryland State FOREST CONSERVATION MANUAL

HANDLING AND PLANTING OF SEEDLING(3)

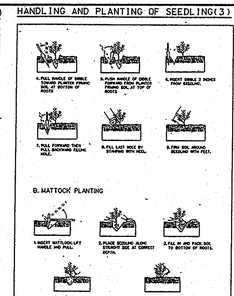

SOURCE: Adapted from Maryland State FOREST CONSERVATION MANUAL

HANDLING AND PLANTING OF SEEDLING(4)

C. CORRECT AND INCORRECT PLANTING DEPTH

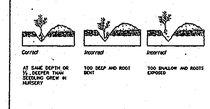

SEEDLING AND WHIP PLANTING SPECIFICATION

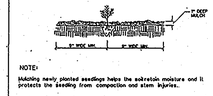

NOTE:
Mulching newly planted seedlings helps the soil retain moisture and it protects the seedling from compaction and stem injuries.

SOURCE: Adapted from Maryland State FOREST CONSERVATION MANUAL

FOREST CONSERVATION WORKSHEET

NET TRACT AREA:
- A. TOTAL TRACT AREA.....5.63 AC
- B. AREA IN 100 YR FLOODPLAIN.....0.00
- C. NET TRACT AREA.....5.63

LAND USE CATEGORY:
- D. AFFORESTATION THRESHOLD.....(15 % X D).....0.84
- E. CONSERVATION THRESHOLD.....(20 % X D).....1.13

EXISTING FOREST COVER
- F. Existing forest cover (excluding floodplain).....5.13
- G. Forest area above conservation threshold.....4.00

BREAK EVEN POINT:
- H. Min. Forest Retention with no mitigation.....1.93
- I. Max. clearing with no mitigation.....3.20

PROPOSED CLEARING
- J. Total Forest area to be cleared.....4.19
- K. Total Forest area to be retained.....0.94

PLANTING REQUIREMENTS:
- L. Reforestation for clearing ABOVE threshold.....1.00
- M. Reforestation for clearing BELOW threshold.....0.37
- N. Credit for RETENTION above threshold.....0.00
- P. Total REFORESTATION required.....1.37
- Q. Total AFFORESTATION required.....0.00
- R. TOTAL PLANTING REQUIREMENT.....1.37 AC
- S. Total onsite planting.....0.11 AC
- T. Total offsite planting required.....1.26 AC

THE FOREST CONSERVATION REQUIREMENT OF SECTION 16.1200 OF THE HOWARD COUNTY CODE: FOREST CONSERVATION ACT, HAS BEEN MET BY THE REFORESTATION OF 1.26 ACRES OFFSITE. FINANCIAL SURETY FOR THE ONSITE FOREST CONSERVATION OBLIGATIONS FOR THIS SUBDIVISION ARE $5,189.00 FOR RETENTION OF 0.84 ACRES OF FOREST AND $2,396.00 FOR ONSITE REFORESTATION OF 0.11 ACRES.
FINANCIAL SURETY FOR THE OFF-SITE REFORESTATION IS $27,443.00.

FOREST RETENTION AREA – SIGN

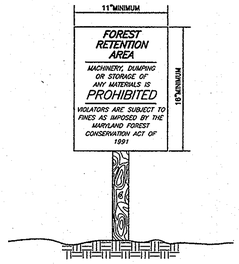

SIGNS SHALL BE POSTED AT 50' INTERVALS

NO SCALE

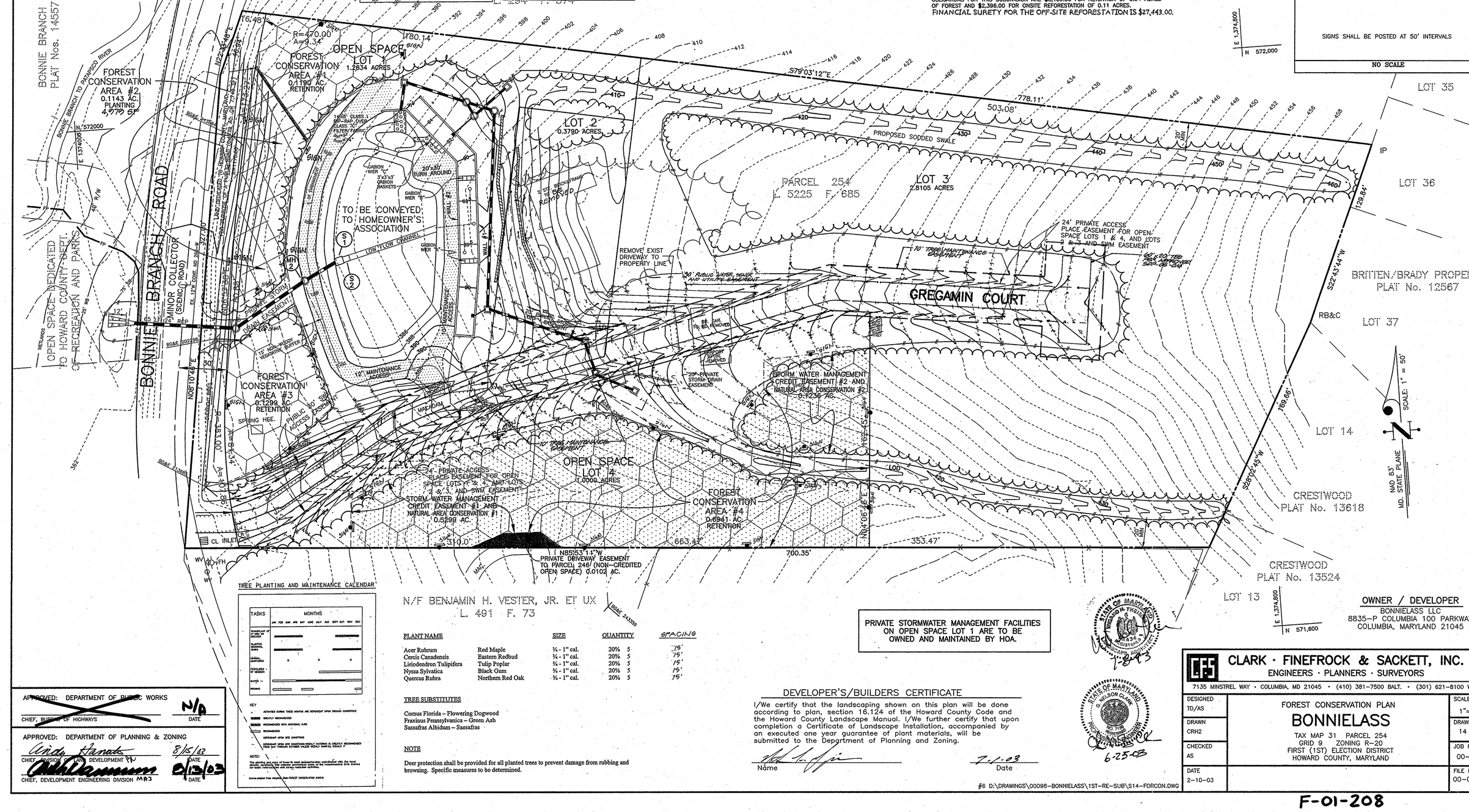

TREE PLANTING AND MAINTENANCE CALENDAR

N/F BENJAMIN H. VESTER, JR. ET UX
L. 491 F. 73

PLANT NAME		SIZE	QUANTITY	SPACING
Acer Rubrum	Red Maple	¾ - 1" cal.	20% 5	15'
Cercis Canadensis	Eastern Redbud	¾ - 1" cal.	20% 5	15'
Liriodendron Tulipifera	Tulip Poplar	¾ - 1" cal.	20% 5	15'
Nyssa Sylvatica	Black Gum	¾ - 1" cal.	20% 5	15'
Quercus Rubra	Northern Red Oak	¾ - 1" cal.	20% 5	15'

TREE SUBSTITUTES

Cornus Florida – Flowering Dogwood
Fraxinus Pennsylvanica – Green Ash
Sassafras Albidum – Sassafras

NOTE

Deer protection shall be provided for all planted trees to prevent damage from rubbing and browsing. Specific measures to be determined.

PRIVATE STORMWATER MANAGEMENT FACILITIES ON OPEN SPACE LOT 1 ARE TO BE OWNED AND MAINTAINED BY HOA.

DEVELOPER'S/BUILDERS CERTIFICATE

I/We certify that the landscaping shown on this plan will be done according to plan, section 16.124 of the Howard County Code and the Howard County Landscape Manual. I/We further certify that upon completion a Certificate of Landscape Installation, accompanied by an executed one year guarantee of plant materials, will be submitted to the Depgrtment of Planning and Zoning.

Name — Date 7-1-03

APPROVED: DEPARTMENT OF PUBLIC WORKS

CHIEF, BUREAU OF HIGHWAYS — DATE N/A

APPROVED: DEPARTMENT OF PLANNING & ZONING

CHIEF, DIVISION OF LAND DEVELOPMENT — DATE 8/15/03

CHIEF, DEVELOPMENT ENGINEERING DIVISION — DATE 8/13/03

STATE OF MARYLAND — EDWARD A. THIBEAU — No. 21434 — REGISTERED LANDSCAPE ARCHITECT — 7-2-03

STATE OF MARYLAND — G. NELSON CLARK — No. 10193 — REGISTERED PROFESSIONAL ENGINEER — 6-25-03

OWNER / DEVELOPER
BONNIELASS LLC
8835-P COLUMBIA 100 PARKWAY
COLUMBIA, MARYLAND 21045

CLARK · FINEFROCK & SACKETT, INC.
ENGINEERS · PLANNERS · SURVEYORS
7135 MINSTREL WAY · COLUMBIA, MD 21045 · (410) 381-7500 BALT. · (301) 621-8100 WASH.

DESIGNED TD/AS	FOREST CONSERVATION PLAN	SCALE 1"=30'
DRAWN CRH2	BONNIELASS	DRAWING 14 of 17
CHECKED AS	TAX MAP 31 PARCEL 254 GRID 9 ZONING R-20 FIRST (1ST) ELECTION DISTRICT HOWARD COUNTY, MARYLAND	JOB NO. 00-098
DATE 2-10-03		FILE NO. 00-098LS

#6 D:\DRAWINGS\00098-BONNIELASS\1ST-RE-SUB\S14-FORCON.DWG

F-01-208

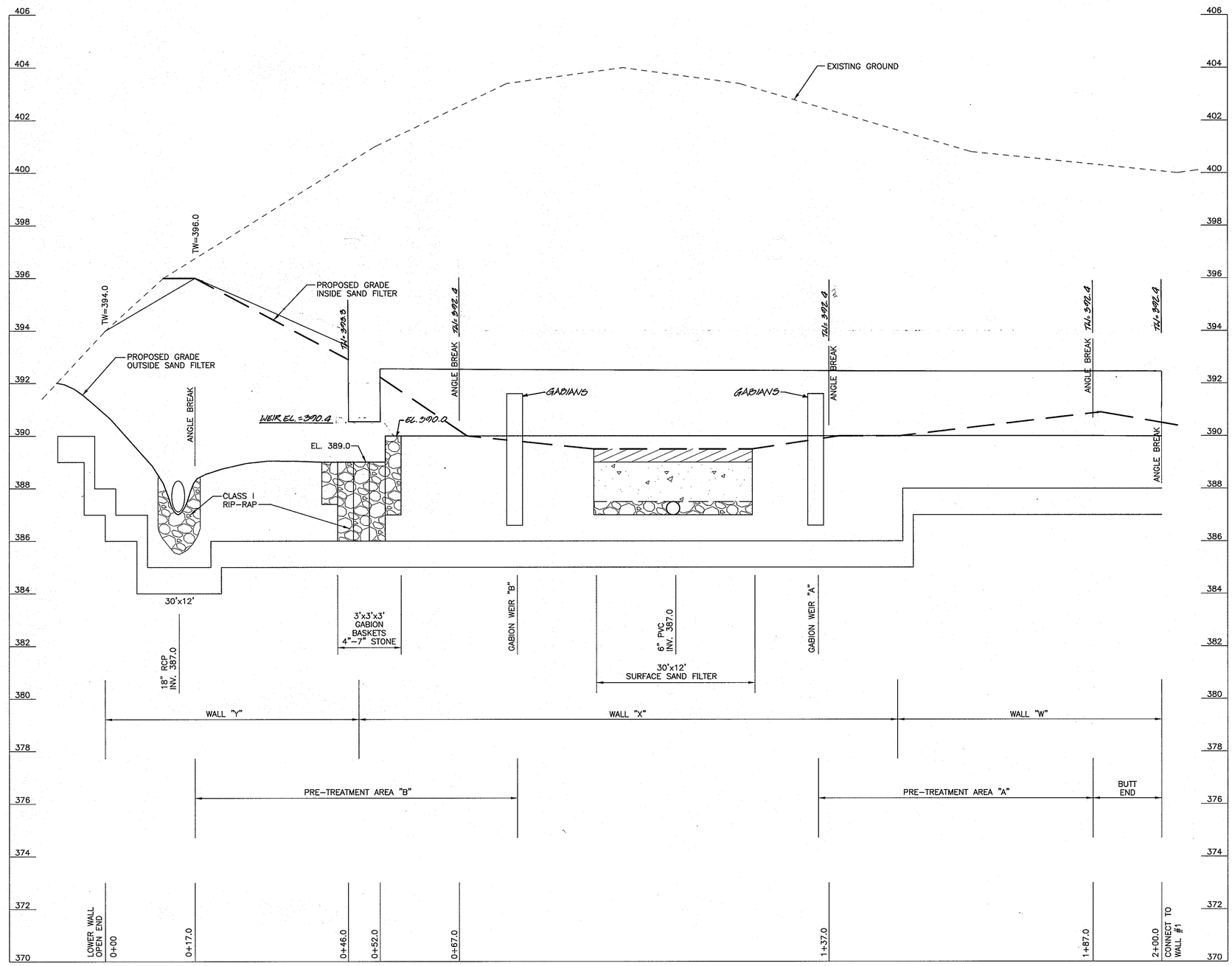

SURFACE SAND FILTER WALL #2 ELEVATION

SCALE: HOR. 1"=10'
VER. 1"=2'

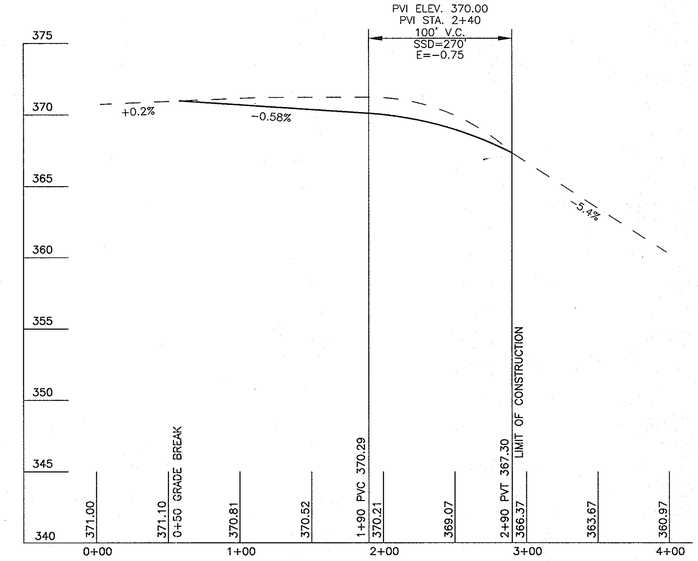

PROFILE– BONNIE BRANCH ROAD CONSTRUCTION

SCALE: HOR. 1"=50'
VER. 1"=5'

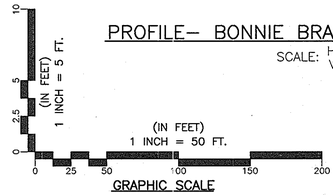

NO.	REVISIONS	DATE
2	REV. SHEET NUM. FROM 13 of 15 TO 13 of 17	4-3-05
1	REV. PROP GRDG FOR TOE OF RETAINING WALL	3-16-04

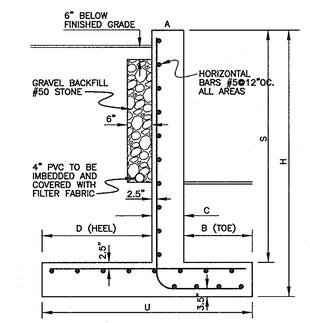

RETAINING WALL SCHEMATIC (TYP.)

NO SCALE

CHART FOR RETAINING WALLS

DIM. WALL	H	A	B	C	D	S	T	U	STEM & TOE REINFORCING	HEEL REINFORCING	MIN. SOIL BEARING
W	7'	8"	12"	8"	3'	6'	12"	4.67'	#5@18"	#5@12"	3000 psf
X	9'	8"	1.33'	8"	4'	8'	12"	6.0'	#5@12"	#5@12"	3000 psf
Y	11'	12"	1.5'	12"	4.9'	10'	12"	7.4'	#8@15"	#5@8"	3000 psf
Z	16.5'	12"	2.33'	12"	9.5'	15'	18"	12.83'	#8@6"O.C.	#8@6"O.C.	3000 psf

NOTES:
1. SOME WALL TOPS SLOPE (NO SLOPE ON FOOTING)
2. USE PROFILE TO SET ELEVATIONS OF FOOTING AND WALL TOP (AS MAXIMUM) USE APPROPRIATE BAR LENGTHS.
3. THE MAXIMUM SLOPE ABOVE & BELOW WALLS IS 2:1
4. THE MINIMUM BEARING STRENGTH SHALL HAVE S.F.=3
5. PROVIDE A 4" DRAIN & GRAVEL BEHIND THE UPPER WALL AND DRAINED TO DAYLIGHT AT EACH END.

APPROVED: DEPARTMENT OF PUBLIC WORKS — N/A
CHIEF, BUREAU OF HIGHWAYS — DATE

APPROVED: DEPARTMENT OF PLANNING & ZONING
CHIEF, DIVISION OF LAND DEVELOPMENT — DATE 5/15/03
CHIEF, DEVELOPMENT ENGINEERING DIVISION — DATE 5/13/03

NOTE: THE SUITABILITY OF FILL MATERIAL MUST BE CONFIRMED BY THE ON-SITE GEOTECHNICAL PROFESSIONAL. EACH 8 INCH LEFT MUST BE COMPACTED TO 95% STANDARD PROCTOR DENSITY AND A TESTING REPORT SHALL BE MADE AVAILABLE TO THE HOWARD COUNTY INSPECTOR UPON COMPLETION OF CONSTRUCTION.

NOTE: THE REQUIRED BEARING PRESSURE BENEATH THE FOOTING OF THE WALL SHALL BE VERIFIED IN THE FIELD BY A GEOTECHNICAL PROFESSIONAL. TESTING DOCUMENTATION MUST BE PROVIDED TO THE HOWARD COUNTY INSPECTOR PRIOR TO THE START OF CONSTRUCTION.

OWNER / DEVELOPER
BONNIELASS LLC
8835-P COLUMBIA 100 PARKWAY
COLUMBIA, MARYLAND 21045

STATE OF MARYLAND — G. NELSON CLARK — No. 11138 — PROFESSIONAL ENGINEER
4-23-03

#6 D:\DRAWINGS\00098-BONNIELASS\1ST-RE-SUB\S13-STRUCTURE-DETS.DWG

CLARK · FINEFROCK & SACKETT, INC.
ENGINEERS · PLANNERS · SURVEYORS
7135 MINSTREL WAY · COLUMBIA, MD 21045 · (410) 381-7500 BALT. · (301) 621-8100 WASH.

DESIGNED PC/AS	WALL ELEVATION AND ROAD PROFILE	SCALE AS SHOWN
DRAWN CRH2	BONNIELASS	DRAWING 13 OF 17
CHECKED AS	TAX MAP 31 PARCEL 254 GRID 9 ZONING R-20 FIRST (1ST) ELECTION DISTRICT HOWARD COUNTY, MARYLAND	JOB NO. 00-098
DATE 4-1-03		FILE NO. 00-098-D

F01-208

E:\BONNIELASS\224213-structure-9548.dwg Tue, 30 Sep 2003 08:52:36 Cst

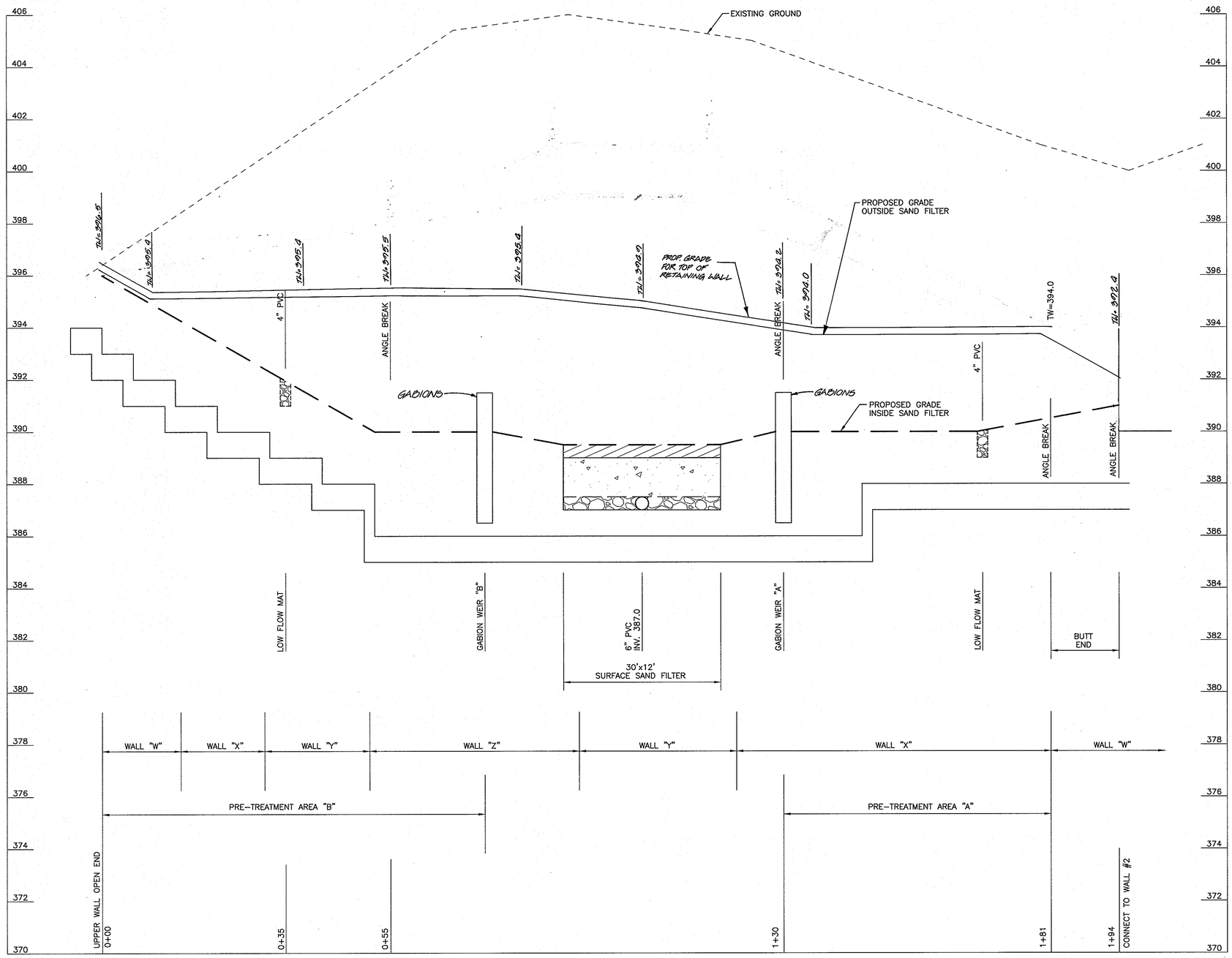

SURFACE SAND FILTER WALL #1 ELEVATION

SCALE: HOR. 1"=10' VER. 1"=2'

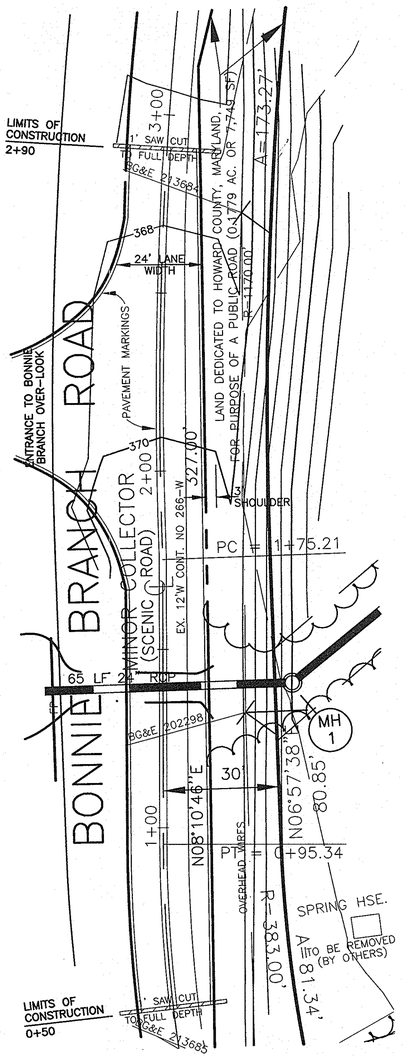

ROAD CONSTRUCTION ENLARGED PLAN

SCALE: 1" = 20'

No	REVISIONS	DATE
2	REV. SHEET NUMBER 12 of 15 TO 12 of 17	4-9-05
1	REV. PROP. GRADES FOR TOP OF RETAINING WALL	5-16-04

APPROVED: DEPARTMENT OF PUBLIC WORKS — CHIEF, BUREAU OF HIGHWAYS — DATE N/A

APPROVED: DEPARTMENT OF PLANNING & ZONING — CHIEF, DIVISION OF LAND DEVELOPMENT — DATE 8/15/03

CHIEF, DEVELOPMENT ENGINEERING DIVISION MAJ — DATE 8/13/03

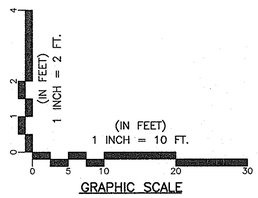

GRAPHIC SCALE

NOTE: THE SUITABILITY OF FILL MATERIAL MUST BE CONFIRMED BY THE ON-SITE GEOTECHNICAL PROFESSIONAL. EACH 8 INCH LEFT MUST BE COMPACTED TO 95% STANDARD PROCTOR DENSITY AND A TESTING REPORT SHALL BE MADE AVAILABLE TO THE HOWARD COUNTY INSPECTOR UPON COMPLETION OF CONSTRUCTION.

NOTE: THE REQUIRED BEARING PRESSURE BENEATH THE FOOTING OF THE WALL SHALL BE VERIFIED IN THE FIELD BY A GEOTECHNICAL PROFESSIONAL. TESTING DOCUMENTATION MUST BE PROVIDED TO THE HOWARD COUNTY INSPECTOR PRIOR TO THE START OF CONSTRUCTION.

OWNER / DEVELOPER
BONNIELASS LLC
8835-P COLUMBIA 100 PARKWAY
COLUMBIA, MARYLAND 21045

STATE OF MARYLAND G. NELSON CLARK NO. 7139 REGISTERED PROFESSIONAL ENGINEER — 4-23-03

#6 D:\DRAWINGS\00098-BONNIELASS\1ST-RE-SUB\S12-STRUCTURE-DETS.DWG

CLARK · FINEFROCK & SACKETT, INC.
ENGINEERS · PLANNERS · SURVEYORS
7135 MINSTREL WAY · COLUMBIA, MD 21045 · (410) 381-7500 BALT. · (301) 621-8100 WASH.

DESIGNED PC/AS	WALL ELEVATION AND ROAD DETAIL	SCALE AS SHOWN
DRAWN CRH2	BONNIELASS	DRAWING 12 OF 17
CHECKED AS	TAX MAP 31 PARCEL 254 GRID 9 ZONING R-20 FIRST (1ST) ELECTION DISTRICT HOWARD COUNTY, MARYLAND	JOB NO. 00-098
DATE 4-1-03		FILE NO. 00-098-D

F-01-208

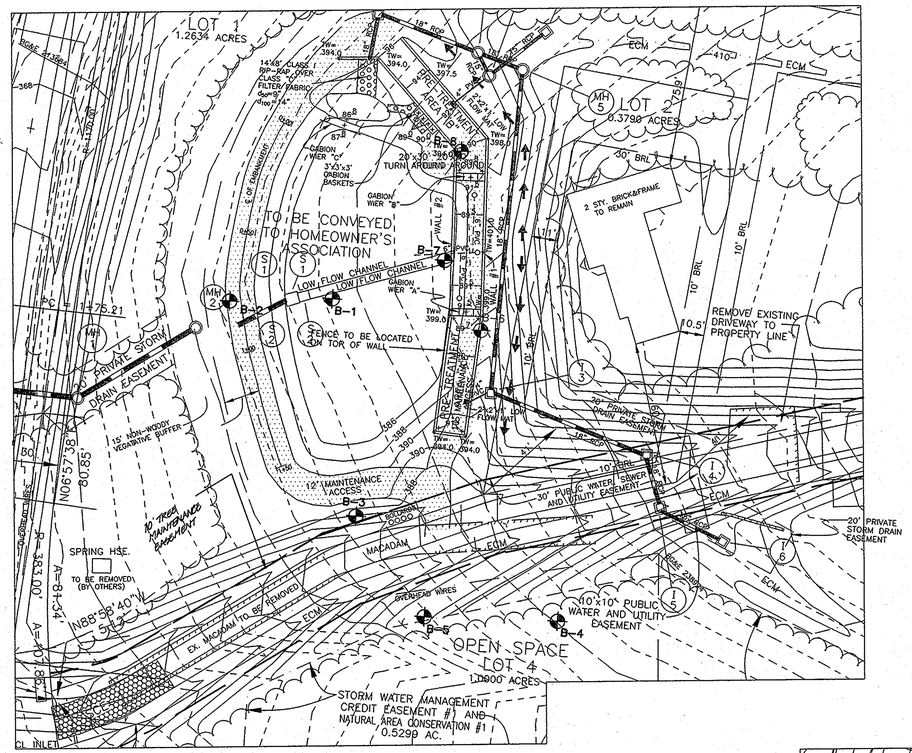

BORING LOCATIONS
SCALE: 1" = 30'

HERBST/BENSON & ASSOCIATES Geotechnical Engineers

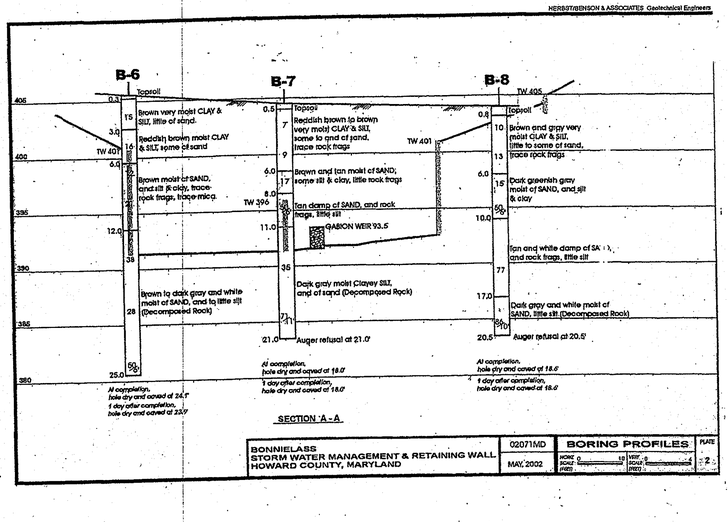

BONNIELASS STORM WATER MANAGEMENT & RETAINING WALL HOWARD COUNTY, MARYLAND	02071MD MAY, 2002	BORING PROFILES HORIZ SCALE (FEET) 0 10 VERT SCALE (FEET) 0 4	PLATE 2

HERBST/BENSON & ASSOCIATES Geotechnical Engineers

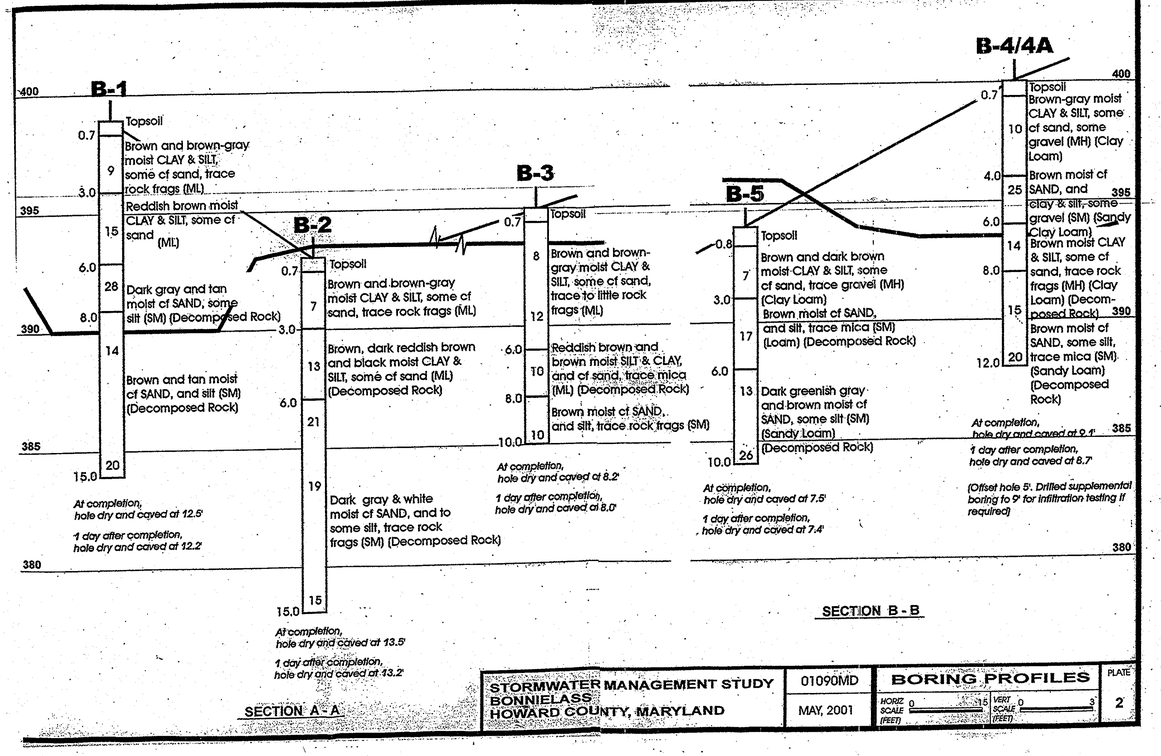

STORMWATER MANAGEMENT STUDY BONNIELASS HOWARD COUNTY, MARYLAND	01090MD MAY, 2001	BORING PROFILES HORIZ SCALE (FEET) 0 15 VERT SCALE (FEET) 0 3	PLATE 2

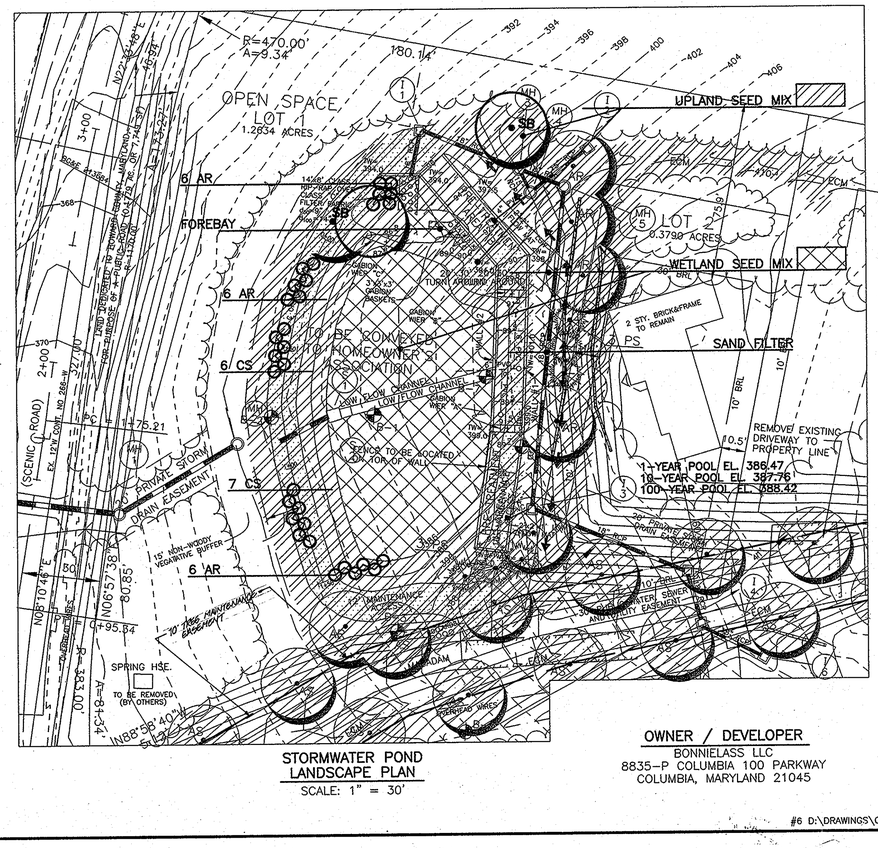

STORMWATER POND
LANDSCAPE PLAN
SCALE: 1" = 30'

WETLAND SEED MIX		
SPECIES	COMMON NAME	RATE
ELYMUS VIRGINICUS	VIRGINIA WILD RYE	2 LBS. / AC.
ELYMUS RIPARIUS	RIVERBANK WILD RYE	1 LBS. / AC.
CAREX VULPINOIDEA	FOX SEDGE	1 LBS. / AC.
BIDENS FRONDOSA	BEGGAR-TICKS	1 LBS. / AC.
POA TRIVIALIS	ROUGH BLUEGRASS	10 LBS. / AC.
LOLIUM MULTIFLORUM	ANNUAL RYEGRASS	10 LBS. / AC.
GLYCERIA STRIATA	FOWL MANNAGRASS	2 LBS. / AC.
ASTER NOVAE ANGLIAE	NEW ENGLAND ASTER	1/2 LBS. / AC.

UPLAND GRASS SEED MIX		
SPECIES	COMMON NAME	RATE
PERMANENT HERBACEOUS		
AGROSTIS PALUSTRIS (SEE NOTE 1)	CREEPING BENTGRASS	2 LBS. / AC.
FESTUCA ARUNDINACEA	TALL FESCUE	40 LBS. / AC.
FESTUCA RUBRA VAR. RUBRA (SEE NOTE 2)	CREEPING RED FESCUE	20 LBS. / AC.
LOLIUM PERENNE (SEE NOTE 3)	PERENNIAL RYGRASS	25 LBS. / AC.
PANICUM VIRGATUM (SEE NOTE 4)	SWITCHGRASS	10 LBS. / AC.
POA TRIVIALIS	ROUGH BLUEGRASS	15 LBS. / AC.
TRIFOLIUM REPENS	WHITE CLOVER	5 LBS. / AC.
NURSE CROP FOR SITE STABILIZATION		
AVENA SATIVA	OATS	28 LBS. / AC.
LOLIUM PERENNE SSP. MULTIFLORUM	ANNUAL RYEGRASS	5 LBS. / AC.
SETARIA ITALICA	FOXTAIL MILLET	5 LBS. / AC.

NOTES:
1. RECOMMENDED CULTIVAR: SEASIDE
2. RECOMMENDED CULTIVARS: PENNLAWN, FLYER, FORTESS, RUBY, OR SALEM.
3. RECOMMENDED CULTIVARS: BLAZER(II) OR PENNFINE
4. RECOMMENDED CULTIVARS: BLACKWELL, CARTHAGE, CAVE-IN-ROCK, OR SHELTER

STORMWATER POND PLANT SCHEDULE							
KEY	QTY	BOTANICAL NAME	COMMON NAME	WATER DEPTH	INDICATOR STATUS	ROOT	SPACING	SIZE
SHRUBS								
AR	18	ARONIA ARBUTIFOLIA	RED CHOKEBERRY	IRREGULARLY INUNDATED	FACW	CONT.	CLUMPS	18-24"
CS	13	CORNUS SERICEA	RED-OSIER DOGWOOD	IRREGULARLY INUNDATED	FACW+	CONT.	CLUMPS	18-24"
TREES								
SB	2	SALIX BABYLONICA	WEEPING WILLOW	IRREGULARLY INUNDATED	FACW	B&B	30' O.C.	2 1/2 - 3" CAL

OWNER / DEVELOPER
BONNIELASS LLC
8835-P COLUMBIA 100 PARKWAY
COLUMBIA, MARYLAND 21045

APPROVED: DEPARTMENT OF PUBLIC WORKS — N/A
CHIEF, BUREAU OF HIGHWAYS — DATE

APPROVED: DEPARTMENT OF PLANNING & ZONING
CHIEF, DIVISION OF LAND DEVELOPMENT — DATE 5/15/03
CHIEF, DEVELOPMENT ENGINEERING DIVISION — DATE 6/13/03

STATE OF MARYLAND — CARLSON CLARK — No. 7126 — PROFESSIONAL ENGINEER
6-25-03

CLARK · FINEFROCK & SACKETT, INC.
ENGINEERS · PLANNERS · SURVEYORS
7135 MINSTREL WAY · COLUMBIA, MD 21045 · (410) 381-7500 BALT. · (301) 621-8100 WASH.

DESIGNED PC/AS	BORING LOGS AND STORMWATER POND LANDSCAPE PLAN BONNIELASS TAX MAP 31 PARCEL 254 GRID 9 ZONING R-20 FIRST (1ST) ELECTION DISTRICT HOWARD COUNTY, MARYLAND	SCALE 1"=30'
DRAWN CRH2		DRAWING 11 of 17
CHECKED AS		JOB NO. 00-098
DATE 2-10-03		FILE NO. 00-098-D

#6 D:\DRAWINGS\00098-BONNIELASS\1ST-RE-SUB\S11-LOGS.DWG

F-01-208

NO.	REVISION	BY	DATE
2	ADD GRADING LIMITS TO SCREENING BERM, LANDSCAPE PLAN, PARKING PLAN, & TYPE I MONITORING PLAN	PC/AS	9/27/04
1	ADD GRADING LIMITS TO SCREENING BERM, LANDSCAPE PLAN	PC/AS	4-9-03

Plotted: 04 Oct 2004 10:01:48 am
D:\DRAWINGS\00098-BONNIELASS\1ST-RE-SUB\S11-LOGS.DWG

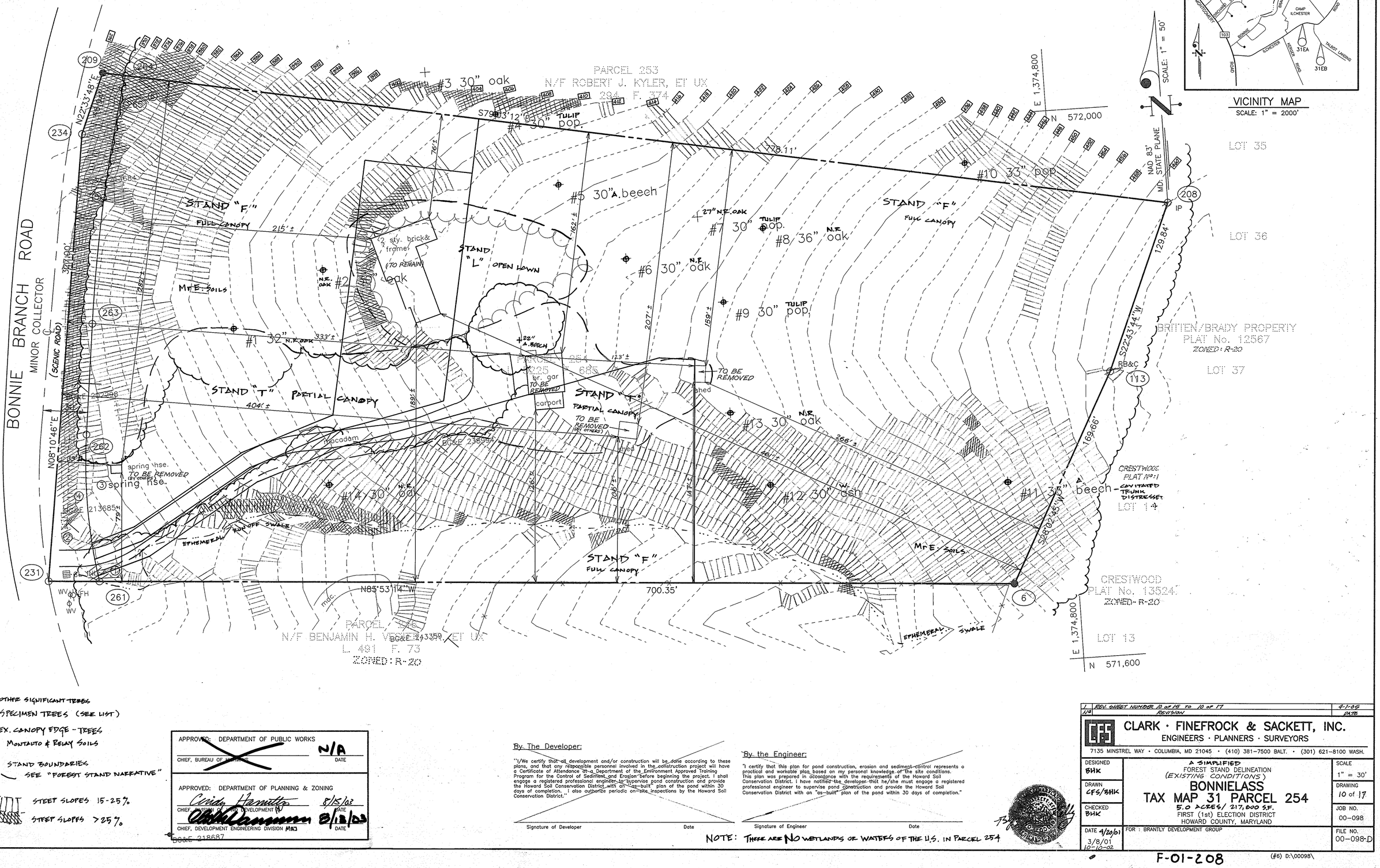

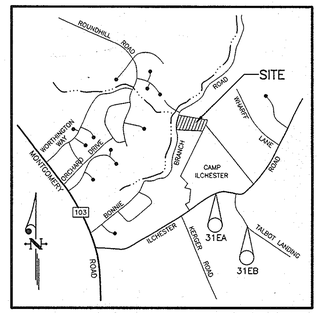

VICINITY MAP
SCALE: 1" = 2000'

+ OTHER SIGNIFICANT TREES
⊕ SPECIMEN TREES (SEE LIST)
EX. CANOPY EDGE - TREES
MrE: Montalto & Relay Soils
STAND BOUNDARIES SEE "FOREST STAND NARRATIVE"
STEEP SLOPES 15-25%
STEEP SLOPES >25%

APPROVED: DEPARTMENT OF PUBLIC WORKS
CHIEF, BUREAU OF ENGINEERING — N/A DATE

APPROVED: DEPARTMENT OF PLANNING & ZONING
CHIEF, DIVISION OF LAND DEVELOPMENT — 8/15/03 DATE
CHIEF, DEVELOPMENT ENGINEERING DIVISION — 8/18/03 DATE

BG&E 218687

By The Developer:

"I/We certify that all development and/or construction will be done according to these plans, and that any responsible personnel involved in the construction project will have a Certificate of Attendance at a Department of the Environment Approved Training Program for the Control of Sediment and Erosion before beginning the project. I shall engage a registered professional engineer to supervise pond construction and provide the Howard Soil Conservation District with an "as-built" plan of the pond within 30 days of completion. I also authorize periodic on-site inspections by the Howard Soil Conservation District."

Signature of Developer — Date

By the Engineer:

"I certify that this plan for pond construction, erosion and sediment control represents a practical and workable plan based on my personal knowledge of the site conditions. This plan was prepared in accordance with the requirements of the Howard Soil Conservation District. I have notified the developer that he/she must engage a registered professional engineer to supervise pond construction and provide the Howard Soil Conservation District with an "as-built" plan of the pond within 30 days of completion."

Signature of Engineer — Date

NOTE: THERE ARE NO WETLANDS OR WATERS OF THE U.S. IN PARCEL 254

1	REV. SHEET NUMBER 10 OF 18 TO 10 OF 17	4-1-05
1/2	REVISION	DATE

CLARK · FINEFROCK & SACKETT, INC.
ENGINEERS · PLANNERS · SURVEYORS
7135 MINSTREL WAY · COLUMBIA, MD 21045 · (410) 381-7500 BALT. · (301) 621-8100 WASH.

DESIGNED BHK	A SIMPLIFIED FOREST STAND DELINEATION (EXISTING CONDITIONS)	SCALE 1" = 30'
DRAWN CFS/BHK	BONNIELASS	DRAWING 10 of 17
CHECKED BHK	TAX MAP 31 PARCEL 254	JOB NO. 00-098
DATE 4/20/01 3/8/01 10-10-02	5.0 ACRES/ 217,800 S.F. FIRST (1st) ELECTION DISTRICT HOWARD COUNTY, MARYLAND	FILE NO. 00-098-D
	FOR : BRANTLY DEVELOPMENT GROUP	

F-01-208

(#6) D:\00098\

SOILS LEGEND

SYMBOL	NAME / DESCRIPTION	TYPE
SsE	SASSAFRAS SOILS, 15 TO 40 PERCENT SLOPE	B
MrE	MONTALTO AND RELAY SOILS, 15 TO 45 PERCENT SLOPES LESS SEVERELY ERODED	C
BeC2	BELTSVILLE SILT LOAM, 5 TO 10 PERCENT SLOPES MODERATELY ERODED	C
BeD2	BELTSVILLE SILT LOAM, 10 TO 15 PERCENT SLOPES MODERATELY ERODED	C

LEGEND

CONTOUR INTERVAL	2 FT.
EXISTING CONTOUR	348
PROPOSED CONTOUR	348
DIRECTION OF DRAINAGE	
PROP. DRAINAGE DIVIDE	
SOILS	
PROP. DRAINAGE AREA TO SODDED SWALE	

OWNER / DEVELOPER
BONNIELASS LLC
8835-P COLUMBIA 100 PARKWAY
COLUMBIA, MARYLAND 21045

APPROVED: DEPARTMENT OF PUBLIC WORKS		
CHIEF, BUREAU OF HIGHWAYS	N/A	DATE
APPROVED: DEPARTMENT OF PLANNING & ZONING		
CHIEF, DIVISION OF LAND DEVELOPMENT	8/15/03	DATE
CHIEF, DEVELOPMENT ENGINEERING DIVISION MAJ	8/13/03	DATE

Nº	REVISION	DATE
2	REV. TO SHOW PROPOSED 10' TREE MAINTENANCE EASEMENT AND PROP. 60'x20' TEE TURNAROUND PER SDP-05-014. REV. PROP. STREET GRADES	3-29-05
1	REV. PROP. STREET GRDS. ADD RETAINING WALLS TO STORMWATER POND	3-23-04

STATE OF MARYLAND G. NELSON CLARK NO. 7139 REGISTERED PROFESSIONAL ENGINEER
2-10-03

#6 D:\DRAWINGS\00098-BONNIELASS\1ST-RE-SUB\S09-DRAIN-MAP.DWG

CLARK · FINEFROCK & SACKETT, INC.
ENGINEERS · PLANNERS · SURVEYORS
7135 MINSTREL WAY · COLUMBIA, MD 21045 · (410) 381-7500 BALT. · (301) 621-8100 WASH.

DESIGNED PC/AS	DRAINAGE AREA MAP	SCALE 1"=30'
DRAWN ZAH/CRH2	**BONNIELASS**	DRAWING 9 of 17
CHECKED AS	TAX MAP 31 PARCEL 254 GRID 9 ZONING R-20 FIRST (1ST) ELECTION DISTRICT HOWARD COUNTY, MARYLAND	JOB NO. 00-098
DATE 2-10-03		FILE NO. 00-098-D

F-01-208

D:\Drawings\00098-Bonnielass\1st-re-sub\S09-DRAIN-MAP.dwg Jun Feb 09 15:35:17 2003 CFS Computer #6

BONDING NOTE:

THIS PLAN HAS BEEN PREPARED IN ACCORDANCE WITH THE PROVISIONS OF SECTION 16.124 OF THE HOWARD COUNTY CODE AND LANDSCAPE MANUAL.

FINANCIAL SURETY FOR THE TREES IN SCHEDULE D, TRASH PAD SCREENING, AND STREET TREES IN THE AMOUNT OF $12,180.00 SHALL BE PART OF THE DEVELOPERS AGREEMENT.

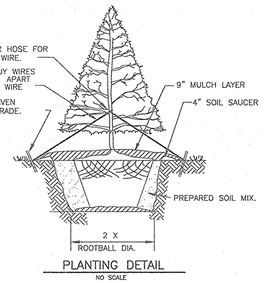

PLANTING DETAIL
NO SCALE

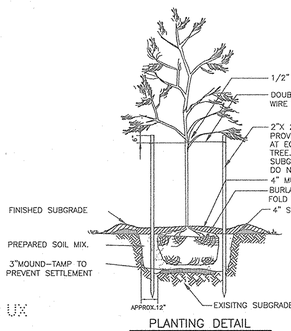

PLANTING DETAIL
NO SCALE

NOTES:

1. ALL PLANT MATERIALS SHALL BE FULL AND HEAVY, BE WELL FORMED AND SYMMETRICAL. CONFORM TO THE MOST CURRENT AAN SPECIFICATIONS AND BE INSTALLED IN ACCORDNACE WITH HRD PLANTING SPECIFICATIONS.
2. CONTRACTOR SHALL VERIFY LOCATION OF ALL UNDERGROUND UTILITIES PRIOR TO DIGGING.
3. FINAL LOCATION OF PLANT MATERIAL MAY NEED TO VARY TO MEET FINAL FIELD CONDITIONS. TREES SHALL NOT BE PLANTED IN THE BOTTOM OF DRAINAGE SWALES.
4. AT THE TIME OF INSTALLMENT, ALL SHRUBS AND OTHER PLANTINGS HEREWITH LISTED AND APPROVED FOR THIS SITE, SHALL BE OF THE PROPER HEIGHT REQUIREMENTS IN ACCORDANCE WITH THE HOWARD COUNTY LANDSCAPE MANUAL. IN ADDITION, NO SUBSTITUTIONS OR RELOCATION OF REQUIRED PLANTINGS MAY BE MADE WITHOUT PRIOR REVIEW AND APPROVAL FROM THE DEPARTMENT OF PLANNING AND ZONING. ANY DEVIATION FROM THIS APPROVED LANDSCAPE PLAN MAY RESULT IN DENIAL OR DELAY IN THE RELEASE OF LANDSCAPE SURETY UNTIL SUCH TIME AS ALL REQUIRED MATERIALS ARE PLANTED AND/OR REVISIONS ARE MADE TO APPLICABLE PLANS AND CERTIFICATES.

SCHEDULE A
PERIMETER LANDSCAPE EDGE

Category — Adjacent Perimeter Properties		PERIMETER 1	PERIMETER 2	PERIMETER 3
Landscape Type		A	A	A
Frontage/Perimeter		581.49'	299.50'	353.47'
Number of Plants Required				
Shade Trees	(1/50)	0 *	0 *	0 *
Evergreen Trees	(1/40)	0 *	0 *	0 *
Shrubs				
Number of Plants Provided				
Shade Trees		0	0	0
Evergreen Trees				
Surety Amounts		0	0	0

* 100% credit for existing vegetation to remain. Total Surety= $0,000.00

PLANT SCHEDULE

KEY	PLANT NAME	SIZE	QUAN.	REMARK
AR	ACER RUBRUM 'OCTOBER GLORY' OCTOBER GLORY RED MAPLE	2 1/2"-3" CAL. 12-14' HT.	6	B&B
PS	PINUS STROBUS WHITE PINE	6'-8' HT.	6	B&B
AS	ACER SACCHARUM 'GREEN MOUNTAIN' GREEN MOUNTAIN SUGAR MAPLE	2 1/2" - 3" CAL. 12-14' HT.	29	B&B

BONNIE BRANCH OVERLOOK
PLAT Nos. 14557 - 14561

PARCEL 253
N/F ROBERT J. KYLER, ET UX
L. 284 F. 374

PARCEL 254
L. 5225 F. 685

N/F BENJAMIN H. VESTER, JR. ET UX
L. 481 F. 73

BRITTEN/BRADY PROPERTY
PLAT No. 12567

CRESTWOOD
PLAT No. 13618

CRESTWOOD
PLAT No. 13524

LOT 35 | LOT 36 | LOT 37 | LOT 14 | LOT 13

OPEN SPACE LOT 1
1.2634 ACRES
FOREST CONSERVATION AREA #1
0.1190 AC. RETENTION

LOT 2
0.3790 ACRES

LOT 3
2.8105 ACRES

OPEN SPACE LOT 4
1.0000 ACRES

FOREST CONSERVATION AREA #2
0.1143 AC. PLANTING

FOREST CONSERVATION AREA #3
0.1299 AC. RETENTION

FOREST CONSERVATION AREA #4
0.6941 AC. RETENTION

PERIMETER 1 — S79°03'12"E 778.11' — 503.08' — IP

PERIMETER 2 — S22°43'44"W 169.66' — S28°02'45"W 129.84' — IP

PERIMETER 3 — N85°53'14"W 310.0' — 663.47' — 700.35' — N04°06'48"E 353.47'

N22°33'46"E 6.48' — R=470.00' A=9.34' — N02°33'46"E 180.14'

N08°10'48"E 327.00' — R=385.00' A=84.34' — N08°56'40"W 5/12

BONNIE BRANCH ROAD
MINOR COLLECTOR (SCENIC ROAD)
50' R/W — 20' R/W

GREGORY COURT

TO BE CONVEYED TO HOMEOWNER'S ASSOCIATION

LON T LON CHANNEL

REMOVE EXISTING DRIVEWAY TO PROPERTY LINE

30' PUBLIC WATER, SEWER AND UTILITY EASEMENT

24' PRIVATE ACCESS PLACE EASEMENT FOR OPEN SPACE LOTS 1 & 4, AND LOTS 2 & 3 AND SWM EASEMENT

STORM WATER MANAGEMENT CREDIT EASEMENT #2 AND NATURAL AREA CONSERVATION #2 0.1236 AC. REMOVED (BY OTHERS)

STORM WATER MANAGEMENT CREDIT EASEMENT #1 AND NATURAL AREA CONSERVATION #1 0.5299 AC.

PROPOSED SODDED SWALE

10' TREE MAINTENANCE EASEMENT

20' PRIVATE STORM DRAIN EASEMENT

10' MAINTENANCE ACCESS

15' NON-WOODY VEGETATIVE BUFFER

4'x10' CONCRETE TRASH PAD WITH SIX SHRUBS OWNED AND MAINTAINED BY THE H.O.A.

N85°53'14"W PRIVATE DRIVEWAY EASEMENT TO PARCEL 246 (NON-CREDITED OPEN SPACE) 0.0102 AC.

1.374,800 E
572,000 N

571,600 N

NAD 83' MD. STATE PLANE

SCALE: 1" = 50'

LEGEND:

STREET TREES

STORMWATER MANAGEMENT AREA

STORMWATER MANAGEMENT AREA

STREET TREES

LOT NUMBER	LOT 1	LOT 2	LOT 3	LOT 4
LINEAR FEET OF FRONTAGE	199.71	85.0'	485.0'	341.22
NUMBER OF TREES REQUIRED @ 1/40	5	2	12	9
NUMBER OF TREES PROPOSED	5	2	12	10
SURETY AMOUNT	$1,500	$600	$3,600	$3,000

SCHEDULE D
STORMWATER MANAGEMENT AREA LANDSCAPING

EDGE	N	E	S	W	TOTAL
LINEAR FEET OF PERIMETER	180.00	227.15	199.71	342.86	949.72
NUMBER OF TREES REQUIRED					
SHADE TREES @ 1/50	4	5	4	7	19
EVERGREEN TREES @1/40	4	6	5	9	24
CREDIT FOR EXISTING VEGETATION (NO, YES, AND %)	YES, 100%	YES, 8.8%	YES, 45%	YES, 100%	YES, 66.2%
CREDIT FOR OTHER LANDSCAPING (NO, YES, AND %)	NO	NO	NO	NO	YES, 9.6%
NUMBER OF TREES PROVIDED					
SHADE TREES	–	5	2	–	7
EVERGREEN TREES	–	5	3	–	8
SURETY AMOUNT					$3,300

NO	REVISION	DATE
2	REV. TO SHOW PROPOSED TREE MAINTENANCE EASEMENT AND PROP. AND APPROVED 90'x20' TBE TURNAROUND PER SDP-05-014	3-29-05
1	REV. PROP. STREET CURVES, ADD RETAINING WALLS TO STORMWATER POND	3-10-05

TRASH PAD PLANTING SCHEDULE

QUANTITY	SYMBOL	PLANT NAME	SIZE
6	VW	VIBURNUM x RHYTIDOPHYLLOIDES 'WILLOWWOOD' WILLOWWOOD VIBURNUM	2-3' B&B

PRIVATE STORMWATER MANAGEMENT FACILITIES ON OPEN SPACE LOT 1 ARE TO BE OWNED AND MAINTAINED BY HOA.

APPROVED: DEPARTMENT OF PUBLIC WORKS

CHIEF, BUREAU OF HIGHWAYS — DATE N/A

APPROVED: DEPARTMENT OF PLANNING & ZONING

CHIEF, DIVISION OF LAND DEVELOPMENT — DATE 5/15/03

CHIEF, DEVELOPMENT ENGINEERING DIVISION — DATE 8/13/03

DEVELOPER'S/BUILDERS CERTIFICATE

I/We certify that the landscaping shown on this plan will be done according to plan, section 16.124 of the Howard County Code and the Howard County Landscape Manual. I/We further certify that upon completion a Certificate of Landscape Installation, accompanied by an executed one year guarantee of plant materials, will be submitted to the Department of Planning and Zoning.

Name — Date 7.1.03

STATE OF MARYLAND — CHARLES R. NELSON — No. 11796 — REGISTERED LANDSCAPE ARCHITECT — 6-25-03

OWNER / DEVELOPER
BONNIELASS LLC
8835-P COLUMBIA 100 PARKWAY
COLUMBIA, MARYLAND 21045

CLARK · FINEFROCK & SACKETT, INC.
ENGINEERS · PLANNERS · SURVEYORS
7135 MINSTREL WAY · COLUMBIA, MD 21045 · (410) 381-7500 BALT. · (301) 621-8100 WASH.

DESIGNED DAR	LANDSCAPING PLAN	SCALE 1"=30'
DRAWN ZAH/CRH2	BONNIELASS	DRAWING 8 of 17
CHECKED AS	TAX MAP 31 PARCEL 254 GRID 9 ZONING R-20 FIRST (1ST) ELECTION DISTRICT HOWARD COUNTY, MARYLAND	JOB NO. 00-098
DATE 4-1-03		FILE NO. 00-098LS

#6 D:\DRAWINGS\00098-BONNIELASS\1ST-RE-SUB\S08-LANDSCAPE.DWG

F-01-708

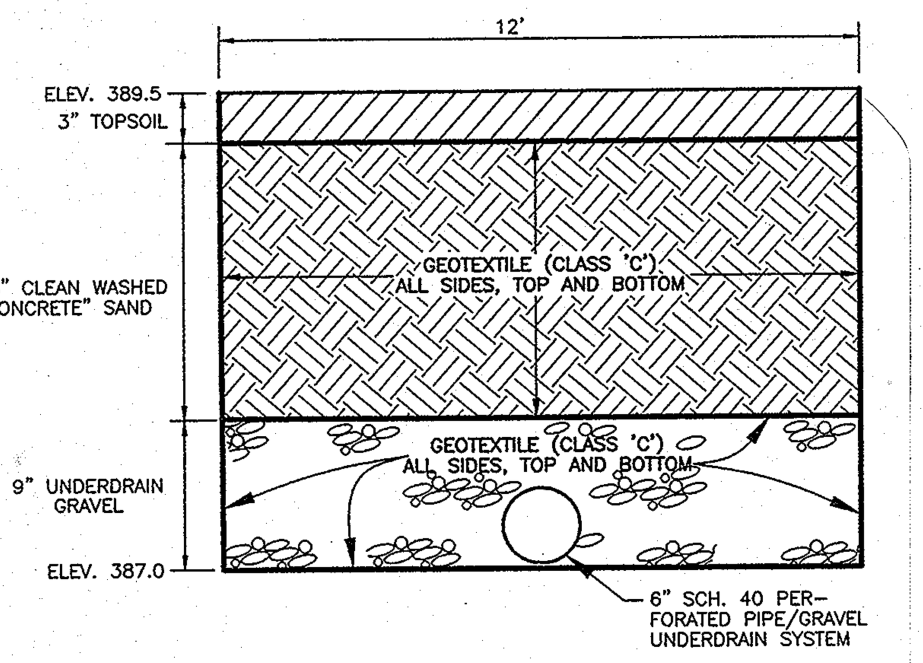

NOTE:
SURFACE AREA SHALL MATCH THE PLAN VIEW. (30'x12')

MATERIAL SPECIFICATIONS FOR SAND FILTERS

THE ALLOWABLE MATERIALS FOR SAND FILTER CONSTRUCTION ARE DETAILED IN TABLE B.3.1

SAND FILTER TESTING SPECIFICATIONS

1. UNDERGROUND SAND FILTERS, FACILITIES WITHIN SENSITIVE GROUNDWATER AQUIFERS, AND FILTERS DESIGNED TO SERVE URBAN HOT SPOTS ARE TO BE TESTED FOR WATER TIGHTNESS PRIOR TO PLACEMENT OF FILTER MEDIA. ENTRANCES AND EXITS SHOULD BE PLUGGED AND THE SYSTEM COMPLETELY FILLED WITH WATER TO DEMONSTRATE WATER TIGHTNESS. WATER TIGHTNESS MEANS NO LEAKAGE FOR A PERIOD OF 8 HOURS.
2. ALL OVERFLOW WEIRS, MULTIPLE ORIFICES AND FLOW DISTRIBUTION SLOTS ARE TO BE FIELD TESTED TO VERIFY ADEQUATE DISTRIBUTION OF FLOWS.

SAND FILTER CONSTRUCTION SPECIFICATIONS

1. ABSOLUTELY NO RUNOFF IS TO ENTER THE FILTER UNTIL ALL CONTRIBUTING DRAINAGE AREAS HAVE BEEN STABILIZED.
2. SURFACE OF FILTER BED IS TO BE LEVEL.
3. ALL UNDERGROUND SAND FILTERS SHOULD BE CLEARLY DELINEATED WITH SIGNS SO THAT THEY MAY BE LOCATED WHEN MAINTENANCE IS DUE.
4. SURFACE SAND FILTERS SHALL BE PLANTED WITH APPROPRIATE GRASSES, CRESTED SEDGE OR APPROVED EQUAL.

FILTERING MAINTENANCE CRITERIA

1. THE SEDIMENT CHAMBER OUTLET DEVICES SHALL BE CLEANED/REPAIRED WHEN DRAWDOWN TIMES WITHIN THE CHAMBER EXCEED 36 HOURS. TRASH AND DEBRIS TO BE REMOVED AS NECESSARY.
2. SEDIMENT SHOULD BE CLEANED OUT OF THE SEDIMENTATION CHAMBER WHEN IT ACCUMULATES TO A DEPTH OF MORE THAN SIX INCHES. VEGETATION WITHIN THE SEDIMENTATION CHAMBER SHOULD BE LIMITED TO A HEIGHT OF 18 INCHES.
3. WHEN THE FILTERING CAPACITY OF THE FILTER DIMINISHES SUBSTANTIALLY (e.g., WHEN WATER PONDS ON THE SURFACE OF THE FILTER BED FOR MORE THAN 72 HOURS), THE TOP FEW INCHES OF DISCOLORED MATERIAL SHALL BE REMOVED AND SHALL BE REPLACE WITH FRESH MATERIAL. THE REMOVED SEDIMENTS SHOULD BE DISPOSED IN AN ACCEPTABLE MANNER (e.g., LANDFILL). SILT/SEDIMENT SHOULD BE REMOVED FROM THE FILTER BED WHEN THE ACCUMULATION EXCEEDS ONE INCH.
4. ORGANIC FILTERS (F-4) OR SURFACE SAND FILTERS (F-1) THAT HAVE A GRASS COVER SHOULD BE MOWED A MINIMUM OF 3 TIMES PER GROWING SEASON TO MAINTAIN MAXIMUM GRASS HEIGHTS LESS THAN 12 INCHES.
5. A DROP OF AT LEAST 6 INCHES SHALL BE PROVIDED AT THE INLET OF BIORETENTION FACILITIES (F-6) (STONE DIAPHRAGM). DEAD OR DISEASED PLANT MATERIAL SHALL BE REPLACED. AREAS DEVOID OF MULCH SHOULD BE RE-MULCHED ON AN ANNUAL BASIS.

SAND FILTER DETAIL

NO SCALE

TABLE B.3.1 MATERIAL SPECIFICATIONS FOR SAND FILTERS

Material	Specification/Test Method	Size	Notes
sand	clean AASHTO-M-6 or ASTM-C-33 concrete sand	0.02" to 0.04"	Sand substitutions such as Diabase and Graystone #10 are not acceptable. No calcium carbonated or dolomitic sand substitutions are acceptable. No "rock dust" can be used for sand.
peat	ash content: < 15%; pH range: 5.2 to 4.9; loose bulk density 0.12 to 0.15 g/cc	n/a	The material must be reed-sedge hemic peat, shredded, uncompacted, uniform and clean.
leaf compost		n/a	
underdrain gravel	AASHTO-M-43	0.375" to 0.75"	
geotextile fabric (if required)	ASTM-D-4833 (puncture strength-125 lb.) ASTM-D-4632 (Tensile Strength-300 lb.)	0.08" thick equivalent opening size of #80 sieve	Must maintain 125 gpm per sq. ft. flow rate. Note: a 4" pea gravel layer may be substituted for geotextiles meant to "seperate" sand filter layers.
impermeable liner (if required)	ASTM-D-4833 (thickness) ASTM-D-412 (tensile strength) 1,100 lb., elongation 200%) ASTM-D-624 (Tear resistence - 150 lb./in) ASTM-D-471 (water adsorption: +8 to -2% mass)	30 mil thickness	Liner to be ultraviolet resistant. A geotextile fabric should be used to protect the liner from puncture.
underdrain piping	F 758, Type PS 28 or AASHTO-M-278	4" - 6" rigid schedule 40 PVC or SDR35	3/8" perf. @ 6" o.c., 4 holes per row; minimum of 3" of gravel over pipes; not necessary underneath pipes
concrete (cast-in-place)	MSHA Standards and Specs. Section 902, Mix No. 3, f'c =3500 psi, normal weight, air entrained; re-inforcing to meet ASTM-615-60	n/a	on-site testing of poured-in-place concrete required: 28 day strength and slump test; all concrete design (cast-in-place or pre-cast) not using previously approved State or local standards requires design drawings sealed and approved by a professional structural engineer licensed in the State of maryland
concrete (pre-cast)	per pre-cast manufacturer	n/a	SEE ABOVE NOTE
non-rebar steel	ASTM A-36	n/a	structural steel to be hot-dipped galvanized ASTM-A-123

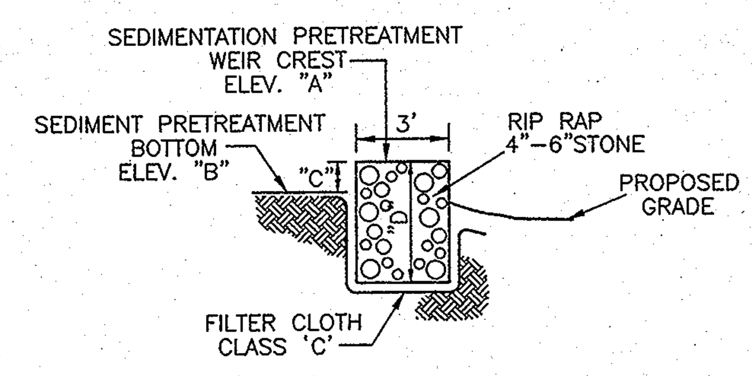

GABION BASKET DETAIL

GABION BASKET SCHEDULE

	ELEV. "A"	ELEV. "B"	HEIGHT "C"	MIN. HEIGHT "D"	LOCATION
GABION WEIR "A"	391.5	389.7	1.8'	4.8'	PRE-TREATMENT AREA "A"
GABION WEIR "B"	391.5	389.8	1.7'	4.7'	PRE-TREATMENT AREA "B"
GABION WEIR "C"	387.8	386.8	1.0'	4.0'	FOREBAY

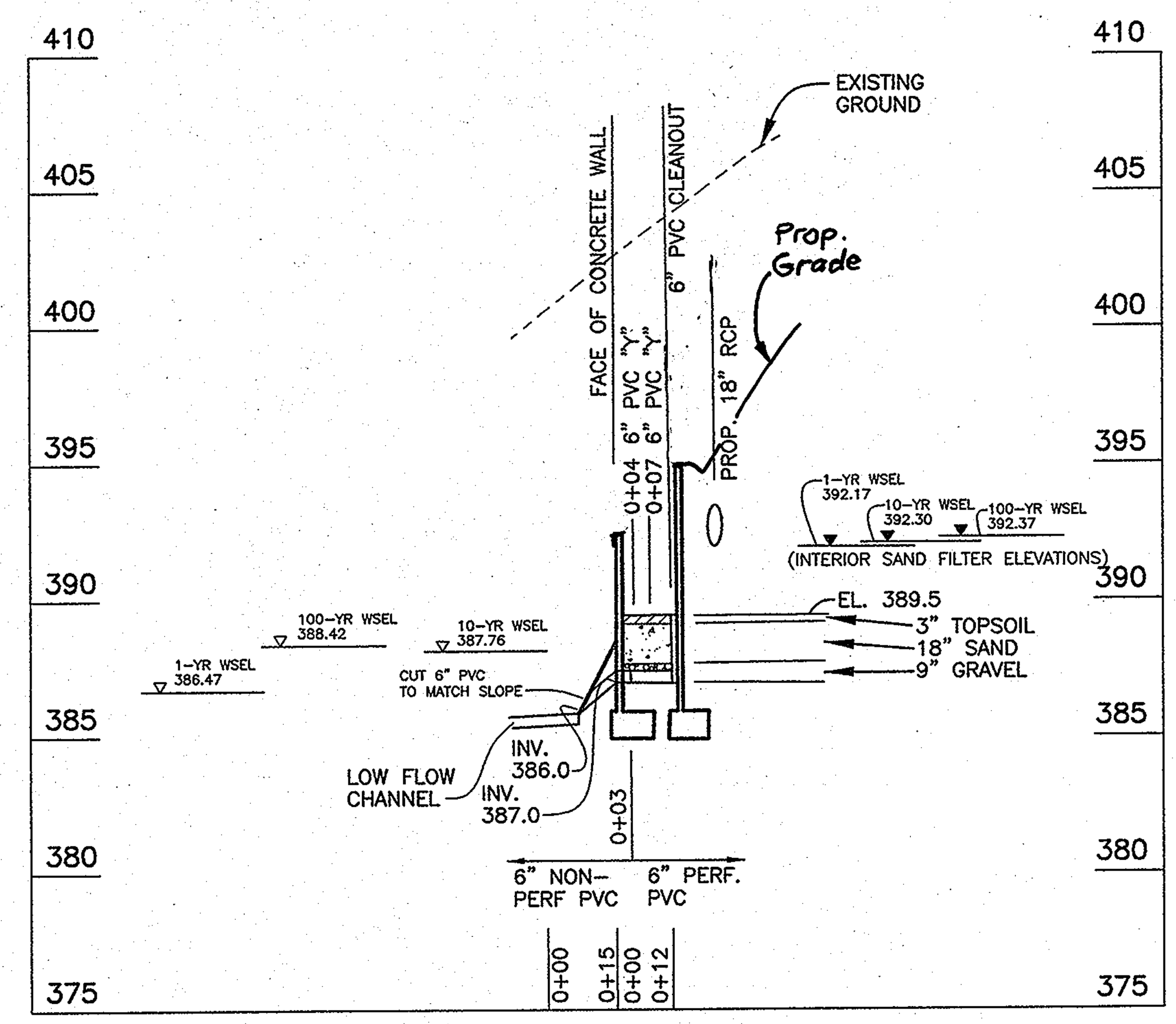

CROSS-SECTION THROUGH SAND FILTER

SCALE: HOR. 1"=30' VER. 1'=5'

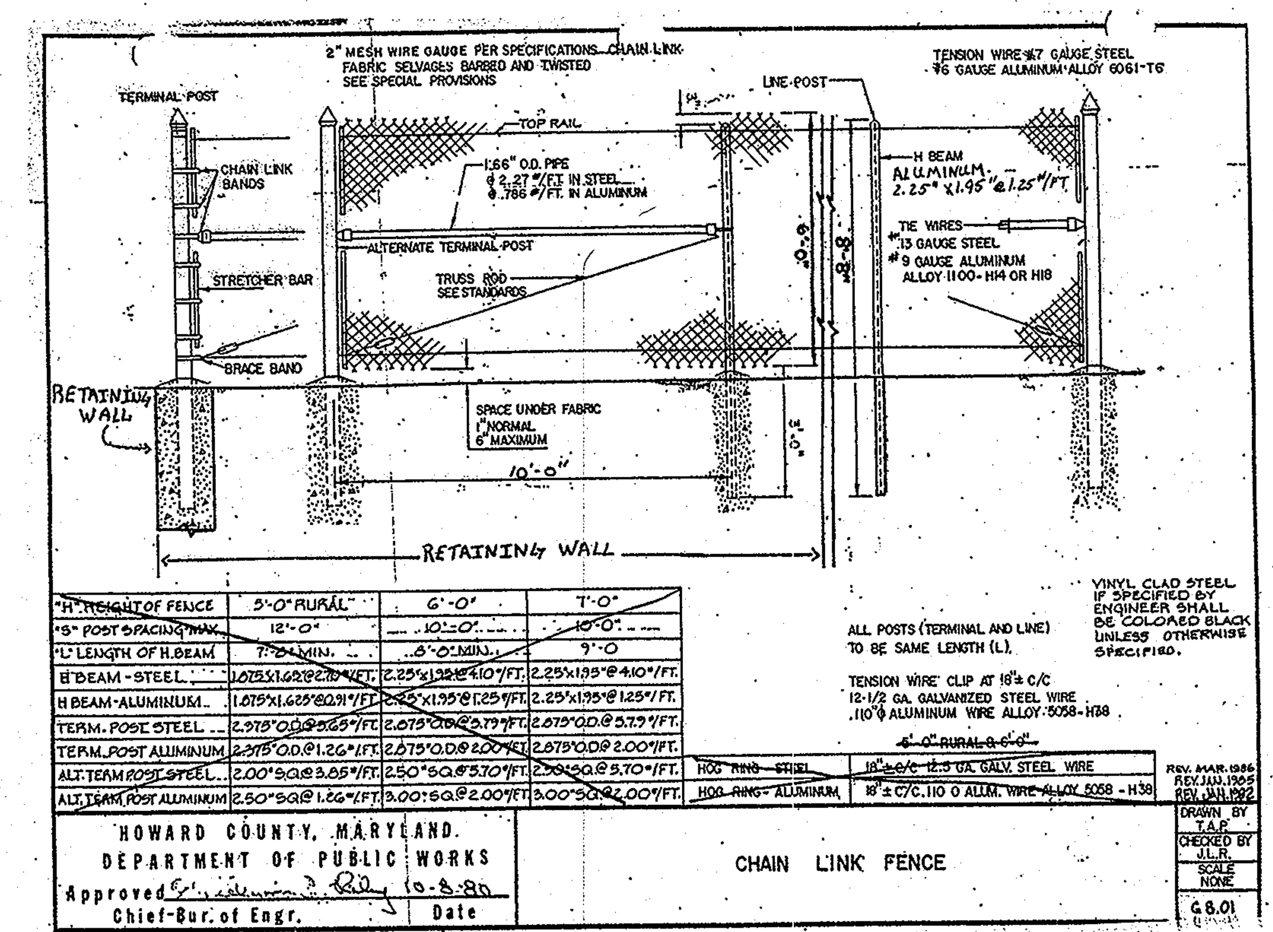

CHAIN LINK FENCE DETAIL

SCALE: NTS

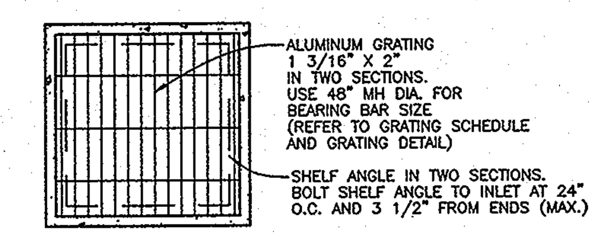

GRATING PLAN

N.T.S.

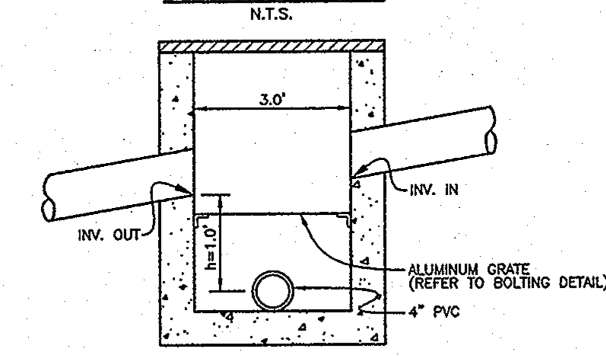

MODIFIED TYPE "S" INLET

N.T.S.

FLOW SPLITTER SCHEDULE

STRUCTURE	ACTUAL DIMENSION BETWEEN OVERFLOW PIPE ELEVATION AND LOW FLOW PIPE INVERT (PVC)
I-3	1'-2"
MH-4	1'-2"

THE CONTRACTOR IS TO VERIFY THE DIMENSION BETWEEN THE LOW FLOW PIPE AND THE OVERFLOW SLOT PRIOR TO BACKFILLING AROUND THE STRUCTURE. NOTIFY THE DESIGN ENGINEER IMEDIATELY IF THERE IS A DISCREPANCY.

GRATING SCHEDULE

MH DIA.	BEARING BAR
48", 54"	1-1/4" x 1/8"
60", 66", 72"	1-1/4" x 3/16"
78"	1-1/2" x 3/16"
84"	1-3/4" x 3/16"
96"	2" x 3/16"

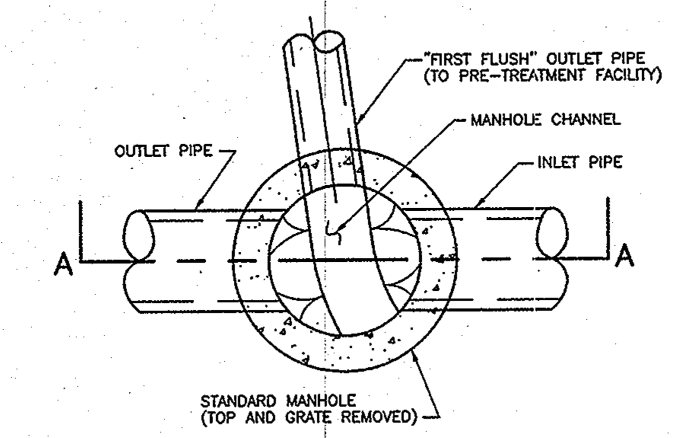

PLAN VIEW

N.T.S.

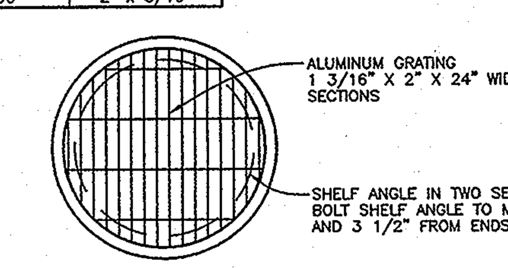

GRATING PLAN

N.T.S.

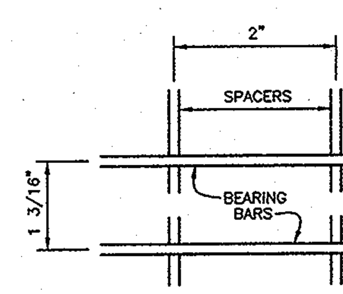

GRATING DETAIL

N.T.S.

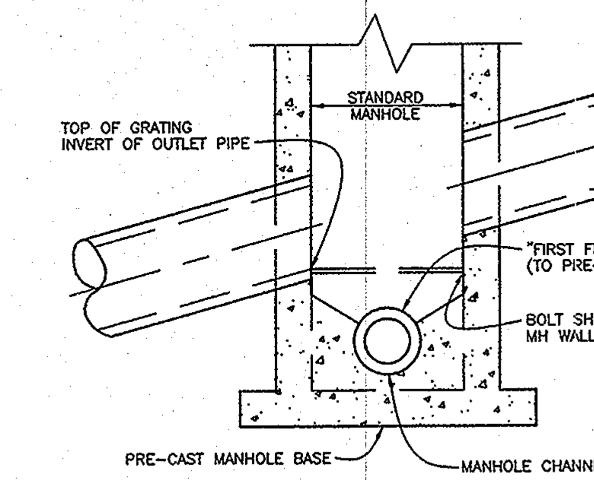

SECTION A-A

N.T.S.

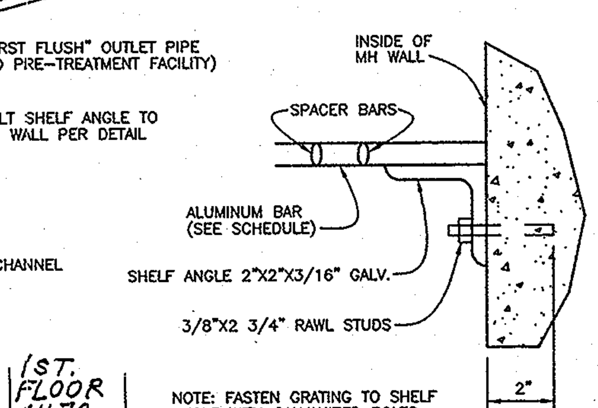

NOTE: FASTEN GRATING TO SHELF ANGLE WITH GALVANIZED BOLTS AND STANDARD RETAINER CLIPS

BOLTING DETAIL

N.T.S.

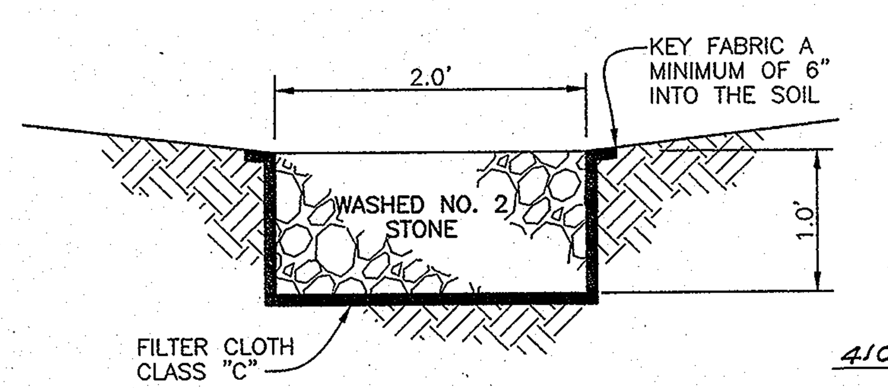

LOW FLOW MAT DETAIL

SCALE: NTS

NOTE:
ELEVATION OF WALLS (1&2 (AT SANDFILTER) BETWEEN WEIR A & WEIR B, MUST BE AT 392.4

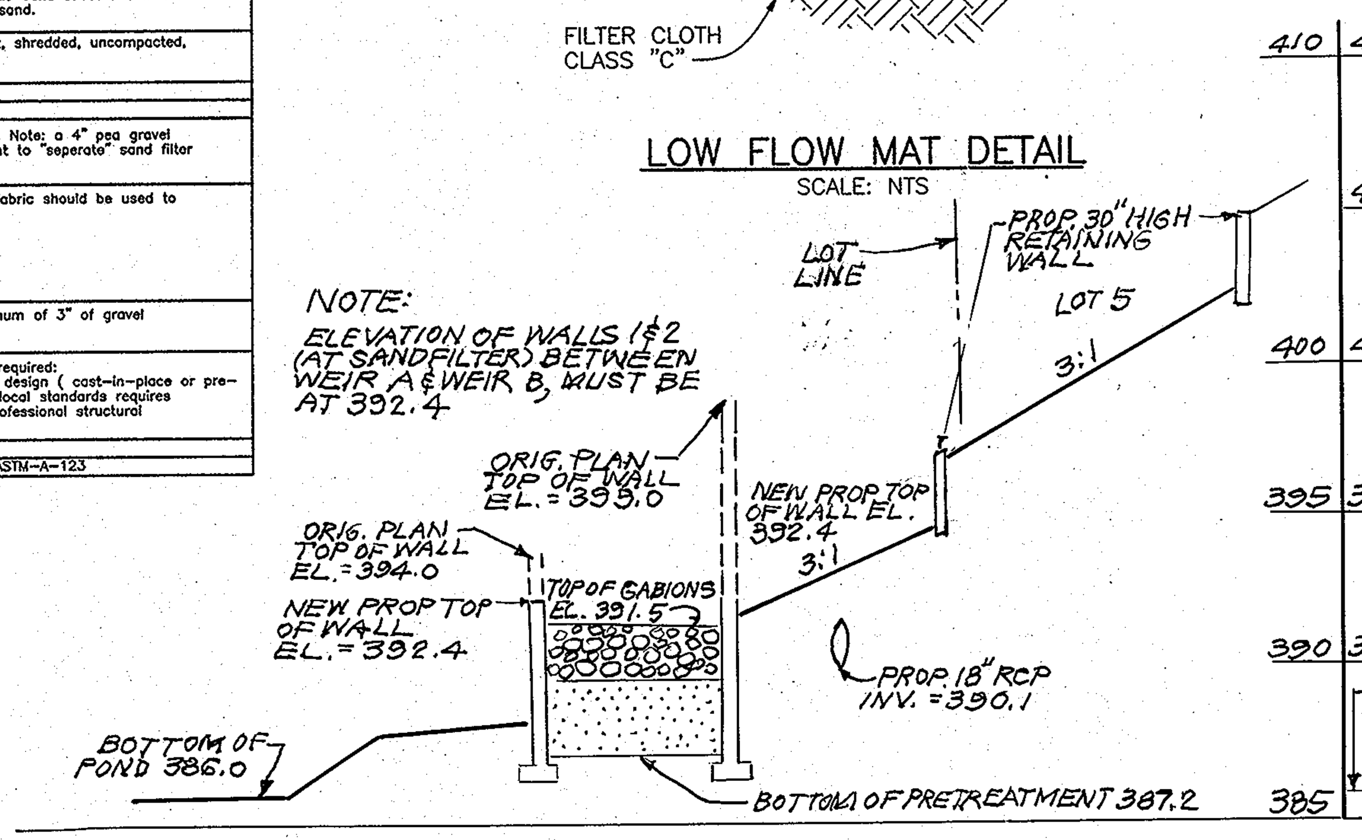

SECTION A-A

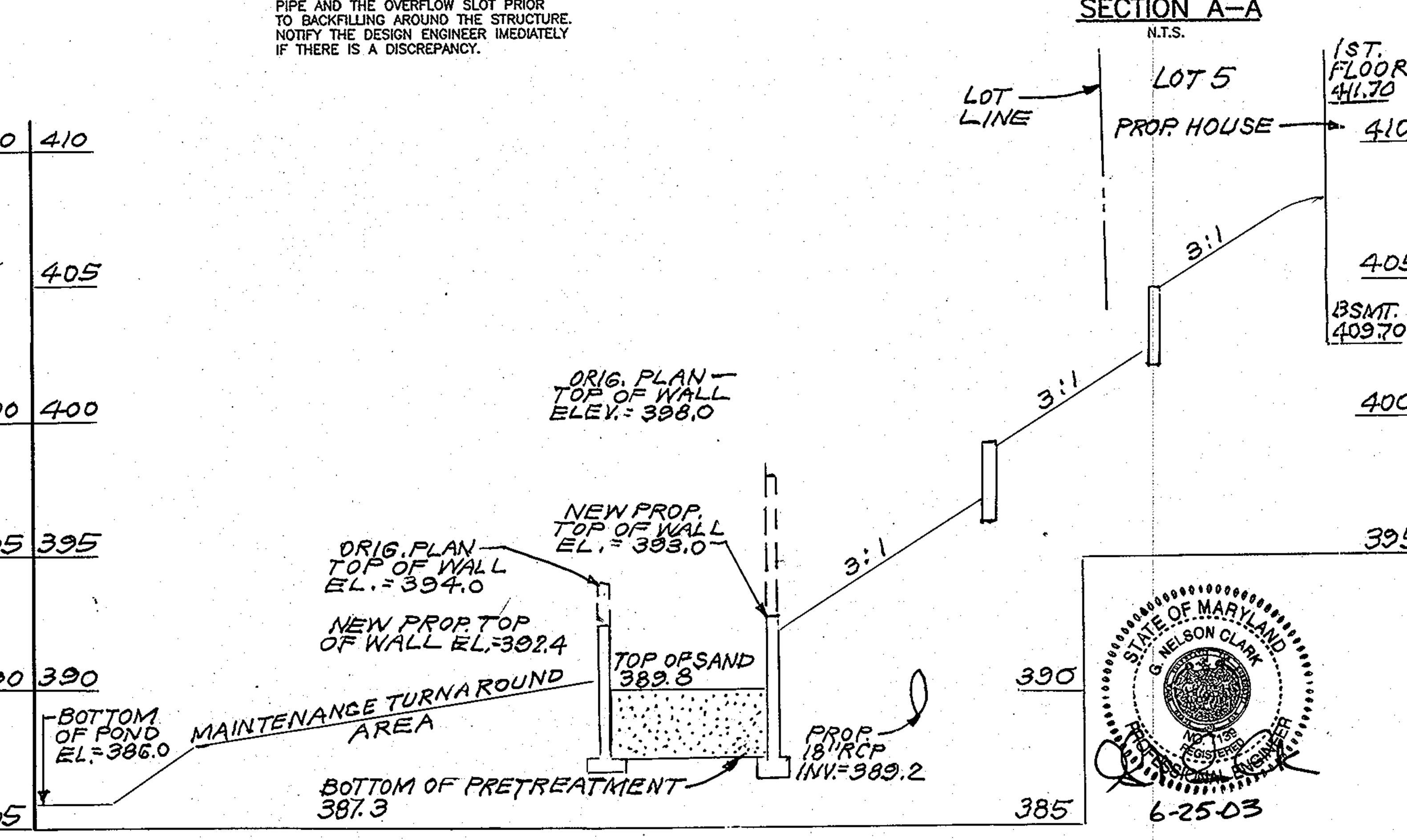

SECTION B-B

SCALE: HORIZ: 1"=10'
VERT: 1"=5'

#6 D:\DRAWINGS\00098-BONNIELASS\1ST-RE-SUB\S07-SAND-FILT-DETS.DWG

NO	REVISIONS	DATE
1	ADD SURFACE SAND FILTER PROFILE	3-17-04
2	REV. SHEET NUMBER 7 of 15 TO 7 of 17	4-1-05

APPROVED: DEPARTMENT OF PUBLIC WORKS
N/A
CHIEF, BUREAU OF HIGHWAYS — DATE

APPROVED: DEPARTMENT OF PLANNING & ZONING
CHIEF, DIVISION OF LAND DEVELOPMENT — 8/15/03 DATE
CHIEF, DEVELOPMENT ENGINEERING DIVISION MAJ — 8/13/03 DATE

OWNER / DEVELOPER
BONNIELASS LLC
8835-P COLUMBIA 100 PARKWAY
COLUMBIA, MARYLAND 21045

CLARK · FINEFROCK & SACKETT, INC.
ENGINEERS · PLANNERS · SURVEYORS
7135 MINSTREL WAY · COLUMBIA, MD 21045 · (410) 381-7500 BALT. · (301) 621-8100 WASH.

DESIGNED PC/AS	SURFACE SAND FILTER DETAILS	SCALE 1"=30'
DRAWN ZAH/CRH2	BONNIELASS	DRAWING 7 OF 17
CHECKED AS	TAX MAP 31 PARCEL 254; GRID 9 ZONING R-20; FIRST (1ST) ELECTION DISTRICT; HOWARD COUNTY, MARYLAND	JOB NO. 00-098
DATE 2-10-03		FILE NO. 00-098-D

F-01-208

D:/Drawings/00098-Bonnielass/1ST-RE-SUB/S07-sand-filt-dets.dwg Sun Feb 06 12:25:03 2005 CFS Computer #6

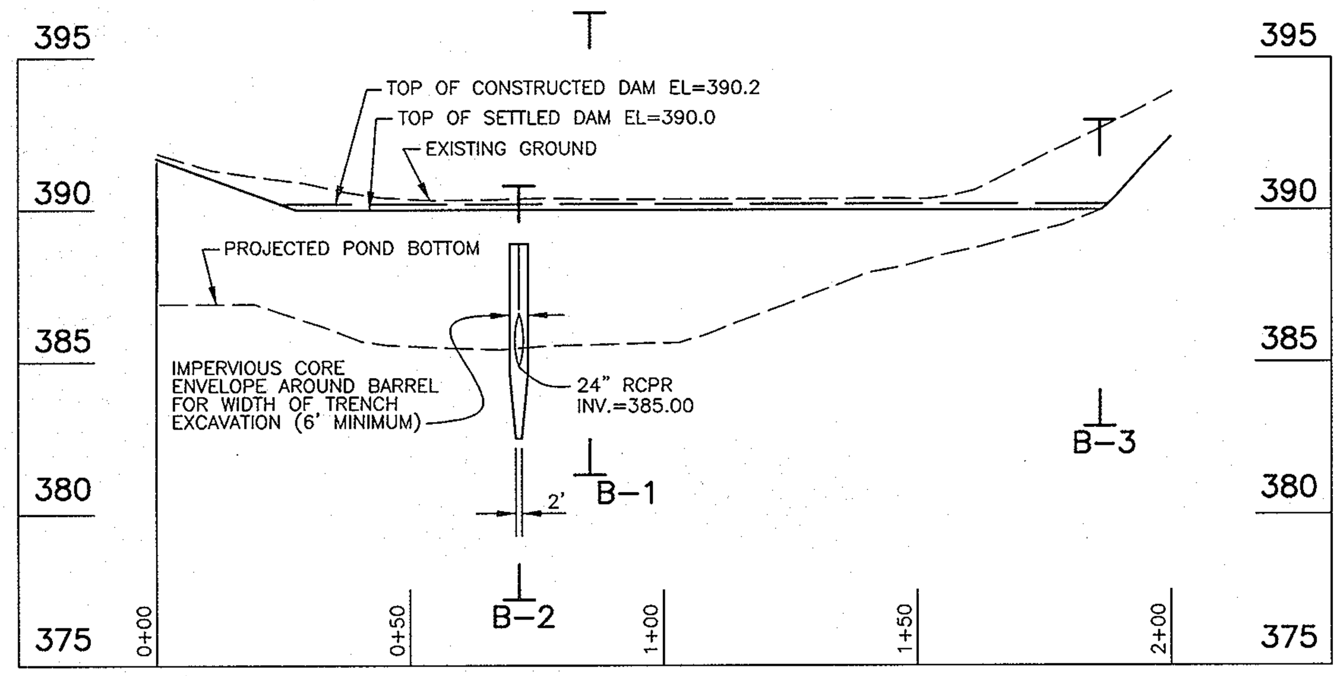

CENTERLINE OF EMBANKMENT PROFILE POND

SCALE: HOR. 1"=30' VER. 1'=5'

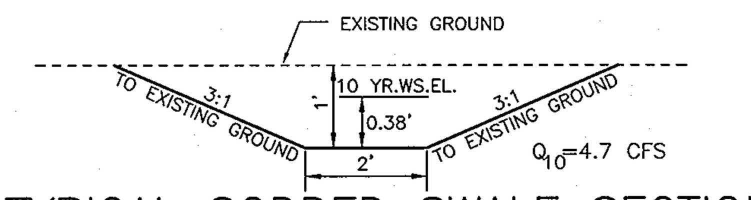

TYPICAL SODDED SWALE SECTION

NO SCALE

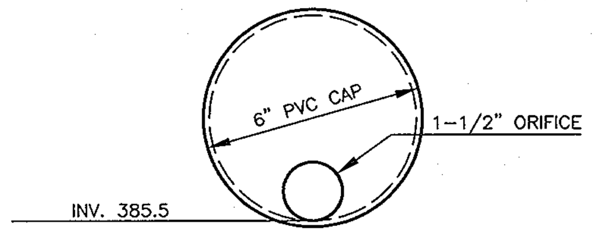

REMOVABLE 6" PVC CAP WITH 1.5" ORIFICE

NO SCALE

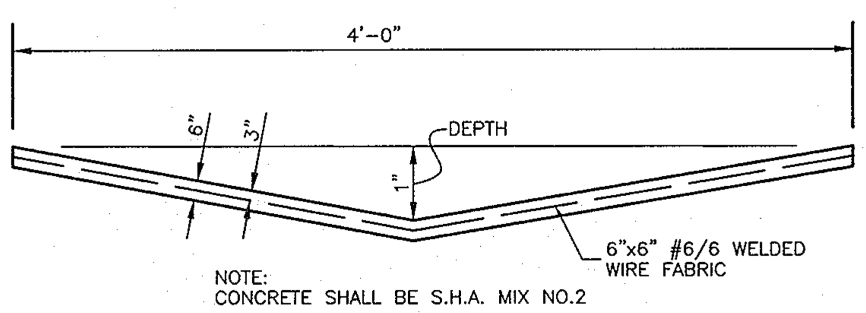

NOTE:
CONCRETE SHALL BE S.H.A. MIX NO.2

LOW FLOW CHANNEL

NO SCALE

SWM POND DESIGN SUMMARY					
DESIGN STORM	ALLOWABLE RELEASE RATE	FACILITY IN FLOW	FACILITY DISCHARGE	WATER SURFACE ELEVATION	STORAGE VOLUME (AC. FT.)
1 YEAR	1.02 CFS	4.12 CFS	1.02 CFS	386.47 FT.	0.18 ac-ft
10 YEAR	4.71 CFS	14.57 CFS	4.69 CFS	387.76 FT	0.29 ac-ft
100 YEAR	21.42 CFS	24.26 CFS	17.25 CFS	388.42 FT	0.44 ac-ft

HAZARD CLASSIFICATION: A
STORAGE - HEIGHT PRODUCT (392.0-387.5)(0.58)=2.6 ac-ft
WATERSHED AREA TO FACILITY (ACRES): 4.08 AC
LEVEL OF MANAGEMENT PROVIDED BY FACILITY: QUALITY MANAGEMENT TO TREAT 90% OF RUNOFF
QUALITY MANAGEMENT: SURFACE SAND FILTER

GENERAL SWM POND STORAGE REQUIREMENTS			
STEP	REQUIREMENT	VOLUME REQUIRED	NOTES
1	Water Quality Volume (WQv)	0.078 ac-ft	Provided by surface sand filter
2	Recharge Volume (Rev)	0.017 ac-ft	Treated non-structurally via grass channels
3	Channel Protection Volume (Cpv)	0.14 ac-ft	Cpv release rate is 0.1 CFS WSEL.=386.76
4	Overbank Flood Protection Volume (Qp)	13.8 CFS	10-year Protection Volume (Qp)
5	Extreme Flood volume (Qf)	N/A	safe passage for the 100 year event provided.

HOME OWNERS' ASSOCIATION MAINTENANCE SCHEDULE FOR SWM FACILITY

A. FACILITY IS TO BE INSPECTED ONCE A MONTH AND EXCESSIVE GROWTH CUT OR MOVED AS REQUIRED. NO GROWTH ABOVE 18" ALLOWED DURING GROWING SEASON. BOTTOM TO BE MOVED AS NEEDED.

B. POND SLOPES, TOP & BENCH ARE TO BE MOWED ONCE EVERY MONTH DURING GROWIN SEASON.

C. TRASH TO BE REMOVED AFTER EACH MAJOR STORM OR EVERY MONTH, AND DURING REGULAR MOWING OPERATIONS.

D. AN ANNUAL INSPECTION OF THE POND IS TO BE DONE.

E. REMOVE SEDIMENT WHEN DEPTH EXCEEDS 2".

F. CORRECTIVE MAINTENANCE IS TO BE DONE AS NEEDED IF THE POND IS FOUND TO BE UNFUNCTIONAL, WATER DOES NOT DRAIN WITHIN 60 HOURS. INSPECTIONS SHOULD BE PERFORMED DURING WET WEATHER TO DETERMINE IF THE POND IS FUNCTIONING PROPERLY.

G. VISIBLE SIGNS OF EROSION IN THE POND AS WELL AS RIP-RAP OUTLET AREA SHALL BE REPAIRED AS SOON AS IT IS NOTICED.

OPERATION, MAINTENANCE & INSPECTION

INSPECTION OF THE POND SHOWN SHALL BE PERFORMED AT LEAST ANNUALLY, IN ACCORDANCE WITH THE CHECKLIST AND REQUIREMENT CONTAINED WITHIN USDA, SCS "STANDARDS AND SPECIFICATION FOR PONDS" (MD-378). THE POND OWNER(S) AND ANY HEIRS, SUCCESSORS OR ASSIGNS SHALL BE RESPONSIBLE FOR THE SAFETY OF THE POND AND THE CONTINUED OPERATION, SURVEILLANCE, INSPECTION, AND MAINTENANCE THEREOF. THE POND OWNER(S) SHALL PROMPTLY NOTIFY THE SOIL CONSERVATION DISTRICT OF ANY UNUSUAL OBSERVATIONS THAT MAY BE INDICATIONS OF DISTRESS SUCH AS EXCESSIVER SEEPAGE, TURBID SEEPAGE, SLIDING OR SLUMPING. IT SHOULD BE NOTED THAT THIS STRUCTURE DOES NOT MEET THE DEFINITION OF A MD-378 POND. HOWEVER THIS DOES NOT EXEMPT THE OWNER FROM FOLLOWING THE ABOVE REFERENCED MAINTENANCE INSPECTION.

NON-ROUTINE MAINTENANCE

1. STRUCTURAL COMPONENTS OF THE POND SUCH AS THE DAM, THE RISER, AND THE PIPES SHALL BE REPAIRED UPON THE DETECTION OF ANY DAMAGE. THE COMPONENTS SHOULD BE INSPECTED DURING ROUTINE MAINTENANCE OPERATIONS.
2. SEDIMENT SHOULD BE REMOVED WHEN ITS ACCUMULATION SIGNIFICANTLY REDUCES THE DESIGN STORAGE, INTERFERES WITH THE FUNCTION OF THE RISER, WHEN DEEMED NECESSARY FOR AESTHETIC REASONS, OR WHEN DEEMED NECESSARY BY THE HOWARD COUNTY'S DEPARTMENT OF PUBLIC WORKS.

S-1 RISER DETAIL

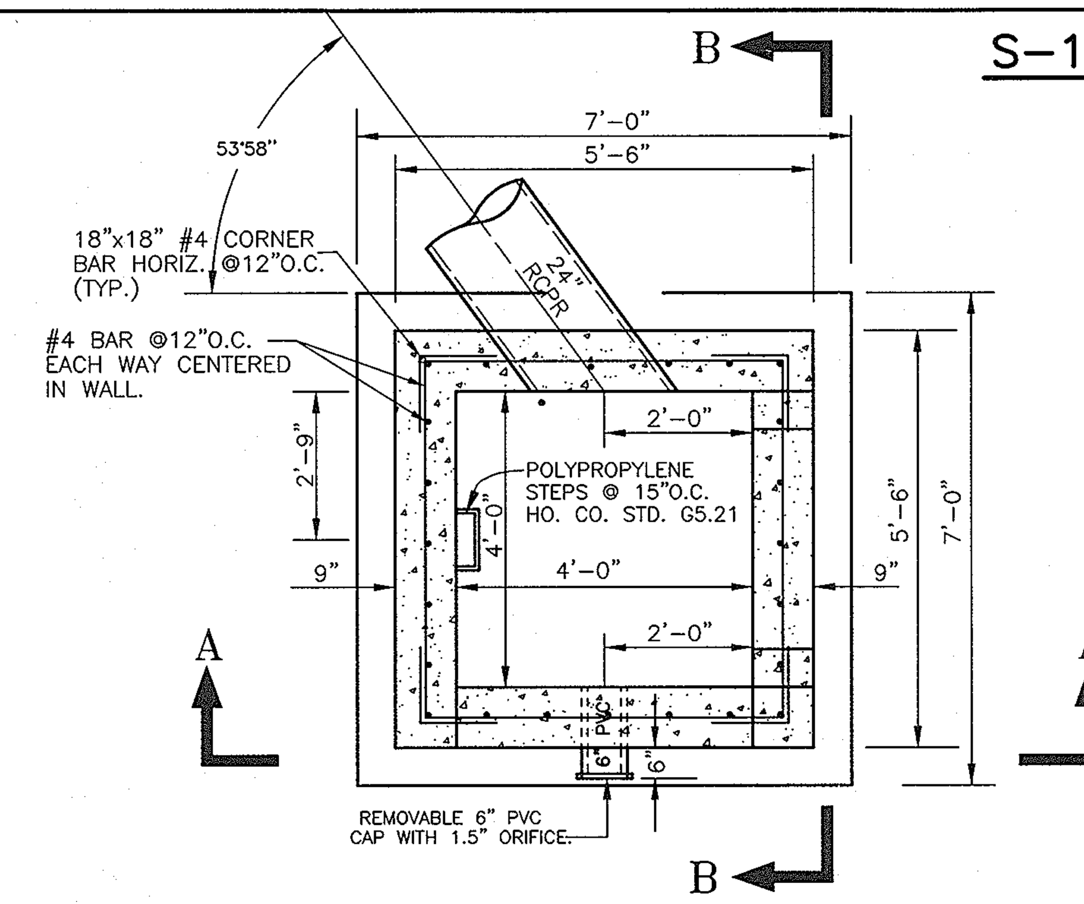

PLAN VIEW WITHOUT TOP SLAB

NOT TO SCALE
(TRASH RACKS NOT SHOWN FOR CLARITY)

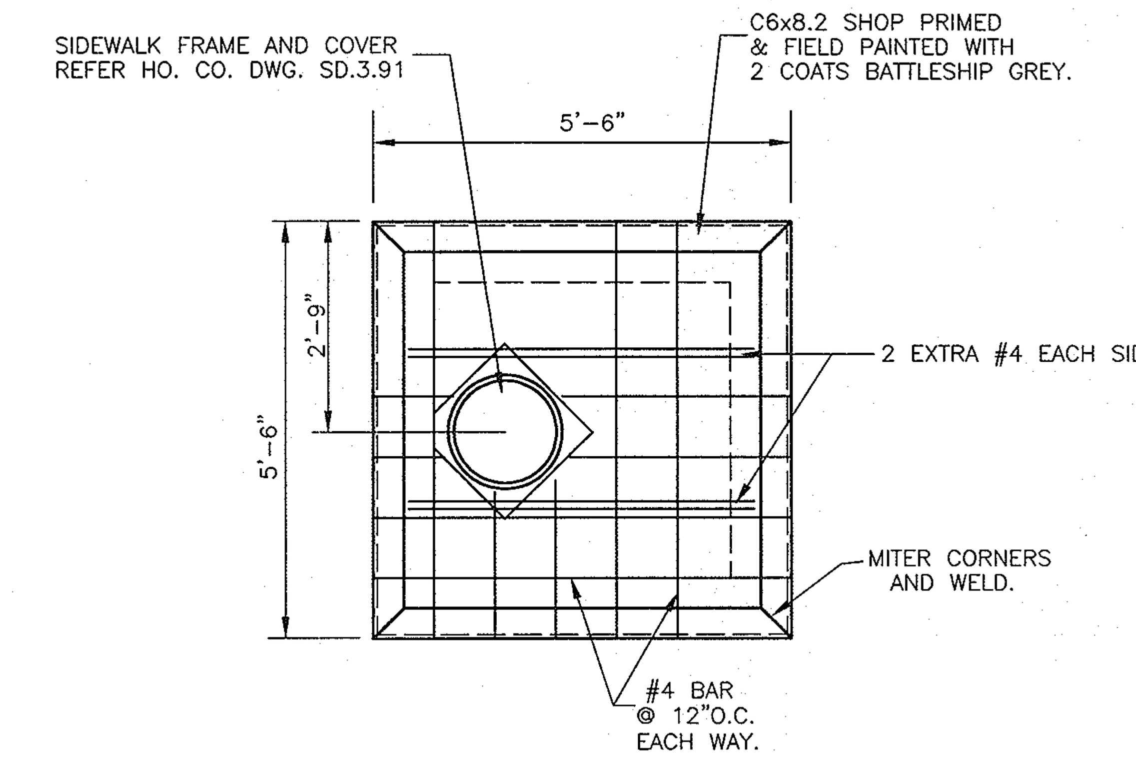

PLAN VIEW OF TOP SLAB

NOT TO SCALE

NOTE:
1. ALL WORK SHALL BE SUPERVISED BY A QUALIFIED GEOTECHNICAL ENGINEER.
2. ALL CONCRETE TO BE 3500 PSI @ 28 WITH AIR ENTRAINMENT.
3. ALL REINFORCING STEEL SHALL BE ASTM 615 GRADE 60.
4. STRUCTURE MAYBE PRECAST. SHOP DRAWINGS SHALL BE SUBMITTED AND APPROVED BY ENGINEER PRIOR TO FABRICATION.
5. RISER SHALL BE PLACE ON APPROVED SUBGRADE. NO STONE IS PERMITTED UNDER RISER.
6. ANY OVER EXCAVATION SHALL BE A MINIMUM OF 4" AND FILLED WITH CONCRETE AS APPROVED BY ON-SITE GEOTECHNICAL ENGINEER. FOR PRECAST STRUCTURE 8'x8'x4" MIN., 2000 PSI MUD MAT SHALL REPLACE ANY REQUIRED OVER EXCAVATION.

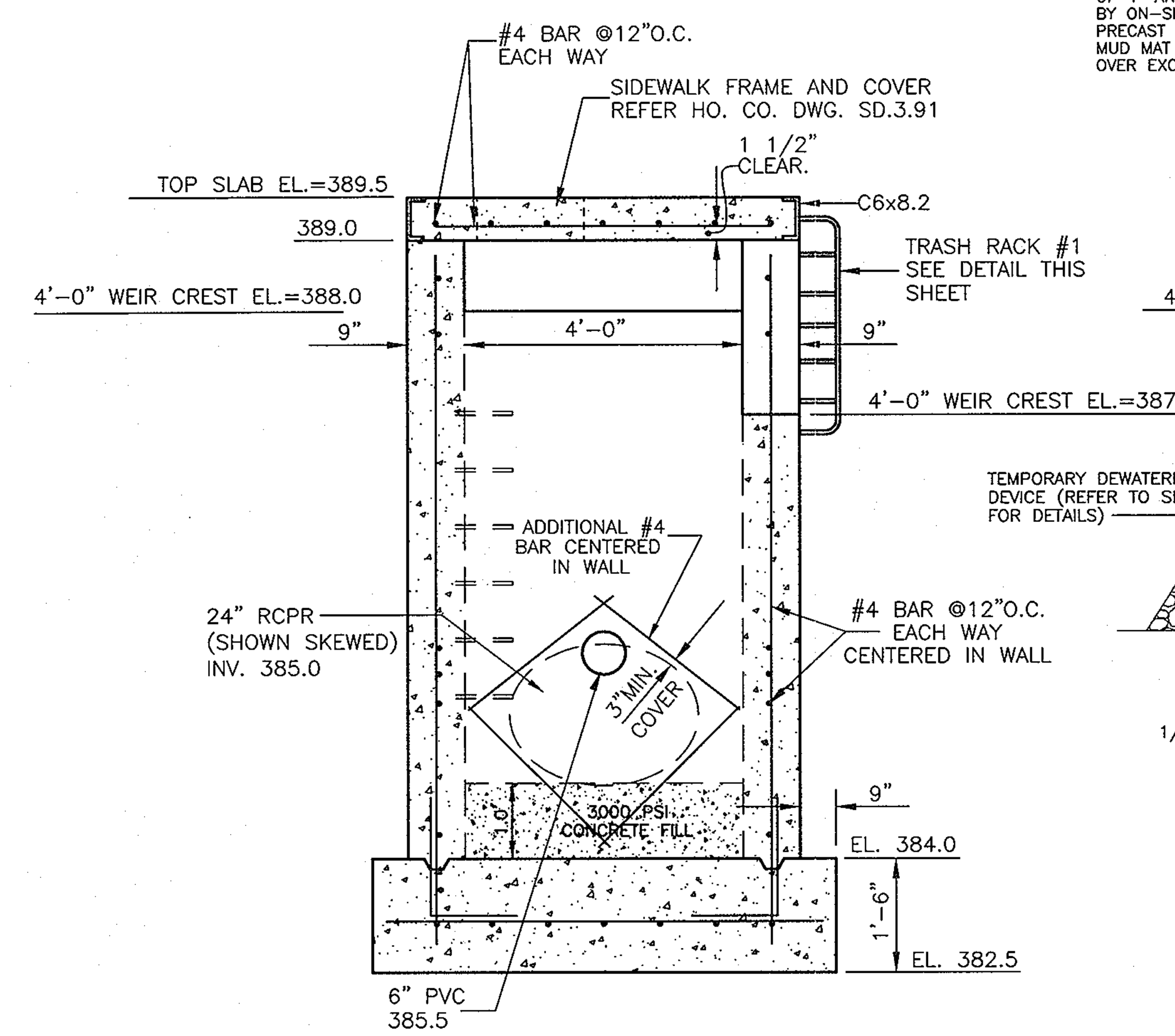

SECTION 'A-A'

NOT TO SCALE

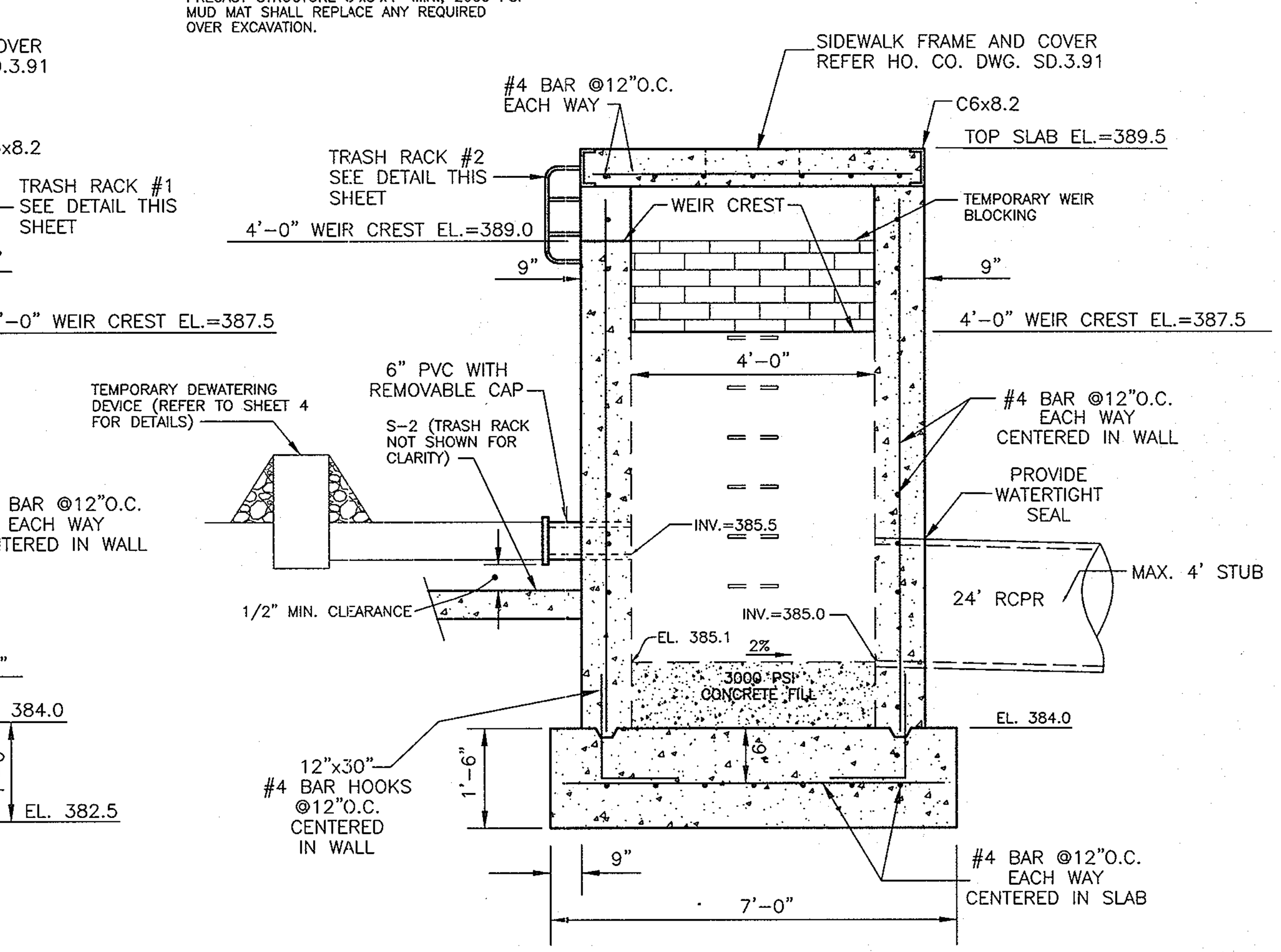

SECTION 'B-B'

NOT TO SCALE

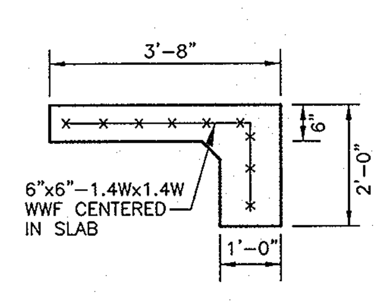

SECTION A-A

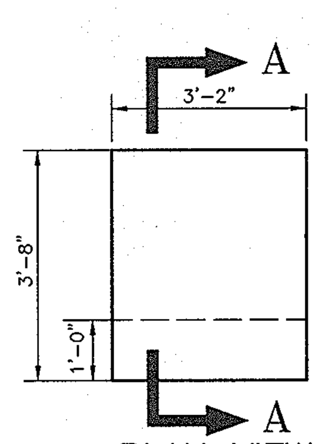

PLAN VIEW

NO TRASH RACK SHOWN

S-2 LOW FLOW TRASH RACK BASE

NO SCALE

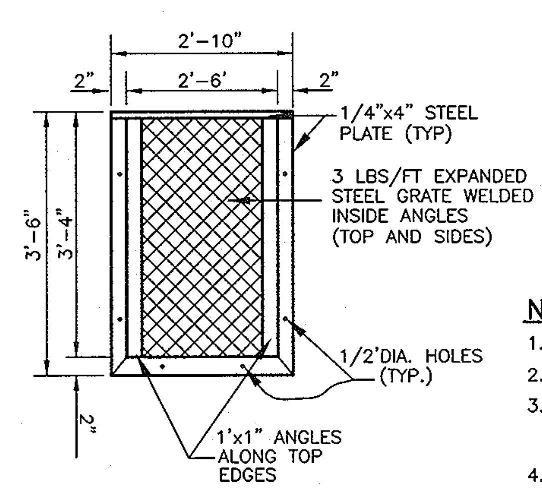

TOP VIEW

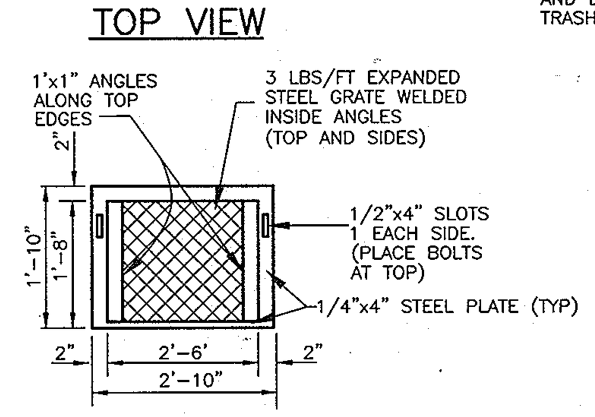

FRONT VIEW

NOTES FOR TRASH RACK
1. TRASH RACK TO BE CENTERED OVER OPENING.
2. STEEL TO CONFORM TO ASTM-A36.
3. ALL SURFACES TO BE COATED WITH ZRC COLD GALVANIZING COMPOUND AFTER WELDING AND PAINTED WITH 2 COATS OF BATTLESHIP GREY.
4. TRASH RACK TO BE FASTENED TO THE WALL AND BASE WITH 1/2" MASONRY ANCHORS. TRASH RACK TO BE REMOVABLE.

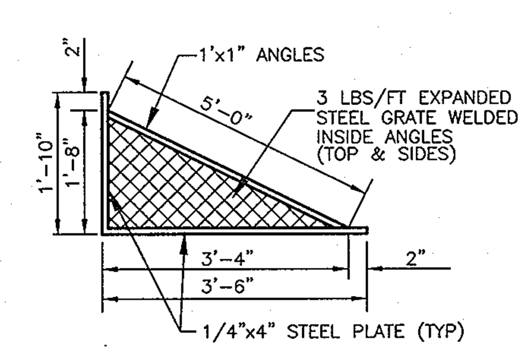

SIDE VIEW

LOW FLOW TRASH RACK

NO SCALE

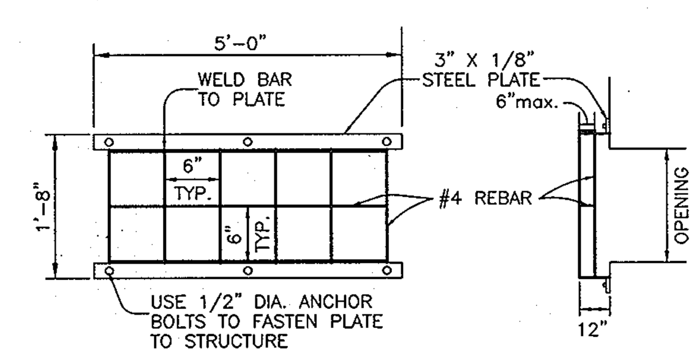

GALVANIZE RACK AFTER FABRICATION. RACK TO BE PAINTED WITH 2 COATS OF BATTLESHIP GRAY.

TRASH RACK #2 DETAIL

NO SCALE

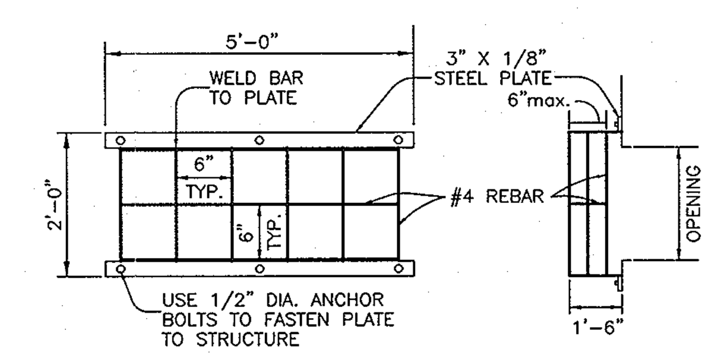

GALVANIZE RACK AFTER FABRICATION. RACK TO BE PAINTED WITH 2 COATS OF BATTLESHIP GRAY.

TRASH RACK #1 DETAIL

NO SCALE

APPROVED: DEPARTMENT OF PUBLIC WORKS
CHIEF, BUREAU OF HIGHWAYS — N/A — DATE

APPROVED: DEPARTMENT OF PLANNING & ZONING
CHIEF, DIVISION OF LAND DEVELOPMENT — 8/15/05 — DATE
CHIEF, DEVELOPMENT ENGINEERING DIVISION MAJ — 8/13/03 — DATE

Reviewed for HOWARD S.C.D. and meets Technical Requirements
Signature — 7/31/03 Date
U.S. Natural Resources Conservation Service

THIS DEVELOPMENT PLAN IS APPROVED FOR SOIL EROSION AND SEDIMENT CONTROL BY THE HOWARD SOIL CONSERVATION DISTRICT.
HOWARD S.C.D. — 7/31/03 DATE

By The Developer:

"I/We certify that all development and/or construction will be done according to these plans, and that any responsible personnel involved in the construction project will have a Certificate of Attendance at a Department of the Environment Approved Training Program for the Control of Sediment and Erosion before beginning the project. I shall engage a registered professional engineer to supervise pond construction and provide the Howard Soil Conservation District with an "as-built" plan of the pond within 30 days of completion. I also authorize periodic on-site inspections by the Howard Soil Conservation District."

Signature of Developer — 7.1.03 Date

By the Engineer:

"I certify that this plan for pond construction, erosion and sediment control represents a practical and workable plan based on my personal knowledge of the site conditions. This plan was prepared in accordance with the requirements of the Howard Soil Conservation District. I have notified the developer that he/she must engage a registered professional engineer to supervise pond construction and provide the Howard Soil Conservation District with an "as-built" plan of the pond within 30 days of completion."

Signature of Engineer — 6-25-03 Date

STATE OF MARYLAND — G. NELSON CLARK — NO. 7139 REGISTERED PROFESSIONAL ENGINEER — 2-10-03

#6 D:\DRAWINGS\00098-BONNIELASS\1ST-RE-SUB\S06-SWM-POND-DETS.DWG

Nº	REVISION	DATE
1	REV. SHEET NUMBER 6 OF 15 TO 6 OF 17	4-1-05

CLARK · FINEFROCK & SACKETT, INC.
ENGINEERS · PLANNERS · SURVEYORS
7135 MINSTREL WAY · COLUMBIA, MD 21045 · (410) 381-7500 BALT. · (301) 621-8100 WASH.

DESIGNED PC/AS	STORMWATER MANAGEMENT POND DETAILS STRUCTURE S-1 **BONNIELASS** TAX MAP 31 PARCEL 254 GRID 9 ZONING R-20 FIRST (1ST) ELECTION DISTRICT HOWARD COUNTY, MARYLAND	SCALE AS SHOWN
DRAWN ZAH/CRH2		DRAWING 6 OF 17
CHECKED AS		JOB NO. 000-98
DATE 2-10-03		FILE NO. 00-098-D

F-01-208

D:/Drawings/00098-Bonnielass/1st-RE-SUB/S06-SWM-POND-DETS.DWG Sun Feb 09 12:05:21 2003 CFS2 Computer #6

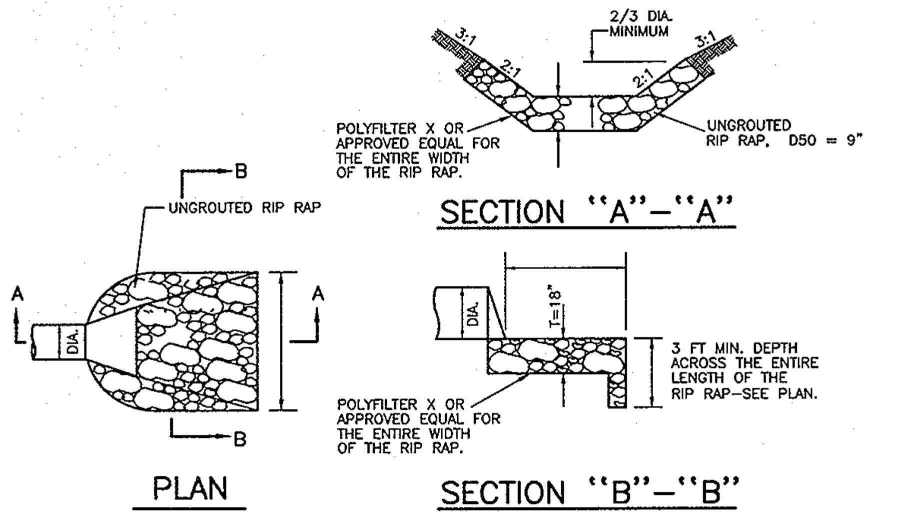

RIP RAP SCHEDULE

	WIDTH 'W'	LENGTH 'L'
ES–1	8'	12'
FOREBAY	8'	14'

UNGROUTED RIP RAP DETAIL

NO SCALE

Construction Specifications

1. The subgrade for the filter, rip–rap, or gabion shall be prepared to the required lines and grades. Any fill required in the subgrade shall be compacted to a density of approximately that of the surrounding undisturbed material.

2. The rock or gravel shall conform to the specified grading limits when installed respectively in the rip–rap or filter.

3. Geotextile shall be protected from punching, cutting, or tearing. Any damage other than an occasional small hole shall be repaired by placing another piece of geotextile over the damaged part or by completely replacing the geotextile. All overlaps whether for repairs or for joining two pieces of geotextile shall be a minimum of one foot.

4. Stone for the rip–rap or gabion outlets may be placed by equipment. They shall be constructed to the full course thickness in one operation and in such a manner as to avoid displacement of underlying materials. The stone for rip–rap or gabion outlets shall be delivered and placed in a manner that will ensure that it is reasonably homogeneous with the smaller stones and spalls filling the voids between the larger stones. Rip–rap shall be placed in a manner to prevent damage to the filter blanket or geotextile. Hand placement will be required to the extent necessary to prevent damage to the permanent works.

5. The stone shall be placed so that it blends in with the existing ground. If the stone is placed too high then the flow will be forced out of the channel and scour adjacent to the stone will occur.

KEY:

- CHANNELIZING DEVICES
- SIGN SUPPORT / FACE OF SIGN
- DIRECTION OF TRAFFIC
- WORK SITE
- FLAGGER

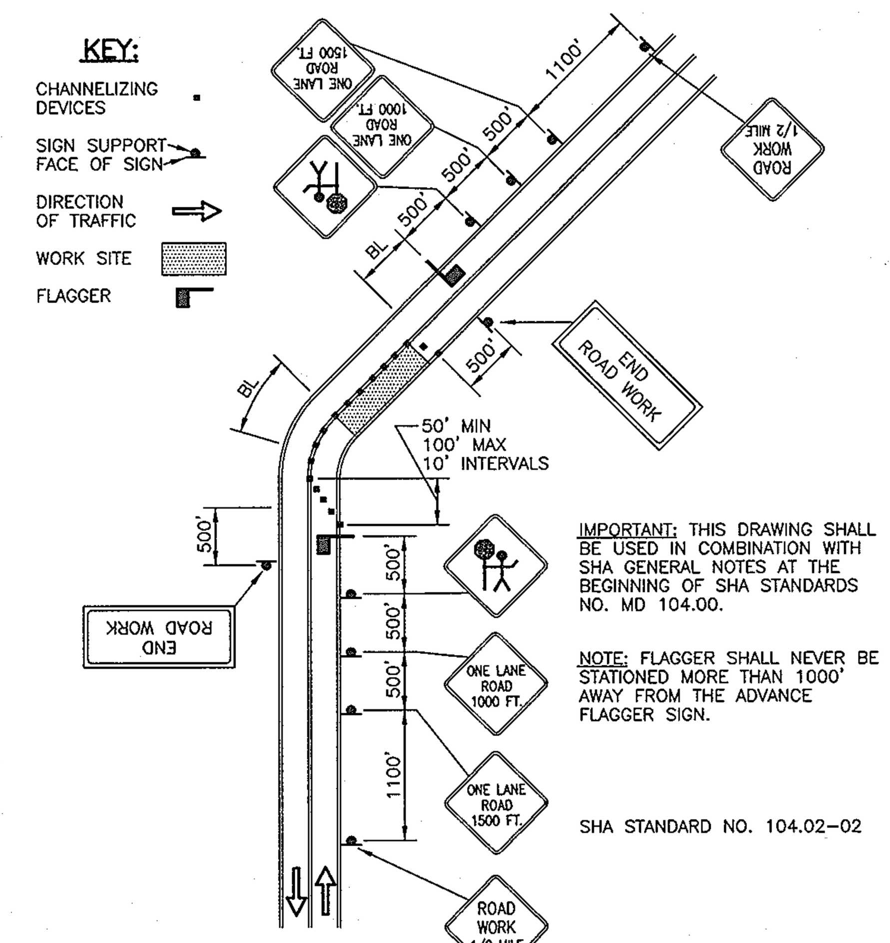

IMPORTANT: THIS DRAWING SHALL BE USED IN COMBINATION WITH SHA GENERAL NOTES AT THE BEGINNING OF SHA STANDARDS NO. MD 104.00.

NOTE: FLAGGER SHALL NEVER BE STATIONED MORE THAN 1000' AWAY FROM THE ADVANCE FLAGGER SIGN.

SHA STANDARD NO. 104.02–02

TRAFFIC CONTROL DETAIL

NO SCALE

STRUCTURE SCHEDULE						
NO.	TYPE	TOP OF STRUCTURE ELEVATION	INVERT IN	INVERT OUT	REMARKS	LOCATION
ES–1	24" RCP END SECTION		359.6	359.2	HO. CO. STD. SD 5.52	N. 571865.15, E. 1374031.67
MH–1	MANHOLE 48" DIA.	379.80	363.5	376.0	HO. CO. STD. S 1.32	N. 571856.65, E. 1374150.36
MH–2	MANHOLE 48" DIA.	389.00	383.2	384.7	HO. CO. STD. S 1.32	N. 571886.48, E. 1374148.86
MH–3	MANHOLE 48" DIA	396.80	388.24	388.14	HO. CO. STD. S 1.32	N. 572000.60, E. 1374268.75
MH–4	MANHOLE 48" DIA	396.50	393.60	393.40	HO. CO. STD. S 1.32	N. 571991.01, E. 1374273.00
MH–5	MANHOLE 48" DIA	398.70	388.66	388.56	HO. CO. STD. S 1.32	N. 571993.74, E. 1374286.98
S–1	CONCRETE RISER	390.00	385.5	385.0	REFER TO DETAIL– SHEET 6	N. 571897.20, E. 1374169.42
S–2	TRASH RACK BASE		–	–	REFER TO DETAIL– SHEET 6	SEE PLAN
I–1	TYPE 'S' INLET	393.70	387.42	387.32	HO. CO. STD SD 4.22\4.23 MODIFIED TO INCLUDE ALUMINUM GRATE REFER TO SHT 7 OF FOR ADD. DETAILS	N. 572016.69, E. 1374226.94
I–2	TYPE 'DOUBLE S' INLET	401.60	–	397.60	HO. CO. STD. SD 4.22\4.23	N. 572008.54, E. 1374296.64
I–3	TYPE 'S' INLET	393.40	390.70	390.03	HO. CO. STD. SD 4.12\4.13	N. 571857.33, E. 1374272.94
I–4	TYPE 'DOUBLE S' INLET	403.00	392.8	392.6	HO. CO. STD SD 4.22\4.23	N. 571829.91, E. 1374338.18
I–5	TYPE 'S' INLET	403.20	393.25	393.00	HO. CO. STD SD 4.22\4.23	N. 571808.63 E. 1374343.47
I–6	TYPE 'S' INLET	407.80	–	403.66	HO. CO. STD SD 4.22\4.23	N. 571793.23 E. 1374369.82

PIPE SCHEDULE		
SIZE	TYPE	LENGTH
4"	PVC	25 LF
15"	RCP	80 LF
18"	RCP	316 LF
24"	RCPR	20 LF
24"	RCP	113 LF

RCPR – REINFORCED CONCRETE PIPE WITH RUBBER GASKET.
RCP – REINFORCED CONCRETE PIPE.

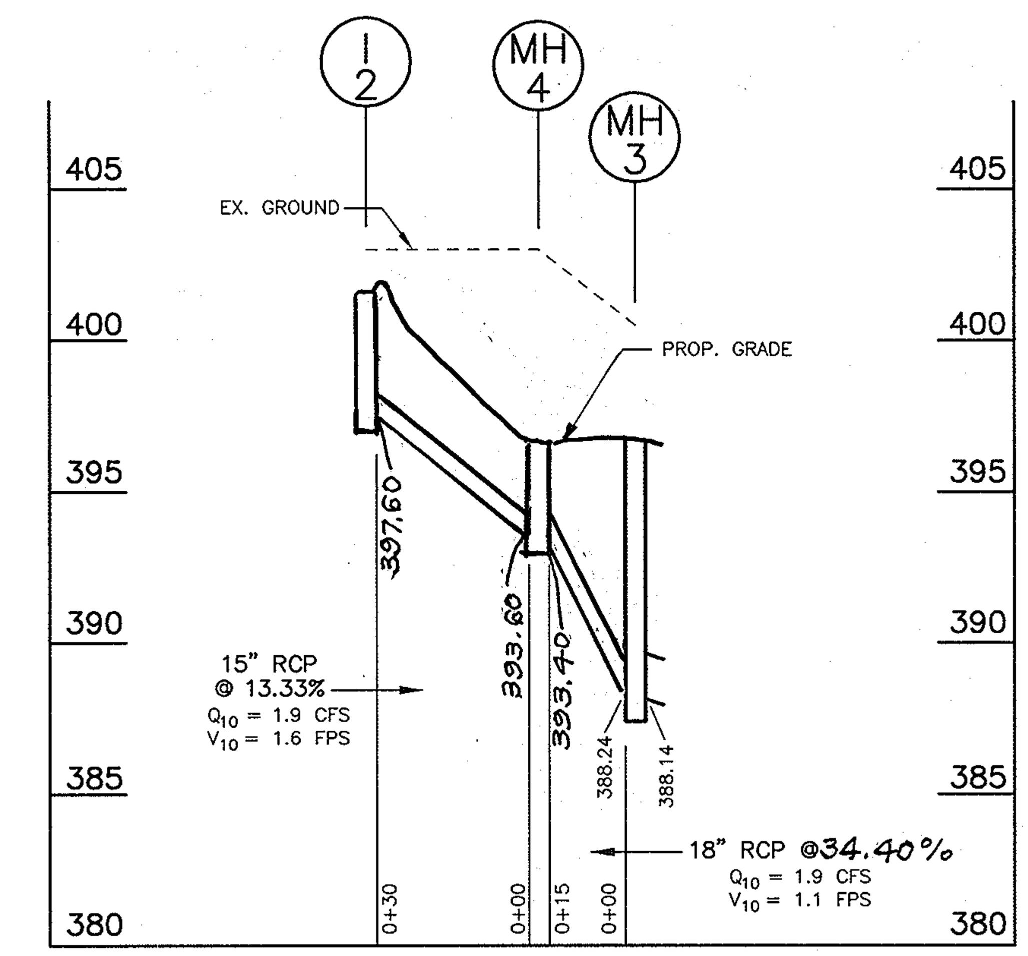

STORM DRAIN SYSTEM

SCALE: HOR. 1"=30' VER. 1'=5'

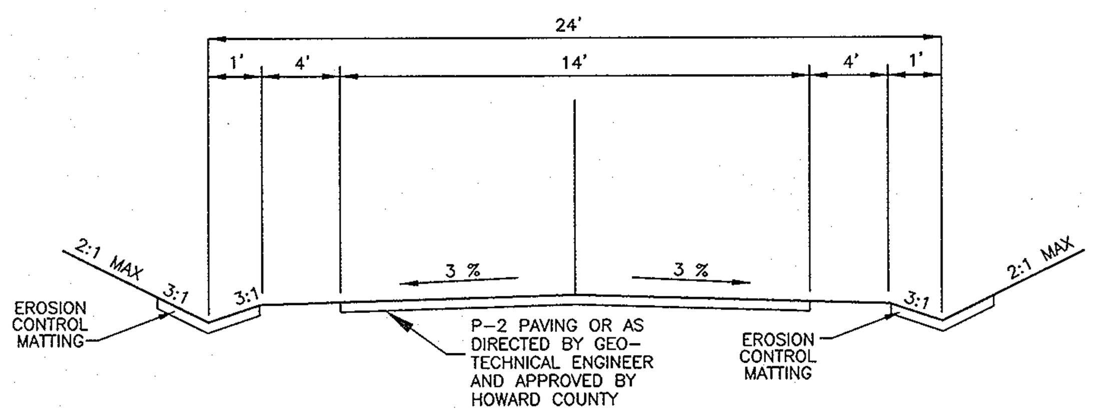

TYPICAL SECTION PRIVATE ACCESS PLACE

NO SCALE

1–1/2" SURFACE COURSE
2–1/2" BASE COURSE
6" AGGREGATE BASE

P–2 PAVING SECTION

NO SCALE

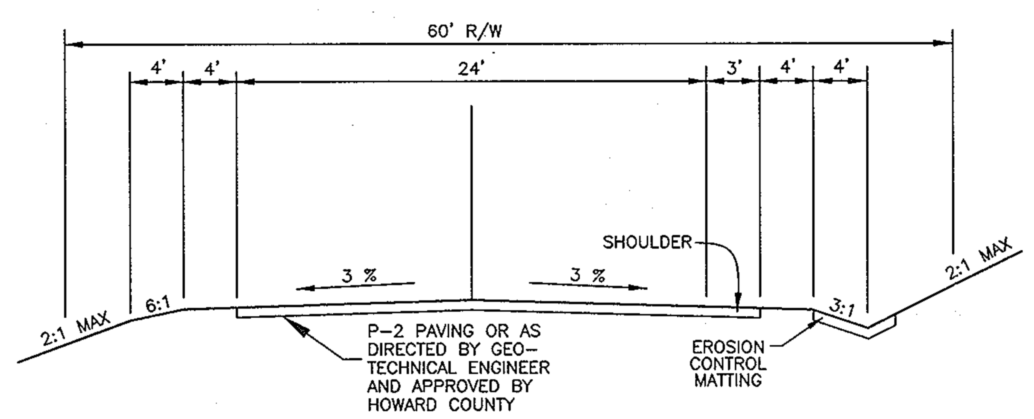

PROPOSED CROSS–SECTION FOR BONNIE BRANCH ROAD IMPROVEMENTS

MINOR COLLECTOR

NO SCALE

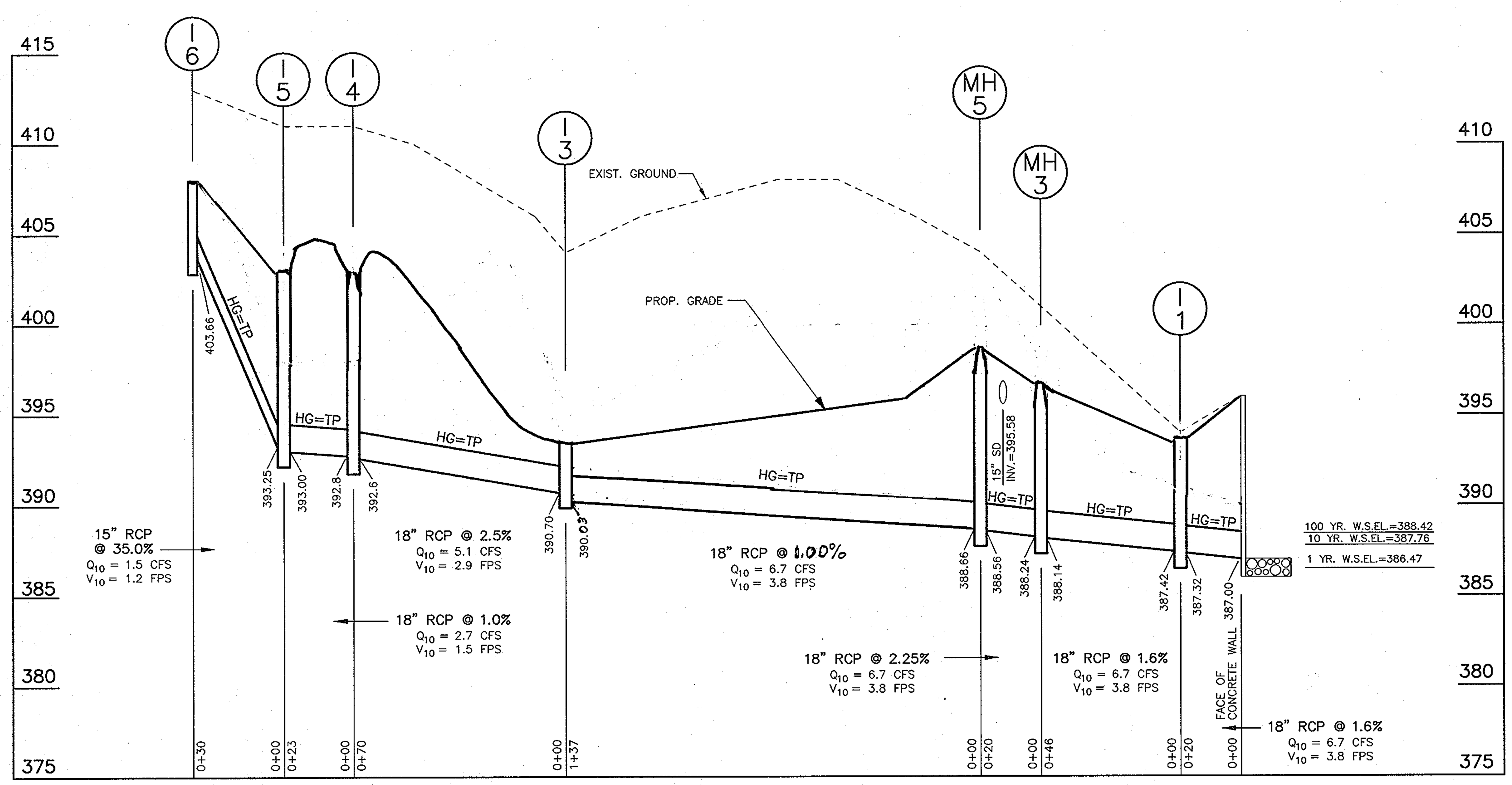

STORM DRAIN SYSTEM

SCALE: HOR. 1"=30' VER. 1'=5'

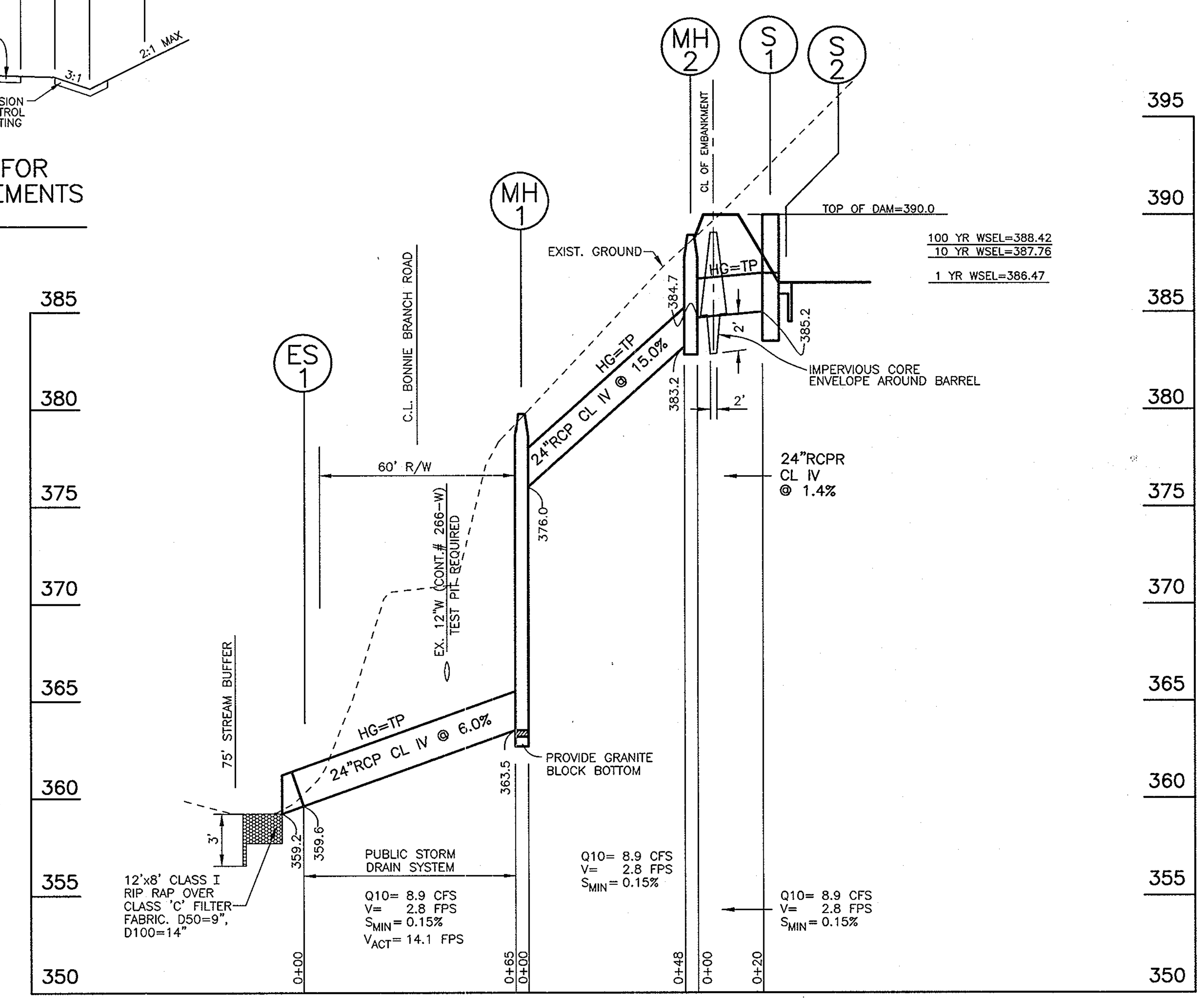

PRINCIPLE SPILLWAY

SCALE: HOR. 1"=30' VER. 1'=5'

OWNER / DEVELOPER
BONNIELASS LLC.
8835–P COLUMBIA 100 PARKWAY
COLUMBIA, MARYLAND 21045

Nº	REVISION	DATE
2	REV. SHEET NUMBER 5 of 15 TO 5 of 17	4-1-05
1	REVISE STORM DRAIN SYSTEM PROFILE	3-18-04

APPROVED: DEPARTMENT OF PUBLIC WORKS	
CHIEF, BUREAU OF HIGHWAYS	N/A DATE
APPROVED: DEPARTMENT OF PLANNING & ZONING	
CHIEF, DIVISION OF LAND DEVELOPMENT	8/15/03 DATE
CHIEF, DEVELOPMENT ENGINEERING DIVISION MAJ	8/13/03 DATE

Reviewed for HOWARD S.C.D. and meets Technical Requirements
Signature 7/31/03 Date
U.S. Natural Resources Conservation Service

THIS DEVELOPMENT PLAN IS APPROVED FOR SOIL EROSION AND SEDIMENT CONTROL BY THE HOWARD SOIL CONSERVATION DISTRICT.

HOWARD S.C.D. 7/31/03 DATE

DEVELOPER'S/BUILDER'S CERTIFICATE

"I/We certify that all development and construction will be done according to this plan of development and plan for sediment and erosion control and that all responsible personnel involved in the construction project will have a Certificate of Attendance at a Department of the Environment Approved Training Program for the Control of Sediment and Erosion before beginning the project. I also authorize periodic on–site inspection by the Howard Soil Conservation District or their authorized agents, as are deemed necessary".

NAME 7-3-03 DATE

ENGINEER'S CERTIFICATE

I hereby certify that this plan for Sediment and Erosion Control represents a practical and workable plan based on my personal knowledge of the site conditions and that it was prepared in accordance with the requirements of the Howard Soil Conservation District.

G. NELSON CLARK 6-25-03 DATE

STATE OF MARYLAND G. NELSON CLARK NO. 7139 REGISTERED PROFESSIONAL ENGINEER
2-10-03

#6 D:\DRAWINGS\00098–BONNIELASS\1ST–RE–SUB\S05–SD–PROF–PAV--DETS.DWG

CFS **CLARK · FINEFROCK & SACKETT, INC.**
ENGINEERS · PLANNERS · SURVEYORS
7135 MINSTREL WAY · COLUMBIA, MD 21045 · (410) 381–7500 BALT. · (301) 621–8100 WASH.

DESIGNED PC/AS	STORM DRAIN PROFILES AND PAVING DETAILS	SCALE 1"=30'
DRAWN ZAH/CRH2	**BONNIELASS**	DRAWING 5 of 17
CHECKED AS	TAX MAP 31 PARCEL 254 GRID 9 ZONING R–20 FIRST (1ST) ELECTION DISTRICT HOWARD COUNTY, MARYLAND	JOB NO. 00–098
DATE 2–10–03		FILE NO. 00–098–D

F-01-208

D:/Drawings/00098-Bonnielass/1ST-RE-SUB/S05-SD-prof-pav-dets.dwg Sun Feb 09 13:53 2003 CFS Computer #6

DETAIL 24 – STABILIZED CONSTRUCTION ENTRANCE

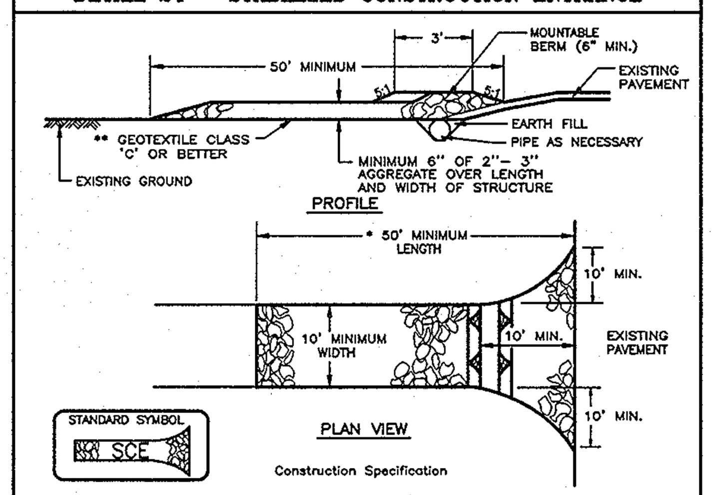

Construction Specification

1. Length – minimum of 50' (* 30' for a single residence lot).
2. Width – 10' minimum, should be flared at the existing road to provide a turning radius.
3. Geotextile fabric (filter cloth) shall be placed over the existing ground prior to placing stone. ** The plan approval authority may not require single family residences to use geotextile.
4. Stone – crushed aggregate (2" to 3") or reclaimed or recycled concrete equivalent shall be placed at least 6" deep over the length and width of the entrance.
5. Surface Water – all surface water flowing to or diverted toward construction entrances shall be piped through the entrance, maintaining positive drainage. Pipe installed through the stabilized construction entrance shall be protected with a mountable berm with 5:1 slopes and a minimum of 6" of stone over the pipe. Pipe has to be sized according to the drainage. When the SCE is located at a high spot and has no drainage to convey, a pipe will not be necessary. Pipe should be sized according to the amount of runoff to be conveyed. A 6" minimum will be required.
6. Location – A stabilized construction entrance shall be located at every point where construction traffic enters or leaves a construction site. Vehicles leaving the site must travel over the entire length of the stabilized construction entrance.

U.S. DEPARTMENT OF AGRICULTURE SOIL CONSERVATION SERVICE	PAGE F - 17 - 3	MARYLAND DEPARTMENT OF ENVIRONMENT WATER MANAGEMENT ADMINISTRATION

DETAIL 22 – SILT FENCE

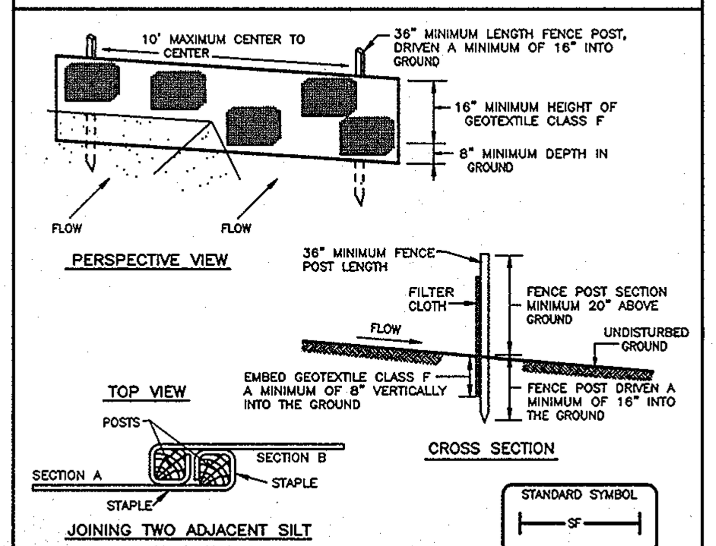

Construction Specifications

1. Fence posts shall be a minimum of 36" long, driven 16" minimum into the ground. Wood posts shall be 1 1/2" x 1 1/2" square (minimum) cut, or 1 3/4" diameter (minimum) round and shall be of sound quality hardwood. Steel posts will be standard T or U section weighing not less than 1.00 pound per linear foot.
2. Geotextile shall be fastened securely to each fence post with wire ties or staples at top and mid–section and shall meet the following requirements for Geotextile Class F:

Tensile Strength	50 lbs/in (min.)	Test: MSMT 509
Tensile Modulus	20 lbs/in (min.)	Test: MSMT 509
Flow Rate	0.3 gal ft²/minute (max.)	Test: MSMT 322
Filtering Efficiency	75% (min.)	Test: MSMT 322

3. Where ends of geotextile fabric come together, they shall be overlapped, folded and stapled to prevent sediment bypass.
4. Silt Fence shall be inspected after each rainfall event and maintained when bulges occur or when sediment accumulation reaches 50% of the fabric height.

U.S. DEPARTMENT OF AGRICULTURE SOIL CONSERVATION SERVICE	PAGE E - 15 - 3	MARYLAND DEPARTMENT OF ENVIRONMENT WATER MANAGEMENT ADMINISTRATION

DETAIL 1 – EARTH DIKE

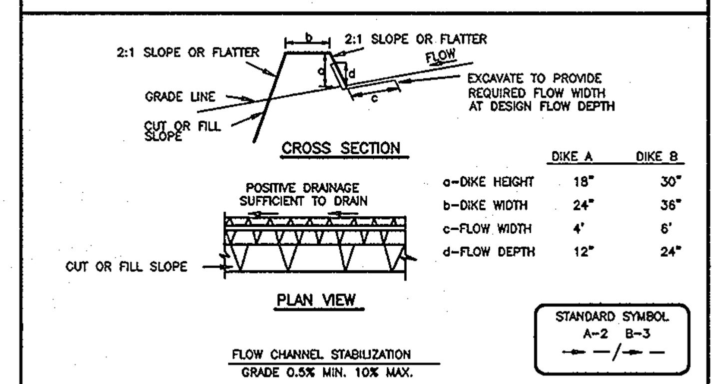

	DIKE A	DIKE B
a–DIKE HEIGHT	18"	30"
b–DIKE WIDTH	24"	36"
c–FLOW WIDTH	4'	6'
d–FLOW DEPTH	12"	24"

1. Seed and cover with straw mulch.
2. Seed and cover with Erosion Control Matting or line with sod.
3. 4" – 7" stone or recycled concrete equivalent pressed into the soil 7" minimum

Construction Specifications

1. All temporary earth dikes shall have uninterrupted positive grade to an outlet. Spot elevations may be necessary for grades less than 1%.
2. Runoff diverted from a disturbed area shall be conveyed to a sediment trapping device.
3. Runoff diverted from an undisturbed area shall outlet directly into an undisturbed, stabilized area at a non–erosive velocity.
4. All trees, brush, stumps, obstructions, and other objectional material shall be removed and disposed of so as not to interfere with the proper functioning of the dike.
5. The dike shall be excavated or shaped to line, grade and cross section as required to meet the criteria specified herein and be free of bank projections or other irregularities which will impede normal flow.
6. Fill shall be compacted by earth moving equipment.
7. All earth removed and not needed for construction shall be placed so that it will not interfere with the functioning of the dike.
8. Inspection and maintenance must be provided periodically and after each rain event.

U.S. DEPARTMENT OF AGRICULTURE SOIL CONSERVATION SERVICE	PAGE A - 1 - 6	MARYLAND DEPARTMENT OF ENVIRONMENT WATER MANAGEMENT ADMINISTRATION

DETAIL 18 – SEDIMENT BASIN BAFFLES

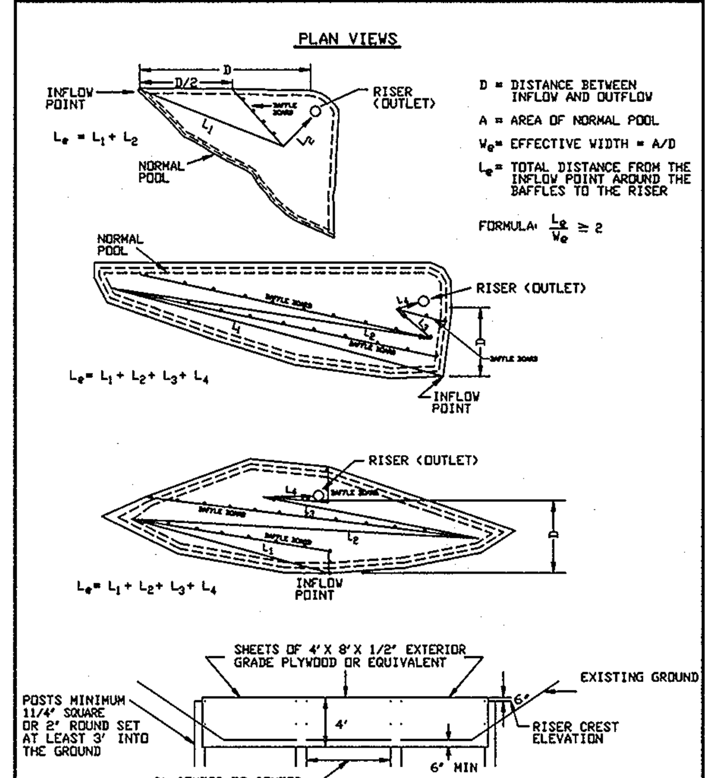

U.S. DEPARTMENT OF AGRICULTURE SOIL CONSERVATION SERVICE	PAGE C - 10 - 28	MARYLAND DEPARTMENT OF ENVIRONMENT WATER MANAGEMENT ADMINISTRATION

SEQUENCE OF CONSTRUCTION

PHASE I:

1. Obtain grading permit.	7 days
2. Install tree protection fence.	5 days
3. Clear and grub for installation of perimeter sediment and erosion control devices, within Phase I limit of disturbance, install super silt fence, silt fence, and construction entrance and stabilize.	5 days
4. Clear and grub within perimeter controls and remove structures as indicated.	5 days
5. With a dry weather forcast and super silt fence installed for construction of storm drain and outfall construct storm drain from ES–1 to MH–1. The contractor shall maintain one lane of traffic during construction of the storm drainage crossing the road. All traffic control measures shall be in accordance with MSHA standards and specifications and comply with the manual on uniform traffic control devices (MUTCD).	5 days
6. Reconstruct Bonnie Branch Road from stations 0+50 to 2+90 as shown, keeping one lane of traffic open at all times. All traffic control measures shall be in accordance with MSHA standards and specifications and comply with the manual on uniform traffic control devices (MUTCD).	? days
7. Rough grade site as required for the installation of storm drain from MH–1 to S–1. Install clean water diversion dikes and stone pads.	15 days
8. With permission from the sediment control inspector, construct pond to ultimate conditions, and construct storm drain from MH–1 to S–1. Close off perimeter super silt fence. Block low weir (#1) to be equal with high weir (#2) and install sediment dewatering devices. Construct concrete retaining walls.	50 days
9. Stablize grades above sand filter and install silt fence and super silt to protect sand filter.	3 days
10. Install 6" PVC, 6" perforated PVC. Install gabion weir "A" & "B", and low flow mats.	10 days
11. With permission from sediment control inspector, rough grade site as required for the installation of the driveway.	5 days
12. Install storm drain system MH3, MH4, MH5, I1, I2, FS1, & I3. Temporarily block 4" PVC outlet at I1 and FS1.	25 days
13. Install base pavement and sodded side channel. Fine grade and seed and mulch disturbed area.	5 days

PHASE II:

14. With permission of the Sediment Control Inspector, clear and grub within Phase II limit of disturbance for installation of sodded channels. Remove clean water diversion dikes.	5 days
15. Excavate channel in increments which can be stabilized with sod and erosion controll matting in one day.	5 days
16. When site has thriving vegetation and with permission of the Sediment Control Inspector flush storm drain pipes and drain bottom of I1 and FS1. Clean out sediment and return pond to ultimate conditions. Install surface sand filter.	15 days
17. Convert riser to ultimate conditions. Cut 6" PVC and install removable cap with 2" orifice. Install S–2 such that 6" PVC cap may be removed. Install low flow channel. Remove blocking from weir #1 and install all trash racks. Install 4" PVC low flow pipes to sand filter.	5 days
18. With permission of Sediment Control Inspector, install surface course on driveway and remove all remaining sediment controls and stabilize.	3 days

PERMANENT SEEDING NOTES

APPLY TO GRADED OR CLEARED AREAS NOT SUBJECT TO IMMEDIATE FURTHER DISTURBANCE WHERE A PERMANENT LONG–LIVED VEGETATIVE COVER IS NEEDED.

SEEDBED PREPARATION: Loosen upper three inches of soil by raking, discing or other acceptable means before seeding, if not previously loosened.

SOIL AMENDMENTS: In lieu of soil test recommendations, use one of the following schedules:

1) Preferred–Apply 2 tons per acre dolomitic limestone (92 lbs/100 sq.ft.) and 600 lbs per acre 10–10–10 fertilizer (14 lbs./1000 sq.ft.) before seeding. Harrow or disc into upper three inches of soil. At the time of seeding, apply 400 lbs. per acre 30–0–0 ureaform fertilizer (9 lbs/1000 sq.ft.)
2) Acceptable–Apply 2 tons per acre dolomitic limestone (92 lbs/1000 sq.ft.) and apply 1000 lbs. per acre 10–10–10– fertilizer (23 lbs./1000 sq.ft.) before seeding. Harrow or disc into upper three inches of soil.

SEEDING: For the periods March 1 thru April 30, and August 1 thru October 15, seed with 60 lbs. per acre (1.4 lbs/1000 sq.ft.) of Kentucky 31 Tall Fescue. For the period May 1 thru July 31, seed with 60 lbs. Kentucky 31 Tall Fescue per acre and 2 lbs. per acre (.05 lbs./1000 sq.ft.) of weeping lovegrass. During the period of October 16 thru February 28, protect site by: Option (1) 2 tons per acre well anchored straw mulch and seed as soon as possible in the spring. Option (2) Use sod. Option (3) Seed with 60 lbs/acre Kentucky 31 Tall Fescue and mulch with 2 tons/acre well anchored straw.

MULCHING: Apply 1 1/2 to 2 tons per acre (70 to 90 lbs/1000 sq. ft.) of unrotted small grain straw immediately after seeding. Anchor mulch immediately after application using mulch anchoring tool or 218 gallons per acre (5 gal/1000 sq.ft.) of emulsified asphalt on flat areas. On slopes 8 feet or higher, use 348 gallons per acre (8 gal/1000 sq.ft.) for anchoring.

MAINTENANCE: Inspect all seeded areas and make needed repairs, replacements and reseedings.

TEMPORARY SEEDING NOTES

SEEDBED PREPARATION: Loosen upper three inches of soil by raking, discing or other acceptable means before seeding, if not previously loosened.

SOIL AMENDMENTS: Apply 600 lbs. per acre 10–10–10 fertilizer (14 lbs./1000 sq.ft).

SEEDING: For periods March 1 thru April 30 and from August 15 thru November 15, seed with 2 1/2 bushel per acre of annual rye (3.2 lbs./1000 sq.ft.) For the period May 1 thru August 14, seed with 3 lbs. per acre of weeping lovegrass (.07 lbs./1000 sq.ft.). For the period November 1 thru February 28, protect site by applying 2 tons per acre of well anchored straw mulch and seed as soon as possible in the spring, or use sod.

MULCHING: Apply 1 1/2 to 2 tons per acre (70 to 90 lbs./1000 sq.ft.) of unrotted small grain straw immediately after seeding. Anchor mulch immediately after application using mulch anchoring tool or 218 gallons per acre (5 gal/1000 sq.ft.) of emulsified asphalt on flat areas. On slopes 8 feet or higher, use 348 gallons per acre (8 gal/1000 sq.ft.) for anchoring.

REFER TO THE 1994 MARYLAND STANDARDS AND SPECIFICATIONS FOR SOIL EROSION AND SEDIMENT CONTROL FOR RATE AND METHODS NOT COVERED.

SEDIMENT AND EROSION CONTROL NOTES

1. A minimum of 48 hours notice must be given to the Howard County Department of Inspections, Licenses and Permits, Sediment Control Division prior to the start of any construction (313–1855).
2. All vegetative and structural practices are to be installed according to the provisions of this plan and are to be in conformance with the 1994 MARYLAND STANDARDS AND SPECS. FOR SOIL EROSION AND SEDIMENT CONTROL and revisions thereto.
3. Following initial soil disturbance or redisturbance, permanent or temporary stabilization shall be completed within:
   a) 7 calendar days for all perimeter sediment control stuctures, dikes, perimeter slopes and all slopes greater than 3:1
   b) 14 days as to all other disturbed or graded areas on the project site.
4. All sediment traps/basins shown must be fenced and warning signs posted around their perimeters in accordance with Vol.1, Chapter 7, of the HOWARD COUNTY DESIGN MANUAL, Storm Drainage.
5. All disturbed areas must be stabilized within the time period specified above, in accordance with the 1994 MARYLAND STANDARDS AND SPECIFICATIONS FOR SOIL EROSION AND SEDIMENT CONTROL for permanent seedings, sod, temporary seeding and mulching (Sec G). Temporary stabilization with mulch alone can only be done when recommended seeding dates do not allow for proper germination and establishment of grasses.
6. All sediment control structures are to remain in place and are to be maintained in operative condition until permission for their removal has been obtained from the Howard County Sediment Control Inspector.
7. SITE ANALYSIS:

Total Area of Site:	5.63 Acres
Area Disturbed:	1.73 Acres
Area to be roofed or paved:	0.20 Acres
Area to be vegetatively stabilized:	1.53 Acres
Total Cut:	2,720 CY
Total Fill:	120 CY
Offsite Waste/Borrow Area Location:	*

8. Any sediment control practice which is disturbed by grading activity for placement of utilities must be repaired on the same day of disturbance.
9. Additional sediment control must be provided, if deemed necessary by the Howard County DPW Sediment Control Inspector.
10. On all sites with disturbed areas in excess of 2 acres, approval of the inspection agency shall be requested upon completion of installation of perimeter erosion and sediment controls, but before proceeding with any other earth disturbance or grading. Other building or grading inspection approvals may not be authorized until this initial approval by the inspection agency is made.
11. Trenches for the construction of utilities shall be backfilled and stabilized within one working day, or is limited to three pipe lengths.
12. The total amount of earth dike = 950 LF
13. The total amount of super silt fence = 890 LF
14. The total amount of super silt fence = 117 LF

* It is the responsibility of the contractor to identify the spoil/borrow site and notify and gain approval from the sediment control inspector of the site and it's grading permit number at the time of construction.

ALL CUT/FILL QUANTITIES SHOWN ARE FOR THE REVIEWING AGENCIES ONLY. THE CONTRACTOR IS RESPONSIBLE FOR VERIFYING ALL CALCULATIONS TO HIS OWN SATISFACTION FOR BID/CONTRACT PURPOSES.

DETAIL 33 – SUPER SILT FENCE

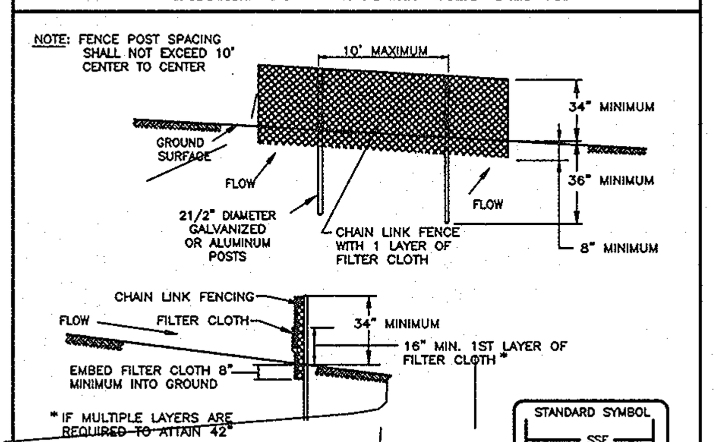

Construction Specifications

1. Fencing shall be 42" in height and constructed in accordance with the latest Maryland State Highway Details for Chain Link Fencing. The specification for a 6' fence shall be used, substituting 42" fabric and 6' length posts.
2. Chain link fence shall be fastened securely to the fence posts with wire ties. The lower tension wire, brace and truss rods, drive anchors and post caps are not required except on the ends of the fence.
3. Filter cloth shall be fastened securely to the chain link fence with ties spaced every 24" at the top and mid section.
4. Filter cloth shall be embedded a minimum of 8" into the ground.
5. When two sections of filter cloth adjoin each other, they shall be overlapped by 6" and folded.
6. Maintenance shall be performed as needed and silt buildups removed when "bulges" develop in the silt fence, or when silt reaches 50% of fence height
7. Filter cloth shall be fastened securely to each fence post with wire ties or staples at top and mid section and shall meet the following requirements for Geotextile Class F:

Tensile Strength	50 lbs/in (min.)	Test: MSMT 509
Tensile Modulus	20 lbs/in (min.)	Test: MSMT 509
Flow Rate	0.3 gal/ft²/minute (max.)	Test: MSMT 322
Filtering Efficiency	75% (min.)	Test: MSMT 322

U.S. DEPARTMENT OF AGRICULTURE SOIL CONSERVATION SERVICE	PAGE H - 26 - 3	MARYLAND DEPARTMENT OF ENVIRONMENT WATER MANAGEMENT ADMINISTRATION

DETAIL 30 – EROSION CONTROL MATTING

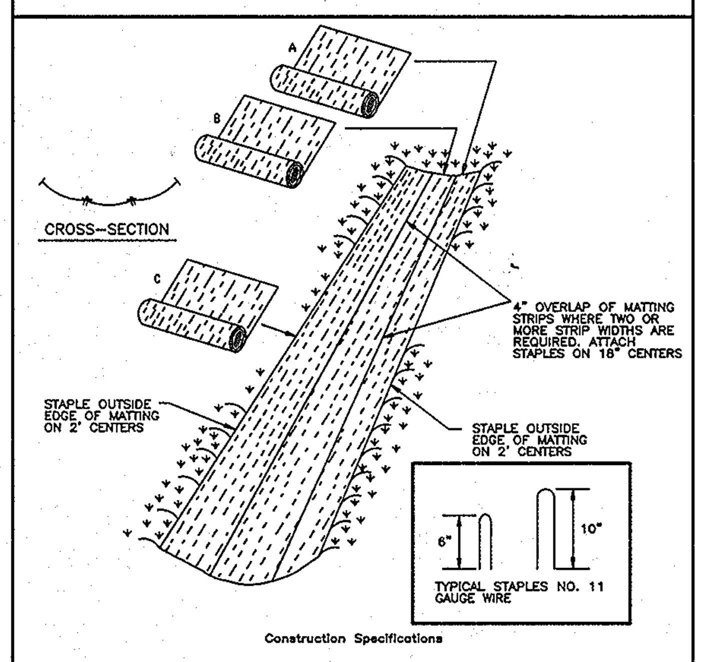

Construction Specifications

1. Key–in the matting by placing the top ends of the matting in a narrow trench, 6" in depth. Backfill the trench and tamp firmly to conform to the channel cross–section. Secure with a row of staples about 4" down slope from the trench. Spacing between staples is 6".
2. Staple the 4" overlap in the channel center using an 18" spacing between staples.
3. Before stapling the outer edges of the matting, make sure the matting is smooth and in firm contact with the soil.
4. Staples shall be placed 2' apart with 4 rows for each strip, 2 outer rows, and 2 alternating rows down the center.
5. Where one roll of matting ends and another begins, the end of the top strip shall overlap the upper end of the lower strip by 4", shiplap fashion. Reinforce the overlap with a double row of staples spaced 6" apart in a staggered pattern on either side.
6. The discharge end of the matting liner should be similarly secured with 2 double rows of staples.

Note: If flow will enter from the edge of the matting then the area effected by the flow must be keyed–in.

U.S. DEPARTMENT OF AGRICULTURE SOIL CONSERVATION SERVICE	PAGE G - 22 - 2	MARYLAND DEPARTMENT OF ENVIRONMENT WATER MANAGEMENT ADMINISTRATION

DETAIL 5 – RIP–RAP INFLOW PROTECTION

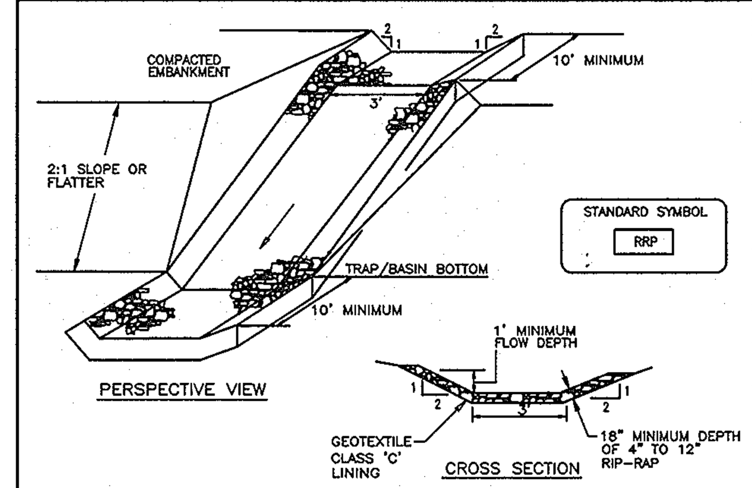

Construction Specifications

1. Rip–rap lined inflow channels shall be 1' in depth, have a trapezoidal cross section with 2:1 or flatter side slopes and 3' (min.) bottom width. The channel shall be lined with 4" to 12" rip– rap to a depth of 18".
2. Filter cloth shall be installed under all rip–rap. Filter cloth shall be Geotextile Class C.
3. Entrance and exit sections shall be installed as shown on the detail section.
4. Rip–rap used for the lining may be recycled for permanent outlet protection if the basin is to be converted to a stormwater management facility.
5. Gabion Inflow Protection may be used in lieu of Rip–rap Inflow Protection.
6. Rip–rap should blend into existing ground.
7. Rip–rap Inflow Protection shall be used where the slope is between 4:1 and 10:1, for slopes flatter than 10:1 use Earth Dike or Temporary Swale lining criteria.

U.S. DEPARTMENT OF AGRICULTURE SOIL CONSERVATION SERVICE	PAGE B - 6 - 2	MARYLAND DEPARTMENT OF ENVIRONMENT WATER MANAGEMENT ADMINISTRATION

DETAIL 23A – STANDARD INLET PROTECTION

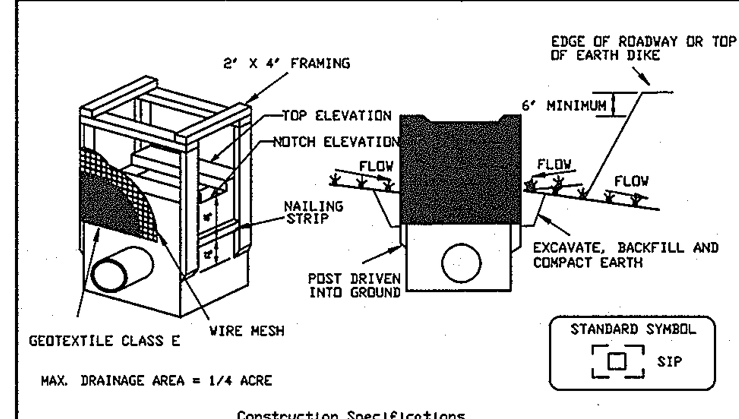

MAX. DRAINAGE AREA = 1/4 ACRE

Construction Specifications

1. Excavate completely around the inlet to a depth of 18' below the notch elevation.
2. Drive the 2' x 4' construction grade lumber posts 1' into the ground at each corner of the inlet. Place nail strips between the posts on the ends of the inlet. Assemble the top portion of the 2' x 4' frame using the overlap joint shown on Detail 23A. The top of the frame (weir) must be 6' below adjacent roadways where flooding and safety issues may arise.
3. Stretch the 1/2' x 1/2' wire mesh tightly around the frame and fasten securely. The ends must meet and overlap at a post.
4. Stretch the Geotextile Class E tightly over the wire mesh with the geotixtile extending from the top of the frame to 18' below the inlet notch elevation. Fasten the geotextile firmly to the frame. The ends of the geotextile must meet at a post, be overlapped and folded, then fastened down.
5. Backfill around the inlet in compacted 6' layers until the layer of earth is level with the notch elevation on the ends and top elevation on the sides.
6. If the inlet is not in a sump, construct a compacted earth dike across the ditch line directly below it. The top of the earth dike should be at least 6' higher than the top of the frame.
7. The structure must be inspected periodically and after each rain and the geotextile replaced when it becomes clogged.

U.S. DEPARTMENT OF AGRICULTURE SOIL CONSERVATION SERVICE	PAGE E - 16 - 5	MARYLAND DEPARTMENT OF ENVIRONMENT WATER MANAGEMENT ADMINISTRATION

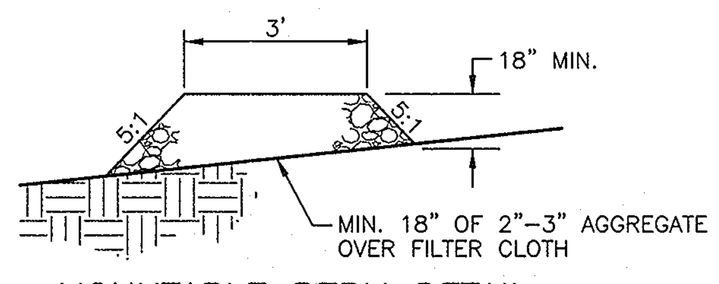

MOUNTABLE BERM DETAIL

NOT TO SCALE

21.0 STANDARDS AND SPECIFICATIONS FOR TOPSOIL

Definition

Placement of topsoil over a prepared subsoil prior to establishment of permanent vegetation.

Purpose

To provide a suitable soil medium for vegetable growth. Soils of concern have low moisture content, low nutrient levels, low pH, materials toxic to plants, and/or unacceptable soil gradation.

Conditions Where Practice Applies

I. This practice is limited to areas having 2:1 or flatter slopes where:
   a. The texture of the exposed subsoil/parent material is not adequate to produce vegetative growth.
   b. The soil material is so shallow that the rooting zone is not deep enough to support plants or furnish continuing supplies of moisture and plant nutrients.
   c. The original soil to be vegetated contains material toxic to plant growth.
   d. The soil is so acidic that treatment with limestone is not feasible.

II. For the purpose of these Standards and Specifications, areas having slopes steeper than 2:1 require special consideration and design for adequate stabilization. Areas having slopes steeper than 2:1 shall have the appropriate stabilization shown on the plans.

Construction and Material Specifications

I. Topsoil salvaged from the existing site may be used provided that it meets the standards as set forth in these specifications. Typically, the depth of topsoil to be salvaged for a given soil type can be found in the representative soil profile section in the Soil Survey published by USDA–SCS in cooperation with Maryland Agricultural Experimental Station.

II. Topsoil Specifications – Soil to be used as topsoil must meet the following:
   i. Topsoil shall be a loam, sandy loam, clay loam, silt loam, sandy clay loam, loamy sand. Other soils may be used if recommended by an agronomist or a soil scientist and approved by the appropriate approval authority. Regardless, topsoil shall not be a mixture of contrasting textured subsoils and shall contain less than 5% by volume of cinders, stones, slag, coarse fragments, gravel, sticks, roots, trash, or other materials larger than 1 1/2" in diameter.
   ii. Topsoil must be free of plants or plant parts such as Bermuda grass, quackgrass, Johnsongrass, nutsedge, poison ivy, thistle, or others as specified.
   iii. Where the subsoil is either highly acidic or composed of heavy clays, ground limestone shall be spread at the rate of 4–8 tons/acre (200–400 pounds per 1,000 square feet) prior to the placement of topsoil. Lime shall be distributed uniformly over designated areas and worked into the soil in conjunction with tillage operations as described in the following procedures.

III. For sites having disturbed areas under 5 acres:
   i. Place topsoil (if required) and apply soil amendments as specified in 20.0 Vegetative Stabilization – Section I – Vegetative Stabilization Methods and Materials.

IV. For sites having disturbed areas over 5 acres:
   i. On soil meeting topsoil specifications, obtain test results dictating fertilizer and lime amendments required to bring the soil into compliance with the following:
      a. pH for topsoil shall be between 6.0 and 7.5. If the tested soil demonstrates a pH of less than 6.0, sufficient lime shall be prescribed to raise the pH to 6.5 or higher.
      b. Organic content of topsoil shall be not less than 1.5 percent by weight.
      c. Topsoil having soluble salt content greater than 500 parts per million shall not be used.
      d. No sod or seed shall be placed on soil which has been treated with soil sterilants or chemicals used for weed control until sufficient time has elapsed (14 days min.) to permit dissipation of phyto–toxic materials.

NOTE: Topsoil substitutes or amendments, as recommended by a qualified agronomist or soil scientist and approved by the appropriate approval authority, may be used in lieu of natural topsoil.

   ii. Place topsoil (if required) and apply soil amendments specified in 20.0 Vegetative Stabilization–Section I–Vegetative Stabilization Methods and Materials.

V. Topsoil Application
   i. When topsoiling, maintain needed erosion and sediment control practices such as diversions, Grade Stabilization Structures, Earth Dikes, Slope Silt Fence and Sediment Traps and Basins.
   ii. Grades on the areas to be topsoiled, which have been previously established, shall be maintained, albeit 4"– 8" higher in elevation.
   iii. Topsoil shall be uniformly distributed in a 4"–8" layer and lightly compacted to a minimum thickness of 4". Spreading shall be performed in such a manner that sodding or seeding can proceed with a minimum of additional soil preparation and tillage. Any irregularities in the surface resulting from topsoiling or other operations shall be corrected in order to prevent the formation of depressions or water pockets.
   iv. Topsoil shall not be place while the topsoil or subsoil is in a frozen or muddy condition, when the subsoil is excessively wet or in a condition that may otherwise be detrimental to proper grading and seedbed preparation.

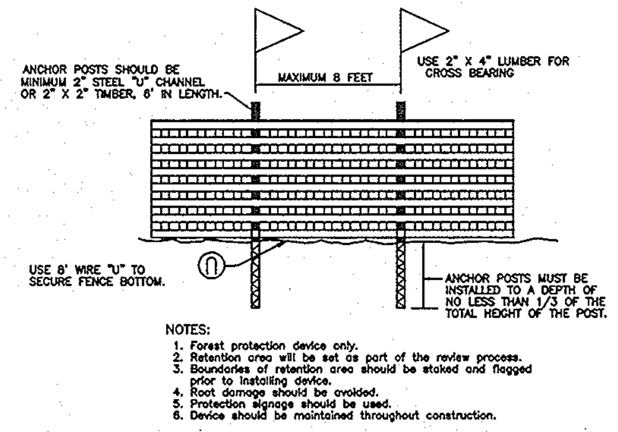

NOTES:
1. Forest protection device only.
2. Retention area will be set as part of the review process.
3. Boundaries of retention area should be staked and flagged prior to installing device.
4. Root damage should be avoided.
5. Protection signage should be used.
6. Device should be maintained throughout construction.

BLAZE ORANGE PLASTIC MESH

TYPICAL TREE PROTECTION FENCE DETAIL

NO SCALE

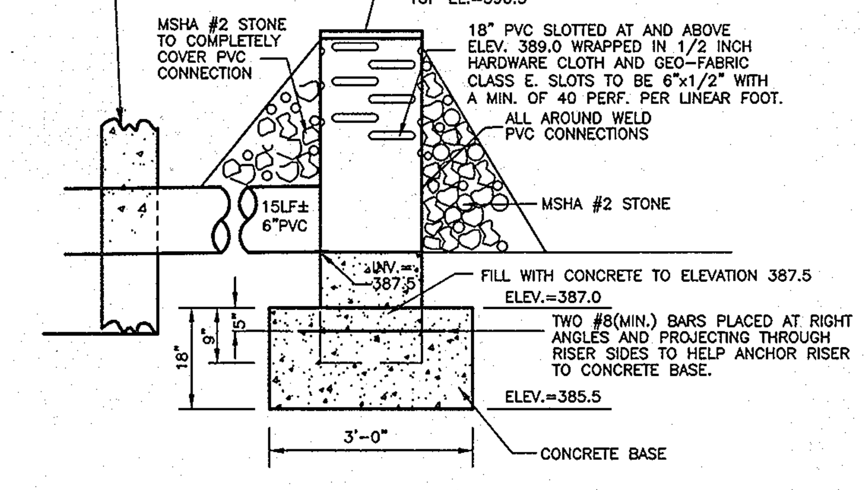

TEMPORARY DEWATERING DEVICE CONSTRUCTION SPECIFICATIONS

THE RISER SHALL HAVE A BASE ATTACHED WITH A WATERTIGHT CONNECTION AND SHALL HAVE SUFFICIENT WEIGHT TO PREVENT FLOTATION OF THE RISER. TWO APPROVED BASES FOR RISERS 10' OR LESS IN HEIGHT ARE:

1. A CONCRETE BASE 18" THICK WITH THE RISER EMBEDDED 9" IN THE BASE.

2. A 1/4" MINIMUM THICKNESS STEEL PLATE ATTACHED TO THE RISER BY A CONTINUOUS WELD AROUND THE CIRCUMFERENCE OF THE RISER TO FORM A WATERTIGHT CONNECTION. THE PLATE SHALL HAVE 2' OF STONE, GRAVEL, OR COMPACTED EARTH PLACED ON IT TO PREVENT FLOTATION. IN EITHER CASE, EACH SIDE OF THE SQUARE BASE SHALL BE TWICE THE RISER DIAMETER.

NOTE: FOR RISERS GREATER THAN TEN FEET HIGH COMPUTATIONS SHALL BE MADE TO DESIGN A BASE WHICH WILL PREVENT FLOATATION. THE MINIMUM FACTOR OF SAFETY SHALL BE 1.20 (DOWNWARD FORCES = 1.20 X UPWARD FORCES).

18" PVC RISER WITH CONCRETE BASE HAS BEEN SHOWN. THE CONTRACTOR MAY PROVIDE AN EQUIVALENT CMP RISER WITH STEEL PLATE, PROVIDING A WATER TIGHT COUPLING IS INSTALLED WHEN CONNECTING RISER TO 6" PVC OUTFALL.

TEMPORARY DEWATERING DEVICE

NOT TO SCALE

SEDIMENT BASIN CONSTRUCTION SPECIFICATIONS

1. Site Preparation: Perimeter sediment control devices must be installed prior to clearing and grubbing. Areas where the embankment is to be placed shall be cleared, grubbed, and stripped of topsiol to remove trees, vegetation, roots or other objectionable material. The pool area shall not be cleared until completion of the dam embankment unless the pool area is to be used for borrow. In order to facilitate clean–out and restoration, the pool area (measured at the top of the pipe spillway) shall be cleared of all brush, trees and other objectionable materials.

2. Cut–off Trench: A cut–off trench shall be excavated along the centerline of earth fill embankments. The minimum depth shall be four feet. The cut–off trench shall extend up both abutments to the riser crest elevation. The minimum bottom width shall be two feet, but wide enough to permit operation of excavation and compaction equipment. The side slopes shall be no steeper than 1:1. Compaction requirements shall be the same as those for the embankment. The trench shall be dewatered during the backfilling–compaction operations. For dewatering see Section D.

3. Embankment: The fill material shall be taken from approved areas shown on the plans. It shall be clean mineral soil free of roots, woody vegetation, oversized stones, rocks, or other objectionable material. Relatively pervious materials such as sand or gravel (Unified Soil Classes GW, GP, SW & SP) or organic materials (Unified Soil Classes OL and OH) shall not be placed in the embankment. Areas on which fill is to be placed shall be scarified prior to placement of fill. The fill material shall contain sufficient moisture so that it can be formed by hand into a ball without crumbling. If water can be squeezed out of the ball, it is too wet for proper compaction. Fill material shall be placed in six–inch to eight–inch thick continuous lifts over the entire length of the fill. Compaction shall be obtained by routing and hauling the construction equipment over the fill so that the entire surface of each layer of the fill is traversed by at least one wheel or tread track of the equipment or by the use of a compactor. The embankment shall be constructed to an elevation 10 percent higher than the design height to allow for settlement.

4. Principal Spillway: Steel risers shall be securely attached to the barrel or barrel stub by welding the full circumference making a watertight structural connection. Concrete risers shall be poured with the principal spillway in place or precast with voids around the principal spillway filled with concrete or shrink proof grout for watertight connection. The barrel stub must be attached to the riser at the same percent (angle) of grade as the outlet conduit. The connection between the riser and the riser base shall be watertight. All connections between barrel sections must be achieved by approved watertight band assemblies. The barrel and riser shall be placed on a firm, smooth foundation of impervious soil as the embankment is constructed. Breaching the embankment to install the barrel is unacceptable. Pervious materials such as sand, gravel, or crushed stone shall not be used as backfill around the pipe or anti–seep collars. The fill material around the pipe spillway shall be placed in four–inch lifts and hand compacted under and around the pipe to at least the same density as the adjacent embankment. A depth of 1.5 times the pipe diameter (minimum) shall be backfilled over the principal spillway and hand compacted before crossing it with construction equipment.

5. Emergency Spillway: The emergency spillway shall be installed in undisturbed ground. The achievement of planned elevations, grades, design width, entrance and exit channel slopes are critical to the successful operation of the emergency spillway and must be constructed within a tolerance of +/– 0.2 feet.

6. Vegetative Treatment: Stabilize the embankment in accordance with the appropriate vegetative Standard and Specifications immediately following construction. In no case shall the embankment remain unstabilized for more than seven (7) days. Once constructed, the top and outside face of the embankment shall be stabilized with seed and mulch. The remainder of the interior slopes should be stabilized (one time) with seed and mulch upon basin completion and monitored and maintained erosion free during the life of the basin.

7. Safety: Local requirements concerning fencing and signs shall be met, warning the public of hazards of soft sediment and floodwater.

8. Maintenance: Repair all damage caused by soil erosion and construction equipment at or before the end of each working day. Sediment shall be removed from the basin when it reaches the specified distance below the top of the riser as shown on the riser. This sediment shall be placed in such a manner that it will not erode from the site. The sediment shall not be deposited downstream from the embankment, adjacent to a stream or floodplain. Disposal areas must be stabilized.

9. Final Disposal: When temporary structures have served their intended purpose and the contributing drainage area has been properly stabilized, the embankment and resulting sediment deposits are to be leveled or otherwise disposed of in accordance with the approved sediment control plan. The proposed use of a sediment basin site will often dictate final disposition of the basin and any sediment contained therein. If the site is scheduled for future construction, then the basin material and trapped sediments must be removed and safely disposed of and the basin shall be backfilled with a structural fill. When the basin area is to remain open space, the pond may be pumped dry (using methods in Section D – Dewatering), graded and backfilled.

10. Conversion to Stormwater Management Structure: After permanent stabilization of all disturbed contributory drainage areas, temporary sediment basins, if initially built and certified to meet permanent standards, may be converted to permanent stormwater management structures. To convert the basin from temporary to permanent use, the outlet structure must be modified in accordance with approved stormwater management design plans. Additional grading may also be necessary to provide the required storage volume in the basin. Conversion can only take place after all disturbed area have been permanently stabilized to the satisfaction of the inspection authority and storm drains have been flushed.

1	REV. SHEET NUMBER FROM 4 of 15 TO 4 of 17	4-1-05
No	REVISION	DATE

Reviewed for HOWARD S.C.D. and meets Technical Requirements

Signature: Jim Myers/16 — Date: 7/21/03

U.S. Natural Resources Conservation Service

THIS DEVELOPMENT PLAN IS APPROVED FOR SOIL EROSION AND SEDIMENT CONTROL BY THE HOWARD SOIL CONSERVATION DISTRICT.

HOWARD S.C.D. — DATE 7/31/03

DEVELOPER'S/BUILDER'S CERTIFICATE

"I/We certify that all development and construction will be done according to this plan of development and plan for sediment and erosion control and that all responsible personnel involved in the construction project will have a Certificate of Attendance at a Department of the Environment Approved Training Program for the Control of Sediment and Erosion before beginning the project. I also authorize periodic on–site inspection by the Howard Soil Conservation District or their authorized agents, as are deemed necessary".

NAME — DATE 7-1-03

ENGINEER'S CERTIFICATE

I hereby certify that this plan for Sediment and Erosion Control represents a practical and workable plan based on my personal knowledge of the site conditions and that it was prepared in accordance with the requirements of the Howard Soil Conservation District.

G. NELSON CLARK — DATE 6-30-03

STATE OF MARYLAND — G. NELSON CLARK — NO. 7139 — REGISTERED PROFESSIONAL ENGINEER — 2-10-03

APPROVED: DEPARTMENT OF PUBLIC WORKS — N/A

CHIEF, BUREAU OF HIGHWAYS — DATE

APPROVED: DEPARTMENT OF PLANNING & ZONING

CHIEF, DIVISION OF LAND DEVELOPMENT — DATE 8/15/03

CHIEF, DEVELOPMENT ENGINEERING DIVISION MAJ — DATE 8/13/03

OWNER / DEVELOPER

BONNIELASS LLC
8835–P COLUMBIA 100 PARKWAY
COLUMBIA, MARYLAND 21045

CLARK · FINEFROCK & SACKETT, INC.
ENGINEERS · PLANNERS · SURVEYORS
7135 MINSTREL WAY • COLUMBIA, MD 21045 • (410) 381–7500 BALT. • (301) 621–8100 WASH.

DESIGNED PC/AS	SEDIMENT AND EROSION CONTROL DETAILS	SCALE
DRAWN ZAH/CRH2	BONNIELASS	DRAWING 4 of 17
CHECKED AS	TAX MAP 31 PARCEL 254 GRID 9 ZONING R–20 FIRST (1ST) ELECTION DISTRICT HOWARD COUNTY, MARYLAND	JOB NO. 00–098
DATE 2–10–03		FILE NO. 00–098–D

#6 D:\DRAWINGS\00098–BONNIELASS\1ST–RE–SUB\S04–SEC–DETS.DWG

F–01–208

NO	REVISION	DATE
1	REV. PROP. STREET GRADES, ADD RETAINING WALLS TO STORMWATER POND	5-22-03
2	ADD TO SHEET, PROP. 10' TREE MAINTENANCE EASEMENT AND PROP. 60'x70' TREE TURNAROUND PER SDP-03-078, REV. PROP. STREET GRADES	9-29-08

SEDIMENT BASIN #1

DRAINAGE AREA = 1.45 AC.
WET STORAGE REQUIRED= 2,610 CF
WET STORAGE PROVIDED= 4,880 CF
WET STORAGE ELEVATION= 387.0
DRY STORAGE REQUIRED= 2,610 CF
DRY STORAGE PROVIDED= 4,880 CF
DRY STORAGE ELEVATION= 388.0
TOP OF DAM ELEVATION= 390.0
BOTTOM ELEVATION= 388.0
BOTTOM DIMENSIONS= 75'x73'
SIDE SLOPES= 3:1
CLEANOUT ELEVATION= 386.4

LEGEND

CONTOUR INTERVAL 2 FT.
EXISTING CONTOUR 348
PROPOSED CONTOUR 348
DIRECTION OF DRAINAGE
WALK OUT BASEMENT WOB
SPOT ELEVATION +78.4
STABILIZED CONSTRUCTION ENTRANCE SCE
EROSION CONTROL MATTING ECM
SUPER SILT FENCE SSF
LIMIT OF DISTURBED AREA OF PHASE I LOD
LIMIT OF DISTURBED AREA OF PHASE II LOD
TREE PROTECTION FENCE
EXISTING TREES TO REMAIN
EARTH DIKE A-1
STANDARD INLET PROTECTION SIP
MOUNTABLE BERM MB

NAD 83' MD. STATE PLANE
SCALE: 1" = 50'
E 1,374,800
N 572,000

PARCEL 253
N/F ROBERT J. KYLER, ET UX
L. 294 F. 374

15'x5'x18" STONE VELOCITY DISSIPATER
4"-7" STONE OVER CLASS "C" FILTER FABRIC.
(TEMPORARY)

BONNIE BRANCH OVERLOOK
PLAT Nos. 14557 - 14561

OPEN SPACE LOT 1

FOREST CONSERVATION AREA #1
0.1190 AC.
RETENTION

FOREST CONSERVATION AREA #2
0.1442 AC.
PLANTING

(TEMPORARILY BLOCK 4" PVC ORIFICE)

LIMIT OF DISTURBANCE PHASE I

LOT 2

LOT 3

LIMIT OF DISTURBANCE PHASE II

PARCEL 254
L. 5225 F. 685

LOT 35

IP

LOT 36

BONNIE BRANCH ROAD
MINOR COLLECTOR
(SCENIC ROAD)

TO HOWARD COUNTY DEPT. OF RECREATION AND PARKS

OPEN SPACE LOT 5

TO BE CONVEYED TO HOMEOWNER'S ASSOCIATION

20'x20' TURN AROUND

LOW FLOW CHANNEL

TEMP. DEWATERING DEVICE

DRAINAGE AREA TO BASIN 1.45 AC.

REMOVE EXISTING DRIVEWAY TO PROPERTY LINE

CLEAN WATER DIVERSION A-3

10' TREE MAINTENANCE EASEMENT

60'x70' TREE TURNAROUND TO BE REMOVED SDP-06-014

GREGAMIN COURT

24' PRIVATE ACCESS PLACE EASEMENT FOR OPEN SPACE LOTS 1 & 4, AND LOTS 2 & 3, AND SWM EASEMENT

BRITTEN/BRADY PROPERTY
PLAT No. 12567

RB&C

LOT 37

LOT 14

CRESTWOOD
PLAT No. 13618

CRESTWOOD
PLAT No. 13524

LOT 13

E 1,374,800
N 571,600

TEMPORARY STOCK PILE AREA

20' PRIVATE STORM DRAIN EASEMENT

STORM WATER MANAGEMENT CREDIT EASEMENT #2 AND NATURAL AREA CONSERVATION #2
0.1236 AC.

12" MAINTENANCE ACCESS

50' PUBLIC WATER AND UTILITY EASEMENT

18' NON-WOODY VEGETATIVE BUFFER

LIMIT OF DISTURBANCE PHASE I

FOREST CONSERVATION AREA #3
0.1299 AC.
RETENTION

SPRING HSE.

TO BE REMOVED (BY OTHERS)

OPEN SPACE LOT 4

STORM WATER MANAGEMENT CREDIT EASEMENT #1 AND NATURAL AREA CONSERVATION #1
0.5299 AC.

10' TREE MAINTENANCE EASEMENT

15'x5'x18" RIP-RAP INFLOW PROTECTION (TEMPORARY)

FOREST CONSERVATION AREA #4
0.6941 AC.
RETENTION

LIMIT OF DISTURBANCE PHASE II

PROPOSED SODDED SWALE

4'x10' CONCRETE TRASH PAD (OWNED AND MAINTAINED BY H.O.A.)

MILL APRON 1 1/2", WIDEN TO 14' WITH BASE COURSE AND TOP WITH 1 1/2" SURFACE PAVEMENT.

SAW CUT ASPHALT DRIVEWAY

PUBLIC 30' SWM ACCESS EASEMENT

PRIVATE DRIVEWAY EASEMENT TO PARCEL 248 (NON-CREDITED OPEN SPACE) 0.0102 AC.

LIVE CHANNEL WITH RIPRAP D50=9" OVER EROSION CONTROL FABRIC

PARCEL 246
N/F BENJAMIN H. VESTER, JR. ET UX
L. 481 F. 73

Detail 6- Gabion Inflow Protection of 1994 MD Standards and Specification for Soil Erosion and Sediment Control. Relocate upstream toe and center to existing swale.

NOTE:
SPECIAL CARE SHALL BE TAKEN WHILE WORKING UNDER OVERHEAD ELECTRIC.

NOTE:
CONTRACTOR SHALL PROVIDE SHORING AS REQUIRED TO MAINTAIN INTEGRITY OF BG&E POLE #202298 DURING INSTALLATION OF STORM DRAIN.

NOTE:
CONTRACTOR IS TO COORDINATE RELOCATION OF OVERHEAD WIRES AND REMOVAL/RESETTING OF BG&E POLES #238994 AND #213685 WITH UTILITY COMPANY

PRIVATE STORMWATER MANAGEMENT FACILITIES ON OPEN SPACE LOT 1 TO BE OWNED AND MAINTAINED BY HOA.

Reviewed for HOWARD S.C.D.
and meets Technical Requirements
Signature — Date 7/1/03
U.S. Natural Resources Conservation Service

THIS DEVELOPMENT PLAN IS APPROVED FOR SOIL EROSION AND SEDIMENT CONTROL BY THE HOWARD SOIL CONSERVATION DISTRICT.
Howard S.C.D. — Date 7/31/03

APPROVED: DEPARTMENT OF PUBLIC WORKS
CHIEF, BUREAU OF HIGHWAYS — DATE N/A

APPROVED: DEPARTMENT OF PLANNING & ZONING
CHIEF, DIVISION OF LAND DEVELOPMENT — DATE 8/15/03
CHIEF, DEVELOPMENT ENGINEERING DIVISION — DATE 8/13/03

By The Developer:

"I/We certify that all development and/or construction will be done according to these plans, and that any responsible personnel involved in the construction project will have a Certificate of Attendance at a Department of the Environment Approved Training Program for the Control of Sediment and Erosion before beginning the project. I shall engage a registered professional engineer to supervise pond construction and provide the Howard Soil Conservation District with an "as-built" plan of the pond within 30 days of completion. I also authorize periodic on-site inspections by the Howard Soil Conservation District."

Signature of Developer — Date 7.1.03

By the Engineer:

"I certify that this plan for pond construction, erosion and sediment control represents a practical and workable plan based on my personal knowledge of the site conditions. This plan was prepared in accordance with the requirements of the Howard Soil Conservation District. I have notified the developer that he/she must engage a registered professional engineer to supervise pond construction and provide the Howard Soil Conservation District with an "as-built" plan of the pond within 30 days of completion."

Signature of Engineer — Date 6-25-03

STATE OF MARYLAND — NELSON CLARK — No. 21368 — PROFESSIONAL ENGINEER
2-10-03

OWNER / DEVELOPER
BONNIELASS LLC
8835-P COLUMBIA 100 PARKWAY
COLUMBIA, MARYLAND 21045

CLARK · FINEFROCK & SACKETT, INC.
ENGINEERS · PLANNERS · SURVEYORS
7135 MINSTREL WAY · COLUMBIA, MD 21045 · (410) 381-7500 BALT. · (301) 621-8100 WASH.

DESIGNED PC/AS	SEDIMENT AND EROSION CONTROL PLAN	SCALE 1"=30'
DRAWN CRH2	BONNIELASS	DRAWING 3 of 17
CHECKED AS	TAX MAP 31 PARCEL 254 GRID 9 ZONING R-20 FIRST (1ST) ELECTION DISTRICT HOWARD COUNTY, MARYLAND	JOB NO. 00-098
DATE 2-10-03		FILE NO. 00-098-D

#6 D:\DRAWINGS\00098-BONNIELASS\1ST-RE-SUB\S03-SEC-PLAN.DWG

F-01-208

3003 02:10:03 09 mar 2003 dwg no 19-32-2003-3BE-12/22 asbuilt and 08000 apartment/D

NO	REVISION	DATE
1	REV. PROPOSED STREET GRADES, ADD RET. WALLS TO STORMWATER POND	9-16-03
2	REV. TO SHOW PROPOSED 10' TREE MAINTENANCE EASEMENT AND PROPOSED 60'x 30' TEE TURNAROUND PER SDP-05-014. REV. PROP. STREET GRADES	3-29-05

LEGEND

CONTOUR INTERVAL 2 FT.
EXISTING CONTOUR 348
PROPOSED CONTOUR 348
DIRECTION OF DRAINAGE
WALK OUT BASEMENT
SPOT ELEVATION + 78
STABILIZED CONSTRUCTION ENTRANCE SCE
EROSION CONTROL MATTING ECM
SILT FENCE SF SF SF
LIMIT OF DISTURBED AREA OF PHASE I LOD
LIMIT OF DISTURBED AREA OF PHASE II LOD
TREE PROTECTION FENCE
EXISTING TREES TO REMAIN

SCALE: 1" = 50'

NAD 83' MD. STATE PLANE

E 1,374,800
N 572,000

NOTE: THE HEIGHT OF THE 2 RETAINING WALLS SHALL NOT EXCEED 3 FEET AT ANY POINT.

BONNIE BRANCH OVERLOOK
PLAT Nos. 14557 - 14561

PARCEL 253
N/F ROBERT J. KYLER, ET UX
L. 284 F. 374

OPEN SPACE LOT 1
1.2634 ACRES

FOREST CONSERVATION AREA #1
0.1190 AC. RETENTION

FOREST CONSERVATION AREA #2
0.1142 AC. PLANTING

LIMITS OF CONSTRUCTION STA. 2+90

1' SAW CUT TO FULL DEPTH

LOT 2
3.3799 ACRES

LOT 3
2.8105 ACRES

PARCEL 254
L. 5225 F. 685

TO BE CONVEYED TO HOMEOWNER'S ASSOCIATION

LOW FLOW CHANNEL

REMOVE EXISTING DRIVEWAY TO PROPERTY LINE

10' TREE MAINTENANCE EASEMENT

60'x 30' TEE TURNAROUND PER SDP-05-014

24' PRIVATE ACCESS PLACE EASEMENT

GREGAMIN COURT

BONNIE BRANCH ROAD

MINOR COLLECTOR (SCENIC ROAD)

OPEN SPACE LOT 35 DEDICATED TO HOWARD COUNTY DEPT. OF RECREATION AND PARKS

12'x8' CLASS I RIP RAP OVER CLASS 'C' FILTER FABRIC. D50=9", D100=14"

1' SAW CUT TO FULL DEPTH

LIMITS OF CONSTRUCTION STA. 0+50

NOTE: 0+50 TO 2+90 LOWER BONNIE BRANCH ROAD PROFILE IN ACCORDANCE WITH PROFILE ON SHEET 13. MATCH SECTION AND PAVING DEPTH TO EX. SECTION AND PAVING DEPTH.

4'x10' CONCRETE TRASH PAD OWNED AND MAINTAINED BY THE HOMEOWNER'S ASSOCIATION

MILL APRON 1 1/2", WIDEN TO 14' WITH BASE COURSE AND TOP WITH 1 1/2" SURFACE PAVEMENT.

0+00 INTERSECTION ANGLE 84°25'06"

SAW CUT ASPHALT DRIVEWAY

FOREST CONSERVATION AREA #3
0.1299 AC. RETENTION

SPRING HSE. TO BE REMOVED (BY OTHERS)

OPEN SPACE LOT 4
1.0000 ACRES

STORM WATER MANAGEMENT CREDIT EASEMENT #1 AND NATURAL AREA CONSERVATION #1
0.5298 AC.

FOREST CONSERVATION AREA #4
0.6941 AC. RETENTION

STORM WATER MANAGEMENT CREDIT EASEMENT #2 AND NATURAL AREA CONSERVATION #2
0.1236 AC.

TO BE REMOVED (BY OTHERS)

NOT TO REMOVE TREES OVER 2" IN DIAMETER ADJUST IN THE FIELD AS NEEDED.

PROPOSED SODDED SWALE

10'x10' PUBLIC WATER AND UTILITY EASEMENT

20' PRIVATE STORM DRAIN EASEMENT

PUBLIC 30' SWM ACCESS EASEMENT

PRIVATE DRIVEWAY EASEMENT TO PARCEL 246 (NON-CREDITED OPEN SPACE) 0.0102 AC.

PARCEL 246
N/F BENJAMIN H. VESTER, JR. ET UX
L. 481 F. 73

BRITTEN/BRADY PROPERTY
PLAT No. 12567
LOT 37
RB&C

CRESTWOOD
PLAT No. 13618
LOT 14

CRESTWOOD
PLAT No. 13524
LOT 13

LOT 35
LOT 36
IP

E 1,374,800
N 571,600

MDE Detail 6- Gabion Inflow Protection

NOTE:
SPECIAL CARE SHALL BE TAKEN WHILE WORKING UNDER OVERHEAD ELECTRIC.

NOTE:
CONTRACTOR SHALL PROVIDE SHORING AS REQUIRED TO MAINTAIN INTEGRITY OF BG&E POLE #202298 DURING INSTALLATION OF STORM DRAIN.

NOTE:
CONTRACTOR IS TO COORDINATE RELOCATION OF OVERHEAD WIRES AND REMOVAL/RESETTING OF BG&E POLES #238994 AND #213685 WITH UTILITY COMPANY

PRIVATE STORMWATER MANAGEMENT FACILITIES ON OPEN SPACE LOT 1 TO BE OWNED AND MAINTAINED BY HOA.

OWNER / DEVELOPER
BONNIELASS LLC
8835-P COLUMBIA 100 PARKWAY
COLUMBIA, MARYLAND 21045

APPROVED: DEPARTMENT OF PUBLIC WORKS

CHIEF, BUREAU OF HIGHWAYS — DATE N/A

APPROVED: DEPARTMENT OF PLANNING & ZONING

CHIEF, DIVISION OF DEVELOPMENT — DATE 8/15/03

CHIEF, DEVELOPMENT ENGINEERING DIVISION — DATE 8/13/03

By The Developer:

"I/We certify that all development and/or construction will be done according to these plans, and that any responsible personnel involved in the construction project will have a Certificate of Attendance at a Department of the Environment Approved Training Program for the Control of Sediment and Erosion before beginning the project. I shall engage a registered professional engineer to supervise pond construction and provide the Howard Soil Conservation District with an "as-built" plan of the pond within 30 days of completion. I also authorize periodic on-site inspections by the Howard Soil Conservation District."

Signature of Developer — 7.1.03 Date

By the Engineer:

"I certify that this plan for pond construction, erosion and sediment control represents a practical and workable plan based on my personal knowledge of the site conditions. This plan was prepared in accordance with the requirements of the Howard Soil Conservation District. I have notified the developer that he/she must engage a registered professional engineer to supervise pond construction and provide the Howard Soil Conservation District with an "as-built" plan of the pond within 30 days of completion."

Signature of Engineer — 6-25-03 Date

STATE OF MARYLAND — NELSON CLARK — No. 21612 — REGISTERED PROFESSIONAL ENGINEER

2-10-03

#6 D:\DRAWINGS\00098-BONNIELASS\1ST-RE-SUB\S02-SDP-SWM-GRAD.DWG

CLARK · FINEFROCK & SACKETT, INC.
ENGINEERS · PLANNERS · SURVEYORS
7135 MINSTREL WAY · COLUMBIA, MD 21045 · (410) 381-7500 BALT. · (301) 621-8100 WASH.

DESIGNED PC/AS	SITE DEVELOPMENT, STORMWATER MANAGEMENT AND GRADING PLAN	SCALE 1"=30'
DRAWN ZAH/CRH2	BONNIELASS	DRAWING 2 of 17
CHECKED AS	TAX MAP 31 PARCEL 254 GRID 9 ZONING R-20 FIRST (1ST) ELECTION DISTRICT HOWARD COUNTY, MARYLAND	JOB NO. 00-098
DATE 2-10-03		FILE NO. 00-098-D

F-01-208

STORMWATER MANAGEMENT CONSTRUCTION PLANS

BONNIELASS

LOTS 1-4

SHEET INDEX

SHEET	DESCRIPTION
1	COVER SHEET
2	SITE DEVELOPMENT PLAN, STORMWATER MANAGEMENT PLAN AND GRADING PLAN
3	SEDIMENT EROSION CONTROL PLAN
4	SEDIMENT AND EROSION CONTROL DETAILS
5	STORM DRAIN AND PAVING DETAILS
6	STORMWATER MANAGEMENT POND DETAILS
7	SURFACE SAND FILTER DETAILS
8	LANDSCAPE PLAN
9	DRAINAGE AREA MAP
10	FOREST STAND DELINEATION (EXISTING CONDITIONS)
11	BORING LOGS AND STORMWATER POND LANDSCAPE PLAN
12	WALL ELEVATION AND RETAINING WALL DESIGN
13	WALL ELEVATION AND ROAD PROFILE
14	FOREST CONSERVATION PLAN
15	REFORESTATION PLANTING PLAN
16	PRIVATE ACCESS PLACE PLAN AND PROFILE
17	SITE DEVELOPMENT PLAN PER SDP-05-014

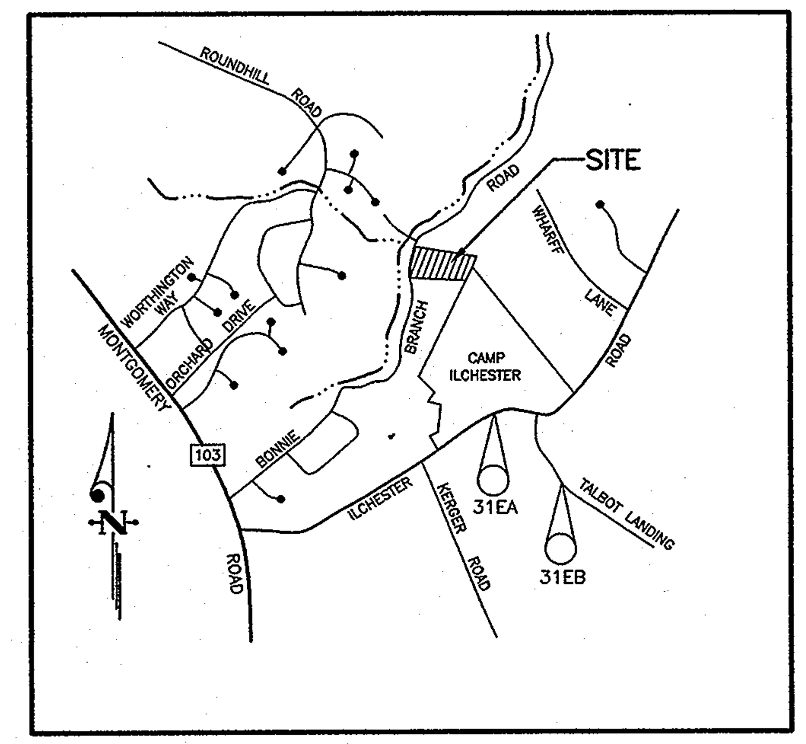

VICINITY MAP

SCALE: 1" = 2000'

BENCH MARKS

MONUMENT	DESCRIPTION	ELEVATION	NORTHING	EASTING
31EA	MONUMENT	469.603	569641.123	1,374,815.935
31EB	MONUMENT	453.396	568730.984	1,376,273.491

SITE ANALYSIS DATA CHART

a. Total Project Area: 5.6308 acres or 245,277 square feet
b. Area of Plan Submission: 5.6308 acres
c. Limit of Disturbed Area: 2.81 acres
d. Present Zoning: R-20
e. Proposed Uses for Site and Structures: Residential
f. Open Space: Lot 1 = 1.2634 AC.
Lot 4 = 1.0000 AC.
TOTAL = 2.2634 AC.

GENERAL NOTES:

1. ALL CONSTRUCTION SHALL BE IN ACCORDANCE WITH THE LATEST STANDARDS AND SPECIFICATIONS OF HOWARD COUNTY PLUS MSHA STANDARDS AND SPECIFICATIONS, IF APPLICABLE.
2. THE CONTRACTOR SHALL NOTIFY THE DEPARTMENT OF PUBLIC WORKS/BUREAU OF ENGINEERING, CONSTRUCTION INSPECTION DIVISION AT (410) 313-1880 AT LEAST FIVE (5) WORKING DAYS PRIOR TO THE START OF WORK.
3. THE CONTRACTOR SHALL NOTIFY "MISS UTILITY" AT 1-800-257-7777 AT LEAST 48 HOURS PRIOR TO ANY EXCAVATION WORK.
4. PROJECT BACKGROUND:
ZONING: R-20
TOTAL TRACT AREA: 5.6308 AC
NUMBER OF PROPOSED LOTS: 2 BUILDABLE, 2 OPEN SPACE
5. TRAFFIC CONTROL DEVICES, MARKINGS, AND SIGNING SHALL BE IN ACCORDANCE WITH THE LATEST EDITION OF THE MANUAL ON UNIFORM TRAFFIC CONTROL DEVICES (MUTCD). ALL STREET AND REGULATORY SIGNS SHALL BE IN PLACE PRIOR TO THE PLACEMENT OF ANY ASPHALT.
6. TOPOGRAPHIC SURVEY WAS FIELD RUN AT 2' CONTOUR INTERVALS BY CLARK, FINEFROCK & SACKETT, INC., DATED FEBRUARY, 2001.
7. HORIZONTAL AND VERTICAL CONTROL BASED ON HOWARD COUNTY CONTROL STATIONS 31EA-ELEV. 469.603 AND 31EB-ELEV. 453.396.
8. STREET LIGHTS WILL NOT BE REQUIRED IN THIS DEVELOPMENT IN ACCORDANCE WITH THE DESIGN MANUAL.
9. PUBLIC WATER AND SEWER ARE TO BE UTILIZED.
10. STORMWATER MANAGEMENT FOR THIS PROJECT IS BEING PROVIDED ON SITE FOR QUANTITY AND QUALITY. QUALITY CONTROL FOR THIS SITE IS A SURFACE SAND FILTER. QUANTITY CONTROL FOR THIS SITE IS EXTENDED DETENTION. THE STORM-WATER MANAGEMENT FACILITY WILL BE PRIVATELY OWNED AND MAINTAINED BY THE HOMEOWNER'S ASSOCIATION.
11. THE FOLLOWING STUDIES WERE PREPARED:
A. FOREST STAND DELINEATION BY THE GREENFIELDS COMPANY, DATED 5/18/01
B. WETLAND CERTIFICATION BY THE GREENFIELDS COMPANY, DATED 11/10/01
C. GEOTECHNICAL REPORT BY HERBST/BENSON ASSOCIATES, DATED MAY 31, 2001
12. EXISTING UTILITIES AND IMPROVEMENTS SHOWN ARE TAKEN FROM AVAILABLE RECORDS, WHERE NOT VISIBLY EVIDENT FROM FIELD SURVEY.
13. TRENCH COMPACTION FOR STORM DRAINS WITHIN THE ROAD OR STREET RIGHTS OF WAY LIMITS SHALL BE IN ACCORDANCE WITH "HOWARD COUNTY DESIGN MANUAL", VOL IV, STD. NO. G-2.01
14. ALL COMPACTED FILL SHALL BE IN ACCORDANCE WITH AASHTO T-180 REQUIRE-MENTS.
15. ALL FILLET RADII ARE 5 FT. UNLESS INDICATED OTHERWISE.
16. SAG AND CREST VERTICAL CURVES WERE DESIGNED IN ACCORDANCE WITH THE "HOWARD COUNTY DESIGN MANUAL", VOL. III.
17. BONNIE BRANCH ROAD IS A SCENIC ROAD.
18. WAIVER PETITION, WP-01-139, WAS GRANTED PER LETTER DATED AUG. 2, 2001. ACTION WAS TAKEN TO WAIVE SECTION 16.121(E), REQUIRING 40' FRONTAGE ON A PUBLIC ROAD FOR OPEN SPACE LOTS.
19. STORMWATER MANAGEMENT FACILITIES WILL BE REQUIRED ON THE PARCELS SHOWN ON THIS PLAN IN ACCORDANCE WITH THE DESIGN MANUALS. PRIOR TO SIGNATURE APPROVAL OF THE SITE DEVELOPMENT PLAN, THE DEVELOPER WILL BE REQUIRED TO EXECUTE THE DEVELOPER'S AGREEMENT FOR THE CONSTRUCTION OF THE STORMWATER MANAGEMENT FACILITY AND A MAINTENANCE AGREEMENT. THE STORMWATER MANAGEMENT FACILITIES AREA TO BE CONSTRUCTED AS A PART OF THIS SUBDIVISION. CONSTRUCTION MAY ONLY BEGIN AFTER THE APPROVAL OF THE CONSTRUCTION DRAWINGS FOR THE FURTHER SUBDIVISION OF LOT 3.
20. "THE GRANTOR ACKNOWLEDGES THAT THE DEDICATION OF THE EASEMENT AREA TO THE COUNTY HAS BENEFITTED THE GRANTOR BY REDUCING THE SIZE OF THE STORM WATER MANAGEMENT FACILITY REQUIRED BY THE DEVELOPMENT OF THE PROPERTY ASSOCIATED WITH THE EASEMENT AREA. ACCORDINGLY, THE GRANTOR FOR ITSELF AND ITS SUCCESSORS AND ASSIGNS, SHALL NOT PERMIT OTHERS TO GRADE WITHIN THE EASEMENT AREA OR MOW GRASSY VEGETATION WITHIN THE EASEMENT AREA. THE GRANTOR AND ITS SUCCESSORS AND ASSIGNS SHALL PERIODICALLY INSPECT THE EASEMENT AREA AND TAKE NECESSARY STEPS TO REMOVE DEBRIS AND TRASH, AND CONTROL THE GROWTH OF NOXIOUS WEEDS. THE GRANTOR SHALL POST AND MAINTAIN MARKERS AT REGULAR INTERVALS NO MORE THAN FIFTY (50) FEET APART IDENTIFYING THE BOUNDARY OF THE EASEMENT AREA. THE MARKERS SHALL CONTAIN A STATEMENT OF THE PROHIBITED ACTIVITIES WITHIN THE EASEMENT AREA. THE PENALTIES FOR A VIOLATIONS OF THE TERMS OF THIS EASEMENT ARE SET FORTH IN HOWARD COUNTY CODE SECTION 18.907".
21. A NATURAL AREA CONSERVATION AND STORMWATER MANAGEMENT CREDIT EASEMENT, OF 0.6535 AC. HAS REDUCED THE REQUIRED WQv BY 0.013 AC.-FT.
22. THE FOREST CONSERVATION EASEMENT HAS BEEN ESTABLISHED TO FULFILL THE REQUIREMENTS OF SECTION 16.1200 OF THE HOWARD COUNTY CODE AND FOREST CONSERVATION ACT. NO CLEARING, GRADING OR CONSTRUCTION IS PERMITTED WITHIN THE FOREST CONSERVATION EASEMENT; HOWEVER, FOREST MANAGEMENT PRACTICES AS DEFINED IN THE DEED OF FOREST CONSERVATION EASEMENT ARE ALLOWED.
23. THE FOREST CONSERVATION REQUIREMENT OF SECTION 16.1200 OF THE HOWARD COUNTY CODE: FOREST CONSERVATION ACT, HAS BEEN MET BY THE REFORESTATION OF 1.26 ACRES OFFSITE. FINANCIAL SURETY FOR THE ONSITE FOREST CONSERVATION OBLIGATIONS FOR THIS SUBDIVISION ARE $8,189.00 FOR RETENTION OF 0.94 ACRES OF FOREST AND $2,396.00 FOR ONSITE REFORESTATION OF 0.11 ACRES. FINANCIAL SURETY FOR THE OFF-SITE REFORESTATION IS $27,443.00.
24. LANDSCAPING FOR LOTS 1 THRU 4 IS PROVIDED IN ACCORDANCE WITH THE LANDSCAPE PLAN INCLUDED WITH THE CONSTRUCTION PLANS FOR THIS PROJECT. LANDSCAPING IS IN ACCORDANCE WITH SECTION 16.124 OF THE HOWARD COUNTY CODE AND LANDSCAPE MANUAL. SURETY FOR THE REQUIRED PLANT MATERIALS ($12,180.00) HAS BEEN POSTED AS PART OF THE DEVELOPER'S AGREEMENT.
25. RETAINING WALLS SHALL ONLY BE CONSTRUCTED UNDER THE OBSERVATION OF A REGISTERED PROFESSIONAL ENGINEER AND UNDER THE SUPERVISION OF A CERTIFIED GEOTECHNICAL PROFESSIONAL.
26. DESIGN MANUAL WAIVER WAS GRANTED FOR INTERSECTION SIGHT DISTANCE OF DESIGN MANUAL, VOLUME III, SECTION 2.5.2.H.3 ON NOVEMBER 1, 2002.
27. IMPROVEMENTS FOR EXISTING BONNIE BRANCH ROAD FROM STATION 0+50 TO 2+90 INCLUDE LOWERING OF THE ROAD TO PROVIDE PROPER SIGHT DISTANCE AND THE ADDITION OF A 3' SHOULDER ALONG THE FRONTAGE OF THE SITE.

OPTION 5:			FOREST CONSERVATION DATA SUMMARY			
File Number: **F-01-208**		Project/Subdivision Name: **Bonnielass, Lots 1 thru 4**				
Land Use **Residential**	Subwatershed Number 2130906	On-site MD Grid N (1) **511,400**	On-site MD Grid E (1) **862,000**	Net Tract Area (Acs.) **5.63**	Total Site Disturbance (Acs.) **4.69**	
Priority Disturbance within Total Disturbed Area (2) **N/A**	% of Priority Disturbance (3) **N/A**	Existing Forest (Acs.) (4) **5.13**	On-site Retention (Acs.) **0.94**	Off-site Retention (Acs.) (5) N/A	Cleared Forest (Acs.) (4) **4.19**	
On-site Reforestation (Acs.) **0.11**	Off-site Reforestation (Acs.) (5) **1.26**	On-site Afforestation (Acs.) N/A	Off-site Afforestation (Acs.) (5) **N/A**	Off-site MD Grid N (1) **528,000**	Off-site MD Grid E (1) **828,000**	
Total Acres in Easement **2.32**	Total Acres of Priority Area Within Total Easement **N/A**	% of Priority Area Within Total Easement **N/A**	Amount of Surety Posted $38,028	Amount of Fee-in-Lieu **N/A**	Cash Receipt No. for Fee (6) N/A	Off-site Subwatershed Number 2131106

(1) - These 6 digit coordinates can be taken from ADC's Street Map of Howard County.
(2) - Provide the acreage of the total site disturbance which occurs in priority areas (wetlands, wetland buffers, stream buffers, steep slopes, floodplain).
(3) - Provide the percentage of the total site disturbance which occurs within priority areas.
(4) - These figures apply to the acreage of existing forest in the Net Tract Area and to the acreage of the forest which will be cleared.
(5) - These figures apply to off-site planting and/or retention not associated with a Forest Conservation Bank
(6) - This receipt number is completed by DPZ staff.

APPROVED: DEPARTMENT OF PUBLIC WORKS — N/A
CHIEF, BUREAU OF HIGHWAYS — DATE

APPROVED: DEPARTMENT OF PLANNING & ZONING
Cindy Hamilton — 8/15/03
CHIEF, DIVISION OF LAND DEVELOPMENT — DATE
[signature] — 8/13/03
CHIEF, DEVELOPMENT ENGINEERING DIVISION MAJ — DATE

1	REV. SHEET NUMBER 15 TO 17	3-28-05
№	REVISION	DATE

OWNER / DEVELOPER
BONNIELASS LLC
8835-P COLUMBIA 100 PARKWAY
COLUMBIA, MARYLAND 21045

STATE OF MARYLAND — G. NELSON CLARK — NO. 7135 — REGISTERED PROFESSIONAL ENGINEER
6-25-03

#6 D:\DRAWINGS\00098-BONNIELASS\1ST-RE-SUB\S01-COVER.DWG

CLARK · FINEFROCK & SACKETT, INC.
ENGINEERS · PLANNERS · SURVEYORS
7135 MINSTREL WAY • COLUMBIA, MD 21045 • (410) 381-7500 BALT. • (301) 621-8100 WASH.

DESIGNED PC	COVER SHEET	SCALE AS SHOWN
DRAWN ZAH/CRH2	**BONNIELASS**	DRAWING 1 of 17
CHECKED AS	TAX MAP 31 PARCEL 254 GRID 9 ZONING R-20 FIRST (1ST) ELECTION DISTRICT HOWARD COUNTY, MARYLAND	JOB NO. 00-098
DATE 6-23-03		FILE NO. 00-098-D

F-01-208