SHEET INDEX	
NO.	DESCRIPTION
1	TITLE SHEET
2	ROAD PLAN, PROFILES AND DETAILS
3	STORM DRAINAGE AREA MAP, PROFILES & DETAILS
4	SEDIMENT & EROSION CONTROL PLAN AND DETAILS
5	STORMWATER MANAGEMENT NOTES AND DETAILS
6	STORMWATER MANAGEMENT NOTES AND DETAILS
7	LANDSCAPE AND RETAINING WALL PLAN & DETAILS

ROADWAYS, STORM DRAINAGE AND STORMWATER MANAGEMENT CONSTRUCTION PLANS

HARWOOD PARK

IVY SPRING ROAD & CROSS IVY ROAD AND LOTS 1093C, 1094C, 1097C, 1098B, 1100A–1101A, 1103A–1104A, 1106A–1108A, 1109, 1110B–1111B, 1116B–1118B, 1133B–1137B, 1141B AND 1143B

1st ELECTION DISTRICT of HOWARD COUNTY, MD

HOWARD COUNTY FILE No. F-01-035

GENERAL NOTES

1. ALL CONSTRUCTION SHALL BE IN ACCORDANCE WITH THE LATEST STANDARDS AND SPECIFICATIONS OF HOWARD COUNTY, PLUS MSHA STANDARDS AND SPECIFICATIONS, IF APPLICABLE.
2. THE CONTRACTOR SHALL NOTIFY THE DEPARTMENT OF PUBLIC WORKS CONSTRUCTION INSPECTION DIVISION AT 410–313–1880 AT LEAST FIVE(5) WORKING DAYS PRIOR TO THE START OF WORK.
3. THE CONTRACTOR SHALL NOTIFY "MISS UTILITY" AT 1–800–257–7777 AT LEAST 48 HOURS PRIOR TO ANY EXCAVATION.
4. PROJECT BACKGROUND :
   LOCATION : TAX MAP 38 – P/O PARCEL 873
   ZONING : R–12
   TOTAL TRACT AREA : 4.35 Ac.±
   NUMBER OF PROPOSED LOTS : 21 BUILDABLE (23 TOTAL INCL. 1 EX.)
   DPZ REFERENCE # : N/A
5. TRAFFIC CONTROL DEVICES, MARKINGS, AND SIGNING SHALL BE IN ACCORDANCE WITH THE MOST CURRENT EDITION OF THE MANUAL ON UNIFORM TRAFFIC CONTROL DEVICES (MUTCD). ALL STREET AND REGULATORY SIGNS SHALL BE IN PLACE PRIOR TO THE PLACEMENT OF ANY ASPHALT.
6. TOPOGRAPHY SHOWN TAKEN FROM FIELD RUN SURVEY BY BENCHMARK ENGINEERING, INC., ON OR ABOUT 3/00 AND SUPPLEMENTED WITH TOPOGRAPHY PURCHASED FROM HOWARD COUNTY DEPARTMENT OF TECHNOLOGY & COMMUNICTION SERVICES, GIS DIVISION. CONTOUR INTERVAL IS 2 FEET.
7. STREET LIGHT PLACEMENT, TYPE OF FIXTURE AND POLE SELECTION SHALL BE IN ACCORDANCE WITH THE LATEST HOWARD COUNTY DESIGN MANUAL, VOLUME III.
8. ALL ROAD FILLS SHALL BE COMPACTED TO 95% AS DETERMINED BY AASHTO T–180.
9. IN ACCORDANCE WITH SECTION 16.134(d)(2) OF THE SUBDIVISION REGULATIONS, IF A SITE IS ADJACENT TO DEVELOPMENTS WITHOUT SIDEWALKS AND THERE IS NO NEED FOR SIDEWALKS TO SERVE SCHOOLS, SHOPPING OR ACTIVE RECREATION AREAS, SIDEWALKS CAN BE ELIMINATED. IF SIDEWALKS WERE ADDED TO THIS SITE, THIS AREA WOULD NOT BE CONSISTENT WITH THE REST OF THE HARWOOD PARK AREA AND THE ROADWAY SECTION WOULD NEED TO BE REVISED TO A CLOSED–SECTION ROADWAY WHICH ALSO IS INCONSISTENT. THEREFORE, SIDEWALKS HAVE NOT BEEN SHOWN ON THIS PLAN.
10. THIS SUBDIVISION IS LOCATED IN THE METROPOLITAN DISTRICT.
11. NO BURIAL GROUNDS OR CEMETARIES EXIST ON–SITE.
12. WATER AND SEWER FOR THIS SUBDIVISION IS PUBLIC, CONTRACT NUMBER 14–3916–D. DRAINAGE AREA IS DEEP RUN.
13. WETLANDS DELINEATION PREPARED BY ECO–SCIENCE PROFFESSIONALS, INC., ON OR ABOUT 5/00
14. GEOTECHNICAL REPORT PREPARED BY HILLIS–CARNES ASSOC., INC., DATED 5/00
15. EXISTING UTILITIES WERE LOCATED BY RECORD DRAWINGS AND/OR FIELD RUN SURVEY BY BENCHMARK ENGINEERING, INC., CONTRACTOR IS RESPONSIBLE FOR VERIFYING THE LOCATION OF ALL EXISTING UTILITIES PRIOR TO THE START OF CONSTRUCTION ACTIVITIES.
16. UNLESS NOTED AS "PRIVATE", ALL EASEMENTS ARE PUBLIC.
17. STORMWATER MANAGEMENT QUANTITY CONTROL IS PROVIDED BY A DETENTION FACILITY; QUALITY CONTROL IS PROVIDED BY EXTENDED DETENTION. THE SWMF SHALL BE PRIVATELY OWNED AND MAINTAINED.
18. NO CLEARING, GRADING OR CONSTRUCTION IS PERMITTED WITHIN WETLANDS, WETLANDS BUFFERS, STREAMS, STREAM BUFFERS OR FLOODPLAIN AREAS EXCEPT FOR THE WORK APPROVED AS PART OF THESE PLANS.
19. EX. FLOODPLAIN INFORMATION SHOWN WAS TAKEN FROM THE HOWARD COUNTY FLOODPLAIN MAP ON FILE FOR THE SHALLOW RUN.
20. THIS PROJECT IS EXEMPT FROM THE REQUIREMENTS OF SECTION 16.1200 OF THE HOWARD COUNTY CODE FOR FOREST CONSERVATION. HARWOOD PARK WAS IN EXISTENCE PRIOR TO THE ENACTMENT OF THE FOREST CONSERVATION REGULATIONS AND NO ADDITIONAL LOTS ARE BEING CREATED.
21. A LANDSCAPE SURETY FOR THE STREET TREES IN THE AMOUNT OF $4800.00 AND FOR THE SWMF LANDSCAPING IN THE AMOUNT OF $4350.00 WILL BE BONDED AS PART OF THE DEVELOPER'S AGREEMENT. PERIMETER LANDSCAPING IS NOT REQUIRED FOR THE SITE SINCE THE LOTS WERE IN EXISTENCE PRIOR TO ADOPTION OF THE HO. CO. LANDSCAPE MANUAL. ALL LANDSCAPING SHALL BE IN ACCORDANCE WITH SECTION 16.124 OF THE HOWARD COUNTY CODE AND LANDSCAPE MANUAL.
22. FOR FLAG OR PIPESTEM LOTS, REFUSE COLLECTION, SNOW REMOVAL AND ROAD MAINTENANCE ARE PROVIDED TO THE JUNCTION OF THE FLAG OR PIPESTEM AND ROAD RIGHT–OF–WAY LINE AND NOT TO THE PIPESTEM LOT DRIVEWAY.
23. DRIVEWAYS SHALL BE PROVIDED PRIOR TO ISSUANCE OF A USE AND OCCUPANCY PERMIT FOR ANY NEW DWELLINGS TO INSURE SAFE ACCESS FIRE AND EMERGENCY VEHICLES PER THE FOLLOWING MINIMUM REQUIREMENTS:
   A.) WIDTH – 12 FEET (14 FT. SERVING MORE THAN ONE RESIDENCE)
   B.) SURFACE – 6 INCHES COMPACTED CRUSHER RUN BASE W/TAR & CHIP COATING
   C.) GEOMETRY – 15% GRADE MAX.; 10% MAX. GRADE CHANGE; 45 FOOT MIN. TURNING RADIUS
   D.) STRUCTURES(BRIDGES/CULVERTS) – CAPABLE OF SUPPORTING 25 GROSS TONS (H25 LOAD)
   E.) DRAINAGE ELEMENTS – CAPABLE OF SAFELY PASSING 100–YEAR FLOOD WITH NO MORE THAN 1 FOOT DEPTH OVER DRIVEWAY SURFACE
   F.) STRUCTURE CLEARANCE – MINIMUM 12 FEET
   G.) MAINTENANCE – SUFFICIENT TO ENSURE ALL–WEATHER USE
24. THERE IS AN EXISTING DWELLING ON LOT 1104A TO REMAIN. NO NEW BUILDINGS, EXTENSIONS OR ADDITIONS TO THE EX. DWELLING ARE TO BE CONSTRUCTED AT A DISTANCE TO THE PROPERTY LINE LESS THAN THE ZONING REGULATIONS REQUIRE.
25. LOTS 1133 TO 1137B AND LOTS 116B TO 118B SHALL DERIVE ACCESS ONTO CROSS IVY ROAD ONLY AND ACCESS ACROSS THE FLOODPLAIN AREA IS NOT PERMITTED.
26. HOMEOWNER'S ASSOCIATION DOCUMENTS WILL BE FILED WITH THE STATE DEPARTMENT OF TAXATION AND ASSESSMENTS PRIOR TO RECORDATION OF THE PLAT OF PUBLIC DEDICATION.
27. A USE–IN–COMMON MAINTENANCE AGREEMENT FOR LOTS 1101A & 1103A AND 1104A, 1106A–1108A WILL BE RECORDED AMONG THE LAND RECORDS OF HOWARD COUNTY, PRIOR TO RECORDATION OF THE PLAT OF PUBLIC DEDICATION.
28. STORMWATER MANAGEMENT FOR THE LOTS WITHIN THIS AREA WILL BE REQUIRED TO BE PROVIDED IN ACCORDANCE WITH THE REGULATIONS IN EFFECT AT THE TIME OF APPLICATION FOR A BUILDING PERMIT.

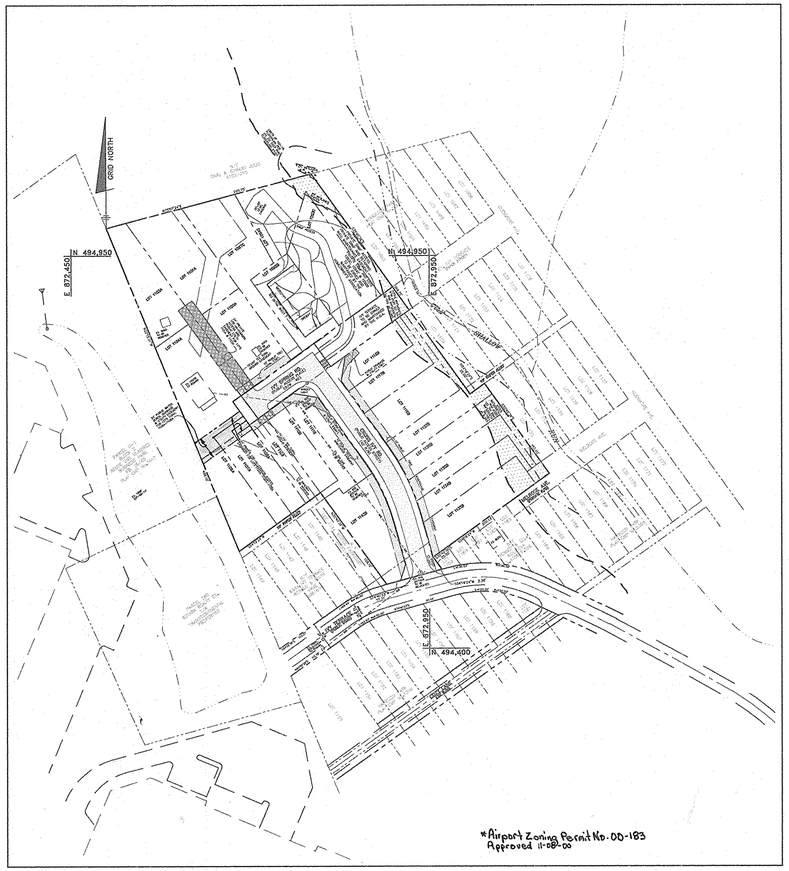

LOCATION PLAN
SCALE: 1" = 100'

BENCH MARKS (NAD27)

No. 132 ELEV.
REBAR AND CAP FOUND ON THE NORTHERN RIGHT–OF–WAY LINE OF IVY TERRACE AT THE LEFT FRONT CORNER OF LOT 1159
N.494510.8884 E.872956.8690

No. 136 ELEV.
REBAR AND CAP FOUND AT THE CORNER OF LOT 1154, 1155 AND THE SOUHTERN RIGHT–OF–WAY LINE OF IVY TERRACE
N.494438.0155 E.872865.3084

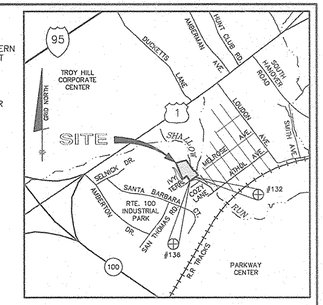

VICINITY MAP
SCALE: 1" = 2000'

LEGEND

SOILS CLASSIFICATION AbA
SOILS DELINEATION
EXISTING CONTOURS 999
PROPOSED CONTOURS 999
LIMIT OF WETLANDS
LIMITS OF FLOODPLAIN
EXISTING STREAM
75' SREAM BUFFER
EXISTING WOODS LINE
PROPOSED WOODS LINE
EXISTING STRUCTURE
PROPOSED STRUCTURE
DRAINAGE AREA
DRAINAGE DIVIDE
Tc STUDY PATH (A) (B)
LIMIT OF DISTURBANCE
STABILIZED CONSTRUCTION ENTRANCE SCE
SUPER SILT FENCE SSF
SOIL STABILIZATION MATTING
EARTH DIKE
INLET PROTECTION [ ]
REMOVABLE PUMP STATION RPS

NO.	DATE	REVISION
1	8-6-02	REV. LOCATION OF RETAINING WALL IN POND

APPROVED: HOWARD COUNTY DEPARTMENT OF PUBLIC WORKS
CHIEF, BUREAU OF HIGHWAYS — DATE 8/27/01

APPROVED: HOWARD COUNTY DEPARTMENT OF PLANNING AND ZONING
CHIEF, DIVISION OF LAND DEVELOPMENT — DATE 12/6/01
CHIEF, DEVELOPMENT ENGINEERING DIVISION MK 11-28-01 — DATE 9/24/01

BENCHMARK
ENGINEERS ▲ LAND SURVEYORS ▲ PLANNERS
ENGINEERING, INC.
8480 BALTIMORE NATIONAL PIKE ▲ SUITE 418
ELLICOTT CITY, MARYLAND 21043
phone: 410–465–6105 ▲ fax: 410–465–6644
email: Benchmrk@cais.com

Donald Mason
STATE OF MARYLAND — DONALD A. MASON — No. 10,866 — REGISTERED PROFESSIONAL ENGINEER
8/6/01

OWNER/DEVELOPER:
SPRINGLAND, LLC.
5570 STERRET STREET
COLUMBIA, MD 21044
PHONE: 410–472–2993

PROJECT: HARWOOD PARK
IVY SPRING ROAD & CROSS IVY ROAD AND LOTS 1093C, 1094C, 1097C, 1098B, 1100A–1101A, 1103A–1104A, 1106A–1108A, 1109, 1110B–1111B, 1116B–1118B, 1133B–1137B, 1141B AND 1143B

LOCATION: TAX MAP 38 – GRIDS 13 & 14
P/O PARCEL 873
1st ELECTION DISTRICT
HOWARD COUNTY, MARYLAND

TITLE: TITLE SHEET

DATE: AUGUST, 2000 / AUGUST, 2001 — PROJECT NO. 1306

Design: DAM MLV — Draft: MCR — Check: DAM

SCALE: AS SHOWN — DRAWING 1 OF 7

AS-BUILT

F-01-035

\\ssivol1\engineer\projects\1306\dwg\7009.dwg, 08/01/2001 03:50:30 PM, BALTIMORE RAVENS SUPER BOWL CHAMPS

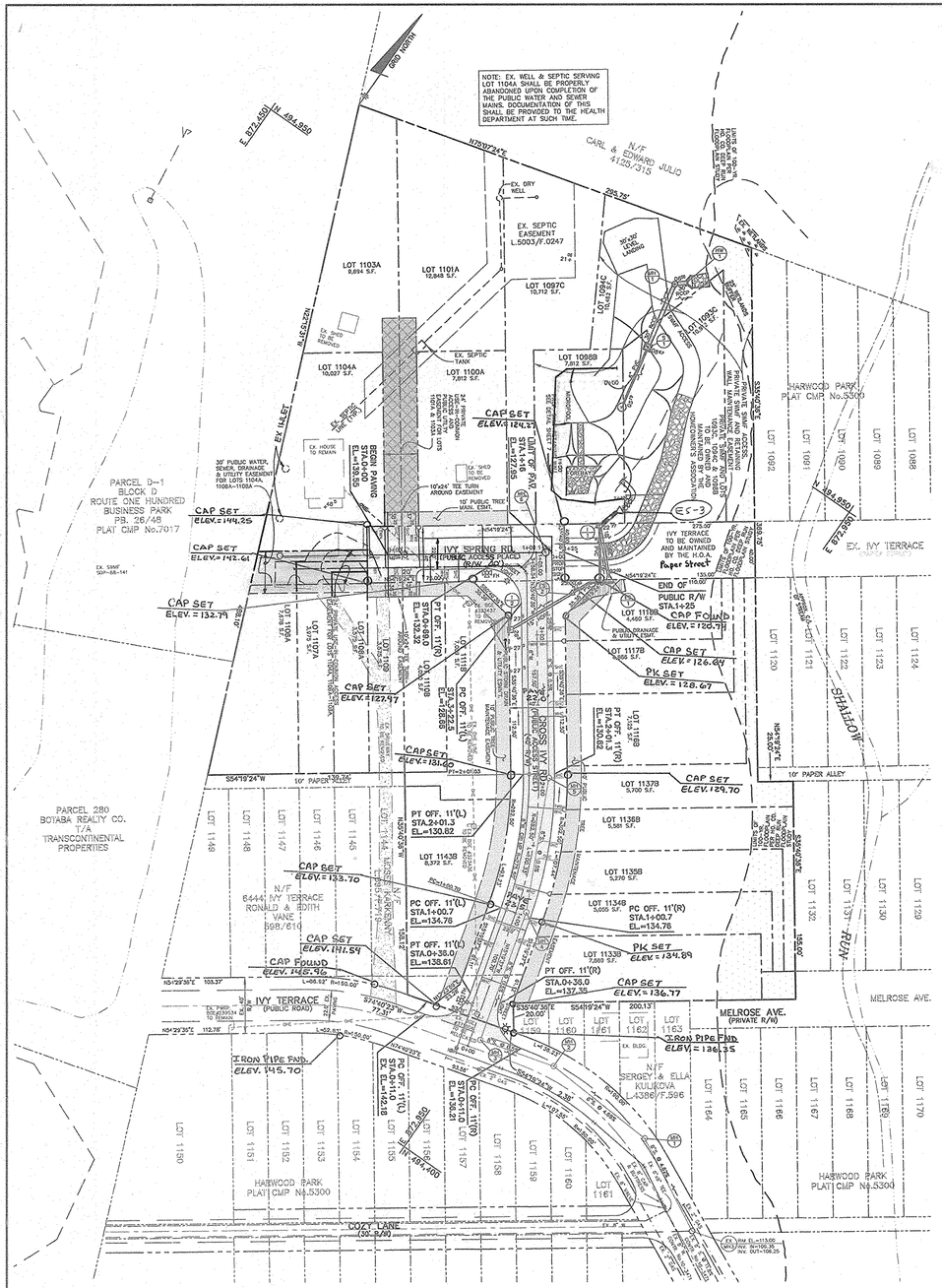

ROAD PLAN
SCALE: 1" = 50'

CONTRACTOR NOTES:
1.) MAINTAIN A MINIMUM OF ONE LANE OPEN ON EX. IVY TERRACE AT ALL TIMES DURING CONSTRUCTION ACTIVITY
2.) MAINTAIN ACCESS TO EX. HOUSE VIA EX. DRIVEWAY AT ALL TIMES DURING CONSTRUCTION ACTIVITY
3.) EXERCISE EXTREME CAUTION WHEN WORKING IN THE AREA OF EX. OVERHEAD ELECTRIC LINES
4.) A PRIVATE WHC EXISTS CROSSING THE PROPERTY TO SERVE THE RESIDENCES AT 6440 AND 6451 IVY TERRACE; THE EXACT LOCATION IS UNKNOWN; TEST PIT FOR LOCATION AND MAINTAIN SERVICE UNTIL SUCH TIME AS A CONNECTION TO THE PROP. WATERLINE WITHIN IVY TERRACE CAN BE MADE

STREET LIGHT SCHEDULE		
SYMBOL	DESCRIPTION	LOCATION
☼	100 WATT HPS VAPOR "COLONIAL" POST TOP FIXTURE MOUNTED ON A 14' BLACK FIBERGLASS POLE.	19' RT. STA.0+42. CROSS IVY RD. 20' LT. STA.3+34 CROSS IVY RD

CENTERLINE CONTROL DATA			
STREET NAME	STATION	NORTH	EAST
CROSS IVY ROAD	P.O.B.=0+00	494,484.4282	872,945.9895
CROSS IVY ROAD	P.C.=1+00.07	494,581.5442	872,916.3723
CROSS IVY ROAD	P.T.=2+01.03	494,671.6282	872,876.4009
CROSS IVY/IVY SPRING	3+58.54=0+00	494,799.5718	872,784.5434
IVY SPRING ROAD	P.O.B.=0+00	494,738.3348	872,699.2496
IVY SPRING ROAD	END=1+50	494,825.8162	872,821.0979

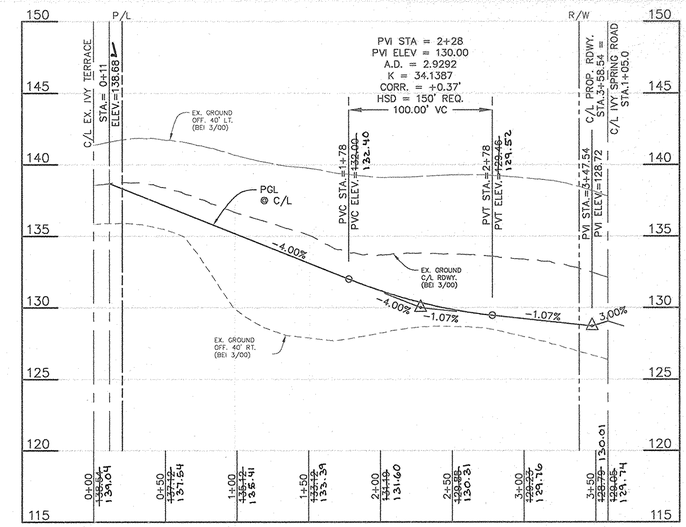

PUBLIC ACCESS STREET (LOCAL ROAD) DESIGN SPEED=25 MPH
ROADWAY PROFILE – CROSS IVY ROAD
HORIZONTAL SCALE: 1" = 50'
VERTICAL SCALE: 1" = 5'

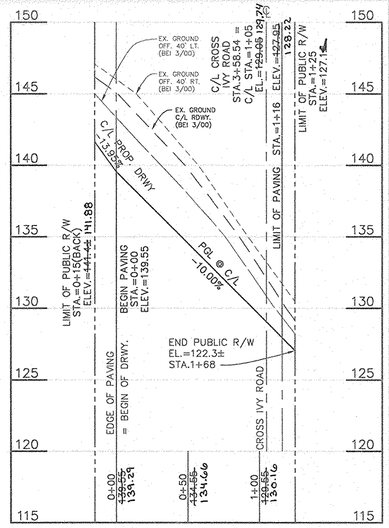

PUBLIC ACCESS PLACE (LOCAL ROAD)
DESIGN SPEED=15 MPH
ROADWAY PROFILE – IVY SPRING ROAD
HORIZONTAL SCALE: 1" = 50'
VERTICAL SCALE: 1" = 5'

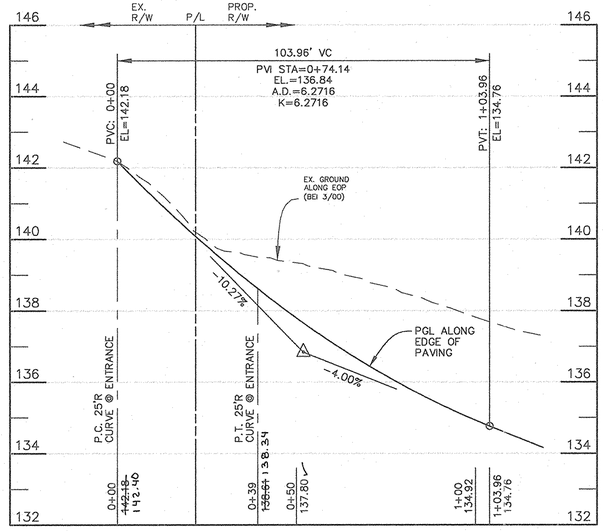

LEFT SIDE – ENTRANCE
EX. IVY TERRACE @
PROP. CROSS IVY ROAD
HORIZONTAL SCALE: 1" = 20'
VERTICAL SCALE: 1" = 2'

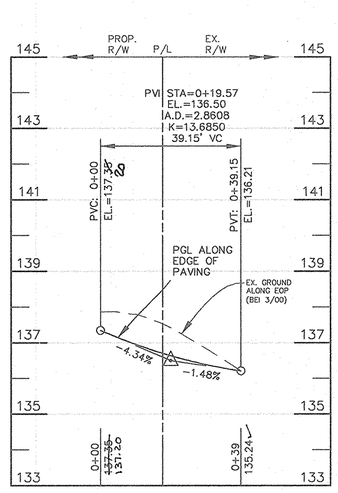

RIGHT SIDE – ENTRANCE
EX. IVY TERRACE @
PROP. CROSS IVY ROAD
HORIZONTAL SCALE: 1" = 20'
VERTICAL SCALE: 1" = 2'

LEGEND

SOILS CLASSIFICATION	AbC1
SOILS DELINEATION	
EXISTING CONTOURS	999
PROPOSED CONTOURS	999
LIMIT OF WETLANDS	
LIMITS OF FLOODPLAIN	
EXISTING STREAM	
75' SREAM BUFFER	
EXISTING WOODS LINE	
PROPOSED WOODS LINE	
EXISTING STRUCTURE	
PROPOSED STRUCTURE	
DRAINAGE AREA	
DRAINAGE DIVIDE	
Tc STUDY PATH	A B
LIMIT OF DISTURBANCE	
STABILIZED CONSTRUCTION ENTRANCE	SCE
SUPER SILT FENCE	SSF
SOIL STABILIZATION MATTING	
EARTH DIKE	
INLET PROTECTION	[ ]
REMOVABLE PUMP STATION	RPS

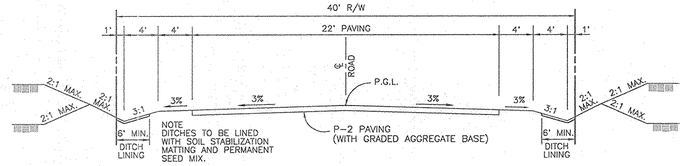

TYPICAL ROADWAY SECTION
NOT TO SCALE

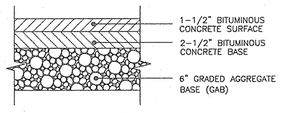

ALTERNATIVE SECTION

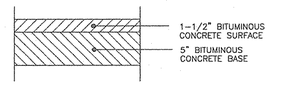

TYPICAL SECTION

P-2 PAVEMENT DETAIL
NOT TO SCALE

CENTERLINE CURVE DATA							
STREET NAME	STATION	RADIUS	ARC	DELTA	TANGENT	CHORD	
CROSS IVY ROAD	PC=1+00.10 PT=2+01.03	282.50'	100.33'	20°20'58"	50.70'	N25°30'07"W	99.81'

APPROVED: HOWARD COUNTY DEPARTMENT OF PUBLIC WORKS
CHIEF, BUREAU OF HIGHWAYS — DATE: 8/2/01

APPROVED: HOWARD COUNTY DEPARTMENT OF PLANNING AND ZONING
CHIEF, DIVISION OF LAND DEVELOPMENT — DATE: 12/12/01
CHIEF, DEVELOPMENT ENGINEERING DIVISION MK 11-28-01 — DATE: 9/19/01

NO.	DATE	REVISION
2	3-3-06	REVISED PER AS-BUILT CONDITIONS
1	8-6-02	REVISE LOCATION OF RET. WALL IN POND & ADDED ES-3

BENCHMARK
ENGINEERS & LAND SURVEYORS & PLANNERS
ENGINEERING, INC.
8480 BALTIMORE NATIONAL PIKE ▲ SUITE 418
ELLICOTT CITY, MARYLAND 21043
phone: 410-465-6105 ▲ fax: 410-465-6644
email: Benchmrk@ccis.com

STATE OF MARYLAND — DONALD MASON — No. 21563 — REGISTERED PROFESSIONAL ENGINEER
8/2/01

AS BUILTS
BY: DFI DATE: 3-13-06

OWNER/DEVELOPER:
SPRINGLAND, LLC.
5570 STERRET STREET
COLUMBIA, MD 21044
PHONE: 410-472-2993

PROJECT: HARWOOD PARK
IVY SPRING ROAD & CROSS IVY ROAD AND LOTS 1093C, 1094C, 1097C, 1098B, 1100A-1101A, 1103A-1104A, 1106A-1108A, 1109, 1110B-1111B, 1116B-1118B, 1133B-1137B, 1141B AND 1143B

LOCATION: TAX MAP 38 – GRIDS 13 & 14
P/O PARCEL 873
1st ELECTION DISTRICT
HOWARD COUNTY, MARYLAND

TITLE: ROAD PLAN, PROFILES AND DETAILS

DATE: AUGUST, 2000 / AUGUST, 2001
PROJECT NO. 1306
Design: DAM | Draft: MCR | Check: DAM
SCALE: AS SHOWN
DRAWING 2 OF 7

AS-BUILT
F-01-035

\\tsa\vol1\engineer\projects\1306\dwg\7041.dwg, 08/01/2001 05:00:32 PM, BALTIMORE RAVENS SUPER BOWL CHAMPS

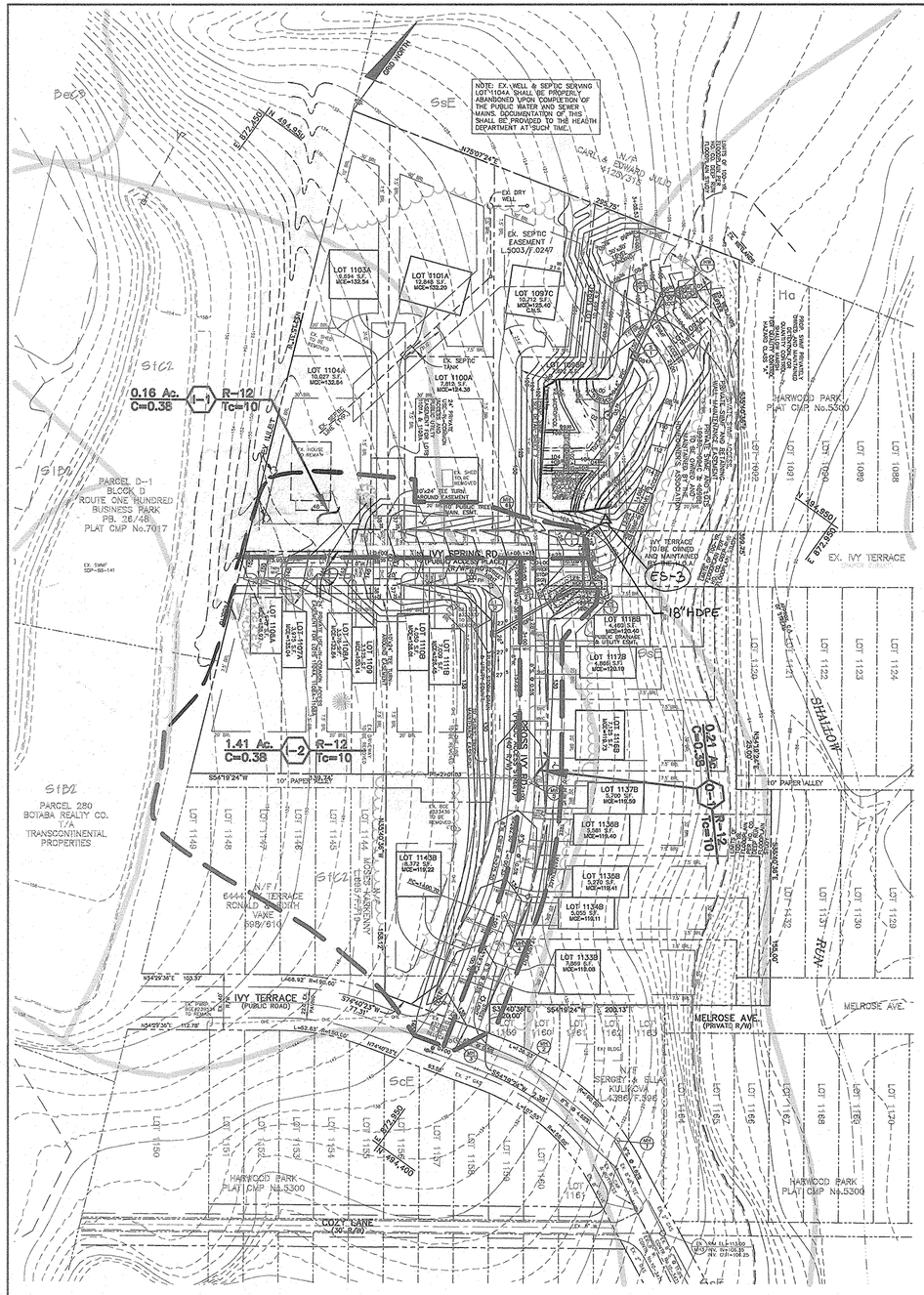

PLAN

SCALE: 1"=50'

CONTRACTOR NOTES:
1.) MAINTAIN A MINIMUM OF ONE LANE OPEN ON EX. IVY TERRACE AT ALL TIMES DURING CONSTRUCTION ACTIVITY
2.) MAINTAIN ACCESS TO EX. HOUSE VIA EX. DRIVEWAY AT ALL TIMES DURING CONSTRUCTION ACTIVITY
3.) EXERCISE EXTREME CAUTION WHEN WORKING IN THE AREA OF EX. OVERHEAD ELECTRIC LINES
4.) A PRIVATE WHC EXISTS CROSSING THE PROPERTY TO SERVE THE RESIDENCES AT 6440 AND 6451 IVY TERRACE; THE EXACT LOCATION IS UNKNOWN; TEST PIT FOR LOCATION AND MAINTAIN SERVICE UNTIL SUCH TIME AS A CONNECTION TO THE PROP. WATERLINE WITHIN IVY TERRACE CAN BE MADE

SOILS LEGEND		
MAP SYMBOL	SOIL TYPE	MAPPING UNIT
Ha	B	HATBORO SILT LOAM
SoE	D	SANDY AND CLAYEY LAND – MODERATELY STEEP
SfC2	D	SASSAFRAS GRAVELLY SANDY LOAM – 5 TO 10 PERCENT SLOPES – MODERATELY ERODED
SoE	B	SASSAFRAS SOILS – 15 TO 40 PERCENT SLOPES
SOILS MAP No. 26		

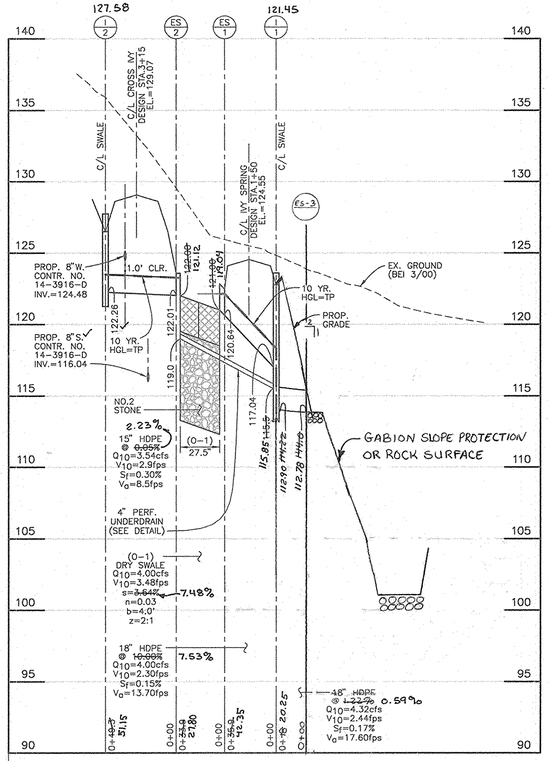

STORM DRAIN PROFILE

VERTICAL SCALE: 1" = 5'
HORIZONTAL SCALE: 1" = 50'

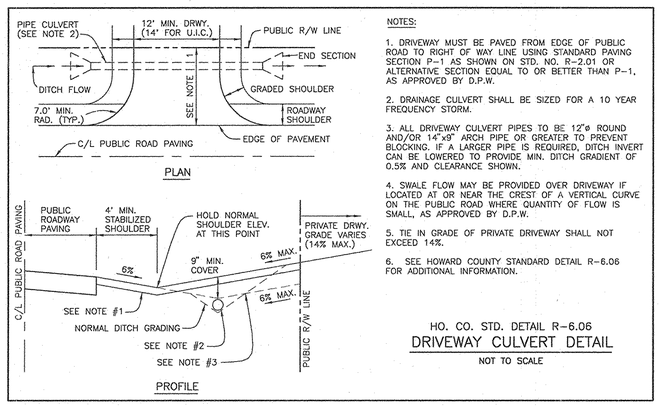

NOTES:

1. DRIVEWAY MUST BE PAVED FROM EDGE OF PUBLIC ROAD TO RIGHT OF WAY LINE USING STANDARD PAVING SECTION P-1 AS SHOWN ON STD. NO. R-2.01 OR ALTERNATIVE SECTION EQUAL TO OR BETTER THAN P-1, AS APPROVED BY D.P.W.
2. DRAINAGE CULVERT SHALL BE SIZED FOR A 10 YEAR FREQUENCY STORM.
3. ALL DRIVEWAY CULVERT PIPES TO BE 12"ø ROUND AND/OR 14"x9" ARCH PIPE OR GREATER TO PREVENT BLOCKING. IF A LARGER PIPE IS REQUIRED, DITCH INVERT CAN BE LOWERED TO PROVIDE MIN. DITCH GRADIENT OF 0.5% AND CLEARANCE SHOWN.
4. SWALE FLOW MAY BE PROVIDED OVER DRIVEWAY IF LOCATED AT OR NEAR THE CREST OF A VERTICAL CURVE ON THE PUBLIC ROAD WHERE QUANTITY OF FLOW IS SMALL, AS APPROVED BY D.P.W.
5. TIE IN GRADE OF PRIVATE DRIVEWAY SHALL NOT EXCEED 14%.
6. SEE HOWARD COUNTY STANDARD DETAIL R-6.06 FOR ADDITIONAL INFORMATION.

HO. CO. STD. DETAIL R-6.06
DRIVEWAY CULVERT DETAIL

NOT TO SCALE

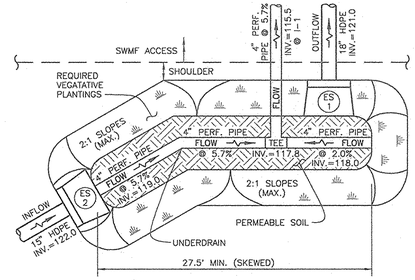

PLAN

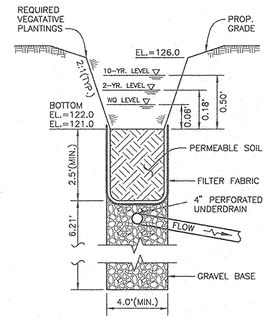

SECTION

DRY SWALE DETAIL

NOT TO SCALE

LEGEND

SOILS CLASSIFICATION	AbC1
SOILS DELINEATION	
EXISTING CONTOURS	999
PROPOSED CONTOURS	999
LIMIT OF WETLANDS	
LIMITS OF FLOODPLAIN	
EXISTING STREAM	
75' SREAM BUFFER	
EXISTING WOODS LINE	
PROPOSED WOODS LINE	
EXISTING STRUCTURE	
PROPOSED STRUCTURE	
DRAINAGE AREA	
DRAINAGE DIVIDE	
Tc STUDY PATH	A B
LIMIT OF DISTURBANCE	
STABILIZED CONSTRUCTION ENTRANCE	SCE
SUPER SILT FENCE	SSF
SOIL STABILIZATION MATTING	
EARTH DIKE	
INLET PROTECTION	[ ]
REMOVABLE PUMP STATION	RPS

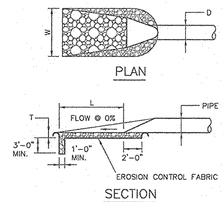

SECTION

STRUCTURE	D-50	LENGTH(L)	WIDTH(W)	THICK.(T)	SHA CLASS
HW-1	9.5"	12' @ 0%	10'	19"	I

1. The subgrade for the filter, rip-rap, or gabion shall be prepared to the required lines and grades. Any fill required in the subgrade shall be compacted to a density of approximately that of the surrounding undisturbed material.
2. The rock or gravel shall conform to the specified grading limits when installed respectively in the rip-rap or filter.
3. Geotextile shall be protected from punching, cutting, or tearing. Any damage other than an occasional small hole shall be repaired by placing another piece of geotextile over the damaged part or by completely replacing the geotextile. All overlaps whether for repairs or for joining two pieces of geotextile shall be a minimum of one foot.
4. Stone for the rip-rap or gabion outlets may be placed by equipment. They shall be constructed to the full course thickness in one operation and in such a manner as to avoid displacement of underlying materials. The stone for rip-rap or gabion outlets shall be delivered and placed in a manner that will ensure that it is reasonably homogeneous with the smaller stones and spalls filling the voids between the larger stones. Rip-rap shall be placed in a manner to prevent damage to the filter blanket or geotextile. Hand placement will be required to the extent necessary to prevent damage to the permanent works.
5. The stone shall be placed so that it blends in with the existing ground. If the stone is placed too high then the flow will be forced out of the channel and scour adjacent to the stone will occur.

OUTFALL PROTECTION DETAIL

NOT TO SCALE

PIPE SCHEDULE			
RUN	SIZE	LENGTH	TYPE & CLASS
FOREBAY TO I-1	18"	28'	HDPE
I-1 TO ES-1	15"	36'	HDPE
I-2 TO ES-2	15"	49'	HDPE
DEWATER. TO S-1	6"	46'	PVC SCH. 40
S-1 TO MH-1	30"	49'	ASTM C-361 (B-25)
MH-1 TO HW-1	30"	8'	ASTM C-361 (B-25)
I-1 TO ES-3	18"	18'	HDPE

STRUCTURE SCHEDULE									
NO.	TYPE	LOCATION	INVERT IN	INVERT OUT	INVERT OUT	TOP ELEV.	HO. CO. STD.	REMARKS	FRONT TO BACK INSIDE DIM. OF STRUC.
I-1	"D" INLET	IVY SPRING ROAD STA.1+50 19.0' LT.	117.04	103.80	–	123.60	SD-4.11	–	–
I-2	"D" INLET	CROSS IVY ROAD STA.3+04 19.0' LT.	–	122.26	–	127.33	SD-4.11	–	–
S-1	SWMF RCLEASE	N 494964.53 E 872765.60	102.41	102.41	–	108.67	–	–	–
HW-1	TYPE "A" HEADWALL	N 495017.85 E 872761.94	101.92	101.90	–	–	SD-5.11	–	–
MH-1	MANHOLE	N 495012.19 E 872755.72	102.16	101.96	–	106.00	G-5.11	–	–
ES-1	HDPE	CROSS IVY ROAD STA.3+29 24.0' RT.	122.01	122.00	–	123.6	–	–	–
ES-2	HDPE	IVY SPRING ROAD STA.1+56 17.0' RT.	121.00	120.84	–	122.8	–	–	–
NOTE: DRIVEWAY CULVERTS WILL BE 14"x 9" ARCH CMP PER HO. CO. STD. R8.06 AND SHALL BE SHOWN WHEN A BUILDING PERMIT PLAN IS REQUIRED FOR EACH LOT.									
ES-3	HDPE	N 494957.1970 E 872818.3658	114.0	113.96	—	115.6	—	—	—

APPROVED: HOWARD COUNTY DEPARTMENT OF PUBLIC WORKS

CHIEF, BUREAU OF HIGHWAYS — DATE: 8/9/01

APPROVED: HOWARD COUNTY DEPARTMENT OF PLANNING AND ZONING

CHIEF, DIVISION OF LAND DEVELOPMENT — DATE: 12/6/11

CHIEF, DEVELOPMENT ENGINEERING DIVISION MK 11-28-01 — DATE: 8/9/01

AS BUILTS
BY: DFI DATE: 3-13-06

NO.	DATE	REVISION
2	3-3-06	REVISED PER AS-BUILT CONDITIONS
1	8-6-02	REV. RET. WALL IN POND & ADDED ES-3

BENCHMARK
ENGINEERS & LAND SURVEYORS & PLANNERS
ENGINEERING, INC.
8480 BALTIMORE NATIONAL PIKE ▲ SUITE 418
ELLICOTT CITY, MARYLAND 21043
phone: 410-465-6105 ▲ fax: 410-465-6644
email: Benchmrk@cals.com

Donald Mann
8/6/01

OWNER/DEVELOPER:
SPRINGLAND, LLC.
5570 STERRET STREET
COLUMBIA, MD 21044
PHONE: 410-472-2993

PROJECT: HARWOOD PARK
IVY SPRING ROAD & CROSS IVY ROAD AND LOTS 1093C, 1094C, 1097C, 1098B, 1100A-1101A, 1103A-1104A, 1106A-1108A, 1109, 1110B-1111B, 1116B-1118B, 1133B-1137B, 1141B AND 1143B

LOCATION: TAX MAP 38 – GRIDS 13 & 14
P/O PARCEL 873
1st ELECTION DISTRICT
HOWARD COUNTY, MARYLAND

TITLE: STORM DRAIN DRAINAGE AREA MAP, PROFILES AND DETAILS

DATE: AUGUST, 2000 / AUGUST, 2001
PROJECT NO. 1306
SCALE: AS SHOWN
DRAWING 3 OF 7

Design: MLV | Draft: MCR | Check: DAM

AS-BUILT

F-01-035

\\tsa\vol1\engineer\projects\1306\dwg\7025D.dwg, 08/01/2001 06:45:41 PM, BALTIMORE RAVENS SUPER BOWL CHAMPS

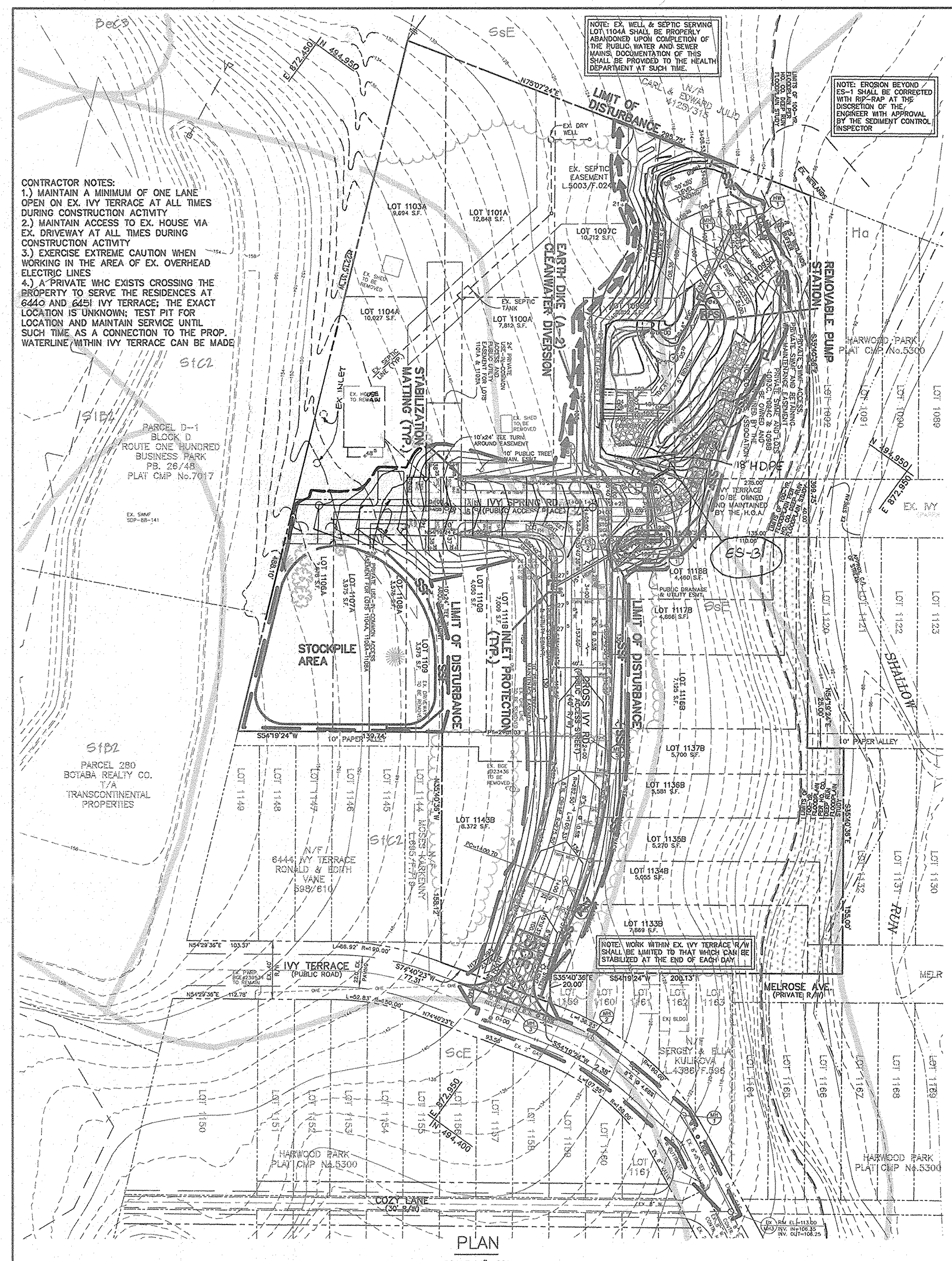

CONTRACTOR NOTES:
1.) MAINTAIN A MINIMUM OF ONE LANE OPEN ON EX. IVY TERRACE AT ALL TIMES DURING CONSTRUCTION ACTIVITY
2.) MAINTAIN ACCESS TO EX. HOUSE VIA EX. DRIVEWAY AT ALL TIMES DURING CONSTRUCTION ACTIVITY
3.) EXERCISE EXTREME CAUTION WHEN WORKING IN THE AREA OF EX. OVERHEAD ELECTRIC LINES
4.) A PRIVATE WHC EXISTS CROSSING THE PROPERTY TO SERVE THE RESIDENCES AT 6440 AND 6451 IVY TERRACE; THE EXACT LOCATION IS UNKNOWN; TEST PIT FOR LOCATION AND MAINTAIN SERVICE UNTIL SUCH TIME AS A CONNECTION TO THE PROP. WATERLINE WITHIN IVY TERRACE CAN BE MADE

NOTE: EX. WELL & SEPTIC SERVING LOT 1104A SHALL BE PROPERLY ABANDONED UPON COMPLETION OF THE PUBLIC WATER AND SEWER MAINS. DOCUMENTATION OF THIS SHALL BE PROVIDED TO THE HEALTH DEPARTMENT AT SUCH TIME.

NOTE: EROSION BEYOND ES-1 SHALL BE CORRECTED WITH RIP-RAP AT THE DISCRETION OF THE ENGINEER WITH APPROVAL BY THE SEDIMENT CONTROL INSPECTOR

NOTE: WORK WITHIN EX. IVY TERRACE R/W SHALL BE LIMITED TO THAT WHICH CAN BE STABILIZED AT THE END OF EACH DAY

SEDIMENT CONTROL NOTES

1. A MINIMUM OF 48 HOURS NOTICE MUST BE GIVEN TO THE HOWARD COUNTY DEPARTMENT OF INSPECTIONS AND PERMITS SEDIMENT CONTROL DIVISION PRIOR TO THE START OF ANY CONSTRUCTION.
2. ALL VEGETATIVE AND STRUCTURAL PRACTICES ARE TO BE INSTALLED ACCORDING TO THE PROVISIONS OF THIS PLAN AND ARE TO BE IN CONFORMANCE WITH THE 1994 MARYLAND STANDARDS AND SPECIFICATIONS FOR SOIL EROSION AND SEDIMENT CONTROL AND REVISIONS THERETO.
3. FOLLOWING INITIAL SOIL DISTURBANCE OR REDISTURBANCE, PERMANENT OR TEMPORARY STABILIZATION SHALL BE COMPLETED WITHIN: A) 7 CALENDAR DAYS FOR ALL PERIMETER SEDIMENT CONTROL STRUCTURES, DIKES, PERIMETER SLOPES AND ALL SLOPES GREATER THAN 3:1, B) 14 DAYS AS TO ALL OTHER DISTURBED OR GRADED AREAS ON THE PROJECT SITE.
4. ALL SEDIMENT TRAPS/BASINS SHOWN MUST BE FENCED AND WARNING SIGNS POSTED AROUND THEIR PERIMETER IN ACCORDANCE WITH VOL. 1, CHAPTER 12, OF THE HOWARD COUNTY DESIGN MANUAL, STORM DRAINAGE.
5. ALL DISTURBED AREAS MUST BE STABILIZED WITHIN THE TIME PERIOD SPECIFIED ABOVE IN ACCORDANCE WITH THE 1994 MARYLAND STANDARDS AND SPECIFICATIONS FOR SOIL EROSION AND SEDIMENT CONTROL FOR PERMANENT SEEDINGS (SEC. 51) SOD (SEC. 54), TEMPORARY SEEDING (SEC. 50) AND MULCHING (SEC. 52). TEMPORARY STABILIZATION WITH MULCH ALONE CAN ONLY BE DONE WHEN RECOMMENDED SEEDING DATES DO NOT ALLOW FOR PROPER GERMINATION AND ESTABLISHMENT OF GRASSES.
6. ALL SEDIMENT CONTROL STRUCTURES ARE TO REMAIN IN PLACE AND ARE TO BE MAINTAINED IN OPERATIVE CONDITION UNTIL PERMISSION FOR THEIR REMOVAL HAS BEEN OBTAINED FROM THE HOWARD COUNTY SEDIMENT CONTROL INSPECTOR.
7. SITE ANALYSIS:

TOTAL AREA OF SITE	4.35±	ACRES
TOTAL AREA DISTURBED	1.95±	ACRES
AREA TO BE ROOFED OR PAVED	0.26±	ACRES
AREA TO BE VEGETATIVELY STABILIZED	1.69±	ACRES
TOTAL CUT	6750	CU. YDS.
TOTAL FILL	350	CU. YDS.
OFFSITE BORROW	*	

8. ANY SEDIMENT CONTROL PRACTICE WHICH IS DISTURBED BY GRADING ACTIVITY FOR PLACEMENT OF UTILITIES MUST BE REPAIRED ON THE SAME DAY OF DISTURBANCE.
9. ADDITIONAL SEDIMENT CONTROLS MUST BE PROVIDED, IF DEEMED NECESSARY BY THE HOWARD COUNTY SEDIMENT CONTROL INSPECTOR.
10. ON ALL SITES WITH DISTURBED AREAS IN EXCESS OF 2 ACRES, APPROVAL OF THE INSPECTION AGENCY SHALL BE REQUESTED UPON COMPLETION OF INSTALLATION OF PERIMETER EROSION AND SEDIMENT CONTROLS, BUT BEFORE PROCEEDING WITH ANY OTHER EARTH DISTURBANCE OR GRADING. OTHER BUILDING OR GRADING INSPECTION APPROVALS MAY NOT BE AUTHORIZED UNTIL THIS INITIAL APPROVAL BY THE INSPECTION AGENCY IS MADE.
11. TRENCHES FOR THE CONSTRUCTION OF UTILITIES ARE LIMITED TO THREE PIPE LENGTHS OR THAT WHICH CAN BE BACK FILLED AND STABILIZED WITHIN ONE WORKING DAY, WHICHEVER IS SHORTER.
12. QUANTITIES AND ESTIMATES SHOWN ARE FOR SEDIMENT CONTROL PURPOSES ONLY.

* IT IS THE RESPONSIBILITY OF THE CONTRACTOR TO IDENTIFY THE SPOIL/BORROW SITE AND NOTIFY AND GAIN APPROVAL FROM THE SEDIMENT CONTROL INSPECTOR OF THE SITE AND IT'S GRADING PERMIT NUMBER AT THE TIME OF CONSTRUCTION.

TEMPORARY SEEDBED PREPARATION

APPLY TO GRADED OR CLEARED AREAS LIKELY TO BE REDISTURBED WHERE A SHORT-TERM VEGETATIVE COVER IS NEEDED.

SEEDBED PREPARATION: LOOSEN UPPER THREE INCHES OF SOIL BY RAKING, DISCING OR OTHER ACCEPTABLE MEANS BEFORE SEEDING, IF NOT PREVIOUSLY LOOSENED.

SOIL AMENDMENTS: APPLY 600 LBS PER ACRE 10-10-10 FERTILIZER (14 LBS/1000 SQ FT).

SEEDING: FOR PERIOD MARCH 1 THROUGH APRIL 30 AND FROM AUGUST 15 THROUGH NOVEMBER 15, SEED WITH 2-1/2 BUSHELS PER ACRE OF ANNUAL RYE (3.2 LBS/1000 SQ FT). FOR THE PERIOD MAY 1 THROUGH AUGUST 14, SEED WITH 3 LBS PER ACRE OF WEEPING LOVEGRASS (.07 LBS/1000 SQ FT). FOR THE PERIOD NOVEMBER 16 THROUGH FEBRUARY 28, PROTECT SITE BY APPLYING 2 TONS PER ACRE OF WELL ANCHORED STRAW MULCH AND SEED AS SOON AS POSSIBLE IN THE SPRING, OR USE SOD.

MULCHING: APPLY 1-1/2 TO 2 TONS PER ACRE (70 TO 90 LBS/1000 SQ FT) OF UNROTTED SMALL GRAIN STRAW IMMEDIATELY AFTER SEEDING. ANCHOR MULCH IMMEDIATELY AFTER APPLICATION USING MULCH ANCHORING TOOL OR 218 GALLONS PER ACRE (5 GAL/1000 SQ FT) OF EMULSIFIED ASPHALT ON FLAT AREAS. ON SLOPES, 8 FT. OR HIGHER, USE 348 GALLONS PER ACRE (8 GAL/1000 SQ FT) FOR ANCHORING.

REFER TO THE 1994 MARYLAND STANDARDS AND SPECIFICATIONS FOR SOIL EROSION AND SEDIMENT CONTROL FOR RATE AND METHODS NOT COVERED.

PERMANENT SEEDBED PREPARATION

SEEDBED PREPARATION: LOOSEN UPPER THREE INCHES OF SOIL BY RAKING, DISCING OR OTHER ACCEPTABLE MEANS BEFORE SEEDING, IF NOT PREVIOUSLY LOOSENED.

SOIL AMENDMENTS: IN LIEU OF SOIL TEST RECOMMENDATIONS, USE ON OF THE FOLLOWING SCHEDULES:

1. PREFERRED – APPLY 2 TONS PER ACRE DOLOMITIC LIMESTONE (92 LBS/1000 SQ FT) AND 600 LBS PER ACRE 10-10-10 FERTILIZER (14 LBS/1000 SQ FT) BEFORE SEEDING. HARROW OR DISC INTO UPPER THREE INCHES OF SOIL. AT TIME OF SEEDING, APPLY 400 LBS PER ACRE 30-0-0- UREAFORM FERTILIZER (9 LBS/1000 SQ FT).
2. ACCEPTABLE – APPLY 2 TONS PER ACRE DOLOMITIC LIMESTONE (92 LBS/1000 SQ FT) AND 1000 LBS PER ACRE 10-10-10 FERTILIZER (23 LBS/1000 SQ FT) BEFORE SEEDING. HARROW OR DISC INTO UPPER THREE INCHES OF SOIL.

SEEDING: FOR THE PERIODS MARCH 1 THROUGH APRIL 30 AND AUGUST 1 THROUGH OCTOBER 15, SEED WITH 60 LBS PER ACRE (1.4 LBS/1000 SQ FT) OF KENTUCKY 31 TALL FESCUE PER ACRE AND 2 LBS PER ACRE (.05 LBS/1000 SQ FT) OF WEEPING LOVEGRASS. DURING THE PERIOD OF OCTOBER 16 THROUGH FEBRUARY 28, PROTECT SITE BY: OPTION (1) 2 TONS PER ACRE OF WELL ANCHORED STRAW MULCH AND SEED AS SOON AS POSSIBLE IN THE SPRING. OPTION (2) USE SOD. OPTION (3) SEED WITH 60 LBS PER ACRE OF KENTUCKY 31 TALL FESCUE AND MULCH WITH 2 TONS PER ACRE OF WELL ANCHORED STRAW.

MULCHING: APPLY 1-1/2 TO 2 TONS PER ACRE (70 TO 90 LBS/1000 SQ FT) OF UNROTTED SMALL GRAIN STRAW IMMEDIATELY AFTER SEEDING. ANCHOR MULCH IMMEDIATELY AFTER APPLICATION USING MULCH ANCHORING TOOL OR 218 GALLONS PER ACRE (5 GAL/1000 SQ FT) OF EMULSIFIED ASPHALT ON FLAT AREAS. ON SLOPES 8 FEET OR HIGHER, USE 348 GALLONS PER ACRE (8 GAL/1000 SQ FT) FOR ANCHORING.

MAINTENANCE: INSPECT ALL SEEDED AREAS AND MAKE NEEDED REPAIRS, REPLACEMENTS AND RESEEDINGS.

SOILS LEGEND

MAP SYMBOL	SOIL TYPE	MAPPING UNIT
Ha	B	HATBORO SILT LOAM
ScE	D	SANDY AND CLAYEY LAND – MODERATELY STEEP
SfC2	D	SASSAFRAS GRAVELLY SANDY LOAM – 5 TO 10 PERCENT SLOPES – MODERATELY ERODED
SsE	B	SASSAFRAS SOILS – 15 TO 40 PERCENT SLOPES
SOILS MAP No. 26		

21.0 STANDARD AND SPECIFICATIONS FOR TOPSOIL

Definition

Placement of topsoil over a prepared subsoil prior to establishment of permanent vegetation.

Purpose

To provide a suitable medium for vegetative growth. Soils of concern have low moisture content, low nutrient levels, low pH, materials toxic to plants, and/or unacceptable soil gradation.

Conditions Where Practice Applies

I. This practice is limited to areas having 2:1 or flatter slopes where:

a. The texture of the exposed subsoil/parent material is not adequate to produce vegetative growth.

b. The soil material is so shallow that the rooting zone is not deep enough to support plants or furnish continuing supplies of moisture and plant nutrients.

c. The original soil to be vegetated contains material toxic to plant growth.

d. The soil is so acidic that treatment with limestone is not feasible. II. For the purpose of these Standards and Specifications, areas having slopes steeper than 2:1 require special consideration and design for adequate stabilization. Areas having slopes steeper than 2:1 shall have the appropriate stabilization shown on the plans.

Construction and Material Specifications

I. Topsoil salvaged from the existing site may be used provided that it meets the standards as set forth in these specifications. Typically, the depth of topsoil to be salvaged for a given soil type can be found in the representative soil profile section in the Soil Survey published by USDA-SCS in cooperation with Maryland Agricultural Experimental Station.

II. Topsoil Specifications – Soil to be used as topsoil must meet the following:

i. Topsoil shall be a loam, sandy loam, clay loam, silt loam, sandy clay loam, loamy sand. Other soils may be used if recommended by an agronomist or soil scientist and approved by the appropriate approval authority. Regardless, topsoil shall not be a mixture of contrasting textured subsoils and shall contain less than 5% by volume of cinders, stones, slag, coarse fragments, gravel, sticks, roots, trash, or other materials larger than 1 ½" in diameter.

ii. Topsoil must be free of plants or plant parts such as Bermuda grass, quack grass, Johnson grass, nutsedge, poison ivy, thistle, or others as specified.

iii. Where the subsoil is either highly acidic or composed of heavy clays, ground limestone shall be spread at the rate of 4-8 tons/acre (200-400 pounds per 1,000 square feet) to the placement of topsoil. Lime shall be distributed uniformly over designated areas prior and worked into the soil in conjunction with tillage operations as described in the following procedures.

III. For sites having disturbed areas under 5 acres:

i. Place topsoil (if required) and apply soil amendments as specified in 20.0 Vegetative Stabilization – Section I – Vegetative Stabilization Methods and Materials.

IV. For sites having disturbed areas over 5 acres:

i. On soil meeting topsoil specifications, obtain test results dictating fertilizer and lime amendments required to bring the soil into compliance with the following:

a. pH for topsoil shall be between 6.0 and 7.5. If the tested soil demonstrates a pH of less than 6.0, sufficient lime shall be prescribed to raise the pH to 6.5 or higher.

b. Organic content of topsoil shall be not less than 1.5 percent by weight.

c. Topsoil having soluble salt content greater than 500 parts per million shall not be used.

d. No sod or seed shall be placed on soil which has been treated with soil sterilants or chemicals used for weed control until sufficient time has elapsed (14 days min.) to permit dissipation of phyto-toxic materials.

Note: Topsoil substitutes or amendments, as recommended by a qualified agronomist or soil scientist and approved by the appropriate approval authority, may be used in lieu of natural topsoil.

ii. Place topsoil (if required) and apply soil amendments as specified in 20.0 Vegetative Stabilization – Section I – Vegetative Stabilization Methods and Materials.

V. Topsoil Application

i. When topsoiling, maintain needed erosion and sediment control practices such as diversion, Grade Stabilization Structures, Earth Dikes, Slope Silt Fence and Sediment Traps and Basins.

ii. Grades on the areas to be topsoiled, which have been previously established, shall be maintained, albeit 4" – 8" higher in elevation.

iii. Topsoil shall be uniformly distributed in a 4" – 8" layer and lightly compacted to a minimum thickness of 4". Spreading shall be performed in such a manner that sodding or seeding can proceed with a minimum of additional preparation and tillage. Any irregularities in the surface resulting from topsoiling or other operations shall be corrected in order to prevent the formation of depressions or water pockets.

iv. Topsoil shall not be placed while the topsoil or subsoil is in a frozen or muddy condition, when the subsoil is excessively wet or in a condition that may otherwise be detrimental to proper grading and seedbed preparation. G-21-2

VI. Alternative for Permanent Seeding – Instead of applying the full amounts of lime and commercial fertilizer, composted sludge and amendments may be applied as specified below:

i. Composted Sludge Material for use as a soil conditioner for sites having disturbed areas over 5 acres shall be tested to prescribed amendments and for sites having disturbed areas under 5 acres shall conform to the following requirements:

a. Composted sludge shall be supplied by, or originate from, a person or persons that are permitted (at the time of acquisition of the compost) by the Maryland Department of the Environment under COMAR 26.04.06.

b. Composted sludge shall contain at least 1 percent nitrogen, 1.5 percent phosphorus, and 0.2 percent potassium and have a pH of 7.0 to 8.0. If compost does not meet these requirements, the appropriate constituents must be added to meet the requirements prior to use.

c. Composted sludge shall be applied at a rate of 1 ton/1,000 square feet.

iv. Composted sludge shall be amended with a potassium fertilizer applied at the rate of 4 lb/1,000 square feet, and 1/3 the normal lime application rate.

References: Guideline Specifications, Soil Preparation and Sodding. MD-VA, Pub. #1, Cooperative Extension Service, University of Maryland and Virginia Polytechnic Institutes. Rev. 1973.

SEDIMENT BASIN DATA

EX. DA = 2.4 Ac.
PROP. DA = 2.4 Ac.
STORAGE REQUIRED:
WET = 4320 C.F.
DRY = 4320 C.F.
STORAGE PROVIDED:
WET = 4320 C.F.
(EL.102.41 TO EL.104.00)
DRY = 4320 C.F.
(EL.104.00 TO EL.104.93)
6"ø ORIFICE INV.=102.41
CLEANOUT EL.=103.20
BASIN BOTTOM EL.=102.41
TOP DAM EL.=108.0

SEQUENCE OF CONSTRUCTION

DAY 1	OBTAIN GRADING PERMIT.
DAY 2-23	CLEAR AND GRUB FOR SEDIMENT CONTROL DEVICES , INSTALL SEDIMENT CONTROL DEVICES, INCLUDING SEDIMENT BASIN AND RETAINING WALL (SEE SHEET 7 FOR WALL CONSTRUCTION SEQUENCE)
DAY 24	UPON COMPLETION, STABILIZE SLOPE BELOW WALL.
DAY 25-27	UPON APPROVAL OF HOWARD COUNTY SEDIMENT CONTROL INSPECTOR, CLEAR AND GRUB REMAINDER OF SITE. CONTRACTOR TO CONTACT THE HEALTH DEPARTMENT FOR PROPER ABANDONMENT OF EX. SEPTIC SYSTEM AFTER CONNECTION OF THE EX. HOUSE TO PUBLIC SEWER.
DAY 28-38	UPON APPROVAL OF HOWARD COUNTY SEDIMENT CONTROL INSPECTOR, COMMENCE WITH ROADWAY AND MASS GRADING OF SITE.
DAY 39-54	CONSTRUCT STORM DRAIN SYSTEM.
DAY 55	INSTALL INLET PROTECTION MEASURES.
DAY 56-66	CONSTRUCT PAVING FOR PUBLIC ROADWAYS.
DAY 67-75	FINAL GRADE SITE AND STABILIZE.
DAY 76-83	INSTALL REQUIRED LANDSCAPING AS SPECIFIED ON THE PLAN.
DAY 84-85	UPON APPROVAL OF HOWARD COUNTY SEDIMENT CONTROL INSPECTOR, REMOVE ACCUMULATED SEDIMENT IN SWMF. REMOVE ALL SEDIMENT CONTROL DEVICES AND PERMANENTLY STABILIZE REMAINING DISTURBED AREAS AS REQUESTED.

LEGEND

SOILS CLASSIFICATION	AbC1
SOILS DELINEATION	
EXISTING CONTOURS	999
PROPOSED CONTOURS	999
LIMIT OF WETLANDS	
LIMITS OF FLOODPLAIN	
EXISTING STREAM	
75' SREAM BUFFER	
EXISTING WOODS LINE	
PROPOSED WOODS LINE	
EXISTING STRUCTURE	
PROPOSED STRUCTURE	
DRAINAGE AREA	
DRAINAGE DIVIDE	
Tc STUDY PATH	Ⓐ Ⓑ
LIMIT OF DISTURBANCE	
STABILIZED CONSTRUCTION ENTRANCE	SCE
SUPER SILT FENCE	SSF
SOIL STABILIZATION MATTING	
EARTH DIKE	
INLET PROTECTION	[ ]
REMOVABLE PUMP STATION	RPS

DETAIL 6 – GABION INFLOW PROTECTION

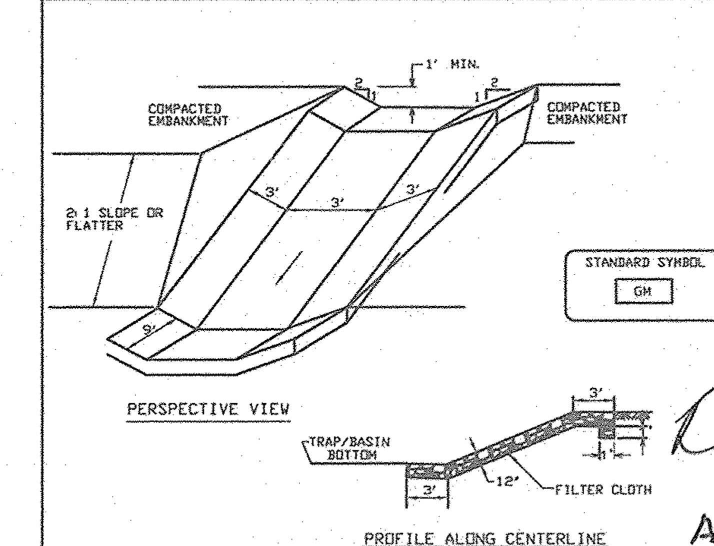

Donald Mason
AS-BUILT 3/13/06

Construction Specifications

1. Gabion inflow protection shall be constructed of 9' x 3' x 9" gabion baskets forming a trapezoidal cross section 1' deep, with 2:1 side slopes, and a 3' bottom width.
2. Geotextile Class C shall be installed under all gabion baskets.
3. The stone used to fill the gabion baskets shall be 4" – 7".
4. Gabions shall be installed in accordance with manufacturers recommendations.
5. Gabion Inflow Protection shall be used where concentrated flow is present on slopes steeper than 4:1.

U.S. DEPARTMENT OF AGRICULTURE SOIL CONSERVATION SERVICE	PAGE B - 7 - 2	MARYLAND DEPARTMENT OF ENVIRONMENT WATER MANAGEMENT ADMINISTRATION

DETAIL 20A – REMOVABLE PUMPING STATION

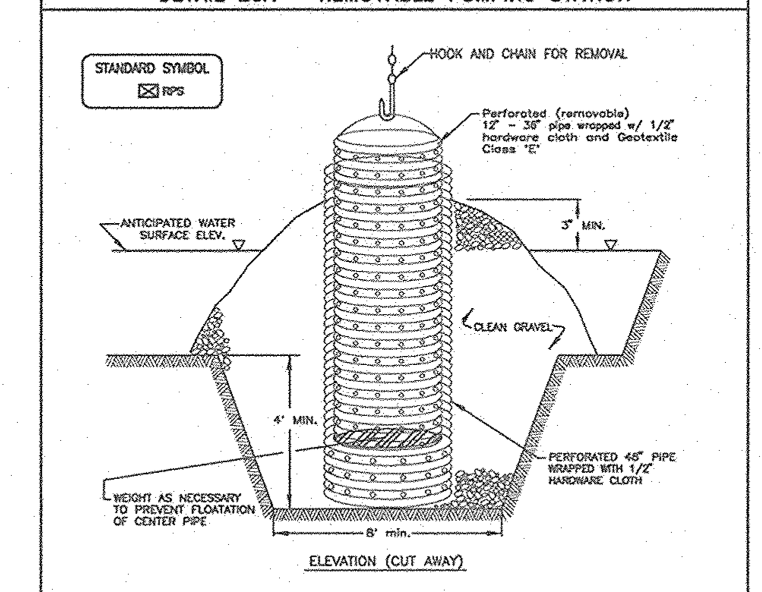

Construction Specifications

1. The outer pipe should be 48" dia. or shall, in any case, be at least 4" greater in diameter than the center pipe. The outer pipe shall be wrapped with 1/2" hardware cloth to prevent backfill material from entering the perforations.
2. After installing the outer pipe, backfill around outer pipe with 2" aggregate or clean gravel.
3. The inside stand pipe (center pipe) should be constructed by perforating a corrugated or PVC pipe between 12" and 36" in diameter. The perforations shall be 1/2" X 6" slits or 1" diameter holes 6" on center. The center pipe shall be wrapped with 1/2" hardware cloth first, then wrapped again with Geotextile Class C.
4. The center pipe should extend 12" to 18" above the anticipated water surface elevation or riser crest elevation when dewatering a basin.

U.S. DEPARTMENT OF AGRICULTURE SOIL CONSERVATION SERVICE	PAGE D - 12 - 5	MARYLAND DEPARTMENT OF ENVIRONMENT WATER MANAGEMENT ADMINISTRATION

BY THE DEVELOPER:

"I/WE CERTIFY THAT ALL DEVELOPMENT AND/OR CONSTRUCTION WILL BE DONE ACCORDING TO THESE PLANS, AND THAT ANY RESPONSIBLE PERSONNEL INVOLVED IN THE CONSTRUCTION PROJECT WILL HAVE A CERTIFICATE OF ATTENDANCE AT A DEPARTMENT OF THE ENVIRONMENT APPROVED TRAINING PROGRAM FOR THE CONTROL OF SEDIMENT AND EROSION BEFORE BEGINNING THE PROJECT. I SHALL ENGAGE A REGISTERED PROFESSIONAL ENGINEER TO SUPERVISE POND CONSTRUCTION AND PROVIDE THE HOWARD SOIL CONSERVATION DISTRICT WITH AN "AS-BUILT" PLAN OF THE POND WITHIN 30 DAYS OF COMPLETION. I ALSO AUTHORIZE PERIODIC ON-SITE INSPECTIONS BY THE HOWARD SOIL CONSERVATION DISTRICT."

DEVELOPER – SPRINGLAND, LLC. STEVE SHIPP — DATE: 8/2/01

BY THE ENGINEER:

"I/WE CERTIFY THAT THIS PLAN FOR POND CONSTRUCTION, EROSION AND SEDIMENT CONTROL REPRESENTS A PRACTICAL AND WORKABLE PLAN BASED ON MY PERSONAL KNOWLEDGE OF THE SITE CONDITIONS. THIS PLAN WAS PREPARED IN ACCORDANCE WITH THE REQUIREMENTS OF THE HOWARD SOIL CONSERVATION DISTRICT. I HAVE NOTIFIED THE DEVELOPER THAT HE/SHE MUST ENGAGE A REGISTERED PROFESSIONAL ENGINEER TO SUPERVISE POND CONSTRUCTION AND PROVIDE THE HOWARD SOIL CONSERVATION DISTRICT WITH AN "AS-BUILT" PLAN OF THE POND WITHIN 30 DAYS OF COMPLETION."

Donald Mason
ENGINEER – BENCHMARK ENGINEERING, INC. DONALD A. MASON, P.E. # 21443 — DATE: 8/2/01

THESE PLANS HAVE BEEN REVIEWED FOR THE HOWARD SOIL CONSERVATION DISTRICT AND MEET THE TECHNICAL REQUIREMENTS FOR SMALL POND CONSTRUCTION, SOIL EROSION, AND SEDIMENT CONTROL.

Jim Myers / GS
NATURAL RESOURCES CONSERVATION SERVICE — DATE: 8/13/01

THESE PLANS FOR SMALL POND CONSTRUCTION, SOIL EROSION, AND SEDIMENT CONTROL MEET THE REQUIREMENTS OF THE HOWARD SOIL CONSERVATION DISTRICT.

HOWARD SOIL CONSERVATION DISTRICT — DATE: 8/13/01 12-02-01

APPROVED: HOWARD COUNTY DEPARTMENT OF PUBLIC WORKS

CHIEF, BUREAU OF HIGHWAYS — DATE: 8/01/01

APPROVED: HOWARD COUNTY DEPARTMENT OF PLANNING AND ZONING

CHIEF, DIVISION OF LAND DEVELOPMENT BB — DATE: 12/10/01

CHIEF, DEVELOPMENT ENGINEERING DIVISION MK 11-28-01 — DATE: 9/19/01

DETAIL 24 – STABILIZED CONSTRUCTION ENTRANCE

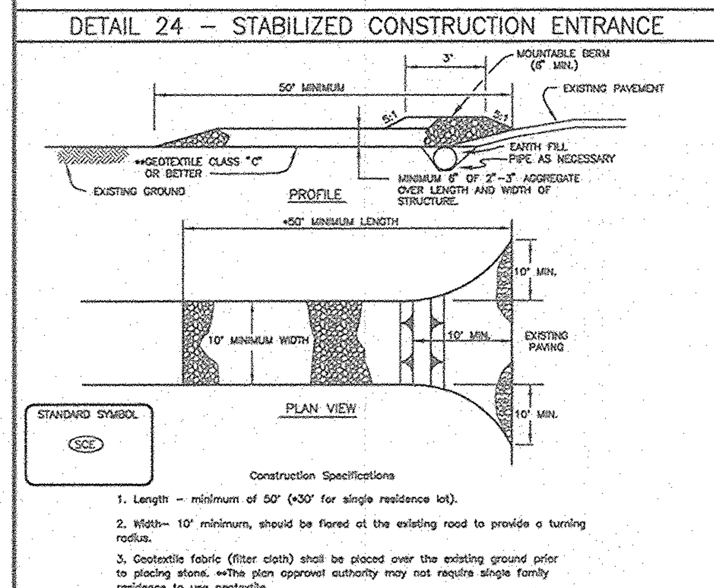

Construction Specifications

1. Length – minimum of 50' (*30' for single residence lot).
2. Width– 10' minimum, should be flared at the existing road to provide a turning radius.
3. Geotextile fabric (filter cloth) shall be placed over the existing ground prior to placing stone. **The plan approval authority may not require single family residence to use geotextile.
4. Stone – crushed aggregate (2" to 3") or reclaimed or recycled concrete equivalent shall be placed at least 6" deep over the length and width of the entrance.
5. Surface Water – all surface water flowing to or diverted toward construction entrances shall be piped through the entrance, maintaining positive drainage. Pipe installed through the stabilized construction entrance shall be protected with a mounted berm with 5:1 slopes and a minimum of 6" of stone over the pipe. Pipe has to be sized according to the drainage. When the SCE is located at a high spot and has no drainage to convey a pipe will not be necessary. Pipe should be sized according to the amount of runoff to be conveyed. A 6" minimum will be required.
6. Location – A stabilized construction entrance shall be located at every point where construction traffic enters or leaves a construction site. Vehicles leaving the site must travel over the entire length of the stabilized construction entrance.

U.S. DEPARTMENT OF AGRICULTURE SOIL CONSERVATION SERVICE	PAGE F - 17 - 3	MARYLAND DEPARTMENT OF ENVIRONMENT WATER MANAGEMENT ADMINISTRATION

DETAIL 30 – EROSION CONTROL MATTING

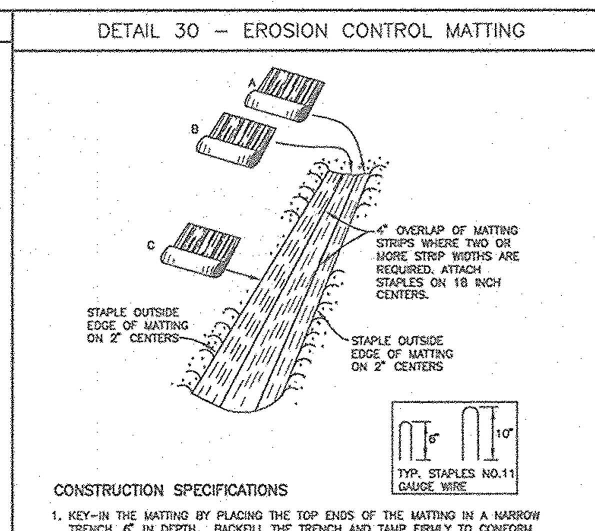

CONSTRUCTION SPECIFICATIONS

1. KEY-IN THE MATTING BY PLACING THE TOP ENDS OF THE MATTING IN A NARROW TRENCH, 6" IN DEPTH. BACKFILL THE TRENCH AND TAMP FIRMLY TO CONFORM TO THE CHANNEL CROSS-SECTION. SECURE WITH A ROW OF STAPLES ABOUT 4" DOWN SLOPE FROM THE TRENCH. SPACING BETWEEN STAPLES IS 6".
2. STAPLE THE 4" OVERLAP IN THE CHANNEL CENTER USING AN 18" SPACING BETWEEN STAPLES.
3. BEFORE STAPLING THE OUTER EDGES OF THE MATTING, MAKE SURE THE MATTING IS SMOOTH AND IN FIRM CONTACT WITH THE SOIL.
4. STAPLES SHALL BE PLACED 2' APART WITH 4 ROWS FOR EACH STRIP, 2 OUTER ROWS, AND 2 ALTERNATING ROWS DOWN THE CENTER.
5. WHERE ONE ROLL OF MATTING ENDS AND ANOTHER BEGINS, THE END OF THE TOP STRIP SHALL OVERLAP THE UPPER END OF THE LOWER STRIP BY 4", SHIPLAP FASHION. REINFORCE THE OVERLAP WITH A DOUBLE ROW OF STAPLES SPACED 6" APART IN A STAGGERED PATTERN ON EITHER SIDE.
6. THE DISCHARGE END OF THE MATTING LINER SHOULD BE SIMILARLY SECURED WITH WITH 2 DOUBLE ROWS OF STAPLES.

NOTE: IF FLOW WILL ENTER FROM THE EDGE OF THE MATTING THEN THE AREA EFFECTED BY THE FLOW MUST BE KEYED-IN.

U.S. DEPARTMENT OF AGRICULTURE SOIL CONSERVATION SERVICE	PAGE G - 22 - 2	MARYLAND DEPARTMENT OF ENVIRONMENT WATER MANAGEMENT ADMINISTRATION

DETAIL 33 – SUPER SILT FENCE

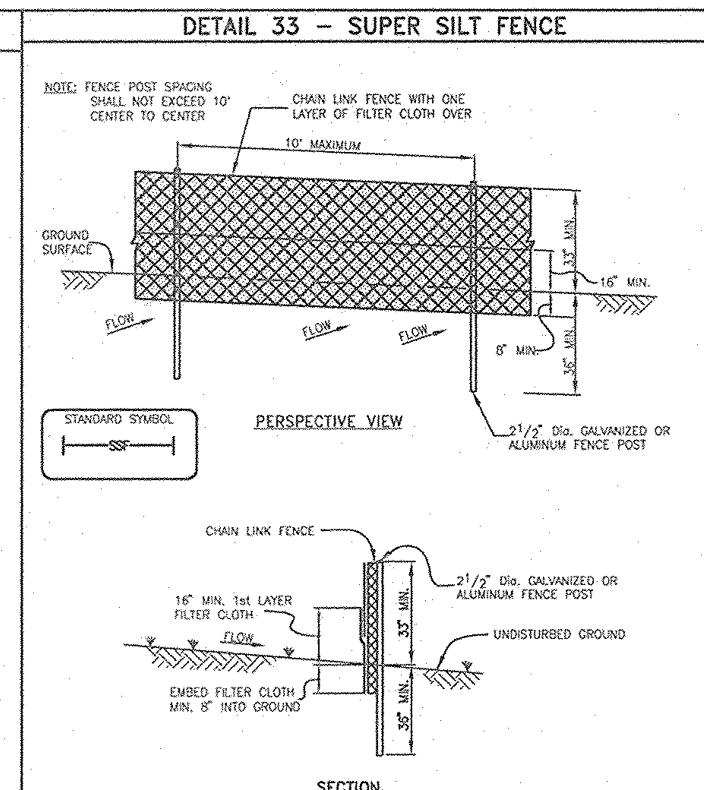

U.S. DEPARTMENT OF AGRICULTURE SOIL CONSERVATION SERVICE	PAGE H - 26 - 3	MARYLAND DEPARTMENT OF ENVIRONMENT WATER MANAGEMENT ADMINISTRATION

SUPER SILT FENCE

CONSTRUCTION SPECIFICATIONS

1. Fencing shall be 42" in height and constructed in accordance with the latest Maryland State Highway Details for Chain Link Fencing. The specification for a 6' fence shall be used, substituting 42" fabric and 6' length posts.
2. Chain link fence shall be fastened securely to the fence posts with wire ties. The lower tension wire, brace and truss rods, drive anchors and post caps are not required except on the ends of the fence.
3. Filter cloth shall be fastened securely to the chain link fence with ties spaced every 24" at the top and mid section.
4. Filter cloth shall be embedded a minimum of 8" into the ground.
5. When two sections of filter cloth adjoin each other, they shall be overlapped by 6" and folded.
6. Maintenance shall be performed as needed and silt buildups removed when "bulges" develop in the silt fence, or when silt reaches 50% of fence height
7. Filter cloth shall be fastened securely to each fence post with wire ties or staples at top and mid section and shall meet the following requirements for Geotextile Class F:

Tensile Strength	50 lbs/in (min.)	Test: MSMT 509
Tensile Modulus	20 lbs/in (min.)	Test: MSMT 509
Flow Rate	0.3 gal/ft /minute (max.)	Test: MSMT 322
Filtering Efficiency	75% (min.)	Test: MSMT 322

SUPER SILT FENCE DESIGN CRITERIA

Slope	Slope Steepness	Slope Length (maximum)	Silt Fence Length (maximum)
0 – 10%	0 – 10:1	Unlimited	Unlimited
10 – 20%	10:1 – 5:1	200 feet	1,500 feet
20 – 33%	5:1 – 3:1	100 feet	1,000 feet
33 – 50%	3:1 – 2:1	100 feet	500 feet
50% +	2:1 +	50 feet	250 feet

U.S. DEPARTMENT OF AGRICULTURE SOIL CONSERVATION SERVICE	PAGE E - 26 - 3A	MARYLAND DEPARTMENT OF ENVIRONMENT WATER MANAGEMENT ADMINISTRATION

DETAIL 1 – EARTH DIKE

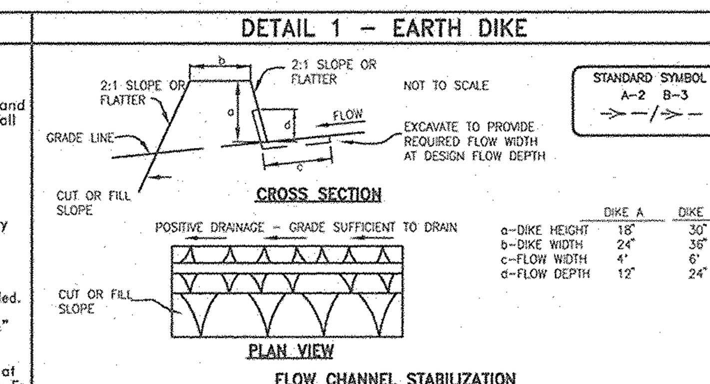

	DIKE A	DIKE B
a-DIKE HEIGHT	18"	30"
b-DIKE WIDTH	24"	36"
c-FLOW WIDTH	4'	6'
d-FLOW DEPTH	12"	24"

FLOW CHANNEL STABILIZATION
GRADE 0.5% MIN. 10% MAX.

1. Seed and cover with straw mulch.
2. Seed and cover with Erosion Control Matting or line with sod.
3. 4" – 7" stone or recycled concrete equivalent pressed into the soil 7" minimum.

CONSTRUCTION SPECIFICATIONS

1. All temporary earth dikes shall have uninterrupted positive grade to an outlet. Spot elevations may be necessary for grades less than 1%.
2. Runoff diverted from a disturbed area shall be conveyed to a sediment trapping device.
3. Runoff diverted from an undisturbed area shall outlet directly into an undisturbed, stabilized area at a non-erosive velocity.
4. All trees, brush, stumps, obstructions, and other objectional material shall be removed and disposed of so as not to interfere with the proper functioning of the dike.
5. The dike shall be excavated or shaped to line, grade and cross section as required to meet the criteria specified herein and be free of bank projections or other irregularities which will impede normal flow.
6. Fill shall be compacted by earth moving equipment.
7. All earth removed and not needed for construction shall be placed so that it will not interfere with the functioning of the dike.
8. Inspection and maintenance must be provided periodically and after each rain event.

U.S. DEPARTMENT OF AGRICULTURE SOIL CONSERVATION SERVICE	PAGE A - 1 - 6	MARYLAND DEPARTMENT OF ENVIRONMENT WATER MANAGEMENT ADMINISTRATION

DETAIL 23A – STANDARD INLET PROTECTION

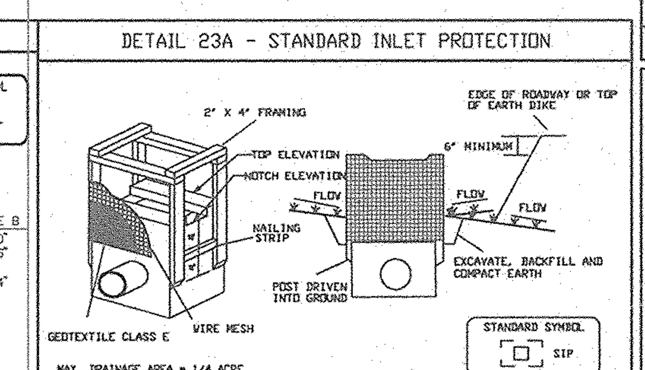

MAX. DRAINAGE AREA = 1/4 ACRE

Construction Specifications

1. Excavate completely around the inlet to a depth of 18" below the notch elevation.
2. Drive the 2" x 4" construction grade lumber posts 1' into the ground at each corner of the inlet. Place nail strips between the posts on the ends of the inlet. Assemble the top portion of the 2" x 4" frame using the overlap joint shown on Detail 23A. The top of the frame (weir) must be 6" below adjacent roadways where flooding and safety issues may arise.
3. Stretch the 1/2" x 1/2" wire mesh tightly around the frame and fasten securely. The ends must meet and overlap at a post.
4. Stretch the Geotextile Class E tightly over the wire mesh with the geotextile extending from the top of the frame to 18" below the inlet notch elevation. Fasten the geotextile firmly to the frame. The ends of the geotextile must meet at a post, be overlapped and folded, then fastened down.
5. Backfill around the inlet in compacted 6" layers until the layer of earth is level with the notch elevation on the ends and top elevation on the sides.
6. If the inlet is not in a sump, construct a compacted earth dike across the ditch line directly below it. The top of the earth dike should be at least 6" higher than the top of the frame.
7. The structure must be inspected periodically and after each rain and the geotextile replaced when it becomes clogged.

U.S. DEPARTMENT OF AGRICULTURE SOIL CONSERVATION SERVICE	PAGE E - 16 - 5	MARYLAND DEPARTMENT OF ENVIRONMENT WATER MANAGEMENT ADMINISTRATION

NO.	DATE	REVISION
2	3-3-06	REVISED PER AS-BUILT CONDITIONS
1	8-6-02	REV. RET. WALL LOCATION & ADDED ES-3

BENCHMARK
ENGINEERS ▲ LAND SURVEYORS ▲ PLANNERS
ENGINEERING, INC.
8480 BALTIMORE NATIONAL PIKE ▲ SUITE 418
ELLICOTT CITY, MARYLAND 21043
phone: 410-465-6105 ▲ fax: 410-465-6644
email: Benchmrk@cais.com

Donald Mason 8/2/01

OWNER/DEVELOPER:
SPRINGLAND, LLC.
5570 STERRET STREET
COLUMBIA, MD 21044
PHONE: 410-472-2993

PROJECT: HARWOOD PARK
IVY SPRING ROAD & CROSS IVY ROAD AND LOTS 1093C, 1094C, 1097C, 1098B, 1100A-1101A, 1103A-1104A, 1106A-1108A, 1109, 1110B-1111B, 1116B-1118B, 1133B-1137B, 1141B AND 1143B

LOCATION: TAX MAP 38 – GRIDS 13 & 14
P/O PARCEL 873
1st ELECTION DISTRICT
HOWARD COUNTY, MARYLAND

TITLE: GRADING, SEDIMENT & EROSION CONTROL PLAN AND DETAILS

DATE: AUGUST, 2000 / AUGUST, 2001 — PROJECT NO. 1306

Design: MLV — Draft: MCR — Check: DAM — SCALE: AS SHOWN — DRAWING 4 OF 7

AS-BUILT F-01-035

\\tsa\vol1\engineer\projects\1306\dwg\7023D.dwg, 08/01/2001 05:35:53 PM, BALTIMORE RAVENS SUPER BOWL CHAMPS

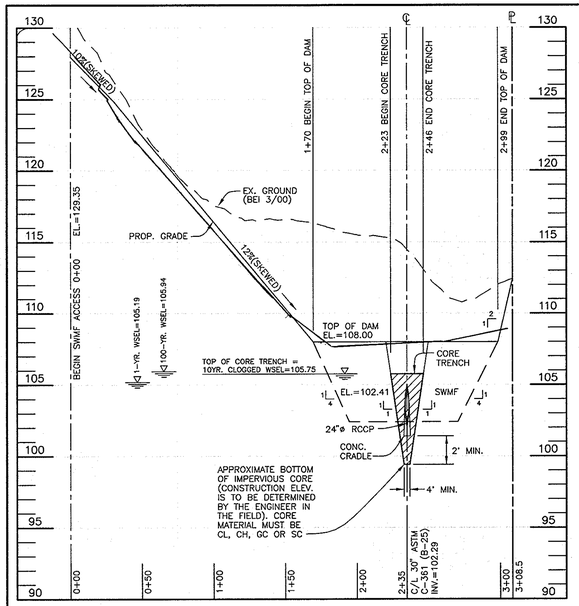

PROFILE ALONG C/L OF EMBANKMENT

HORIZONTAL SCALE: 1"=50'
VERTICAL SCALE: 1"=5'

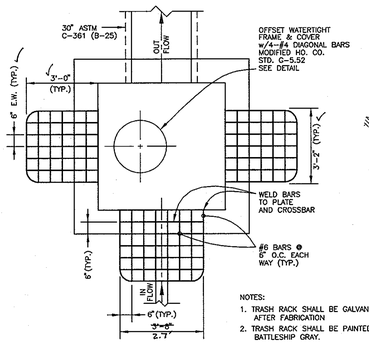

PLAN VIEW

NOTES:
1. TRASH RACK SHALL BE GALVANIZED AFTER FABRICATION
2. TRASH RACK SHALL BE PAINTED BATTLESHIP GRAY.

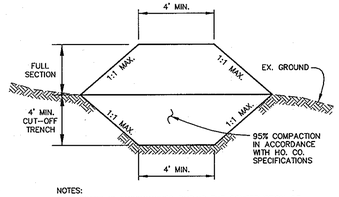

NOTES:
1. IF WATER IS ENCOUNTERED DURING THE CONSTRUCTION OF THE CORE TRENCH, IT IS TO BE REMOVED BY PUMPING.
2. CORE TRENCH SHALL CONSIST OF IMPERVIOUS MATERIAL (CL, CH, GC or SC) AS DIRECTED BY A GEOTECHNICAL ENGINEER ONSITE AND MAY REQUIRE TO BE HAULED FROM AN OFFSITE LOCATION.

CORE TRENCH DETAIL

NOT TO SCALE

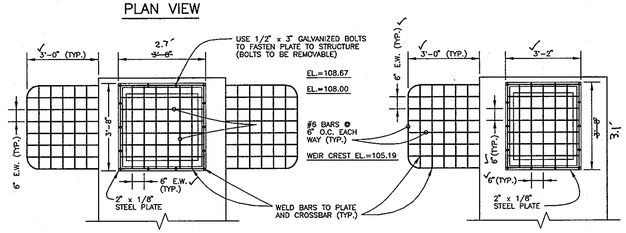

FRONT VIEW

SIDE VIEW

TRASH RACK

SCALE: 1"=3'

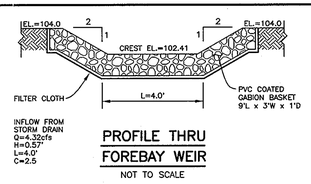

PROFILE THRU FOREBAY WEIR

NOT TO SCALE

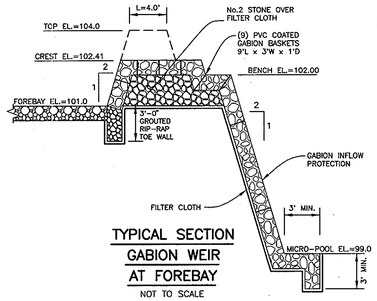

TYPICAL SECTION GABION WEIR AT FOREBAY

NOT TO SCALE

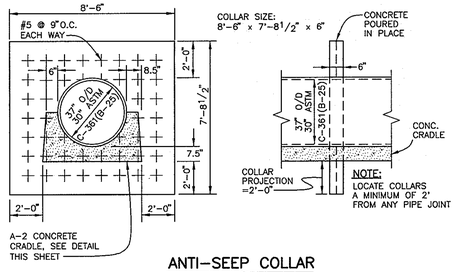

ANTI-SEEP COLLAR

NOT TO SCALE

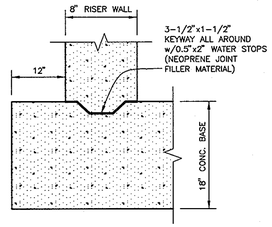

KEYWAY DETAIL

NOT TO SCALE

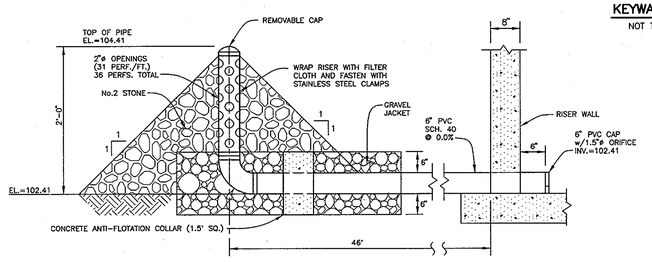

6" SWM DEWATERING PIPE DETAIL

NOT TO SCALE

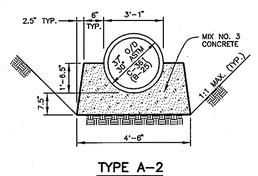

TYPE A-2 CONCRETE CRADLE

NOT TO SCALE

SECTION THRU PRINCIPAL SPILLWAY

HORIZONTAL SCALE: 1"=20'
VERTICAL SCALE: 1"=2'

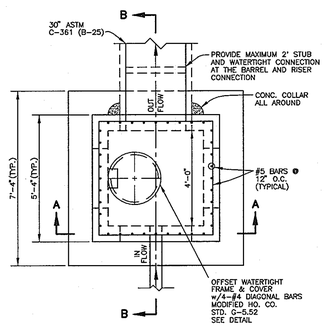

PLAN VIEW

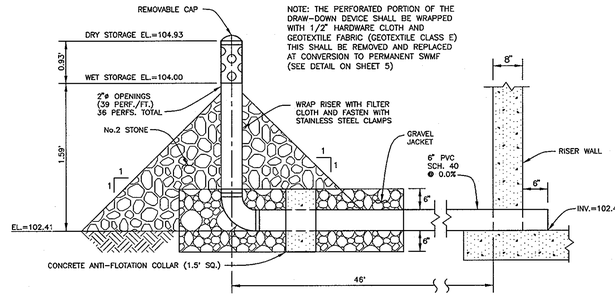

6" TEMPORARY SWM VERTICAL DRAW-DOWN DEVICE

NOT TO SCALE

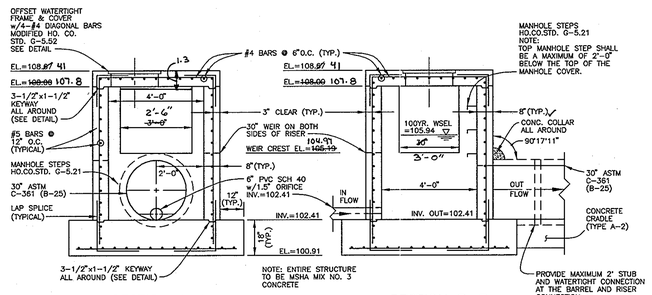

SECTION A–A FRONT VIEW

SECTION B–B SIDE VIEW

CONTROL STRUCTURE

SCALE: 1"=3'

AS-BUILT 8/13/06

OPERATION AND MAINTENANCE SCHEDULE OF PRIVATELY OWNED AND MAINTAINED STORMWATER MANAGEMENT FACILITY

ROUTINE MAINTENANCE

1. FACILITY SHALL BE INSPECTED ANNUALLY AND AFTER MAJOR STORMS. INSPECTIONS SHOULD BE PERFORMED DURING WET WEATHER TO DETERMINE IF THE POND IS FUNCTIONING PROPERLY.
2. TOP AND SIDE SLOPES OF THE EMBANKMENT SHALL BE MOWED A MINIMUM OF TWO (2) TIMES A YEAR, ONCE IN JUNE AND ONCE IN SEPTEMBER. OTHER SIDE SLOPES AND MAINTENANCE ACCESS SHOULD BE MOWED AS NEEDED.
3. DEBRIS AND LITTER SHALL BE REMOVED DURING REGULAR MOWING OPERATIONS AND AS NEEDED.
4. VISIBLE SIGNS OF EROSION IN THE POND AS WELL AS RIPRAP OUTLET AREA SHALL BE REPAIRED AS SOON AS IT IS NOTICED.

NON-ROUTINE MAINTENANCE

1. STRUCTURAL COMPONENTS OF THE POND SUCH AS THE DAM, THE RISER, AND THE PIPES SHALL BE REPAIRED UPON THE DETECTION OF ANY DAMAGE. THE COMPONENTS SHOULD BE INSPECTED DURING ROUTINE MAINTENANCE OPERATIONS.
2. SEDIMENT SHOULD BE REMOVED FROM THE POND NO LATER THAN WHEN THE CAPACITY OF THE POND IS HALF FULL OF SEDIMENT, WHEN DEEMED NECESSARY FOR AESTHETIC REASONS, OR WHEN DEEMED NECESSARY BY HOWARD COUNTY'S DEPARTMENT OF PUBLIC WORKS.

OPERATION, MAINTENANCE AND INSPECTION NOTE

INSPECTION OF THE POND(S) SHOWN HEREON SHALL BE PERFORMED AT LEAST ANNUALLY, IN ACCORDANCE WITH THE CHECKLIST AND REQUIREMENTS CONTAINED WITHIN USDA, SCS STANDARDS AND SPECIFICATIONS FOR PONDS" (MD-378). THE POND OWNER(S) AND ANY HEIRS, SUCCESSORS, OR ASSIGNS SHALL BE RESPONSIBLE FOR THE SAFETY OF THE POND AND THE CONTINUED OPERATION, SURVEILLANCE, INSPECTION, AND MAINTENANCE THEREOF. THE POND OWNER(S) SHALL PROMPTLY NOTIFY THE SOIL CONSERVATION DISTRICT OF ANY UNUSUAL OBSERVATIONS THAT MAY BE INDICATIONS OF DISTRESS SUCH AS EXCESSIVE SEEPAGE, TURBID SEEPAGE, SLIDING OR SLUMPING.

AS-BUILT CERTIFICATION

I HEREBY CERTIFY THAT THE FACILITY SHOWN ON THIS PLAN WAS CONSTRUCTED AS SHOWN ON THE "AS-BUILT" PLANS AND MEETS THE APPROVED PLANS AND SPECIFICATIONS.

Donald Mason — DONALD A. MASON — PE NO. 21443 — DATE 3/13/06

CERTIFY MEANS TO STATE OR DECLARE A PROFESSIONAL OPINION BASED UPON ONSITE INSPECTIONS AND MATERIAL TESTS WHICH ARE CONDUCTED DURING CONSTRUCTION. THE ONSITE INSPECTIONS AND MATERIAL TESTS ARE THOSE INSPECTIONS AND TESTS DEEMED SUFFICIENT AND APPROPRIATE BY COMMONLY ACCEPTED ENGINEERING STANDARDS. CERTIFY DOES NOT MEAN OR IMPLY A GUARANTEE BY THE ENGINEER NOR DOES AN ENGINEER'S CERTIFICATION RELIEVE ANY OTHER PARTY FROM MEETING REQUIREMENTS IMPOSED BY CONTRACT, EMPLOYMENT, OR OTHER MEANS, INCLUDING MEETING COMMONLY ACCEPTED INDUSTRY PRACTICES.

BY THE DEVELOPER:

"I/WE CERTIFY THAT ALL DEVELOPMENT AND/OR CONSTRUCTION WILL BE DONE ACCORDING TO THESE PLANS, AND THAT ANY RESPONSIBLE PERSONNEL INVOLVED IN THE CONSTRUCTION PROJECT WILL HAVE A CERTIFICATE OF ATTENDANCE AT A DEPARTMENT OF THE ENVIRONMENT APPROVED TRAINING PROGRAM FOR THE CONTROL OF SEDIMENT AND EROSION BEFORE BEGINNING THE PROJECT. I SHALL ENGAGE A REGISTERED PROFESSIONAL ENGINEER TO SUPERVISE POND CONSTRUCTION AND PROVIDE THE HOWARD SOIL CONSERVATION DISTRICT WITH AN "AS-BUILT" PLAN OF THE POND WITHIN 30 DAYS OF COMPLETION. I ALSO AUTHORIZE PERIODIC ON-SITE INSPECTIONS BY THE HOWARD SOIL CONSERVATION DISTRICT."

DEVELOPER – SPRINGLAND, LLC. STEVE SHIPP — DATE: 8/2/01

BY THE ENGINEER:

"I/WE CERTIFY THAT THIS PLAN FOR POND CONSTRUCTION, EROSION AND SEDIMENT CONTROL REPRESENTS A PRACTICAL AND WORKABLE PLAN BASED ON MY PERSONAL KNOWLEDGE OF THE SITE CONDITIONS. THIS PLAN WAS PREPARED IN ACCORDANCE WITH THE REQUIREMENTS OF THE HOWARD SOIL CONSERVATION DISTRICT. I HAVE NOTIFIED THE DEVELOPER THAT HE/SHE MUST ENGAGE A REGISTERED PROFESSIONAL ENGINEER TO SUPERVISE POND CONSTRUCTION AND PROVIDE THE HOWARD SOIL CONSERVATION DISTRICT WITH AN "AS-BUILT" PLAN OF THE POND WITHIN 30 DAYS OF COMPLETION."

Donald Mason — ENGINEER – BENCHMARK ENGINEERING, INC. DONALD A. MASON, P.E. # 21443 — DATE: 8/6/01

THESE PLANS HAVE BEEN REVIEWED FOR THE HOWARD SOIL CONSERVATION DISTRICT AND MEET THE TECHNICAL REQUIREMENTS FOR SMALL POND CONSTRUCTION, SOIL EROSION, AND SEDIMENT CONTROL.

NATURAL RESOURCES CONSERVATION SERVICE — DATE: 8/13/01

THESE PLANS FOR SMALL POND CONSTRUCTION, SOIL EROSION, AND SEDIMENT CONTROL MEET THE REQUIREMENTS OF THE HOWARD SOIL CONSERVATION DISTRICT.

HOWARD SOIL CONSERVATION DISTRICT — DATE: 8/13/01; 12-03-01

APPROVED: HOWARD COUNTY DEPARTMENT OF PUBLIC WORKS

CHIEF, BUREAU OF HIGHWAYS — DATE: 8/29/01

APPROVED: HOWARD COUNTY DEPARTMENT OF PLANNING AND ZONING

CHIEF, DIVISION OF LAND DEVELOPMENT — DATE: 12/10/01

CHIEF, DEVELOPMENT ENGINEERING DIVISION MK 11-28-01 — DATE: 9/19/01

NO.	DATE	REVISION
1	3-3-06	REVISED PER AS-BUILT CONDITIONS

BENCHMARK
ENGINEERS ▲ LAND SURVEYORS ▲ PLANNERS
ENGINEERING, INC.
8480 BALTIMORE NATIONAL PIKE ▲ SUITE 418
ELLICOTT CITY, MARYLAND 21043
phone: 410-465-6105 ▲ fax: 410-465-6644
email: Benchmrk@cals.com

Donald Mason — 8/6/01

OWNER/DEVELOPER:
SPRINGLAND, LLC.
5570 STERRET STREET
COLUMBIA, MD 21044
PHONE: 410-472-2993

PROJECT: HARWOOD PARK
IVY SPRING ROAD & CROSS IVY ROAD AND LOTS 1093C, 1094C, 1097C, 1098B, 1100A–1101A, 1103A–1104A, 1106A–1108A, 1109, 1110B–1111B, 1116B–1118B, 1133B–1137B, 1141B AND 1143B

LOCATION: TAX MAP 38 – GRIDS 13 & 14 P/O PARCEL 873 1st ELECTION DISTRICT HOWARD COUNTY, MARYLAND

TITLE: STORMWATER MANAGEMENT NOTES AND DETAILS

DATE: AUGUST, 2000 / AUGUST, 2001 — PROJECT NO. 1306

Design: MLV — Draft: MCR — Check: DAM — SCALE: AS SHOWN — DRAWING 5 OF 7

AS-BUILT

F-01-035

CONSTRUCTION SPECIFICATIONS

These specifications are appropriate to all ponds within the scope of the Standard for practice MD-378. All references to ASTM and AASHTO specifications apply to the most recent version.

Site Preparation

Areas designated for borrow areas, embankment, and structural works shall be cleared, grubbed and stripped to topsoil. All trees, vegetation, roots and other objectionable material shall be removed. Channel banks and sharp breaks shall be sloped to no steeper than 1:1. All trees shall be cleared and grubbed within 15 feet of the toe of the embankment.

Areas to be covered by the reservoir will be cleared of all trees, brush, logs, fences, rubbish and other objectionable material unless otherwise designated on the plans. Trees, brush, and stumps shall be cut approximately level with the ground surface. For dry stormwater management ponds, a minimum of a 25-foot radius around the inlet structure shall be cleared.

All cleared and grubbed material shall be disposed of outside and below the limits of the dam and reservoir as directed by the owner or his representative. When specified, a sufficient quantity of topsoil will be stockpiled in a suitable location for use on the embankment and other designated areas.

Earth Fill

Material – The fill material shall be taken from approved designated borrow areas. If shall be free of roots, stumps, wood, rubbish, stones greater than 6", frozen or other objectionable material. Fill material for the center of the embankment, and cut off trench shall conform to Unified Soil Classification GC, SC, CH, or CL and must have at least 30% passing the #200 sieve. Consideration may be given to the use of other materials in the embankment if designed by a geotechnical engineer. Such special designs must have construction supervised by a geotechnical engineer.

Materials used in the outer shell of the embankment must have the capability to support vegetation of the quality required to prevent erosion of the embankment.

Placement – Areas on which fill is to be placed shall be scarified prior to placement of fill. Fill materials shall be placed in maximum 8 inch thick (before compaction) layers which are to be continuous over the entire length of the fill. The most permeable borrow material shall be placed in the downstream portions of the embankment. The principal spillway must be installed concurrently with fill placement and not excavated into the embankment.

Compaction – the movement of the hauling and spreading equipment over the fill shall be controlled so that the entire surface of each lift shall be traversed by not less than one tread track of heavy equipment or compaction shall be achieved by a minimum of four complete passes of a sheepsfoot, rubber tired or vibratory roller. Fill material shall contain sufficient moisture such that the required degree of compaction will be obtained with teh equipment used. The fill material shall contain sufficient moisture so that if formed into a ball it will not crumble, yet not be so wet that water can be squeezed out.

When required by the reviewing agency the minimum required density shall not be less than 95% of maximum dry density with a moisture content within ± 2% of the optimum. Each layer of fill shall be compacted as necessary to obtain that density, and is to be certified by the Engineer at the time of construction. All compaction is to be determined by AASHTO Method T-99 (Standard Proctor).

Cut Off Trench – The cutoff trench shall be excavated into impervious material along or parallel to the centerline of the embankment as shown on the plans. The bottom width of the trench shall be governed by the equipment used for excavation, with the minimum width being four feet. The depth shall be a least four feet below existing grade or as shown on the plans. The side slopes of the trench shall be 1 to 1 or flatter. The backfill shall be compacted with construction equipment, rollers, or hand tampers to assure maximum density and minimum permeability.

Embankment Core – The core shall be parallel to the centerline of the embankment as shown on the plans. The top width of the cores shall be a minimum of four feet. The height shall extend up to at least the 10 year water elevation or as shown on the plans. The side slopes shall be 1 to 1 or flatter. The core shall be compacted with construction equipment, rollers, or hand tampers to assure maximum density and minimum permeability. In addition, the core shall be placed concurrently with the outer shell of the embankment.

Structure Backfill

Backfill adjacent to pipes or structures shall be of the type and quality conforming to that specified for the adjoining fill material. The fill shall be placed in horizontal layers not to exceed four inches in thickness and compacted by hand tampers or other manually directed compaction equipment. The material needs to fill completely all spaces under and adjacent to the pipe. At no time during the backfilling operation shall driven equipment be allowed to operate closer than four feet, measured horizontally, to any part of a structure. Under no circumstances shall equipment be driven over any part of a concrete structure or pipe, unless there is a compacted fill of 24" or greater over the structure or pipe.

Structure backfill may be flowable fill meeting the requirements of Maryland Department of Transportation, State Highway Administration Standard Specifications for Construction and Materials, Section 313 as modified. The mixture shall have a 100-200 psi; 28 day unconfined compressive strength. The flowable fill shall have a minimum pH of 4.0 and a minimum resistively of 2,000 ohm-cm. Material shall be placed such that a minimum of 6" (measured perpendicular to the outside of the pipe) of flowable fill shall be under (bedding), over and, on the sided of the pipe. It only needs to extend up to the spring line for rigid conduits. Average slump of the fill shall be 7" to assure flowability of the material. Adequate measures shall be taken (sand bags, etc.) to prevent floating the pipe. When using flowable fill, all metal pipe shall be bituminous coated. Any adjoining soil fill shall be placed in horizontal layers not to exceed four inches in thickness and compacted by hand tampers or other manually directed compaction equipment. The material shall completely fill all voids adjacent to the flowable fill zone. At no time during the backfilling operation shall driven equipment be allowed to operate closer than four feet, measured horizontally, to any part of a structure. Under no circumstances shall equipment be driven over any part of a structure or pipe unless there is a compacted fill of 24' or greater over the structure or pipe. Backfill material outside the structural backfill (flowable fill) zone shall be of the type and quality conforming to that specified for the core of the embankment or other embankment materials.

Pipe Conduits

All pipes shall be circular in cross section

Corrugated Metal Pipe – all of the following criteria shall apply for corrugated metal pipe:

1. Materials – (Polymer Coated steel pipe) – Steel pipes with polymeric coatings shall bave a minimum coating thickness of 0.01 inch (10 mil) on both sides of the pipe. This pipe and its appurtenances shall conform to the requirements of AASHTO Specifications M-245 & M-246 with watertight coupling bands or flanges.

Materials – (Aluminum Coated Steel Pipe) – This pipe and its appurtenances shall conform to the requirements of AASHTO Specification M-274 with watertight coupling bands or flanges. Aluminum Coated Steel Pipe, when used with flowable fill or when soil and/or water conditions warrant the need for increased durability, shall be fully bituminous coated per requirements of AASHTO Specification M-190 Type A. Any aluminum coating damaged or otherwise removed shall be replaced with cold applied bituminous coating compound. Aluminum surfaces that are to be in contact with concrete shall be painted with one coat of zinc chromate primer or two coats of asphalt.

Materials – (Aluminum Pipe) – This pipe and its appurtenances shall conform to the requirements of AASHTO Specification M-196 or M-211 with watertight coupling bands or flanges. Aluminum Pipe, when used with flowable fill or when soil and/or water conditions warrant for increased durability, shall be fully bituminous coated per requirements of AASHTO Specification M-190 Type A. Aluminum surfaces that are to be contact with concrete shall be painted with one coat of zinc chromate primer or two coats of asphalt. Hot dip galvonized bolts may be used for connections. The pH of the surrounding soils shall be between 4 and 9.

2. Coupling bands, anti-seep collars, end sections, etc., must be composed of the same material and coatings as the pipe. Metals must be insulated from dissimilar materials with use of rubber or plastic insulating materials at least 24 mils in thickness.

3. Connections – All connections with pipes must be completely watertight. The drain pipe or barrel connection to the riser shall be welded all around when the pipe and riser are metal. Anti-seep collars shall be connected to the pipe in such a manner as to be completely watertight. Dimple bands are not considered to be watertight.

All connection shall use a rubber or neoprene gasket when joining pipe sections. The end of each pipe shall be re-rolled an adequate number of corrugations to accommodate the bandwidth. The following type connections are acceptable for pipes less than 24 inches in diameter: flanges on both ends of the pipe with a circular 3/8 inch closed cell neoprene gasket, prepunched to the flange bolt circle, sandwiched between adjacent flanges; a 12-inch wide standard lap type band with 12-inch wide by 3/8-inch thick closed cell circular neoprene gasket; and a 12-inch wide hugger type band with o-ring gaskets having a minimum diameter of 1/2 inch greater than the corrugation depth. Pipes 24 inches in diameter and larger shall be connected by a 24 inch long annular corrugated band using a minimum of 4 (four) rods and lugs, 2 on each connecting pipe end. A 24-inch wide by 3/8-inch thick closed cell circular neoprene gasket will be installed with 12 inches on the end of each pipe. Flanged joints with 3/8 inch closed cell gaskets the full width of the flange is also acceptable.

Helically corrugated pipe shall have either continuously welded seams or have lock seams with internal caulking or a neoprene bead.

4. Bedding – The pipe shall be firmly and uniformly bedded throughout its entire length. Where rock or soft, spongy or other unstable soil is encountered, all such material shall be removed and replaced with suitable earth compacted to provide adequate support.

5. Backfilling shall conform to "Structure Backfill".

6. Other details (anti-seep collars, valves, etc.) shall be as shown on the drawings.

Reinforced Concrete Pipe – All of the following criteria shall apply for reinforced concrete pipe:

1. Materials – Reinforced concrete pipe shall have bell and spigot joints with rubber gaskets and shall equal or exceed ASTM C-361.

2. Bedding – Reinforced concrete pipe conduits shall be laid in a concrete bedding/cradle for their entire length. This bedding/cradle shall consist of high slump concrete placed under the pipe and up the sides of the pipe at least 50% of its outside diameter with a minimum thickness of 6 inches. Where a concrete cradle is not needed for structural reasons, flowable fill may be used a described in the "Structure Backfill" section of this standard. Gravel bedding is not permitted.

3. Laying pipe – Bell and spigot pipe shall be places with the bell end upstream. Joints shall be made in accordance with recommendations of the manufacturer of the material. After the joints are sealed for the entire line, the bedding shall be placed so that all spaces under the pipe are filled. Care shall be exercised to prevent any deviation form the original line and grade of the pipe. The first joint must be located within 4 feet from the riser.

4. Backfilling shall conform to "Structure Backfill".

5. Other details (anti-seep collars, valves, etc.) shall be shown on the drawings.

Plastic Pipe – The following criteria shall apply for plastic pipe:

1. Materials – PVC pipe shall be PVC-1120 or PVC-1220 conforming to ASTM D-1785 or ASTM D-2241. Corrugated High Density Polyethylene (HDPE) pipe, couplings and fittings shall conform to the following: 4" – 10" inch pipe shall meet the requirements of AASHTO M252 Type S, and 12" through 24" inch shall meet the requirements of AASHTO M294 Type S.

2. Joints and connections to anti-seep collars shall be completely watertight.

3. Bedding – The pipe shall be firmly and uniformly bedded throughout its entire length. Where rock or soft, spongy or other unstable soil is encountered, all such material shall be removed and replaced with suitable earth compacted to provide adequate support.

4. Backfilling shall conform to "Structure Backfill".

5. Other details (anti-seep collars, valves, etc.) shall be as shown on the drawings.

Drainage Diaphragms – When a drainage diaphragm is used, a registered professional engineer will supervise the design and construction inspection.

Concrete

Concrete shall meet the requirements of Maryland Department of Transportation, State Highway Administration Standard Specifications for Construction and Materials, Section 414, Mix No. 3.

Rock Riprap

Rock riprap shall meet the requirements of Maryland Department of Transportation, State Highway Administration Standard Specifications for Construction and Materials, Section 311.

Geotextile shall be placed under all riprap and shall meet the requirements of Maryland Department of Transportation, State Highway Administration Standard Specifications for Construction and Materials, Section 921.09, Class C.

Care of Water during Construction

All work on permanent structures shall be carried out in areas free from water. The contractor shall construct and maintain all temporary dikes, levees, cofferdoms, drainage channels, and stream diversions necessary to protect the areas to be occupied by the permanent works. The contractor shall also furnish, install, operate, and maintain all necessary pumping and other equipment required for removal of water from various parts of the work and for maintaining the evacuations, foundation, and other parts of the work free from water as required or directed by the engineer for constructing each part of the work. After having served their purpose, all temporary protective works shall be removed or leveled and graded to the extent required to prevent obstruction in any degree whatsoever of the flow of water to the spillway or outlet works and so as not to interfere in any way with the operation or maintenance of the structure. Stream diversions shall be maintained until the full flow can be passed through the permanent works. The removal of water from the required excavation and the foundation shall be accomplished in a manner and to the extent that will maintain stability of the excavated slopes and bottom required excavations and will allow satisfactory performance of all construction operations. During the placing and compacting of material in required excavations, the water level at the location being refilled shall be maintained below the bottom of the excavation at such locations which may require draining the water sumps from which the water shall be pumped.

Stabilization

All borrow areas shall be graded to provide proper drainage and left in a sightly condition. All exposed surfaces of the embankment, spillway, spoil and borrow areas, and berms shall be stabilized by seeding, liming, fertilizing and mulching in accordance with the Natural Resources Conservation Service Standards and Specifications for Critical Area Planting (MD-342) or as shown on the accompanying drawings.

Erosion and Sediment Control

Construction operations will be carried out in such a manner that erosion will be controlled and water and air pollution minimized. State and local laws concerning pollution abatement will be followed. Construction plans shall detail erosion and sediment control measures.

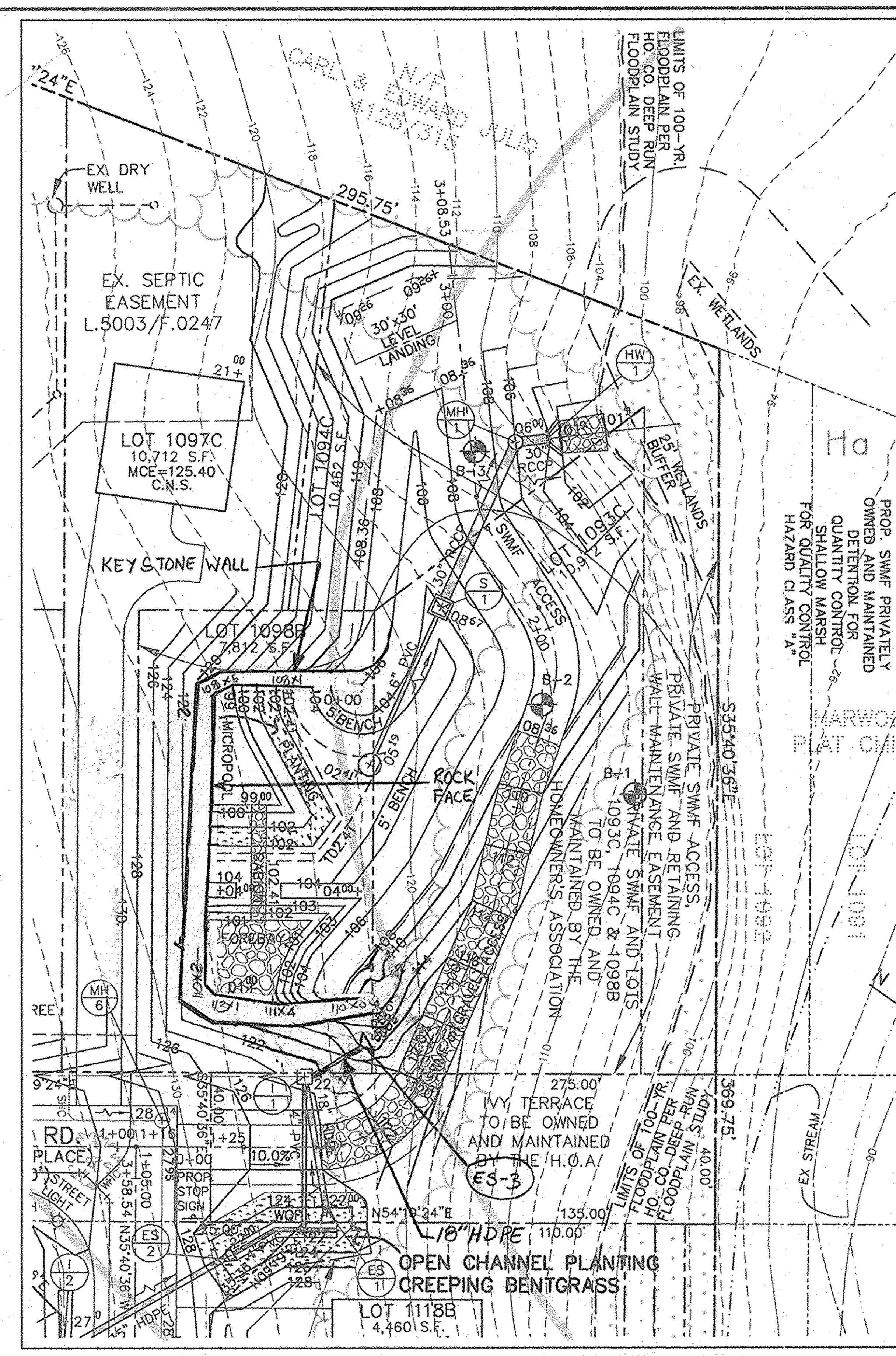

PROPOSED SWMF LANDSCAPING – PLAN VIEW

SCALE: 1"=30'

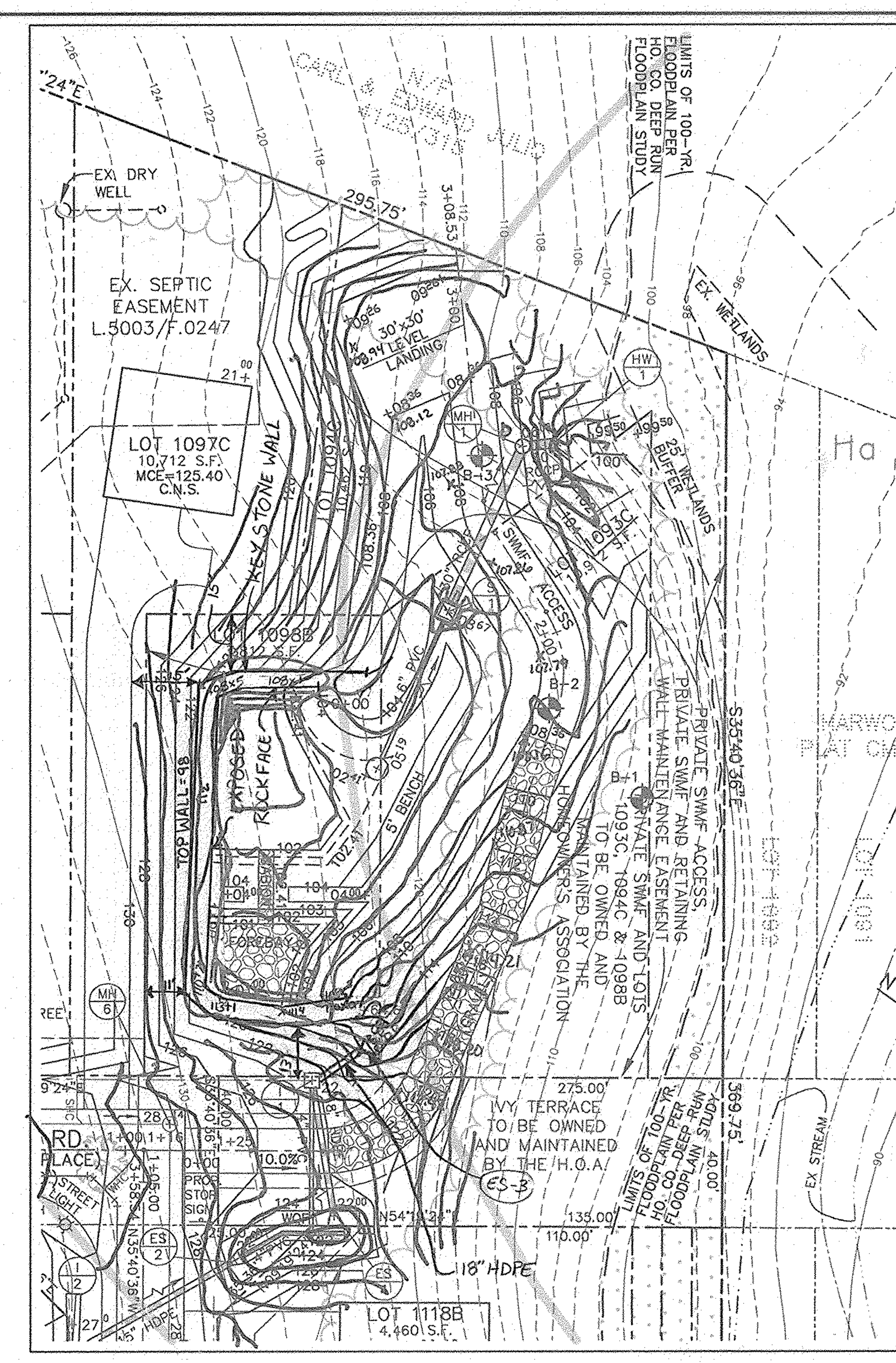

TSWM BASIN GRADING – PLAN VIEW

SCALE: 1"=30'

SWMF – LANDSCAPE DATA

HYDROLOGIC ZONE 2 – SHALLOW WATER BENCH (LOW MARSH)
HYDROLOGIC CONDITION – 6" TO 1'-0" DEEP
HARDINESS – TEMPERATE ZONE 6b (-5° TO 0°)
SEE SHEET 4 FOR SEQUENCE OF CONSTRUCTION

NOTE: REFER TO MDE 2000 MD STORMWATER DESIGN MANUAL VOLUMES 1 & 2 FOR LANDSCAPE CONTRACTOR RESPONSIBILITIES, PRACTICES AND MAINTENANCE DUTIES

"DUE TO THE EXISTENCE OF ROCK IN THE BOTTOM OF THE FACILITY NO BOTTOM PLANTINGS ARE BEING PROPOSED"

SOILS LEGEND

MAP SYMBOL	SOIL TYPE	MAPPING UNIT
Ha	B	HATBORO SILT LOAM
ScE	D	SANDY AND CLAYEY LAND – MODERATELY STEEP
SfC2	D	SASSAFRAS GRAVELLY SANDY LOAM – 5 TO 10 PERCENT SLOPES – MODERATELY ERODED
SsE	B	SASSAFRAS SOILS – 15 TO 40 PERCENT SLOPES
SOILS MAP No. 26		

SWM SUMMARY TABLE – D.A.=2.4Ac.±

STORM FREQUENCY	EX. RUNOFF (cfs)	DEVELOPED RUNOFF AND DISCHARGE (cfs)	INFLOW INTO SWMF	DISCHARGE FROM SWMF	WSEL (ft)	STORAGE (Ac.-ft)
1 YR.	8.73	5.67	5.14	0.28	105.19	0.226
100 YR.	32.08	N/A	17.78	16.59	105.94	0.306

SUMMARY OF GENERAL STORAGE REQUIREMENTS

STEP	REQUIREMENT	VOLUME REQUIRED (AC.-FT.)	NOTES
1	WATER QUALITY VOLUME (WQ_v)	0.04 –	PROVIDING MINIMUM WQv –
2	RECHARGE VOLUME (Rev)	0.004 –	PROVIDED IN DRY SWALE –
3	CHANNEL PROTECTION VOLUME (CP_v)	N/A –	qi < 2 cfs –
4	OVERBANK FLOOD PROTECTION VOLUME (Q_p)	N/A –	D.A. NOT IN DESIGNATED FLOOD AREA
5	EXTREME FLOOD VOLUME (Q_f)	N/A –	D.A. NOT IN DESIGNATED FLOOD AREA

OPERATION AND MAINTENANCE SCHEDULE OF PRIVATELY OWNED AND MAINTAINED STORMWATER MANAGEMENT FACILITY

ROUTINE MAINTENANCE

1. FACILITY SHALL BE INSPECTED ANNUALLY AND AFTER MAJOR STORMS. INSPECTIONS SHOULD BE PERFORMED DURING WET WEATHER TO DETERMINE IF THE POND IS FUNCTIONING PROPERLY.
2. TOP AND SIDE SLOPES OF THE EMBANKMENT SHALL BE MOWED A MINIMUM OF TWO (2) TIMES A YEAR, ONCE IN JUNE AND ONCE IN SEPTEMBER. OTHER SIDE SLOPES AND MAINTENANCE ACCESS SHOULD BE MOWED AS NEEDED.
3. DEBRIS AND LITTER SHALL BE REMOVED DURING REGULAR MOWING OPERATIONS AND AS NEEDED.
4. VISIBLE SIGNS OF EROSION IN THE POND AS WELL AS RIPRAP OUTLET AREA SHALL BE REPAIRED AS SOON AS IT IS NOTICED.

NON-ROUTINE MAINTENANCE

1. STRUCTURAL COMPONENTS OF THE POND SUCH AS THE DAM, THE RISER, AND THE PIPES SHALL BE REPAIRED UPON THE DETECTION OF ANY DAMAGE. THE COMPONENTS SHOULD BE INSPECTED DURING ROUTINE MAINTENANCE OPERATIONS.
2. SEDIMENT SHOULD BE REMOVED FROM THE POND NO LATER THAN WHEN THE CAPACITY OF THE POND IS HALF FULL OF SEDIMENT, WHEN DEEMED NECESSARY FOR AESTHETIC REASONS, OR WHEN DEEMED NECESSARY BY HOWARD COUNTY'S DEPARTMENT OF PUBLIC WORKS.

OPERATION, MAINTENANCE AND INSPECTION NOTE

INSPECTION OF THE POND(S) SHOWN HEREON SHALL BE PERFORMED AT LEAST ANNUALLY, IN ACCORDANCE WITH THE CHECKLIST AND REQUIREMENTS CONTAINED WITHIN USDA, SCS "STANDARDS AND SPECIFICATIONS FOR PONDS" (MD-378). THE POND OWNER(S) AND ANY HEIRS, SUCCESSORS, OR ASSIGNS SHALL BE RESPONSIBLE FOR THE SAFETY OF THE POND AND THE CONTINUED OPERATION, SURVEILLANCE, INSPECTION, AND MAINTENANCE THEREOF. THE POND OWNER(S) SHALL PROMPTLY NOTIFY THE SOIL CONSERVATION DISTRICT OF ANY UNUSUAL OBSERVATIONS THAT MAY BE INDICATIONS OF DISTRESS SUCH AS EXCESSIVE SEEPAGE, TURBID SEEPAGE, SLIDING OR SLUMPING.

AS-BUILT CERTIFICATION

I HEREBY CERTIFY THAT THE FACILITY SHOWN ON THIS PLAN WAS CONSTRUCTED AS SHOWN ON THE "AS-BUILT" PLANS AND MEETS THE APPROVED PLANS AND SPECIFICATIONS.

Donald Mason — DONALD A. MASON   PE NO. 21443   DATE 3/13/06

CERTIFY MEANS TO STATE OR DECLARE A PROFESSIONAL OPINION BASED UPON ONSITE INSPECTIONS AND MATERIAL TESTS WHICH ARE CONDUCTED DURING CONSTRUCTION. THE ONSITE INSPECTIONS AND MATERIAL TESTS ARE THOSE INSPECTIONS AND TESTS DEEMED SUFFICIENT AND APPROPRIATE BY COMMONLY ACCEPTED ENGINEERING STANDARDS. CERTIFY DOES NOT MEAN OR IMPLY A GUARANTEE BY THE ENGINEER NOR DOES AN ENGINEER'S CERTIFICATION RELIEVE ANY OTHER PARTY FROM MEETING REQUIREMENTS IMPOSED BY CONTRACT, EMPLOYMENT, OR OTHER MEANS, INCLUDING MEETING COMMONLY ACCEPTED INDUSTRY PRACTICES.

BY THE DEVELOPER:

"I/WE CERTIFY THAT ALL DEVELOPMENT AND/OR CONSTRUCTION WILL BE DONE ACCORDING TO THESE PLANS, AND THAT ANY RESPONSIBLE PERSONNEL INVOLVED IN THE CONSTRUCTION PROJECT WILL HAVE A CERTIFICATE OF ATTENDANCE AT A DEPARTMENT OF THE ENVIRONMENT APPROVED TRAINING PROGRAM FOR THE CONTROL OF SEDIMENT AND EROSION BEFORE BEGINNING THE PROJECT. I SHALL ENGAGE A REGISTERED PROFESSIONAL ENGINEER TO SUPERVISE POND CONSTRUCTION AND PROVIDE THE HOWARD SOIL CONSERVATION DISTRICT WITH AN "AS-BUILT" PLAN OF THE POND WITHIN 30 DAYS OF COMPLETION. I ALSO AUTHORIZE PERIODIC ON-SITE INSPECTIONS BY THE HOWARD SOIL CONSERVATION DISTRICT."

[signature] 8/2/01
DEVELOPER – SPRINGLAND, LLC. STEVE SHIPP   DATE:

BY THE ENGINEER:

"I/WE CERTIFY THAT THIS PLAN FOR POND CONSTRUCTION, EROSION AND SEDIMENT CONTROL REPRESENTS A PRACTICAL AND WORKABLE PLAN BASED ON MY PERSONAL KNOWLEDGE OF THE SITE CONDITIONS. THIS PLAN WAS PREPARED IN ACCORDANCE WITH THE REQUIREMENTS OF THE HOWARD SOIL CONSERVATION DISTRICT. I HAVE NOTIFIED THE DEVELOPER THAT HE/SHE MUST ENGAGE A REGISTERED PROFESSIONAL ENGINEER TO SUPERVISE POND CONSTRUCTION AND PROVIDE THE HOWARD SOIL CONSERVATION DISTRICT WITH AN "AS-BUILT" PLAN OF THE POND WITHIN 30 DAYS OF COMPLETION."

Donald Mason 8/2/01
ENGINEER – BENCHMARK ENGINEERING, INC. DONALD A. MASON, P.E. # 21443   DATE:

THESE PLANS HAVE BEEN REVIEWED FOR THE HOWARD SOIL CONSERVATION DISTRICT AND MEET THE TECHNICAL REQUIREMENTS FOR SMALL POND CONSTRUCTION, SOIL EROSION, AND SEDIMENT CONTROL.

Jim Myers / CS 8/13/01
NATURAL RESOURCES CONSERVATION SERVICE   DATE:

THESE PLANS FOR SMALL POND CONSTRUCTION, SOIL EROSION, AND SEDIMENT CONTROL MEET THE REQUIREMENTS OF THE HOWARD SOIL CONSERVATION DISTRICT.

[signature] 8/13/01 12-28-01
HOWARD SOIL CONSERVATION DISTRICT   DATE:

APPROVED: HOWARD COUNTY DEPARTMENT OF PUBLIC WORKS

[signature] for 8/-/01
CHIEF, BUREAU OF HIGHWAYS   DATE:

APPROVED: HOWARD COUNTY DEPARTMENT OF PLANNING AND ZONING

[signature] 12/10/01
CHIEF, DIVISION OF LAND DEVELOPMENT   DATE:

[signature] 9/19/01
CHIEF, DEVELOPMENT ENGINEERING DIVISION MK 11-28-01   DATE:

HILLIS-CARNES ENGINEERING ASSOCIATES, INC. (Boring Log B-1)

Page 1 of 1

PROJECT NAME: HARWOOD PARK   BORING # B-1
LOCATION: HOWARD COUNTY, MARYLAND   JOB # 00274A
Datum –   Hammer Wt. 140 lbs   Hole Diameter 7"   Foreman K. Callender
Surf. Elev. 110.5±   Hammer Drop 30"   Rock Core Dia. –   Inspector –
Date Started 7-03-00   Pipe Size 2.0"o.d.   Boring Method HSA   Date Completed 7-03-00

SOIL DESCRIPTION	STRA. DEPTH	BORING & SAMPLING NOTES
SURFACE		
Brown, moist, med. dense, SILTY SAND, trace fine gravel (SM)	2.0	2" Topsoil; No water encounter during drilling; Caved in at 5.0' at completion
Orange-brown, moist, dense, SANDY SILT, trace to little fine gravel and decomposed rock fragments (ML)	4.5	
Gray and brown, moist, dense, SILTY SAND with decomposed rock fragments (SM)	7.5	
Brown, moist, very dense, SILTY SAND and decomposed rock fragments (SM)		
Decomposed rock	10.0	
Bottom of hole at 10.0'		

HILLIS-CARNES ENGINEERING ASSOCIATES, INC. (Boring Log B-2)

Page 1 of 1

PROJECT NAME: HARWOOD PARK   BORING # B-2
LOCATION: HOWARD COUNTY, MARYLAND   JOB # 00274A
Datum –   Hammer Wt. 140 lbs   Hole Diameter 7"   Foreman K. Callender
Surf. Elev. 116.0±   Hammer Drop 30"   Rock Core Dia. –   Inspector –
Date Started 7-03-00   Pipe Size 2.0"o.d.   Boring Method HSA   Date Completed 7-03-00

SOIL DESCRIPTION	STRA. DEPTH	BORING & SAMPLING NOTES
SURFACE		
Orange-brown, moist, med. dense SANDY SILT, trace to no clay (ML)	2.0	2" Topsoil; No water encounter during drilling; Caved in at 6.2' at completion
Orange-brown and black, moist, dense, SANDY SILT with rock fragments (SM)	7.0	
Green and brown, moist, very dense SILTY SAND and rock fragments (SM)		
Decomposed rock	12.0	
Auger Refusal at 12.0' Bottom of hole at 12.0'		

HILLIS-CARNES ENGINEERING ASSOCIATES, INC. (Boring Log B-3)

Page 1 of 1

PROJECT NAME: HARWOOD PARK   BORING # B-3
LOCATION: HOWARD COUNTY, MARYLAND   JOB # 00274A
Datum –   Hammer Wt. 140 lbs   Hole Diameter 7"   Foreman K. Callender
Surf. Elev. 116.0±   Hammer Drop 30"   Rock Core Dia. –   Inspector –
Date Started 7-03-00   Pipe Size 2.0"o.d.   Boring Method HSA   Date Completed 7-03-00

SOIL DESCRIPTION	STRA. DEPTH	BORING & SAMPLING NOTES
SURFACE		
Brown, moist, very loose, SANDY SILT, trace roots, trace rock fragments (ML)	2.0	3" Topsoil; No water encounter during drilling; Caved in at 6.6' at completion
Tan and orange-brown, moist, dense, SILTY SAND and decomposed rock fragments (SM)	8.0	
Spoon Refusal Bottom of hole at 8.0'		

(Each log:) SAMPLER TYPE: DRIVEN SPLIT SPOON UNLESS OTHERWISE NOTED. PT=PRESSED SHELBY TUBE, CA=CONTINUOUS FLIGHT AUGER, RC=ROCK CORE. SAMPLE CONDITIONS: D=DISINTEGRATED, I=INTACT, U=UNDISTURBED, L=LOST. GROUND WATER DEPTH: AT COMPLETION Dry FT., AFTER ___ FT., AFTER ___ FT. BORING METHOD: HSA=HOLLOW STEM AUGERS, CFA=CONT. FLIGHT AUGERS, DC=DRIVING CASING, MD=MUD DRILLING.

STANDARD PENETRATION TEST – DRIVING 2" OD SAMPLER 1' WITH 140# HAMMER FALLING 30":COUNT MADE AT 6" INTERVALS

HILLIS-CARNES ENGINEERING ASSOCIATES, INC. RECOMMENDATIONS

Embankment and Cut-off trench Construction

The site should be stripped of topsoil and any other unsuitable materials from the embankment or structure area in accordance with Soil Conservation Guidelines. After stripping operations have been completed, the exposed subgrade materials should be proofrolled with a loaded dumptruck or similar equipment in the presence of a geotechnical engineer or his representative. For areas that are not accessible to a dump truck, the exposed materials should be observed and tested by a geotechnical engineer or his representative utilizing a Dynamic Cone Penetrometer. Any excessively soft or loose materials identified by proofrolling or penetrometer testing should be excavated to suitable firm soil, and then grades re-established by backfilling with suitable soil.

A representative of the geotechnical Engineer should be present to monitor placement and compaction of fill for each embankment and cut-off trench. In accordance with Maryland Soil Conservation Specification 378, soils considered suitable for the center of embankment and cut-off trench shall conform to Unified Soil Classification GC, SC, CH, or CL. Per SCS 378, consideration may be given to the use of other materials in the embankment if design and construction are supervised by a geotechnical engineer. Any materials for core and cut-off trench construction should be tested prior to placement to determine its suitability. All fill materials must be placed and compacted in accordance with MD SCS 378 specifications (that is, to a minimum of 95 percent of the Standard Proctor maximum dry density).

Additionally, the following procedures should be utilized to construct the proposed embankments:

1. Slope construction should commence at the toes of the proposed slopes and continue upwards as additional fill is placed. The engineered fill placed for slope construction should be benched into the natural slopes in the abutment areas to provide good contact and to prevent the presence of weak zones.
2. Typically during slope construction, compaction equipment has difficulty compacting soils along the shoulder. It is therefore important that the bank be overfilled during slope construction and then cut back to the required geometry.
3. After construction, the slopes should be promptly vegetated to prevent erosion. Also, to prevent erosion from occurring prior to sprouting of the vegetation, the slopes should be protected with straw or an erosion control geotextile.
4. The embankment construction should be done under the supervision of an experienced soil inspector or the Geotechnical Engineer. Sufficient testing during fill placement should be done to verify adequate compaction.

Donald Mason
AS-BUILT 3/13/06

NO.	DATE	REVISION
2	3-3-06	REVISED PER AS-BUILT CONDITIONS
1	8-6-02	REV. RET. WALL LOCATION IN POND & ADDED ES-3

BENCHMARK
ENGINEERS ▲ LAND SURVEYORS ▲ PLANNERS
ENGINEERING, INC.
8480 BALTIMORE NATIONAL PIKE ▲ SUITE 418
ELLICOTT CITY, MARYLAND 21043
phone: 410-465-6105 ▲ fax: 410-465-6644
email: Benchmrk@cais.com

Donald Mason 8/2/01

OWNER/DEVELOPER:
SPRINGLAND, LLC.
5570 STERRET STREET
COLUMBIA, MD 21044
PHONE: 410-472-2993

PROJECT: HARWOOD PARK
IVY SPRING ROAD & CROSS IVY ROAD AND LOTS 1093C, 1094C, 1097C, 1098B, 1100A-1101A, 1103A-1104A, 1106A-1108A, 1109, 1110B-1111B, 1116B-1118B, 1133B-1137B, 1141B AND 1143B

LOCATION: TAX MAP 38 – GRIDS 13 & 14, P/O PARCEL 873, 1st ELECTION DISTRICT, HOWARD COUNTY, MARYLAND

TITLE: STORMWATER MANAGEMENT NOTES AND DETAILS

DATE: AUGUST, 2000 / AUGUST, 2001   PROJECT NO. 1306
Design: MLV   Draft: MCR   Check: DAM   SCALE: AS SHOWN   DRAWING 6 OF 7

AS-BUILT   F-01-035

\\tsa\vol1\engineer\projects\1306\dwg\7024DS2.dwg, 08/01/2001 05:51:41 PM, BALTIMORE RAVENS SUPER BOWL CHAMPS

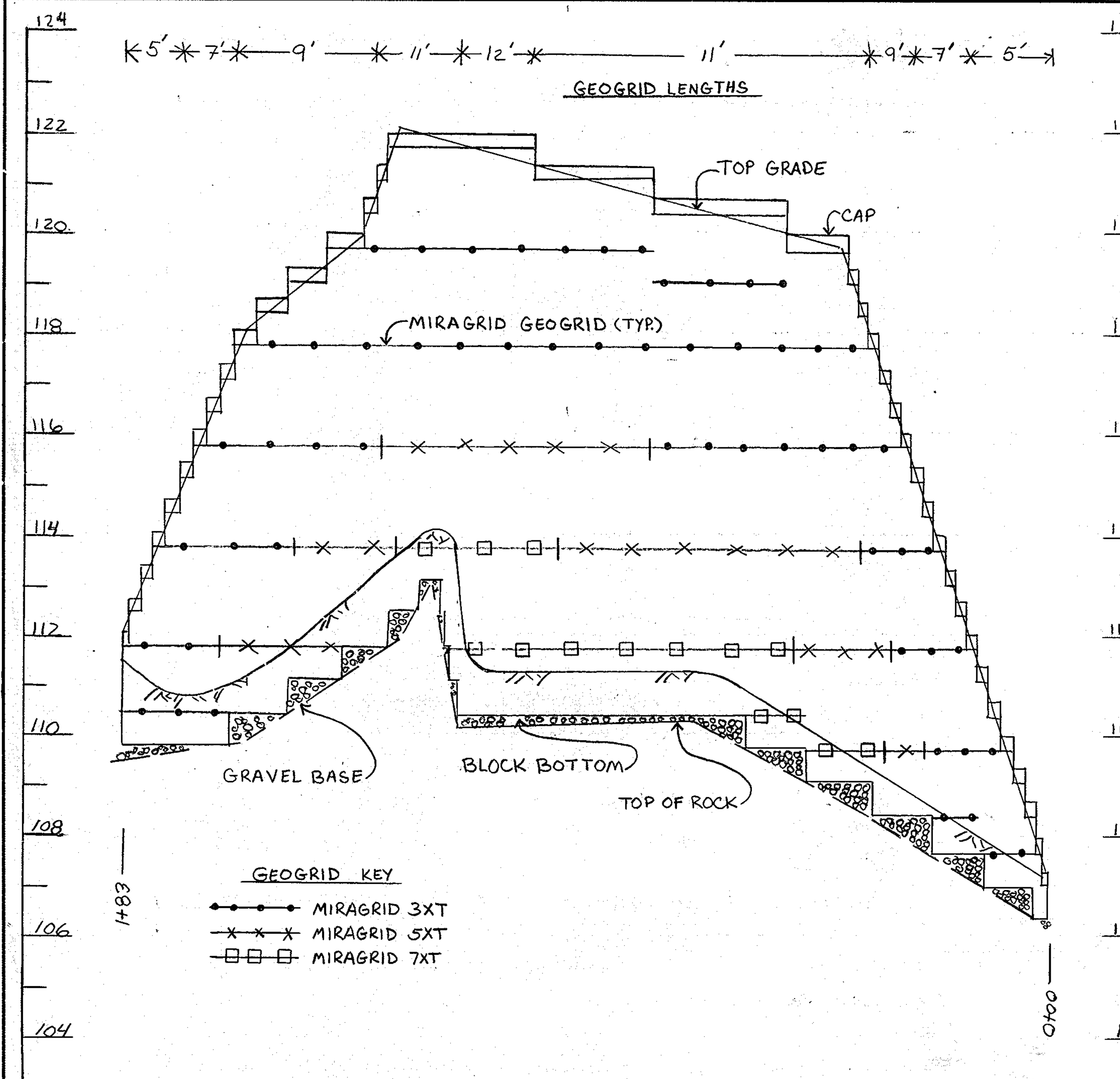

RETAINING WALL PROFILE

HORIZONTAL SCALE 1"=20'
VERTICAL SCALE 1"=2'

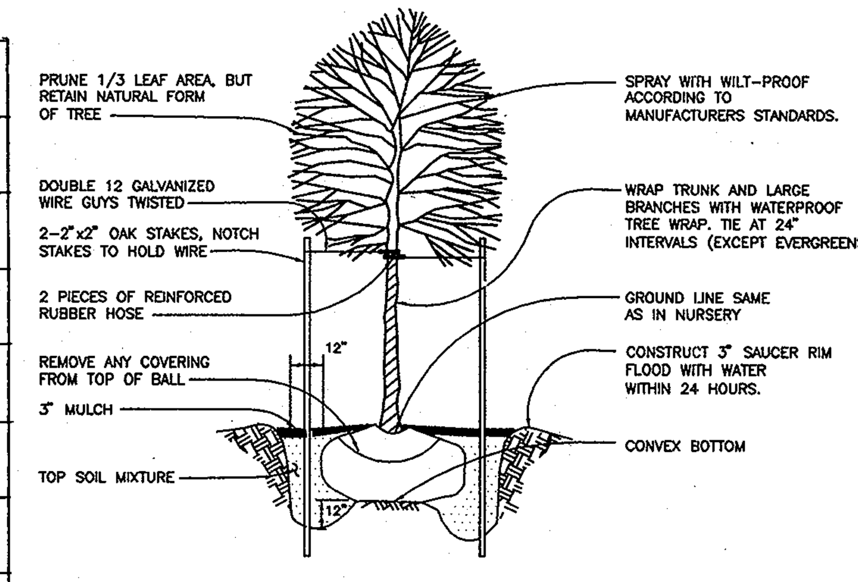

TREE PLANTING DETAIL

NOT TO SCALE

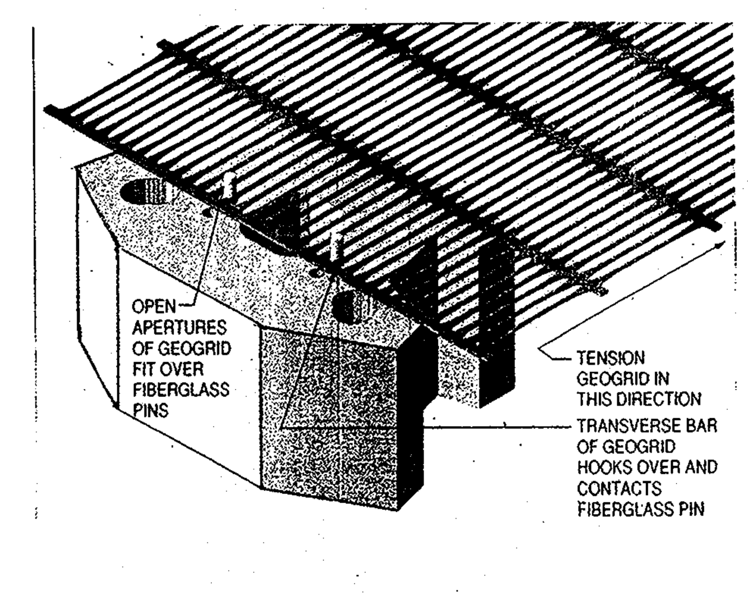

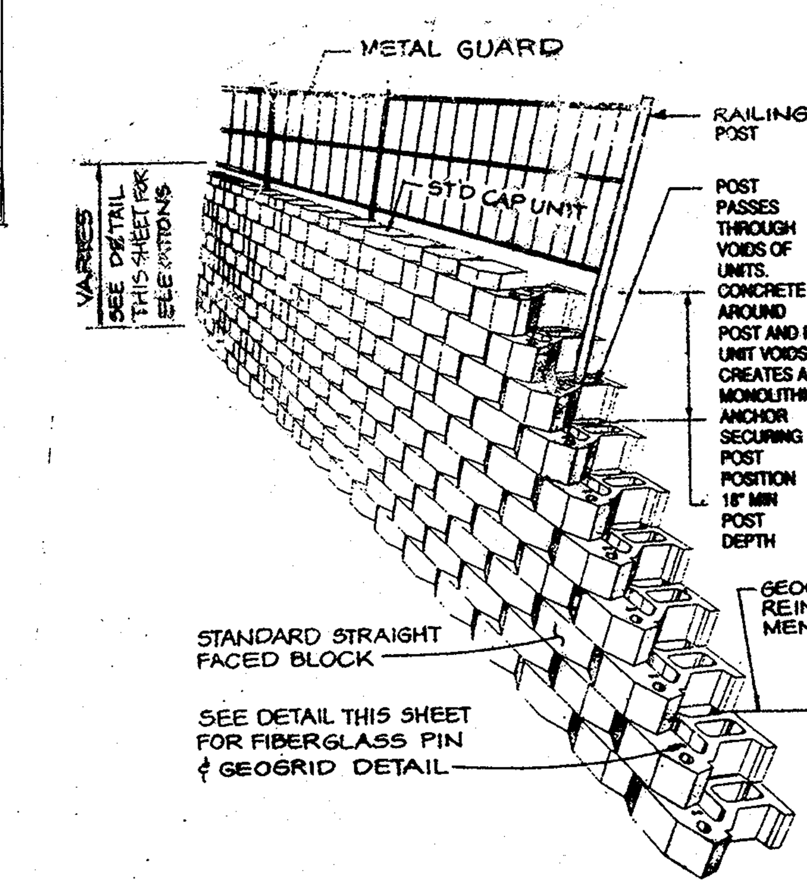

TYPICAL KEYSTONE RETAINING WALL DETAIL

N.T.S.

NOTE:
1. PROVIDE RAILING ON TOP OF RETAINING WALL ALONG PROPOSED SIDEWALK.
2. THE WALL BATTER (VERTICAL TILT) SHALL BE 1 OR 1:128 BATTER (SEE DETAIL THIS SHEET).

SCHEDULE D – STORMWATER MANAGEMENT AREA LANDSCAPING TYPE "B" BUFFER	
SWM FACILITY NO.	#1
LINEAR FEET OF PERIMETER	740/435
NUMBER OF TREES REQUIRED: SHADE TREES / EVERGREEN TREES	9 / 11
CREDIT FOR EXISTING VEGETATION: (NO OR YES W/L.F.)	YES 305
CREDIT FOR OTHER LANDSCAPING: (NO OR YES W/%)	NO
NUMBER OF TREES PROVIDED: SHADE TREES / EVERGREEN TREES / OTHER TREES (2:1 SUBSTITUTE)	6 / 17 / –

STREET TREE PLANTING LIST

SYMBOL	QUANTITY	NAME	REMARKS
(+)	12	ACER SACCHARUM "SUGAR MAPLE"	2 1/2" MIN. CAL. B & B FULL HEAD
(◎)	4	ACER RUBRUM "RED MAPLE"	2 1/2" MIN. CAL. B & B FULL HEAD

SWMF TREE PLANTING LIST

SYMBOL	QUANTITY	NAME	REMARKS
(o)	6	PRUNUS SARGENTII "SARGENT CHERRY"	2 1/2" MIN. CAL. B & B FULL HEAD
(✳)	17	PINUS STROBUS "EASTERN WHITE PINE"	5'-6' HT. UNSHEARED

LANDSCAPING NOTES:

1.) TREES MUST BE A MINIMUM OF FOURTEEN(14) FEET FROM THE EDGE OF PAVING, FIVE(5) FEET FROM ANY STORM DRAIN, TEN(10) FEET FROM A DRIVEWAY AND TWENTY(20) FEET FROM A STREETLIGHT.
2.) THIS PLAN HAS BEEN PREPARED IN ACCORDANCE WITH THE PROVISIONS OF SECTION 16.124 OF THE HOWARD COUNTY CODE AND LANDSCAPE MANUAL.
3.) FINANCIAL SURETY FOR THE 16 REQUIRED STREET TREE LANDSCAPING IN THE AMOUNT OF $4800.00 AND FOR THE 6 SHADE TREES & 17 EVERGREENS REQUIRED SWMF PERIMETER LANDSCAPING IN THE AMOUNT OF $4350.00 WILL BE POSTED AS PART OF THE DPW DEVELOPERS AGREEMENT UNDER F-01-035
4.) PERIMETER LANDSCAPING IS NOT REQUIRED FOR THE SITE SINCE THE LOTS WERE IN EXISTENCE PRIOR TO ADOPTION OF THE HO. CO. LANDSCAPE MANUAL.

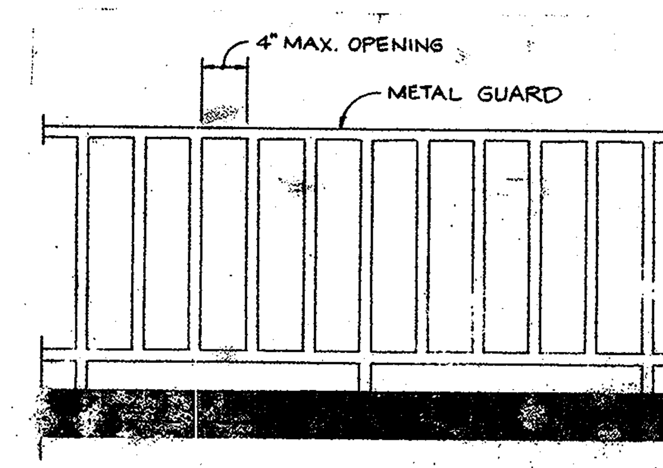

TYPICAL GUARD DETAIL

N.T.S.

SECTION 1021.0 GUARDS

1021.1 General: Where required by the provisions of sections 406.5, 408.3.2, 1005.5, 1014.7, 1016.5 and 1825.5, guards shall be designed and constructed in accordance with the requirements of this section and Section 1615.8. A guardrail system is a system of building components located near the open sides of elevated walking surfaces for the purpose of minimizing the possibility of an accidental fall from the walking surface to the lower level.

1021.2 Height: The guards shall be at least 42 inches (1067 mm) in height measured vertically above the leading edge of the tread or adjacent walking surface.

Exceptions
1. In other than occupancies in Use Group E, guards shall not be less than 34 inches (864 mm) in height above the leading edge of the tread along stairs which are not more than 20 feet (6096 mm) in height or which reverse direction at an intermediate landing with 12 inches (305 mm) or less measured horizontally between successive flights.
2. Guards along open-sided floor areas, *mezzanines* and landings in occupancies in Use Group R-3 shall not be less than 36 inches (914 mm) in height.

1021.3 Opening limitations: In occupancies in Use Groups A, B, E, H-4, I-1, I-2, M and R, and in *public garages* and open parking structures, open guards shall have balusters or be of solid material such that a sphere with a diameter of 4 inches (102 mm) cannot pass through any opening. Guards shall not have an ornamental pattern that would provide a ladder effect.

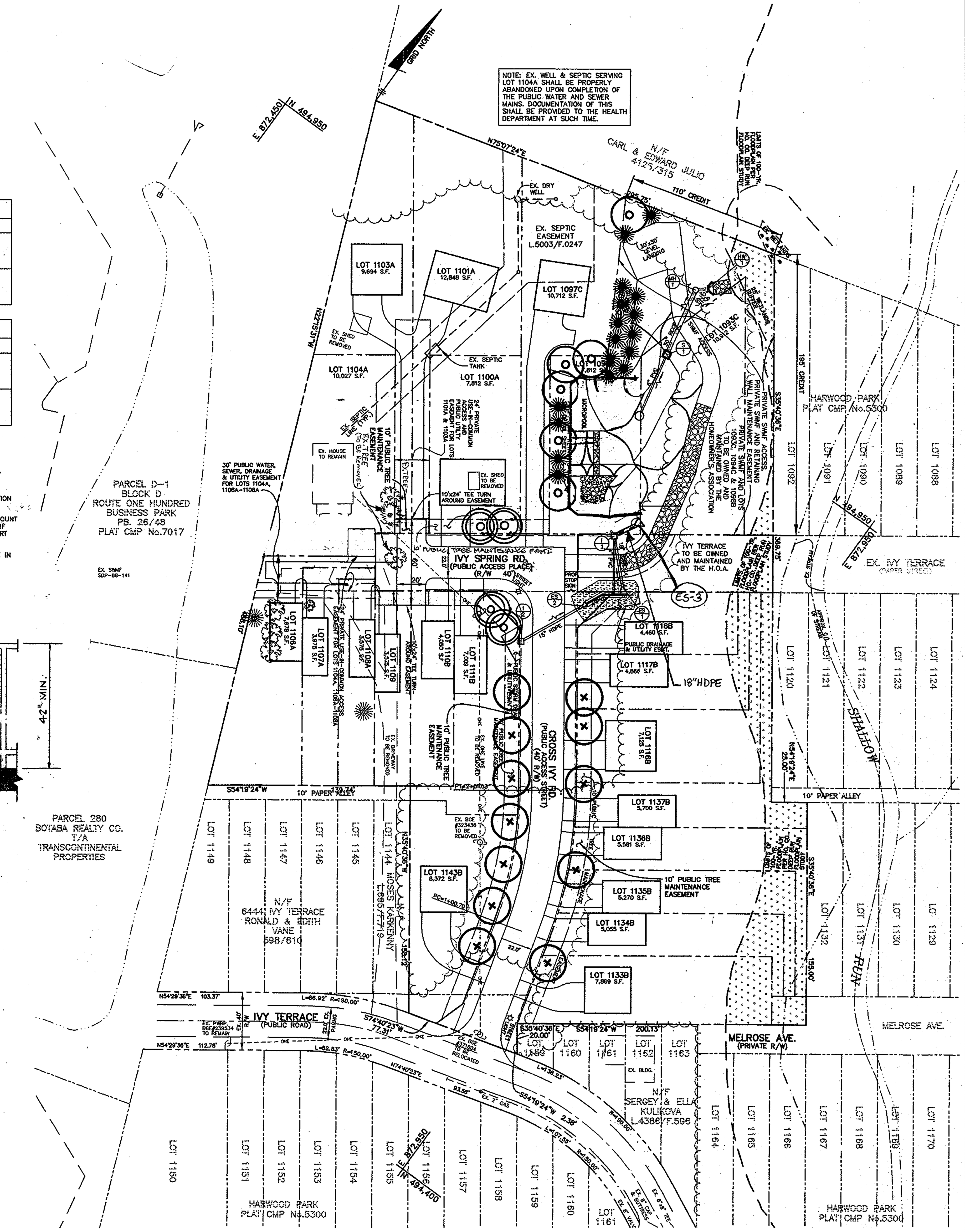

LANDSCAPING PLAN

SCALE: 1"=50'

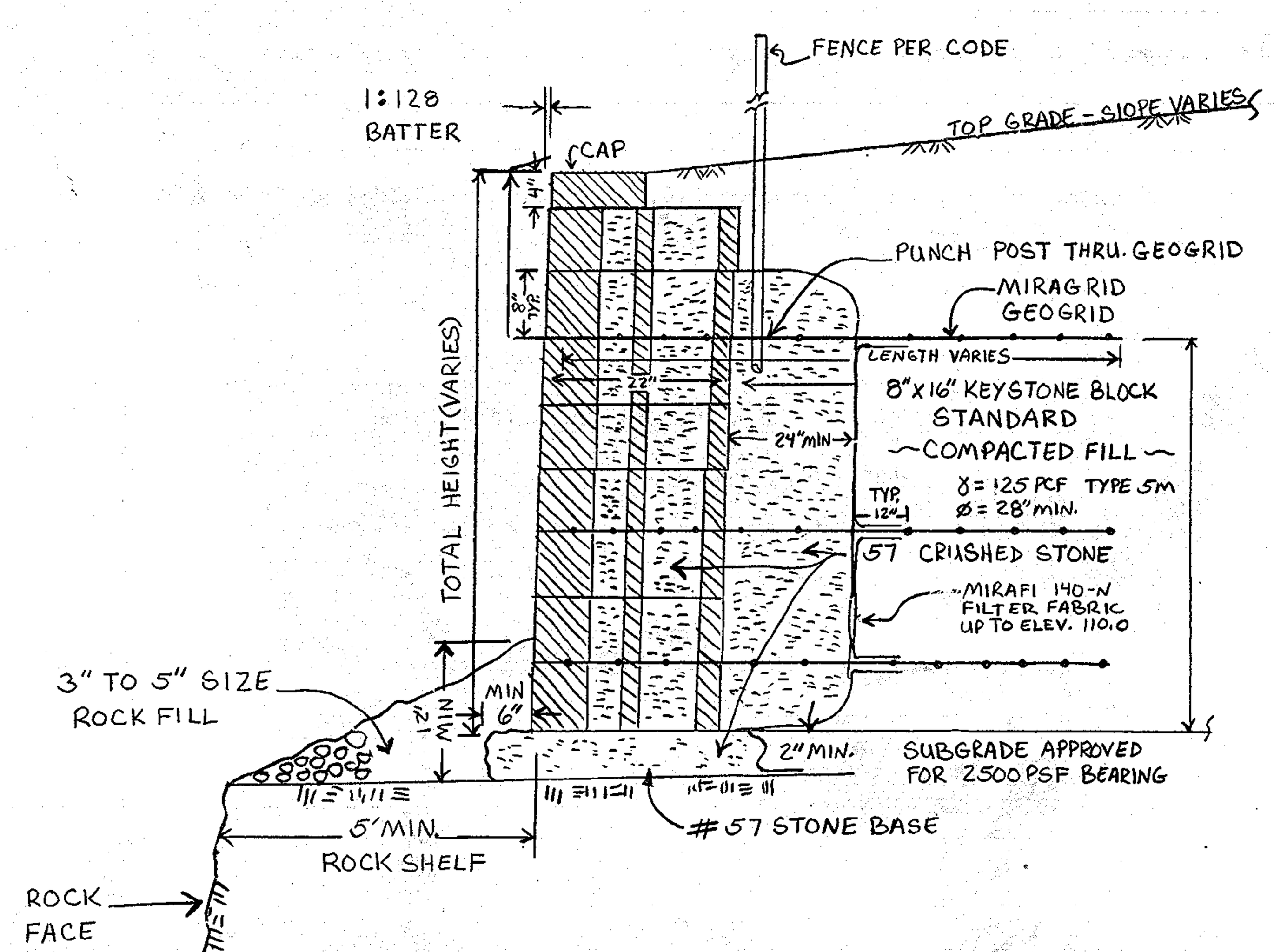

TYPICAL WALL PROFILE

NOT TO SCALE

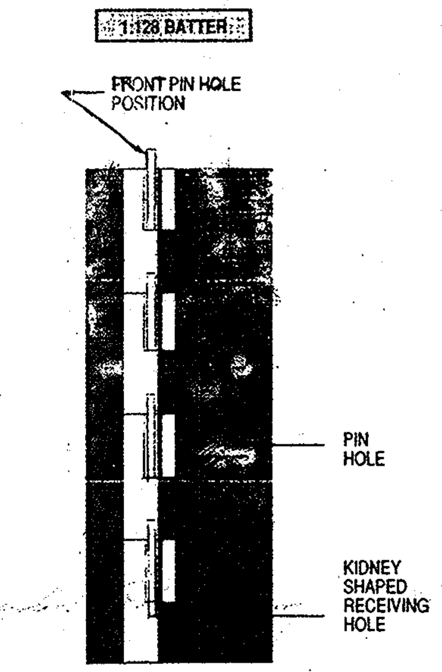

SEQUENCE OF CONSTRUCTION FOR KEYSTONE RETAINING WALL

1.) REMOVE ALL SURFACE VEGETATION AND DEBRIS
2.) EXCAVATE BASE TRENCH TO ALLOW FOR BASE LEVELING AND FIRST COURSE OF KEYSTONE UNIT.
3.) PLACE AND COMPACT BASE LEVELING PAD.
4.) SET AND ALIGN BASE COURSE.
5.) INSERT FIBERGLASS CONNECTING PINS.
6.) PLACE UNIT/DRAINAGE MATERIAL. DRAINAGE MATERIAL SHALL BE NUMBER 57 CRUSHED STONE OR AS DIRECTED BY THE KEYSTONE MANUFACTURER. DO NOT OPERATE COMPACTION EQUIPMENT DIRECTLY OVER THE KEYSTONE UNIT. INSTALL GEOGRID REINFORCEMENT AT INTERVALS INDICATED ON WALL DETAIL.
7.) BACKFILL AND COMPACT ALL SOILS PLACED BETWEEN THE UNIT/DRAINAGE MATERIAL AND THE RETAINED BACKFILL.
8.) SWEEP TOP OF UNITS CLEAN PRIOR TO PLACEMENT OF THE NEXT COURSE.
9.) INSTALL ADDITIONAL COURSES OF KEYSTONE UNIT AS INDICATED IN ABOVE STEPS 5-9.
10.) INSTALL RAILING/FENCE/GUARDRAIL
11.) POSITION AND INSTALL CAP UNITS.
12.) FINISH GRADING.

RETAINING WALL NOTES:

1. THE EARTH WORK AND CONSTRUCTION OF THE RETAINING WALLS SHALL BE PERFORMED UNDER THE OBSERVATION OF A MARYLAND REGISTERED PROFESSIONAL ENGINEER.
2. THE BEARING CAPACITY OF THE SOIL MUST BE VERIFIED IN THE FIELD PRIOR TO WALL CONSTRUCTION. THE FOLLOWING SOIL PROPERTIES WERE ASSUMED FOR DESIGN:
   GRANULAR FILL – SOIL FRICTION ANGLE =
   UNIT WEIGHT –
   BACKFILL SHALL BE COMPACTED TO A MINIMUM OF 95% STANDARD PROCTOR WITH THE PROPER EQUIPMENT (ASTM D-690)
   MINIMUM ALLOWABLE BEARING PRESSURE IS 2500 PSF. IF BEARING IS FOUND TO BE INADEQUATE, AREA UNDER WALL AND REINFORCED BACKFILL MUST BE UNDERCUT AND REPLACED W/APPROPRIATE MATERIAL AT THE DIRECTION OF THE GEOTECHNICAL ENGINEER.
3. BASE LEVELING PAD AND UNIT/DRAINAGE MATERIAL SHALL BE COMPACTED 3/4" MIN. CRUSHED STONE.
4. WALLS SHALL BE KEYSTONE UNITS AND PINS. CORNER UNITS SHALL BE SET CUTS. CAPS AND CORNER UNITS SHALL BE SECURED W/FLEXIBLE EPOXY BASED ADHESIVE SUCH AS KEYSTONE KAPSEAL
5. GEOGRID SHALL BE STRATGRID 200 AND STRATGRID 300.
6. WORK SHALL BE PERFORMED PER KEYNOTES CONSTRUCTION MANUAL BY A QUALIFIED CONTRACTOR.
7. A CERTIFICATION LETTER FROM A GEOTECHNICAL ENGINEER SHAL BE OBTAINED BY THE OWNER CERTIFYING THE MONITORING AND PLACEMENT OF FILL FOR THE RETAINING WALLS.

THE STRUCTURAL DESIGN OF THIS RETAINING WALL WAS PERFORMED BY RICHARD STURTEVANT, P.E. No.14434 OF HILLIS-CARNES ENGINEERING, INC., PHONE 410-880-4788. ANY QUESTIONS REGARDING THE DESIGN SHOULD BE DIRECTED TO MR. STURTEVANT

DEVELOPER'S/BUILDER'S CERTIFICATE

I/WE CERTIFY THAT THE LANDSCAPING SHOWN ON THIS PLAN WILL BE DONE ACCORDING TO THE PLAN, SECTION 16.124 OF THE HOWARD COUNTY CODE AND THE HOWARD COUNTY LANDSCAPE MANUAL. I/WE FURTHER CERTIFY THAT UPON COMPLETION A CERTIFICATION OF LANDSCAPE INSTALLATION, ACCOMPANIED BY AN EXECUTED ONE YEAR GUARANTEE OF PLANT MATERIALS, WILL BE SUBMITTED TO THE DEPARTMENT OF PLANNING AND ZONING.

[signature] 8/2/01
STEVE SHIPP – SPRINGLAND, LLC — DATE

APPROVED: HOWARD COUNTY DEPARTMENT OF PUBLIC WORKS
[signature] for 8/24/01
CHIEF, BUREAU OF HIGHWAYS — DATE:

APPROVED: HOWARD COUNTY DEPARTMENT OF PLANNING AND ZONING
[signature] 12/10/01
CHIEF, DIVISION OF LAND DEVELOPMENT — DATE:
[signature] 9/19/01
CHIEF, DEVELOPMENT ENGINEERING DIVISION MK 11-28-01 — DATE:

NO.	DATE	REVISION
1	8-6-02	REV. RETAINING WALL & LANDSCAPING IN POND & ADDED ES-3

BENCHMARK
ENGINEERS ▲ LAND SURVEYORS ▲ PLANNERS
ENGINEERING, INC.
8480 BALTIMORE NATIONAL PIKE ▲ SUITE 418
ELLICOTT CITY, MARYLAND 21043
phone: 410-465-6105 ▲ fax: 410-465-6644
email: Benchmrk@cais.com

[signature: Donald Mason] 8/2/01

OWNER/DEVELOPER:
SPRINGLAND, LLC.
5570 STERRET STREET
COLUMBIA, MD 21044
PHONE: 410-472-2993

PROJECT: HARWOOD PARK
IVY SPRING ROAD & CROSS IVY ROAD AND LOTS 1093C, 1094C, 1097C, 1098B, 1100A-1101A, 1103A-1104A, 1106A-1108A, 1109, 1110B-1111B, 1116B-1118B, 1133B-1137B, 1141B AND 1143B

LOCATION: TAX MAP 38 – GRIDS 13 & 14
P/O PARCEL 873
1st ELECTION DISTRICT
HOWARD COUNTY, MARYLAND

TITLE: LANDSCAPE PLAN AND RETAINING WALL DETAILS

DATE:	AUGUST, 2000 / AUGUST, 2001	PROJECT NO.	1306
Design: –	Draft: MCR	Check: DAM	
SCALE:	AS SHOWN	DRAWING 7 OF 7	

AS-BUILT F-01-035