SHEET INDEX	
SHEET No.	DESCRIPTION
1	TITLE SHEET
2	ENFIELD DRIVE PROFILE AND DETAILS
3	HILLINGDON ROAD PLAN AND PROFILE; HARROW DRIVE PLAN
4	HILLINGDON ROAD PLAN; HARROW DRIVE PLAN AND PROFILE; ENFIELD DRIVE PLAN; BARNET COURT PLAN
5	BARNET COURT PROFILE AND FILLET PROFILES
6	STREET TREE, GRADING AND SEDIMENT CONTROL PLAN
7	DRAINAGE AREA MAP AND LANDSCAPE PLAN
8	STORM DRAIN PROFILES
9	STORM DRAIN PROFILES
10	SEDIMENT CONTROL NOTES AND DETAILS
11	SEDIMENT CONTROL NOTES AND DETAILS
12	SEDIMENT CONTROL NOTES AND DETAILS
13	FOREST CONSERVATION PLAN
14	FOREST CONSERVATION NOTES AND DETAILS

APPROVED: DEPARTMENT OF PUBLIC WORKS

CHIEF, BUREAU OF HIGHWAYS — DATE 1-24-01

APPROVED: DEPARTMENT OF PLANNING AND ZONING

CHIEF, DIVISION OF LAND DEVELOPMENT — DATE 1/31/01

CHIEF, DEVELOPMENT ENGINEERING DIVISION — DATE 1/25/01

FINAL ROAD CONSTRUCTION, GRADING AND SEDIMENT CONTROL PLANS

GTW'S WAVERLY WOODS

SECTION 12

LOTS 1 THRU 127 AND PARCELS 'A' & 'B'

(A SUBDIVISION OF PART OF THE PROPERTY OF GTW JOINT VENTURE, LIBER 2222, FOLIO 36)

ZONED R-SA-8

TAX MAP No. 16, PART OF PARCEL No. 20

ROAD CLASSIFICATION CHART		
ROAD	CLASSIFICATION	R/W WIDTH
HILLINGDON ROAD	PUBLIC ACCESS STREET	50'
HARROW DRIVE	PUBLIC ACCESS STREET	50'
BARNET COURT	PUBLIC ACCESS PLACE	40'
ENFIELD DRIVE	PUBLIC ACCESS PLACE	40'

TRAFFIC CONTROL SIGNS				
STREET NAME	C.L. STATION	OFFSET	POSTED SIGN	SIGN CODE
HILLINGDON ROAD	0+45	15'L	STOP	R1-1
HILLINGDON ROAD	15+83	15'R	STOP	R1-1
HILLINGDON ROAD	1+30	14'R	SPEED LIMIT 25	R2-1
HARROW DRIVE	0+45	15'L	STOP	R1-1
HARROW DRIVE	7+38	15'R	STOP	R1-1
HARROW DRIVE	1+60	14'R	SPEED LIMIT 25	R2-1
BARNET COURT	0+40	15'L	STOP	R1-1
ENFIELD DRIVE	7+22	14'R	STOP	R1-1
ENFIELD DRIVE	8+10	14'L	STOP	R1-1
HILLINGDON ROAD	10+29	14'R	TURN SYMBOL w/ 15 M.P.H.	W1-1L w/ W13-1
HILLINGDON ROAD	13+31	14'L	TURN SYMBOL w/ 15 M.P.H.	W1-1R w/ W13-1

STREET LIGHT CHART				
DWG. No.	STREET NAME	STATION	OFF-SET	FIXTURE/POLE TYPE
3	DORCHESTER WAY	C.L. STA. 37+48	29'L	150-WATT H.P.S. VAPOR PENDANT (CUT-OFF) MOUNTED AT 30' ON A GALVANIZED STEEL POLE USING A 6' ARM
4	BIRMINGHAM WAY	C.L. STA. 13+13	31'R	150-WATT H.P.S. VAPOR PENDANT (CUT-OFF) MOUNTED AT 30' ON A GALVANIZED STEEL POLE USING A 6' ARM
3	HILLINGDON ROAD	C.L. STA. 4+22	14'R	100-WATT "TRADITIONAIRE" H.P.S. VAPOR FIXTURE POST TOP FIXTURE MOUNTED ON A 14-FOOT BLACK FIBERGLASS POLE.
3	HILLINGDON ROAD	C.L. STA. 7+78	14'L	100-WATT "TRADITIONAIRE" H.P.S. VAPOR FIXTURE POST TOP FIXTURE MOUNTED ON A 14-FOOT BLACK FIBERGLASS POLE.
3	HILLINGDON ROAD	C.L. STA. 9+38	19'L	100-WATT "TRADITIONAIRE" H.P.S. VAPOR FIXTURE POST TOP FIXTURE MOUNTED ON A 14-FOOT BLACK FIBERGLASS POLE.
3	HILLINGDON ROAD	C.L. STA. 11+75	14'L	100-WATT "TRADITIONAIRE" H.P.S. VAPOR FIXTURE POST TOP FIXTURE MOUNTED ON A 14-FOOT BLACK FIBERGLASS POLE.
3	HILLINGDON ROAD	C.L. STA. 13+48	14'R	100-WATT "TRADITIONAIRE" H.P.S. VAPOR FIXTURE POST TOP FIXTURE MOUNTED ON A 14-FOOT BLACK FIBERGLASS POLE.
4	HARROW DRIVE	C.L. STA. 1+17	20'R	100-WATT "TRADITIONAIRE" H.P.S. VAPOR FIXTURE POST TOP FIXTURE MOUNTED ON A 14-FOOT BLACK FIBERGLASS POLE.
4	HARROW DRIVE	C.L. STA. 2+31	19'R	100-WATT "TRADITIONAIRE" H.P.S. VAPOR FIXTURE POST TOP FIXTURE MOUNTED ON A 14-FOOT BLACK FIBERGLASS POLE.
3	HARROW DRIVE	C.L. STA. 6+06	16'R	100-WATT "TRADITIONAIRE" H.P.S. VAPOR FIXTURE POST TOP FIXTURE MOUNTED ON A 14-FOOT BLACK FIBERGLASS POLE.
4	BARNET COURT	C.L. STA. 2+88	5'L	100-WATT "TRADITIONAIRE" H.P.S. VAPOR FIXTURE POST TOP FIXTURE MOUNTED ON A 14-FOOT BLACK FIBERGLASS POLE.
4	ENFIELD DRIVE	C.L. STA. 4+21	19'L	100-WATT "TRADITIONAIRE" H.P.S. VAPOR FIXTURE POST TOP FIXTURE MOUNTED ON A 14-FOOT BLACK FIBERGLASS POLE.
4	ENFIELD DRIVE	C.L. STA. 5+57	17'R	100-WATT "TRADITIONAIRE" H.P.S. VAPOR FIXTURE POST TOP FIXTURE MOUNTED ON A 14-FOOT BLACK FIBERGLASS POLE.
4	ENFIELD DRIVE	C.L. STA. 7+42	19'R	100-WATT "TRADITIONAIRE" H.P.S. VAPOR FIXTURE POST TOP FIXTURE MOUNTED ON A 14-FOOT BLACK FIBERGLASS POLE.
3	ENFIELD DRIVE	C.L. STA. 10+14	20'R	100-WATT "TRADITIONAIRE" H.P.S. VAPOR FIXTURE POST TOP FIXTURE MOUNTED ON A 14-FOOT BLACK FIBERGLASS POLE.

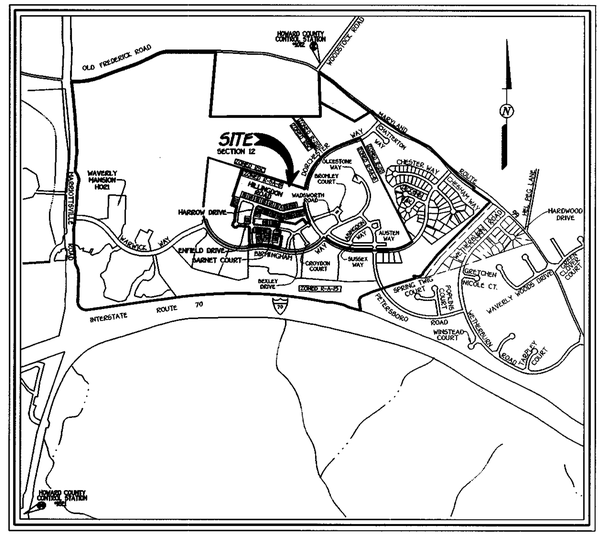

VICINITY MAP
SCALE: 1" = 1200'

THIRD ELECTION DISTRICT
HOWARD COUNTY, MARYLAND

GENERAL NOTES

1. ALL ASPECTS OF THE PROJECT ARE IN CONFORMANCE WITH THE LATEST HOWARD COUNTY STANDARDS UNLESS, WAIVERS ARE APPROVED.
2. THE CONTRACTOR SHALL NOTIFY THE DEPARTMENT OF DEPARTMENT OF PUBLIC WORKS, DIVISION OF CONSTRUCTION INSPECTION AT 410-313-1880 AT LEAST (5) WORKING DAYS. PRIOR TO THE START OF CONSTRUCTION.
3. THE CONTRACTOR SHALL NOTIFY "MISS UTILITY" AT 1-800-257-7777 AT LEAST 48 HOURS PRIOR TO ANY EXCAVATION.
4. LOCATION: NORTHSIDE OF BIRMINGHAM WAY AND EAST OF DORCHESTER WAY. TAX MAP: #16, PART OF PARCEL 20.
5. THIS PLAN IS SUBJECT TO ZONING BOARD CASE No. ZB929-M WHICH APPROVED ON MARCH 22, 1993 A REQUEST TO REZONE 68218 ACRES OF RURAL LAND INTO THE MIXED USE AREAS.
6. TOPOGRAPHY SHOWN HEREON IS FROM AERIAL MAPS FLOWN WITH 2 FOOT CONTOUR INTERVALS PREPARED BY HARFORD AERIAL SURVEYS DATED NOV., 1998.
7. PROPERTY IS LOCATED WITHIN METROPOLITAN DISTRICT.
8. PUBLIC WATER AND SEWER ARE TO BE UTILIZED FOR THIS SITE AND WILL BE EXTENDED FROM THE LIMITS OF CONTRACT Nos. 24-3780-D, 24-3566-D AND 24-3636-D.
9. STORMWATER MANAGEMENT FOR THIS DEVELOPMENT WILL BE DONE BY THE RETENTION METHOD PROVIDED UNDER EX. POND 1, (F 95-174). THE S.W.M. REPORT IS PROVIDED BY MILDENBURG ASSOCIATES, INC. (APPROVED 3/26/96).
10. THIS HORIZONTAL AND VERTICAL DATUM SHOWN ARE BASED ON THE FOLLOWING NAD'83 HOWARD COUNTY CONTROL STATIONS:
    HOWARD COUNTY MONUMENT 1012 — N 601060.177, E 1345336.7580 — ELEV. = 445.577
    HOWARD COUNTY MONUMENT 16GE1 — N 993250.9322, E 1340192.7110 — ELEV. = 509.924
11. TOTAL R-SA-8 ZONING PARKING TABULATION FOR ALL SECTIONS RECORDED AND/OR UNDER REVIEW:

ZONING	NUMBER OF PARKING SPACES REQUIRED	NUMBER OF PARKING SPACES PROVIDED
R-SA-8 (SECTION 4 AREA 1) (F 95-173)	2 SPACES PER UNIT 2x6= 12	25
R-SA-8 (SECTION 5) (F 96-179)	2 SPACES PER UNIT: 2x128 = 256	285
R-SA-8 (SECTION 6) (F 98-88)	2 SPACES PER UNIT 2x66 = 132	137
R-SA-8 (SECTION 10) (F 00-06)	2 SPACES PER UNIT 2x53 = 106	123
R-SA-8 (SECTION 12)	2 SPACES PER UNIT 2x120 = 240	359
TOTALS	746 SPACES	929 SPACES

SECTION 12 PARKING TABULATION		
NUMBER OF PARKING SPACES FOR R-SA-8 ZONING		
UNIT DESIGNATION	REQUIRED SPACES	PROVIDED
GARAGE UNITS: 2 SPACES X 95 UNITS	190	190
TRADITIONAL UNITS: 2 SPACES X 25 UNITS	50	169 (ON-STREET)
TOTAL	240	359

NOTE: GARAGE UNITS ARE FOR TOWNHOUSE LOTS 49-56, 72-96 & 98-123

12. AREA TABULATION:

SECTION 12

TOTAL NUMBER OF BUILDABLE LOTS TO BE RECORDED . . . 120
TOTAL NUMBER OF OPEN SPACE LOTS TO BE RECORDED . . . 7
TOTAL NUMBER OF LOTS TO BE RECORDED. 127
TOTAL NUMBER OF PARCELS 2
TOTAL AREA OF BUILDABLE LOTS TO BE RECORDED . . . 7.455 AC.±
TOTAL AREA OF OPEN SPACE LOTS TO BE RECORDED . . . 13.852 AC.±
TOTAL AREA OF PARCELS TO BE RECORDED . . . . . 1.950 AC.±
TOTAL AREA OF ROADWAY TO BE RECORDED. . . . . 3.741 AC.±
TOTAL AREA TO BE RECORDED . . . . . 27.006 AC.

13. THE NOISE STUDY FOR GTW'S WAVERLY WOODS WAS PROVIDED BY WILDMAN ENVIRONMENTAL SERVICES, INC. ON NOVEMBER 1, 1994.
14. THE FOREST CONSERVATION OBLIGATION FOR THIS SECTION HAS BEEN MET WITH 1.86 ACRES OF REFORESTATION.
15. THERE IS NO 100 YEAR FLOODPLAIN WITHIN SECTION 12.
16. THE WETLANDS STUDY FOR GTW'S WAVERLY WOODS WAS PREPARED BY EXPLORATION RESEARCH, INC. AND WAS COMPILED ON 9/5/91.
17. THE TRAFFIC STUDY FOR GTW'S WAVERLY WOODS WAS PREPARED BY THE TRAFFIC GROUP AND APPROVED ON JULY 14, 1994.
18. THE SOILS INVESTIGATION REPORT WAS PREPARED BY I.T.E., Inc. ON JUNE 28, 1994.
19. THE SKETCH PLAN No. S 94-07 WAS APPROVED ON 11/30/93. THE PRELIMINARY PLAN P 00-17 WAS APPROVED ON 7/7/00. THE PRELIMINARY PLAN COINCIDES WITH THE PHASING PLAN FOR THE YEAR OF 2002 AS SHOWN UNDER THE SKETCH PLAN AND MODIFIED PHASING PLAN FOR PHASING 2002 THRU 2010 APPROVED BY THE PLANNING DIRECTOR ON JUNE 21, 1999. PHASE VI ALLOCATION YEAR 2002, DUE 7/1/99 - 4/1/00 CONSISTS OF 192 TENTATIVE ALLOCATIONS. THIS PLAN REPRESENTS 120 TENTATIVE ALLOCATIONS.
20.

RECREATIONAL OPEN SPACE CHART					
ZONING	SECTION	No. OF UNITS	REQUIRED RECREATIONAL OPEN SPACE PER UNIT	TOTAL RECREATIONAL OPEN SPACE REQUIRED	TOTAL RECREATIONAL OPEN SPACE PROVIDED
R-SA-8	SECTION 4, AREA 1 (F95-173)	6	200 Sq.Ft./UNIT	1,200 Sq.Ft.	0 Sq.Ft.
	SECTION 5 (F96-179)	128		25,600 Sq.Ft.	46,105 Sq.Ft.
	SECTION 6 (F98-88)	66		13,200 Sq.Ft.	0 Sq.Ft.
	SECTION 6 (F99-174)	5		1,000 Sq.Ft.	0 Sq.Ft.
	SECTION 10 (F00-06)	53		10,600 Sq.Ft.	6,007 Sq.Ft.
	SECTION 12	120		24,000 Sq.Ft.	26,274 Sq.Ft.
TOTAL		378		75,600 Sq.Ft.	82,621 Sq.Ft.

21. OPEN SPACE LOTS 8, 48, 97, 124, 125 AND 127 ARE TO BE DEDICATED TO HOMEOWNER'S ASSOCIATION.
22. a) THE REQUIRED REAR TO REAR DISTANCE BETWEEN TOWNHOUSES DOES NOT INCLUDE DECKS, BUT IS MEASURED FROM REAR FACE OF BUILDING TO REAR FACE OF BUILDING.
    b) DECKS ARE NOT INCLUDED IN CALCULATIONS OF COVERAGE ON TOWNHOUSES.
    c) THE FRONT STAIRS OF ANY TOWNHOUSE MAY NOT EXTEND MORE THAN 10 FEET INTO THE FRONT SETBACK.
23. PARCELS 'A' & 'B' RESERVE THE RIGHT TO RESUBDIVIDE IN ACCORDANCE WITH APPROVED APFO PHASING DEVELOPMENT PLAN.
24. STREET LIGHTS WILL BE REQUIRED IN THIS DEVELOPMENT IN ACCORDANCE WITH THE DESIGN MANUAL. STREET LIGHT PLACEMENT AND TYPE OF FIXTURE AND POLE SELECTED SHALL BE IN ACCORDANCE WITH THE LATEST HOWARD COUNTY DESIGN MANUAL, VOLUME III (1993) AND AS MODIFIED BY "GUIDELINES FOR STREET LIGHTS IN RESIDENTIAL DEVELOPMENTS (JUNE 1993)." THE JUNE 1993 POLICY INCLUDES GUIDELINES FOR LATERAL AND LONGITUDINAL PLACEMENT. A MINIMUM SPACING OF 20' SHALL BE MAINTAINED BETWEEN AND STREET LIGHT AND ANY TREE.

FISHER, COLLINS & CARTER, INC.
CIVIL ENGINEERING CONSULTANTS & LAND SURVEYORS
CENTENNIAL SQUARE OFFICE PARK - 10272 BALTIMORE NATIONAL PIKE
ELLICOTT CITY, MARYLAND 21042
(410) 461 - 2855

OWNER
GTW JOINT VENTURE
c/o LAND DESIGN AND DEVELOPMENT, LLC
8000 MAIN STREET
ELLICOTT CITY, MARYLAND 21042

DEVELOPER
WAVERLY WOODS DEVELOPMENT CORPORATION
c/o LAND DESIGN AND DEVELOPMENT, LLC
8000 MAIN STREET
ELLICOTT CITY, MARYLAND 21042

STATE OF MARYLAND — ALDO MICHAEL VITUCCI — No. 20739

ALDO M. VITUCCI, P.E. — DATE 12-27-00

GTW'S WAVERLY WOODS
SECTION 12
LOTS 1 THRU 127 AND PARCELS 'A' & 'B'
(A SUBDIVISION OF PART OF THE PROPERTY OF GTW JOINT VENTURE, LIBER 2222, FOLIO 36)
ZONED R-SA-8
TAX MAP No. 16 PART OF PARCEL No. 20
THIRD ELECTION DISTRICT HOWARD COUNTY, MARYLAND
DATE: DECEMBER 5, 2000
SHEET 1 OF 14

F01-31

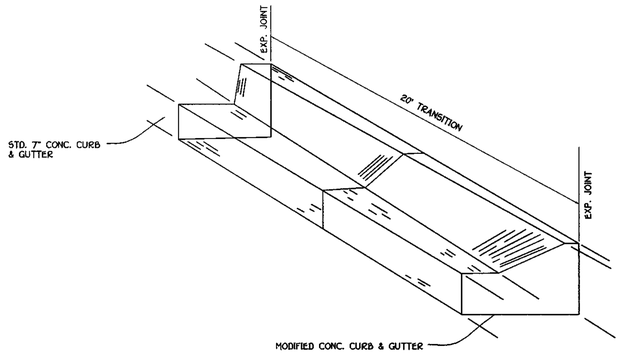

CONCRETE CURB & GUTTER TRANSITION

NO SCALE

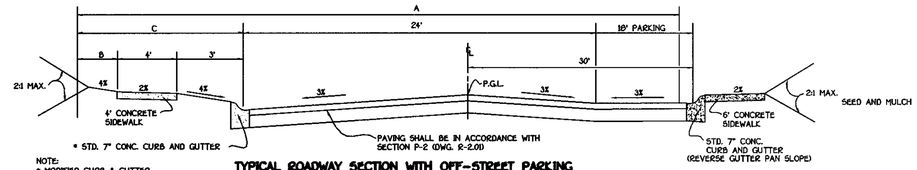

NOTE:
* MODIFIED CURB & GUTTER AT GARAGE UNITS

TYPICAL ROADWAY SECTION WITH OFF-STREET PARKING

NO SCALE

ROADWAY INFORMATION CHART

ROAD NAME	CLASSIFICATION	DESIGN SPEED	ZONING	℄ STATION LIMITS	A	B	C	PAVING SECTION
HILLINGDON ROAD	PUBLIC ACCESS STREET	30 M.P.H.	R-SA-8	7+50 TO 9+12.82; 12+00 TO 16+23.62	50' R/W	6'	13'	P-2
HARROW DRIVE	PUBLIC ACCESS STREET	25 M.P.H.	R-SA-8	0+00 TO 7+74.40	50' R/W	6'	13'	P-2
ENFIELD DRIVE	PUBLIC ACCESS PLACE	25 M.P.H.	R-SA-8	3+10 TO 7+66.97	40' R/W	1'	8'	P-2
BARNET COURT	PUBLIC ACCESS PLACE	25 M.P.H.	R-SA-8	0+00 TO 2+65	40' R/W	1'	8'	P-2

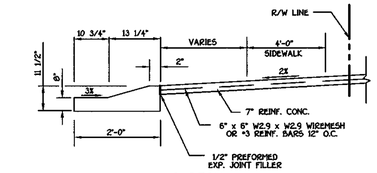

SECTION

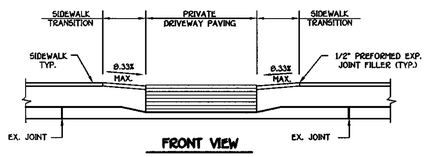

FRONT VIEW

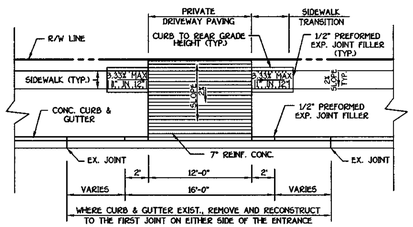

PLAN

MODIFIED CURB & GUTTER LIMITS	
℄ ROAD STATIONS	ROAD NAME
0+00 TO 13+31 (12' R)	HILLINGDON ROAD
0+00 TO 7+60 (12' L)	HILLINGDON ROAD
9+83 TO 11+97 (12' L)	HILLINGDON ROAD
0+00 TO 2+40 (12' L)	HARROW DRIVE
3+46 TO 7+74.40 (12' L)	HARROW DRIVE
0+00 TO 2+35 (12' L)	BARNET COURT
3+10 TO 10+81 (12' L)	ENFIELD DRIVE
7+66.97 TO 9+77 (12' R)	ENFIELD DRIVE

RESIDENTIAL DRIVEWAY ENTRANCE CLOSED SECTION WITH MODIFIED COMBINATION CURB & GUTTER AND SIDEWALK

NO SCALE

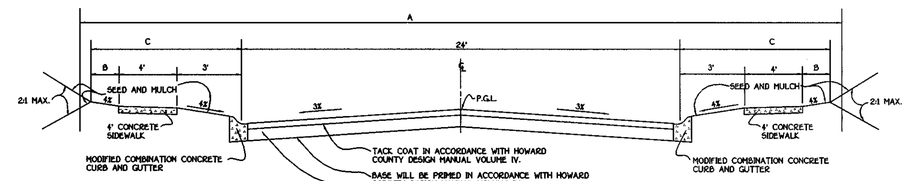

NOTE:
ALL MATERIALS AND CONSTRUCTION SHALL BE IN ACCORDANCE WITH HOWARD COUNTY DESIGN MANUAL VOLUME IV, STANDARD SPECIFICATION AND DETAILS FOR CONSTRUCTION.

TYPICAL ROADWAY SECTION (LOCAL ROAD AND MINOR COLLECTOR)

NO SCALE

ROADWAY INFORMATION CHART

ROAD NAME	CLASSIFICATION	DESIGN SPEED	ZONING	℄ STATION LIMITS	A	B	C	PAVING SECTION
HILLINGDON ROAD	PUBLIC ACCESS STREET	30 M.P.H.	R-SA-8	0+00 TO 7+50; 9+12.82 TO 12+00	50' R/W	6'	13'	P-2
ENFIELD DRIVE	PUBLIC ACCESS PLACE	25 M.P.H.	R-SA-8	7+66.97 TO 10+81.19	40' R/W	1'	8'	P-2

APPROVED
Cindy Hamilton JA 1/31/01
DATE

APPROVED
Mike Dammann 1/25/01
DATE

APPROVED
Andrew M. Roeder MS 1-24-01
DATE

STATE OF MARYLAND
ALDO MICHAEL VITUCCI
No. 20748
REGISTERED
PROFESSIONAL ENGINEER
Aldo M. Vitucci
12-28-00

GTW'S WAVERLY WOODS
SECTION 12
LOTS 1 THRU 127 AND PARCELS 'A' 'B'

(A SUBDIVISION OF PART OF THE PROPERTY OF GTW JOINT VENTURE, LIBER 2222, FOLIO 36)
ZONED: R-SA-8

TAX MAP No. 16 — PART OF PARCEL No. 20
THIRD ELECTION DISTRICT — HOWARD COUNTY, MARYLAND

ENFIELD DRIVE
PROFILE

OWNER
GTW JOINT VENTURE
c/o LAND DESIGN
AND DEVELOPMENT, LLC
8000 MAIN STREET
ELLICOTT CITY, MARYLAND 21042

DEVELOPER
WAVERLY WOODS
DEVELOPMENT CORPORATION
c/o LAND DESIGN
AND DEVELOPMENT, LLC
8000 MAIN STREET
ELLICOTT CITY, MARYLAND 21042

SCALE: AS SHOWN	DATE: DEC. 5, 2000	SHT. NO. 2 OF 14	
DES: J.M.Z.	DRN: J.C.L.	CHK: C.J.C.	

FISHER, COLLINS & CARTER, INC.
CIVIL ENGINEERING CONSULTANTS
CENTENNIAL SQUARE OFFICE PARK - 10272 BALTIMORE NATIONAL PIKE
ELLICOTT CITY, MARYLAND 21042

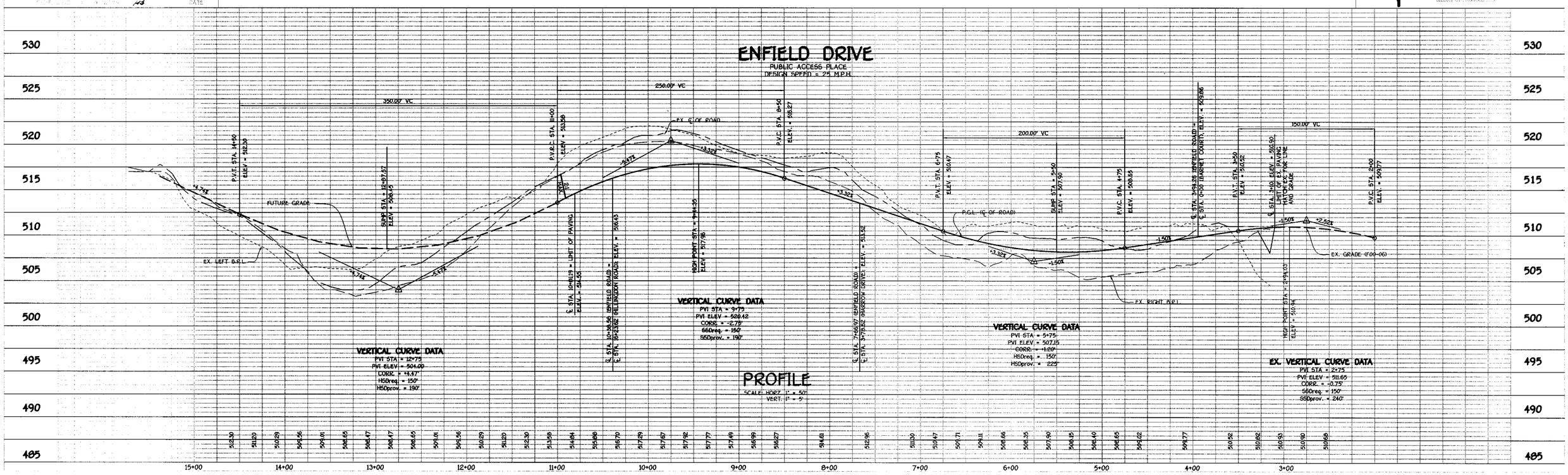

F01-31

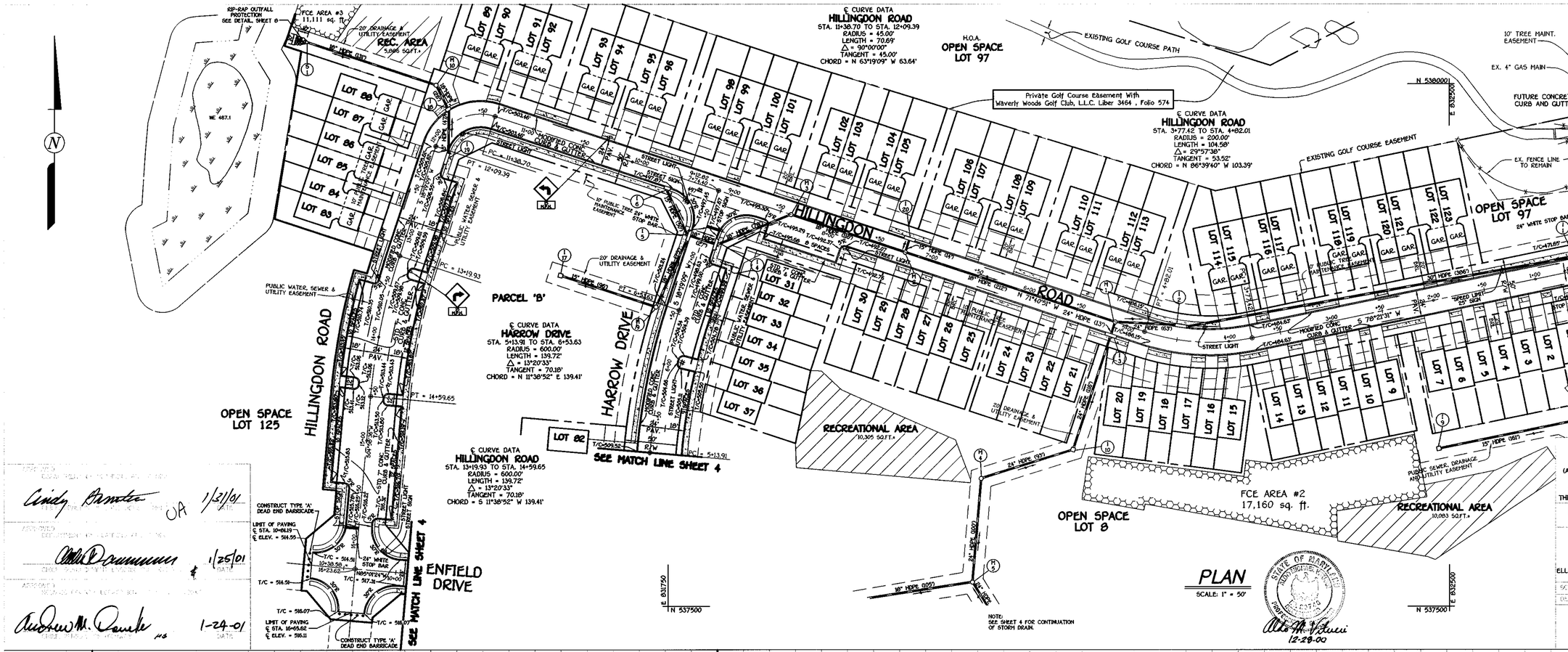

Cindy Bamber 1/31/01

1/25/01

1-24-01

GTW'S WAVERLY WOODS
SECTION 12
LOTS 1 THRU 127 AND PARCELS 'A' 'B'
(A SUBDIVISION OF PART OF THE PROPERTY OF GTW JOINT VENTURE, LIBER 2222, FOLIO 36)
ZONED: R-SA-8

TAX MAP No. 16 — THIRD ELECTION DISTRICT
PART OF PARCEL No. 20 — HOWARD COUNTY, MARYLAND

HILLINGDON ROAD	HARROW DRIVE
PLAN AND PROFILE	PLAN
OWNER	**DEVELOPER**
GTW JOINT VENTURE c/o LAND DESIGN AND DEVELOPMENT, LLC 8000 MAIN STREET ELLICOTT CITY, MARYLAND 21042	WAVERLY WOODS DEVELOPMENT CORPORATION c/o LAND DESIGN AND DEVELOPMENT, LLC 8000 MAIN STREET ELLICOTT CITY, MARYLAND 21042

SCALE: AS SHOWN | DATE: DEC. 5, 2000 | SHEET NO. 3 OF 14
DES. J.M.Z. | DRN. F.J.M. | CHK. A.M.V.

FISHER, COLLINS & CARTER, INC.
CIVIL ENGINEERING CONSULTANTS
CENTENNIAL SQUARE OFFICE PARK - 10272 BALTIMORE NATIONAL PIKE
ELLICOTT CITY, MARYLAND 21042

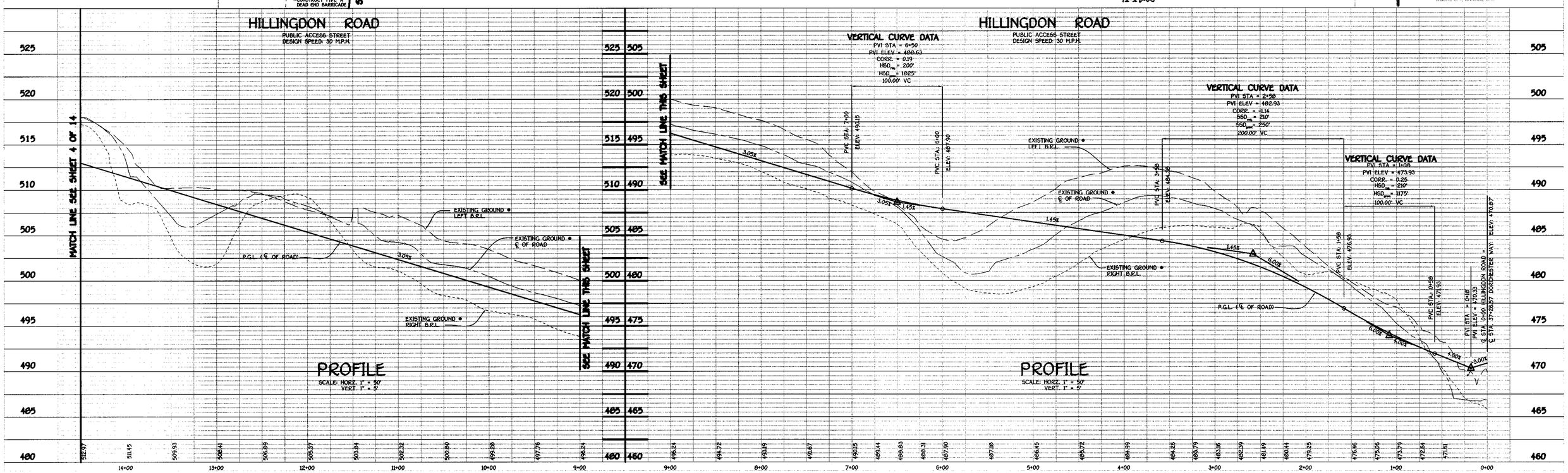

F01-31

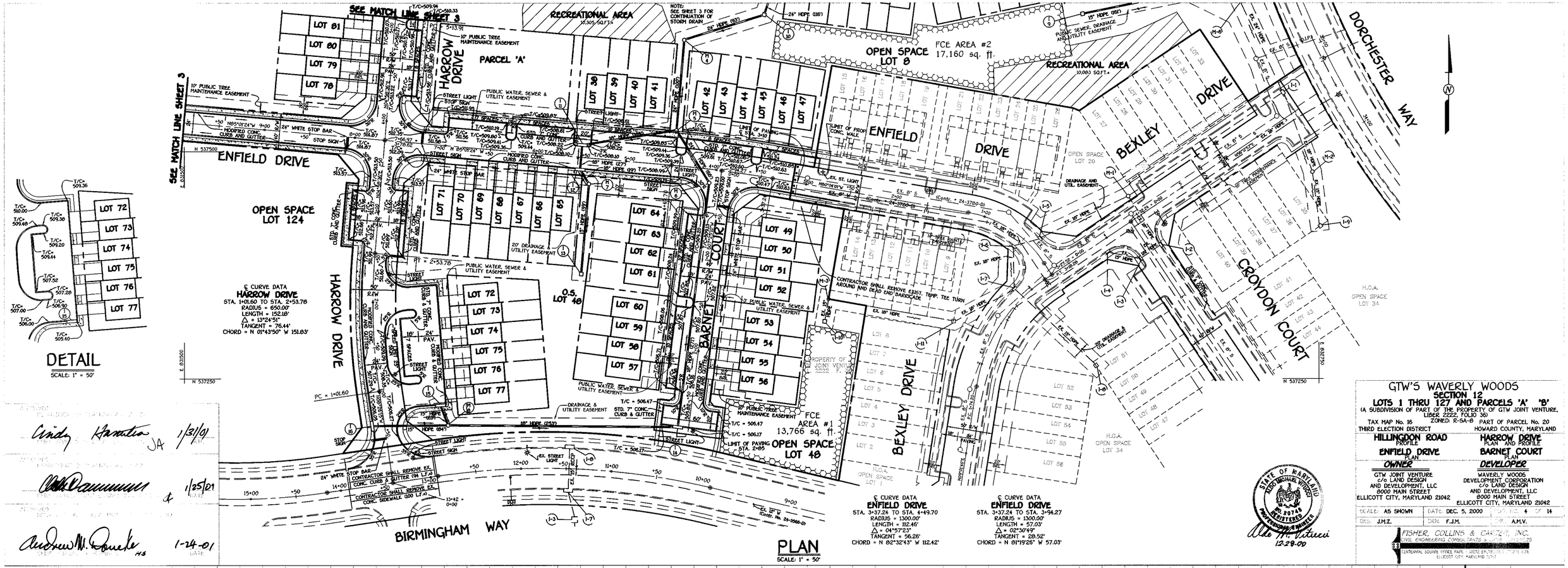

DETAIL
SCALE: 1" = 50'

PLAN
SCALE: 1" = 50'

GTW'S WAVERLY WOODS
SECTION 12
LOTS 1 THRU 127 AND PARCELS 'A' 'B'
(A SUBDIVISION OF PART OF THE PROPERTY OF GTW JOINT VENTURE, LIBER 2222, FOLIO 360
ZONED: R-SA-8
TAX MAP No. 16 PART OF PARCEL No. 20
THIRD ELECTION DISTRICT HOWARD COUNTY, MARYLAND

HILLINGDON ROAD PROFILE	HARROW DRIVE PLAN AND PROFILE
ENFIELD DRIVE PLAN	BARNET COURT PLAN

OWNER	DEVELOPER
GTW JOINT VENTURE c/o LAND DESIGN AND DEVELOPMENT, LLC 8000 MAIN STREET ELLICOTT CITY, MARYLAND 21042	WAVERLY WOODS DEVELOPMENT CORPORATION c/o LAND DESIGN AND DEVELOPMENT, LLC 8000 MAIN STREET ELLICOTT CITY, MARYLAND 21042

SCALE: AS SHOWN | DATE: DEC. 5, 2000 | SHT. NO. 4 OF 14
DES. J.M.Z. | DRN. F.J.M. | CHK. A.M.V.

FISHER, COLLINS & CARTER, INC.
CIVIL ENGINEERING CONSULTANTS
CENTENNIAL SQUARE OFFICE PARK - 10272 BALTIMORE NATIONAL PIKE
ELLICOTT CITY, MARYLAND 21043

STATE OF MARYLAND
ALDO MICHAEL VITUCCI
No. 20748
REGISTERED PROFESSIONAL ENGINEER
Aldo M. Vitucci
12-29-00

Cindy Karanfilian JA 1/31/01
1/25/01
Andrew M. Roberts HS 1-24-01

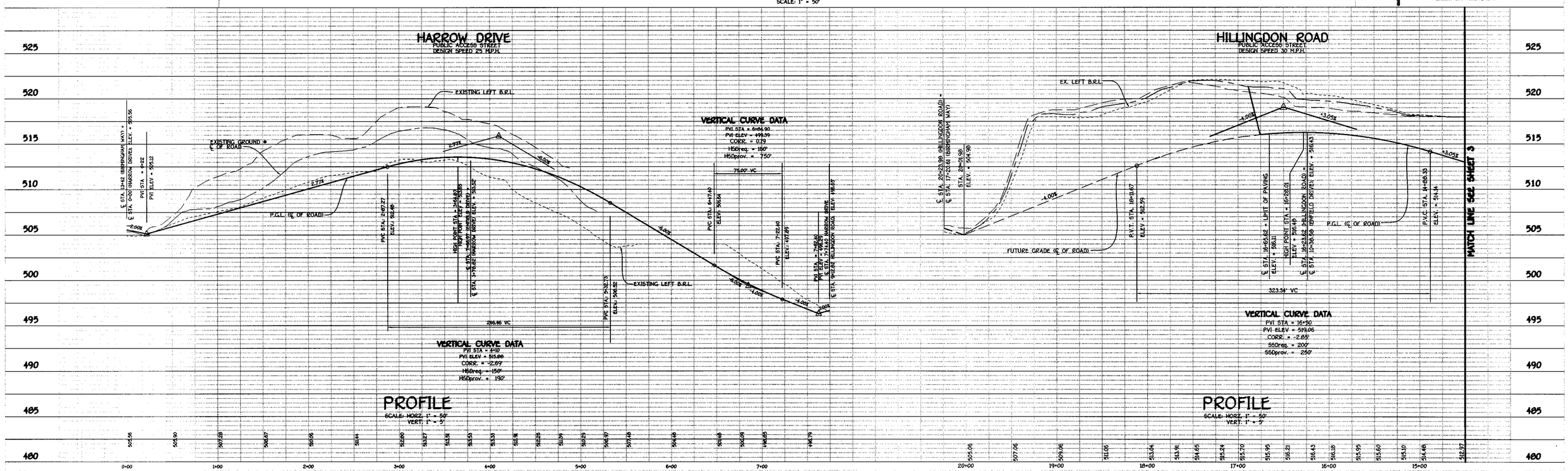

F01-31

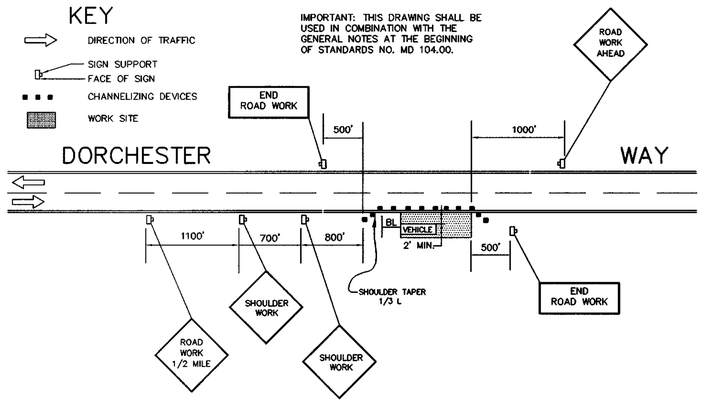

(STANDARD NO. MD 104.04-01)

TEMPORARY TRAFFIC CONTROL PLAN

NO SCALE

MAINTENANCE OF TRAFFIC SPECIAL PROVISIONS

GENERAL

1. THE PURPOSE OF THIS PORTION OF THE SPECIAL PROVISION IS TO SET FOR THE TRAFFIC CONTROL REQUIREMENTS NECESSARY FOR THE SAFE AND EFFICIENT MAINTENANCE TO TRAFFIC WITHIN WORK AREAS, AND TO MINIMIZE ANY INCONVENIENCES TO THE TRAVELING PUBLIC AND THE CONTRACTOR AND/OR PERMITTEE.
2. PROPERLY TRAFFIC CONTROL THROUGH WORK AREAS IS ESSENTIAL FOR INSURING THE SAFETY AND THAT OF HIGHWAY WORKERS HAS THE HIGHEST PRIORITY OF ALL TASKS WITHIN THIS PROJECT. THE PROPERTY APPLICATION OF THE APPROVED TRAFFIC CONTROL PLAN (TCP) WILL PROVIDE THE DESIRED LEVEL OF SAFETY.
3. THROUGHOUT THESE SPECIAL PROVISIONS, ANY MENTION OF THE TCP SHALL BE IMPLIED TO INCLUDE ANY COMBINATION OF TYPICAL TRAFFIC CONTROL STANDARDS WHICH FORM THE OVERALL TCP FOR THIS PROJECT WHICH HAS BEEN APPROVED BY THE APPROPRIATE SHA TRAFFIC ENGINEER.
4. THE CONTRACTOR AND/OR PERMITTEE SHALL BE REQUIRED TO ADHERE TO THE PROVISIONS OF THE MANUAL OF UNIFORM TRAFFIC CONTROL DEVICES (MUTCD), 1988 EDITION, ESPECIALLY PART VI, AND TO SECTION 104 OF THE MARYLAND DOT STANDARD SPECIFICATIONS FOR CONSTRUCTION AND MATERIALS (JANUARY, 1982), INCLUDING ALL REVISIONS AND SUPPLEMENTS TO EACH.
5. THE CONTRACTOR AND/OR PERMITTEE SHALL BE REQUIRED TO ADHERE TO THE REQUIREMENTS SET FOR IN THE TCP AND THESE SPECIAL PROVISIONS, UNLESS OTHERWISE DIRECTED BY THE ENGINEER. ANY REQUESTS TO MAKE MINOR CHANGES TO THE TCP OR THE SPECIAL PROVISIONS WITH REGARD TO THE TRAFFIC CONTROL ITEMS SHALL BE MADE IN WRITING TO THE ENGINEER A MINIMUM OF THREE(3) WORKING DAYS PRIOR TO THE PROPOSED SCHEDULING CHANGE. THE CONTRACTOR AND/OR PERMITTEE SHALL HAVE WRITTEN APPROVAL OF THE ENGINEER PRIOR TO THE IMPLEMENTATION OF ANY CHANGE.
6. NO WORK SHALL BEGIN ON ANY WORK ACTIVITY OR WORK PHASE UNTIL ALL REQUIRED TRAFFIC CONTROL PATTERNS AND DEVICES INDICATED ON THE TCP FOR THAT ACTIVITY OR PHASE ARE COMPLETELY AND CORRECTLY IN PLACE TO HAVE BEEN CHECKED FOR APPROVED USAGE.
7. GENERAL AND SPECIFIC WARNING SIGNS SHALL ONLY BE IN PLACE WHEN SPECIFIC WORK TASKS AND ACTIVITIES ARE ACTUALLY UNDERWAY OR CONDITIONS EXIST THAT POSE A POTENTIAL HAZARD TO THE PUBLIC, AND ANY ADDITIONAL SIGNING HAS BEEN APPROVED BY THE APPROPRIATE SHA TRAFFIC ENGINEER. NOTE: THE PRACTICE OF PLACING SIGNING AND OTHER TRAFFIC CONTROL DEVICES IN ADDITION TO THOSE INDICATED ON THE APPROVED TCP IS NOT PERMITTED.
8. THE CONTRACTOR AND/OR PERMITTEE SHALL PROVIDE, MAINTAIN IN NEW CONDITION, AND MOVE WHEN NECESSARY, OR AS DIRECTED BY THE ENGINEER, ALL TRAFFIC CONTROL DEVICES USED FOR THE GUIDANCE AND PROTECTION OF MOTORISTS, PEDESTRIANS, AND WORKERS.
9. ALL TRAFFIC CONTROL DEVICES REQUIRED BY THE TCP SHALL BE KEPT IN GOOD CONDITION, FULLY PERFORMING AS SET FORTH IN THE TCP, THE MUTCD, AND/OR SECTION 104 OF THE SPECIFICATIONS. FOR REFLECTIVE DEVICES, A PARTICULAR DEVICE IS ASSUMED TO HAVE FAILED TO MEET MINIMUM OPERATIONAL STANDARDS WHEN THE DEVICE NO LONGER HAS RETRO-REFLECTANCE CAPABILITY OF AT LEAST 60% OF THE SPECIFIED MINIMUM VALUE OVER AT LEAST 90% OF THE VISIBLE REFLECTIVE SURFACE.
10. ALL TRAFFIC CONTROL DEVICES NOT REQUIRED FOR THE SAFE CONDUCT OF TRAFFIC SHALL BE PROMPTLY REMOVED, COMPLETELY COVERED, TURNED AWAY FROM TRAFFIC, OR OTHERWISE TAKEN OUT OF SERVICE. IT IS INTENDED THAT NO TRAFFIC CONTROL DEVICE IS TO BE IN SERVICE WHEN THERE IS NO CLEAR CUT REASON FOR THE DEVICE.
11. THROUGHOUT THE PERIOD(S) OF WORK ACTIVITIES, TRAFFIC SHALL BE MAINTAINED BY IMPLEMENTING THE APPROVED TCP. IN LIEU OF THE TCP PREPARED FOR THIS PROJECT, AND/OR INDIVIDUAL TYPICAL TRAFFIC CONTROL STANDARDS, THE CONTRACTOR AND/OR PERMITTEE HAS THE OPTION OF PREPARING AND SUBMITTING A TCP, WHOLLY OR IN PART, OF HIS OWN DESIGN, FOLLOWING GUIDELINES SET FORTH IN THE MUTCD AND PRESCRIBED BY THE ADMINISTRATION. A TCP DEVELOPED BY THE CONTRACTOR AND/OR PERMITTEE SHALL NOT BE IMPLEMENTED UNTIL ADVANCE, WRITTEN APPROVAL IS OBTAINED FROM THE ENGINEER. TCPS MAY BE IMPLEMENTED WITHIN A SINGLE PROJECT OR JOINTLY BETWEEN TWO OR MORE PROJECTS. IN SITUATIONS WHERE TCPS JOINTLY IMPLEMENTED, CARE SHALL BE EXERCISED TO PRESENT CORRECT AND NON-CONFLICTING GUIDANCE TO THE TRAVELING PUBLIC.
12. THROUGHOUT THESE SPECIAL PROVISIONS, WHERE SPEED OF TRAFFIC IS NOTED, THIS MEANS THE POSTED SPEED OR PREVAILING TRAVEL SPEED, WHICHEVER IS HIGHER, UNLESS OTHERWISE NOTED.
13. TRAFFIC SHALL BE MAINTAINED AT ALL TIMES THROUGHOUT THE ENTIRE LENGTH OF THE PROJECT, UNLESS OTHERWISE NOTED. NO TRAVEL LANE(S) OTHER THAN THOSE DESIGNATED FOR POSSIBLE CLOSURE IN THE TCP SHALL BE CLOSED WITHOUT OBTAINING PRIOR APPROVAL FROM THE ENGINEER. ALL INGRESS AND EGRESS TO THE WORK AREA BY THE CONTRACTOR AND/OR PERMITTEE SHALL BE PERFORMED WITH THE FLOW OF TRAFFIC.

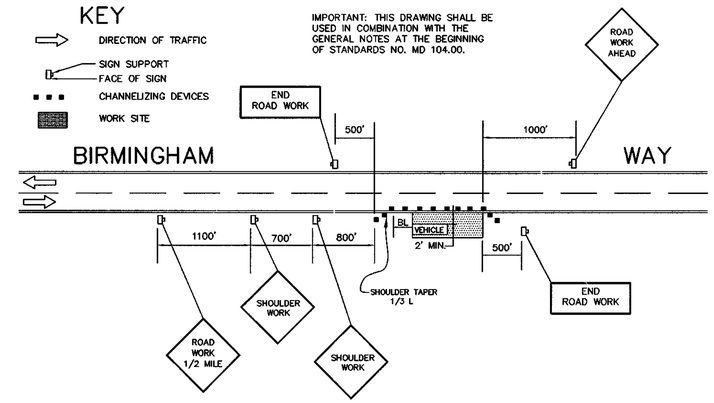

(STANDARD NO. MD 104.04-01)

TEMPORARY TRAFFIC CONTROL PLAN

NO SCALE

APPROVED FOR THE DEPARTMENT OF TRANSPORTATION
Cindy Ramotta JR 1/31/01
CHIEF, TRAFFIC DEVELOPMENT DIVISION DATE

APPROVED FOR THE DEPARTMENT OF TRANSPORTATION
1/25/01
CHIEF, TRAFFIC ENGINEERING DIVISION DATE

APPROVED FOR THE DEPARTMENT OF TRANSPORTATION
Andrew M. Robinette HS 1-24-01
CHIEF, TRAFFIC ENGINEERING DIVISION DATE

STATE OF MARYLAND
ALDO MICHAEL VITUCCI
No. 20749
REGISTERED PROFESSIONAL ENGINEER
Aldo M. Vitucci
12-27-00

GTW'S WAVERLY WOODS
SECTION 12
LOTS 1 THRU 127 AND PARCELS 'A' 'B'

(A SUBDIVISION OF PART OF THE PROPERTY OF GTW JOINT VENTURE, LIBER 2222, FOLIO 361)
ZONED: R-SA-8

TAX MAP No. 16
THIRD ELECTION DISTRICT

PART OF PARCEL No. 20
HOWARD COUNTY, MARYLAND

BARNET COURT PROFILE

FILLET PROFILES (IN CRITICAL AREAS)

OWNER
GTW JOINT VENTURE
c/o LAND DESIGN
AND DEVELOPMENT, LLC
8000 MAIN STREET
ELLICOTT CITY, MARYLAND 21042

DEVELOPER
WAVERLY WOODS
DEVELOPMENT CORPORATION
c/o LAND DESIGN
AND DEVELOPMENT, LLC
8000 MAIN STREET
ELLICOTT CITY, MARYLAND 21042

SCALE: AS SHOWN	DATE: DEC. 5, 2000	SHEET 5 OF 14	
DES. J.M.Z.	DRN. J.C.L.	CHK. A.M.V.	

FISHER, COLLINS & CARTER, INC.
CIVIL ENGINEERING CONSULTANTS
CENTENNIAL SQUARE OFFICE PARK - 10272 BALT. NAT'L PIKE, STE. 106
ELLICOTT CITY, MARYLAND 21042

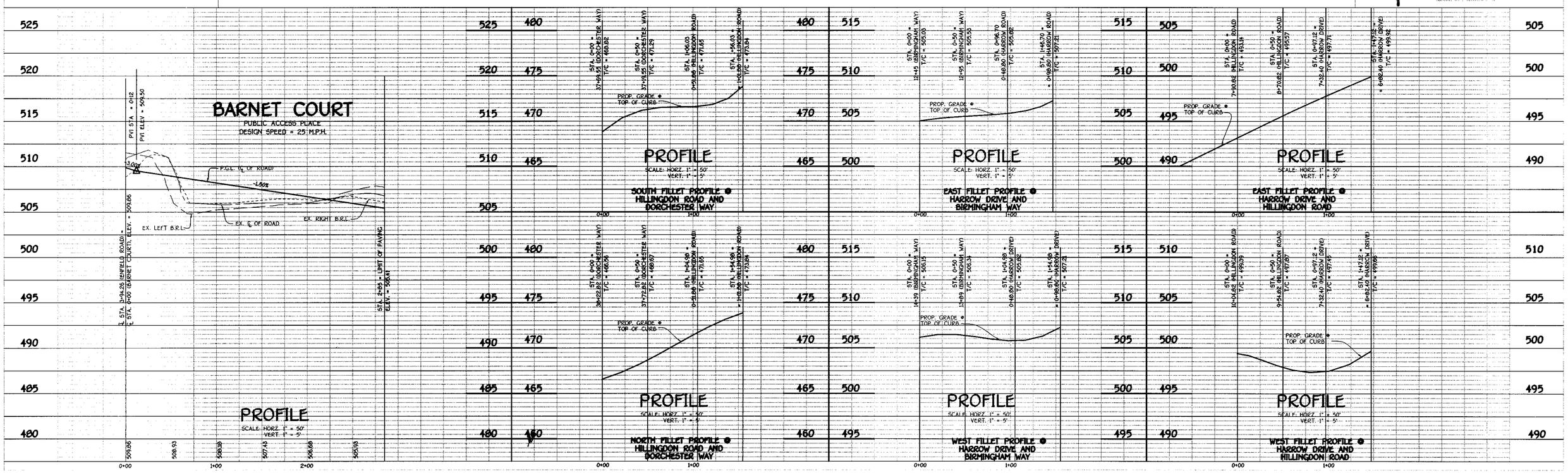

STREET TREE SCHEDULE

SYMBOL	QUANTITY	BOTANICAL AND COMMON NAME	SIZE	COMMENTS
	16	ACER RUBRUM 'OCTOBER GLORY' RED MAPLE	2 1/2"-3" CAL.	40' APART ON PUBLIC R/W
	11	PLATANUS X ACERIFOLIA 'BLOODGOOD' BLOODGOOD LONDON PLANE	2 1/2"-3" CAL.	40' APART ON PUBLIC R/W
	50	FRAXINUS AMERICANA 'ROSEHILL' ROSEHILL WHITE ASH	2 1/2"-3" CAL.	40' APART ON PUBLIC R/W
	19	FRAXINUS AMERICANA 'AUTUMN PURPLE' AUTUMN PURPLE WHITE ASH	2 1/2"-3" CAL.	40' APART ON PUBLIC R/W

ENGINEER'S CERTIFICATE

I Hereby Certify That The Plan For Erosion And Sediment Control Represents A Practical And Workable Plan Based On My Personal Knowledge Of The Site Conditions And That It Was Prepared In Accordance With The Requirements Of The Howard Soil Conservation District.

Signature Of Engineer — Date: 12-27-00

DEVELOPER'S CERTIFICATE

"I/We Certify That All Development And Construction Will Be Done According To This Plan Of Development And Plan For Erosion And Sediment Control And That All Responsible Personnel Involved In The Construction Project Will Have A Certificate Of Attendance At A Department Of Natural Resources Approved Training Program For The Control Of Sediment And Erosion Before Beginning The Project. I Also Authorize Periodic On-Site Inspection By The Howard Soil Conservation District Or Their Authorized Agents, As Are Deemed Necessary."

Signature Of Developer — Date

Reviewed For Howard County Soil Conservation District And Meets Technical Requirements

U.S.D.A. - Natural Resources Conservation Service — Date: 1/9/01

Approved: This Development Is Approved For Erosion And Sediment Control By The Howard Soil Conservation District.

District Howard Soil Conservation Dist. — Date: 1/9/01

Approved: Department Of Planning And Zoning

Chief, Division Of Land Development — Date: 1/3/01

Chief, Development Engineering Division — Date: 1/25/01

Approved: Howard County Department Of Public Works

Chief, Bureau Of Highways — Date: 1-24-01

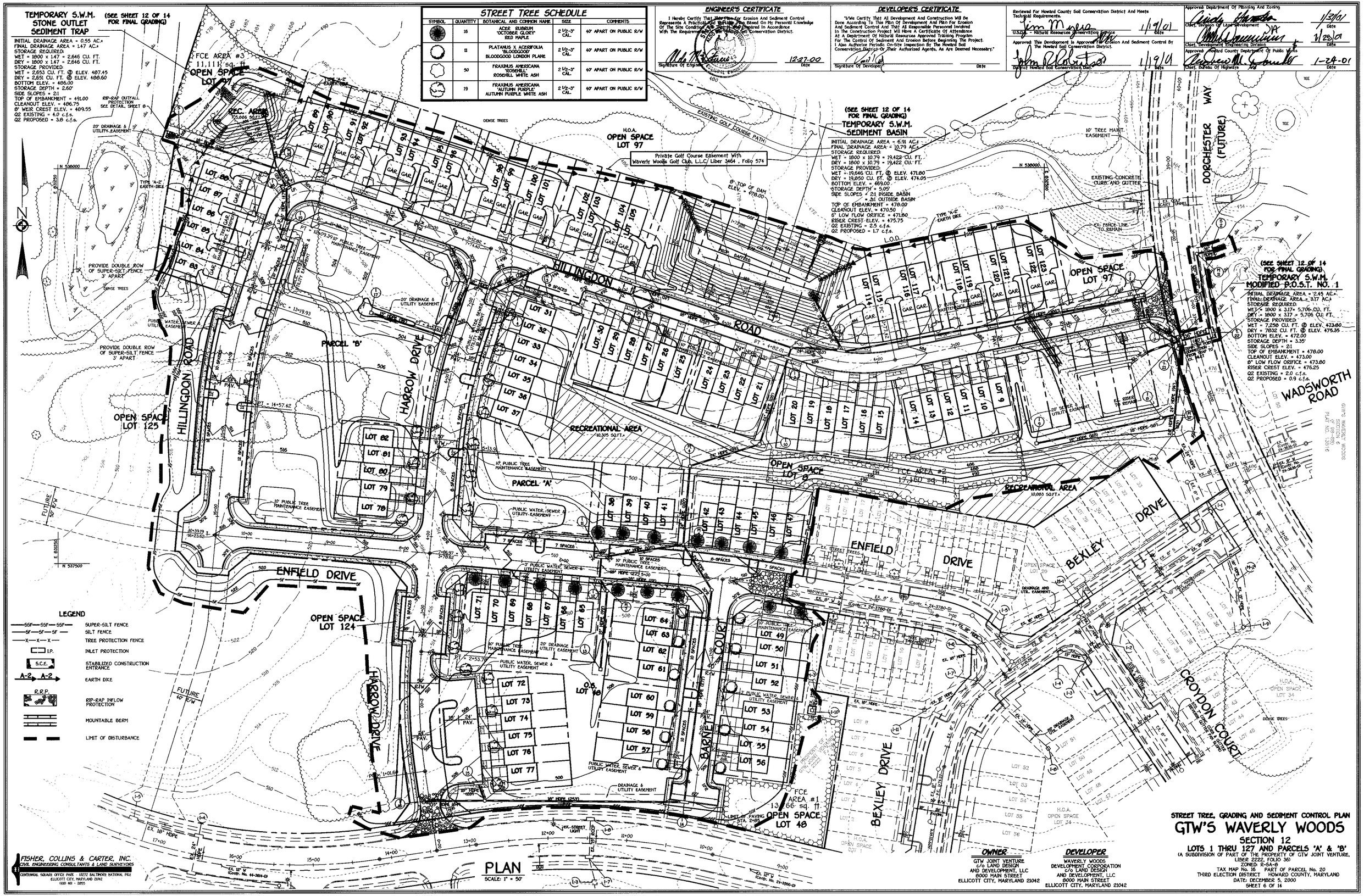

FISHER, COLLINS & CARTER, INC.
CIVIL ENGINEERING CONSULTANTS & LAND SURVEYORS
CENTENNIAL SQUARE OFFICE PARK - 10272 BALTIMORE NATIONAL PIKE
ELLICOTT CITY, MARYLAND 21042
(410) 461 - 2855

OWNER
GTW JOINT VENTURE
c/o LAND DESIGN AND DEVELOPMENT, LLC
8000 MAIN STREET
ELLICOTT CITY, MARYLAND 21042

DEVELOPER
WAVERLY WOODS DEVELOPMENT CORPORATION
c/o LAND DESIGN AND DEVELOPMENT, LLC
8000 MAIN STREET
ELLICOTT CITY, MARYLAND 21042

STREET TREE, GRADING AND SEDIMENT CONTROL PLAN

GTW'S WAVERLY WOODS

SECTION 12

LOTS 1 THRU 127 AND PARCELS 'A' & 'B'
(A SUBDIVISION OF PART OF THE PROPERTY OF GTW JOINT VENTURE, LIBER 2222, FOLIO 367
ZONED: R-SA-8
TAX MAP No. 16 PART OF PARCEL No. 20
THIRD ELECTION DISTRICT HOWARD COUNTY, MARYLAND
DATE: DECEMBER 5, 2000
SHEET 6 OF 14

F01-31

Approved: Department Of Planning And Zoning	
Chief, Division Of Land Development	1/31/01 Date
Chief, Development Engineering Division	1/25/01 Date
Approved: Howard County Department Of Public Works	
Chief, Bureau Of Highways	1-24-01 Date

LANDSCAPING PLANT LIST

QTY.	KEY	NAME	SIZE
33		QUERCUS COCCINEA SCARLET OAK	2-1/2" - 3" CAL.
15		CEDRUS DEODORA DEODAR CEDAR	6' - 8' HT.
19	O	VIBURNUM DENTATUM ARROWWOOD VIBURNUM	2-1/2' - 3' HT.

19 SHRUBS + 1.9 TREES FOR THE REQUIRED SURETY AMOUNT ($600.00)
THIS PLAN HAS BEEN PREPARED IN ACCORDANCE WITH THE PROVISIONS OF SECTION 16.124 OF THE HOWARD COUNTY CODE AND THE LANDSCAPE MANUAL. FINANCIAL SURETY FOR THE 50 REQUIRED LANDSCAPE TREES AND 32 REFORESTATION TREES HAVE BEEN POSTED AS PART OF THE DEVELOPER'S AGREEMENT IN THE AMOUNT OF $ 20,550.00.

NOTE: SEE SHEET 5 FOR STREET TREE SCHEDULE AND SURETY AMOUNT

DRAINAGE AREA DATA

STRUCTURE NO.	DRAINAGE AREA	AREA (AC.)	'C'	ZONED	% IMP.
I-1	A	0.54	0.64	R-SA-8	66%
I-2	B	0.39	0.64	R-SA-8	67%
I-3	C	0.71	0.68	R-SA-8	72%
I-4	D	0.43	0.69	R-SA-8	73%
I-5	E	0.59	0.53	R-SA-8	49%
I-6	F	0.34	0.39	R-SA-8	27%
I-7	G	0.74	0.68	R-SA-8	71%
I-8	H	0.91	0.30	R-SA-8	14%

DRAINAGE AREA DATA

STRUCTURE NO.	DRAINAGE AREA	AREA (AC.)	'C'	ZONED	% IMP.
I-9	I	1.33	0.32	R-SA-8	17%
I-10	J	1.66	0.29	R-SA-8	12%
I-11	K	0.65	0.65	R-SA-8	67%
I-12	L	0.43	0.54	R-SA-8	50%
I-13	M	0.76	0.36	R-SA-8	22%
I-14	N	0.78	0.70	R-SA-8	74%
I-15	O	0.55	0.63	R-SA-8	64%
I-16	P	0.69	0.41	R-SA-8	30%
I-17	Q	1.12	0.24	R-SA-8	4%
I-18	R	0.51	0.67	R-SA-8	69%
I-19	S	0.62	0.53	R-SA-8	49%
I-20	T	0.70	0.64	R-SA-8	66%
EX I-10	U	0.97	0.32	R-SA-8	16%
I-21 I-22	SEE SECTION 11, AREA 1 FOR PROPOSED DRAINAGE AREA				

REFORESTATION AREA 1 & 2 PLANT LIST

QTY.	SYMBOL	NAME	SIZE	CONDITION	SPACING
12	A	ACER RUBRUM RED MAPLE	2.5" CAL.	B & B	AS SHOWN
12	F	PINUS STROBUS WHITE PINE	6' - 8' HT.	B & B	AS SHOWN
8	G	QUERCUS COCCINEA SCARLET OAK	2.5" CAL.	B & B	AS SHOWN

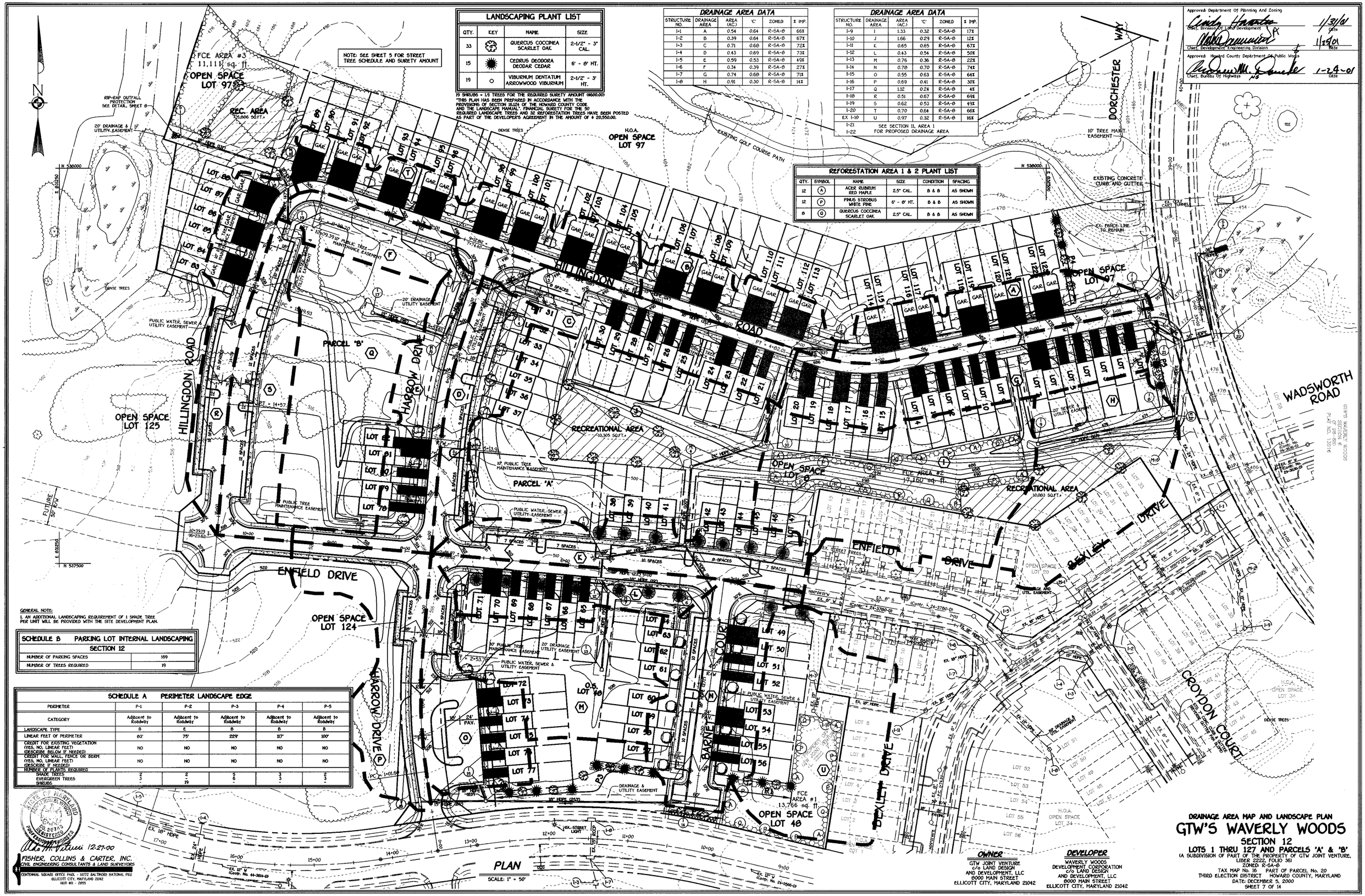

GENERAL NOTE:
1. AN ADDITIONAL LANDSCAPING REQUIREMENT OF 1 SHADE TREE PER UNIT WILL BE PROVIDED WITH THE SITE DEVELOPMENT PLAN.

SCHEDULE B PARKING LOT INTERNAL LANDSCAPING
SECTION 12

NUMBER OF PARKING SPACES	169
NUMBER OF TREES REQUIRED	19

SCHEDULE A PERIMETER LANDSCAPE EDGE

PERIMETER	P-1	P-2	P-3	P-4	P-5
CATEGORY	Adjacent to Roadway	Adjacent to Roadway	Adjacent to Roadway	Adjacent to Roadway	Adjacent to Roadway
LANDSCAPE TYPE	B	E	B	B	B
LINEAR FEET OF PERIMETER	63'	75'	229'	117'	100'
CREDIT FOR EXISTING VEGETATION (YES, NO, LINEAR FEET) (DESCRIBE BELOW IF NEEDED)	NO	NO	NO	NO	NO
CREDIT FOR WALL, FENCE OR BERM (YES, NO, LINEAR FEET) (DESCRIBE IF NEEDED)	NO	NO	NO	NO	NO
NUMBER OF PLANTS REQUIRED					
SHADE TREES	2	2	5	3	2
EVERGREEN TREES	3	-	6	3	3
SHRUBS	-	19	-	-	-

STATE OF MARYLAND ALAN M. VITUNI No. 22174 REGISTERED PROFESSIONAL ENGINEER

12-27-00

FISHER, COLLINS & CARTER, INC.
CIVIL ENGINEERING CONSULTANTS & LAND SURVEYORS
CENTENNIAL SQUARE OFFICE PARK - 10272 BALTIMORE NATIONAL PIKE
ELLICOTT CITY, MARYLAND 21042
(410) 461 - 2855

PLAN
SCALE: 1" = 50'

OWNER
GTW JOINT VENTURE
c/o LAND DESIGN
AND DEVELOPMENT, LLC
8000 MAIN STREET
ELLICOTT CITY, MARYLAND 21042

DEVELOPER
WAVERLY WOODS
DEVELOPMENT CORPORATION
c/o LAND DESIGN
AND DEVELOPMENT, LLC
8000 MAIN STREET
ELLICOTT CITY, MARYLAND 21042

DRAINAGE AREA MAP AND LANDSCAPE PLAN

GTW'S WAVERLY WOODS

SECTION 12
LOTS 1 THRU 127 AND PARCELS 'A' & 'B'
(A SUBDIVISION OF PART OF THE PROPERTY OF GTW JOINT VENTURE, LIBER 2222, FOLIO 361)
ZONED: R-SA-8
TAX MAP No. 16 PART OF PARCEL No. 20
THIRD ELECTION DISTRICT HOWARD COUNTY, MARYLAND
DATE: DECEMBER 5, 2000
SHEET 7 OF 14

F01-31

STRUCTURE SCHEDULE

STRUCTURE NO.	TOP ELEVATION	INV. IN	INV. OUT	ROAD NAME	℄ ROAD STA.	OFFSET	TYPE	W	REMARKS
I-1	471.91	466.50	466.00	HILLINGDON ROAD	0+58.50	*12.43' R	PRECAST STD. A-10 INLET	3.0'	SD 4.41
I-2	485.65	476.76, 478.19	476.26	HILLINGDON ROAD	4+48	*12.43' R	PRECAST STD. A-10 INLET	3.0'	SD 4.41
I-3	486.58	478.55	478.45	HILLINGDON ROAD	5+12	*12.43' L	PRECAST STD. A-10 INLET	2.5'	SD 4.41
I-4	497.79	489.73	489.23	HARROW DRIVE	7+24	* 12' R	PRECAST STD. A-10 INLET	2.5'	SD 4.41
I-5	497.79	491.00, 492.78	490.00	HARROW DRIVE	7+24	*12.43' L	PRECAST STD. A-10 INLET	2.5'	SD 4.41
I-6	498.03	----	492.50	HILLINGDON ROAD	9+60	*12.43' L	PRECAST STD. A-5 INLET	2.5'	SD 4.40
I-7	471.91	465.72	465.22	HILLINGDON ROAD	0+58.50	*12.43' L	PRECAST STD. A-10 INLET	3.0'	SD 4.41
I-8	475.50	469.49	468.99	----	N 537683.33 E 832647.68	----	'D' INLET	–	SD 4.39
I-9	479.30	----	474.80	----	N 537650.83 E 832489.95	----	'D' INLET	–	SD 4.39
I-10	484.50	479.82	479.32	----	N 537649.85 E 832138.95	----	'D' INLET	–	SD 4.39
I-11	508.16	500.05	499.55	ENFIELD DRIVE	5+50	* 12' R	PRECAST STD. A-10 INLET	2.5'	SD 4.41
I-12	508.16	500.82	500.32	ENFIELD DRIVE	5+50	*12.43' L	PRECAST STD. A-10 INLET	2.5'	SD 4.41
I-13	507.00	----	502.50	----	N 537365.24 E 831937.08	----	'D' INLET	–	SD 4.39
I-14	505.63	499.82	499.32	BARNET COURT	2+85	12' R	PRECAST STD. A-10 INLET	2.5'	SD 4.41
I-15	505.40	----	502.00	HARROW DRIVE	0+76	64.28' R	PRECAST STD. A-10 INLET	2.5'	SD 4.41
I-16	506.28	----	502.00	HARROW DRIVE	0+65	*12.43' L	PRECAST STD. A-10 INLET	2.5'	SD 4.41
I-17	499.30	----	495.00	----	N 537816.81 E 831647.00	----	'D' INLET	–	SD 4.39
I-18	504.66	496.99	496.49	HILLINGDON ROAD	11+78	* 12.43' R	PRECAST STD. A-5 INLET	2.5'	SD 4.40
I-19	505.12	----	497.93	HILLINGDON ROAD	12+17	* 12' L	PRECAST STD. A-10 INLET	2.5'	SD 4.41
I-20	490.84	----	483.25	HILLINGDON ROAD	7+24	*12.43' R	PRECAST STD. A-10 INLET	2.5'	SD 4.41
I-21	473.77	465.16, 464.24	463.74	DORCHESTER WAY	36+74	*18.00' L	PRECAST STD. A-10 INLET	3.5'	SD 4.41
I-22	473.77	463.34	462.84	DORCHESTER WAY	36+74	*18.00' R	PRECAST STD. A-10 INLET	3.5'	SD 4.41
M-1	486.62	477.89, 478.35	477.39	HILLINGDON ROAD	5+12	0.00	4' STD. PRECAST MH	–	G 5.12
M-2	490.88	482.64, 483.12	482.14	HILLINGDON ROAD	7+24	0.00	4' STD. PRECAST MH	–	G 5.12
M-3	494.41	486.89	486.39	HILLINGDON ROAD	8+40	0.00	4' STD. PRECAST MH	–	G 5.12
M-4	495.70	488.66	487.67	----	N 537622.36 E 832050.80	——	4' STD. PRECAST MH	–	G 5.12
M-5	510.15	497.12, 498.50	496.62	ENFIELD DRIVE	4+48	39'R	4' STD. PRECAST MH	–	G 5.12
M-6	509.09	497.96	497.46	BARNET COURT	0+15	12' R	4' STD. PRECAST MH	–	G 5.12
M-7	508.50	501.51	501.01	ENFIELD DRIVE	5+39	28' L	4' STD. PRECAST MH	–	G 5.12
M-8	505.30	501.58, 501.77	501.08	HARROW DRIVE	0+53	69' R	4' STD. PRECAST MH	–	G 5.12
M-9	501.60	494.04	493.54	HARROW DRIVE	6+53	22' L	4' STD. PRECAST MH	–	G 5.12
M-10	504.89	495.97	495.47	HILLINGDON ROAD	11+77	39' R	4' STD. PRECAST MH	–	G 5.12
M-11	468.37	461.72	461.22	DORCHESTER WAY	37+82	22.29' R	5' STD. PRECAST MH	–	G 5.13
M-12	477.00	472.10, 468.81	468.31	----	N 537686.95 E 832665.26	——	4' STD. PRECAST MH	–	G 5.12
S-1	486.00	484.50	484.50	----	N 538040.30 E 831403.80	----	18" CONC. END SECT.	–	SD 5.51
S-2	465.00	461.00	461.00	----	N 537895.02 E 832713.51	----	TYPE 'C' HEADWALL (36")	–	SD 5.21

* - DENOTES DISTANCE BETWEEN CENTERLINE OF ROAD AND FACE OF INLET

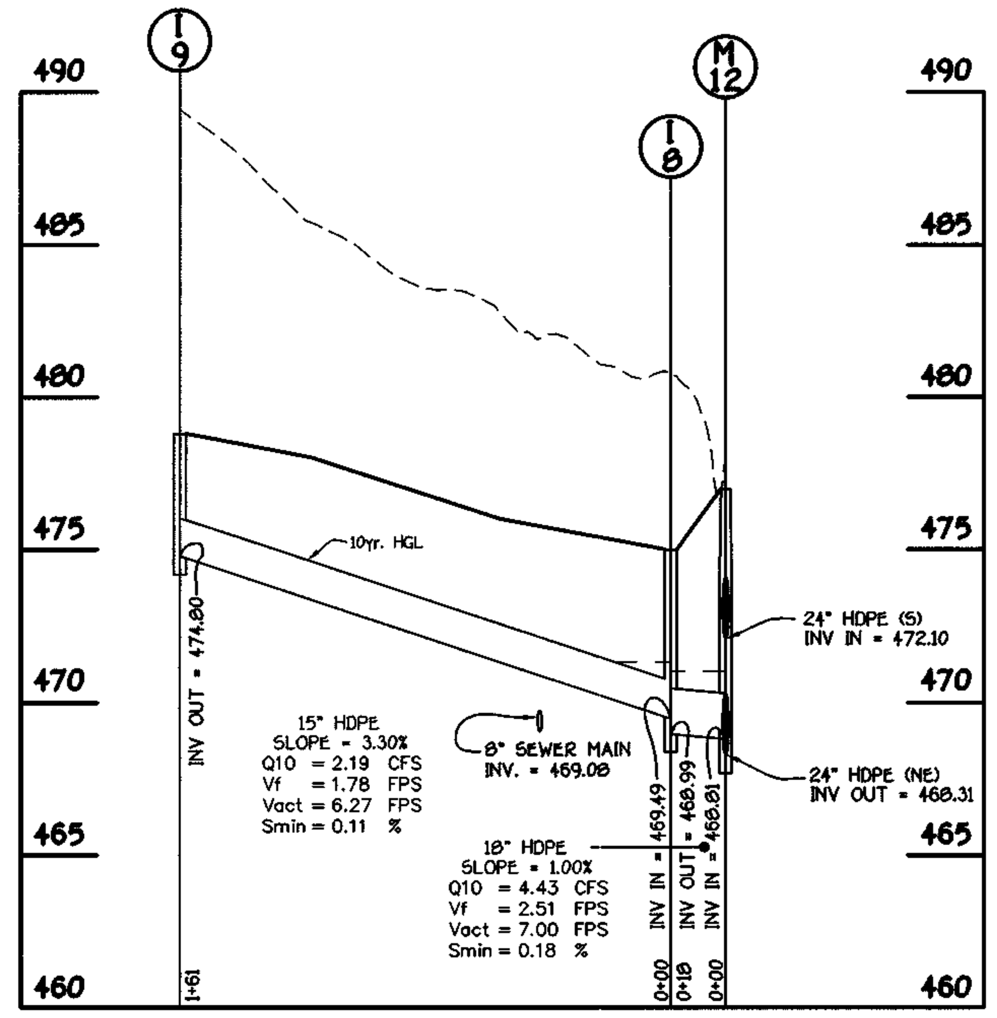

PROFILE

SCALE: HORIZ. : 1" = 50'
VERT. : 1" = 5'

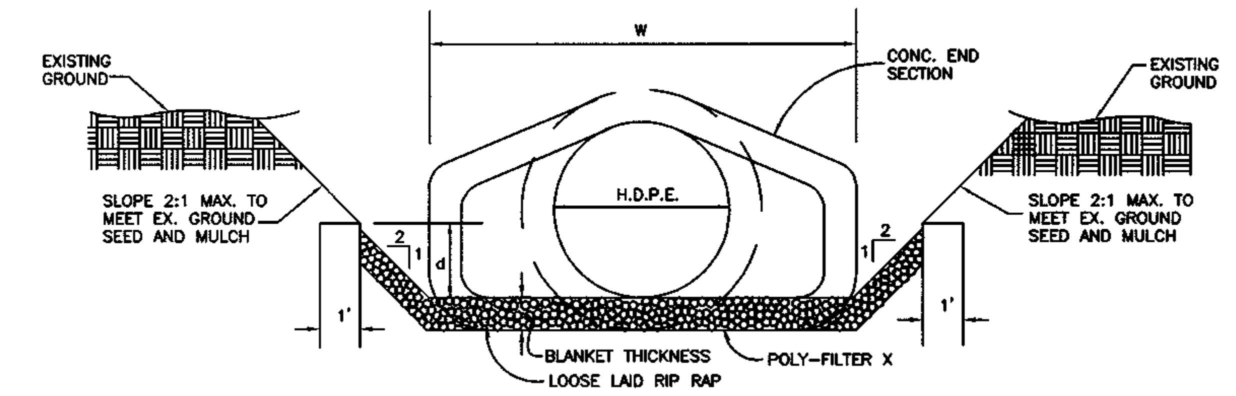

RIP RAP CHANNEL DETAIL

NO SCALE

RIP-RAP CHANNEL DESIGN DATA

STRUCTURE	AREA	WETTED PERIMETER	R	R 2/3	S	S 1/2	W	d	N	V (F.P.S.)	Q (C.F.S.)	RIP-RAP SIZE d_{50}	RIP-RAP SIZE d_{MAX}	BLANKET THICKNESS	DIA.
S-1	2.9	6.81'	0.4258'	0.5660	0.0050	0.0707	3.0'	0.60'	0.04'	1.49	4.31	9.5"	15"	19"	18"
S-2	16.88	15.17'	1.1127'	1.0738	0.0050	0.0707	3.0'	1.92'	0.04'	2.82	47.62	9.5"	15"	19"	36"

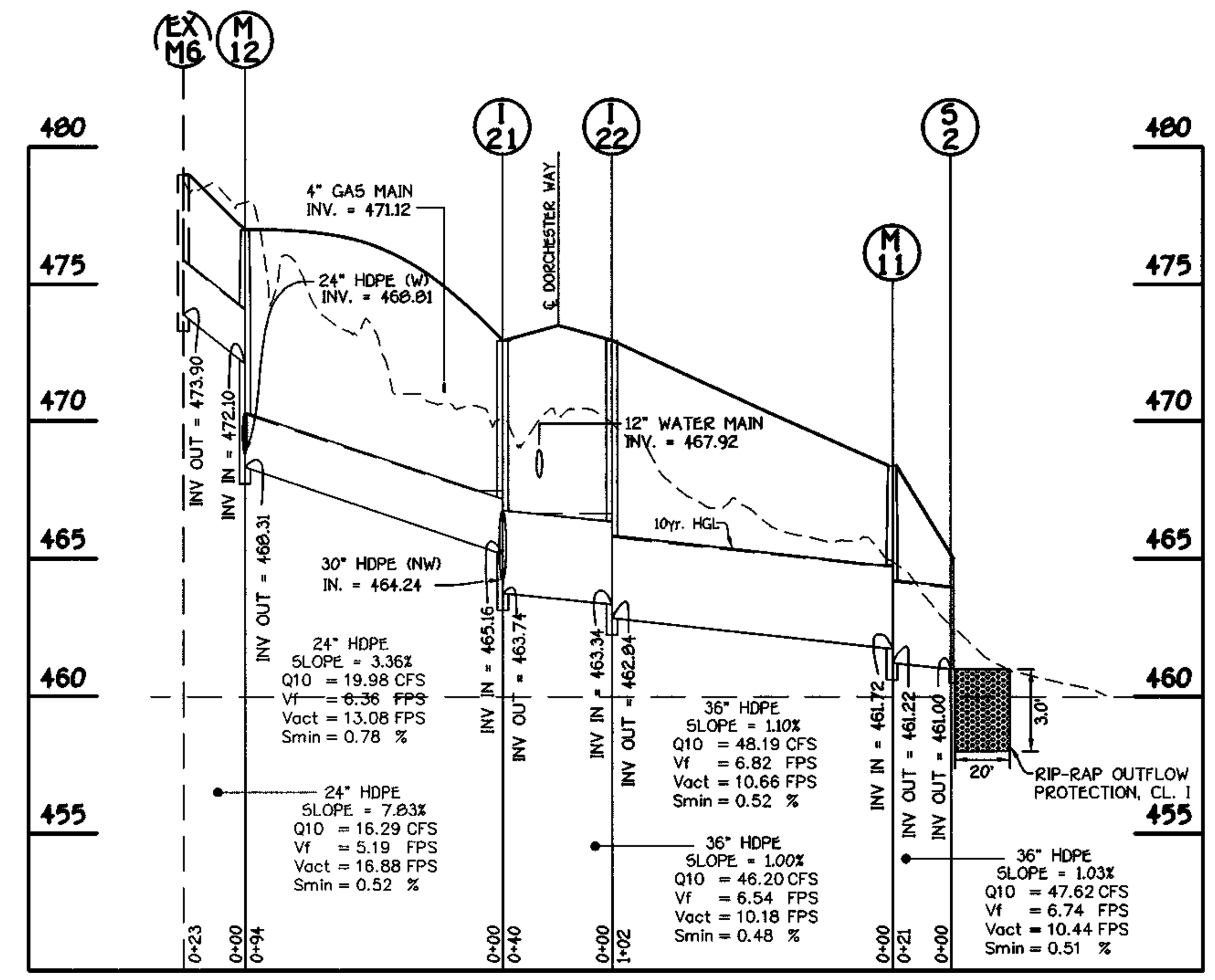

PROFILE

SCALE: HORIZ. : 1" = 50'
VERT. : 1" = 5'

Approved: Department Of Public Works
Chief Bureau Of Highways — 1-24-01 Date

Approved: Department Of Planning And Zoning
Chief, Division Of Land Development — 1/31/01 Date
Chief, Development Engineering Division — 1/25/01 Date

CONSTRUCTION SPECIFICATIONS FOR RIP-RAP OUTFALLS

1. The subgrade for the filter, riprap or gabion shall be prepared to the required lines and grades. Any fill required in the subgrade shall be compacted to a density of approximately that of the surrounding undisturbed material.
2. The rock or gravel shall conform to the specified grading limits when installed respectively in the riprap or filter.
3. Filter cloth shall be protected from punching, cutting or tearing. Any damage other than an occasional small hole shall be repaired by placing another piece of cloth over the damaged part or by completely replacing the cloth. All overlaps whether for repairs or for joining two pieces of cloth shall be a minimum of one foot.
4. Stone for the riprap or gabion outlets may be placed by equipment. Both shall each be constructed to the full course thickness in one operation and in such a manner as to avoid displacement of underlying materials. The stone for riprap or gabion outlets shall be delivered and placed in a manner that will insure that it is reasonably homogenous with the smaller stones and spalls filling the voids between the larger stones. Riprap shall be placed in a manner to prevent damage to the filter blanket or filter cloth. Hand placement will be required to the extent necessary to prevent damage to the permanent works.

PIPE SCHEDULE

SIZE	CLASS	LENGTH
15"	HDPE	574'
18"	HDPE	1358'
24"	HDPE	570'
30"	HDPE	467'
36"	HDPE	163'

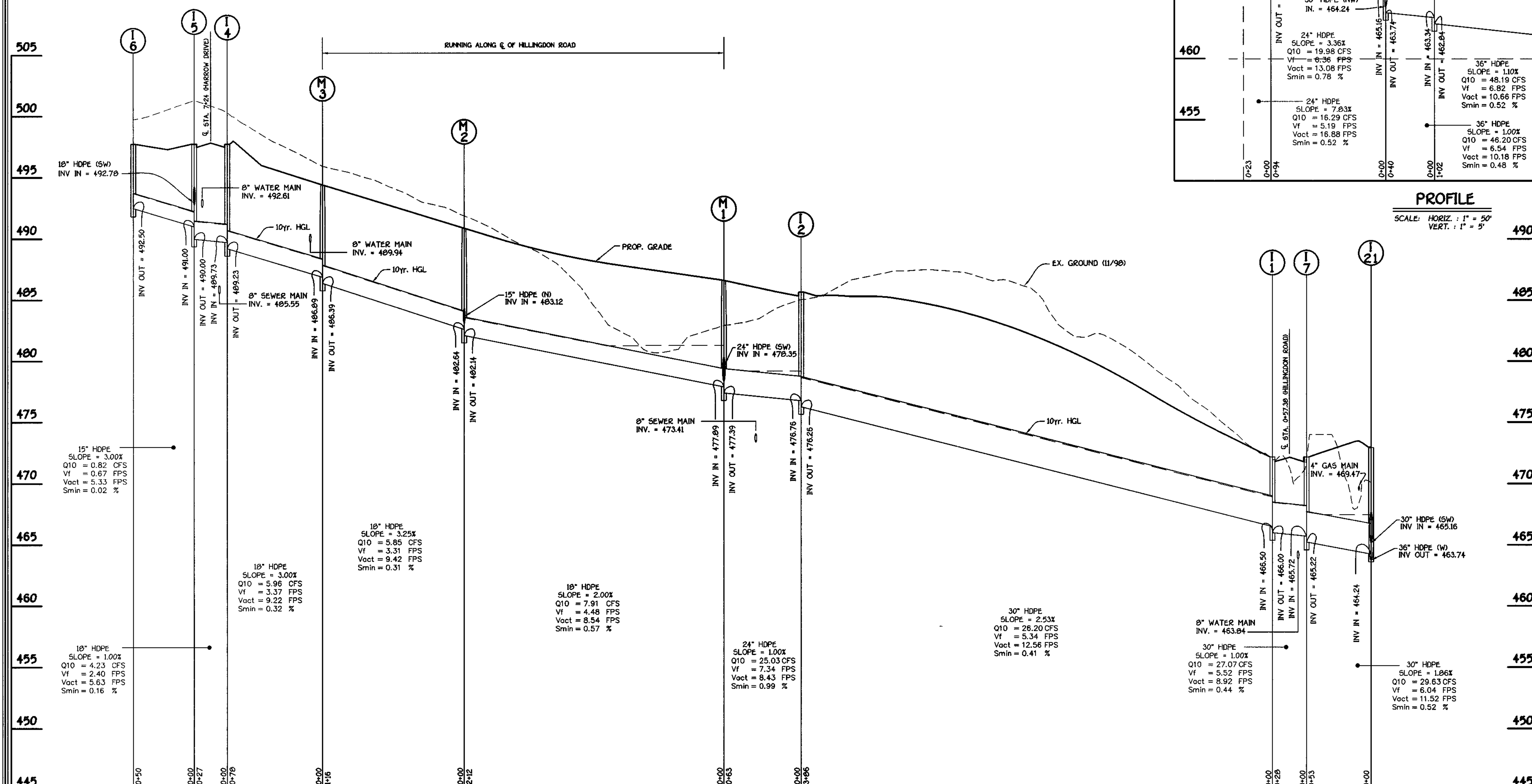

PROFILE

SCALE: HORIZ. : 1" = 50'
VERT. : 1" = 5'

FISHER, COLLINS & CARTER, INC.
CIVIL ENGINEERING CONSULTANTS & LAND SURVEYORS
CENTENNIAL SQUARE OFFICE PARK - 10272 BALTIMORE NATIONAL PIKE
ELLICOTT CITY, MARYLAND 21042
(410) 461 - 2855

OWNER
GTW JOINT VENTURE
c/o LAND DESIGN
AND DEVELOPMENT, LLC
8000 MAIN STREET
ELLICOTT CITY, MARYLAND 21042

DEVELOPER
WAVERLY WOODS
DEVELOPMENT CORPORATION
c/o LAND DESIGN
AND DEVELOPMENT, LLC
8000 MAIN STREET
ELLICOTT CITY, MARYLAND 21042

STATE OF MARYLAND — PROFESSIONAL ENGINEER — 12-27-00

STORM DRAIN PROFILES
GTW'S WAVERLY WOODS
SECTION 12
LOTS 1 THRU 127 AND PARCELS 'A' & 'B'
(A SUBDIVISION OF PART OF THE PROPERTY OF GTW JOINT VENTURE, LIBER 2222, FOLIO 36)
ZONED: R-SA-8
TAX MAP No. 16 PART OF PARCEL No. 20
THIRD ELECTION DISTRICT HOWARD COUNTY, MARYLAND
DATE: NOVEMBER 20, 2000

K:\Drawings 3\30691 GTW SECTION 12\FINAL\30691 STORM DRAIN PROFILES.dwg Wed Dec 27 18:06:46 2000 JMZ

Approved: Department Of Public Works
Chief Bureau Of Highways — Date: 1-24-01

Approved: Department Of Planning And Zoning
Chief, Division Of Land Development — Date: 1/31/01
Chief, Development Engineering Division — Date: 1/25/01

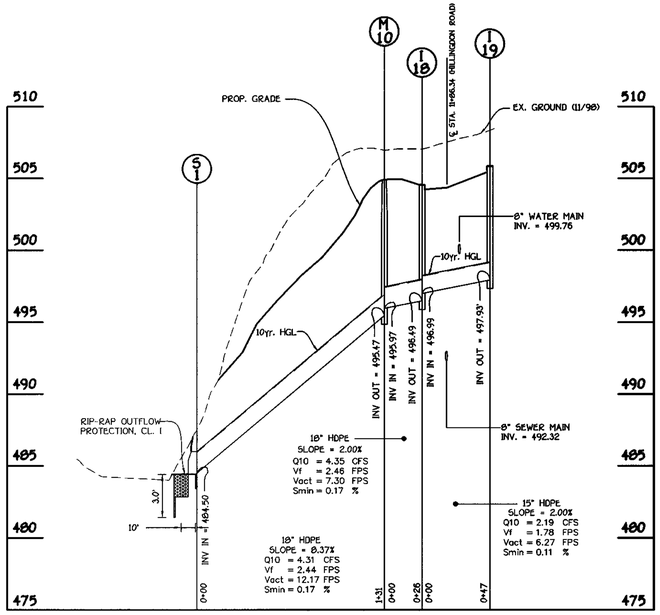

PROFILE
SCALE: HORIZ. : 1" = 50' VERT. : 1" = 5'

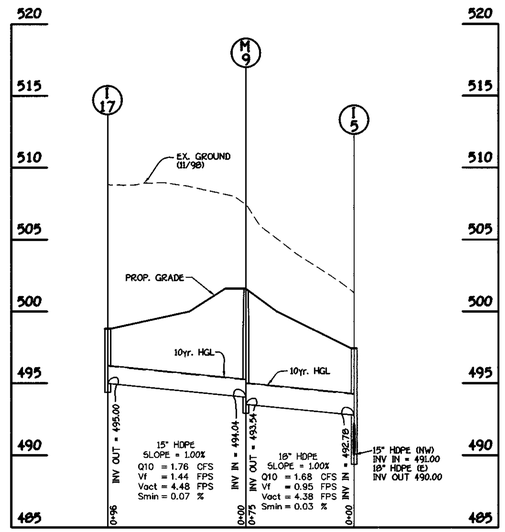

PROFILE
SCALE: HORIZ. : 1" = 50' VERT. : 1" = 5'

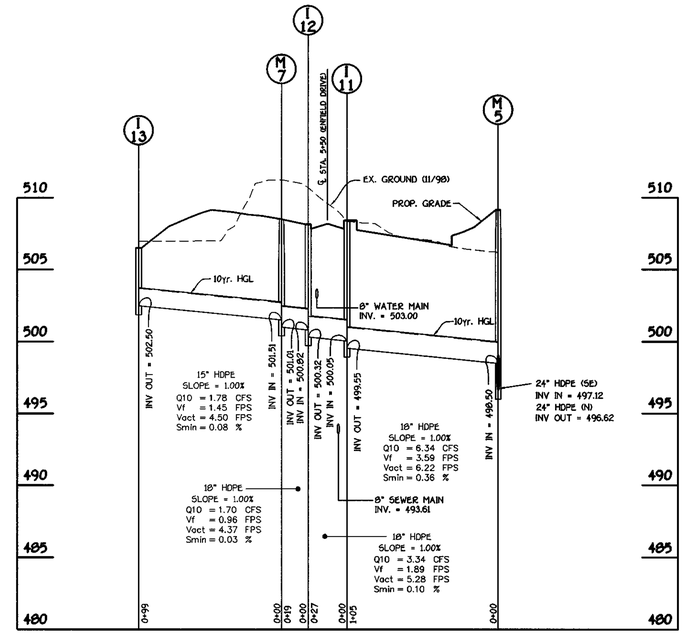

PROFILE
SCALE: HORIZ. : 1" = 50' VERT. : 1" = 5'

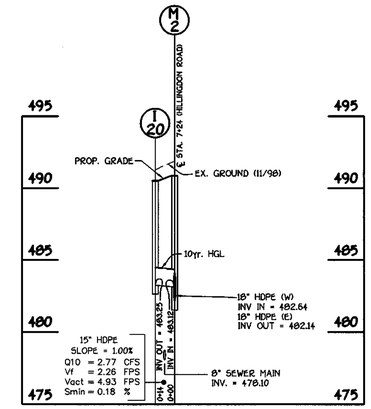

PROFILE
SCALE: HORIZ. : 1" = 50' VERT. : 1" = 5'

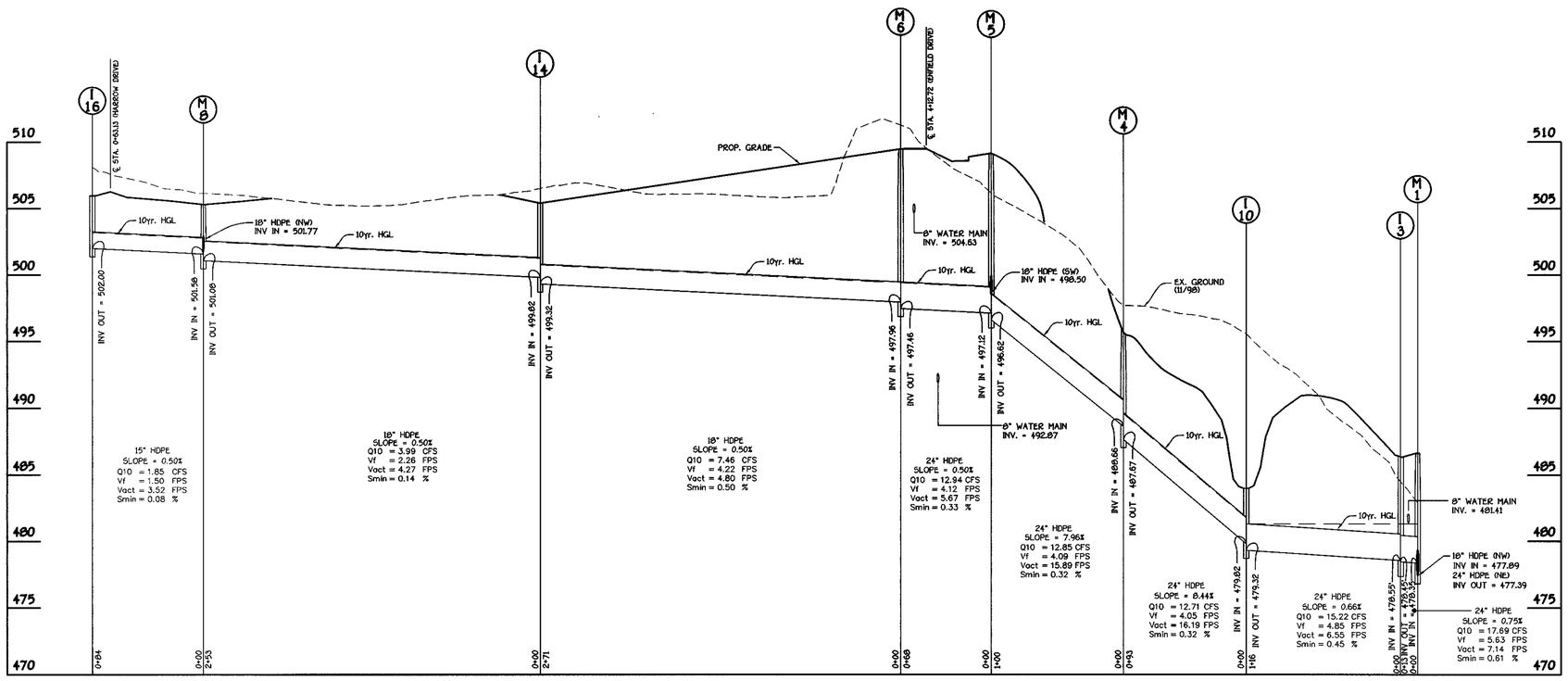

PROFILE
SCALE: HORIZ. : 1" = 50' VERT. : 1" = 5'

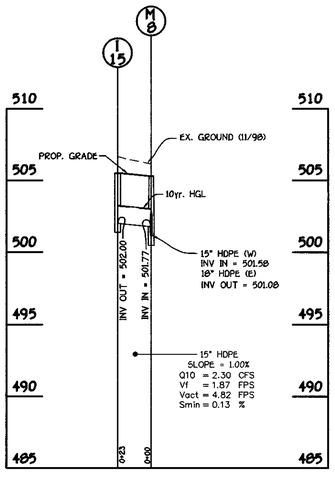

PROFILE
SCALE: HORIZ. : 1" = 50' VERT. : 1" = 5'

FISHER, COLLINS & CARTER, INC.
CIVIL ENGINEERING CONSULTANTS & LAND SURVEYORS
CENTENNIAL SQUARE OFFICE PARK - 10272 BALTIMORE NATIONAL PIKE
ELLICOTT CITY, MARYLAND 21042
(410) 461 - 2855

STATE OF MARYLAND — ALDO MICHAEL VITALI — No. 20748 — REGISTERED PROFESSIONAL ENGINEER
12-27-00

OWNER
GTW JOINT VENTURE
c/o LAND DESIGN
AND DEVELOPMENT, LLC
8000 MAIN STREET
ELLICOTT CITY, MARYLAND 21042

DEVELOPER
WAVERLY WOODS
DEVELOPMENT CORPORATION
c/o LAND DESIGN
AND DEVELOPMENT, LLC
8000 MAIN STREET
ELLICOTT CITY, MARYLAND 21042

STORM DRAIN PROFILES

GTW'S WAVERLY WOODS

SECTION 12

LOTS 1 THRU 127 AND PARCELS 'A' & 'B'
(A SUBDIVISION OF PART OF THE PROPERTY OF GTW JOINT VENTURE, LIBER 2222, FOLIO 36)
ZONED: R-SA-8
TAX MAP No. 15 PART OF PARCEL No. 20
THIRD ELECTION DISTRICT HOWARD COUNTY, MARYLAND
DATE: NOVEMBER 20, 2000
SHEET 9 OF 14

F01-31

K:\Drawings 31\30691 GTW SECTION 12\FINAL\30691 STORM DRAIN PROFILES.dwg

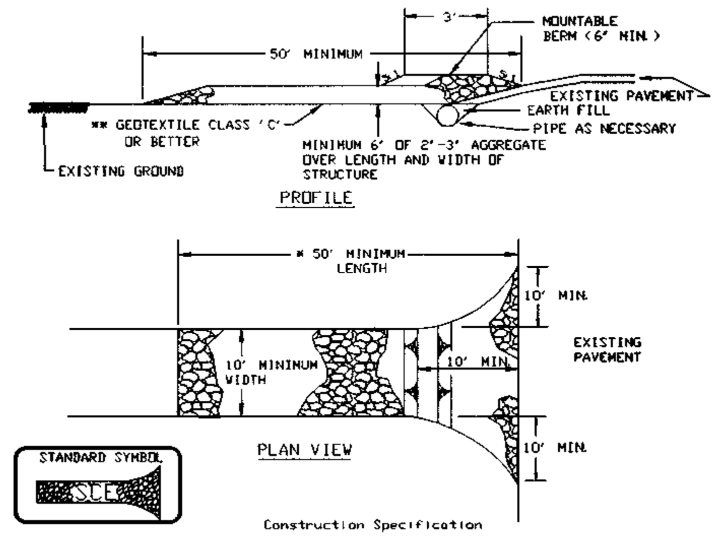

Construction Specification

1. Length - minimum of 50' (*30' for single residence lot).

2. Width - 10' minimum, should be flared at the existing road to provide a turning radius.

3. Geotextile fabric (filter cloth) shall be placed over the existing ground prior to placing stone. **The plan approval authority may not require single family residences to use geotextile.

4. Stone - crushed aggregate (2" to 3") or reclaimed or recycled concrete equivalent shall be placed at least 6" deep over the length and width of the entrance.

5. Surface Water - all surface water flowing to or diverted toward construction entrances shall be piped through the entrance, maintaining positive drainage. Pipe installed through the stabilized construction entrance shall be protected with a mountable berm with 5:1 slopes and a minimum of 6" of stone over the pipe. Pipe has to be sized according to the drainage. When the SCE is located at a high spot and has no drainage to convey a pipe will not be necessary. Pipe should be sized according to the amount of runoff to be conveyed. A 6" minimum will be required.

6. Location - A stabilized construction entrance shall be located at every point where construction traffic enters or leaves a construction site. Vehicles leaving the site must travel over the entire length of the stabilized construction entrance.

STABILIZED CONSTRUCTION ENTRANCE - 2

NOT TO SCALE

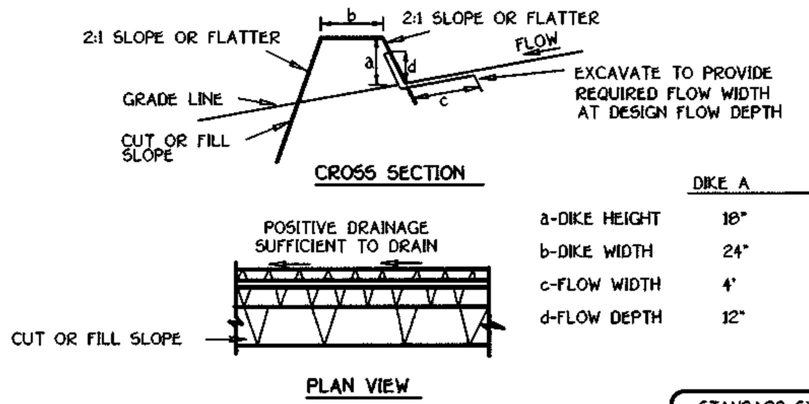

	DIKE A	DIKE B
a-DIKE HEIGHT	18"	30"
b-DIKE WIDTH	24"	36"
c-FLOW WIDTH	4'	6'
d-FLOW DEPTH	12"	24"

STANDARD SYMBOL
A-2 B-3
—▸—/—▸—

FLOW CHANNEL STABILIZATION
GRADE 0.5% MIN. 10% MAX.

1. Seed and cover with straw mulch.
2. Seed and cover with Erosion Control Matting or line with sod.
3. 4" - 7" stone or recycled concrete equivalent pressed into the soil 7" minimum

Construction Specifications

1. All temporary earth dikes shall have uninterrupted positive grade to an outlet. Spot elevations may be necessary for grades less than 1%.
2. Runoff diverted from a disturbed area shall be conveyed to a sediment trapping device.
3. Runoff diverted from an undisturbed area shall outlet directly into an undisturbed, stabilized area at a non-erosive velocity.
4. All trees, brush, stumps, obstructions, and other objectionable material shall be removed and disposed of so as not to interfere with the proper functioning of the dike.
5. The dike shall be excavated or shaped to line, grade and cross section as required to meet the criteria specified herein and be free of bank projections or other irregularities which will impede normal flow.
6. Fill shall be compacted by earth moving equipment.
7. All earth removed and not needed for construction shall be placed so that it will not interfere with the functioning of the dike.
8. Inspection and maintenance must be provided periodically and after each rain event.

EARTH DIKE

NOT TO SCALE

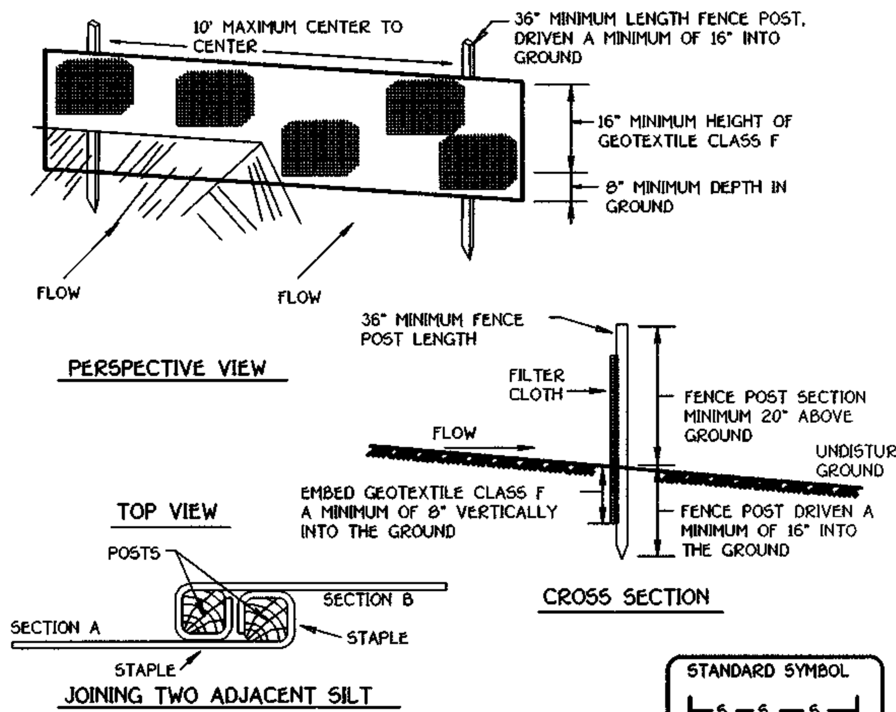

STANDARD SYMBOL
├—S—S—S—┤

Construction Specifications

1. Fence posts shall be a minimum of 36" long driven 16" minimum into the ground. Wood posts shall be 11/2" x 11/2" square (minimum) cut, or 13/4" diameter (minimum) round and shall be of sound quality hardwood. Steel posts will be standard T or U section weighting not less than 1.00 pond per linear foot.

2. Geotextile shall be fastened securely to each fence post with wire ties or staples at top and mid-section and shall meet the following requirements for Geotextile Class F:

Tensile Strength	50 lbs/in (min.)	Test: MSMT 509
Tensile Modulus	20 lbs/in (min.)	Test: MSMT 509
Flow Rate	0.3 gal ft / minute (max.)^2	Test: MSMT 322
Filtering Efficiency	75% (min.)	Test: MSMT 322

3. Where ends of geotextile fabric come together, they shall be overlapped, folded and stapled to prevent sediment bypass.

4. Silt Fence shall be inspected after each rainfall event and maintained when bulges occur or when sediment accumulation reached 50% of the fabric height.

DETAIL 22 - SILT FENCE

NOT TO SCALE

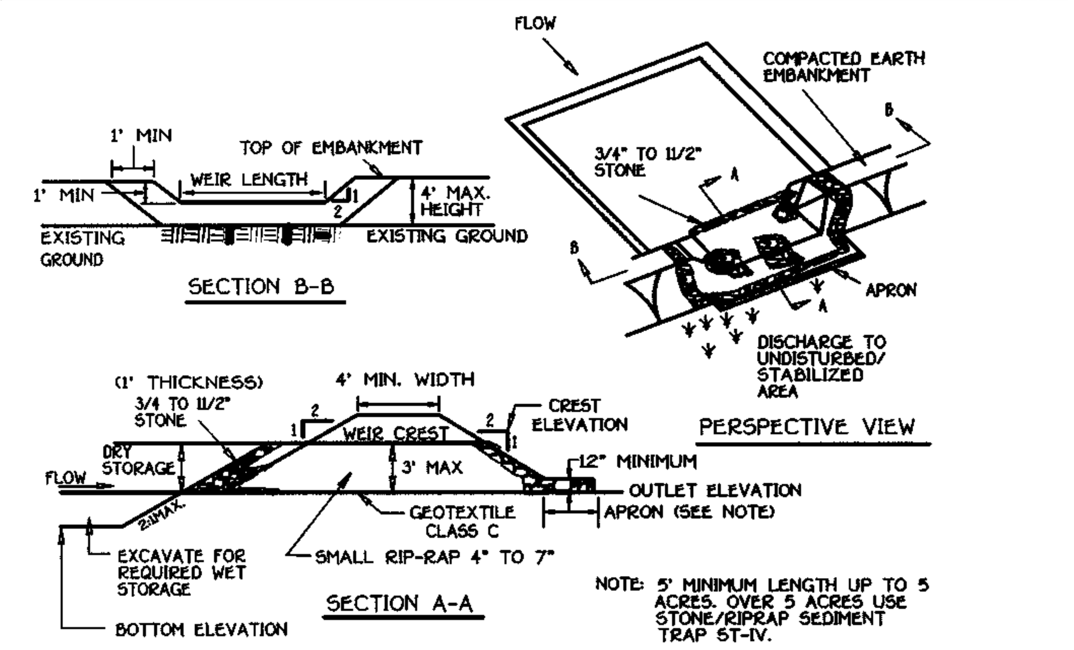

NOTE: 5' MINIMUM LENGTH UP TO 5 ACRES. OVER 5 ACRES USE STONE/RIPRAP SEDIMENT TRAP ST-IV.

Construction Specifications

1. Area under embankment shall be cleared, grubbed and stripped of any vegetation and root mat. The pool area shall be cleared.
2. The fill material for the embankment shall be free of roots and other woody vegetation as well as over-sized stones, rocks, organic material or other objectionable material. The embankment shall be compacted by traversing with equipment while it is being constructed.
3. All cut and fill slopes shall be 2:1 or flatter.
4. The stone used in the outlet shall be small rip-rap 4" to 7" in size with a 1' thick layer of 3/4" to 11/2" washed aggregate placed on the upstream face of the outlet. Stone facing shall be as necessary to prevent clogging. Geotextile Class C may be substituted for the stone facing by placing it on the inside face of the stone outlet.
5. Sediment shall be removed and trap restored to its original dimensions when the sediment has accumulated to one half of the wet storage depth of the trap. Removed sediment shall be deposited in a suitable area and in such a manner that it will not erode.
6. The structure shall be inspected periodically and after each rain and repairs made as needed.
7. Construction of traps shall be carried out in such a manner that sediment pollution is abated. Once constructed, the top and outside face of the embankment shall be stabilized with seed and mulch. Points of concentration inflow shall be protected in accordance with Grade Stabilization Structure criteria. The remainder of the interior slopes should be stabilized (one time) with seed and much upon trap completion and monitored and maintained erosion free during the life of the trap.
8. The structure shall be dewatered by approved methods, removed and the area stabilized when the drainage area has been properly stabilized.
9. Refer to Section D for specifications concerning trap dewatering.
10. Minimum trap depth shall be measured from the weir elevation.
11. The elevation of the top of any dike directing water into the trap must equal or exceed the elevation of the trap embankment.
12. Geotextile Class C shall be placed over the bottom and sides of the outlet channel prior to the placement of stone. Sections of filter cloth must overlap at least 1' with the section nearest the entrance placed on top. The filter cloth shall be embedded at least 6" into existing ground at the entrance of the outlet channel.
13. Outlet - An outlet shall be provided, including a means of conveying the discharge in an erosion free manner to an existing stable channel.

STONE OUTLET SEDIMENT TRAP - ST II

NOT TO SCALE

DEVELOPER'S CERTIFICATE

"I/WE CERTIFY THAT ALL DEVELOPMENT AND CONSTRUCTION WILL BE DONE ACCORDING TO THIS PLAN OF DEVELOPMENT AND THAT ANY RESPONSIBLE PERSONNEL IN THE CONSTRUCTION PROJECT WILL HAVE A CERTIFICATE OF ATTENDANCE AT A DEPARTMENT OF NATURAL RESOURCES APPROVED TRAINING PROGRAM FOR THE CONTROL OF SEDIMENT AND EROSION BEFORE BEGINNING THE PROJECT. I ALSO AUTHORIZE PERIODIC ON-SITE INSPECTION BY THE HOWARD SOIL CONSERVATION DISTRICT OR THEIR AUTHORIZED AGENTS, AS ARE DEEMED NECESSARY".

SIGNATURE OF DEVELOPER — 12/29/00 DATE

ENGINEER'S CERTIFICATE

I HEREBY CERTIFY THAT THIS PLAN FOR EROSION AND SEDIMENT CONTROL REPRESENTS A PRACTICAL AND WORKABLE PLAN BASED ON MY PERSONAL KNOWLEDGE OF THE SITE CONDITIONS AND THAT IT WAS PREPARED IN ACCORDANCE WITH THE REQUIREMENTS OF THE HOWARD SOIL CONSERVATION DISTRICT.

SIGNATURE OF ENGINEER — 11-21-00 DATE

REVIEW FOR HOWARD COUNTY SOIL CONSERVATION DISTRICT AND MEETS TECHNICAL REQUIREMENTS.

U.S.D.A. NATURAL RESOURCES CONSERVATION SERVICE — 1/19/01 DATE

THIS DEVELOPMENT IS APPROVED FOR EROSION AND SEDIMENT CONTROL BY THE HOWARD SOIL CONSERVATION DISTRICT.
APPROVED:

HOWARD SOIL CONSERVATION DISTRICT — 1/19/01 DATE

APPROVED: DEPARTMENT OF PLANNING AND ZONING

CHIEF, DIVISION OF LAND DEVELOPMENT — 1/31/01 DATE

APPROVED: DEPARTMENT OF PLANNING AND ZONING

CHIEF, DEVELOPMENT ENGINEERING DIVISION — 1/25/01 DATE

APPROVED: HOWARD COUNTY DEPARTMENT OF PUBLIC WORKS

CHIEF, BUREAU OF HIGHWAYS — 1-29-01 DATE

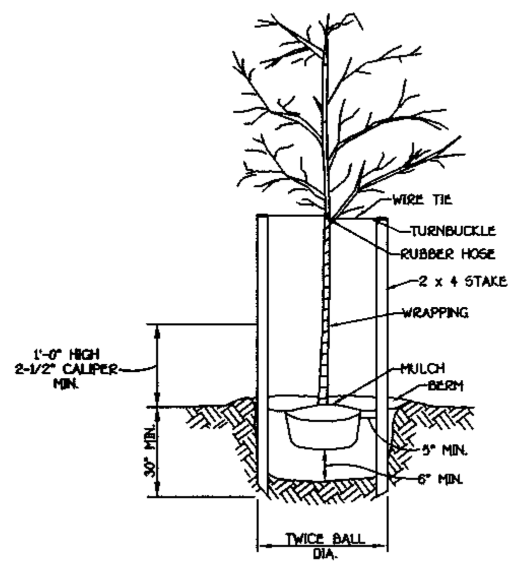

NOTE: REMOVE BURLAP FROM TOP 1/3 OF BALL

TREE PLANTING
NOT TO SCALE

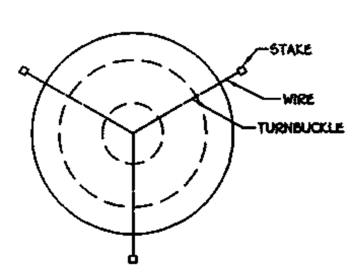

STAKING DETAIL
NOT TO SCALE

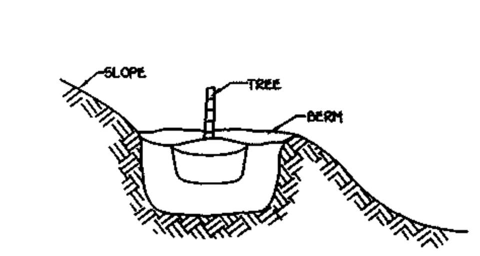

GRADING FOR PLANTING ON SLOPES
NOT TO SCALE

SEDIMENT CONTROL NOTES

1) A MINIMUM OF 48 HOURS NOTICE MUST BE GIVEN TO THE HOWARD COUNTY DEPARTMENT OF INSPECTIONS, LISCENSES AND PERMITS, SEDIMENT CONTROL DIVISION PRIOR TO THE START OF ANY CONSTRUCTION (313-1855).
2) ALL VEGETATIVE AND STRUCTURAL PRACTICES ARE TO BE INSTALLED ACCORDING TO THE PROVISIONS OF THIS PLAN AND ARE TO BE IN CONFORMANCE WITH THE MOST CURRENT MARYLAND STANDARDS AND SPECIFICATIONS FOR SOIL EROSION AND SEDIMENT CONTROL AND REVISIONS THERETO.
3) FOLLOWING INITIAL SOIL DISTURBANCE OR RE-DISTURBANCE, PERMANENT OR TEMPORARY STABILIZATION SHALL BE COMPLETED WITHIN: a) 7 CALENDAR DAYS FOR ALL PERIMETER SEDIMENT CONTROL STRUCTURES, DIKES, PERIMETER SLOPES AND ALL SLOPES STEEPER THAN 3:1, b) 14 DAYS AS TO ALL OTHER DISTURBED OR GRADED AREAS ON THE PROJECT SITE. GRADING NECESSARY TO INSTALL STORM DRAINS, SEDIMENT TRAP AND EARTH DIKES TO BE PERFORMED FIRST. REMAINDER OF THE GRADING TO BE PERFORMED AFTER STORM DRAINS, SEDIMENT TRAP AND EARTH DIKES ARE INSTALLED.
4) ALL SEDIMENT TRAPS/BASINS SHOWN MUST BE FENCED AND WARNING SIGNS POSTED AROUND THEIR PERIMETER IN ACCORDANCE WITH VOL. 1, CHAPTER 12, OF THE HOWARD COUNTY DESIGN MANUAL, STORM DRAINAGE.
5) ALL DISTURBED AREAS MUST BE STABILIZED WITHIN THE TIME PERIOD SPECIFIED ABOVE IN ACCORDANCE WITH THE 1994 MARYLAND STANDARDS AND SPECIFICATIONS FOR SOIL EROSION AND SEDIMENT CONTROL FOR PERMANENT SEEDING (SEC. 51), SOD (SEC. 54), TEMPORARY SEEDING (SEC. 50), AND MULCHING (SEC. 52). TEMPORARY STABILIZATION WITH MULCH ALONE CAN ONLY BE DONE WHEN RECOMMENDED SEEDING DATES DO NOT ALLOW FOR PROPER GERMINATION AND ESTABLISHMENT OF GRASSES.
6) ALL SEDIMENT CONTROL STRUCTURES ARE TO REMAIN IN PLACE AND ARE TO BE MAINTAINED IN OPERATIVE CONDITION UNTIL PERMISSION FOR THEIR REMOVAL HAS BEEN OBTAINED FROM THE HOWARD COUNTY SEDIMENT CONTROL INSPECTOR.
7) SITE ANALYSIS:

TOTAL AREA OF SITE	27.006	ACRES
AREA DISTURBED	15.425	ACRES
AREA TO BE ROOFED OR PAVED	7.150	ACRES
AREA TO BE VEGETATIVELY STABILIZED	8.275	ACRES
TOTAL CUT	12,400	CU.YDS.
TOTAL FILL	12,400	CU.YDS.
OFFSITE WASTE/BORROW AREA LOCATION	N/A	CU.YDS.

8) ANY SEDIMENT CONTROL PRACTICE WHICH IS DISTURBED BY GRADING ACTIVITY FOR PLACEMENT OF UTILITIES MUST BE REPAIRED ON THE SAME DAY OF DISTURBANCE.
9) ADDITIONAL SEDIMENT CONTROLS MUST BE PROVIDED, IF DEEMED NECESSARY BY THE HOWARD COUNTY SEDIMENT CONTROL INSPECTOR.
10) ON ALL SITES WITH DISTURBED AREAS IN EXCESS OF 2 ACRES, APPROVAL OF THE INSPECTION AGENCY SHALL BE REQUESTED UPON COMPLETION OF INSTALLATION OF PERIMETER EROSION AND SEDIMENT CONTROLS, BUT BEFORE PROCEEDING WITH ANY OTHER EARTH DISTURBANCE OR GRADING. OTHER BUILDING OR GRADING INSPECTION APPROVALS MAY NOT BE AUTHORIZED UNTIL THIS INITIAL APPROVAL BY THE INSPECTION AGENCY IS MADE.
11) TRENCHES FOR THE CONSTRUCTION OF UTILITIES IS LIMITED TO THREE PIPE LENGHTS OR THAT WHICH SHALL BE BACK-FILLED AND STABILIZED WITHIN ONE WORKING DAY, WHICHEVER IS SHORTER.

20.0 STANDARDS AND SPECIFICATIONS
FOR
VEGETATIVE STABILIZATION

DEFINITION
Using vegetation as cover for barren soil to protect it from forces that cause erosion.

PURPOSE
Vegetative stabilization specifications are used to promote the establishment of vegetation on exposed soil. When soil is stabilized with vegetation, the soil is less likely to erode and more likely to allow infiltration of rainfall, thereby reducing sediment loads and run-off to downstream areas, and improving wildlife habitat and visual resources.

CONDITIONS WHERE PRACTICE APPLIES
This practice shall be used on denuded areas as specified on the plans and may be used on highly erodible or critically eroding areas. This specification is divided into Temporary Seeding, to quickly establish vegetative cover for short duration (up to one year), and Permanent Seeding, for long term vegetative cover. Examples of applicable areas for Temporary Seeding are temporary Soil Stockpiles, cleared areas being left idle between construction phases, earth dikes, etc. and for Permanent Seeding are lawns, dams, cut and fill slopes and other areas at final grade, former stockpile and staging areas, etc.

EFFECTS ON WATER QUALITY AND QUANTITY
Planting vegetation in disturbed areas will have an effect on the water budget, especially on volumes and rates of runoff, infiltration evaporation, transpiration, percolation, and groundwater recharge. Vegetation, over time, will increase organic matter content and improve the water holding capacity of the soil and subsequent plant growth.
Vegetation will help reduce the movement of sediment, nutrients, and other chemicals carried by runoff to receiving waters. Plants will also help protect groundwater supplies by assimilating those substances present within the root zone.
Sediment control devices must remain in place during grading, seedbed preparation, seeding, mulching and vegetative establishment to prevent large quantities of sediment and associated chemicals and nutrients from washing into surface waters.

SECTION 1 - VEGETATIVE STABILIZATION METHODS AND MATERIALS

A. Site Preparation
   i. Install erosion and sediment control structures (either temporary of permanent) such as diversions, grade stabilization structures, berms, waterways, or sediment control basins.
   ii. Perform all grading operations at right angles to the slope. Final grading and shaping is not usually necessary for temporary seeding.
   iii. Schedule required soil tests to determine soil amendment composition and application rates for sites having disturbed area over 5 acres.
B. Soil Amendments (Fertilizer and Lime Specifications)
   i. Soil tests must be performed to determine the exact ratios and application rates for both lime and fertilizer on sites having disturbed areas over 5 acres. Soil analysis may be performed by the University of Maryland or a recognized commercial laboratory. Soil samples taken for engineering purposes may also be used for chemical analyses.
   ii. Fertilizers shall be uniform in composition, free flowing and suitable for accurate application by approved equipment. Manure may be substituted for fertilizer with prior approval from the appropriate approval authority. Fertilizers shall all be delivered to the site fully labeled according to the applicable state fertilizer laws and shall bear the name, trade name or trademark and warrantee of the producer.
   iii. Lime materials shall be ground limestone (hydrated or burnt lime may be substituted) which contains at least 50% total oxides (calcium oxide plus magnesium oxide). Limestone shall be ground to such fineness that at least 50% will pass through a #100 mesh sieve and 98-100% will pass through a #20 mesh sieve.
   iv. Incorporate lime and fertilizer into the top 3-5" of soil by disking or other suitable means.
C. Seedbed Preparation
   i. Temporary Seeding
      a. Seedbed preparation shall consist of loosening soil to a depth of 3" to 5" by means of suitable agricultural or construction equipment, such as disc harrows or chisel plows or rippers mounted on construction equipment. After the soil is loosened it should not be rolled or dragged smooth, but left in the roughened condition. Sloped areas (greater than 3:1) should be tracked leaving the surface in an irregular condition with ridges running parallel to the contour of the slope.
      b. Apply fertilizer and lime as prescribed on the plans.
      c. In corporate lime and fertilizer into the top 3-5" of soil by disking or other suitable means.
   ii. Permanent Seeding
      a. Minimum soil conditions required for permanent vegetative establishment:
         1. Soil pH shall be between 6.0 and 7.0.
         2. Soluble salts shall be less than 500 parts per million (ppm).
         3. The soil shall contain less than 40% clay, but enough fine grained material (>30% silt plus clay) to provide the capacity to hold a moderate amount of moisture. An exception is if lovegrass or serecia lespedezas is to be planted, then a sandy soil (<30% silt plus clay) would be acceptable.
         4. Soil shall contain 1.5% minimum organic matter by weight.
         5. Soil must contain sufficient pore space to permit adequate root penetration.
         6. If these conditions cannot be met by soils on site, adding topsoil is required in accordance with Section 21 Standard and Specification for Topsoil.
      b. Areas previously graded in conformance with the drawings shall be maintained in a true and even grade, then scarified or otherwise loosened to a depth of 3-5" to permit bonding of the topsoil to the surface area and to create horizontal erosion check slots to prevent topsoil to the surface area and to create horizontal erosion check slots to prevent topsoil from sliding down a slope.
      c. Apply soil amendments as per soil test or as included on the plans.
      d. Mix soil amendments into the top 3-5" of topsoil by disking or other suitable means. Lawn areas should be raked to smooth the surface, remove large objects like stones and branches, and ready the area for seed and application. Where site conditions will not permit normal seedbed preparation, loosen surface soil by dragging with a heavy chain or other equipment to roughen the surface. Steep slopes (steeper than 3:1) should be tracked by a dozer leaving the soil in an irregular condition with ridges running parallel to the contour of the slope. The top 1-3" of soil should be loose and friable. Seedbed loosening may not be necessary on newly disturbed areas.

D. Seed Specifications
   i. All seed must meet the requirements of the Maryland State Seed Law. All seed shall be subject to re-testing by a recognized seed laboratory. All seed used shall have been tested within the 6 months immediately preceding the date of sowing such material on this job.
   Note: Seed tags shall be made available to the inspector to verify type and rate of seed used.
   ii. Inoculant - The inoculant for treating legume seed in the seed mixtures shall be a pure culture of nitrogen-fixing bacteria prepared specifically for the species. Inoculants shall not be used later than the date indicated on the container. Add fresh inoculant as directed on package. Use four times the recommended rate when hydroseeding. Note: It is very important to keep inoculant as cool as possible until used. Temperatures above 75°-80° F. can weaken bacteria and make the inoculant less effective.
E. Methods of Seeding
   i. Hydroseeding: Apply seed uniformly with hydroseeder (slurry includes seed and fertilizer), broadcast or drop seeded, or a cultipacker seeder.
      a. If fertilizer is being applied at the time of seeding, the application rates amounts will not exceed the following: nitrogen: maximum of 100 lbs. per acre total of soluble nitrogen: P205 (phosphorous): 200 lbs/ac; K20 (potassium): 200 lbs/ac.
      b. Lime - use only ground agricultural limestone. (Up to 3 tons per acre may be applied by hydroseeding). Normally, not more than 2 tons are applied by hydroseeding at any one time. Do not use burnt or hydrated lime when hydroseeding.
      c. Seed and fertilizer shall be mixed on site and seeding shall be done immediately and without interruption.
   ii. Dry Seeding: This includes use of conventional drop or broadcast spreaders.
      a. Seed spread dry shall be incorporated into the subsoil at the rates prescribed on the Temporary or Permanent Seeding Summaries or Tables 265 or 26. The seeded area shall then be rolled with a weighted roller to provide good seed to soil contact.
      b. Where practical, seed should be applied in two directions perpendicular to each other. Apply half the seeding rate in each direction.
   iii. Drill or Cultipacker Seeding: Mechanized seeders that apply and cover seed with soil.
      a. Cultipacking seeders are required to bury the seed in such a fashion as to provide at least 1/4 inch of soil covering. Seedbed must be firm after planting.
      b. Where practical, seed should be applied in two directions perpendicular to each other. Apply half the seeding rate in each direction.
F. Mulch Specifications (In order of preference)
   i. Straw shall consist of thoroughly threshed wheat, rye or oat straw, reasonable bright in color, and shall not be musty, moldy, caked, decayed, or excessively dusty and shall be free of noxious weed seeds as specified in the Maryland Seed Law.
   ii. Wood Cellulose Fiber Mulch (WCFM)
      a. WCFM shall consist of specially prepared wood cellulose processed into a uniform fibrous physical state.
      b. WCFM shall be dyed green or contain a green dye in the package that will provide an appropriate color to facilitate visual inspection of the uniformly spread slurry.
      c. WCFM, including dye, shall contain no germination or growth inhibiting factors.
      d. WCFM materials shall be manufactured and processed in such a manner that the wood cellulose fiber mulch will remain in uniform suspension in water under agitation and will blend with seed, fertilizer and other additives to form a homogeneous slurry. The mulch material shall form a blotter-like ground cover, on application, having moisture absorption and percolation properties and shall cover and hold grass seed in contact with the soil without inhibiting the growth of the grass seedlings.
      e. WCFM material shall contain no elements or compounds at concentration levels that will be phyto-toxic.
      f. WCFM must conform to the following physical requirements: fiber length to approximately 10 mm., diameter approximately 1 mm., pH range of 4.0 to 8.5, ash content of 1.6% maximum and water holding capacity of 90% minimum.
   Note: Only sterile straw mulch should be used in areas where one species of grass is desired.
G. Mulching Seeded Areas - Mulch shall be applied to all seeded areas immediately after seeding.
   i. If grading is completed outside of the seeding season, mulch along shall be applied as prescribed in this section and maintained until the seeding season returns and seeding can be performed in accordance with these specifications.
   ii. When straw mulch is used, it shall be spread over all seeded areas at the rate of 2 tons/acre. Mulch shall be applied to a uniform loose depth of between 1" and 2". Mulch applied shall achieve a uniform distribution and depth so that the soil surface is not exposed. If a mulch anchoring tool is to be used, the rate should be increased to 2.5 tons/acre.
   iii. Wood cellulose fiber used as a mulch shall be applied at a net dry weight of 1,500 lbs. per acre. The wood cellulose fiber shall be mixed with water, and the mixture shall contain a maximum of 50 lbs. of wood cellulose fiber per 100 gallons of water.
H. Securing Straw Mulch (Mulch Anchoring): Mulch anchoring shall be performed immediately following mulch application to minimize loss by wind or water. This may be done by one of the following methods (listed by preference), depending upon size of area and erosion hazard:
   i. A mulch anchoring tool is a tractor drawn implement designed to punch and anchor mulch into the soil surface a minimum of two (2) inches. This practice is most effective on large areas, but is limited to flatter slopes where equipment can operate safely. If used on sloping land, this practice should be used on the contour if possible.
   ii. Wood cellulose fiber may be used for anchoring straw. The fiber binder shall be applied at a net dry weight of 750 pounds/acre. The wood cellulose fiber shall be mixed with water and the mixture shall contain a maximum of 50 pounds of wood cellulose fiber per 100 gallons of water.
   iii. Application of liquid binders should be heavier at the edges where wind catches mulch, such as in valleys and crest of banks. The remainder of area should be appear uniform after binder application. Synthetic binders - such as Acrylic DLR (Agro-Tack), DCA-70 Petroset, Terra Tax II, Terra Tack AR or other approved equal may be used at rates recommended by the manufacturer to anchor mulch.
   iv. Lightweight plastic netting may be stapled over the mulch according to manufacturer's recommendations. Netting is usually available in rolls 4' to 15' feet wide and 300 to 3,000 feet long.
I Incremental Stabilization - Cut Slopes
   i. All cuts slopes shall be dressed, prepared, seeded and mulched as the work progresses. Slopes shall be excavated and stabilized in equal increments not to exceed 15'.
   ii. Construction sequence (Refer to Figure 3 below):
      a. Excavate and stabilize all temporary swales, side ditches, or berms that will be used to convey runoff from the excavation.
      b. Perform Phase 1 excavation, dress, and stabilize.
      c. Perform Phase 2 excavation, dress and stabilize. Overseed Phase 1 areas as necessary.
      d. Perform final phase excavation, dress and stabilize. Overseed previously seeded areas as necessary.
Note: Once excavation has begun the operation should be continuous from grubbing through the completion of grading and placement of topsoil (if required) and permanent seed and mulch. Any interruptions int he operation of completing the operation out of the seeding season will necessitate the application of temporary stabilization.
J. Incremental Stabilization of Embankments - Fill Slopes
   i. Embankments shall be constructed in lifts as prescribed on the plans.
   ii. Slopes shall be stabilized immediately when the vertical height of the multiple lifts reaches 15", or when the grading operation ceases as prescribed in the plans.
   iii. At the end of each day, temporary berms and pipe slope drains should be constructed along the top edge of the embankment to intercept surface runoff and convey it down the slope in a non-erosive manner to a sediment trapping device.
   iv. Construction sequence: Refer to Figure 4 (below).
      a. Excavate and stabilize all temporary swales, side ditches, or berms that will be used to divert runoff around the fill. Construct slope silt fence on low side of fill as shown in Figure 5, unless other methods shown on the plans address this area.
      b. Place Phase 1 embankment, dress and stabilize.
      c. Place Phase 2 embankment, dress and stabilize.
      d. Place final phase embankment, dress and stabilize. Overseed previously seeded areas as necessary.
Note: Once the placement of fill has begun the operation should be continuous from grubbing through the completion of grading and placement of topsoil (if required) and permanent seed and mulch. any interruptions in the operation or completing the operation out of the seeding season will necessitate the application of temporary stabilization.

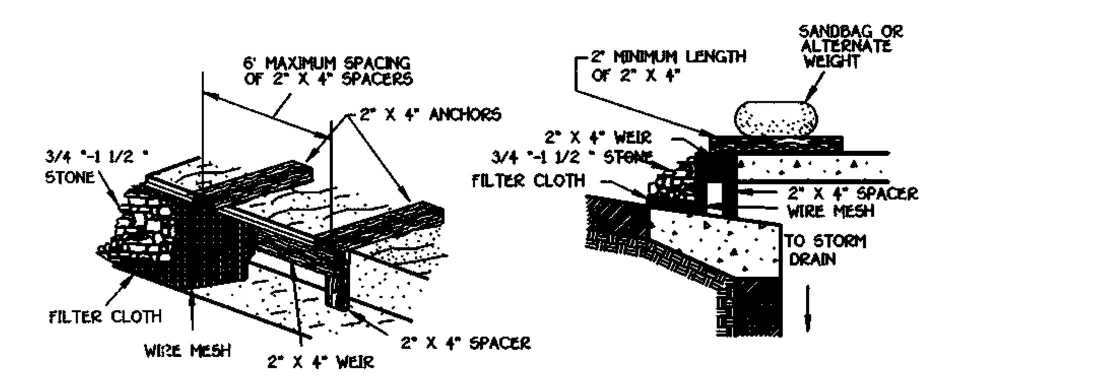

MAX. DRAINAGE AREA = 1/4 ACRE

STANDARD SYMBOL
I.P.

Construction Specifications

1. Attach a continuous piece of wire mesh (30" minimum width by throat length plus 4') to the 2" x 4" weir (measuring throat length plus 2') as shown on the standard drawing.
2. Place a continuous piece of Geotextile Class E the same dimensions as the wire mesh over the wire mesh and securely attach it to the 2" x 4" weir.
3. Securely nail the 2" X 4" weir to a 9" long vertical spacer to be located between the weir and the inlet face (max. 4' apart).
4. Place the assembly against the inlet throat and nail (minimum 2' lengths of 2" x 4" to the top of the weir at spacer locations). These 2" x 4" anchors shall extend across the inlet top and be held in place by sandbags or alternate weight.
5. The assembly shall be placed so that the end spacers are a minimum 1' beyond both ends of the throat opening.
6. Form the 1/2 " x 1/2 " wire mesh and the geotextile fabric to the concrete gutter and against the face of the curb on both sides of the inlet. Place clean 3/4 " x 1 1/2 " stone over the wire mesh and geotextile in such a manner to prevent water from entering the inlet under or around the geotextile.
7. This type of protection must be inspected frequently and the filter cloth and stone replaced when clogged with sediment.
8. Assure that storm flow does not bypass the inlet by installing a temporary earth or asphalt dike to direct the flow to the inlet.

CURB INLET PROTECTION (COG OR COS INLETS)

NOT TO SCALE

BLAZE ORANGE PLASTIC MESH

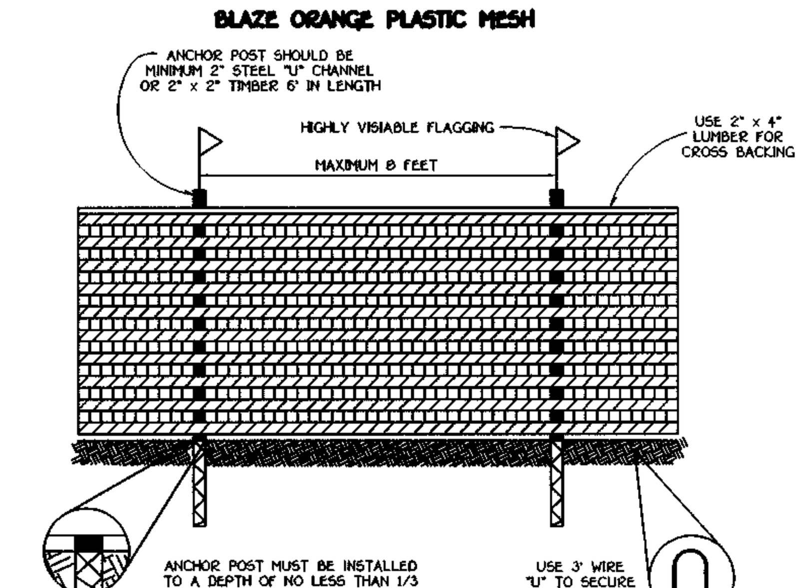

NOTES:
1. FOREST PROTECTION DEVICE ONLY.
2. RETENTION AREA WILL BE SET AS PART OF THE REVIEW PROCESS.
3. BOUNDARIES OF RETENTION AREA SHOULD BE STAKED AND FLAGGED PRIOR TO INSTALLING DEVICE.
4. ROOT DAMAGE SHOULD BE AVOIDED.
5. PROTECTIVE SIGNAGE MAY ALSO BE USED.
6. DEVICE SHOULD BE MAINTAINED THROUGHOUT CONSTRUCTION.

TREE PROTECTION DETAIL

NOT TO SCALE

NO.	DESCRIPTION	DATE
REVISIONS		

FISHER, COLLINS & CARTER, INC.
CIVIL ENGINEERING CONSULTANTS & LAND SURVEYORS
CENTENNIAL SQUARE OFFICE PARK - 10272 BALTIMORE NATIONAL PIKE
ELLICOTT CITY, MARYLAND 21042
(410) 461 - 2855

OWNER
GTW JOINT VENTURE
c/o LAND DESIGN AND DEVELOPMENT, LLC
8000 MAIN STREET
ELLICOTT CITY, MARYLAND 21043

DEVELOPER
WAVERLY WOODS DEVELOPMENT CORPORATION
c/o LAND DESIGN AND DEVELOPMENT, LLC
8000 MAIN STREET
ELLICOTT CITY, MARYLAND 21043

SEDIMENT CONTROL NOTES AND DETAILS

GTW'S WAVERLY WOODS
SECTION 12
LOTS 1 THRU 127 AND PARCELS 'A' & 'B'
(A SUBDIVISION OF PART OF THE PROPERTY OF GTW JOINT VENTURE, LIBER 2222, FOLIO 36)
ZONED R-SA-8
TAX MAP NO. 16 PART OF PARCEL NO. 20
THIRD ELECTION DISTRICT HOWARD COUNTY, MARYLAND
DATE: DECEMBER 5, 2000
SHEET 10 OF 14

F01-31

K:\Drawings 3\30691 GTW SECTION 12\FINAL\30691 Sed Con Details Sht1.dwg Tue Nov 21 07:54:05 2000 JMZ

STANDARDS AND SPECIFICATIONS FOR TOPSOIL

Definition

Placement of topsoil over a prepared subsoil prior to establishment of permanent vegetation.

Purpose

To provide a suitable soil medium for vegetative growth. Soils of concern have low moisture content, low nutrient levels, low pH, materials toxic to plants, and/or unacceptable soil gradation.

Conditions Where Practice Applies

I. This practice is limited to areas having 2:1 or flatter slopes where:
   a. The texture of the exposed subsoil/parent material is not adequate to produce vegetative growth.
   b. The soil material is so shallow that the rooting zone is not deep enough to support plants or furnish continuing supplies of moisture and plant nutrients.
   c. The original soil to be vegetated contains material toxic to plant growth.
   d. The soil is so acidic that treatment with limestone is not feasible.

II. For the purpose of these Standards and Specifications, areas having slopes steeper than 2:1 require special consideration and design for adequate stabilization. Areas having slopes steeper than 2:1 shall have the appropriate stabilization shown on the plans.

Construction and Material Specifications

I. Topsoil salvaged from the existing site may be used provided that it meets the standards as set forth in these specifications. Typically, the depth of topsoil to be salvaged for a given soil type can be found in the representative soil profile section in the Soil Survey published by USDA-SCS in cooperation with Maryland Agricultural Experimental Station.

II. Topsoil Specifications - Soil to be used as topsoil must meet the following:
   i. Topsoil shall be a loam, sandy loam, clay loam, silt loam, sandy clay loam, loamy sand. Other soils may be used if recommended by an agronomist or soil scientist and approved by the appropriate approval authority. Regardless, topsoil shall not be a mixture of contrasting textured subsoils and shall contain less than 5% by volume of cinders, stones, slag, coarse fragments, gravel, sticks, roots, trash, or other materials larger than 11/2" in diameter.
   ii. Topsoil must be free of plants or plant parts such as bermuda grass, quackgrass, Johnsongrass, nutsedge, poison ivy, thistle, or others as specified.
   iii. Where the subsoil is either highly acidic or composed of heavy clays, ground limestone shall be spread at the rate of 4-8 tons/acre (200-400 pounds per 1,000 square feet) prior to the placement of topsoil. Lime shall be distributed uniformly over designated areas and worked into the soil in conjunction with tillage operations as described in the following procedures.

II. For sites havinc, disturbed areas under 5 acres:
   i. Place topsoil (if required) and apply soil amendments as specified in 20.0 Vegetative Stabilization - Section I - Vegetative Stabilization Methods and Materials.

III For sites having disturbed areas over 5 acres:
   i. On soil meeting Topsoil specifications, obtain test results dictating fertilizer and lime amendments required to bring the soil into compliance with the following:
      a. pH for topsoil shall be between 6.0 and 7.5. If the tested soil demonstrates a pH of less than 6.0, sufficient lime shall be perscribed to raise the pH to 6.5 or higher.
      b. Organic content of topsoil shall be not less than 1.5 percent by weight.
      c. Topsoil havina soluble salt content greater than 500 parts per million shall not be used.
      d. No sod or seed shall be placed on soil which has been treated with soil sterilants or chemicals used for weed control until sufficient time has elapsed (14 days min.) to permit dissipation of phyto-toxic materials.

   Note: Topsoil substitutes or amendments, as recommended by a qualified agronomist or soil scientist and approved by the appopriate approval authority, may be used in lieu of natural topsoil.

   ii. Place topsoil (if required) and apply soil amendments as specified in 20.0 Vegetative Stabilization - Section I - Vegetative Stabilization Methods and Materials.

V. Topsoil Application
   i. When topsoiling, maintain needed erosion and sediment control practices such as diversions, Grade Stabilization Structures, Earth Dikes, Slope Silt Fence and Sediment Traps and Basins.
   ii. Grades on the areas to be topsoiled, which have been previously established, shall be maintained, albeit 4" - 8" higher in elevation.
   iii. Topsoil shall be uniformly distributed in a 4" - 8" layer and lightly compacted to a minimum thickness of 4". Spreading shall be performed in such a manner that sodding or seedine can proceed with a minimum of additional soil preparation and tillage. Any irregularities in the surface resulting from topsoiling or other operations shall be corrected in order to prevent the formation of depressions or water pockets.
   iv. Topsoil shall not be placed while the topsoil or subsoil is in a frozen or muddy condition, when the subsoil is excessively wet or in a condition that may otherwise be detrimental to proper grading and seedbed preparation.

VI. Alternative for Permanent Seeding - Instead of applying the full amounts of lime and commercial fertilizer, composted sludge and amendments may be applied as specified below:
   i. Composted Sludge Material for use as a soil conditioner for sites having disturbed areas over 5 acres shall be tested to prescribe amendments and for sites having disturbed areas under 5 acres shall conform to the following requirements:
      a. Composted sludge shall be supplied by, or originate from, a person or persons that are permitted (at the time of acquisition of the compost) by the Maryland Department of the Environment under COMAR 26.04.06.
      b. Composted sludge shall contain at least I percent nitrogen, 1.5 percent phosphorus, and 0.2 percent potassium and have a Ph of 7.0 to 8.0. If compost does not meet these requirements, the appropriate constituents must be added to meet the requirements prior to use.
      c. Composted sludge shall be applied at a rate of I ton/1,000 square feet.
   iv. Composted sludge shall be amended with a potassium fertilizer applied at the rate of 4 lb/1,000 square feet, and 1/3 the normal lime application rate.

   References: Guideline Specifications, Soil PreparationSodding,. MD-VA, Pub. #I, Cooperative Extension Service, University of Maryland and Virginia Polytechnic Institutes. Revised 1973.

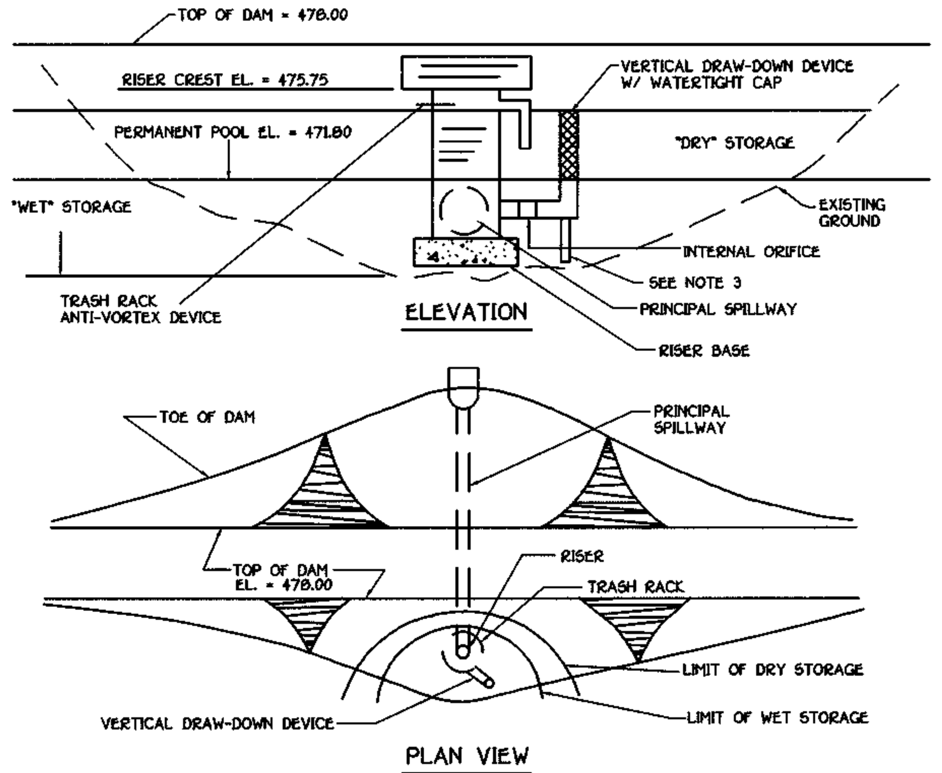

CONSTRUCTION SPECIFICATIONS

1. PERFORATIONS IN THE DRAW-DOWN DEVICE MAY NOT EXTEND INTO THE WET STORAGE.
2. THE TOTAL AREA OF THE PERFORATIONS MUST BE GREATER THAN 2 TIMES THE AREA OF THE INTERNAL ORIFICE.
3. THE PERFORATED PORTION OF THE DRAW-DOWN DEVICE SHALL BE WRAPPED WITH 1/2" HARDWARE CLOTH AND GEOTEXTILE FABRIC. THE GEOTEXTILE FABRIC SHALL MEET THE SPECIFICATIONS FOR GEOTEXTILE CLASS E.
4. PROVIDE SUPPORT OF DRAW-DOWN DEVICE TO PREVENT SAGGING AND FLOATATION. AN ACCEPTABLE PREVENTATIVE MEASURE IS TO STAKE BOTH SIDES OF DRAW-DOWN DEVICE WITH 1" STEEL ANGLE, OR 1" BY 4" SQUARE OR 2" ROUND WOODEN POSTS SET 3' MINIMUM INTO THE GROUND THEN JOINING THEM TO THE DEVICE BY WRAPPING WITH 12 GAUGE MINIMUM WIRE.

BASIN DRAWDOWN SCHEMATIC VERTICAL DRAW-DOWN DEVICE

NOT TO SCALE

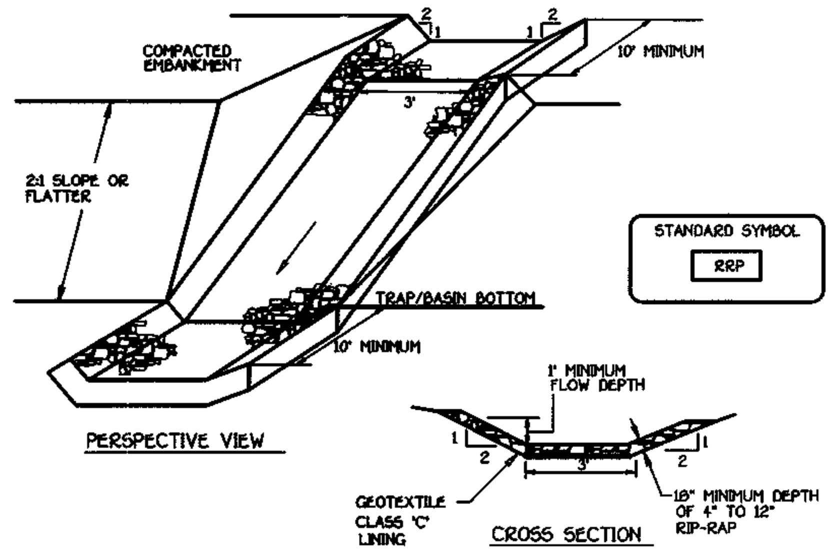

Construction Specifications

1. Rip-rap lined inflow channels shall be 1' in depth, have a trapezoidal cross section with 2:1 or flatter side slopes and 3' (min.) bottom width. The channel shall be lined with 4" to 12" rip- rap to a depth of 18".
2. Filter cloth shall be installed under all rip-rap. Filter cloth shall be Geotextile Class C.
3. Entrance and exit sections shall be installed as shown on the detail section.
4. Rip-rap used for the lining may be recycled for permanent outlet protection if the basin is to be converted to a stormwater management facility.
5. Gabion Inflow Protection may be used in lieu of Rip-rap Inflow Protection.
6. Rip-rap should blend into existing ground.
7. Rip-rap Inflow Protection shall be used where the slope is between 4:1 and 10:1, for slopes flatter than 10:1 use Earth Dike or Temporary Swale lining criteria.

RIP-RAP INFLOW PROTECTION

NOT TO SCALE

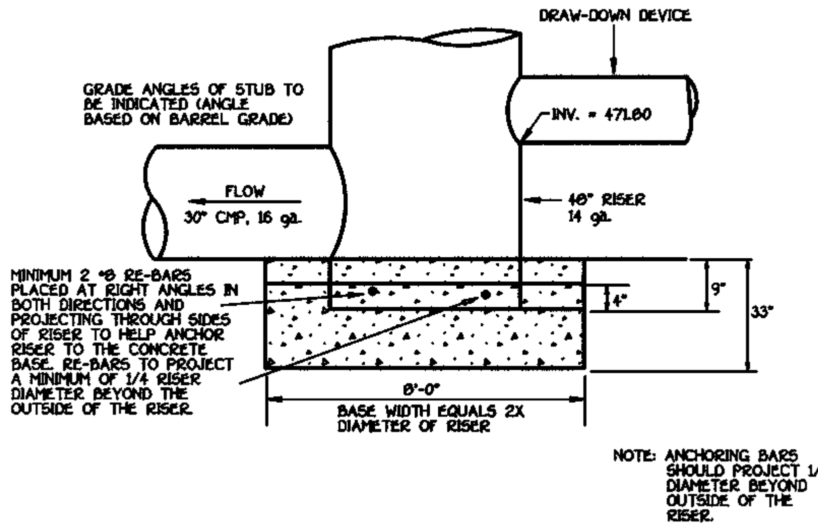

Construction Specifications

The riser shall have a base attached with a watertight connection and shall have sufficient weight to prevent flotation of the riser. Two approved bases for risers 10' or less in height are:

1. A concrete base 18" thick with the riser embedded 9" in the base.
2. A 1/4" minimum thickness steel plate attached to the riser by a continuous weld around the circumference of the riser to form a watertight connection. The plate shall have 2' of stone, gravel, or compacted earth placed on it to prevent flotation. In either case, each side of the square base shall be twice the riser diameter.

Note: For risers greater than ten feet high computations shall be made to design a base which will prevent floatation. The minimum factor of safety shall be 1.20 (downward forces = 1.20 x upward forces).

RISER BASE DETAIL

NOT TO SCALE

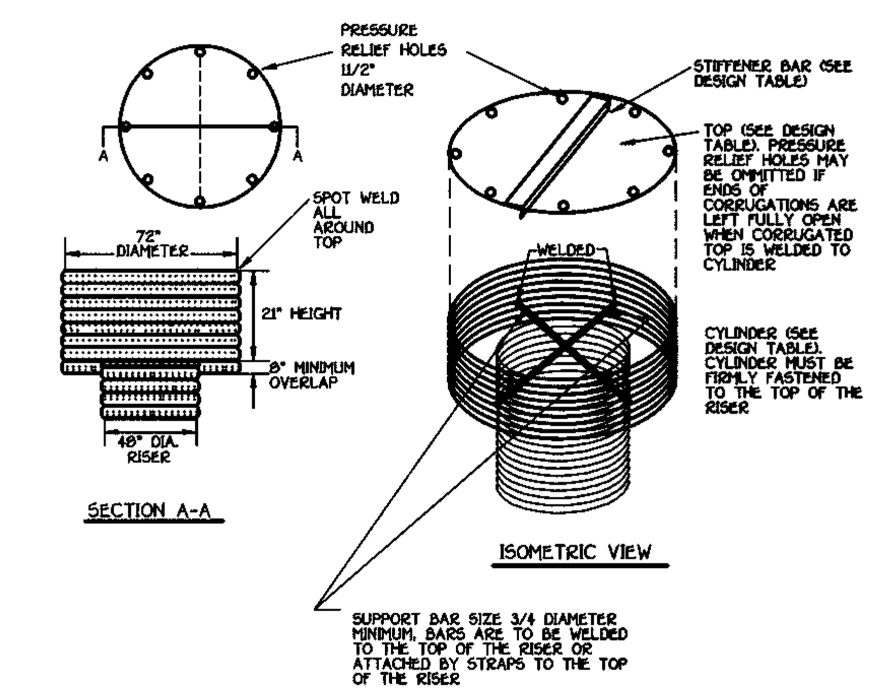

CONCENTRIC TRASH RACK AND ANTI-VORTEX DEVICE

NOT TO SCALE

DEVELOPER'S CERTIFICATE

"I/WE CERTIFY THAT ALL DEVELOPMENT AND CONSTRUCTION WILL BE DONE ACCORDING TO THIS PLAN OF DEVELOPMENT AND THAT ANY RESPONSIBLE PERSONNEL IN THE CONSTRUCTION PROJECT WILL HAVE A CERTIFICATE OF ATTENDANCE AT A DEPARTMENT OF NATURAL RESOURCES APPROVED TRAINING PROGRAM FOR THE CONTROL OF SEDIMENT AND EROSION BEFORE BEGINNING THE PROJECT. I ALSO AUTHORIZE PERIODIC ON-SITE INSPECTION BY THE HOWARD SOIL CONSERVATION DISTRICT OR THEIR AUTHORIZED AGENTS, AS ARE DEEMED NECESSARY".

SIGNATURE OF DEVELOPER — DATE 12-29-00

ENGINEER'S CERTIFICATE

I HEREBY CERTIFY THAT THIS PLAN FOR EROSION AND SEDIMENT CONTROL REPRESENTS A PRACTICAL AND WORKABLE PLAN BASED ON MY PERSONAL KNOWLEDGE OF THE SITE CONDITION AND THAT IT WAS PREPARED IN ACCORDANCE WITH THE REQUIREMENTS OF THE HOWARD SOIL CONSERVATION DISTRICT.

SIGNATURE OF ENGINEER — DATE 11-21-00

REVIEW FOR HOWARD COUNTY SOIL CONSERVATION DISTRICT AND MEETS TECHNICAL REQUIREMENTS.

U.S.D.A. NATURAL RESOURCES CONSERVATION SERVICE — DATE 1/19/01

THIS DEVELOPMENT IS APPROVED FOR EROSION AND SEDIMENT CONTROL BY THE HOWARD SOIL CONSERVATION DISTRICT.
APPROVED:

HOWARD SOIL CONSERVATION DISTRICT — DATE 1/19/01

APPROVED: DEPARTMENT OF PLANNING AND ZONING

CHIEF, DIVISION OF LAND DEVELOPMENT — DATE 1/31/01

APPROVED: DEPARTMENT OF PLANNING AND ZONING

CHIEF, DEVELOPMENT ENGINEERING DIVISION — DATE 1/25/01

APPROVED: HOWARD COUNTY DEPARTMENT OF PUBLIC WORKS

CHIEF, BUREAU OF HIGHWAYS — DATE 1-24-01

SEE F-00-06 FOR RISER AND SPILLWAY DETAILS OF P.O.S.T. #1

2 YR. WSEL = 475.90
Q2 = 0.9 c.f.s.
V2 = 2.5 c.f.s.

10 YR. WSEL = 476.64
Q10 = 12.4 c.f.s.
V10 = 8.8 c.f.s.

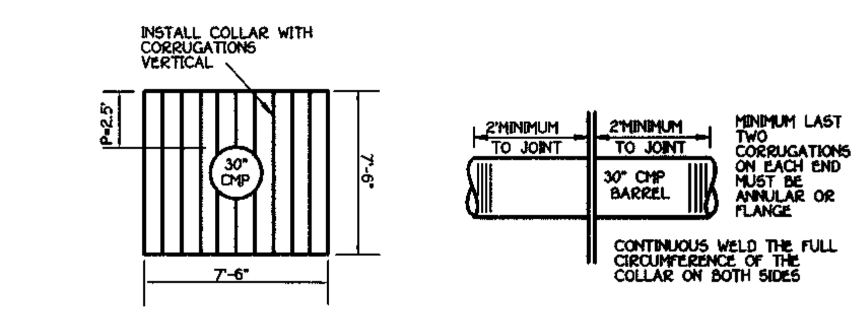

COLLAR WELDED IN PLACE ON BARREL SECTION

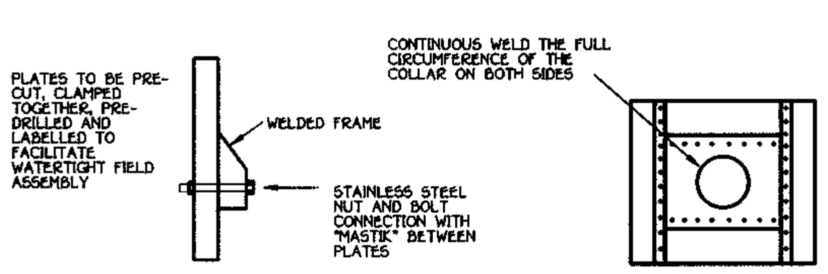

ANTI-SEEP COLLAR DESIGN

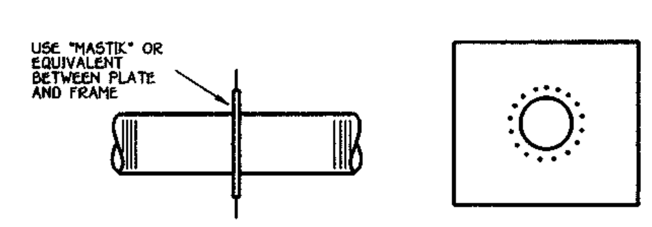

COLLAR FOR FLANGE JOINT PIPE

TYPICAL ANTI-SEEP COLLARS

NOT TO SCALE

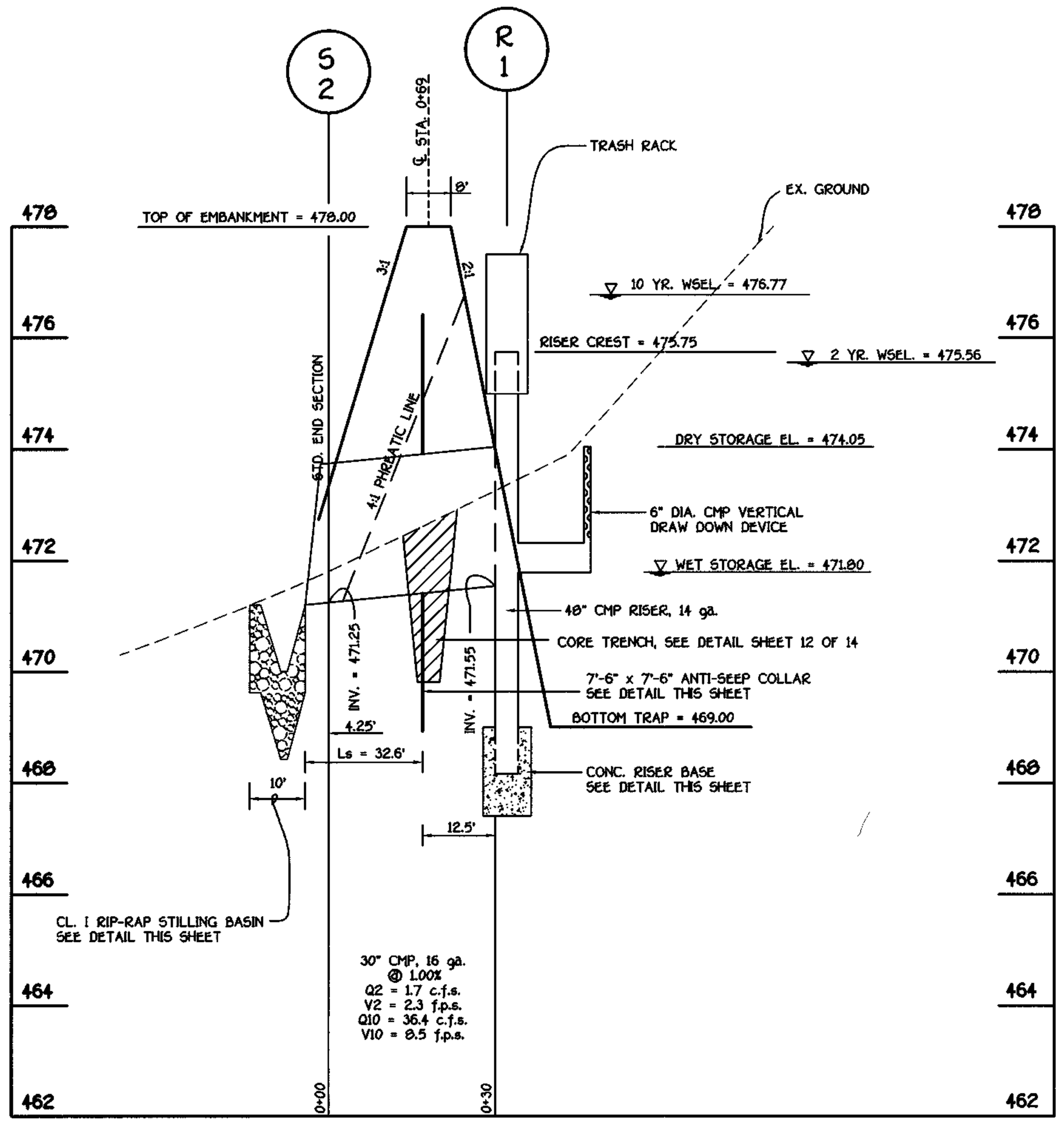

TEMPORARY SEDIMENT BASIN PRINCIPAL SPILLWAY PROFILE

SCALE: HORIZ. : 1" = 20'
VERT. : 1" = 2'

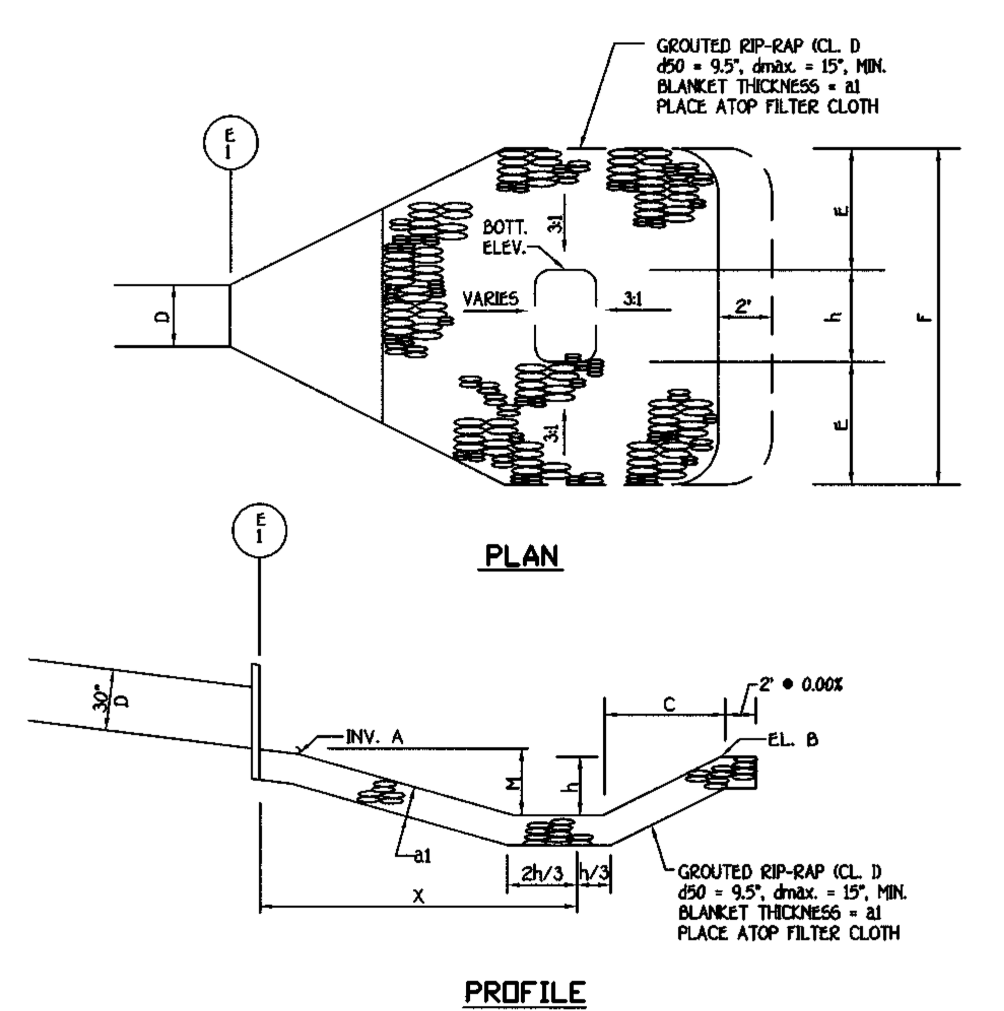

STILLING BASIN OUTFALL DETAIL @ S-1

NO SCALE

STILLING BASIN DATA										
STRUCTURE NO.	INV. A	EL. B	C	D	E	F	h	M	a1	X
E-1	471.20	471.20	3.6'	2.5'	3.6'	8.4'	1.2'	1.2'	19"	8.25'

SEQUENCE OF CONSTRUCTION

1. OBTAIN THE REQUIRED GRADING PERMIT. (1 DAY)
2. NOTIFY 'MISS UTILITY' AT LEAST 48 HOURS BEFORE BEGINNING ANY WORK (1-800-257-7777). NOTIFY THE HOWARD COUNTY OFFICE OF CONSTRUCTION/INSPECTION 24 HOURS BEFORE STARTING ANY WORK (410-313-1870). (1 DAY)
3. CLEAR AND GRUB FOR SEDIMENT CONTROL MEASURES ONLY. INSTALL STABILIZED CONSTRUCTION ENTRANCES. (2 WEEKS)
4. INSTALL THE REQUIRED SEDIMENT AND EROSION CONTROL DEVICES AS INDICATED ON THE PLAN SHEETS. REMOVE EXISTING PIPE AND END SECTION FROM EXISTING P.O.S.T. #1 (CONSTRUCTED UNDER F-00-06). GRADE EXISTING P.O.S.T. #1 PER REVISIONS. NO BLASTING WILL BE PERMITTED FOR THE EXCAVATION OF THE PROPOSED TRAPS OR BASINS. WHERE NECESSARY, RIPPING AND JACK HAMMERING SHOULD BE UTILIZED IN THE EXCAVATION OF EACH FACILITY. (2 WEEKS)
5. OBTAIN PERMISSION OF THE SEDIMENT CONTROL INSPECTOR PRIOR TO PROCEEDING.
6. CLEAR AND GRUB FOR THE REMAINDER OF THE SITE. (1 WEEK)
7. GRADE SITE TO THE PROPOSED SUBGRADE. INSTALL THE WATER AND SEWER MAINS AND THE STORM DRAIN SYSTEM EXCEPT FOR THE PIPE RUN FROM I-9 TO I-7. BRICK STORM DRAIN PIPE RUNS FROM I-2 TO I-1 AND M-10 TO S-1 AT STRUCTURES I-2 AND M-10. INSTALL INLET PROTECTION AS INDICATED ON THE PLAN SHEETS. (4 WEEKS)
8. THE CONTRACTOR SHALL INSPECT AND PROVIDE NECESSARY MAINTENANCE ON ALL SEDIMENT AND EROSION CONTROL STRUCTURES SHOWN HEREON AFTER EACH RAINFALL AND ON A DAILY BASIS. REMOVE SEDIMENTS FROM ALL TRAPS WHEN CLEANOUT ELEVATIONS ARE REACHED. ALL SEDIMENTS MUST BE PLACED UPSTREAM OF AN APPROVED TRAP DEVICE.
9. INSTALL CURB AND GUTTER PLUS ROAD BASE COURSE. (1 WEEK)
10. STABILIZE ALL DISTURBED AREAS AND OBTAIN PERMISSION FROM THE SEDIMENT CONTROL INSPECTOR TO PROCEED. (2 DAYS)
11. APPLY TACK COAT TO SUB-BASE AND LAY SURFACE COURSE. (1 WEEK)
12. FOLLOWING SUCCESSFUL STABILIZATION OF ALL DISTURBED AREAS IN ACCORDANCE WITH THE PERMANENT SEEDING NOTES, AND AFTER PERMISSION HAS BEEN OBTAINED FROM THE HOWARD COUNTY SEDIMENT CONTROL INSPECTOR, ALL EROSION AND SEDIMENT CONTROL DEVICES MAY BE REMOVED AND/OR BACKFILLED AND THE REMAINING AREAS BROUGHT TO FINAL GRADE AFTER THE STORM DRAIN SYSTEM HAS BEEN FLUSHED TO REMOVE TRAPPED SEDIMENT. THIS WOULD ALSO INCLUDE THE REMOVAL OF TEMPORARY STORM DRAIN FLEX PIPES AT THE STORM DRAIN RUN CONNECTIONS. INSTALL THE STORM DRAIN RUN FROM I-9 TO I-7 IN CONJUNCTION WITH THE REMOVAL OF P.O.S.T. #1. (2 WEEKS)
13. NOTIFY HOWARD COUNTY OFFICE OF INSPECTIONS AND PERMITS FOR A FINAL INSPECTION OF THE COMPLETED PROJECT.

FISHER, COLLINS & CARTER, INC.
CIVIL ENGINEERING CONSULTANTS & LAND SURVEYORS
CENTENNIAL SQUARE OFFICE PARK - 10272 BALTIMORE NATIONAL PIKE
ELLICOTT CITY, MARYLAND 21042
(410) 461 - 2855

NO.	DESCRIPTION	DATE
	REVISIONS	

OWNER
GTW JOINT VENTURE
c/o LAND DESIGN AND DEVELOPMENT, LLC
8000 MAIN STREET
ELLICOTT CITY, MARYLAND 21043

DEVELOPER
WAVERLY WOODS DEVELOPMENT CORPORATION
c/o LAND DESIGN AND DEVELOPMENT, LLC
8000 MAIN STREET
ELLICOTT CITY, MARYLAND 21043

SEDIMENT CONTROL NOTES AND DETAILS

GTW'S WAVERLY WOODS

SECTION 12

LOTS 1 THRU 127 AND PARCELS 'A' & 'B'
(A SUBDIVISION OF PART OF THE PROPERTY OF GTW JOINT VENTURE, LIBER 2222, FOLIO 36)
ZONED R-SA-8
TAX MAP NO. 16 PART OF PARCEL NO. 20
THIRD ELECTION DISTRICT HOWARD COUNTY, MARYLAND
DATE: DECEMBER 5, 2000
SHEET 11 OF 14

F01-31

K:\Drawings 3\30691 GTW SECTION 12\FINAL\30691 Sed Con Details Sht2.dwg Tue Nov 21 08:31:41 2000 JMZ

10.0 STANDARD AND SPECIFICATIONS

FOR

SEDIMENT BASINS

Definition

A temporary barrier or dam constructed across a drainage way or at other suitable locations to intercept sediment laden runoff. This barrier may be combined with excavation to achieve the required storage.

Purpose

Sediment basins protect downstream properties and drainageways by trapping sediment and controlling the release of stormwater runoff.

Wet and Dry Storage

The minimum storage volume requirement for sediment basis is 3600 cubic feet per acre of contributory drainage area. The basin storage volume of 3600 cubic feet per acre shall be divided equally into "dry" or dewatered storage and "wet" or retention storage. Basins shall be dewatered to the wet pool elevation corresponding to 1800 cubic feet of storage per acre of drainage area.

Conditions where Practice Applies

A sediment basin required to control runoff and sediment from large areas where sediment traps are not appropriate. Stormwater management ponds may be used as sediment basins provided that they meet the requirements of this section and that the construction sequence addresses converting the sediment basin to the permanent stormwater management pond.

Conditions of Use

This standard applies to the installation of temporary sediment basins on sites where: (a) failure of the structure would not result in loss of life, damage to homes or buildings, or interruption of use or service of public roads or utilities; (b) the drainage area does not exceed 100 acres; (c) the maximum embankment height does not exceed 15 feet measured from the natural ground to the embankment top along the centerline of embankment; and (d) the basin is to be removed within 36 months after the beginning of construction of the basin. Where these criteria cannot be met, the structure shall be designed to conform with the Natural Resources Article, Title 8, Subtitle 8, Annotated Code of Maryland or Maryland SCS Standards and Specifications No. 378 for Ponds. The total volume of permanent sediment basins shall equal or exceed the capacity requirements for temporary basins contained herein.

Construction Specifications

1. Site Preparation: Perimeter sediment control devices must be installed prior to clearing and grubbing. Areas where the embankment is to be placed shall be cleared, grubbed, and stripped of topsoil to remove trees, vegetation, roots or other objectionable material. The pool area shall not be cleared until completion of the dam embankment unless the pool area is to be used for borrow. In order to facilitate clean-out and restoration, the pool area (measured at the top of the pipe spillway) shall be cleared of all brush, trees, and other objectionable materials.

2. Cut-off Trench: A cut-off trench shall be excavated along the centerline of earth fill embankments. The minimum depth shall be four feet. The cut-off trench shall extend up both abutments to the riser crest elevation. The minimum bottom width shall be two feet, but wide enough to permit operation of excavation and compaction equipment. The side slopes shall be no steeper than 1:1. Compaction requirements shall be the same as those for the embankment. The trench shall be dewatered during the backfilling-compaction operations. For dewatering see Section D.

3. Embankment: The fill material shall be taken from approved areas shown on the plans. It shall be clean mineral soil free of roots, woody vegetation, oversized stones, rocks, or other objectionable material. Relatively pervious materials such as sand or gravel (Unified Soil Classes GW, GP, SW & SP) or organic materials (Unified Soil Classes OL and OH) shall not be placed in the embankment. Areas on which fill is to be placed shall be scarified prior to placement of fill. The fill material shall contain sufficient moisture so that it can be formed by hand into a ball without crumbling. If water can be squeezed out of the ball, it is too wet for proper compaction. Fill material shall be placed in six-inch to eight-inch thick continuous lifts over the entire length of the fill. Compaction shall be obtained by routing and hauling the construction equipment over the fill so that the entire surface of each layer of the fill is traversed by at least one wheel or tread track of the equipment or by the use of a compactor. The embankment shall be constructed to an elevation 10 percent higher than the design height to allow for settlement.

4. Principal Spillway: Steel risers shall be securely attached to the barrel or barrel stub by welding the full circumference making a watertight structural connection. Concrete risers shall be poured with the principal spillway in place or precast with voids around the principal spillway filled with concrete or shrink proof grout for watertight connection. The barrel stub must be attached to the riser at the same percent (angle) of grade as the outlet conduit. The connection between the riser and the riser base shall be watertight. All connections between barrel sections must be achieved by approved watertight band assemblies. The barrel and riser shall be placed on a firm, smooth foundation of impervious soil as the embankment is constructed. Breaching the embankment to install the barrel is unacceptable. Pervious materials such as sand, gravel, or crushed stone shall not be used as backfill around the pipe or anti-seep collars. The fill material around the pipe spillway shall be placed in four inch lifts and hand compacted under and around the pipe to at least the same density as the adjacent embankment. A depth of 1.5 times of pipe diameter (min) shall be backfilled over the principal spillway and hand compacted before crossing it with construction equipment.

5. Emergency Spillway: The emergency spillway shall be installed in undisturbed ground. The achievement of planned elevations, grades, design width, entrance and exit channel slopes are critical to the successful operation of the emergency spillway and must be constructed within a tolerance of + 0.2 feet.

6. Vegetative Treatment: Stabilize the embankment in accordance with the appropriate vegetative Standard and Specifications immediately following construction. In no case shall the embankment remain unstabilized for more than seven (7) days. Once constructed, the top and outside face of the embankment shall be stabilized with seed and mulch. The remainder of the interior slopes should be stabilized (one time) with seed and mulch upon basin completion and monitored and maintained erosion free during the life of the basin.

7. Safety: Local requirements concerning fencing and signs shall be met, warning the public of hazards of soft sediment and floodwater.

8. Maintenance: Repair all damage caused by soil erosion and construction equipment at or before the end of each working day. Sediment shall be removed from the basin when it reaches the specified distance below the top of the riser as shown on the riser. This sediment shall be placed in such a manner that it will not erode from the site. The sediment shall not be deposited downstream from the embankment, adjacent to a stream or floodplain. Disposal areas must be stabilized.

9. Final Disposal: When temporary structures have served their intended purpose and the contributing drainage area has been properly stabilized, the embankment and resulting sediment deposits are to be leveled or otherwise disposed of in accordance with the approved sediment control plan. The proposed use of a sediment basin site will often dictate final disposition of the basin and any sediment contained therein. If the site is scheduled for future construction, then the basin material and trapped sediments must be removed and safely disposed of and the basin shall be backfilled with a structural fill. When the basin area is to remain open space, the pond may be pumped dry (using methods in Section D - Dewatering), graded, and back filled.

10. Conversion to Stormwater Management Structure: After permanent stabilization of all disturbed contributory drainage areas, temporary sediment basins, if initially built and certified to meet permanent standards, may be converted to permanent stormwater management structures. To convert the basin from temporary to permanent use, the outlet structure must be modified in accordance with approved stormwater management design plans. Additional grading may also be necessary to provide the required storage volume in the basin. Conversion can only take place after all disturbed areas have been permanently stabilized to the satisfaction of the inspection authority and storm drains have been flushed.

REMOVABLE PUMPING STATION

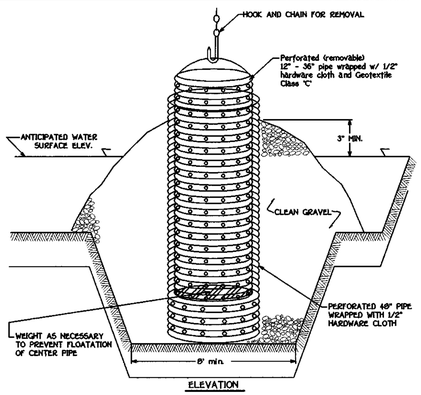

ELEVATION

Construction Specifications

1. The outer pipe should be 48" dia. or shall, in any case, be at least 4" greater in diameter than the center pipe. The outer pipe shall be wrapped with 1/2" hardware cloth to prevent backfill material from entering the perforations.

2. After installing the outer pipe, backfill around outer pipe with 2" aggregate or clean gravel.

3. The inside stand pipe (center pipe) should be constructed by perforating a corrugated or PVC pipe between 12" and 36" in diameter. The perforations shall be 1/2" x 6" slits or 1" diameter holes 6" on center. The center pipe shall be wrapped with 1/2" hardware cloth first, then wrapped again with Geotextile Class C.

4. The center pipe should extend 12" to 18" above the anticipated water surface elevation or riser crest elevation when dewatering a basin.

SEDIMENT BASIN BAFFLES

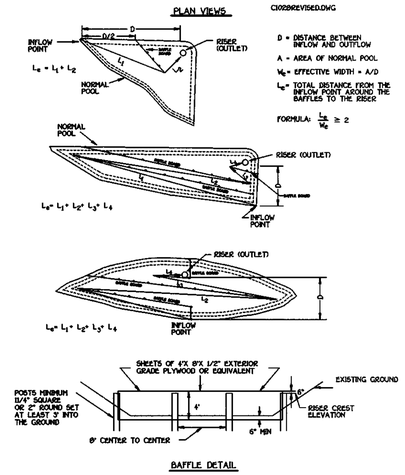

BAFFLE DETAIL

PROFILE ALONG TOP OF EMBANKMENT

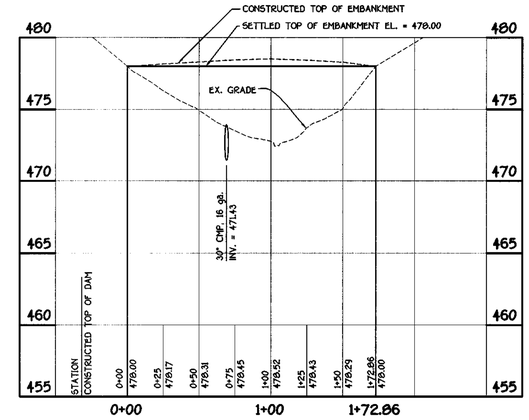

SCALE: HORIZ. : 1" = 50'
VERT: 1" = 5'

DEVELOPER'S CERTIFICATE

"I/WE CERTIFY THAT ALL DEVELOPMENT AND CONSTRUCTION WILL BE DONE ACCORDING TO THIS PLAN OF DEVELOPMENT AND THAT ANY RESPONSIBLE PERSONNEL IN THE CONSTRUCTION PROJECT WILL HAVE A CERTIFICATE OF ATTENDANCE AT A DEPARTMENT OF NATURAL RESOURCES APPROVED TRAINING PROGRAM FOR THE CONTROL OF SEDIMENT AND EROSION BEFORE BEGINNING THE PROJECT. I/WE ALSO AUTHORIZE PERIODIC ON-SITE INSPECTION BY THE HOWARD SOIL CONSERVATION DISTRICT OR THEIR AUTHORIZED AGENTS, AS ARE DEEMED NECESSARY".

SIGNATURE OF DEVELOPER — DATE 12-29-00

ENGINEER'S CERTIFICATE

I HEREBY CERTIFY THAT THE PLAN FOR EROSION AND SEDIMENT CONTROL REPRESENTS A PRACTICAL AND WORKABLE PLAN BASED ON MY PERSONAL KNOWLEDGE OF THE SITE CONDITIONS AND THAT IT WAS PREPARED IN ACCORDANCE WITH THE REQUIREMENTS OF THE HOWARD SOIL CONSERVATION DISTRICT.

SIGNATURE OF ENGINEER — DATE 11-21-00

REVIEW FOR HOWARD COUNTY SOIL CONSERVATION DISTRICT AND MEETS TECHNICAL REQUIREMENTS.

U.S.D.A. NATURAL RESOURCES CONSERVATION SERVICE — DATE 1/19/01

THIS DEVELOPMENT IS APPROVED FOR EROSION AND SEDIMENT CONTROL BY THE HOWARD SOIL CONSERVATION DISTRICT.
APPROVED:
HOWARD SOIL CONSERVATION DISTRICT — DATE 1/19/01

APPROVED: DEPARTMENT OF PLANNING AND ZONING
CHIEF, DIVISION OF LAND DEVELOPMENT — DATE 1/31/01

APPROVED: DEPARTMENT OF PLANNING AND ZONING
CHIEF, DEVELOPMENT ENGINEERING DIVISION — DATE 1/25/01

APPROVED: HOWARD COUNTY DEPARTMENT OF PUBLIC WORKS
CHIEF, BUREAU OF HIGHWAYS — DATE 1-24-01

SUPER SILT FENCE

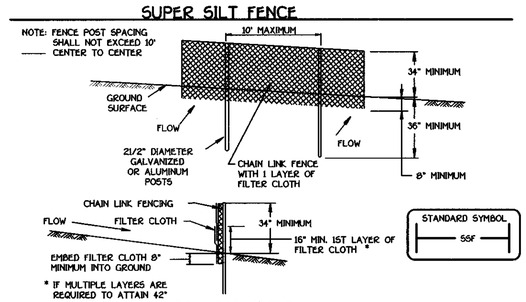

Construction Specifications

1. Fencing shall be 42" in height and constructed in accordance with the latest Maryland State Highway Details for Chain Link Fencing. The specification for a 6' fence shall be used, substituting 42" fabric and 6' length posts.

2. Chain link fence shall be fastened securely to the fence posts with wire ties. The lower tension wire, brace and truss rods, drive anchors and post caps are not required except on the ends of the fence.

3. Filter cloth shall be fastened securely to the chain link fence with ties spaced every 24" at the top and mid section.

4. Filter cloth shall be embedded a minimum of 8" into the ground.

5. When two sections of filter cloth adjoin each other, they shall be overlapped by 6" and folded.

6. Maintenance shall be performed as needed and silt buildups removed when "bulges" develop in the silt fence, or when silt reaches 50% of fence height

7. Filter cloth shall be fastened securely to each fence post with wire ties or staples at top and mid section and shall meet the following requirements for Geotextile Class F:

Tensile Strength	50 lbs/in (min)	Test: MSMT 509
Tensile Modulus	20 lbs/in (min)	Test: MSMT 509
Flow Rate	0.3 gal/ft /minute (max.)	Test: MSMT 322
Filtering Efficiency	75% (min)	Test: MSMT 322

Design Criteria

Slope	Slope Steepness	Slope Length (maximum)	Silt Fence Length (maximum)
0 - 10%	0 - 10:1	Unlimited	Unlimited
10 - 20%	10:1 - 5:1	200 feet	1,500 feet
20 - 33%	5:1 - 3:1	100 feet	1,000 feet
33 - 50%	3:1 - 2:1	100 feet	500 feet
50% +	2:1 +	50 feet	250 feet

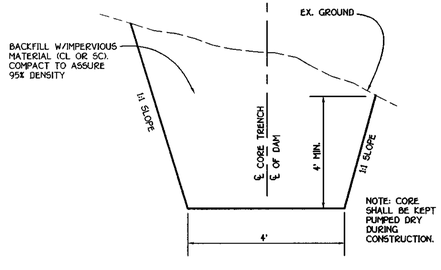

CORE TRENCH DETAIL

NOT TO SCALE

FINAL GRADING @ SEDIMENT TRAP
SCALE: 1" = 50'

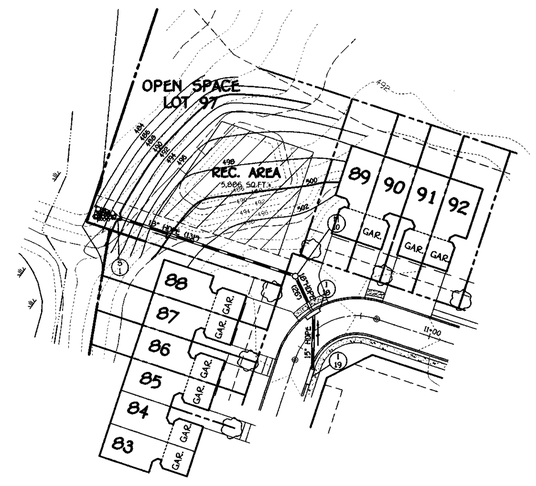

FINAL GRADING @ P.O.S.T. #1
SCALE: 1" = 50'

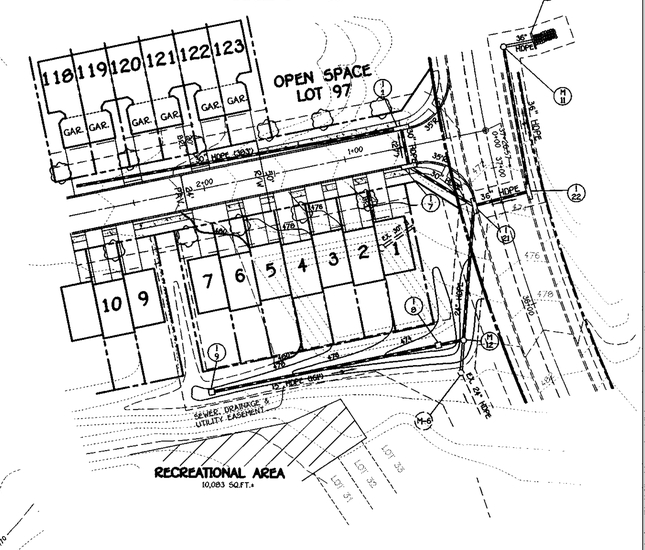

FINAL GRADING @ SEDIMENT BASIN
SCALE: 1" = 50'

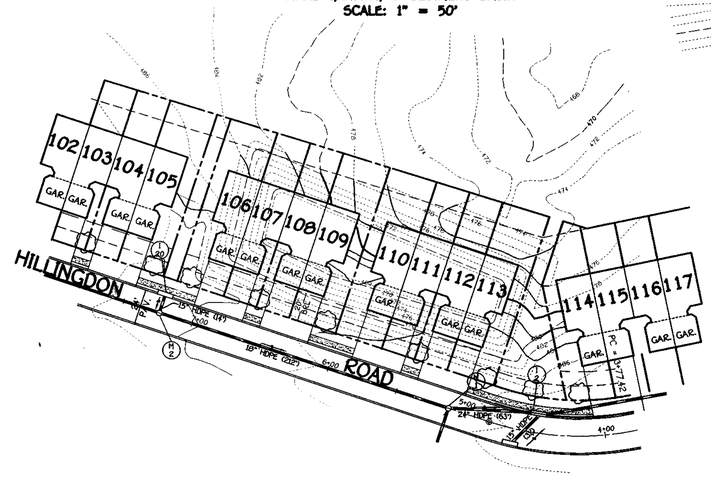

NO.	DESCRIPTION	DATE
	REVISIONS	

SEDIMENT CONTROL NOTES AND DETAILS

GTW'S WAVERLY WOODS

SECTION 12

LOTS 1 THRU 127 AND PARCELS 'A' & 'B'
(A SUBDIVISION OF PART OF THE PROPERTY OF GTW JOINT VENTURE, LIBER 2222, FOLIO 36)
ZONED R-SA-8
TAX MAP NO. 16 PART OF PARCEL NO. 20
THIRD ELECTION DISTRICT HOWARD COUNTY, MARYLAND
DATE: DECEMBER 5, 2000
SHEET 12 OF 14

FISHER, COLLINS & CARTER, INC.
CIVIL ENGINEERING CONSULTANTS & LAND SURVEYORS
CENTENNIAL SQUARE OFFICE PARK - 10272 BALTIMORE NATIONAL PIKE
ELLICOTT CITY, MARYLAND 21042
(410) 461 - 2855

OWNER
GTW JOINT VENTURE
c/o LAND DESIGN AND DEVELOPMENT, LLC
8000 MAIN STREET
ELLICOTT CITY, MARYLAND 21043

DEVELOPER
WAVERLY WOODS DEVELOPMENT CORPORATION
c/o LAND DESIGN AND DEVELOPMENT, LLC
8000 MAIN STREET
ELLICOTT CITY, MARYLAND 21043

K:\Drawings 3130691 GTW SECTION 12\FINAL\30691 Sed Con Details Sht3.dwg Tue Nov 21 08:42:12 2000 JMZ

F 01-31

TEMPORARY S.W.M. STONE OUTLET SEDIMENT TRAP (SEE SHEET 12 OF 14 FOR FINAL GRADING)

INITIAL DRAINAGE AREA = 0.55 AC.±
FINAL DRAINAGE AREA = 1.47 AC.±
STORAGE REQUIRED:
WET = 1800 x 1.47 = 2,646 CU. FT.
DRY = 1800 x 1.47 = 2,646 CU. FT.
STORAGE PROVIDED:
WET = 2,653 CU. FT. @ ELEV. 487.45
DRY = 2,651 CU. FT. @ ELEV. 486.60
BOTTOM ELEV. = 486.00
STORAGE DEPTH = 2.60'
SIDE SLOPES = 2:1
TOP OF EMBANKMENT = 491.00
CLEANOUT ELEV. = 486.75
8' WEIR CREST ELEV. = 489.55
Q2 EXISTING = 4.0 c.f.s.
Q2 PROPOSED = 3.8 c.f.s.

REFORESTATION AREA C = 0.26 ACRE

TEMPORARY S.W.M. SEDIMENT BASIN (SEE SHEET 12 OF 14 FOR FINAL GRADING)

INITIAL DRAINAGE AREA = 6.91 AC.±
FINAL DRAINAGE AREA = 10.79 AC.±
STORAGE REQUIRED:
WET = 1800 x 10.79 = 19,422 CU. FT.
DRY = 1800 x 10.79 = 19,422 CU. FT.
STORAGE PROVIDED:
WET = 19,646 CU. FT. @ ELEV. 471.80
DRY = 19,850 CU. FT. @ ELEV. 471.05
BOTTOM ELEV. = 469.00
STORAGE DEPTH = 5.05'
SIDE SLOPES = 2:1 INSIDE BASIN
= 3:1 OUTSIDE BASIN
TOP OF EMBANKMENT = 476.00
CLEANOUT ELEV. = 470.50
6" LOW FLOW ORIFICE = 471.80
RISER CREST ELEV. = 475.75
Q2 EXISTING = 2.5 c.f.s.
Q2 PROPOSED = 1.7 c.f.s.

TEMPORARY S.W.M. MODIFIED P.O.S.T. NO. 1 (SEE SHEET 12 OF 14 FOR FINAL GRADING)

INITIAL DRAINAGE AREA = 2.45 AC.±
FINAL DRAINAGE AREA = 3.17 AC.±
STORAGE REQUIRED:
WET = 1800 x 3.17= 5,706 CU. FT.
DRY = 1800 x 3.17 = 5,706 CU. FT.
STORAGE PROVIDED:
WET = 7,256 CU. FT. @ ELEV. 473.80
DRY = 7632 CU. FT. @ ELEV. 473.35
BOTTOM ELEV. = 472.00
STORAGE DEPTH = 3.35'
SIDE SLOPES = 2:1
TOP OF EMBANKMENT = 478.00
CLEANOUT ELEV. = 473.00
6" LOW FLOW ORIFICE = 473.80
RISER CREST ELEV. = 476.25
Q2 EXISTING = 2.0 c.f.s.
Q2 PROPOSED = 0.9 c.f.s.

REFORESTATION AREA A = 0.39 ACRE

REFORESTATION AREA B = 0.32 ACRE

ENGINEER'S CERTIFICATE

"I Hereby Certify That This Plan For Erosion And Sediment Control Represents A Practical And Workable Plan Based On My Personal Knowledge Of The Site Condition And That It Was Prepared In Accordance With The Requirements Of The Howard Soil Conservation District."

Signature Of Engineer — Date

DEVELOPER'S CERTIFICATE

"I/We Certify That All Development And Construction Will Be Done According To This Plan Of Development And Plan For Erosion And Sediment Control, And That All Responsible Personnel Involved In The Construction Project Will Have A Certificate Of Attendance At A Department Of Natural Resources Approved Training Program For The Control Of Sediment And Erosion Before Beginning The Project. I Also Authorize Periodic On-Site Inspection By The Howard Soil Conservation District Or Their Authorized Agents, As Are Deemed Necessary."

Signature Of Developer — Date

Reviewed For Howard County Soil Conservation District And Meets Technical Requirements.

U.S.D.A. - Natural Resources Conservation Service — Date

Approved: This Development Is Approved For Erosion And Sediment Control By The Howard Soil Conservation District.

District Howard Soil Conservation Dist. — Date

Approved: Department Of Planning And Zoning
Chief, Division Of Land Development — Date 1/31/01

Chief, Development Engineering Division — Date 1/25/01

Approved: Howard County Department Of Public Works
Chief, Bureau Of Highways — Date 1-24-01

LEGEND

SUPER-SILT FENCE	
SILT FENCE	
TREE PROTECTION FENCE	
I.P.	INLET PROTECTION
S.C.E.	STABILIZED CONSTRUCTION ENTRANCE
A-2	EARTH DIKE
	LIMIT OF DISTURBANCE
R.P.P.	RIP-RAP INFLOW PROTECTION
	MOUNTABLE BERM

LEGEND

	EXISTING TREE LINE
	DENSE SHRUB AREAS
ST29	SPECIMEN TREES
	FOREST CLEARING
	REFORESTATION AREAS
	PERMANENT REFORESTATION SIGNAGE
A	LANDSCAPE TREE STOCK
	SPLIT RAIL FENCING

NOTE:
THIS SHEET IS FOR FOREST CONSERVATION INFORMATION ONLY.

PLAN PREPARED BY:
Environmental Systems Analysis, Inc.
48 Maryland Avenue, Annapolis, Maryland 21401
(410) 267 - 0495 Fax: (410) 267 - 0496

FISHER, COLLINS & CARTER, INC.
CIVIL ENGINEERING CONSULTANTS & LAND SURVEYORS
CENTENNIAL SQUARE OFFICE PARK - 10272 BALTIMORE NATIONAL PIKE
ELLICOTT CITY, MARYLAND 21042
(410) 461 - 2855

Colin A. MacLachlan
Registered Landscape Architect
MD. License #3040
8/22/00 Date

PLAN
SCALE: 1" = 50'

OWNER
GTW JOINT VENTURE
c/o LAND DESIGN
AND DEVELOPMENT, LLC
8000 MAIN STREET
ELLICOTT CITY, MARYLAND 21042

DEVELOPER
WAVERLY WOODS
DEVELOPMENT CORPORATION
C/o LAND DESIGN
AND DEVELOPMENT, LLC
8000 MAIN STREET
ELLICOTT CITY, MARYLAND 21042

FOREST CONSERVATION PROPERTY

GTW'S WAVERLY WOODS

SECTION 12

LOTS 1 THRU 127 AND PARCELS 'A' & 'B'
(A SUBDIVISION OF PART OF THE PROPERTY OF GTW JOINT VENTURE.
LIBER 2222, FOLIO 36)
ZONED: R-SA-8
TAX MAP No. 15 PART OF PARCEL No. 20
THIRD ELECTION DISTRICT HOWARD COUNTY, MARYLAND
DATE: AUGUST 4, 2000
SHEET 15 OF 14

F 01-31

93 AX

K:\Drawings 3\30691 GTW SECTION 12\FINAL\30691 GRADING Sht1.dwg Wed Aug 16 08:56:28 2000

NARRATIVE

The Waverly Woods Property is a 682 acre tract which contains a combination of commercially and residentially zoned property. The site is to be slowly developed in a series of phases. A Preliminary Forest Conservation Plan was prepared for the property in August of 1993. In February of 1996, this plan was revised and approved by the Howard County Department of Planning and Zoning. Since that time, Final Forest Conservation Plans have been prepared for each development section as they are phased in. These Final Forest Conservation Plans have included revised Forest Conservation Worksheets to reflect changes in forest clearing and forest preservation from the 1996 Preliminary Plan.

This Final Forest Conservation Plan has been prepared for Waverly Woods Section 12, a residential section of the development. Like the previous Final FCP's, the reforestation requirement for Section 12 has been calculated on a percentage basis (see "Section 12 Forest Conservation Calculations" on this sheet). To meet the 1.86 acre reforestation requirement for Section 12, these plans identify a combination of on-site reforestation and surplus forest retention on the Waverly Woods Commercial Property.

GENERAL NOTES

1. This forest conservation plan has been prepared for GTW Joint Venture (hereinafter referred to as "Owner") in accordance with the requirements set forth by the Howard County Forest Conservation Act. The preparation of this plan, the notes and details were prepared using the guidelines of the Howard County Forest Conservation Manual.
2. Base sheet information was provided by Fisher, Collins and Carter, Inc.
3. All appropriate bonds shall be posted prior to the issuance of any permits per Howard County Forest Conservation Act. These bonds will be retained as surety until all required activities have been satisfied.
4. Reforestation planting and related work must be performed by a contractor who is knowledgeable and experienced in reforestation planting techniques and proper plant handling.

FOREST PROTECTION MEASURES

1. As all of the existing forest within Waverly Woods Section 12 will be cleared, there are no forest preservation areas which require protection prior to construction.
2. A total of 1.86 acres of reforestation will be provided for Waverly Woods Section 12. 0.97 acre of reforestation will be located within Section 12 as shown on this plan set. The balance of reforestation, 0.89 acre, will be provided using the 0.91 acre reforestation surplus in Waverly Woods Sections 6 and 10 (See the approved Final Forest Conservation Plan for Section 10 which is attached with this plan set for reference). All reforestation areas will be permanently protected by means of a conservation easement which will be recorded at record plat (the Section 6 and 10 reforestation areas have already been recorded).
3. It is the responsibility of the present Owner to educate the new occupants or owners in Section 12 about the proper use of these reforestation areas, the need for the Owner/Developer to carry out the post-construction management program, and the eventual transfer of long-term responsibilities to the new owners or occupants.
4. A signed agreement detailing the post-construction management program shall be submitted for approval as part of the developers agreements for the project. The agreement shall include bonding covering all costs of the necessary protection and management activities required by the post-construction program.

REFORESTATION

Quality Assurance

All plant material shall conform to the current issue of the *American Standard for Nursery Stock* published by the American Association of Nurserymen and as specified below. Plant material delivered to the site which does not conform to the *American Standard for Nursery Stock* or the following will be rejected by the Owner or the Owner's representative and must be immediately removed from the site by the landscape contractor.

1. All live plant material shall be nursery-grown with the seed or vegetative source located within a 200 mile radius of the site. Live plant material collected from the wild will be rejected.
2. All plant material shall be obtained from nurseries that have been inspected and certified by state plant inspectors.
3. The contractor is to provide stock true to botanical name. Varieties will not be accepted unless specified or approved by the Owner or the Owner's representative.
4. Balled and burlapped (B&B) plants shall be dug with firm root balls free of noxious weeds. There should be no excess soil on top of the root ball or around the trunk.
5. Caliper of tree stock shall be taken 6" above the ground level.
6. The root system of container grown plants shall be white, well-developed, and well-distributed throughout the container with the roots visibly extending to the inside face of the growing container. If the soil/root masses are substantially smaller than the specified container size and loose soil exists on the bottom of the containers, the plants will be rejected.
7. If in leaf, the plants shall appear healthy with no leaf spots, leaf damage, leaf discoloration, leaf wilting or evidence of insects on the plant.
8. There shall be no change in the quantity, size, or type of plant material without the approval of the Owner or the Owner's representative.
9. Plant materials are subject to inspection and approval upon delivery for conformity to specification requirements (i.e., size, quality, and variety). Such approval shall not impair the right of inspection by the owner's representative during the progress of work and/or the right of rejection due to damage suffered in handling or transportation. Rejected plants shall be removed immediately from the site and replaced with acceptable plant material

Product Specifications

Fertilizer:
Granular, packet or pellet form with a minimum analysis of 10% nitrogen, 6% phosphorus and 4% potassium (10-6-4). 35% to 80% of the total nitrogen shall be in a slow release form.
Organic Matter:
Leaf Compost - thoroughly shredded, well-composted leaf material, free of trash
Composted Sewage Sludge - approved, screened, polymer-dewatered sewage sludge with a pH of 6.2 - 7.2
Backfill Mixture:
Backfill for all stock shall be 3/4 existing soil mixed with 1/4 organic material. If any other additives are found to be needed at the time of planting, the landscape contractor shall notify the Owner or Owner's representative for approval.

Mulch:
Mulch shall be dark brown, uniform sized, composted, shredded hardwood bark or pine bark with less than 10% sapwood or approved equal.
Tree Support Stakes:
Stakes shall be 2"x2" hardwood or approved equal.
Support Wire:
Wire shall be 14 gauge galvanized steel or approved equal.

Pre-Planting Specifications

1. The recommended planting period is September 15th to November 15th. Planting may also be undertaken from March 15th to June 15th. Planting outside of this planting window may only be conducted with the approval of the owner's representative.
2. Planting shall not take place in sub-freezing temperatures, when the soil is too wet or too dry, or under any environmental constraints generally accepted by the Landscape Contractor's Association (Maryland, District of Columbia, and Virginia) as unsuitable for planting.
3. All planting areas shall be stabilized prior to planting to minimize soil erosion. While soil stabilization and seeding are not part of these plan documents, **the use of Tall Fescue (*Festuca arundinacea*) to stabilize reforestation areas shall be strictly forbidden.**
4. Planting areas shall be free of noxious weeds prior to planting. If noxious weeds (see list for Maryland provided by the USDA) are present, they should be removed or treated with a herbicide (e.g. "Roundup") according to the manufacturer's specifications.
5. The landscape contractor must notify the Owner or the Owner's representative 48 hours prior to the start of construction to arrange a pre-planting meeting. Failure to provide this notification may result in the rejection of all planting.
6. Planting should occur within 24 hours of plant material delivery to the site. Plant materials left unplanted for more than 24 hours shall be protected from direct sun and weather and kept moist. Plant material shall not be left unplanted for more than 2 weeks. Plant material not installed by the Contractor after 24 hours may be reinspected by the Owner or the Owner's representative and rejected if not in satisfactory condition as specified under the Quality Assurance section above.
7. When conditions detrimental to plant growth are encountered (e.g., rubble fill, poor drainage, obstructions), the landscape contractor shall notify the Owner or the Owner's representative before planting. Notification following planting shall not relieve the Contractor from his responsibilities under the terms of these specifications particularly relating to Warranty & Replacement (see below).
8. The landscape contractor is responsible for the location of all existing underground utilities. Repair of utilities during planting shall be at the landscape contractor's expense.

Plant Spacing

The approximate location of balled and burlapped plants within each reforestation areas as shown on this forest conservation plan. Container plants shall installed in a random pattern throughout the remaining portion of each planting area. "Random" refers to both the plant species and plant spacing. Grid patterns with uniform spacing will be rejected.

Planting Specifications

Planting shall be conducted according to the latest edition of the Landscape Specification Guidelines published by the Landscape Contractors Association (Maryland, District of Columbia, and Virginia) and as specified below.

Container Stock

1. Excavate a planting hole at least 12" wider than the width of the rootball and to a depth which leaves the plant root collar flush with the existing grade.
2. Remove the plant either by cutting the container or inverting the container with one hand supporting the top of the root ball and carefully shaking the plant free from the container.
3. Using a knife or a sharp blade, make 4 to 5, one inch cuts the length of the root ball.
4. Install containerized plants in the center of the hole with the root collar flush with the finished landscape grade.
5. All trees must be planted erect. Plants showing a lean of greater than 10 degrees from perpendicular must be straightened or replanted by the landscape contractor.
6. Backfill planting hole with 75% existing soil and 25% organic matter.
7. Any surplus soil which remains after planting shall be used to create a small mound around the edge of the planting hole to hold water during watering operations.
8. Thoroughly water the interior of the tree saucer until it is filled. Watering shall be undertaken even if it is raining. A second watering may be necessary to insure saturation of the rootball and elimination of the air pockets.
9. Place a 3 foot diameter mulch ring around each plant. Mulch shall be a minimum depth of 2" and a maximum depth of 3". DO NOT PLACE MULCH AGAINST THE TRUNK.
10. Prune any and all tree branches that are dead, diseased, damaged, or conflicting.
11. Remove all tags, labels, strings, and wire from the trees.

Balled & Burlapped Stock

1. Excavation for the planting of B&B plant material shall be accomplished using manual methods (e.g., shovels, planting bars, dibble bars, or mattocks) or with a tree spade.
2. Walls of the tree pit shall be dug vertical or sloping outward in heavy soils. Walls shall be scarified after digging.
3. Tree pit shall be 9" larger than the rootball of the tree on every side.
4. Tree pit shall be dug deep enough to allow 1/8 of the rootball to be above the existing grade. The bottom of the root ball shall rest on undisturbed existing soil or well-compacted backfill.
5. Place the tree in the pit by lifting and lowering the rootball. DO NOT LIFT THE TREE BY THE TRUNK OR BRANCHES. Set tree straight and in the center of the pit. Cut and remove rope and or wire from the top 50% of the rootball. Remove any and all plastic or synthetic film from the rootball. Pull burlap back to the edge.
6. Backfill the sides of the tree pit halfway with the "Backfill Mixture" (see "Product Specifications" above). Mix granular fertilizer in with backfill mixture unless composted sewage sludge is used-fertilizer is unnecessary if composted material is used.
7. Tamp backfill material as pit is filled being careful not to overcompact the top 2/3 of the backfill. Do not cover the top of the rootball with soil.
8. Form a saucer around the outer rim of the tree pit above existing grade.Mulch top of root ball and saucer to a minimum depth of 2" and a maximum depth of 3". DO NOT PLACE MULCH AGAINST THE TRUNK.
9. Thoroughly water the interior of the tree saucer until it is filled. Watering shall be undertaken even if it is raining. A second watering may be necessary to insure saturation of the rootball and elimination of the air pockets.
10. Prune any and all tree branches that are dead, diseased, damaged, or conflicting.
11. Remove all tags, labels, strings, and wire from the trees.
12. The decision to stake trees shall be made on an individual basis and should not be required for all trees.If staking is necessary, space stakes evenly and around the outside of the rootball and drive firmly into the ground making certain not to drive the stake into the rootball.
13. Cut hose long enough to loop around the trunk of the tree and place high enough on the trunk to provide optimum support.
14. Thread the wire through the hose, pull the two ends 2' beyond the stake, and twist the wire at the hose to hold it in place. Wind both ends of the wire around the stake twice, 2" to 6" from the top of the stake. Allow 1" to 3" of sway in the tree. Cut off the excess wire.
15. **ALL STAKES, WIRE, AND HOSE MUST BE REMOVED BY THE LANDSCAPE CONTRACTOR AFTER ONE YEAR.**

Reforestation Area Protection

Following the plant installation, watering, and mulching, the contractor shall install a Split Rail Fence (see detail on this sheet) along the boundaries of Reforestation Areas A & B as shown in this plan set. Permanent signs identifying these reforestation areas (see detail on this sheet) shall be attached to this fence at the designated locations. Freestanding reforestation signs shall also be installed by the contractor along the boundary line of Reforestation Area C in the designated location. **SIGNS SHALL NEVER BE ATTACHED TO TREES.**

Warranty and Replacement

1. The landscape contractor shall guarantee that seventy-five percent (75%) of the plants will remain alive and in a healthy, vigorous condition for a period of two years following planting except in the case of damage by vandalism, fire, animal predation, or other events beyond the landscape contractor's ability to control. Drought is not considered beyond the landscape contractor's ability to control unless the County and/or State prohibit watering by landscape contractors.
2. The landscape contractor shall perform the recommended management tasks listed in the "Two Year Post Construction Management Plan" (see below) as necessary to ensure the required survival rate of the plants.
3. At the end of the warranty period, the landscape contractor and the Owner or the Owner's representative will perform a final inspection of the plant material. Plant losses exceeding 75% of the original quantity during this inspection shall be removed from the site and replaced by the landscape contractor on a one time basis.
4. A tree shall be considered dead when the main leader has died back, or 25% of the crown is dead.
5. Plant material replacements shall be of the same type, size and variety as specified in this plan or as approved by the owner's representative. Any substitutions must be plants that are native to the Mid-Atlantic region of the United States. Plants shall be furnished, planted and mulched as specified herein and at the expense of the landscape contractor.

FOREST MANAGEMENT PROGRAM

Two Year Post-Construction Management Plan

1. The required two year management of the reforestation areas is the responsibility of the Owner. Management may include the following: watering, fertilizing, pruning, removal of dead material and the control of pests and competing vegetation.
2. Inspect the reforestation areas for a period of two years per the Howard County Forest Conservation Manual, to monitor the health and vigor of the plantings and specify actions needed to correct existing problems. The following inspection schedule shall be carried out:
   Year 1 & 2: Two Inspections per year - inspect at the beginning of the growing season (May or June) and the end of the growing season (September or October).
3. At the end of the second year the survival rate shall be a minimum of 75% of the total number of trees planted under the approved Forest Conservation Plan. If the survival rate is below 75%, additional trees must be planted in order to ensure a 75% survival rate at the end of the subsequent year.
4. A signed agreement detailing these post-construction activities shall be submitted for approval as part of the developer's agreements for the project. The agreement shall also include bonding covering all costs of the necessary protection and management activities required by the post-construction program.
5. At the end of the management period the Owner or Owner's representative shall convey to the administrator of the Howard County Forest Conservation Program certification that the required reforestation survival rate has been achieved.

Long Term Management Plan

1. All reforestation areas shall be protected by conservation easements which will be recorded at record plat (refer to the latest edition of the Howard County Forest Conservation Manual for activities permitted within the forest conservation easement).
2. The periodic removal of vines and or other invasive and non-native vegetation along the perimeter of the forest conservation area may be conducted to control the intrusion and development of such vegetation and maintain forest productivity.
3. Woody vegetation located within 20' from the forest perimeter susceptible to windthrow and dead or diseased trees along the forest perimeter shall be selectively thinned if potentially hazardous.

TYPICAL DETAIL FOR CONTAINER GROWN TREES AND SHRUBS

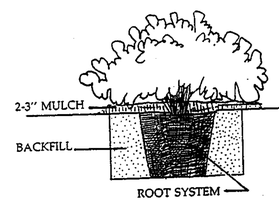

Environmental Systems Analysis, Inc.
48 Maryland Avenue, Annapolis, Maryland 21401
(410) 267 - 0495 Fax: (410) 267 - 0496

TYPICAL DETAIL FOR BALLED & BURLAPPED TREE STOCK

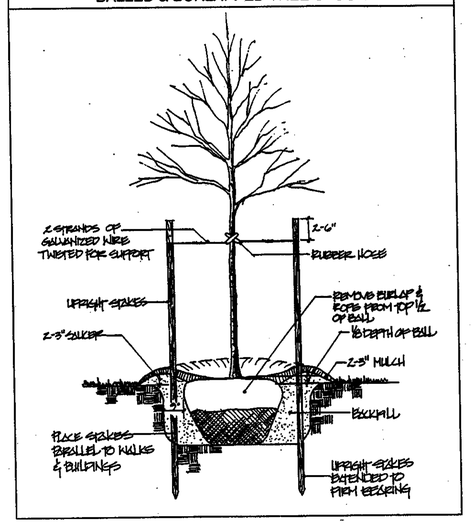

TYPICAL DETAIL FOR SPLIT RAIL FENCE

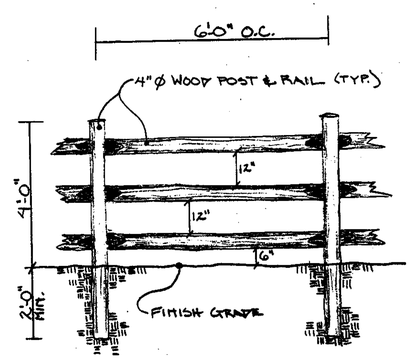

Waverly Woods (Residential)
Forest Conservation Worksheet

Input Parameter:	Preliminary FCP	Revised Per Section 4	Revised Per Section 5	Revised Per Section 6	Revised Per Section 10	Revised Per Section 12
Tract Area	291.90	291.90	291.90	291.90	291.90	291.90
100-Year Floodplain Area	4.10	4.68	4.81	4.81	4.81	4.81
Other ROW/Easements to be Excluded from Net Tract Area	2.04	2.04	2.09	2.09	2.09	2.09
Disturbance within Floodplain to be added to Net Tract Area	0.00	2.32	2.32	2.32	2.32	2.32
Existing Forest Area within Net Tract Area	103.00	103.00	103.00	103.00	103.00	103.00
Afforestation Threshold Percentage	0.15	0.15	0.15	0.15	0.15	0.15
Conservation Threshold Percentage	0.20	0.20	0.20	0.20	0.20	0.20
Total Area of Forest to be Cleared	65.55	66.83	68.23	69.17	69.17	69.17
Calculated Parameters:						
Net Tract Area	285.76	287.50	287.32	287.32	287.32	287.32
Afforestation Threshold	42.86	43.13	43.10	43.10	43.10	43.10
Conservation Threshold	57.15	57.50	57.46	57.46	57.46	57.46
Area of Forest Above Afforestation Threshold	60.14	59.88	59.90	59.90	59.90	59.90
Area of Forest Above Conservation Threshold	45.85	45.50	45.54	45.54	45.54	45.54
Break Even Point	66.32	66.60	66.57	66.57	66.57	66.57
Clearing Permitted with no Mitigation	36.68	36.40	36.43	36.43	36.43	36.43
Total Area of Forest to be Retained	37.45	36.17	34.77	33.83	33.83	33.83
Reforestation for Clearing Above Conservation Threshold	11.46	11.38	11.38	11.38	11.38	11.38
Reforestation for Clearing Below the Conservation Threshold	39.40	42.66	45.39	47.27	47.27	47.27
Credit for Retention Above the Conservation Threshold	0.00	0.00	0.00	0.00	0.00	0.00
Total Reforestation Required	50.87	54.04	56.77	58.65	58.65	58.65
Total Afforestation Required	0.00	0.00	0.00	0.00	0.00	0.00
TOTAL Afforestation/Reforestation Required	50.87	54.04	56.77	58.65	58.65	58.65

SECTION 12 FOREST CONSERVATION CALCULATIONS

Forest Preservation in Section 12 Development (acres)	0
Forest Clearing in Section 12 Development (acres)	2.19
Total Forest Clearing within Residentially Zoned Areas of Waverly Woods (acres)	69.17
Percentage of Forest Clearing Within Section 12 Development	3.17%
Total Reforestation Required for Waverly Woods Residential Development (acres)	58.65
Reforestation for Section 12 Development (acres)	1.86

NOTE: PLANTED AND BONDED AS PART OF LANDSCAPING REQUIREMENTS SHOWN ON SHEET 7.

Calculation Notes

1. The columns presented in the "Forest Conservation Worksheet" contain the forest conservation calculations for all proposed development on residentially zoned property at Waverly Woods. The "Preliminary FCP" column contains the residential development forest conservation worksheet numbers from the Preliminary Forest Conservation Plan dated August 9, 1993 and revised on February 26, 1996. The subsequent columns contain "clearing" and "net tract area" changes resulting from differences between the Preliminary and Final residential development plans. Thirteen residential development sections are anticipated.
2. Section 12 accounts for 3.17% or 1.86 acres of the 58.65 acres of reforestation currently required for residential development on the Waverly Woods property. A total of 0.97 acre of reforestation will be located within Section 12 as shown on this plan set. The balance of reforestation, 0.89 acre, will be provided using 0.91 acre of reforestation surplus provided in Waverly Woods Sections 6 and 10 (See the approved Final Forest Conservation Plan for Waverly Woods Section 10). All reforestation areas will be permanently protected by means of a conservation easement which will be recorded at record plat (the Section 6 and 10 reforestation areas have already been recorded). Including Section 12, a total of 9.05 acres of on-site reforestation and 8.13 acres of off-site reforestation (see January 1996 Final FCP for Waverly Woods Section 4, Areas 1 and 2) has been planned for the Waverly Woods residentially zoned property to date. This leaves a balance of 41.47 acres of reforestation to be performed for the Golf Course and Section 11.
3. THE TOTAL FOREST CONSERVATION BOND HAS BEEN ADJUSTED BY 400 SQ.FT. PER LANDSCAPING TREE ADDED TO SHEET 7 IN THE AMOUNT OF $0.30 PER SQ. FT. TOTAL ADJUSTMENT WOULD BE 400 SQ.FT. x 32 TREES x 0.30 = $3,840.00. THEREFORE, THE TOTAL FOREST CONSERVATION BOND AMOUNT WOULD BE FOR 1.86 AC. x 43560 - (400 x 32) = 68,221.6 SQ.FT. or $20,466.48.

APPROVED: DPZ
Chief, Div. of Land Development — 1/31/01 DATE
OR
Chief, Development Eng. Div. — 1/25/01 DATE
Chief, Bureau of Highways — 1-24-01 DATE

TYPICAL DETAIL FREE STANDING SIGN INSTALLATION

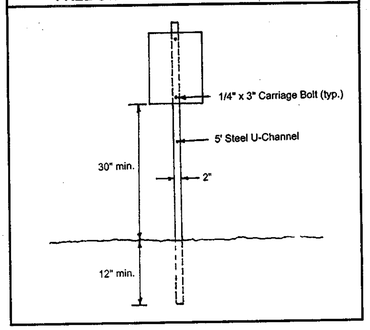

STATE OF MARYLAND — COLIN ALASTAIR MACLACHLAN — #3040 — REGISTERED LANDSCAPE ARCHITECT

Colin A. MacLachlan — Registered Landscape Architect — MD. License #3040 — 8/2/00 Date

WAVERLY WOODS SECTION 12 REFORESTATION MASTER PLANTING SCHEDULE

Qty	Botanical Name	Common Name	Size	Condition	Spacing*
B&B Stock					
12	*Acer rubrum*	Red Maple	2.5" Cal.	B&B	As Shown
12	*Pinus strobus*	White Pine	6-8'	B&B	As Shown
8	*Quercus coccinea*	Scarlet Oak	2.5" Cal.	B&B	As Shown
Container Stock					
45	*Acer rubrum*	Red Maple	2 Gal.	Cont.	12' Random
30	*Cercis canadensis*	Redbud	2 Gal.	Cont.	12' Random
10	*Cladrastis lutea*	Yellowwood	2 Gal.	Cont.	12' Random
10	*Cornus alternifolia*	Pagoda Dogwood	2 Gal.	Cont.	12' Random
10	*Hamamelis virginiana*	Witch-hazel	2 Gal.	Cont.	12' Random
55	*Liriodendron tulipifera*	Tulip Poplar	2 Gal.	Cont.	12' Random
45	*Quercus coccinea*	Scarlet Oak	2 Gal.	Cont.	12' Random
46	*Quercus rubra*	Red Oak	2 Gal.	Cont.	12' Random

* 12' Random Spacing - plants shall be installed in a random pattern throughout the planting area with a maximum spacing of 12 feet between individual plants.

REFORESTATION AREA A (0.39 AC)

Symbol	Qty	Botanical Name	Common Name	Size	Condition	Spacing
B&B Stock						
A	7	*Acer rubrum*	Red Maple	2.5" Cal.	B&B	As Shown
P	6	*Pinus strobus*	White Pine	6-8'	B&B	As Shown
Q	5	*Quercus coccinea*	Scarlet Oak	2.5" Cal.	B&B	As Shown
Container Stock						
-	15	*Acer rubrum*	Red Maple	2 Gal.	Cont.	12' Random
-	10	*Cercis canadensis*	Redbud	2 Gal.	Cont.	12' Random
-	10	*Cornus alternifolia*	Pagoda Dogwood	2 Gal.	Cont.	12' Random
-	15	*Liriodendron tulipifera*	Tulip Poplar	2 Gal.	Cont.	12' Random
-	15	*Quercus coccinea*	Scarlet Oak	2 Gal.	Cont.	12' Random
-	15	*Quercus rubra*	Red Oak	2 Gal.	Cont.	12' Random

NOTE: PLANTED AND BONDED AS PART OF LANDSCAPING REQUIREMENTS SHOWN ON SHEET 7.

REFORESTATION AREA B (0.32 AC)

Symbol	Qty	Botanical Name	Common Name	Size	Condition	Spacing
B&B Stock						
A	5	*Acer rubrum*	Red Maple	2.5" Cal.	B&B	As Shown
P	6	*Pinus strobus*	White Pine	6-8'	B&B	As Shown
Q	3	*Quercus coccinea*	Scarlet Oak	2.5" Cal.	B&B	As Shown
Container Stock						
-	15	*Acer rubrum*	Red Maple	2 Gal.	Cont.	12' Random
-	10	*Cercis canadensis*	Redbud	2 Gal.	Cont.	12' Random
-	10	*Cladrastis lutea*	Yellowwood	2 Gal.	Cont.	12' Random
-	15	*Liriodendron tulipifera*	Tulip Poplar	2 Gal.	Cont.	12' Random
-	15	*Quercus coccinea*	Scarlet Oak	2 Gal.	Cont.	12' Random
-	15	*Quercus rubra*	Red Oak	2 Gal.	Cont.	12' Random

REFORESTATION AREA C (0.26 AC)

Symbol	Qty	Botanical Name	Common Name	Size	Condition	Spacing
Container Stock						
-	15	*Acer rubrum*	Red Maple	2 Gal.	Cont.	12' Random
-	10	*Cercis canadensis*	Redbud	2 Gal.	Cont.	12' Random
-	10	*Hamamelis virginiana*	Witch Hazel	2 Gal.	Cont.	12' Random
-	25	*Liriodendron tulipifera*	Tulip Poplar	2 Gal.	Cont.	12' Random
-	15	*Quercus coccinea*	Scarlet Oak	2 Gal.	Cont.	12' Random
-	16	*Quercus rubra*	Red Oak	2 Gal.	Cont.	12' Random

PERMANENT SIGNAGE DETAIL

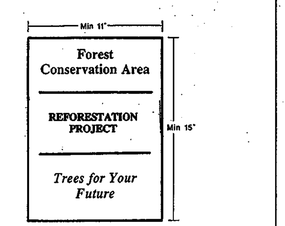

PLAN PREPARED BY:
Environmental Systems Analysis, Inc.
48 Maryland Avenue, Annapolis, Maryland 21401
(410) 267 - 0495 Fax: (410) 267 - 0496

REVISIONS	DATE
REVISE PLAN PER 10/20/00 CO. COMMENTS	11/7/00

FOREST CONSERVATION PLAN
DETAIL SHEET
GTW'S WAVERLY WOODS SECTION 12
Howard County, Maryland
No Scale — August 2000
Sheet 14 of 14

F 01-31

STREET TREE SCHEDULE

SYMBOL	QUANTITY	BOTANICAL AND COMMON NAME	SIZE	COMMENTS
	20	ACER RUBRUM 'OCTOBER GLORY' RED MAPLE	2 1/2-3" CAL.	40' APART ON PUBLIC R/W
	11	PLATANUS X ACERIFOLIA 'BLOODGOOD' BLOODGOOD LONDON PLANE	2 1/2-3" CAL.	40' APART ON PUBLIC R/W
	57	*Tilia Cordata "Greenspire" Greenspire Littleleaf Linden*	2 1/2-3" CAL.	40' APART ON PUBLIC R/W
	57	*Gleditsia Triacanthus Inermis "Imperial" Imperial Thornless Honeylocust*	2 1/2-3" CAL.	40' APART ON PUBLIC R/W

ENGINEER'S CERTIFICATE

"I Hereby Certify That The Plan For Erosion And Sediment Control Represents A Practical And Workable Plan Based On My Personal Knowledge Of The Site Conditions And Was Prepared In Accordance With The Requirements Of The Howard Soil Conservation District."

STATE OF MARYLAND — ALAN M. SCHUMAN — No. 10000 — PROFESSIONAL ENGINEER

Signature Of Engineer — Date: 12-27-00

DEVELOPER'S CERTIFICATE

"I/We Certify That All Development And Construction Will Be Done According To This Plan Of Development And Plan For Erosion And Sediment Control And That All Responsible Personnel Involved In The Construction Project Will Have A Certificate Of Attendance At A Department Of Natural Resources Approved Training Program For The Control Of Sediment And Erosion Before Beginning The Project. I Also Authorize Periodic On-Site Inspection By The Howard Soil Conservation District Or Their Authorized Agents, As Are Deemed Necessary."

Signature Of Developer — Date

NO.	REVISION	DATE
1	ADDED 4 RED MAPLE & 24 "AUTUMN PURPLE" WHITE ASH STREET TREES, AND REVISED QUANTITIES IN STREET TREE SCHEDULE	1/3/01
2	Added 7 "Greenspire" Littleleaf Linden & 14 "Imperial Thornless Honeylocust" street trees; revised quantities & botanical names in Street Tree Schedules	8/10/01

Reviewed For Howard County Soil Conservation District And Meets Technical Requirements.

U.S.D.A. - Natural Resources Conservation Service — Date: 1/9/01

Approved This Development Is Approved For Erosion And Sediment Control By The Howard Soil Conservation District.

District Howard Soil Conservation Dist. — Date: 1/9/01

Approved: Department Of Planning And Zoning
Chief, Division Of Land Development — Date: 1/31/01

Chief, Development Engineering Division — Date: 1/25/01

Approved: Howard County Department Of Public Works
Chief, Bureau Of Highways — Date: 1-24-01

TEMPORARY S.W.M. STONE OUTLET SEDIMENT TRAP

(SEE SHEET 12 OF 14 FOR FINAL GRADING)

INITIAL DRAINAGE AREA = 0.55 AC.±
FINAL DRAINAGE AREA = 1.47 AC.±
STORAGE REQUIRED:
WET = 1800 x 1.47 = 2,646 CU. FT.
DRY = 1800 x 1.47 = 2,646 CU. FT.
STORAGE PROVIDED:
WET = 2,653 CU. FT. @ ELEV. 487.45
DRY = 2,651 CU. FT. @ ELEV. 486.60
BOTTOM ELEV. = 486.00
STORAGE DEPTH = 2.60'
SIDE SLOPES = 2:1
TOP OF EMBANKMENT = 491.00
CLEANOUT ELEV. = 486.75
8' WEIR CREST ELEV. = 489.55
Q2 EXISTING = 4.0 c.f.s.
Q2 PROPOSED = 3.8 c.f.s.

TEMPORARY S.W.M. SEDIMENT BASIN

(SEE SHEET 12 OF 14 FOR FINAL GRADING)

INITIAL DRAINAGE AREA = 6.91 AC.±
FINAL DRAINAGE AREA = 10.79 AC.±
STORAGE REQUIRED:
WET = 1800 x 10.79 = 19,422 CU. FT.
DRY = 1800 x 10.79 = 19,422 CU. FT.
STORAGE PROVIDED:
WET = 19,646 CU. FT. @ ELEV. 471.80
DRY = 19,850 CU. FT. @ ELEV. 474.05
BOTTOM ELEV. = 469.00
STORAGE DEPTH = 5.05'
SIDE SLOPES = 2:1 INSIDE BASIN
= 3:1 OUTSIDE BASIN
TOP OF EMBANKMENT = 478.00
CLEANOUT ELEV. = 470.50
8" LOW FLOW ORIFICE = 471.80
RISER CREST ELEV. = 475.75
Q2 EXISTING = 2.5 c.f.s.
Q2 PROPOSED = 1.7 c.f.s.

TEMPORARY S.W.M. MODIFIED P.O.S.T. NO. 1

(SEE SHEET 12 OF 14 FOR FINAL GRADING)

INITIAL DRAINAGE AREA = 2.45 AC.±
FINAL DRAINAGE AREA = 3.17 AC.±
STORAGE REQUIRED:
WET = 1800 x 3.17 = 5,706 CU. FT.
DRY = 1800 x 3.17 = 5,706 CU. FT.
STORAGE PROVIDED:
WET = 7,256 CU. FT. @ ELEV. 473.80
DRY = 7832 CU. FT. @ ELEV. 475.35
BOTTOM ELEV. = 472.00
STORAGE DEPTH = 3.35'
SIDE SLOPES = 2:1
TOP OF EMBANKMENT = 478.00
CLEANOUT ELEV. = 473.00
8" LOW FLOW ORIFICE = 473.80
RISER CREST ELEV. = 476.25
Q2 EXISTING = 2.0 c.f.s.
Q2 PROPOSED = 0.9 c.f.s.

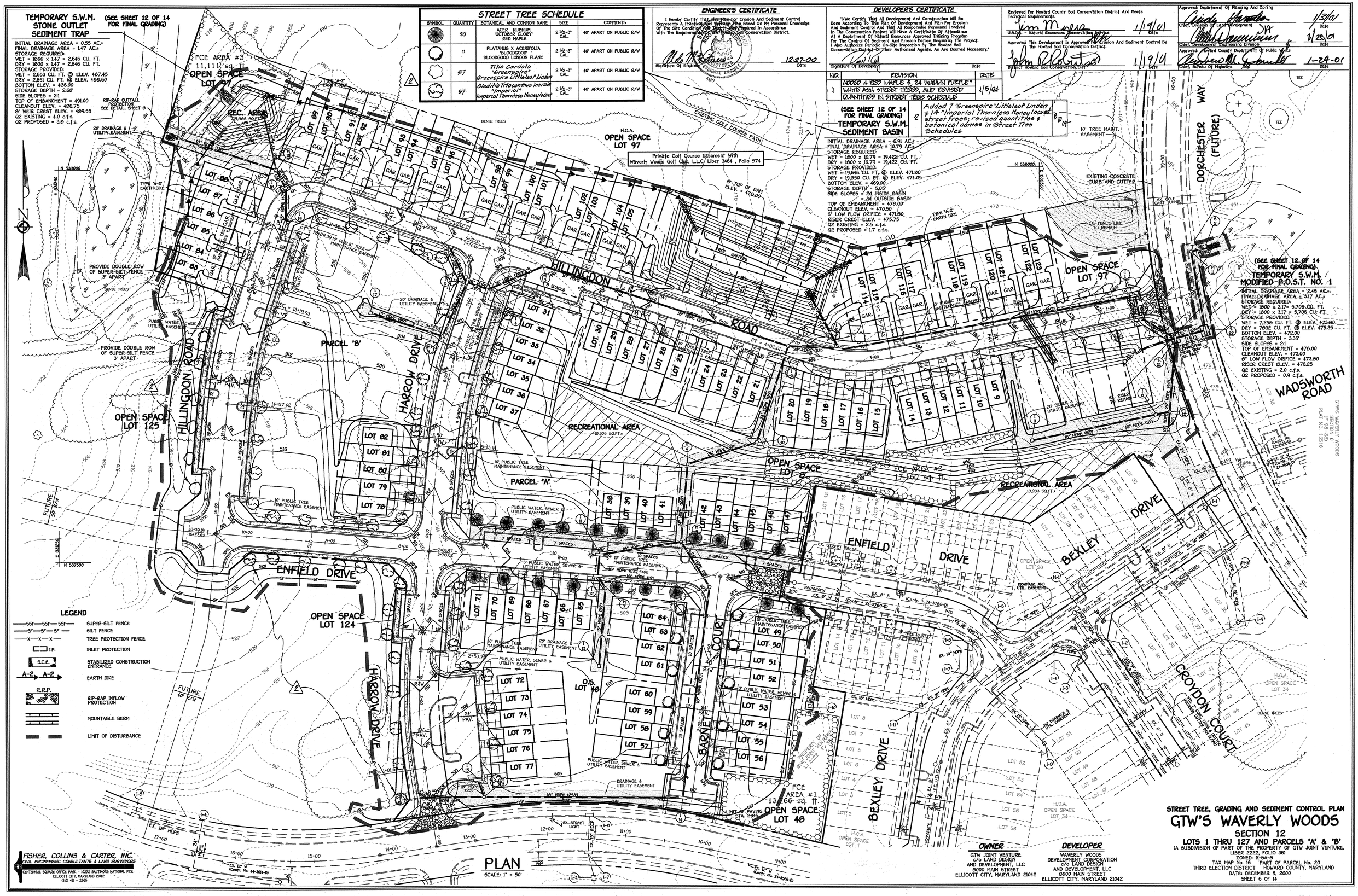

PLAN
SCALE: 1" = 50'

FISHER, COLLINS & CARTER, INC.
CIVIL ENGINEERING CONSULTANTS & LAND SURVEYORS
CENTENNIAL SQUARE OFFICE PARK - 10272 BALTIMORE NATIONAL PIKE
ELLICOTT CITY, MARYLAND 21042
(410) 461 - 2855

OWNER

GTW JOINT VENTURE
c/o LAND DESIGN
AND DEVELOPMENT, LLC
8000 MAIN STREET
ELLICOTT CITY, MARYLAND 21042

DEVELOPER

WAVERLY WOODS
DEVELOPMENT CORPORATION
c/o LAND DESIGN
AND DEVELOPMENT, LLC
8000 MAIN STREET
ELLICOTT CITY, MARYLAND 21042

STREET TREE, GRADING AND SEDIMENT CONTROL PLAN

GTW'S WAVERLY WOODS

SECTION 12

LOTS 1 THRU 127 AND PARCELS 'A' & 'B'
(A SUBDIVISION OF PART OF THE PROPERTY OF GTW JOINT VENTURE, LIBER 2222, FOLIO 36)
ZONED: R-SA-8
TAX MAP No. 16 PART OF PARCEL No. 20
THIRD ELECTION DISTRICT HOWARD COUNTY, MARYLAND
DATE: DECEMBER 5, 2000
SHEET 6 OF 14

F01-31

Approved: Department Of Planning And Zoning
Chief, Division Of Land Development — Date 1/31/01
Chief, Development Engineering Division — Date 1/25/01
Approved: Howard County Department Of Public Works
Chief, Bureau Of Highways — Date 1-24-01

LANDSCAPING PLANT LIST

QTY.	KEY	NAME	SIZE
33		QUERCUS COCCINEA SCARLET OAK	2-1/2" - 3" CAL.
15		CEDRUS DEODORA DEODAR CEDAR	6' - 8' HT.
19		VIBURNUM DENTATUM ARROWWOOD VIBURNUM	2-1/2' - 3' HT.

19 SHRUBS = 1.9 TREES FOR THE REQUIRED SURETY AMOUNT ($6500.00)
"THIS PLAN HAS BEEN PREPARED IN ACCORDANCE WITH THE PROVISIONS OF SECTION 16.124 OF THE HOWARD COUNTY CODE AND THE LANDSCAPE MANUAL". FINANCIAL SURETY FOR THE 50 REQUIRED LANDSCAPE TREES AND 32 REFORESTATION TREES HAVE BEEN POSTED AS PART OF THE DEVELOPER'S AGREEMENT IN THE AMOUNT OF $ 20,550.00.

DRAINAGE AREA DATA

STRUCTURE NO.	DRAINAGE AREA	AREA (AC.)	'C'	ZONED	% IMP.
I-1	A	0.54	0.64	R-SA-8	66%
I-2	B	0.39	0.64	R-SA-8	67%
I-3	C	0.71	0.68	R-SA-8	72%
I-4	D	0.43	0.69	R-SA-8	73%
I-5	E	0.59	0.53	R-SA-8	49%
I-6	F	0.34	0.39	R-SA-8	27%
I-7	G	0.74	0.68	R-SA-8	71%
I-8	H	0.91	0.30	R-SA-8	14%

DRAINAGE AREA DATA

STRUCTURE NO.	DRAINAGE AREA	AREA (AC.)	'C'	ZONED	% IMP.
I-9	I	1.33	0.32	R-SA-8	17%
I-10	J	1.66	0.29	R-SA-8	12%
I-11	K	0.65	0.65	R-SA-8	67%
I-12	L	0.43	0.54	R-SA-8	50%
I-13	M	0.76	0.36	R-SA-8	22%
I-14	N	0.78	0.70	R-SA-8	74%
I-15	O	0.55	0.63	R-SA-8	64%
I-16	P	0.69	0.41	R-SA-8	30%
I-17	Q	1.12	0.24	R-SA-8	4%
I-18	R	0.51	0.67	R-SA-8	69%
I-19	S	0.62	0.53	R-SA-8	49%
I-20	T	0.70	0.64	R-SA-8	66%
EX I-10	U	0.97	0.32	R-SA-8	16%
I-21	SEE SECTION 11, AREA 1 FOR PROPOSED DRAINAGE AREA				
I-22					

REFORESTATION AREA 1 & 2 PLANT LIST

QTY.	SYMBOL	NAME	SIZE	CONDITION	SPACING
12	A	ACER RUBRUM RED MAPLE	2.5" CAL.	B & B	AS SHOWN
12	P	PINUS STROBUS WHITE PINE	6' - 8' HT.	B & B	AS SHOWN
8	Q	QUERCUS COCCINEA SCARLET OAK	2.5" CAL.	B & B	AS SHOWN

NOTE: SEE SHEET 5 FOR STREET TREE SCHEDULE AND SURETY AMOUNT

GENERAL NOTE:
1. AN ADDITIONAL LANDSCAPING REQUIREMENT OF 1 SHADE TREE PER UNIT WILL BE PROVIDED WITH THE SITE DEVELOPMENT PLAN.

SCHEDULE B PARKING LOT INTERNAL LANDSCAPING
SECTION 12

NUMBER OF PARKING SPACES	169
NUMBER OF TREES REQUIRED	19

SCHEDULE A PERIMETER LANDSCAPE EDGE

PERIMETER	P-1	P-2	P-3	P-4	P-5
CATEGORY	Adjacent to Roadway	Adjacent to Roadway	Adjacent to Roadway	Adjacent to Roadway	Adjacent to Roadway
LANDSCAPE TYPE	B	E	B	B	B
LINEAR FEET OF PERIMETER	83'	75'	229'	117'	100'
CREDIT FOR EXISTING VEGETATION (YES, NO, LINEAR FEET) (DESCRIBE BELOW IF NEEDED)	NO	NO	NO	NO	NO
CREDIT FOR WALL, FENCE OR BERM (YES, NO, LINEAR FEET) (DESCRIBE IF NEEDED)	NO	NO	NO	NO	NO
NUMBER OF PLANTS REQUIRED					
SHADE TREES	2	2	5	3	2
EVERGREEN TREES	-	-	6	3	-
SHRUBS	3	19	-	-	-

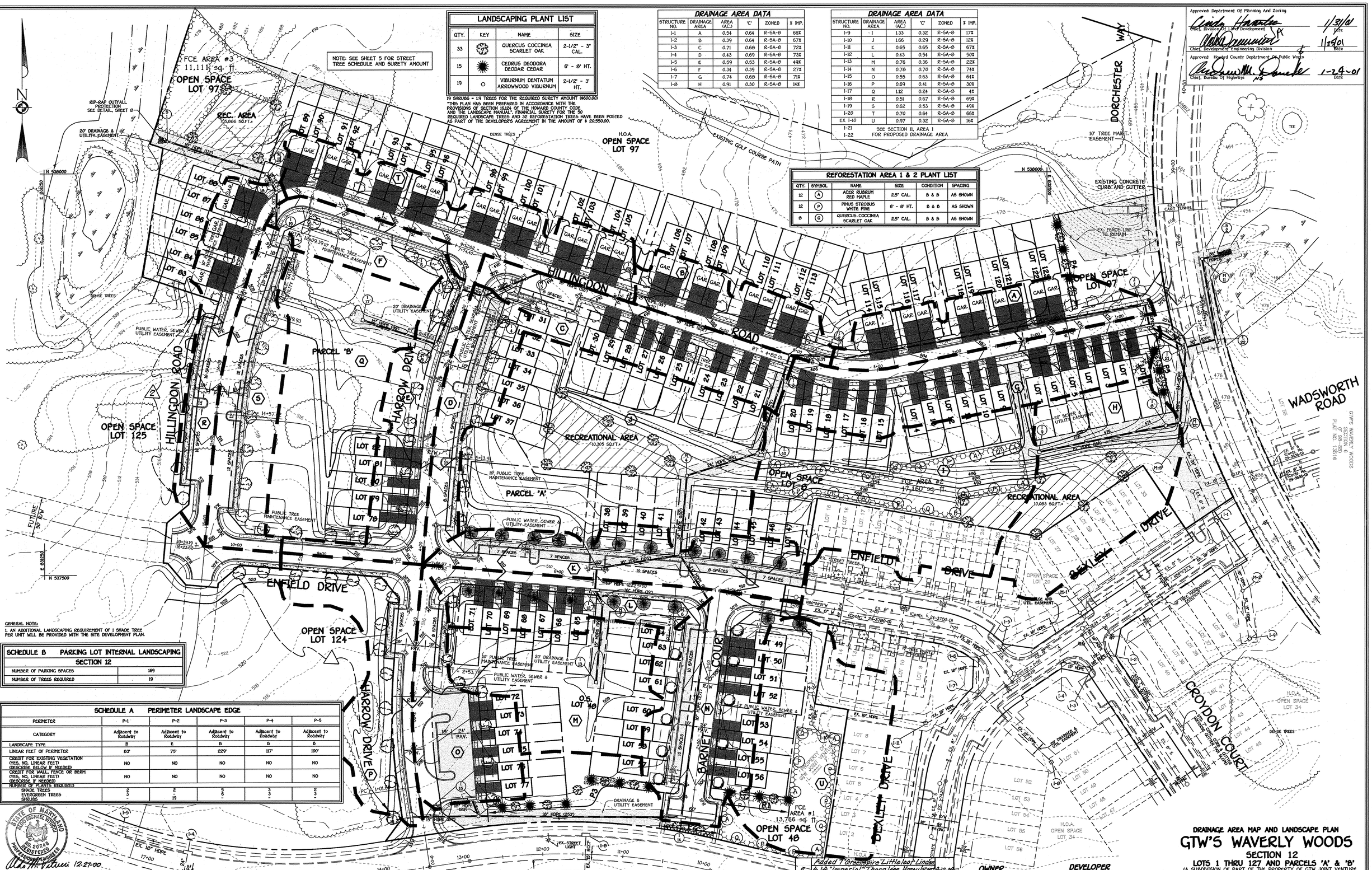

NO.	REVISION	DATE
2	Added 7 "Greenspire" Little leaf Linden & 14 "Imperial" Thornless Honeylocust 8-street trees	8-10-04
1	ADDED A RED MAPLE & 2 "AUTUMN PURPLE" WHITE OAK STREET TREES	1/5/01

OWNER
GTW JOINT VENTURE
c/o LAND DESIGN
AND DEVELOPMENT, LLC
8000 MAIN STREET
ELLICOTT CITY, MARYLAND 21042

DEVELOPER
WAVERLY WOODS
DEVELOPMENT CORPORATION
c/o LAND DESIGN
AND DEVELOPMENT, LLC
8000 MAIN STREET
ELLICOTT CITY, MARYLAND 21042

STATE OF MARYLAND — NOORBOKHSH NOURI — No. 20748 — REGISTERED PROFESSIONAL ENGINEER
12-27-00

FISHER, COLLINS & CARTER, INC.
CIVIL ENGINEERING CONSULTANTS & LAND SURVEYORS
CENTENNIAL SQUARE OFFICE PARK - 10272 BALTIMORE NATIONAL PIKE
ELLICOTT CITY, MARYLAND 21042
(410) 461 - 2855

DRAINAGE AREA MAP AND LANDSCAPE PLAN

GTW'S WAVERLY WOODS

SECTION 12

LOTS 1 THRU 127 AND PARCELS 'A' & 'B'
(A SUBDIVISION OF PART OF THE PROPERTY OF GTW JOINT VENTURE, LIBER 2222, FOLIO 36)
ZONED: R-SA-8
TAX MAP No. 16 PART OF PARCEL No. 20
THIRD ELECTION DISTRICT HOWARD COUNTY, MARYLAND
DATE: DECEMBER 5, 2000
SHEET 7 OF 14

F01-31

NO.	REVISION	DATE
1	ADDED RED MAPLE & "AUTUMN PURPLE" WHITE ASH STREET TREES	1/9/04
2	Added 1" "Greenspire" Littleleaf Linden & 19" "Imperial" Thornless Honeylocust street trees	9-10-04

TEMPORARY S.W.M. STONE OUTLET SEDIMENT TRAP

(SEE SHEET 12 OF 14 FOR FINAL GRADING)

INITIAL DRAINAGE AREA = 0.55 AC.±
FINAL DRAINAGE AREA = 1.47 AC.±
STORAGE REQUIRED:
WET = 1800 x 1.47 = 2,646 CU. FT.
DRY = 1800 x 1.47 = 2,646 CU. FT.
STORAGE PROVIDED:
WET = 2,653 CU. FT. @ ELEV. 487.45
DRY = 2,651 CU. FT. @ ELEV. 488.60
BOTTOM ELEV. = 486.00
STORAGE DEPTH = 2.60'
SIDE SLOPES = 2:1
TOP OF EMBANKMENT = 491.00
CLEANOUT ELEV. = 486.75
8" WEIR CREST ELEV. = 489.55
Q2 EXISTING = 4.0 c.f.s.
Q2 PROPOSED = 3.8 c.f.s.

TEMPORARY S.W.M. SEDIMENT BASIN

(SEE SHEET 12 OF 14 FOR FINAL GRADING)

INITIAL DRAINAGE AREA = 6.91 AC.±
FINAL DRAINAGE AREA = 10.79 AC.±
STORAGE REQUIRED:
WET = 1800 x 10.79 = 19,422 CU. FT.
DRY = 1800 x 10.79 = 19,422 CU. FT.
STORAGE PROVIDED:
WET = 19,646 CU. FT. @ ELEV. 471.80
DRY = 19,850 CU. FT. @ ELEV. 474.05
BOTTOM ELEV. = 469.00
STORAGE DEPTH = 5.05'
SIDE SLOPES = 2:1 INSIDE BASIN
3:1 OUTSIDE BASIN
TOP OF EMBANKMENT = 476.00
CLEANOUT ELEV. = 470.50
6" LOW FLOW ORIFICE = 471.80
RISER CREST ELEV. = 475.75
Q2 EXISTING = 2.5 c.f.s.
Q2 PROPOSED = 1.7 c.f.s.

ENGINEER'S CERTIFICATE

"I Hereby Certify That This Plan For Erosion And Sediment Control Represents A Practical And Workable Plan Based On My Personal Knowledge Of The Site Condition And That It Was Prepared In Accordance With The Requirements Of The Howard Soil Conservation District."

Signature Of Engineer — Date

DEVELOPER'S CERTIFICATE

"I/We Certify That All Development And Construction Will Be Done According To This Plan Of Development And Plan For Erosion And Sediment Control And That All Responsible Personnel Involved In The Construction Project Will Have A Certificate Of Attendance At A Department Of Natural Resources Approved Training Program For The Control Of Sediment And Erosion Before Beginning The Project. I Also Authorize Periodic On-Site Inspection By The Howard Soil Conservation District Or Their Authorized Agents, As Are Deemed Necessary."

Signature Of Developer — Date

Reviewed For Howard County Soil Conservation District And Meets Technical Requirements.

U.S.D.A. - Natural Resources Conservation Service — Date

Approved This Development Is Approved For Erosion And Sediment Control By The Howard Soil Conservation District.

District Howard Soil Conservation Dist. — Date

Approved Department Of Planning And Zoning
Chief, Division Of Land Development — 1/31/01 Date

Chief, Development Engineering Division — 1/25/01 Date

Approved Howard County Department Of Public Works
Chief, Bureau Of Highways — 1-24-01 Date

(SEE SHEET 12 OF 14 FOR FINAL GRADING) TEMPORARY S.W.M. MODIFIED P.O.S.T. NO. 1

INITIAL DRAINAGE AREA = 2.45 AC.±
FINAL DRAINAGE AREA = 3.17 AC.±
STORAGE REQUIRED:
WET = 1800 x 3.17± = 5,706 CU. FT.
DRY = 1800 x 3.17 = 5,706 CU. FT.
STORAGE PROVIDED:
WET = 7,258 CU. FT. @ ELEV. 473.80
DRY = 7832 CU. FT. @ ELEV. 475.35
BOTTOM ELEV. = 472.00
STORAGE DEPTH = 3.35'
SIDE SLOPES = 2:1
TOP OF EMBANKMENT = 478.00
CLEANOUT ELEV. = 473.00
8" LOW FLOW ORIFICE = 473.80
RISER CREST ELEV. = 476.25
Q2 EXISTING = 2.0 c.f.s.
Q2 PROPOSED = 0.9 c.f.s.

REFORESTATION AREA C = 0.26 ACRE

REFORESTATION AREA A = 0.39 ACRE

REFORESTATION AREA B = 0.32 ACRE

LEGEND

SSF SSF SSF	SUPER-SILT FENCE
SF SF SF	SILT FENCE
X X X	TREE PROTECTION FENCE
I.P.	INLET PROTECTION
S.C.E.	STABILIZED CONSTRUCTION ENTRANCE
A-2 A-2	EARTH DIKE
	LIMIT OF DISTURBANCE
R.R.P.	RIP-RAP INFLOW PROTECTION
	MOUNTABLE BERM

LEGEND

	EXISTING TREE LINE
	DENSE SHRUB AREAS
ST29	SPECIMEN TREES
	FOREST CLEARING
	REFORESTATION AREAS
	PERMANENT REFORESTATION SIGNAGE
A	LANDSCAPE TREE STOCK
X—X	SPLIT RAIL FENCING

NOTE: THIS SHEET IS FOR FOREST CONSERVATION INFORMATION ONLY.

PLAN PREPARED BY:
Environmental Systems Analysis, Inc.
48 Maryland Avenue, Annapolis, Maryland 21401
(410) 267 - 0495 Fax: (410) 267 - 0496

FISHER, COLLINS & CARTER, INC.
CIVIL ENGINEERING CONSULTANTS & LAND SURVEYORS
CENTENNIAL SQUARE OFFICE PARK - 10272 BALTIMORE NATIONAL PIKE
ELLICOTT CITY, MARYLAND 21042
(410) 461 - 2855

Colin A. MacLachlan
Registered Landscape Architect
MD. License #3040
8/22/00 Date

PLAN

SCALE: 1" = 50'

OWNER
GTW JOINT VENTURE
c/o LAND DESIGN
AND DEVELOPMENT, LLC
8000 MAIN STREET
ELLICOTT CITY, MARYLAND 21042

DEVELOPER
WAVERLY WOODS
DEVELOPMENT CORPORATION
C/O LAND DESIGN
AND DEVELOPMENT, LLC
8000 MAIN STREET
ELLICOTT CITY, MARYLAND 21042

FOREST CONSERVATION PROPERTY

GTW'S WAVERLY WOODS

SECTION 12

LOTS 1 THRU 127 AND PARCELS 'A' & 'B'
(A SUBDIVISION OF PART OF THE PROPERTY OF GTW JOINT VENTURE, LIBER 2222, FOLIO 36)
ZONED R-SA-8
TAX MAP No. 16 PART OF PARCEL No. 20
THIRD ELECTION DISTRICT HOWARD COUNTY, MARYLAND
DATE: AUGUST 4, 2000
SHEET 13 OF 14

GTW'S WAVERLY WOODS SECTION 6 LOT 98-189 & 190-195 PLAT NO. 13316

F 01-31

93 9X