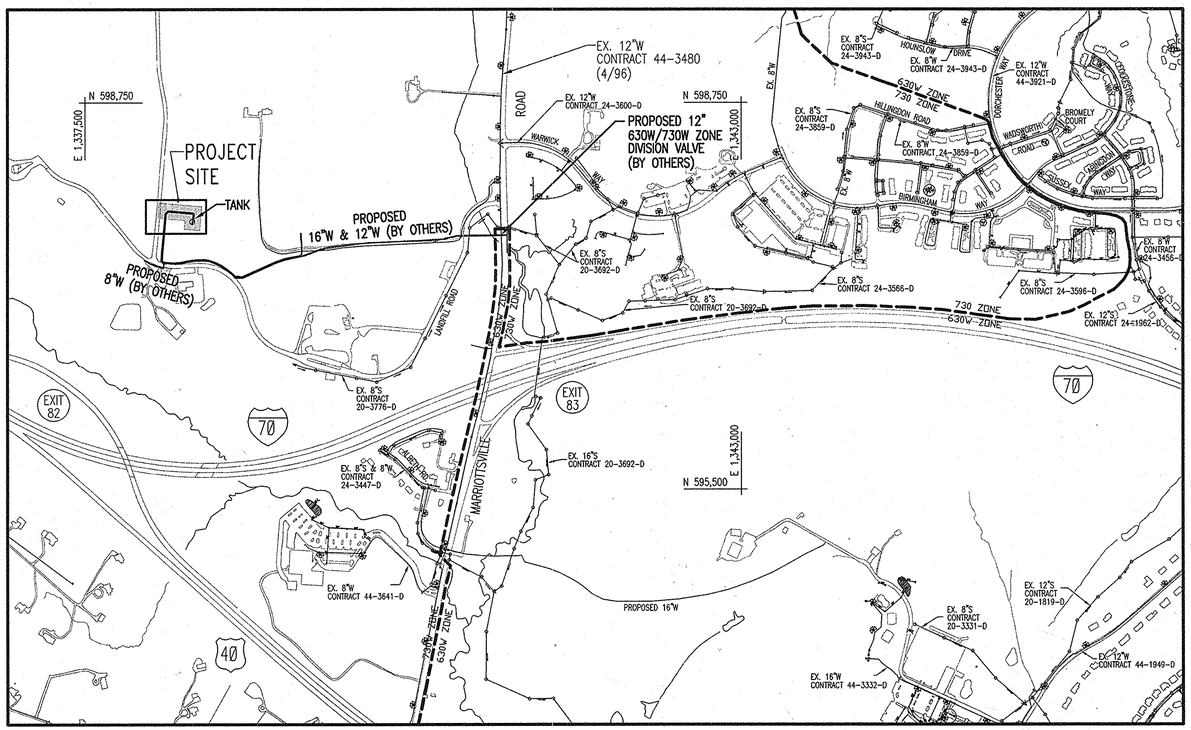

VICINITY MAP

SCALE: 1"=600'

600' 300' 0 600' 1200'

SCALE: 1" = 600'

N

TYPE OF BUILDING: NA
NUMBER OF PARCELS: NA
WATER HOUSE CONNECTIONS: 0
SEWER HOUSE CONNECTIONS: 0
DRAINAGE AREA: LITTLE PATUXENT
PRESSURE ZONE: 630 & 730
WATER TEST GRADIENT: 780 (FOR 630 ZONE)
880 (FOR 730 ZONE)

MARRIOTTSVILLE ROAD ELEVATED TANK AND BOOSTER STATION

CAPITAL PROJECT NO. W8263

CONTRACT NO. 44-4509

HOWARD COUNTY, MARYLAND

DRAWING/SHEET INDEX

DWG.	SHEET	DESCRIPTION
G-1	1	VICINITY MAP, TITLE, BILL OF MATERIALS, SHEET INDEX
G-2	2	GENERAL NOTES, ABBREVIATIONS, LEGEND
C-1	3	WATER MAINS PLAN AND PROFILE
C-2	4	SITE PLAN
C-3	5	CIVIL DETAILS
SC-1	6	EROSION AND SEDIMENT CONTROL PLAN
SC-2	7	EROSION AND SEDIMENT CONTROL GENERAL NOTES
SC-3	8	EROSION AND SEDIMENT CONTROL GENERAL NOTES
SC-4	9	EROSION AND SEDIMENT CONTROL DETAILS
S-1	10	STRUCTURAL NOTES, DETAILS AND SECTION
S-2	11	TANK BOOSTER STATION FLOOR SLAB
S-3	12	TANK BOOSTER STATION PIPE SUPPORT PLAN
S-4	13	TANK BOOSTER STATION FLOOR SLAB SECTIONS
S-5	14	PIPE SUPPORT DETAILS
S-6	15	MISCELLANEOUS STRUCTURAL DETAILS
M-1	16	LEGEND, NOTES, ABBREVIATIONS AND SYSTEM CURVE
M-2	17	TANK AND BOOSTER STATION SYSTEM SCHEMATIC
M-3	18	TANK BOOSTER STATION FLOOR PLAN
M-4	19	SUPPLY, OVERFLOW AND DISCHARGE PIPE SECTIONS
M-5	20	1.25 MILLION GALLON TANK ELEVATION AND SECTIONS
M-6	21	DETAILS
M-7	22	DETAILS AND SCHEDULES
E-1	23	ELECTRICAL SITE PLAN
E-2	24	BOOSTER PUMP SYSTEM – POWER/LIGHTING PLAN
E-3	25	TANK ELEVATION AND LIGHTING AND PANEL SCHEDULE
E-4	26	ELECTRICAL SINGLE LINE DIAGRAM AND MOTOR CONTROL CENTER SCHEDULE
I-1	27	INSTRUMENTATION SYMBOLS, SCHEDULES AND LEGEND
I-2	28	PROCESS AND INSTRUMENTATION DIAGRAM
I-3	29	PUMP CONTROL PANEL ELEMENTARY
I-4	30	VFD PUMP CONTROL PANEL ELEMENTARY
I-5	31	INSTRUMENTATION MISCELLANEOUS DIAGRAMS
I-6	32	INSTRUMENTATION MISCELLANEOUS DIAGRAMS
I-7	33	BOOSTER PUMPING STATION PLAN – INSTRUMENTATION
I-8	34	INSTRUMENTATION CONDUIT RISER DIAGRAM
I-9	35	INSTRUMENTATION CONDUIT & WIRE SCHEDULE

BILL OF MATERIALS

ITEM	QUANTITY	MATERIALS	AS-BUILT QUANTITY	MANUFACTURER ⚠1
TANK, BOOSTER STATION, APPURTENANCES AND SITE WORK	1	--		CALDWELL
16" WATER MAIN (TO TANK)	400 LF	PVC (PVC FTG.'S)	400	NATIONAL PIPE AND PLASTIC
12" WATER MAIN (TO TANK)	360 LF	PVC (PVC FTG.'S)	360	NATIONAL PIPE AND PLASTIC
FIRE HYDRANT, VALVE & LEAD	2 EA.	DI (BODY, PIPE, FTG.'S)	2	KENNEDY
PIPELINE CONTINUITY TEST STATION	4 EA.	COPPER (ROD)	4	AGAVE WIRE
12" GATE VALVE (BURIED)	2 EA.	CI OR DI BODY	2	AMERICAN FLOW CONTROL
⚠1 16" GATE VALVE (BURIED)	1 EA.	DI BODY	1	AMERICAN FLOW CONTROL

NAME OF UTILITY CONTRACTOR: ---

SEDIMENT CONTROL MEASURES FOR THIS CONTRACT WILL BE IMPLEMENTED IN ACCORDANCE WITH THE SPECIFICATIONS AND AS SHOWN ON THE DRAWINGS. SDP-10-83

HOWARD SOIL CONSERVATION DISTRICT CERTIFICATION

THIS DEVELOPMENT PLAN IS APPROVED FOR SOIL EROSION AND SEDIMENT CONTROL BY THE HOWARD SOIL CONSERVATION DISTRICT (SCD).

HOWARD SOIL CONSERVATION DISTRICT — DATE 8/9/11

"PROFESSIONAL CERTIFICATION, I HEREBY CERTIFY THAT THESE DOCUMENTS WERE PREPARED OR APPROVED BY ME, AND THAT I AM A DULY LICENSED PROFESSIONAL ENGINEER UNDER THE LAWS OF THE STATE OF MARYLAND, LICENSE NO. 24478, EXPIRATION DATE: 10/28/11."

ENGINEERS/ARCHITECT DESIGN CERTIFICATION

"I CERTIFY THAT THIS PLAN FOR EROSION AND SEDIMENT CONTROL REPRESENTS A PRACTICAL AND WORKABLE PLAN BASED ON MY PERSONAL KNOWLEDGE OF THE SITE CONDITIONS AND THAT IT WAS PREPARED IN ACCORDANCE WITH THE REQUIREMENTS OF THE HOWARD SOIL CONSERVATION DISTRICT."

SIGNATURE — P.E. 24478 REGISTRATION NUMBER — 7/26/11 DATE

OWNERS/DEVELOPERS CERTIFICATION:

"I/WE CERTIFY THAT ALL DEVELOPMENT AND CONSTRUCTION WILL BE DONE ACCORDING TO THIS PLAN, AND THAT ANY RESPONSIBLE PERSONNEL INVOLVED IN THE CONSTRUCTION PROJECT WILL HAVE A CERTIFICATE OF ATTENDANCE AT A DEPARTMENT OF THE ENVIRONMENT APPROVED TRAINING PROGRAM FOR THE CONTROL OF SEDIMENT AND EROSION BEFORE BEGINNING THE PROJECT. I ALSO AUTHORIZE PERIODIC ON-SITE INSPECTION BY THE HOWARD SOIL CONSERVATION DISTRICT."

DATE 8/9/11

AS-BUILT

DEPARTMENT OF PUBLIC WORKS
HOWARD COUNTY, MARYLAND.

DIRECTOR OF PUBLIC WORKS — DATE 8/26/11
CHIEF, BUREAU OF ENGINEERING — DATE 8/9/11
CHIEF, BUREAU OF UTILITIES — DATE
CHIEF, UTILITY DESIGN DIVISION — DATE 8/9/11

PREPARED BY:
WHITMAN, REQUARDT & ASSOCIATES, LLP
801 South Caroline Street, Baltimore, MD 21231
WR&A

STATE OF MARYLAND — DENISE RUDE WILSON — PROFESSIONAL ENGINEER — 7/26/11

DES:	JDV
DRN:	ACM
CHK:	JDV
DATE:	6/8/11

BY	NO.	REVISION	DATE
WRA	⚠1	AS-BUILTS	2/15

VICINITY MAP, TITLE, BILL OF MATERIALS, SHEET INDEX

600' SCALE TAX MAP NO. 16 BLOCK NO. 3

MARRIOTTSVILLE ROAD
ELEVATED TANK AND BOOSTER STATION
CAPITAL PROJECT NO. W8263
CONTRACT NO. 44-4509

ELECTION DISTRICT 3 HOWARD COUNTY, MARYLAND

DWG. G-1

SCALE

SHEET 1 OF 35

N:\13732\CADD\G1-13732-G01.dwg
Jul 25, 2011 - 2:00pm

CIVIL GENERAL NOTES

1. APPROXIMATE LOCATIONS OF EXISTING UTILITIES ARE SHOWN. THE CONTRACTOR SHALL TAKE ALL NECESSARY PRECAUTIONS TO PROTECT EXISTING UTILITIES AND MAINTAIN UNINTERRUPTED SERVICE. ANY DAMAGE INCURRED SHALL BE REPAIRED IMMEDIATELY TO THE SATISFACTION OF THE ENGINEER AT THE CONTRACTOR'S EXPENSE.
2. TOPOGRAPHIC FIELD SURVEYS WERE PERFORMED ON DECEMBER 2007 BY WHITMAN, REQUARDT & ASSOCIATES, LLP.
3. HORIZONTAL AND VERTICAL SURVEY CONTROLS:

   THE COORDINATES SHOWN ON THE DRAWINGS ARE BASED ON MARYLAND STATE REFERENCE SYSTEM NAD '83/'91 AS PROJECTED BY HOWARD COUNTY GEODETIC CONTROL STATIONS 16E1: N593,250.96380; E1,340,192.70100; ELEV. 463.90600 AND BASE'A: N598,156.2315; E1,336,841.7881; ELEV. 564.874.
   ALL VERTICAL CONTROLS ARE BASED ON NAVD '88. VERTICAL CONTROLS PROVIDED ON THE DRAWINGS ARE INDICATED BY THREE BENCHMARKS ON SITE PLAN SHEET C-2 (BM'S 200, 201 AND 202). DESCRIPTIONS AND RECOVERY DATA ARE SHOWN.
4. ALL PIPE ELEVATIONS SHOWN ARE INVERT ELEVATIONS UNLESS OTHERWISE NOTED ON THE PLANS.
5. CLEAR ALL UTILITIES BY A MINIMUM OF 12 INCHES. CLEAR ALL POLES BY 5'-0" MINIMUM OR TUNNEL AS REQUIRED UNLESS OTHERWISE NOTED. THE OWNER HAS CONTACTED THE UTILITY COMPANIES AND HAS MADE ARRANGEMENTS FOR BRACING OF POLES AS SHOWN ON THE DRAWINGS. (FOR THIS CONTRACT, NO BRACING OF UTILITY POLES IS DEEMED NECESSARY.) IN THE EVEN THE CONTRACTOR'S WORK REQUIRES THE BRACING OF ADDITIONAL POLES, ANY COST INCURRED BY THE OWNER FOR THE BRACING OF ADDITIONAL POLES OR DAMAGES SHALL BE DEDUCTED FROM MONIES OWED THE CONTRACTOR. THE CONTRACTOR SHALL COORDINATE WITH THE UTILITY COMPANIES TO SCHEDULE THE BRACING OF THE POLES.
6. FOR DETAILS NOT SHOWN ON THE DRAWING, AND FOR MATERIALS AND CONSTRUCTION METHODS, USE HOWARD COUNTY DESIGN MANUAL, VOLUME IV, STANDARD SPECIFICATIONS AND DETAILS FOR CONSTRUCTION (LATEST EDITION). THE CONTRACTOR SHALL HAVE A COPY OF VOLUME IV ON THE JOB.
7. WHERE TEST PITS HAVE BEEN MADE ON EXISTING UTILITIES, THEY ARE NOTED BY THE SYMBOL ▣ AT THE LOCATIONS OF THE TEST PITS. (FOR THIS CONTRACT, NO TEST PITS WERE TAKEN.) A NOTE OR NOTES CONTAINING THE RESULTS OF THE TEST PIT OR PITS IS INCLUDED ON THE DRAWINGS EXISTING UTILITIES IN THE VICINITY OF THE PROPOSED WORK FOR WHICH TEST PITS HAVE NOT BEEN DUG SHALL BE LOCATED BY THE CONTRACTOR TWO WEEKS IN ADVANCE OF CONSTRUCTION OPERATIONS AT HIS OWN EXPENSE.
8. THE CONTRACTOR SHALL NOTIFY THE FOLLOWING UTILITY COMPANIES OR AGENCIES AT LEAST FIVE WORKING DAYS BEFORE STARTING WORK SHOWN ON THESE PLANS:

   BGE (CONSTRUCTION SERVIES).....410-850-4620
   BGE (EMERGENCY).....410-685-1400
   BUREAU OF UTILITIES.....410-313-4900
   MISS UTILITY.....1-800-257-7777
   VERIZON.....1-800-743-0033 / 410-224-9210
9. TREES AND SHRUBS ARE TO BE PROTECTED FROM DAMAGE TO THE MAXIMUM EXTENT. TREES AND SHRUBS LOCATED WITHIN THE CONSTRUCTION STRIP ARE NOT TO BE REMOVED OR DAMAGED BY THE CONTRACTOR.
10. THE CONTRACTOR SHALL REMOVE TREES, STUPS AND ROOTS ALONG THE LINE OF EXCAVATION. PAYMENT FOR SUCH REMOVAL SHALL BE INCLUDED IN THE UNIT PRICE BID FOR CONSTRUCTION OF THE MAIN.
11. THE CONTRACTOR SHALL NOTIFY THE BUREAU OF HIGHWAYS, HOWARD COUNTY, AT (410)-313-7450 AT LEAST FIVE WORKING DAYS BEFORE OPEN CUTTING OR BORING/JACKING OF ANY COUNTY ROAD FOR LAYING WATER/SEWER MAINS OR HOUSE CONNECTIONS. THE APPROVAL OF THESE DRAWINGS WILL CONSTITUTE COMPLIANCE WITH DPW REQUIREMENTS PER SECTION 18.114(A) OF THE HOWARD COUNTY CODE. THE CONTRACTOR SHALL ALSO CONTACT THE CONSTRUCTION INSPECTION DIVISION, HOWARD COUNTY, AT (410) 313-1880 24 HOURS IN ADVANCE OF COMMENCEMENT OF WORK.
12. TOPS OF ALL WATER MAINS SHALL HAVE A MINIMUM OF 3'-6" OF COVER UNLESS OTHERWISE NOTED.
13. VALVES ADJACENT TO TEES SHALL BE STRAPPED TO TEES.
14. ALL FITTINGS SHALL BE BUTTRESSED OR ANCHORED WITH CONCRETE IN ACCORDANCE WITH STANDARD DETAILS UNLESS OTHERWISE PROVIDED FOR ON THE DRAWINGS.
15. FIRE HYDRANTS SHALL BE SET TO THE BURY LINE ELEVATIONS AS INDICATED IN THE STANDARD DETAILS AND IN ACCORDANCE WITH THE INFORMATION PROVIDED ON DWG. C-1 IN THE TABLE, "FIRE HYDRANT STANDPIPE HEIGHT". ALL FIRE HYDRANTS SHALL BE INSTALLED IN ACCORDANCE WITH THE STANDARD DETAILS. THE SOIL AROUND THE FIRE HYDRANT SHALL BE COMPACTED IN ACCORDANCE WITH SECTION 1000 AND 1005 OF THE STANDARD SPECIFICATIONS.
16. THE CONTRACTOR SHALL NOT OPERATE ANY WATER MAIN VALVES ON THE EXISTING WATER SYSTEM.
17. THE FOLLOWING NOTE IS ADDED TO HOWARD COUNTY STANDARD DETAIL W2.22, BUTTRESSES AND ANCHORAGES FOR VERTICAL BENDS. "WHEN ANCHORING PVC PIPE, THE STRAPPING IN CONTACT WITH THE PIPE SURFACE SHALL BE 1-INCH WIDE BY 1/4-INCH THICK STEEL. THE REMAINING PORTION OF THE STRAP SHALL BE REINFORCING BAR SIZED IN ACCORDANCE WITH THE PERTINENT CHART SHOWN ON THE DETAIL."
18. EXCEPT AS INDICATED OTHERWISE ON THESE DRAWINGS, ALL PUBLIC WATER MAINS SHALL BE POLYVINYLCHLORIDE (PVC) PIPE MEETING THE REQUIREMENTS OF AWWA C900 DR18, PRESSURE CLASS 150 FOR 4-INCH THROUGH 12-INCH DIAMETER PIPE, AWWA C905 DR18, PRESSURE CLASS 150 FOR 14-INCH THROUGH 30-INCH DIAMETER PIPE AND THE HOWARD COUNTY DESIGN MANUAL VOLUME IV-STANDARD SPECIFICATIONS AND DETAILS FOR CONSTRUCTION AND ALL SUBSEQUENT AMENDMENTS THERETO.
19. FOR PVC PIPE, PROVIDE PIPELINE DETECTION SYSTEM IN ACCORDANCE WITH SECTION 1002.03.04 AND 905.01.05(D) OF THE STANDARD SPECIFICATIONS. PROVIDE CONTINUITY TEST STATIONS ADJACENT TO EACH FIRE HYDRANT AND AT INTERVALS NO GREATER THAN 400 FEET ALONG THE LENGTH OF THE MAIN, AS INDICATED ON THE PLANS.
20. WHEN DUCTILE PIPE WATER MAIN IS CALLED FOR, IT SHALL BE D.I.P. CLASS 54 UNLESS OTHERWISE NOTED.
21. FOR PIPE TRENCH DETAIL, SEE HOWARD COUNTY STANDARD DETAIL G-2.12. FOR 16" WATER MAIN, THE "W" DIMENSION SHALL BE 8 INCHES.
22. WATER MAINS SHALL BE FILLED WITH WATER AND BROUGHT TO 150 PSI FOR 2 HOURS, VARYING 5 PSI. SEE SPECIFICATION SPECIAL PROVISION D-ZZ.
23. AT THE ACCESS ROAD INTERSECTION WITH LANDFILL ROAD, CONSTRUCTION ACTIVITIES SHALL BE CONDUCTED TO MINIMIZE IMPACT TO LANDFILL ROAD. TEMPORARY BLOCKAGE OF THE ROAD BY EQUIPMENT SHALL ONLY BE ALLOWED BY WRITTEN DIRECTION OF THE ENGINEER, AND AT LEAST THE WESTERN HALF OF THE ROAD MUST BE CLEAR FOR TRAFFIC AT ALL TIMES.
24. SOIL BORING LOGS AND REPORT ARE IN THE APPENDIX OF THE SPECIFICATIONS.
25. THE CONTRACTOR HAS AN ADDITIONAL MECHANICAL WORK EFFORT AT THE COUNTY'S BETHANY ELEVATED WATER STORAGE TANK. THE TANK IS LOCATED JUST UNDER THREE MILES EAST OF THE MARRIOTTSVILLE ROAD TANK SITE, ON OLD FREDERICK ROAD ABOUT 0.1 MILES WEST OF THE BETHANY ROAD INTERSECTION, WHICH IS JUST NORTH OF INTERSTATE ROUTE 70. DETAILS OF THE WORK EFFORT ARE DESCRIBED IN DIVISION 15 OF THE SPECIFICATIONS.

CIVIL ABBREVIATIONS

AC	ACRE(S)
AHD.	AHEAD
APPROX.	APPROXIMATE
AR, ARV	AIR RELEASE VALVE
AWWA	AMERICAN WATER WORKS ASSOCIATION
BK.	BACK
BO	BLOW OUT
℄	CENTERLINE
CMP	CORRIGATED METAL PIPE
CONTIN.	CONTINGENT
CT.	COURT
CTS	CONTINUITY TEST STATION
D	DRAIN
DIP	DUCTILE IRON PIPE
DPW	DEPARTMENT OF PUBLIC WORKS
DWG.	DRAWING
E	ELECTRIC, EAST
EA.	EACH
ELEV., EL.	ELEVATION
ETC.	ETCETERA
EX.	EXISTING
FH	FIRE HYDRANT
FM	FORCE MAIN
FTG.	FITTING
FT	FOOT, FEET
GAB	GRADED AGGREGATE BASE
G	GAS
HB	HORIZONTAL BEND
HG	HYDRAULIC GRADIENT
HMA	HOT MIX ASPHALT
HORIZ.	HORIZONTAL
INV.	INVERT
L	LENGTH
LB	POUND(S)
LF	LINEAR FEET
LOD	LIMIT OF DISTURBANCE
MAX.	MAXIMUM
MD	MARYLAND
MIN.	MINIMUM
MON.	MONUMENT (PROPERTY)
MSMT.	MEASUREMENT
N	NORTH
NA, N/A	NOT APPLICABLE
NAD	NORTH AMERICAN DATUM (HORIZ.)
NAVD	NORTH AMERICAN VERTICAL DATUM
NO.	NUMBER
NRCS	NATIONAL RESOURCE CONSERVATION SERVICE
OD	OUTSIDE DIAMETER
PC	POINT OF CURVE
PI	POINT OF INTERSECTION
ℙ	PROPERTY LINE
POP.	POPLAR
PRC	POINT OF REVERSE CURVE
PSI	POUNDS PER SQUARE INCH
PT	POINT OF TANGENCY
PVC	POLYVINYLCHLORIDE
R	RADIUS
R/C	REBAR & CAP
RD	ROAD
R/W	RIGHT-OF-WAY
S	SEWER, SOUTH
SC	SEDIMENT CONTROL
SCE	STABILIZED CONSTRUCTION ENTRANCE
SF	SILT FENCE, SQUARE FOOT/FEET
SSF	SUPER SILT FENCE
STA.	STATION
SWM	STORMWATER MANAGEMENT
T	TANGENT
TP	TREE PROTECTION
TYP.	TYPICAL
USDA	UNITED STATES DEPARTMENT OF AGRICULTURE
V	VALVE
VB	VERTICAL BEND
VERT.	VERTICAL
W	WATER, WEST
Δ	ANGLE

CIVIL LEGEND

EXISTING		NEW
—W—	WATER LINE	
—S—	SEWER LINE	
—E—	ELECTRIC	
—FM—	FORCE MAIN	
—T—	TELEPHONE	
	UTILITY POLE	
	FIRE HYDRANT	
	CLEANOUT	
	GATE	
—X—	FENCE	
	TREE	
	EASEMENT LINE	
	PROPERTY LINE	
	PROPERTY MONUMENT	
	CONTINUITY TEST STATION	
	FIRE HYDRANT AND CONTINUITY TEST STATION NO.	FH 1 / CTS 1
	TRAVERSE PI	
	BENCHMARK	
	SOIL BORING	
	CONTOUR LINE	

LEGEND

X1 / X-4 **PLAN TITLE** SCALE: __"=__'-__" OR SCALE: NONE

X1 / X-4 **ELEVATION TITLE** SCALE: __"=__'-__" OR SCALE: NONE

X3 / X-4 **SECTION/ DETAIL TITLE** SCALE: __"=__'-__" OR (SCALE: NONE)

X1 / X-4 **SCHEMATIC TITLE** SCALE: NONE

X3 / X-4 SECTION MARKS SYMBOL

X1 - DESIGNATION OF PLAN OR SCHEMATIC (1, 2, 3,..)
X3 - DESIGNATION OF SECTION/ DETAIL (A, B, C,..)
X-4 - DRAWING WHERE SECTION / DETAIL / SCHEMATIC / PLAN IS DRAWN (M-2, S-2,..)

"PROFESSIONAL CERTIFICATION, I HEREBY CERTIFY THAT THESE DOCUMENTS WERE PREPARED OR APPROVED BY ME, AND THAT I AM A DULY LICENSED PROFESSIONAL ENGINEER UNDER THE LAWS OF THE STATE OF MARYLAND, LICENSE NO. 24478, EXPIRATION DATE: 10/28/11."

AS-BUILT

DWG. G-2

DEPARTMENT OF PUBLIC WORKS
HOWARD COUNTY, MARYLAND.

DIRECTOR OF PUBLIC WORKS — DATE 8/26/11
CHIEF, BUREAU OF ENGINEERING — DATE 8/2/11
CHIEF, BUREAU OF UTILITIES — DATE 8/26/11
CHIEF, UTILITY DESIGN DIVISION — DATE 8/2/11

PREPARED BY :
WHITMAN, REQUARDT & ASSOCIATES, LLP
801 South Caroline Street, Baltimore, MD 21231

WR&A

STATE OF MARYLAND — DENNIS JUDE KASSON — No. 24478 — PROFESSIONAL ENGINEER — 7/26/11

DES: JDV				
DRN: ACM				
CHK: JDV				
DATE: 6/8/11	WRA BY	1 NO.	AS-BUILTS REVISION	2/15 DATE

GENERAL NOTES, ABBREVIATIONS, LEGEND

600' SCALE TAX MAP NO. 16 BLOCK NO. 3

MARRIOTTSVILLE ROAD
ELEVATED TANK AND BOOSTER STATION
CAPITAL PROJECT NO. W8263
CONTRACT NO. 44-4509

ELECTION DISTRICT 3 — HOWARD COUNTY, MARYLAND

SCALE N/A

SHEET 2 OF 35

N:\13732\CADD\G1-13732-G01.dwg
Jul 25, 2011 - 3:00pm

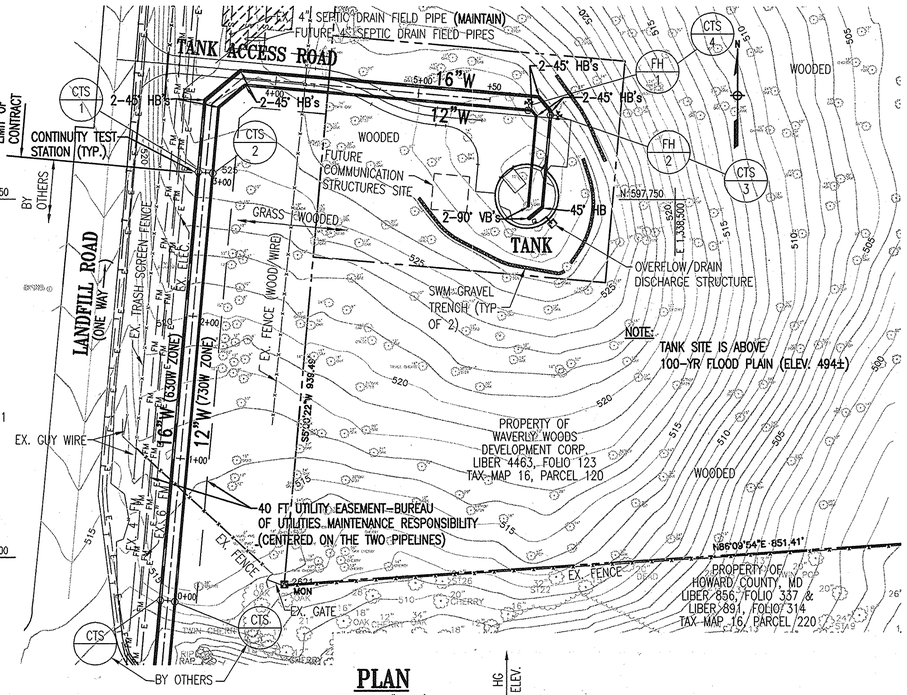

PLAN

SCALE: 1"= 50'

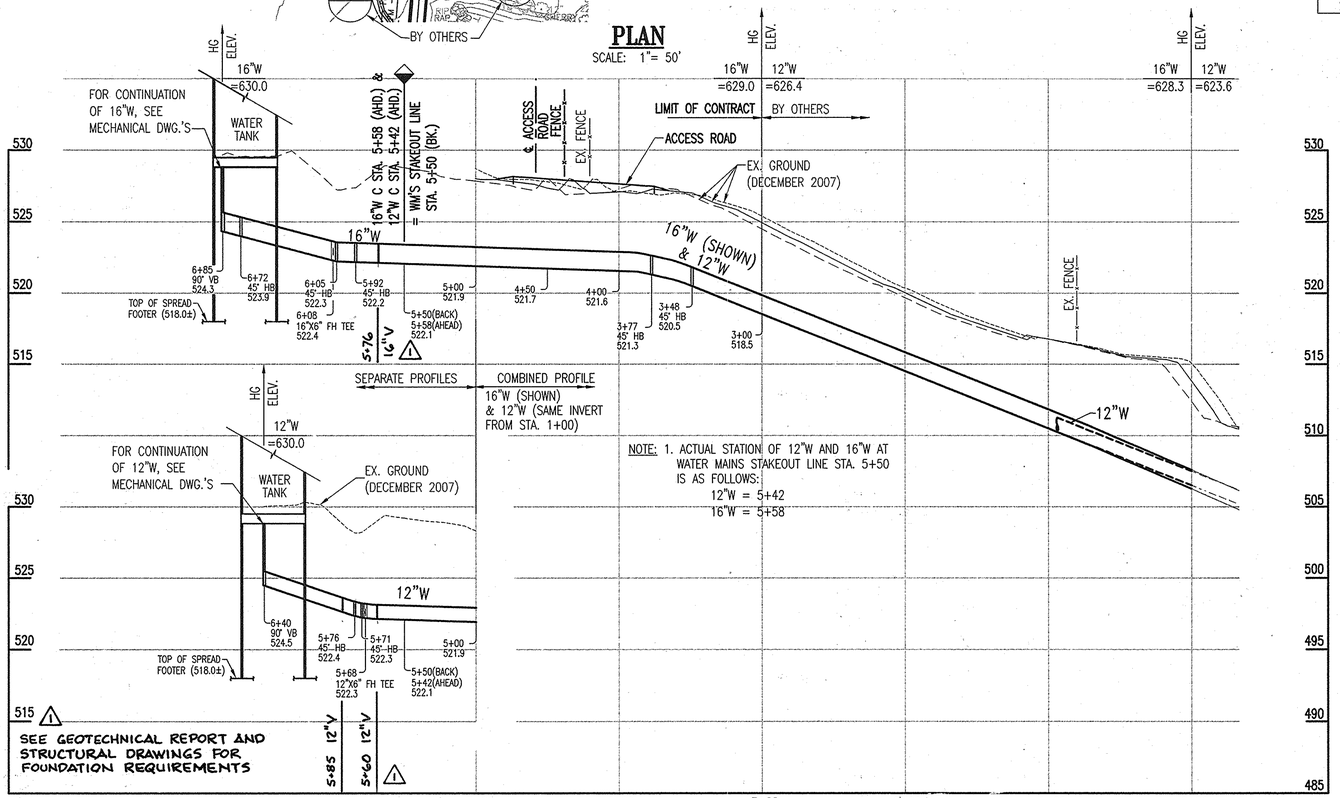

NOTE: 1. ACTUAL STATION OF 12"W AND 16"W AT WATER MAINS STAKEOUT LINE STA. 5+50 IS AS FOLLOWS:
12"W = 5+42
16"W = 5+58

PROFILE

HORIZ: 1"= 50'
VERT: 1"= 5'

NOTES:

1. EXISTING GROUND ON PIPE PROFILE:
   SHORT DASH = OVER ℄ 12"W
   LONG DASH = OVER ℄ 16"W
   SOLID LINE = AT ℄ BETWEEN 16"W & 12"W.
2. PIPE PROFILE FROM STA. 3+00 TO STA. 5+50 IS THAT OF THE WATER MAINS STAKEOUT LINE, WHICH IS THE MID-POINT BETWEEN ℄ 16"W & ℄ 12"W. PROFILE STATIONING BEYOND WATER MAINS STAKEOUT LINE STA. 5+50 IS OF THE ℄ 16"W & ℄ 12"W.
3. ALONG COMBINED PROFILE, THE PROFILE SHOWN IS THAT OF THE 16"W. THE 12"W INVERTS ARE THE SAME EXCEPT FROM STA. 0+00 TO STA. 1+00, AS SHOWN.
4. CONTINUITY TEST STATIONS ARE LOCATED ON THE 16"W AND 12"W AT STA. 3+00 AND AT THE TWO FIRE HYDRANTS.
5. FOR SEDIMENT CONTROL MEASURES AND LIMIT OF DISTURBANCE, INCLUDING TREE PROTECTION, SEE DWG.S C-2 AND SC-1.
6. FOR TRAVERSE PI/BENCHMARK INFORMATION, SEE DWG. C-2.
7. EXISTING UTILITIES AND OTHER FEATURES PERTINENT TO THE INSTALLATION OF THE WATER MAINS ARE MORE READILY EVIDENT ON DWG. C-2.
8. FOR LIMIT OF DISTURBANCE (LOD) FOR AREA OF PIPING (ACCESS ROAD AND TANK SITE), SEE DWG'S C-2 AND/OR SC-1.
9. ⚠1 INSTALL SACRIFICIAL ANODES AT ALL DUCTILE IRON FITTINGS PER HOWARD COUNTY STANDARDS.

16" & 12" WATER MAIN STAKEOUT LINE GEOMETRY*

APPROX. STATION	NORTH	EAST	REMARKS
3+00	597,768.40	1,338,172.01	LOC (APPROX.-CONNECT TO EX. 16"W & 12"W)
3+48	597,816.64	1,338,176.23	45° HB
3+77	597,834.82	1,338,197.90	45° HB
5+50	597,819.69	1,338,370.54	END OF WATER MAINS STAKEOUT LINE STATIONING:
			STAKEOUT LINE STA. 5+50 = ℄ 12"W STA. 5+42
			STAKEOUT LINE STA. 5+50 = ℄ 16"W STA. 5+58
℄ 12" WATER MAIN STAKEOUT GEOMETRY			
5+71	597,812.12	1,338,399.64	12"W 45° HB
5+76	597,808.29	1,338,402.86	12"W 45° HB
6+40	597,745.21	1,338,397.33	12"W 90° VB & ℄ TANK CONNECTION
℄ 16" WATER MAIN STAKEOUT GEOMETRY			
5+92	597,821.72	1,338,404.64	16"W 45° HB
6+05	597,811.55	1,338,413.18	16"W 45° HB
6+72	597,744.69	1,338,407.32	16"W 45° HB
6+85	597,736.49	1,338,397.56	16"W 90° VB & ℄ TANK CONNECTION

* FROM STA. 3+00 TO STA. 5+50, STAKEOUT IS OF MID-POINT OF THE 10.0' PARALLEL DISTANCE BETWEEN THE CENTERLINES OF THE 16"W AND 12"W. BEYOND STA. 5+50, THE STAKEOUT IS OF THE CENTERLINES OF THE 16"W AND 12"W. (NOTE THE PIPE STATION EQUALITIES AT STA. 5+50(BK.).)

FIRE HYDRANT STANDPIPE HEIGHT**

FH NO.	PIPE STA.	STANDPIPE INV.	APPROX. EX. GRADE ELEV.	STANDPIPE HEIGHT**
1	5+69	522.2	528.4	6.2'
2	6+05	522.3	527.5	5.2'

** FROM STANDPIPE INV. TO ℄ OF FH BASE FLANGE.

GRAPHIC SCALES

50' 25' 0 50' 100' — HORIZ. SCALE: 1" = 50'

5' 0 5' 10' — VERT. SCALE: 1" = 5'

AS-BUILT

"PROFESSIONAL CERTIFICATION, I HEREBY CERTIFY THAT THESE DOCUMENTS WERE PREPARED OR APPROVED BY ME, AND THAT I AM A DULY LICENSED PROFESSIONAL ENGINEER UNDER THE LAWS OF THE STATE OF MARYLAND, LICENSE NO. 24478, EXPIRATION DATE: 10/28/11."

DEPARTMENT OF PUBLIC WORKS
HOWARD COUNTY, MARYLAND.

DIRECTOR OF PUBLIC WORKS — DATE 8/26/11
CHIEF, BUREAU OF ENGINEERING — DATE 8/9/11
CHIEF, BUREAU OF UTILITIES — DATE 8/9/11
CHIEF, UTILITY DESIGN DIVISION — DATE 8/9/11

PREPARED BY :
WHITMAN, REQUARDT & ASSOCIATES, LLP
801 South Caroline Street, Baltimore, MD 21231
WR&A

STATE OF MARYLAND — WILLIAM JUDE VASSOR — No. 24478 — PROFESSIONAL ENGINEER — 7/26/11

DES: JDV
DRN: ACM
CHK: JDV
DATE: 6/8/11

BY	NO.	REVISION	DATE
WRA	⚠1	AS-BUILTS	2/15

WATER MAINS
PLAN AND PROFILE

600' SCALE MAP NO. 16 BLOCK NO. 3

MARRIOTTSVILLE ROAD
ELEVATED TANK AND BOOSTER STATION
CAPITAL PROJECT NO. W8263
CONTRACT NO. 44-4509

ELECTION DISTRICT 3 — HOWARD COUNTY, MARYLAND

DWG. C-1

SCALE AS SHOWN

SHEET 3 OF 35

N:\13732\CADD\C2-13732-C01_tank.dwg
Jul 25, 2011 - 2:00pm

TANK ACCESS ROAD:
STA. 0+00 = ℄ LANDFILL ROAD. ROAD GRADE INITIALLY IS 10.0% UP FROM SWALE AT STA. 0+22. THE REMAINDER OF THE ROAD IS APPROXIMATELY AT GRADE, AS SHOWN.

MODIFICATION TO EXISTING TRASH SCREEN FENCE, INCLUDING INSTALLATION OF 16' ROLL-GATE.

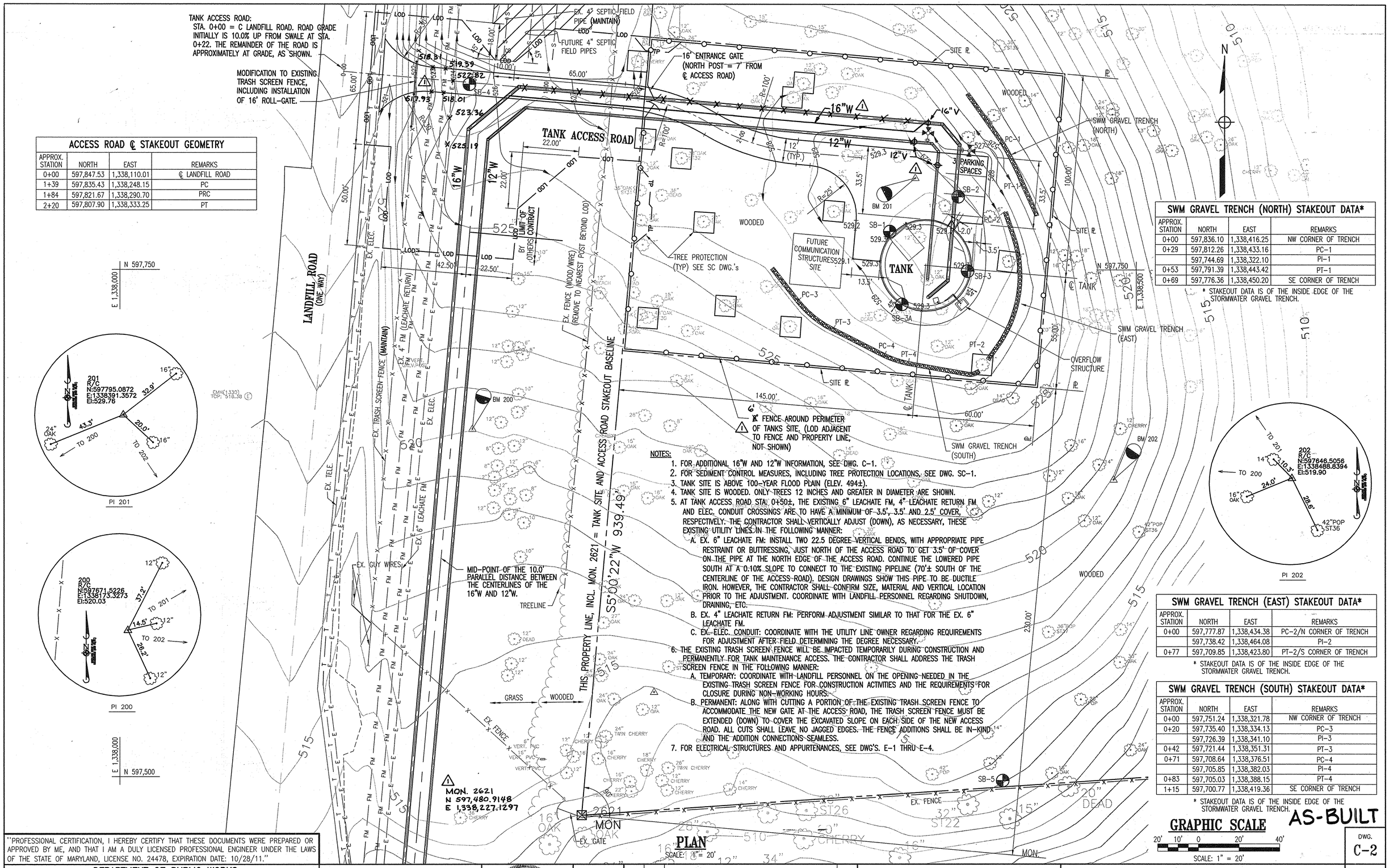

ACCESS ROAD ℄ STAKEOUT GEOMETRY			
APPROX. STATION	NORTH	EAST	REMARKS
0+00	597,847.53	1,338,110.01	℄ LANDFILL ROAD
1+39	597,835.43	1,338,248.15	PC
1+84	597,821.67	1,338,290.70	PRC
2+20	597,807.90	1,338,333.25	PT

SWM GRAVEL TRENCH (NORTH) STAKEOUT DATA*			
APPROX. STATION	NORTH	EAST	REMARKS
0+00	597,836.10	1,338,416.25	NW CORNER OF TRENCH
0+29	597,812.26	1,338,433.16	PC-1
	597,744.69	1,338,322.10	PI-1
0+53	597,791.39	1,338,443.42	PT-1
0+69	597,776.36	1,338,450.20	SE CORNER OF TRENCH

* STAKEOUT DATA IS OF THE INSIDE EDGE OF THE STORMWATER GRAVEL TRENCH.

SWM GRAVEL TRENCH (EAST) STAKEOUT DATA*			
APPROX. STATION	NORTH	EAST	REMARKS
0+00	597,777.87	1,338,434.38	PC-2/N CORNER OF TRENCH
	597,738.42	1,338,464.08	PI-2
0+77	597,709.85	1,338,423.80	PT-2/S CORNER OF TRENCH

* STAKEOUT DATA IS OF THE INSIDE EDGE OF THE STORMWATER GRAVEL TRENCH.

SWM GRAVEL TRENCH (SOUTH) STAKEOUT DATA*			
APPROX. STATION	NORTH	EAST	REMARKS
0+00	597,751.24	1,338,321.78	NW CORNER OF TRENCH
0+20	597,735.40	1,338,334.13	PC-3
	597,726.39	1,338,341.10	PI-3
0+42	597,721.44	1,338,351.31	PT-3
0+71	597,708.64	1,338,376.51	PC-4
	597,705.85	1,338,382.03	PI-4
0+83	597,705.03	1,338,388.15	PT-4
1+15	597,700.77	1,338,419.36	SE CORNER OF TRENCH

* STAKEOUT DATA IS OF THE INSIDE EDGE OF THE STORMWATER GRAVEL TRENCH.

NOTES:

1. FOR ADDITIONAL 16"W AND 12"W INFORMATION, SEE DWG. C-1.
2. FOR SEDIMENT CONTROL MEASURES, INCLUDING TREE PROTECTION LOCATIONS, SEE DWG. SC-1.
3. TANK SITE IS ABOVE 100-YEAR FLOOD PLAIN (ELEV. 494±).
4. TANK SITE IS WOODED. ONLY TREES 12 INCHES AND GREATER IN DIAMETER ARE SHOWN.
5. AT TANK ACCESS ROAD STA. 0+50±, THE EXISTING 6" LEACHATE FM, 4" LEACHATE RETURN FM AND ELEC. CONDUIT CROSSINGS ARE TO HAVE A MINIMUM OF 3.5', 3.5' AND 2.5' COVER, RESPECTIVELY. THE CONTRACTOR SHALL VERTICALLY ADJUST (DOWN), AS NECESSARY, THESE EXISTING UTILITY LINES IN THE FOLLOWING MANNER:
   A. EX. 6" LEACHATE FM: INSTALL TWO 22.5 DEGREE VERTICAL BENDS, WITH APPROPRIATE PIPE RESTRAINT OR BUTTRESSING, JUST NORTH OF THE ACCESS ROAD TO GET 3.5' OF COVER ON THE PIPE AT THE NORTH EDGE OF THE ACCESS ROAD. CONTINUE THE LOWERED PIPE SOUTH AT A 0.10% SLOPE TO CONNECT TO THE EXISTING PIPELINE (70'± SOUTH OF THE CENTERLINE OF THE ACCESS ROAD). DESIGN DRAWINGS SHOW THIS PIPE TO BE DUCTILE IRON. HOWEVER, THE CONTRACTOR SHALL CONFIRM SIZE, MATERIAL AND VERTICAL LOCATION PRIOR TO THE ADJUSTMENT. COORDINATE WITH LANDFILL PERSONNEL REGARDING SHUTDOWN, DRAINING, ETC.
   B. EX. 4" LEACHATE RETURN FM: PERFORM ADJUSTMENT SIMILAR TO THAT FOR THE EX. 6" LEACHATE FM.
   C. EX. ELEC. CONDUIT: COORDINATE WITH THE UTILITY LINE OWNER REGARDING REQUIREMENTS FOR ADJUSTMENT AFTER FIELD DETERMINING THE DEGREE NECESSARY.
6. THE EXISTING TRASH SCREEN FENCE WILL BE IMPACTED TEMPORARILY DURING CONSTRUCTION AND PERMANENTLY FOR TANK MAINTENANCE ACCESS. THE CONTRACTOR SHALL ADDRESS THE TRASH SCREEN FENCE IN THE FOLLOWING MANNER:
   A. TEMPORARY: COORDINATE WITH LANDFILL PERSONNEL ON THE OPENING NEEDED IN THE EXISTING TRASH SCREEN FENCE FOR CONSTRUCTION ACTIVITIES AND THE REQUIREMENTS FOR CLOSURE DURING NON-WORKING HOURS.
   B. PERMANENT: ALONG WITH CUTTING A PORTION OF THE EXISTING TRASH SCREEN FENCE TO ACCOMMODATE THE NEW GATE AT THE ACCESS ROAD, THE TRASH SCREEN FENCE MUST BE EXTENDED (DOWN) TO COVER THE EXCAVATED SLOPE ON EACH SIDE OF THE NEW ACCESS ROAD. ALL CUTS SHALL LEAVE NO JAGGED EDGES. THE FENCE ADDITIONS SHALL BE IN-KIND AND THE ADDITION CONNECTIONS SEAMLESS.
7. FOR ELECTRICAL STRUCTURES AND APPURTENANCES, SEE DWG'S. E-1 THRU E-4.

GRAPHIC SCALE
20' 10' 0 20' 40'
SCALE: 1" = 20'

AS-BUILT

"PROFESSIONAL CERTIFICATION, I HEREBY CERTIFY THAT THESE DOCUMENTS WERE PREPARED OR APPROVED BY ME, AND THAT I AM A DULY LICENSED PROFESSIONAL ENGINEER UNDER THE LAWS OF THE STATE OF MARYLAND, LICENSE NO. 24478, EXPIRATION DATE: 10/28/11."

DEPARTMENT OF PUBLIC WORKS
HOWARD COUNTY, MARYLAND.

DIRECTOR OF PUBLIC WORKS — DATE 8/26/11
CHIEF, BUREAU OF ENGINEERING — DATE 8/29/11
CHIEF, BUREAU OF UTILITIES — DATE 8/29/11
CHIEF, UTILITY DESIGN DIVISION — DATE 8/29/11

PREPARED BY :
WHITMAN, REQUARDT & ASSOCIATES, LLP
801 South Caroline Street, Baltimore, MD 21231
WR&A

STATE OF MARYLAND — JOHN TODD HASSON — No. 24478 — PROFESSIONAL ENGINEER — 7/26/11

DES: JDV
DRN: ACM
CHK: JDV
DATE: 6/8/11

BY	NO.	REVISION	DATE
WRA	1	AS-BUILTS	2/15

SITE PLAN

600' SCALE MAP NO. 16 BLOCK NO. 3

MARRIOTTSVILLE ROAD
ELEVATED TANK AND BOOSTER STATION
CAPITAL PROJECT NO. W8263
CONTRACT NO. 44-4509

ELECTION DISTRICT 3 — HOWARD COUNTY, MARYLAND

SCALE AS SHOWN

SHEET 4 OF 35

DWG. C-2

N:\13732\CADD\C2-13732-C01_tank.dwg
Jul 25, 2011 - 2:00pm

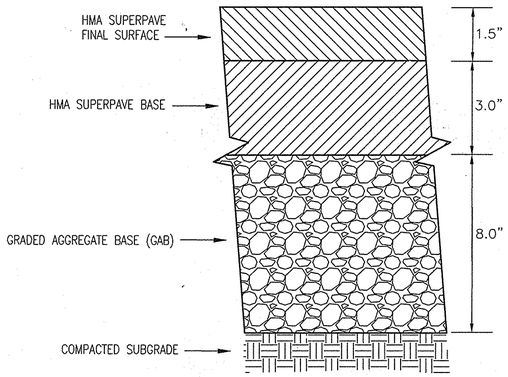

TYPICAL SECTION - ACCESS ROAD

NOT TO SCALE

NOTE: PAVING SECTION SHALL BE BY PAVING SECTION NUMBER P-2 ON DETAIL R-2.01 IN THE "HOWARD COUNTY VOLUME IV DESIGN MANUAL, STANDARD SPECIFICATIONS AND DETAILS FOR CONSTRUCTION."

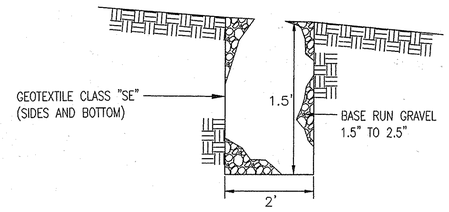

DETAIL - SWM GRAVEL DITCH

NOT TO SCALE

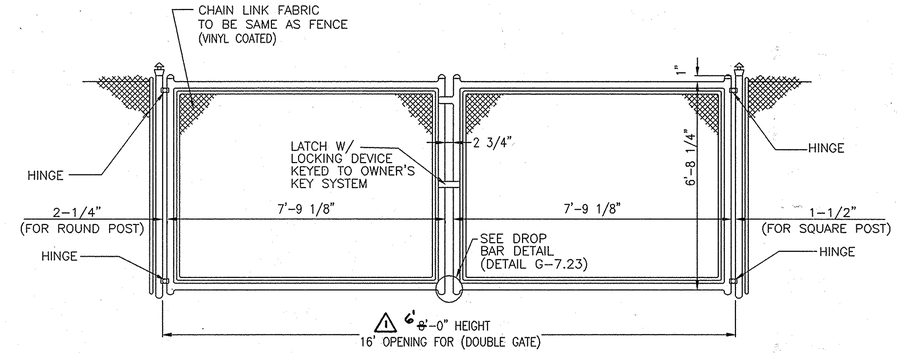

DETAIL - 16' ENTRANCE GATE

NOT TO SCALE

NOTE: SEE "HOWARD COUNTY VOLUME IV DESIGN MANUAL, STANDARD SPECIFICATIONS AND DETAILS FOR CONSTRUCTION" FOR POST SIZING AND FENCING REQUIREMENTS, INCLUDING DETAIL G-7.21.

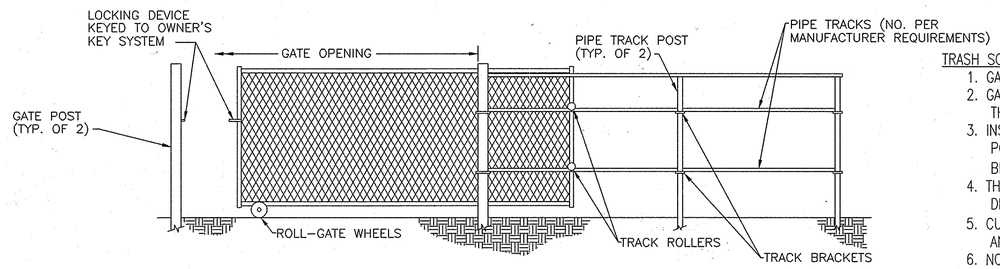

DETAIL - TRASH SCREEN FENCE GATE

NOT TO SCALE

(ROLL-GATE SHOWN)

TRASH SCREEN FENCE GATE NOTES:

1. GATE SHALL BE ROLL-, OVERHEAD SLIDE- OR CANTILEVER-TYPE.
2. GATE SHALL BE 16 FT. WIDE BY 14 FT. HIGH WITH THE GATE OPENING CENTERED ON THE CENTERLINE OF THE TANK ACCESS ROAD.
3. INSTALL GATE IMMEDIATELY ADJACENT TO, AND ON THE WEST SIDE OF, THE EXISTING TRASH FENCE. GATE POST AND PIPE TRACK POST DIAMETERS, GROUND PENETRATION DEPTHS AND FOOTING SIZES, ETC. SHALL BE AS PER GATE MANUFACTURER'S RECOMMENDATIONS.
4. THE GATE APPURTENANCES SHALL AS CLOSELY AS POSSIBLE MATCH HOWARD COUNTY STANDARD DETAIL G-7.21 - CHAIN LINK FENCE.
5. CUT THE TRASH FENCE MESH TO MATCH THAT OF THE GATE OPENING (16 FT. WIDE BY 14+ FT. HIGH), AND FRAME THE OPENING WITH MATERIAL SUCH AS STANDARD CHAIN LINK FENCE STRETCHER BAR.
6. NORTH AND SOUTH OF THE GATE POSTS, EXTEND TRASH SCREEN FENCE MESH, IN KIND, TO FINISHED GRADE ELEVATION.
7. CONTRACTOR SHALL COORDINATE WITH OWNER REGARDING ANY SCREENING CONNECTION REQUIRED BETWEEN GATE AND EXISTING FENCING AND/OR FLEXIBLE FLAP FROM GATE TO ACCESS ROAD.
8. CHAIN LINK GATE SHALL BE AS MANUFACTURED BY MERCHANT METALS; TYMETAL CORP.; OR APPROVED EQUAL.

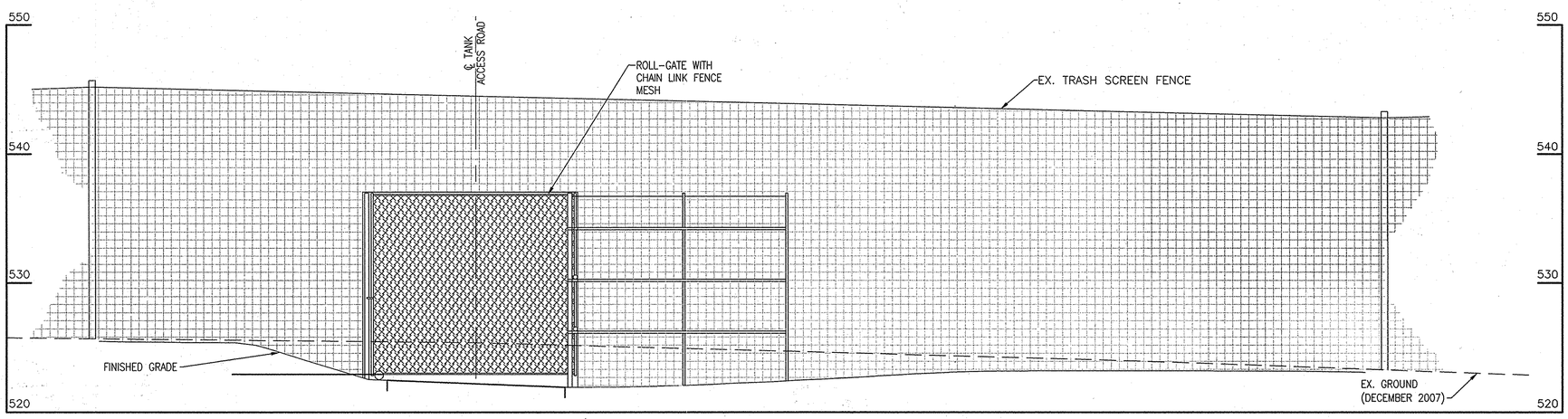

SECTION - TRASH SCREEN FENCE GATE - LOOKING EAST

SCALE: 1" = 5'

(ROLL-GATE SHOWN)

AS-BUILT

"PROFESSIONAL CERTIFICATION, I HEREBY CERTIFY THAT THESE DOCUMENTS WERE PREPARED OR APPROVED BY ME, AND THAT I AM A DULY LICENSED PROFESSIONAL ENGINEER UNDER THE LAWS OF THE STATE OF MARYLAND, LICENSE NO. 24478, EXPIRATION DATE: 10/28/11."

DEPARTMENT OF PUBLIC WORKS
HOWARD COUNTY, MARYLAND.

DIRECTOR OF PUBLIC WORKS — DATE 8/26/11
CHIEF, BUREAU OF ENGINEERING — DATE 8/9/11
CHIEF, BUREAU OF UTILITIES — DATE
CHIEF, UTILITY DESIGN DIVISION — DATE 8/9/11

PREPARED BY :
WHITMAN, REQUARDT & ASSOCIATES, LLP
801 South Caroline Street, Baltimore, MD 21231

STATE OF MARYLAND — JOHN JUDE HANSON — No. 24478 — PROFESSIONAL ENGINEER — 7/12/11

DES: JDV				
DRN: ACM				
CHK: JDV				
DATE: 6/8/11	WRA BY	1 NO.	AS-BUILTS REVISION	2/15 DATE

CIVIL DETAILS

600' SCALE MAP NO. 16 BLOCK NO. 3

MARRIOTTSVILLE ROAD
ELEVATED TANK AND BOOSTER STATION
CAPITAL PROJECT NO. W8263
CONTRACT NO. 44-4509

ELECTION DISTRICT 3 — HOWARD COUNTY, MARYLAND

DWG. C-3

SCALE AS SHOWN

SHEET 5 OF 35

N:\13732\CADD\C2-13732-C01_tank.dwg

NOTES:

1. ALL TRENCHING OPERATIONS ARE TO BE LIMITED TO THAT WHICH CAN BE BACKFILLED AND STABILIZED AT THE END OF EACH WORKING DAY.
2. SILT FENCE SHALL BE CONSTRUCTED IN "J" FORMATIONS WHERE INDICATED AT A MAXIMUM INTERVAL OF 50'.
3. SHIFT STABILIZED CONSTRUCTION ENTRANCE TO ACCESS ROAD AS CONSTRUCTION PROGRESSES.
4. NEW FENCING AROUND PERIMETER OF TANK SITE NOT SHOWN ON THIS PLAN. (SEE DWG. C-2.)
5. FOR LOD STAKEOUT, SEE DWG. C-2.

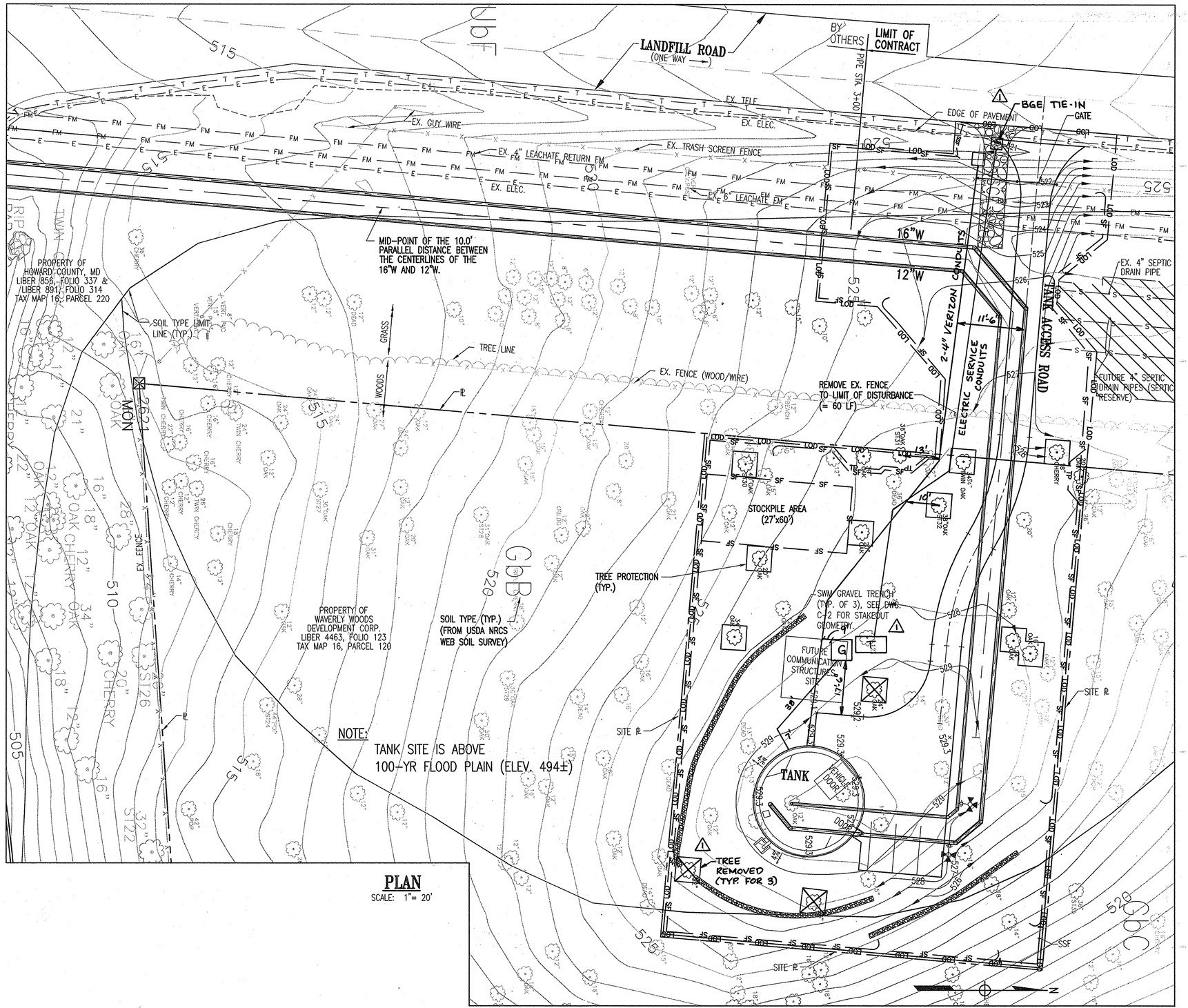

PLAN
SCALE: 1"= 20'

GRAPHIC SCALE

20' 10' 0 20' 40'

SCALE: 1" = 20'

"PROFESSIONAL CERTIFICATION, I HEREBY CERTIFY THAT THESE DOCUMENTS WERE PREPARED OR APPROVED BY ME, AND THAT I AM A DULY LICENSED PROFESSIONAL ENGINEER UNDER THE LAWS OF THE STATE OF MARYLAND, LICENSE NO. 24478, EXPIRATION DATE: 10/28/11."

DEPARTMENT OF PUBLIC WORKS
HOWARD COUNTY, MARYLAND.

DIRECTOR OF PUBLIC WORKS — DATE 8/26/11
CHIEF, BUREAU OF ENGINEERING — DATE 8/9/11
CHIEF, BUREAU OF UTILITIES — DATE 8/24/11
CHIEF, UTILITY DESIGN DIVISION — DATE 8/9/11

PREPARED BY:
WHITMAN, REQUARDT & ASSOCIATES, LLP
801 South Caroline Street, Baltimore, MD 21231

WR&A

STATE OF MARYLAND — DENNIS JUDE HASSON — PROFESSIONAL ENGINEER — 7/26/11

DES: JDV				
DRN: ACM				
CHK: JDV				
DATE: 6/8/11	WRA BY	1 NO.	AS-BUILTS REVISION	2/15 DATE

EROSION AND SEDIMENT CONTROL PLAN

600' SCALE MAP NO. 16 BLOCK NO. 3

MARRIOTTSVILLE ROAD
ELEVATED TANK AND BOOSTER STATION
CAPITAL PROJECT NO. W8263
CONTRACT NO. 44-4509

ELECTION DISTRICT 3 HOWARD COUNTY, MARYLAND

AS-BUILT

DWG. SC-1

SCALE AS SHOWN

SHEET 6 OF 35

N:\13732\CADD\SC1-13732-SC04_tank.dwg

EROSION AND SEDIMENT CONTROL - GENERAL NOTES

1. HOWARD COUNTY NOTIFICATION

THE CONTRACTOR MUST NOTIFY THE HOWARD COUNTY ENVIRONMENTAL COMPLIANCE SECTION IN WRITING AND/OR BY TELEPHONE (410) 313-1880 AT THE FOLLOWING POINTS:
- PRE-CONSTRUCTION MEETING (MINIMUM 5 DAYS PRIOR TO START OF CONSTRUCTION)
- FOLLOWING INSTALLATION OF INITIAL SEDIMENT CONTROL MEASURES
- PRIOR TO REMOVAL OR MODIFICATION OF ANY SEDIMENT CONTROL DEVICE
- PRIOR TO REMOVAL OF ALL SEDIMENT CONTROL DEVICES
- PRIOR TO FINAL ACCEPTANCE BY COUNTY.

2. STANDARDS AND SPECIFICATIONS

THIS PLAN IS DESIGNED AND SHALL BE CONSTRUCTED IN ACCORDANCE WITH THE 1994 MARYLAND STANDARDS AND SPECIFICATIONS FOR SOIL EROSION AND SEDIMENT CONTROL AND ALL REVISIONS THEREOF AND ADDITIONS THERETO INCLUDED IN THE CONTRACT DOCUMENTS. THE CONTRACTOR SHALL HAVE A COPY OF THE 1994 "MARYLAND STANDARDS AND SPECIFICATIONS FOR SOIL EROSION AND SEDIMENT CONTROL" ON THE SITE.

3. INGRESS/EGRESS CONTROLS

THE CONTRACTOR SHALL PROTECT ALL POINTS OF CONSTRUCTION INGRESS AND EGRESS TO PREVENT THE DEPOSITION OF MATERIALS ON PUBLIC ROADS. ALL MATERIALS DEPOSITED ON PUBLIC ROADS SHALL BE MECHANICALLY REMOVED IMMEDIATELY. THE FLUSHING OF ROAD SURFACES IS PROHIBITED.

TYPICALLY, ALL INGRESS AND EGRESS POINTS SHALL BE CONTROLLED THROUGH THE USE OF A "STABILIZED CONSTRUCTION ENTRANCE."

4. INSPECTION

THE CONTRACTOR SHALL INSPECT DAILY AND MAINTAIN CONTINUOUSLY IN AN EFFECTIVE OPERATING CONDITION ALL EROSION AND SEDIMENT CONTROL MEASURES.

5. SHUTDOWNS AND OR PENALTIES

TOTAL COMPLIANCE WITH THE APPROVED EROSION AND SEDIMENT CONTROL PLAN IS EXPECTED AT ALL TIMES. IN CASES WHERE THE CONTRACTOR IS FOUND TO BE IN NON-COMPLIANCE THE COUNTY MAY TAKE STEPS TO IMPOSE SELECTED OR TOTAL SHUTDOWNS AND IMPOSE PER DAY PENALTIES FOR NON-COMPLIANCE.

THE COUNTY ENGINEER CAN IMPOSE A TOTAL OR PARTIAL SHUTDOWN IF THE PROJECT MAY ADVERSELY IMPACT THE WATERS OF THE STATE.

6. RECORD KEEPING

THE PROJECT'S APPROVAL LETTER, APPROVED EROSION AND SEDIMENT CONTROL PLANS, APPROVED CHANGE REQUESTS, DAILY LOG BOOKS AND TEST REPORTS WILL BE AVAILABLE AT THE SITE FOR INSPECTION BY DULY AUTHORIZED OFFICIALS OF MDE.

EROSION AND SEDIMENT CONTROL EXCAVATION

SILT REMOVED FROM CONTROL DEVICES SHALL BE PLACED IN AN APPROVED WASTE SITE EITHER ON OR OFF THE PROJECT. MATERIAL STORED ON SITE MAY BE REUSED ONCE IT IS DRIED AND IF IT MEETS COUNTY REQUIREMENTS FOR EMBANKMENT OR ANY UNSPECIFIED NEED.

1994 MARYLAND STANDARDS AND SPECIFICATIONS FOR SOIL EROSION AND SEDIMENT CONTROL STANDARD REFERENCE DETAILS

DETAIL NO.	TITLE	PAGE
22	SILT FENCE	E-15-3, 3A
24	STABILIZED CONSTRUCTION ENTRANCE	F-17-3
33	SUPER SILT FENCE	H-26-3, 3A

OTHER PROTECTION MEASURES

--	TREE PROTECTION (SEE DWG. SC-3)	--

9. OFF-SITE UTILITY WORK

SEDIMENT CONTROL FOR UTILITY CONSTRUCTION IN AREAS OUTSIDE OF DESIGNED CONTROLS SHALL FOLLOW THESE ADDITIONAL BEST MANAGEMENT PRACTICES:

(a) CALL "MISS UTILITY" AT 1-800-257-7777 48 HOURS PRIOR TO THE START OF WORK

(b) EXCAVATED MATERIAL SHALL BE PLACED ON THE HIGH SIDE OF THE TRENCH.

(c) TRENCHING TO BE LIMITED TO THAT LENGTH WHICH CAN BE BACKFILLED AND STABILIZED AT THE END OF EACH WORKING DAY, I.E., TRENCHES SHALL NOT BE LEFT OPEN.

10. SENSITIVE AREAS

NO CONSTRUCTION ACTIVITIES SHALL BE UNDERTAKEN WITHIN SPECIFIED SENSITIVE AREAS OF THE PROJECT WITHOUT PRIOR NOTIFICATION OF THE ENGINEER. ALL WORK IN THESE AREAS SHALL BE MONITORED BY A RESPONSIBLE PARTY DESIGNATED BY THE CONTRACTOR TO ASSURE THAT REASONABLE CARE IS TAKEN IN OR ADJACENT TO THESE AREAS. AREAS CONSIDERED SENSITIVE ARE DEFINED AS: FLOODPLAINS, WETLANDS (TIDAL, NONTIDAL AND ASSOCIATED BUFFERS) CRITICAL AREAS, FORESTED AREAS, ARCHEOLOGICAL SITES, HISTORIC SITES, PARKLAND AND OPEN WATER.

11. SITE INFORMATION

* (NOT FOR BIDDING PURPOSES)

TOTAL AREA OF SITE	0.98	ACRES
AREA DISTURBED	0.73	ACRES
AREA TO BE PAVED	0.13	ACRES
TOTAL CUT	361.0	CU. YDS.
TOTAL FILL	71.0	CU. YDS.
OFFSITE WASTE/BORROW AREA LOCATION (IF KNOWN)	NOT KNOWN	ACRES

12. CHECKLIST FOR REQUIRED INSPECTIONS

** NOTICE **
THIS LIST IS FOR THE SEQUENCE OF CONSTRUCTION ONLY. HOWARD COUNTY ASSUMES NO RESPONSIBILITY FOR IMPROPER INSTALLATION OF ANY ITEM ON THIS CHECKLIST. A PROFESSIONAL ENGINEER OR THEIR DESIGNEE MUST CERTIFY ALL ASPECTS OF CONSTRUCTION AND CONFORMANCE TO DESIGN REQUIREMENTS.

TYPE OF INSPECTION

1. PRE-CONSTRUCTION MEETING
2. COMPLETION OF SEDIMENT CONTROL MEASURES (IF CONSTRUCTING A BASIN, SEE #6)
3. PRIOR TO MODIFICATION OR REMOVAL OF SEDIMENT CONTROL
4. INFILTRATION SYSTEMS (NOT APPLICABLE ON THIS CONTRACT)
   - A. SITE READINESS PER SEQUENCE OF CONSTRUCTION
   - B. INFILTRATION AREA PROTECTED FROM SEDIMENTATION
   - C. DIMENSIONS
   - D. FILTERING MATERIAL (TYPE/DEPTH)
   - E. FILL MATERIAL
   - F. SIZE, PLACEMENT, TYPE OF PIPING (IF APPLICABLE)
   - G. OBSERVANT WELL
   - H. COVER/STABILIZATION
5. OPEN CHANNEL FLOW ATTENUATION (NOT APPLICABLE ON THIS CONTRACT)
   - A. SITE READINESS PER SEQUENCE OF CONSTRUCTION
   - B. CROSS-SECTION CONFORMATION
   - C. MATERIAL (TYPE/SIZE)
   - D. STABILIZATION
6. RETENTION/DETENTION STRUCTURES, BASINS/PONDS (NOT APPLICABLE ON THIS CONTRACT)

STANDARD SYMBOLS

EARTH DIKE — A-2 / B-3
TEMPORARY SWALE — A-2 / B-3
PERIMETER DIKE/SWALE — PD/S-1
STONE CHECK DAM — CD
STONE OUTLET STRUCTURE — TSOS
SILT FENCE* — SF
SUPER SILT FENCE* — SSF
STRAW BALES — SB
STANDARD INLET PROTECTION — SIP
AT GRADE INLET PROTECTION — AGIP
CURB INLET PROTECTION — CIP
MEDIAN INLET PROTECTION — MIP
GABION INFLOW PROTECTION — GM
RIPRAP INFLOW PROTECTION — RRP
SUMP PIT — SP
REMOVABLE PUMPING STATION — RPS
PORTABLE SEDIMENT TANK — PST
INTERCEPTOR BERM — IB
TEMPORARY BERM — TB
PIPE SLOPE DRAIN — PSD-12
STABILIZED CONSTRUCTION ENTRANCE* — SCE
SOIL STABILIZATION MATTING
PLACED RIPRAP DITCH
GABIONS
CONCRETE GUTTER
STONE OUTLET SEDIMENT TRAP — SOST
RIPRAP OUTLET SEDIMENT TRAP — ROST
STONE/RIPRAP OUTLET SEDIMENT TRAP — SROST
PIPE OUTLET SEDIMENT TRAP — POST
LIMIT OF DISTURBANCE* — LOD
EXISTING CONTOURS* — 100
PROPOSED CONTOURS* — 100
TREE PROTECTION* — TP
SWM GRAVEL TRENCH*

* = PERTINENT TO THIS PROJECT.

BEST MANAGEMENT PRACTICES FOR WORKING IN NONTIDAL WETLANDS, NONTIDAL WETLANDS BUFFERS, WATERWAYS, AND 100-YEAR FLOODPLAINS

NOTE:
THE MARRIOTTSVILLE ROAD TANK SITE IS DEVOID ON ANY OF THESE ENVIRONMENTALLY SENSITIVE FEATURES.

OVERALL PROJECT SEQUENCE OF CONSTRUCTION

1. CALL 'MISS UTILITY' AT 1-800-257-7777 48 HOURS BEFORE ANY CONSTRUCTION IS TO BEGIN.
2. NOTIFY THE HOWARD COUNTY CONSTRUCTION INSPECTION DIVISIONS AT LEAST 5 DAYS PRIOR TO THE START OF CONSTRUCTION TO ARRANGE A PRE-CONSTRUCTION MEETING.
3. PLACE STABILIZED CONSTRUCTION ENTRANCES AT ALL POINTS OF ACCESS FROM EXISTING ROADS.
4. INSTALL AND STABILIZE SEDIMENT CONTROL MEASURES, CONSISTING PRIMARILY OF SILT FENCE ALONG THE TANK SITE PROPERTY LINE AND LIMIT OF DISTURBANCE LINE FOR THE ACCESS ROAD AND APPROACHING 16" AND 12" WATER MAINS. (SEE DWG SC-1).
5. STOCKPILE TOPSOIL.
6. EXCAVATE FOR AND INSTALL ACCESS ROAD, WATERMAINS, TANK AND ASSOCIATED STRUCTURES.
7. EXCAVATION FROM PIPE TRENCHING OPERATIONS SHALL BE PLACED ON THE UPHILL SIDE OF THE TRENCH.
8. VEGETATIVELY STABILIZE BACKFILLED TRENCH AND STRUCTURE SITES AS WORK PROGRESSES.
9. NOTIFY ENVIRONMENTAL COMPLIANCE SECTION (ECS, 410-313-1880) AND OBTAIN APPROVAL TO REMOVE SEDIMENT CONTROL MEASURES
10. PERMANENTLY STABILIZE ANY AREAS DISTURBED DURING CLEANUP ACTIVITIES.

"PROFESSIONAL CERTIFICATION, I HEREBY CERTIFY THAT THESE DOCUMENTS WERE PREPARED OR APPROVED BY ME, AND THAT I AM A DULY LICENSED PROFESSIONAL ENGINEER UNDER THE LAWS OF THE STATE OF MARYLAND, LICENSE NO. 24478, EXPIRATION DATE: 10/28/11."

DEPARTMENT OF PUBLIC WORKS
HOWARD COUNTY, MARYLAND

DIRECTOR OF PUBLIC WORKS — DATE 8/2/11
CHIEF, BUREAU OF ENGINEERING — DATE 8/2/11
CHIEF, BUREAU OF UTILITIES — DATE
CHIEF, UTILITY DESIGN DIVISION — DATE 8/2/11

PREPARED BY :
WHITMAN, REQUARDT & ASSOCIATES, LLP
801 South Caroline Street, Baltimore, MD 21231
WRA

STATE OF MARYLAND — DENNIS TUDOR HANSON — No. 24478 — PROFESSIONAL ENGINEER — 7/22/11

DES: JDV				
DRN: ACM				
CHK: JDV				
DATE: 6/8/11	WRA BY	1 NO.	AS-BUILTS REVISION	8/15 DATE

EROSION AND SEDIMENT CONTROL
GENERAL NOTES

600' SCALE MAP NO. 16 BLOCK NO. 3

MARRIOTTSVILLE ROAD
ELEVATED TANK AND BOOSTER STATION
CAPITAL PROJECT NO. W8263
CONTRACT NO. 44-4509

ELECTION DISTRICT 3 — HOWARD COUNTY, MARYLAND

AS-BUILT

DWG. SC-2

SCALE: N/A

SHEET 7 OF 35

N:\13732\CADD\SC1-13732-SC04_tank.dwg

SECTION II – TEMPORARY SEEDING

VEGETATION – ANNUAL GRASS OR GRAIN USED TO PROVIDE COVER ON DISTURBED AREAS FOR UP TO 12 MONTHS. FOR LONGER DURATION OF VEGETATIVE COVER, PERMANENT SEEDING IS REQUIRED.

A. SEED MIXTURES – TEMPORARY SEEDING

I. SELECT ONE OR MORE OF THE SPECIES OR MIXTURES LISTED IN NRCS–MD TABLE 1 FOR THE APPROPRIATE PLANT HARDINESS ZONE AND ENTER THEM IN THE TEMPORARY SEEDING SUMMARY BELOW, ALONG WITH APPLICATION RATES, SEEDING DATES AND SEEDING DEPTHS. IF THIS SUMMARY IS NOT PUT ON THE PLANS AND COMPLETED, THEN TABLE 1 MUST BE PUT ON THE PLANS.

II. FOR SITES HAVING SOIL TESTS PERFORMED, THE RATES SHOWN ON THIS TABLE SHALL BE DELETED AND THE RATES RECOMMENDED BY THE TESTING AGENCY SHALL BE WRITTEN IN. SOIL TESTS ARE NOT REQUIRED FOR TEMPORARY SEEDING.

TEMPORARY SEEDING SUMMARY

SEED MIXTURE (HARDINESS ZONE 6B) FROM NRCS–MD TABLE 1					FERTILIZER RATE (10–10–10)	LIME RATE
NO.	SPECIES	APPLICATION RATE (LB/AC)	SEEDING DATES	SEEDING DEPTHS		
	ANNUAL RYEGRASS	40	MAR 1 TO MAY 15 AUG 1 TO OCT 15	0.5"	600 LB/AC (15 LB/1000 SF)	2 TONS/AC (100 LB/1000 SF)

SECTION III – PERMANENT SEEDING

SEEDING GRASS AND LEGUMES TO ESTABLISH GROUND COVER FOR A MINIMUM PERIOD OF ONE YEAR ON DISTURBED AREAS GENERALLY RECEIVING LOW MAINTENANCE.

A. SEED MIXTURES – PERMANENT SEEDING

I. SELECT ONE OR MORE OF THE SPECIES OR MIXTURES LISTED IN NRCS–MD TABLE 4 FOR THE APPROPRIATE PLANT HARDINESS ZONE AND ENTER THEM IN THE PERMANENT SEEDING SUMMARY BELOW, ALONG WITH APPLICATION RATES AND SEEDING DATES. SEEDING DEPTHS CAN BE ESTIMATED USING TABLE 4. IF THIS SUMMARY IS NOT PUT ON THE CONSTRUCTION PLANS AND COMPLETED, THEN TABLE 4 MUST BE PUT ON THE PLANS. ADDITIONAL PLANTING SPECIFICATIONS FOR EXCEPTIONAL SITES SUCH AS SHORELINES, STREAM BANKS, OR DUNES OR FOR SPECIAL PURPOSES SUCH AS WILDLIFE OR AESTHETIC TREATMENT MAY BE FOUND IN USDA–SCS TECHNICAL FIELD OFFICE GUIDE, SECTION 342 – CRITICAL AREA PLANTING. FOR SPECIAL LAWN MAINTENANCE AREAS, SEE SECTIONS IV SOD AND V TURF GRASS.

II. FOR SITES HAVING DISTURBED AREA OVER 5 ACRES, THE RATE SHOWN ON THIS TABLE SHALL BE DELETED AND THE RATES RECOMMENDED BY THE SOIL TESTING AGENCY SHALL BE WRITTEN IN.

III. FOR AREAS RECEIVING LOW MAINTENANCE, APPLY UREAFORM FERTILIZER (46–0–0) AT 3 A/2 LBS/1000 SQ. FT. (150 LBS/AC), IN ADDITION TO THE ABOVE SOIL AMENDMENTS SHOWN IN THE TABLE BELOW, TO BE PERFORMED AT THE TIME OF SEEDING.

PERMANENT SEEDING SUMMARY

SEED MIXTURE (HARDINESS ZONE 6B) FROM NRCS–MD TABLE 4					FERTILIZER RATE (10–20–20)			LIME RATE
NO.	SPECIES	APPLICATION RATE (LB/AC)	SEEDING DATES	SEEDING DEPTHS	N	P205	K20	
11*	CREEPING RED FESCUE CHEWING FESCUE KENTUCKY BLUEGRASS ROUGH BLUEGRASS	30 30 20 15	MAR 1 TO MAY 31 AUG 1 TO SEPT 30	1/4–1/2"	90 LB/AC (2.0 LB/ 1000 SF)	175 LB/AC (4 LB/ 1000 SF)	175 LB/AC (4 LB/ 1000 SF)	2 TONS/AC (100 LB/ 1000 SF)

* SEED MIX 11 FROM THE NATURAL RESOURCES CONSERVATION SERVICE – MARYLAND, SEE TABLE 4, PAGE 342–21 FOR RECOMMENDED CULTIVARS AND TABLE 5 FOR QUALITY OF SEEDS.

MAINTENANCE FERTILIZATION FOR PERMANENT SEEDINGS

USE SOIL TEST RESULTS OR RATES SHOWN BELOW

SEEDING MIXTURE	TYPE	LB/AC	LB/1000 SF	TIME	MOWING
TALL FESCUE MAKES UP 70% OR MORE OF COVER	10–10–10 OR 30–10–10	500 400	11.5 9.2	YEARLY OR AS NEEDED. FALL	NOT CLOSER THAN 3" IF OCCASIONAL MOWING IS DESIRED
CROWNVETCH SERICEA LESPEDEZA BIRDSFOOT TREFOIL	0–20–0	400	9.2	SPRING, THE YEAR FOLLOWING ESTABLISHMENT AND EVERY 4–5 YEARS THEREAFTER	DO NOT MOW CROWNVETCH
FAIRLY UNIFORM STAND OF TALL FESCUE AND SERICEA LESPEDEZA, OR BIRDSFOOT TREFOIL	5–10–10	500	11.5	FALL THE YEAR FOLLOWING ESTABLISHMENT AND EVERY 4–5 YEARS THEREAFTER	NOT REQUIRED, NO CLOSER THAN 4" IN THE FALL AFTER SEED HAS MATURED.
WEEPING LOVEGRASS & SERICEA LESPEDEZA FAIRLY UNIFORM PLANT DISTRIBUTIN.	5–10–10	500	11.5	SPRING, THE YEAR FOLLOWING ESTABLISHMENT AND EVERY 4–5 YEARS THEREAFTER.	NOT REQUIRED, NO CLOSER THAN 4" IN THE FALL AFTER SEED HAS MATURED.
RED & CHEWING FESCUE, KENTUCKY BLUEGRASS, HARD FESCUE MIXTURES	20–10–10	250 100	5.8 2.3	SEPTEMBER, 30 DAYS LATER, DECEMBER, MAY 20, JUNE 30, IF NEEDED.	MOW NO CLOSER THAN 2" FOR RED FESCUE AND KENTUCKY BLUEGRASS, 3" FOR FESCUE.

SECTION IV – SOD: TO PROVIDE QUICK COVER ON DISTURBED AREAS (2:1 GRADE OR FLATTER).

A. GENERAL SPECIFICATIONS

I. CLASS OF TURF GRASS SOD SHALL BE MARYLAND OR VIRGINIA STATE CERTIFIED OR APPROVED. SOD LABELS SHALL BE MADE AVAILABLE TO THE JOB FOREMAN AND INSPECTOR.

II. SOD SHALL BE MACHINE CUT AT A UNIFORM SOIL THICKNESS OF 3/4", PLUS OR MINUS 1/4", AT THE TIME OF CUTTING. MEASUREMENT FOR THICKNESS SHALL EXCLUDE TOP GROWTH AND THATCH. INDIVIDUAL PIECES OF SOD SHALL BE CUT TO THE SUPPLIERS WIDTH AND LENGTH. MAXIMUM ALLOWABLE DEVIATION FROM STANDARD WIDTHS AND LENGTHS SHALL BE 5 PERCENT. BROKEN PADS AND TORN OR UNEVEN ENDS WILL NOT BE ACCEPTABLE.

III. STANDARD SIZE SECTIONS OF SOD SHALL BE STRONG ENOUGH TO SUPPORT THEIR OWN WEIGHT AND RETAIN THEIR SIZE AND SHAPE WHEN SUSPENDED VERTICALLY WITH A FIRM GRASP ON THE UPPER 10 PERCENT OF THE SECTION.

IV. SOD SHALL NOT BE HARVESTED OR TRANSPLANTED WHEN MOISTURE CONTENT (EXCESSIVELY DRY OR WET) MAY ADVERSELY AFFECT ITS SURVIVAL.

V. SOD SHALL BE HARVESTED, DELIVERED, AND INSTALLED WITHIN A PERIOD OF 36 HOURS. SOD NOT TRANSPLANTED WITHIN THIS PERIOD SHALL BE APPROVED BY AN AGRONOMIST OR SOIL SCIENTIST PRIOR TO ITS INSTALLATION.

B. SOD INSTALLATION

I. DURING PERIODS OF EXCESSIVELY HIGH TEMPERATURE OR IN AREAS HAVING DRY SUBSOIL, THE SUBSOIL SHALL BE LIGHTLY IRRIGATED IMMEDIATELY PRIOR TO LAYING THE SOD.

II. THE FIRST ROW OF SOD SHALL BE LAID IN A STRAIGHT LINE WITH SUBSEQUENT ROWS PLACED PARALLEL TO AND TIGHTLY WEDGED AGAINST EACH OTHER. LATERAL JOINTS SHALL BE STAGGERED TO PROMOTE MORE UNIFORM GROWTH AND STRENGTH. ENSURE THAT SOD IS NOT STRETCHED OR OVERLAPPED AND THAT ALL JOINTS ARE BUTTED TIGHT IN ORDER TO PREVENT VOIDS WHICH WOULD CAUSE AIR DRYING OF THE ROOTS.

III. WHEREVER POSSIBLE, SOD SHALL BE LAID WITH THE LONG EDGES PARALLEL TO THE CONTOUR AND WITH STAGGERING JOINTS. SOD SHALL BE ROLLED AND TAMPED, PEGGED OR OTHERWISE SECURED TO PREVENT SLIPPAGE ON SLOPES AND TO ENSURE SOLID CONTACT BETWEEN SOD ROOTS AND THE UNDERLYING SOIL SURFACE.

IV. SOD SHALL BE WATERED IMMEDIATELY FOLLOWING ROLLING OR TAMPING UNTIL THE UNDERSIDE OF THE NEW SOD PAD AND SOIL SURFACE BELOW THE SOD ARE THOROUGHLY WET. THE OPERATIONS OF LAYING, TAMPING AND IRRIGATING FOR ANY PIECE OF SOD SHALL BE COMPLETED WITHIN EIGHT HOURS.

C. SOD MAINTENANCE

I. IN THE ABSENCE OF ADEQUATE RAINFALL, WATERING SHALL BE PERFORMED DAILY OR AS OFTEN AS NECESSARY DURING THE FIRST WEEK AND IN SUFFICIENT QUANTITIES TO MAINTAIN MOIST SOIL TO A DEPTH OF 4". WATERING SHOULD BE DONE DURING THE HEAT OF THE DAY TO PREVENT WILTING.

II. AFTER THE FIRST WEEK, SOD WATERING IS REQUIRED AS NECESSARY TO MAINTAIN ADEQUATE MOISTURE CONTENT.

III. THE FIRST MOWING OF SOD SHOULD NOT BE ATTEMPTED UNTIL THE SOD IS FIRMLY ROOTED. NO MORE THAN 1/3 OF THE GRASS LEAF SHALL BE REMOVED BY THE INITIAL CUTTING OR SUBSEQUENT CUTTINGS. GRASS HEIGHT SHALL BE MAINTAINED BETWEEN 2" AND 3" UNLESS OTHERWISE SPECIFIED.

SECTION V – TURF GRASS ESTABLISHMENT

AREAS WHERE TURF GRASS MAY BE DESIRED INCLUDE LAWNS, PARKS, PLAYGROUNDS, AND COMMERCIAL SITES WHICH WILL RECEIVE A MEDIUM TO HIGH LEVEL OF MAINTENANCE. AREAS TO RECEIVE SEED SHALL BE TILLED BY DISKING OR OTHER APPROVED METHODS TO A DEPTH OF 2 TO 4 INCHES, LEVELED AND RAKED TO PREPARE A PROPER SEEDBED. STONES AND DEBRIS OVER 1 1/2 INCHES IN DIAMETER SHALL BE REMOVED. THE RESULTING SEEDBED SHALL BE IN SUCH CONDITION THAT FUTURE MOWING OF GRASSES WILL POSE NO DIFFICULTY.

NOTE: CHOOSE CERTIFIED MATERIAL. CERTIFIED MATERIAL IS THE BEST GUARANTEE OF CULTIVAR PURITY. THE CERTIFICATION PROGRAM OF THE MARYLAND DEPARTMENT OF AGRICULTURE, TURF AND SEED SECTION, PROVIDES A RELIABLE MEANS OF CONSUMER PROTECTION AND ASSURES A PURE GENETIC LINE.

A. TURF GRASS MIXTURES

I. KENTUCKY BLUEGRASS – FULL SUN MIXTURE – FOR USE IN AREAS THAT RECEIVE INTENSIVE MANAGEMENT. IRRIGATION REQUIRED IN THE AREAS OF CENTRAL MARYLAND AND THE EASTERN SHORE. RECOMMENDED CERTIFIED KENTUCKY BLUEGRASS CULTIVARS SEEDING RATE: 1.5 TO 2.0 POUNDS/1000 SQUARE FEET. A MINIMUM OF THREE BLUEGRASS CULTIVARS SHOULD BE CHOSEN RANGING FROM A MINIMUM OF 10% TO A MAXIMUM OF 35% OF THE MIXTURE BY WEIGHT.

II. KENTUCKY BLUEGRASS/PERENNIAL RYE – FULL SUN MIXTURE – FOR USE IN FULL SUN AREAS WHERE RAPID ESTABLISHMENT IS NECESSARY AND WHEN TURF WILL RECEIVE MEDIUM TO INTENSIVE MANAGEMENT. CERTIFIED PERENNIAL RYE GRASS CULTIVARS/CERTIFIED KENTUCKY BLUEGRASS SEEDING RATE: 2 POUNDS MIXTURE/1000 SQUARE FEET. A MINIMUM OF 3 KENTUCKY BLUEGRASS CULTIVARS MUST BE CHOSEN, WITH EACH CULTIVAR RANGING FROM 10% TO 35% OF THE MIXTURE BY WEIGHT.

III. TALL FESCUE/KENTUCKY BLUEGRASS – FULL SUN MIXTURE – FOR USE IN DROUGHT PRONE AREAS AND/OR FOR AREAS TO RECEIVE LOW TO MEDIUM MANAGEMENT IN FULL SUN TO MEDIUM SHADE. RECOMMENDED MIXTURE INCLUDES; CERTIFIED TALL FESCUE CULTIVARS 95–100%, CERTIFIED KENTUCKY BLUEGRASS CULTIVARS 0–5%. SEEDING RATE: 5 TO 8 LB/1000 SF. ONE OR MORE CULTIVARS MAY BE BLENDED.

IV. KENTUCKY BLUEGRASS/FINE FESCUE – SHADE MIXTURE – FOR USE IN AREAS WITH SHADE IN BLUEGRASS LAWNS. FOR ESTABLISHMENT IN HIGH QUALITY, INTENSIVELY MANAGED TURF AREA. MIXTURE INCLUDES; CERTIFIED KENTUCKY BLUEGRASS CULTIVARS 30–40% AND CERTIFIED FINE FESCUE 60–70%. SEEDING RATE: 1 1/2 – 3 LBS/1000 SQUARE FEET. A MINIMUM OF 3 KENTUCKY BLUEGRASS CULTIVARS MUST BE CHOSEN, WITH EACH CULTIVAR RANGING FROM A MINIMUM OF 10% TO A MAXIMUM OF 35% OF THE MIXTURE BY WEIGHT.

NOTE: TURF GRASS VARIETIES SHOULD BE SELECTED FROM THOSE LISTED IN THE MOST CURRENT UNIVERSITY OF MARYLAND PUBLICATION, AGRONOMY MIMEO #77, "TURF GRASS CULTIVAR RECOMMENDATIONS FOR MARYLAND".

B. IDEAL TIMES OF SEEDING

WESTERN MD: MARCH 15 – JUNE 1, AUGUST 1 – OCTOBER 1 (HARDINESS ZONES – 5B, 6A)

CENTRAL MD: MARCH 1 – MAY 15, AUGUST 15 – OCTOBER 15 (HARDINESS ZONE – 6B)

SOUTHERN MD, EASTERN SHORE: MARCH 1 – MAY 15, AUGUST 15 – OCTOBER 15 (HARDINESS ZONES – 7A, 7B)

C. IRRIGATION

IF SOIL MOISTURE IS DEFICIENT, SUPPLY NEW SEEDINGS WITH ADEQUATE WATER FOR PLANT GROWTH (1/2" – 1" EVERY 3 TO 4 DAYS DEPENDING ON SOIL TEXTURE) UNTIL FIRMLY ESTABLISHED. THIS IS ESPECIALLY TRUE WHEN SEEDINGS ARE MADE LATE IN THE PLANTING SEASON, IN ABNORMALLY DRY OR HOT SEASONS, OR ON ADVERSE SITES.

D. REPAIRS AND MAINTENANCE

INSPECT ALL SEEDED AREAS FOR FAILURES AND MAKE NECESSARY REPAIRS, REPLACEMENTS, AND RESEEDINGS WITHIN THE PLANTING SEASON.

I. ONCE THE VEGETATION IS ESTABLISHED, THE SITE SHALL HAVE 95% GROUND COVER TO BE CONSIDERED ADEQUATELY STABILIZED.

II. IF THE STAND PROVIDES LESS THAN 40% GROUND COVERAGE, REESTABLISH FOLLOWING ORIGINAL LIME, FERTILIZING SEEDBED PREPARATION AND SEEDING RECOMMENDATIONS.

III. IF THE STAND PROVIDES BETWEEN 40% AND 94% GROUND COVERAGE, OVER SEEDING AND FERTILIZING USING HALF OF THE RATES ORIGINALLY APPLIED MAY BE NECESSARY.

IV. MAINTENANCE FERTILIZER RATES FOR PERMANENT SEEDINGS AS SHOWN IN TABLE 24. FOR LAWNS AND OTHER MEDIUM TO HIGH MAINTENANCE TURF GRASS AREAS, REFER TO THE UNIVERSITY OF MARYLAND PUBLICATION "LAWN CARE IN MARYLAND" BULLETIN NO. 171.

"PROFESSIONAL CERTIFICATION, I HEREBY CERTIFY THAT THESE DOCUMENTS WERE PREPARED OR APPROVED BY ME, AND THAT I AM A DULY LICENSED PROFESSIONAL ENGINEER UNDER THE LAWS OF THE STATE OF MARYLAND, LICENSE NO. 24478, EXPIRATION DATE: 10/28/11."

DEPARTMENT OF PUBLIC WORKS
HOWARD COUNTY, MARYLAND.

DIRECTOR OF PUBLIC WORKS — DATE 8/26/11
CHIEF, BUREAU OF ENGINEERING — DATE 8/9/11
CHIEF, BUREAU OF UTILITIES — DATE
CHIEF, UTILITY DESIGN DIVISION — DATE 8/9/11

PREPARED BY :
WHITMAN, REQUARDT & ASSOCIATES, LLP
801 South Caroline Street, Baltimore, MD 21231

STATE OF MARYLAND — DENNIS JUDE HASSON — No. 24478 — PROFESSIONAL ENGINEER — 7/26/11

DES: JDV
DRN: ACM
CHK: JDV
DATE: 6/8/11

BY	NO.	REVISION	DATE
WRA	1	AS-BUILTS	2/15

EROSION AND SEDIMENT CONTROL
GENERAL NOTES

600' SCALE MAP NO. 16 BLOCK NO. 3

AS-BUILT

MARRIOTTSVILLE ROAD
ELEVATED TANK AND BOOSTER STATION
CAPITAL PROJECT NO. W8263
CONTRACT NO. 44–4509

ELECTION DISTRICT 3 HOWARD COUNTY, MARYLAND

DWG. SC–3
SCALE: N/A
SHEET 8 OF 35

N:\13732\CADD\SC1-13732-SC04_tank.dwg

DETAIL 22 - SILT FENCE

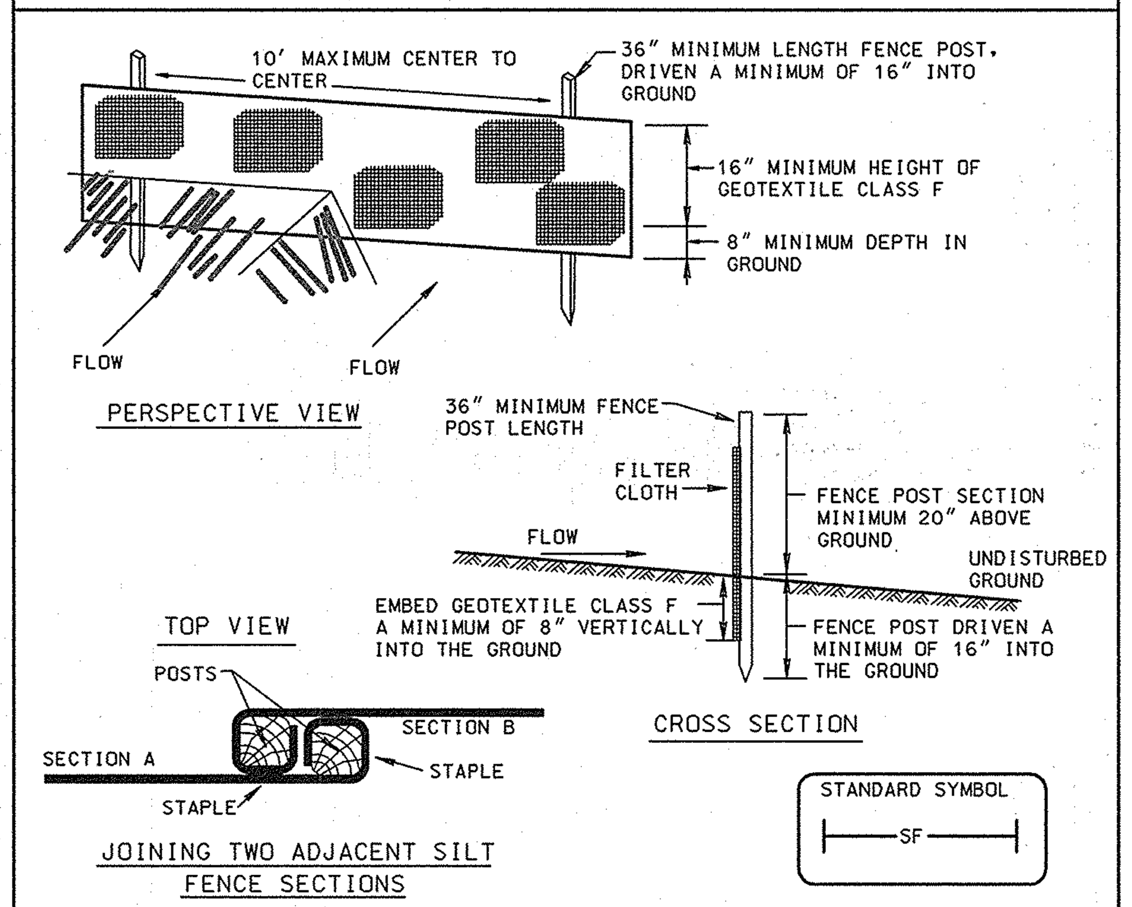

Construction Specifications

1. Fence posts shall be a minimum of 36" long driven 16" minimum into the ground. Wood posts shall be 1½" x 1½" square (minimum) cut, or 1¾" diameter (minimum) round and shall be of sound quality hardwood. Steel posts will be standard T or U section weighting not less than 1.00 pond per linear foot.

2. Geotextile shall be fastened securely to each fence post with wire ties or staples at top and mid-section and shall meet the following requirements for Geotextile Class F:

Tensile Strength	50 lbs/in (min.)	Test: MSMT 509
Tensile Modulus	20 lbs/in (min.)	Test: MSMT 509
Flow Rate	0.3 gal ft²/ minute (max.)	Test: MSMT 322
Filtering Efficiency	75% (min.)	Test: MSMT 322

3. Where ends of geotextile fabric come together, they shall be overlapped, folded and stapled to prevent sediment bypass.

4. Silt Fence shall be inspected after each rainfall event and maintained when bulges occur or when sediment accumulation reached 50% of the fabric height.

U.S. DEPARTMENT OF AGRICULTURE SOIL CONSERVATION SERVICE	PAGE E - 15 - 3	MARYLAND DEPARTMENT OF ENVIRONMENT WATER MANAGEMENT ADMINISTRATION

SILT FENCE

Silt Fence Design Criteria

Slope Steepness	(Maximum) Slope Length	(Maximum) Silt Fence Length
Flatter than 50:1	unlimited	unlimited
50:1 to 10:1	125 feet	1,000 feet
10:1 to 5:1	100 feet	750 feet
5:1 to 3:1	60 feet	500 feet
3:1 to 2:1	40 feet	250 feet
2:1 and steeper	20 feet	125 feet

Note: In areas of less than 2% slope and sandy soils (USDA general classification system, soil Class A) maximum slope length and silt fence length will be unlimited. In these areas a silt fence may be the only perimeter control required.

U.S. DEPARTMENT OF AGRICULTURE SOIL CONSERVATION SERVICE	PAGE E - 15 - 3A	MARYLAND DEPARTMENT OF ENVIRONMENT WATER MANAGEMENT ADMINISTRATION

DETAIL 33 - SUPER SILT FENCE

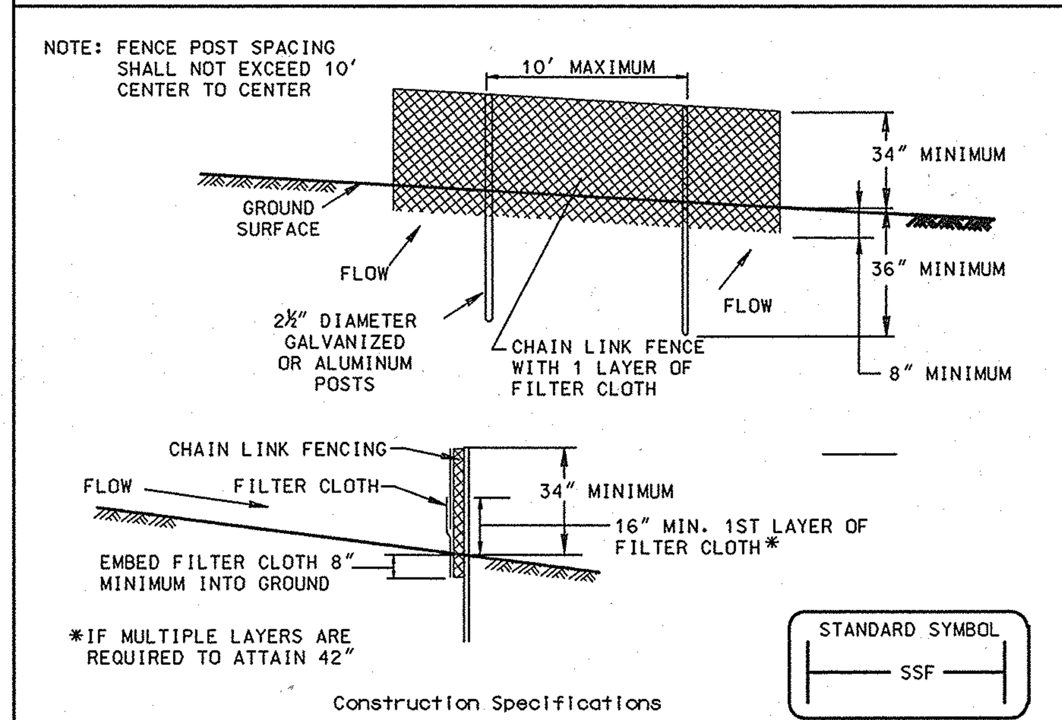

Construction Specifications

1. Fencing shall be 42" in height and constructed in accordance with the latest Maryland State Highway Details for Chain Link Fencing. The specification for a 6' fence shall be used, substituting 42" fabric and 6' length posts.

2. Chain link fence shall be fastened securely to the fence posts with wire ties. The lower tension wire, brace and truss rods, drive anchors and post caps are not required except on the ends of the fence.

3. Filter cloth shall be fastened securely to the chain link fence with ties spaced every 24" at the top and mid section.

4. Filter cloth shall be embedded a minimum of 8" into the ground.

5. When two sections of filter cloth adjoin each other, they shall be overlapped by 6" and folded.

6. Maintenance shall be performed as needed and silt buildups removed when "bulges" develop in the silt fence, or when silt reaches 50% of fence height

7. Filter cloth shall be fastened securely to each fence post with wire ties or staples at top and mid section and shall meet the following requirements for Geotextile Class F:

Tensile Strength	50 lbs/in (min.)	Test: MSMT 509
Tensile Modulus	20 lbs/in (min.)	Test: MSMT 509
Flow Rate	0.3 gal/ft²/minute (max.)	Test: MSMT 322
Filtering Efficiency	75% (min.)	Test: MSMT 322

U.S. DEPARTMENT OF AGRICULTURE SOIL CONSERVATION SERVICE	PAGE H - 26 - 3	MARYLAND DEPARTMENT OF ENVIRONMENT WATER MANAGEMENT ADMINISTRATION

SUPER SILT FENCE

Design Criteria

Slope	Slope Steepness	Slope Length (maximum)	Silt Fence Length (maximum)
0 - 10%	0 - 10:1	Unlimited	Unlimited
10 - 20%	10:1 - 5:1	200 feet	1,500 feet
20 - 33%	5:1 - 3:1	100 feet	1,000 feet
33 - 50%	3:1 - 2:1	100 feet	500 feet
50% +	2:1 +	50 feet	250 feet

U.S. DEPARTMENT OF AGRICULTURE SOIL CONSERVATION SERVICE	PAGE H - 26 - 3A	MARYLAND DEPARTMENT OF ENVIRONMENT WATER MANAGEMENT ADMINISTRATION

DETAIL 24 - STABILIZED CONSTRUCTION ENTRANCE

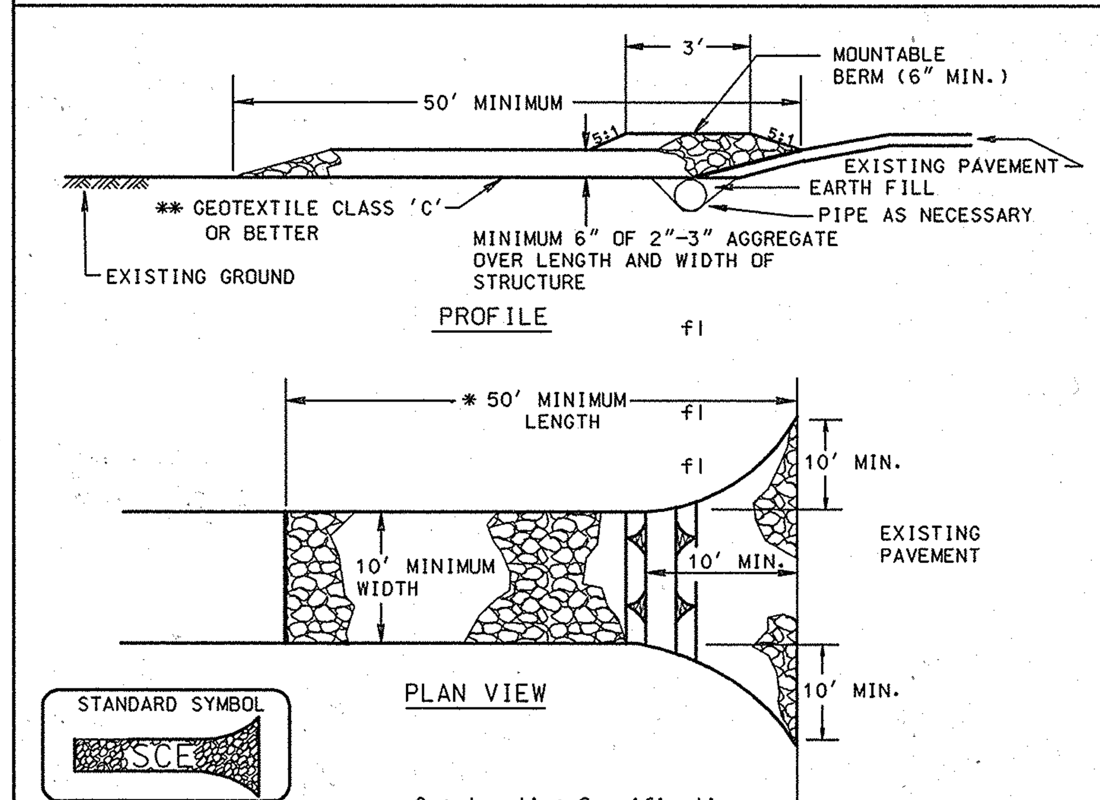

Construction Specification

1. Length - minimum of 50' (*30' for single residence lot).

2. Width - 10' minimum, should be flared at the existing road to provide a turning radius.

3. Geotextile fabric (filter cloth) shall be placed over the existing ground prior to placing stone. **The plan approval authority may not require single family residences to use geotextile.

4. Stone - crushed aggregate (2" to 3") or reclaimed or recycled concrete equivalent shall be placed at least 6" deep over the length and width of the entrance.

5. Surface Water - all surface water flowing to or diverted toward construction entrances shall be piped through the entrance, maintaining positive drainage. Pipe installed through the stabilized construction entrance shall be protected with a mountable berm with 5:1 slopes and a minimum of 6" of stone over the pipe. Pipe has to be sized according to the drainage. When the SCE is located at a high spot and has no drainage to convey a pipe will not be necessary. Pipe should be sized according to the amount of runoff to be conveyed. A 6" minimum will be required.

6. Location - A stabilized construction entrance shall be located at every point where construction traffic enters or leaves a construction site. Vehicles leaving the site must travel over the entire length of the stabilized construction entrance.

U.S. DEPARTMENT OF AGRICULTURE SOIL CONSERVATION SERVICE	PAGE F - 17 - 3	MARYLAND DEPARTMENT OF ENVIRONMENT WATER MANAGEMENT ADMINISTRATION

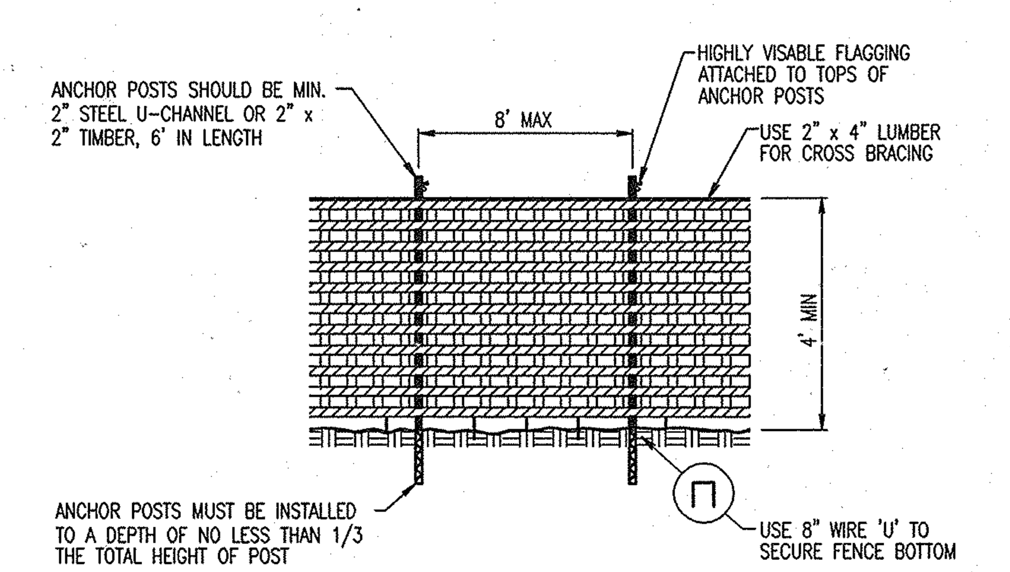

NOTES:
1. BLAZE ORANGE OR BLUE PLASTIC MESH FENCE FOR FOREST PROTECTION DEVICE, ONLY.
2. BOUNDARIES OF RETENTION AREA WILL BE ESTABLISHED AS PART OF THE FOREST CONSERVATION PLAN REVIEW PROCESS.
3. BOUNDARIES OF RETENTION AREA SHOULD BE STAKED AND FLAGGED PRIOR TO INSTALLING DEVICE.
4. AVOID DAMAGE TO CRITICAL ROOT ZONE. DO NOT DAMAGE OR SEVER LARGE ROOTS WHEN INSTALLING POSTS.
5. PROTECTION SIGNAGE IS REQUIRED.
6. DEVICE SHOULD BE MAINTAINED THROUGHOUT CONSTRUCTION.

PLASTIC MESH TREE PROTECTION FENCE

NO SCALE

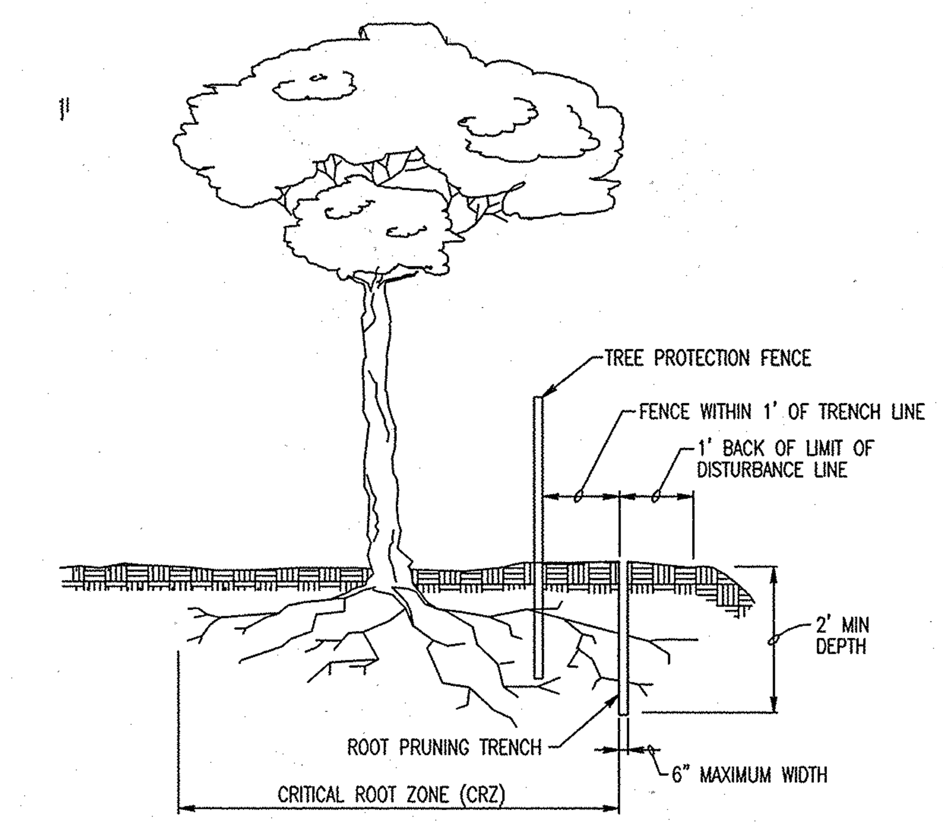

THE CRITICAL ROOT ZONE (CRZ):

FOR TREES ALONG THE EDGES OF STANDS, THE CRZ RADIUS = 1' FOR EVERY 1" OF TREE DIAMETER.

FOR RETENTION AREAS LESS THEN 10,000 SF AND ISOLATED SPECIMEN TREES, THE CRZ RADIUS = 1.5' FOR EVERY 1" OF TREE DIAMETER.

NOTES:
1. RETENTION AREAS TO BE ESTABLISHED AS PART OF THE FOREST CONSERVATION PLAN REVIEW PROCESS.
2. BOUNDARIES OF RETENTION AREAS TO BE STAKED AND FLAGGED PRIOR TO TRENCHING.
3. EXACT LOCATION OF TRENCH SHALL BE IDENTIFIED.
4. TRENCH SHOULD BE IMMEDIATELY BACKFILLED WITH SOIL REMOVED OR OTHER HIGH ORGANIC SOIL.
5. ROOTS SHOULD BE CLEANLY CUT USING VIBRATORY KNIFE OR OTHER ACCEPTABLE EQUIPMENT.

ROOT PRUNING DETAIL

NO SCALE

TREE CONSERVATION NOTES

PRE-CONSTRUCTION ACTIVITIES

PRIOR TO THE START OF ANY CONSTRUCTION:

A. THE CONTRACTOR SHALL LOCATE THE LIMITS OF DISTURBANCE (LOD) IN THE FIELD PRIOR TO ANY CONSTRUCTION ACTIVITIES, THEN INSTALL ALONG THE LOD BLAZE ORANGE FENCING. LOD SHALL BE PLACED OUTSIDE OF CRITICAL ROOT ZONES OF TREES TO BE PRESERVED WHEREVER POSSIBLE.

B. BLAZE ORANGE FENCING:

1. BLAZE ORANGE FENCING SHALL BE PLACED ON ALL LIMITS OF DISTURBANCE, EXCEPT WHERE INGRESS/EGRESS IS REQUIRED.
2. ALL FENCING SHALL BE INSTALLED PRIOR TO CONSTRUCTION ACTIVITIES.
3. FENCING SHALL BE FIRMLY ANCHORED AT SPACING NO GREATER THAN EIGHT FEET AND CONSTRUCTED IN A MANNER WHICH PRECLUDES SAGGING.
4. ALL FENCING SHALL BE MAINTAINED IN A GOOD CONDITION AND PROMPTLY REPAIRED OR RESTORED AS THE SITUATION WARRANTS, FOR THE PROTECTION OF THE ADJACENT WOODLANDS.

C. SIMULTANEOUS WITH CLEARING, THE FOLLOWING STEPS SHOULD BE UNDERTAKEN TO REDUCE STRESS TO EXISTING TREES:

1. FERTILIZE TREES WITHIN 20 FEET OF THE CONSTRUCTION AREA AT THE RATE OF 3 POUNDS OF NITROGEN PER 1000 SQUARE FEET OF ROOT ZONE DISTURBED. APPLY FERTILIZER TO ENTIRE CRITICAL ROOT ZONE OUT TO THE BLAZE ORANGE FENCING.
2. FERTILIZER SHOULD BE AT LEAST 50 PERCENT SLOW RELEASE NITROGEN AND CONTAIN OTHER ESSENTIAL ELEMENTS AND MICRO-NUTRIENTS.
3. WATER CRITICAL ROOT ZONE IMMEDIATELY AFTER APPLYING FERTILIZER TO SATURATE THE TOP 6 INCHES OF SOIL.
4. A MULCH, 1 TO 4 INCHES DEEP COMPRISED OF WOOD CHIPS OR SHREDDED BARK OR LEAVES, SHALL BE APPLIED IN THE CRITICAL ROOT ZONE ADJACENT TO THE BLAZE ORANGE FENCING (SEE EXISTING TREE MULCHING DETAIL).

CONSTRUCTION PHASE

A. EXCAVATED AND BACK FILL MATERIAL SHALL NOT BE PLACED OR SIDE CAST WITHIN THE CRITICAL ROOT ZONES OF TREES TO BE PROTECTED.
B. CONSTRUCTION EQUIPMENT SHALL NOT BE DRIVEN INTO OR THROUGH PROTECTED TREES, NOR SHALL SWING CRANES OR BACKHOES BE ALLOWED IN THEIR CANOPIES.
C. THERE SHALL BE NO STACKING OR STORING SUPPLIES WITHIN THE CRITICAL ROOT ZONES OF TREES TO BE PROTECTED.
D. TREES TO BE REMOVED SHALL BE TAKEN OUT WITHOUT DAMAGING PROTECTED TREES.
E. ALL GRADING SHALL TAKE PLACE OUTSIDE OF THE CRITICAL ROOT ZONE OF THE TREES TO BE PROTECTED.
F. ALL EQUIPMENT SHALL BE KEPT INSIDE THE BLAZE ORANGE FENCING AND WITHIN THE LIMITS OF DISTURBANCE.
G. IN THE EVENT OF DROUGHT, THE PROTECTED TREES SHALL BE MONITORED FOR SIGNS OF STRESS AND WATERED AS NEEDED.

POST-CONSTRUCTION ACTIVITIES

A. THE CONTRACTOR SHALL RETAIN A CERTIFIED TREE EXPERT, LANDSCAPE ARCHITECT, FORESTER OR ARBORIST TO DEVELOP A TREE REPAIR PLAN. THE TREE REPAIR PLAN MUST BE APPROVED BY HOWARD COUNTY.

"PROFESSIONAL CERTIFICATION, I HEREBY CERTIFY THAT THESE DOCUMENTS WERE PREPARED OR APPROVED BY ME, AND THAT I AM A DULY LICENSED PROFESSIONAL ENGINEER UNDER THE LAWS OF THE STATE OF MARYLAND, LICENSE NO. 24478, EXPIRATION DATE: 10/28/11."

DEPARTMENT OF PUBLIC WORKS
HOWARD COUNTY, MARYLAND.

DIRECTOR OF PUBLIC WORKS — DATE 8/26/11
CHIEF, BUREAU OF ENGINEERING — DATE 8/3/11
CHIEF, BUREAU OF UTILITIES — DATE
CHIEF, UTILITY DESIGN DIVISION — DATE 8/9/11

PREPARED BY :
WHITMAN, REQUARDT & ASSOCIATES, LLP
801 South Caroline Street, Baltimore, MD 21231

STATE OF MARYLAND — DENNIS JUDE HASSON — No 24478 — PROFESSIONAL ENGINEER — 7/26/11

DES: JDV
DRN: ACM
CHK: JDV
DATE: 6/8/11

BY	NO.	REVISION	DATE
WRA	1	AS-BUILTS	2/15

EROSION AND SEDIMENT CONTROL DETAILS

600' SCALE MAP NO. 16 BLOCK NO. 3

AS-BUILT

MARRIOTTSVILLE ROAD
ELEVATED TANK AND BOOSTER STATION
CAPITAL PROJECT NO. W8263
CONTRACT NO. 44-4509

ELECTION DISTRICT 3 HOWARD COUNTY, MARYLAND

DWG. SC-4
SCALE AS SHOWN
SHEET 9 OF 35

N:\13732\CADD\SC1-13732-SC04_tank.dwg

GENERAL NOTES:

1. THE SIZES AND LOCATIONS OF EQUIPMENT PADS AND PEDESTALS, AS WELL AS EQUIPMENT-RELATED FLOOR AND WALL OPENINGS, ARE DEPENDENT ON THE ACTUAL EQUIPMENT FURNISHED. CONTRACTOR TO VERIFY AND COORDINATE ALL SUCH ITEMS. DIMENSIONS INDICATED ON THESE DRAWINGS SHALL NOT BE ALTERED WITHOUT APPROVAL OF THE OWNER'S REPRESENTATIVE. STRUCTURAL DRAWINGS MAY NOT SHOW ALL EQUIPMENT PADS AND OTHER EQUIPMENT SUPPORTS REQUIRED. REFER TO CIVIL, MECHANICAL AND ELECTRICAL DRAWINGS.
2. LOCATIONS OF BORINGS ARE SHOWN ON CIVIL DRAWINGS. BORING LOGS ARE INCLUDED IN THE GEOTECHNICAL REPORT.
3. FOR NOTES PERTAINING TO INDIVIDUAL STRUCTURES, SEE DRAWINGS FOR THOSE STRUCTURES.

FOUNDATION NOTES:

1. TANK FOUNDATION SHALL BE DESIGNED BY THE TANK MANUFACTURER IN ACCORDANCE WITH AWWA D-100, ACI 318, ACI 371, THE RECOMMENDATION PROVIDED IN THE GEOTECHNICAL REPORT, AND THE SPECIFICATIONS. SEE SECTION 1/S-1 FOR DETAILS.
2. SUBGRADE FOR THE TANK AND BACKFILL PLACEMENT SHALL BE IN ACCORDANCE WITH SECTION 02200, PARAGRAPH 3.12 OF THE SPECIFICATIONS.
3. DESIGN BEARING PRESSURE SHALL BE AS FOLLOWS:
   A. BENEATH THE FOOTING FOR THE PEDESTAL: SEE GEOTECHNICAL REPORT
   B. BENEATH THE FLOOR SLAB WITHIN THE PEDESTAL (CR-6 BACKFILL): 4000 PSF
4. NOTIFY THE ENGINEER THREE (3) DAYS PRIOR TO REACHING SUBGRADE ELEVATION OF THE TANK FOUNDATION TO ARRANGE INSPECTION OF SUBGRADE.
5. KEEP ALL EXCAVATIONS DRY. STANDING WATER WILL NOT BE ALLOWED IN EXCAVATIONS. PLACE AN 8-INCH LAYER OF CR-6 OR No. 57 STONE BENEATH FOOTING. WITHIN THE TANK PEDESTAL AND BENEATH THE FLOOR SLAB, BACKFILL SHALL BE CR-6 AS DIRECTED BY GEOTECHNICAL REPORT. PLACE A LAYER OF 10 MIL VAPOR BARRIER BENEATH SLAB ON GRADE. ALL EXCAVATIONS SHALL BE INSPECTED AND APPROVED BY THE OWNER'S REPRESENTATIVE BEFORE PLACEMENT OF ANY CONCRETE OR CRUSHED STONE.
6. FROST DEPTH AT THE SITE SHALL BE 30 INCHES BELOW FINISHED GRADE PER HOWARD COUNTY CODE.
7. FOR MECHANICAL AND ELECTRICAL WORK TO BE INCORPORATED IN FOUNDATION WORK, SEE MECHANICAL AND ELECTRICAL DRAWINGS.

CONCRETE NOTES:

1. PROVIDE CONCRETE WITH A MINIMUM COMPRESSIVE STRENGTH OF 4500 PSI AT 28 DAYS.
2. DETAIL AND CONSTRUCT REINFORCED CONCRETE IN ACCORDANCE WITH AMERICAN CONCRETE INSTITUTE ACI 301, "SPECIFICATION FOR STRUCTURAL CONCRETE."
3. DETAIL REINFORCING STEEL IN ACCORDANCE WITH AMERICAN CONCRETE INSTITUTE ACI 315, "MANUAL OF STANDARD PRACTICE FOR DETAILING REINFORCED CONCRETE STRUCTURES," AND ACI SP-66, "ACI DETAILING MANUAL."
4. PROVIDE REINFORCEMENT CONFORMING TO ASTM A 615, GRADE 60, DEFORMED BARS.
5. PROVIDE WELDED WIRE FABRIC CONFORMING TO ASTM A 185.
6. UNLESS NOTED OTHERWISE ON THE DRAWINGS, THE CONCRETE COVER FOR REINFORCEMENT SHALL BE AS FOLLOWS:
   A. BOTTOM BARS IN FOOTINGS AND IN SLABS ON EARTH OR GRAVEL: ..... 3"
   B. BEAMS, SLABS, COLUMNS AND WALLS EXPOSED TO GROUND, WEATHER, PROCESS LIQUID OR VAPORS AFTER REMOVAL OF FORMS: ..... 2"
   C. BEAMS, COLUMNS, WALLS AND PIERS NOT EXPOSED TO WEATHER OR PROCESS LIQUID OR VAPORS: ..... 1½"
7. SUBMIT REINFORCING STEEL DETAILS (SHOP DRAWINGS) AND RECEIVE APPROVAL BEFORE PROCEEDING WITH FABRICATION.
8. CHAMFER ALL EXPOSED CONCRETE EDGES 3/4" UNLESS OTHERWISE NOTED.
9. DETAIL ALL SPLICES FOR REINFORCING BARS NOT DIMENSIONED ON THE DRAWINGS AS TABULATED ON THIS DRAWING.
10. POUR CONCRETE SLABS AND WALLS BETWEEN INDICATED JOINTS, ALLOWING A MINIMUM ELAPSED PERIOD OF 3 DAYS BETWEEN ADJACENT POURS.
11. PROVIDE JOINTS AS DETAILED ON THE DRAWINGS. NO ADDITIONAL JOINTS SHALL BE USED NOR ANY OMITTED EXCEPT BY WRITTEN AUTHORIZATION FROM THE OWNER'S REPRESENTATIVE. APPROVED ADDITIONAL JOINTS SHALL NOT RESULT IN ADDITIONAL EXPENSE TO THE OWNER.
12. SIZE AND LOCATE ANCHOR BOLTS AND EQUIPMENT PADS OR PEDESTALS TO SUIT EQUIPMENT FURNISHED.
13. REVIEW ALL DRAWINGS FROM OTHER DISCIPLINES AND COORDINATE ALL OPENINGS AND EMBEDDED ITEMS SUCH AS SLEEVES, ANCHORS, CONDUIT, ETC. THAT WILL BE INCORPORATED INTO CONCRETE WORK.
14. PROVIDE SURFACE HARDENER ON SLAB AS SPECIFIED.

CODES AND STANDARDS:

1. INTERNATIONAL BUILDING CODE - IBC 2006.
2. AMERICAN INSTITUTE OF STEEL CONSTRUCTION (AISC) "MANUAL OF STEEL CONSTRUCTION" - THIRTEENTH EDITION - ALLOWABLE STRENGTH DESIGN
3. AMERICAN CONCRETE INSTITUTE ACI-318 (2005), "BUILDING CODE REQUIREMENTS FOR REINFORCED CONCRETE"
4. AMERICAN SOCIETY OF CIVIL ENGINEERS ASCE 7 (2005), "MINIMUM DESIGN LOADS FOR BUILDING AND OTHER STRUCTURES"
5. AMERICAN WATER WORKS ASSOCIATION - AWWA D100-05, "WELDED CARBON STEEL TANKS FOR WATER STORAGE"
6. AMERICAN CONCRETE INSTITUTE - ACI-371R-98, "GUIDE FOR ANALYSIS, DESIGN AND CONSTRUCTION OF CONCRETE PEDESTAL WATER TOWERS"

DESIGN LOADS:

1. DEAD LOADS:
   A. STRUCTURES - ACTUAL WEIGHT
   B. WEIGHT OF SOIL - 100 PCF FOR RESISTING UPLIFT
   C. WEIGHT OF SOIL - 120 PCF FOR DEAD LOAD
   D. SNOW LOAD - GROUND SNOW - 25 PSF (MINIMUM).
2. LIVE LOADS:
   A. FLOORS - 150 PSF IN AREAS NOT OCCUPIED BY EQUIPMENT OR TRUCK LOADING.
   B. EQUIPMENT - ACTUAL WEIGHT OF EQUIPMENT.
   C. WALKWAYS AND STAIRWAYS - 100 PSF.
   D. ROOF LOAD - 30 PSF (MINIMUM, NO REDUCTION ALLOWED)
   E. TRUCK - H20 LOADING
3. WIND LOAD
   A. BASIC WIND SPEED - 100 MPH (MINIMUM)
   B. I - IMPORTANCE FACTOR = 1.15
   C. WIND EXPOSURE = C
   D. MINIMUM WIND PRESSURE = 38 PSF
4. EARTHQUAKE DESIGN DATA
   A. SEISMIC USE GROUP = III
   B. SEISMIC IMPORTANCE FACTOR - I_E = 1.50
   C. MAPPED ACCELERATION PARAMETERS - S_S = 19.3; S_1 = 6.37
   D. SITE CLASS = C
   E. DESIGN RESPONSE SPECTRA = GENERAL PROCEDURE
   F. BASIC SEISMIC RESISTING SYSTEM = REINFORCED CONCRETE (PEDESTAL)
      PLATE & FRAME (STEEL TANK)
5. DESIGN CATEGORY: IV

LAP SPLICE LENGTH						MINIMUM TENSION EMBEDMENTS			
BAR SIZE		SLAB AND WALL		BEAM		STD 90° HOOK		STD 180° HOOK	
ENGLISH	SOFT METRIC	OTHER BARS	TOP BARS	OTHER BARS	TOP BARS	ldh	12db	ldh	4db
#3	#10	12"	15"	12"	12"	5"	5"	5"	2"
#4	#13	15"	20"	12"	16"	7"	6"	7"	2"
#5	#16	19"	25"	19"	24"	9"	8"	9"	3"
#6	#19	23"	29"	27"	35"	10"	9"	10"	3"
#7	#22	37"	48"	46"	59"	12"	11"	12"	4"
#8	#25	47"	61"	60"	77"	14"	12"	14"	4"
#9	#29	58"	75"	70"	91"	15"	14"	15"	5"
#10	#32	70"	91"	79"	102"	17"	16"	17"	6"
#11	#36	84"	109"	87"	114"	19"	17"	19"	6"

LAP SPLICE ASSUMPTIONS:

CONCRETE: 4000 PSI COMPRESSIVE STRENGTH (NORMALWEIGHT CONCRETE)

SLAB AND WALL: 6" MINIMUM REBAR SPACING WITH CONCRETE COVER = 1.5" CLEAR

BEAM: MINIMUM CLEAR SPACING BETWEEN BARS = 1.5 db (1.5" MIN). MINIMUM CONCRETE COVER = 1.5" CLEAR. MINIMUM STIRRUP #4@12" PROVIDED.

TOP BAR: TOP BAR FOR SLAB AND BEAM SHALL BE DEFINED AS REINFORCEMENT SO PLACED THAT MORE THAN 12" OF CONCRETE IS CAST BELOW THE SPLICE.

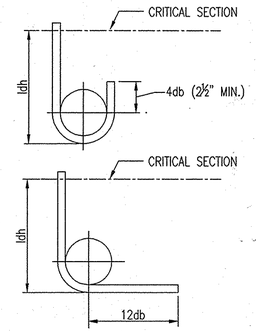

STANDARD HOOK ASSUMPTIONS:

SIDE COVER SHALL NOT BE LESS THAN 2.5".
END COVER ON 90° HOOK SHALL NOT BE LESS THAN 2"

STANDARD 180° AND 90° END HOOKS

TENSION LAP SPLICE AND STANDARD HOOK LENGTH (ACI 318-08/ACI 350-06)

(NON-EPOXY COATED)

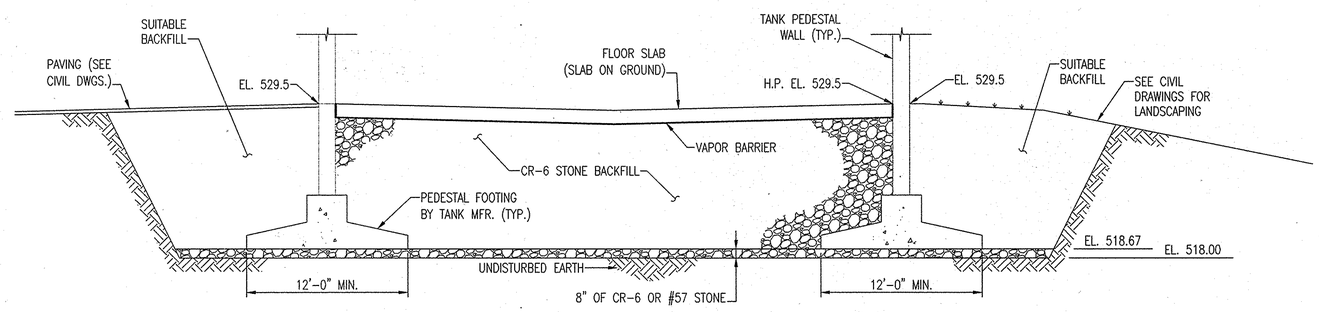

1 / S-1 **SECTION: FOUNDATION REQUIREMENTS**
SCALE: 3/16" = 1'-0"

AS-BUILT

4 2 0 2 4 6 8 10 12
SCALE: 3/16" = 1'-0"

DWG. S-1

"PROFESSIONAL CERTIFICATION: I HEREBY CERTIFY THAT THESE DOCUMENTS WERE PREPARED OR APPROVED BY ME, AND THAT I AM A DULY LICENSED PROFESSIONAL ENGINEER UNDER THE LAWS OF THE STATE OF MARYLAND, LICENSE NO. 9495, EXPIRATION DATE: 9/27/2011."

DEPARTMENT OF PUBLIC WORKS
HOWARD COUNTY, MARYLAND.

DIRECTOR OF PUBLIC WORKS — DATE 8/2/11
CHIEF, BUREAU OF ENGINEERING — DATE 8/2/11
CHIEF, BUREAU OF UTILITIES — DATE
CHIEF, UTILITY DESIGN DIVISION — DATE 8/2/11

PREPARED BY:
WHITMAN, REQUARDT & ASSOCIATES, LLP
801 South Caroline Street, Baltimore, MD 21231
WR&A

STATE OF MARYLAND — JAMES G. ARMACOST III — NO. 9495 — PROFESSIONAL ENGINEER

DES: RLSP				
DRN: RLSP				
CHK: JOA				
DATE: 6/8/11	WRA BY	1 NO.	AS-BUILTS REVISION	2/15 DATE

STRUCTURAL NOTES, DETAILS AND SECTION

600' SCALE TAX MAP NO. 16 BLOCK NO. 3

MARRIOTTSVILLE ROAD
ELEVATED TANK AND BOOSTER STATION
CAPITAL PROJECT NO. W8263
CONTRACT NO. 44-4509

ELECTION DISTRICT 3 HOWARD COUNTY, MARYLAND

SCALE AS SHOWN

SHEET 10 OF 35

N:\13732\CADD\S001-13732S0-01.dwg
Jul 25, 2011 - 1:22pm

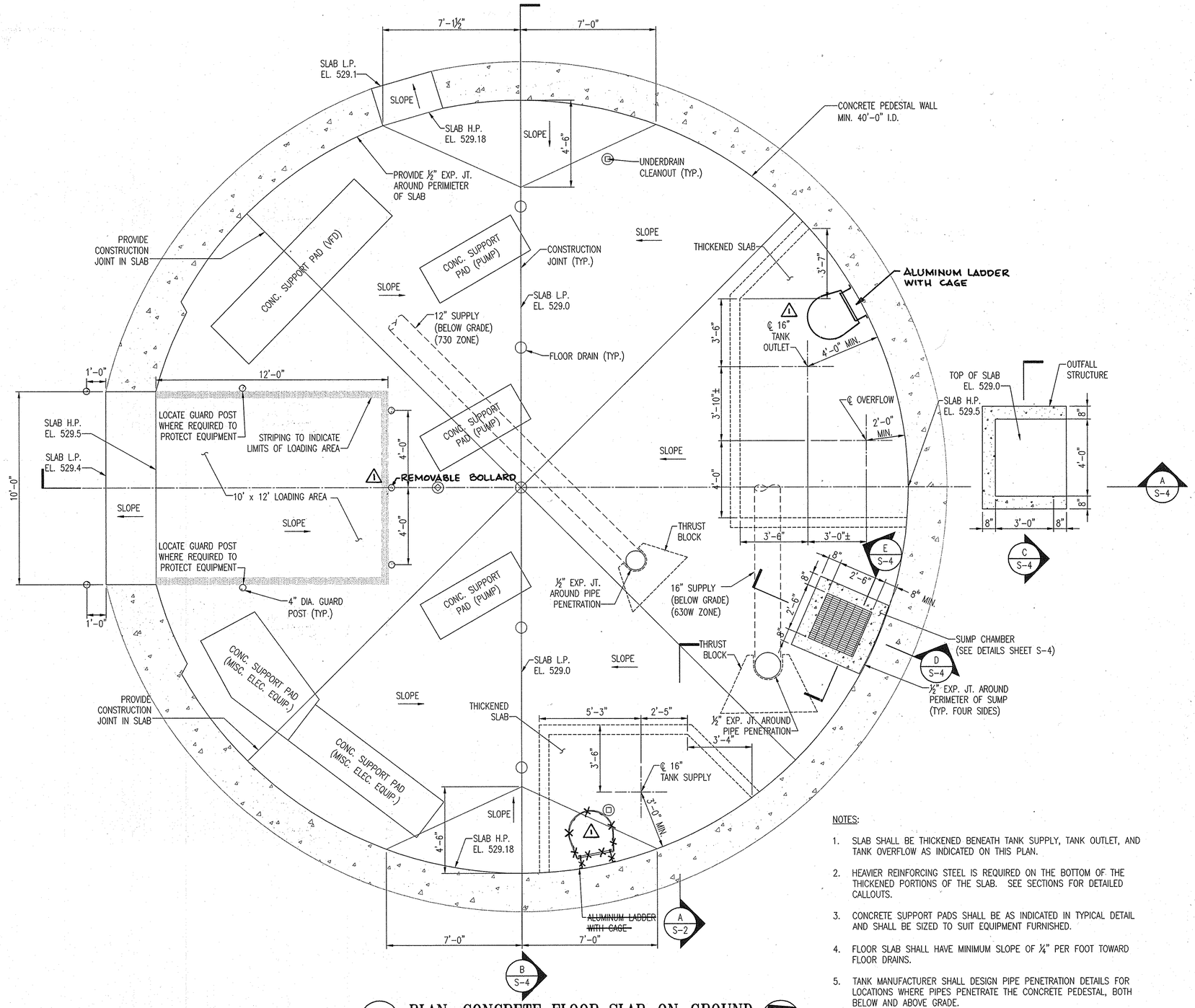

1 S-2 **PLAN: CONCRETE FLOOR SLAB-ON-GROUND**
SCALE: 3/8" = 1'-0"

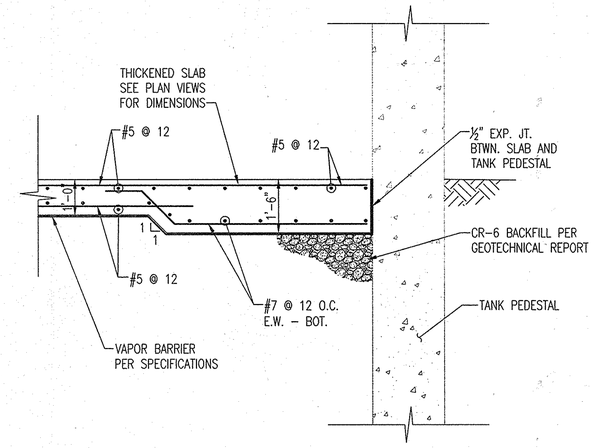

A S-2 **SECTION: THROUGH THICKENED SLAB**
SCALE: 1/2" = 1'-0"

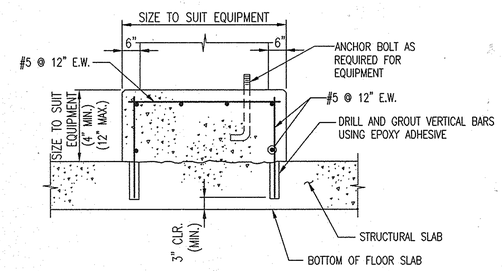

B S-2 **DETAIL: TYPICAL EQUIPMENT SUPPORT PAD**
SCALE: NONE

NOTES:

1. SLAB SHALL BE THICKENED BENEATH TANK SUPPLY, TANK OUTLET, AND TANK OVERFLOW AS INDICATED ON THIS PLAN.
2. HEAVIER REINFORCING STEEL IS REQUIRED ON THE BOTTOM OF THE THICKENED PORTIONS OF THE SLAB. SEE SECTIONS FOR DETAILED CALLOUTS.
3. CONCRETE SUPPORT PADS SHALL BE AS INDICATED IN TYPICAL DETAIL AND SHALL BE SIZED TO SUIT EQUIPMENT FURNISHED.
4. FLOOR SLAB SHALL HAVE MINIMUM SLOPE OF ¼" PER FOOT TOWARD FLOOR DRAINS.
5. TANK MANUFACTURER SHALL DESIGN PIPE PENETRATION DETAILS FOR LOCATIONS WHERE PIPES PENETRATE THE CONCRETE PEDESTAL, BOTH BELOW AND ABOVE GRADE.
6. THRUST BLOCKS INDICATED ON THIS PLAN SHALL BE CONSTRUCTED IN ACCORDANCE WITH DETAIL ON S-3 AND IN ACCORDANCE WITH HOWARD COUNTY STANDARD DETAILS.

1 0 1 2 3 4 5
SCALE: 1/2" = 1'-0"
2 1 0 1 2 3 4 5 6
SCALE: 3/8" = 1'-0"

AS-BUILT

"PROFESSIONAL CERTIFICATION: I HEREBY CERTIFY THAT THESE DOCUMENTS WERE PREPARED OR APPROVED BY ME, AND THAT I AM A DULY LICENSED PROFESSIONAL ENGINEER UNDER THE LAWS OF THE STATE OF MARYLAND, LICENSE NO. 9495, EXPIRATION DATE: 9/27/2011."

DEPARTMENT OF PUBLIC WORKS
HOWARD COUNTY, MARYLAND

DIRECTOR OF PUBLIC WORKS — DATE 8/26/11
CHIEF, BUREAU OF ENGINEERING — DATE 8/29/11
CHIEF, BUREAU OF UTILITIES — DATE
CHIEF, UTILITY DESIGN DIVISION — DATE 8/29/11

PREPARED BY :
WHITMAN, REQUARDT & ASSOCIATES, LLP
801 South Caroline Street, Baltimore, MD 21231
WR&A

STATE OF MARYLAND — JAMES C. ARNACHT III — NO. 9495 — REGISTERED PROFESSIONAL ENGINEER

DES: RLSP
DRN: WRA
CHK: JOA
DATE: 6/8/11

BY	NO.	REVISION	DATE
WRA	1	AS-BUILTS	2/15

TANK BOOSTER STATION
FLOOR SLAB

600' SCALE TAX MAP NO. 16 BLOCK NO. 3

MARRIOTTSVILLE ROAD
ELEVATED TANK AND BOOSTER STATION
CAPITAL PROJECT NO. W8263
CONTRACT NO. 44-4509

ELECTION DISTRICT 3 HOWARD COUNTY, MARYLAND

DWG. S-2
SCALE AS SHOWN
SHEET 11 OF 35

N:\13732\CADD\S002-13732S1-01.dwg
Jul 25, 2011 - 1:22pm

NOTES:

1. CONCRETE PADS AND PIPE SUPPORT LOCATIONS SHOWN ON THIS PLAN ARE APPROXIMATIONS ONLY. CONTRACTOR SHALL VERIFY IN FIELD THE REQUIRED LOCATIONS OF EACH SUPPORT.
2. FOR PIPE SUPPORT DETAILS, SEE SHEET S-5.
3. THRUST BLOCKS INDICATED ON THIS PLAN SHALL BE CONSTRUCTED IN ACCORDANCE WITH DETAILS ON THIS SHEET, AND IN ACCORDANCE WITH HOWARD COUNTY STANDARD DETAILS.

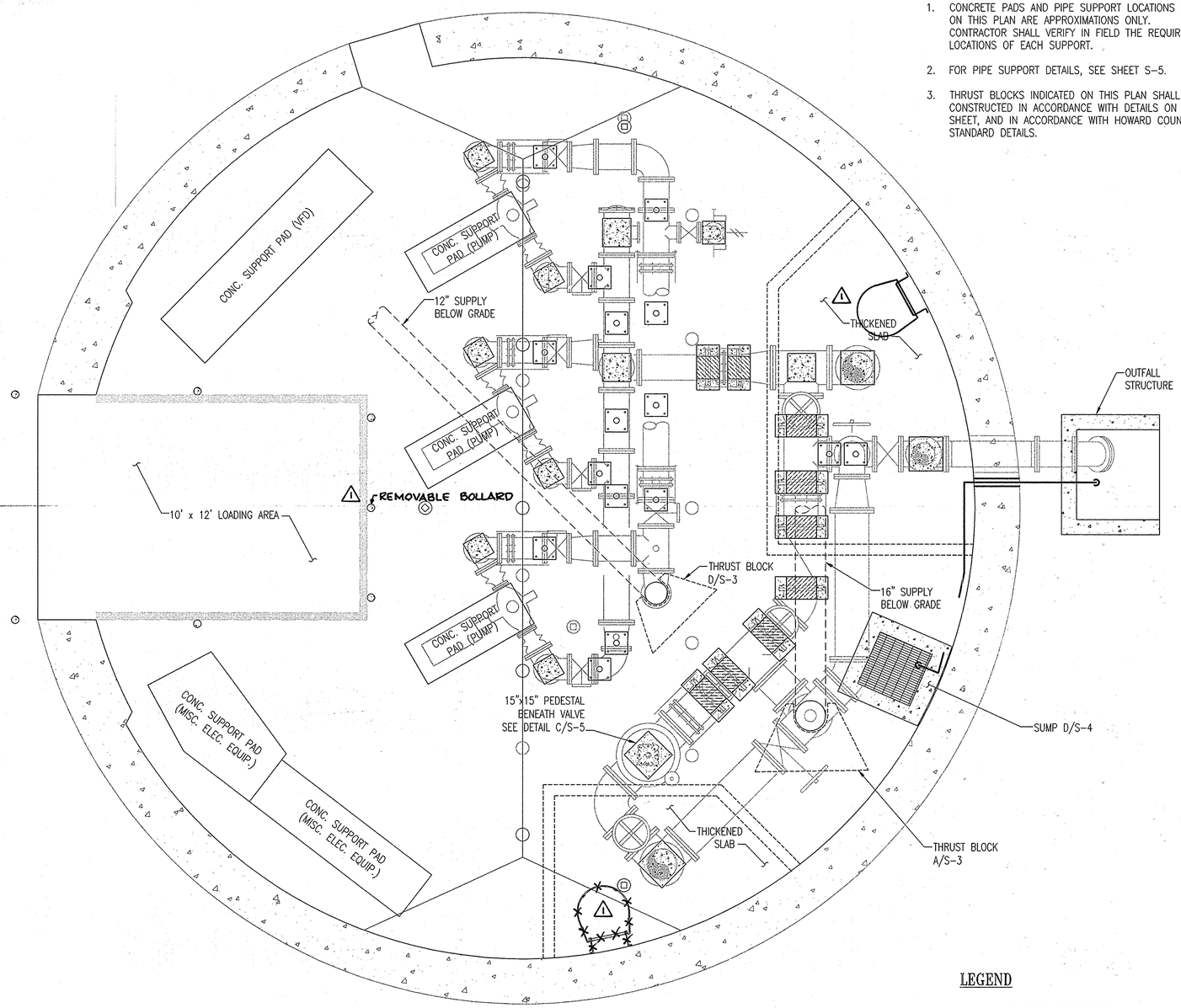

1 / S-3 PLAN: PIPE SUPPORTS
SCALE: 3/8" = 1'-0"

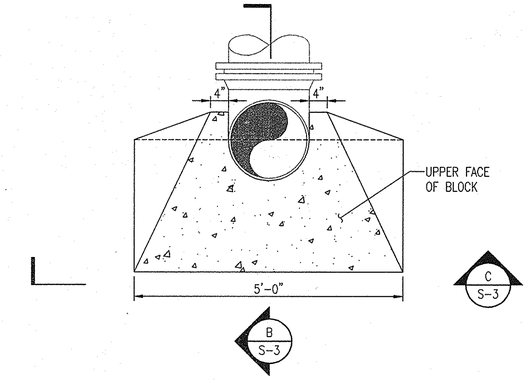

A / S-3 PLAN: CONCRETE THRUST BLOCK FOR 16" 90° BEND
SCALE: 3/4" = 1'-0"

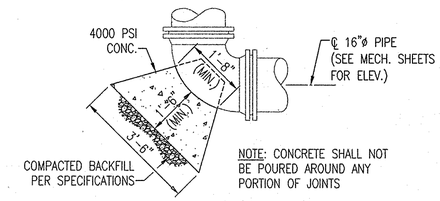

B / S-3 SECTION: THRUST BLOCK
SCALE: 1/2" = 1'-0"

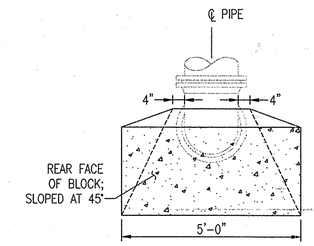

C / S-3 ELEVATION: THRUST BLOCK
SCALE: 1/2" = 1'-0"

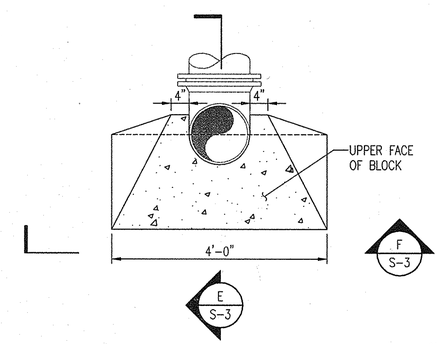

D / S-3 PLAN: CONCRETE THRUST BLOCK FOR 12" 90° BEND
SCALE: 3/4" = 1'-0"

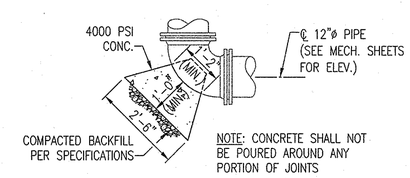

E / S-3 SECTION: THRUST BLOCK
SCALE: 1/2" = 1'-0"

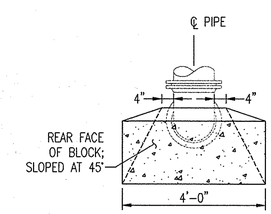

F / S-3 ELEVATION: THRUST BLOCK
SCALE: 1/2" = 1'-0"

LEGEND

- CONCRETE PIPE SADDLE SEE DETAIL A/S-5
- STEEL SADDLE w/ STANCHION SEE DETAIL B/S-5
- CONCRETE PEDESTAL SEE DETAILS C&D/S-5
- FLOOR DRAIN
- UNDERDRAIN CLEANOUT
- GUARD POST

1 0 1 2 3 4 5
SCALE: 1/2" = 1'-0"
2 1 0 1 2 3 4 5 6
SCALE: 3/8" = 1'-0"
2 0 2 4 6 8 10
SCALE: 1/4" = 1'-0"

"PROFESSIONAL CERTIFICATION: I HEREBY CERTIFY THAT THESE DOCUMENTS WERE PREPARED OR APPROVED BY ME, AND THAT I AM A DULY LICENSED PROFESSIONAL ENGINEER UNDER THE LAWS OF THE STATE OF MARYLAND, LICENSE NO. 9495, EXPIRATION DATE: 9/27/2011."

AS-BUILT

DWG. S-3

DEPARTMENT OF PUBLIC WORKS
HOWARD COUNTY, MARYLAND.

DIRECTOR OF PUBLIC WORKS — DATE 8/2/11
CHIEF, BUREAU OF ENGINEERING — DATE 8/2/11
CHIEF, BUREAU OF UTILITIES — DATE 8/2/11
CHIEF, UTILITY DESIGN DIVISION — DATE 8/9/11

PREPARED BY :
WHITMAN, REQUARDT & ASSOCIATES, LLP
801 South Caroline Street, Baltimore, MD 21231
WR&A

DES: RLSP
DRN: WRA
CHK: JOA
DATE: 6/8/11

BY	NO.	REVISION	DATE
WRA	1	AS-BUILTS	2/15

TANK BOOSTER STATION
PIPE SUPPORT PLAN

600' SCALE TAX MAP NO. 16 BLOCK NO. 3

MARRIOTTSVILLE ROAD
ELEVATED TANK AND BOOSTER STATION
CAPITAL PROJECT NO. W8263
CONTRACT NO. 44-4509

ELECTION DISTRICT 3 HOWARD COUNTY, MARYLAND

SCALE AS SHOWN

SHEET 12 OF 35

N:\13732\CADD\S003-1373251-02.dwg
Jul 25, 2011 - 1:22pm

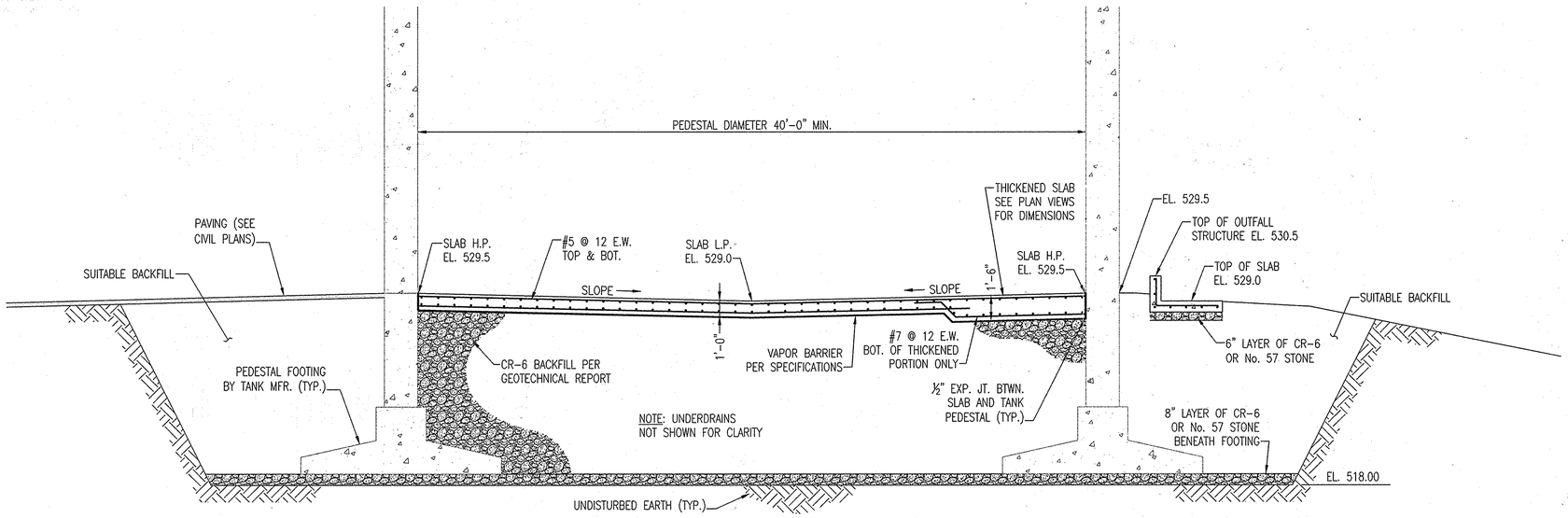

A / S-2 **SECTION THROUGH SLAB ON GROUND**
SCALE: 1/4" = 1'-0"

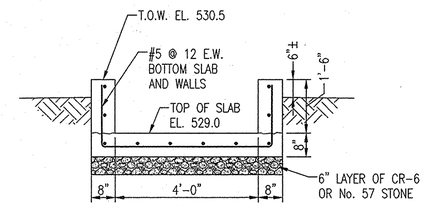

C / S-2 **SECTION THROUGH OUTFALL STRUCTURE**
SCALE: 1/2" = 1'-0"

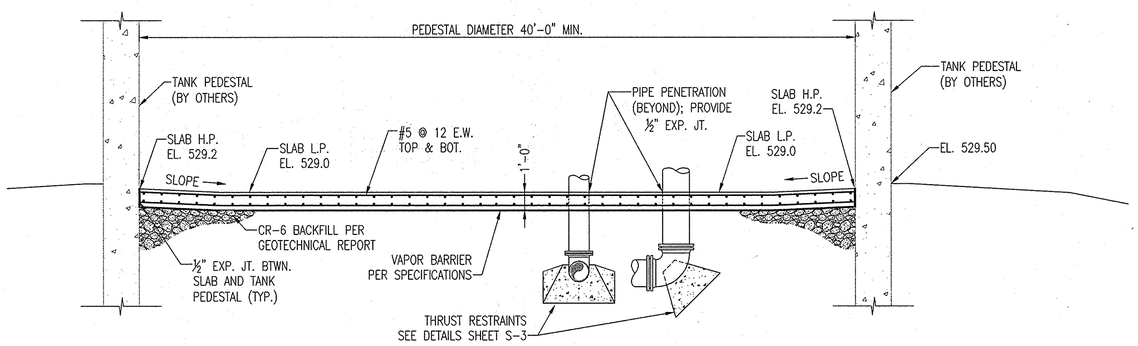

NOTES:
1. UNDERDRAINS NOT SHOWN FOR CLARITY.
2. PIPES ROTATED FOR CLARITY. SEE CIVIL FOR ALIGNMENT.
3. TANK MFR. TO DESIGN PIPE PENETRATIONS THROUGH TANK PEDESTAL (TYP.)

B / S-2 **SECTION THROUGH SLAB ON GROUND**
SCALE: 1/4" = 1'-0"

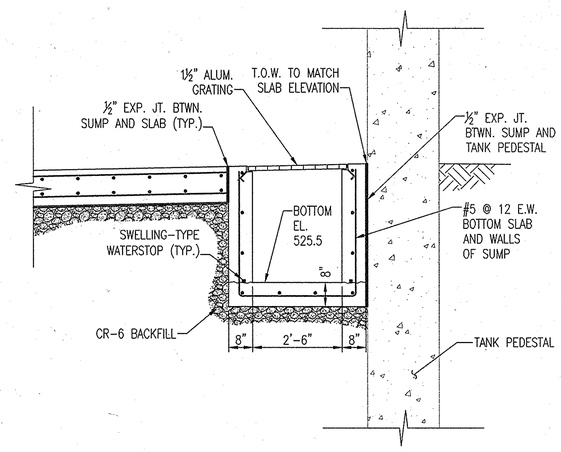

D / S-2 **SECTION THROUGH SUMP CHAMBER**
SCALE: 1/2" = 1'-0"

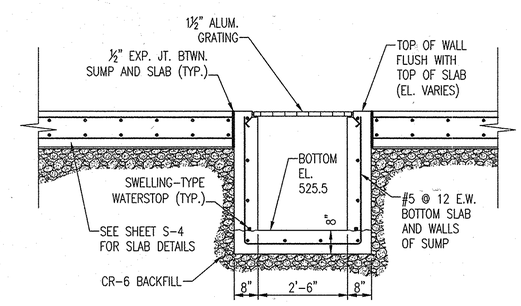

E / S-2 **SECTION THROUGH SUMP CHAMBER**
SCALE: 1/2" = 1'-0"

1 0 1 2 3 4 5
SCALE: 1/2" = 1'-0"

2 0 2 4 6 8 10
SCALE: 1/4" = 1'-0"

AS-BUILT

"PROFESSIONAL CERTIFICATION: I HEREBY CERTIFY THAT THESE DOCUMENTS WERE PREPARED OR APPROVED BY ME, AND THAT I AM A DULY LICENSED PROFESSIONAL ENGINEER UNDER THE LAWS OF THE STATE OF MARYLAND, LICENSE NO. 9495, EXPIRATION DATE: 9/27/2011."

DEPARTMENT OF PUBLIC WORKS
HOWARD COUNTY, MARYLAND.

DIRECTOR OF PUBLIC WORKS — DATE 8/9/11
CHIEF, BUREAU OF ENGINEERING — DATE 8/9/11
CHIEF, BUREAU OF UTILITIES — DATE
CHIEF, UTILITY DESIGN DIVISION — DATE 8/9/11

PREPARED BY :
WHITMAN, REQUARDT & ASSOCIATES, LLP
801 South Caroline Street, Baltimore, MD 21231
WR&A

DES: RLSP
DRN: WRA
CHK: JOA
DATE: 6/8/11

BY	NO.	REVISION	DATE
WRA	1	AS-BUILTS	2/15

TANK BOOSTER STATION
FLOOR SLAB SECTIONS

600' SCALE TAX MAP NO. 16 BLOCK NO. 3

MARRIOTTSVILLE ROAD
ELEVATED TANK AND BOOSTER STATION
CAPITAL PROJECT NO. W8263
CONTRACT NO. 44-4509

ELECTION DISTRICT 3 HOWARD COUNTY, MARYLAND

DWG. S-4
SCALE AS SHOWN
SHEET 13 OF 35

N:\13732\CADD\S004-13732S2-01.dwg
Jul 25, 2011 - 1:22pm

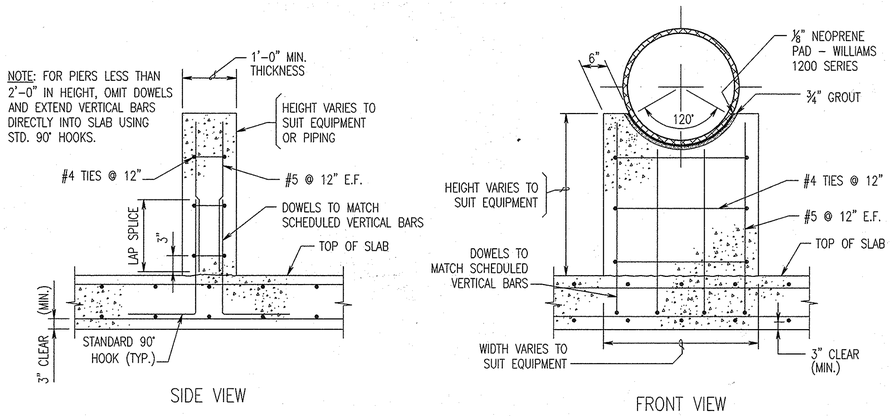

DETAIL: TYPICAL CONCRETE PIPE OR FITTING SUPPORT SADDLE

A / S-3 SCALE: NONE

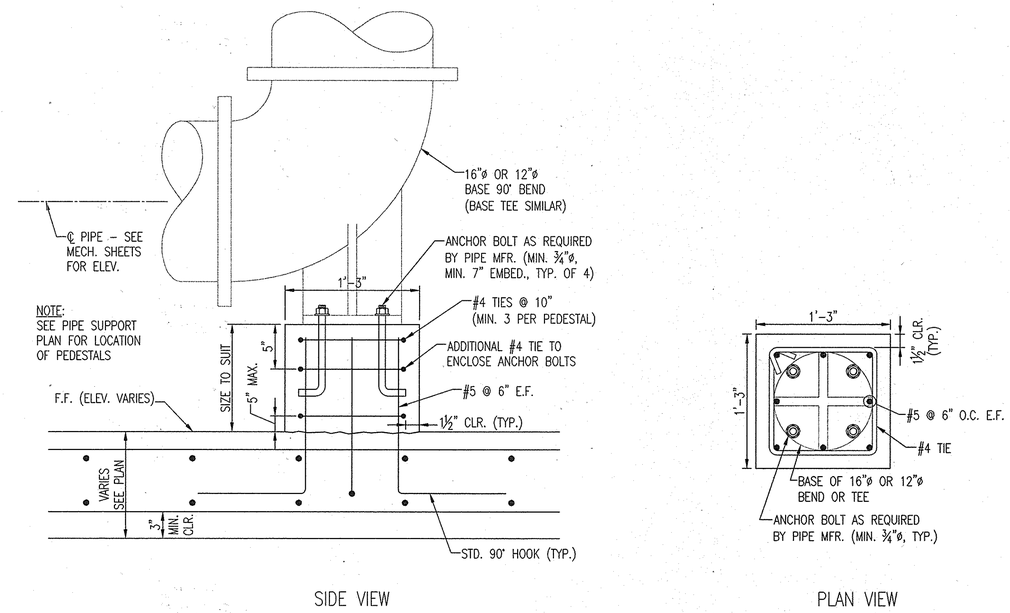

DETAIL: CONCRETE PEDESTAL FOR BASE TEE OR BASE BEND (12" OR 16")

C / S-3 SCALE: NONE

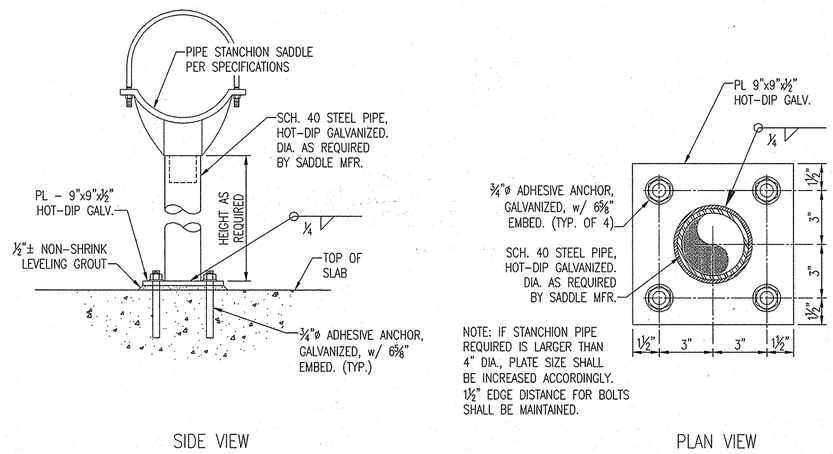

DETAIL: PIPE SADDLE STANCHION AND BASE PLATE

B / S-3 SCALE: NONE

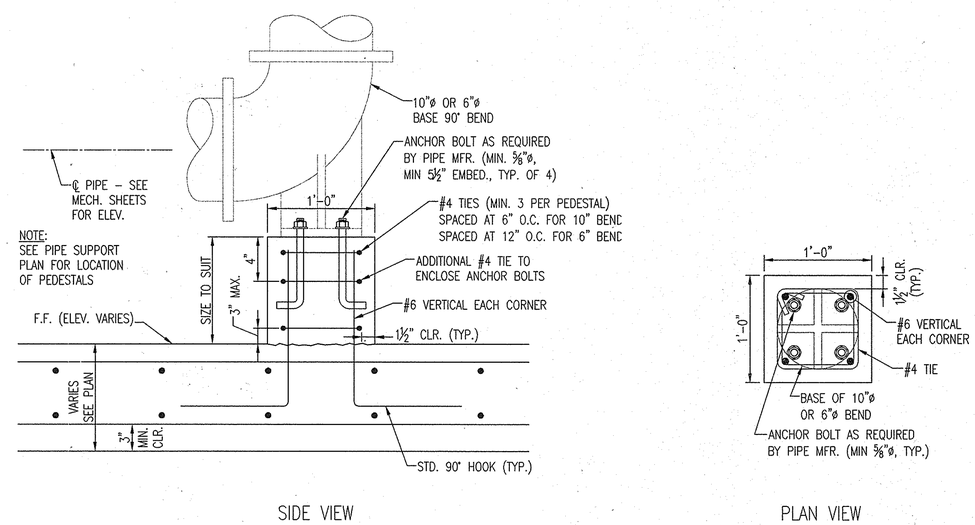

DETAIL: CONCRETE PEDESTAL FOR BASE TEE OR BASE BEND (10" OR 6")

D / S-3 SCALE: NONE

"PROFESSIONAL CERTIFICATION: I HEREBY CERTIFY THAT THESE DOCUMENTS WERE PREPARED OR APPROVED BY ME, AND THAT I AM A DULY LICENSED PROFESSIONAL ENGINEER UNDER THE LAWS OF THE STATE OF MARYLAND, LICENSE NO. 9495, EXPIRATION DATE: 9/27/2011."

DEPARTMENT OF PUBLIC WORKS
HOWARD COUNTY, MARYLAND.

DIRECTOR OF PUBLIC WORKS — DATE 8/22/11
CHIEF, BUREAU OF ENGINEERING — DATE 8/9/11
CHIEF, BUREAU OF UTILITIES — DATE
CHIEF, UTILITY DESIGN DIVISION — DATE 8/9/11

PREPARED BY:
WHITMAN, REQUARDT & ASSOCIATES, LLP
801 South Caroline Street, Baltimore, MD 21231
WR&A

STATE OF MARYLAND — JAMES O. NEW JACOBS, III — NO. 9495 — PROFESSIONAL ENGINEER

DES: RLSP
DRN: RLSP
CHK: JOA
DATE: 6/8/11

BY	NO.	REVISION	DATE
WRA	1	AS-BUILTS	2/15

PIPE SUPPORT DETAILS

600' SCALE TAX MAP NO. 16 BLOCK NO. 3

MARRIOTTSVILLE ROAD
ELEVATED TANK AND BOOSTER STATION
CAPITAL PROJECT NO. W8263
CONTRACT NO. 44-4509

ELECTION DISTRICT 3 HOWARD COUNTY, MARYLAND

AS-BUILT

DWG. S-5

SCALE AS SHOWN

SHEET 14 OF 35

N:\13732\CADD\S005-1373255-02.dwg
Jul 25, 2011 - 1:22pm

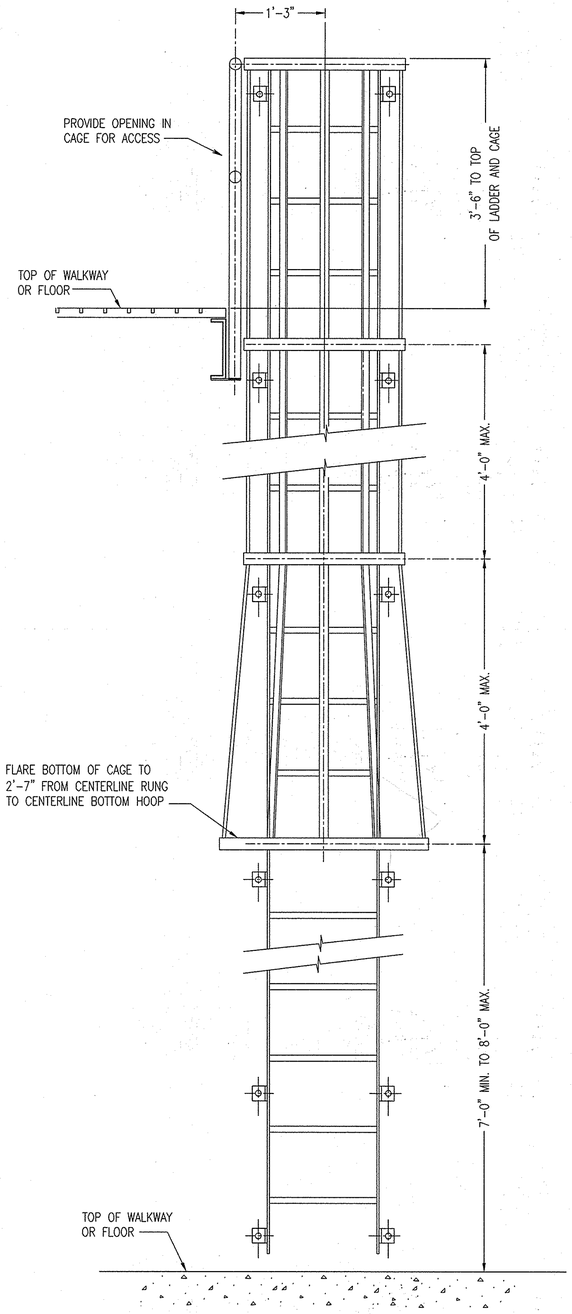

ELEVATION

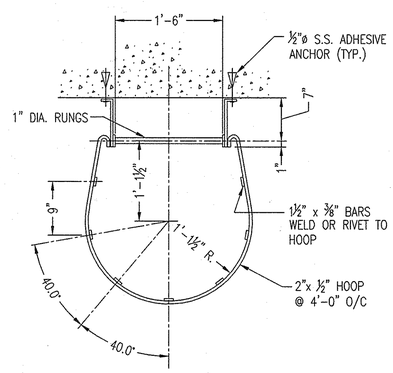

SECTION

NOTE:
ALL CAGE MATERIAL SHALL BE ALUMINUM. WHERE ALUMINUM IS IN CONTACT WITH CONCRETE IT SHALL RECEIVE A PROTECTIVE COATING PER SPECIFICATIONS.

TYPICAL LADDER CAGE DETAIL

SCALE: NONE

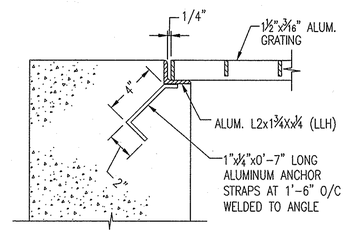

TYPICAL GRATING FRAME DETAIL

SCALE: NONE

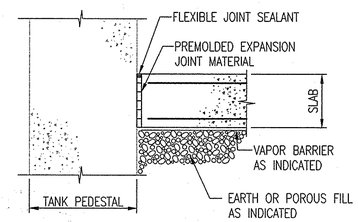

TYPICAL EXPANSION JOINT AT SLAB EDGE

SCALE: NONE

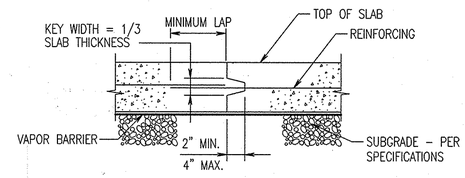

CONSTRUCTION JOINT IN SLAB ON GROUND

SCALE: NONE

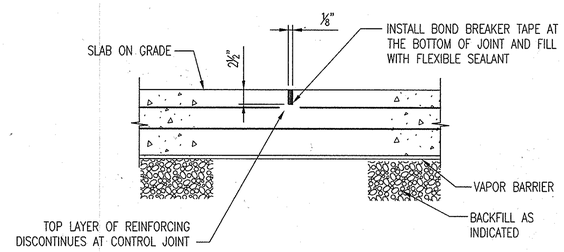

CONTROL JOINT IN SLAB ON GROUND

SCALE: NONE

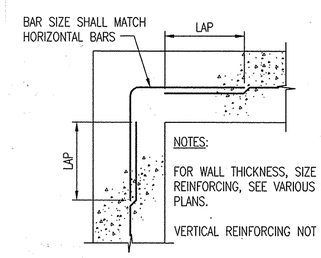

NOTES:

FOR WALL THICKNESS, SIZE AND SPACING OF REINFORCING, SEE VARIOUS SECTIONS AND PLANS.

VERTICAL REINFORCING NOT SHOWN FOR CLARITY.

DETAIL: REINFORCING AT WALL CORNERS

SCALE: NONE

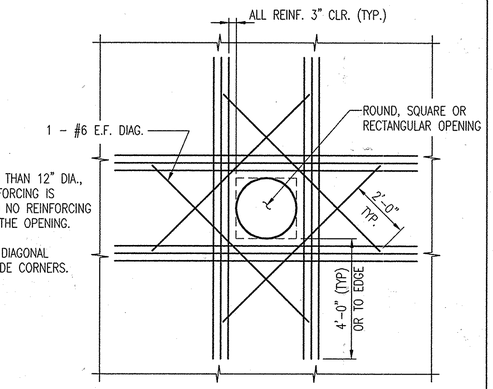

NOTE:
1. FOR OPENINGS LESS THAN 12" DIA., NO ADDITIONAL REINFORCING IS REQUIRED, PROVIDED NO REINFORCING IS INTERRUPTED BY THE OPENING.
2. PROVIDE ADDITIONAL DIAGONAL REINFORCING AT INSIDE CORNERS.

PROVIDE ADDITIONAL REINFORCING (MINIMUM OF ONE-HALF THE NUMBER OF REINFORCING BARS INTERRUPTED BY THE OPENING) ON EACH SIDE AND EACH FACE OF THE OPENING.

ADDITIONAL REINFORCING AROUND OPENINGS

SCALE: NONE

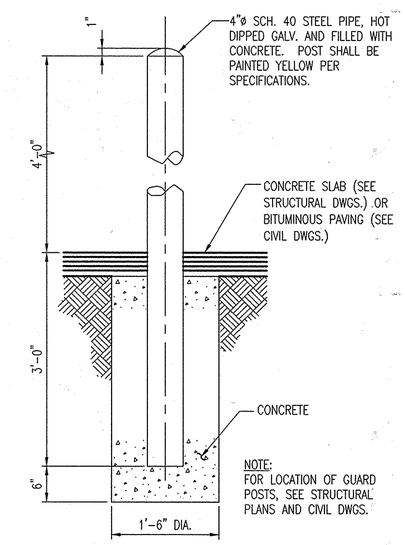

NOTE:
FOR LOCATION OF GUARD POSTS, SEE STRUCTURAL PLANS AND CIVIL DWGS.

TYPICAL GUARD POST DETAIL

SCALE: NONE

"PROFESSIONAL CERTIFICATION: I HEREBY CERTIFY THAT THESE DOCUMENTS WERE PREPARED OR APPROVED BY ME, AND THAT I AM A DULY LICENSED PROFESSIONAL ENGINEER UNDER THE LAWS OF THE STATE OF MARYLAND, LICENSE NO. 9495, EXPIRATION DATE: 9/27/2011."

DEPARTMENT OF PUBLIC WORKS
HOWARD COUNTY, MARYLAND.

DIRECTOR OF PUBLIC WORKS — DATE 8/26/11
CHIEF, BUREAU OF ENGINEERING — DATE 8/29/11
CHIEF, BUREAU OF UTILITIES — DATE 8/29/11
CHIEF, UTILITY DESIGN DIVISION — DATE 8/29/11

PREPARED BY :
WHITMAN, REQUARDT & ASSOCIATES, LLP
801 South Caroline Street, Baltimore, MD 21231

WR&A

STATE OF MARYLAND — JAMES O. ARMAGOST, III — NO. 9495 — REGISTERED PROFESSIONAL ENGINEER

DES: RLSP
DRN: RLSP
CHK: JOA
DATE: 6/8/11

BY	NO.	REVISION	DATE
WRA	1	AS-BUILTS	2/15

MISCELLANEOUS STRUCTURAL DETAILS

600' SCALE TAX MAP NO. 16 BLOCK NO. 3

MARRIOTTSVILLE ROAD
ELEVATED TANK AND BOOSTER STATION
CAPITAL PROJECT NO. W8263
CONTRACT NO. 44-4509

ELECTION DISTRICT 3 HOWARD COUNTY, MARYLAND

AS-BUILT

DWG. S-6

SCALE AS SHOWN

SHEET 15 OF 35

N:\13732\CADD\S006-13732S5-01.dwg
Jul 25, 2011 - 1:22pm

NOTES:

1. VALVES ARE NORMALLY OPEN UNLESS NOTED OTHERWISE.
2. SEE CIVIL SHEETS FOR TANK SUPPLY LINE AND TANK FILL LINE CONTINUATIONS.
3. DRILL AND TAP PIPE ACCORDINGLY TO ACCOMMODATE SAMPLING TAPS, PRESSURE GAUGES, DIFFUSERS AND OTHER SMALL CONNECTIONS.
4. CONTRACTOR SHALL COORDINATE ELEVATIONS WITH THE TANK MANUFACTURER AND SHALL MAKE ADJUSTMENTS TO DIP LENGTH AS REQUIRED.
5. CONTRACTOR SHALL COORDINATE REQUIRED OVERFLOW LINE SIZE TO MEET AWWA D-100. CONTRACTOR COORDINATE STAINLESS STEEL AND DIP LINE SIZE AND OVERFLOW LINE SIZE.
6. DIELECTRIC ISOLATION KITS SHALL BE USED WHERE DISSIMILAR METALS CONNECT TO EACH OTHER PER DIVISION 15.
7. LADDER/PLATFORM ARRANGEMENT CAN VARY FROM THAT WHICH IS SHOWN ON M-6. PLATFORMS ARE TO BE LOCATED AS SPECIFIED.
8. VALVES 4" AND LARGER THAT ARE LOCATED A MIN OF 5.0 FEET FROM FINISHED FLOOR (OR PLATFORM) SHALL BE CHAIN WHEEL OPERATED. CHAIN SHALL EXTEND TO WITHIN 1 FOOT FROM FINISHED FLOOR (OR PLATFORM). CONTRACTOR SHALL COORDINATE VALVES SO THAT CHAIN DOES NOT INTERFERE WITH THE OPERATION OF OTHER VALVES OR DROOPS ACROSS PIPE OR INSTRUMENTATION.
9. CONTRACTOR SHALL COORDINATE LOCATION OF STAINLESS STEEL PIPE TERMINATIONS AND CONNECTION TO DIP FLANGES.
10. CONTRACTOR SHALL COORDINATE DRAIN LINE CONNECTION.
11. DEPENDING UPON THE TYPE OF FOUNDATION THAT IS REQUIRED, THE CONTRACTOR SHALL EITHER PASS THE PIPING THROUGH THE RING WALL OR UNDER THE RING BEAM AND BETWEEN THE PILES. CONTRACTOR SHALL COORDINATE WITH TANK MANUFACTURER. WE HAVE ASSUMED THAT THE PIPE SHALL BE ABLE TO PASS THROUGH THE RING WALL.
12. CONTRACTOR SHALL SUPPLY ALL 45 DEG AND 22.5 DEG FITTINGS AND PIPE TO CONNECT TANK FILL AND OUTLET LINES. BELOW GRADE CONNECTIONS BETWEEN THE TANK FILL AND OUTLET LINES TO THE WATER MAIN SHALL BE PERFORMED AT NO ADDITIONAL COST TO THIS CONTRACT. ELEVATIONS OF PIPING TO THE WATER MAIN SHALL SUIT TYPE OF TANK FOUNDATION USED.
13. THE CRANE AND THE TOP OF THE TANK ACCESS TUBE SHALL HAVE A TEMPORARY DUAL OBSTRUCTION LIGHT IN PLACE AND OPERATIONAL UNTIL THE TANK HAS BEEN PLACED IN OPERATION
14. COATINGS SHALL BE IN ACCORDANCE WITH AWWA D102
15. CONTRACTOR SHALL COORDINATE ALL PENETRATIONS THAT ARE REQUIRED BY MECHANICAL, ELECTRICAL AND INSTRUMENTATION.
16. SEE GEOTECHNICAL REPORT.
17. SEE STRUCTURAL SHEET FOR PIPE SUPPORT AND FLOOR PENETRATION DETAILS.
18. CONTRACTOR SHALL COORDINATE ELEVATIONS WITH THE TANK MANUFACTURER AND SHALL MAKE ADJUSTMENTS AS REQUIRED.
19. ALL DAMPERS SHALL MATCH IN NOMINAL SIZE WITH THEIR RESPECTIVE LOUVERS UNLESS OTHERWISE INDICATED ON THE CONTRACT DRAWINGS. WHERE MULTIPLE FANS SHARE A LOUVER, THE BACKDRAFT DAMPERS SHALL BE PARTITIONED FOR EACH REPSECTIVE FAN.
20. ALL FLANGE ADAPTERS AND FLEXIBLE COUPLINGS SHALL BE HARNESSED, WHETHER SHOWN OR NOT SHOWN.
21. SAMPLING TAP SHALL BE SIZED AS SHOWN IN DETAIL UNLESS NOTED OTHERWISE.
22. TANK MANUFACTURER TO DESIGN TANK PENETRATIONS FOR COMMUNICATIONS CABLE ENTRY SLOTS
23. SLOPES FOR DRAIN LINES, VENTS AND PRESSURE RELIEF SHALL BE A MINIMUM OF 1/4" PER LINEAR FOOT UNLESS NOTED OTHERWISE.
24. PROVIDE AS BUILT SPOT ELEVATIONS AT THE CENTER OF ALL VALVES, PIPE RUNS AND OTHER MECHANICAL COMPONENTS INCLUDING THE LEVELS IN THE TANK
25. COORDINATE THE PUMP DISCHARGE AND SUCTION FITTING SIZE AND MAKE ADJUSTMENTS TO SUIT.
26. MAINTAIN DETAILED RED LINE AS BUILT DRAWINGS ON THE JOB SITE DURING CONSTRUCTION TO DOCUMENT CONSTRUCTION CHANGES AND INFORMATION AS DELINEATED IN THE SPECIFICATIONS. RED LINE AS BUILD DRAWINGS SHALL BE MADE AVAILABLE FOR PERIODIC REVIEW DURING THE PROGRESS MEETINGS.
27. ALL HOSE BIBS AND HOSE RACKS SHALL BE INSTALLED 3.5 FEET ABOVE THE FINISHED FLOOR.
28. UNLESS OTHERWISE INDICATED, ALL EQUIPMENT SHALL BE PROVIDED WITH A MINIMUM 4 INCH CONCRETE HOUSE KEEPING PAD SIZED TO SUIT EQUIPMENT.
29. METAL FABRICATIONS WITH BURS, SHARP EDGES OR POSE A HAZARD SHALL BE MADE DULL/BLUNT OR SHALL BE PROVIDED WITH AN APPROPRIATE COVERING THAT SHALL MITIGATE AND DRAW ATTENTION TO THE HAZARD.
30. COORDINATE THE LOCATION OF PIPE AND VALVE SUPPORTS SO THAT ACCESS TO VALVE BEARINGS AND ACCESS PORTS ARE NOT RESTRICTED.
31. ALL MOTOR DRIVEN EQUIPMENT OR EQUIPMENT REQUIRING ELECTRICAL CONNECTIONS SHALL HAVE A DISCONNECT.

ABBREVIATIONS:

AIT	ANALYZE INDICATE TRANSMIT
ARV	AIR RELEASE VALVE
AWWA	AMERICAN WATER WORKS ASSOCIATION
ASTM	AMERICAN SOCIETY FOR TESTING MATERIAL
BOB	BOTTOM OF BOWL
BDD	BACK DRAFT DAMPER
BP	BOOSTER PUMP
CL	CENTER LINE
CONC.	CONCRETE
COL.	COLUMN
CO	CLEAN OUT
DEG.	DEGREE
D.I.	DUCTILE IRON
DIA.	DIAMETER
DIP	DUCTILE IRON PIPE
EL.	ELEVATION
' OR FT.	FEET
FAA	FEDERAL AVIATION ADMINISTRATION
FB	FLAT BAR
FD	FLOOR DRAIN
FM	FLOW METER
FF	FINISHED FLOOR
FLGD.	FLANGED
GPM	GALLONS PER MINUTE
HDPE	HIGH DENSITY POLYETHYLENE
HP	HIGH POINT
I.D.	INSIDE DIAMETER
INV	INVERT
" OR IN.	INCH
LG	LONG
LF	LINEAR FEET
MP	METERING PUMP
mA	MILLI-AMP
MG	MILLION GALLON
MGD	MILLION GALLONS PER DAY
MIN.	MINIMUM
MOD	MOTOR OPERATED DAMPER
NC OR N.C.	NOMINALLY CLOSED
NO OR N.O.	NOMINALLY OPEN
NPT	NATIONAL PIPE THREAD
O.D.	OUTSIDE DIAMETER
OSHA	OCCUPATIONAL SAFETY AND HEALTH ACT
OF	OVERFLOW
#	POUND
PL	PLATE
PPM	PART PER MILLION
PSI	POUNDS PER SQUARE INCH
PSIG	POUNDS PER SQUARE INCH GAUGE
PVC	POLYVINYL CHLORIDE
PT	PRESSURE TRANSMITTER
RAD	RADIUS
RPM	REVOLUTIONS PER MINUTE
SMACCNA	SHEET METAL AND AIR CONDITIONING CONTRACTORS NATIONAL ASSOCIATION
NAOCL	SODIUM HYPOCHLORITE CHEMICAL
STN.STL. (S.S.)	STAINLESS STEEL
SPD.	SUMP PUMP DISCHARGE
THD	THREAD
THK.	THICK
TYP.	TYPICAL
W/	WITH

LEGEND:

- BALL VALVE
- BLIND FLANGE
- CHECK VALVE
- CLEAN OUT
- DRAIN LINES OR UNDERGROUND UTILITIES
- XX — DENOTES CONSTRUCTION NOTE
- XX — DENOTES EQUIPMENT
- EQUIPMENT TO BE PROVIDED BY OTHERS
- FIRE HYDRANT
- FLOOR DRAIN W/ P TRAP
- FLOW ARROW
- FM — FLOW METER
- GROUND
- NEW CONSTRUCTION
- REDUCER
- RESILIENT SEAT GATE VALVE
- SURGE RELIEF VALVE
- PUMP
- PT — PRESSURE TRANSMITTER
- SINGLE ACTING ALTITUDE VALVE
- HOSE BIBB
- LT — LEVEL TRANSMITTER

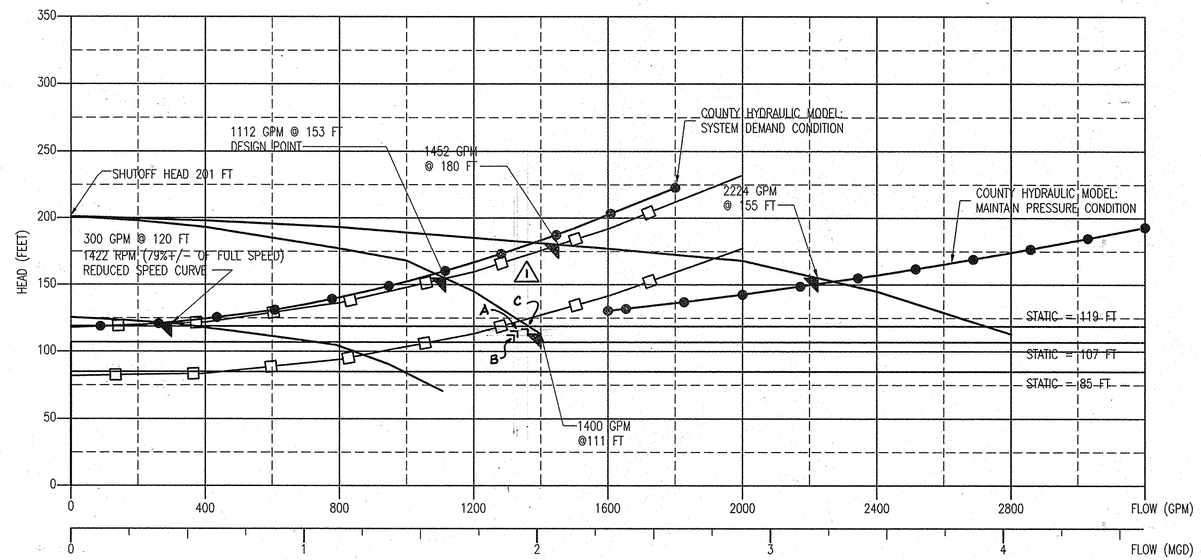

1

PUMP FIELD TEST		DISCHARGE PRESSURE PSI	SUCTION PRESSURE PSI	FLOW GPM	HEAD FEET
A	PUMP 1	90	40	1332	116
B	PUMP 2	90	42	1320	112
C	PUMP 3	92	42	1359	117

- COUNTY HYDRAULIC MODEL DYNAMICS
- PUMP CURVE SUPPLEMENTAL POINTS AND DESIGN POINTS
- 2011 COUNTY HYDRAULIC MODEL DYNAMICS

SYSTEM CHARACTERISTICS AND PUMP CURVE

HORIZONTAL SCALE 3/16" = 40 GPM VERTICAL SCALE 3/16" = 10'-0"

"PROFESSIONAL CERTIFICATION, I HEREBY CERTIFY THAT THESE DOCUMENTS WERE PREPARED OR APPROVED BY ME, AND THAT I AM A DULY LICENSED PROFESSIONAL ENGINEER UNDER THE LAWS OF THE STATE OF MARYLAND, LICENSE NO. 10009, EXPIRATION DATE: 9/21/2012"

AS-BUILT

DWG. M-1

DEPARTMENT OF PUBLIC WORKS
HOWARD COUNTY, MARYLAND.

DIRECTOR OF PUBLIC WORKS — DATE 8/26/11
CHIEF, BUREAU OF ENGINEERING — DATE 8/29/11
CHIEF, BUREAU OF UTILITIES — DATE
CHIEF, UTILITY DESIGN DIVISION — DATE 8/29/11

PREPARED BY :
WHITMAN, REQUARDT & ASSOCIATES, LLP
801 South Caroline Street, Baltimore, MD 21231

WR&A

STATE OF MARYLAND — HERBERT W. LEW — NO. 10,009 — REGISTERED PROFESSIONAL ENGINEER
8/1/11

DES:
DRN: PLL
CHK:
DATE: 6/8/11

BY	NO.	REVISION	DATE
WRA	1	AS-BUILTS	8/15

LEGEND, NOTES, ABBREVIATIONS AND SYSTEM CURVE

600' SCALE TAX MAP NO. 16 BLOCK NO. 3

MARRIOTTSVILLE ROAD
ELEVATED TANK AND BOOSTER STATION
CAPITAL PROJECT NO. W8263
CONTRACT NO. 44-4509

ELECTION DISTRICT 3 HOWARD COUNTY, MARYLAND

SCALE AS SHOWN

SHEET 16 OF 35

C:\Temp\Drawing\AcPublish_3700\M001-13732M0-01.dwg
Jul 25, 2011 - 10:20am

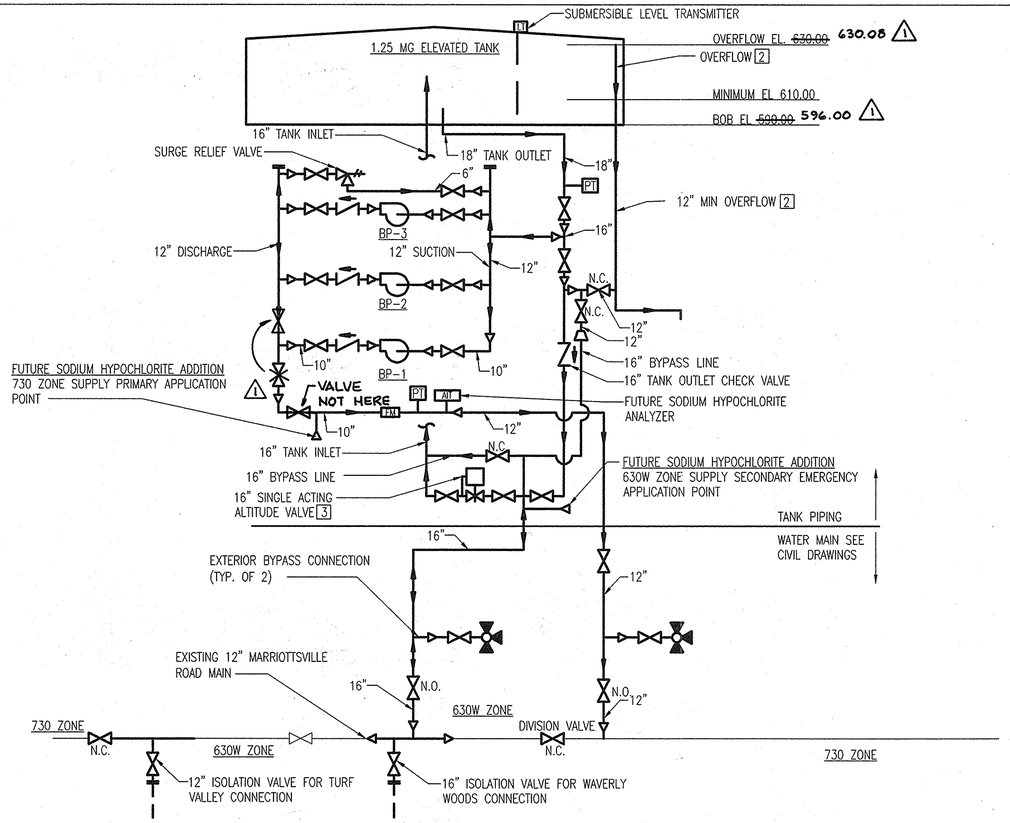

BOOSTER STATION SCHEMATIC

SCALE: NONE

LEGEND

- EXISTING
- NEW WORK
- ANALOG CONTROL

NOTES

1. SEE M-1 FOR GENERAL NOTES, LEGEND AND ABBREVIATIONS.
2. OVERFLOW WILL BE SIZED BY TANK MANUFACTURERS.
3. ALTITUDE VALVE SHALL BE EQUIPPED WITH REMOTE CLOSING FEATURES.
4. FLOW PACING SIGNAL ORIGINATES WITH THE 730 ZONE FLOW METER.
5. ALL CONTROL LEVELS SHALL BE ADJUSTABLE AT THE BUREAU MASTER SCADA STATION.
6. THE EXISTING 12 INCH DOUBLE ACTING ALTITUDE VALVE AT BETHANY ELEVATED WATER TANK SHALL BE REPLACED WITH A NEW CLA-VAL 12 INCH DOUBLE ACTING ALTITUDE VALVE. CONTRACTOR SHALL COORDINATE REQUIRED CONTROLS TO MAKE NEW VALVE OPERATIONAL.

MARRIOTTSVILE TANK AND BOOSTER STATION ELEVATIONS

BOWL: 1	ZONE SERVICE:	ZONE SERVICE (CONT):
OVERFLOW EL.....~~630.00~~ 630.08 16" INLET EL.....610.00 BOTTOM OF BOWL EL....~~590.00~~ 596.00 ALTITUDE VALVE: CLOSE EL.....629.00 OPEN EL.....620.00 FINISHED FLOOR EL.....529.50	630W ZONE REQUIREMENTS: FUTURE MAX DAY.....1000 GPM FIRE FLOW.....1500 GPM TOTAL.....2500 GPM	TANK OUTLET REQUIREMTNES MAXIMUM 630W ZONE.....2500 GPM MAXIMUM 730 ZONE.....1580 GPM TOTAL.....4080 GPM

PRIMARY SUPPLY ZONE - 550 ZONE PINE ORCHARD BOOSTER STATION RECOVERY CONTROL LEVELS FOR 630 W ZONE MARRIOTTSVILE TANK

NOTE:	TANK CONTROL LEVELS:	TANK CONTROL LEVELS:
PINE ORCHARD BOOSTER STATION SHALL BE CONTROLLED FROM THE MARRIOTTSVILLE TANK	[CONSTANT SPEED] LEAD PUMP STOP EL.....627.00 LAG PUMP STOP EL.....623.00 PINE ORCHARD LEAD PUMP START EL.....617.00 PINE ORCHARD LAG PUMP START EL.....613.00	[VARIABLE SPEED] STEP STOP EL.....627.00 MAINTAIN EL.....620.00 STEP START EL.....615.00

SECONDARY SUPPLY ZONE - ALPHA RIDGE 730 ZONE TANK NEW CONTROL LEVELS

BOWL:	TANK CONTROL LEVELS:	TANK CONTROL LEVELS:
OVERFLOW EL.....730.00 BOTTOM OF BOWL EL...700.00 ALTITUDE VALVE: CLOSE EL.....729.00 OPEN EL.....725.00	[CONSTANT SPEED] PUMP(S) STOP EL.....728.00 MARRIOTTSVILLE (LEAD) EL.....725.00 FREDERICK ROAD (LAG) EL.....723.00 MARRIOTTSVILLE (LAG-LAG) EL.....721.00 FREDERICK ROAD (LAG-LAG) EL.....719.00 MARRIOTTSVILLE (STANDBY) EL.....717.00 FREDERICK ROAD (STANDBY) EL.....715.00	[VARIABLE SPEED] STEP STOP EL.....728.00 MAINTAIN EL.....725.00 STEP START EL.....723.00

"PROFESSIONAL CERTIFICATION, I HEREBY CERTIFY THAT THESE DOCUMENTS WERE PREPARED OR APPROVED BY ME, AND THAT I AM A DULY LICENSED PROFESSIONAL ENGINEER UNDER THE LAWS OF THE STATE OF MARYLAND, LICENSE NO. 10009, EXPIRATION DATE: 9/2/2012"

AS-BUILT

DWG. M-2

DEPARTMENT OF PUBLIC WORKS
HOWARD COUNTY, MARYLAND.

DIRECTOR OF PUBLIC WORKS — DATE 8/26/11
CHIEF, BUREAU OF ENGINEERING — DATE 8/9/11
CHIEF, BUREAU OF UTILITIES — DATE
CHIEF, UTILITY DESIGN DIVISION — DATE 8/9/11

PREPARED BY :
WHITMAN, REQUARDT & ASSOCIATES, LLP
801 South Caroline Street, Baltimore, MD 21231
WR&A

STATE OF MARYLAND — HERBERT W. LEW — No. 10,009 — REGISTERED PROFESSIONAL ENGINEER
Hubert W. Lew 8/11/11

DES: BKM
DRN: PLL
CHK:
DATE: 6/8/11

BY	NO.	REVISION	DATE
WRA	1	AS-BUILTS	2/15

TANK AND BOOSTER STATION SYSTEM SCHEMATICS

600' SCALE TAX MAP NO. 16 BLOCK NO. 3

MARRIOTTSVILLE ROAD
ELEVATED TANK AND BOOSTER STATION
CAPITAL PROJECT NO. W8263
CONTRACT NO. 44-4509

ELECTION DISTRICT 3 — HOWARD COUNTY, MARYLAND

SCALE AS SHOWN

SHEET 17 OF 35

C:\Temp\Drawing\AcPublish_3700\M002-13732M1-01.dwg
Jul 25, 2011 - 10:20am

NOTES:

1. SEE M-1 FOR NOTES, LEGEND AND ABBREVIATIONS
2. THE TANK MANUFACTURER SHALL SIZE THE OVERFLOW PIPE AND ALL ASSOCIATED FITTINGS.
3. SEE E AND I DRAWINGS FOR ELECTRICAL AND INSTRUMENTATION REQUIREMENTS
4. TANK MANUFACTURER SHALL SIZE THE TANK PEDESTAL WALL THICKNESS. THE THICKNESS SHOW IS FOR ILLUSTRATION PURPOSES ONLY.
5. THE MINIMUM ID OF THE COLUMN SHALL BE 40 FEET.

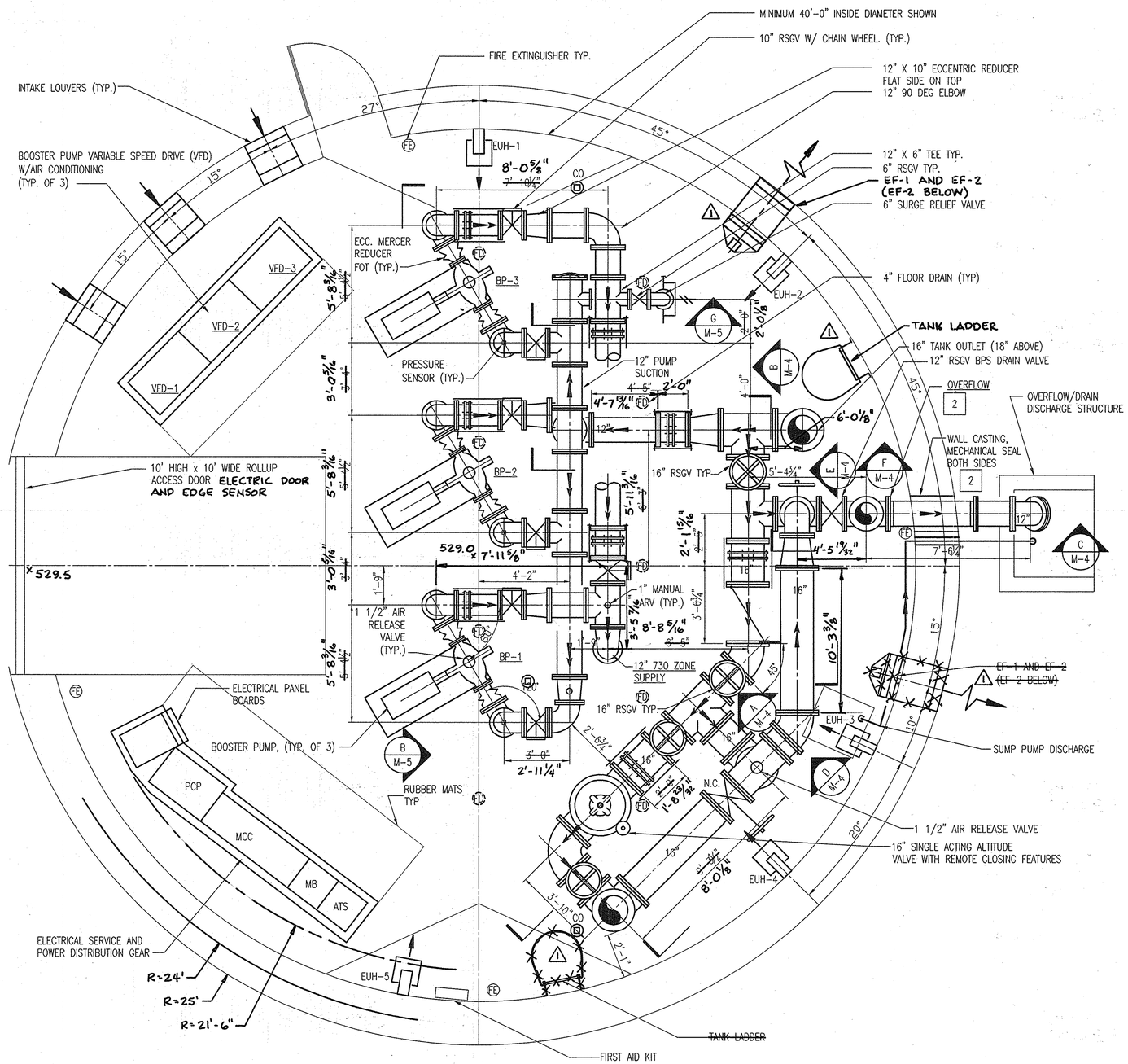

1 / M-3 BPS PLAN

SCALE: 3/8"=1'-0"

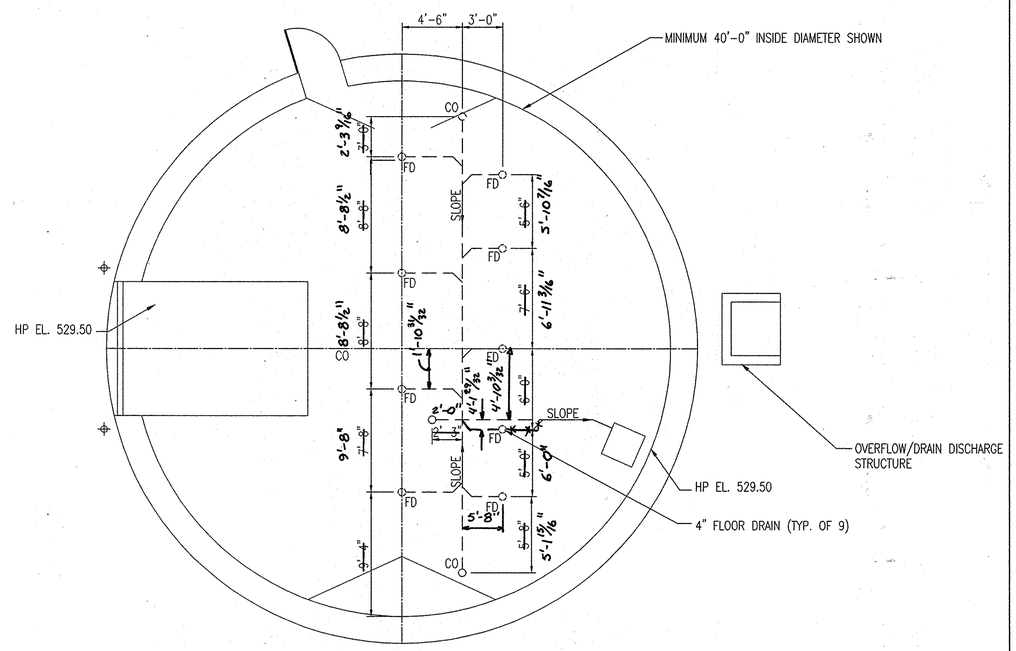

2 / M-3 FLOOR DRAIN PLAN

SCALE: 3/16"=1'-0"

GRAPHIC SCALE

SCALE: 3/8" = 1'-0"

SCALE: 3/16" = 1'-0"

AS-BUILT

DWG. M-3

"PROFESSIONAL CERTIFICATION, I HEREBY CERTIFY THAT THESE DOCUMENTS WERE PREPARED OR APPROVED BY ME, AND THAT I AM A DULY LICENSED PROFESSIONAL ENGINEER UNDER THE LAWS OF THE STATE OF MARYLAND, LICENSE NO. 10009, EXPIRATION DATE: 9/2/2012."

DEPARTMENT OF PUBLIC WORKS
HOWARD COUNTY, MARYLAND

DIRECTOR OF PUBLIC WORKS — DATE 8/2/11
CHIEF, BUREAU OF ENGINEERING — DATE 8/2/11
CHIEF, BUREAU OF UTILITIES — DATE
CHIEF, UTILITY DESIGN DIVISION — DATE 8/2/11

PREPARED BY :
WHITMAN, REQUARDT & ASSOCIATES, LLP
801 South Caroline Street, Baltimore, MD 21231

STATE OF MARYLAND — HERBERT W. LEW — NO. 10009 — REGISTERED PROFESSIONAL ENGINEER — 8/1/11

DES:
DRN: PLL/BKM
CHK:
DATE: 6/8/11

BY	NO.	REVISION	DATE
WRA	1	AS-BUILTS	2/15

TANK BOOSTER STATION
FLOOR PLAN

600' SCALE TAX MAP NO. 16 BLOCK NO. 3

MARRIOTTSVILLE ROAD
ELEVATED TANK AND BOOSTER STATION
CAPITAL PROJECT NO. W8263
CONTRACT NO. 44-4509

ELECTION DISTRICT 3 HOWARD COUNTY, MARYLAND

SCALE AS SHOWN

SHEET 18 OF 35

C:\Temp\Drawing\AcPublish_3700\M003-13732M2-01.dwg
Jul 25, 2011 - 10:20am

NOTES:

1. SEE M-1 FOR GENERAL NOTES, LEGEND AND ABBREVIATIONS
2. TANK MANUFACTURER SHALL SIZE THE OVERFLOW LINE AND PROVIDE ADDITIONAL FITTINGS AND APPURTENANCES AS REQUIRED.
3. CONTRACTOR SHALL SEE SPECIFICATION DIVISION 15 FOR ISOLATION KITS REQUIREMENTS.
4. THICKNESS OF TANK SUPPORT COLUMN WALL SHALL BE SIZED BY THE TANK MANUFACTURER.
5. PIPES ROTATED FOR CLARITY. SEE PLAN.
6. SEE CIVIL FOR BURIED PIPE INFORMATION AND LOCATION AND BUTTRESS DETAILS.

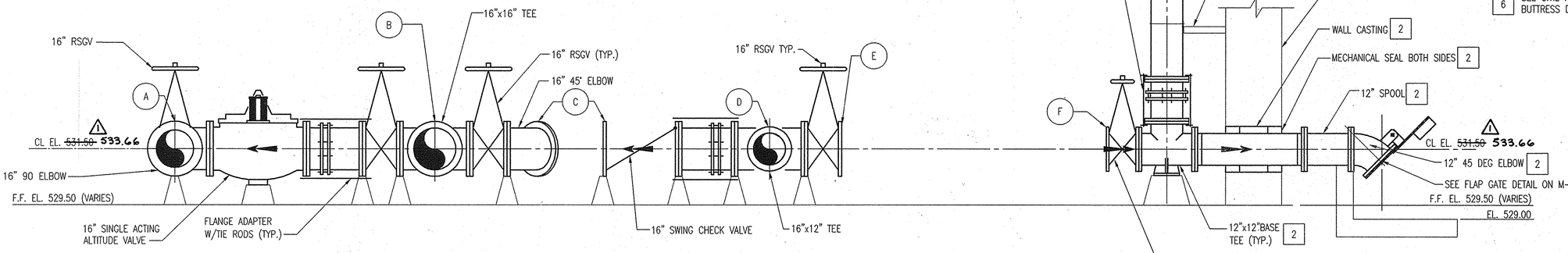

B / M-3 **TANK 630 W BACK FEED SUPPLY LINE**
SCALE: 1/2" = 1'-0"
REF: M-3

A / M-3 **TANK SUPPLY LINE**
SCALE: 1/2" = 1'-0"
REF: M-3

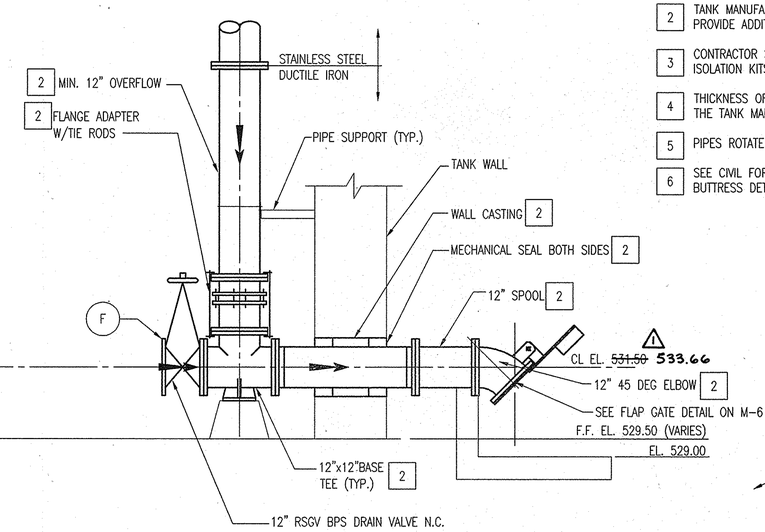

C / M-3 **TANK OVERFLOW AND BOOSTER PUMP PIPING DRAIN LINE** 9
SCALE: 1/2" = 1'-0"
REF: M-3

SHEET LEGEND:

- # CONNECTION/PIPING CONTINUATION MARKERS
- ▲ PIPE SUPPORT, APPROXIMATE LOCATION 7

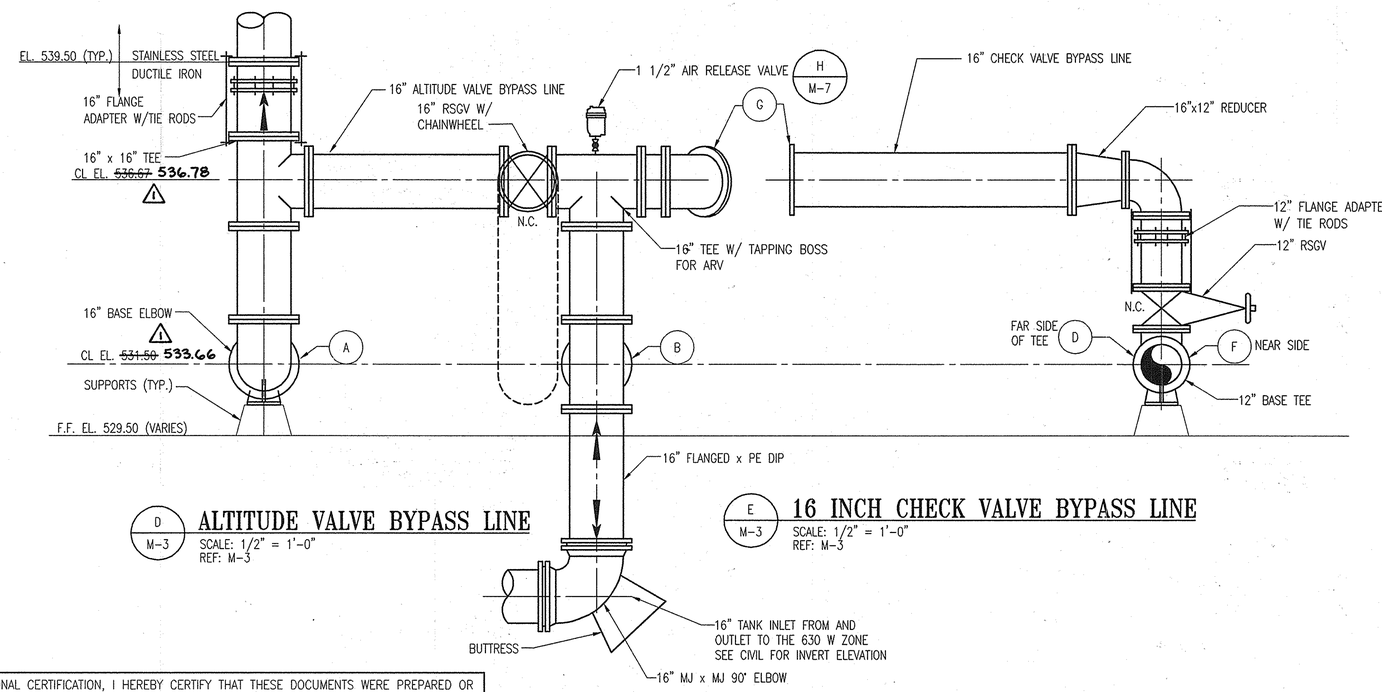

D / M-3 **ALTITUDE VALVE BYPASS LINE**
SCALE: 1/2" = 1'-0"
REF: M-3

E / M-3 **16 INCH CHECK VALVE BYPASS LINE**
SCALE: 1/2" = 1'-0"
REF: M-3

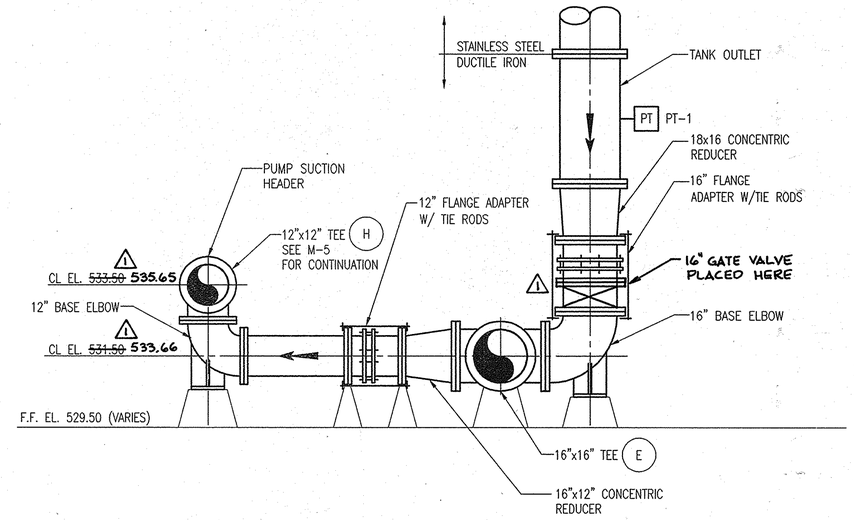

F / M-3 **BOOSTER PUMP SUPPLY LINE**
SCALE: 1/2" = 1'-0"
REF: M-3

GRAPHIC SCALE
0 1' 2' 4'
SCALE: 1/2" = 1'-0"

AS-BUILT

DWG. M-4

"PROFESSIONAL CERTIFICATION, I HEREBY CERTIFY THAT THESE DOCUMENTS WERE PREPARED OR APPROVED BY ME, AND THAT I AM A DULY LICENSED PROFESSIONAL ENGINEER UNDER THE LAWS OF THE STATE OF MARYLAND, LICENSE NO. 10009, EXPIRATION DATE: 9/2/2012"

DEPARTMENT OF PUBLIC WORKS
HOWARD COUNTY, MARYLAND

DIRECTOR OF PUBLIC WORKS — DATE 8/2/11
CHIEF, BUREAU OF ENGINEERING — DATE 8/2/11
CHIEF, BUREAU OF UTILITIES — DATE
CHIEF, UTILITY DESIGN DIVISION — DATE 8/2/11

PREPARED BY:
WHITMAN, REQUARDT & ASSOCIATES, LLP
801 South Caroline Street, Baltimore, MD 21231
WR&A

STATE OF MARYLAND — HUBERT W. LEE — No. 10009 — REGISTERED PROFESSIONAL ENGINEER
Hubert W. Lee 8/1/11

DES:
DRN:
CHK:
DATE: 6/8/11

BY	NO.	REVISION	DATE
WRA	1	AS-BUILTS	2/15

SUPPLY, OVERFLOW AND DISCHARGE PIPE SECTIONS

600' SCALE TAX MAP NO. 16 BLOCK NO. 3

MARRIOTTSVILLE ROAD
ELEVATED TANK AND BOOSTER STATION
CAPITAL PROJECT NO. W8263
CONTRACT NO. 44-4509

ELECTION DISTRICT 3 — HOWARD COUNTY, MARYLAND

SCALE AS SHOWN

SHEET 19 OF 35

C:\Temp\Drawing\AcPublish_3700\M004-13732M2-02.dwg
Jul 25, 2011 - 10:20am

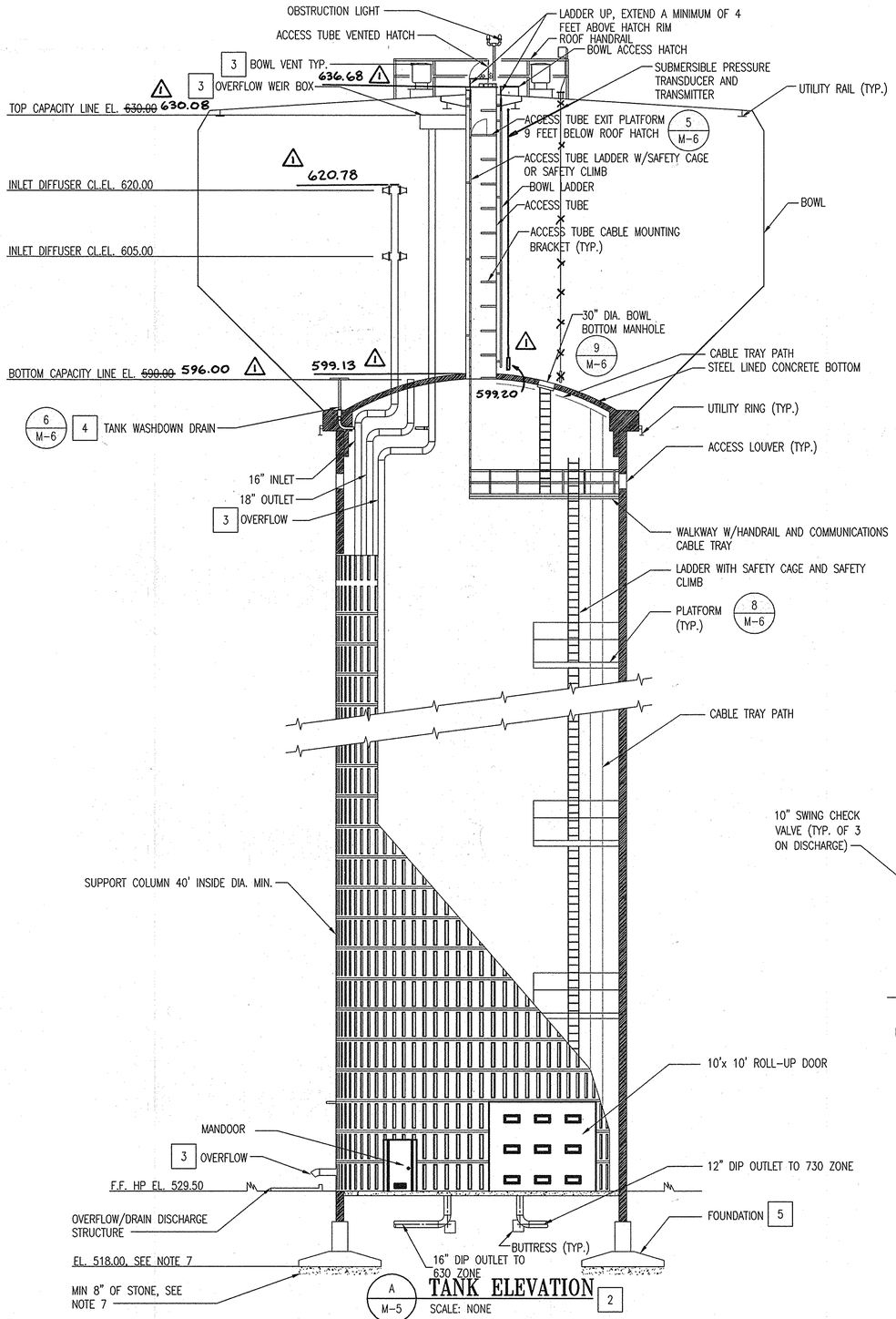

A M-5 **TANK ELEVATION** 2

SCALE: NONE

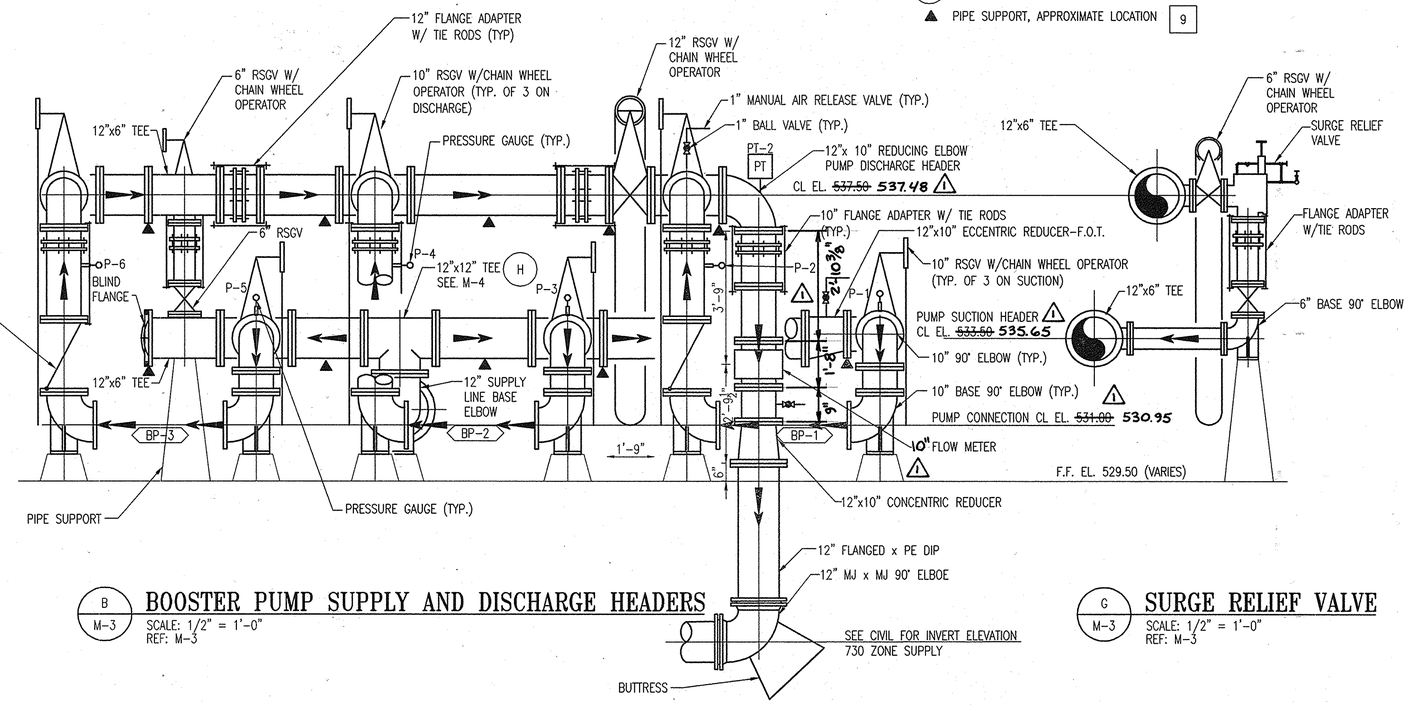

B M-3 **BOOSTER PUMP SUPPLY AND DISCHARGE HEADERS**

SCALE: 1/2" = 1'-0"
REF: M-3

G M-3 **SURGE RELIEF VALVE**

SCALE: 1/2" = 1'-0"
REF: M-3

NOTES:

1. SEE M-1 FOR NOTES, LEGEND AND ABBREVIATIONS
2. ROTATED FOR CLARITY
3. TANK MANUFACTURER SHALL SIZE ALL COMPONENTS OF THE OVERFLOW, BOWL VENTILATION AND ACCESS TUBE, EACH VENT SHALL BE SIZED FOR THE MAXIMUM CAPACITY.
4. THE TANK WASHDOWN DRAIN SHALL BE LOCATED IN THE LOWEST PRACTICAL LOCATION OF THE BOWL.
5. TANK MANUFACTURER SHALL DESIGN THE FOUNDATION. FOUNDATION SHOWN IS FOR ILLUSTRATION ONLY.
6. SEE CIVIL, M-3 AND M-4 FOR ON-SITE PIPING LAYOUT AND CONFIGURATION.
7. TANK SHALL BE SUPPORTED ON A SPREAD FOOTING FOUNDED AT OR BELOW ELEVATION 518 IN ACCORDANCE WITH THE GEOTECHNICAL REPORT
8. ACCESS HATCHS ON THE TANK ROOF SHALL HAVE A LATCHING STOP THAT WILL KEEP IT OPEN AND PREVENT IT FROM BEING FORCE CLOSED BY AIR GUSTS.
9. SUCTION AND DISCHARGE HEADER PIPE SUPPORTS. ALL PIPE SUPPORTS ARE NOT SHOWN. SEE DIVISION 15.
10. PUMPS AND ECCENTRIC REDUCING MERCERS NOT SHOWN FOR CLARITY. ECCENTRIC REDUCING MERCERS SHALL BE INSTALLED WITH FLAT SIDE ON TOP. ARCHES SHALL BE FILLED.
11. SUCTION AND DISCHARGE HEADER PIPE SUPPORTS. ALL PIPE SUPPORTS ARE NOT SHOWN. SEE DIVISION 15.

SHEET LEGEND:

CONNECTION/PIPING CONTINUATION MARKERS

PIPE SUPPORT, APPROXIMATE LOCATION 9

GRAPHIC SCALE

1 0 1 2 3 4 5

SCALE: 1/2" = 1'-0"

AS-BUILT

"PROFESSIONAL CERTIFICATION, I HEREBY CERTIFY THAT THESE DOCUMENTS WERE PREPARED OR APPROVED BY ME, AND THAT I AM A DULY LICENSED PROFESSIONAL ENGINEER UNDER THE LAWS OF THE STATE OF MARYLAND, LICENSE NO. 10003, EXPIRATION DATE: 9/2/2012"

DEPARTMENT OF PUBLIC WORKS
HOWARD COUNTY, MARYLAND.

DIRECTOR OF PUBLIC WORKS — DATE 8/2/11
CHIEF, BUREAU OF ENGINEERING — DATE 8/2/11
CHIEF, BUREAU OF UTILITIES — DATE 8/2/11
CHIEF, UTILITY DESIGN DIVISION — DATE 8/2/11

PREPARED BY:
WHITMAN, REQUARDT & ASSOCIATES, LLP
801 South Caroline Street, Baltimore, MD 21231

WR&A

STATE OF MARYLAND — HERBERT W. KEE — No. 10003 — REGISTERED PROFESSIONAL ENGINEER
Herbert W. Kee 8/1/11

DES:
DRN:
CHK:
DATE: 6/8/11

BY	NO.	REVISION	DATE
WRA	1	AS-BUILTS	2/15

1.25 MILLION GALLON TANK ELEVATION AND SECTIONS

600' SCALE TAX MAP NO. 16 BLOCK NO. 3

MARRIOTTSVILLE ROAD
ELEVATED TANK AND BOOSTER STATION
CAPITAL PROJECT NO. W8263
CONTRACT NO. 44-4509

ELECTION DISTRICT 3 HOWARD COUNTY, MARYLAND

DWG. M-5

SCALE AS SHOWN

SHEET 20 OF 35

C:\Temp\Drawing\AcPublish_3700\M005-13732M2-03.dwg
Jul 25, 2011 - 10:20am

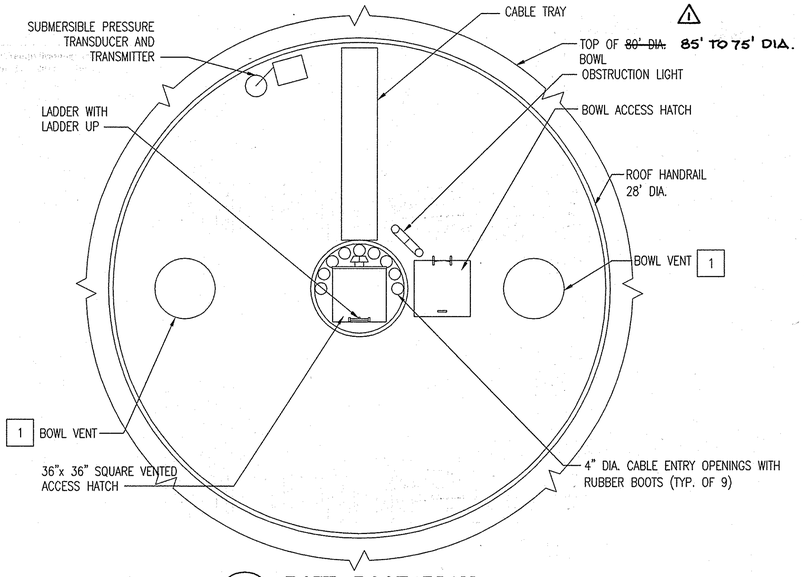

1 / M-6 **BOWL ROOF PLAN**
SCALE: 1/4" – 1'-0"

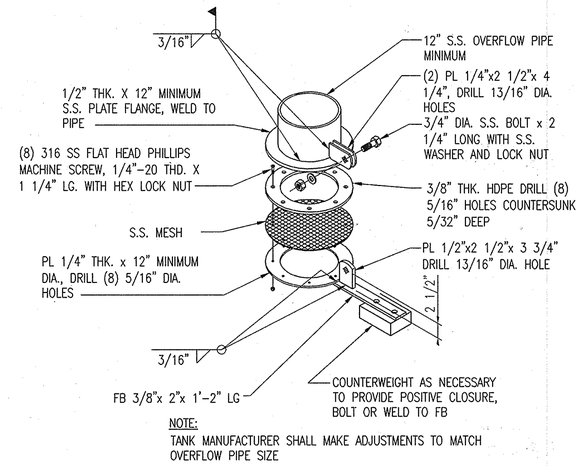

NOTE:
TANK MANUFACTURER SHALL MAKE ADJUSTMENTS TO MATCH OVERFLOW PIPE SIZE

5 / M-6 **FLAP GATE DETAIL**
SCALE: NONE

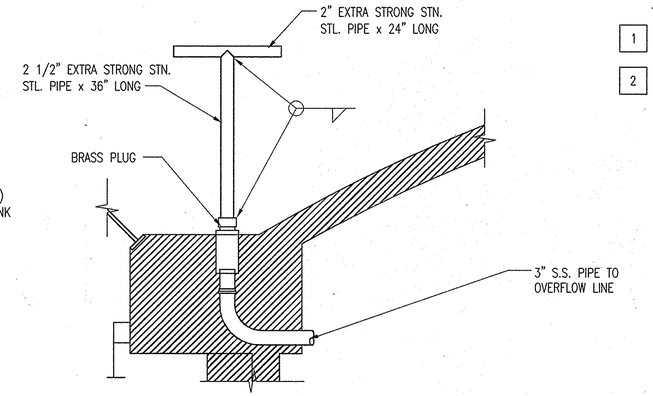

6 / M-6 **TANK WASHOUT DRAIN SECTION DETAIL** 2
SCALE: NONE

NOTES:

1. TANK MANUFACTURER SHALL SIZE ALL COMPONENTS OF THE BOWL VENTILATION, EACH VENT SHALL BE SIZED FOR THE MAXIMUM CAPACITY.
2. CONTRACTOR MAY SUBMIT TANK MANUFACTURERS TYPICAL TANK WASHOUT DRAIN FOR ENGINEER TO REVIEW IN LIEU OF WHAT IS SHOWN.

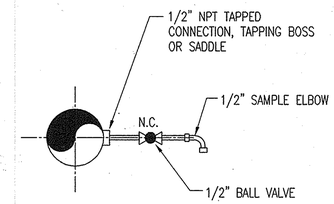

7 / M-6 **SAMPLING TAP DETAIL**
SCALE: NONE

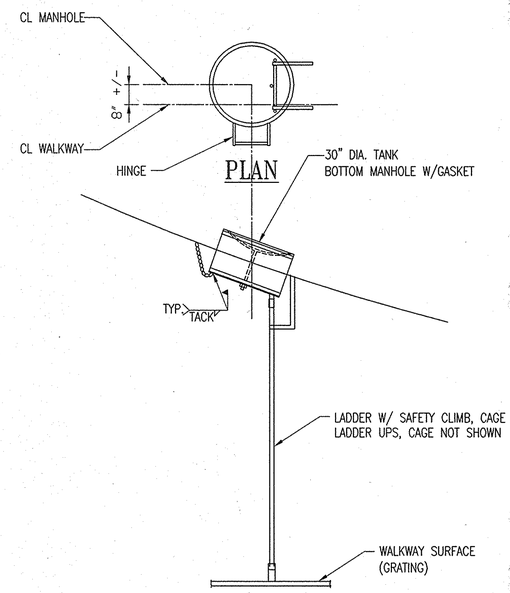

9 / M-6 **BOTTOM MANWAY DETAIL**
SCALE: NONE

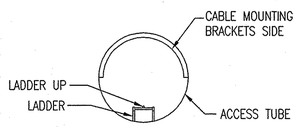

2 / M-6 **60" ACCESS TUBE PLAN**
SCALE: 1/4" = 1'-0"

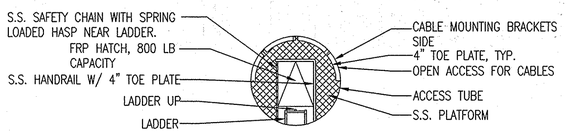

3 / M-6 **60" ACCESS TUBE EXIT PLATFORM PLAN**
SCALE: 1/4" = 1'-0"

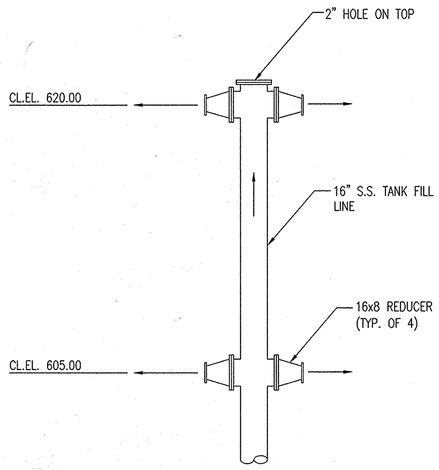

SECTION

4 / M-6 **16" TANK DIFFUSER INLET**
SCALE: 1/4" = 1'-0"

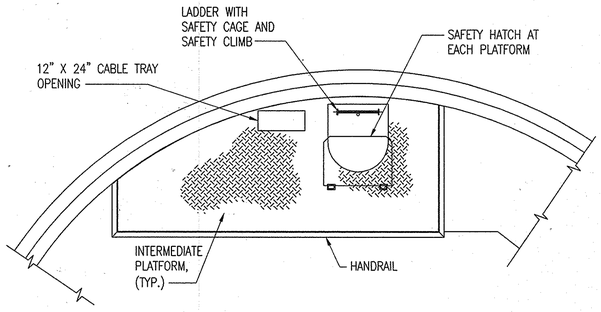

PLAN

8 / M-6 **PLATFORM DETAIL**
SCALE: NONE
REF: X/XX.X

GRAPHIC SCALE **AS-BUILT**
2 0 2 4 6 8 10
SCALE: 1/4" = 1'-0"

DWG. M-6

"PROFESSIONAL CERTIFICATION, I HEREBY CERTIFY THAT THESE DOCUMENTS WERE PREPARED OR APPROVED BY ME, AND THAT I AM A DULY LICENSED PROFESSIONAL ENGINEER UNDER THE LAWS OF THE STATE OF MARYLAND, LICENSE NO. 10003, EXPIRATION DATE: 8/2/2012"

DEPARTMENT OF PUBLIC WORKS
HOWARD COUNTY, MARYLAND

DIRECTOR OF PUBLIC WORKS — DATE 8/2/11
CHIEF, BUREAU OF ENGINEERING — DATE 8/9/11
CHIEF, BUREAU OF UTILITIES — DATE
CHIEF, UTILITY DESIGN DIVISION — DATE 8/9/11

PREPARED BY:
WHITMAN, REQUARDT & ASSOCIATES, LLP
801 South Caroline Street, Baltimore, MD 21231
WR&A

STATE OF MARYLAND — HERBERT W. KEW — No. 10003 — REGISTERED PROFESSIONAL ENGINEER
Herbert W. Kew 8/1/11

DES: BKM
DRN: PLL
CHK:
DATE: 6/8/11

BY	NO.	REVISION	DATE
WRA	1	AS-BUILTS	2/15

DETAILS

600' SCALE TAX MAP NO. 16 BLOCK NO. 3

MARRIOTTSVILLE ROAD
ELEVATED TANK AND BOOSTER STATION
CAPITAL PROJECT NO. W8263
CONTRACT NO. 44-4509

ELECTION DISTRICT 3 — HOWARD COUNTY, MARYLAND

SCALE AS SHOWN

SHEET 21 OF 35

C:\Temp\Drawing\AcPublish_3700\M006-13732M5-01.dwg
Jul 25, 2011 - 10:20am

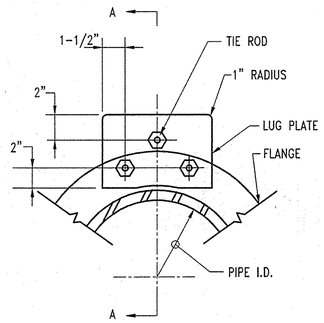

PLAN

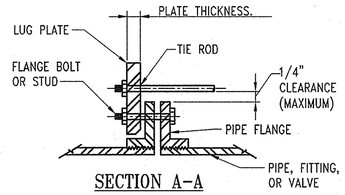

SECTION A-A

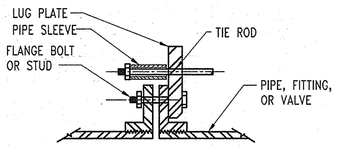

PIPE SLEEVE

NOTES:
1. IF PLATE IS REQUIRED TO BE MOUNTED ON REVERSE SIDE OF FLANGE, PROVIDE A PIPE SLEEVE AND WASHER ON THE END OF THE TIE ROD SO THAT THE MAXIMUM CLEARANCE BETWEEN THE SLEEVE AND THE FLANGE CAN BE MAINTAINED. FLANGE SURFACE IN CONTACT WITH LUG PLATE SHALL BE GROUND SMOOTH TO CLEAR THE CASTING IRREGULARITY AND EMBOSSED LETTERING. CONTACT SURFACE OF LUG PLATE SHALL BE MACHINED TO A ONE DEGREE TAPER FOR PIPE DIAMETERS 12-INCH AND LARGER.
2. DETAIL IS TYPICAL FOR BOTH ENDS. THE USE OF A FLANGE STOP OR SIMILAR COMPONENT SHALL NOT BE USED UNLESS NOTED OTHERWISE.

ROD MATERIAL - ASTM A193, GRADE B7
PLATE MATERIAL - ASTM A36
SLEEVE MATERIAL - SCHEDULE 40 STEEL PIPE

PIPE SIZE (IN.)	NUMBER OF RODS	DIAMETER OF RODS (IN.)	PLATE THICKNESS (IN.)	MINIMUM PIPE SLEEVE (IF REQUIRED) (IN.)	DESIGN PRESSURE PSI
6	2	3/4	5/8	2 1/4	150
10	4	3/4	3/4	2 3/4	150
12	4	3/4	3/4	2 3/4	150
16	4	3/4	1	3 3/8	150
18	4	3/4	1 1/8	3 3/8	150

A / M-7 TYPICAL TIE-ROD DETAIL
SCALE: NONE

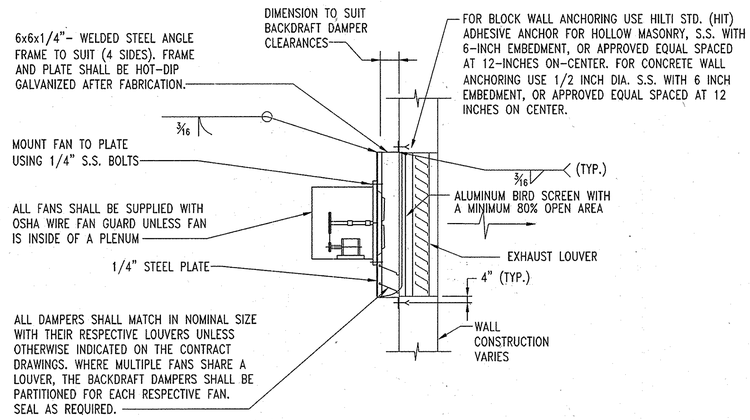

C / M-7 EXHAUST FAN TYPICAL DETAIL
SCALE: NONE

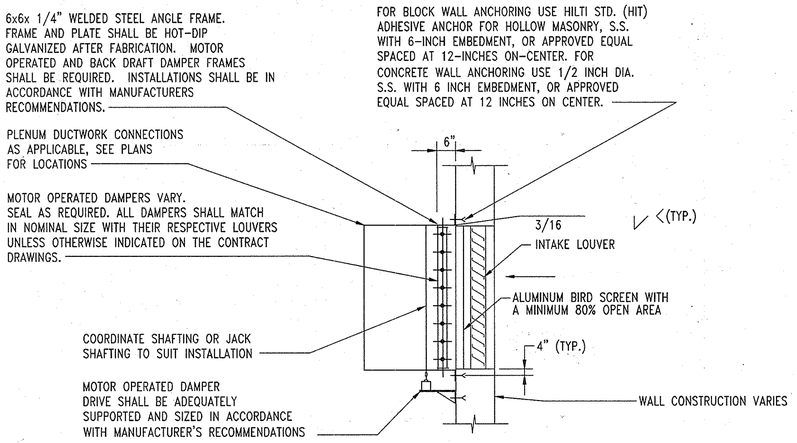

D / M-7 INTAKE DETAIL
SCALE: NONE

EXHAUST FAN SCHEDULE

UNIT I.D.	TYPE	DRIVE	TOTAL CAPACITY CFM	TOTAL S.P. IN W.C.	MAX. FAN RPM	ELECTRICAL CHARACTERISTICS VOLTS/PH/HZ	MAX. MOTOR HP	DAMPER	REMARKS
EF-1	P	B	2100	0.3	850	480/3/60	1/2	GD	PUMP ROOM
EF-2	P	B	2100	0.3	850	480/3/60	1/2	GD	PUMP ROOM

UNIT HEATER SCHEDULE

UNIT I.D.	KW	ELECTRICAL CHARACTERISTICS VOLTS/PH/HZ	REMARKS
EUH-1	10	480/3/60	INTEGRAL THERMOSTAT, DISCONNECT & SUMMER FAN SWITCH
EUH-2	10	480/3/60	INTEGRAL THERMOSTAT, DISCONNECT & SUMMER FAN SWITCH
EUH-3	10	480/3/60	INTEGRAL THERMOSTAT, DISCONNECT & SUMMER FAN SWITCH
EUH-4	10	480/3/60	INTEGRAL THERMOSTAT, DISCONNECT & SUMMER FAN SWITCH
EUH-5	10	480/3/60	INTEGRAL THERMOSTAT, DISCONNECT & SUMMER FAN SWITCH

PRESSURE GAUGE SCHEDULE

UNIT I.D.	RANGE PSI	LOCATION
P-1	0-100	BP-1 SUCTION
P-2	0-300	BP-1 DISCHARGE
P-3	0-100	BP-2 SUCTION
P-4	0-300	BP-2 DISCHARGE
P-5	0-100	BP-3 SUCTION
P-6	0-300	BP-3 DISCHARGE
PT-1	N/A	BP SUCTION HEADER
PT-2	N/A	BP DISCHARGE HEADER

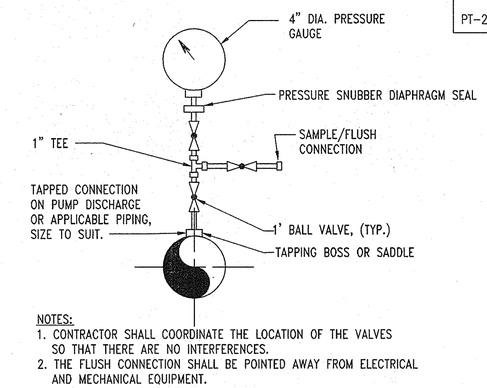

NOTES:
1. CONTRACTOR SHALL COORDINATE THE LOCATION OF THE VALVES SO THAT THERE ARE NO INTERFERENCES.
2. THE FLUSH CONNECTION SHALL BE POINTED AWAY FROM ELECTRICAL AND MECHANICAL EQUIPMENT.

E / M-7 PRESSURE GAUGE DETAIL
SCALE: NONE

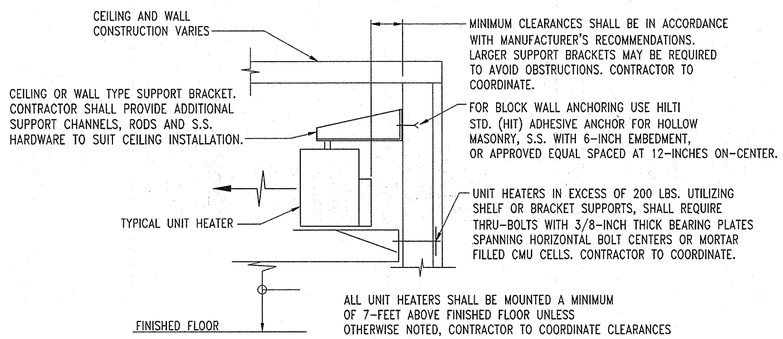

B / M-7 TYPICAL UNIT HEATER INSTALLATION
SCALE: NONE

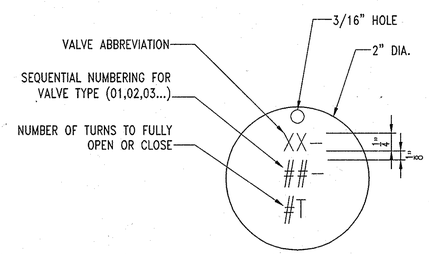

F / M-7 VALVE TAG DETAIL
SCALE: NONE

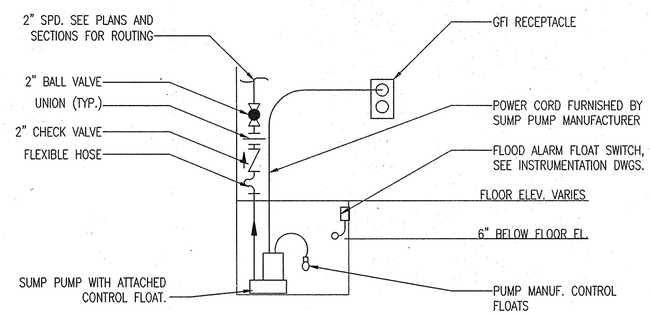

G / M-7 TYPICAL SUMP PUMP DETAIL
SCALE: NONE

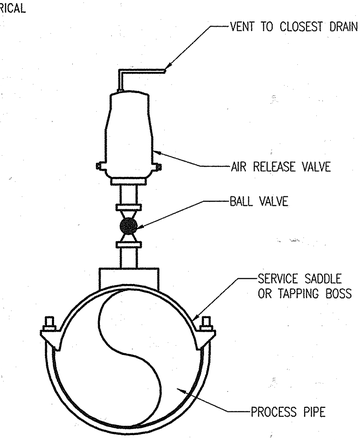

H / M-7 AIR RELEASE VALVE DETAIL
SCALE: NONE

"PROFESSIONAL CERTIFICATION, I HEREBY CERTIFY THAT THESE DOCUMENTS WERE PREPARED OR APPROVED BY ME, AND THAT I AM A DULY LICENSED PROFESSIONAL ENGINEER UNDER THE LAWS OF THE STATE OF MARYLAND, LICENSE NO. 10009, EXPIRATION DATE: 9/2/2012"

AS-BUILT

DWG. M-7

DEPARTMENT OF PUBLIC WORKS
HOWARD COUNTY, MARYLAND.

DIRECTOR OF PUBLIC WORKS — DATE 8/2/11
CHIEF, BUREAU OF ENGINEERING — DATE 8/2/11
CHIEF, BUREAU OF UTILITIES — DATE 8/2/11
CHIEF, UTILITY DESIGN DIVISION — DATE 8/2/11

PREPARED BY:
WHITMAN, REQUARDT & ASSOCIATES, LLP
801 South Caroline Street, Baltimore, MD 21231
WR&A

STATE OF MARYLAND — HARRY W. LEE — No. 10,009 — REGISTERED PROFESSIONAL ENGINEER — 8/1/11

DES: BKM
DRN: PLL
CHK:
DATE: 6/8/11

BY	NO.	REVISION	DATE
WRA	1	AS-BUILTS	2/15

DETAILS AND SCHEDULES

600' SCALE TAX MAP NO. 16 BLOCK NO. 3

MARRIOTTSVILLE ROAD
ELEVATED TANK AND BOOSTER STATION
CAPITAL PROJECT NO. W8263
CONTRACT NO. 44-4509

ELECTION DISTRICT 3 — HOWARD COUNTY, MARYLAND

SCALE AS SHOWN

SHEET 22 OF 35

C:\Temp\Drawing\AcPublish_3700\M007-13732M5-02.dwg
Jul 25, 2011 - 10:20am

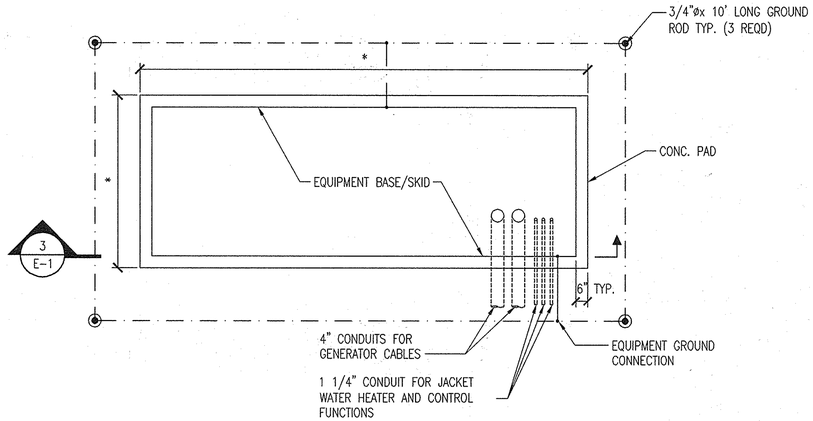

2 / E-1 DIESEL GENERATOR PAD - PLAN

SCALE: NONE

1. * - DIMENSION TO MATCH EQUIPMENT SUPPLIED
2. LOCATE CONDUITS/FUEL PIPING TO SUIT SITE CONDITIONS

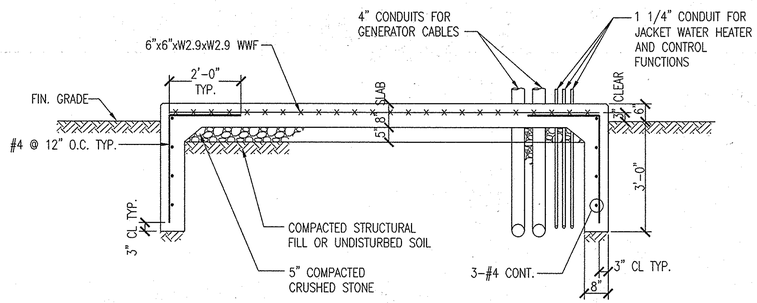

3 / E-1 DIESEL GENERATOR PAD - SECTION

SCALE: NONE

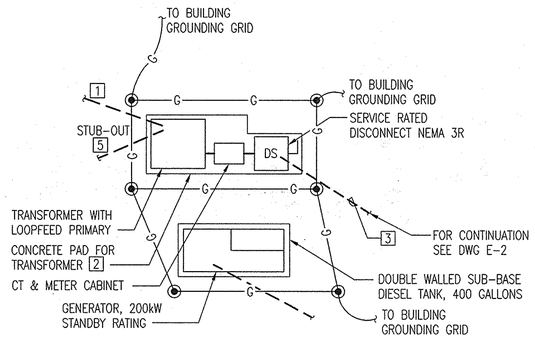

A / E-1 DETAIL

SCALE: NONE

NOTES:

1. FOR EQUIPMENT DETAILS SEE SINGLE LINE DIAGRAM AND EQUIPMENT NOTES DWG. E-4.
2. FOR LEGEND, GENERAL NOTES SEE DWG. E-2.

SPECIFIC NOTES □:

1. 2-4"C DIRECT BURIED CONDUITS 3'-0" BELOW GRADE BY CONTRACTOR. PRIMARY CABLES BY BGE. CONTRACTOR TO COORDINATE SIZE AND QUANTITY OF CONDUITS WITH ELECTRIC UTILITY BGE.
2. CONCRETE PAD TO BE PROVIDED BY THE CONTRACTOR PER BGE REQUIREMENTS. TRANSFORMER WITH LOOP FEED BUSHING TO BE PROVIDED BY BGE.
3. 3-4" PVC SCH. 80 UNDERGROUND CONDUITS, DIRECT BURIED AT 3'-0" BELOW FINISHED GRADE. CONDUITS AND CABLES BY CONTRACTOR.
4. 3-4" PVC SCH. 80 UNDERGROUND CONDUITS, DIRECT BURIED AT 3'-0" BELOW FINISHED GRADE. CONDUITS AND CABLES ARE TO BE PROVIDED BY CONTRACTOR.
5. 2-4" DIRECT BURIED CONDUITS 3'-0" BELOW GRADE, CAPPED AND STUBBED OUT 5'-0" FROM TRANSFORMER PAD, FOR PRIMARY POWER TO COMMUNICATION BUILDINGS IN FUTURE.

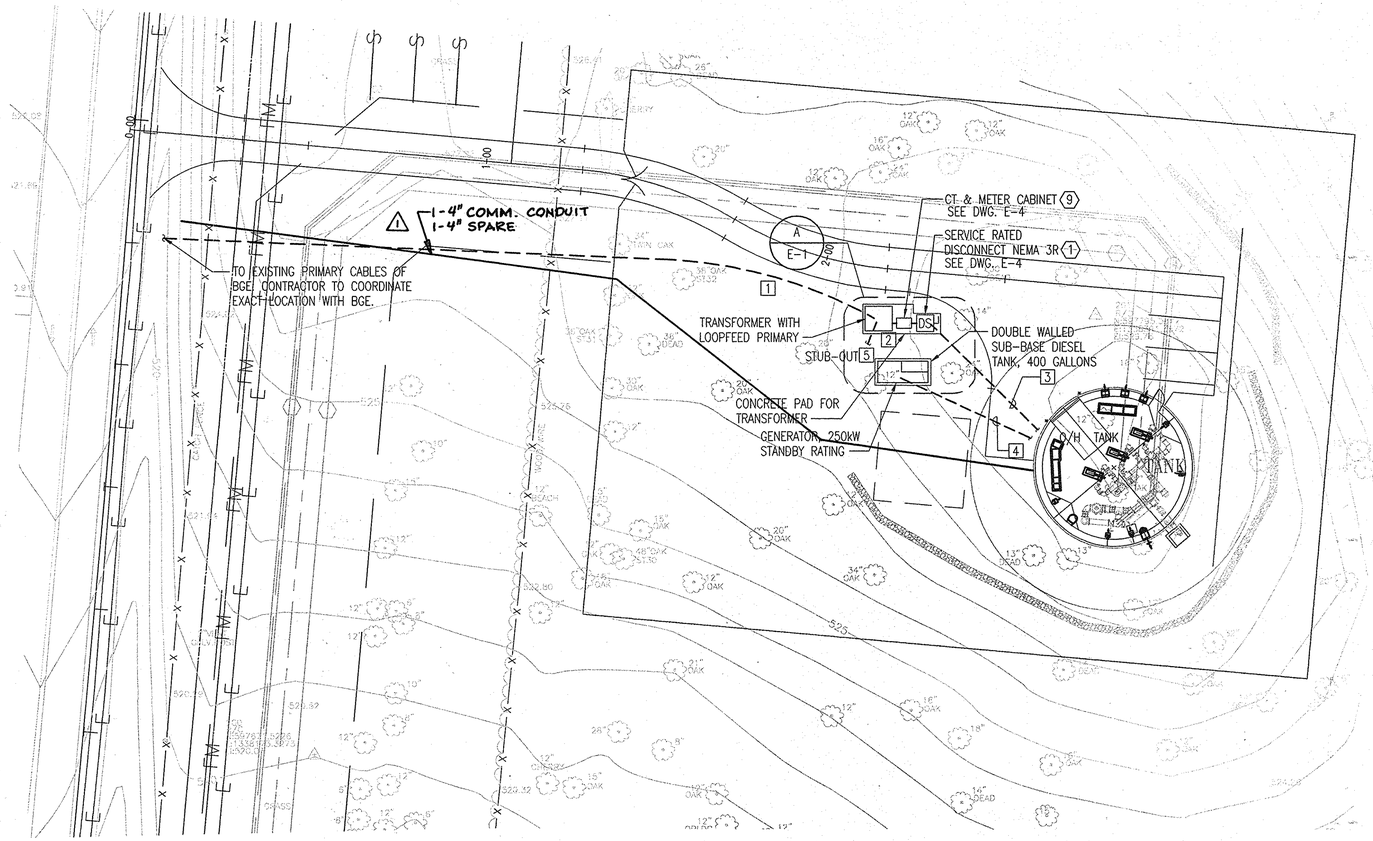

1 / E-1 SITE PLAN

SCALE: 1"=20'-0"

GRAPHIC SCALE

SCALE 1 IN = 20 FT

20' 0 20' 40' 60'

AS-BUILT

"PROFESSIONAL CERTIFICATION, I HEREBY CERTIFY THAT THESE DOCUMENTS WERE PREPARED OR APPROVED BY ME, AND THAT I AM A DULY LICENSED PROFESSIONAL ENGINEER UNDER THE LAWS OF THE STATE OF MARYLAND, LICENSE NO. 8050 , EXPIRATION DATE: 08/19/13"

DHILLON ENGINEERING, INC.
10902 REISTERSTOWN ROAD, # 204
OWINGS MILLS, MD 21117
(P)410.356.1095 (F)410.363.4675

DWG. E-1

DEPARTMENT OF PUBLIC WORKS
HOWARD COUNTY, MARYLAND.

DIRECTOR OF PUBLIC WORKS — DATE 8/26/11
CHIEF, BUREAU OF ENGINEERING — DATE 8/26/11
CHIEF, BUREAU OF UTILITIES — DATE 8/26/11
CHIEF, UTILITY DESIGN DIVISION — DATE 8/29/11

PREPARED BY :
WHITMAN, REQUARDT & ASSOCIATES, LLP
801 South Caroline Street, Baltimore, MD 21231
WR&A

DES:				
DRN:				
CHK:				
DATE:	WRA BY	1 NO.	AS-BUILTS REVISION	3/15 DATE

ELECTRICAL SITE PLAN

600' SCALE MAP NO. 16 BLOCK NO. 3

MARRIOTTSVILLE ROAD
ELEVATED TANK AND BOOSTER STATION
CAPITAL PROJECT NO. W8263
CONTRACT NO. 44-4509

ELECTION DISTRICT 3 HOWARD COUNTY, MARYLAND

SCALE AS SHOWN

SHEET 23 OF 35

C:\Temp\Drawing\AcPublish_2596\E-1.dwg
Jul 25, 2011 - 2:39pm

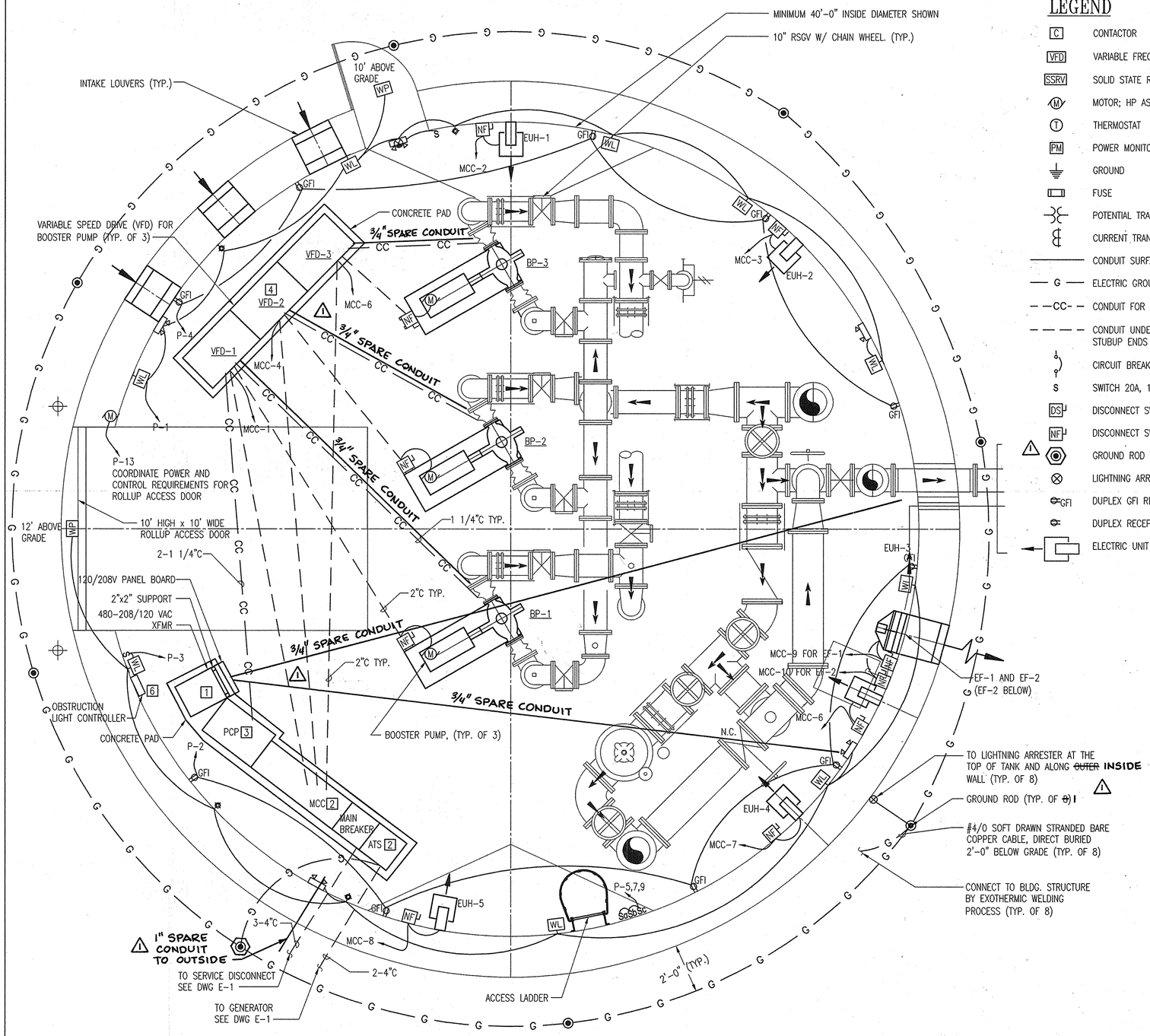

1 / E-2 BPS POWER/LIGHTING PLAN

SCALE: 3/8"=1'-0"

LEGEND

- CONTACTOR
- VARIABLE FREQUENCY DRIVE (VFD)
- SOLID STATE REDUCED VOLTAGE STARTER
- MOTOR; HP AS NOTED
- THERMOSTAT
- POWER MONITOR
- GROUND
- FUSE
- POTENTIAL TRANSFORMER
- CURRENT TRANSFORMER
- CONDUIT SURFACE MOUNTED
- — G — ELECTRIC GROUND GRID DIRECT BURRIED
- – –CC– – CONDUIT FOR CONTROL WIRING 1 1/4" TYP.
- — — — CONDUIT UNDER FLOOR SLAB OR EMBEDDED, STUBUP ENDS AT 4" AFF
- CIRCUIT BREAKER
- S SWITCH 20A, 125V
- DS DISCONNECT SWITCH FUSED, NEMA 4X
- NF DISCONNECT SWITCH NON-FUSED, NEMA 4X
- 1 GROUND ROD WITH WELL **(ONLY ONE)**
- LIGHTNING ARRESTER
- GFI DUPLEX GFI RECEPTACLE 20A, 125V
- DUPLEX RECEPTACLE 20A, 125V
- ELECTRIC UNIT HEATER

ELECTRICAL ABBREVIATIONS:

A	AMPERE
AC	ALTERNATING CURRENT
AFF	ABOVE FINISHED FLOOR
AIC	AMPS INTERRUPTING CAPACITY
AMP	AMPERES
AUTO	AUTOMATIC
ATS	AUTOMATIC TRANSFER SWITCH
BCSD	BARE COPPER SOFT DRAWN
C	CONDUIT
CB	CIRCUIT BREAKER
CKT	CIRCUIT
CONN	CONNECTION OR CONNECT
DET	DETAIL
DWG	DRAWING
EF	EXHAUST FAN
ELECT	ELECTRICAL
EX.	EXISTING
FVNR	FULL VOLTAGE NON-REVERSING
G,GRD	GROUND
GRS	GALVANIZED RIGID STEEL CONDUIT
HP	HORSEPOWER
HZ	HERTZ
JB	JUNCTION BOX
KA	KILO AMPERES
KAIC	KILOAMPERES INTERRUPTING CAPACITY
KCMIL	THOUSAND CIRCULAR MILLS
KW	KILOWATT
KVA	KILOVOLT AMPERE
MAX	MAXIMUM
MCC	MOTOR CONTROL CENTER
MIN	MINIMUM
MOT	MOTOR
N	NEUTRAL
NEMA	NATIONAL ELECTRICAL MANUFACTURERS ASSOCIATION
NTS	NOT TO SCALE
P	POLE
PB	PULL BOX
PLC	PROGRAMMABLE LOGIC CONTROLLER
PNL	PANEL
ø	PHASE
PWR	POWER
PVC	POLYVINYL CHLORIDE
REC/RECP	RECEPTACLE
RMC	RIGID METAL CONDUIT
RMS	ROOT MEAN SQUARE
SCH	SCHEDULE
SSRV	SOLID STATE RV STARTER
S	SWITCH
TYP	TYPICAL
UG	UNDERGROUND
UNO	UNLESS NOTED OTHERWISE
V	VOLTS
VA	VOLT AMPERE
VFD	VARIABLE FREQUENCY DRIVE
W	WATTS
WP	WEATHERPROOF

GENERAL NOTES:

1. CONTRACTOR SHALL BE RESPONSIBLE FOR COORDINATING ALL WORK WITH ELECTRIC POWER AND TELEPHONE UTILITY COMPANY.

2. ALL WORK SHALL BE CARRIED OUT IN ACCORDANCE WITH THE LATEST EDITION OF NATIONAL ELECTRICAL CODE AND APPLICABLE LOCAL CODES, RULES AND REGULATIONS.

3. ALL CONDUITS AND EQUIPMENT SHALL BE INSTALLED, WIRED AND GROUNDED IN ACCORDANCE WITH THE LATEST RULES AND REGULATIONS OF NATIONAL ELECTRICAL CODE (NEC) AND LOCAL CODES.

4. CONDUIT RUNS ARE SHOWN DIAGRAMATICALLY ONLY AND SHALL BE INSTALLED IN A MANNER TO PREVENT CONFLICTS WITH OTHER EQUIPMENT. EXPOSED CONDUITS SHALL BE RUN ON THE WALLS HORIZONTALLY AND VERTICALLY.

5. CONDUITS SHALL BE TERMINATED SO AS TO PERMIT NEAT CONNECTION TO EQUIPMENT. CONDUIT ENDS SHALL BE SUITABLY SEALED TO PREVENT TRANSGRESS OF MOISTURE THROUGH CONDUITS FROM ONE EQUIPMENT TO OTHER.

6. CONDUITS AND WIRES SHALL BE SIZED IN ACCORDANCE WITH NEC UNO. MINIMUN CONDUIT SIZE SHAL BE 3/4" UNO, AND MIINIMUM WIRE SIZE SHALL BE #12 UNO FOR POWER CIRCUITS.

7. CONDUITS INSTALLED EXPOSED ON EXTERIOR/INTERIOR OF BUILDING SHALL BE POLYURETHANE COATED GALVANIZED RMC.

8. ALL WALL AND FLOOR PENETRATIONS FOR ELECTRICAL CONDUITS SHALL BE CORE DRILLED. PROVIDE SEGMENTED RUBBER COMPRESSION SEALS ON BOTH SIDES.

9. PROVIDE ALL REQUIRED BOXES AND JUNCTION BOXES FOR INSTALLATION OF THE WIRING IN ACCORDANCE WITH THE CONTRACT SPECIFICATIONS THROUGH THE BOXES MAY NOT BE INDICATIED ON THE DRAWINGS. ALL JUNCTION AND PULL BOXES SHALL BE LABELED WITH THEIR VOLTAGE AND USAGE.

10. FINAL LOCATION FOR ALL ELECTRICAL EQUIPMENT, INCLUDING RECEPTACLES, JUNCTION BOXES FOR SPECIFIED EQUIPMENT, LIGHTING FIXTURES, SWITCHES, ETC. SHALL BE APPROVED BY THE COUNTY PRIOR TO INSTALLATION.

11. THE WIRING DIAGRAMS, QUANTITY AND SIZE OF WIRES AND CONDUITS ARE BASED UPON SELECTED STANDARD COMPONENTS OF ELECTRICAL EQUIPMENT. MODIFICATIONS APPROVED BY THE COUNTY MAY BE MADE BY THE CONTRACTOR AT HIS EXPENSE TO ACCOMODATE EQUIPMENT ACTUALLY PURCHASED.

12. ALL ALARM INDICATION AND CONTROL WIRING IN JUNCTION BOXES SHALL BE WIRED TO NUMBERED TERMINAL STRIPS AND IDENTIFIED AS TO START AND END OF RUN.

13. ALL ELECTRICAL EQUIPMENT INSTALLED AGAINST CONCRETE OR MASONRY WALLS SHALL BE INSTALLED WITH 1/4" SPACERS BETWEEN THE EQUIPMENT AND THE MOUNTING SURFACE. SPACERS SHALL BE STAINLESS STEEL, PVC, OR NYLON.

14. ELECTRICAL ENCLOSURES LOCATED OUTDOORS SHALL BE WEATHERPROOF NEMA 4X, UNO.

15. THE CIRCUIT NUMBERS ARE FOR IDENTIFICATION PURPOSE ONLY. THE CONTRACTOR IS RESPONSIBLE FOR BALANCING LOADS AND CORRECTLY PHASING CIRCUITS IN PANELBOARDS.

CONSTRUCTION NOTES □:

1. DRY TYPE TRANSFORMER, MOUNT ON PRECAST PAD 4" HIGH AND EXTENDING 4" ON ALL SIDES, DIMENSION PER EQUIPMENT PROVIDED.

2. MOTOR CONTROL CENTER, MOUNT ON 4" HIGH PAD EXTENDING 4" ON ALL SIDES, DIMENSION PER EQUIPMENT PROVIDED.

3. PUMP CONTROL PANEL PER INSTRUMENTATION DRAWINGS. MOUNT ON 4" HIGH PAD EXTENDING 4" ON ALL SIDES.

4. VARIABLE FREQUENCY DRIVES 3NOS. MOUNT ON 4" HIGH CONCRETE PAD EXTENDING 4" ON ALL SIDES, DIMENSION PER EQUIPMENT PROVIDED.

5. ALL GROUNDING CONNECTIONS EMBEDDED IN EARTH SHALL BE EXOTHERMIC.

6. PROVIDE OBSTRUCTION LIGHT CONTROLLER WITH SPARE LAMPS (6NOS), LOGIC RELAYS AND RELATED COMPONENTS TO INDICATE FAILURE OF OPERATING LAMPS BY FLASHING RED LIGHT AND CONTACT OUTPUTS TO TELEMETRY PANEL.

GRAPHIC SCALE

2 1 0 1 2 3 4 5 6

SCALE: 3/8" = 1'-0"

STATE OF MARYLAND — THOMAS A. DHILLON — NO. 6010 — REGISTERED PROFESSIONAL ENGINEER

AS-BUILT

DHILLON ENGINEERING, INC.
10902 REISTERSTOWN ROAD, # 204
OWINGS MILLS, MD 21117
(P)410.356.1095 (F)410.363.4675

DWG. E-2

"PROFESSIONAL CERTIFICATION, I HEREBY CERTIFY THAT THESE DOCUMENTS WERE PREPARED OR APPROVED BY ME, AND THAT I AM A DULY LICENSED PROFESSIONAL ENGINEER UNDER THE LAWS OF THE STATE OF MARYLAND, LICENSE NO. 8050 , EXPIRATION DATE: 08/13/13."

DEPARTMENT OF PUBLIC WORKS
HOWARD COUNTY, MARYLAND.

DIRECTOR OF PUBLIC WORKS — DATE 8/26/11
CHIEF, BUREAU OF ENGINEERING — DATE 8/9/11
CHIEF, BUREAU OF UTILITIES — DATE
CHIEF, UTILITY DESIGN DIVISION — DATE 8/9/11

PREPARED BY :
WHITMAN, REQUARDT & ASSOCIATES, LLP
801 South Caroline Street, Baltimore, MD 21231
WR&A

DES:				
DRN:				
CHK:				
DATE:	WRA BY	1 NO.	AS-BUILTS REVISION	2/15 DATE

BOOSTER PUMP SYSTEM – POWER/LIGHTING PLAN

600' SCALE MAP NO. 16 BLOCK NO. 3

MARRIOTTSVILLE ROAD
ELEVATED TANK AND BOOSTER STATION
CAPITAL PROJECT NO. W8263
CONTRACT NO. 44-4509

ELECTION DISTRICT 3 HOWARD COUNTY, MARYLAND

SCALE AS SHOWN

SHEET 24 OF 35

C:\Temp\Drawing\AcPublish_2596\E-2.dwg
Jul 25, 2011 - 2:39pm

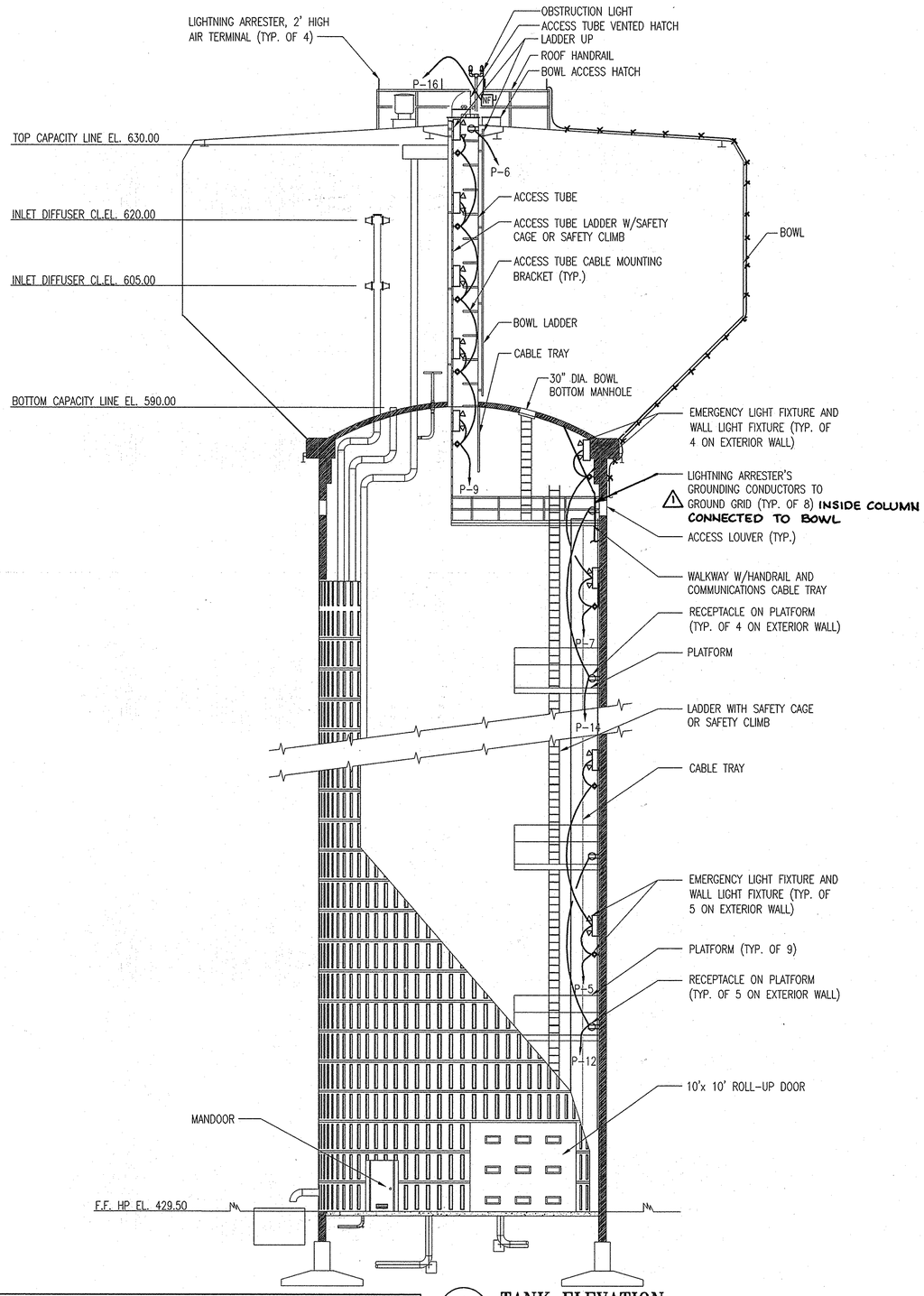

1 / E-3 **TANK ELEVATION**
SCALE: NONE

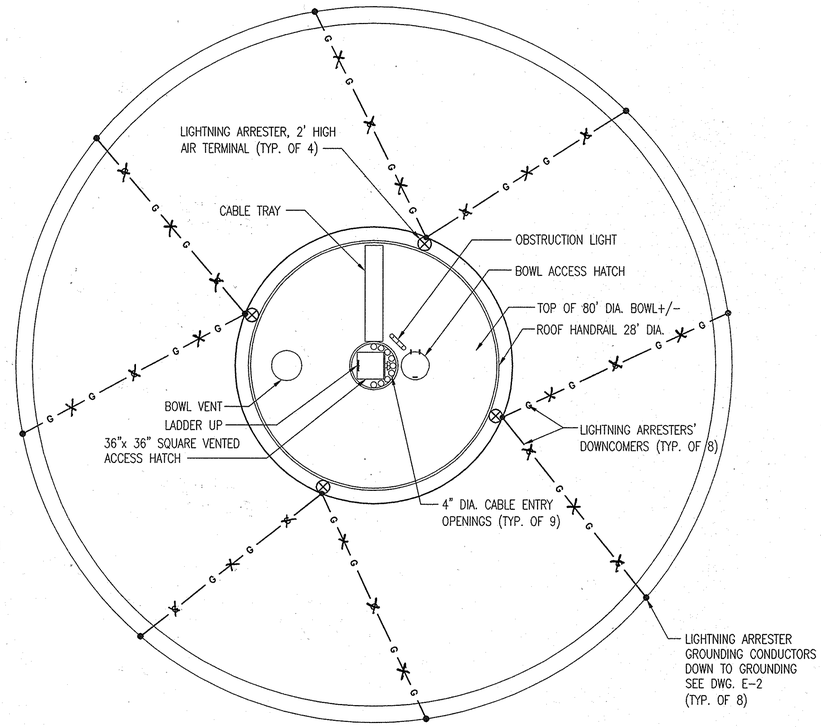

2 / E-3 **BOWL ROOF PLAN** ⚠
SCALE: 1 /8" = 1'-0"

LIGHTING FIXTURE SCHEDULE

FIXTURE TYPE	DESCRIPTION	MOUNTING	LAMPS			MANUFACTURER AND CATALOG NO.	VOLTS	REMARKS
			NO	WATTS	TYPE			
WL	METAL HALIDE WALL LIGHT	WALL 12'-0" AFF	1	175	METAL HALIDE	LITHONIA LIGHTING TWH175M120 OR EQUAL	120	MOUNT ON WALL WITH BRACKET AND ADJUST ANGLE
	COMPACT FLUORESCENT WALL LIGHT WITH HPF BALLAST	WALL 8' ABOVE PLATFORM BASE	1	42	TRT	LITHONIA LIGHTING TWL42TRT120SF OR EQUAL	120	MOUNT ON WALL WITH BRACKET AND ADJUST ANGLE
	DUAL HEAD EMERGENCY LIGHT WITH BATTERY BACK UP FOR MIN. 90 MINUTES	WALL 8' ABOVE PLATFORM BASE	2	6	HALOGEN PAR 36	RUDD LIGHTING EMHC12100 OR EQUAL	120	SELF DIAGONOSTIC WITH TEST SWITCH AND INDICATOR. SEE NOTE 1.
	DUAL HEAD EMERGENCY/EXIT LIGHT WITH BATTERY BACK UP FOR MIN. 90 MINUTES	WALL 10'-0"	2	8	LED/HALOGEN PAR 36	RUDD LIGHTING EXPCRWH-HO OR EQUAL	120	SELF DIAGONOSTIC WITH TEST SWITCH AND INDICATOR. SEE NOTE 1.
	DOUBLE/OBSTRUCTION LIGHT WITH RELAY & PHOTO ELECTRIC CONTROLLER	ABOVE TOP OF THE TANK	1	116	HALOGEN PAR 36	CROUSE HINDS5021-116-GR, RELAY-70020, PEC-52010	120	SEE NOTE 2
WP	METAL HALIDE WALL PACK SUITABLE FOR WET LOCATION	WALL SEE DWG E-2	1	175	METAL HALIDE	LITHONIA LIGHTING TWP150M120FS OR EQUAL	120	SINGLE FUSE, PHOTOCELL

NOTE:

1. EMERGENCY AND EXIT LIGHTS SHALL BE WIRED TO THE NEARBY CIRCUITS BUT AHEAD OF CONTROLLING SWITCHES.
2. CONTROLLER FOR AVIATION LIGHTS SHALL PROVIDE NECESSARY CONTROLS TO DETECT FAILURE OF LAMP AND INITIATE ALARM IN LOCAL CONTROL PANEL AND PROVIDE A CONTACT TO SCADA PANEL FOR INITIATING REMOTE ALARM.
3. CABLE SUPPORTS SHALL COMPLY WITH NEC 300.19(A).

STATE OF MARYLAND — GURDEEP S. DHILLON — NO. 8050 — REGISTERED PROFESSIONAL ENGINEER — 7/26/11

AS-BUILT

"PROFESSIONAL CERTIFICATION, I HEREBY CERTIFY THAT THESE DOCUMENTS WERE PREPARED OR APPROVED BY ME, AND THAT I AM A DULY LICENSED PROFESSIONAL ENGINEER UNDER THE LAWS OF THE STATE OF MARYLAND, LICENSE NO. 8050 , EXPIRATION DATE: 08/19/13."

DEPARTMENT OF PUBLIC WORKS
HOWARD COUNTY, MARYLAND.

DIRECTOR OF PUBLIC WORKS — DATE 8/26/11
CHIEF, BUREAU OF ENGINEERING — DATE 8/9/11
CHIEF, BUREAU OF UTILITIES — DATE
CHIEF, UTILITY DESIGN DIVISION — DATE 8/9/11

PREPARED BY :
WHITMAN, REQUARDT & ASSOCIATES, LLP
801 South Caroline Street, Baltimore, MD 21231
WR&A

DHILLON ENGINEERING, INC.
10902 REISTERSTOWN ROAD, # 204
OWINGS MILLS, MD 21117
(P)410.356.1095 (F)410.363.4675

DWG. E-3

	BY	NO.	REVISION	DATE
DES:				
DRN:				
CHK:				
DATE:	WRA	1	AS-BUILTS	2/15

TANK ELEVATION POWER/LIGHTING, LIGHTING FIXTURE SCHEDULE, AND ROOF PLAN

600' SCALE MAP NO. 16 BLOCK NO. 3

MARRIOTTSVILLE ROAD
ELEVATED TANK AND BOOSTER STATION
CAPITAL PROJECT NO. W8263
CONTRACT NO. 44-4509

ELECTION DISTRICT 3 HOWARD COUNTY, MARYLAND

SCALE AS SHOWN

SHEET 25 OF 35

C:\Temp\Drawing\AcPublish_2596\E-3.dwg
Jul 25, 2011 - 2:39pm

MOTOR CONTROL CENTER SCHEDULE

BUCKET NUMBER	NAME PLATE DATA	DEVICE DESCRIPTION	BREAKER FRAME	BREAKER POLE	BREAKER CALIB.	BREAKER K.A.I.C.	REMARKS
CC-1	VFD # 1	MOLDED CASE CIRCUIT BREAKER	225	3	125	22	
CC-2	EUH # 1	MCCB	100	3	20	22	
CC-3	EUH # 2	MCCB	100	3	20	22	
CC-4	VFD # 2	MOLDED CASE CIRCUIT BREAKER	225	3	125	22	
CC-5	VFD # 3	MOLDED CASE CIRCUIT BREAKER	225	3	125	22	
CC-6	EUH # 3	MCCB	100	3	20	22	
CC-7	EUH # 4	MCCB	100	3	20	22	
CC-8	EUH # 5	MCCB	100	3	20	22	
CC-9	EXHAUST FAN (EF-1)	MCCB COMBINATION STARTER NEMA SIZE 1/FVNR	100	3	15	22	
CC-10	EXHAUST FAN (EF-2)	MCB COMBINATION STARTER NEMA SIZE 1/FVNR	100	3	15	22	
CC-11	30kVA TRANSFORMER	MCCB	100	3	50	22	
CC-12	DIESEL GENERATOR JACKET WATER HEATER	MCCB	100	3	50	22	
CC-13	DIESEL GENERATOR BATTERY CHARGER	MCCB	100	3	20	22	
CC-14	SPARE	–	100	3	20	22	
CC	SPACE						PREPARED SPACE
CC	SPACE						PREPARED SPACE

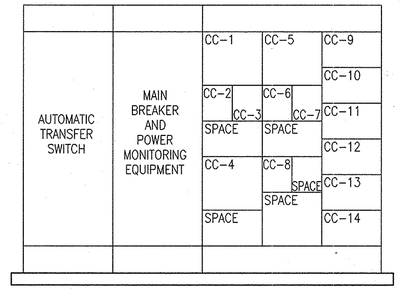

1 / E-4 **MOTOR CONTROL CENTER**
SCALE: 1/2" = 1'-0"

NOTES:

1. FOR LEGEND AND GENERAL NOTES SEE DWG. E-2.

EQUIPMENT NOTES (X):

1. SERVICE ENTRANCE RATED DISCONNECT SWITCH, 600V, 600A, FUSED 400A, 22 KAIC RATED, WITH NEMA 4X STAINLESS STEEL ENCLOSURE MOUNTED ON FRAME AS PER BGE REQUIREMENTS.

2. METERING BOX AND METER SOCKET WILL BE PROVIDED BY CONTRACTOR AS PER BGE REQUIREMENTS AND METER TO BE PROVIDED BY BGE.

3. DIESEL GENERATOR 200kW, 488/277V, 3 PHASE, 4 WIRE, STANDBY RATED.

4. GENERATOR BREAKER 600V, 400AF/350AT, ADJUSTABLE OVERCURRENT TRIP FROM 50 TO 100% AND SHORT TIME MAGNETIC TRIP ADJUSTABLE FROM 500% TO 800%, 14 KAIC RATED.

5. AUTOMATIC TRANSFER SWITCH, 600V, 400A, 14KAIC RATED, MOUNTED IN 20" DEEP MOTOR CONTROL CENTER.

6. TRANSFORMER, 30KVA, DRY TYPE IN NEMA 3R ENCLOSURE 480V DELTA – 102/208V WYE.

7. MOTOR CONTROL CENTER 480V, 600A, 14KAIC, NEMA 12 ENCLOSURE, MOUNTED ON 4" HIGH CONCRETE PAD.

8. MOLDED CASE CIRCUIT BREAKER RATED, 600V, 600AF/400AT, ADJUSTABLE OVERCURRENT TRIP FROM 50% TO 100% AND SHORT TIME MAGNETIC TRIP ADJUSTABLE FROM 800% TO 1100%, 14 KAIC RATED, MOUNTED IN ATS COMPARTMENT.

9. DIESEL GENERATOR ENCLOSURE, SOUND ATTENUATED, SUITABLE FOR OUTDOOR LOCATION.

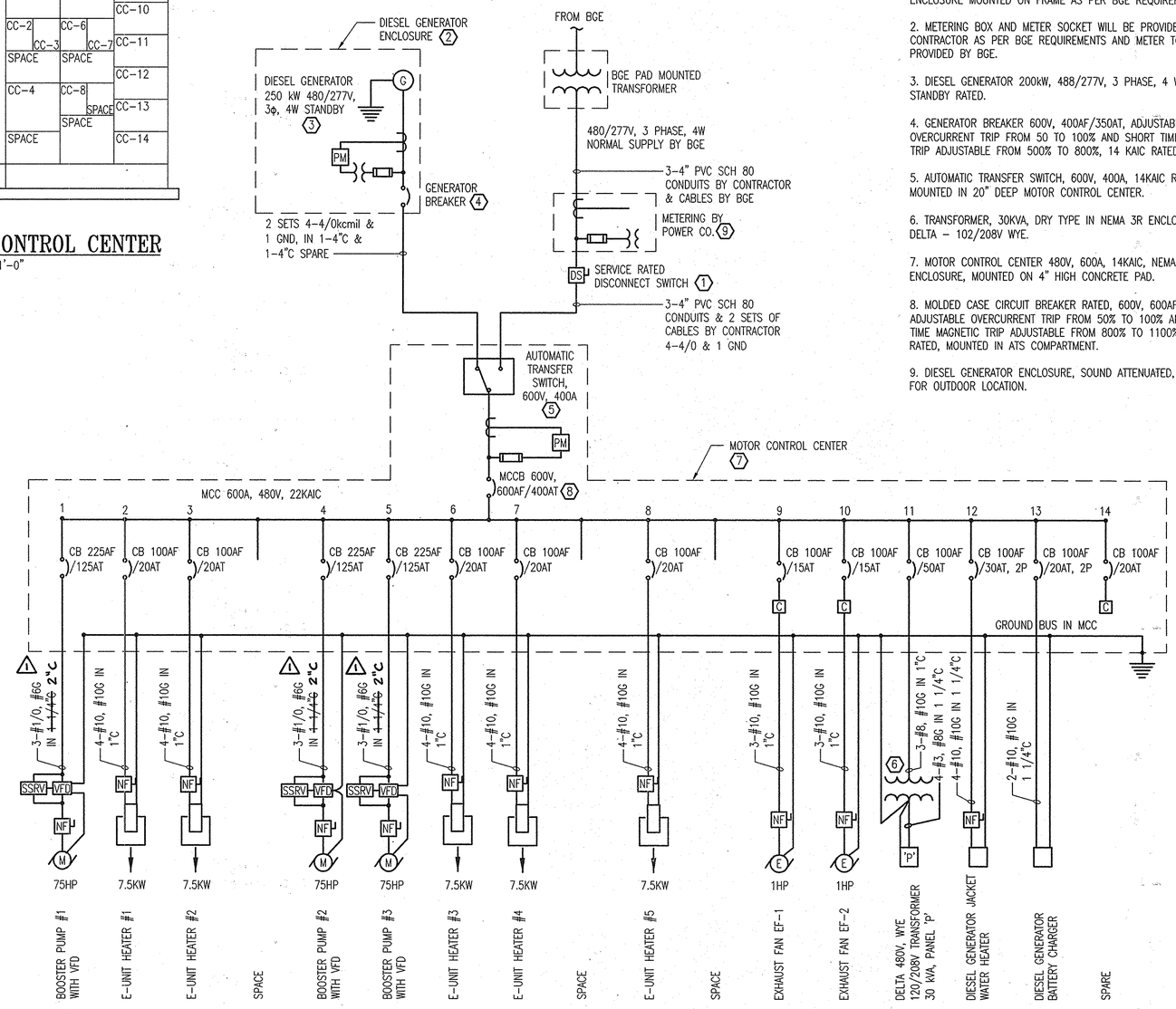

2 / E-4 **SINGLE LINE DIAGRAM**
SCALE: NONE

PANELBOARD: "P"

LOCATION: NEAR VEHICLE ENTRANCE

Main Device: MCB 100AF/100AT — 3 PHASE 4 WIRE — Voltage: 120/208V
Device Family: BOLT ON — Mounting: FRAME SUPPORT — Enclosure: NEMA 1
Bus Rating: 100A — Fault Duty: 10KAIC — Neutral : 100%

	CKT NO	TRIP AMP	POLE NO	LOAD TYPE	LOAD SERVED	LOAD – VA A ø	B ø	C ø	A ø	B ø	C ø	CKT NO	TRIP AMP	POLE NO	LOAD TYPE	LOAD SERVED	
①	1	20	1	LTS	LIGHTS PERIMETER WALL	960			900			2	20	1	REC	PERIMETER OUTLETS	①
①	3	20	1	LTS	LIGHTS PERIMETER WALL		900			900		4	20	1	REC	PERIMETER OUTLETS	①
①	5	20	1	LTS	LIGHTS PLATFORMS			650			180	6	20	1	REC	ACCESS TUBE	②
②	7	20	1	LTS	LIGHTS PLATFORMS	520			50			8	20	1	REC	PRESSURE TRANSMITTER PT-1	
②	9	20	1	LTS	LIGHTS ACCESS TUBE		650			50		10	20	1	REC	FLOW MAGNETIC METER	
	11	20	1	PNL	SCADA CONTROL PANEL			400			900	12	20	1	REC	PLATFORM OUTLETS	①
	13	20	1	MOT	DOOR CONTROLLER	1000			720			14	20	1	REC	PLATFORM OUTLETS	①
①	15	20	1	S	SPARE		–			160		16	20	1	REC	OBSTRUCTION LIGHT & CONTROLLER	②
①	17	20	1	S	SPARE			–			50	18	20	1	MOT	MOTOR OPERATED DAMPER	①
①	19	20	1	S	SPARE	–			50			20	20	1	MOT	MOTOR OPERATED DAMPER	
	21	20	1	S	SPARE		–			50		22	20	1	MOT	MOTOR OPERATED DAMPER	
	23	20	1	S	SPARE			–			50	24	20	1	REC	PAPERLESS RECORDER	
	25	20	1	S	SPARE	–			–			26	–	–	–	SPACE	
	27	20	1	S	SPARE		–			–		28	–	–	–	SPACE	
	29	20	1	S	SPARE			–			–	30	–	–	–	SPACE	
	CONNECTED LOAD VA					2480	1550	1050	1720	1160	1180						

CONNECTED LOAD A ø 4200 VA B ø 2710 VA C ø 2230 VA
CONNECTED LOAD: 9140 VA
NEC LOAD: 9140 VA
FULL LOAD AMPS: 25 A

SCHEDULE NOTES:

① PROVIDE 2-#10, #10G COPPER IN 3/4" C.

② PROVIDE 2-#8, #10G COPPER IN 1" C.

"PROFESSIONAL CERTIFICATION, I HEREBY CERTIFY THAT THESE DOCUMENTS WERE PREPARED OR APPROVED BY ME, AND THAT I AM A DULY LICENSED PROFESSIONAL ENGINEER UNDER THE LAWS OF THE STATE OF MARYLAND, LICENSE NO. 8050 , EXPIRATION DATE: 08/10/13."

AS-BUILT

DHILLON ENGINEERING, INC.
10902 REISTERSTOWN ROAD, # 204
OWINGS MILLS, MD 21117
(P)410.356.1095 (F)410.363.4675

DWG. E-4

DEPARTMENT OF PUBLIC WORKS
HOWARD COUNTY, MARYLAND.

DIRECTOR OF PUBLIC WORKS — DATE 8/2/11
CHIEF, BUREAU OF ENGINEERING — DATE 8/2/11
CHIEF, BUREAU OF UTILITIES — DATE 8/2/11
CHIEF, UTILITY DESIGN DIVISION — DATE 8/2/11

PREPARED BY :
WHITMAN, REQUARDT & ASSOCIATES, LLP
801 South Caroline Street, Baltimore, MD 21231
WR&A

DES:
DRN:
CHK:
DATE:

BY	NO.	REVISION	DATE
WRA	1	AS-BUILTS	2/15

ELECTRICAL SINGLE LINE DIAGRAM, MOTOR CONTROL CENTER, AND PANEL SCHEDULES

600' SCALE MAP NO. 16 BLOCK NO. 3

MARRIOTTSVILLE ROAD
ELEVATED TANK AND BOOSTER STATION
CAPITAL PROJECT NO. W8263
CONTRACT NO. 44-4509

ELECTION DISTRICT 3 — HOWARD COUNTY, MARYLAND

SCALE AS SHOWN

SHEET 26 OF 35

C:\Temp\Drawing\AcPublish_2596\E-4.dwg
Jul 25, 2011 - 2:39pm

EQUIPMENT SYMBOLS

- BOOSTER PUMP
- CHECK VALVE
- GATE VALVE
- BALL VALVE
- BUTTERFLY VALVE
- M — FLOW METER

MISCELLANEOUS

(# OR X / I-#)

– DESIGNATION OF PLAN/SHEET NUMBER (1, 2, ETC.)
X – DESIGNATION OF SECTION LETTER (A, B, ETC.)

SYMBOLS

- FUSE
- M — MOTOR
- OVERLOAD
- GROUND
- H, A, O, XOO, OOX — MAINTAINED CONTACT SELECTOR SWITCH (THREE POSITION SHOWN)
- MOMENTARY CLOSED PUSH BUTTON (NORMALLY CLOSED)
- MOMENTARY OPEN PUSH BUTTON (NORMALLY OPEN)
- G — PUSH-TO-TEST INDICATING LIGHT R=RED, G=GREEN, A=AMBER, W=WHITE
- THERMOSTAT
- NORMALLY OPEN (TIME DELAY AFTER ENERGIZATION)
- CR # — CONTROL RELAY W/ DESIGNATION
- TR # — TIMING RELAY W/ DESIGNATION
- NORMALLY OPEN CONTACT
- NORMALLY CLOSED CONTACT
- TRANSFORMER
- FUSED SWITCH
- ETM — ELAPSED TIME METER
- JB — JUNCTION BOX
- WIRING TERMINATION
- FLOW SWITCH
- SOLENOID PILOT
- CONDUIT
- MULTIPLE CONDUITS
- FLEXIBLE CONDUIT CONNECTION
- S — SOLENOID COIL
- NORMALLY OPEN LIMIT SWITCH

PROCESS AND INSTRUMENTATION SYMBOLS

- MOUNTED NEAR EQUIPMENT
- FACE OF PANEL MOUNTED
- X — INDICATING LAMP – X=COLOR
  A = AMBER
  B = BLUE
  G = GREEN
  R = RED
- DIGITAL READOUT DISPLAY
- ETM — ELAPSED TIME METER
- RTU INPUT
- ANALOG INPUT TO PLC
- ANALOG OUTPUT FROM PLC
- DIGITAL INPUT TO PLC
- DIGITAL OUTPUT FROM PLC
- ABC 123 — ABC – LETTERS INDICATE FUNCTION ACCORDING TO ISA SCHEDULE: 123–DIGITS IDENTIFY ASSOCIATED EQUIPMENT
- SB — SIGNAL BOOSTER
- ELECTRICAL SERVICE
- PROCESS FLOW
- ELECTRIC SIGNAL
- DATA COMMUNICATION LINK
- LEASED PHONE LINE COMMUNICATIONS
- EXISTING PHONE LINE CONNECTION
- DIGITAL COMMUNICATIONS INPUT TO SCADA
- DIGITAL COMMUNICATIONS OUTPUT FROM SCADA
- ANALOG COMMUNICATIONS OUTPUT FROM SCADA
- ANALOG COMMUNICATIONS INPUT TO SCADA
- INPUTS TO TELEMETRY SYSTEM THROUGH DATA HIGHWAY COMMUNICATIONS LINK
- I — INTROLOCKING SIGNALS – LOGICAL OR ELECTRICAL AS SHOWN
- K — CALCULATION FUNCTION
- PLC D.O. – THROUGH INTERPOSING RELAY CONTACTS.

GENERAL NOTES

1. ALL WORK SHOWN SHALL BE NEW UNLESS OTHERWISE NOTED AS EXISTING.
2. SEE ELECTRICAL DRAWINGS FOR POWER DISTRIBUTION, DISCONNECT REQUIREMENTS, EQUIPMENT LOCATIONS AND FEEDER REQUIREMENTS.
3. MOTOR STARTER ELEMENTARIES SHOWN ARE INTENDED TO DEPICT THE GENERAL CONTROLS REQUIREMENT FOR THAT PARTICULAR PIECE OF EQUIPMENT AND DO NOT NECESSARILY INDICATE ALL THE REQUIREMENTS OF THE MOTOR STARTER. SEE ELECTRICAL DRAWINGS AND SPECIFICATIONS FOR SPECIFIC MOTOR STARTER REQUIREMENTS.
4. SEE MECHANICAL AND ELECTRICAL DRAWINGS FOR EQUIPMENT LOCATIONS AND POWER REQUIREMENTS. CONTRACTOR SHALL COORDINATE EQUIPMENT LOCATIONS SUCH AS NOT TO CAUSE INTERFERENCE WITH NEW AND/OR EXISTING EQUIPAMENT.
5. ENCLOSURE DIMENSIONS SHOWN ARE MINIMUM REQUIREMENTS. ENCLOSURES SHALL BE SIZED TO ACCOMMODATE EQUIPMENT, CONTROLS AND COMPONENTS AS SHOWN, SPECIFIED AND REQUIRED FOR AN OPERABLE SYSTEM.
6. CONTROL CIRCUITS SHOWN SHALL BE (2) #14 + #14 G THHN STRANDED WIRE INSTALLED IN 3/4" CONDUITS UNLESS INDICATED OTHERWISE.
7. ALL PENETRATIONS THROUGH EXISTING SOLID CONCRETE STRUCTURES WHERE SLEEVES HAVE NOT BEEN PROVIDED SHALL BE CORE DRILLED AND SIZED TO ACCEPT MECHANICAL LINK SEALS. THROUGH NON-FIRE RATED WALLS, CORE HOLES AND SEAL AROUND CONDUIT WITH NON-SHRINK GROUT. THROUGH EXTERIOR WALL, SEAL WATERTIGHT WITH SILICONE MASONRY SEALANT.
8. ALL DISCRETE OUTPUTS FROM THE PUMP CONTROLLERS SHALL BE PROVIDED WITH INTERPOSING RELAYS.

DRAWING (I-2) NOTES

1. CONTRACTOR SHALL PROVIDE AND INSTALL ANALOG SIGNAL DUPLICATOR TO SPLIT 4–20 mA SIGNAL INTO SEPARATE SIGNALS. TO BE LOCATED INSIDE PUMP PANEL.
2. ALL PLC CONTROL OUTPUTS TERMINATING OUTSIDE THE PLC/PCP ENCLOSURE SHALL ENERGIZE AN INTERPOSING RELAY INSIDE THE ENCLOSURE. FIELD EQUIPMENT CONTROL SHALL BE THROUGH THE INTERPOSING RELAY CONTACTS AND AS SHOWN ON ELECTRICAL DRAWINGS.
3. INFORMATION SHOWN IS THE MINIMUM DATA THAT SHALL BE ACCESSIBLE THROUGH THE PANEL MOUNTED RTU.
4. TRU TO INCLUDE TOTALIZER FUNCTION FOR DISPLAY ON ELECTRONIC DATA RECORDERS.
5. ELECTRONIC DATA RECORDER WITH TANK LEVEL SHALL BE PROGRAMMED TO SHOW TANK VOLUME.
6. REFER TO DRAWING I-6 FOR SCADA CONNECTION INFORMATION.
7. CONTRACTOR SHALL PROVIDE FULL DUPLEX LEASED TELEPHONE LINE IN ACCORDANCE WITH EXISTING BRIDGED CONNECTIONS. COORDINATE WITH B.O.U. AND VERIZON FOR LINE REQUIREMENTS.

INSTRUMENT IDENTIFICATION SCHEDULE

	FIRST LETTER		SUCCEEDING LETTER		
	VARIABLE	MODIFIER	PASSIVE FUNCTION	OUTPUT FUNCTION	MODIFIER
A	ANALYSIS		ALARM		AUTOMATIC
B	BREAKER		USER'S CHOICE	CLOSE OR STOP	BYPASS
C	COMMUNICATIONS			CONTROL	
D	DENSITY	DIFFERENTIAL		OPEN OR START	
E	VOLTAGE (EMF)		PRIMARY ELEMENT	SENSOR	EMERGENCY
F	FLOW RATE	RATIO	FAIL	FAIL	FAIL
G	GAUGING		GLASS		LOCAL/MANUAL/HAND
H	HAND				HIGH OR OPEN
I	CURRENT		INDICATE		INTERMEDIATE
J	POWER	SCAN			
K	TIME	TIME RATE		CONTROL STATION	
L	LEVEL		LIGHT		LOW OR CLOSE
M	MOTOR	MOMENTARY		MOTOR	MIDDLE
N	USER'S CHOICE		INPUT	FORWARD	ON OR OPERATE
O				OFF	OVERLOAD
P	PRESSURE	PNEUMATIC	POINT (TEST)	POSITION	
Q	QUANTITY OR EVENT	TOTALIZE		EMERGENCY/ABNORMAL	
R	RADIOACTIVITY		RECORD OR PRINT	REMOTE	RUN
S	SPEED OR FREQUENCY	SUM	SWITCH	SWITCH	STOP
T	TEMPERATURE			TRANSMIT	
U	MULTIVARIABLE		MULTIFUNCTION	MULTIFUNCTION	MULTIFUNCTION
V	VARIABLE OR VISCOSITY			VALVE OR DAMPER	VFD / VALVE
W	WEIGHT OR FORCE		WELL		
X	MOD, LIGHT OR VALVE		UNCLASSIFIED	UNCLASSIFIED	UNCLASSIFIED
Y	INTERLOCK			RELAY OR COMPUTE	RESET
Z	POSITION			DRIVE OR ACTUATOR	

EXAMPLES:
FE = FLOW ELEMENT
FIT = FLOW INDICATING TRANSMITTER
PSL = PRESSURE SWITCH LOW
ZSC = POSITION SWITCH CLOSED

NUMBERING SEQUENCE

100 SERIES – PROCESS EQUIPMENT
200 SERIES – ELECTRICAL GEAR
300 SERIES – SECURITY SYSTEM

P & I D LEGEND

PANEL LEGEND:

XX

A = LOCAL PUMP PRESSURE INDICATION PANEL
B = SYSTEM PRESSURE INDICATION PANEL
M = MODEM (SCADA INTERFACE)
N = VENTILATION CONTROL PANEL
O = OBSTRUCTION LIGHT CONTROLLER
P = PUMP CONTROL PANEL / PLC
S = MOTOR STARTER
T = TELEMETRY
V = VARIABLE FREQUENCY DRIVE
(X) NOTES OR REFERENCE NOTES

HAND SWITCHES

HS XXX — SELECTOR SWITCH OR PUSH BUTTON (MAINTAINED CONTACTS) CONTACTS CLOSED IN POSITION X

HMS XXX — SPRING RETURN SWITCH OR PUSH BUTTON (MOMENTARY CONTACTS) CONTACTS CLOSED IN POSITION X

ABBREVIATIONS

AI	ANALOG INPUT
AIT	ANALYSIS INDICATING TRANSMITTER
AO	ANALOG OUTPUT
AUTO	AUTOMATIC
CB	CIRCUIT BREAKER
CP	CONTROL PANEL
CR#-#	CONTROL RELAY (W/ # DESIGNATION
DI	DISCRETE INPUT
DO	DISCRETE OUTPUT
EF	EXHAUST FAN
ES	EMERGENCY STOP (PUSH BUTTON)
ETM	ELAPSED TIME METER
EX	EXISTING
FIT	FLOW INDICATING TRANSMITTER
G,GND	GROUND
HOA	HAND/OFF/AUTOMATIC
LIT	LEVEL INDICATING TRANSMITTER
L/L/S	LEAD/LAG/STANDBY
mA	MILLAMP
MCC	MOTOR CONTROL CENTER
MIN	MINUTES
MLS	MOTOR LEAKAGE SENSOR
MMS	MOTOR OPERATED DAMPER
MOHS	MOTHER OIL HOUSING SENSOR
MS	MOTOR STARTER
MWTS	MOTOR WINDING TEMPERATURE SENSOR
NC	NORMALLY CLOSED
NO	NORMALLY OPEN OR NUMBER
NOTC	NORMALLY OPENED TIME CLOSE
NCTO	NORMALLY CLOSED TIMED OPEN
OL	OVERLOAD
OLC	OBSTRUCTION LIGHT CONTROLLER
PAH	PRESSURE ALARM HIGH
PAL	PRESSURE ALARM LOW
PLC	PROGRAMMABLE LOGIC CONTROLLER
POT	POTENTIOMETER
PS	POWER SUPPLY
RES	RESET (PUSH BUTTON)
SP	STOP (PUSH BUTTON)
ST	START (PUSH BUTTON)
TB	TERMINATION BOX
TR#	TIMING RELAY (W/ # DESIGNATION
TSP	TWISTED SHIELDED PAIR
TSTAT	THERMOSTAT (V=VENTILATION, F=FREEZE)
TVSS	TRANSIENT VOLTAGE SURGE SUPPRESSER
UL	UNDERWRITERS LABORATORY
VAC	VOLTS ALTERNATING CURRENT
VDC	VOLTS DIRECT CURRENT
VFD	VARIABLE FREQUENCY DRIVE
W/	WITH
ZS	POSITION SWITCH
ZSH	POSITION SWITCH OPEN
ZSL	POSITION CLOSED

AS-BUILT

"PROFESSIONAL CERTIFICATION, I HEREBY CERTIFY THAT THESE DOCUMENTS WERE PREPARED OR APPROVED BY ME, AND THAT I AM A DULY LICENSED PROFESSIONAL ENGINEER UNDER THE LAWS OF THE STATE OF MARYLAND, LICENSE NO. 25378, EXPIRATION DATE: 7/14/2012."

DEPARTMENT OF PUBLIC WORKS
HOWARD COUNTY, MARYLAND.

DIRECTOR OF PUBLIC WORKS — DATE 8/26/11
CHIEF, BUREAU OF ENGINEERING — DATE 8/9/11
CHIEF, BUREAU OF UTILITIES — DATE
CHIEF, UTILITY DESIGN DIVISION — DATE 8/9/11

PREPARED BY:
WHITMAN, REQUARDT & ASSOCIATES, LLP
801 South Caroline Street, Baltimore, MD 21231

STATE OF MARYLAND — PADRAIC WILLIAM GRAY — No. 25378 — PROFESSIONAL ENGINEER — 7/27/11

DES:				
DRN:				
CHK:				
DATE: 6/8/11	WRA	1	AS-BUILTS	2/15
	BY	NO.	REVISION	DATE

INSTRUMENTATION SYMBOLS, SCHEDULES AND LEGEND

600' SCALE TAX MAP NO. 16 BLOCK NO. 3

MARRIOTTSVILLE ROAD
ELEVATED TANK AND BOOSTER STATION
CAPITAL PROJECT NO. W8263
CONTRACT NO. 44-4509

ELECTION DISTRICT 3 — HOWARD COUNTY, MARYLAND

DWG. I-1
SCALE N/A
SHEET 27 OF 35

C:\Temp\Drawing\AcPublish_2596\I-1.dwg
Jul 25, 2011 – 1:17pm

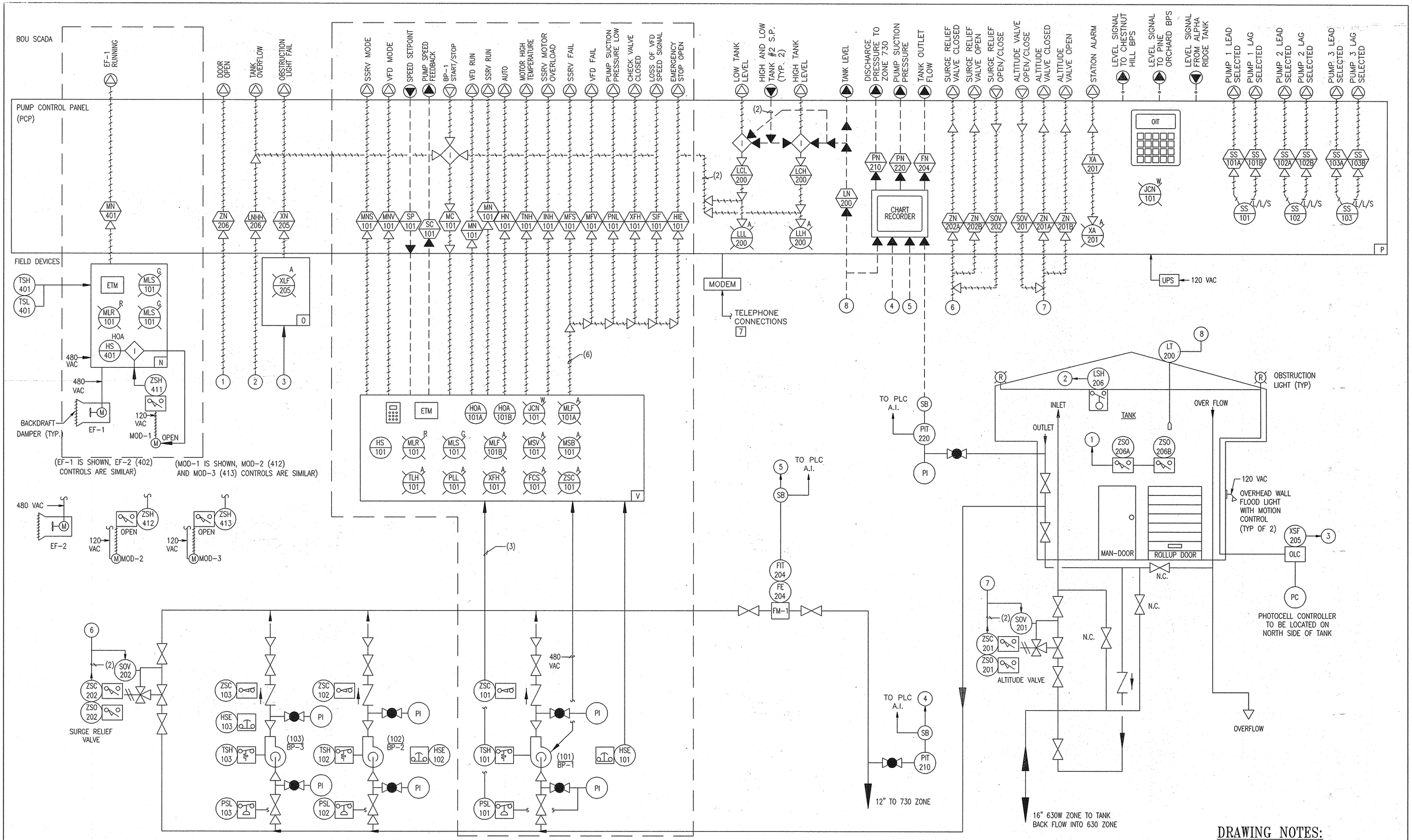

DRAWING NOTES:

1. FOR SPECIFIC DRAWINGS NOTES SEE SHEET I-1

AS-BUILT

"PROFESSIONAL CERTIFICATION, I HEREBY CERTIFY THAT THESE DOCUMENTS WERE PREPARED OR APPROVED BY ME, AND THAT I AM A DULY LICENSED PROFESSIONAL ENGINEER UNDER THE LAWS OF THE STATE OF MARYLAND, LICENSE NO. 25378, EXPIRATION DATE: 7/14/2012."

DEPARTMENT OF PUBLIC WORKS
HOWARD COUNTY, MARYLAND

DIRECTOR OF PUBLIC WORKS — DATE 8/2/11
CHIEF, BUREAU OF ENGINEERING — DATE 8/2/11
CHIEF, BUREAU OF UTILITIES — DATE
CHIEF, UTILITY DESIGN DIVISION — DATE 8/2/11

PREPARED BY:
WHITMAN, REQUARDT & ASSOCIATES, LLP
801 South Caroline Street, Baltimore, MD 21231

STATE OF MARYLAND — PHOENIX WILLIAM GRAY — No. 25378 — PROFESSIONAL ENGINEER — 7/27/11

DES:			
DRN:			
CHK:			
DATE: 6/8/11	WRA	1	AS-BUILTS 2/15
	BY	NO.	REVISION / DATE

PROCESS AND INSTRUMENTATION DIAGRAM

600' SCALE TAX MAP NO. 16 BLOCK NO. 3

MARRIOTTSVILLE ROAD
ELEVATED TANK AND BOOSTER STATION
CAPITAL PROJECT NO. W8263
CONTRACT NO. 44-4509

ELECTION DISTRICT 3 — HOWARD COUNTY, MARYLAND

DWG. I-2
SCALE N/A
SHEET 28 OF 35

N:\13732\CADD\I-2.dwg
Jul 25, 2011 - 1:17pm

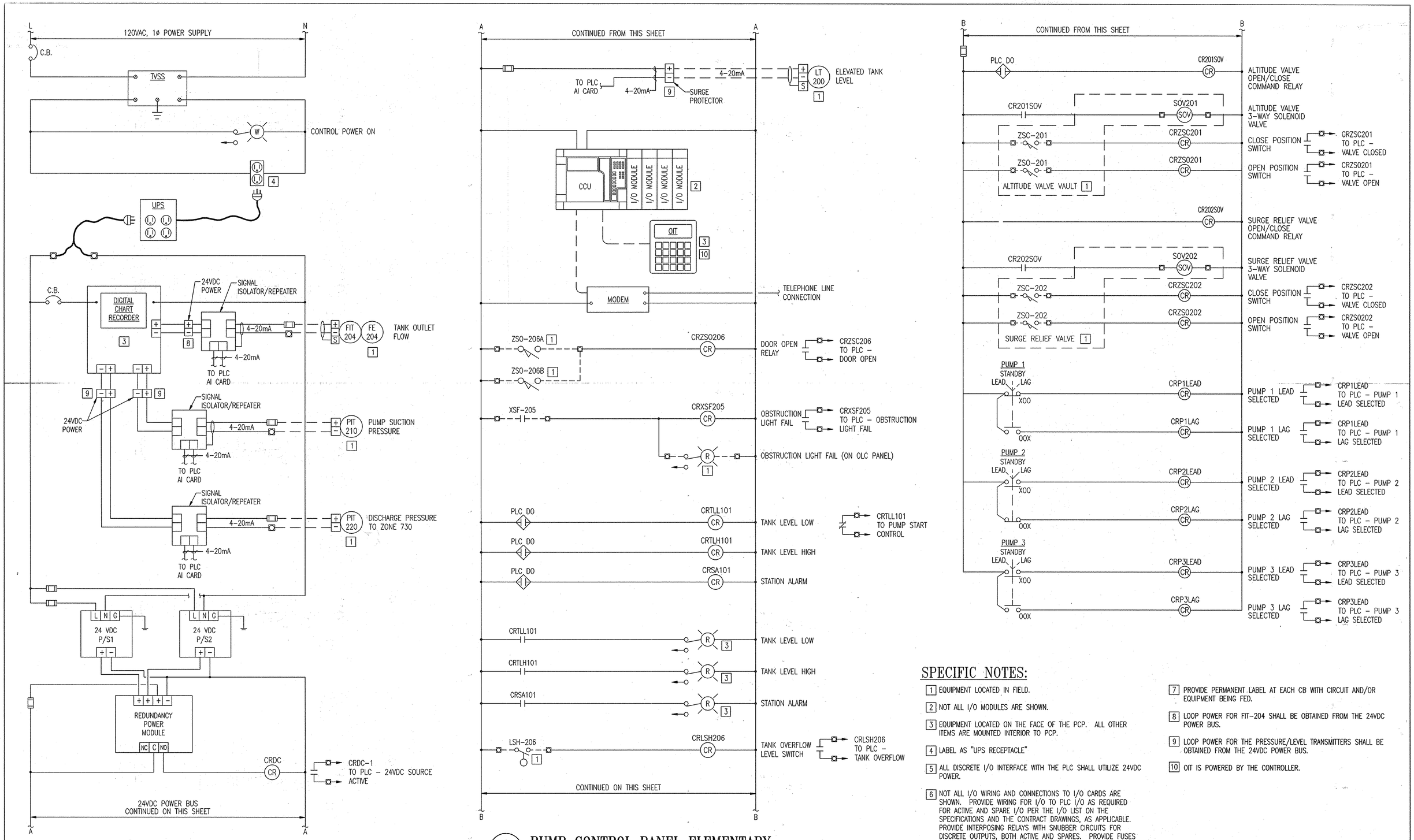

1 / I-3 **PUMP CONTROL PANEL ELEMENTARY**

NOT TO SCALE

SPECIFIC NOTES:

1. EQUIPMENT LOCATED IN FIELD.
2. NOT ALL I/O MODULES ARE SHOWN.
3. EQUIPMENT LOCATED ON THE FACE OF THE PCP. ALL OTHER ITEMS ARE MOUNTED INTERIOR TO PCP.
4. LABEL AS "UPS RECEPTACLE"
5. ALL DISCRETE I/O INTERFACE WITH THE PLC SHALL UTILIZE 24VDC POWER.
6. NOT ALL I/O WIRING AND CONNECTIONS TO I/O CARDS ARE SHOWN. PROVIDE WIRING FOR I/O TO PLC I/O AS REQUIRED FOR ACTIVE AND SPARE I/O PER THE I/O LIST ON THE SPECIFICATIONS AND THE CONTRACT DRAWINGS, AS APPLICABLE. PROVIDE INTERPOSING RELAYS WITH SNUBBER CIRCUITS FOR DISCRETE OUTPUTS, BOTH ACTIVE AND SPARES. PROVIDE FUSES ON ANALOG INPUTS AND OUTPUTS, BOTH ACTIVE AND SPARES. PROVIDE WIRING OF ALL I/O, INCLUDING SPARES, TO FIELD TERMINAL STRIPS.
7. PROVIDE PERMANENT LABEL AT EACH CB WITH CIRCUIT AND/OR EQUIPMENT BEING FED.
8. LOOP POWER FOR FIT-204 SHALL BE OBTAINED FROM THE 24VDC POWER BUS.
9. LOOP POWER FOR THE PRESSURE/LEVEL TRANSMITTERS SHALL BE OBTAINED FROM THE 24VDC POWER BUS.
10. OIT IS POWERED BY THE CONTROLLER.

"PROFESSIONAL CERTIFICATION, I HEREBY CERTIFY THAT THESE DOCUMENTS WERE PREPARED OR APPROVED BY ME, AND THAT I AM A DULY LICENSED PROFESSIONAL ENGINEER UNDER THE LAWS OF THE STATE OF MARYLAND, LICENSE NO. 25378, EXPIRATION DATE: 7/14/2012."

DEPARTMENT OF PUBLIC WORKS
HOWARD COUNTY, MARYLAND

DIRECTOR OF PUBLIC WORKS — DATE 8/26/11
CHIEF, BUREAU OF ENGINEERING — DATE 8/30/11
CHIEF, BUREAU OF UTILITIES — DATE 8/30/11
CHIEF, UTILITY DESIGN DIVISION — DATE 8/7/11

PREPARED BY :
WHITMAN, REQUARDT & ASSOCIATES, LLP
801 South Caroline Street, Baltimore, MD 21231

STATE OF MARYLAND — PATRICK WILLIAM GRAY — No. 25378 — PROFESSIONAL ENGINEER — 7/22/11

DES:					
DRN:					
CHK:					
DATE: 6/8/11	WRA BY	1 NO.	AS-BUILTS REVISION	2/15 DATE	

PUMP CONTROL PANEL ELEMENTARY

600' SCALE TAX MAP NO. 16 BLOCK NO. 3

MARRIOTTSVILLE ROAD
ELEVATED TANK AND BOOSTER STATION
CAPITAL PROJECT NO. W8263
CONTRACT NO. 44-4509

ELECTION DISTRICT 3 — HOWARD COUNTY, MARYLAND

AS-BUILT

DWG. I-3

SCALE N/A

SHEET 29 OF 35

N:\13732\CADD\I-3.dwg
Jul 25, 2011 - 1:17pm

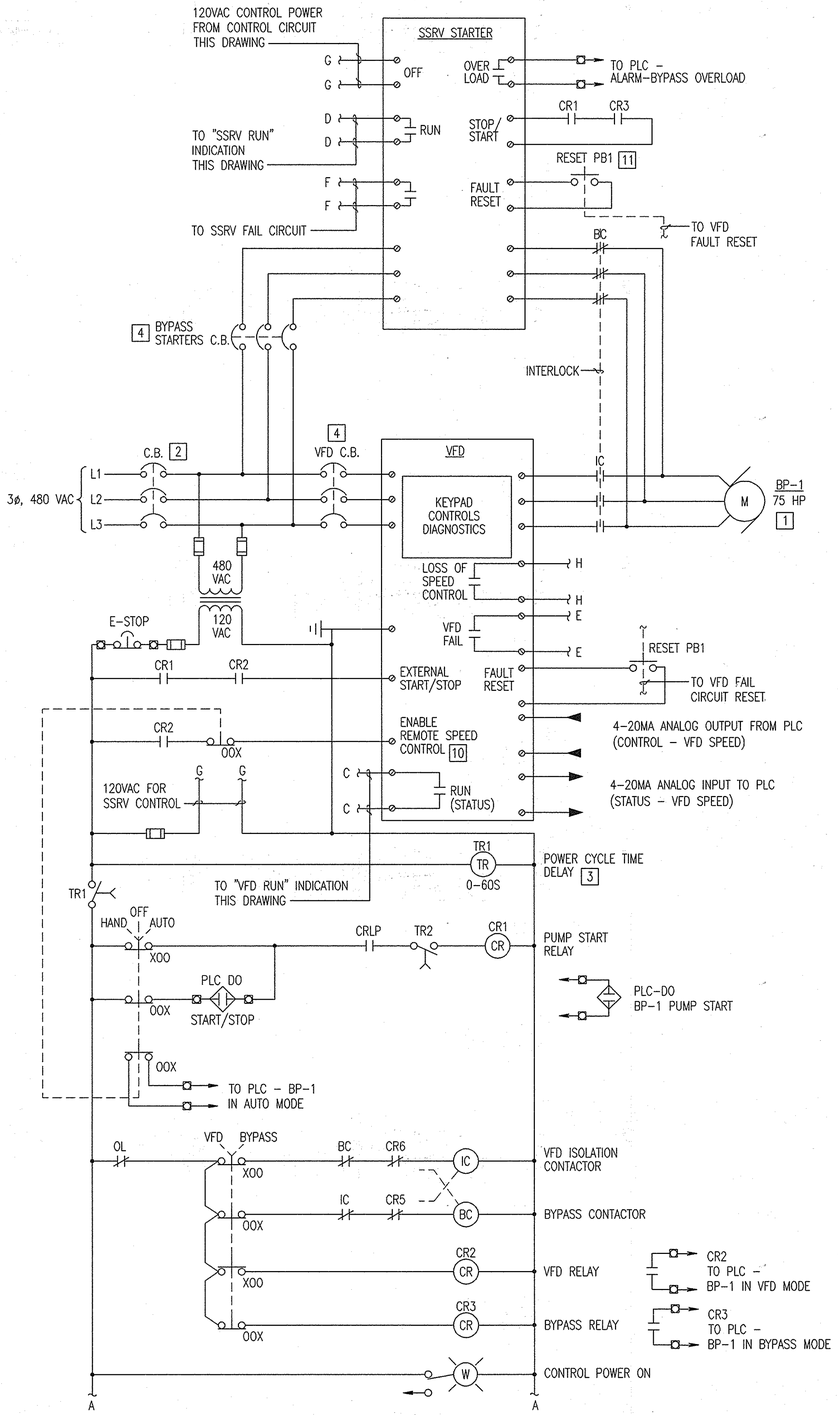

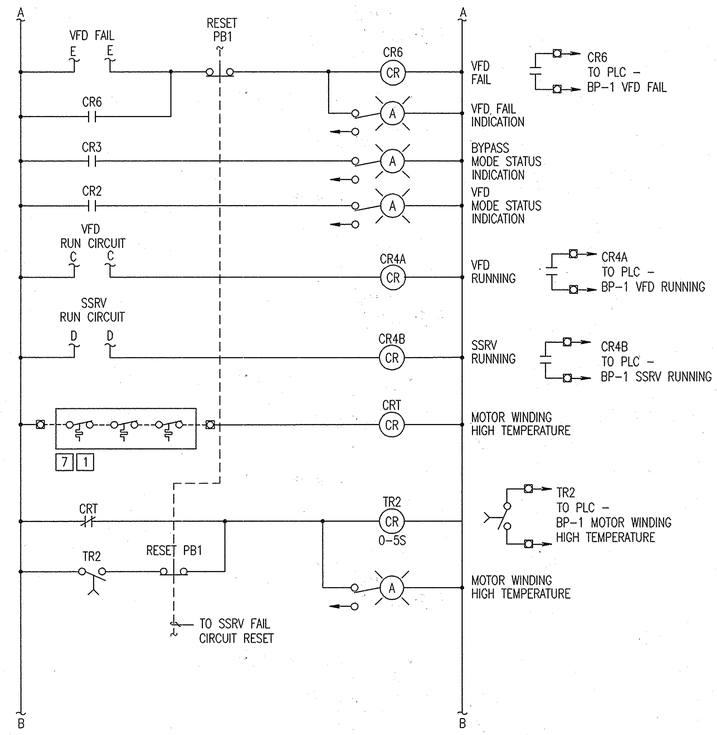

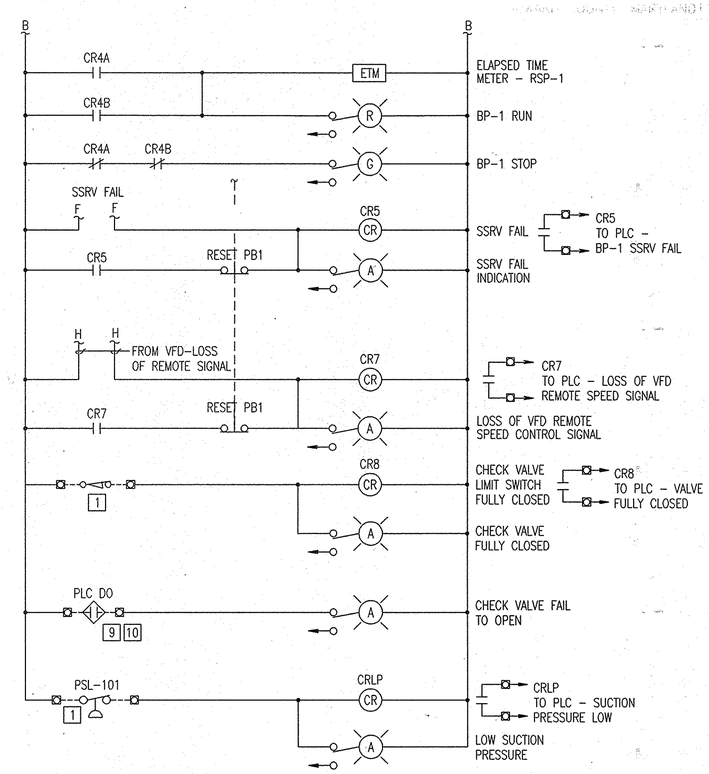

SPECIFIC NOTES:

1. EQUIPMENT LOCATED REMOTE FROM VFD ENCLOSURE.
2. MAIN CIRCUIT BREAKER FOR VFD ENCLOSURE EQUIPMENT.
3. SET AT 10 SECOND DELAY FOR BP–1, 20 SECOND DELAY FOR BP–2 AND 30 SECONDS FOR BP–3
4. PROVIDE INDIVIDUAL CIRCUIT BREAKERS FOR VFD AND SSRV STARTER.
5. MPD RELAY SHALL BE FURNISHED BY PUMP MANUFACTURER, AND SHALL BE COMPATIBLE WITH PUMP MOTOR PROTECTIVE DEVICES. PUMP MANUFACTURER SHALL FURNISH RELAY TO VFD MANUFACTURER FOR INSTALLATION IN VFD ENCLOSURE.
6. PROVIDE 24 VDC CONTROL RELAYS FOR INTERFACING WITH MPD RELAY AND WIRING. RELAYS SHALL BE PROVIDED WITH CONTACTS RATED MINIMUM OF 2 AMPERES AT 120 VAC FOR VFD CONTROL CIRCUIT.
7. MOTOR WINDING TEMPERATURE SENSOR IN MOTOR WINDINGS.
8. AUTO MODE–EXTERNAL SPEED CONTROL ENABLED.
9. ALL DISCRETE I/O INTERFACE WITH THE PLC SHALL UTILIZE 24VDC POWER.
10. NOT ALL I/O WIRING AND CONNECTIONS TO I/O CARDS ARE SHOWN. PROVIDE WIRING FOR I/O TO PLC I/O AS REQUIRED FOR ACTIVE AND SPARE I/O PER THE I/O LIST ON THE SPECIFICATIONS AND THE CONTRACT DRAWINGS, AS APPLICABLE. PROVIDE INTERPOSING RELAYS WITH SNUBBER CIRCUITS FOR DISCRETE OUTPUTS, BOTH ACTIVE AND SPARES. PROVIDE FUSES ON ANALOG INPUTS AND OUTPUTS, BOTH ACTIVE AND SPARES. PROVIDE WIRING OF ALL I/O, INCLUDING SPARES, TO FIELD TERMINAL STRIPS.
11. EQUIPMENT MOUNTED ON THE FACE OF THE VFD PANEL.

VFD PUMP 1 CONTROL PANEL ELEMENTARY

1 / I–4

(TYPICAL FOR BP–2, BP–3)

"PROFESSIONAL CERTIFICATION, I HEREBY CERTIFY THAT THESE DOCUMENTS WERE PREPARED OR APPROVED BY ME, AND THAT I AM A DULY LICENSED PROFESSIONAL ENGINEER UNDER THE LAWS OF THE STATE OF MARYLAND, LICENSE NO. 25378, EXPIRATION DATE: 7/14/2012."

DEPARTMENT OF PUBLIC WORKS
HOWARD COUNTY, MARYLAND.

DIRECTOR OF PUBLIC WORKS — DATE 8/26/11
CHIEF, BUREAU OF ENGINEERING — DATE 8/29/11
CHIEF, BUREAU OF UTILITIES — DATE
CHIEF, UTILITY DESIGN DIVISION — DATE 8/29/11

PREPARED BY :
WHITMAN, REQUARDT & ASSOCIATES, LLP
801 South Caroline Street, Baltimore, MD 21231

WR&A

STATE OF MARYLAND — ADAMIC WILLIAM RAU — No. 25378 — PROFESSIONAL ENGINEER — 7/27/11

DES:
DRN:
CHK:
DATE: 6/8/11

BY	NO.	REVISION	DATE
WRA	1	AS-BUILTS	2/15

VFD PUMP CONTROL PANEL ELEMENTARY

600' SCALE TAX MAP NO. 16 BLOCK NO. 3

MARRIOTTSVILLE ROAD
ELEVATED TANK AND BOOSTER STATION
CAPITAL PROJECT NO. W8263
CONTRACT NO. 44–4509

ELECTION DISTRICT 3 — HOWARD COUNTY, MARYLAND

AS-BUILT

DWG. I–4

SCALE N/A

SHEET 30 OF 35

N:\13732\CADD\I-4.dwg
Jul 25, 2011 – 1:17pm

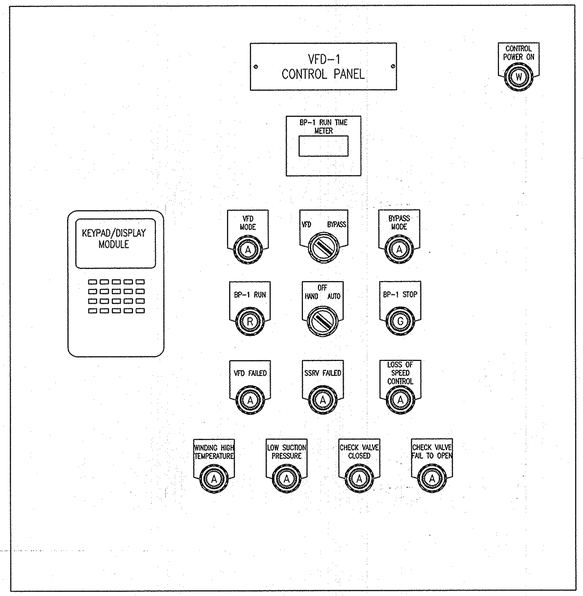

1 / I-5 **VFD-1 PARTIAL PANEL ELEVATION**
NOT TO SCALE (TYPICAL FOR BP-2, BP-3)

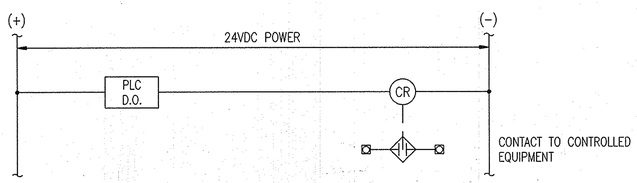

2 / I-5 **PLC D.O. INTERPOSING RELAY (TYP.)**
NOT TO SCALE

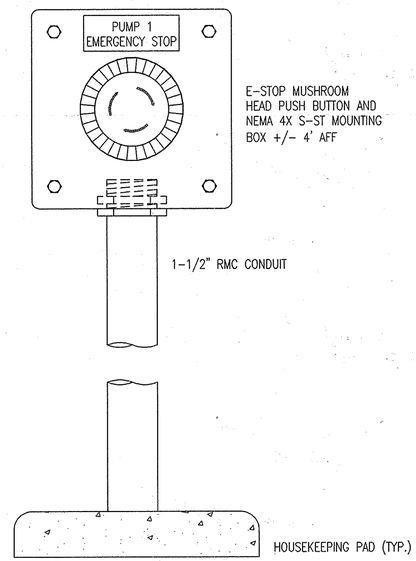

3 / I-5 **PUMP E-STOP PEDASTAL**
NOT TO SCALE

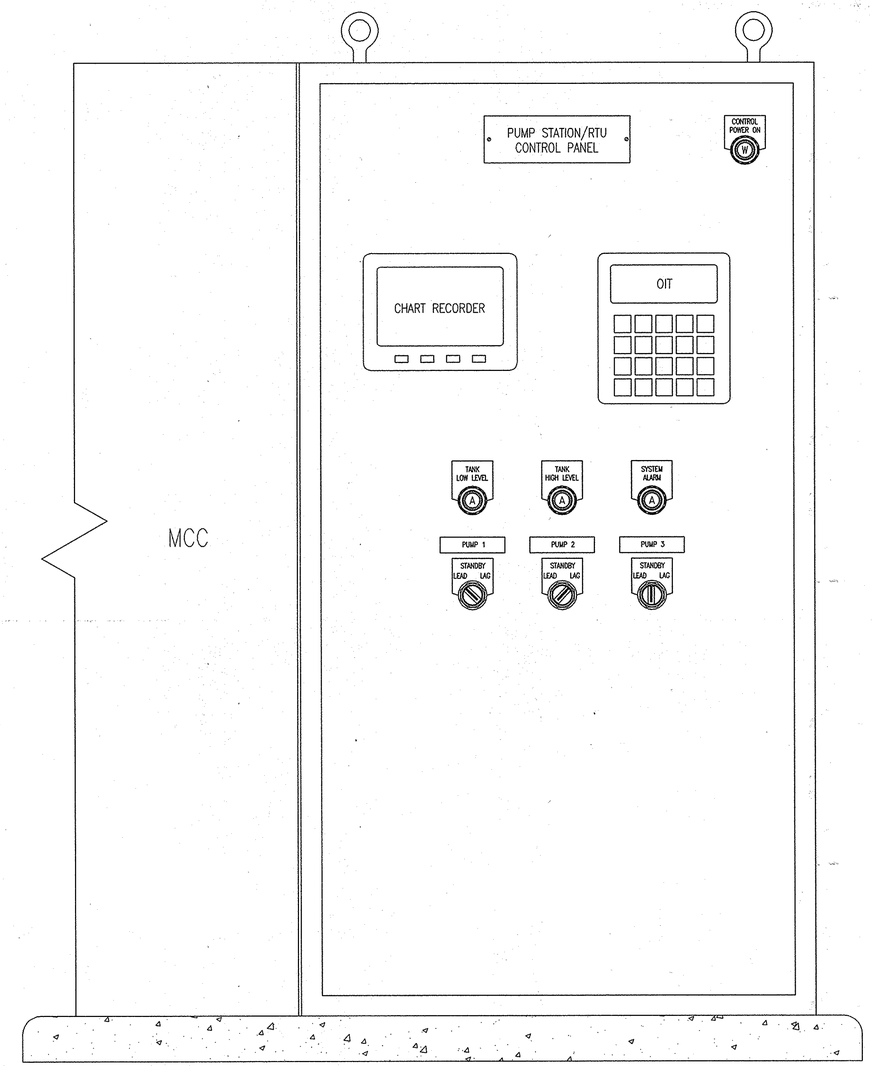

4 / I-5 **PUMP STATION CONTROL PANEL ELEVATION**
NOT TO SCALE

"PROFESSIONAL CERTIFICATION, I HEREBY CERTIFY THAT THESE DOCUMENTS WERE PREPARED OR APPROVED BY ME, AND THAT I AM A DULY LICENSED PROFESSIONAL ENGINEER UNDER THE LAWS OF THE STATE OF MARYLAND, LICENSE NO. 25378, EXPIRATION DATE: 7/14/2012."

DEPARTMENT OF PUBLIC WORKS
HOWARD COUNTY, MARYLAND.

DIRECTOR OF PUBLIC WORKS — DATE 8/26/11
CHIEF, BUREAU OF ENGINEERING — DATE 8/3/11
CHIEF, BUREAU OF UTILITIES — DATE
CHIEF, UTILITY DESIGN DIVISION — DATE 8/9/11

PREPARED BY :
WHITMAN, REQUARDT & ASSOCIATES, LLP
801 South Caroline Street, Baltimore, MD 21231
WR&A

STATE OF MARYLAND — THOMAS WILLIAM GRAY — No. 25378 — PROFESSIONAL ENGINEER — 7/27/11

DES:				
DRN:				
CHK:				
DATE: 6/8/11	WRA BY	1 NO.	AS-BUILTS REVISION	2/15 DATE

INSTRUMENTATION MISCELLANEOUS DIAGRAMS

600' SCALE TAX MAP NO. 16 BLOCK NO. 3

MARRIOTTSVILLE ROAD
ELEVATED TANK AND BOOSTER STATION
CAPITAL PROJECT NO. W8263
CONTRACT NO. 44-4509

ELECTION DISTRICT 3 HOWARD COUNTY, MARYLAND

AS-BUILT

DWG. I-5
SCALE N/A
SHEET 31 OF 35

N:\13732\CADD\I-5.dwg
Jul 25, 2011 - 1:17pm

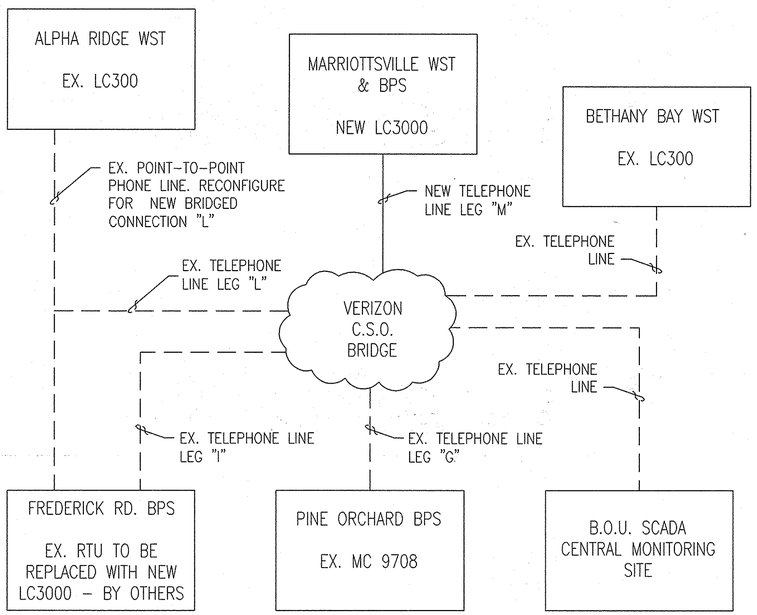

1 / I-6 **SCADA INTERFACE SCHEMATIC**
NOT TO SCALE

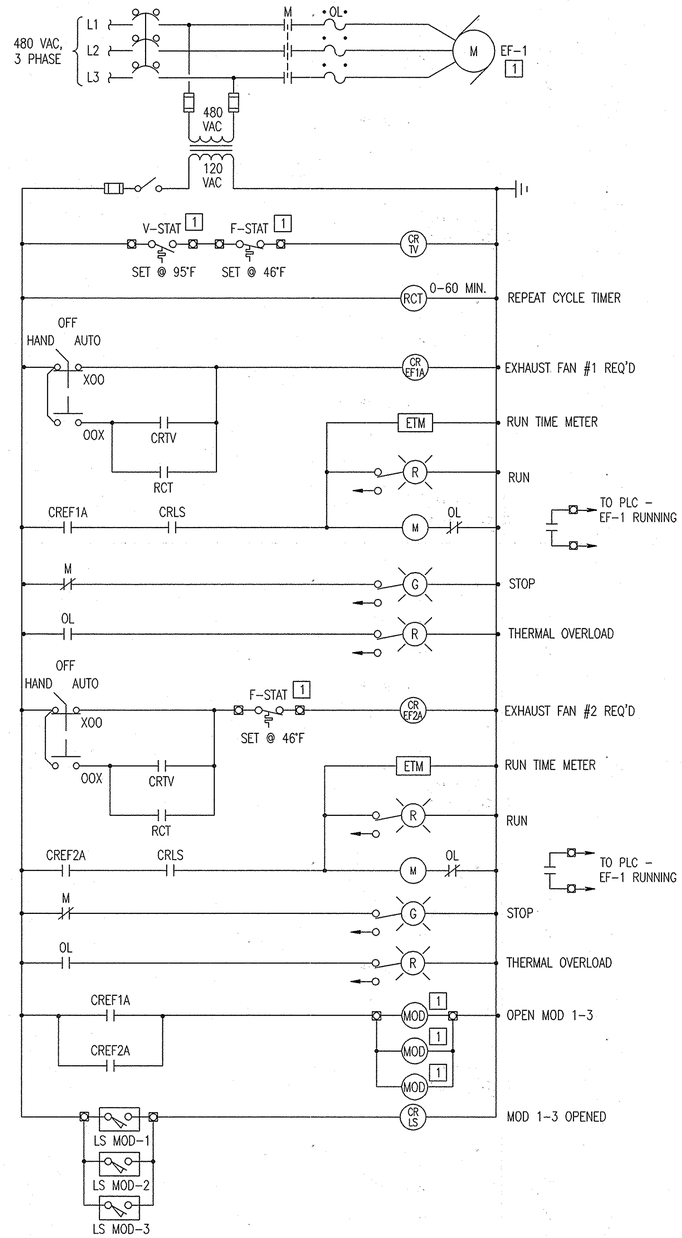

3 / I-6 **EXHAUST FAN CONTROL PANEL ELEMENTARY**
NOT TO SCALE

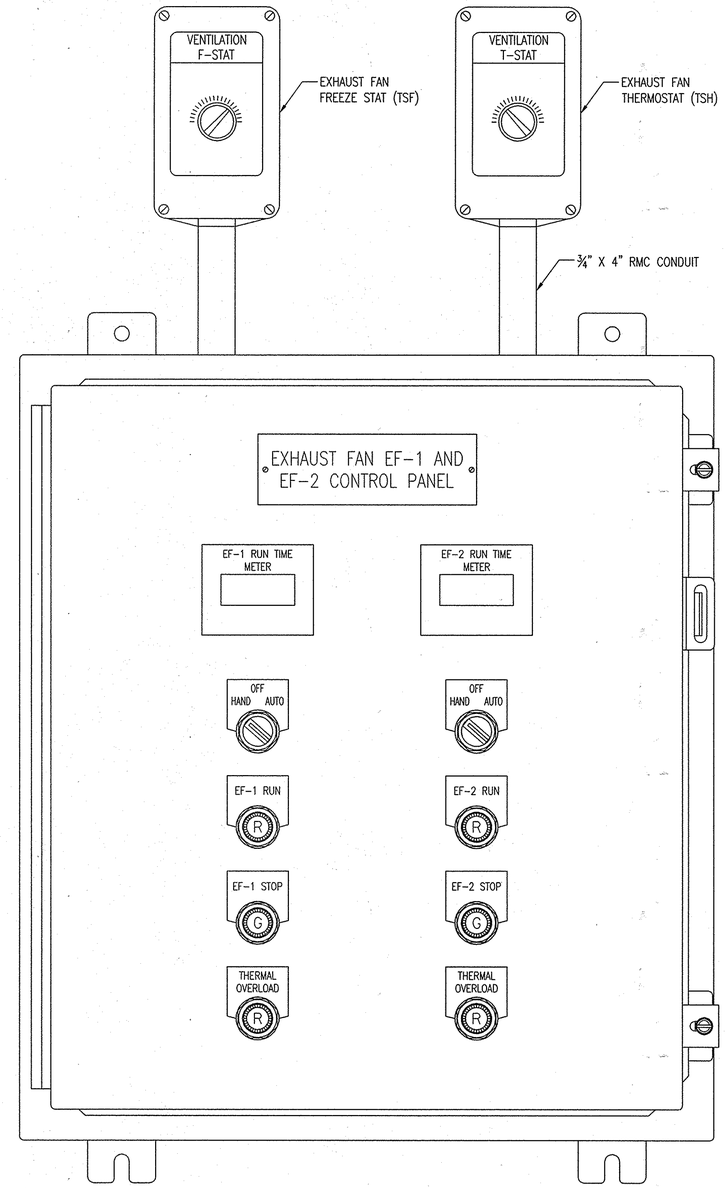

2 / I-6 **EXHAUST FAN EF-1 AND EF-2 MOTOR STARTER CONTROL PANEL ELEVATION**
NOT TO SCALE

DRAWING NOTES:

— — — EXISTING TELEPHONE LINE.

——— NEW TELEPHONE LINE.

[1] EQUIPMENT LOCATED REMOTE FROM THE FAN CONTROL PANEL.

"PROFESSIONAL CERTIFICATION, I HEREBY CERTIFY THAT THESE DOCUMENTS WERE PREPARED OR APPROVED BY ME, AND THAT I AM A DULY LICENSED PROFESSIONAL ENGINEER UNDER THE LAWS OF THE STATE OF MARYLAND, LICENSE NO. 25378, EXPIRATION DATE: 7/14/2012."

AS-BUILT

DWG. I-6

DEPARTMENT OF PUBLIC WORKS
HOWARD COUNTY, MARYLAND.

DIRECTOR OF PUBLIC WORKS — DATE 8/26/11
CHIEF, BUREAU OF ENGINEERING — DATE 8/9/11
CHIEF, BUREAU OF UTILITIES — DATE 8/24/11
CHIEF, UTILITY DESIGN DIVISION — DATE 8/9/11

PREPARED BY:
WHITMAN, REQUARDT & ASSOCIATES, LLP
801 South Caroline Street, Baltimore, MD 21231

STATE OF MARYLAND — PADRAIC WILLIAM GRAY — No. 25378 — PROFESSIONAL ENGINEER — 7/27/11

DES:
DRN:
CHK:
DATE: 6/8/11

BY	NO.	REVISION	DATE
WRA	1	AS-BUILTS	2/15

INSTRUMENTATION MISCELLANEOUS DIAGRAMS

600' SCALE TAX MAP NO. 16 BLOCK NO. 3

MARRIOTTSVILLE ROAD
ELEVATED TANK AND BOOSTER STATION
CAPITAL PROJECT NO. W8263
CONTRACT NO. 44-4509

ELECTION DISTRICT 3 HOWARD COUNTY, MARYLAND

SCALE N/A

SHEET 32 OF 35

N:\13732\CADD\I-6.dwg
Jul 25, 2011 - 1:17pm

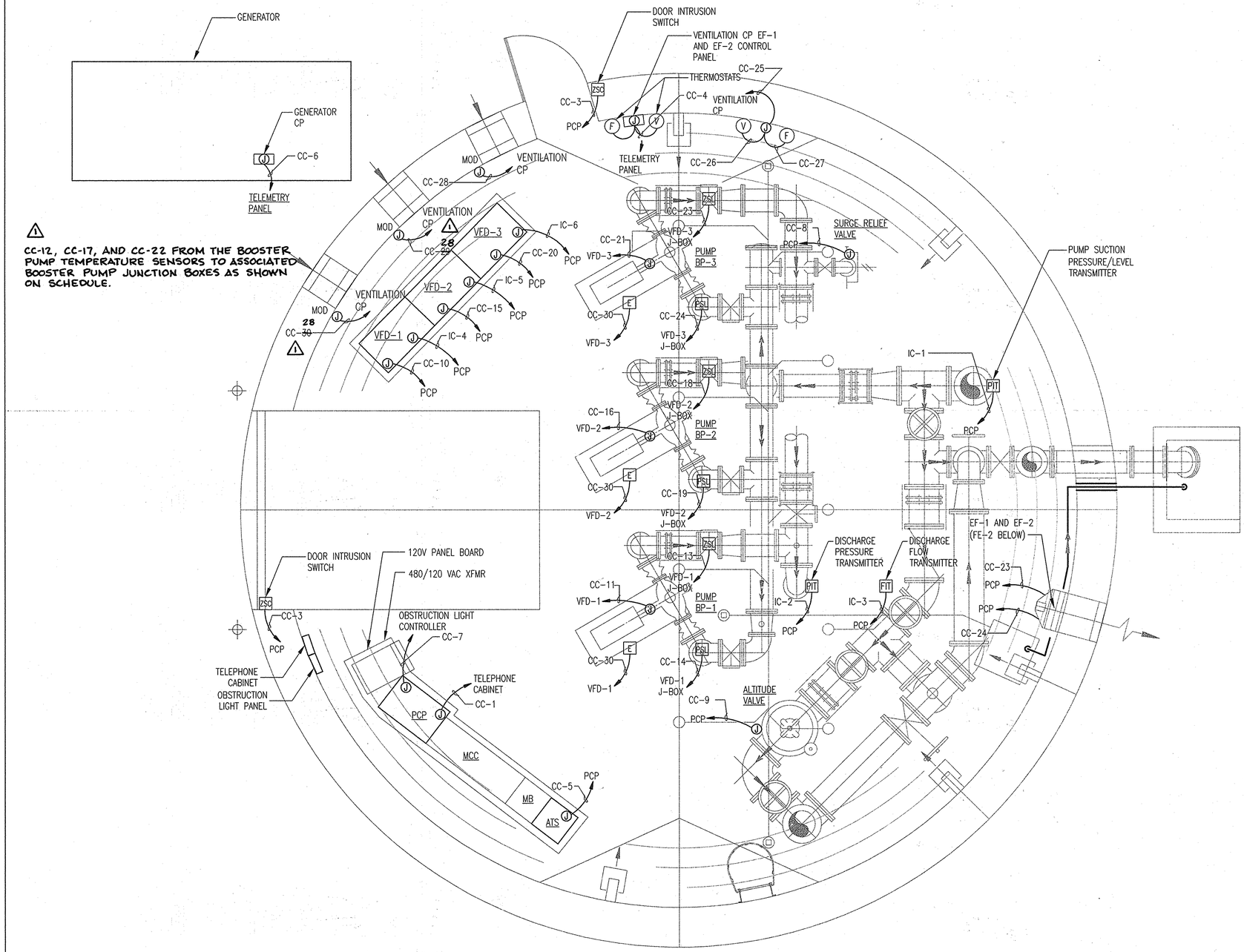

1 / I-6 **BPS INSTRUMENTATION**

SCALE: 3/8"=1'-0"

GENERAL NOTES

1. ALL WORK SHOWN SHALL BE NEW UNLESS OTHERWISE NOTED AS EXISTING.
2. SEE ELECTRICAL DRAWINGS FOR POWER DISTRIBUTION, DISCONNECT REQUIREMENTS, EQUIPMENT LOCATIONS AND FEEDER REQUIREMENTS.
3. MOTOR STARTER ELEMENTARIES SHOWN ARE INTENDED TO DEPICT THE GENERAL CONTROLS REQUIREMENT FOR THAT PARTICULAR PIECE OF EQUIPMENT AND DO NOT NECESSARILY INDICATE ALL THE REQUIREMENTS OF THE MOTOR STARTER. SEE ELECTRICAL DRAWINGS AND SPECIFICATIONS FOR SPECIFIC MOTOR STARTER REQUIREMENTS.
4. SEE MECHANICAL AND ELECTRICAL DRAWINGS FOR EQUIPMENT LOCATIONS AND POWER REQUIREMENTS. CONTRACTOR SHALL COORDINATE EQUIPMENT LOCATIONS SUCH AS NOT TO CAUSE INTERFERENCE WITH NEW AND/OR EXISTING EQUIPAMENT.
5. ENCLOSURE DIMENSIONS SHOWN ARE MINIMUM REQUIREMENTS. ENCLOSURES SHALL BE SIZED TO ACCOMMODATE EQUIPMENT, CONTROLS AND COMPONENTS AS SHOWN, SPECIFIED AND REQUIRED FOR AN OPERABLE SYSTEM.
6. CIRCUITS SHOWN SHALL BE INSTALLED 3/4" CONDUITS UNLESS INDICATED OTHERWISE.
7. ALL PENETRATIONS THROUGH EXISTING SOLID CONCRETE STRUCTURES WHERE SLEEVES HAVE NOT BEEN PROVIDED SHALL BE CORE DRILLED AND SIZED TO ACCEPT MECHANICAL LINK SEALS. THROUGH NON-FIRE RATED WALLS, CORE HOLES AND SEAL AROUND CONDUIT WITH NON-SHRINK GROUT. THROUGH EXTERIOR WALL, SEAL WATERTIGHT WITH SILICONE MASONRY SEALANT.
8. ALL DISCRETE OUTPUTS FROM THE PUMP CONTROLLERS SHALL BE PROVIDED WITH INTERPOSING RELAYS.

"PROFESSIONAL CERTIFICATION, I HEREBY CERTIFY THAT THESE DOCUMENTS WERE PREPARED OR APPROVED BY ME, AND THAT I AM A DULY LICENSED PROFESSIONAL ENGINEER UNDER THE LAWS OF THE STATE OF MARYLAND, LICENSE NO. 25378, EXPIRATION DATE: 7/1/2012."

DEPARTMENT OF PUBLIC WORKS
HOWARD COUNTY, MARYLAND.

DIRECTOR OF PUBLIC WORKS — DATE 8/22/11
CHIEF, BUREAU OF ENGINEERING — DATE 8/9/11
CHIEF, BUREAU OF UTILITIES — DATE 8/9/11
CHIEF, UTILITY DESIGN DIVISION — DATE 8/9/11

PREPARED BY:
WHITMAN, REQUARDT & ASSOCIATES, LLP
801 South Caroline Street, Baltimore, MD 21231
WR&A

STATE OF MARYLAND — PADRAIC WILLIAM SKY — No. 25378 — PROFESSIONAL ENGINEER — 8/27/11

DES:
DRN:
CHK:
DATE: 6/8/11

BY	NO.	REVISION	DATE
WRA	1	AS-BUILTS	2/15

BOOSTER PUMPING STATION PLAN – INSTRUMENTATION

600' SCALE TAX MAP NO. 16 BLOCK NO. 3

MARRIOTTSVILLE ROAD
ELEVATED TANK AND BOOSTER STATION
CAPITAL PROJECT NO. W8263
CONTRACT NO. 44-4509

ELECTION DISTRICT 3 HOWARD COUNTY, MARYLAND

AS-BUILT

DWG. I-7

SCALE AS SHOWN

SHEET 33 OF 35

N:\13732\CADD\I-7.dwg
Jul 25, 2011 - 1:17pm

GENERAL NOTES

1. ALL WORK SHOWN SHALL BE NEW UNLESS OTHERWISE NOTED AS EXISTING.
2. SEE ELECTRICAL DRAWINGS FOR POWER DISTRIBUTION, DISCONNECT REQUIREMENTS, EQUIPMENT LOCATIONS AND FEEDER REQUIREMENTS.
3. MOTOR STARTER ELEMENTARIES SHOWN ARE INTENDED TO DEPICT THE GENERAL CONTROLS REQUIREMENT FOR THAT PARTICULAR PIECE OF EQUIPMENT AND DO NOT NECESSARILY INDICATE ALL THE REQUIREMENTS OF THE MOTOR STARTER. SEE ELECTRICAL DRAWINGS AND SPECIFICATIONS FOR SPECIFIC MOTOR STARTER REQUIREMENTS.
4. SEE MECHANICAL AND ELECTRICAL DRAWINGS FOR EQUIPMENT LOCATIONS AND POWER REQUIREMENTS. CONTRACTOR SHALL COORDINATE EQUIPMENT LOCATIONS SUCH AS NOT TO CAUSE INTERFERENCE WITH NEW AND/OR EXISTING EQUIPAMENT.
5. ENCLOSURE DIMENSIONS SHOWN ARE MINIMUM REQUIREMENTS. ENCLOSURES SHALL BE SIZED TO ACCOMMODATE EQUIPMENT, CONTROLS AND COMPONENTS AS SHOWN, SPECIFIED AND REQUIRED FOR AN OPERABLE SYSTEM.
6. CIRCUITS SHOWN SHALL BE INSTALLED 3/4" CONDUITS UNLESS INDICATED OTHERWISE.
7. ALL PENETRATIONS THROUGH EXISTING SOLID CONCRETE STRUCTURES WHERE SLEEVES HAVE NOT BEEN PROVIDED SHALL BE CORE DRILLED AND SIZED TO ACCEPT MECHANICAL LINK SEALS. THROUGH NON-FIRE RATED WALLS, CORE HOLES AND SEAL AROUND CONDUIT WITH NON-SHRINK GROUT. THROUGH EXTERIOR WALL, SEAL WATERTIGHT WITH SILICONE MASONRY SEALANT.
8. ALL DISCRETE OUTPUTS FROM THE PUMP CONTROLLERS SHALL BE PROVIDED WITH INTERPOSING RELAYS.

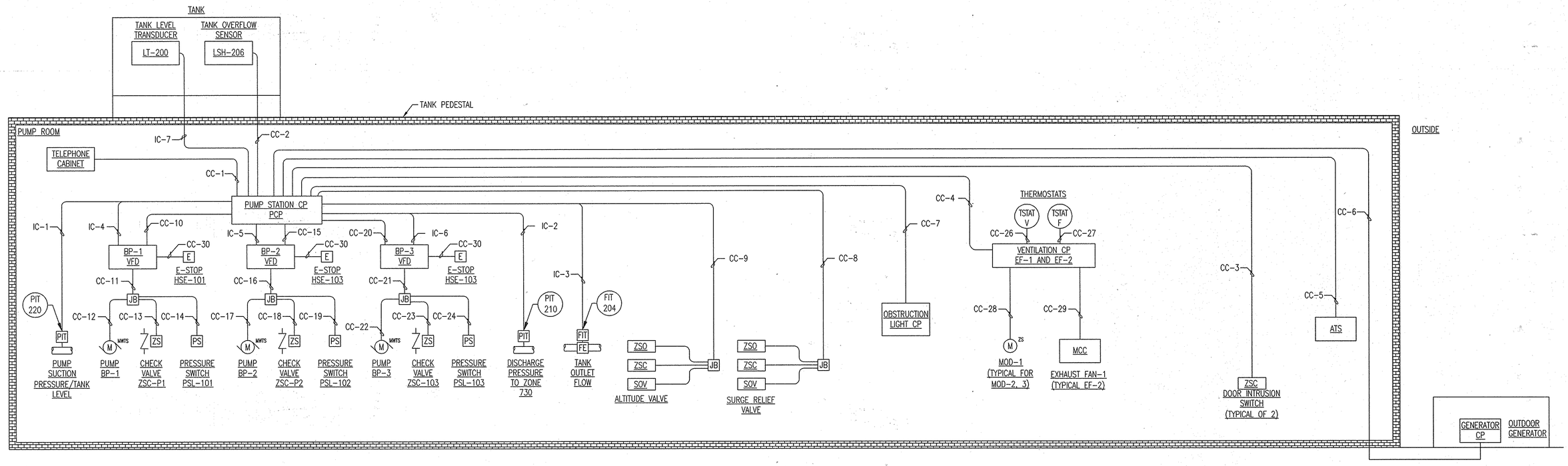

1 / I-8 CONTROL CONDUIT RISER DIAGRAM

NOT TO SCALE

"PROFESSIONAL CERTIFICATION, I HEREBY CERTIFY THAT THESE DOCUMENTS WERE PREPARED OR APPROVED BY ME, AND THAT I AM A DULY LICENSED PROFESSIONAL ENGINEER UNDER THE LAWS OF THE STATE OF MARYLAND, LICENSE NO. 25378, EXPIRATION DATE: 7/14/2012."

AS-BUILT

DWG. I-8

DEPARTMENT OF PUBLIC WORKS
HOWARD COUNTY, MARYLAND.

DIRECTOR OF PUBLIC WORKS — DATE 8/26/11
CHIEF, BUREAU OF ENGINEERING — DATE 8/2/11
CHIEF, BUREAU OF UTILITIES — DATE
CHIEF, UTILITY DESIGN DIVISION — DATE 8/2/11

PREPARED BY :
WHITMAN, REQUARDT & ASSOCIATES, LLP
801 South Caroline Street, Baltimore, MD 21231

STATE OF MARYLAND — RAYMONDS WILLIAM GRAY — No. 25378 — PROFESSIONAL ENGINEER — 7/27/11

DES:
DRN:
CHK:
DATE: 6/8/11

BY	NO.	REVISION	DATE
WRA	1	AS-BUILTS	2/15

INSTRUMENTATION CONDUIT RISER DIAGRAM

600' SCALE TAX MAP NO. 16 BLOCK NO. 3

MARRIOTTSVILLE ROAD
ELEVATED TANK AND BOOSTER STATION
CAPITAL PROJECT NO. W8263
CONTRACT NO. 44-4509

ELECTION DISTRICT 3 HOWARD COUNTY, MARYLAND

SCALE N/A

SHEET 34 OF 35

N:\13732\CADD\I-8.dwg
Jul 25, 2011 - 1:17pm

INSTRUMENTATION CONDUIT AND CONDUCTOR SCHEDULE

CONDUIT			CONDUCTOR			FROM	TO	REMARKS
NO.	SIZE	TYPE	QTY	SIZE	GROUND			
CC-1	3/4"	RGC	1	CAT-3 PHONE LINE	–	TELEPONE CABINET	PCP	
CC-2	3/4"	RGC	2	#14	#12	HIGH LEVEL SENSOR	PCP	3
CC-3	3/4"	RGC	2	#14	#12	DOOR INTRUSION SWITCH	PCP	4
CC-4	3/4"	RGC	4	#14	#12	VENTILATION CP	PCP	3
CC-5	3/4"	RGC	4	#14	#12	ATS	PCP	3
CC-6	3/4"	RGC	8	#14	#12	GENERATOR CP	PCP	3
CC-7	3/4"	RGC	2	#14	#12	OLC	PCP	3
CC-8	3/4"	RGC	6	#14	#12	SURGE RELIEF VALVE JUNCTION BOX	PCP	4
CC-9	3/4"	RGC	6	#14	#12	ALTITUDE VALVE JUNCTION BOX	PCP	4
CC-10	1-1/2"	RGC	26	#14	#12	BP-1 VFD	PCP	5
CC-11	3/4"	RGC	6	#14	#12	BP-1 VFD JUNCTION BOX	BP-1 VFD	3
CC-12	3/4"	RGC	2	#14	#12	BP-1 MWTS	BP-1 VFD JUNCTION BOX	3
CC-13	3/4"	RGC	2	#14	#12	CHECK VALVE ZSC-101	BP-1 VFD JUNCTION BOX	3
CC-14	3/4"	RGC	2	#14	#12	PRESSURE SWITCH PSL-101	BP-1 VFD JUNCTION BOX	3
CC-15	1-1/2"	RGC	26	#14	#12	BP-2 VFD	PCP	5
CC-16	3/4"	RGC	6	#14	#12	BP-2 VFD JUNCTION BOX	BP-2 VFD	3
CC-17	3/4"	RGC	2	#14	#12	BP-2 MWTS	BP-2 VFD JUNCTION BOX	3
CC-18	3/4"	RGC	2	#14	#12	CHECK VALVE ZSC-102	BP-2 VFD JUNCTION BOX	3
CC-19	3/4"	RGC	2	#14	#12	PRESSURE SWITCH PSL-102	BP-2 VFD JUNCTION BOX	3
CC-20	1-1/2"	RGC	26	#14	#12	BP-3 VFD	PCP	5
CC-21	3/4"	RGC	6	#14	#12	BP-3 VFD JUNCTION BOX	BP-3 VFD	3
CC-22	3/4"	RGC	2	#14	#12	BP-3 MWTS	BP-3 VFD JUNCTION BOX	3
CC-23	3/4"	RGC	2	#14	#12	CHECK VALVE ZSC-103	BP-3 VFD JUNCTION BOX	3
CC-24	3/4"	RGC	2	#14	#12	PRESSURE SWITCH PSL-103	BP-3 VFD JUNCTION BOX	3
CC-25	–	–	–	–	–	–	–	NOT USED
CC-26	3/4"	RGC	2	#14	#14	TSTAT-V	VENTILATION CP	3
CC-27	3/4"	RGC	2	#14	#14	TSTAT-F	VENTILATION CP	3
CC-28	3/4"	RGC	4	#14	#14	MOD	VENTILATION CP	3
CC-29	3/4"	RGC	10	#14	#14	MCC	VENTILATION CP	3
CC-30	1"	RGC	4	#14	#14	VFD	E-STOP	3

INSTRUMENTATION CONDUIT AND CONDUCTOR SCHEDULE

CONDUIT			CONDUCTOR			FROM	TO	REMARKS
NO.	SIZE	TYPE	QTY	SIZE	GROUND			
IC-1	3/4"	PVCC-GRS	1	TSP-#16	SHIELDED	PIT-220	PCP	1
IC-2	3/4"	PVCC-GRS	1	TSP-#16	SHIELDED	PIT-210	PCP	1
IC-3	3/4"	PVCC-GRS	1	TSP-#16	SHIELDED	FIT-204	PCP	1
IC-4	1-1/2"	PVCC-GRS	2	TSP-#16	SHIELDED	BP-1 VFD	PCP	1
IC-5	1-1/2"	PVCC-GRS	2	TSP-#16	SHIELDED	BP-2 VFD	PCP	1
IC-6	1-1/2"	PVCC-GRS	2	TSP-#16	SHIELDED	BP-3 VFD	PCP	1
IC-7	3/4"	PVCC-GRS	1	TSP-#16	SHIELDED	LT-200	PCP	1

SPECIFIC NOTES:

1. CONTINUOUS CABLE – DO NOT SPLICE.
2. PROVIDE SPARE ETHERNET CABLE.
3. PROVIDE 2-#14 SPARE CONDUCTORS.
4. PROVIDE 4-#14 SPARE CONDUCTORS.
5. PROVIDE 8-#14 SPARE CONDUCTORS.
6. PROVIDE LABELS FOR ALL SPARE CONDUCTORS.

"PROFESSIONAL CERTIFICATION, I HEREBY CERTIFY THAT THESE DOCUMENTS WERE PREPARED OR APPROVED BY ME, AND THAT I AM A DULY LICENSED PROFESSIONAL ENGINEER UNDER THE LAWS OF THE STATE OF MARYLAND, LICENSE NO. 25378, EXPIRATION DATE: 7/14/2012"

AS-BUILT

DWG. I-9

DEPARTMENT OF PUBLIC WORKS
HOWARD COUNTY, MARYLAND.

DIRECTOR OF PUBLIC WORKS — DATE 8/9/11
CHIEF, BUREAU OF ENGINEERING — DATE 8/9/11
CHIEF, BUREAU OF UTILITIES — DATE
CHIEF, UTILITY DESIGN DIVISION — DATE 8/9/11

PREPARED BY :
WHITMAN, REQUARDT & ASSOCIATES, LLP
801 South Caroline Street, Baltimore, MD 21231
WR&A

STATE OF MARYLAND — HAROLD WILLIAM GRAY — No. 25378 — PROFESSIONAL ENGINEER — 7/27/11

DES:				
DRN:				
CHK:				
DATE: 6/8/11	WRA	1	AS-BUILTS	2/15
	BY	NO.	REVISION	DATE

INSTRUMENTATION CONDUIT & WIRE SCHEDULE

600' SCALE TAX MAP NO. 16 BLOCK NO. 3

MARRIOTTSVILLE ROAD
ELEVATED TANK AND BOOSTER STATION
CAPITAL PROJECT NO. W8263
CONTRACT NO. 44-4509

ELECTION DISTRICT 3 HOWARD COUNTY, MARYLAND

SCALE N/A

SHEET 35 OF 35

N:\13732\CADD\I-9.dwg
Jul 25, 2011 - 1:17pm