ALPHA RIDGE LANDFILL PANELS
COORDINATES IN NAD'83 FEET
ELEVATIONS IN FEET

PANEL NUMBER	NORTH	EAST	ELEVATION
HV00	596654.78	1336886.02	526.35
PC01	596733.66	1337856.74	510.81
PC04	597298.09	1338453.33	495.55
PC05	598870.35	1339271.78	548.00
PC06	600370.18	1339244.20	513.06
PC07	598191.26	1336887.65	566.36
PC08	599855.00	1336682.66	561.11
PC09	602346.70	1336578.63	526.17
PC10	597186.12	1334540.67	574.07
PC11	598429.53	1334744.49	576.44
PC12	599799.43	1334659.45	585.44
PC13	601881.34	1335027.83	552.64

HOWARD COUNTY
Department of Public Works
6751 Gateway Drive, Suite 514
Columbia, Maryland 21046

ALPHA RIDGE LANDFILL
UNLINED CELL CLOSURE

CAPITAL PROJECT NO. C-0190-N
SITE DEVELOPMENT PLAN

△4
126 E&S PLAN MAINTENANCE FAC. WASHPAD/OWS MODIFICATIONS
127 MAINT. FACILITY PUMP STATION SITE PLANS AND PROFILE
128 MAINT. FACILITY PUMP STATION SEDIMENT & EROSION CONTROL NOTES AND DETAILS
129 BUILDING SUPPORT PARKING EROSION & SEDIMENT CONTROL PLAN
130 BUILDING SUPPORT PARKING EROSION & SEDIMENT CONTROL NOTES AND DETAILS
131 BUILDING SUPPORT PARKING EROSION & SEDIMENT CONTROL NOTES AND DETAILS

△4
74A REVISED SITE DEVELOPMENT PLAN ALPHA RIDGE SALT BARN
74B ALPHA RIDGE SALT BARN
74C ALPHA RIDGE SALT BARN
74D COMBINED FOREST STAND DELINEATION AND FOREST CONSERVATION PLAN
74E DETAILS FSD & FCP
74F BORROW AREA/DRAINAGE DIVIDES (11-09-99)

PREVIOUS SITE DEVELOPMENT PLAN NUMBER
CAPITAL PROJECT C-4-0108
CAPITAL PROJECT C-4-0109
△2 CAPITAL PROJECT C-0190-B OR SDP-90-90
CAPITAL PROJECT ~~C-2093~~, LANDFILL GAS TO ENERGY (LFGE) FACILITY (C-0299)

△3
NOTE: THIS CAPITAL PROJECT SITE PLAN IS EXEMPT FROM FOREST CONSERVATION REQUIREMENTS AS OUTLINED IN APPENDIX 'D' OF THE HOWARD COUNTY FOREST CONSERVATION MANUAL. FOREST CONSERVATION OBLIGATIONS HAVE BEEN PREVIOUSLY ADDRESSED BY SDP-97-128, ALPHA RIDGE LANDFILL

WETLANDS PERMIT TRACKING NO.: 1997-63409

PROFESSIONAL CERTIFICATION: I HEREBY CERTIFY THESE DOCUMENTS WERE PREPARED OR APPROVED BY ME, AND THAT I AM A DULY LICENSED PROFESSIONAL ENGINEER UNDER THE LAWS OF THE STATE OF MARYLAND LICENSE NO. 19170. EXPIRATION DATE JUNE 16, 2015. THIS SEAL APPLIES ONLY TO REVISION △4 ON THIS SHEET.

△4 DPW HAS APPROVED THE ENVIRONMENTAL CONCEPT PLAN AND THE SWM DESIGN FOR THE 2014 IMPROVEMENTS.

△3,△4
CO-1 SITE DEVELOPMENT PLAN
CO-2 MISCELLANEOUS DETAILS
CO-3 DRAINAGE DETAILS
CO-4 BIO-SWALE DETAILS
CO-5 GRADING, EROSION & SEDIMENT CONTROL PLAN
CO-6 EROSION AND SEDIMENT CONTROL NOTES AND DETAILS
CO-7 EROSION AND SEDIMENT CONTROL NOTES AND DETAILS
CO-8 DRAINAGE AREA MAP
CO-9 WATER/SANITARY AND ELECTRICAL SERVICE PLAN

"PROFESSIONAL CERTIFICATION. I HEREBY CERTIFY THESE DOCUMENTS ARE PREPARED OR APPROVED BY ME, AND THAT I AM A DULY LICENSED PROFESSIONAL ENGINEER UNDER THE LAWS OF THE STATE OF MARYLAND, LICENSE NO. 15212, EXPIRATION DATE: 12/24/2012". THIS SEAL APPLIES ONLY TO REVISION 3 ON THIS SHEET.

SUBDIVISION NAME	LOT/PARCEL △2	
ALPHA RIDGE SOLID WASTE MANAGEMENT CENTER	54,253,220,11,302	
LIBER/FOLIO	ZONE △2	TAX/ZONE MAP
10-847/606 16-878/215 10-891/314	~~PEC~~ RC-DEO	10 & 16
WATER CODE	SEWER CODE	△2 CENSUS TR.
PRIVATE, EXISTING	PRIVATE, EXISTING	~~60-30~~ 6030.00

DEPARTMENT OF PLANNING AND ZONING
HOWARD COUNTY, MARYLAND

DIRECTOR — DATE 11/3/97
CHIEF, DEVELOPMENT ENGINEERING DIVISION — DATE 10/3/97
CHIEF, DIVISION OF LAND DEVELOPMENT — DATE 11/3/97

DEPARTMENT OF PUBLIC WORKS
HOWARD COUNTY, MARYLAND

DIRECTOR OF PUBLIC WORKS — DATE 10/30/97
CHIEF, BUREAU OF WASTE MANAGEMENT — DATE 10/30/97

△2
NOTE:
DISTURBANCE FROM THE ALPHA RIDGE LANDFILL GAS TO ENERGY (LGTE) PROJECT IS PROPOSED TO BE LESS THAN 5,000 SQUARE FEET IN AREA ON THE EASTERN SIDE OF THE ALPHA RIDGE LANDFILL SITE. EXAMINATION OF THE FOREST CONSERVATION EASEMENTS SHOWS THAT THE PROPOSED SITE FOR THE PROJECT DOES NOT FALL WITHIN A DESIGNATED FOREST CONSERVATION EASEMENT. DUE TO THE SMALL AREA OF LAND DISTURBED FOR THIS PROJECT, A FOREST CONSERVATION PLAN IS NOT REQUIRED FOR THE ALPHA RIDGE LGTE PROJECT.

HOWARD COUNTY MARYLAND HEALTH OFFICER — DATE 10/30/97

SCS ENGINEERS
CONSULTING ENGINEERS
11260 ROGER BACON DRIVE
SUITE 300
RESTON, VIRGINIA 22090
PH. (703) 471-6150
FAX. (703) 471-6676

Paul Anthony Mandeville, PE

PROFESSIONAL CERTIFICATION. I HEREBY CERTIFY THAT THESE DOCUMENTS WERE PREPARED OR APPROVED BY ME, AND THAT I AM A DULY LICENSED PROFESSIONAL ENGINEER UNDER THE LAWS OF THE STATE OF MARYLAND. LICENSE NO. 15493. EXPIRATION DATE: 2 JULY 2013. THIS SEAL APPLIES ONLY TO REVISION 2 ON THIS SHEET.

SITE LOCATION

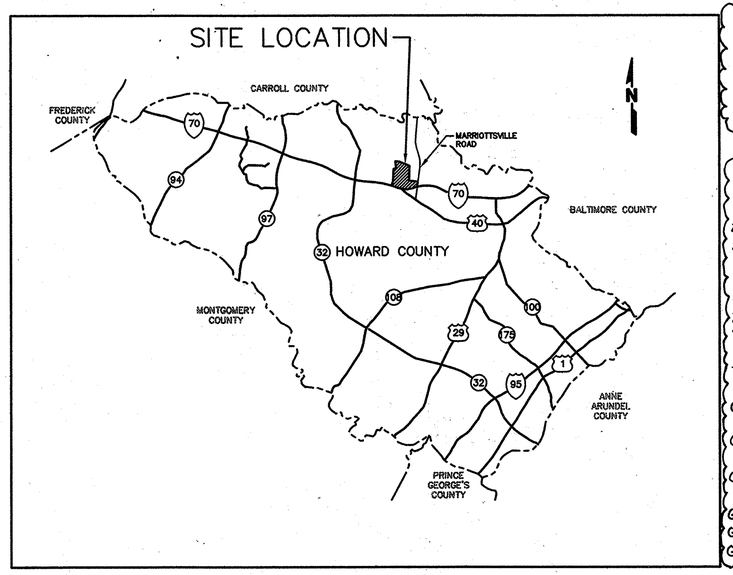

LOCATION MAP
0 2 4 6
SCALE IN MILES

L-1 LINER AS-BUILT
L-2 TRENCH LINER AS-BUILT NORTH
L-3 TRENCH LINER AS-BUILT SOUTH
U-1 ALARM SYSTEMS AND UTILITY AS-BUILT
U-2 LEACHATE UST ELECTRICAL

S-AB BASE GRADING AS-BUILT AND VOLUME
10-AB FINAL SURFACE AS-BUILT
24-AB EAST BASIN AS-BUILT
26-AB AS-BUILT NORTH AND WEST BASINS
28-AB AS-BUILT PROFILES NORTH AND WEST BASINS
30-AB SOUTH BASIN AS-BUILT
34-AB NORTHEAST ACCESS ROAD AS-BUILT
70-AB CLEARWATER 1 BASIN-ENLARGED PLAN AS-BUILT
72-AB CLEARWATER 2 BASIN-ENLARGED PLAN AS-BUILT
61B-AB LINED CELL LANDFILL GAS AS-BUILT
61C-AB LINED CELL/LFG AS-BUILT PROFILES
61D-AB LINED CELL/LFG AS-BUILT PROFILES
62-AB AS-BUILT LANDFILL GAS
62A-AB AS-BUILTS OF GAS LATERALS
68-AB FLARE STATION AS-BUILT

NOTE: This Site Development Plan is comprised of Plan Sheets 1-78 excepting sheets 57 and 58 (Borrow Area Boring Logs). Sheets 79-89 are architectural detail sheets not part of the SDP.

DRAWING INDEX

1. COVER SHEET — 1A COVER SHEET (8-16-00) — 1B COVERSHEET (04-17-07)
2. GENERAL NOTES
3. OVERALL SITE PLAN — 3A OVERALL SITE PLAN (04-17-07)
4. EXISTING CONDITIONS PLAN
5. BASE GRADING PLAN
6. BASE GRADING PLAN – SE QUADRANT
7. BASE GRADING PLAN – SW QUADRANT
8. BASE GRADING PLAN – NW QUADRANT
9. BASE GRADING PLAN – NE QUADRANT
10. FINAL SURFACE GRADING PLAN
11. LANDFILL CROSS-SECTIONS
12. LANDFILL CROSS-SECTIONS
13. EAST LEACHATE COLLECTION TRENCH PROFILE
14. EAST LEACHATE COLLECTION TRENCH CROSS-SECTIONS
15. EAST LEACHATE COLLECTION TRENCH CROSS-SECTIONS
16. WEST LEACHATE COLLECTION TRENCH PROFILE — 16A MISCELLANEOUS DETAILS (03-30-99)
17. WEST LEACHATE COLLECTION TRENCH CROSS-SECTIONS
18. LEACHATE FACILITY LAYOUT AND DETAILS
19. LEACHATE PUMP STATION DETAILS
20. LEACHATE FORCE MAIN PLAN & PROFILE
21. LEACHATE PUMP STATION – ELECTRICAL SITE PLAN
22. LEACHATE PUMP STATION ELECTRICAL DETAILS
23. POND CONSTRUCTION SPECIFICATIONS AND CERTIFICATIONS
24. EAST SEDIMENT BASIN ENLARGED PLAN AND PROFILES
25. EAST SEDIMENT BASIN DETAILS
26. NORTH BASIN ENLARGED PLAN AND PROFILES
27. NORTH BASIN DETAILS
28. WEST DETENTION BASIN ENLARGED PLAN AND PROFILES
29. WEST DETENTION BASIN DETAILS
30. SOUTH SEDIMENT BASIN ENLARGED PLAN AND PROFILES
31. SOUTH SEDIMENT BASIN DETAILS
32. NORTH PERIMETER ACCESS ROAD PLAN & PROFILE
33. NORTH BASIN ACCESS ROAD PROFILE
34. NORTHEAST LANDFILL ACCESS ROAD PLAN & PROFILE
35. CENTRAL ACCESS ROAD & EAST SIDE CHANNEL PLAN & PROFILE
36. WEST SIDE CHANNEL PLAN AND PROFILE
37. DOWNCHUTES & SWALE PROFILES
38. DOWNCHUTES & SWALE PROFILES
39. DOWNCHUTES & SWALE PROFILES
40. SWALE CROSS-SECTIONS
41. SWALE CROSS-SECTIONS
42. VEGETATIVE COVER PLAN
43. VEGETATIVE COVER DETAILS
44. LANDFILL MAINTENANCE ACCESS ROAD PLAN
45. MISCELLANEOUS DETAILS — 45A MISCELLANEOUS DETAILS (03-30-99)
46. MISCELLANEOUS DETAILS
47. MISCELLANEOUS DETAILS
48. UNLINED CELL DRAINAGE DIVIDES
49. UNLINED CELL EROSION & SEDIMENT CONTROL PLAN
50. EROSION & SEDIMENT CONTROL NOTES-CONSTRUCTION SEQUENCE
51. EROSION & SEDIMENT CONTROL DETAILS
52. EROSION & SEDIMENT CONTROL AND MISCELLANEOUS DETAILS
53. LEACHATE FACILITY LAYOUT AND DETAILS
54. BORROW AREA EXISTING CONDITIONS PLAN
55. BORROW AREA TEST PIT LOGS
56. BORROW AREA TEST PIT LOGS
57. BORROW AREA BORING LOGS
58. BORROW AREA BORING LOGS
59. SOIL BARRIER LAYER BORROW AREAS A1,A2, & A3
60. SOIL BARRIER BORROW AREA CROSS-SECTIONS AND DETAILS
61. BASE GRADING SOIL BORROW AREA B AND CROSS-SECTIONS
62. VEGETATIVE COVER SOIL BORROW AREA C AND CROSS SECTIONS
63. ~~RECREATIONAL PLAN~~ △1
64. ~~PROFILES AND CROSS SECTIONS~~
65. ~~RECREATIONAL PLAN DETAILS~~
66. ~~RECREATIONAL PLAN-DRAINAGE DIVIDES AND EROSION & SEDIMENT CONTROLS~~
67. LANDFILL CONSTRUCTION SEQUENCE PLAN
68. BORROW AREA SEQUENCE PLAN
69. MISCELLANEOUS E&S DETAILS
70. CLEARWATER 1 BASIN ENLARGED PLAN AND PROFILES
71. CLEARWATER 1 BASIN DETAILS
72. CLEARWATER 2 BASIN ENLARGED PLAN AND PROFILES
73. CLEARWATER 2 BASIN DETAILS
74. BORROW AREA DRAINAGE DIVIDES / EROSION & SEDIMENT CONTROL
75. RISER MODIFICATIONS DURING CONSTRUCTION ACTIVITIES
76. OVERALL LIMIT OF DISTURBANCE
77. MISCELLANEOUS BUILDING ALARM SYSTEMS
78. MISCELLANEOUS BUILDING ALARM SYSTEMS DETAILS
G-1 LINED CELL LFG SYSTEM LAYOUT
G-2 UNLINED CELL LFG COLLECTION SYSTEM LAYOUT
G-3 LFG COLLECTION SYSTEM EXTRACTION WELL DETAILS
G-4 LFG COLLECTION SYSTEM DETAILS
G-5 LFG COLLECTION SYSTEM DETAILS
G-6 LFG HEADER PROFILE
G-7 BLOWER/FLARE STATION DETAILS
G-8 BLOWER STATION/MISCELLANEOUS DETAILS
G-9 BLOWER STATION SHELTER DETAILS
G-10 ELECTRICAL DETAILS
G-11 ELECTRICAL DETAILS

	BY	NO.	REVISION	DATE
		6		
		5		
	JED	4	WEST SHOP PRKING. SOIL STORAGE SHELTER. TOC	6/9/14
	CSN	3	ALPHA RIDGE LANDFILL COMPOST FACILITY	3/19/12
	CJS	2	ALPHA RIDGE LANDFILL GAS TO ENERGY PROJECT	10/4/11
	MRG	1	DELETED REC. AREA SHEETS 63-66	11/9/99

DES. RTT, AST
DRN. EGC, JCB
CHK. PAM
DATE 10-30-97

COVER SHEET

△1 REDLINE SDP 97-128 (JUNE 2014) COMPRISED OF SHEETS 1, 54, 61, 126-131 ONLY

ALPHA RIDGE LANDFILL
UNLINED CELL CLOSURE
CAPITAL PROJECT NO. C-0190-N

3rd ELECTION DISTRICT — HOWARD COUNTY, MARYLAND

SCALE: AS NOTED

SHEET 1 OF 131

SHT1 M:\295077.01\FINAL SHT1(DEVPLAN)

SDP 97-128

ALPHA RIDGE LANDFILL PANELS
COORDINATES IN NAD'83 FEET
ELEVATIONS IN FEET

PANEL NUMBER	NORTH	EAST	ELEVATION
HV00	596654.78	1336886.02	526.35
PC01	595733.66	1337856.74	510.81
PC04	507298.09	1338453.33	495.55
PC05	598870.35	1339271.78	548.00
PC06	600370.18	1339244.20	513.06
PC07	598191.26	1336887.65	566.36
PC08	599855.00	1336682.66	561.11
PC09	602346.70	1336578.63	526.17
PC10	597186.12	1334540.67	574.07
PC11	598429.53	1334744.49	576.44
PC12	599799.43	1334659.45	585.44
PC13	601881.34	1335027.83	552.64

HOWARD COUNTY
Department of Public Works
6751 Gateway Drive, Suite 514
Columbia, Maryland 21046

ALPHA RIDGE LANDFILL
UNLINED CELL CLOSURE

CAPITAL PROJECT NO. C-0190-N
SITE DEVELOPMENT PLAN

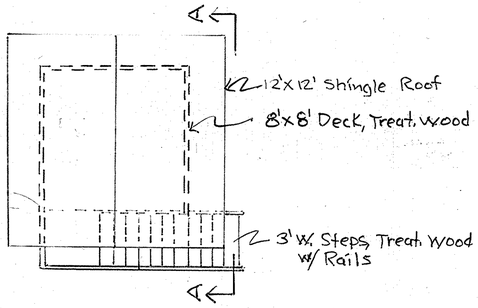

2 PROP. OBSERVATION DECK - PLAN
1/4" = 1'-0"

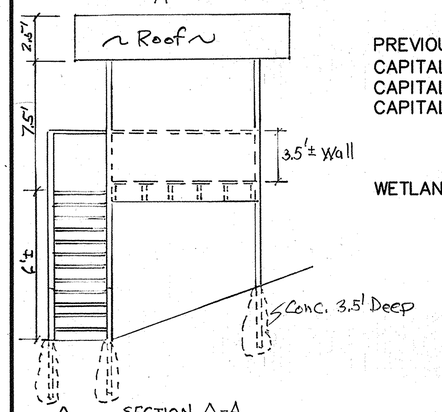

2 SECTION A-A
N.T.S.

PREVIOUS SITE DEVELOPMENT PLAN NUMBER
CAPITAL PROJECT C-4-0108
CAPITAL PROJECT C-4-0109
CAPITAL PROJECT C-0190-B OR SDP-90-90

WETLANDS PERMIT TRACKING NO.: 1997-63409

SITE LOCATION

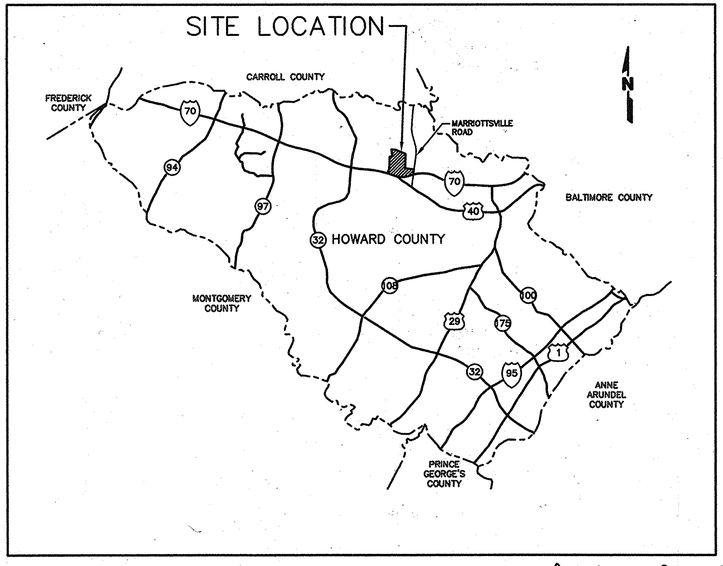

LOCATION MAP
0 2 4 6
SCALE IN MILES

3 ALPHA RIDGE LANDFILL LEACHATE DISPOSAL SYSTEM CAP. PROJ. S-6215

S-1 PLAN & PROFILE
S-2 PLAN & PROFILE
S-3 PLAN & PROFILE
S-4 NOTES & DETAILS

3 Redline SDP 97-128 (Aug '00) Comprised of Sheets 1A & S-1 thru S-4

~~NOTE: This Site Development Plan is comprised of Plan Sheets 1-78 excepting sheets 57 and 58 (Borrow Area Boring Logs). Sheets 79-89 are architectural detail sheets not part of the SDP.~~

DRAWING INDEX

3 2 1 1.A COVER SHEET
2. GENERAL NOTES
2 1 3.A OVERALL SITE PLAN
4. EXISTING CONDITIONS PLAN
5. BASE GRADING PLAN
6. BASE GRADING PLAN – SE QUADRANT
7. BASE GRADING PLAN – SW QUADRANT
8. BASE GRADING PLAN – NW QUADRANT
9. BASE GRADING PLAN – NE QUADRANT
10. FINAL SURFACE GRADING PLAN
11. LANDFILL CROSS-SECTIONS
12. LANDFILL CROSS-SECTIONS
13. EAST LEACHATE COLLECTION TRENCH PROFILE
14. EAST LEACHATE COLLECTION TRENCH CROSS-SECTIONS
15. EAST LEACHATE COLLECTION TRENCH CROSS-SECTIONS
16. WEST LEACHATE COLLECTION TRENCH PROFILE
17. WEST LEACHATE COLLECTION TRENCH CROSS-SECTIONS
18. LEACHATE FACILITY LAYOUT AND DETAILS
19. LEACHATE PUMP STATION DETAILS
20. LEACHATE FORCE MAIN PLAN & PROFILE
21. LEACHATE PUMP STATION – ELECTRICAL SITE PLAN
22. LEACHATE PUMP STATION ELECTRICAL DETAILS
23. POND CONSTRUCTION SPECIFICATIONS AND CERTIFICATIONS
24. EAST SEDIMENT BASIN ENLARGED PLAN AND PROFILES
25. EAST SEDIMENT BASIN DETAILS
26. NORTH BASIN ENLARGED PLAN AND PROFILES
27. NORTH BASIN DETAILS
28. WEST DETENTION BASIN ENLARGED PLAN AND PROFILES
29. WEST DETENTION BASIN DETAILS
30. SOUTH SEDIMENT BASIN ENLARGED PLAN AND PROFILES
31. SOUTH SEDIMENT BASIN DETAILS
32. NORTH PERIMETER ACCESS ROAD PLAN & PROFILE
33. NORTH BASIN ACCESS ROAD PROFILE
34. NORTHEAST LANDFILL ACCESS ROAD PLAN & PROFILE
35. CENTRAL ACCESS ROAD & EAST SIDE CHANNEL PLAN & PROFILE
36. WEST SIDE CHANNEL PLAN AND PROFILE
37. DOWNCHUTES & SWALE PROFILES
38. DOWNCHUTES & SWALE PROFILES
39. DOWNCHUTES & SWALE PROFILES
40. SWALE CROSS-SECTIONS
41. SWALE CROSS-SECTIONS
42. VEGETATIVE COVER PLAN
43. VEGETATIVE COVER DETAILS
44. LANDFILL MAINTENANCE ACCESS ROAD PLAN
45. MISCELLANEOUS DETAILS
46. MISCELLANEOUS DETAILS
47. MISCELLANEOUS DETAILS
48. UNLINED CELL DRAINAGE DIVIDES
49. UNLINED CELL EROSION & SEDIMENT CONTROL PLAN
50. EROSION & SEDIMENT CONTROL NOTES-CONSTRUCTION SEQUENCE
51. EROSION & SEDIMENT CONTROL DETAILS
52. EROSION & SEDIMENT CONTROL AND MISCELLANEOUS DETAILS
53. LEACHATE FACILITY LAYOUT AND DETAILS
54. BORROW AREA EXISTING CONDITIONS PLAN
55. BORROW AREA TEST PIT LOGS
56. BORROW AREA TEST PIT LOGS
57. BORROW AREA BORING LOGS
58. BORROW AREA BORING LOGS
59. SOIL BARRIER LAYER BORROW AREAS A1,A2, & A3
60. SOIL BARRIER BORROW AREA CROSS-SECTIONS AND DETAILS
61. BASE GRADING SOIL BORROW AREA B AND CROSS-SECTIONS
62. VEGETATIVE COVER SOIL BORROW AREA C AND CROSS SECTIONS
63. RECREATIONAL PLAN
64. PROFILES AND CROSS SECTIONS
65. RECREATIONAL PLAN DETAILS
66. RECREATIONAL PLAN-DRAINAGE DIVIDES AND EROSION & SEDIMENT CONTROLS
67. LANDFILL CONSTRUCTION SEQUENCE PLAN
68. BORROW AREA SEQUENCE PLAN
69. MISCELLANEOUS E&S DETAILS
70. CLEARWATER 1 BASIN ENLARGED PLAN AND PROFILES
71. CLEARWATER 1 BASIN DETAILS
72. CLEARWATER 2 BASIN ENLARGED PLAN AND PROFILES
73. CLEARWATER 2 BASIN DETAILS
74. BORROW AREA DRAINAGE DIVIDES / EROSION & SEDIMENT CONTROL
75. RISER MODIFICATIONS DURING CONSTRUCTION ACTIVITIES
76. OVERALL LIMIT OF DISTURBANCE
77. MISCELLANEOUS BUILDING ALARM SYSTEMS
78. MISCELLANEOUS BUILDING ALARM SYSTEMS DETAILS
G-1 LINED CELL LFG SYSTEM LAYOUT
G-2 UNLINED CELL LFG COLLECTION SYSTEM LAYOUT
G-3 LFG COLLECTION SYSTEM EXTRACTION WELL DETAILS
G-4 LFG COLLECTION SYSTEM DETAILS
G-5 LFG COLLECTION SYSTEM DETAILS
G-6 LFG HEADER PROFILE
G-7 BLOWER/FLARE STATION DETAILS
G-8 BLOWER STATION/MISCELLANEOUS DETAILS
G-9 BLOWER STATION SHELTER DETAILS
G-10 ELECTRICAL DETAILS
G-11 ELECTRICAL DETAILS

SDP 97-128

SUBDIVISION NAME	LOT/PARCEL	
ALPHA RIDGE SOLID WASTE MANAGEMENT CENTER	54,253,220,11	
LIBER/FOLIO	ZONE	TAX/ZONE MAP
10-847/606 16-878/215 10-691/314	PEC	10 & 16
WATER CODE	SEWER CODE	CENSUS TR.
PRIVATE, EXISTING	PRIVATE, EXISTING	60-30

DEPARTMENT OF PLANNING AND ZONING
HOWARD COUNTY, MARYLAND

DIRECTOR — DATE 11/3/97
CHIEF, DEVELOPMENT ENGINEERING DIVISION — DATE 10/31/97
CHIEF, DIVISION OF LAND DEVELOPMENT — DATE 11/3/97

HOWARD COUNTY, MARYLAND HEALTH OFFICER — DATE 10/30/97

DEPARTMENT OF PUBLIC WORKS
HOWARD COUNTY, MARYLAND

DIRECTOR OF PUBLIC WORKS — DATE 10/30/97
CHIEF, BUREAU OF WASTE MANAGEMENT — DATE 10/30/97

SCS ENGINEERS
CONSULTING ENGINEERS
11260 ROGER BACON DRIVE
SUITE 300
RESTON, VIRGINIA 22090
PH. (703) 471-6150
FAX. (703) 471-6676

STATE OF MARYLAND — PAUL ANTHONY MANDEVILLE — No. 12368 — PROFESSIONAL ENGINEER
Paul Anthony Mandeville, PE
9-30-98

BY	NO.	REVISION	DATE
	6		
	5		
	4		
S.H.	3	Add Leachate Disposal Sys, 3800LF± Mains	8-16-00
S.H.	2	Add 12'x12' Wood Observation Deck	6-25-99
S.H.	1	Add 12'x46' Trailer @ Police Pistol Range	9-30-98

DES. RTT, AST
DRN. EGC, JCB
CHK. PAM
DATE: 10-30-97

2 Redline SDP 97-128 (Jun. '99) Comprised of Shts. 1A & 3A only

COVER SHEET

1 Redline SDP 97-128 (Sep. '98) Comprised of Sht. 1A & 3A only

ALPHA RIDGE LANDFILL
UNLINED CELL CLOSURE
CAPITAL PROJECT NO. C-0190-N

3rd ELECTION DISTRICT — HOWARD COUNTY, MARYLAND

SCALE: AS NOTED

3 2 1
SHEET 1A OF 13

M:\295077.01\FINAL SHT1
SHT1(DEVPLAN)

ALPHA RIDGE LANDFILL PANELS
COORDINATES IN NAD'83 FEET
ELEVATIONS IN FEET

PANEL NUMBER	NORTH	EAST	ELEVATION
HV00	596654.78	1336886.02	526.35
PC01	596733.66	1337856.74	510.81
PC04	597298.09	1338453.33	495.55
PC05	598870.35	1339271.78	548.00
PC06	600370.18	1339244.20	513.06
PC07	598191.26	1336887.65	566.36
PC08	599855.00	1336682.66	561.11
PC09	602346.70	1336578.63	526.17
PC10	597186.12	1334540.67	574.07
PC11	598429.53	1334744.49	576.44
PC12	599799.43	1334659.45	585.44
PC13	601881.34	1335027.83	552.64

HOWARD COUNTY
Department of Public Works
6751 Gateway Drive, Suite 514
Columbia, Maryland 21046

ALPHA RIDGE LANDFILL
UNLINED CELL CLOSURE

CAPITAL PROJECT NO. C-0190-N
SITE DEVELOPMENT PLAN

PREVIOUS SITE DEVELOPMENT PLAN NUMBER
CAPITAL PROJECT C-4-0108
CAPITAL PROJECT C-4-0109
CAPITAL PROJECT C-0190-B OR SDP-90-90

WETLANDS PERMIT TRACKING NO.: 1997-63409

SITE LOCATION

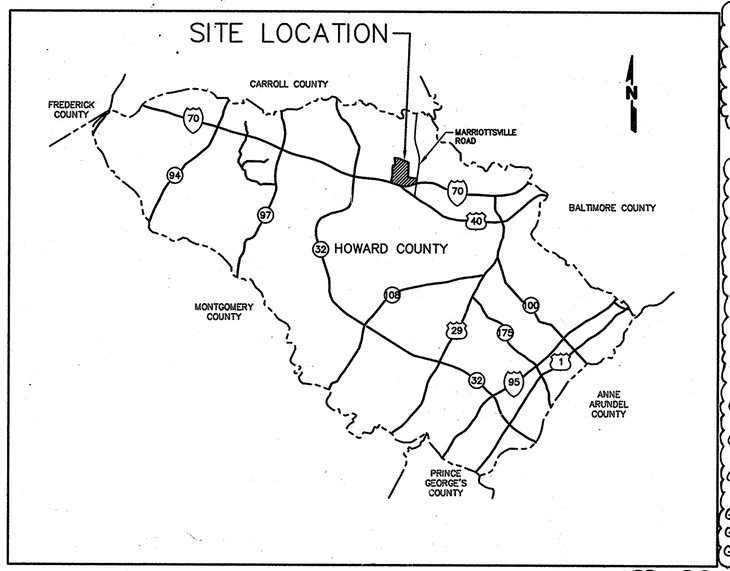

LOCATION MAP

0 2 4 6
SCALE IN MILES

L-1 LINER AS-BUILT
L-2 TRENCH LINER AS-BUILT NORTH
L-3 TRENCH LINER AS-BUILT SOUTH
U-1 ALARM SYSTEMS AND UTILITY AS-BUILT
U-2 LEACHATE UST ELECTRICAL

5-AB BASE GRADING AS-BUILT AND VOLUME
10-AB FINAL SURFACE AS-BUILT
24-AB EAST BASIN AS-BUILT
26-AB AS-BUILT NORTH AND WEST BASINS
28-AB AS-BUILT PROFILES NORTH AND WEST BASINS
30-AB SOUTH BASIN AS-BUILT
34-AB NORTHEAST ACCESS ROAD AS-BUILT
70-AB CLEARWATER 1 BASIN-ENLARGED PLAN AS-BUILT
72-AB CLEARWATER 2 BASIN-ENLARGED PLAN AS-BUILT
G1B-AB LINED CELL LANDFILL GAS AS-BUILT
G1C-AB LINED CELL/LFG AS-BUILT PROFILES
G1D-AB LINED CELL/LFG AS-BUILT PROFILES
G2-AB AS-BUILT LANDFILL GAS
G2A-AB AS-BUILTS OF GAS LATERALS
G8-AB FLARE STATION AS-BUILT

△2 74A SALT BARN TITLE SHEET
74B SALT BARN SITE GRADING & EROSION AND SEDIMENT CONTROL PLAN
74C SALT BARN EROSION & SEDIMENT CONTROL NOTES & DETAILS

NOTE: This Site Development Plan is comprised of Plan Sheets 1-78 excepting sheets 57 and 58 (Borrow Area Boring Logs). Sheets 79-89 are architectural detail sheets not part of the SDP.

△3 74D & 74E COMBINED FOREST STAND DELINEATION AND FOREST CONSERVATION PLAN & DETAILS.

DRAWING INDEX

1. COVER SHEET
2. GENERAL NOTES
3. OVERALL SITE PLAN
4. EXISTING CONDITIONS PLAN
5. BASE GRADING PLAN
6. BASE GRADING PLAN – SE QUADRANT
7. BASE GRADING PLAN – SW QUADRANT
8. BASE GRADING PLAN – NW QUADRANT
9. BASE GRADING PLAN – NE QUADRANT
10. FINAL SURFACE GRADING PLAN
11. LANDFILL CROSS-SECTIONS
12. LANDFILL CROSS-SECTIONS
13. EAST LEACHATE COLLECTION TRENCH PROFILE
14. EAST LEACHATE COLLECTION TRENCH CROSS-SECTIONS
15. EAST LEACHATE COLLECTION TRENCH CROSS-SECTIONS
16. WEST LEACHATE COLLECTION TRENCH PROFILE
17. WEST LEACHATE COLLECTION TRENCH CROSS-SECTIONS
18. LEACHATE FACILITY LAYOUT AND DETAILS
19. LEACHATE PUMP STATION DETAILS
20. LEACHATE FORCE MAIN PLAN & PROFILE
21. LEACHATE PUMP STATION – ELECTRICAL SITE PLAN
22. LEACHATE PUMP STATION ELECTRICAL DETAILS
23. POND CONSTRUCTION SPECIFICATIONS AND CERTIFICATIONS
24. EAST SEDIMENT BASIN ENLARGED PLAN AND PROFILES
25. EAST SEDIMENT BASIN DETAILS
26. NORTH BASIN ENLARGED PLAN AND PROFILES
27. NORTH BASIN DETAILS
28. WEST DETENTION BASIN ENLARGED PLAN AND PROFILES
29. WEST DETENTION BASIN DETAILS
30. SOUTH SEDIMENT BASIN ENLARGED PLAN AND PROFILES
31. SOUTH SEDIMENT BASIN DETAILS
32. NORTH PERIMETER ACCESS ROAD PLAN & PROFILE
33. NORTH BASIN ACCESS ROAD PROFILE
34. NORTHEAST LANDFILL ACCESS ROAD PLAN & PROFILE
35. CENTRAL ACCESS ROAD & EAST SIDE CHANNEL PLAN & PROFILE
36. WEST SIDE CHANNEL PLAN AND PROFILE
37. DOWNCHUTES & SWALE PROFILES
38. DOWNCHUTES & SWALE PROFILES
39. DOWNCHUTES & SWALE PROFILES
40. SWALE CROSS-SECTIONS
41. SWALE CROSS-SECTIONS
42. VEGETATIVE COVER PLAN
43. VEGETATIVE COVER DETAILS
44. LANDFILL MAINTENANCE ACCESS ROAD PLAN
45. MISCELLANEOUS DETAILS
46. MISCELLANEOUS DETAILS
47. MISCELLANEOUS DETAILS
48. UNLINED CELL DRAINAGE DIVIDES
49. UNLINED CELL EROSION & SEDIMENT CONTROL PLAN
50. EROSION & SEDIMENT CONTROL NOTES-CONSTRUCTION SEQUENCE
51. EROSION & SEDIMENT CONTROL DETAILS
52. EROSION & SEDIMENT CONTROL AND MISCELLANEOUS DETAILS
53. LEACHATE FACILITY LAYOUT AND DETAILS
54. BORROW AREA EXISTING CONDITIONS PLAN
55. BORROW AREA TEST PIT LOGS
56. BORROW AREA TEST PIT LOGS
57. BORROW AREA BORING LOGS
58. BORROW AREA BORING LOGS
59. SOIL BARRIER LAYER BORROW AREAS A1,A2, & A3
60. SOIL BARRIER BORROW AREA CROSS-SECTIONS AND DETAILS
61. BASE GRADING SOIL BORROW AREA B AND CROSS-SECTIONS
62. VEGETATIVE COVER SOIL BORROW AREA C AND CROSS SECTIONS
63. ~~RECREATIONAL PLAN~~ △1
64. ~~PROFILES AND CROSS SECTIONS~~
65. ~~RECREATIONAL PLAN DETAILS~~
66. ~~RECREATIONAL PLAN-DRAINAGE DIVIDES AND EROSION & SEDIMENT CONTROLS~~
67. LANDFILL CONSTRUCTION SEQUENCE PLAN
68. BORROW AREA SEQUENCE PLAN
69. MISCELLANEOUS E&S DETAILS
70. CLEARWATER 1 BASIN ENLARGED PLAN AND PROFILES
71. CLEARWATER 1 BASIN DETAILS
72. CLEARWATER 2 BASIN ENLARGED PLAN AND PROFILES
73. CLEARWATER 2 BASIN DETAILS
74. BORROW AREA DRAINAGE DIVIDES / EROSION & SEDIMENT CONTROL
75. RISER MODIFICATIONS DURING CONSTRUCTION ACTIVITIES
76. OVERALL LIMIT OF DISTURBANCE
77. MISCELLANEOUS BUILDING ALARM SYSTEMS
78. MISCELLANEOUS BUILDING ALARM SYSTEMS DETAILS

G-1 LINED CELL LFG SYSTEM LAYOUT
G-2 UNLINED CELL LFG COLLECTION SYSTEM LAYOUT
G-3 LFG COLLECTION SYSTEM EXTRACTION WELL DETAILS
G-4 LFG COLLECTION SYSTEM DETAILS
G-5 LFG COLLECTION SYSTEM DETAILS
G-6 LFG HEADER PROFILE
G-7 BLOWER/FLARE STATION DETAILS
G-8 BLOWER STATION/MISCELLANEOUS DETAILS
G-9 BLOWER STATION SHELTER DETAILS
G-10 ELECTRICAL DETAILS
G-11 ELECTRICAL DETAILS

SUBDIVISION NAME	LOT/PARCEL	
ALPHA RIDGE SOLID WASTE MANAGEMENT CENTER	54,253,220,11	
LIBER/FOLIO	ZONE	TAX/ZONE MAP
10-847/606 16-878/215 10-691/314	PEC	10 & 16
WATER CODE	SEWER CODE	CENSUS TR.
PRIVATE, EXISTING	PRIVATE, EXISTING	60-30

DEPARTMENT OF PLANNING AND ZONING
HOWARD COUNTY, MARYLAND

DIRECTOR — DATE 11/3/97
CHIEF, DEVELOPMENT ENGINEERING DIVISION — DATE 10/31/97
CHIEF, DIVISION OF LAND DEVELOPMENT — DATE 11/3/97

HOWARD COUNTY MARYLAND HEALTH OFFICER — DATE 10/30/97

DEPARTMENT OF PUBLIC WORKS
HOWARD COUNTY, MARYLAND

DIRECTOR OF PUBLIC WORKS — DATE 10/30/97
CHIEF, BUREAU OF WASTE MANAGEMENT — DATE 10/30/97

SEAL & SIGNATURE FOR REVISION NO. 2 △2 ONLY and △3

STATE OF MARYLAND — DAVID THOMAS BORDOW — No. 16156 — REGISTERED PROFESSIONAL ENGINEER — 4/17/07

SCS ENGINEERS
CONSULTING ENGINEERS
11260 ROGER BACON DRIVE
SUITE 300
RESTON, VIRGINIA 22090
PH. (703) 471-6150
FAX. (703) 471-6676

STATE OF MARYLAND — PAUL ANTHONY MANDEVILLE — No. 19893 — PROFESSIONAL ENGINEER
Paul Anthony Mandeville, PE

DES. RTT, AST				
DRN. EGC, JCB		6		
		5		
		4		
CHK. PAM	DTM	3	ADDED FOREST CONSERVATION PLANS	4/17/07
	DTM	2	ADDED SALT BARN; REVISED SDP	12/21/05
DATE:10-30-97	MRG	1	DELETED REC. AREA SHEETS 63-66	11/9/99
	BY	NO.	REVISION	DATE

COVER SHEET

ALPHA RIDGE LANDFILL
UNLINED CELL CLOSURE
CAPITAL PROJECT NO. C-0190-N

3rd ELECTION DISTRICT — HOWARD COUNTY, MARYLAND

SCALE: AS NOTED

SHEET 1B OF 13

SHT1(DEVPLAN) M:\295077.01\FINAL SHT1

SDP 97-128

GENERAL NOTES
NON-RESIDENTIAL
SITE DEVELOPMENT PLAN

1. ALL CONSTRUCTION SHALL BE IN ACCORDANCE WITH THE LATEST STANDARDS AND SPECIFICATIONS OF HOWARD COUNTY AND THE MARYLAND STATE HIGHWAY ADMINISTRATION IF APPLICABLE.
2. THE CONTRACTOR SHALL NOTIFY THE DEPARTMENT OF PUBLIC WORKS/BUREAU OF WASTE MANAGEMENT AT (410) 313-6444 AT LEAST FIVE (5) WORKING DAYS PRIOR TO THE START OF WORK.
3. THE CONTRACTOR SHALL NOTIFY "MISS UTILITY" AT 1-800-257-7777 AT LEAST 48 HOURS PRIOR TO ANY EXCAVATION WORK BEING DONE.
4. TRAFFIC CONTROL DEVICES, MARKINGS AND SIGNING SHALL BE IN ACCORDANCE WITH THE LATEST EDITION OF THE MANUAL OF UNIFORM TRAFFIC CONTROL DEVICES (MUTCD).
5. THE EXISTING TOPOGRAPHY IS TAKEN FROM AIR PHOTOGRAPHY WITH (MAXIMUM TWO FOOT) CONTOUR INTERVALS PREPARED BY AIR SURVEY CORPORATION, INC. JANUARY,1997.
6. THE COORDINATES SHOWN HEREON ARE BASED UPON THE HOWARD COUNTY GEODETIC CONTROL WHICH IS BASED UPON THE MARYLAND STATE PLANE COORDINATE SYSTEM NAD, 1983(HORIZ.) & NAVD, 1988(VERT.) HOWARD COUNTY MONUMENT NOS. PC-06 AND PC-09 WERE USED FOR THIS PROJECT.
7. WATER IS PRIVATE.
8. SEWER IS PRIVATE.
9. STORMWATER MANAGEMENT CONTROL IS PRIVATE AND IS OWNED AND MAINTAINED BY HOWARD COUNTY.
10. EXISTING UTILITIES ARE BASED ON HOWARD COUNTY RECORDS.
11. THE FLOODPLAIN DELINEATION STUDY FOR THIS PROJECT WAS PREPARED BY CENTURY ENGINEERING, DATED 1978, UPDATED IN 1986 BY BERNARD JOHNSON, INC.
12. THE WETLANDS DELINEATION STUDY FOR THIS PROJECT WAS PREPARED BY HOWARD SOIL CONSERVATION SERVICE, DATED JANUARY 17, 1997, AND WAS APPROVED (PENDING) AS OF SEPTEMBER, 1997.
13. NO TRAFFIC STUDY IS REQUIRED FOR THIS PROJECT.
14. SUBDIVISION NAME HOWARD COUNTY ALPHA RIDGE LANDFILL, TAX MAP 10 & 16.
15. CONTRACTOR SHALL PROTECT ALL EXISTING GROUNDWATER AND LANDFILL GAS WELLS BY MEANS OF BARRICADES AND OR CONCRETE JERSEY BARRIERS AS NECESSARY TO PREVENT DAMAGE FROM CONSTRUCTION VEHICLES. WELLS DAMAGED AS A RESULT OF CONTRACTOR'S OPERATION SHALL BE REPAIRED/REPLACED BY HOWARD COUNTY AT THE CONTRACTORS EXPENSE.
16. MAGNETIC LOCATION TAPE IS TO BE PLACED ABOVE ON ALL BURIED PLASTIC PIPELINE UTILITIES DURING CONSTRUCTION.

SUBDIVISION NAME	LOT/PARCEL	
ALPHA RIDGE SOLID WASTE MANAGEMENT CENTER	54,253,220,11	
LIBER/FOLIO	ZONE	TAX/ZONE MAP
10-847/606 16-878/215 10-691/314	PEC	10 & 16
WATER CODE	SEWER CODE	CENSUS TR.
PRIVATE, EXISTING	PRIVATE, EXISTING	60-30

DEPARTMENT OF PLANNING AND ZONING
HOWARD COUNTY, MARYLAND

DIRECTOR — DATE 11/3/97

CHIEF, DEVELOPMENT ENGINEERING DIVISION — DATE 10/30/97

CHIEF, DIVISION OF LAND DEVELOPMENT — DATE 11/3/97

HOWARD COUNTY, MARYLAND HEALTH OFFICER — DATE 10/30/97

DEPARTMENT OF PUBLIC WORKS
HOWARD COUNTY, MARYLAND

DIRECTOR OF PUBLIC WORKS — DATE 10/30/97

CHIEF, BUREAU OF WASTE MANAGEMENT — DATE 10/30/97

SCS ENGINEERS
CONSULTING ENGINEERS
11260 ROGER BACON DRIVE
SUITE 300
RESTON, VIRGINIA 22090
PH. (703) 471-6150
FAX. (703) 471-6676

STATE OF MARYLAND — PAUL ANTHONY MANDEVILLE — LIC. REG. CERT. NO. 14969 — PROFESSIONAL ENGINEER

Paul Anthony Mandeville, PE

DES. RTT, AST
DRN. SPC
CHK. PAM
DATE: 10-30-97

BY	NO.	REVISION	DATE
	6		
	5		
	4		
	3		
	2		
	1		

GENERAL NOTES

ALPHA RIDGE LANDFILL
UNLINED CELL CLOSURE
CAPITAL PROJECT NO. C-0190-N

3rd ELECTION DISTRICT — HOWARD COUNTY, MARYLAND

SCALE: NO SCALE

SHEET 2 OF 13

GENNOTES-B M:\295077.01\FINAL GENNOTES

SDP 97-128

NOTES:

1. TOPOGRAPHIC INFORMATION SHOWN ON THIS SHEET WAS COMPILED BY AIR SURVEY CORPORATION, INC. FROM AIR PHOTOGRAPHY DATED JANUARY, 1997.
2. LFG PROBES INSTALLED IN APRIL, 1996.
3. LFG MONITORING WELLS INSTALLED IN MAY, 1996.
4. 100 YEAR FLOODPLAIN INFORMATION PROVIDED BY HOWARD CO. INFORMATION IS BASED ON THE 1978 FLOOD PLAIN DELINEATION BY CENTURY ENGINEERING AND THE 1986 UPDATE BY BERNARD JOHNSON, INC. HOWARD CO. MAPS: GC-0119-T-36-38, GC-0119-T-35-38, GC-0119-T-234-38, GC-0119-T-35-39.

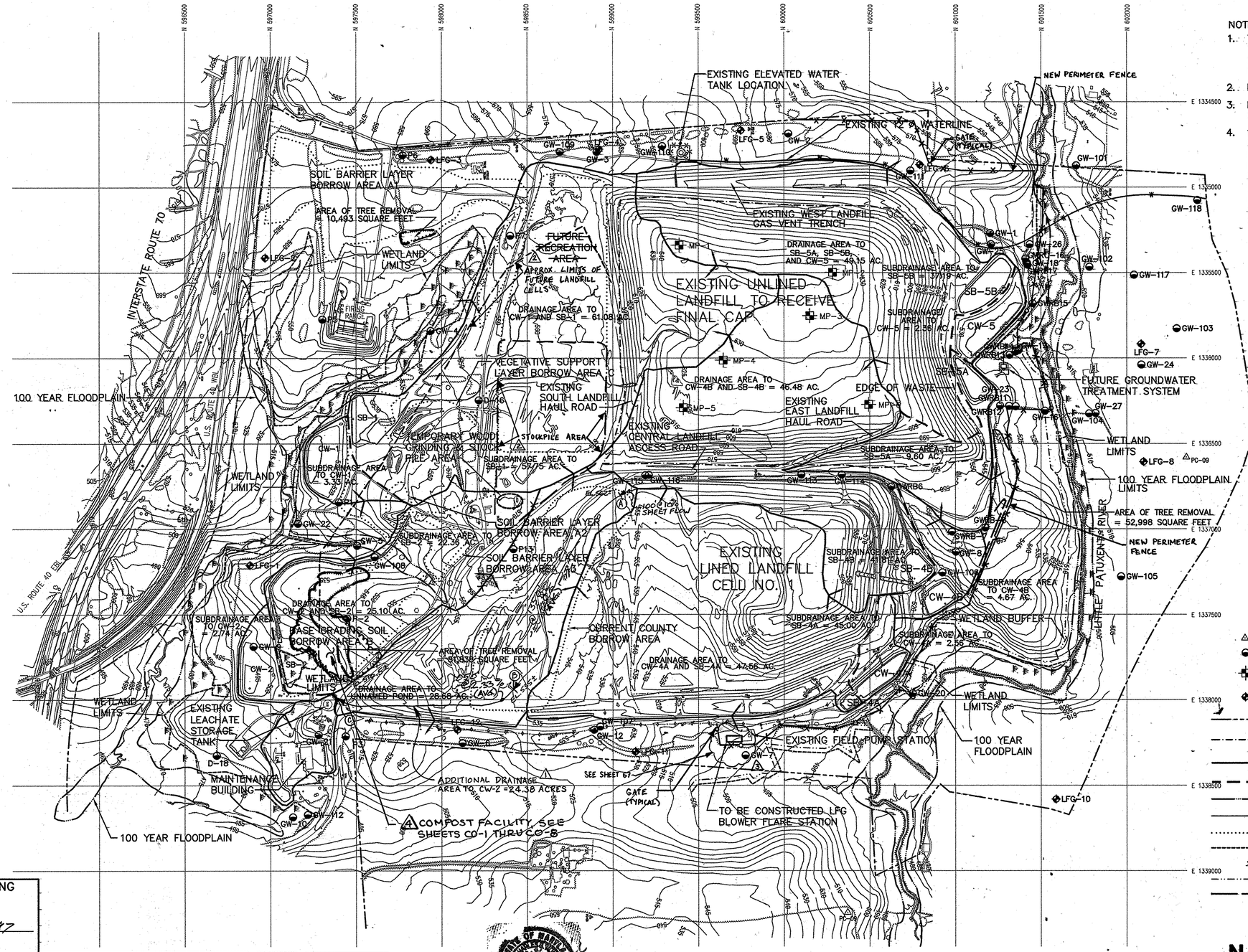

LEGEND

△PC-09	SURVEY CONTROL MONUMENT
GW-101	GROUNDWATER WELLS(EXISTING)
MP-3	LFG PROBES(EXISTING)
LFG-9	LFG MONITORING WELLS(EXISTING)
	PROPERTY LINE
	EDGE OF WASTE
	DRAINAGE DIVIDES
	SUBDRAINAGE DIVIDES
	100 YEAR FLOODPLAIN
	EXISTING WATER LINE
	BORROW AREA LIMITS
	WETLAND LIMITS
	WETLANDS
	WETLAND BUFFER
	TREE REMOVE AREA

N

300 0 300

SCALE IN FEET

SUBDIVISION NAME	LOT/PARCEL △3	
ALPHA RIDGE SOLID WASTE MANAGEMENT CENTER	54,253,220,11,302	
LIBER/FOLIO	ZONE △3	TAX/ZONE MAP
10-847/606 16-878/215 10-691/314	~~PEC~~ RC-060	10 & 16
WATER CODE	SEWER CODE	△3 CENTSUS TR.
PRIVATE, EXISTING	PRIVATE, EXISTING	6050.00 ~~80.30~~

DEPARTMENT OF PLANNING AND ZONING
HOWARD COUNTY, MARYLAND

DIRECTOR — DATE 11/3/97

CHIEF, DEVELOPMENT ENGINEERING DIVISION — DATE 10/30/97

CHIEF, DIVISION OF LAND DEVELOPMENT — DATE 11/3/97

HOWARD COUNTY, MARYLAND HEALTH OFFICER — DATE 10/30/97

PROFESSIONAL CERTIFICATION. I HEREBY CERTIFY THAT THESE DOCUMENTS WERE PREPARED OR APPROVED BY ME, AND THAT I AM A DULY LICENSED PROFESSIONAL ENGINEER UNDER THE LAWS OF THE STATE OF MARYLAND, LICENSE NO. 19453, EXPIRATION DATE: 2 JULY 2013. THIS SEAL APPLIES ONLY TO REVISION 3 ON THIS SHEET. △3

SEAL & SIGNATURE FOR REV. △4 ONLY

DEPARTMENT OF PUBLIC WORKS
HOWARD COUNTY, MARYLAND

DIRECTOR OF PUBLIC WORKS — DATE 10/30/97

CHIEF, BUREAU OF WASTE MANAGEMENT — DATE 10/30/97

SCS ENGINEERS
CONSULTING ENGINEERS
11260 ROGER BACON DRIVE
SUITE 300
RESTON, VIRGINIA 22090
PH. (703) 471-6150
FAX. (703) 471-6676

Paul Anthony Mandeville, PE

DES. RTT, AST
DRN. AST, EGC
CHK. PAM
DATE: 10-30-97

BY	NO.	REVISION	DATE
	△5		
	△5		
CSN	△4	ALPHA RIDGE LANDFILL COMPOST FACILITY	3/19/12
CJS	△3	ALPHA RIDGE LANDFILL GAS TO ENERGY PROJECT	10/4/11
MRG	△2	DELETED REC. AREA; ADDED STOCKPILE AREA, ETC.	11-9-99
	△1	DRAINAGE AREA TO BASIN CW-2	4-28-99

OVERALL SITE PLAN

ALPHA RIDGE LANDFILL
UNLINED CELL CLOSURE
CAPITAL PROJECT NO. C-0190-N

3rd ELECTION DISTRICT — HOWARD COUNTY, MARYLAND

SCALE: 1"=300'

SHEET 3 OF 13

SHT3 OVERALL W:\295077.01\FINAL

SDP 97-128

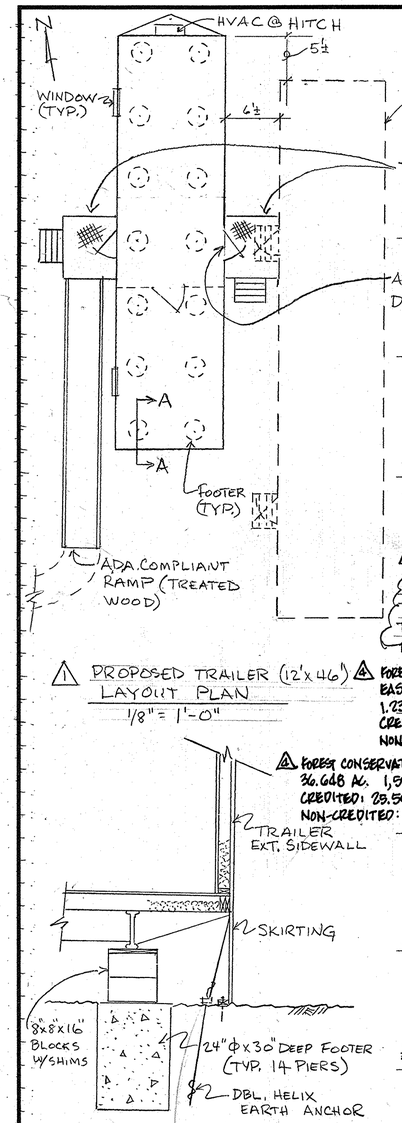

1 PROPOSED TRAILER (12'x46') LAYOUT PLAN
1/8" = 1'-0"

1 ANCHOR SEC. A-A
N.T.S.

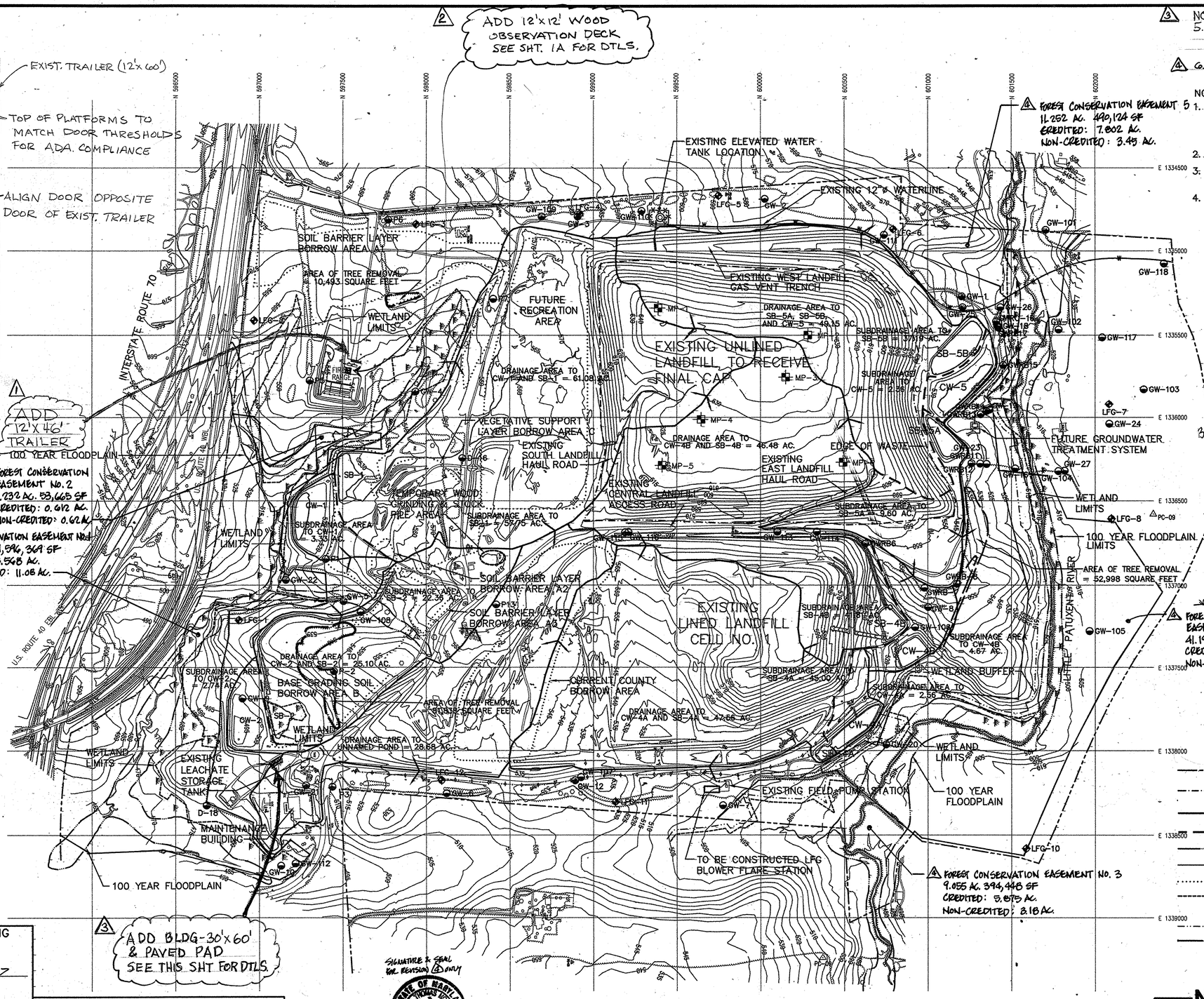

3 NOTES: (CONT'D)
5. WHEELCHAIR ENTRY TO BLDG. MAX. 5% SLOPE ALONG PATHWAY & MAX. 2% CROSS-SLOPE. NO CURBS, STEPS OR RAMPS ALONG PATHWAY.

4 6. REFER TO SHEETS 74D & 74E FOR FOREST CONSERVATION PLAN.

NOTES:
1. TOPOGRAPHIC INFORMATION SHOWN ON THIS SHEET WAS COMPILED BY AIR SURVEY CORPORATION, INC. FROM AIR PHOTOGRAPHY DATED JANUARY, 1997.
2. LFG PROBES INSTALLED IN APRIL, 1996.
3. LFG MONITORING WELLS INSTALLED IN MAY, 1996.
4. 100 YEAR FLOODPLAIN INFORMATION PROVIDED BY HOWARD CO. INFORMATION IS BASED ON THE 1978 FLOOD PLAIN DELINEATION BY CENTURY ENGINEERING AND THE 1986 UPDATE BY BERNARD JOHNSON, INC. HOWARD CO. MAPS: GC-0119-T-36-38, GC-0119-T-35-38, GC-0119-T-234-38, GC-0119-T-35-39.

3 Proposed Addition: Old Electronic Equip. Process Bldg.

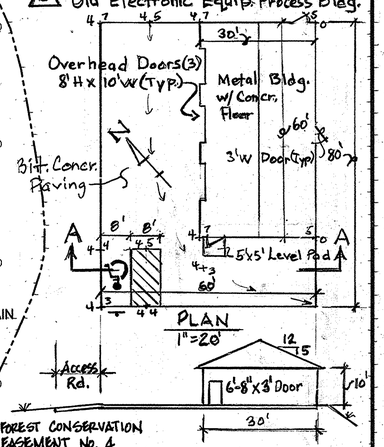

LEGEND

△ PC-09	SURVEY CONTROL MONUMENT
GW-101	GROUNDWATER WELLS (EXISTING)
MP-3	LFG PROBES (EXISTING)
LFG-9	LFG MONITORING WELLS (EXISTING)
	PROPERTY LINE
	EDGE OF WASTE
	DRAINAGE DIVIDES
	SUBDRAINAGE DIVIDES
	100 YEAR FLOODPLAIN
	EXISTING WATER LINE
	BORROW AREA LIMITS
	WETLAND LIMITS
	WETLANDS
	WETLAND BUFFER
	TREE REMOVE AREA

N
300 0 300
SCALE IN FEET

SUBDIVISION NAME	LOT/PARCEL	
ALPHA RIDGE SOLID WASTE MANAGEMENT CENTER	54,253,220,11	
LIBER/FOLIO	ZONE	TAX/ZONE MAP
10-847/606 16-878/215 10-691/314	PEC	10 & 16
WATER CODE	SEWER CODE	CENSUS TR.
PRIVATE, EXISTING	PRIVATE, EXISTING	60-30

DEPARTMENT OF PLANNING AND ZONING
HOWARD COUNTY, MARYLAND

DIRECTOR — DATE 11/3/97
CHIEF, DEVELOPMENT ENGINEERING DIVISION — DATE 12/2/97
CHIEF, DIVISION OF LAND DEVELOPMENT — DATE 11/3/97
HOWARD COUNTY, MARYLAND HEALTH OFFICER — DATE 10/30/97

SIGNATURE & SEAL FOR REVISION 4 ONLY
STATE OF MARYLAND — DAVID THOMAS MOSER — No. 16156 — REGISTERED PROFESSIONAL ENGINEER — 4/17/07

4 REDLINE SDP 97-128 (FC) SHTS 1, 3A, 74D & 74E
3 Redline SDP 97-128 (Jan.'01) this sht. only

SDP 97-128

DEPARTMENT OF PUBLIC WORKS
HOWARD COUNTY, MARYLAND

DIRECTOR OF PUBLIC WORKS — DATE 10/30/97
CHIEF, BUREAU OF WASTE MANAGEMENT — DATE 10/30/97

SCS ENGINEERS
CONSULTING ENGINEERS
11260 ROGER BACON DRIVE
SUITE 300
RESTON, VIRGINIA 22090
PH. (703) 471-6150
FAX. (703) 471-6676

STATE OF MARYLAND — DAVID THOMAS MOSER — No. 16156 — REGISTERED PROFESSIONAL ENGINEER — 9-30-98

STATE OF MARYLAND — PAUL ANTHONY MANDEVILLE — No. 19511 — PROFESSIONAL ENGINEER
Paul Anthony Mandeville, PE

DES. RTT, AST		6			
		5			
DRN. AST, EGC	DTM	4	ADD FOREST CONSERVATION EASEMENT	4-17-07
	SH	3	Add Bldg (30'x60') & Paved Pad	1-10-01
CHK. PAM	SH	2	Add 12'x12' Wood Observation Deck	6-25-98
	SH	1	Add 12'x46' Trailer @ Police Pistol Range	9-30-98
DATE: 10-30-97	BY	NO.	REVISION	DATE

2 Redline SDP 97-128 (Jun.'99) Comprised of Shts 1A & 3A only

OVERALL SITE PLAN

1 Redline SDP 97-128 (Sep.'98) Comprised of Sht. 1A & 3A only

3rd ELECTION DISTRICT — HOWARD COUNTY, MARYLAND

ALPHA RIDGE LANDFILL
UNLINED CELL CLOSURE
CAPITAL PROJECT NO. C-0190-N

SCALE: 1" = 300'

1 SHEET 3A OF 13

OVERALL
M:\295077.01\FINAL
SHT3

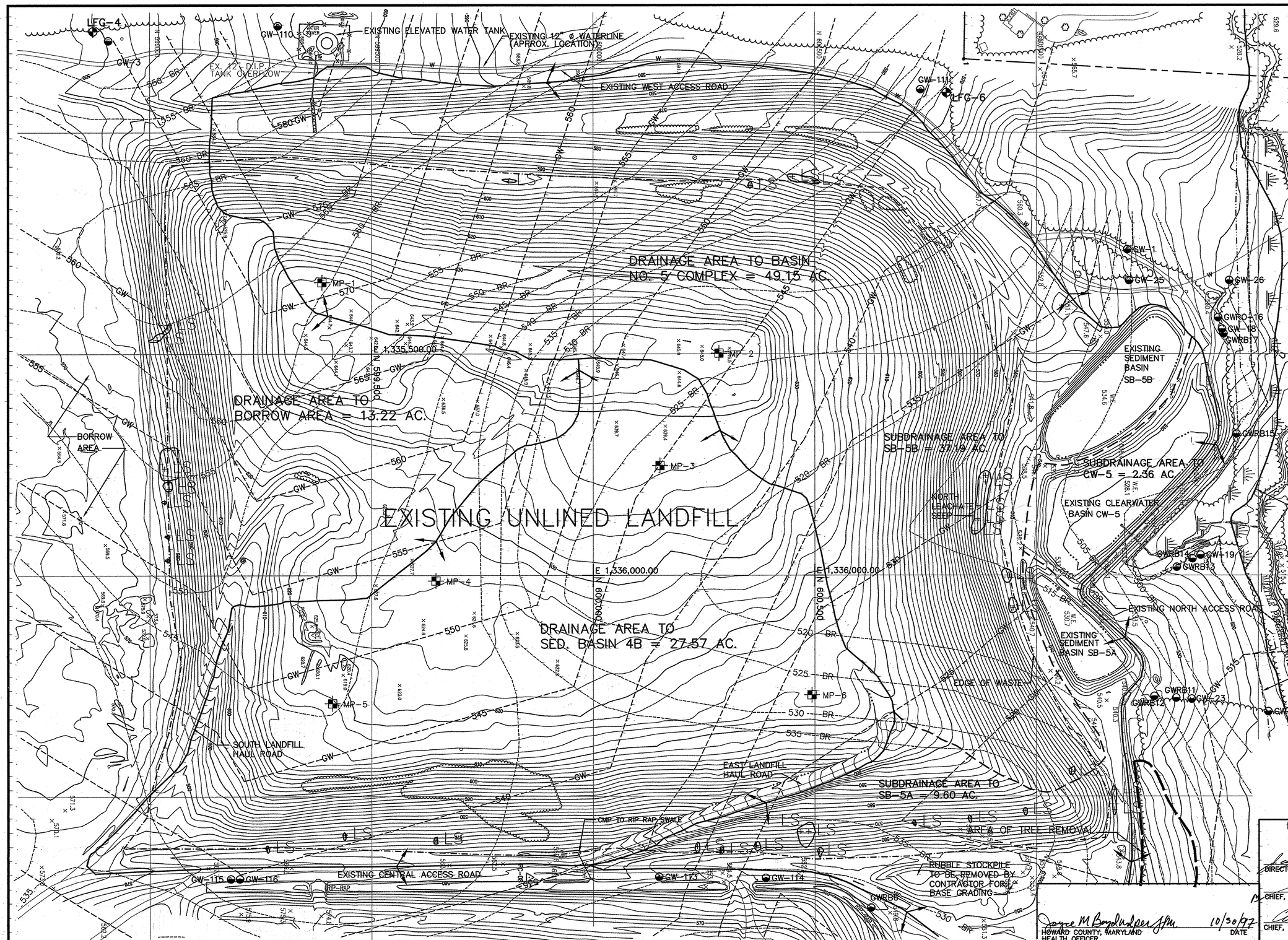

NOTES:

1. TOPOGRAPHIC INFORMATION SHOWN ON THIS SHEET WAS COMPILED BY AIR SURVEY CORPORATION, INC. FROM AIR PHOTOGRAPHY DATED JANUARY, 1997.
2. LFG PROBES INSTALLED IN APRIL, 1996.
3. LFG MONITORING WELLS INSTALLED IN MAY, 1996.
4. GROUNDWATER CONTOUR ELEVATIONS BASED ON MAY 1994 MEASUREMENTS.
5. 100 YEAR FLOODPLAIN INFORMATION PROVIDED BY HOWARD CO. INFORMATION IS BASED ON THE 1978 FLOOD PLAIN DELINEATION BY CENTURY ENGINEERING AND THE 1986 UPDATE BY BERNARD JOHNSON, INC. HOWARD CO. MAPS: GC-0119-T-36-38, GC-0119-T-35-38, GC-0119-T-234-38, GC-0119-T-35-39.

LEGEND

LS	LEACHATE SEEP LOCATIONS
GW-102	GROUNDWATER WELLS(EXISTING)
MP-3	LFG PROBES(EXISTING)
LFG-6	LFG MONITORING WELLS(EXIST.)
	PROPERTY LINE
	CONFIRMED LIMITS OF WASTE
	EXISTING DRAINAGE DIVIDE
	DRAINAGE SUB-DIVIDES
GW	GROUNDWATER CONTOURS
BR	BEDROCK CONTOURS
	EXISTING TREE LINE
	EXISTING SCRUBS & WOODS VEGETATION
	WETLAND LIMITS
	WETLANDS
	WETLAND BUFFER
	EDGE OF WASTE
	TREE REMOVE AREA
	100 YR. FLOODPLAIN

SUBDIVISION NAME	LOT/PARCEL	
ALPHA RIDGE SOLID WASTE MANAGEMENT CENTER	54,253,220,11	
LIBER/FOLIO 10-847/606 16-878/215 10-691/314	ZONE PEC	TAX/ZONE MAP 10 & 16
WATER CODE PRIVATE, EXISTING	SEWER CODE PRIVATE, EXISTING	CENSUS TR. 60-30

DEPARTMENT OF PLANNING AND ZONING
HOWARD COUNTY, MARYLAND

DIRECTOR — DATE 11/3/97
CHIEF, DEVELOPMENT ENGINEERING DIVISION — DATE 10/30/97
CHIEF, DIVISION OF LAND DEVELOPMENT — DATE 11/3/97

HOWARD COUNTY, MARYLAND HEALTH OFFICER — DATE 10/30/97

DEPARTMENT OF PUBLIC WORKS
HOWARD COUNTY, MARYLAND

DIRECTOR OF PUBLIC WORKS — DATE 10/30/97
CHIEF, BUREAU OF WASTE MANAGEMENT — DATE 10/30/97

SCS ENGINEERS
CONSULTING ENGINEERS
11260 ROGER BACON DRIVE
SUITE 300
RESTON, VIRGINIA 22090
PH. (703) 471-6150
FAX. (703) 471-6676

STATE OF MARYLAND — PAUL ANTHONY MANDEVILLE — LIC. REG. CERT. NO. 14968 — PROFESSIONAL ENGINEER
Paul Anthony Mandeville, PE

DES. RTT, EGC
DRN. EGC
CHK. PAM
DATE: 10-30-97

BY	NO.	REVISION	DATE
	6		
	5		
	4		
	3		
	2		
	1		

EXISTING CONDITIONS PLAN

ALPHA RIDGE LANDFILL
UNLINED CELL CLOSURE
CAPITAL PROJECT NO. C-0190-N

3rd ELECTION DISTRICT — HOWARD COUNTY, MARYLAND

SCALE: 1"=100'

SHEET 4 OF 13

SDP-97-128

M:\295077.01\FINAL ECP

ECP-B

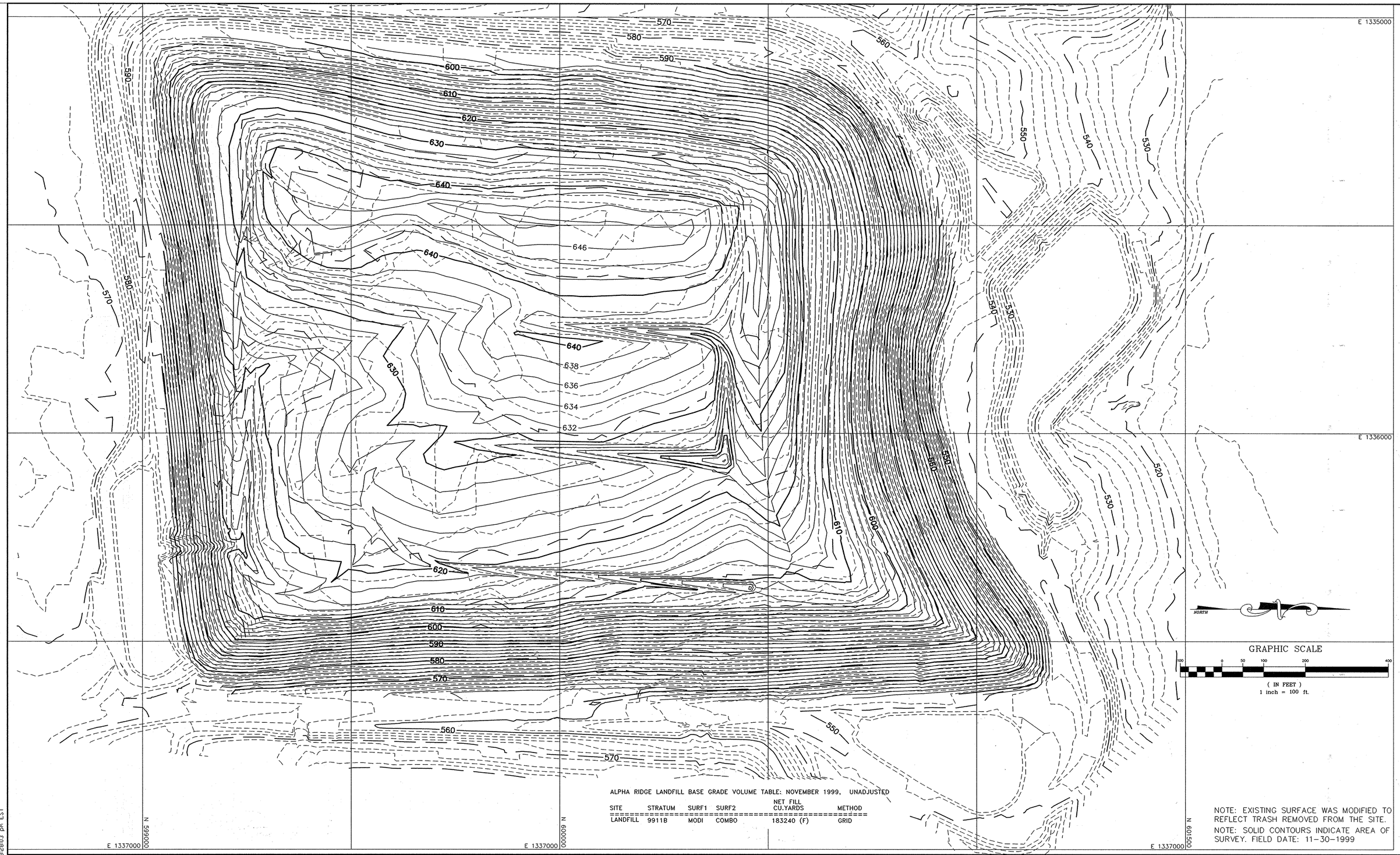

ALPHA RIDGE LANDFILL BASE GRADE VOLUME TABLE: NOVEMBER 1999, UNADJUSTED

SITE	STRATUM	SURF1	SURF2	NET FILL CU.YARDS	METHOD
LANDFILL	9911B	MODI	COMBO	183240 (F)	GRID

NOTE: EXISTING SURFACE WAS MODIFIED TO REFLECT TRASH REMOVED FROM THE SITE.
NOTE: SOLID CONTOURS INDICATE AREA OF SURVEY. FIELD DATE: 11-30-1999

Vol9911.dwg 2-27-00 3:28:03 pm EST

DESIGNED BY: _____ DATE
DRAWN BY: TWH 12-7 DATE
CHECKED BY: _____ DATE
APPROVED BY: _____ DATE

REVISIONS

DATE	BY	DESCRIPTION

ENGINEERING TECHNOLOGIES ASSOCIATES, INC.
ENGINEERS * PLANNERS * SURVEYORS
3458 ELLICOTT CENTER DRIVE SUITE 101
ELLICOTT CITY, MARYLAND 21043
BALTO. (410)461-9920 FAX (410)750-8565

STATE OF MARYLAND CLIFFORD ALLEN ELLIOTT No. 6223 REGISTERED PROPERTY LINE SURVEYOR

H. E. SARGENT, INC. CONTRACTORS • STILLWATER, ME.

BASE GRADING AS-BUILT AND VOLUME

ALPHA RIDGE LANDFILL CELL CLOSURE

HOWARD COUNTY MARYLAND

SCALE : 1"=100' | CONTRACT NO.: 98301.10 | DATE : 2-11-2000 | SHEET : 5-AB

OF 13P

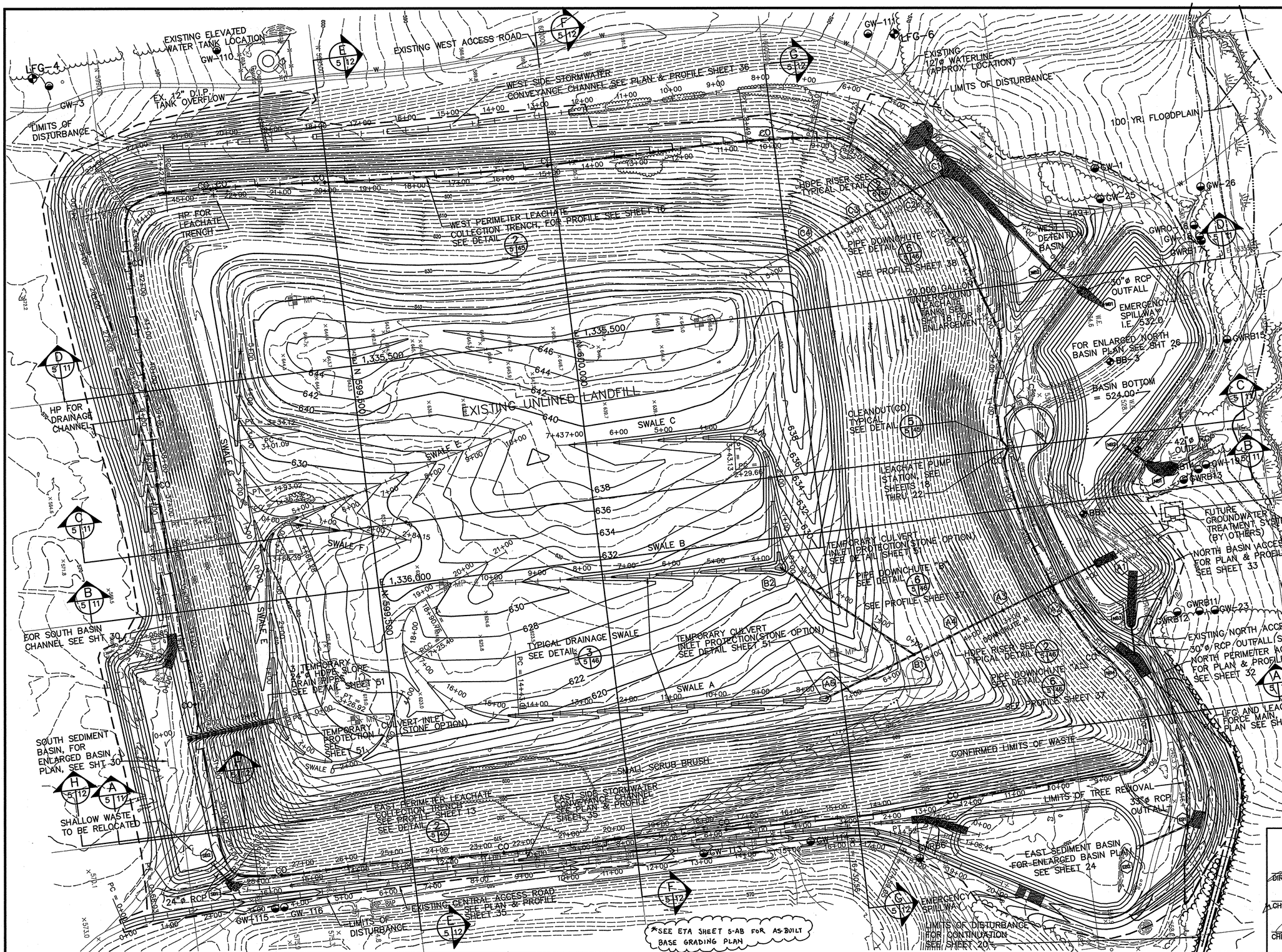

NOTES:

1. TOPOGRAPHIC INFORMATION SHOWN ON THIS SHEET WAS COMPILED BY AIR SURVEY CORPORATION, INC. FROM AIR PHOTOGRAPHY DATED JANUARY, 1997.
2. LFG PROBES INSTALLED APRIL, 1996.
3. LFG MONITORING WELLS INSTALLED IN MAY, 1996.
4. 100 YEAR FLOODPLAIN INFORMATION PROVIDED BY HOWARD CO. INFORMATION IS BASED ON THE 1978 FLOOD PLAIN DELINEATION BY CENTURY ENGINEERING AND THE 1986 UPDATE BY BERNARD JOHNSON, INC. HOWARD CO. MAPS: GC-0119-T-36-38, GC-0119-T-35-38, GC-0119-T-234-38, GC-0119-T-35-39.
5. LFG PROBES MP-1,MP-2,MP-4,MP-5, & AND MP-6 TO BE REMOVED BY CONTRACTOR (SEE SHEET G2).
6. HORIZONTAL AND VERTICAL SURVEY CONTROL WILL BE ESTABLISHED BY HOWARD COUNTY PRIOR TO CONSTRUCTION.

LEGEND

GW-102	GROUNDWATER WELLS(EXISTING)
MP-3	LFG PROBES(TO BE REMOVED) SEE SHEET G2
LFG-6	LFG MONITORING WELLS(EXIST.)
	PROPERTY LINE
	CONFIRMED LIMITS OF WASTE
HP	HIGH POINT
B1	STRUCTURE DESIGNATION
	NEW HDPE PIPE/DOWNCHUTES/ CONCRETE DRAINAGE PIPES
	NEW LEACHATE COLLECTION TRENCH
	NEW LEACHATE FORCEMAIN
	EXISTING TREE LINE
	EXISTING SCRUB BRUSH VEGETATION
	PROPOSED TREE LINE
	WETLAND LIMITS
	WETLANDS
	WETLAND BUFFER LIMITS
	LIMITS OF DISTURBANCE
	TREE REMOVAL AREA
CO = CLEANOUT	

SUBDIVISION NAME	LOT/PARCEL	
ALPHA RIDGE SOLID WASTE MANAGEMENT CENTER	54,253,220,11	
LIBER/FOLIO	ZONE	TAX/ZONE MAP
10-847/606 16-878/215 10-691/314	PEC	10 & 16
WATER CODE	SEWER CODE	CENSUS TR.
PRIVATE, EXISTING	PRIVATE, EXISTING	60-30

Joyce M Boyd for JFM 10/30/97
HOWARD COUNTY, MARYLAND HEALTH OFFICER — DATE

DEPARTMENT OF PLANNING AND ZONING
HOWARD COUNTY, MARYLAND

DIRECTOR — DATE 11/5/97
CHIEF, DEVELOPMENT ENGINEERING DIVISION — DATE 10/30/97
CHIEF, DIVISION OF LAND DEVELOPMENT — DATE 11/5/97

DEPARTMENT OF PUBLIC WORKS
HOWARD COUNTY, MARYLAND

DIRECTOR OF PUBLIC WORKS — DATE 10/30/97
CHIEF, BUREAU OF WASTE MANAGEMENT — DATE 10/30/97

SCS ENGINEERS
CONSULTING ENGINEERS
11260 ROGER BACON DRIVE
SUITE 300
RESTON, VIRGINIA 22090
PH. (703) 471-6150
FAX. (703) 471-6676

STATE OF MARYLAND — PAUL ANTHONY MANDEVILLE — No. 14885 — PROFESSIONAL ENGINEER
Paul Anthony Mandeville, PE

DES. RTT, EGC
DRN. EGC,JCB
CHK. PAM
DATE: 10-30-97

BY	NO.	REVISION	DATE
	6		
	5		
	4		
	3		
	2	REVISED GRADES *	7/23/98
	1	REVISED GRADES *	7/17/98

BASE GRADING PLAN

ALPHA RIDGE LANDFILL
UNLINED CELL CLOSURE
CAPITAL PROJECT NO. C-0190-N

3rd ELECTION DISTRICT — HOWARD COUNTY, MARYLAND

SCALE: 1'=100'

SHEET 5 OF 13

SDP-97-128

M:\295077.01\FINAL BGP

BGP-B

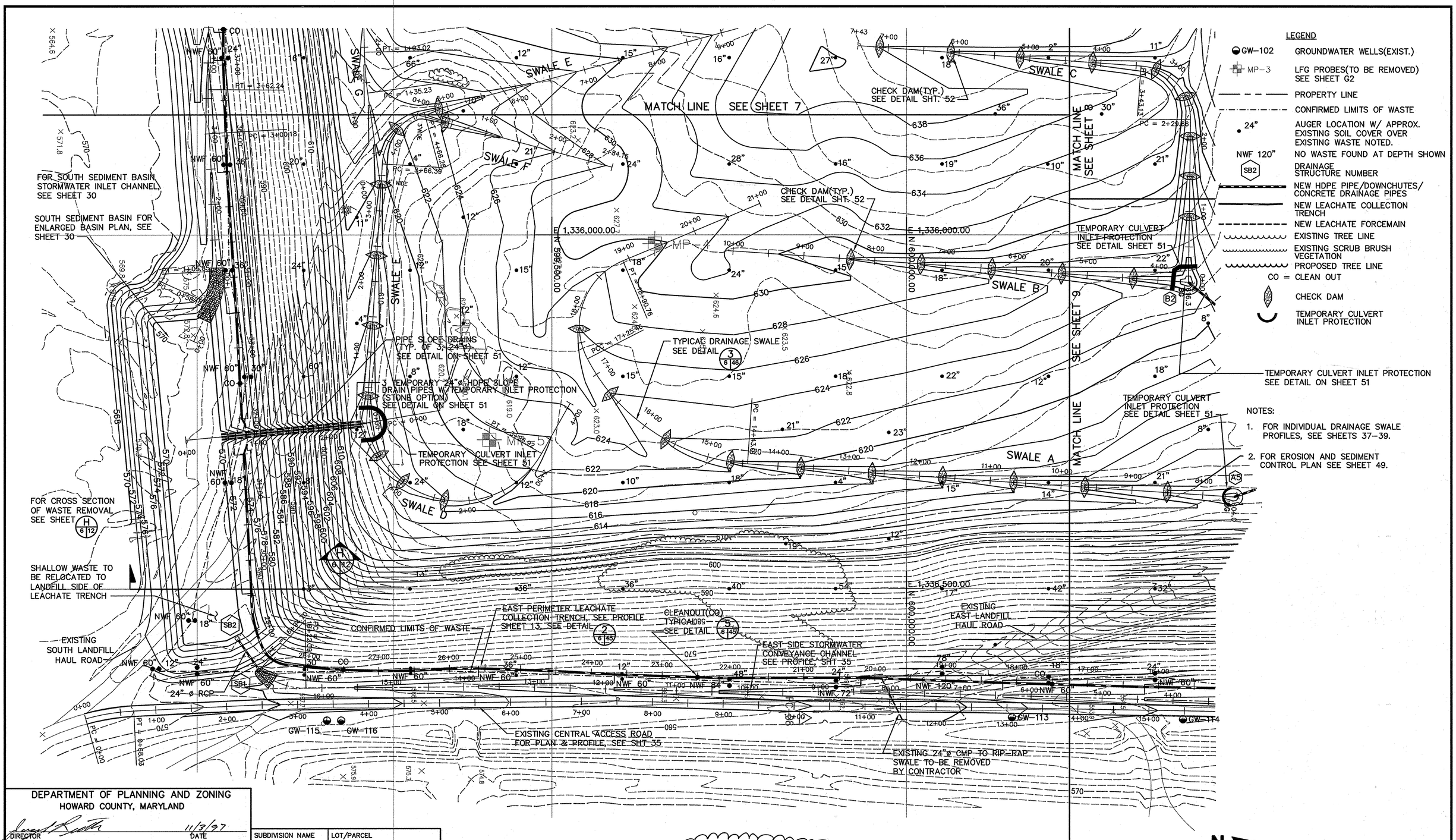

NOTES:

1. FOR INDIVIDUAL DRAINAGE SWALE PROFILES, SEE SHEETS 37–39.
2. FOR EROSION AND SEDIMENT CONTROL PLAN SEE SHEET 49.

* SEE ETA SHEET 5-AB FOR AS-BUILT BASE GRADING PLAN

DEPARTMENT OF PLANNING AND ZONING
HOWARD COUNTY, MARYLAND

DIRECTOR	DATE 11/3/97
CHIEF, DEVELOPMENT ENGINEERING DIVISION	DATE 10/30/97
CHIEF, DIVISION OF LAND DEVELOPMENT	DATE 11/3/97

SUBDIVISION NAME	LOT/PARCEL	
ALPHA RIDGE SOLID WASTE MANAGEMENT CENTER	54,253,220,11	
LIBER/FOLIO	ZONE	TAX/ZONE MAP
10-847/606 16-878/215 10-691/314	PEC	10 & 16
WATER CODE	SEWER CODE	CENSUS TR.
PRIVATE, EXISTING	PRIVATE, EXISTING	60-30

HOWARD COUNTY, MARYLAND HEALTH OFFICER — DATE 10/30/97

DEPARTMENT OF PUBLIC WORKS
HOWARD COUNTY, MARYLAND

DIRECTOR OF PUBLIC WORKS	DATE 10/30/97	CHIEF, BUREAU OF WASTE MANAGEMENT	DATE 10/30/97

SCS ENGINEERS
CONSULTING ENGINEERS
11260 ROGER BACON DRIVE
SUITE 300
RESTON, VIRGINIA 22090
PH. (703) 471-6150
FAX. (703) 471-6676

STATE OF MARYLAND — PAUL ANTHONY MANDEVILLE — LIC. REG. CERT. NO. 14868 — PROFESSIONAL ENGINEER
Paul Anthony Mandeville, PE

DES.	RTT, EGC
DRN.	EGC,JCB
CHK.	PAM
DATE:	10-30-97

BY	NO.	REVISION	DATE
	6		
	5		
	4		
	3		
	2		
	1	REVISED GRADES*	7/17/98

BASE GRADING PLAN
SE QUADRANT

ALPHA RIDGE LANDFILL
UNLINED CELL CLOSURE
CAPITAL PROJECT NO. C-0190-N
3rd ELECTION DISTRICT — HOWARD COUNTY, MARYLAND

SCALE: 1"=60'
SHEET 6 OF 131

SDP-97-128

BGP-SE-B M:\295077.01\FINAL BGP-SE

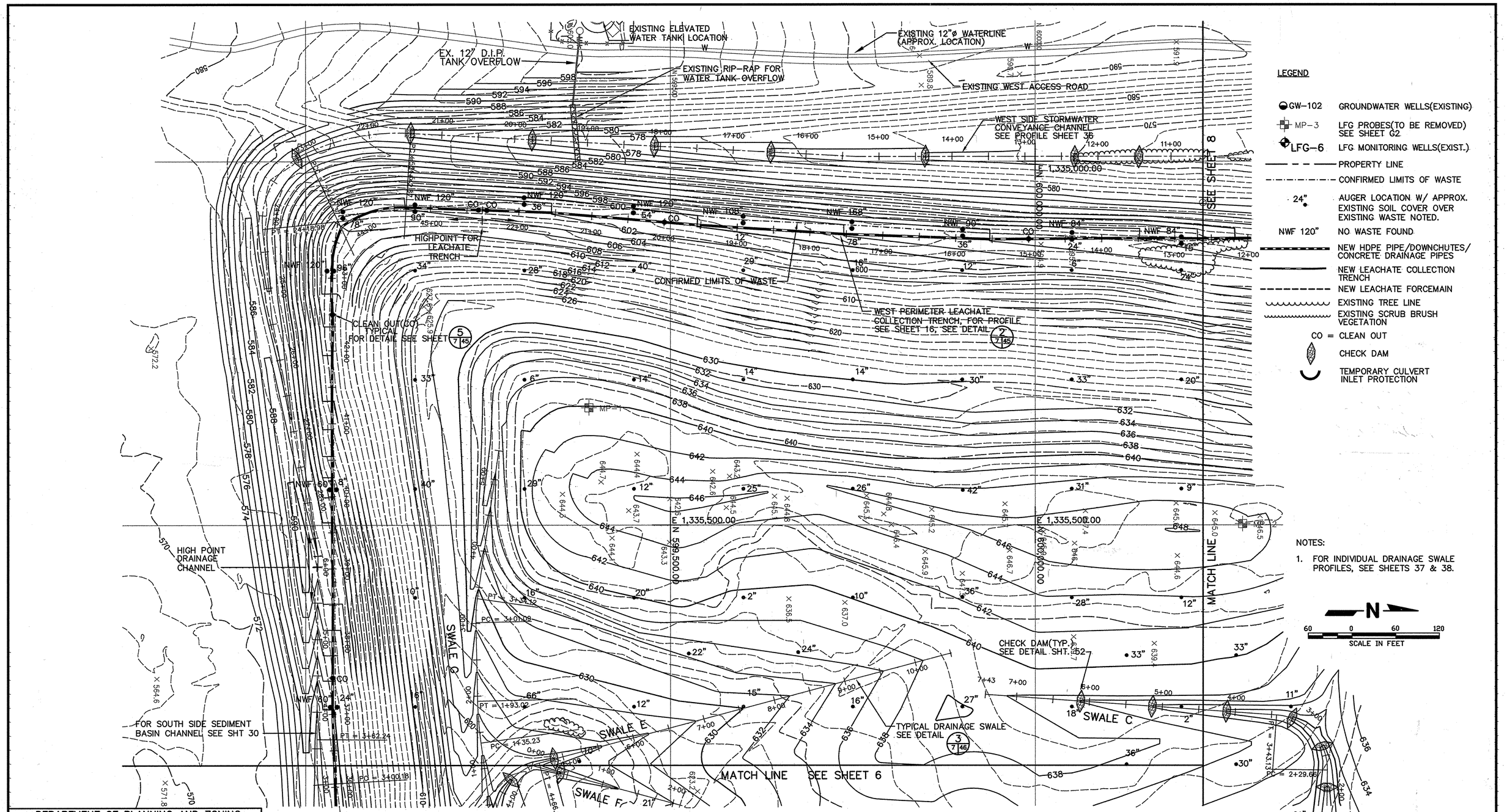

NOTES:

1. FOR INDIVIDUAL DRAINAGE SWALE PROFILES, SEE SHEETS 37 & 38.

* SEE ETA SHEET 5-AB FOR AS-BUILT BASE GRADING PLAN

DEPARTMENT OF PLANNING AND ZONING
HOWARD COUNTY, MARYLAND

DIRECTOR	DATE 11/3/97
CHIEF, DEVELOPMENT ENGINEERING DIVISION	DATE 10/23/97
CHIEF, DIVISION OF LAND DEVELOPMENT	DATE 11/3/97

SUBDIVISION NAME	LOT/PARCEL	
ALPHA RIDGE SOLID WASTE MANAGEMENT CENTER	54,253,220,11	
LIBER/FOLIO	ZONE	TAX/ZONE MAP
10-847/606 16-878/215 10-691/314	PEC	10 & 16
WATER CODE	SEWER CODE	CENSUS TR.
PRIVATE, EXISTING	PRIVATE, EXISTING	60-30

HOWARD COUNTY, MARYLAND HEALTH OFFICER — DATE 10/30/97

DEPARTMENT OF PUBLIC WORKS
HOWARD COUNTY, MARYLAND

DIRECTOR OF PUBLIC WORKS	DATE 10/30/97
CHIEF, BUREAU OF WASTE MANAGEMENT	DATE 10/30/97

SCS ENGINEERS
CONSULTING ENGINEERS
11260 ROGER BACON DRIVE
SUITE 300
RESTON, VIRGINIA 22090
PH. (703) 471-6150
FAX. (703) 471-6676

STATE OF MARYLAND — PAUL ANTHONY MANDEVILLE — LIC. REG. CERT. NO. 14868 — PROFESSIONAL ENGINEER
Paul Anthony Mandeville, PE

DES.	RTT, EGC
DRN.	EGC
CHK.	PAM
DATE:	10-30-97

BY	NO.	REVISION	DATE
	6		
	5		
	4		
	3		
	2		
	1	REVISED GRADES*	7/17/98

BASE GRADING PLAN
SW QUADRANT

ALPHA RIDGE LANDFILL
UNLINED CELL CLOSURE
CAPITAL PROJECT NO. C-0190-N
3rd ELECTION DISTRICT — HOWARD COUNTY, MARYLAND

SCALE: 1"=60'
SHEET 7 OF 13

M:\295077.01\FINAL BGP-SW
BGP-SW-B

SDP-97-128

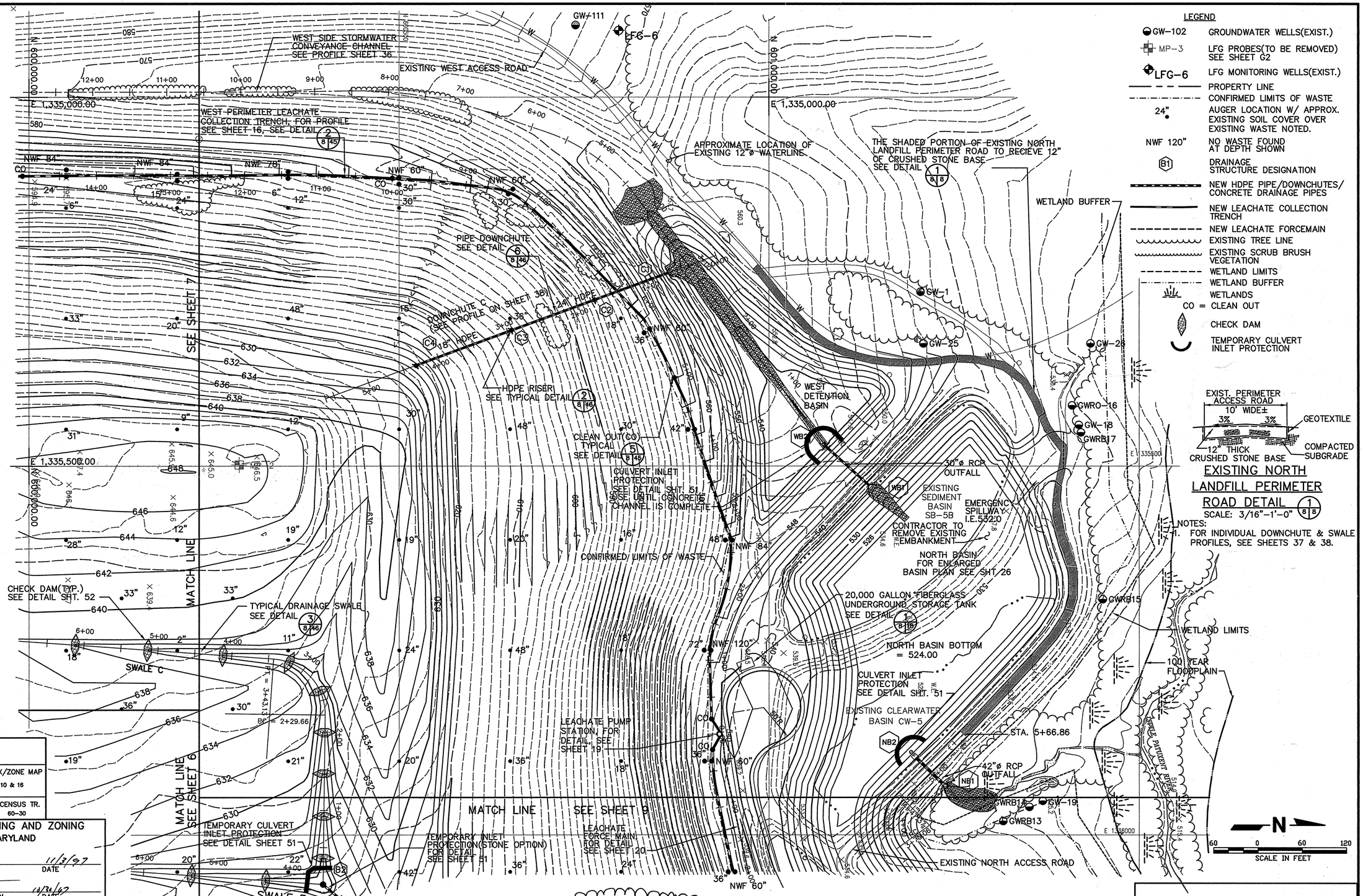

SUBDIVISION NAME	LOT/PARCEL	
ALPHA RIDGE SOLID WASTE MANAGEMENT CENTER	54,253,220,11	
LIBER/FOLIO	ZONE	TAX/ZONE MAP
10-847/806 16-878/215 10-691/314	PEC	10 & 16
WATER CODE	SEWER CODE	CENSUS TR.
PRIVATE, EXISTING	PRIVATE, EXISTING	60-30

DEPARTMENT OF PLANNING AND ZONING
HOWARD COUNTY, MARYLAND

DIRECTOR — DATE 11/3/97
CHIEF, DEVELOPMENT ENGINEERING DIVISION — DATE 10/31/97
CHIEF, DIVISION OF LAND DEVELOPMENT — DATE 11/3/97

Joyce M. Boyd (EA) 10/30/97
HOWARD COUNTY, MARYLAND HEALTH OFFICER — DATE

DEPARTMENT OF PUBLIC WORKS
HOWARD COUNTY, MARYLAND

DIRECTOR OF PUBLIC WORKS — DATE 10/30/97
CHIEF, BUREAU OF WASTE MANAGEMENT — DATE 10/30/97

SCS ENGINEERS
CONSULTING ENGINEERS
11260 ROGER BACON DRIVE
SUITE 300
RESTON, VIRGINIA 22090
PH. (703) 471-6150
FAX. (703) 471-6676

STATE OF MARYLAND — PAUL ANTHONY MANDEVILLE — No. 26 PROFESSIONAL ENGINEER
Paul Anthony Mandeville, PE

DES. RTT, EGC
DRN. EGC,JCB
CHK. PAM
DATE: 10-30-97

BY	NO.	REVISION	DATE
	6		
	5		
	4		
	3		
	2		
	1	REVISED GRADES *	7/17/98

BASE GRADING PLAN
NW QUADRANT

ALPHA RIDGE LANDFILL
UNLINED CELL CLOSURE
CAPITAL PROJECT NO. C-0190-N
3rd ELECTION DISTRICT — HOWARD COUNTY, MARYLAND

SCALE: 1"=60'
SHEET 8 OF 12

BGP-NW
M:\295077.01\FINAL
BGP-NW-B

SDP-97-128

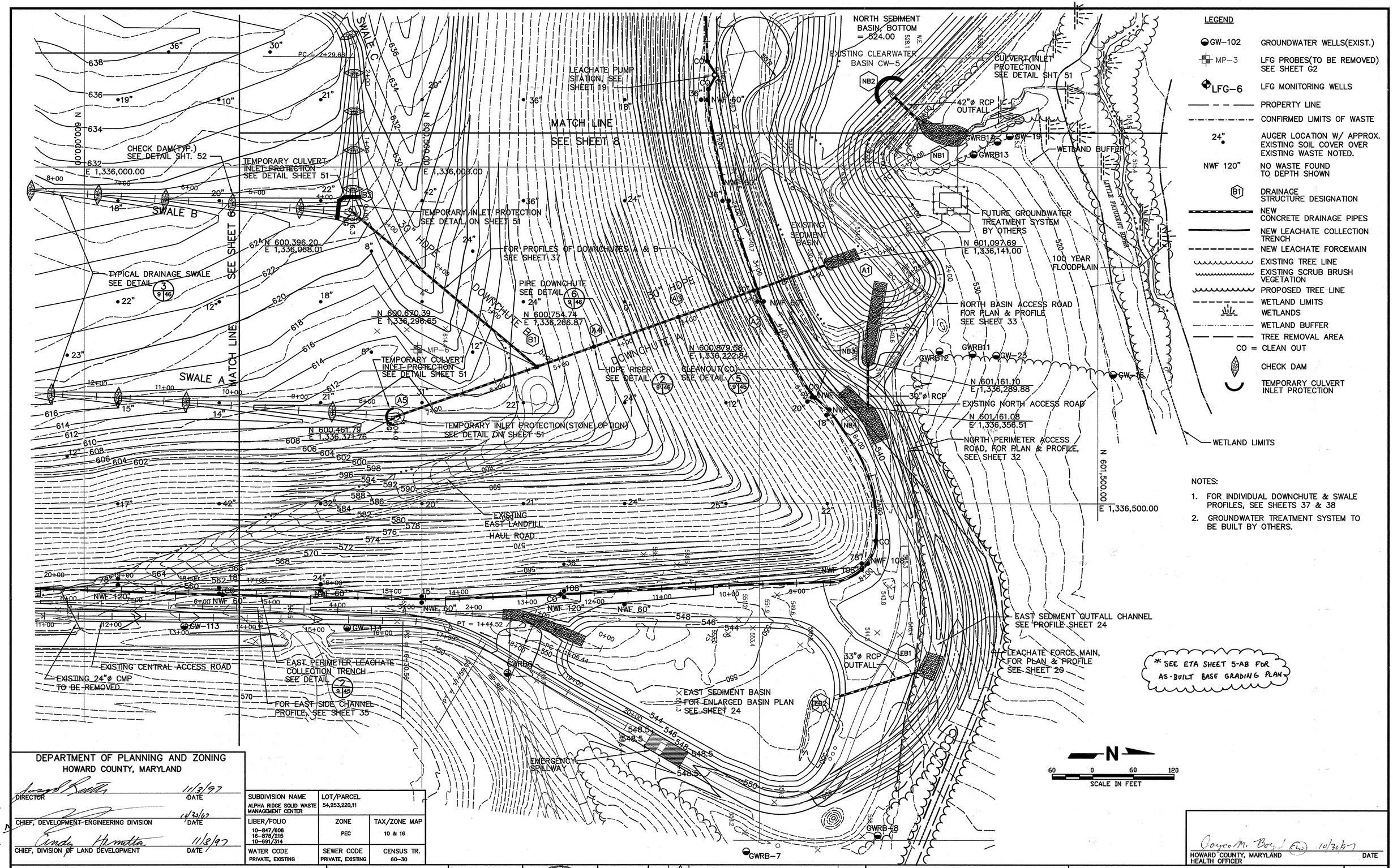

DEPARTMENT OF PLANNING AND ZONING
HOWARD COUNTY, MARYLAND

DIRECTOR — DATE 11/3/97
CHIEF, DEVELOPMENT ENGINEERING DIVISION — DATE 11/3/97
CHIEF, DIVISION OF LAND DEVELOPMENT — DATE 11/3/97

SUBDIVISION NAME	LOT/PARCEL	
ALPHA RIDGE SOLID WASTE MANAGEMENT CENTER	54,253,220,11	
LIBER/FOLIO	ZONE	TAX/ZONE MAP
10-847/606 16-878/215 10-691/314	PEC	10 & 16
WATER CODE	SEWER CODE	CENSUS TR.
PRIVATE, EXISTING	PRIVATE, EXISTING	60-30

HOWARD COUNTY, MARYLAND HEALTH OFFICER — DATE 10/30/97

DEPARTMENT OF PUBLIC WORKS
HOWARD COUNTY, MARYLAND

DIRECTOR OF PUBLIC WORKS — DATE 10/30/97
CHIEF, BUREAU OF WASTE MANAGEMENT — DATE 10/30/97

SCS ENGINEERS
CONSULTING ENGINEERS
11260 ROGER BACON DRIVE
SUITE 300
RESTON, VIRGINIA 22090
PH. (703) 471-6150
FAX. (703) 471-6676

STATE OF MARYLAND — PAUL ANTHONY MANDEVILLE — No. 29612 — PROFESSIONAL ENGINEER
Paul Anthony Mandeville, PE

DES. RTT, EGC
DRN. EGC
CHK. PAM
DATE: 10-30-97

BY	NO.	REVISION	DATE
	6		
	5		
	4		
	3		
	2	REVISED GRADES *	7/23/98
	1	REVISED GRADES *	7/17/98

BASE GRADING PLAN
NE QUADRANT

ALPHA RIDGE LANDFILL
UNLINED CELL CLOSURE
CAPITAL PROJECT NO. C-0190-N
3rd ELECTION DISTRICT — HOWARD COUNTY, MARYLAND

SCALE: 1"=60'
SHEET 9 OF 13

BGP-NE
M:\295077.01\FINAL
BGP-NE-B

SDP-97-128

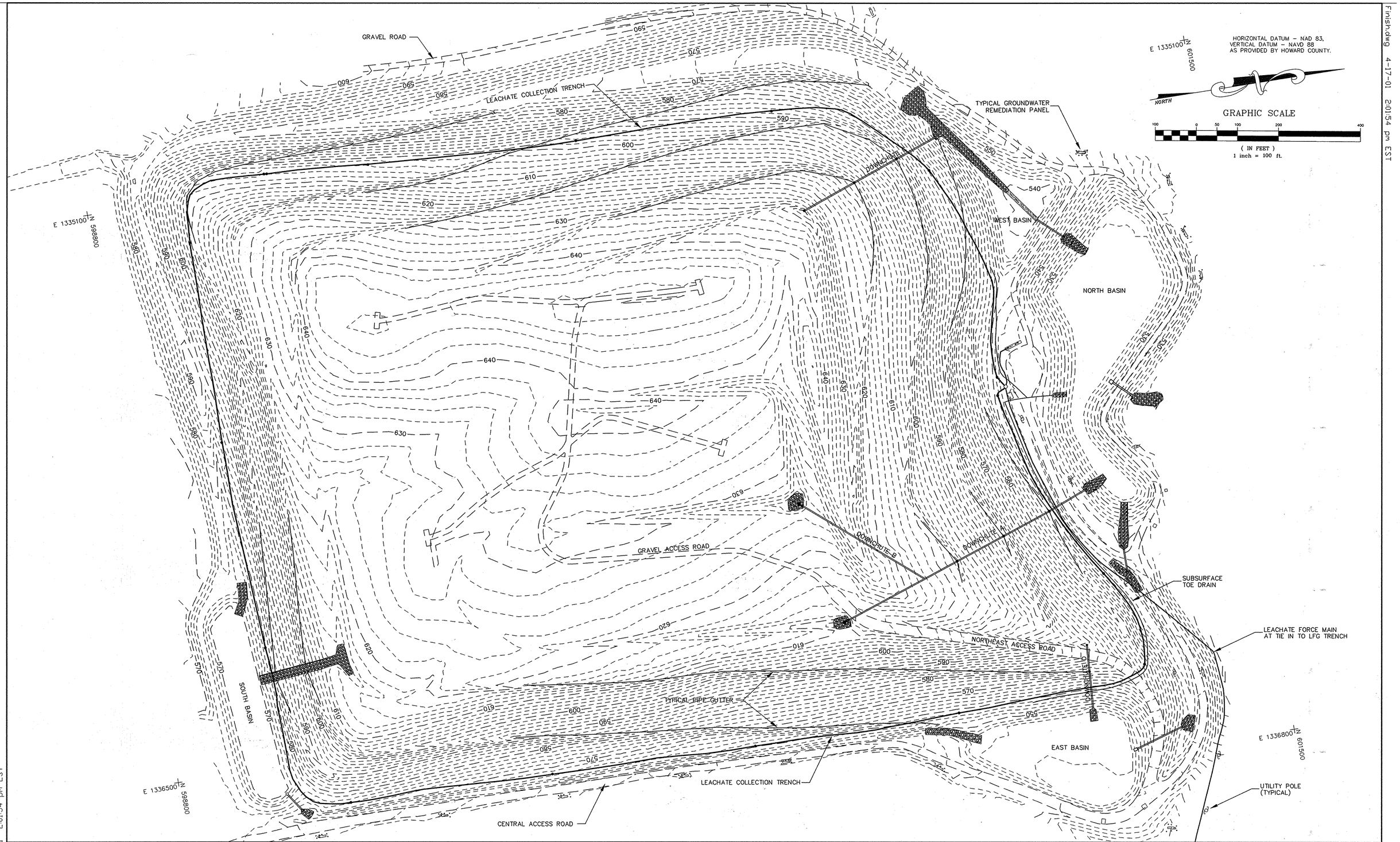

DESIGNED BY:		DATE
DRAWN BY:	TWH	2-26-00 DATE
CHECKED BY:		DATE
APPROVED BY:		DATE

REVISIONS

DATE	BY	DESCRIPTION
10-17-00	TWH	REMOVED GROUNDWATER TRENCH AND BUILDING.
4-4-01	TWH	REVISED CONTOURS AROUND SOUTH BASIN.

ENGINEERING TECHNOLOGIES ASSOCIATES, INC.

ENGINEERS * PLANNERS * SURVEYORS

3458 ELLICOTT CENTER DRIVE SUITE 101
ELLICOTT CITY, MARYLAND 21043
BALTO. (410)461-9920 FAX (410)750-8565

STATE OF MARYLAND — CLIFFORD NILES BAILEY — No. 8625 — REGISTERED PROFESSIONAL LAND SURVEYOR

H. E. SARGENT, INC. — CONTRACTORS • STILLWATER, ME.

FINAL SURFACE AS-BUILT

ALPHA RIDGE LANDFILL CELL CLOSURE

HOWARD COUNTY MARYLAND

SCALE : 1"=100' | CONTRACT NO.: 98301.10 | DATE : 2-26-2000 | SHEET 10-AB OF 13

Finish.dwg 4-17-01 2:01:54 pm EST

Finish.dwg 4-17-01 2:01:54 pm EST

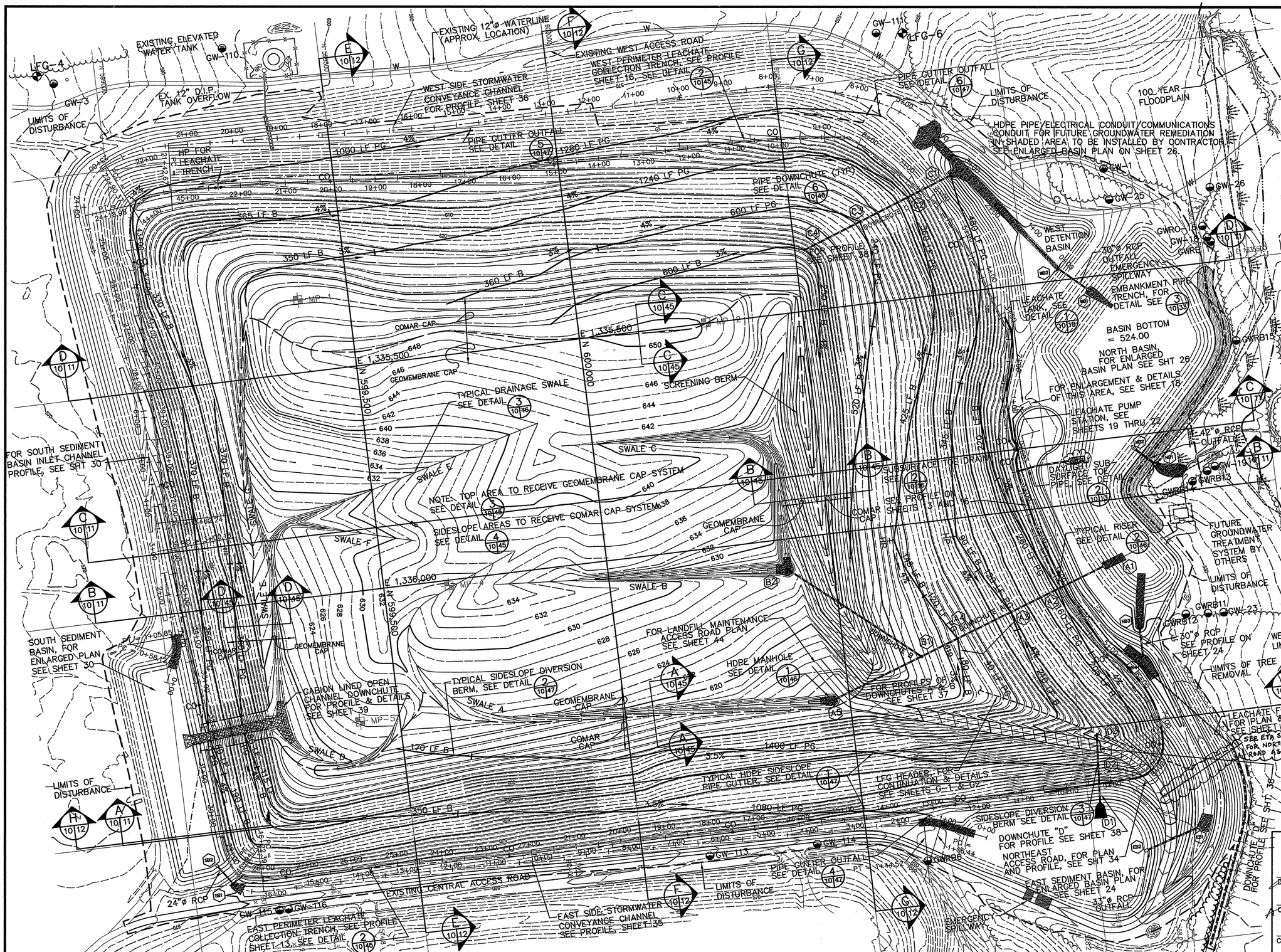

NOTES:

1. TOPOGRAPHIC INFORMATION SHOWN ON THIS SHEET WAS COMPILED BY AIR SURVEY CORPORATION, INC. FROM AIR PHOTOGRAPHY DATED JANUARY, 1997.
2. LFG PROBES INSTALLED APRIL, 1996.
3. LFG MONITORING WELLS INSTALLED IN MAY, 1996.

LEGEND

GW-102	GROUNDWATER WELLS(EXIST.)
MP-3	LFG PROBES(TO BE REMOVED) SEE SHEET G2
LFG-6	LFG MONITORING WELLS(EXIST.)
	PROPERTY LINE
	CONFIRMED LIMITS OF WASTE
B =	BERM
PG =	PIPE GUTTER
HP =	HIGH POINT
B1	DRAINAGE STRUCTURE DESIGNATION
	HDPE PIPE/DOWNCHUTES/ CONCRETE DRAINAGE PIPES
	NEW LEACHATE COLLECTION TRENCH
	NEW LEACHATE FORCEMAIN
	EXISTING TREE LINE
	EXISTING SCRUB BRUSH VEGETATION
	PROPOSED TREE LINE
	WETLAND LIMITS
	WETLANDS
	LIMITS OF GEOMEMBRANE CAP
CO =	CLEAN OUT
	CONDUIT AREA
	WETLAND BUFFER
	TREE REMOVAL AREA
	LIMITS OF DISTURBANCE

SEE ETA SHEET 10-AB FOR AS-BUILT FINAL SURFACE GRADING PLAN

SUBDIVISION NAME	LOT/PARCEL	
ALPHA RIDGE SOLID WASTE MANAGEMENT CENTER	54,253,220,11	
LIBER/FOLIO	ZONE	TAX/ZONE MAP
10-847/806 16-578/215 10-691/314	PEC	10 & 16
WATER CODE	SEWER CODE	CENSUS TR.
PRIVATE, EXISTING	PRIVATE, EXISTING	60-30

Joyce M. Boyd (CW) 10/30/97
HOWARD COUNTY, MARYLAND HEALTH OFFICER — DATE

DEPARTMENT OF PLANNING AND ZONING
HOWARD COUNTY, MARYLAND

DIRECTOR — 11/3/97
CHIEF, DEVELOPMENT ENGINEERING DIVISION — DATE
Cindy Hiaatta 11/3/97
CHIEF, DIVISION OF LAND DEVELOPMENT — DATE

DEPARTMENT OF PUBLIC WORKS
HOWARD COUNTY, MARYLAND

DIRECTOR OF PUBLIC WORKS — DATE 10/30/97
CHIEF, BUREAU OF WASTE MANAGEMENT — DATE 10/30/97

SCS ENGINEERS
CONSULTING ENGINEERS
11260 ROGER BACON DRIVE
SUITE 300
RESTON, VIRGINIA 22090
PH. (703) 471-6150
FAX. (703) 471-6676

STATE OF MARYLAND — PAUL ANTHONY MANDEVILLE — No. 19810 — PROFESSIONAL ENGINEER
Paul Anthony Mandeville, PE

DES. RTT, EGC		6		
DRN. EGC, JCB		5		
CHK. PAM		4		
		3		
		2		
DATE: 10-30-97	BY	NO.	REVISION	DATE

FINAL SURFACE GRADING PLAN

ALPHA RIDGE LANDFILL
UNLINED CELL CLOSURE
CAPITAL PROJECT NO. C-0190-N

3rd ELECTION DISTRICT — HOWARD COUNTY, MARYLAND

SCALE: 1"=100'

SHEET 10 OF 13

SDP-97-128

FGP-B M:\295077.01\FINAL FGP

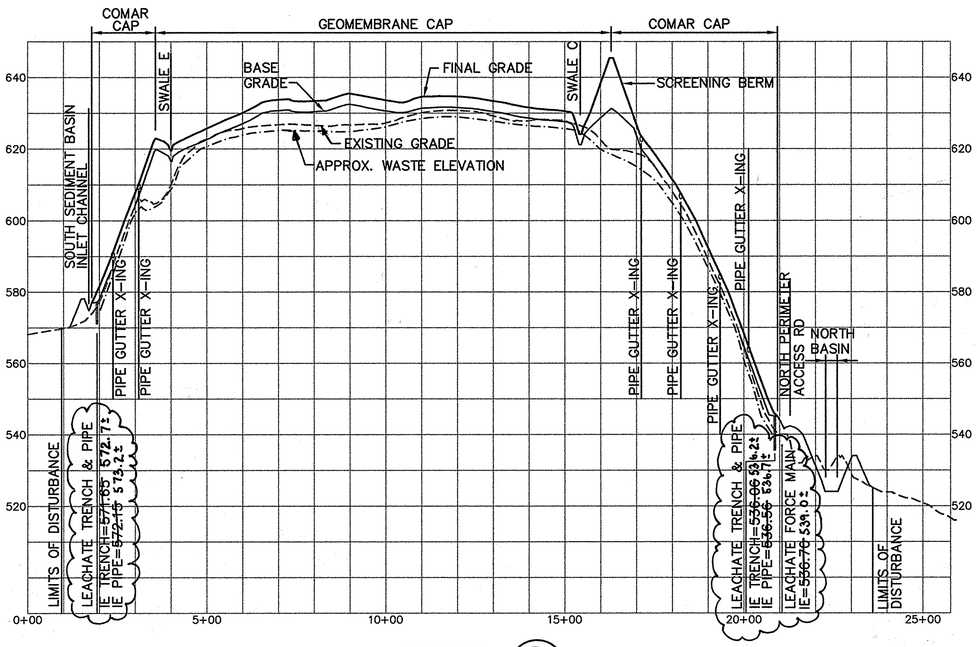

SECTION B
SCALE: 1"=200'
5, 10 / 11

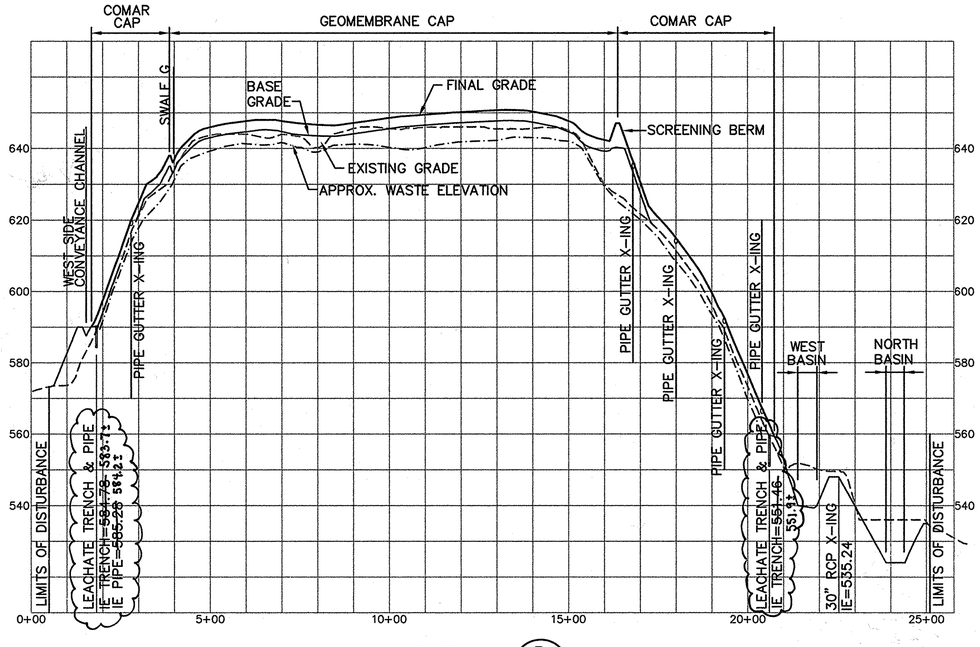

SECTION D
SCALE: 1"=200'
5, 10 / 11

FOR COMAR CAP DETAILS SEE 4 / 11 45

FOR GEOMEMGRANE CAP DETAILS SEE 3 / 11 45

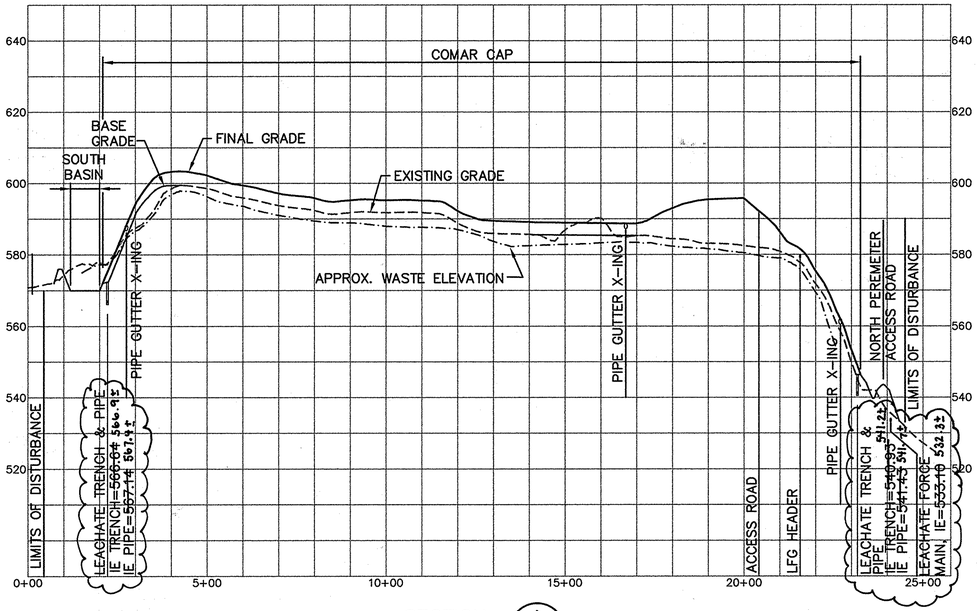

SECTION A
SCALE: 1"=200'
5, 10 / 11

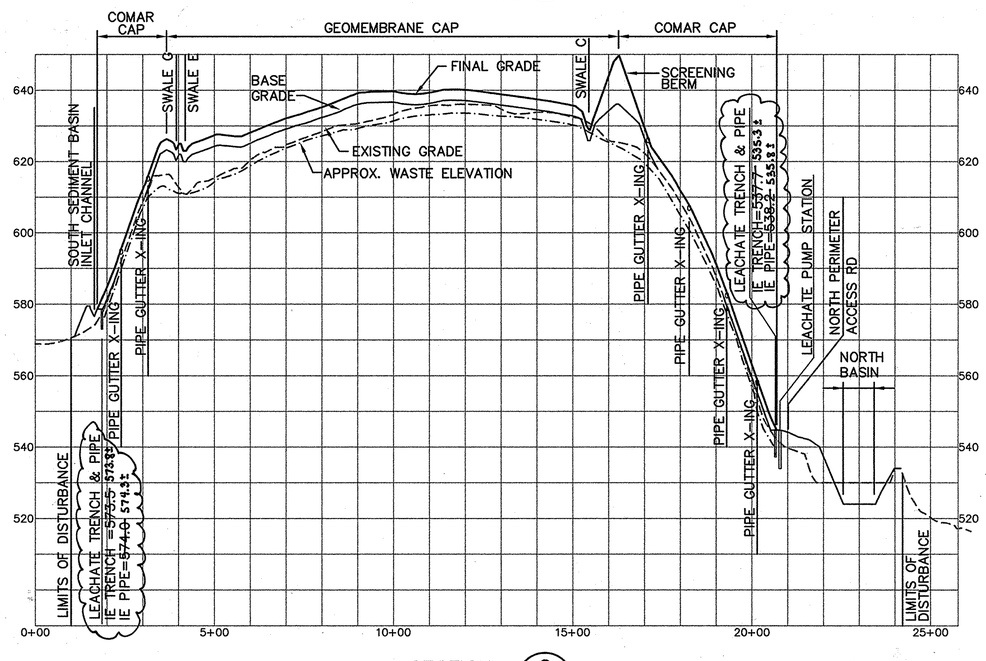

SECTION C
SCALE: 1"=200'
5, 10 / 11

VERT. SCALE: 20 0 20 40 SCALE IN FEET

HORIZ. SCALE: 200 0 200 400 SCALE IN FEET

SUBDIVISION NAME	LOT/PARCEL	
ALPHA RIDGE SOLID WASTE MANAGEMENT CENTER	54,253,220,11	
LIBER/FOLIO	ZONE	TAX/ZONE MAP
10-847/606 16-878/215 10-691/314	PEC	10 & 16
WATER CODE	SEWER CODE	CENSUS TR.
PRIVATE, EXISTING	PRIVATE, EXISTING	60-30

DEPARTMENT OF PLANNING AND ZONING
HOWARD COUNTY, MARYLAND

DIRECTOR — DATE 11/3/97

CHIEF, DEVELOPMENT ENGINEERING DIVISION — DATE 10/30/97

CHIEF, DIVISION OF LAND DEVELOPMENT — DATE 11/3/97

DEPARTMENT OF PUBLIC WORKS
HOWARD COUNTY, MARYLAND

DIRECTOR OF PUBLIC WORKS — DATE 10/30/97 — CHIEF, BUREAU OF WASTE MANAGEMENT — DATE 10/30/97

SCS ENGINEERS
CONSULTING ENGINEERS
11260 ROGER BACON DRIVE
SUITE 300
RESTON, VIRGINIA 22090
PH. (703) 471-6150
FAX. (703) 471-6676

STATE OF MARYLAND — PAUL ANTHONY MANDEVILLE — No. 19892 — PROFESSIONAL ENGINEER
Paul Anthony Mandeville, PE

DES. RTT, EGC
DRN. EGC
CHK. PAM
DATE: 10-30-97

BY	NO.	REVISION	DATE
	6		
	5		
	4		
	3		
	2		
	1		

LANDFILL
CROSS-SECTIONS

ALPHA RIDGE LANDFILL
UNLINED CELL CLOSURE
CAPITAL PROJECT NO. C-0190-N

3rd ELECTION DISTRICT — HOWARD COUNTY, MARYLAND

SCALE: AS NOTED

SHEET 11 OF 13

LFXSEC
M:\295077.01\FINAL
LFXSEC-B

SDP-97-128

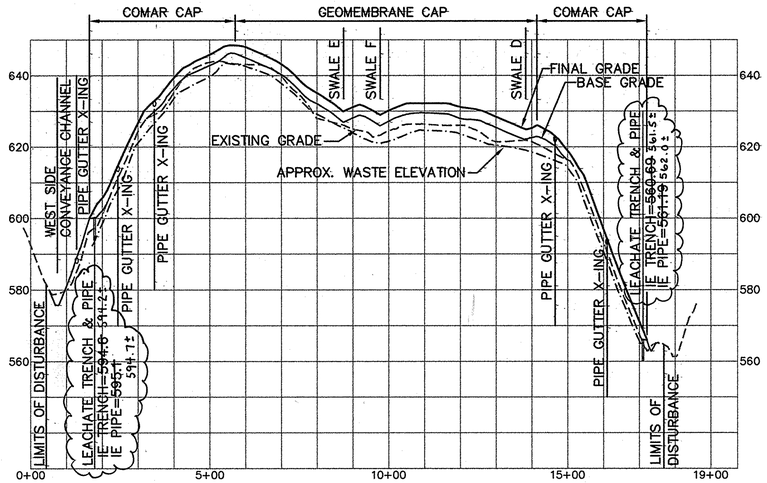

SECTION E
SCALE: 1"=200'
5, 10 | 12

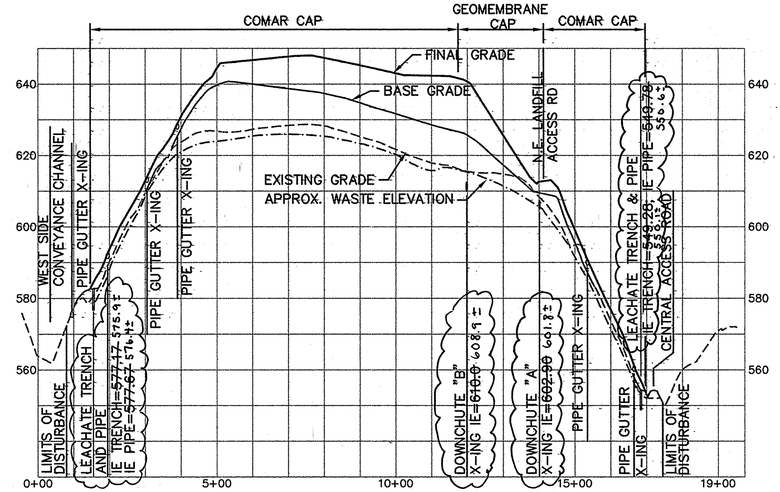

SECTION G
SCALE: 1"=200'
5, 10 | 12

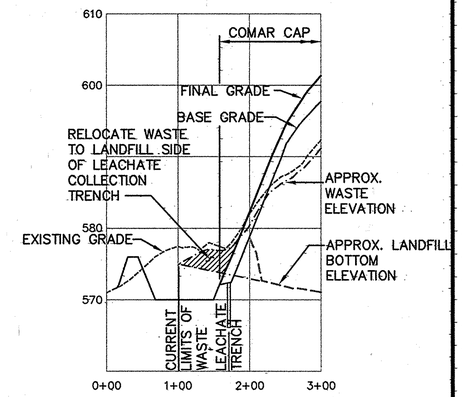

SECTION H
SCALE: 1"=100'
5,6,10 & 39 | 12

VERT. SCALE: 10 0 10 20 SCALE IN FEET

HORIZ. SCALE: 100 0 100 200 SCALE IN FEET

VERT. SCALE: 20 0 20 40 SCALE IN FEET

HORIZ. SCALE: 200 0 200 400 SCALE IN FEET

FOR COMAR CAP DETAILS SEE 4 | 12 45

FOR GEOMEMBRANE CAP DETAILS SEE 3 | 12 45

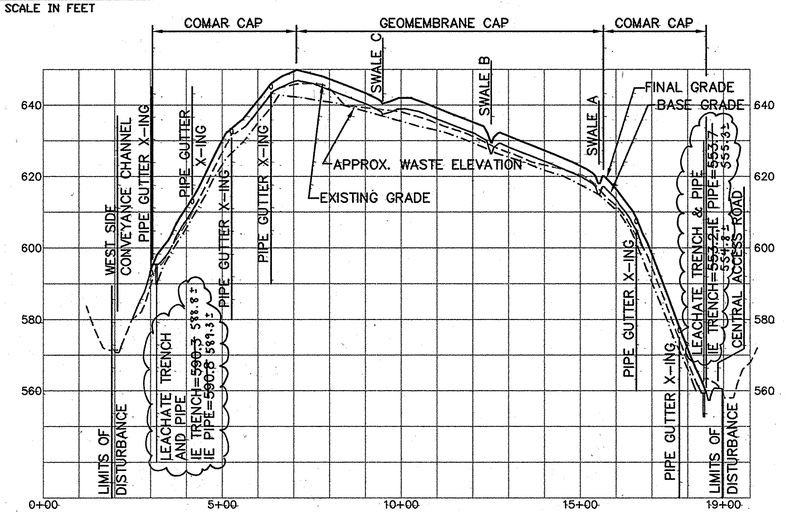

SECTION F
SCALE: 1"=200'
5, 10 | 12

SUBDIVISION NAME	LOT/PARCEL	
ALPHA RIDGE SOLID WASTE MANAGEMENT CENTER	54,253,220,11	
LIBER/FOLIO	ZONE	TAX/ZONE MAP
10-847/606 16-878/215 10-691/314	PEC	10 & 16
WATER CODE	SEWER CODE	CENSUS TR.
PRIVATE, EXISTING	PRIVATE, EXISTING	60-30

DEPARTMENT OF PLANNING AND ZONING
HOWARD COUNTY, MARYLAND

DIRECTOR — DATE 11/3/97

CHIEF, DEVELOPMENT ENGINEERING DIVISION — DATE 11/3/97

CHIEF, DIVISION OF LAND DEVELOPMENT — DATE 11/5/97

DEPARTMENT OF PUBLIC WORKS
HOWARD COUNTY, MARYLAND

DIRECTOR OF PUBLIC WORKS — DATE 10/30/97

CHIEF, BUREAU OF WASTE MANAGEMENT — DATE 10/30/97

SCS ENGINEERS
CONSULTING ENGINEERS
11260 ROGER BACON DRIVE
SUITE 300
RESTON, VIRGINIA 22090
PH. (703) 471-6150
FAX. (703) 471-6676

STATE OF MARYLAND — PAUL ANTHONY MANDEVILLE — REG. NO. 20506 — PROFESSIONAL ENGINEER
Paul Anthony Mandeville, PE

DES. RTT, EGC
DRN. EGC
CHK. PAM
DATE: 10-30-97

BY	NO.	REVISION	DATE
	6		
	5		
	4		
	3		
	2		
	1		

LANDFILL
CROSS-SECTIONS

ALPHA RIDGE LANDFILL
UNLINED CELL CLOSURE
CAPITAL PROJECT NO. C-0190-N

3rd ELECTION DISTRICT — HOWARD COUNTY, MARYLAND

SCALE: AS NOTED

SHEET 12 OF 13

M:\295077.01\FINAL\LFXSEC1\SECH

LFXSEC1-B

SDP-97-128

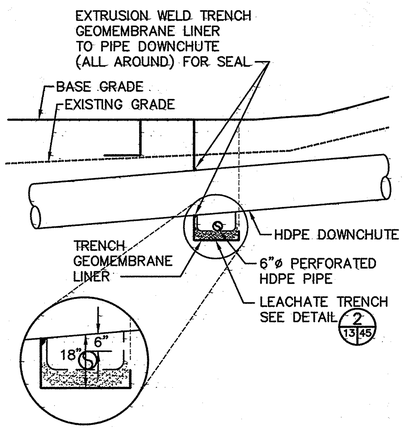

HDPE DOWNCHUTE/LEACHATE TRENCH CROSSING DETAIL 1/13,14,16,17,37

SCALE: 1/4"=1'-0"

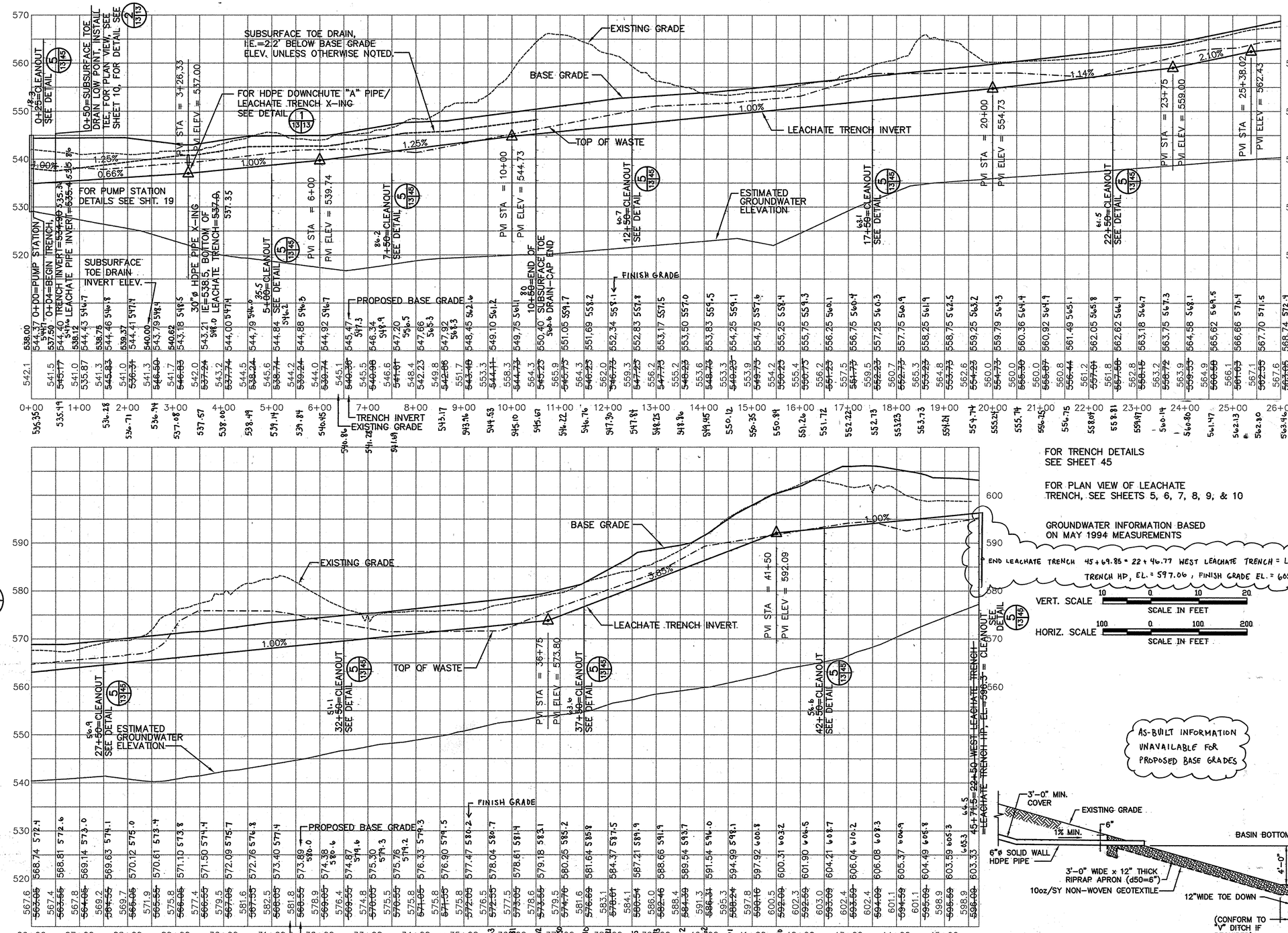

FOR TRENCH DETAILS SEE SHEET 45

FOR PLAN VIEW OF LEACHATE TRENCH, SEE SHEETS 5, 6, 7, 8, 9, & 10

GROUNDWATER INFORMATION BASED ON MAY 1994 MEASUREMENTS

END LEACHATE TRENCH 45+69.85 = 22+46.77 WEST LEACHATE TRENCH = LEACHATE TRENCH HP, EL.= 597.06, FINISH GRADE EL.= 605.9

VERT. SCALE 10 0 10 20 SCALE IN FEET

HORIZ. SCALE 100 0 100 200 SCALE IN FEET

EAST LEACHATE COLLECTION TRENCH PROFILE

AS-BUILT INFORMATION UNAVAILABLE FOR PROPOSED BASE GRADES

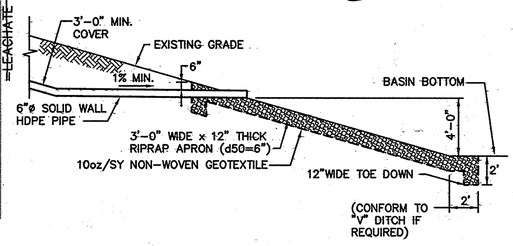

SUBSURFACE TOE DRAIN OUTFALL DETAIL 2/13

NOT TO SCALE

10,13,16,21,32,33

SUBDIVISION NAME	LOT/PARCEL	
ALPHA RIDGE SOLID WASTE MANAGEMENT CENTER	54,253,220,11	
LIBER/FOLIO	ZONE	TAX/ZONE MAP
10-847/606 16-878/215. 10-691/314	PEC	10 & 16
WATER CODE	SEWER CODE	CENSUS TR.
PRIVATE, EXISTING	PRIVATE, EXISTING	60-30

DEPARTMENT OF PLANNING AND ZONING
HOWARD COUNTY, MARYLAND

DIRECTOR — DATE 11/3/97

CHIEF, DEVELOPMENT ENGINEERING DIVISION — DATE 11/3/97

CHIEF, DIVISION OF LAND DEVELOPMENT — DATE 11/3/97

DEPARTMENT OF PUBLIC WORKS
HOWARD COUNTY, MARYLAND

DIRECTOR OF PUBLIC WORKS — DATE 10/30/97

CHIEF, BUREAU OF WASTE MANAGEMENT — DATE 10/30/97

SCS ENGINEERS
CONSULTING ENGINEERS
11260 ROGER BACON DRIVE
SUITE 300
RESTON, VIRGINIA 22090
PH. (703) 471-6150
FAX. (703) 471-6676

STATE OF MARYLAND — PAUL ANTHONY MANDEVILLE — No. 20 — REG. CERT. PROFESSIONAL ENGINEER

Paul Anthony Mandeville, PE

DES. RTT, EGC
DRN. EGC
CHK. PAM
DATE: 10-30-97

BY	NO.	REVISION	DATE
	6		
	5		
	4		
	3		
	2		
	1		

EAST LEACHATE COLLECTION TRENCH PROFILE

ALPHA RIDGE LANDFILL
UNLINED CELL CLOSURE
CAPITAL PROJECT NO. C-0190-N

3rd ELECTION DISTRICT — HOWARD COUNTY, MARYLAND

SCALE: 1"=100'

SHEET 13 OF 13

SDP-97-128

LEACHPROE M:\295077.01\FINAL LPRO-E_TR-XING_TOEDRAIN

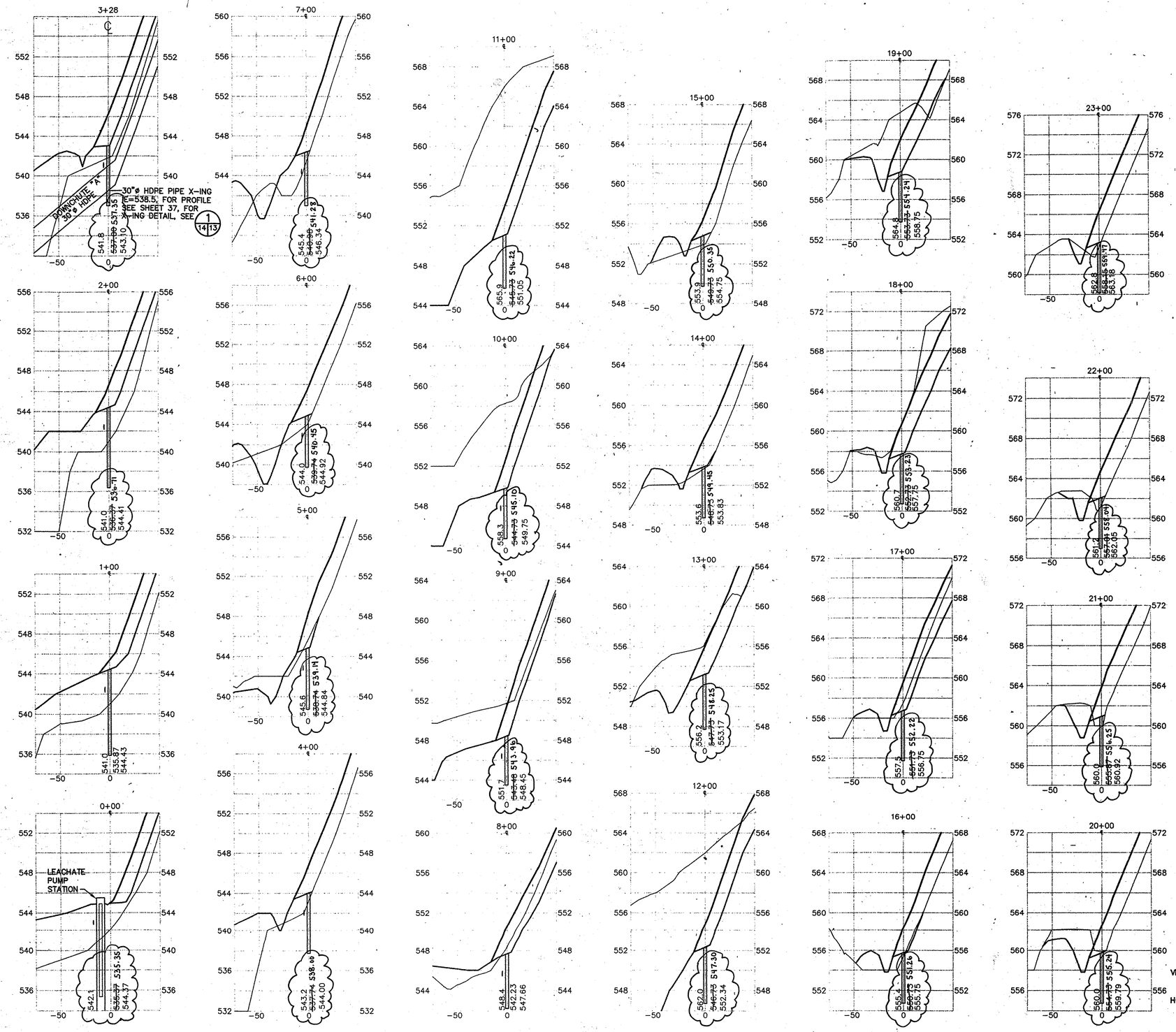

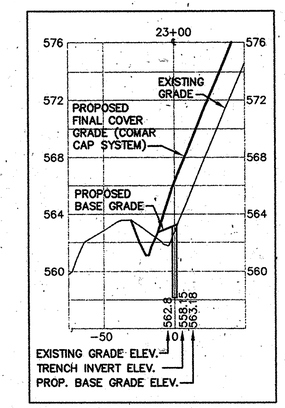

TYPICAL LEGEND FOR CROSS-SECTIONS

NOTE:

FOR TYPICAL LEACHATE TRENCH CROSS-SECTION DETAILS, SEE SHEET 45.

AS-BUILT INFORMATION UNAVAILABLE FOR PROPOSED BASE GRADES

VERT. SCALE: 5 0 5 10 SCALE IN FEET

HORIZ. SCALE: 50 0 50 100 SCALE IN FEET

SUBDIVISION NAME	LOT/PARCEL	
ALPHA RIDGE SOLID WASTE MANAGEMENT CENTER	54,253,220,11	
LIBER/FOLIO	ZONE	TAX/ZONE MAP
10-847/606 16-878/215 10-691/314	PEC	10 & 16
WATER CODE	SEWER CODE	CENSUS TR.
PRIVATE, EXISTING	PRIVATE, EXISTING	60-30

DEPARTMENT OF PLANNING AND ZONING
HOWARD COUNTY, MARYLAND

DIRECTOR — DATE 11/3/97

CHIEF, DEVELOPMENT ENGINEERING DIVISION — DATE 10/24/97

CHIEF, DIVISION OF LAND DEVELOPMENT — DATE 11/3/97

DEPARTMENT OF PUBLIC WORKS
HOWARD COUNTY, MARYLAND

DIRECTOR OF PUBLIC WORKS — DATE 10/30/97

CHIEF, BUREAU OF WASTE MANAGEMENT — DATE 10/30/97

SCS ENGINEERS
CONSULTING ENGINEERS
11260 ROGER BACON DRIVE
SUITE 300
RESTON, VIRGINIA 22090
PH. (703) 471-6150
FAX. (703) 471-6676

STATE OF MARYLAND — PAUL ANTHONY MANDEVILLE — No. 17 — PROFESSIONAL ENGINEER
Paul Anthony Mandeville, PE

DES. RTT, EGC
DRN. EGC
CHK. PAM
DATE: 10-30-97

BY	NO.	REVISION	DATE
	6		
	5		
	4		
	3		
	2		
	1		

EAST LEACHATE COLLECTION TRENCH CROSS-SECTIONS

ALPHA RIDGE LANDFILL
UNLINED CELL CLOSURE
CAPITAL PROJECT NO. C-0190-N

3rd ELECTION DISTRICT — HOWARD COUNTY, MARYLAND

SCALE: AS NOTED

SHEET 14 OF 12[illegible]

LSEC1-E

M:\295077.01\FINAL

LSEC1-EB

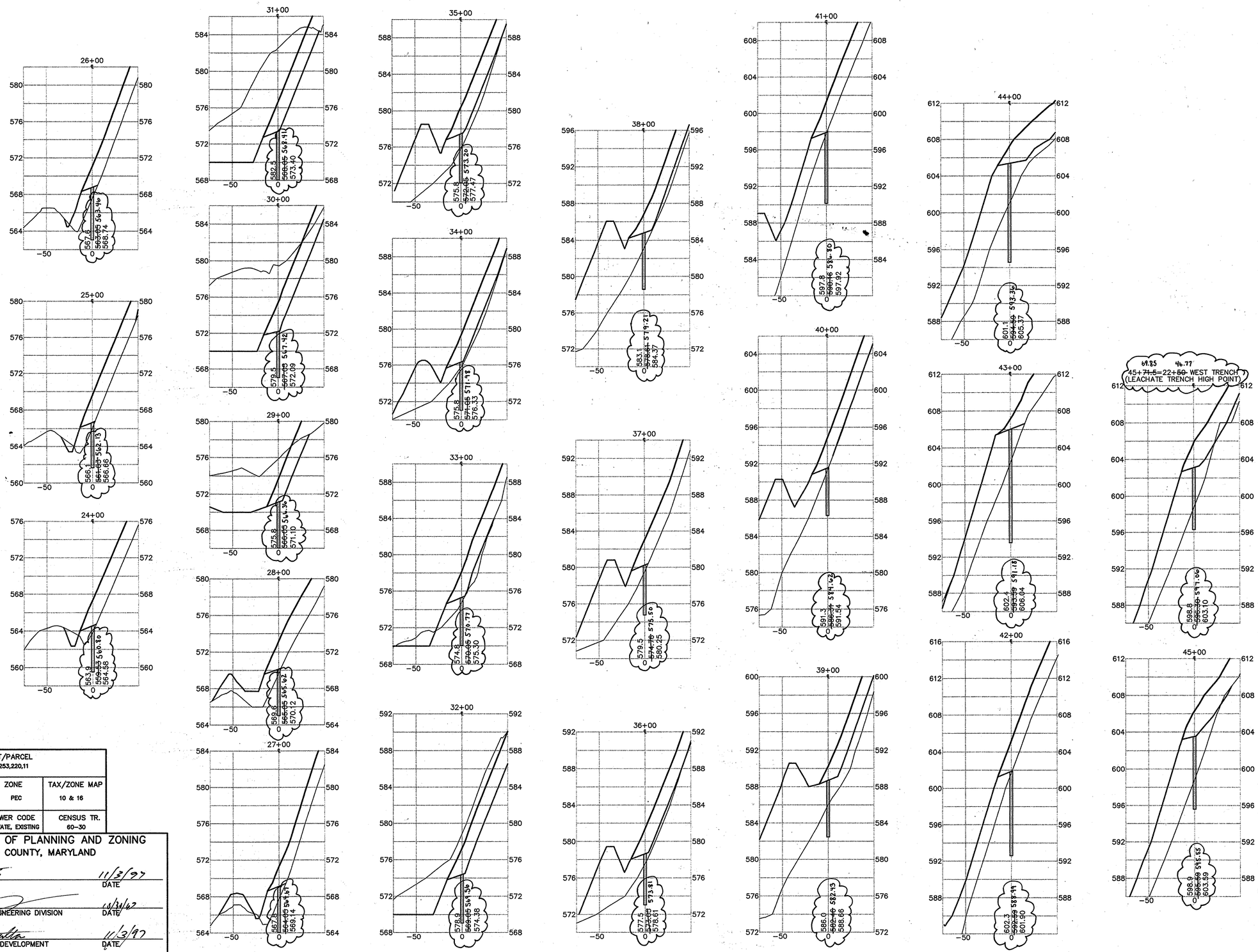

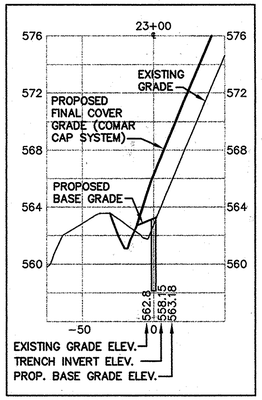

TYPICAL LEGEND FOR CROSS-SECTIONS

NOTE:

FOR TYPICAL LEACHATE TRENCH CROSS-SECTION DETAILS, SEE SHEET 45.

AS-BUILT INFORMATION UNAVAILABLE FOR PROPOSED BASE GRADES

VERT. SCALE: 5 0 5 10 SCALE IN FEET

HORIZ. SCALE: 50 0 50 100 SCALE IN FEET

SUBDIVISION NAME	LOT/PARCEL	
ALPHA RIDGE SOLID WASTE MANAGEMENT CENTER	54,253,220,11	
LIBER/FOLIO	ZONE	TAX/ZONE MAP
10-847/606 16-878/215 10-691/314	PEC	10 & 16
WATER CODE	SEWER CODE	CENSUS TR.
PRIVATE, EXISTING	PRIVATE, EXISTING	60-30

DEPARTMENT OF PLANNING AND ZONING
HOWARD COUNTY, MARYLAND

DIRECTOR — DATE 11/3/97

CHIEF, DEVELOPMENT ENGINEERING DIVISION — DATE 10/30/97

CHIEF, DIVISION OF LAND DEVELOPMENT — DATE 11/3/97

DEPARTMENT OF PUBLIC WORKS
HOWARD COUNTY, MARYLAND

DIRECTOR OF PUBLIC WORKS — DATE 10/30/97

CHIEF, BUREAU OF WASTE MANAGEMENT — DATE 10/30/97

SCS ENGINEERS
CONSULTING ENGINEERS
11260 ROGER BACON DRIVE
SUITE 300
RESTON, VIRGINIA 22090
PH. (703) 471-6150
FAX. (703) 471-6676

STATE OF MARYLAND — PAUL ANTHONY MANDEVILLE — LIC. REG. CERT. NO. 14868 — PROFESSIONAL ENGINEER

Paul Anthony Mandeville, PE

DES. RTT, EGC
DRN. EGC
CHK. PAM
DATE: 10-30-97

BY	NO.	REVISION	DATE
	6		
	5		
	4		
	3		
	2		
	1		

EAST LEACHATE COLLECTION TRENCH CROSS-SECTIONS

ALPHA RIDGE LANDFILL
UNLINED CELL CLOSURE
CAPITAL PROJECT NO. C-0190-N

3rd ELECTION DISTRICT — HOWARD COUNTY, MARYLAND

SCALE: AS NOTED

SHEET 15 OF 131

M:\295077.01\FINAL LSEC2-E

LSEC2-EB

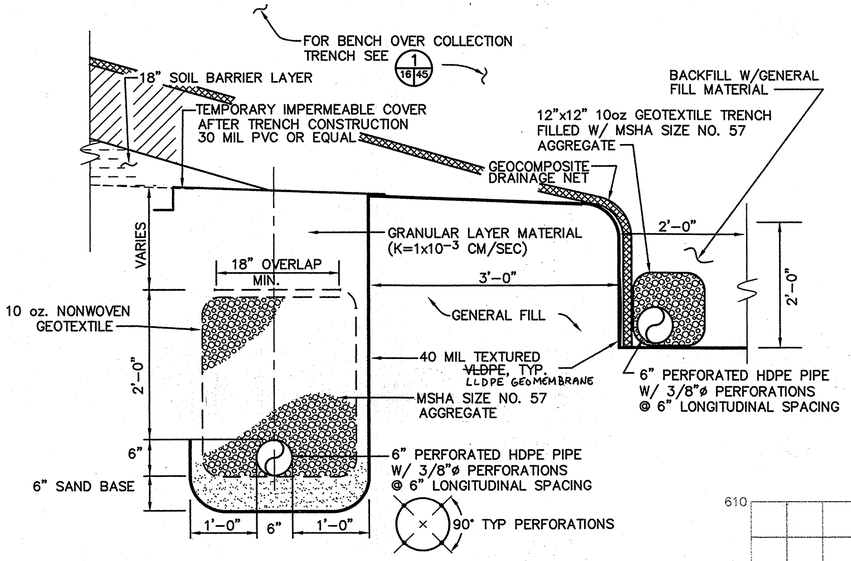

LEACHATE TRENCH WITH TOE DRAIN DETAIL (2 / 10|16)

SCALE: 1" = 1'-0"

FOR PUMP STATION DETAILS SEE SHT. 19

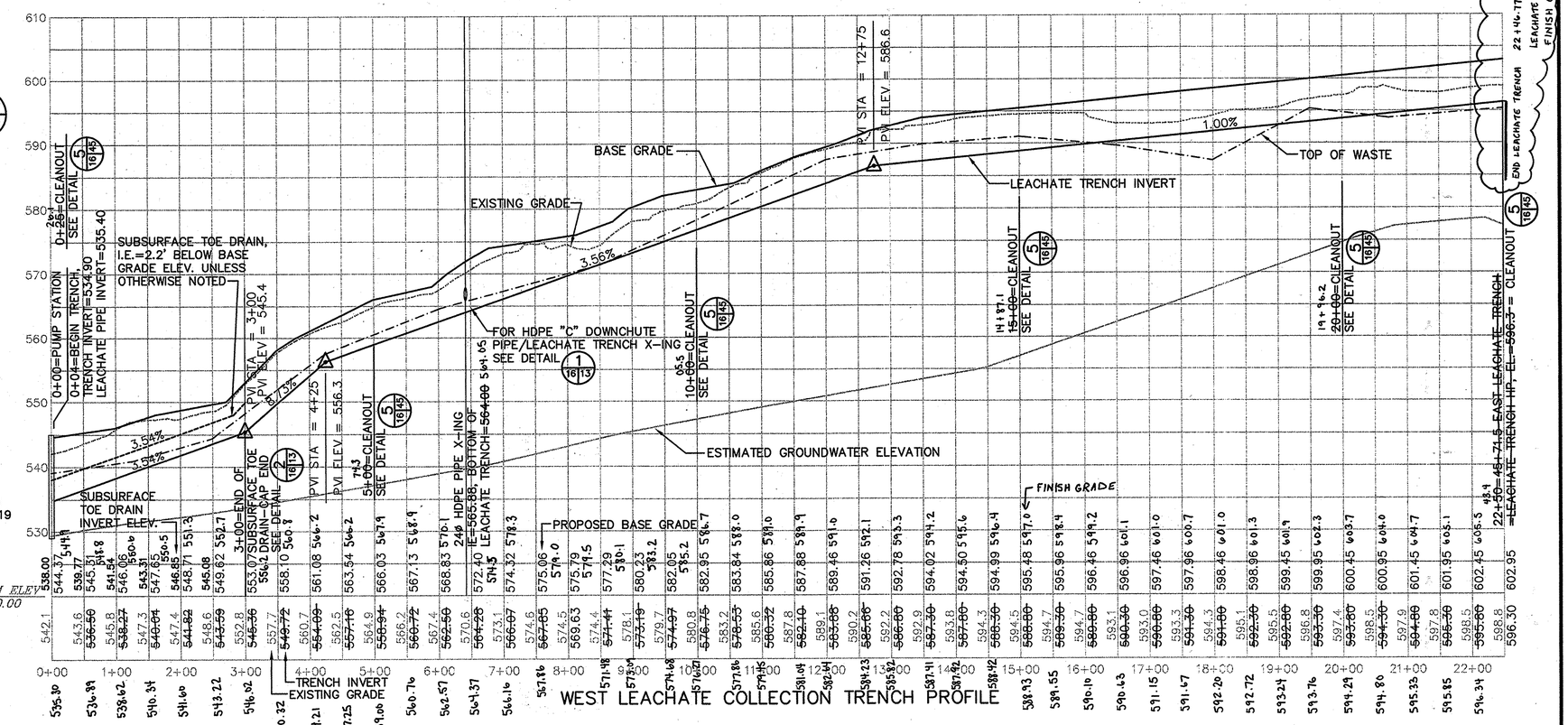

WEST LEACHATE COLLECTION TRENCH PROFILE

FOR TRENCH DETAILS SEE SHEET 45

FOR PLAN VIEW OF LEACHATE TRENCH, SEE SHEETS 5, 7, 8, 9, & 10

GROUNDWATER INFORMATION BASED ON MAY 1994 MEASUREMENTS

VERT. SCALE 10 0 10 20 SCALE IN FEET

HORIZ. SCALE 100 0 100 200 SCALE IN FEET

SUBDIVISION NAME	LOT/PARCEL	
ALPHA RIDGE SOLID WASTE MANAGEMENT CENTER	54,253,220,11	
LIBER/FOLIO	ZONE	TAX/ZONE MAP
10-847/606 16-878/215 10-521/314	PEC	10 & 16
WATER CODE	SEWER CODE	CENSUS TR.
PRIVATE, EXISTING	PRIVATE, EXISTING	60-30

DEPARTMENT OF PLANNING AND ZONING
HOWARD COUNTY, MARYLAND

DIRECTOR — DATE 11/3/97

CHIEF, DEVELOPMENT ENGINEERING DIVISION — DATE 11/3/97

CHIEF, DIVISION OF LAND DEVELOPMENT — DATE 11/3/97

DEPARTMENT OF PUBLIC WORKS
HOWARD COUNTY, MARYLAND

DIRECTOR OF PUBLIC WORKS — DATE 10/30/97 — CHIEF, BUREAU OF WASTE MANAGEMENT — DATE 10/30/97

SCS ENGINEERS
CONSULTING ENGINEERS
11260 ROGER BACON DRIVE
SUITE 300
RESTON, VIRGINIA 22090
PH. (703) 471-6150
FAX. (703) 471-6676

STATE OF MARYLAND — PAUL ANTHONY MANDEVILLE — No. 18 REG. CAP. — PROFESSIONAL ENGINEER
Paul Anthony Mandeville, PE

DES. RTT, EGC
DRN. EGC
CHK. PAM
DATE: 10-30-97

BY	NO.	REVISION	DATE
	6		
	5		
	4		
	3		
	2		
	1		

WEST LEACHATE COLLECTION TRENCH PROFILE

ALPHA RIDGE LANDFILL
UNLINED CELL CLOSURE
CAPITAL PROJECT NO. C-0190-N
3rd ELECTION DISTRICT — HOWARD COUNTY, MARYLAND

SCALE: 1"=100'

SHEET 16 OF 131

LEACHPROW M:\295077.01\FINAL LPRO-W

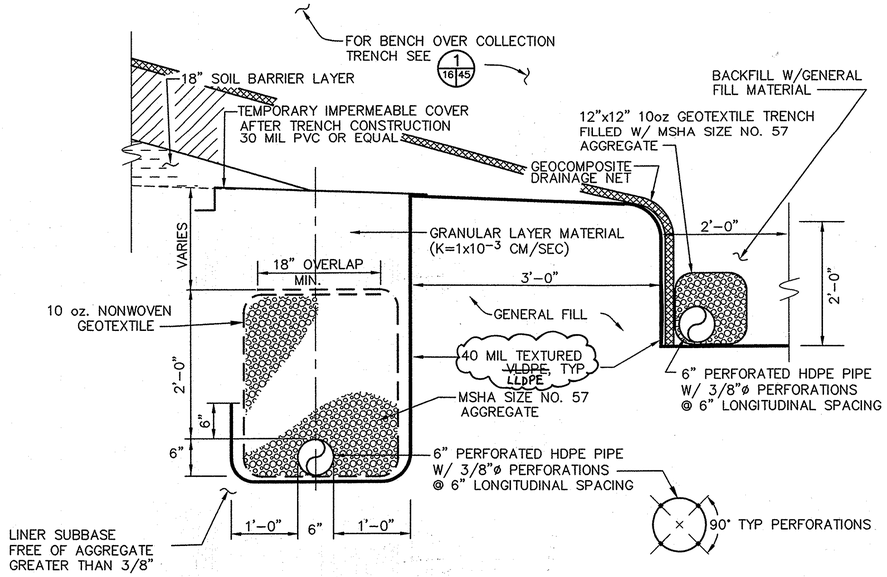

LEACHATE TRENCH WITH TOE DRAIN DETAIL IN SOIL 2A 10 16

SCALE: 1" = 1'-0"

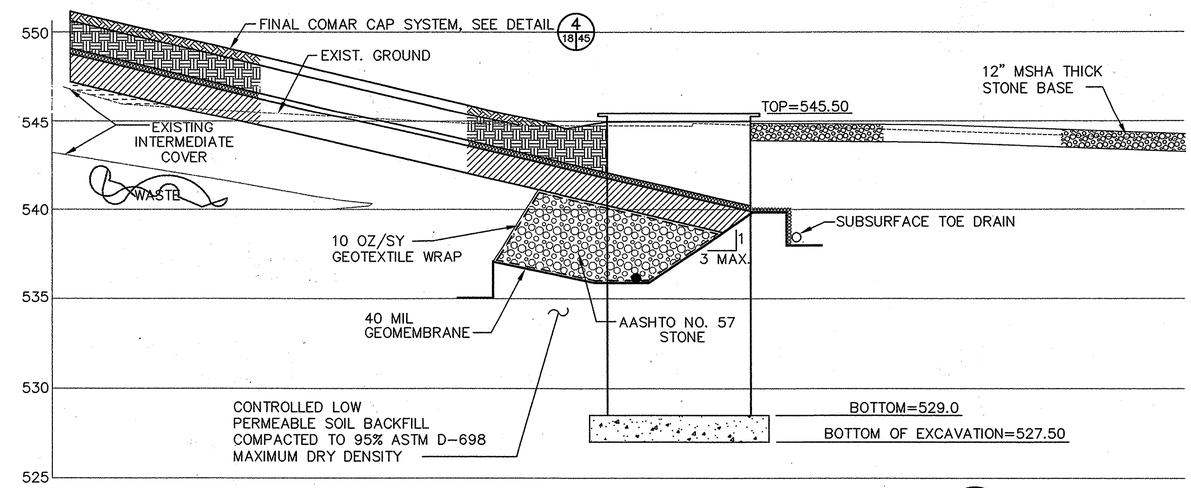

SECTION THRU LEACHATE PUMP STATION B 18 18

SCALE: 1/4"=1'-0"

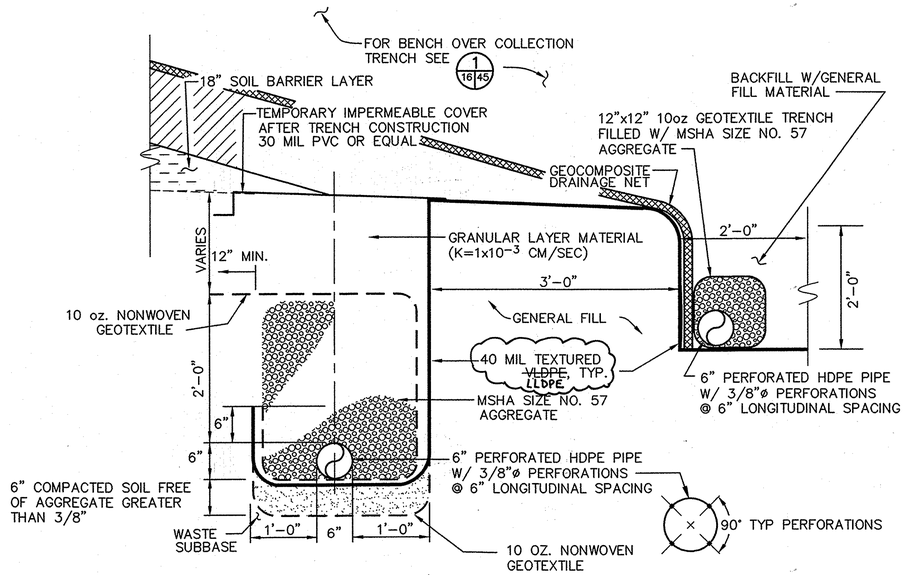

LEACHATE TRENCH WITH TOE DRAIN DETAIL OVER WASTE 2B 10 16

SCALE: 1" = 1'-0"

M:\295077.01\

SHT-16A

DEPARTMENT OF PUBLIC WORKS
HOWARD COUNTY, MARYLAND

DIRECTOR OF PUBLIC WORKS DATE CHIEF, BUREAU OF WASTE MANAGEMENT DATE

SCS ENGINEERS
CONSULTING ENGINEERS
11260 ROGER BACON DRIVE
SUITE 300
RESTON, VIRGINIA 20190
PH. (703) 471-6150
FAX. (703) 471-6676

STATE OF MARYLAND PAUL ANTHONY MANDEVILLE LIC REG CERT NO 14968 PROFESSIONAL ENGINEER

STATE OF MARYLAND H.T. JAMES LAW LIC REG CERT NO 19888 PROFESSIONAL ENGINEER

DES. HJL		6			
DRN. SPS		5			
CHK. PAM		4			
DATE: 03-30-99		3			
		2			
		1			
	BY	NO.	REVISION	DATE	

MISCELLANEOUS DETAILS

ALPHA RIDGE LANDFILL
CELL CLOSURE
CAPITAL PROJECT NO. C-0190

1st ELECTION DISTRICT HOWARD COUNTY, MARYLAND

SCALE: AS NOTED

SHEET 16A OF 31

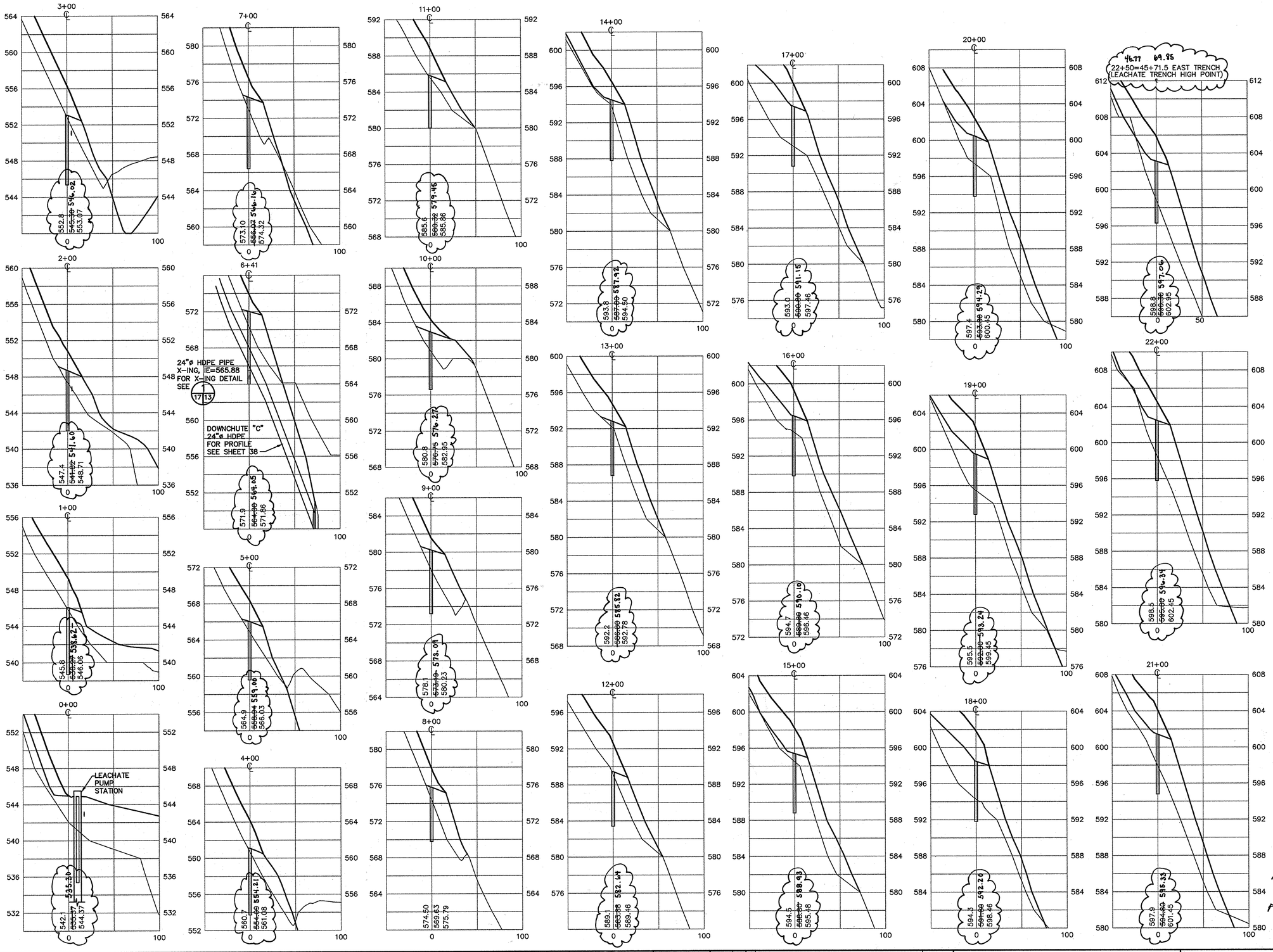

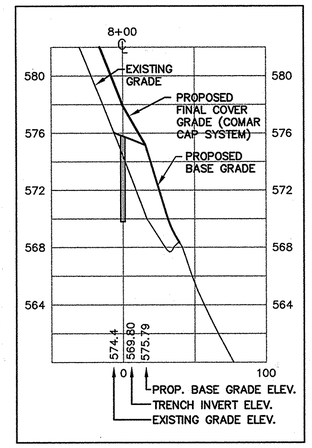

TYPICAL LEGEND FOR CROSS-SECTIONS

NOTE:

FOR TYPICAL LEACHATE TRENCH CROSS-SECTION DETAILS, SEE SHEET 45.

AS-BUILT INFORMATION UNAVAILABLE FOR PROPOSED BASE GRADES

VERT. SCALE: 5 0 5 10 SCALE IN FEET

HORIZ. SCALE: 50 0 50 100 SCALE IN FEET

SUBDIVISION NAME	LOT/PARCEL	
ALPHA RIDGE SOLID WASTE MANAGEMENT CENTER	54,253,220,11	
LIBER/FOLIO	ZONE	TAX/ZONE MAP
10-847/606 16-878/215 10-691/314	PEC	10 & 16
WATER CODE	SEWER CODE	CENSUS TR.
PRIVATE, EXISTING	PRIVATE, EXISTING	60-30

DEPARTMENT OF PLANNING AND ZONING
HOWARD COUNTY, MARYLAND

DIRECTOR — DATE 11/3/97

CHIEF, DEVELOPMENT ENGINEERING DIVISION — DATE 11/3/97

CHIEF, DIVISION OF LAND DEVELOPMENT — DATE 11/3/97

DEPARTMENT OF PUBLIC WORKS
HOWARD COUNTY, MARYLAND

DIRECTOR OF PUBLIC WORKS — DATE 10/30/97

CHIEF, BUREAU OF WASTE MANAGEMENT — DATE 10/30/97

SCS ENGINEERS
CONSULTING ENGINEERS
11260 ROGER BACON DRIVE
SUITE 300
RESTON, VIRGINIA 22090
PH. (703) 471-6150
FAX. (703) 471-6676

STATE OF MARYLAND — PAUL ANTHONY MANDEVILLE — No. 19822 — PROFESSIONAL ENGINEER
Paul Anthony Mandeville, PE

DES. RTT, EGC
DRN. EGC
CHK. PAM
DATE: 10-30-97

BY	NO.	REVISION	DATE
	6		
	5		
	4		
	3		
	2		
	1		

WEST LEACHATE COLLECTION TRENCH CROSS-SECTIONS

ALPHA RIDGE LANDFILL
UNLINED CELL CLOSURE
CAPITAL PROJECT NO. C-0190-N

3rd ELECTION DISTRICT — HOWARD COUNTY, MARYLAND

SCALE: AS NOTED

SHEET 17 OF 121

LSEC-WB — M:\295077.01\FINAL — LSEC-W

SDP-97-128

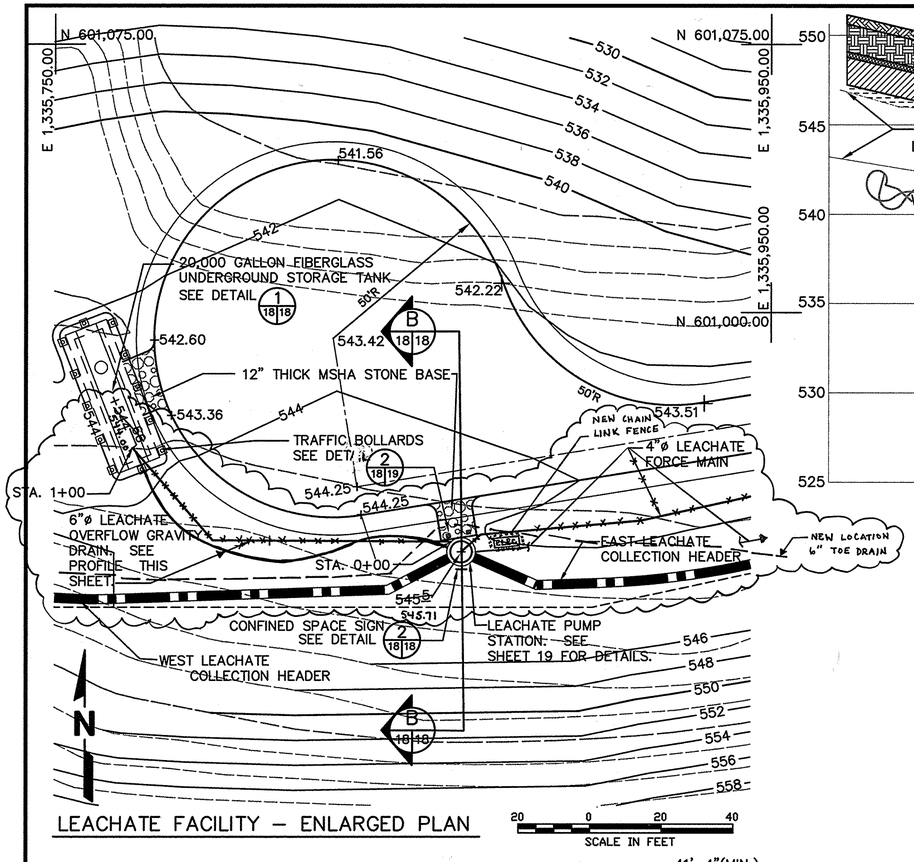

LEACHATE FACILITY – ENLARGED PLAN

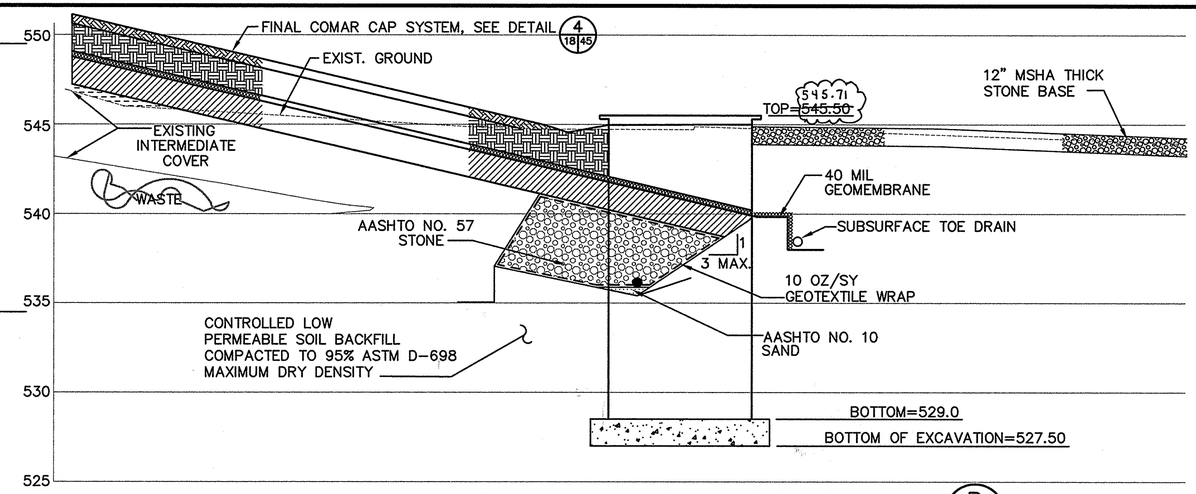

SECTION THRU LEACHATE PUMP STATION B/18|18

SCALE: 1/4"=1'-0"

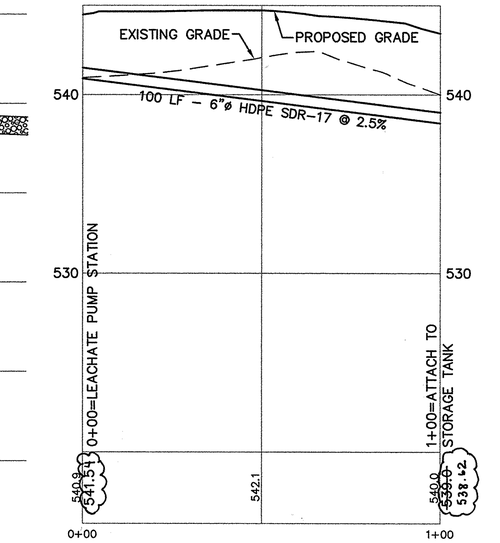

LEACHATE OVERFLOW GRAVITY DRAIN PROFILE

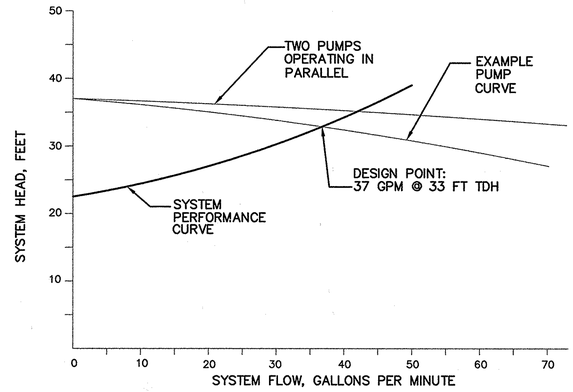

LEACHATE PUMP SYSTEM PERFORMANCE CURVE

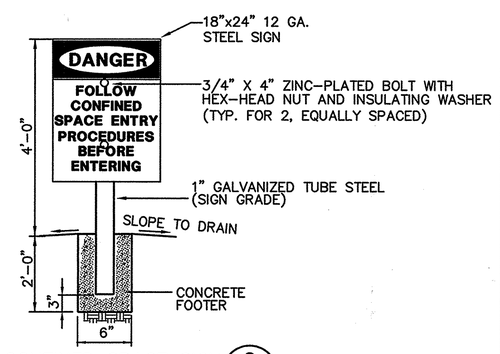

CONFINED SPACE SIGN 2/18|18

NOT TO SCALE

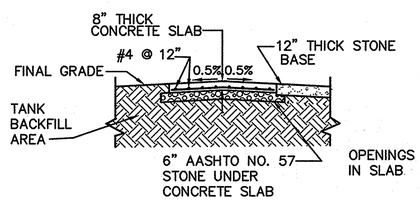

SECTION A/18|18

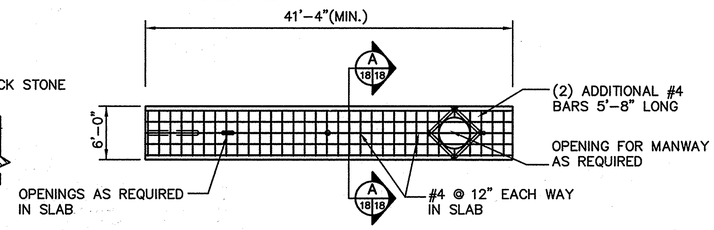

TANK TOP SLAB DETAIL

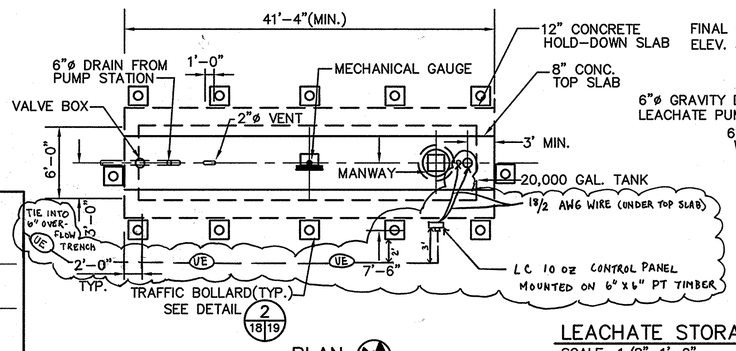

PLAN

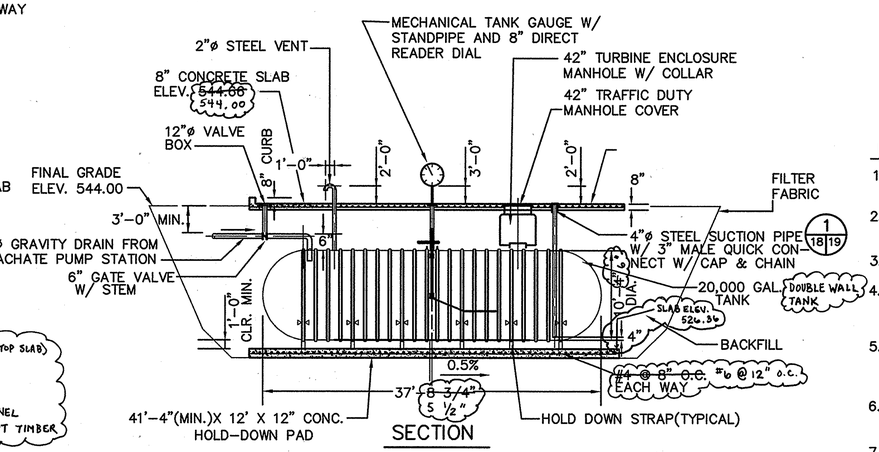

SECTION

LEACHATE STORAGE TANK 1/18

SCALE: 1/8"=1'-0"

5,8,10,18

NOTES:

1. UNDERGROUND STORAGE TANK (UST) – PROVIDE 20,000 GALLON SINGLE WALL FIBERGLASS UST WITH OPENINGS AS INDICATED.
2. THE LOCATION PLACEMENT AND NUMBER OF HOLD DOWN STRAPS SHALL BE AS SPECIFIED BY THE MANUFACTURER.
3. UST BACKFILL SHALL BE AS SPECIFIED BY THE MANUFACTURER.
4. INSTALL THE UST IN ACCORDANCE WITH THE UST MANUFACTURER'S WRITTEN INSTRUCTIONS AND PETROLEUM EQUIPMENT INSTITUTE (PEI) 100-94.
5. CONCRETE SLAB SHALL BE CONSTRUCTED SO A 0.5% SLOPE IS MAINTAINED FROM THE CENTER (HIGH POINT) TO EACH CORNER OF SLAB (LOW POINT).
6. CONCRETE MINIMUM COMPRESSIVE STRENGTH SHALL BE 4,000 PSI AS PER SPECIFICATION 03300 "CONCRETE".
7. FOR ADDITIONAL OPENINGS OR IF OPENING LOCATIONS DIFFER FROM THOSE INDICATED DUE TO TANK MANUFACTURER'S REQUIREMENTS, CONTRACTOR SHALL SUBMIT A REVISED REINFORCING PLAN FOR ENGINEERS APPROVAL.
8. CONCRETE PAD SHALL BE BROOM FINISHED.

SUBDIVISION NAME	LOT/PARCEL	
ALPHA RIDGE SOLID WASTE MANAGEMENT CENTER	54,253,220,11	
LIBER/FOLIO	ZONE	TAX/ZONE MAP
10-847/606 16-878/215 10-691/314	PEC	10 & 16
WATER CODE	SEWER CODE	CENSUS TR.
PRIVATE, EXISTING	PRIVATE, EXISTING	60-30

DEPARTMENT OF PLANNING AND ZONING
HOWARD COUNTY, MARYLAND

DIRECTOR — DATE 11/3/97
CHIEF, DEVELOPMENT ENGINEERING DIVISION — DATE 10/30/97
CHIEF, DIVISION OF LAND DEVELOPMENT — DATE 11/3/97

DEPARTMENT OF PUBLIC WORKS
HOWARD COUNTY, MARYLAND

DIRECTOR OF PUBLIC WORKS — DATE 10/30/97
CHIEF, BUREAU OF WASTE MANAGEMENT — DATE 10/30/97

SCS ENGINEERS
CONSULTING ENGINEERS
11260 ROGER BACON DRIVE
SUITE 300
RESTON, VIRGINIA 22090
PH. (703) 471-6150
FAX. (703) 471-6676

STATE OF MARYLAND — PAUL ANTHONY MANDEVILLE — REG. NO. 15668 — PROFESSIONAL ENGINEER
Paul Anthony Mandeville, PE

DES. RTT, FDB
DRN. FTB, EGC
CHK. PAM
DATE: 10-30-97

BY	NO.	REVISION	DATE
	6		
	5		
	4		
	3		
	2		
	1		

LEACHATE FACILITY LAYOUT AND DETAILS

ALPHA RIDGE LANDFILL
UNLINED CELL CLOSURE
CAPITAL PROJECT NO. C-0190-N

3rd ELECTION DISTRICT — HOWARD COUNTY, MARYLAND

SCALE: AS NOTED

SHEET 18 OF 131

SDP-97-128

LEACHFAC — M:\295077.01\FINAL — PLAN2, GRAVPRO, L-TANK, PSNOTES, PUMPXSEC, SYSTEMCURVE, SIGN1

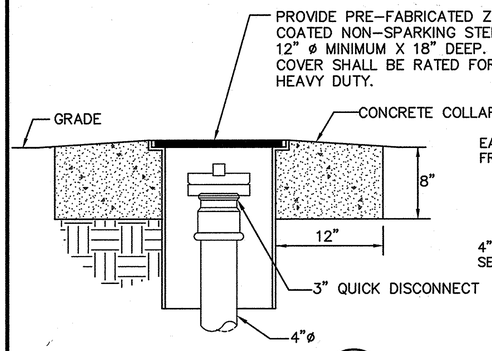

HANDHOLE DETAIL

SCALE: 1 1/2"=1'-0"

1 / 19 — 18,53

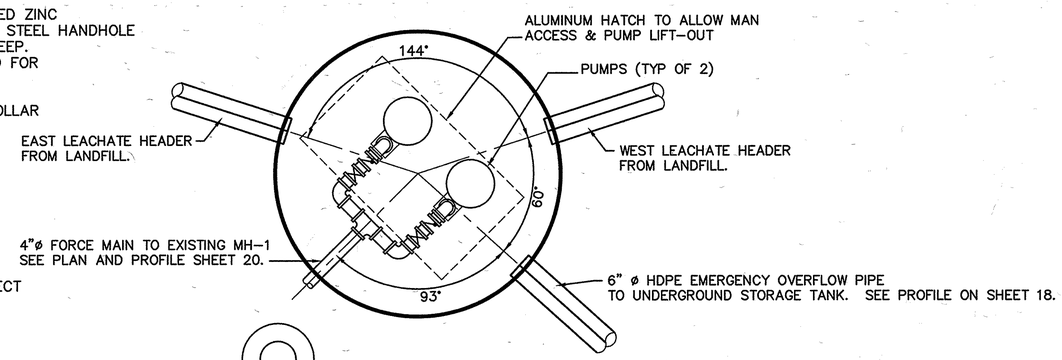

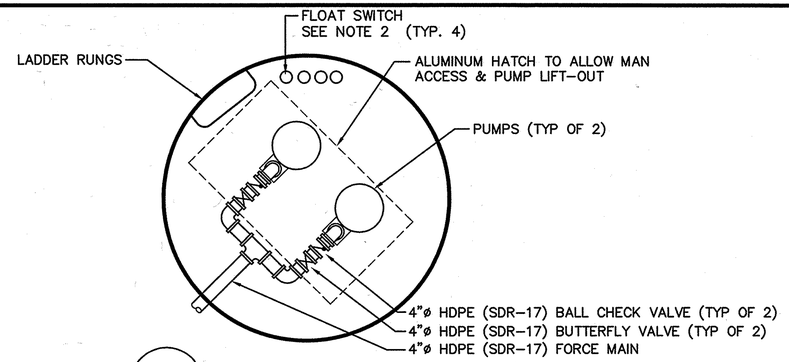

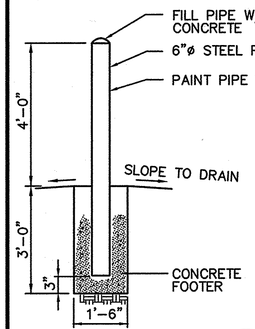

BOLLARD DETAIL

SCALE: 1/2" = 1-0'

2 / 19 — 18,53

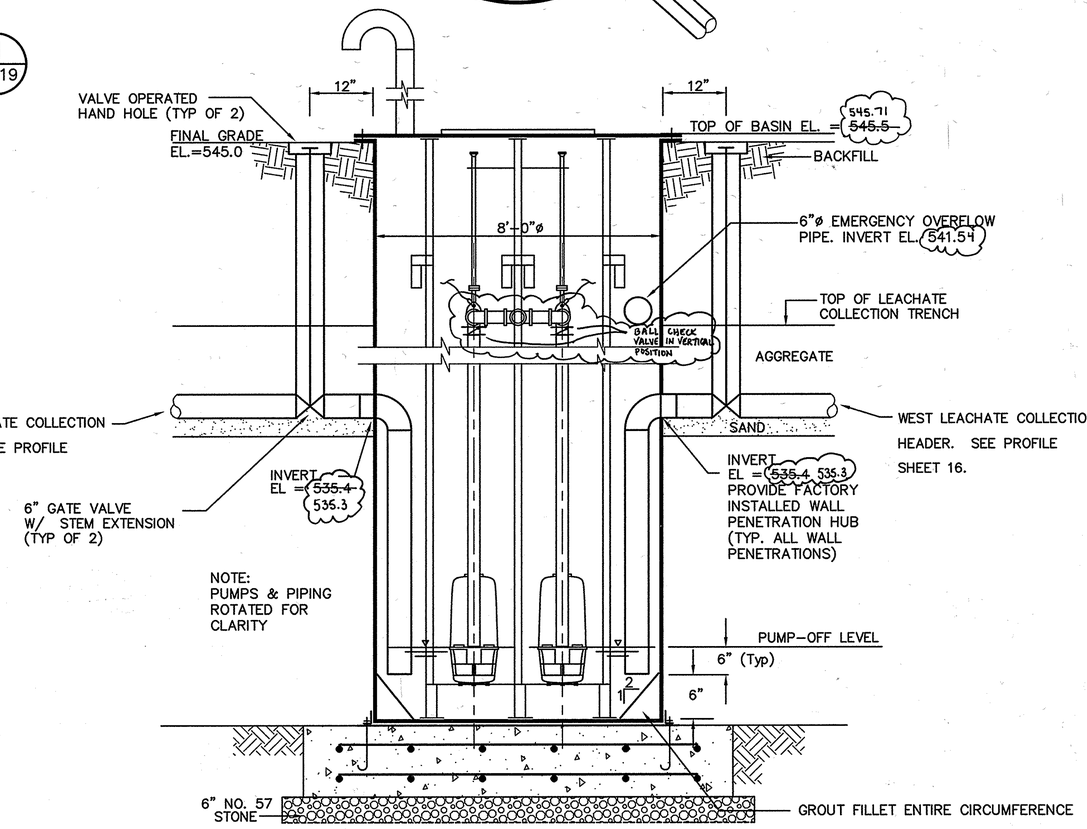

LEACHATE PUMP STATION CONNECTION

NO SCALE

NOTES:

1. ALL BASIN WALL PENETRATIONS SHALL BE WATER-TIGHT, FACTORY-INSTALLED PENETRATION HUBS, CAST INTO BASIN WALL FIBERGLASS.

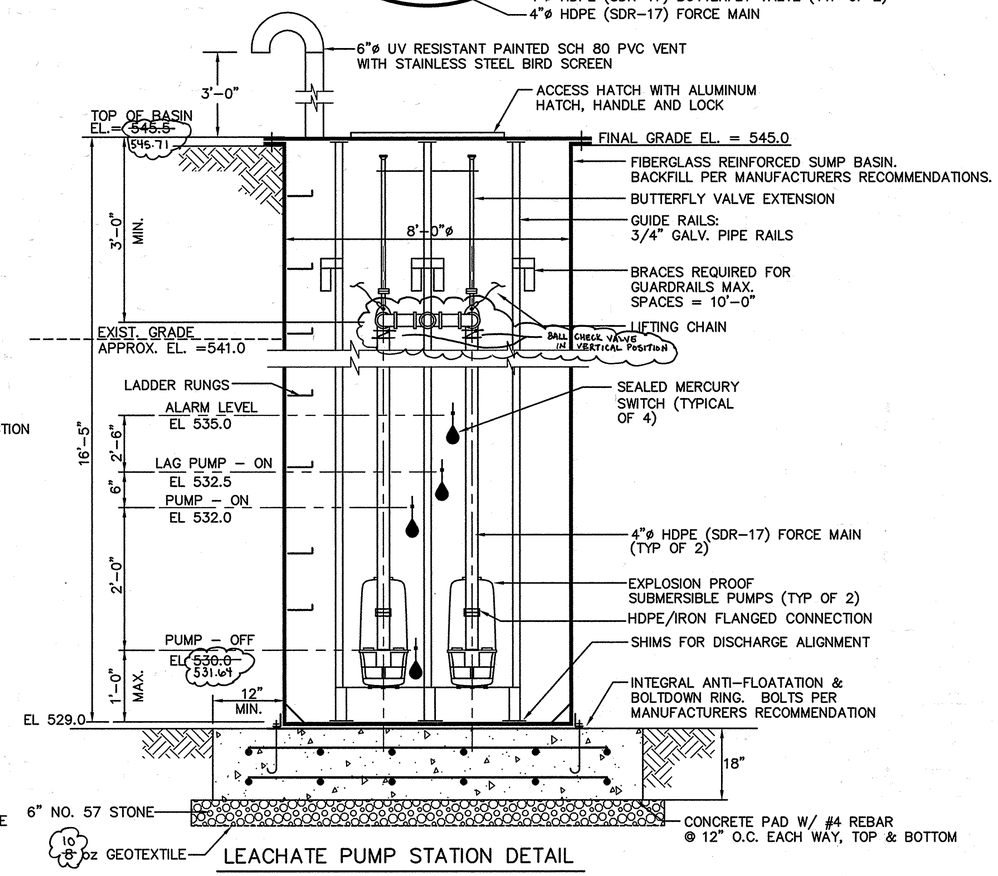

LEACHATE PUMP STATION DETAIL

NO SCALE

NOTES:

1. FOR INLET PIPE CONNECTIONS, SEE LEACHATE PUMP STATION CONNECTION DETAIL, THIS SHEET.
2. COORDINATE FLOAT SWITCH HANGING LOCATIONS WITH BASIN PIPE PENETRATIONS
3. ACCESS HATCH SHALL ALLOW REMOVAL/INSERTION OF PUMPS AND PERSONNEL ACCESS.

SUBDIVISION NAME	LOT/PARCEL	
ALPHA RIDGE SOLID WASTE MANAGEMENT CENTER	54,253,220,11	
LIBER/FOLIO	ZONE	TAX/ZONE MAP
10-847/606 16-878/215 10-891/314	PEC	10 & 16
WATER CODE	SEWER CODE	CENSUS TR.
PRIVATE, EXISTING	PRIVATE, EXISTING	60-30

DEPARTMENT OF PLANNING AND ZONING
HOWARD COUNTY, MARYLAND

DIRECTOR — DATE 11/3/97

CHIEF, DEVELOPMENT ENGINEERING DIVISION — DATE 10/30/97

CHIEF, DIVISION OF LAND DEVELOPMENT — DATE 11/3/97

DEPARTMENT OF PUBLIC WORKS
HOWARD COUNTY, MARYLAND

DIRECTOR OF PUBLIC WORKS — DATE 10/30/97 — CHIEF, BUREAU OF WASTE MANAGEMENT — DATE 10/30/97

SCS ENGINEERS
CONSULTING ENGINEERS
11260 ROGER BACON DRIVE
SUITE 300
RESTON, VIRGINIA 22090
PH. (703) 471-6150
FAX. (703) 471-6676

STATE OF MARYLAND — PAUL ANTHONY MANDEVILLE — No. 16868 — PROFESSIONAL ENGINEER
Paul Anthony Mandeville, PE

DES.	RTT
DRN.	FDB
CHK.	PAM
DATE: 10-30-97	

BY	NO.	REVISION	DATE
	6		
	5		
	4		
	3		
	2		
	1		

LEACHATE PUMP STATION DETAILS

ALPHA RIDGE LANDFILL
UNLINED CELL CLOSURE
CAPITAL PROJECT NO. C-0190-N

3rd ELECTION DISTRICT — HOWARD COUNTY, MARYLAND

SCALE: AS NOTED

SHEET 19 OF 13[illegible]

SDP-97-128

PUMPCON, PUMPSTA, HANDHOLE, BOLLARD
M:\295077.01\FINAL
LEACHPS

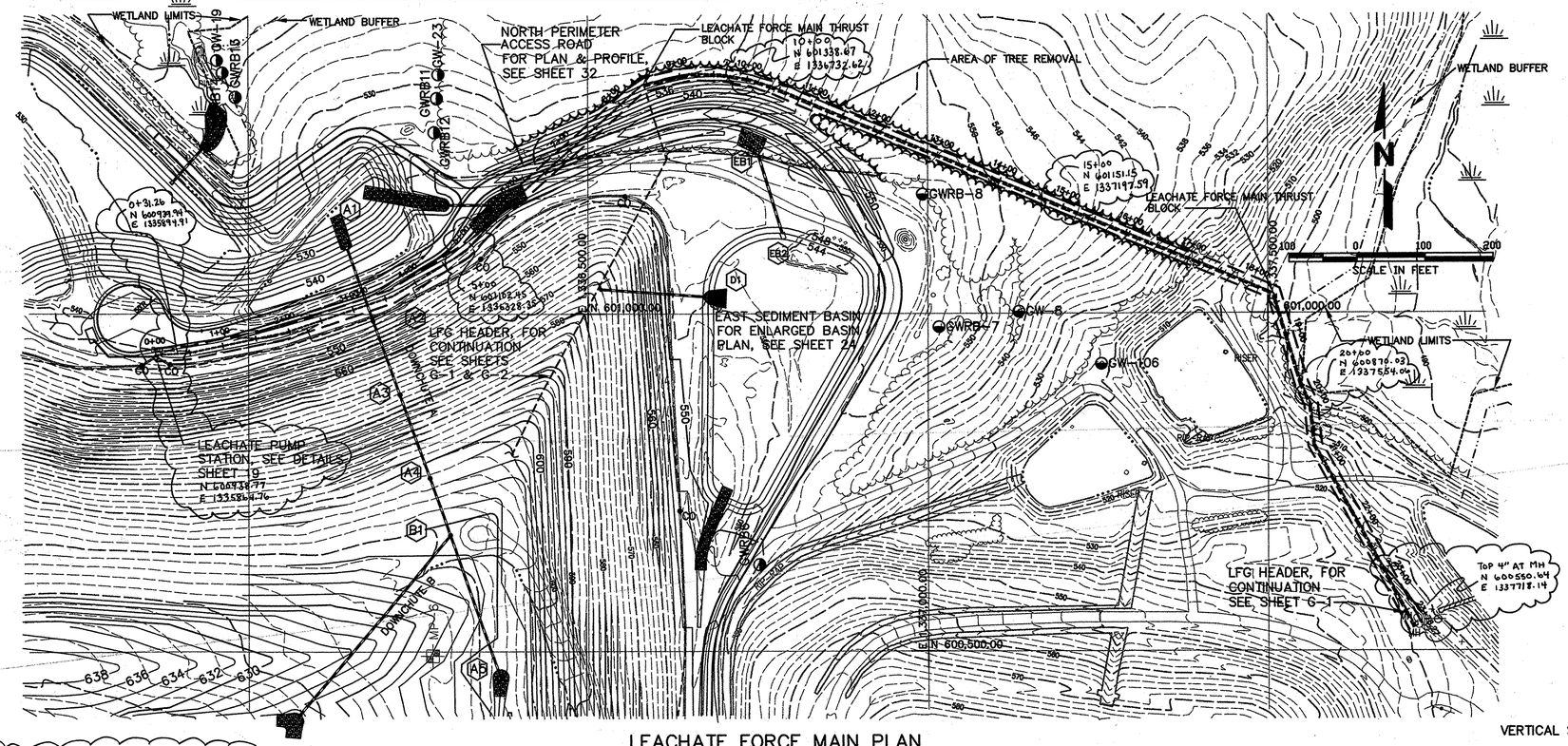

LEACHATE FORCE MAIN PLAN

LEGEND

- GW-102 — GROUNDWATER WELLS(EXIST.)
- MP-3 — LFG PROBES(TO BE REMOVED) SEE SHEET G2
- LFG-6 — LFG MONITORING WELLS(EXIST.)
- PROPERTY LINE
- CONFIRMED LIMITS OF WASTE
- B = BERM
- CO = CLEAN OUT
- PG = PIPE GUTTER
- HP = HIGH POINT
- B1 — DRAINAGE STRUCTURE DESIGNATION
- NEW HDPE PIPE/DOWNCHUTES/ CONCRETE DRAINAGE PIPES
- NEW LEACHATE COLLECTION TRENCH
- NEW LEACHATE FORCEMAIN
- EXISTING TREE LINE
- EXISTING SCRUB BRUSH VEGETATION
- PROPOSED TREE LINE
- WETLAND LIMITS
- WETLANDS
- WETLAND BUFFER
- LIMITS OF TREE REMOVAL

THIS SHEET FOR CONSTRUCTION OF LEACHATE FORCE MAIN ONLY.

VERTICAL SCALE: 10 0 10 20 SCALE IN FEET

HORIZONTAL SCALE: 100 0 100 200 SCALE IN FEET

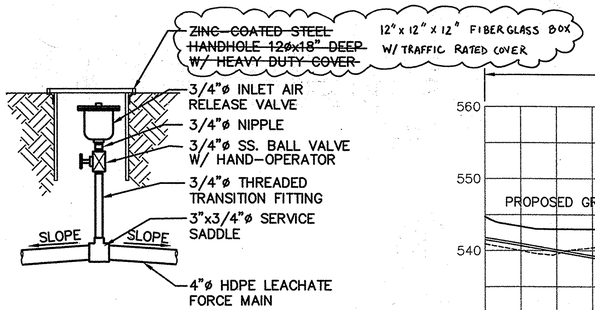

AIR RELEASE VALVE DETAIL (1 / 20|20)
SCALE: 1"=1'-0"

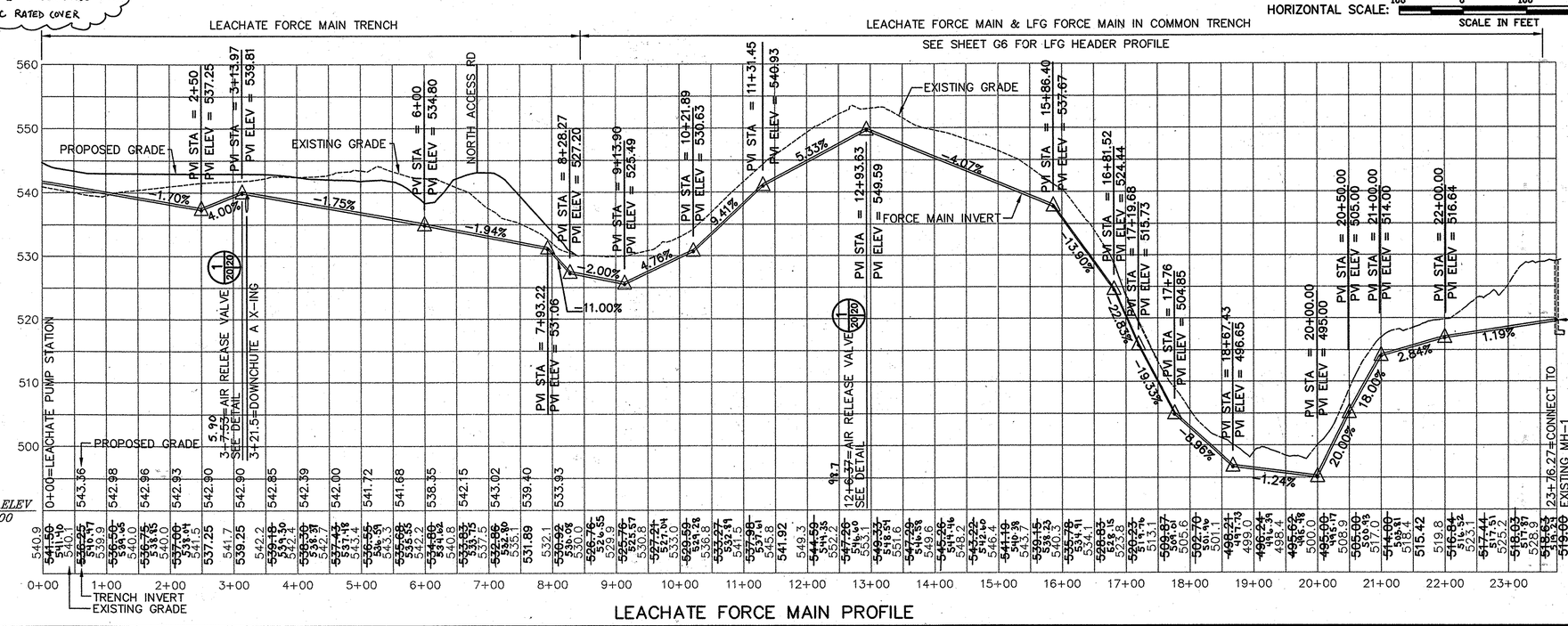

LEACHATE FORCE MAIN PROFILE

SUBDIVISION NAME	LOT/PARCEL	
ALPHA RIDGE SOLID WASTE MANAGEMENT CENTER	54,253,220,11	
LIBER/FOLIO	ZONE	TAX/ZONE MAP
10-847/606 16-878/215 10-691/314	PEC	10 & 16
WATER CODE	SEWER CODE	CENSUS TR.
PRIVATE, EXISTING	PRIVATE, EXISTING	60-30

DEPARTMENT OF PLANNING AND ZONING
HOWARD COUNTY, MARYLAND

DIRECTOR — DATE 11/3/97

CHIEF, DEVELOPMENT ENGINEERING DIVISION — DATE 10/31/97

CHIEF, DIVISION OF LAND DEVELOPMENT — DATE 11/3/97

DEPARTMENT OF PUBLIC WORKS
HOWARD COUNTY, MARYLAND

DIRECTOR OF PUBLIC WORKS — DATE 10/30/97 — CHIEF, BUREAU OF WASTE MANAGEMENT — DATE 10/30/97

SCS ENGINEERS
CONSULTING ENGINEERS
11260 ROGER BACON DRIVE
SUITE 300
RESTON, VIRGINIA 22090
PH. (703) 471-6150
FAX. (703) 471-6676

STATE OF MARYLAND — PAUL ANTHONY MANDEVILLE — No. 15818 — PROFESSIONAL ENGINEER
Paul Anthony Mandeville, PE

DES. RTT, EGC
DRN. EGC
CHK. PAM
DATE: 10-30-97

BY	NO.	REVISION	DATE
	6		
	5		
	4		
	3		
	2		
	1		

LEACHATE FORCE MAIN PLAN & PROFILE

ALPHA RIDGE LANDFILL
UNLINED CELL CLOSURE
CAPITAL PROJECT NO. C-0190-N

3rd ELECTION DISTRICT — HOWARD COUNTY, MARYLAND

SCALE: 1"=100'

SHEET 20 OF 121

M:\295077.01\FINAL PLAN1, FORCEPRO, PRV

LEACHFM

THIS SHEET FOR LEACHATE PUMP STATION UTILITIES ONLY.

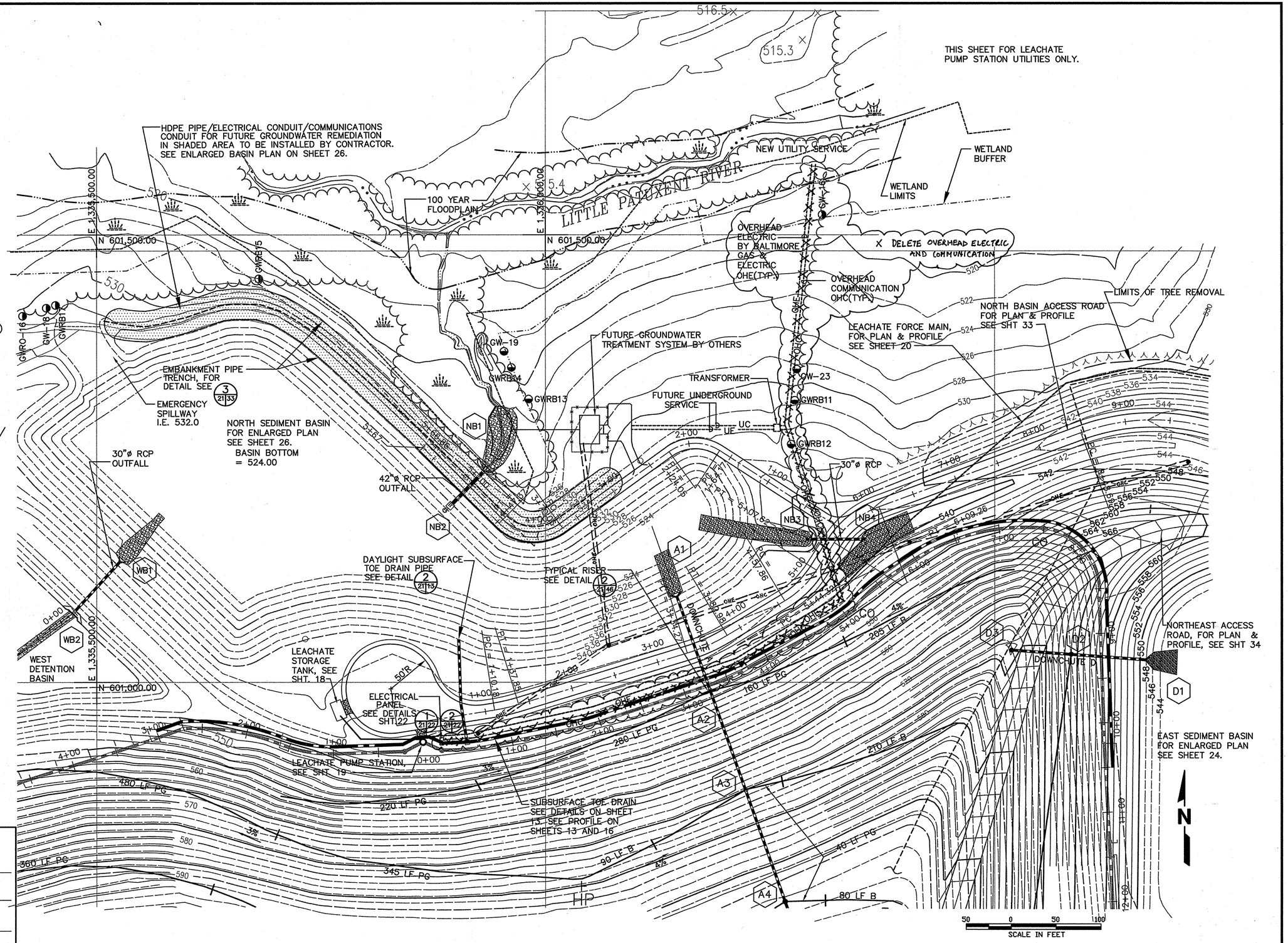

LEGEND

GW-102	GROUNDWATER WELLS(EXIST.)
MP-3	LFG PROBES(TO BE REMOVED) SEE SHEET G2
LFG-6	LFG MONITORING WELLS(EXIST.)
	PROPERTY LINE
	CONFIRMED LIMITS OF WASTE
B =	BERM
PG =	PIPE GUTTER
HP =	HIGH POINT
B1	DRAINAGE STRUCTURE DESIGNATION
	NEW HDPE PIPE/DOWNCHUTES/ CONCRETE DRAINAGE PIPES
	NEW LEACHATE COLLECTION TRENCH
	NEW LEACHATE FORCEMAIN
	EXISTING TREE LINE
	EXISTING SCRUB BRUSH VEGETATION
	PROPOSED TREE LINE
	WETLAND LIMITS
	WETLANDS
	LIMITS OF GEOMEMBRANE CAP
CO =	CLEAN OUT
	CONDUIT AREA
	DAYLIGHT SUBSURFACE TOE DRAIN PIPE
	WETLAND BUFFER
	LIMITS OF TREE REMOVAL
	LIMITS OF DISTURBANCE

SUBDIVISION NAME	LOT/PARCEL	
ALPHA RIDGE SOLID WASTE MANAGEMENT CENTER	54,253,220,11	
LIBER/FOLIO	ZONE	TAX/ZONE MAP
10-847/606 16-878/215 10-691/314	PEC	10 & 16
WATER CODE	SEWER CODE	CENSUS TR.
PRIVATE, EXISTING	PRIVATE, EXISTING	60-30

DEPARTMENT OF PLANNING AND ZONING
HOWARD COUNTY, MARYLAND

DIRECTOR — DATE 11/3/97
CHIEF, DEVELOPMENT ENGINEERING DIVISION — DATE 10/31/97
CHIEF, DIVISION OF LAND DEVELOPMENT — DATE 11/3/97

DEPARTMENT OF PUBLIC WORKS
HOWARD COUNTY, MARYLAND

DIRECTOR OF PUBLIC WORKS — DATE 10/31/97
CHIEF, BUREAU OF WASTE MANAGEMENT — DATE 10/30/97

SCS ENGINEERS
CONSULTING ENGINEERS
11260 ROGER BACON DRIVE
SUITE 300
RESTON, VIRGINIA 22090
PH. (703) 471-6150
FAX. (703) 471-6676

STATE OF MARYLAND — PAUL ANTHONY MANDEVILLE — REG. NO. 17-0-0 — PROFESSIONAL ENGINEER
Paul Anthony Mandeville, PE

DES. RTT
DRN. EGC,MEH
CHK. PAM
DATE: 10-30-97

BY	NO.	REVISION	DATE
	6		
	5		
	4		
	3		
	2		
	1		

LEACHATE PUMP STATION
ELECTRICAL SITE PLAN

ALPHA RIDGE LANDFILL
UNLINED CELL CLOSURE
CAPITAL PROJECT NO. C-0190-N
3rd ELECTION DISTRICT — HOWARD COUNTY, MARYLAND

SCALE: 1"=50'
SHEET 21 OF 1313

ELECTRIC
M:\295077.01\FINAL
ELECPLAN-B

SDP-97-128

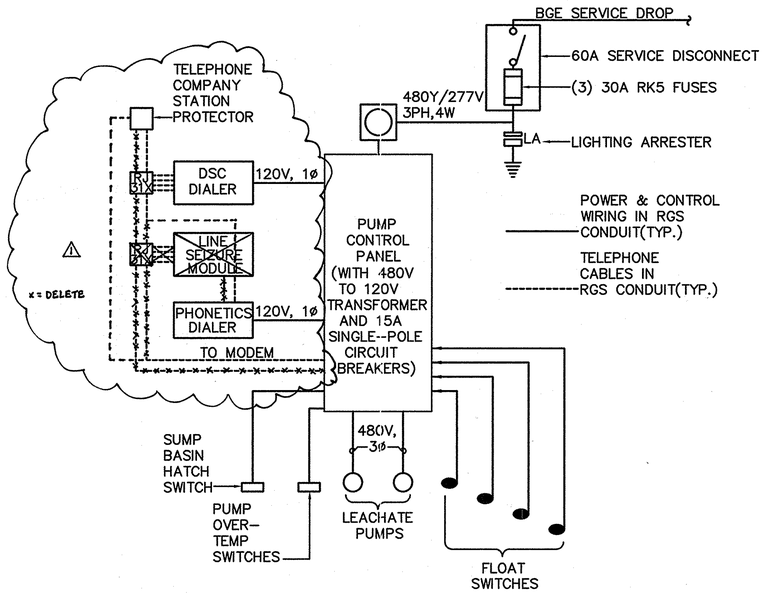

SINGLE LINE DIAGRAM DETAIL 1/21|22

NO SCALE

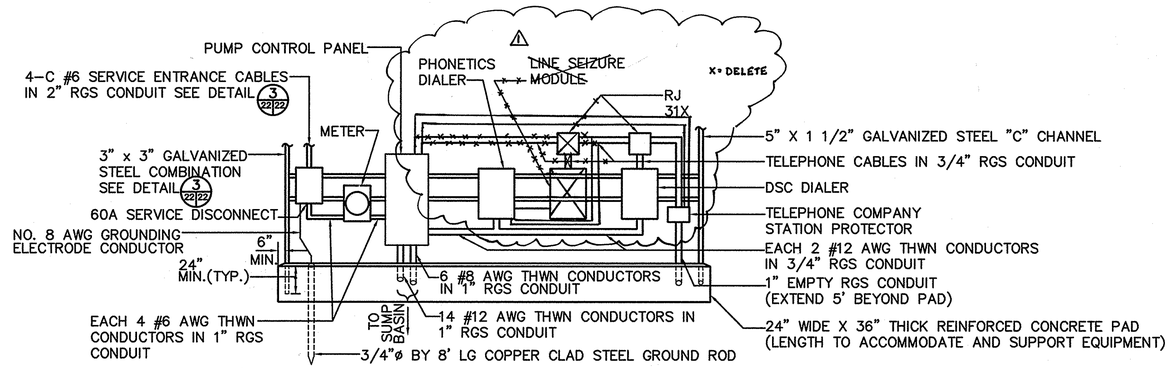

ELECTRICAL RISER DIAGRAM DETAIL 2/21|22

NO SCALE

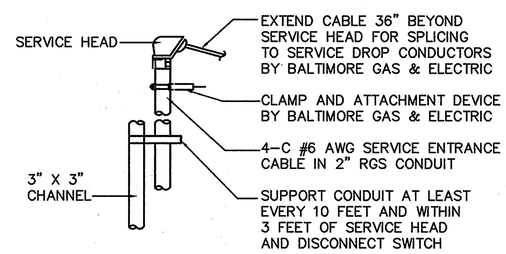

DETAIL 3/22|22

NO SCALE

NOTES:

1. BALTIMORE GAS & ELECTRIC WILL INSTALL SERVICE CABLE FROM THEIR POWER SOURCE TO THE SERVICE HEAD
2. EQUIPMENT SHALL BE ATTACHED TO THE CHANNELING WITH 3/4" GALVANIZED BOLTS, NUTS AND WASHERS.
3. CONTRACTOR SHALL OBTAIN METER BASE FROM BALTIMORE GAS & ELECTRIC AND INSTALL IT.

SUBDIVISION NAME	LOT/PARCEL	
ALPHA RIDGE SOLID WASTE MANAGEMENT CENTER	54,253,220,11	
LIBER/FOLIO	ZONE	TAX/ZONE MAP
10-847/606 16-878/215 10-691/314	PEC	10 & 16
WATER CODE	SEWER CODE	CENSUS TR.
PRIVATE, EXISTING	PRIVATE, EXISTING	60-30

DEPARTMENT OF PLANNING AND ZONING
HOWARD COUNTY, MARYLAND

DIRECTOR — DATE 11/3/97

CHIEF, DEVELOPMENT ENGINEERING DIVISION — DATE 10/30/97

CHIEF, DIVISION OF LAND DEVELOPMENT — DATE 11/2/97

DEPARTMENT OF PUBLIC WORKS
HOWARD COUNTY, MARYLAND

DIRECTOR OF PUBLIC WORKS — DATE 10/30/97

CHIEF, BUREAU OF WASTE MANAGEMENT — DATE 10/30/97

SCS ENGINEERS
CONSULTING ENGINEERS
11260 ROGER BACON DRIVE
SUITE 300
RESTON, VIRGINIA 22090
PH. (703) 471-6150
FAX. (703) 471-6676

STATE OF MARYLAND — RAYMOND F. IRBY — No. 9812 — PROFESSIONAL ENGINEER — 10/29/97

Raymond F. Irby, PE

DES. RFI
DRN. MEH
CHK. PAM
DATE: 10-30-97

BY	NO.	REVISION	DATE
	6		
	5		
	4		
	3		
	2		
RPI	1	MODIFICATION TO ELECTRICAL DIAGRAMS	8/26/98

LEACHATE PUMP STATION
ELECTRICAL DETAILS

ALPHA RIDGE LANDFILL
UNLINED CELL CLOSURE
CAPITAL PROJECT NO. C-0190-N

3rd ELECTION DISTRICT — HOWARD COUNTY, MARYLAND

SCALE: AS NOTED

SHEET 22 OF 131

ELEC-SING-B — M:\295077.01\FINAL\ — ELEC-SING

SDP-97-128

SEDIMENT CONTROL & POND CONSTRUCTION

( ) BY THE DEVELOPER:

"I/WE CERTIFY THAT ALL DEVELOPMENT AND/OR CONSTRUCTION WILL BE DONE ACCORDING TO THESE PLANS, AND THAT ANY RESPONSIBLE PERSONNEL INVOLVED IN THE CONSTRUCTION PROJECT WILL HAVE A CERTIFICATE OF ATTENDANCE AT A DEPARTMENT OF THE ENVIRONMENT APPROVED TRAINING PROGRAM FOR THE CONTROL OF SEDIMENT AND EROSION BEFORE BEGINNING THE PROJECT. I SHALL ENGAGE A REGISTERED PROFESSIONAL ENGINEER TO SUPERVISE POND CONSTRUCTION AND PROVIDE THE HOWARD CO. SOIL CONSERVATION DISTRICT WITH AN "AS-BUILT" PLAN OF THE POND WITHIN 30 DAYS OF COMPLETION. I ALSO AUTHORIZE PERIODIC ON-SITE INSPECTIONS BY THE HOWARD SOIL CONSERVATION DISTRICT."

John J. O'Hara — 10/30/97
SIGNATURE OF DEVELOPER — DATE
PRINT NAME BELOW SIGNATURE — JOHN J. O'HARA

( ) BY THE ENGINEER:

"I CERTIFY THAT THIS PLAN FOR POND CONSTRUCTION, EROSION AND SEDIMENT CONTROL REPRESENTS A PRACTICAL AND WORKABLE PLAN BASED ON MY PERSONAL KNOWLEDGE OF THE SITE CONDITIONS. THIS PLAN WAS PREPARED IN ACCORDANCE WITH THE REQUIREMENTS OF THE HOWARD CO. SOIL CONSERVATION DISTRICT. I HAVE NOTIFIED THE DEVELOPER THAT HE/SHE MUST ENGAGE A REGISTERED PROFESSIONAL ENGINEER TO SUPERVISE POND CONSTRUCTION AND PROVIDE THE HOWARD CO. SOIL CONSERVATION DISTRICT WITH AN "AS-BUILT" PLAN OF THE POND WITHIN 30 DAYS OF COMPLETION."

PAUL A. MANDEVILLE — Paul A. Mandeville — 10/30/97
SIGNATURE OF ENGINEER — DATE
PRINT NAME BELOW SIGNATURE

( ) THESE PLANS HAVE BEEN REVIEWED FOR THE HOWARD CO. SOIL CONSERVATION DISTRICT AND MEET THE TECHNICAL REQUIREMENTS FOR SMALL POND CONSTRUCTION, SOIL EROSION AND SEDIMENT CONTROL.

Chris Simmons /as. — 10/30/97
USDA – NATURAL RESOURCES CONSERVATION SERVICE — DATE

( ) THESE PLANS FOR SMALL POND CONSTRUCTION, SOIL EROSION AND SEDIMENT CONTROL MEET THE REQUIREMENTS OF THE HOWARD CO. SOIL CONSERVATION DISTRICT.

Robert W. Bricker /as — 10/30/97
HOWARD CO. SOIL CONSERVATION DISTRICT — DATE

AS-BUILT CERTIFICATION

I HEREBY CERTIFY THAT THE FACILITY SHOWN ON THIS PLAN WAS CONSTRUCTED AS SHOWN ON THE "AS-BUILT" PLANS AND MEETS THE APPROVED PLANS AND SPECIFICATIONS.

Michael R. Farnham — PE NO. 17650
SIGNATURE — DATE 10/10/01

CERTIFY MEANS TO STATE OR DECLARE A PROFESSIONAL OPINION BASED UPON ON-SITE INSPECTIONS AND MATERIAL TESTS WHICH ARE CONDUCTED DURING CONSTRUCTION. THE ON-SITE INSPECTIONS AND MATERIAL TESTS ARE THOSE INSPECTIONS AND TESTS DEEMED SUFFICIENT AND APPROPRIATE BY COMMONLY ACCEPTED ENGINEERING STANDARDS. CERTIFY DOES NOT MEAN OR IMPLY A GUARANTEE BY THE ENGINEER NOR DOES AN ENGINEER'S CERTIFICATION RELIEVE ANY OTHER PARTY FROM MEETING REQUIREMENTS IMPOSED BY CONTRACT, EMPLOYMENT, OR OTHER MEANS, INCLUDING MEETING COMMONLY ACCEPTED INDUSTRY PRACTICES.

OPERATION, MAINTENANCE AND INSPECTION

INSPECTION OF THE POND(S) SHOWN HEREON SHALL BE PERFORMED AT LEAST ANNUALLY, IN ACCORDANCE WITH THE CHECKLIST AND REQUIREMENTS CONTAINED WITHIN USDA, SCS "STANDARDS AND SPECIFICATIONS FOR PONDS" (MD-378). THE POND OWNER(S) AND ANY HEIRS, SUCCESSORS, OR ASSIGNS SHALL BE RESPONSIBLE FOR THE SAFETY OF THE POND AND THE CONTINUED OPERATION, SURVEILLANCE, INSPECTION, AND MAINTENANCE THEREOF. THE POND OWNER(S) SHALL PROMPTLY NOTIFY THE SOIL CONSERVATION DISTRICT OF ANY UNUSUAL OBSERVATIONS THAT MAY BE INDICATIONS OF DISTRESS SUCH AS EXCESSIVE SEEPAGE, TURBID SEEPAGE, SLIDING OR SLUMPING.

SUBDIVISION NAME	LOT/PARCEL	
ALPHA RIDGE SOLID WASTE MANAGEMENT CENTER	54,253,220,11	
LIBER/FOLIO	ZONE	TAX/ZONE MAP
10-847/606 10-678/215 10-691/314	PEC	10 & 16
WATER CODE	SEWER CODE	CENSUS TR.
PRIVATE, EXISTING	PRIVATE, EXISTING	60-30

DEPARTMENT OF PLANNING AND ZONING
HOWARD COUNTY, MARYLAND

DIRECTOR — DATE 11/3/97

CHIEF, DEVELOPMENT ENGINEERING DIVISION — DATE 10/30/97

CHIEF, DIVISION OF LAND DEVELOPMENT — DATE 11/3/97

DEPARTMENT OF PUBLIC WORKS
HOWARD COUNTY, MARYLAND

DIRECTOR OF PUBLIC WORKS — DATE 10/30/97

CHIEF, BUREAU OF WASTE MANAGEMENT — DATE 10/30/97

SPECIFICATIONS FOR SEDIMENT CONTROL AND POND CONSTRUCTION

THESE SPECIFICATIONS ARE APPROPRIATE TO ALL PONDS WITHIN THE SCOPE OF THE STANDARD FOR PRACTICE MD-378. ALL REFERENCES TO ASTM AND AASHTO SPECIFICATIONS APPLY TO THE MOST RECENT VERSION.

SITE PREPARATION

AREAS DESIGNATED FOR BORROW AREAS, EMBANKMENT, AND STRUCTURAL WORKS SHALL BE CLEARED, GRUBBED AND STRIPPED OF TOPSOIL. ALL TREES, VEGETATION, ROOTS AND OTHER OBJECTIONABLE MATERIAL SHALL BE REMOVED. CHANNEL BANKS AND SHARP BREAKS SHALL BE SLOPED TO NO STEEPER THAN 1:1.

AREAS TO BE COVERED BY THE RESERVOIR WILL BE CLEARED OF ALL TREES, BRUSH, LOGS, FENCES, RUBBISH AND OTHER OBJECTIONABLE MATERIAL UNLESS OTHERWISE DESIGNATED ON THE PLANS. TREES, BRUSH AND STUMPS SHALL BE CUT APPROXIMATELY LEVEL WITH THE GROUND SURFACE. FOR DRY STORM WATER MANAGEMENT PONDS, A MINIMUM OF A 50 FOOT RADIUS AROUND THE INLET STRUCTURE SHALL BE CLEARED.

ALL CLEARED AND GRUBBED MATERIAL SHALL BE DISPOSED OF OUTSIDE AND BELOW THE LIMITS OF THE DAM AND RESERVOIR AS DIRECTED BY THE OWNER OR HIS REPRESENTATIVE. WHEN SPECIFIED, A SPECIFIC QUANTITY OF TOPSOIL WILL BE STOCKPILED IN A SUITABLE LOCATION FOR USE ON THE EMBANKMENT AND OTHER DESIGNATED AREAS.

EARTH FILL

MATERIAL– THE FILL MATERIAL SHALL BE TAKEN FROM APPROVED DESIGNATED BORROW AREAS. IT SHALL BE FREE OF ROOTS, STUMPS, WOOD, RUBBISH, STONES GREATER THAN 6", AND FROZEN OR OTHER OBJECTIONABLE MATERIALS. FILL MATERIAL FOR THE CENTER OF THE EMBANKMENT AND CUT OFF TRENCH SHALL CONFORM TO UNIFIED SOIL CLASSIFICATION GC, SC, CH, or CL. CONSIDERATION SHALL BE GIVEN TO THE USE OF OTHER MATERIALS IN THE EMBANKMENT IF DESIGN AND CONSTRUCTION ARE SUPERVISED BY A GEOTECHNICAL ENGINEER.

PLACEMENT– AREAS ON WHICH FILL IS TO BE PLACED SHALL BE SCARIFIED PRIOR TO PLACEMENT OF FILL. FILL MATERIALS SHALL BE PLACED IN MAXIMUM 8" THICK (BEFORE COMPACTION) LAYERS WHICH ARE TO BE CONTINUOUS OVER THE ENTIRE LENGTH OF THE FILL. THE MOST PERMEABLE BORROW MATERIAL SHALL BE PLACED IN THE DOWNSTREAM PORTIONS OF THE EMBANKMENT. THE PRINCIPAL SPILLWAY MUST BE INSTALLED CONCURRENTLY WITH FILL PLACEMENT AND NOT EXCAVATED INTO THE EMBANKMENT.

COMPACTION– THE MOVEMENT OF THE HAULING AND SPREADING EQUIPMENT OVER THE FILL SHALL BE CONTROLLED SO THAT THE ENTIRE SURFACE OF EACH LIFT SHALL BE TRAVERSED BY NOT LESS THAN ONE TREAD TRACK OF THE EQUIPMENT OR COMPACTION SHALL BE ACHIEVED BY A MINIMUM OF FOUR COMPLETE PASSES OF A SHEEPSFOOT, RUBBER TIRED OR VIBRATORY ROLLER. FILL MATERIAL SHALL CONTAIN SUFFICIENT MOISTURE SUCH THAT THE REQUIRED DEGREE OF COMPACTION WILL BE OBTAINED WITH THE EQUIPMENT USED. THE FILL MATERIAL SHALL CONTAIN SUFFICIENT MOISTURE SO THAT IF FORMED INTO A BALL IT WILL NOT CRUMBLE YET NOT BE SO WET THAT WATER CAN BE SQUEEZED OUT.

WHERE A MINIMUM REQUIRED DENSITY IS SPECIFIED, IT SHALL NOT BE LESS THAN 95% OF MAXIMUM DRY DENSITY WITH A MOISTURE CONTENT WITHIN +/– 2% OF THE OPTIMUM. EACH LAYER OF FILL SHALL BE COMPACTED AS NECESSARY TO OBTAIN THAT DENSITY, AND IS TO BE CERTIFIED BY THE ENGINEER AT THE TIME OF CONSTRUCTION. ALL COMPACTION IS TO BE DETERMINED BY AASHTO METHOD T-99.

CUT OFF TRENCH– THE CUTOFF TRENCH SHALL BE EXCAVATED INTO IMPERVIOUS MATERIAL ALONG OR PARALLEL TO THE CENTERLINE OF THE EMBANKMENT AS SHOWN ON THE PLANS. THE BOTTOM WIDTH OF THE TRENCH SHALL BE GOVERNED BY THE EQUIPMENT USED FOR EXCAVATION, WITH THE MINIMUM WIDTH BEING FOUR FEET. THE DEPTH SHALL BE AT LEAST FOUR FEET BELOW EXISTING GRADE OR AS SHOWN ON THE PLANS. THE SIDE SLOPES OF THE TRENCH SHALL BE 1 TO 1 OR FLATTER. THE BACKFILL SHALL BE COMPACTED WITH CONSTRUCTION EQUIPMENT, ROLLERS OR HAND TAMPERS TO ASSURE MAXIMUM DENSITY AND MINIMUM PERMEABILITY.

STRUCTURE BACKFILL

BACKFILL ADJACENT TO PIPES OR STRUCTURES SHALL BE OF THE TYPE AND QUALITY CONFORMING TO THAT SPECIFIED FOR THE ADJOINING FILL MATERIAL. THE FILL SHALL BE PLACED IN HORIZONTAL LAYERS NOT TO EXCEED FOUR INCHES IN THICKNESS AND COMPACTED BY HAND TAMPERS OR OTHER MANUALLY DIRECTED COMPACTION EQUIPMENT. THE MATERIAL NEEDS TO FILL COMPLETELY ALL SPACES UNDER AND ADJACENT TO THE PIPE. AT NO TIME DURING THE BACKFILLING OPERATION SHALL DRIVEN OVER ANY PART OF CONCRETE STRUCTURE OR PIPE, UNLESS THERE IS A COMPACTED FILL OF 24" OR GREATER OVER THE STRUCTURE OR PIPE.

PIPE CONDUITS

ALL PIPES SHALL BE CIRCULAR IN CROSS SECTION.

REINFORCED CONCRETE PIPE– ALL OF THE FOLLOWING CRITERIA SHALL APPLY FOR REINFORCED CONCRETE PIPE:

1. MATERIALS– REINFORCED CONCRETE PIPE SHALL HAVE BELL AND SPIGOT JOINTS WITH RUBBER GASKETS AND SHALL EQUAL OR EXCEED ASTM DESIGNATION C-361.

2. BEDDING– ALL REINFORCED CONCRETE PIPE CONDUITS SHALL BE LAID IN A CONCRETE BEDDING FOR THEIR ENTIRE LENGTH. THIS BEDDING SHALL CONSIST OF HIGH SLUMP CONCRETE PLACED UNDER THE PIPE AND UP THE SIDES OF THE PIPE AT LEAST 10 % OF ITS OUTSIDE DIAMETER WITH A MINIMUM THICKNESS OF 3 INCHES, OR AS SHOWN ON THE DRAWINGS.

3. LAYING PIPE– BELL AND SPIGOT PIPE SHALL BE PLACED WITH THE BELL END UPSTREAM. JOINTS SHALL BE MADE IN ACCORDANCE WITH RECOMMENDATIONS OF THE MANUFACTURER OF THE MATERIAL. AFTER THE JOINTS ARE SEALED FOR THE ENTIRE LINE, THE BEDDING SHALL BE SO THAT ALL SPACES UNDER THE PIPE ARE FILLED. CARE SHALL BE EXERCISED TO PREVENT ANY DEVIATION FROM THE ORIGINAL LINE AND GRADE OF THE PIPE. THE FIRST JOINT MUST BE LOCATED WITHIN TWO FEET FROM THE RISER.

4. BACK FILLING SHALL CONFORM TO "STRUCTURE BACKFILL".

5. OTHER DETAILS (ANTI-SEEP COLLARS, VALVES, ETC.) SHALL BE AS SHOWN ON THE DRAWINGS.

CONCRETE

CONCRETE SHALL MEET THE REQUIREMENTS OF MARYLAND DEPARTMENT OF TRANSPORTATION, STATE HIGHWAY ADMINISTRATION STANDARD SPECIFICATIONS FOR CONSTRUCTION AND MATERIALS, SECTION 608, MIX NO. 3.

ROCK RIPRAP

ROCK RIPRAP SHALL MEET THE REQUIREMENTS OF MARYLAND DEPARTMENT OF TRANSPORTATION, STATE HIGHWAY ADMINISTRATION STANDARD SPECIFICATIONS FOR CONSTRUCTION AND MATERIALS, SECTION 905.

THE RIPRAP SHALL BE PLACED ON THE REQUIRED THICKNESS IN ONE OPERATION. THE ROCK SHALL BE DELIVERED AND PLACED IN A MANNER THAT WILL INSURE THE RIPRAP IN PLACE SHALL BE REASONABLY HOMOGENEOUS WITH THE LARGER ROCKS UNIFORMLY DISTRIBUTED AND FIRMLY IN CONTACT ONE TO ANOTHER WITH THE SMALLER ROCKS FILLING THE VOIDS BETWEEN THE LARGER ROCKS. FILTER CLOTH SHALL BE PLACED UNDER ALL RIPRAP AND SHALL MEET THE REQUIREMENTS OF MARYLAND DOT, STATE HIGHWAY ADMINISTRATION STANDARD SPECIFICATIONS FOR CONSTRUCTION AND MATERIALS, SECTION 919.12.

CARE OF WATER DURING CONSTRUCTION

ALL WORK ON PERMANENT STRUCTURES SHALL BE CARRIED OUT IN AREAS FREE FROM WATER. THE CONTRACTOR SHALL CONSTRUCT AND MAINTAIN ALL TEMPORARY DIKES, LEVEES, COFFERDAMS, DRAINAGE CHANNELS, AND STREAM DIVERSIONS NECESSARY TO PROTECT THE AREAS TO BE OCCUPIED BY THE PERMANENT WORKS. THE CONTRACTOR SHALL ALSO FURNISH, INSTALL, OPERATE, AND MAINTAIN ALL NECESSARY PUMPING AND OTHER EQUIPMENT REQUIRED FOR REMOVAL OF WATER FROM THE VARIOUS PARTS OF THE WORK AND MAINTAIN THE EXCAVATIONS, FOUNDATION, AND OTHER PARTS OF THE WORK FREE FROM WATER REQUIRED OR DIRECTED BY THE ENGINEER FOR CONSTRUCTING EACH PART OF THE WORK. AFTER HAVING SERVED THEIR PURPOSE, ALL TEMPORARY PROTECTIVE WORKS SHALL BE REMOVED OR LEVELED AND GRADED TO THE EXTENT REQUIRED TO PREVENT OBSTRUCTION IN ANY DEGREE WHATSOEVER OF THE FLOW OF WATER TO THE SPILLWAY OR OUTLET WORKS AND SO AS NOT TO INTERFERE IN ANY WAY WITH THE OPERATION OR MAINTENANCE OF THE STRUCTURE. STREAM DIVERSIONS SHALL BE MAINTAINED UNTIL THE FULL FLOW CAN BE PASSED THROUGH THE PERMANENT WORKS. THE REMOVAL OF WATER FROM THE REQUIRED EXCAVATION AND THE FOUNDATION SHALL BE ACCOMPLISHED IN A MANNER AND TO THE EXTENT THAT WILL MAINTAIN STABILITY OF THE EXCAVATED SLOPES AND BOTTOM OF REQUIRED EXCAVATIONS AND WILL ALLOW SATISFACTORY PERFORMANCE OF ALL CONSTRUCTION OPERATIONS. DURING THE PLACING AND COMPACTING OF MATERIAL IN REQUIRED EXCAVATIONS, THE WATER LEVEL AT THE LOCATIONS BEING REFILLED SHALL BE MAINTAINED BELOW THE BOTTOM OF THE EXCAVATION AT SUCH LOCATIONS WHICH MAY REQUIRE DRAINING THE WATER TO SUMPS FROM WHICH THE WATER SHALL BE PUMPED

STABILIZATION

ALL BORROW AREAS SHALL BE GRADED TO PROVIDE PROPER DRAINAGE AND LEFT IN A SIGHTLY CONDITION. ALL EXPOSED SURFACES OF THE EMBANKMENT, SPILLWAY, SPOIL AND BORROW AREAS, AND BERMS SHALL BE STABILIZED BY SEEDING, LIMING, FERTILIZING AND MULCHING IN ACCORDANCE WITH THE MARYLAND SOIL CONSERVATION SERVICE STANDARDS AND SPECIFICATIONS FOR CRITICAL AREA PLANTING (MD-342) OR AS SHOWN ON THE DRAWINGS.

EROSION AND SEDIMENT CONTROL

CONSTRUCTION OPERATIONS WILL BE CARRIED OUT IN SUCH A MANNER THAT EROSION WILL BE CONTROLLED AND WATER AND AIR POLLUTION MINIMIZED. STATE AND LOCAL LAWS CONCERNING POLLUTION ABATEMENT WILL BE FOLLOWED. CONSTRUCTION PLANS SHALL DETAIL EROSION AND SEDIMENT CONTROL MEASURES TO BE EMPLOYED DURING THE CONSTRUCTION PROCESS.

CORRUGATED HDPE DRAINAGE PIPE– ALL OF THE FOLLOWING CRITERIA SHALL APPLY FOR CORRUGATED HDPE DRAINAGE PIPE:

1. BASIC MATERIALS:

A. PIPE AND FITTINGS: THE PIPE AND FITTINGS SHALL BE MADE OF HIGH DENSITY, HIGH MOLECULAR WEIGHT POLYETHYLENE PIPE MATERIAL MEETING THE REQUIREMENTS OF TYPE III, CLASS C, CATEGORY 5, GRADE P34, AS DEFINED IN ASTM D 1248 STANDARD SPECIFICATION FOR POLYETHYLENE PLASTICS MOLDING AND EXTRUSION MATERIALS. MATERIALS MEETING THE REQUIREMENTS OF CELL CLASSIFICATION PE 334433C OR HIGHER CELL CLASSIFICATION IN ACCORDANCE WITH ASTM D 3350 ARE ALSO SUITABLE FOR MAKING PIPE PRODUCTS UNDER THE SPECIFICATION. CLEAN REWORK MATERIAL GENERATED BY THE MANUFACTURER'S OWN PRODUCTION MAY BE USED SO LONG AS THE PIPES OR FITTINGS PRODUCED MEET ALL THE REQUIREMENTS OF THIS SPECIFICATION.

B. OTHER PIPE MATERIALS: MATERIALS OTHER THAN THOSE SPECIFIED IN SECTION A MAY BE USED AS PART OF THE PROFILE CONSTRUCTION e.g. AS A CORE TUBE TO SUPPORT THE SHAPE OF THE PROFILE DURING PROCESSING, PROVIDED THAT THESE MATERIALS ARE COMPATIBLE WITH THE BASE POLYETHYLENE MATERIAL AND ARE COMPLETELY ENCAPSULATED IN THE FINISHED PRODUCT AND IN NO WAY COMPROMISE THE PERFORMANCE OF THE PIPE PRODUCTS IN THE INTENDED USE. EXAMPLES OF SUITABLE MATERIALS INCLUDE POLYETHYLENE AND POLYPROPYLENE.

C. GASKETS: GASKETS SHALL MEET THE REQUIREMENTS OF ASTM F 477 AND BE MOLDED INTO A CIRCULAR FORM OR EXTRUDED TO THE PROPER SECTION AND THEN SPLICED INTO CIRCULAR FORM AND SHALL BE MADE OF A PROPERLY CURED HIGH GRADE ELASTOMERIC COMPOUND. THE BASIC POLYMER SHALL BE NATURAL RUBBER, SYNTHETIC ELASTOMER OR A BLEND OF BOTH.

D. LUBRICANT: THE LUBRICANT USED FOR ASSEMBLY OF GASKET JOINTS SHALL HAVE NO DETRIMENTAL EFFECT ON THE GASKET OR ON THE PIPE.

E. THERMAL WELDING MATERIAL: THE MATERIAL USED FOR THERMALLY WELDED PIPE JOINTS SHALL MEET THE REQUIREMENTS ESTABLISHED FOR THE BASIC PIPE MATERIALS AS DETAILED IN SECTION A.

2. REQUIREMENTS:

A. APART FROM THE BUILT-IN VOIDS AND HOLLOWS ASSOCIATED WITH SOME PROFILE WALL DESIGNS, THE PIPE AND FITTINGS SHALL BE HOMOGENOUS THROUGHOUT AND FREE FROM VISIBLE CRACKS, HOLES, FOREIGN INCLUSIONS OR OTHER INJURIOUS DEFECTS. THE PIPE SHALL BE AS UNIFORM AS COMMERCIALLY PRACTICAL IN COLOR, OPACITY, DENSITY AND OTHER PHYSICAL PROPERTIES.

B. DIMENSIONS: PIPE DIMENSIONS– THE AVERAGE INSIDE DIAMETER AND THE MINIMUM WALL THICKNESS OF THE WATERWAY OF THE PIPE SHALL COMPLY WITH THE VALUES SHOWN IN TABLE 1. STANDARD LAYING LENGTHS SHALL BE 20 FEET +/– 2 INCHES.

FITTING DIMENSIONS– FITTINGS SUCH AS COUPLINGS, WYES, TEES, ADAPTORS, ETC. FOR USE IN LAYING HDPE GRAVITY SEWER PIPE SHALL HAVE LAYING LENGTH DIMENSIONS AS RECOMMENDED BY THE MANUFACTURER.

C. FLATTENING: THERE SHALL BE NO EVIDENCE OF SPLITTING, CRACKING OR BREAKING WHEN THE PIPE IS TESTED IN ACCORDANCE WITH SECTION 3C (FLATTENING).

D. RING STIFFNESS CONSTANT: NORMAL RING STIFFNESS CONSTANT (RSC) VALUES FOR THE PIPE BETWEEN BELL AND SPIGOT SECTIONS SHALL COMPLY WITH THE MINIMUM VALUES SHOWN IN TABLE 2 WHEN TESTED IN ACCORDANCE WITH SECTION 3C (RING STIFFNESS).

E. JOINT TIGHTNESS BELL AND SPIGOT CONNECTIONS WHETHER GASKET STYLE OR THERMAL WELD TYPE WHEN JOINED IN ACCORDANCE WITH MANUFACTURERS RECOMMENDATIONS SHALL SHOW NO SIGN OF LEAKAGE WHEN TESTED IN ACCORDANCE WITH 3C (JOINT TIGHTNESS). IN THE CASE OF GASKET TYPE, ALL SURFACES OF THE JOINT UPON WHICH THE GASKET MAY BEAR, SHALL BE SMOOTH AND FREE OF SUCH IMPERFECTIONS, RIDGES, FRACTURES OR CRACKS THAT COULD ADVERSELY AFFECT SEALABILITY.

PIPE JOINTS SHALL BE BELL AND SPIGOT TYPE, DESIGNED TO REMAIN WATER TIGHT UNDER BOTH AN INTERNAL AND EXTERNAL HYDROSTATIC PRESSURE OF 10.8 POUNDS PER SQUARE INCH. COMPRESSION RELEASE (COMPENSATING) "O"-RING JOINTS SHALL BE DESIGNED TO REMAIN WATER TIGHT UNDER BOTH AN INTERNAL AND EXTERNAL HYDROSTATIC PRESSURE OF 5.0 POUNDS PER SQUARE INCH.

TABLE 2: MINIMUM RING STIFFNESS CONSTANT (RSC) VALUES

NOMINAL PIPE CLASSIFICATION	RSC (LBS./FT. OF LENGTH)
63	56
100	90

3. INSPECTION AND TESTING:

A. CERTIFICATION: AS THE BASIS OF THE ACCEPTANCE OF THE PRODUCT, THE MANUFACTURER SHALL FURNISH A CERTIFICATE OF CONFORMANCE TO THESE SPECIFICATIONS UPON REQUEST. WHEN PRIOR AGREEMENT IS BEING MADE IN WRITING BETWEEN THE PURCHASER AND THE MANUFACTURER, THE MANUFACTURER SHALL FURNISH OTHER CONFORMANCE CERTIFICATION IN THE FORM OF AFFIDAVIT OF CONFORMANCE, TEST RESULTS, OR COPIES OF TEST REPORT.

B. PHYSICAL TEST REQUIREMENTS: SAMPLING– THE SELECTION OF THE SAMPLE(S) PRIOR TO AND DURING TESTS SHALL BE AS AGREED UPON BY THE PURCHASER AND THE MANUFACTURER. IN CASE OF NO PRIOR AGREEMENT, ANY SAMPLE SELECTED BY THE MANUFACTURER SHALL BE DEEMED ADEQUATE.

CONDITIONING– CONDITIONING OF SAMPLES PRIOR TO AND DURING TESTS SHALL BE AS AGREED UPON BY THE PURCHASER AND MANUFACTURER. IN CASE OF NO PRIOR AGREEMENT, THE CONDITIONING PROCEDURE USED BY THE MANUFACTURER SHALL BE DEEMED ADEQUATE. WHEN REFEREE TESTS ARE REQUIRED, CONDITION THE SPECIMENS IN ACCORDANCE WITH PROCEDURE A IN METHOD D 618 AT 73.4 +/– 3.6°F (23 +/– 2°C) AND 50 +/– 5% RELATIVE HUMIDITY FOR NOT LESS THAN 40 HOURS PRIOR TO TEST. CONDUCT TESTS UNDER THE SAME CONDITIONS OF TEMPERATURE AND HUMIDITY UNLESS OTHERWISE SPECIFIED.

RETEST AND REJECTION– IF THE RESULTS OF ANY TESTS DO NOT MEET THE REQUIREMENTS OF THIS SPECIFICATION, THE TESTS MAY BE CONDUCTED AGAIN IN ACCORDANCE WITH AGREEMENT BETWEEN PURCHASER AND SELLER. IN RETESTING, THE PRODUCT REQUIREMENTS OF THIS SPECIFICATION SHALL BE MET AND THE TEST METHODS DESIGNATED IN THIS SPECIFICATION SHALL BE FOLLOWED. IF UPON RETEST FAILURE OCCURS, THE QUANTITY OF PRODUCT REPRESENTED BY THE TESTS SHALL BE REJECTED.

C. TEST METHODS: RING STIFFNESS CONSTANT– DETERMINE THE RSC BY DIVIDING THE PARALLEL PLATE LOAD, IN POUNDS PER FOOT OF PIPE, BY THE RESULTING DEFLECTION, IN PERCENT, AT 3% DEFLECTION. THE TEST SHALL BE CONDUCTED IN ACCORDANCE WITH ASTM D 2412 EXCEPT THAT THE RATE OF LOADING SHALL BE TWO INCHES PER MINUTE AND THE LENGTH OF THE TEST PIECES SHALL BE AS FOLLOWS:
TEST THREE SPECIMENS EACH SQUARELY CUT FROM A PIPE SECTION. FOR PIPE SIZES UP TO 48 INCH DIAMETER THE TEST SPECIMEN SHALL HAVE A LENGTH OF TWO PIPE DIAMETERS OR 4 FEET (1.22 M) WHICHEVER IS LESS. FOR SIZES LARGER THAN 48 INCH DIAMETER, THE LENGTH OF THE TEST SPECIMEN SHALL BE ONE PIPE DIAMETER OR 6 FEET (1.83 M) WHICHEVER IS LESS. THE RSC SHALL EQUAL OR EXCEED THE MINIMUM VALUES IN TABLE 2.

FLATTENING– FLATTEN THREE SPECIMENS OF PIPE, PREPARED IN ACCORDANCE WITH THE PRECEDING SECTION, IN A SUITABLE PRESS UNTIL THE INTERNAL DIAMETER HAS BEEN REDUCED TO 40% OF THE ORIGINAL INSIDE DIAMETER OF THE PIPE. THE RATE OF LOADING SHALL BE UNIFORM AND AT 2 INCHES PER MINUTE. THE TEST SPECIMENS, WHEN EXAMINED UNDER NORMAL LIGHT AND THE UNAIDED EYE SHALL SHOW NO EVIDENCE OF SPLITTING, CRACKING, BREAKING OR SEPARATION OF THE PIPE WALLS OR BRACING PROFILES.

JOINT TIGHTNESS– TEST IN ACCORDANCE WITH ASTM D 3212 WITH THE EXCEPTION THAT THE SHEAR LOAD TRANSFER BARS AND SUPPORTS SHALL BE REPLACED WITH 6" WIDE SUPPORT BLOCKS THAT CAN BE EITHER FLAT OR CONTOURED TO CONFORM TO THE PIPE'S OUTER CONTOUR.

NOTE: RING STIFFNESS CONSTANT, FLATTENING AND JOINT TIGHTNESS TESTS ARE NOT INTENDED TO BE ROUTINE QUALITY CONTROL TESTS BUT RATHER TO QUALIFY PIPE TO A SPECIFIED LEVEL OF PERFORMANCE.

TABLE 1: PIPE DIMENSIONS AND TOLERANCES

		RSC CLASS 40	RSC CLASS 63	RSC CLASS 100	RSC CLASS 160
NOMINAL ID (INS)	AVERAGE ID (INS)	MIN. WALL IN PIPE WATERWAY (INS)	MIN. WALL IN PIPE WATERWAY (INS)	MIN. WALL IN PIPE WATERWAY (INS)	MIN. WALL IN PIPE WATERWAY (INS)
18	18.00+-0.20	.19	.19	.19	.24
24	24.00+-0.20	.19	.19	.24	.27
30	30.00+-0.25	.19	.24	.26	.28

SCS ENGINEERS
CONSULTING ENGINEERS
11260 ROGER BACON DRIVE
SUITE 300
RESTON, VIRGINIA 22090
PH. (703) 471-6150
FAX. (703) 471-6676

STATE OF MARYLAND — PAUL ANTHONY MANDEVILLE — No. 14959 — PROFESSIONAL ENGINEER
Paul Anthony Mandeville, PE

DES.	RTT
DRN.	SC
CHK.	PAM
DATE:	10-30-97

BY	NO.	REVISION	DATE
	6		
	5		
	4		
	3		
	2		
	1		

POND CONSTRUCTION SPECIFICATIONS AND CERTIFICATIONS

ALPHA RIDGE LANDFILL
UNLINED CELL CLOSURE
CAPITAL PROJECT NO. C-0190-N

3rd ELECTION DISTRICT — HOWARD COUNTY, MARYLAND

SCALE: AS NOTED

SHEET 23 OF 134

SDP-97-128

M:\295077.01\FINAL HDPENOTES,ASBNOTE,SPECS,PONDNOTE,TABLES,TABLES2 SPEC-B

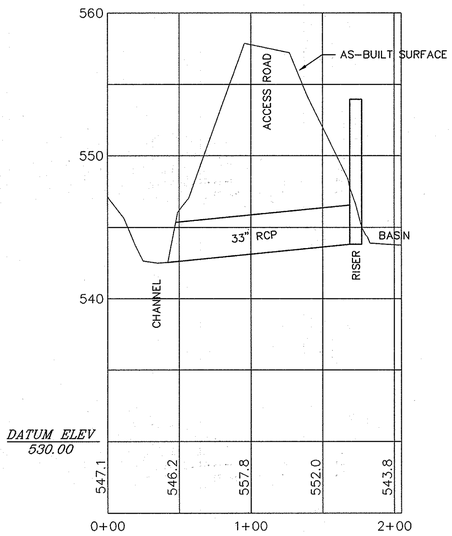

PROFILE ALONG OUTLET
EAST BASIN

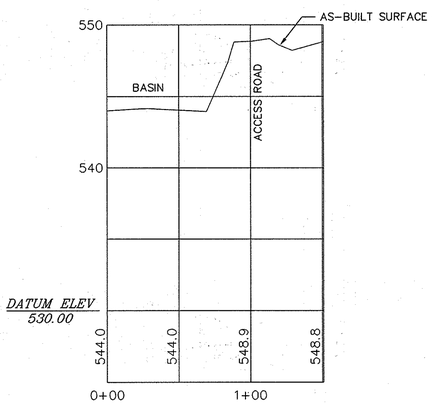

SPILLWAY PROFILE
EAST BASIN

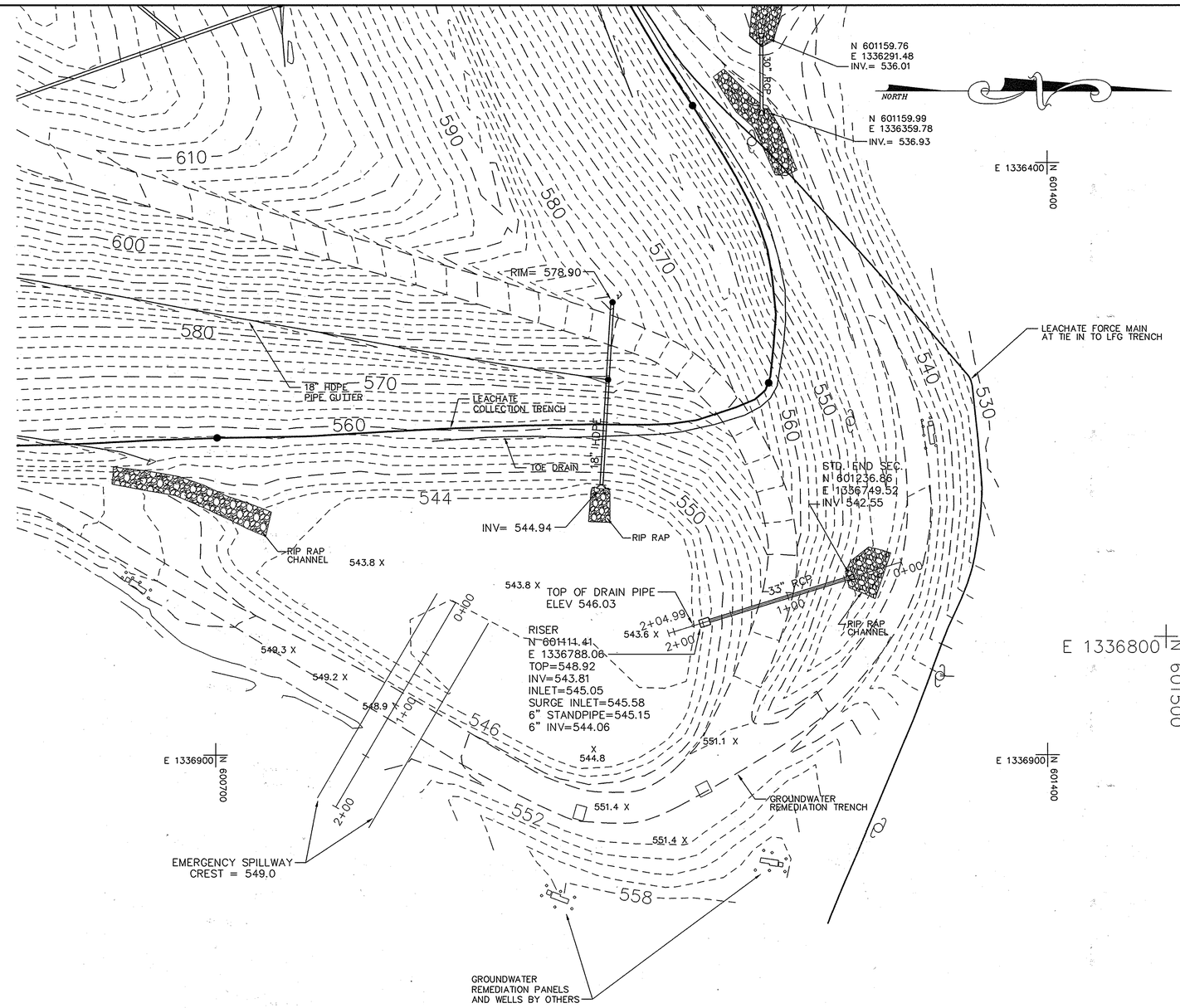

GRAPHIC SCALE

50 0 25 50 100 200

(IN FEET)
1 inch = 50 ft.

REVISIONS		
DATE	BY	DESCRIPTION
4-5-00	TWH	ADDED PROFILES
10-17-00	TWH	LABEL EMERGENCY SPILLWAY.

DESIGNED BY: _____ DATE
DRAWN BY: TWH 2-26-00 DATE
CHECKED BY: _____ DATE
APPROVED BY: _____ DATE

ENGINEERING TECHNOLOGIES ASSOCIATES, INC.
ENGINEERS * PLANNERS * SURVEYORS
3458 ELLICOTT CENTER DRIVE SUITE 101
ELLICOTT CITY, MARYLAND 21043
BALTO. (410)461-9920 FAX (410)750-8565

STATE OF MARYLAND CLIFFORD NILES BOWER REGISTERED PROPERTY LINE SURVEYOR

H. E. SARGENT, INC. CONTRACTORS • STILLWATER, ME.

EAST BASIN AS-BUILT

ALPHA RIDGE LANDFILL CELL CLOSURE

HOWARD COUNTY MARYLAND

SCALE : 1"=50' | CONTRACT NO.: 98301.10 | DATE : 2-27-2000 | SHEET : 24-AB OF 137

Eb-asblt.dwg 10-25-00 10:18:49 am EST
Eb-asblt.dwg 10-25-00 10:18:49 am EST

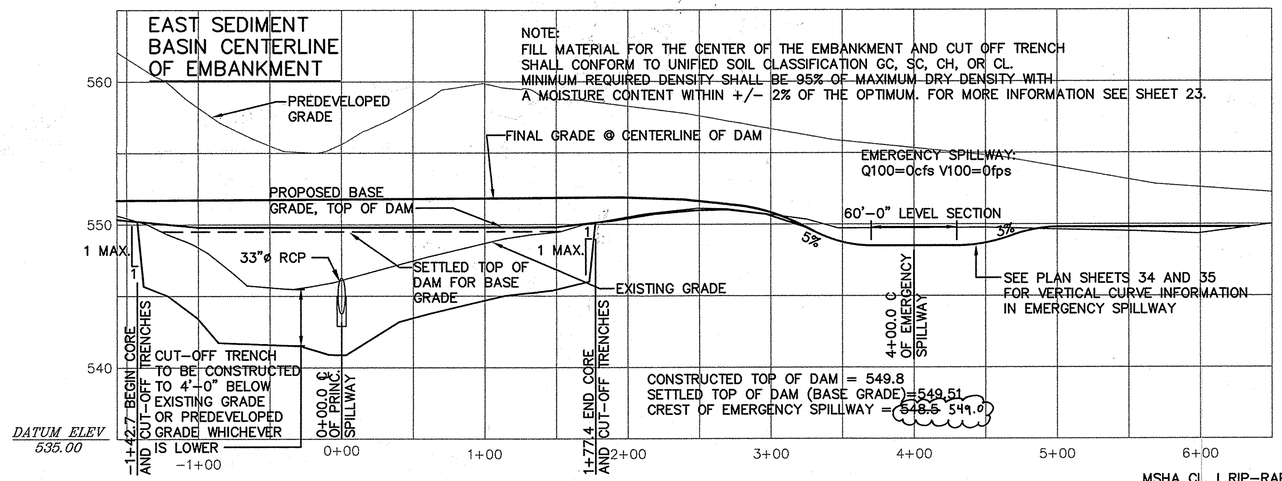

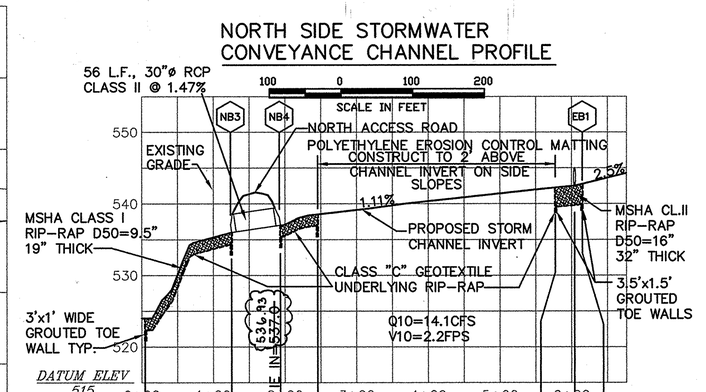

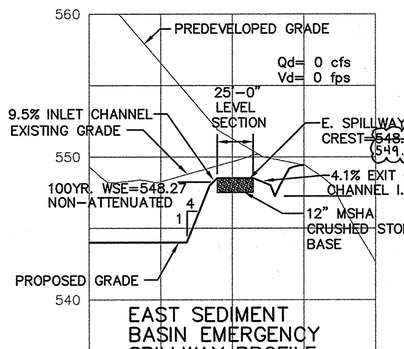

EAST SEDIMENT BASIN EMERGENCY SPILLWAY PROFILE

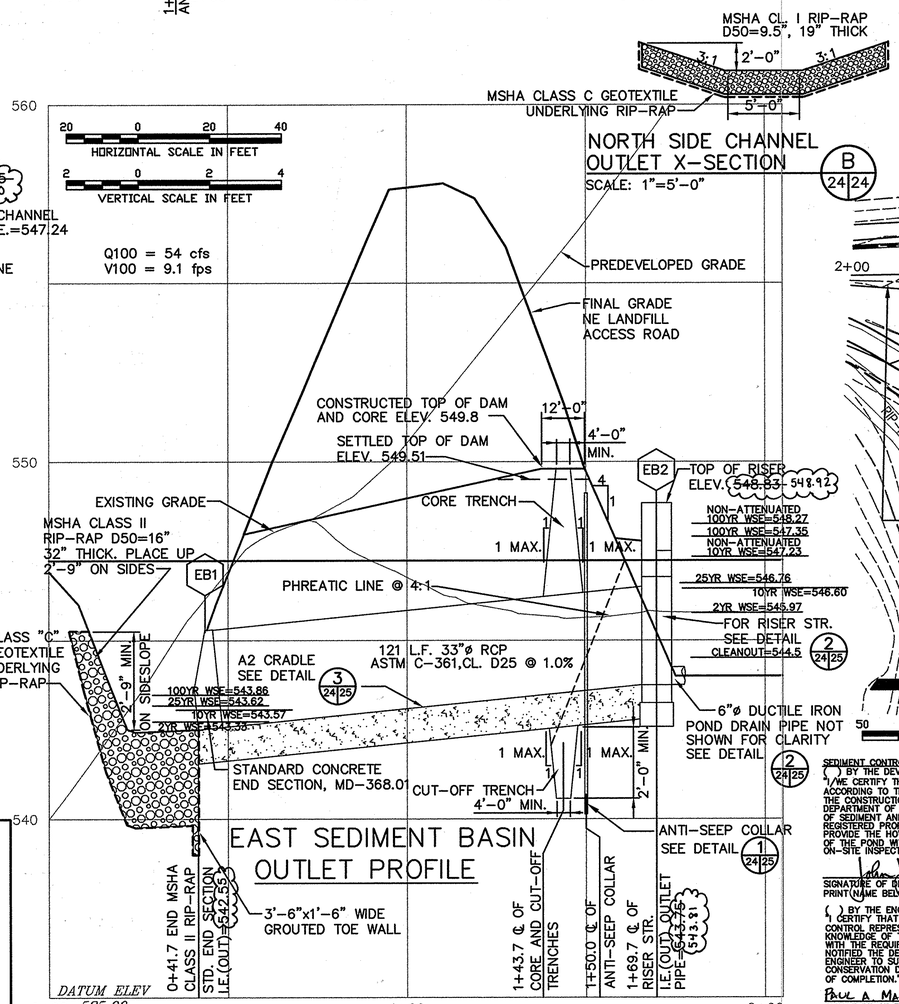

EAST SEDIMENT BASIN OUTLET PROFILE

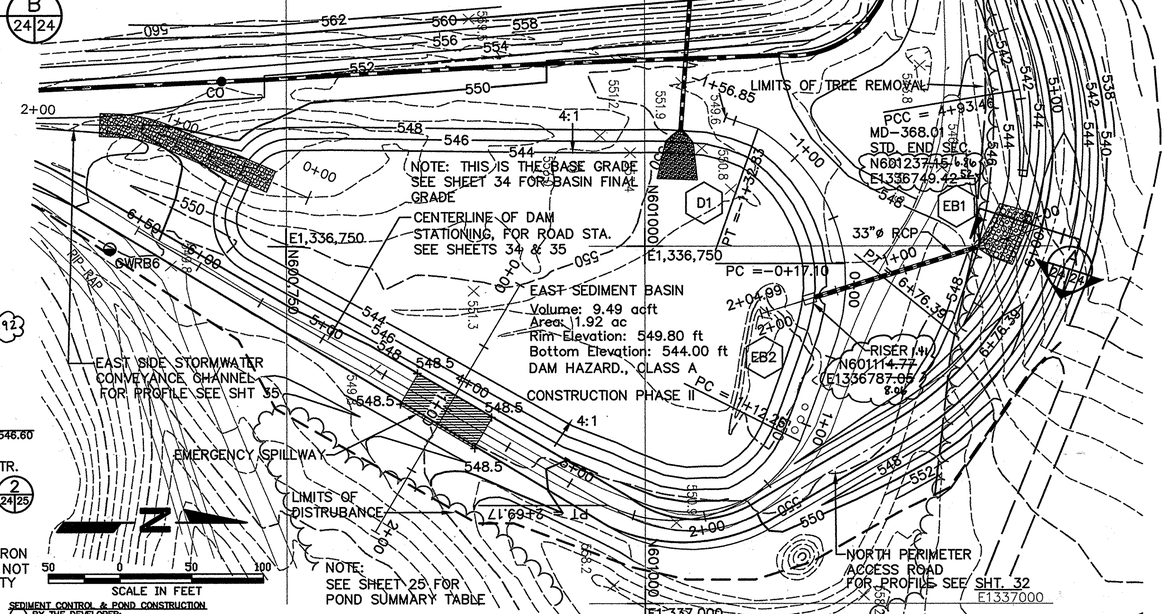

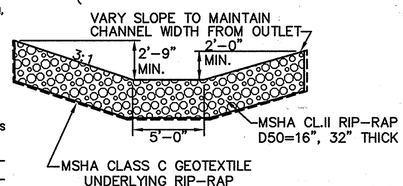

EAST BASIN OUTLET SECTION (A 24/24)
SCALE: 1"=5'-0"

CERTIFY MEANS TO STATE OR DECLARE A PROFESSIONAL OPINION BASED UPON ON-SITE INSPECTIONS AND MATERIAL TESTS WHICH ARE CONDUCTED DURING CONSTRUCTION. THE ON-SITE INSPECTIONS AND MATERIAL TESTS ARE THOSE INSPECTIONS AND TESTS DEEMED SUFFICIENT AND APPROPRIATE BY COMMONLY ACCEPTED ENGINEERING STANDARDS. CERTIFY DOES NOT MEAN OR IMPLY A GUARANTEE BY THE ENGINEER NOR DOES AN ENGINEER'S CERTIFICATION RELIEVE ANY OTHER PARTY FROM MEETING REQUIREMENTS IMPOSED BY CONTRACT, EMPLOYMENT, OR OTHER MEANS, INCLUDING MEETING COMMONLY ACCEPTED INDUSTRY PRACTICES.

OPERATION, MAINTENANCE AND INSPECTION
INSPECTION OF THE POND(S) SHOWN HEREON SHALL BE PERFORMED AT LEAST ANNUALLY, IN ACCORDANCE WITH THE CHECKLIST AND REQUIREMENTS CONTAINED WITHIN USDA, SCS "STANDARDS AND SPECIFICATIONS FOR PONDS" (MD-378). THE POND OWNER(S) AND ANY HEIRS, SUCCESSORS, OR ASSIGNS SHALL BE RESPONSIBLE FOR THE SAFETY OF THE POND AND THE CONTINUED OPERATION, SURVEILLANCE, INSPECTION, AND MAINTENANCE THEREOF. THE POND OWNER(S) SHALL PROMPTLY NOTIFY THE SOIL CONSERVATION DISTRICT OF ANY UNUSUAL OBSERVATIONS THAT MAY BE INDICATIONS OF DISTRESS SUCH AS EXCESSIVE SEEPAGE, TURBID SEEPAGE, SLIDING OR SLUMPING.

SUBDIVISION NAME	LOT/PARCEL	
ALPHA RIDGE SOLID WASTE MANAGEMENT CENTER	54,253,220,11	
LIBER/FOLIO	ZONE	TAX/ZONE MAP
10-847/606 16-878/215 10-891/314	PEC	10 & 16
WATER CODE	SEWER CODE	CENSUS TR.
PRIVATE, EXISTING	PRIVATE, EXISTING	60-30

DEPARTMENT OF PLANNING AND ZONING
HOWARD COUNTY, MARYLAND

DIRECTOR — DATE 11/3/97
CHIEF, DEVELOPMENT ENGINEERING DIVISION — DATE 10/31/97
CHIEF, DIVISION OF LAND DEVELOPMENT — DATE 11/3/97

DEPARTMENT OF PUBLIC WORKS
HOWARD COUNTY, MARYLAND

DIRECTOR OF PUBLIC WORKS — DATE 10/30/97
CHIEF, BUREAU OF WASTE MANAGEMENT — DATE 10/30/97

SEDIMENT CONTROL & POND CONSTRUCTION

( ) BY THE DEVELOPER:
"I/WE CERTIFY THAT ALL DEVELOPMENT AND/OR CONSTRUCTION WILL BE DONE ACCORDING TO THESE PLANS, AND THAT ANY RESPONSIBLE PERSONNEL INVOLVED IN THE CONSTRUCTION PROJECT WILL HAVE A CERTIFICATE OF ATTENDANCE AT A DEPARTMENT OF THE ENVIRONMENT APPROVED TRAINING PROGRAM FOR THE CONTROL OF SEDIMENT AND EROSION BEFORE BEGINNING THE PROJECT. I SHALL ENGAGE A REGISTERED PROFESSIONAL ENGINEER TO SUPERVISE POND CONSTRUCTION AND PROVIDE THE HOWARD SOIL CONSERVATION DISTRICT WITH AN "AS-BUILT" PLAN OF THE POND WITHIN 30 DAYS OF COMPLETION. I ALSO AUTHORIZE PERIODIC ON-SITE INSPECTIONS BY THE HOWARD SOIL CONSERVATION DISTRICT."

SIGNATURE OF DEVELOPER — DATE 10/30/97
PRINT NAME BELOW SIGNATURE JOHN J. O'HARA

( ) BY THE ENGINEER:
"I CERTIFY THAT THIS PLAN FOR POND CONSTRUCTION, EROSION AND SEDIMENT CONTROL REPRESENTS A PRACTICAL AND WORKABLE PLAN BASED ON MY PERSONAL KNOWLEDGE OF THE SITE CONDITIONS. THIS PLAN WAS PREPARED IN ACCORDANCE WITH THE REQUIREMENTS OF THE HOWARD SOIL CONSERVATION DISTRICT. I HAVE NOTIFIED THE DEVELOPER THAT HE/SHE MUST ENGAGE A REGISTERED PROFESSIONAL ENGINEER TO SUPERVISE POND CONSTRUCTION AND PROVIDE THE HOWARD SOIL CONSERVATION DISTRICT WITH AN "AS-BUILT" PLAN OF THE POND WITHIN 30 DAYS OF COMPLETION."

SIGNATURE OF ENGINEER — DATE 10/30/97
PRINT NAME BELOW SIGNATURE PAUL A MANDEVILLE

( ) THESE PLANS HAVE BEEN REVIEWED FOR THE HOWARD SOIL CONSERVATION DISTRICT AND MEET THE TECHNICAL REQUIREMENTS FOR SMALL POND CONSTRUCTION, SOIL EROSION AND SEDIMENT CONTROL.

USDA - NATURAL RESOURCES CONSERVATION SERVICE — DATE 10-30-97

( ) THESE PLANS FOR SMALL POND CONSTRUCTION, SOIL EROSION AND SEDIMENT CONTROL MEET THE REQUIREMENTS OF THE HOWARD SOIL CONSERVATION DISTRICT.

HOWARD SOIL CONSERVATION DISTRICT — DATE 10-30-97

AS-BUILT CERTIFICATION
I HEREBY CERTIFY THAT THE FACILITY SHOWN ON THIS PLAN WAS CONSTRUCTED AS SHOWN ON THE "AS-BUILT" PLANS AND MEETS THE APPROVED PLANS AND SPECIFICATIONS.

SIGNATURE — PE NO. 17650 — DATE 10/10/01

SCS ENGINEERS
CONSULTING ENGINEERS
11260 ROGER BACON DRIVE
SUITE 300
RESTON, VIRGINIA 22090
PH. (703) 471-6150
FAX. (703) 471-6676

STATE OF MARYLAND — PAUL ANTHONY MANDEVILLE — REG. NO. 17650 — PROFESSIONAL ENGINEER
Paul Anthony Mandeville, PE

DES. AST,RTT	6		
DRN. AST,EGC	5		
CHK. PAM	4		
DATE: 10-30-97	3		
	2		
BY	1		
	NO.	REVISION	DATE

EAST SEDIMENT BASIN ENLARGED PLAN AND PROFILES

ALPHA RIDGE LANDFILL
UNLINED CELL CLOSURE
CAPITAL PROJECT NO. C-0190-N

3rd ELECTION DISTRICT — HOWARD COUNTY, MARYLAND

SCALE: AS NOTED

SHEET 24 OF 128

M:\295077.01\FINAL EASTBSN,EBCLDAM,PRF-EBSN,PRF-RDPP,XS-RDPP,XS-EBO

EBSN-B

SDP-97-128

POND	RISER: WEIR HT.	RISER: WEIR WIDTH	RISER: CREST ELEV.	RISER: STR. WIDTH	OUTLET PIPE: DIA. IN.	OUTLET PIPE: L FT.	OUTLET PIPE: U/S INV.	OUTLET PIPE: D/S INV.	ANTI-SEEP COLLAR: QTY.	ANTI-SEEP COLLAR: APPROX. SIZE	DAM: TOP WIDTH FT.	DAM: CONSTR. HEIGHT	DAM: SETTLED HEIGHT	EMERG. SPILLWAY: ELEV.	EMERG. SPILLWAY: BOTTOM WIDTH FT.	CORE TRENCH: TOP WIDTH FT.	CORE TRENCH: SIDE SLOPES	CUT-OFF TRENCH: BOT. WIDTH FT.	CUT-OFF TRENCH: SIDE SLOPES	WATER SURFACE ELEV.: 2 YR.	10 YR.	25 YR.	100 YR.
EAST	2'-2"	5'	546.13 ~~546.0~~	6.33' x 8.33'	33	121	543.81 ~~543.75~~	542.55 ~~542.50~~	1	8.98' H. 9.63' W.	12'	549.8	549.51	549.5 ~~548.5~~	60'	4'	1:1	4'	1:1	545.97	546.60	546.76	547.35

POST CONSTRUCTION EAST SEDIMENT BASIN MAINTENANCE IS RESPONSIBILITY OF OWNER, HOWARD COUNTY

NOTES:
1. ANTI-SEEP COLLAR TO BE POURED AT LEAST TWO (2) FEET FROM NEAREST PIPE JOINT
2. ANTI-SEEP COLLAR IS TO BE CONSTRUCTED IN THREE POURS.
3. BOTTOM HALF TO BE POURED FIRST.
4. PLACE PIPE AND POUR CRADLE SECOND.
5. TOP PORTION OF COLLAR POURED THIRD.
6. BACKFILL SHALL BE PLACED EVENLY ON BOTH SIDES OF THE ANTI-SEEP COLLAR.
7. REINFORCED CONCRETE: fc = 4,000 psi @ 28 DAYS.

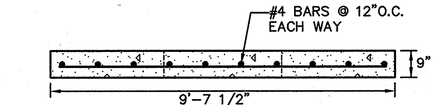

SECTION A (25|25)
SCALE: 1/2"=1'-0"

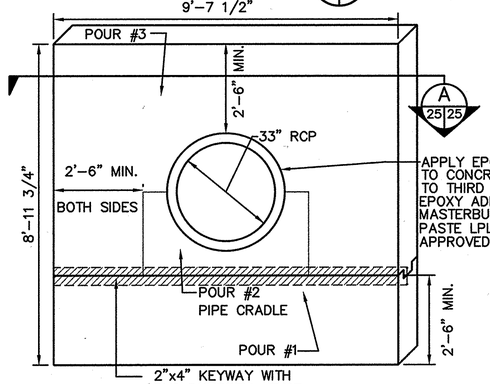

ANTI-SEEP COLLAR DETAIL (1 | 24|25)
SCALE: 1/2"=1'-0"

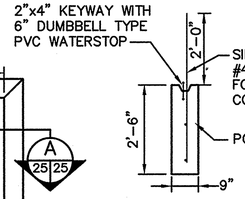

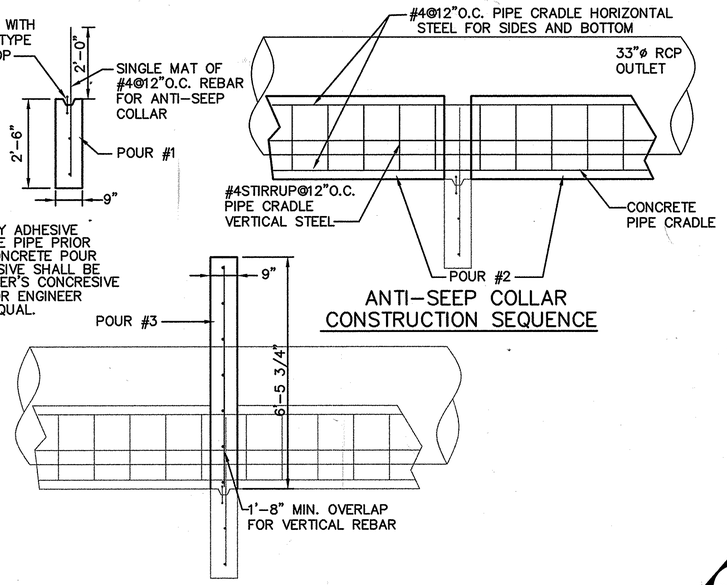

ANTI-SEEP COLLAR CONSTRUCTION SEQUENCE

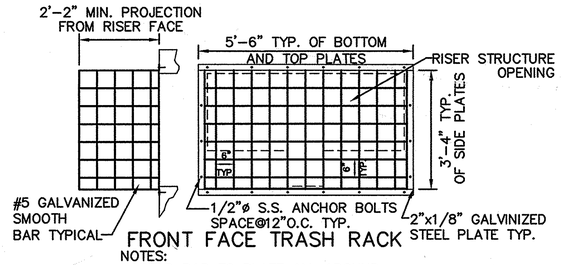

FRONT FACE TRASH RACK

NOTES:
1. WELD BAR TO PLATE ALL AROUND.
2. GALVANIZE TRASH RACK AFTER FABRICATION.
3. PAINT TRASH RACK BATTLESHIP GRAY.

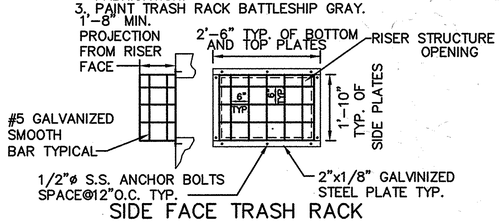

SIDE FACE TRASH RACK

TRASH RACK DETAIL (4 | 25|25)
SCALE: 1/2"=1'-0"

NOTE:
CONCRETE OUTLET RISER SHALL BE POURED IN-PLACE UNLESS CONTRACTOR RECEIVES APPROVAL FROM THE HOWARD CTY. DEVELOPMENT ENGINEERING DIVISION FOR A WATERTIGHT PRECAST OUTLET RISER DESIGN

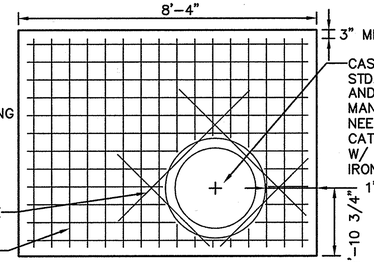

0 1 2 4 6
SCALE 1/2"=1'-0"

RISER STRUCTURE SECTION (E | 25|25)
SCALE: 1/2"=1'-0"

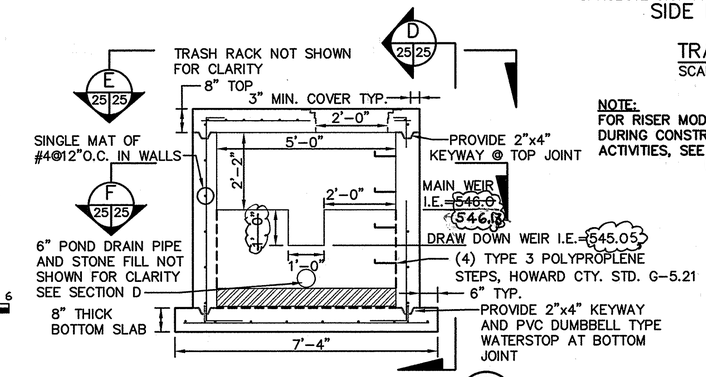

RISER STRUCTURE DETAIL (2 | 24|25)
SCALE: 1/2"=1'-0"

NOTE:
FOR RISER MODIFICATIONS DURING CONSTRUCTION ACTIVITIES, SEE (2 | 25|75)

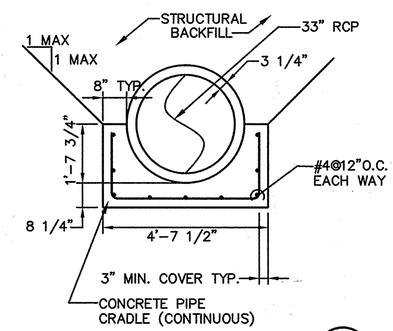

A2 PIPE CRADLE DETAIL (3 | 70|71)
SCALE: 1/2"=1'-0"

NOTES:
1. PIPE CRADLE SHALL HAVE A MINIMUM fc OF 4,000 psi @ 28 DAYS
2. USE INTERMEDIATE GRADE REINFORCING STEEL

TRASH RACK TO COVER WEIR OPENINGS, FOR TYPICALS SEE DETAIL (4 | 25|25)

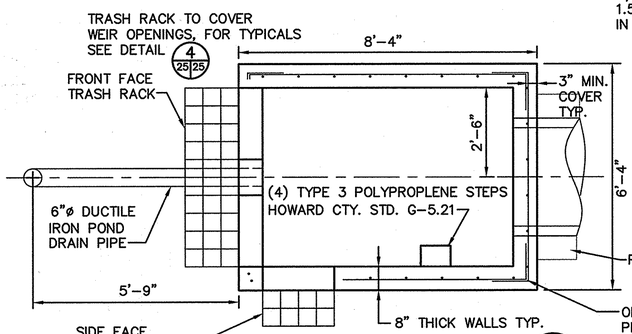

RISER STRUCTURE SECTION (F | 25|25)
SCALE: 1/2"=1'-0"

PERFORATE POND DRAIN PIPE w/ 8 ROWS/FT., 9-1"ø HOLES/ROW. 1.5" O.C. ROW SPACING. STAGGER HOLES IN EACH ROW

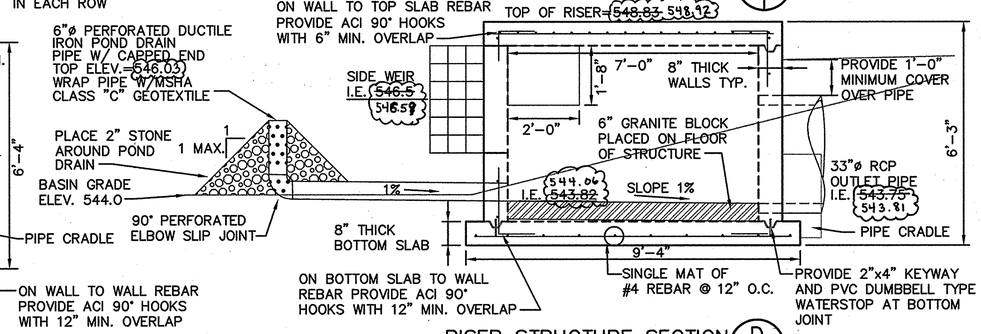

RISER STRUCTURE SECTION (D | 25|25)
SCALE: 1/2"=1'-0"

SEDIMENT CONTROL & POND CONSTRUCTION

( ) BY THE DEVELOPER:

"I/WE CERTIFY THAT ALL DEVELOPMENT AND/OR CONSTRUCTION WILL BE DONE ACCORDING TO THESE PLANS AND THAT ANY RESPONSIBLE PERSONNEL INVOLVED IN THE CONSTRUCTION PROJECT WILL HAVE A CERTIFICATE OF ATTENDANCE AT A DEPARTMENT OF THE ENVIRONMENT APPROVED TRAINING PROGRAM FOR THE CONTROL OF SEDIMENT AND EROSION BEFORE BEGINNING THE PROJECT. I SHALL ENGAGE A REGISTERED PROFESSIONAL ENGINEER TO SUPERVISE POND CONSTRUCTION AND PROVIDE THE HOWARD SOIL CONSERVATION DISTRICT WITH AN "AS-BUILT" PLAN OF THE POND WITHIN 30 DAYS OF COMPLETION. I ALSO AUTHORIZE PERIODIC ON-SITE INSPECTIONS BY THE HOWARD SOIL CONSERVATION DISTRICT."

John J. O'Hara 10/30/97
SIGNATURE OF DEVELOPER — DATE
PRINT NAME BELOW SIGNATURE JOHN J. O'HARA

( ) BY THE ENGINEER:

"I CERTIFY THAT THIS PLAN FOR POND CONSTRUCTION, EROSION AND SEDIMENT CONTROL REPRESENTS A PRACTICAL AND WORKABLE PLAN BASED ON MY PERSONAL KNOWLEDGE OF THE SITE CONDITIONS. THIS PLAN WAS PREPARED IN ACCORDANCE WITH THE REQUIREMENTS OF THE HOWARD SOIL CONSERVATION DISTRICT. I HAVE NOTIFIED THE DEVELOPER THAT HE/SHE MUST ENGAGE A REGISTERED PROFESSIONAL ENGINEER TO SUPERVISE POND CONSTRUCTION AND PROVIDE THE HOWARD SOIL CONSERVATION DISTRICT WITH AN "AS-BUILT" PLAN OF THE POND WITHIN 30 DAYS OF COMPLETION."

PAUL A. MANDEVILLE 10/30/97
SIGNATURE OF ENGINEER — DATE
PRINT NAME BELOW SIGNATURE

( ) THESE PLANS HAVE BEEN REVIEWED FOR THE HOWARD SOIL CONSERVATION DISTRICT AND MEET THE TECHNICAL REQUIREMENTS FOR SMALL POND CONSTRUCTION, SOIL EROSION AND SEDIMENT CONTROL.

10-30-97
USDA – NATURAL RESOURCES CONSERVATION SERVICE — DATE

( ) THESE PLANS FOR SMALL POND CONSTRUCTION, SOIL EROSION AND SEDIMENT CONTROL MEET THE REQUIREMENTS OF THE HOWARD SOIL CONSERVATION DISTRICT.

10-30-97
HOWARD SOIL CONSERVATION DISTRICT — DATE

AS-BUILT CERTIFICATION

I HEREBY CERTIFY THAT THE FACILITY SHOWN ON THIS PLAN WAS CONSTRUCTED AS SHOWN ON THE "AS-BUILT" PLANS AND MEETS THE APPROVED PLANS AND SPECIFICATIONS.

PE NO. 17650
SIGNATURE — DATE 10/10/01

CERTIFY MEANS TO STATE OR DECLARE A PROFESSIONAL OPINION BASED UPON ON-SITE INSPECTIONS AND MATERIAL TESTS WHICH ARE CONDUCTED DURING CONSTRUCTION. THE ON-SITE INSPECTIONS AND MATERIAL TESTS ARE THOSE INSPECTIONS AND TESTS DEEMED SUFFICIENT AND APPROPRIATE BY COMMONLY ACCEPTED ENGINEERING STANDARDS. CERTIFY DOES NOT MEAN OR IMPLY A GUARANTEE BY THE ENGINEER NOR DOES AN ENGINEER'S CERTIFICATION RELIEVE ANY OTHER PARTY FROM MEETING REQUIREMENTS IMPOSED BY CONTRACT, EMPLOYMENT, OR OTHER MEANS, INCLUDING MEETING COMMONLY ACCEPTED INDUSTRY PRACTICES.

OPERATION, MAINTENANCE AND INSPECTION

INSPECTION OF THE POND(S) SHOWN HEREON SHALL BE PERFORMED AT LEAST ANNUALLY, IN ACCORDANCE WITH THE CHECKLIST AND REQUIREMENTS CONTAINED WITHIN USDA, SCS "STANDARDS AND SPECIFICATIONS FOR PONDS" (MD-378). THE POND OWNER(S) AND ANY HEIRS, SUCCESSORS, OR ASSIGNS SHALL BE RESPONSIBLE FOR THE SAFETY OF THE POND AND THE CONTINUED OPERATION, SURVEILLANCE, INSPECTION, AND MAINTENANCE THEREOF. THE POND OWNER(S) SHALL PROMPTLY NOTIFY THE SOIL CONSERVATION DISTRICT OF ANY UNUSUAL OBSERVATIONS THAT MAY BE INDICATIONS OF DISTRESS SUCH AS EXCESSIVE SEEPAGE, TURBID SEEPAGE, SLIDING OR SLUMPING.

SUBDIVISION NAME	LOT/PARCEL	
ALPHA RIDGE SOLID WASTE MANAGEMENT CENTER	54,253,220,11	
LIBER/FOLIO	ZONE	TAX/ZONE MAP
10-847/606 16-878/215 10-691/314	PEC	10 & 16
WATER CODE	SEWER CODE	CENSUS TR.
PRIVATE, EXISTING	PRIVATE, EXISTING	60-30

DEPARTMENT OF PLANNING AND ZONING
HOWARD COUNTY, MARYLAND

DIRECTOR — DATE 11/3/97
CHIEF, DEVELOPMENT ENGINEERING DIVISION — DATE 11/3/97
CHIEF, DIVISION OF LAND DEVELOPMENT — DATE 11/3/97

DEPARTMENT OF PUBLIC WORKS
HOWARD COUNTY, MARYLAND

DIRECTOR OF PUBLIC WORKS — DATE 10/30/97
CHIEF, BUREAU OF WASTE MANAGEMENT — DATE 10/30/97

SCS ENGINEERS
CONSULTING ENGINEERS
11260 ROGER BACON DRIVE
SUITE 300
RESTON, VIRGINIA 22090
PH. (703) 471-6150
FAX. (703) 471-6676

STATE OF MARYLAND — PAUL ANTHONY MANDEVILLE — No. 14666 — PROFESSIONAL ENGINEER
Paul Anthony Mandeville, PE

DES. AST,RTT	6			
DRN. AST,EGC	5			
CHK. PAM	4			
	3			
DATE: 10-30-97	2			
	1			
BY	NO.	REVISION	DATE	

EAST SEDIMENT BASIN DETAILS

ALPHA RIDGE LANDFILL
UNLINED CELL CLOSURE
CAPITAL PROJECT NO. C-0190-N
3rd ELECTION DISTRICT — HOWARD COUNTY, MARYLAND

SCALE: AS NOTED
SHEET 25 OF 131

SDP-97-128

M:\295077.01\FINAL ANTSP-EB,CRADLE-EB,RISER-EBA2,TRK-EB,TBL-EB EBSN2-B

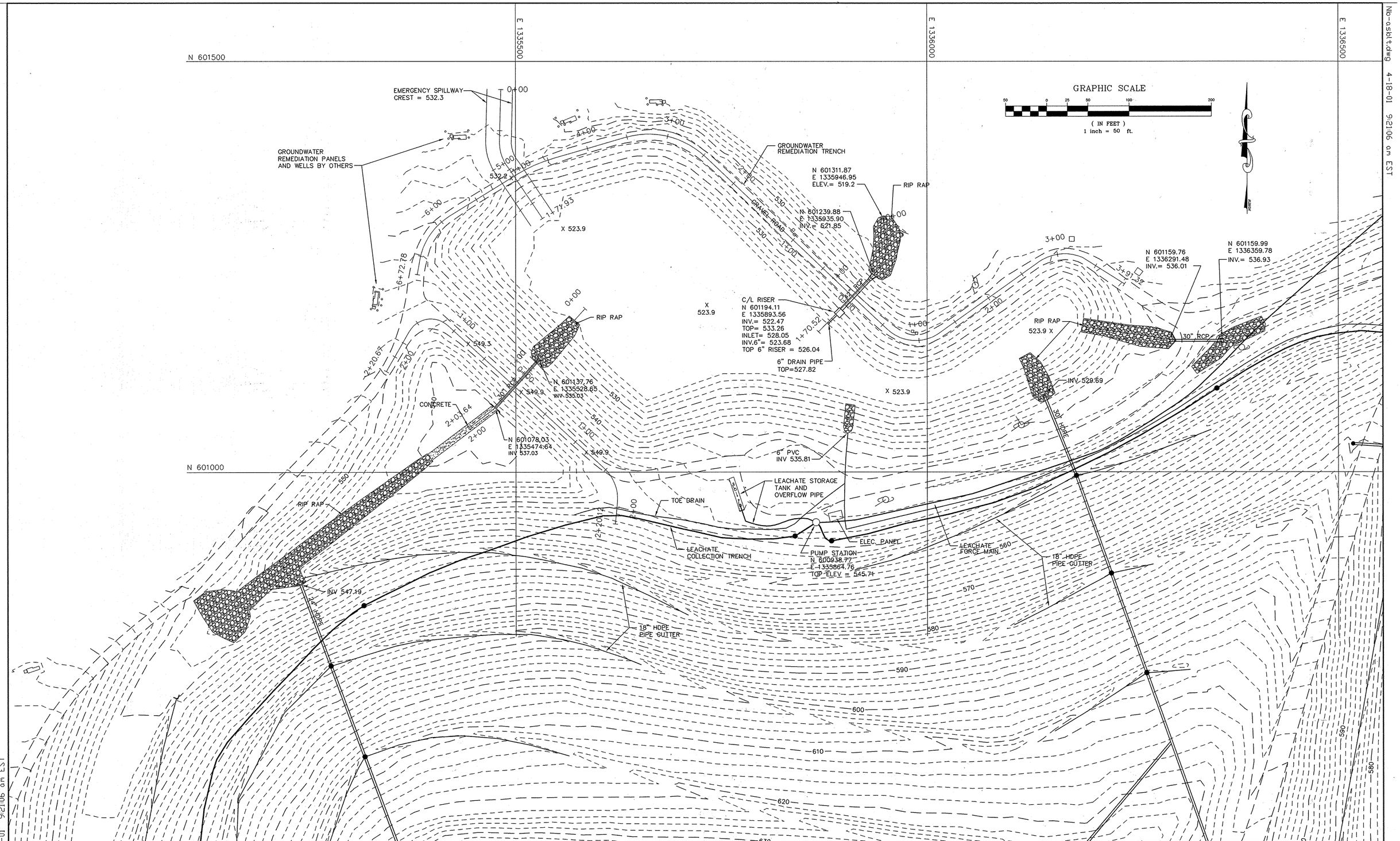

DESIGNED BY:		DATE
DRAWN BY:	TWH	7-21-98 DATE
CHECKED BY:		DATE
APPROVED BY:		DATE

REVISIONS

DATE	BY	DESCRIPTION
4-4-00	TWH	ADDED STATIONING FOR PROFILES.
10-17-00	TWH	LABELED EMERGENCY SPILLWAY.
4-18-01	TWH	ADDED 6' RISER ELEVATION.

ENGINEERING TECHNOLOGIES ASSOCIATES, INC.
ENGINEERS * PLANNERS * SURVEYORS
3458 ELLICOTT CENTER DRIVE SUITE 101
ELLICOTT CITY, MARYLAND 21043
BALTO. (410)461-9920 FAX (410)750-8565

STATE OF MARYLAND — CLIFFORD ALLEN BROWN — REGISTERED PROFESSIONAL LAND SURVEYOR

H. E. SARGENT, INC. — CONTRACTORS • STILLWATER, ME.

AS-BUILT NORTH AND WEST BASINS

ALPHA RIDGE LANDFILL CELL CLOSURE

HOWARD COUNTY MARYLAND

SCALE : 1"=50'	CONTRACT NO.: 98301.10	DATE : 2-27-2000	SHEET 26-AB OF 131

No-asblt.dwg 4-18-01 9:21:06 am EST

No-asblt.dwg 4-18-01 9:21:06 am EST

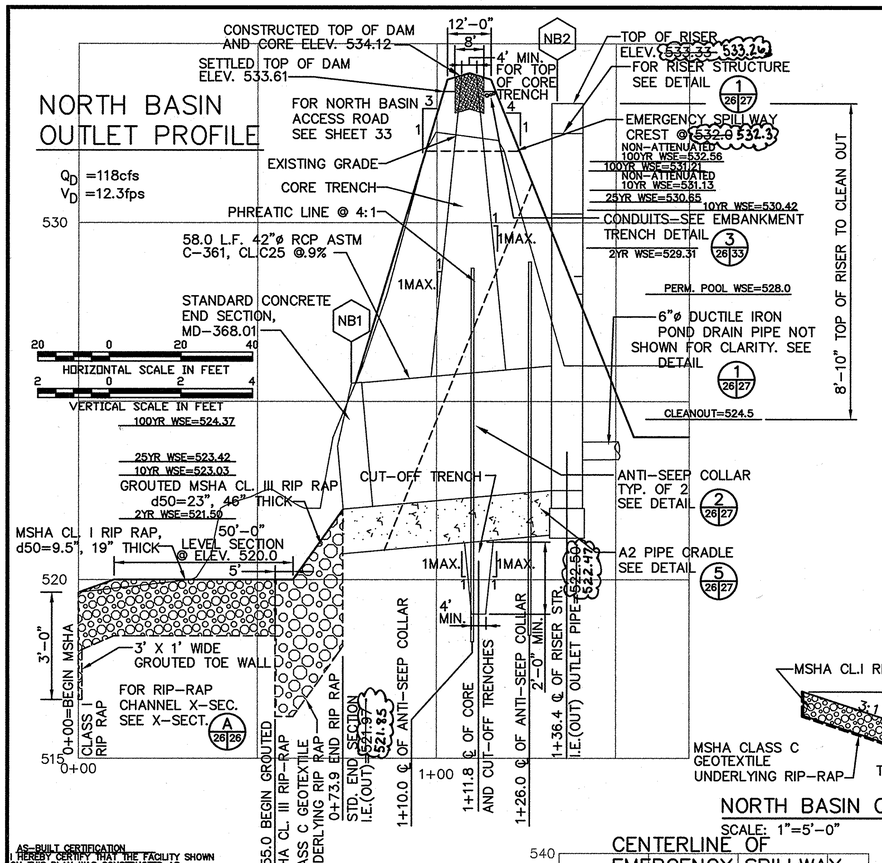

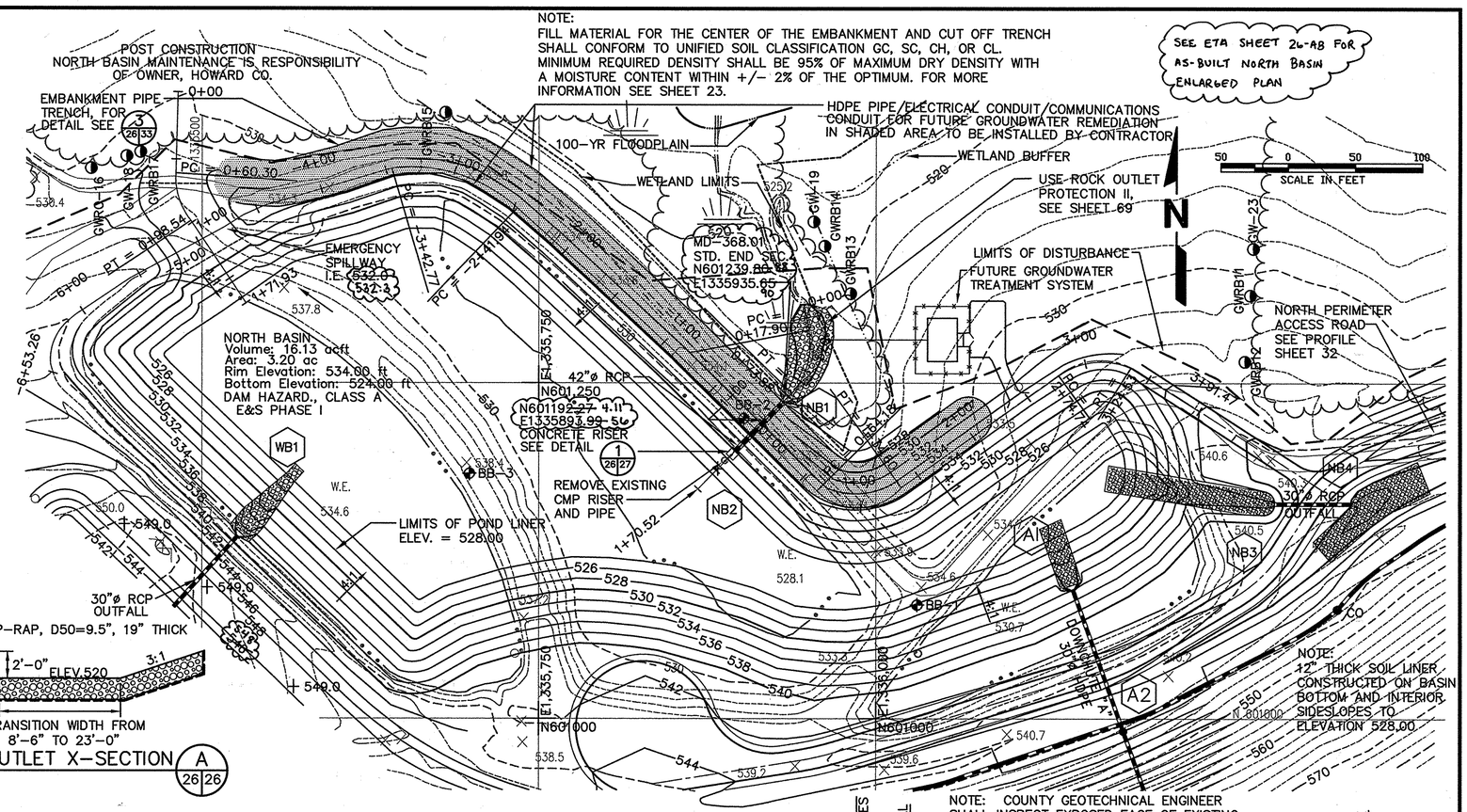

NORTH BASIN OUTLET X-SECTION A/26/26

SCALE: 1"=5'-0"

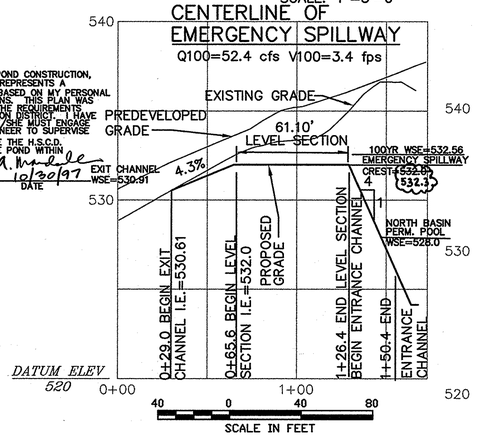

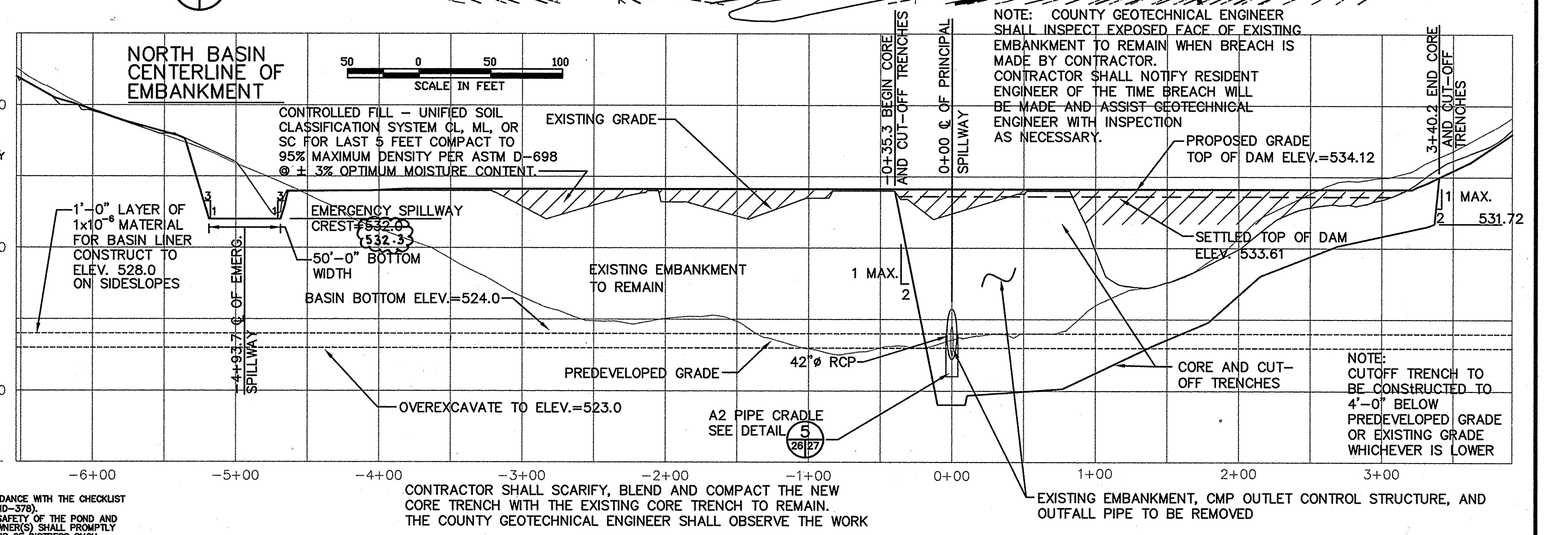

NOTE: COUNTY GEOTECHNICAL ENGINEER SHALL INSPECT EXPOSED FACE OF EXISTING EMBANKMENT TO REMAIN WHEN BREACH IS MADE BY CONTRACTOR. CONTRACTOR SHALL NOTIFY RESIDENT ENGINEER OF THE TIME BREACH WILL BE MADE AND ASSIST GEOTECHNICAL ENGINEER WITH INSPECTION AS NECESSARY.

AS-BUILT CERTIFICATION
I HEREBY CERTIFY THAT THE FACILITY SHOWN ON THIS PLAN WAS CONSTRUCTED AS SHOWN ON THE AS-BUILT PLANS AND MEETS THE APPROVED PLANS AND SPECIFICATIONS.
SIGNATURE Michael R. Poulsen
DATE 10/10/97
PE NO. 17650
CERTIFY MEANS TO STATE OR DECLARE A PROFESSIONAL OPINION BASED UPON ON-SITE INSPECTIONS AND MATERIAL TESTS WHICH ARE CONDUCTED DURING CONSTRUCTION. THE ON-SITE INSPECTIONS AND MATERIAL TESTS ARE THOSE INSPECTIONS AND TESTS DEEMED SUFFICIENT AND APPROPRIATE BY COMMONLY ACCEPTED ENGINEERING STANDARDS. CERTIFY DOES NOT MEAN OR IMPLY A GUARANTEE BY THE ENGINEER NOR DOES AN ENGINEER'S CERTIFICATION RELIEVE ANY OTHER PARTY FROM MEETING REQUIREMENTS IMPOSED BY CONTRACT, EMPLOYMENT, OR OTHER MEANS, INCLUDING MEETING COMMONLY ACCEPTED INDUSTRY PRACTICES.

( ) THESE PLANS HAVE BEEN REVIEWED FOR THE HOWARD SOIL CONSERVATION DISTRICT AND MEET THE TECHNICAL REQUIREMENTS FOR SMALL POND CONSTRUCTION, SOIL EROSION AND SEDIMENT CONTROL.
USDA - NRCS DATE 10-30-97
( ) THESE PLANS FOR SMALL POND CONSTRUCTION, SOIL EROSION AND SEDIMENT CONTROL MEET THE REQUIREMENTS OF THE HOWARD SOIL CONSERVATION DISTRICT.
HOWARD SOIL CONSERVATION DISTRICT DATE 10-30-97

( ) BY THE ENGINEER:
"I CERTIFY THAT THIS PLAN FOR POND CONSTRUCTION, EROSION AND SEDIMENT CONTROL REPRESENTS A PRACTICAL AND WORKABLE PLAN BASED ON MY PERSONAL KNOWLEDGE OF THE SITE CONDITIONS. THIS PLAN WAS PREPARED IN ACCORDANCE WITH THE REQUIREMENTS OF THE HOWARD SOIL CONSERVATION DISTRICT. I HAVE NOTIFIED THE DEVELOPER THAT HE/SHE MUST ENGAGE A REGISTERED PROFESSIONAL ENGINEER TO SUPERVISE POND CONSTRUCTION AND PROVIDE THE H.S.C.D. WITH AN "AS-BUILT" PLAN OF THE POND WITHIN 30 DAYS OF COMPLETION."
SIGNATURE OF ENGINEER Paul A. Mandeville DATE 10/30/97
PRINT NAME BELOW SIGNATURE PAUL A. MANDEVILLE

SUBDIVISION NAME	LOT/PARCEL	
ALPHA RIDGE SOLID WASTE MANAGEMENT CENTER	54,253,220,11	
LIBER/FOLIO	ZONE	TAX/ZONE MAP
10-847/606 16-878/215 10-691/314	PEC	10 & 16
WATER CODE	SEWER CODE	CENSUS TR.
PRIVATE, EXISTING	PRIVATE, EXISTING	60-30

DEPARTMENT OF PLANNING AND ZONING
HOWARD COUNTY, MARYLAND
DIRECTOR DATE 11/3/97
CHIEF, DEVELOPMENT ENGINEERING DIVISION DATE 11/3/97
CHIEF, DIVISION OF LAND DEVELOPMENT DATE 11/3/97

DEPARTMENT OF PUBLIC WORKS
HOWARD COUNTY, MARYLAND
DIRECTOR OF PUBLIC WORKS DATE 10/30/97
CHIEF, BUREAU OF WASTE MANAGEMENT DATE 10/30/97

OPERATION, MAINTENANCE AND INSPECTION
INSPECTION OF THE POND(S) SHOWN HEREON SHALL BE PERFORMED AT LEAST ANNUALLY, IN ACCORDANCE WITH THE CHECKLIST AND REQUIREMENTS CONTAINED WITHIN USDA, SCS "STANDARDS AND SPECIFICATIONS FOR PONDS" (MD-378). THE POND OWNER(S) AND ANY HEIRS, SUCCESSORS, OR ASSIGS SHALL BE RESPONSIBLE FOR THE SAFETY OF THE POND AND THE CONTINUED OPERATION, SURVEILLANCE, INSPECTION, AND MAINTENANCE THEREOF. THE POND OWNER(S) SHALL PROMPTLY NOTIFY THE SOIL CONSERVATION DISTRICT OF ANY UNUSUAL OBSERVATIONS THAT MAY BE INDICATIONS OF DISTRESS SUCH AS EXCESSIVE SEEPAGE, TURBID SEEPAGE, SLIDING OR SLUMPING.
SEDIMENT CONTROL & POND CONSTRUCTION ( ) BY THE DEVELOPER:
"I/WE CERTIFY THAT ALL DEVELOPMENT AND/OR CONSTRUCTION WILL BE DONE ACCORDING TO THESE PLANS, AND THAT ANY RESPONSIBLE PERSONNEL INVOLVED IN THE CONSTRUCTION PROJECT WILL HAVE A CERTIFICATE OF ATTENDANCE AT A DEPARTMENT OF THE ENVIRONMENT APPROVED TRAINING PROGRAM FOR THE CONTROL OF SEDIMENT AND EROSION. BEFORE BEGINNING THE PROJECT, I SHALL ENGAGE A REGISTERED PROFESSIONAL ENGINEER TO SUPERVISE POND CONSTRUCTION AND PROVIDE THE H.S.C.D. WITH "AS-BUILT" PLAN OF THE POND WITHIN 30 DAYS OF COMPLETION. I ALSO AUTHORIZE PERIODIC ON-SITE INSPECTIONS BY THE HOWARD SOIL CONSERVATION DISTRICT."
SIGNATURE OF DEVELOPER (PRINT NAME BELOW SIGNATURE) DATE 10/30/97
JOHN J. O'HARA

SCS ENGINEERS
CONSULTING ENGINEERS
11260 ROGER BACON DRIVE
SUITE 300
RESTON, VIRGINIA 22090
PH. (703) 471-6150
FAX. (703) 471-6676

STATE OF MARYLAND PAUL ANTHONY MANDEVILLE No. 14995 PROFESSIONAL ENGINEER
Paul Anthony Mandeville, PE

POND	RISER WEIR HT.	RISER WEIR WIDTH	RISER CREST ELEV.	RISER STR. WIDTH	OUTLET PIPE DIA. IN.	OUTLET PIPE L FT.	OUTLET PIPE U/S INV.	OUTLET PIPE D/S INV.	ANTI-SEEP COLLAR QTY.	ANTI-SEEP COLLAR APPROX. SIZE	DAM TOP WIDTH FT.	DAM CONSTR. HEIGHT	DAM SETTLED HEIGHT	EMERG. SPILLWAY ELEV.	EMERG. SPILLWAY BOTTOM WIDTH FT.	CORE TRENCH TOP WIDTH FT.	CORE TRENCH SIDE SLOPES	CUT-OFF TRENCH BOT. WIDTH FT.	CUT-OFF TRENCH SIDE SLOPES	WATER SURFACE ELEV. 2 YR.	10 YR.	25 YR.	100 YR.
NORTH	4.0'	7.00'	528.41 528.5	8.67'	42	51	522.47 522.50	521.85 521.97	2	10.46' H 10.92' W	12'	534.12	533.61	532.3 532.0	25	4'	1:1	4'	1:1	529.31	530.42	530.65	531.21

BY	NO.	REVISION	DATE
	6		
	5		
	4		
	3		
	2		
	1		

DES. AST,RTT
DRN. AST,EGC
CHK. PAM
DATE: 10-30-97

NORTH BASIN ENLARGED PLAN AND PROFILES

ALPHA RIDGE LANDFILL
UNLINED CELL CLOSURE
CAPITAL PROJECT NO. C-0190-N
3rd ELECTION DISTRICT HOWARD COUNTY, MARYLAND

SCALE: AS NOTED
SHEET 26 OF 136

N5BSN-B M:\295077.01\FINAL N5BSN,N5CLDAM,PRF-5BSN,NBCLES,XS-NBO,MIKENOTE

SDP-97-128

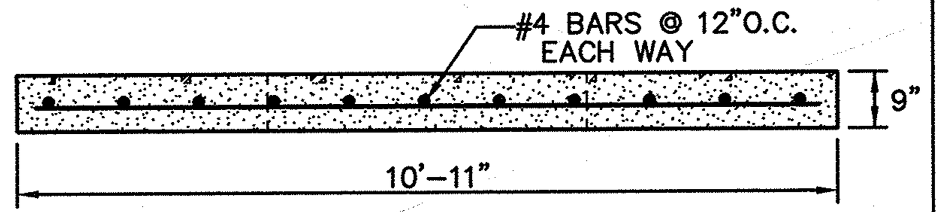

SECTION (A) 27|27
SCALE: 1/2"=1'-0"

NOTES FOR ANTI-SEEP COLLAR:
1. ANTI-SEEP COLLAR TO BE POURED AT LEAST TWO (2) FEET FROM NEAREST PIPE JOINT
2. ANTI-SEEP COLLAR IS TO BE CONSTRUCTED IN THREE POURS.
3. BOTTOM HALF TO BE POURED FIRST.
4. PLACE PIPE AND POUR CRADLE SECOND.
5. TOP PORTION OF COLLAR POURED THIRD.
6. BACKFILL SHALL BE PLACED EVENLY ON BOTH SIDES OF THE ANTI-SEEP COLLAR.
7. REINFORCED CONCRETE: fc = 4,000 psi @ 28 DAYS.

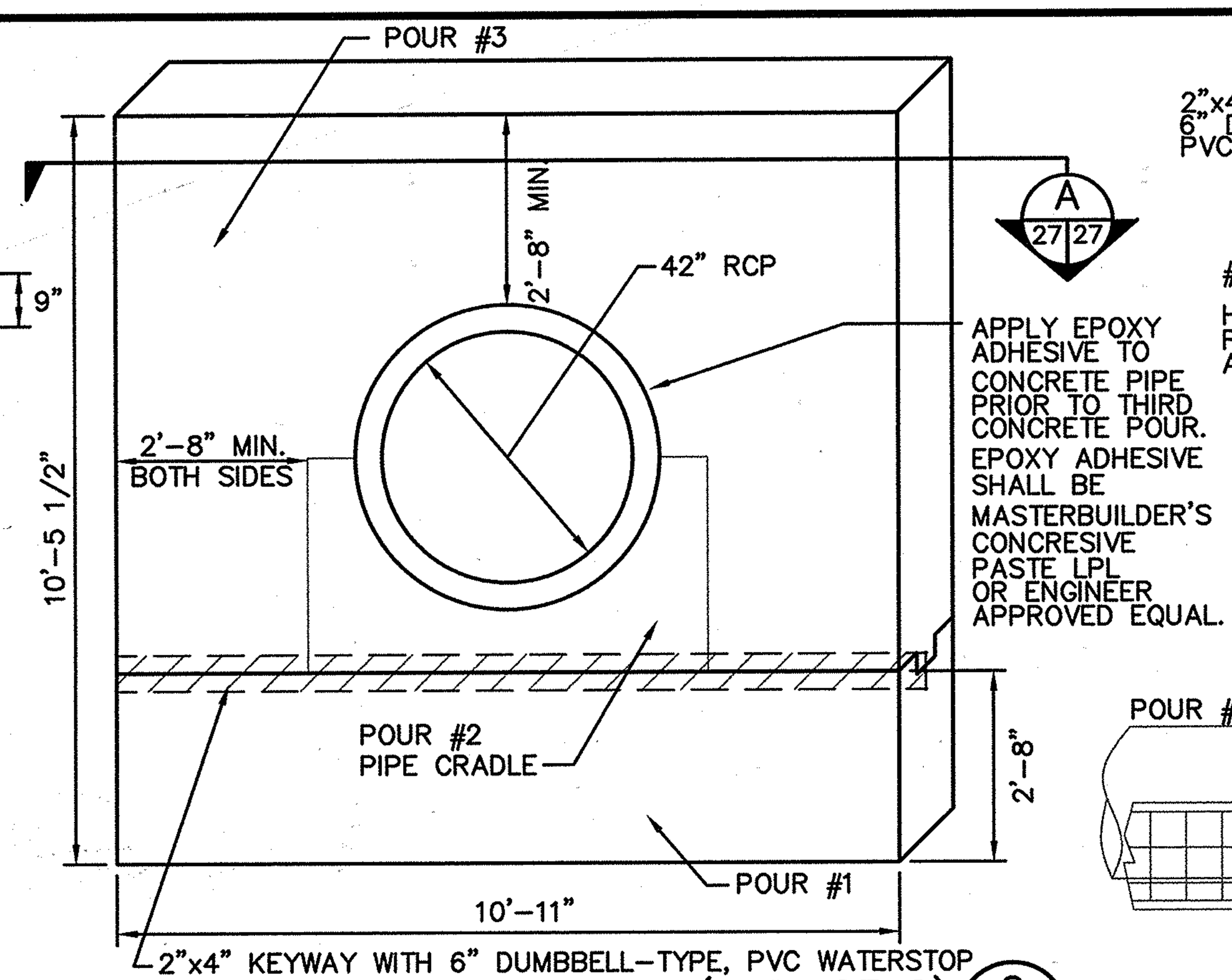

ANTI-SEEP COLLAR DETAIL (TYP. OF 2) (2) 26|27
SCALE: 1/2"=1'-0"

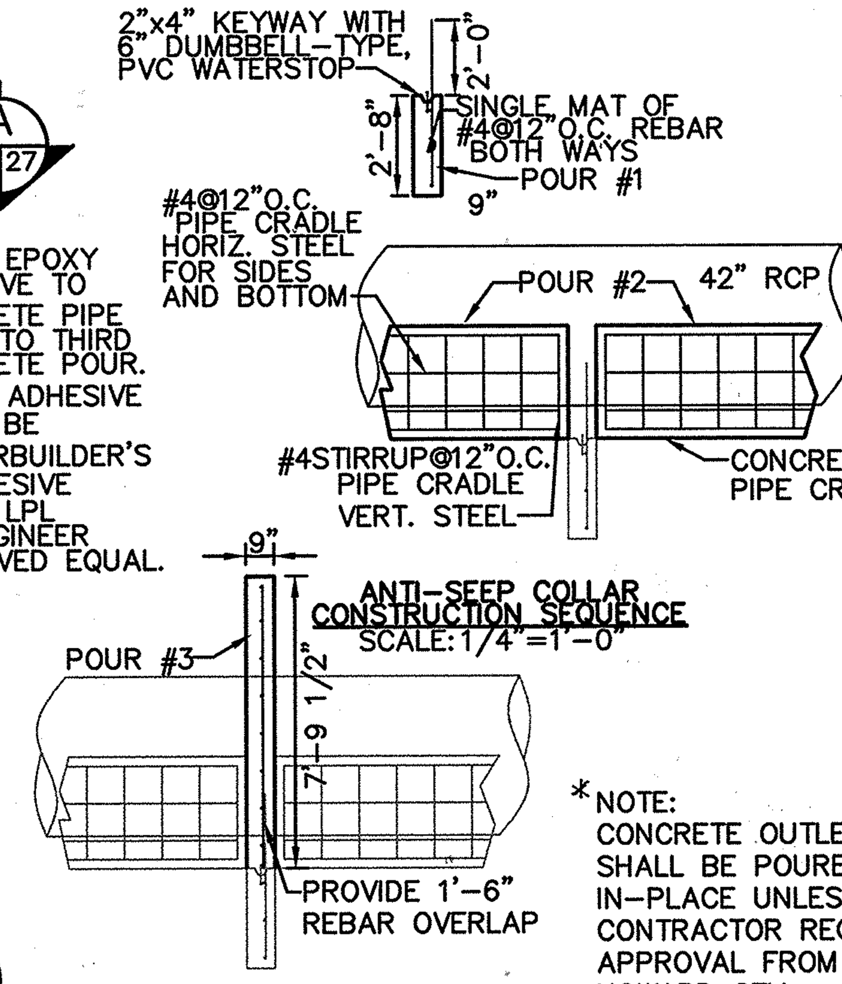

ANTI-SEEP COLLAR CONSTRUCTION SEQUENCE
SCALE: 1/4"=1'-0"

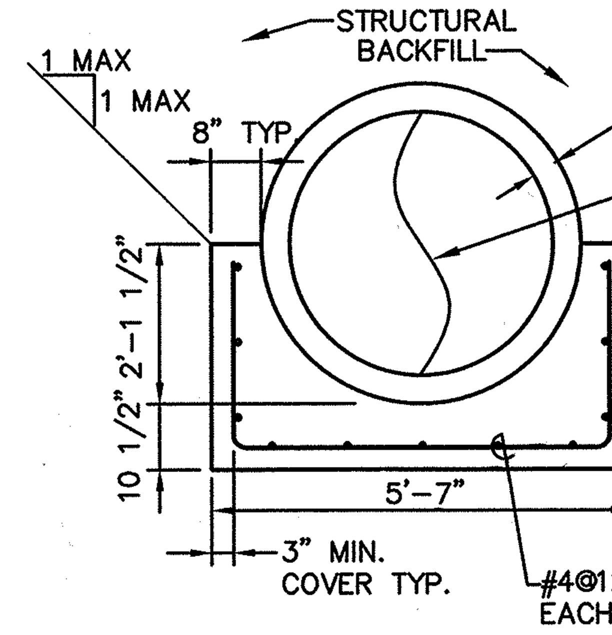

CONCRETE PIPE CRADLE (CONTINUOUS)

NOTES:
1. PIPE CRADLE SHALL HAVE A MINIMUM fc OF 4,000 psi @ 28 DAYS
2. USE INTERMEDIATE GRADE REINFORCING STEEL

A2 PIPE CRADLE DETAIL (5) 26|27
SCALE: 1/2"=1'-0"

AS-BUILT CERTIFICATION
I HEREBY CERTIFY THAT THE FACILITY SHOWN ON THIS PLAN WAS CONSTRUCTED AS SHOWN ON THE "AS-BUILT" PLANS AND MEETS THE APPROVED PLANS AND SPECIFICATIONS.

Michael R. Gondhan (signature)
SIGNATURE
PE NO. 17650 DATE 10/10/01

CERTIFY MEANS TO STATE OR DECLARE A PROFESSIONAL OPINION BASED UPON ON-SITE INSPECTIONS AND MATERIAL TESTS WHICH ARE CONDUCTED DURING CONSTRUCTION. THE ON-SITE INSPECTIONS AND MATERIAL TESTS ARE THOSE INSPECTIONS AND TESTS DEEMED SUFFICIENT AND APPROPRIATE BY COMMONLY ACCEPTED ENGINEERING STANDARDS. CERTIFY DOES NOT MEAN OR IMPLY A GUARANTEE BY THE ENGINEER NOR DOES AN ENGINEER'S CERTIFICATION RELIEVE ANY OTHER PARTY FROM MEETING REQUIREMENTS IMPOSED BY CONTRACT, EMPLOYMENT, OR OTHER MEANS, INCLUDING MEETING COMMONLY ACCEPTED INDUSTRY PRACTICES.

OPERATION, MAINTENANCE AND INSPECTION
INSPECTION OF THE POND(S) SHOWN HEREON SHALL BE PERFORMED AT LEAST ANNUALLY, IN ACCORDANCE WITH THE CHECKLIST AND REQUIREMENTS CONTAINED WITHIN USDA, SCS "STANDARDS AND SPECIFICATIONS FOR PONDS" (MD-378). THE POND OWNER(S) AND ANY HEIRS SUCCESSORS, OF ASSIGNS SHALL BE RESPONSIBLE FOR THE SAFETY OF THE POND AND THE CONTINUED OPERATION, SURVEILLANCE, INSPECTION, AND MAINTENANCE THEREOF. tHE POND OWNER(S) SHALL PROMPTLY NOTIFY THE SOIL CONSERVATION DISTRICT OF ANY UNUSUAL OBSERVATIONS THAT MAY BE INDICATIONS OF DISTRESS SUCH AS EXCESSIVE SEEPAGE, TURBID SEEPAGE, SLIDING OR SLUMPING.

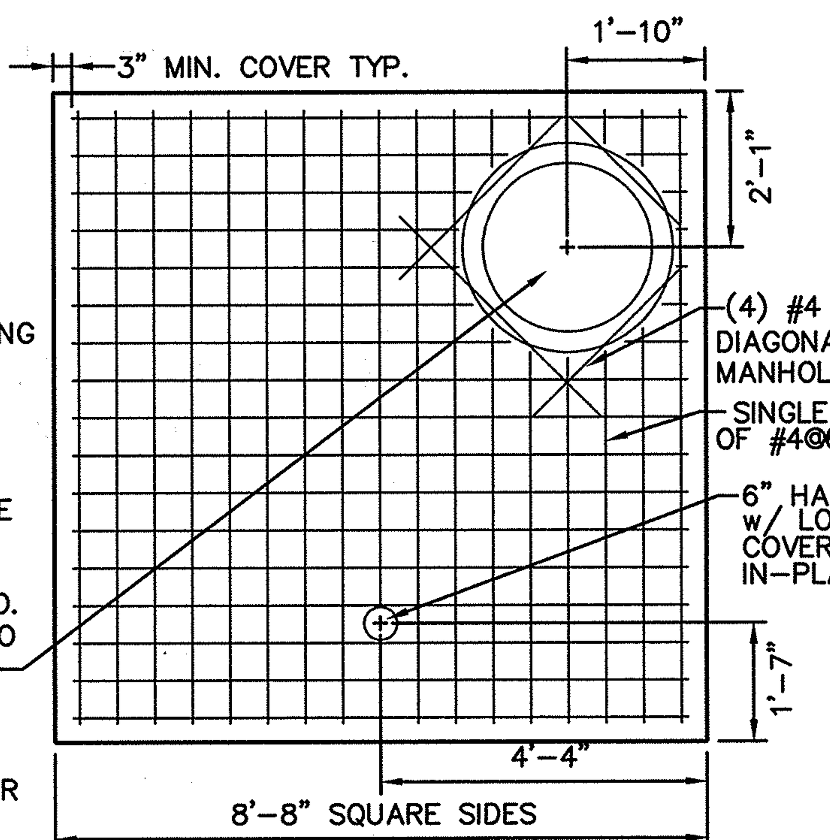

RISER STRUCTURE SECTION (E) 27|27
SCALE: 1/2"=1'-0"

*NOTE:
CONCRETE OUTLET RISER SHALL BE POURED IN-PLACE UNLESS CONTRACTOR RECEIVES APPROVAL FROM THE HOWARD CTY. DEVELOPMENT ENGINEERING DIVIISION FOR A WATERTIGHT PRECAST OUTLET RISER DESIGN

CAST-IN PLACE STD. MANHOLE GRATE AND COVER AS MANUFACTURED BY NEENAH FOUNDRY CO. CAT. NO. R-6400-CO W/ TYPE D-STRAP

* PRECAST APPROVED FOR EACH STRUCTURE

FOR POND SUMMARY TABLE SEE SHEET 26

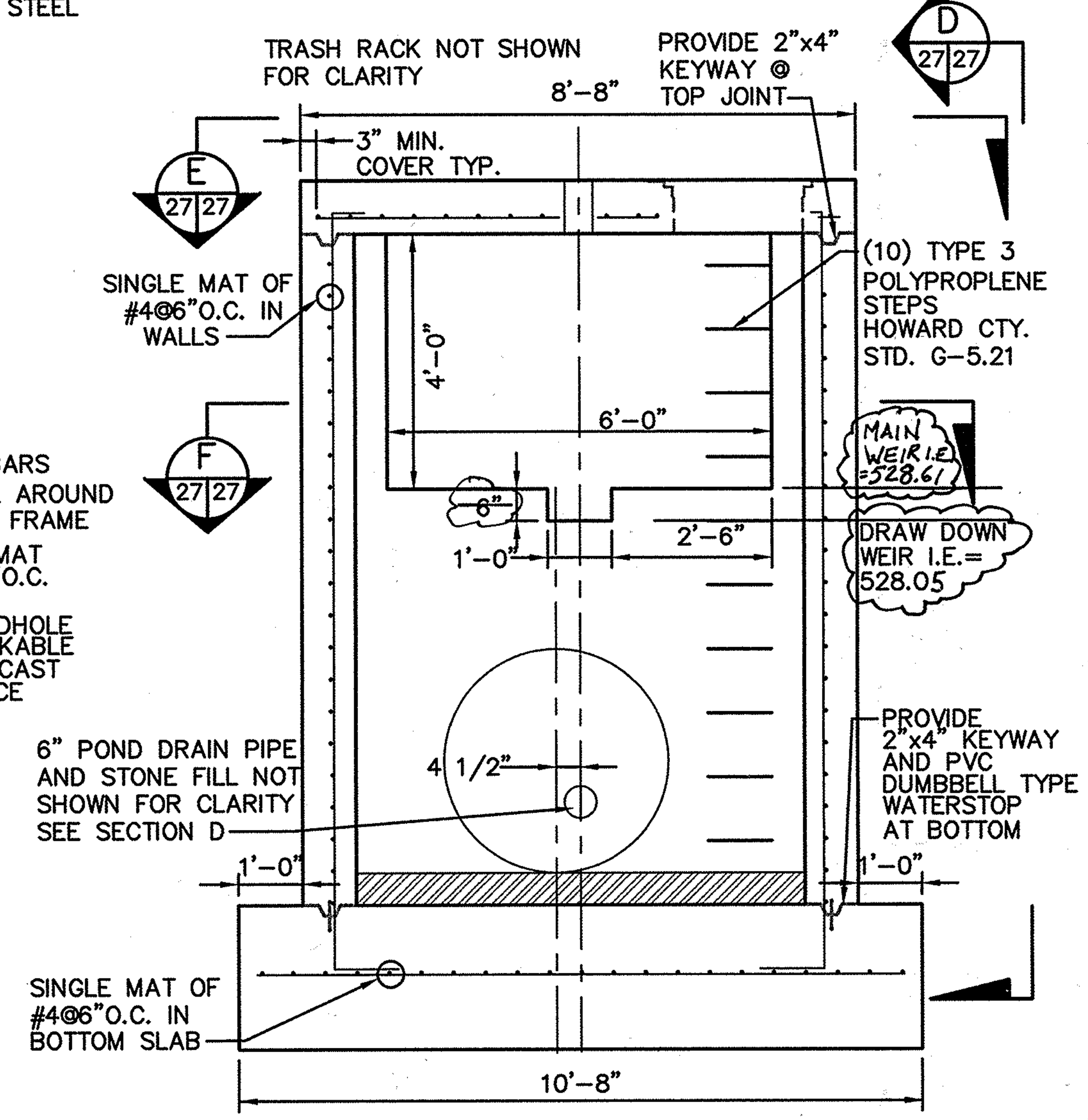

RISER STRUCTURE DETAIL (1) 26|27
SCALE: 1/2"=1'-0"

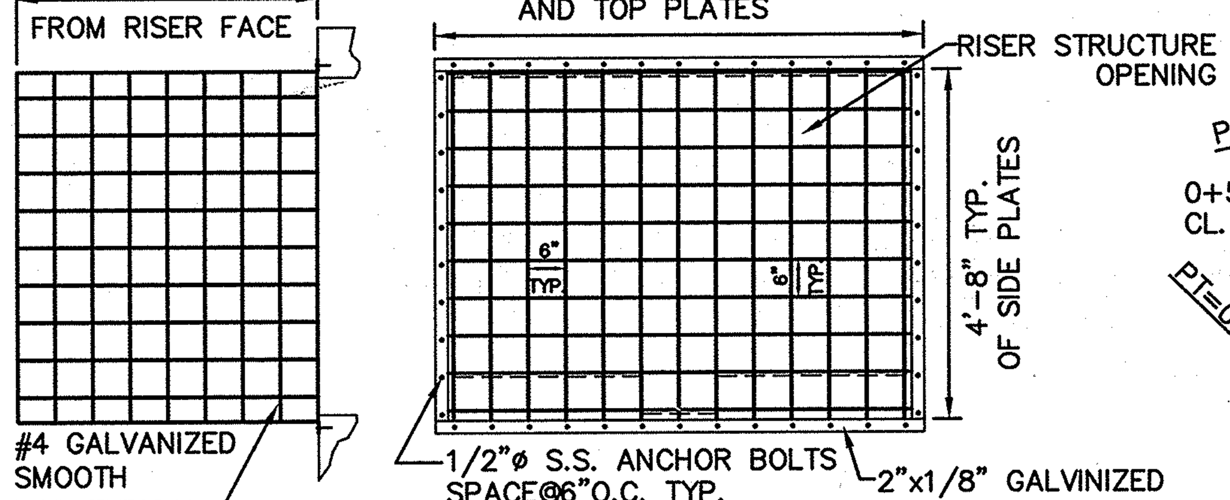

FRONT FACE TRASH RACK

NOTES:
1. WELD BAR TO PLATE ALL AROUND.
2. GALVANIZE TRASH RACK AFTER FABRICATION.
3. PAINT TRASH RACK BATTLESHIP GRAY.

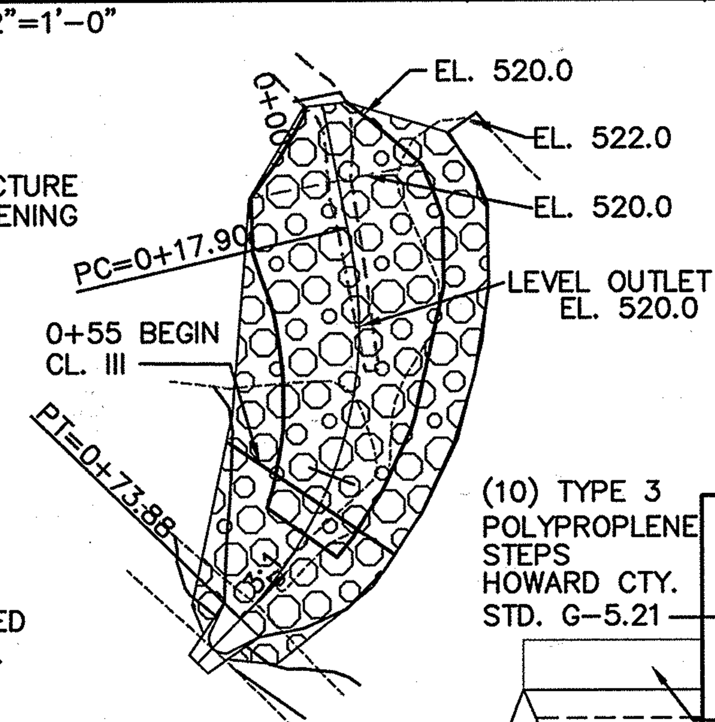

NORTH BASIN OUTLET PLAN (6) 26|27
SCALE: 1"=20'-0"

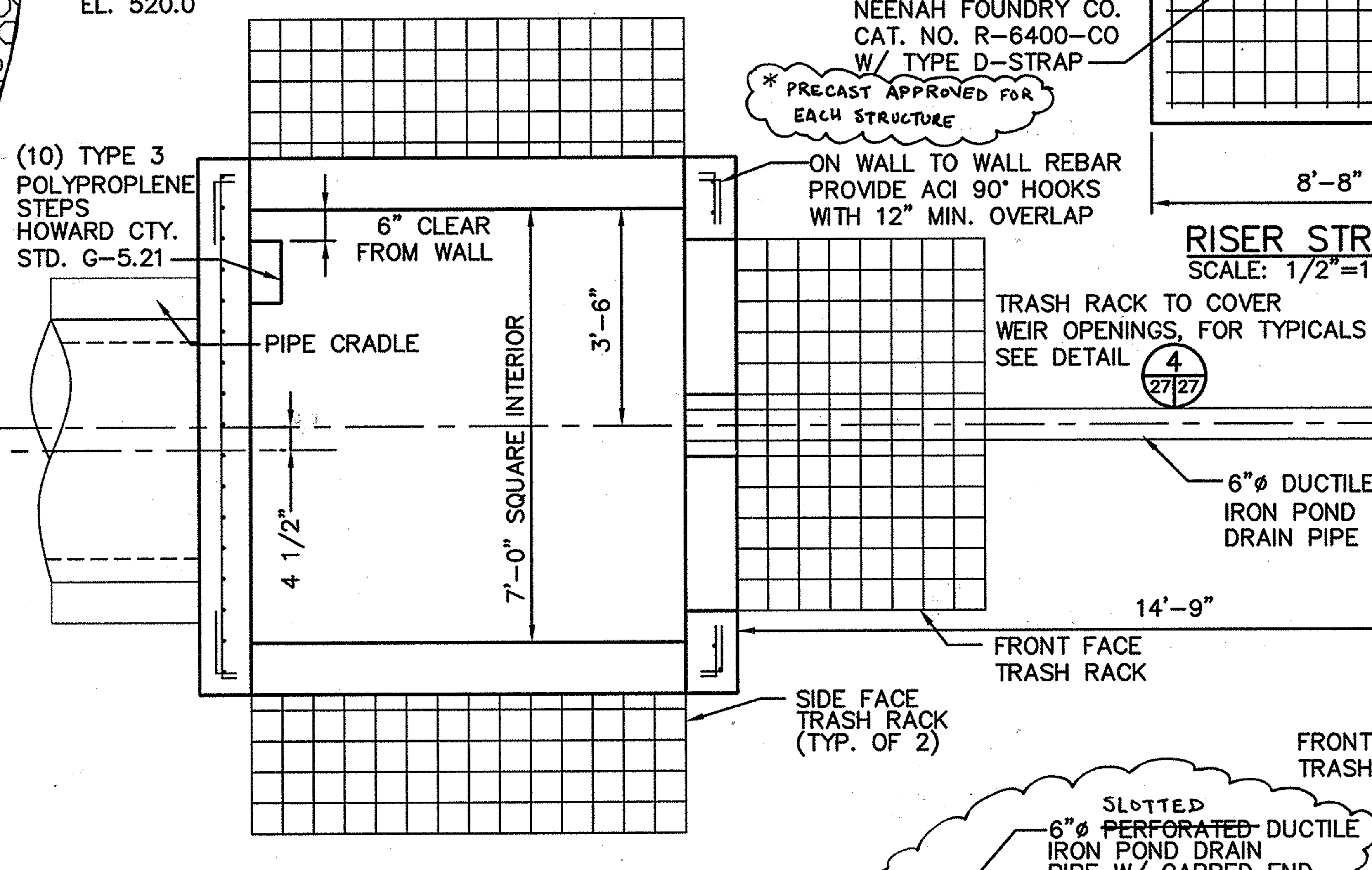

RISER STRUCTURE SECTION (F) 27|27
SCALE: 1/2"=1'-0"

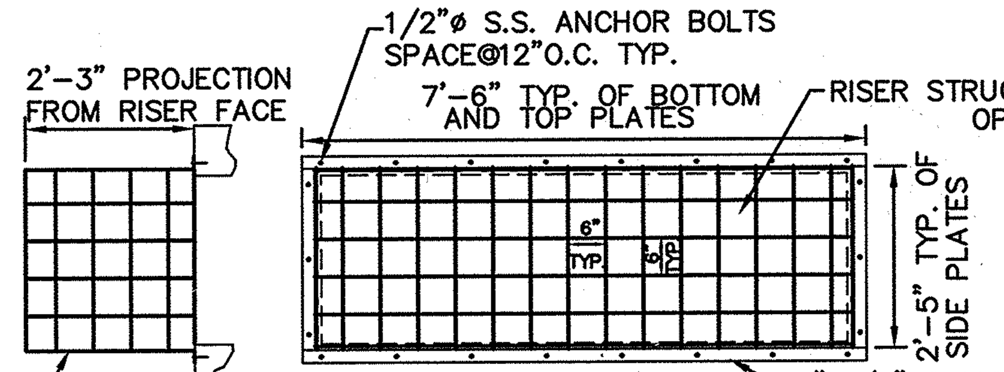

SIDE FACE TRASH RACK
(TYP. OF TWO)

TRASH RACK DETAIL (4) 27|27
SCALE: 1/2"=1'-0"

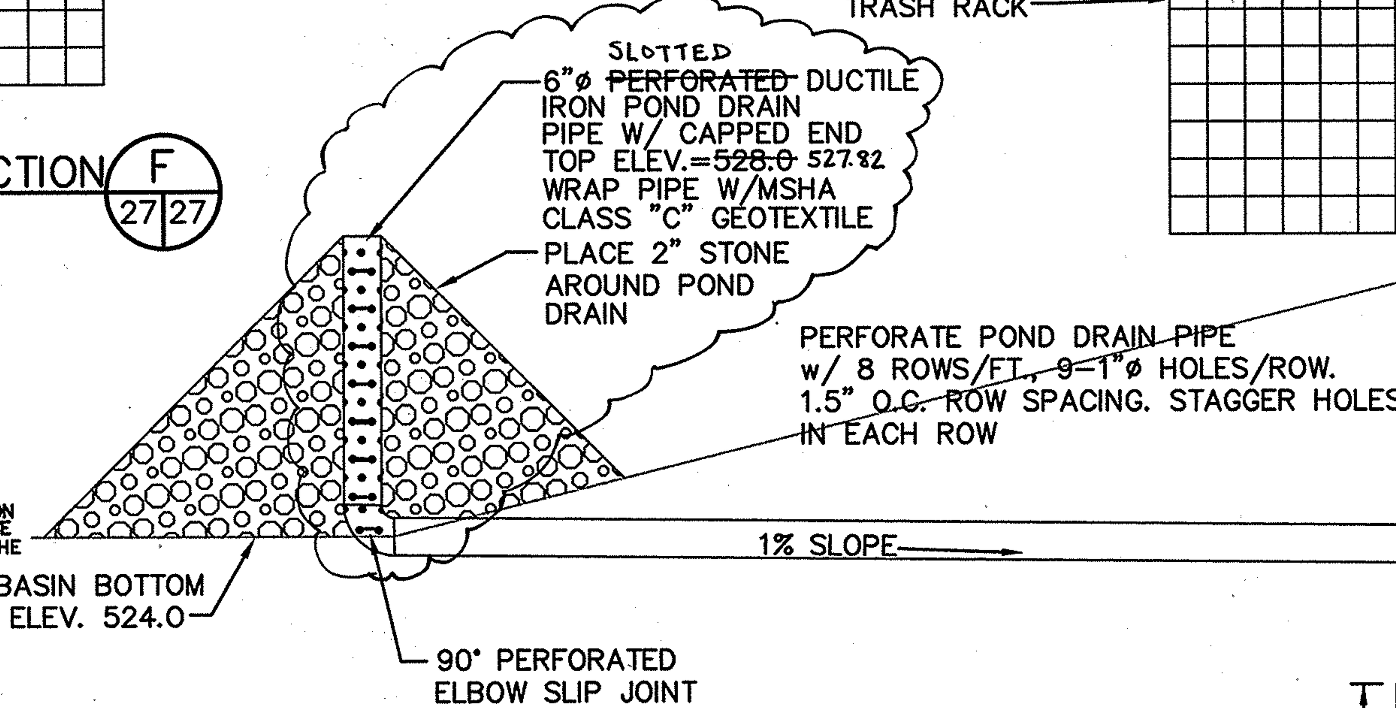

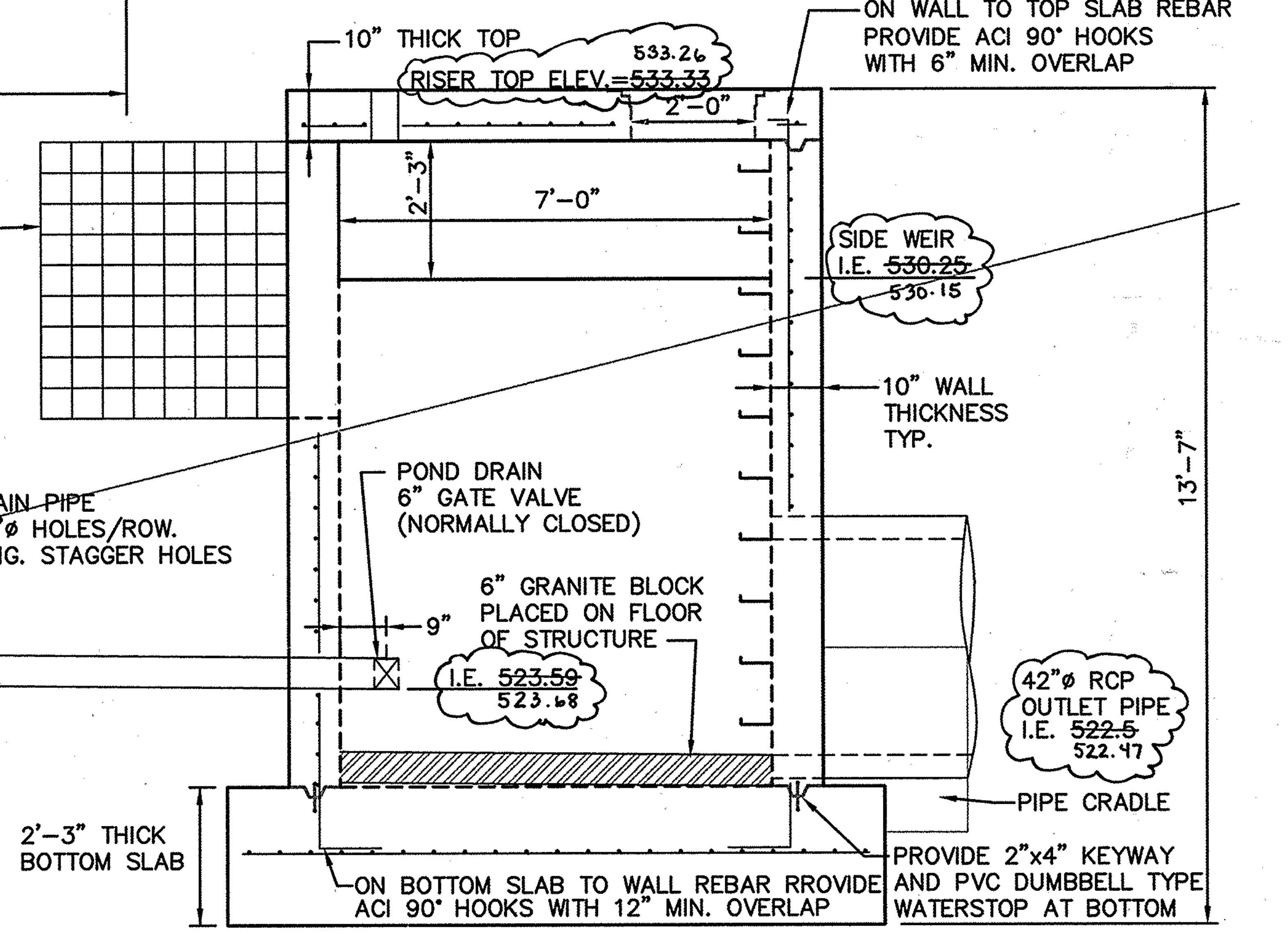

RISER STRUCTURE SECTION (D) 27|27
SCALE: 1/2"=1'-0"

SUBDIVISION NAME	LOT/PARCEL	
ALPHA RIDGE SOLID WASTE MANAGEMENT CENTER	84/253/220,11	
LIBER/FOLIO	ZONE	TAX/ZONE MAP
10-847/606 16-878/215 10-691/314	PEC	10 & 16
WATER CODE	SEWER CODE	CENSUS TR.
PRIVATE, EXISTING	PRIVATE, EXISTING	60-30

SEDIMENT CONTROL & POND CONSTRUCTION ( ) BY THE DEVELOPER:
"I/WE CERTIFY THAT ALL DEVELOPMENT AND/OR CONSTRUCTION WILL BE DONE ACCORDING TO THESE PLANS, AND THAT ANY RESPONSIBLE PERSONNEL INVOLVED IN THE CONSTRUCTION PROJECT WILL HAVE A CERTIFICATE OF ATTENDANCE AT A DEPARTMENT OF THE ENVIRONMENT APPROVED TRAINING PROGRAM FOR THE CONTROL OF SEDIMENT AND EROSION BEFORE BEGINNING THE PROJECT. I SHALL ENGAGE A REGISTERED PROFESSIONAL ENGINEER TO SUPERVISE POND CONSTRUCTION AND PROVIDE THE H.S.C.D. WITH AN "AS-BUILT" PLAN OF THE POND WITHIN 30 DAYS OF COMPLETION. I ALSO AUTHORIZE PERIODIC ON-SITE INSPECTIONS BY THE HOWARD SOIL CONSERVATION DISTRICT."

John J. O'Hara 10/30/97
SIGNATURE OF DEVELOPER (PRINT NAME BELOW SIGNATURE) DATE
JOHN J. O'HARA

( ) BY THE ENGINEER:
"I CERTIFY THAT THIS PLAN FOR POND CONSTRUCTION, EROSION AND SEDIMENT CONTROL REPRESENTS A PRACTICAL AND WORKABLE PLAN BASED ON MY PERSONAL KNOWLEDGE OF THE SITE CONDITIONS. THIS PLAN WAS PREPARED IN ACCORDANCE WITH THE REQUIREMENTS OF THE H.S.C.D. I HAVE NOTIFIED THE DEVELOPER THAT HE/SHE MUST ENGAGE A REGISTERED PROFESSIONAL ENGINEER TO SUPERVISE POND CONSTRUCTION AND PROVIDE THE H.S.C.D. WITH AN "AS-BUILT" PLAN OF THE POND WITHIN 30 DAYS OF COMPLETION."

PAUL A. MANDEVILLE *Paul A. Mandeville* 10/30/97
SIGNATURE OF ENGINEER (PRINT NAME BELOW SIGNATURE) DATE

( ) THESE PLANS HAVE BEEN REVIEWED FOR THE H.S.C.D. AND MEET THE TECHNICAL REQUIREMENTS FOR SMALL POND CONSTRUCTION, SOIL EROSION AND SEDIMENT CONTROL.

Cheryl K. Simmons 10-30-97
USDA - NATURAL RESOURCES CONSERVATION SERVICE DATE

( ) THESE PLANS FOR SMALL POND CONSTRUCTION, SOIL EROSION AND SEDIMENT CONTROL MEET THE REQUIREMENTS OF THE HOWARD SOIL CONSERVATION DISTRICT.

Robert W. Zielinski 10-30-97
HOWARD SOIL CONSERVATION DISTRICT DATE

DEPARTMENT OF PLANNING AND ZONING
HOWARD COUNTY, MARYLAND

DIRECTOR — DATE 11/3/97
CHIEF, DEVELOPMENT ENGINEERING DIVISION — DATE 10/31/97
CHIEF, DIVISION OF LAND DEVELOPMENT — DATE 11/3/97

DEPARTMENT OF PUBLIC WORKS
HOWARD COUNTY, MARYLAND

DIRECTOR OF PUBLIC WORKS — DATE 10/30/97
CHIEF, BUREAU OF WASTE MANAGEMENT — DATE 10/30/97

SCS ENGINEERS
CONSULTING ENGINEERS
11260 ROGER BACON DRIVE
SUITE 300
RESTON, VIRGINIA 22090
PH. (703) 471-6150
FAX. (703) 471-6676

STATE OF MARYLAND — PAUL ANTHONY MANDEVILLE — LIC REG CERT NO 14968 — PROFESSIONAL ENGINEER
Paul Anthony Mandeville, PE

DES. AST,RTT		6		
DRN. AST,EGC		5		
		4		
CHK. PAM		3		
		2		
DATE: 10-30-97		1		
	BY	NO.	REVISION	DATE

NORTH BASIN DETAILS

ALPHA RIDGE LANDFILL
UNLINED CELL CLOSURE
CAPITAL PROJECT NO. C-0190-N
3rd ELECTION DISTRICT — HOWARD COUNTY, MARYLAND

SCALE: AS NOTED
SHEET 27 OF 131

SDP-97-128

N5BSN2-B M:\295077.01\FINAL\ ANTSP-5B,CRADLE-5B,RISER-5B,TBL-5B,TRK-5B,DEWTR-5B

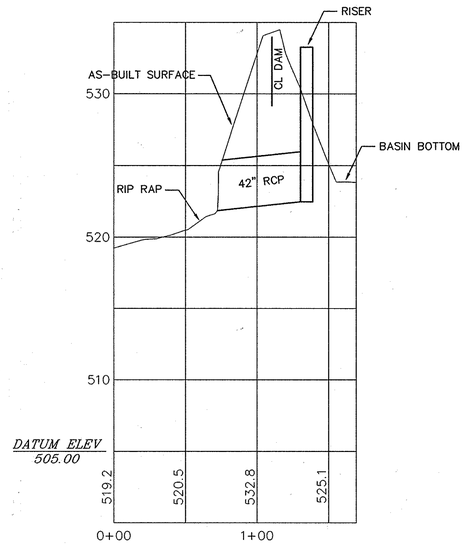

OUTLET PROFILE
NORTH BASIN

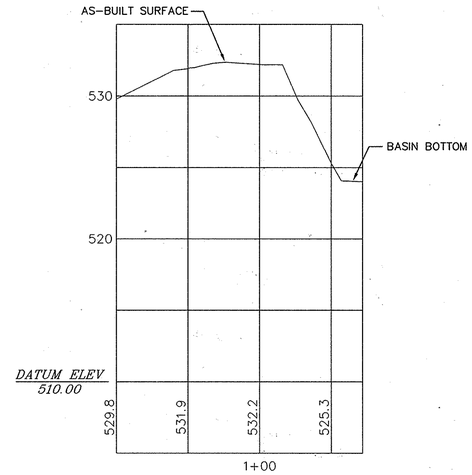

SPILLWAY PROFILE
NORTH BASIN

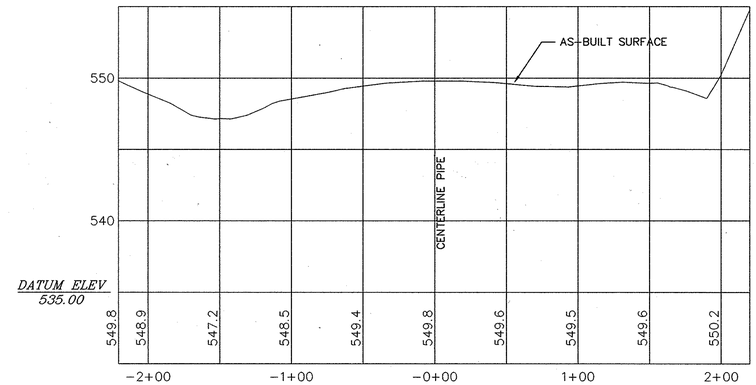

TOP OF DAM PROFILE
WEST BASIN

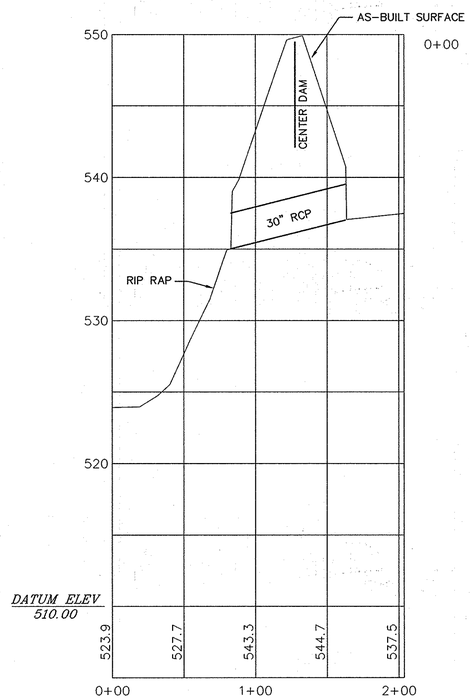

OUTLET PROFILE
WEST BASIN

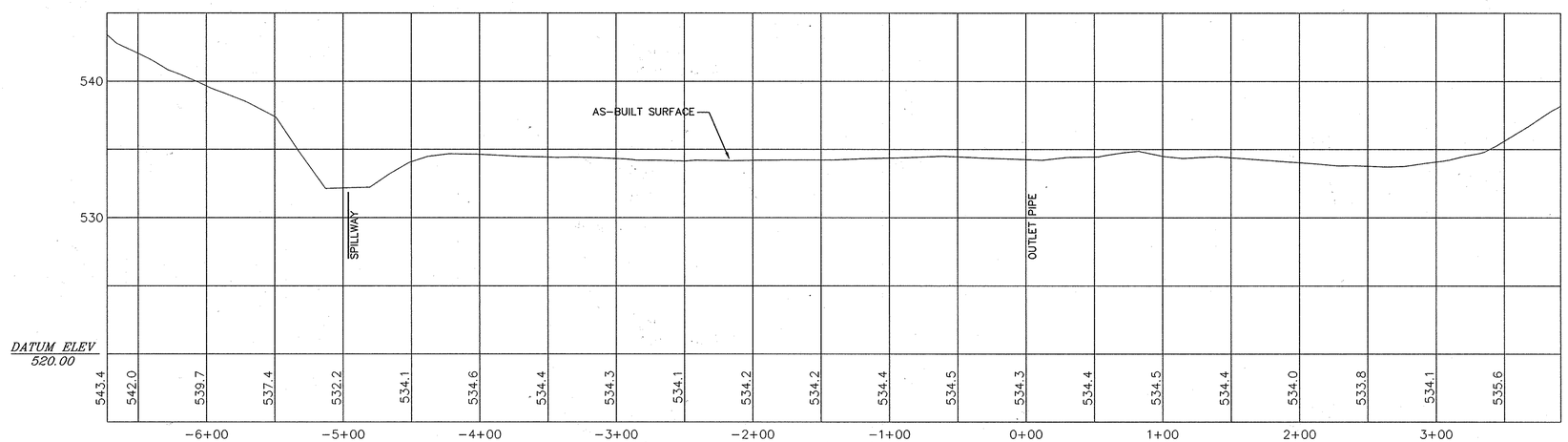

TOP OF DAM PROFILE
NORTH BASIN

HORIZONTAL SCALE: 1"=50'
VERTICAL SCALE: 1"=5'

DESIGNED BY:		DATE
DRAWN BY:	TWH	4-3-00 DATE
CHECKED BY:		DATE
APPROVED BY:		DATE

REVISIONS

DATE	BY	DESCRIPTION

ENGINEERING TECHNOLOGIES ASSOCIATES, INC.
ENGINEERS * PLANNERS * SURVEYORS
3458 ELLICOTT CENTER DRIVE SUITE 101
ELLICOTT CITY, MARYLAND 21043
BALTO. (410)461-9920 FAX (410)750-8565

STATE OF MARYLAND — CLIFFORD ALLEN TWIGG — REGISTERED PROFESSIONAL LAND SURVEYOR

H. E. SARGENT, INC. — CONTRACTORS • STILLWATER, NE.

AS-BUILT PROFILES NORTH AND WEST BASINS

ALPHA RIDGE LANDFILL CELL CLOSURE

HOWARD COUNTY MARYLAND

SCALE : AS NOTED | CONTRACT NO.: 98301.10 | DATE : 4-3-2000 | SHEET 28-AB OF 126

Nb-asblt.dwg 4-4-00 3:56:11 pm EST

Nb-asblt.dwg 4-4-00 3:56:11 pm EST

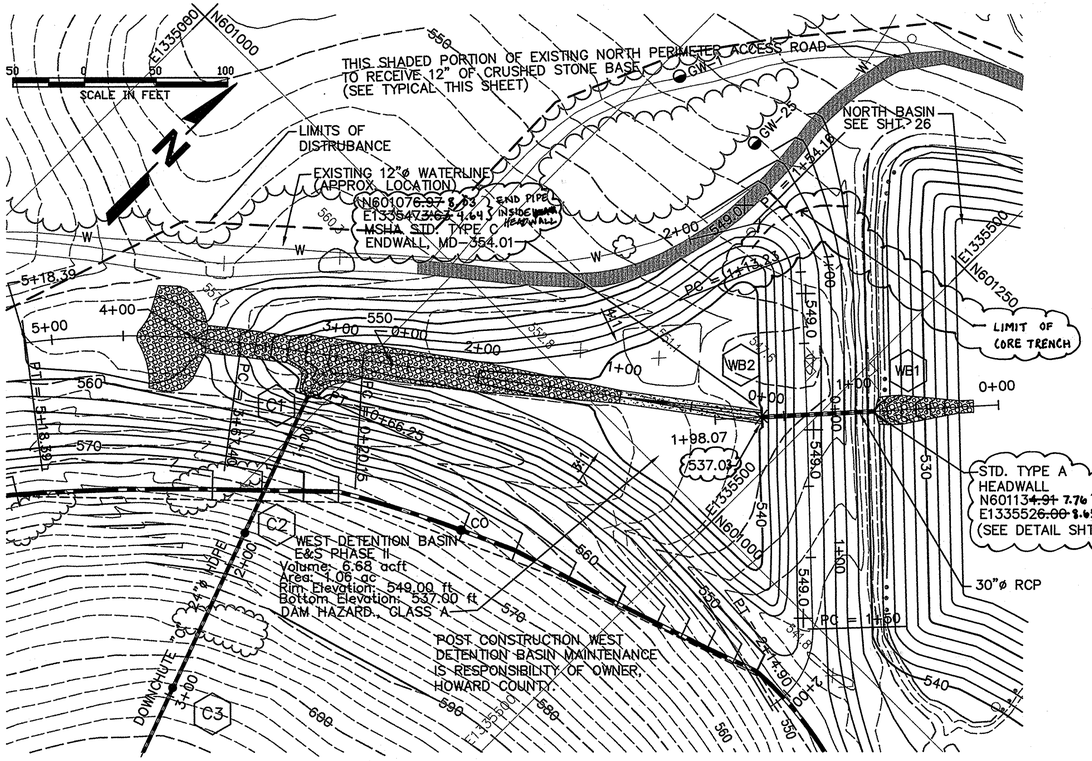

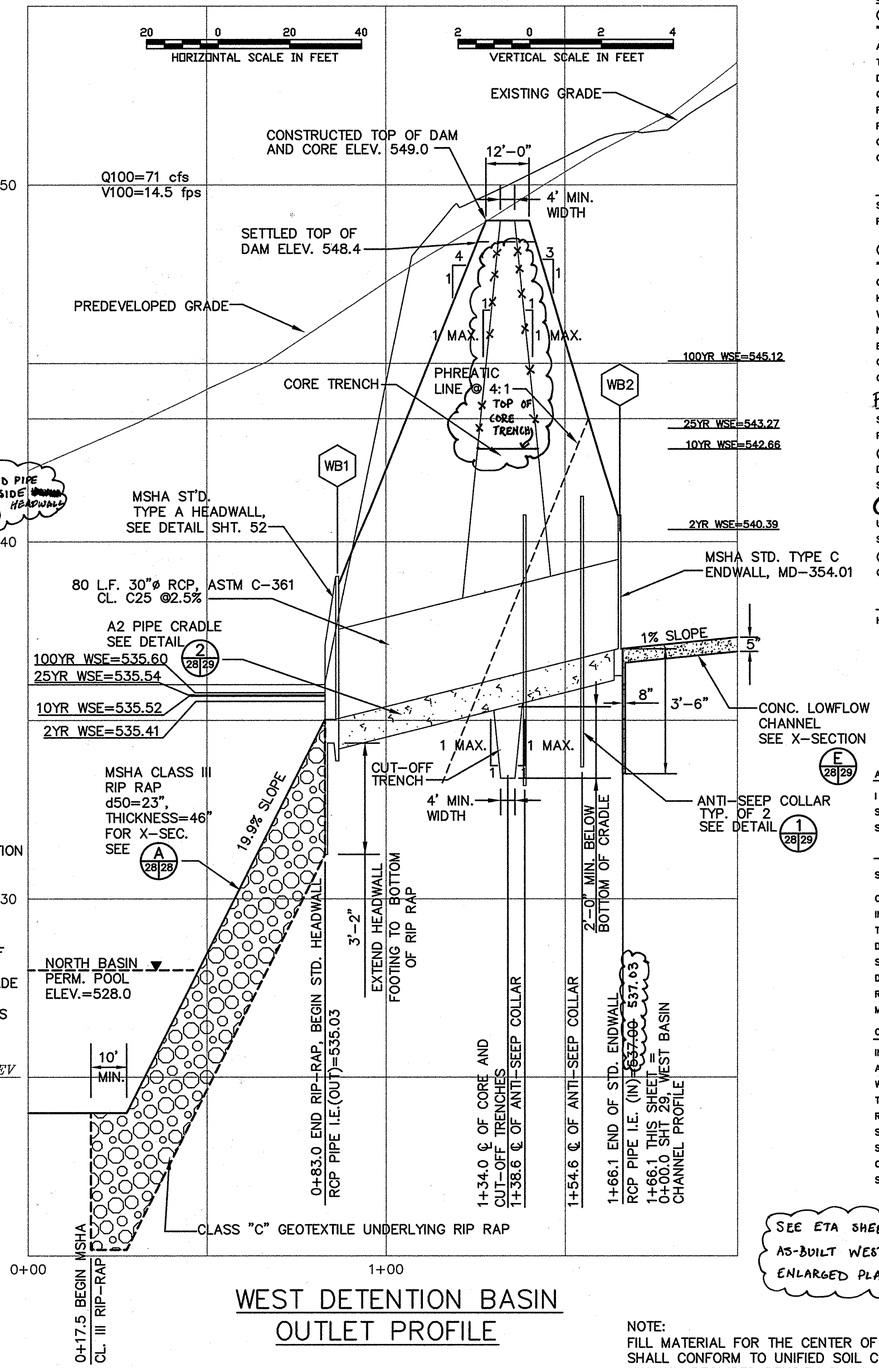

WEST DETENTION BASIN OUTLET PROFILE

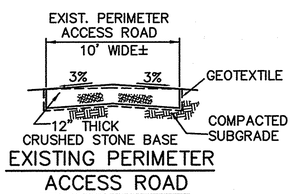

EXISTING PERIMETER ACCESS ROAD

SCALE: 3/16"-1'-0"

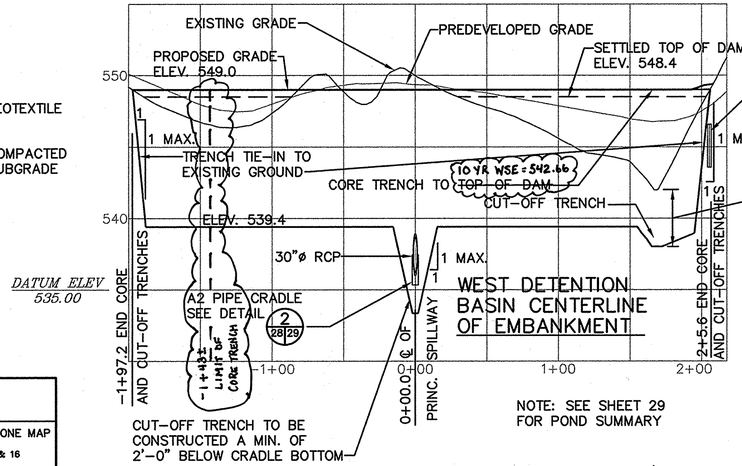

WEST DETENTION BASIN CENTERLINE OF EMBANKMENT

NOTE: SEE SHEET 29 FOR POND SUMMARY

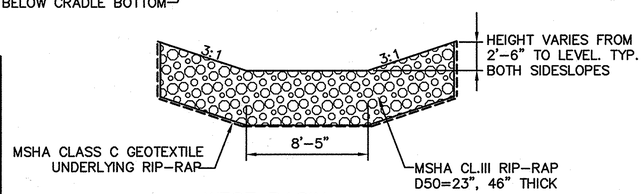

WEST BASIN OUTLET X-SECTION

SCALE: 1"=5'-0"

SUBDIVISION NAME	LOT/PARCEL	
ALPHA RIDGE SOLID WASTE MANAGEMENT CENTER	54,253,220,11	
LIBER/FOLIO	ZONE	TAX/ZONE MAP
10-847/606 16-876/215 10-891/314	PEC	10 & 16
WATER CODE	SEWER CODE	CENSUS TR.
PRIVATE, EXISTING	PRIVATE, EXISTING	60-30

DEPARTMENT OF PLANNING AND ZONING
HOWARD COUNTY, MARYLAND

DIRECTOR — DATE 11/3/97
CHIEF, DEVELOPMENT ENGINEERING DIVISION — DATE 11/3/97
CHIEF, DIVISION OF LAND DEVELOPMENT — DATE 11/6/97

DEPARTMENT OF PUBLIC WORKS
HOWARD COUNTY, MARYLAND

DIRECTOR OF PUBLIC WORKS — DATE 10/30/97
CHIEF, BUREAU OF WASTE MANAGEMENT — DATE 10/30/97

SCS ENGINEERS
CONSULTING ENGINEERS
11260 ROGER BACON DRIVE
SUITE 300
RESTON, VIRGINIA 22090
PH. (703) 471-6150
FAX. (703) 471-6676

STATE OF MARYLAND — PAUL ANTHONY MANDEVILLE — No. 14668 — PROFESSIONAL ENGINEER
Paul Anthony Mandeville, PE

DES. AST,RTT
DRN. AST,EGC
CHK. PAM
DATE: 10-30-97

BY	NO.	REVISION	DATE
	6		
	5		
	4		
	3		
	2		
	1		

SEDIMENT CONTROL & POND CONSTRUCTION

( ) BY THE DEVELOPER:
"I/WE CERTIFY THAT ALL DEVELOPMENT AND/OR CONSTRUCTION WILL BE DONE ACCORDING TO THESE PLANS, AND THAT ANY RESPONSIBLE PERSONNEL INVOLVED IN THE CONSTRUCTION PROJECT WILL HAVE A CERTIFICATE OF ATTENDANCE AT A DEPARTMENT OF THE ENVIRONMENT APPROVED TRAINING PROGRAM FOR THE CONTROL OF SEDIMENT AND EROSION BEFORE BEGINNING THE PROJECT. I SHALL ENGAGE A REGISTERED PROFESSIONAL ENGINEER TO SUPERVISE POND CONSTRUCTION AND PROVIDE THE HOWARD SOIL CONSERVATION DISTRICT WITH AN "AS-BUILT" PLAN OF THE POND WITHIN 30 DAYS OF COMPLETION. I ALSO AUTHORIZE PERIODIC ON-SITE INSPECTIONS BY THE HOWARD SOIL CONSERVATION DISTRICT."

SIGNATURE OF DEVELOPER — DATE 10/30/97
PRINT NAME BELOW SIGNATURE — JOHN J. O'HARA

( ) BY THE ENGINEER:
"I CERTIFY THAT THIS PLAN FOR POND CONSTRUCTION, EROSION AND SEDIMENT CONTROL REPRESENTS A PRACTICAL AND WORKABLE PLAN BASED ON MY PERSONAL KNOWLEDGE OF THE SITE CONDITIONS. THIS PLAN WAS PREPARED IN ACCORDANCE WITH THE REQUIREMENTS OF THE HOWARD SOIL CONSERVATION DISTRICT. I HAVE NOTIFIED THE DEVELOPER THAT HE/SHE MUST ENGAGE A REGISTERED PROFESSIONAL ENGINEER TO SUPERVISE POND CONSTRUCTION AND PROVIDE THE HOWARD SOIL CONSERVATION DISTRICT WITH AN "AS-BUILT" PLAN OF THE POND WITHIN 30 DAYS OF COMPLETION."

SIGNATURE OF ENGINEER — DATE 10/30/97
PRINT NAME BELOW SIGNATURE — PAUL A. MANDEVILLE

( ) THESE PLANS HAVE BEEN REVIEWED FOR THE HOWARD SOIL CONSERVATION DISTRICT AND MEET THE TECHNICAL REQUIREMENTS FOR SMALL POND CONSTRUCTION, SOIL EROSION AND SEDIMENT CONTROL.

USDA - NATURAL RESOURCES CONSERVATION SERVICE — DATE 10-30-97

( ) THESE PLANS FOR SMALL POND CONSTRUCTION, SOIL EROSION AND SEDIMENT CONTROL MEET THE REQUIREMENTS OF THE HOWARD SOIL CONSERVATION DISTRICT.

HOWARD SOIL CONSERVATION DISTRICT — DATE 10-30-97

AS-BUILT CERTIFICATION

I HEREBY CERTIFY THAT THE FACILITY SHOWN ON THIS PLAN WAS CONSTRUCTED AS SHOWN ON THE "AS-BUILT" PLANS AND MEETS THE APPROVED PLANS AND SPECIFICATIONS.

SIGNATURE — PE NO. 17650 — DATE 10/10/01

CERTIFY MEANS TO STATE OR DECLARE A PROFESSIONAL OPINION BASED UPON ON-SITE INSPECTIONS AND MATERIAL TESTS WHICH ARE CONDUCTED DURING CONSTRUCTION. THE ON-SITE INSPECTIONS AND MATERIAL TESTS ARE THOSE INSPECTIONS AND TESTS DEEMED SUFFICIENT AND APPROPRIATE BY COMMONLY ACCEPTED ENGINEERING STANDARDS. CERTIFY DOES NOT MEAN OR IMPLY A GUARANTEE BY THE ENGINEER NOR DOES AN ENGINEER'S CERTIFICATION RELIEVE ANY OTHER PARTY FROM MEETING REQUIREMENTS IMPOSED BY CONTRACT, EMPLOYMENT, OR OTHER MEANS, INCLUDING MEETING COMMONLY ACCEPTED INDUSTRY PRACTICES.

OPERATION, MAINTENANCE AND INSPECTION

INSPECTION OF THE POND(S) SHOWN HEREON SHALL BE PERFORMED AT LEAST ANNUALLY, IN ACCORDANCE WITH THE CHECKLIST AND REQUIREMENTS CONTAINED WITHIN USDA, SCS "STANDARDS AND SPECIFICATIONS FOR PONDS" (MD-378). THE POND OWNER(S) AND ANY HEIRS, SUCCESSORS, OR ASSIGNS SHALL BE RESPONSIBLE FOR THE SAFETY OF THE POND AND THE CONTINUED OPERATION, SURVEILLANCE, INSPECTION, AND MAINTENANCE THEREOF. THE POND OWNER(S) SHALL PROMPTLY NOTIFY THE SOIL CONSERVATION DISTRICT OF ANY UNUSUAL OBSERVATIONS THAT MAY BE INDICATIONS OF DISTRESS SUCH AS EXCESSIVE SEEPAGE, TURBID SEEPAGE, SLIDING OR SLUMPING.

SEE ETA SHEET 26AB AND 28AB FOR AS-BUILT WEST DETENTION BASIN ENLARGED PLAN AND PROFILES

NOTE:
FILL MATERIAL FOR THE CENTER OF THE EMBANKMENT AND CUT OFF TRENCH SHALL CONFORM TO UNIFIED SOIL CLASSIFICATION GC, SC, CH, OR CL. MINIMUM REQUIRED DENSITY SHALL BE 95% OF MAXIMUM DRY DENSITY WITH A MOISTURE CONTENT WITHIN +/- 2% OF THE OPTIMUM. FOR MORE INFORMATION SEE SHEET 23.

WEST DETENTION BASIN ENLARGED PLAN AND PROFILES

ALPHA RIDGE LANDFILL
UNLINED CELL CLOSURE
CAPITAL PROJECT NO. C-0190-N

3rd ELECTION DISTRICT — HOWARD COUNTY, MARYLAND

SCALE: AS NOTED

SHEET 28 OF 131

SDP-97-128

WBSN-B M:\295077.01\FINAL WBSN,WBCLDAM,PRF-WBSX,MKENOTE

NOTES:
1. RIP-RAP FOR GABION BASKETS TO BE d50 =7".
2. INSTALL CLASS C GEOTEXTILE UNDER ALL RIP-RAP AND GABIONS.
3. PROVIDE 1'-0" CL OR SC MATERIAL COMPACTED TO 95% (ASTM D698) BELOW GEOTEXTILE FROM STA. 2+81 TO STA. 4+00.

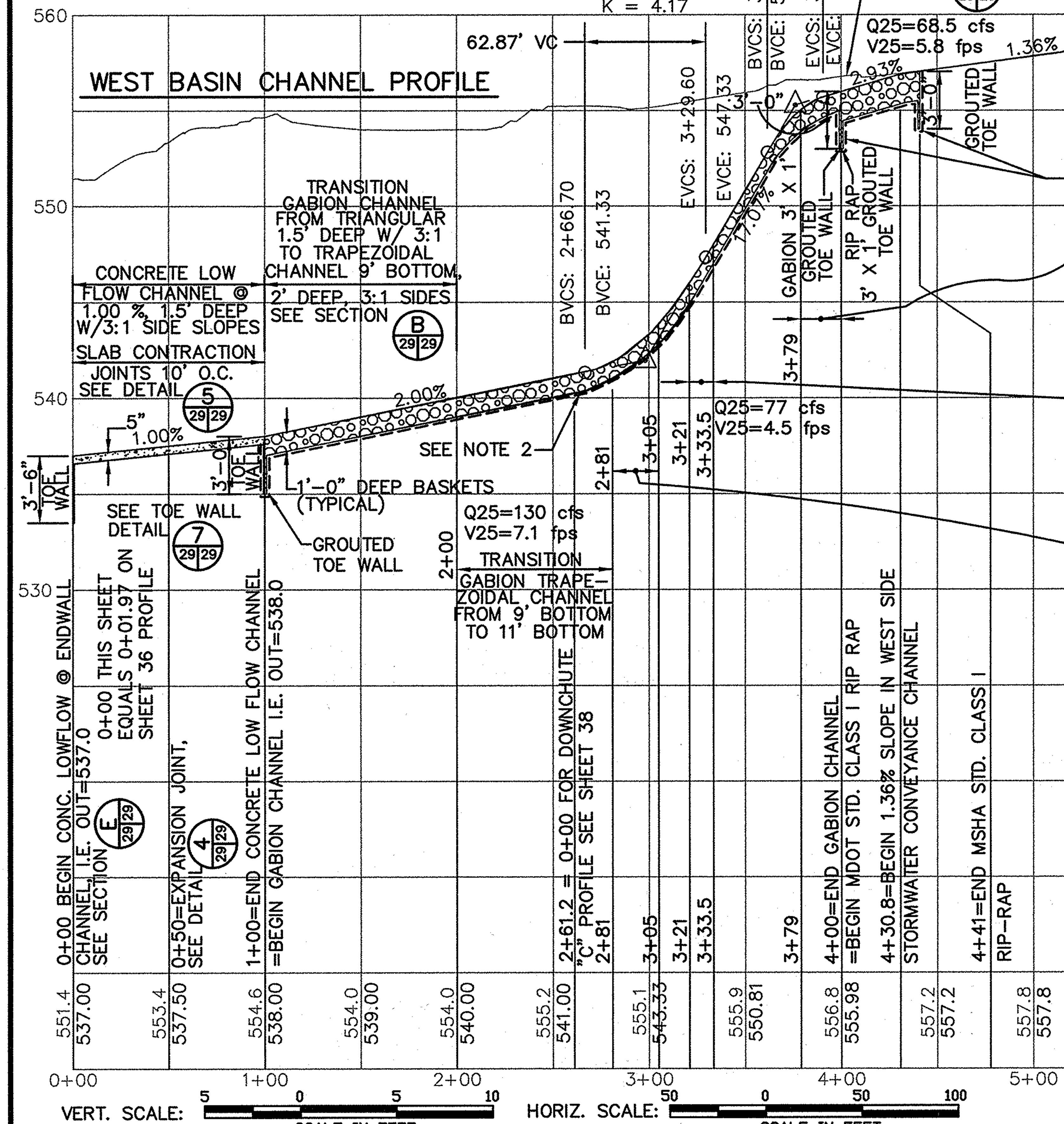

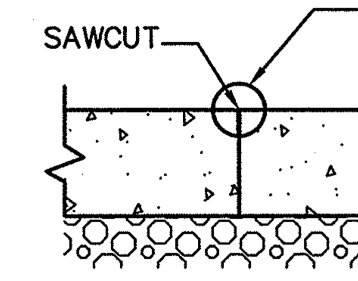

SLAB CONTRACTION JOINT DETAIL (5, 29|29)
NOT TO SCALE

POND	RISER				OUTLET PIPE				ANTI-SEEP COLLAR		DAM			EMERG. SPILLWAY		CORE TRENCH		CUT-OFF TRENCH		WATER SURFACE ELEV.			
	WEIR HT.	WEIR WIDTH	CREST ELEV.	STR. WIDTH	DIA. IN.	L FT.	U/S INV.	D/S INV.	QTY.	APPROX. SIZE	TOP WIDTH FT.	CONSTR. HEIGHT	SETTLED HEIGHT	ELEV.	BOTTOM WIDTH FT.	TOP WIDTH FT.	SIDE SLOPES	BOT. WIDTH FT.	SIDE SLOPES	2 YR.	10 YR.	25 YR.	100 YR.
WEST	N/A	N/A	N/A	N/A	30	80.0	537.03	535.03	2	7.58' HT. 8.29' W.	12'	549.0	548.4	N/A	N/A	4'	1:1	4'	1:1	540.39	542.66	543.27	545.12

POST CONSTRUCTION WEST DETENTION BASIN MAINTENANCE IS RESPONSIBILITY OF OWNER, HOWARD COUNTY.

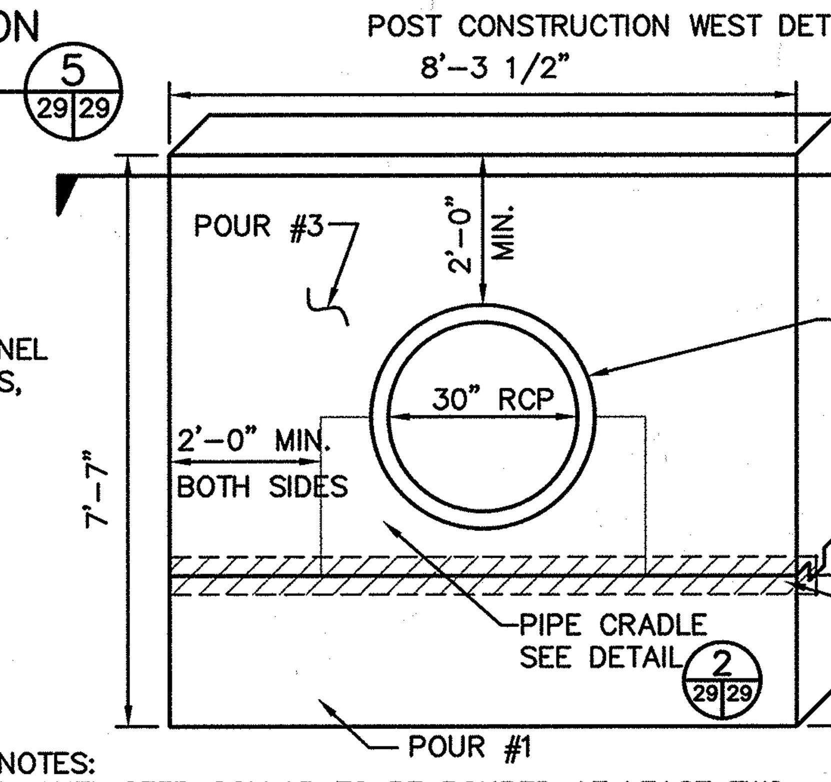

NOTES:
1. ANTI-SEEP COLLAR TO BE POURED AT LEAST TWO (2) FEET FROM NEAREST PIPE JOINT.
2. ANTI-SEEP COLLAR TO BE CONSTRUCTED IN THREE POURS.
3. BOTTOM HALF TO BE POURED FIRST.
4. PLACE PIPE AND POUR CRADLE SECOND.
5. TOP PORTION OF COLLAR POURED THIRD.
6. BACKFILL SHALL BE PLACED EVENLY ON BOTH SIDES OF THE ANTI-SEEP COLLAR.
7. REINFORCED CONCRETE: fc = 4,000 psi @ 28 DAYS.

ANTI-SEEP COLLAR DETAIL (TYP. OF 2) (1, 28|29)
SCALE: 1/2"=1'-0"

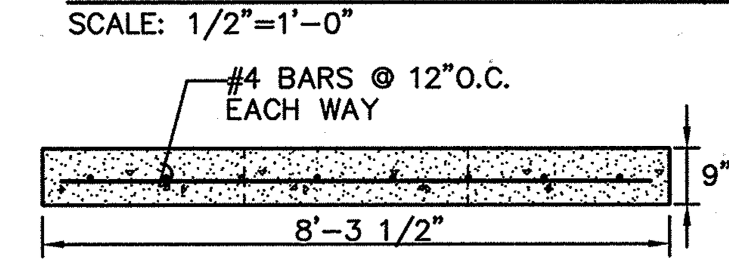

SECTION (A, 29|29)
SCALE: 1/2"=1'-0"

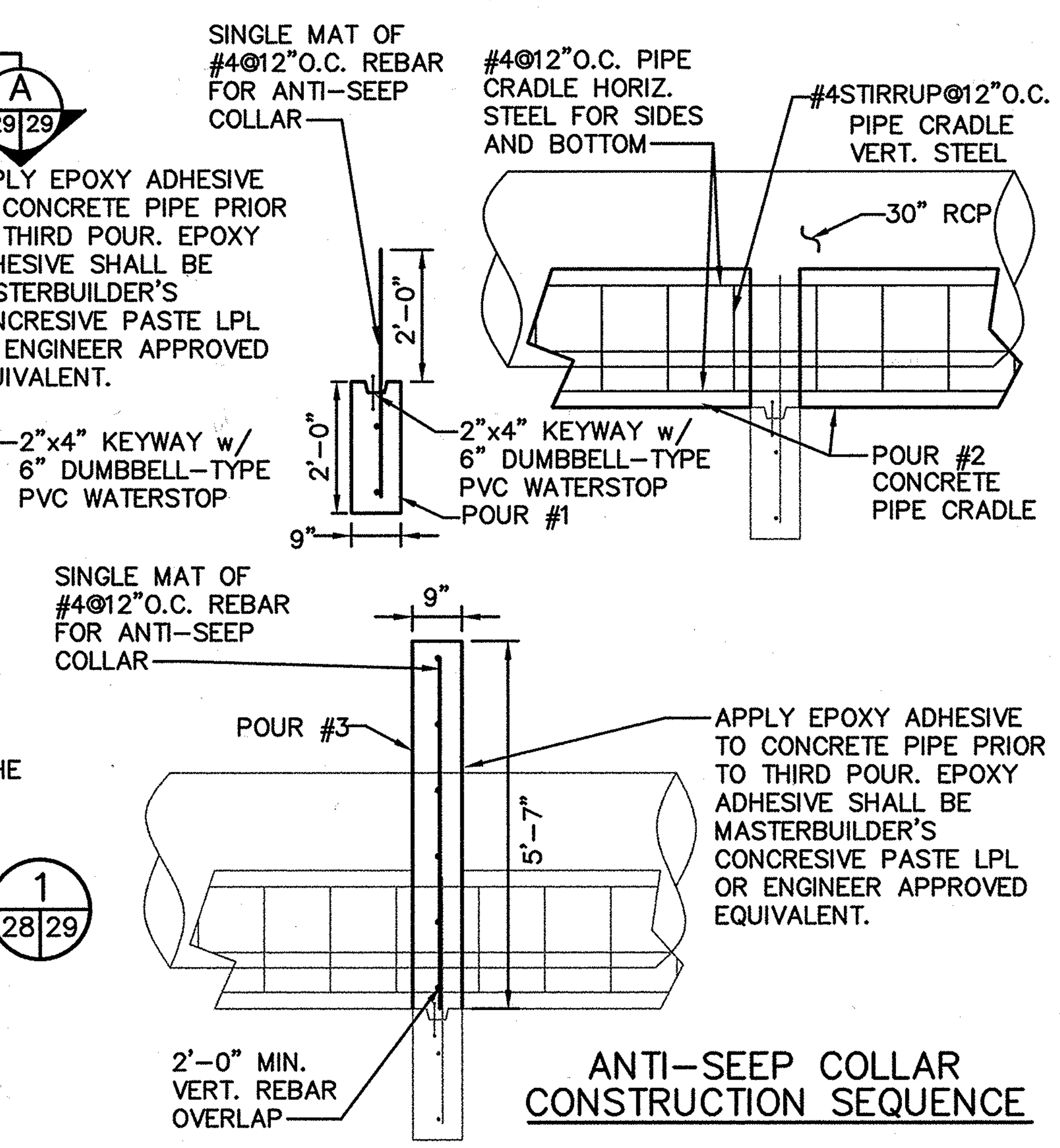

ANTI-SEEP COLLAR CONSTRUCTION SEQUENCE

SEDIMENT CONTROL & POND CONSTRUCTION

( ) BY THE DEVELOPER:
"I/WE CERTIFY THAT ALL DEVELOPMENT AND/OR CONSTRUCTION WILL BE DONE ACCORDING TO THESE PLANS, AND THAT ANY RESPONSIBLE PERSONNEL INVOLVED IN THE CONSTRUCTION PROJECT WILL HAVE A CERTIFICATE OF ATTENDANCE AT A DEPARTMENT OF THE ENVIRONMENT APPROVED TRAINING PROGRAM FOR THE CONTROL OF SEDIMENT AND EROSION BEFORE BEGINNING THE PROJECT. I SHALL ENGAGE A REGISTERED PROFESSIONAL ENGINEER TO SUPERVISE POND CONSTRUCTION AND PROVIDE THE HOWARD SOIL CONSERVATION DISTRICT WITH AN "AS-BUILT" PLAN OF THE POND WITHIN 30 DAYS OF COMPLETION. I ALSO AUTHORIZE PERIODIC ON-SITE INSPECTIONS BY THE HOWARD SOIL CONSERVATION DISTRICT."

John J. O'Hara 10/30/97
SIGNATURE OF DEVELOPER JOHN J. O'HARA DATE
PRINT NAME BELOW SIGNATURE

( ) BY THE ENGINEER:
"I CERTIFY THAT THIS PLAN FOR POND CONSTRUCTION, EROSION AND SEDIMENT CONTROL REPRESENTS A PRACTICAL AND WORKABLE PLAN BASED ON MY PERSONAL KNOWLEDGE OF THE SITE CONDITIONS. THIS PLAN WAS PREPARED IN ACCORDANCE WITH THE REQUIREMENTS OF THE HOWARD SOIL CONSERVATION DISTRICT. I HAVE NOTIFIED THE DEVELOPER THAT HE/SHE MUST ENGAGE A REGISTERED PROFESSIONAL ENGINEER TO SUPERVISE POND CONSTRUCTION AND PROVIDE THE HOWARD SOIL CONSERVATION DISTRICT WITH AN "AS-BUILT" PLAN OF THE POND WITHIN 30 DAYS OF COMPLETION."

PAUL A. MANDEVILLE Paul A. Mandeville 10/30/97
SIGNATURE OF ENGINEER DATE
PRINT NAME BELOW SIGNATURE

( ) THESE PLANS HAVE BEEN REVIEWED FOR THE HOWARD SOIL CONSERVATION DISTRICT AND MEET THE TECHNICAL REQUIREMENTS FOR SMALL POND CONSTRUCTION, SOIL EROSION AND SEDIMENT CONTROL.

Cheryl K. Simmons 10.30.97
USDA - NATURAL RESOURCES CONSERVATION SERVICE DATE

( ) THESE PLANS FOR SMALL POND CONSTRUCTION, SOIL EROSION AND SEDIMENT CONTROL MEET THE REQUIREMENTS OF THE HOWARD SOIL CONSERVATION DISTRICT.

Robert W. Ziehm 10.30.97
HOWARD SOIL CONSERVATION DISTRICT DATE

AS-BUILT CERTIFICATION
I HEREBY CERTIFY THAT THE FACILITY SHOWN ON THIS PLAN WAS CONSTRUCTED AS SHOWN ON THE "AS-BUILT" PLANS AND MEETS THE APPROVED PLANS AND SPECIFICATIONS.

Michael R. Goudreau PE NO. 17650
SIGNATURE DATE 10/10/01

CERTIFY MEANS TO STATE OR DECLARE A PROFESSIONAL OPINION BASED UPON ON-SITE INSPECTIONS AND MATERIAL TESTS WHICH ARE CONDUCTED DURING CONSTRUCTION. THE ON-SITE INSPECTIONS AND MATERIAL TESTS ARE THOSE INSPECTIONS AND TESTS DEEMED SUFFICIENT AND APPROPRIATE BY COMMONLY ACCEPTED ENGINEERING STANDARDS. CERTIFY DOES NOT MEAN OR IMPLY A GUARANTEE BY THE ENGINEER NOR DOES AN ENGINEER'S CERTIFICATION RELIEVE ANY OTHER PARTY FROM MEETING REQUIREMENTS IMPOSED BY CONTRACT, EMPLOYMENT, OR OTHER MEANS, INCLUDING MEETING COMMONLY ACCEPTED INDUSTRY PRACTICES.

OPERATION, MAINTENANCE AND INSPECTION
INSPECTION OF THE POND(S) SHOWN HEREON SHALL BE PERFORMED AT LEAST ANNUALLY, IN ACCORDANCE WITH THE CHECKLIST AND REQUIREMENTS CONTAINED WITHIN USDA, SCS "STANDARDS AND SPECIFICATIONS FOR PONDS" (MD-378). THE POND OWNER(S) AND ANY HEIRS, SUCCESSORS, OR ASSIGNS SHALL BE RESPONSIBLE FOR THE SAFETY OF THE POND AND THE CONTINUED OPERATION, SURVEILLANCE, INSPECTION, AND MAINTENANCE THEREOF. THE POND OWNER(S) SHALL PROMPTLY NOTIFY THE SOIL CONSERVATION DISTRICT OF ANY UNUSUAL OBSERVATIONS THAT MAY BE INDICATIONS OF DISTRESS SUCH AS EXCESSIVE SEEPAGE, TURBID SEEPAGE, SLIDING OR SLUMPING.

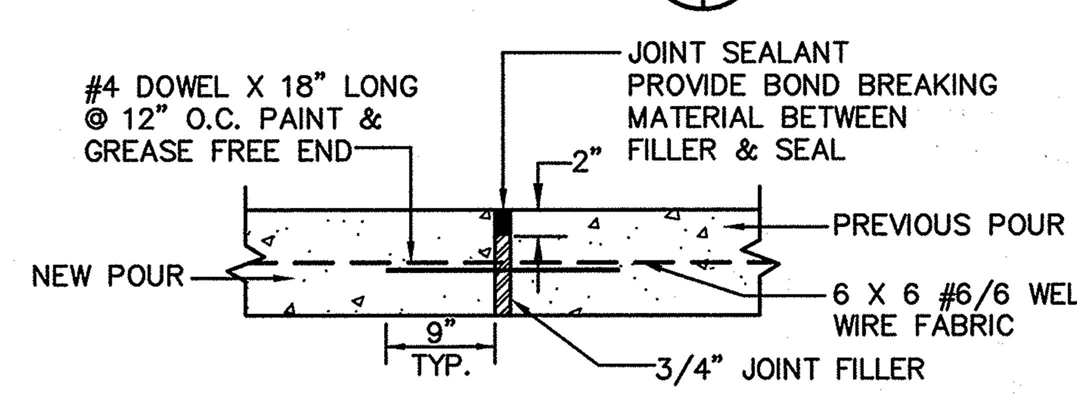

CONCRETE SLAB EXPANSION JOINT DETAIL (4, 29|29)
NOT TO SCALE

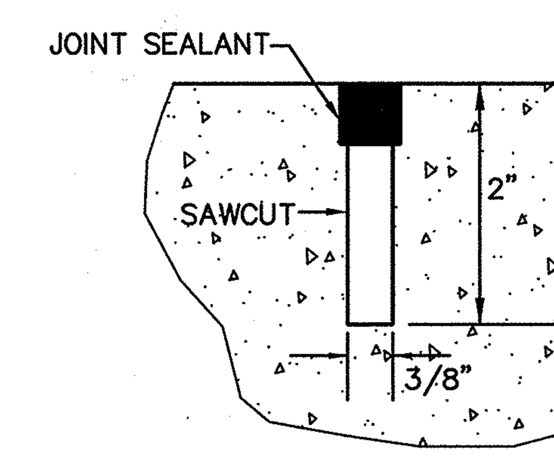

SAWCUT SEALANT DETAIL (6, 29|29)
NOT TO SCALE

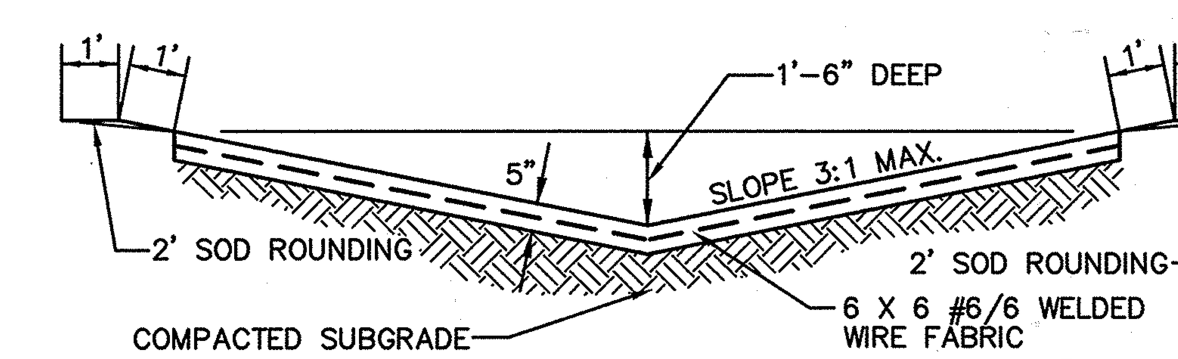

CONCRETE TRIANGULAR X-SECTION (E, 29|29)
NOT TO SCALE

28,

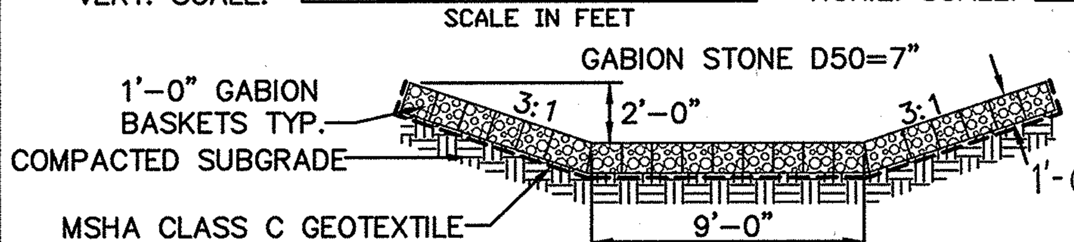

WEST BASIN CHANNEL STA. 2+00 (B, 29|29)
SCALE: 1"=5'-0"

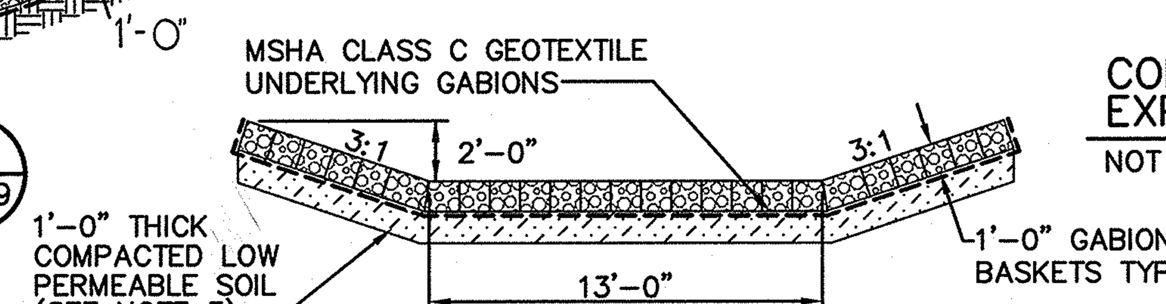

WEST BASIN CHANNEL STA. 3+05 TO 3+21 (C, 29|29)
SCALE: 1"=5'-0"

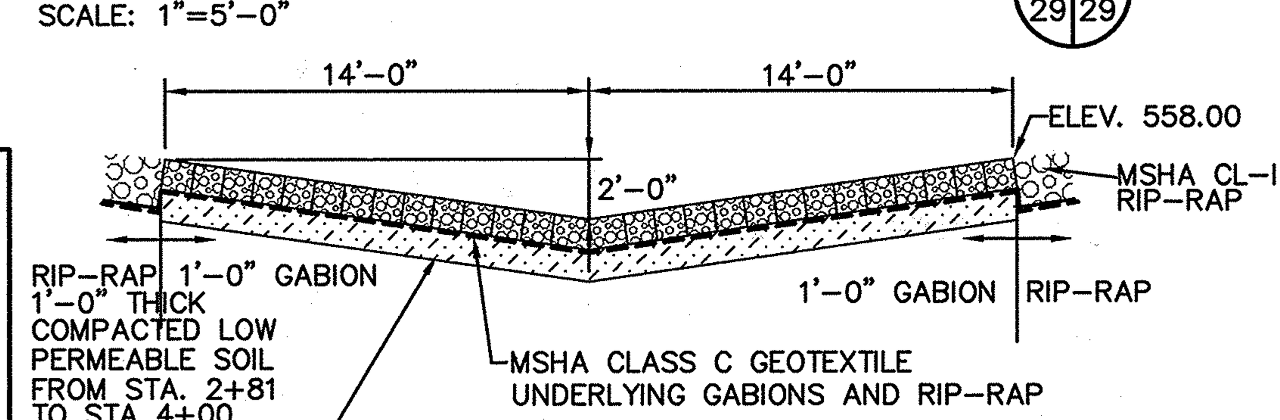

WEST BASIN CHANNEL STA. 4+00 (D, 29|29)
SCALE: 1"=5'-0"

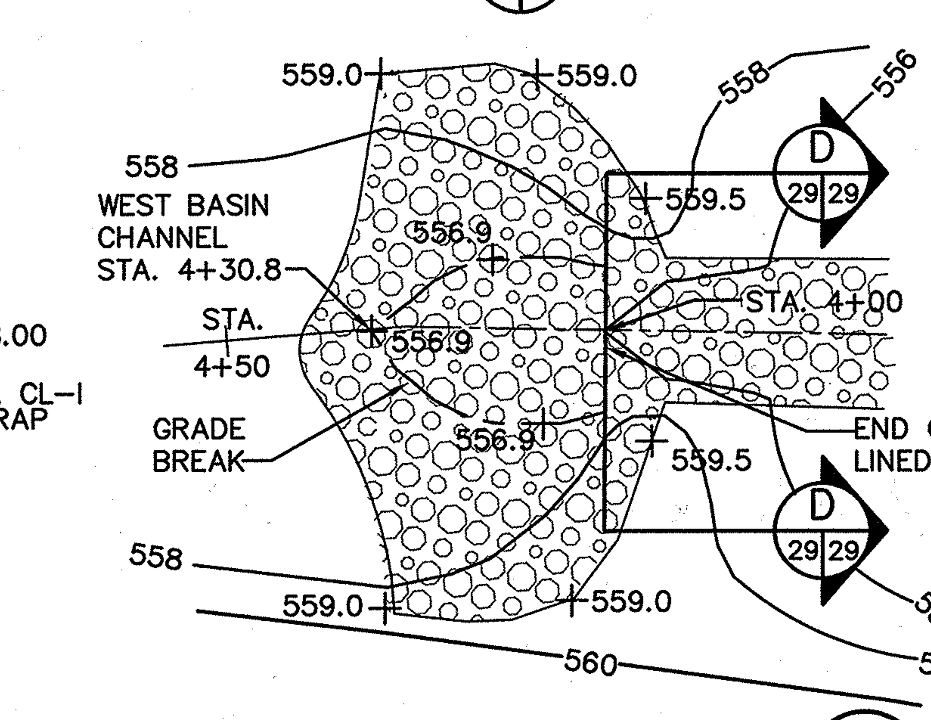

WEST BASIN INLET DETAIL (3, 29|29)
SCALE: 1"=20'-0"

LOWFLOW CHANNEL NOTES:
1. ALL SOD TO BE STAKED WITH 1/2" X 1" X 12" WOOD STAKES ON 24" CENTERS BOTH WAYS.
2. CONCRETE SHALL BE MSHA MIX NO. 2.

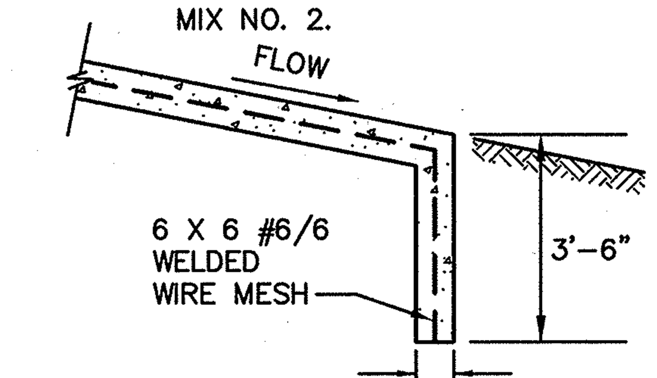

TOE WALL DETAIL (7, 29|29)
NOT TO SCALE

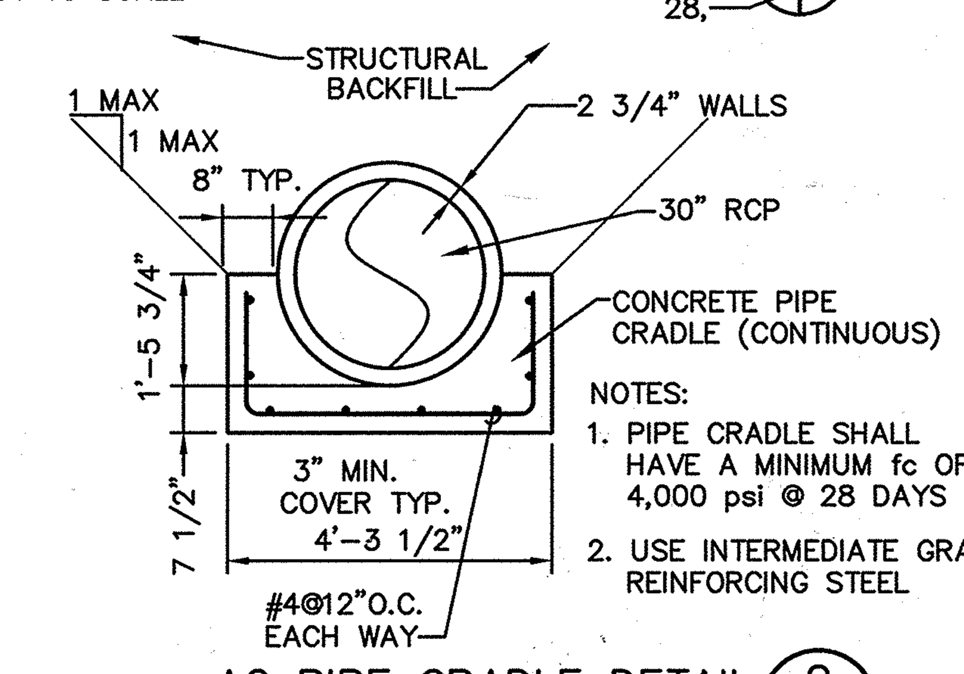

NOTES:
1. PIPE CRADLE SHALL HAVE A MINIMUM fc OF 4,000 psi @ 28 DAYS
2. USE INTERMEDIATE GRADE REINFORCING STEEL

A2 PIPE CRADLE DETAIL (2, 29|29)
SCALE: 1/2"=1'-0"

SUBDIVISION NAME	LOT/PARCEL	
ALPHA RIDGE SOLID WASTE MANAGEMENT CENTER	54,253,220,11	
LIBER/FOLIO	ZONE	TAX/ZONE MAP
10-847/606 16-878/215 10-691/314	PEC	10 & 16
WATER CODE	SEWER CODE	CENSUS TR.
PRIVATE, EXISTING	PRIVATE, EXISTING	60-30

DEPARTMENT OF PLANNING AND ZONING
HOWARD COUNTY, MARYLAND

DIRECTOR DATE 11/3/97

CHIEF, DEVELOPMENT ENGINEERING DIVISION DATE 11/3/97

Cindy Hamilton
CHIEF, DIVISION OF LAND DEVELOPMENT DATE 11/3/97

DEPARTMENT OF PUBLIC WORKS
HOWARD COUNTY, MARYLAND

DIRECTOR OF PUBLIC WORKS DATE 10/30/97

John J. O'Hara
CHIEF, BUREAU OF WASTE MANAGEMENT DATE 10/30/97

SCS ENGINEERS
CONSULTING ENGINEERS
11260 ROGER BACON DRIVE
SUITE 300
RESTON, VIRGINIA 22090
PH. (703) 471-6150
FAX. (703) 471-6676

STATE OF MARYLAND PAUL ANTHONY MANDEVILLE LIC REG CERT NO 14968 PROFESSIONAL ENGINEER
Paul Anthony Mandeville, PE

		BY	NO.	REVISION	DATE
DES.	AST,RTT		6		
DRN.	AST,EGC		5		
			4		
CHK.	PAM		3		
			2		
DATE:	10-30-97		1		

WEST DETENTION BASIN DETAILS

ALPHA RIDGE LANDFILL
UNLINED CELL CLOSURE
CAPITAL PROJECT NO. C-0190-N

3rd ELECTION DISTRICT HOWARD COUNTY, MARYLAND

SCALE: AS NOTED

SHEET 29 OF 131

SDP-97-128

WBSN2-B M:\295077.01\FINAL\ ANTSP-WB,CRADLE-WB,A-SEEP,PNDTBL,WBINLET,XS-WB11,XS-WB12,XS-WB13,WBINLET,PRF-WBC, CONCTRI

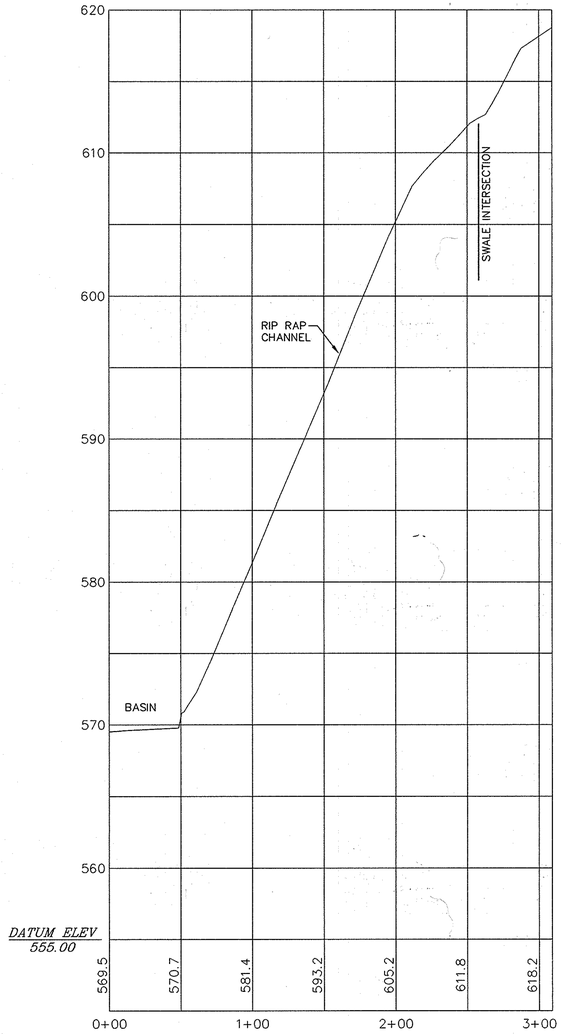

DOWNCHUTE PROFILE
SOUTH BASIN

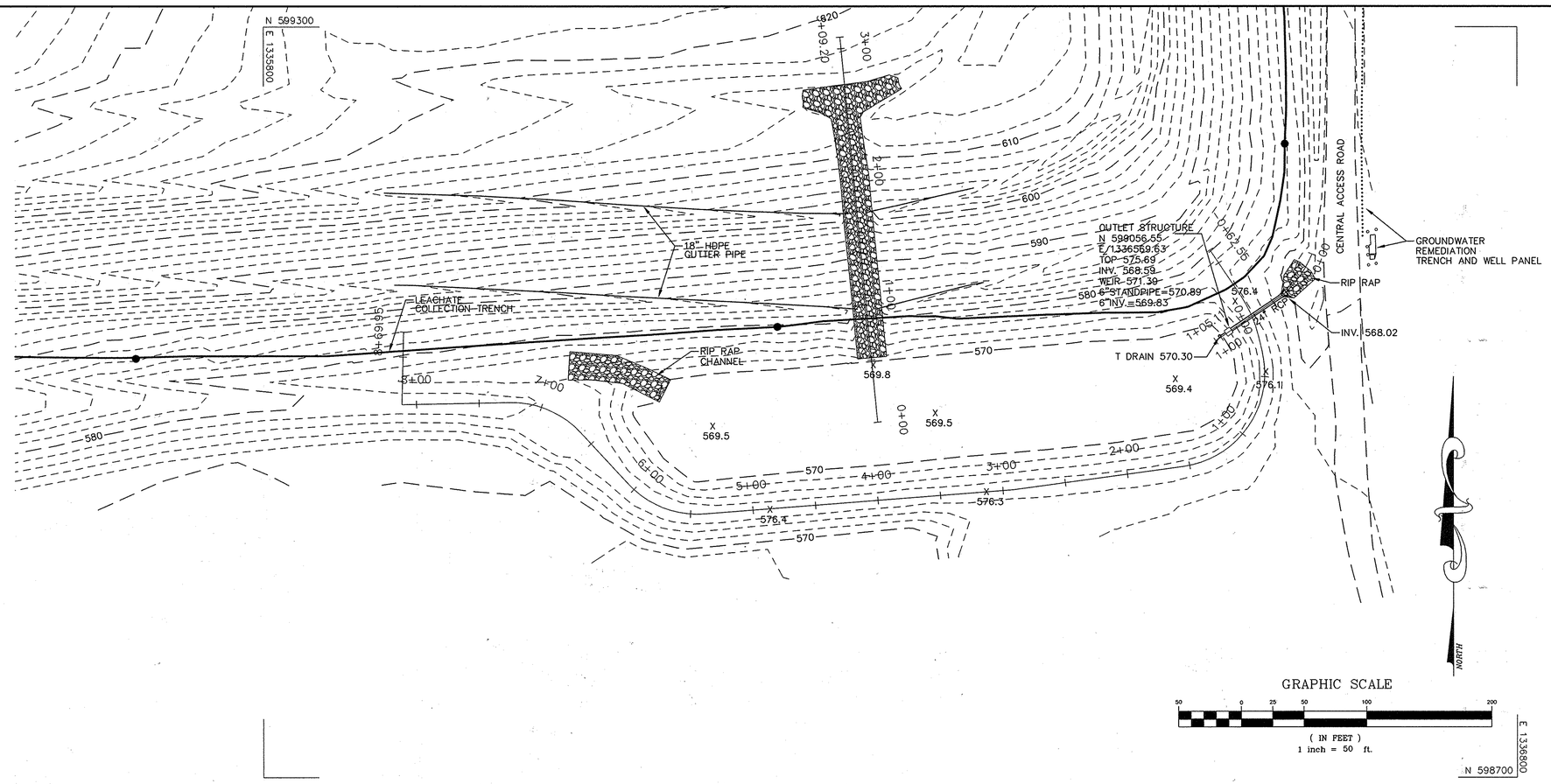

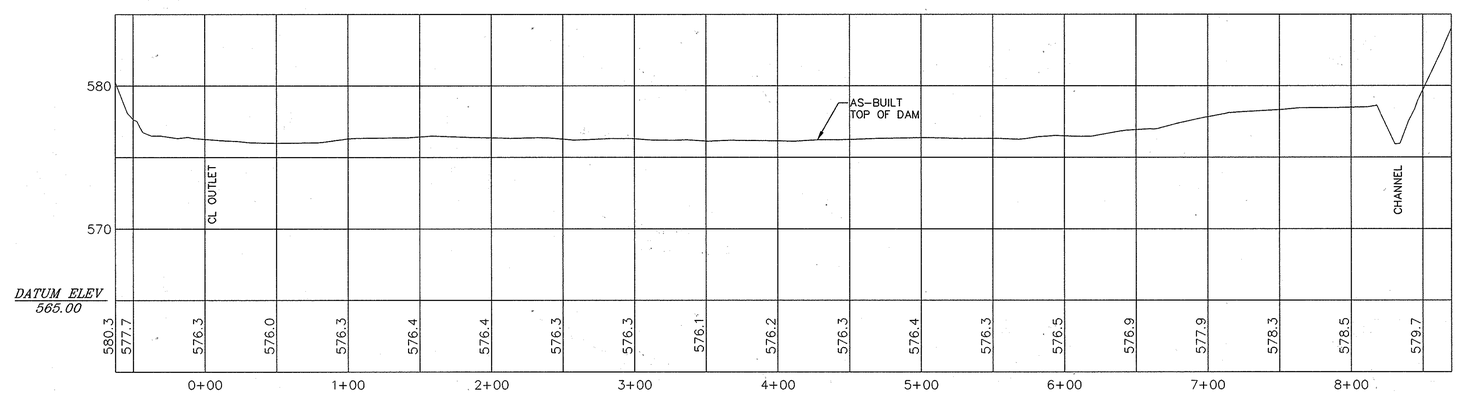

TOP OF DAM PROFILE
SOUTH BASIN

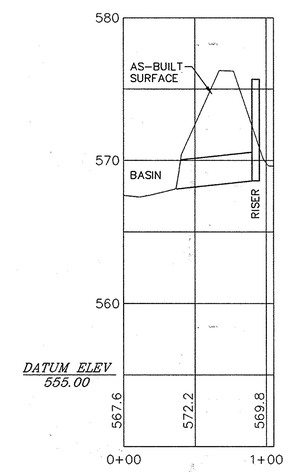

OUTLET PROFILE
SOUTH BASIN

DESIGNED BY:		DATE
DRAWN BY:	TWH	11-21-98 DATE
CHECKED BY:		DATE
APPROVED BY:		DATE

REVISIONS

DATE	BY	DESCRIPTION
4-6-00	TWH	ADDED PROFILES
10-30-00	TWH	ADDED RISER DRAIN ELEVATIONS.
4-18-01	TWH	REVISED CONTOURS OF BERM AND PROFILE GRADES.

ENGINEERING TECHNOLOGIES ASSOCIATES, INC.
ENGINEERS * PLANNERS * SURVEYORS
3458 ELLICOTT CENTER DRIVE SUITE 101
ELLICOTT CITY, MARYLAND 21043
BALTO. (410)461-9920 FAX (410)750-8565

STATE OF MARYLAND · CLIFFORD ALLEN ELGIN · REGISTERED PROPERTY LINE SURVEYOR

H. E. SARGENT, INC. · CONTRACTORS • STILLWATER, ME.

SOUTH BASIN AS-BUILT

ALPHA RIDGE LANDFILL CELL CLOSURE

HOWARD COUNTY MARYLAND

SCALE : 1"=50'	CONTRACT NO.: 98301.10	DATE : 2-27-2000	SHEET : 30-AB OF 131

Sb-asblt.dwg 4-18-01 8:56:28 am EST

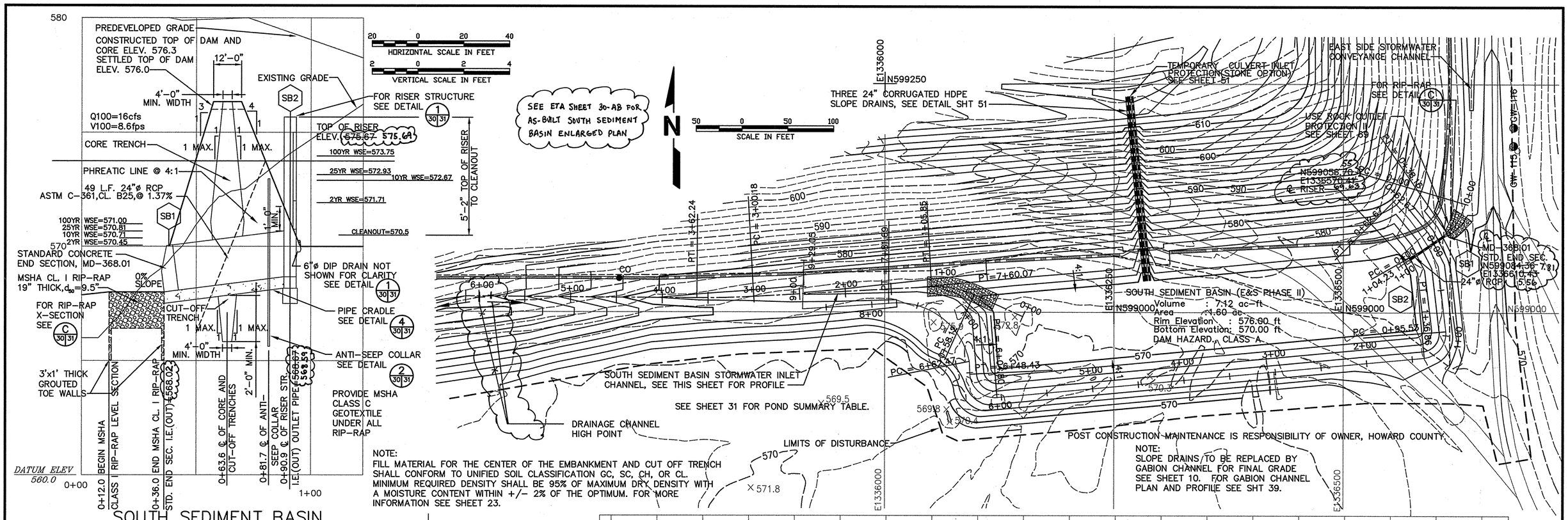

SUBDIVISION NAME	LOT/PARCEL	
ALPHA RIDGE SOLID WASTE MANAGEMENT CENTER	54,253,220,11	
LIBER/FOLIO	ZONE	TAX/ZONE MAP
10-847/606 16-878/215 10-691/314	PEC	10 & 16
WATER CODE	SEWER CODE	CENSUS TR.
PRIVATE, EXISTING	PRIVATE, EXISTING	60-30

AS-BUILT CERTIFICATION

I HEREBY CERTIFY THAT THE FACILITY SHOWN ON THIS PLAN WAS CONSTRUCTED AS SHOWN ON THE "AS-BUILT" PLANS AND MEETS THE APPROVED PLANS AND SPECIFICATIONS.

Michael R. Farnham PE NO. 17650

SIGNATURE DATE 10/10/01

CERTIFY MEANS TO STATE OR DECLARE A PROFESSIONAL OPINION BASED UPON ON-SITE INSPECTIONS AND MATERIAL TESTS WHICH ARE CONDUCTED DURING CONSTRUCTION. THE ON-SITE INSPECTIONS AND MATERIAL TESTS ARE THOSE INSPECTIONS AND TESTS DEEMED SUFFICIENT AND APPROPRIATE BY COMMONLY ACCEPTED ENGINEERING STANDARDS. CERTIFY DOES NOT MEAN OR IMPLY A GUARANTEE BY THE ENGINEER NOR DOES AN ENGINEER'S CERTIFICATION RELIEVE ANY OTHER PARTY FROM MEETING REQUIREMENTS IMPOSED BY CONTRACT, EMPLOYMENT, OR OTHER MEANS, INCLUDING MEETING COMMONLY ACCEPTED INDUSTRY PRACTICES.

OPERATION, MAINTENANCE AND INSPECTION

INSPECTION OF THE POND(S) SHOWN HEREON SHALL BE PERFORMED AT LEAST ANNUALLY, IN ACCORDANCE WITH THE CHECKLIST AND REQUIREMENTS CONTAINED WITHIN USDA, SCS "STANDARDS AND SPECIFICATIONS FOR PONDS" (MD-378). THE POND OWNER(S) AND ANY HEIRS, SUCCESSORS, OR ASSIGNS SHALL BE RESPONSIBLE FOR THE SAFETY OF THE POND AND THE CONTINUED OPERATION, SURVEILLANCE, INSPECTION, AND MAINTENANCE THEREOF. THE POND OWNER(S) SHALL PROMPTLY NOTIFY THE SOIL CONSERVATION DISTRICT OF ANY UNUSUAL OBSERVATIONS THAT MAY BE INDICATIONS OF DISTRESS SUCH AS EXCESSIVE SEEPAGE, TURBID SEEPAGE, SLIDING OR SLUMPING.

SEDIMENT CONTROL & POND CONSTRUCTION

( ) BY THE DEVELOPER:

"I/WE CERTIFY THAT ALL DEVELOPMENT AND/OR CONSTRUCTION WILL BE DONE ACCORDING TO THESE PLANS, AND THAT ANY RESPONSIBLE PERSONNEL INVOLVED IN THE CONSTRUCTION PROJECT WILL HAVE A CERTIFICATE OF ATTENDANCE AT A DEPARTMENT OF THE ENVIRONMENT APPROVED TRAINING PROGRAM FOR THE CONTROL OF SEDIMENT AND EROSION BEFORE BEGINNING THE PROJECT. I SHALL ENGAGE A REGISTERED PROFESSIONAL ENGINEER TO SUPERVISE POND CONSTRUCTION AND PROVIDE THE HOWARD SOIL CONSERVATION DISTRICT WITH AN "AS-BUILT" PLAN OF THE POND WITHIN 30 DAYS OF COMPLETION. I ALSO AUTHORIZE PERIODIC ON-SITE INSPECTIONS BY THE HOWARD SOIL CONSERVATION DISTRICT."

John J. O'Hara 10/30/97

SIGNATURE OF DEVELOPER DATE

PRINT NAME BELOW SIGNATURE

( ) BY THE ENGINEER:

"I CERTIFY THAT THIS PLAN FOR POND CONSTRUCTION, EROSION AND SEDIMENT CONTROL REPRESENTS A PRACTICAL AND WORKABLE PLAN BASED ON MY PERSONAL KNOWLEDGE OF THE SITE CONDITIONS. THIS PLAN WAS PREPARED IN ACCORDANCE WITH THE REQUIREMENTS OF THE HOWARD SOIL CONSERVATION DISTRICT. I HAVE NOTIFIED THE DEVELOPER THAT HE/SHE MUST ENGAGE A REGISTERED PROFESSIONAL ENGINEER TO SUPERVISE POND CONSTRUCTION AND PROVIDE THE HOWARD SOIL CONSERVATION DISTRICT WITH AN "AS-BUILT" PLAN OF THE POND WITHIN 30 DAYS OF COMPLETION."

PAUL A. MANDEVILLE Paul A. Mandeville 10/30/97

PRINT NAME BELOW SIGNATURE

SIGNATURE OF ENGINEER DATE

( ) THESE PLANS HAVE BEEN REVIEWED FOR THE HOWARD SOIL CONSERVATION DISTRICT AND MEET THE TECHNICAL REQUIREMENTS FOR SMALL POND CONSTRUCTION, SOIL EROSION AND SEDIMENT CONTROL.

Cheryl L. Simmons 10-30-97

USDA - NATURAL RESOURCES CONSERVATION SERVICE DATE

( ) THESE PLANS FOR SMALL POND CONSTRUCTION, SOIL EROSION AND SEDIMENT CONTROL MEET THE REQUIREMENTS OF THE HOWARD SOIL CONSERVATION DISTRICT.

Robert W. Zielman 10-30-97

HOWARD SOIL CONSERVATION DISTRICT DATE

DEPARTMENT OF PLANNING AND ZONING
HOWARD COUNTY, MARYLAND

DIRECTOR DATE 11/3/97

CHIEF, DEVELOPMENT ENGINEERING DIVISION DATE 11/3/97

CHIEF, DIVISION OF LAND DEVELOPMENT DATE 11/3/97

DEPARTMENT OF PUBLIC WORKS
HOWARD COUNTY, MARYLAND

DIRECTOR OF PUBLIC WORKS DATE 10/30/97

CHIEF, BUREAU OF WASTE MANAGEMENT DATE 10/30/97

SCS ENGINEERS
CONSULTING ENGINEERS
11260 ROGER BACON DRIVE
SUITE 300
RESTON, VIRGINIA 22090
PH. (703) 471-6150
FAX. (703) 471-6676

STATE OF MARYLAND — PAUL ANTHONY MANDEVILLE — LIC. REG. CIVIL ENGINEER NO. 14868 — PROFESSIONAL ENGINEER

Paul Anthony Mandeville, PE

DES. AST,RTT				
DRN. AST,EGC	6			
CHK. PAM	5			
DATE: 10-30-97	4			
	3			
	2			
	1			
BY	NO.	REVISION	DATE	

SOUTH SEDIMENT BASIN ENLARGED PLAN AND PROFILES

ALPHA RIDGE LANDFILL
UNLINED CELL CLOSURE
CAPITAL PROJECT NO. C-0190-N

3rd ELECTION DISTRICT HOWARD COUNTY, MARYLAND

SCALE: AS NOTED

SHEET 30 OF 33

SDP-97-128

SBSN-B M:\295077.01\FINAL SOUTHBSN1,PRF-SBSN,SBCLDAM1,SCHAN,MIKENOTEPRO

POND	RISER WEIR HT.	RISER WEIR WIDTH	RISER CREST ELEV.	RISER STR. WIDTH	OUTLET PIPE DIA. IN.	OUTLET PIPE L FT.	OUTLET PIPE U/S INV.	OUTLET PIPE D/S INV.	ANTI-SEEP COLLAR QTY.	ANTI-SEEP COLLAR APPROX. SIZE	DAM TOP WIDTH FT.	DAM CONSTR. HEIGHT	DAM SETTLED HEIGHT	EMERG. SPILLWAY ELEV.	EMERG. SPILLWAY BOTTOM WIDTH FT.	CORE TRENCH TOP WIDTH FT.	CORE TRENCH SIDE SLOPES	CUT-OFF TRENCH BOT. WIDTH FT.	CUT-OFF TRENCH SIDE SLOPES	WATER SURFACE ELEV. 2 YR.	WATER SURFACE ELEV. 10 YR.	WATER SURFACE ELEV. 25 YR.	WATER SURFACE ELEV. 100 YR.
SOUTH	4'-3"	1'	573.96 ~~572~~	5'-4"	24	49	568.59 ~~568.67~~	568.02	1	9.00 H. 9.83 W.	12'	576.3	576.0	N/A	N/A	4'	1:1	4'	1:1	571.71	572.67	572.93	573.75

POST CONSTRUCTION SOUTH SEDIMENT BASIN MAINTENANCE IS RESPONSIBILITY OF OWNER, HOWARD COUNTY.

NOTE:
CONCRETE OUTLET RISER SHALL BE POURED IN PLACE UNLESS CONTRACTOR RECEIVES APPROVAL FROM THE HOWARD CO. DEVELOPMENT ENGINEERING DIVISION FOR A WATERTIGHT PRECAST OUTLET RISER DESIGN.

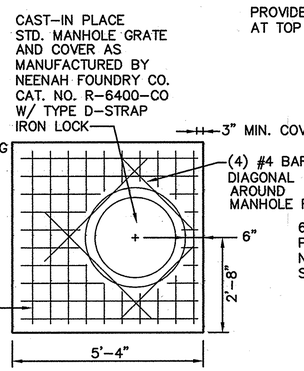

RISER STRUCTURE SECTION E (31|31)
SCALE: 1/2"=1'-0"

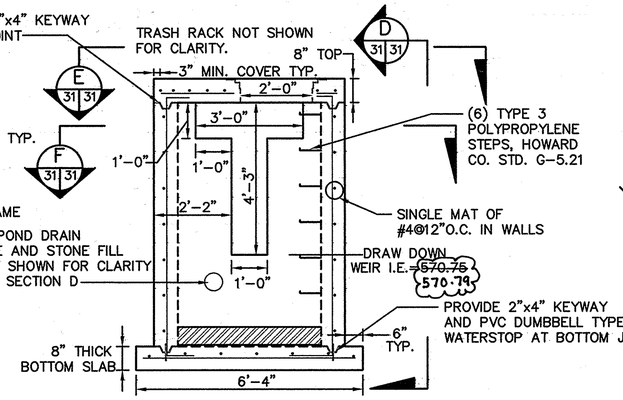

NOTE: RISER STRUCTURE TO BE POURED IN-PLACE

RISER STRUCTURE DETAIL 1 (30|31)
SCALE: 1/2"=1'-0"

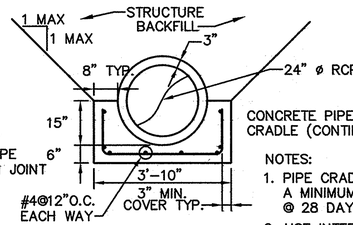

CONCRETE PIPE CRADLE (CONTINUOUS)

NOTES:
1. PIPE CRADLE SHALL HAVE A MINIMUM fc OF 4,000 psi @ 28 DAYS
2. USE INTERMEDIATE GRADE REINFORCING STEEL

PIPE CRADLE DETAIL 4 (31|31)
SCALE: 1/2"=1'-0"

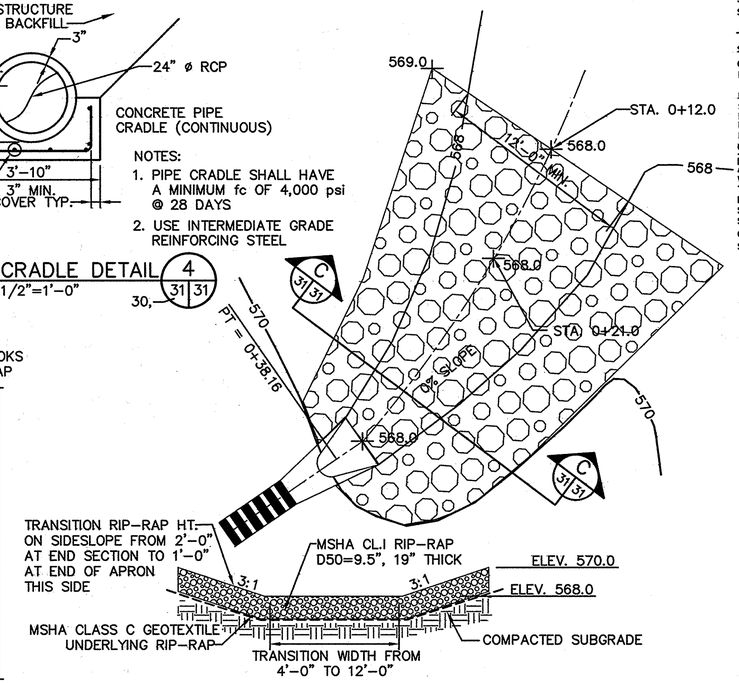

SOUTH BASIN OUTLET CHANNEL X-SECTION C (31|31)
SCALE: 1"=5'-0"

AS-BUILT CERTIFICATION
I HEREBY CERTIFY THAT THE FACILITY SHOWN ON THIS PLAN WAS CONSTRUCTED AS SHOWN ON THE "AS-BUILT" PLAN AND MEETS THE APPROVED PLANS AND SPECIFICATIONS.

SIGNATURE — PE NO. 17650 — DATE 10/10/01

CERTIFY MEANS TO STATE OR DECLARE A PROFESSIONAL OPINION BASED UPON ON-SITE INSPECTIONS AND MATERIAL TESTS WHICH ARE CONDUCTED DURING CONSTRUCTION. THE ON-SITE INSPECTIONS AND MATERIAL TESTS ARE THOSE INSPECTIONS AND TESTS DEEMED SUFFICIENT AND APPROPRIATE BY COMMONLY ACCEPTED ENGINEERING STANDARDS. CERTIFY DOES NOT MEAN OR IMPLY A GUARANTEE BY THE ENGINEER NOR DOES AN ENGINEER'S CERTIFICATION RELIEVE ANY OTHER PARTY FROM MEETING REQUIREMENTS IMPOSED BY CONTRACT, EMPLOYMENT, OR OTHER MEANS, INCLUDING MEETING COMMONLY ACCEPTED INDUSTRY PRACTICES.

OPERATION, MAINTENANCE AND INSPECTION

INSPECTION OF THE POND(S) SHOWN HEREON SHALL BE PERFORMED AT LEAST ANNUALLY, IN ACCORDANCE WITH THE "CHECKLIST AND REQUIREMENTS CONTAINED WITHIN USDA, SCS "STANDARDS AND SPECIFICATIONS FOR PONDS" (MD-378). THE POND OWNER(S) AND ANY HEIRS, SUCCESSORS, OR ASSIGNS SHALL BE RESPONSIBLE FOR THE SAFETY OF THE POND AND THE CONTINUED OPERATION, SURVEILLANCE, INSPECTION, AND MAINTENANCE THEREOF. THE POND OWNER(S) SHALL PROMPTLY NOTIFY THE SOIL CONSERVATION DISTRICT OF ANY UNUSUAL OBSERVATIONS THAT MAY BE INDICATIONS OF DISTRESS SUCH AS EXCESSIVE SEEPAGE, TURBID SEEPAGE, SLIDING OR SLUMPING.

SEDIMENT CONTROL & POND CONSTRUCTION

( ) BY THE DEVELOPER:
"I/WE CERTIFY THAT ALL DEVELOPMENT AND/OR CONSTRUCTION WILL BE DONE ACCORDING TO THESE PLANS, AND THAT ANY RESPONSIBLE PERSONNEL INVOLVED IN THE CONSTRUCTION PROJECT WILL HAVE A CERTIFICATE OF ATTENDANCE AT A DEPARTMENT OF THE ENVIRONMENT APPROVED TRAINING PROGRAM FOR THE CONTROL OF SEDIMENT AND EROSION BEFORE BEGINNING THE PROJECT. I SHALL ENGAGE A REGISTERED PROFESSIONAL ENGINEER TO SUPERVISE POND CONSTRUCTION AND PROVIDE THE HOWARD SOIL CONSERVATION DISTRICT WITH AN "AS-BUILT" PLAN OF THE POND WITHIN 30 DAYS OF COMPLETION. I ALSO AUTHORIZE PERIODIC ON-SITE INSPECTIONS BY THE HOWARD SOIL CONSERVATION DISTRICT."

SIGNATURE OF DEVELOPER — JOHN J. O'HARA — DATE 10/30/97
PRINT NAME BELOW SIGNATURE

( ) BY THE ENGINEER:
"I CERTIFY THAT THIS PLAN FOR POND CONSTRUCTION, EROSION AND SEDIMENT CONTROL REPRESENTS A PRACTICAL AND WORKABLE PLAN BASED ON MY PERSONAL KNOWLEDGE OF THE SITE CONDITIONS. THIS PLAN WAS PREPARED IN ACCORDANCE WITH THE REQUIREMENTS OF THE HOWARD SOIL CONSERVATION DISTRICT. I HAVE NOTIFIED THE DEVELOPER THAT HE/SHE MUST ENGAGE A REGISTERED PROFESSIONAL ENGINEER TO SUPERVISE POND CONSTRUCTION AND PROVIDE THE HOWARD SOIL CONSERVATION DISTRICT WITH AN "AS-BUILT" PLAN OF THE POND WITHIN 30 DAYS OF COMPLETION."

PAUL A. MANDEVILLE — DATE 10/30/97
SIGNATURE OF ENGINEER
PRINT NAME BELOW SIGNATURE

( ) THESE PLANS HAVE BEEN REVIEWED FOR THE HOWARD SOIL CONSERVATION DISTRICT AND MEET THE TECHNICAL REQUIREMENTS FOR SMALL POND CONSTRUCTION, SOIL EROSION AND SEDIMENT CONTROL.

USDA – NATURAL RESOURCES CONSERVATION SERVICE — DATE 10-30-97
( ) THESE PLANS FOR SMALL POND CONSTRUCTION, SOIL EROSION AND SEDIMENT CONTROL MEET THE REQUIREMENTS OF THE HOWARD SOIL CONSERVATION DISTRICT.

HOWARD SOIL CONSERVATION DISTRICT — DATE 10-30-97

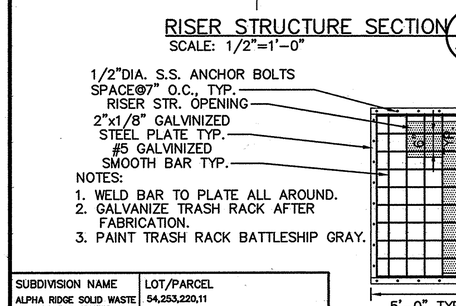

RISER STRUCTURE SECTION F (31|31)
SCALE: 1/2"=1'-0"

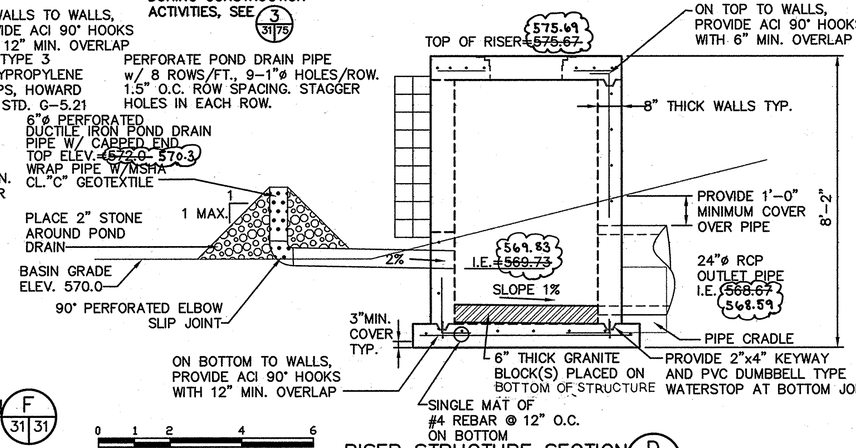

RISER STRUCTURE SECTION D (31|31)
SCALE: 1/2"=1'-0"

NOTES:
1. WELD BAR TO PLATE ALL AROUND.
2. GALVANIZE TRASH RACK AFTER FABRICATION.
3. PAINT TRASH RACK BATTLESHIP GRAY.

TRASH RACK DETAIL 3 (31|31)
SCALE: 1/2"=1'-0"

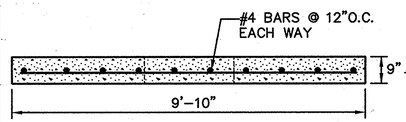

SECTION A (31|31)
SCALE: 1/2"=1'-0"

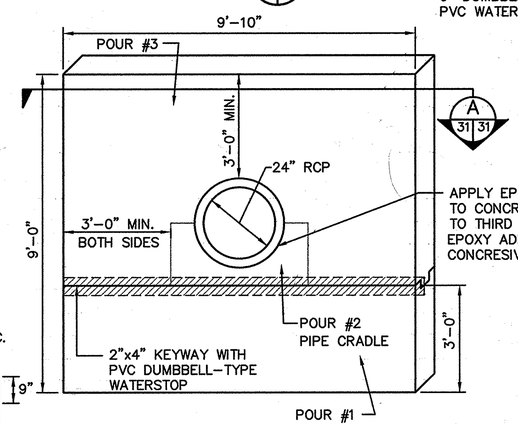

ANTI-SEEP COLLAR DETAIL 2 (30|31)
SCALE: 1/2"=1'-0"

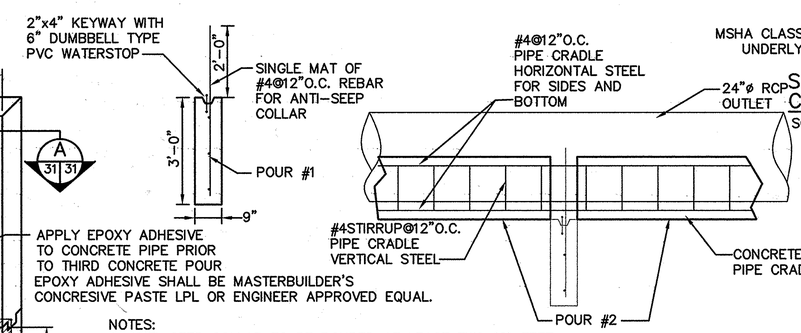

NOTES:
1. ANTI-SEEP COLLAR TO BE POURED AT LEAST TWO (2) FEET FROM NEAREST PIPE JOINT
2. ANTI-SEEP COLLAR IS TO BE CONSTRUCTED IN THREE POURS.
3. BOTTOM HALF TO BE POURED FIRST.
4. PLACE PIPE AND POUR CRADLE SECOND.
5. TOP PORTION OF COLLAR POURED THIRD.
6. BACKFILL SHALL BE PLACED EVENLY ON BOTH SIDES OF THE ANTI-SEEP COLLAR.
7. REINFORCED CONCRETE: fc = 4,000 psi @ 28 DAYS.

ANTI-SEEP COLLAR CONSTRUCTION SEQUENCE

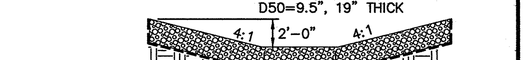

SOUTH SIDE STORMWATER INLET CHANNEL X-SECTION B (30|31)
SCALE: 1"=5'-0"

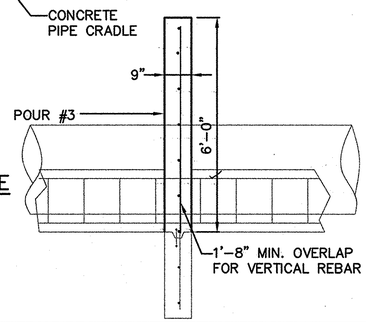

SUBDIVISION NAME	LOT/PARCEL	
ALPHA RIDGE SOLID WASTE MANAGEMENT CENTER	54,253,220,11	
LIBER/FOLIO	ZONE	TAX/ZONE MAP
10-847/806 16-878/215 10-891/314	PEC	10 & 16
WATER CODE	SEWER CODE	CENSUS TR.
PRIVATE, EXISTING	PRIVATE, EXISTING	60-30

DEPARTMENT OF PLANNING AND ZONING
HOWARD COUNTY, MARYLAND

DIRECTOR — DATE 11/3/97
CHIEF, DEVELOPMENT ENGINEERING DIVISION — DATE 10/30/97
CHIEF, DIVISION OF LAND DEVELOPMENT — DATE 11/3/97

DEPARTMENT OF PUBLIC WORKS
HOWARD COUNTY, MARYLAND

DIRECTOR OF PUBLIC WORKS — DATE 10/30/97
CHIEF, BUREAU OF WASTE MANAGEMENT — DATE 10/30/97

SCS ENGINEERS
CONSULTING ENGINEERS
11260 ROGER BACON DRIVE
SUITE 300
RESTON, VIRGINIA 22090
PH. (703) 471-6150
FAX. (703) 471-6676

STATE OF MARYLAND — PAUL ANTHONY MANDEVILLE — No. 14668 — PROFESSIONAL ENGINEER
Paul Anthony Mandeville, PE

DES. AST,RTT	6			
DRN. AST,EGC	5			
CHK. PAM	4			
	3			
	2			
DATE: 10-30-97	1			
	BY	NO.	REVISION	DATE

SOUTH SEDIMENT BASIN DETAILS

ALPHA RIDGE LANDFILL
UNLINED CELL CLOSURE
CAPITAL PROJECT NO. C-0190-N

3rd ELECTION DISTRICT — HOWARD COUNTY, MARYLAND

SCALE: AS NOTED

SHEET 31 OF 1313

SDP-97-128

M:\295077.01\FINAL ANTSP-SB,CRADLE-SB,RISER-SB,TBL-SB,TRK-SB, XS-SBO,XS-SBISC SBSN2-B

DEPARTMENT OF PLANNING AND ZONING
HOWARD COUNTY, MARYLAND

DIRECTOR	DATE 11/3/97
CHIEF, DEVELOPMENT ENGINEERING DIVISION	DATE 10/30/97
CHIEF, DIVISION OF LAND DEVELOPMENT	DATE 11/3/97

SUBDIVISION NAME	LOT/PARCEL	
ALPHA RIDGE SOLID WASTE MANAGEMENT CENTER	54,253,220,11	
LIBER/FOLIO	ZONE	TAX/ZONE MAP
10-847/606 16-878/215 10-691/314	PEC	10 & 16
WATER CODE	SEWER CODE	CENSUS TR.
PRIVATE, EXISTING	PRIVATE, EXISTING	60-30

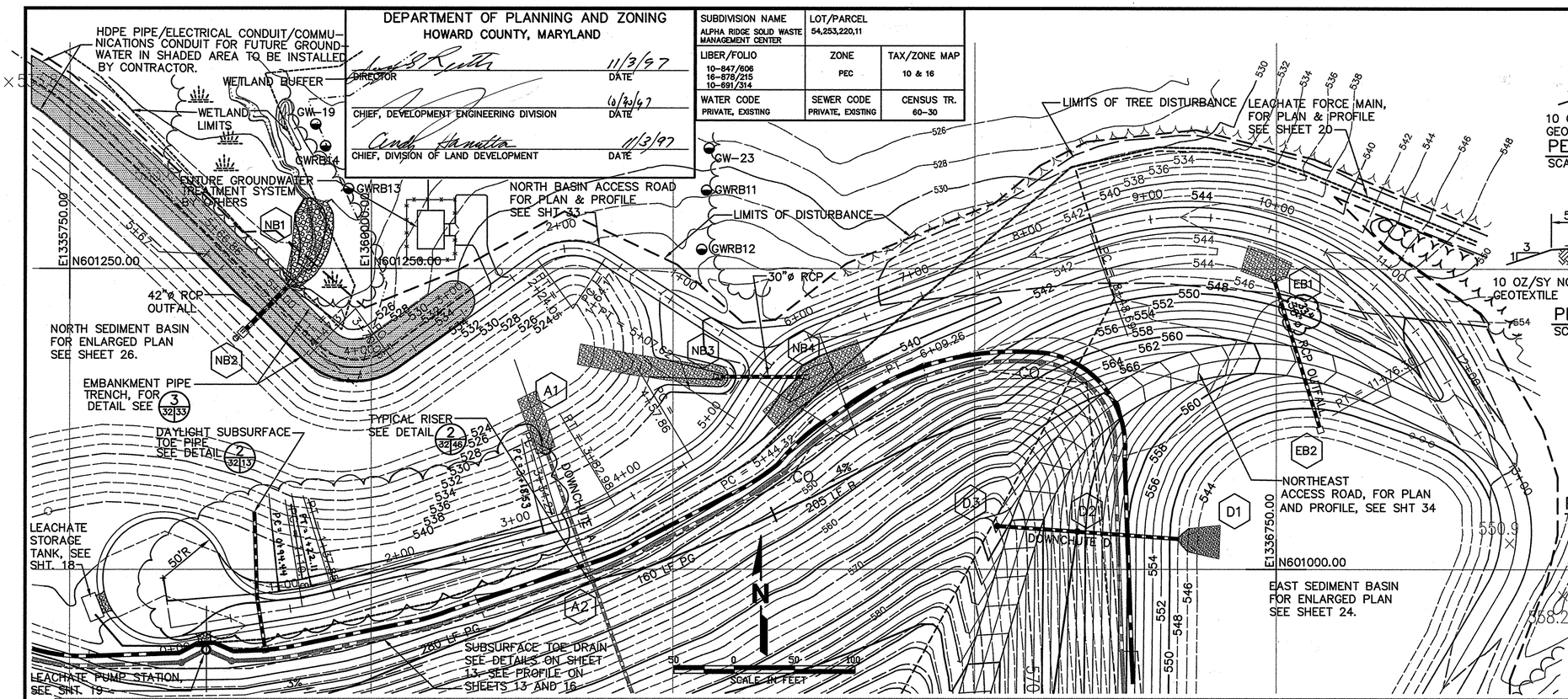

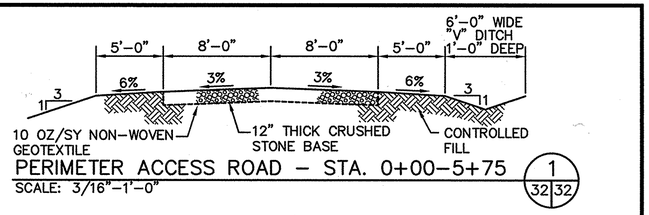

PERIMETER ACCESS ROAD – STA. 0+00–5+75 (1 / 32 32)
SCALE: 3/16"–1'–0"

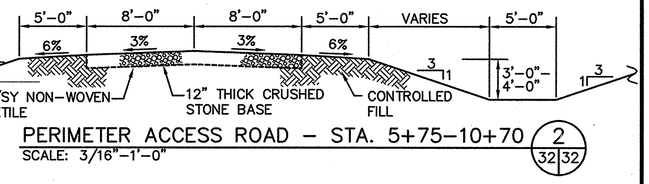

PERIMETER ACCESS ROAD – STA. 5+75–10+70 (2 / 32 32)
SCALE: 3/16"–1'–0"

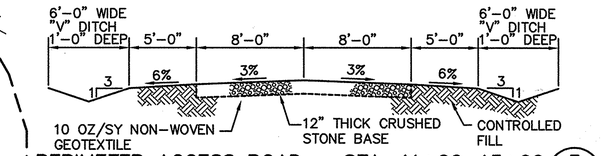

PERIMETER ACCESS ROAD – STA. 11+00–13+00 (3 / 32 32)
SCALE: 3/16"–1'–0"

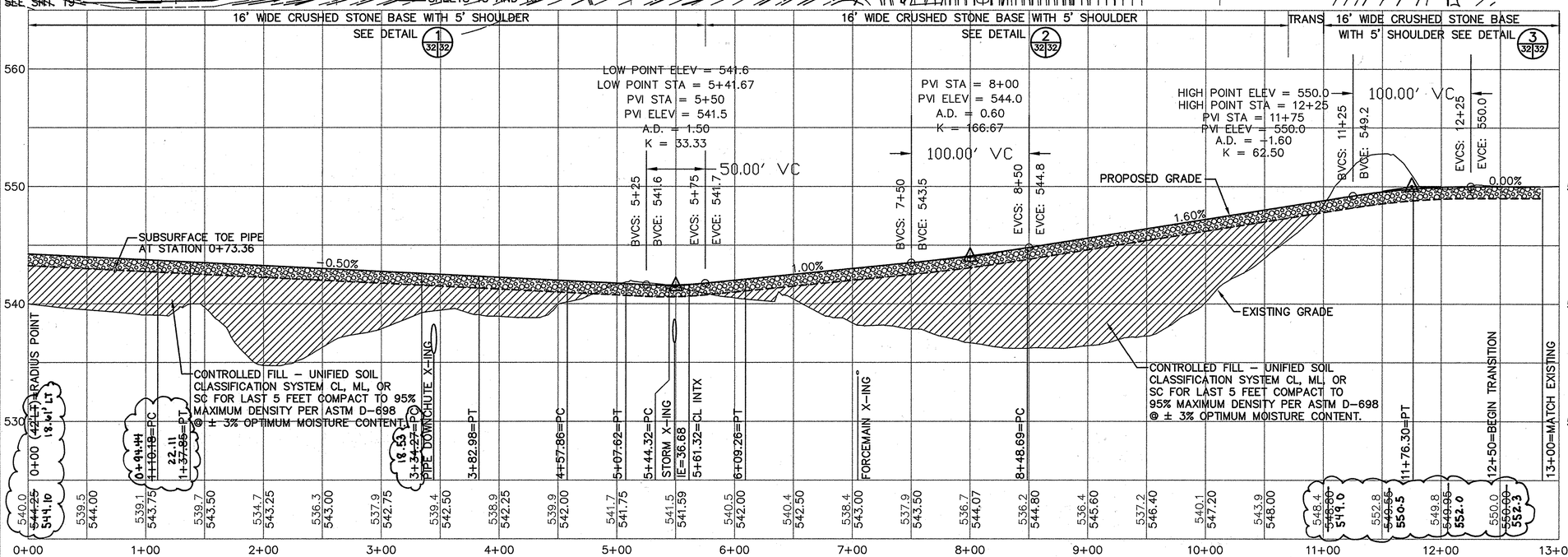

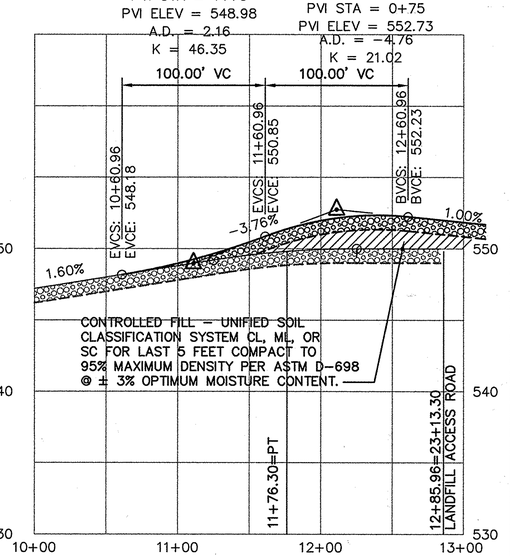

TRANSITION TO NORTHEAST LANDFILL ACCESS ROAD

VERT. SCALE: 5 0 5 10 SCALE IN FEET
HORIZ. SCALE: 50 0 50 100 SCALE IN FEET

DEPARTMENT OF PUBLIC WORKS
HOWARD COUNTY, MARYLAND

DIRECTOR OF PUBLIC WORKS — DATE 10/30/97
CHIEF, BUREAU OF WASTE MANAGEMENT — DATE 10/30/97

SCS ENGINEERS
CONSULTING ENGINEERS
11260 ROGER BACON DRIVE
SUITE 300
RESTON, VIRGINIA 22090
PH. (703) 471-6150
FAX. (703) 471-6676

STATE OF MARYLAND — PAUL ANTHONY MANDEVILLE — No. 9812 — PROFESSIONAL ENGINEER
Paul Anthony Mandeville, PE

DES.	RTT, EGC
DRN.	EGC,JCB
CHK.	PAM
DATE:	10-30-97

BY	NO.	REVISION	DATE
	6		
	5		
	4		
	3		
	2		
	1		

NORTH PERIMETER ACCESS ROAD PLAN & PROFILE

ALPHA RIDGE LANDFILL
UNLINED CELL CLOSURE
CAPITAL PROJECT NO. C-0190-N

3rd ELECTION DISTRICT — HOWARD COUNTY, MARYLAND

SCALE: 1"=50'

SHEET 32 OF 131

SDP-97-128

M:\295077.01\FINAL RDPLN, RDSEC1, RDSEC2, RDSEC3

RDPLN-B

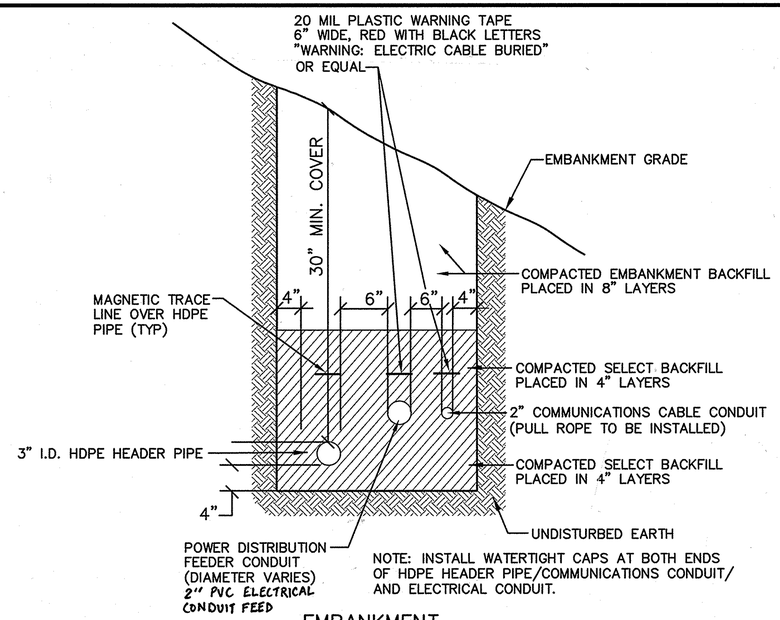

EMBANKMENT
PIPE TRENCH DETAIL (3 / 33|33)
NOT TO SCALE

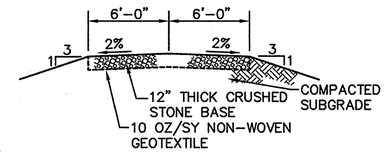

NORTH BASIN ACCESS ROAD
STA. 0+00 – 1+43.5 (1 / 33|33)
SCALE: 3/16"=1'-0"

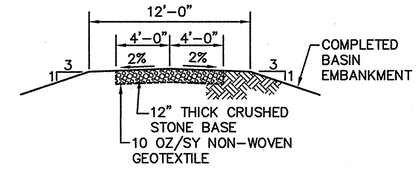

NORTH BASIN ACCESS ROAD
STA. 1+93.5 – 5+67 (2 / 33|33)
SCALE: 3/16"=1'-0"

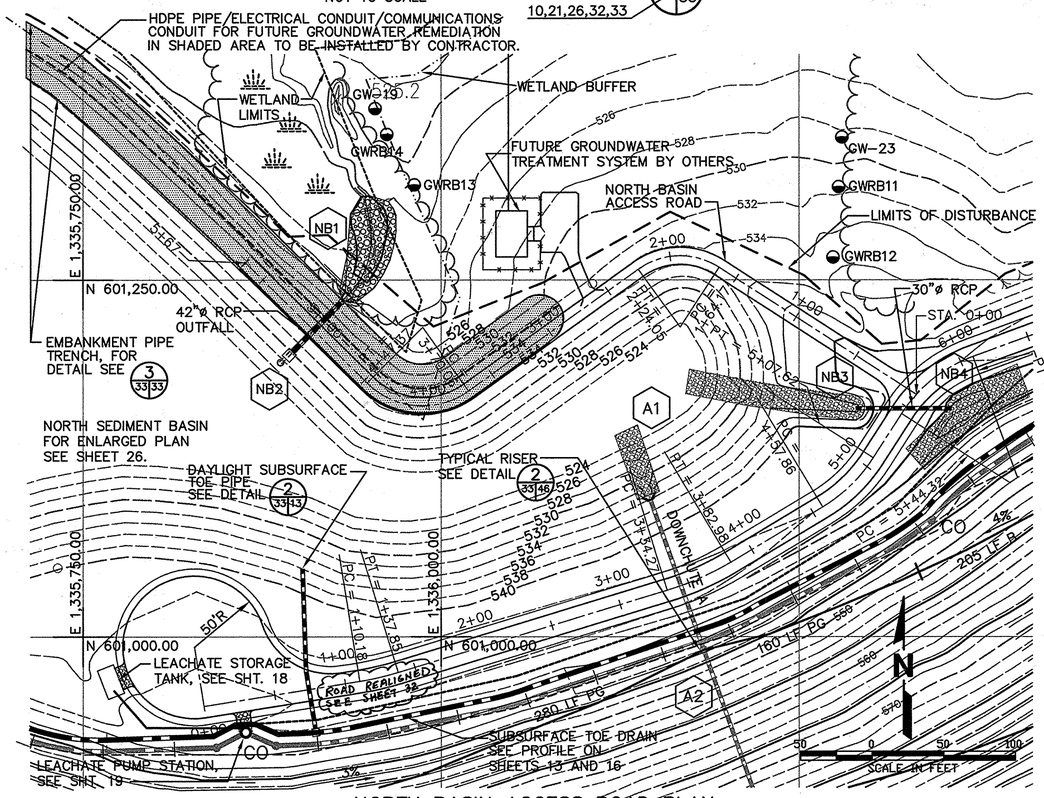

NORTH BASIN ACCESS ROAD PLAN

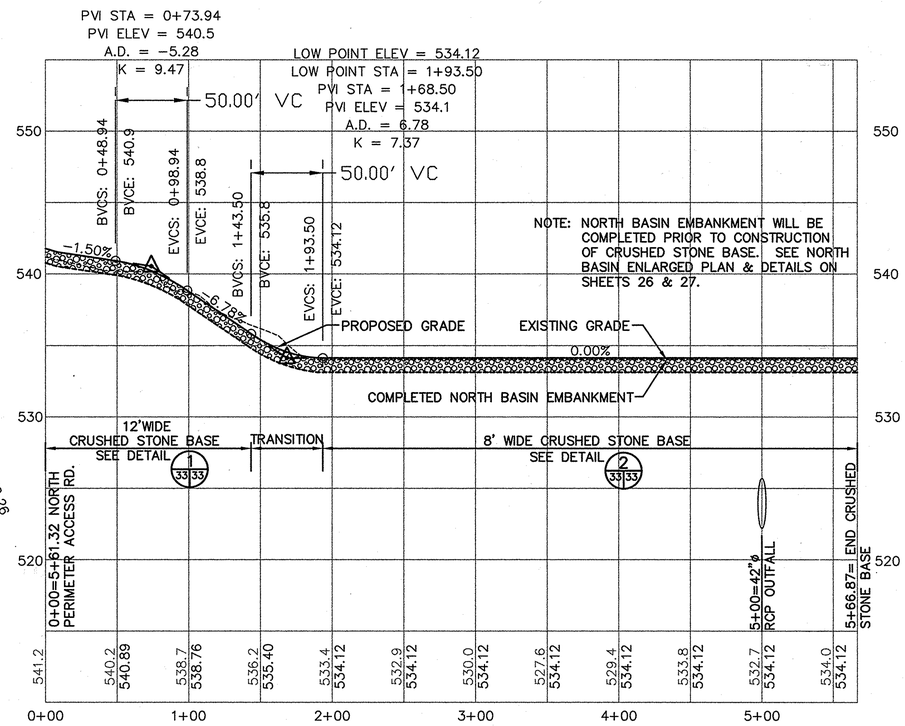

NORTH BASIN ACCESS ROAD PROFILE

VERT. SCALE: 5 0 5 10 SCALE IN FEET

HORIZ. SCALE: 50 0 50 100 SCALE IN FEET

SUBDIVISION NAME	LOT/PARCEL	
ALPHA RIDGE SOLID WASTE MANAGEMENT CENTER	54,253,220,11	
LIBER/FOLIO	ZONE	TAX/ZONE MAP
10-847/606 16-878/215 10-691/314	PEC	10 & 16
WATER CODE	SEWER CODE	CENSUS TR.
PRIVATE, EXISTING	PRIVATE, EXISTING	60-30

DEPARTMENT OF PLANNING AND ZONING
HOWARD COUNTY, MARYLAND

DIRECTOR — DATE 11/3/97
CHIEF, DEVELOPMENT ENGINEERING DIVISION — DATE 10/2/97
CHIEF, DIVISION OF LAND DEVELOPMENT — DATE 11/3/97

DEPARTMENT OF PUBLIC WORKS
HOWARD COUNTY, MARYLAND

DIRECTOR OF PUBLIC WORKS — DATE 10/30/97
CHIEF, BUREAU OF WASTE MANAGEMENT — DATE 10/30/97

SCS ENGINEERS
CONSULTING ENGINEERS
11260 ROGER BACON DRIVE
SUITE 300
RESTON, VIRGINIA 22090
PH. (703) 471-6150
FAX. (703) 471-6676

STATE OF MARYLAND — PAUL ANTHONY MANDEVILLE — No. 20-25-07 — PROFESSIONAL ENGINEER
Paul Anthony Mandeville, PE

DES. EGC, RTT
DRN. EGC,JCB
CHK. PAM
DATE: 10-30-97

BY	NO.	REVISION	DATE
	6		
	5		
	4		
	3		
	2		
	1		

NORTH BASIN
ACCESS ROAD PROFILE

ALPHA RIDGE LANDFILL
UNLINED CELL CLOSURE
CAPITAL PROJECT NO. C-0190-N
3rd ELECTION DISTRICT — HOWARD COUNTY, MARYLAND

SCALE: 1"=50'
SHEET 33 OF 131

NBASINRD, RDSEC8, RDSEC9 NBARDPLN
M:\295077.01\FINAL
NBASINRD-B

SDP-97-128

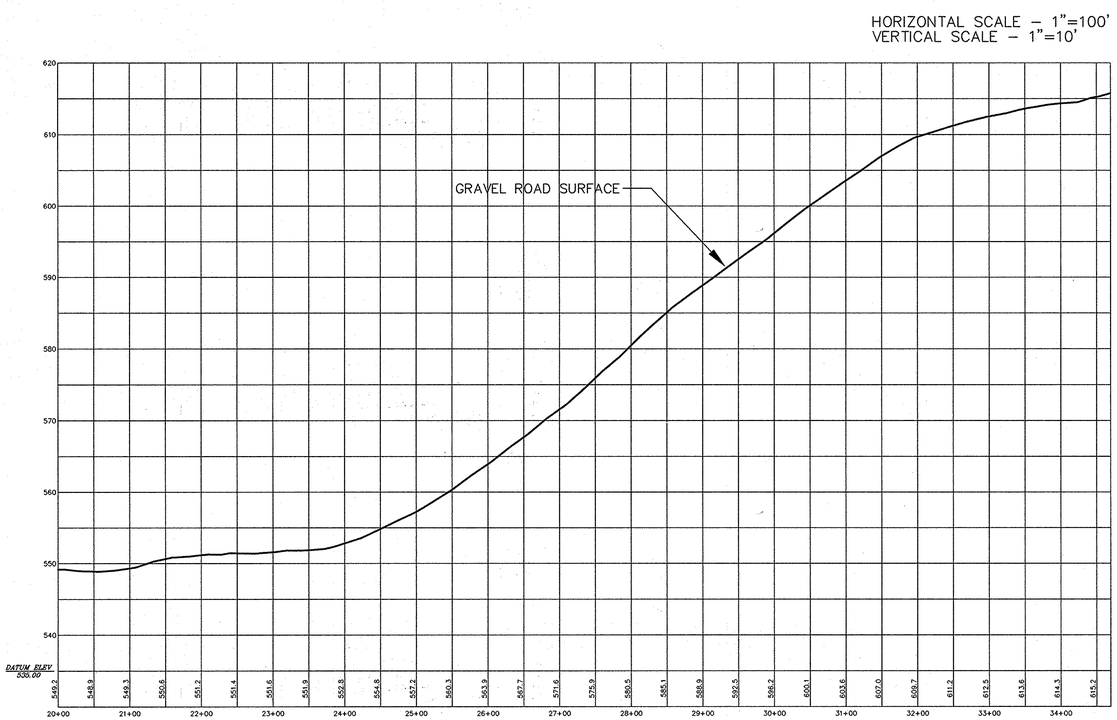

NORTHEAST LANDFILL ACCESS ROAD PROFILE

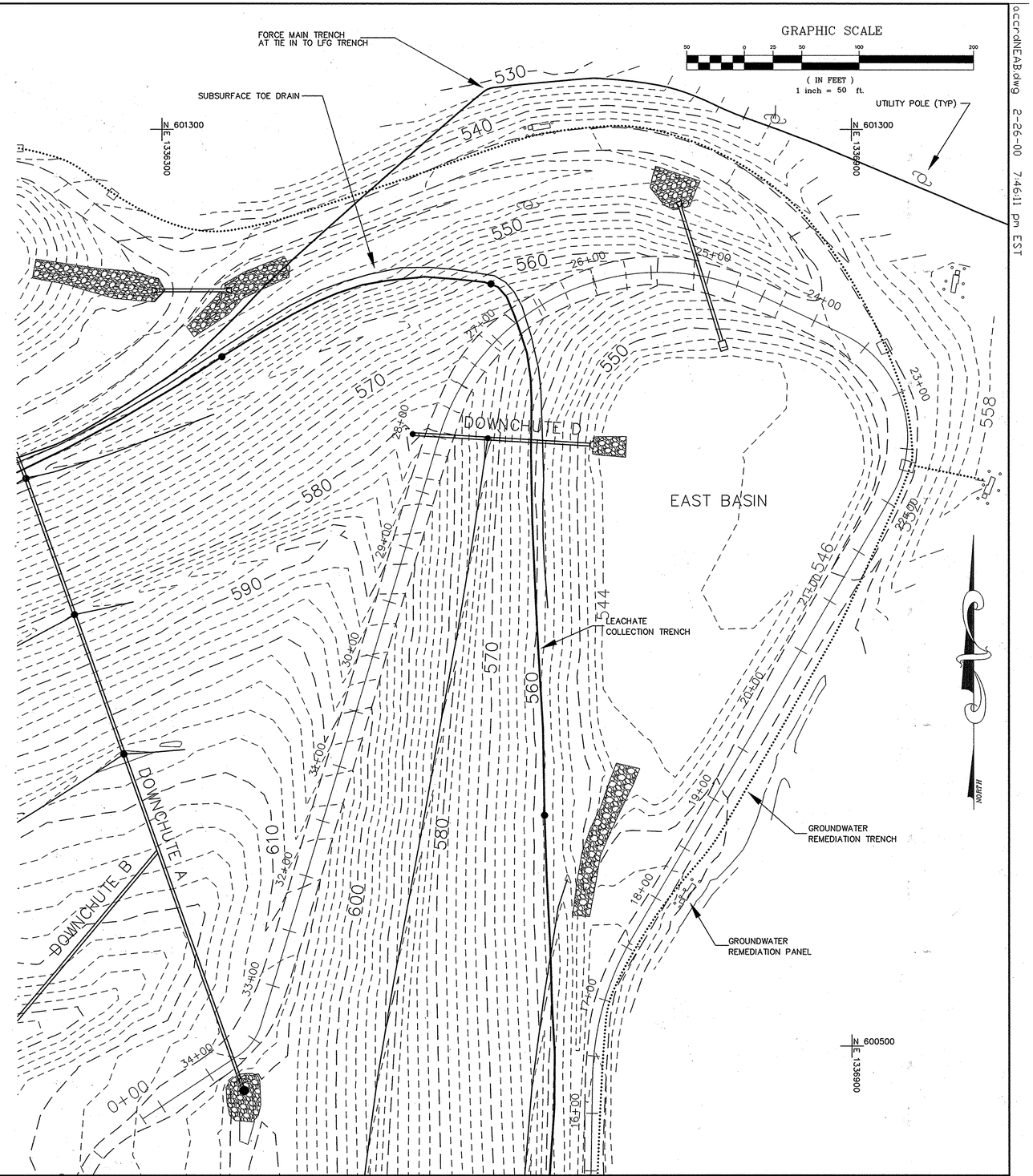

accrdNEAB.dwg 2-26-00 7:46:11 pm EST

DESIGNED BY:		DATE
DRAWN BY:	TWH	9-13-99 DATE
CHECKED BY:		DATE
APPROVED BY:		DATE

REVISIONS

DATE	BY	DESCRIPTION

ENGINEERING TECHNOLOGIES ASSOCIATES, INC.
ENGINEERS * PLANNERS * SURVEYORS
3458 ELLICOTT CENTER DRIVE SUITE 101
ELLICOTT CITY, MARYLAND 21043
BALTO. (410)461-9920 FAX (410)750-8565

STATE OF MARYLAND CLIFFORD ALLEN ELKIN REGISTERED PROPERTY LINE SURVEYOR

H. E. SARGENT, INC. CONTRACTORS • STILLWATER, ME.

NORTHEAST ACCESS ROAD AS-BUILT

ALPHA RIDGE LANDFILL CELL CLOSURE

HOWARD COUNTY MARYLAND

SCALE : AS NOTED	CONTRACT NO.: 98301.10	DATE : 2-25-2000	SHEET : 34-AB OF 131

accrdNEAB.dwg 2-26-00 7:46:11 pm EST

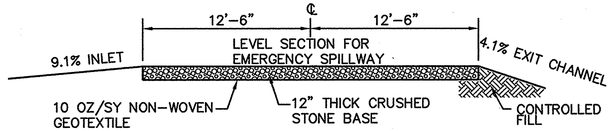

PERIMETER ACCESS ROAD – STA. 19+99–21+48 (3 / 34|34)
SCALE: 3/16"=1'-0"

VERT. SCALE: 10 0 10 20 SCALE IN FEET
HORIZ. SCALE: 100 0 100 200 SCALE IN FEET

SEE ETA SHEET 34-AB FOR FINAL GRADE REVISION AND VERTICAL REALIGNMENT OF NORTHEAST ACCESS ROAD

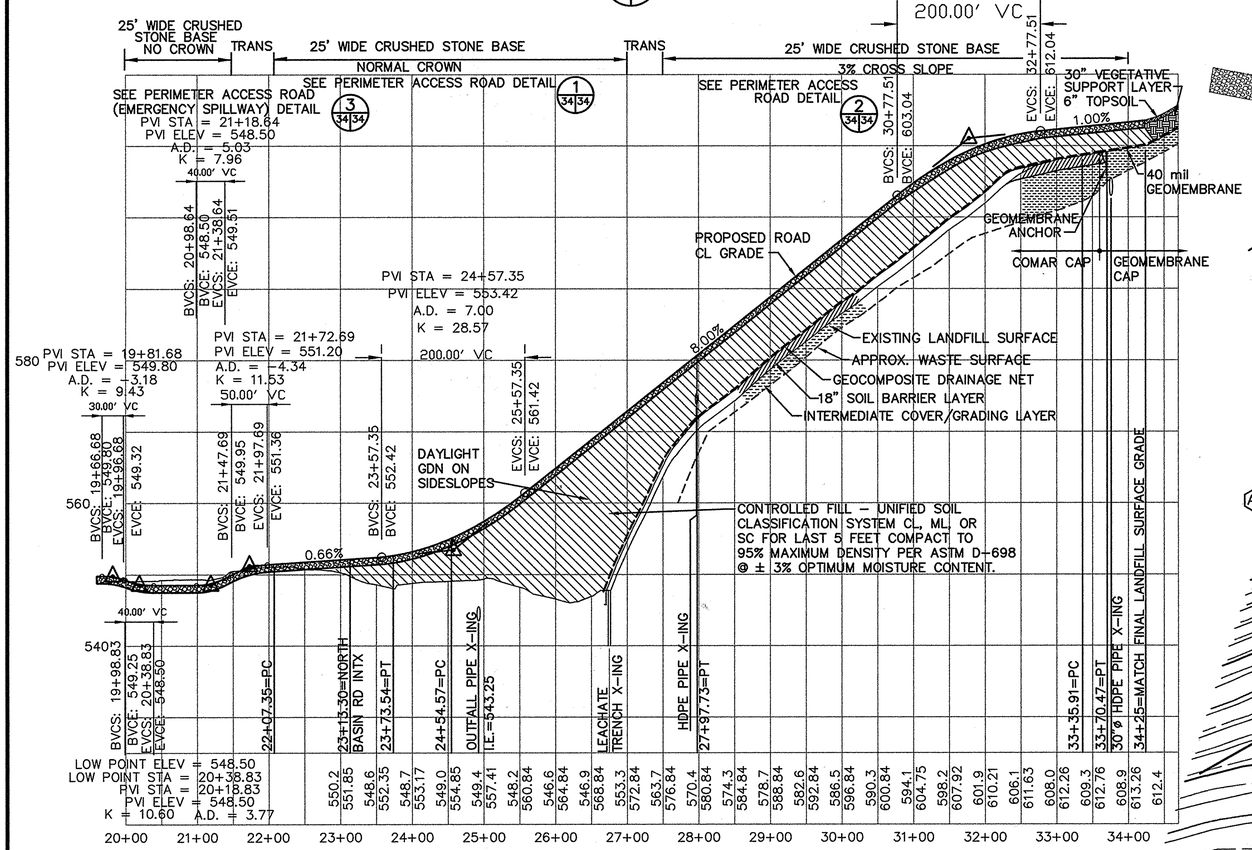

LANDFILL NORTHEAST ACCESS ROAD PROFILE

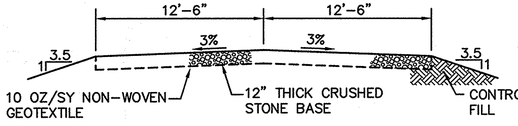

PERIMETER ACCESS ROAD – STA. 22+07–27+00 (1 / 34|34)
SCALE: 3/16"=1'-0"

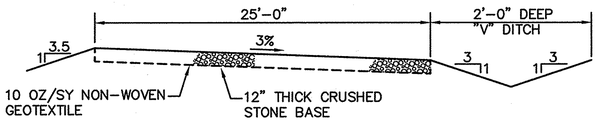

PERIMETER ACCESS ROAD – STA. 27+50–34+25 (2 / 34|34)
SCALE: 3/16"=1'-0"

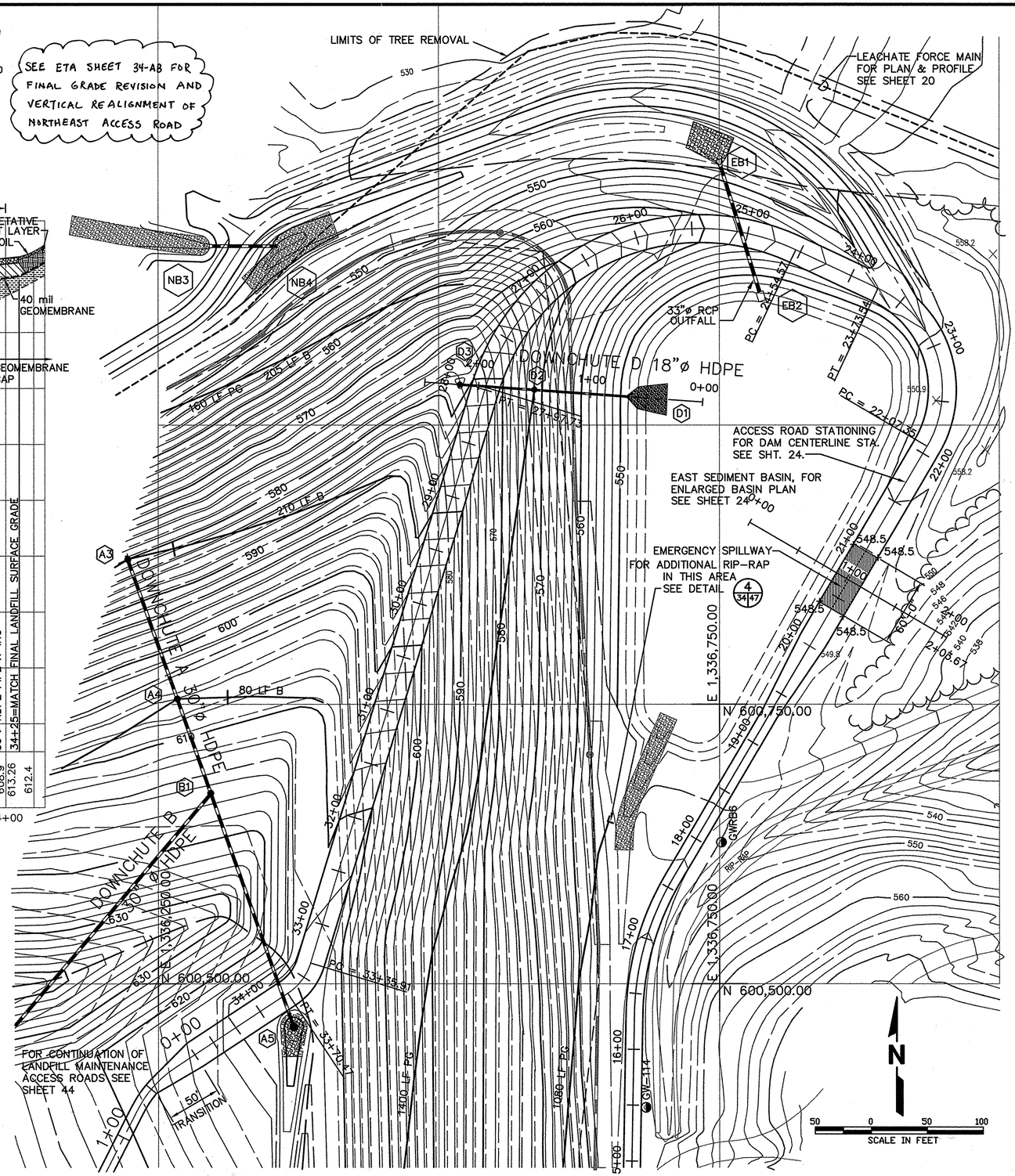

SUBDIVISION NAME	LOT/PARCEL	
ALPHA RIDGE SOLID WASTE MANAGEMENT CENTER	54,253,220,11	
LIBER/FOLIO	ZONE	TAX/ZONE MAP
10-847/806 16-878/215 10-691/314	PEC	10 & 16
WATER CODE	SEWER CODE	CENSUS TR.
PRIVATE, EXISTING	PRIVATE, EXISTING	60-30

DEPARTMENT OF PLANNING AND ZONING
HOWARD COUNTY, MARYLAND

DIRECTOR — DATE 11/3/97
CHIEF, DEVELOPMENT ENGINEERING DIVISION — DATE 10/31/97
CHIEF, DIVISION OF LAND DEVELOPMENT — DATE 11/3/97

DEPARTMENT OF PUBLIC WORKS
HOWARD COUNTY, MARYLAND

DIRECTOR OF PUBLIC WORKS — DATE 10/30/97
CHIEF, BUREAU OF WASTE MANAGEMENT — DATE 10/30/97

SCS ENGINEERS
CONSULTING ENGINEERS
11260 ROGER BACON DRIVE
SUITE 300
RESTON, VIRGINIA 22090
PH. (703) 471-6150
FAX. (703) 471-6676

STATE OF MARYLAND — PAUL ANTHONY MANDEVILLE — No. 19870 — PROFESSIONAL ENGINEER
Paul Anthony Mandeville, PE

DES. RTT, EGC
DRN. EGC/JCB
CHK. PAM
DATE: 10-30-97

BY	NO.	REVISION	DATE
	6		
	5		
	4		
	3		
	2		
	1		

NORTHEAST LANDFILL ACCESS ROAD PLAN & PROFILE

ALPHA RIDGE LANDFILL
UNLINED CELL CLOSURE
CAPITAL PROJECT NO. C-0190-N
3rd ELECTION DISTRICT — HOWARD COUNTY, MARYLAND

SCALE: AS NOTED
SHEET 34 OF 131

SDP-97-128

ACCRD, ACCRDONE, RDSEC5, RDSEC6
M:\295077.01\FINAL
ACCRD-B

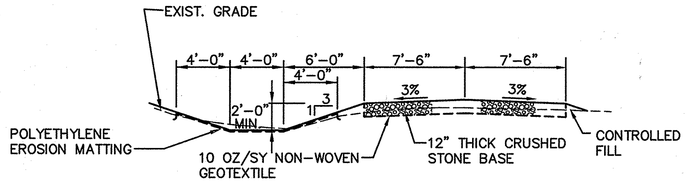

CENTRAL ACCESS ROAD– TYPICAL X-SECTION (1 / 35 35)
SCALE: 3/16"-1'-0"

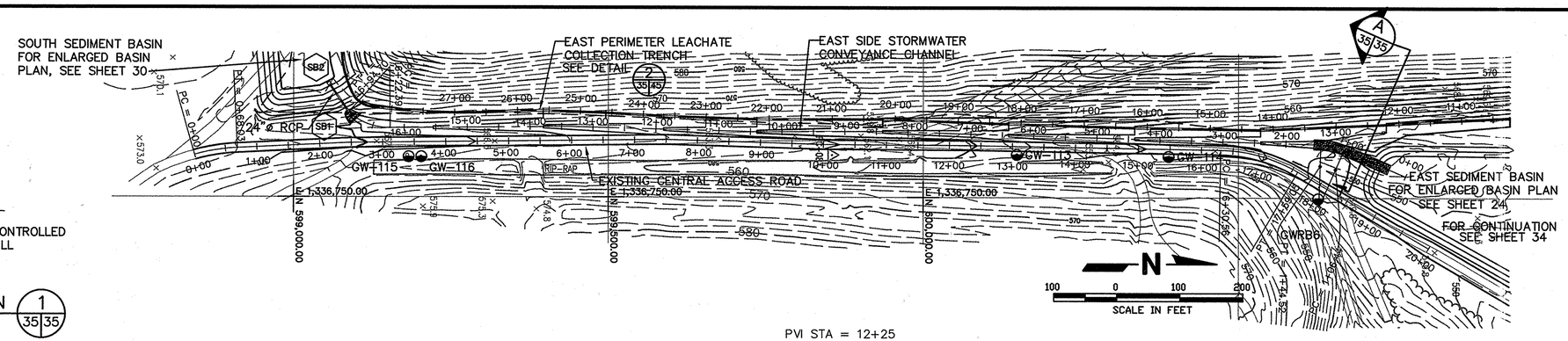

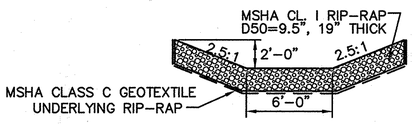

EAST SEDIMENT BASIN AND RIPRAP STORMWATER INLET X-SECTION (A / 35 35)
SCALE: 1"=5'-0"

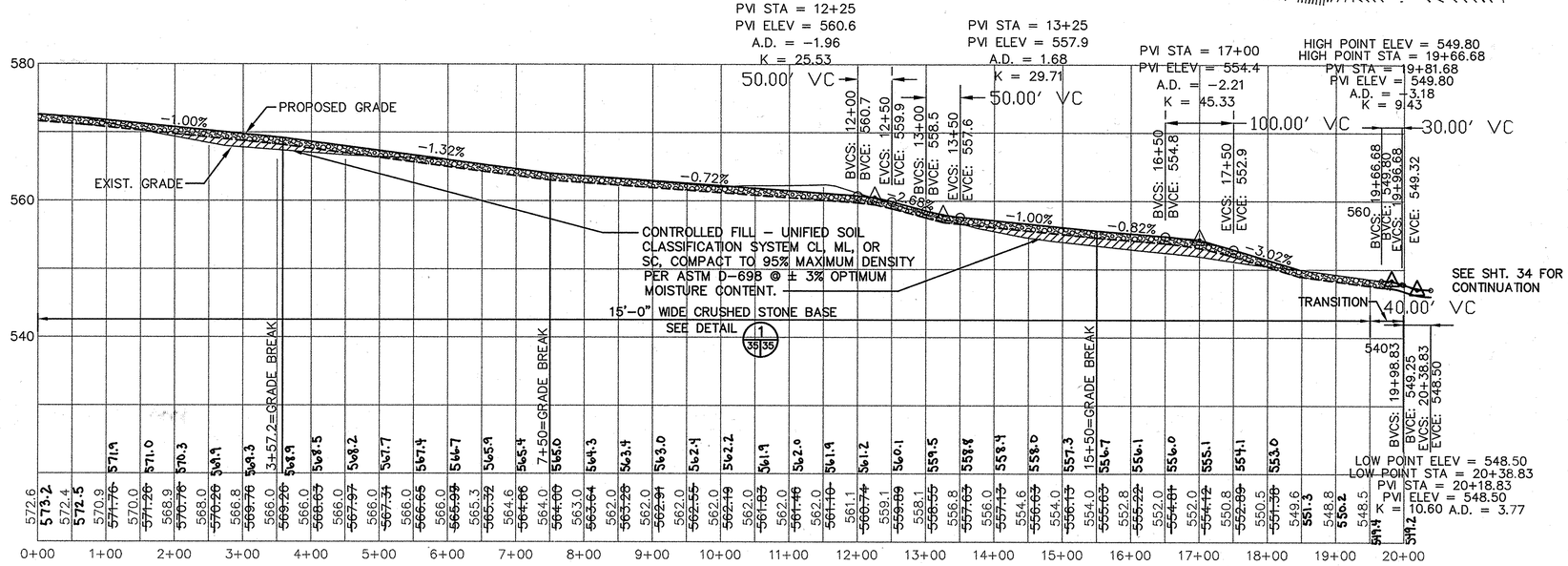

CENTRAL ACCESS ROAD PROFILE

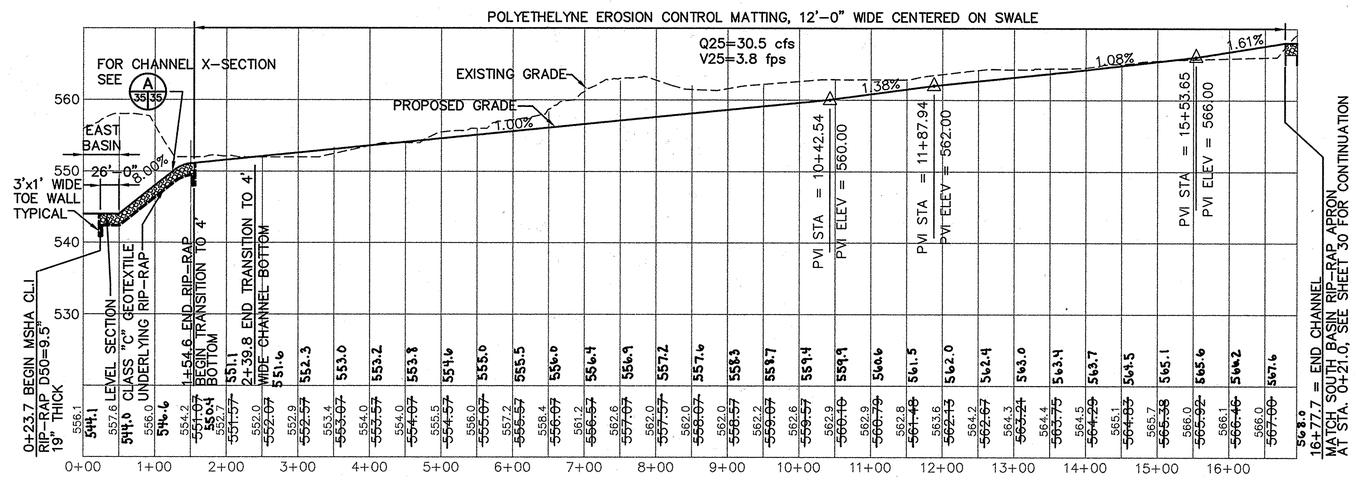

EAST SIDE CHANNEL PROFILE

VERT. SCALE 10 0 10 20 SCALE IN FEET
HORIZ. SCALE 100 0 100 200 SCALE IN FEET

SUBDIVISION NAME	LOT/PARCEL	
ALPHA RIDGE SOLID WASTE MANAGEMENT CENTER	54,253,220,11	
LIBER/FOLIO	ZONE	TAX/ZONE MAP
10-847/806 16-878/215 10-691/314	PEC	10 & 16
WATER CODE	SEWER CODE	CENSUS TR.
PRIVATE, EXISTING	PRIVATE, EXISTING	60-30

DEPARTMENT OF PLANNING AND ZONING
HOWARD COUNTY, MARYLAND

DIRECTOR — DATE 11/3/97
CHIEF, DEVELOPMENT ENGINEERING DIVISION — DATE 10/30/97
CHIEF, DIVISION OF LAND DEVELOPMENT — DATE 11/3/97

DEPARTMENT OF PUBLIC WORKS
HOWARD COUNTY, MARYLAND

DIRECTOR OF PUBLIC WORKS — DATE 10/30/97
CHIEF, BUREAU OF WASTE MANAGEMENT — DATE 10/30/97

SCS ENGINEERS
CONSULTING ENGINEERS
11260 ROGER BACON DRIVE
SUITE 300
RESTON, VIRGINIA 22090
PH. (703) 471-6150
FAX. (703) 471-6676

STATE OF MARYLAND — PAUL ANTHONY MANDEVILLE — No. 9811 — PROFESSIONAL ENGINEER
Paul Anthony Mandeville, PE

DES. RTT, EGC
DRN. EGC
CHK. PAM
DATE: 10-30-97

BY	NO.	REVISION	DATE
	6		
	5		
	4		
	3		
	2		
	1		

CENTRAL ACCESS ROAD & EAST SIDE CHANNEL PLAN & PROFILE

ALPHA RIDGE LANDFILL
UNLINED CELL CLOSURE
CAPITAL PROJECT NO. C-0190-N
3rd ELECTION DISTRICT — HOWARD COUNTY, MARYLAND

SCALE: 1"=100'
SHEET 35 OF 1[illegible]

SDP-97-28

M:\295077.01\FINAL CENRDPLN, CENRDPRO, ECHANPRO, RDSEC4
CENRD-B

SUBDIVISION NAME	LOT/PARCEL	
ALPHA RIDGE SOLID WASTE MANAGEMENT CENTER	54,253,220,11	
LIBER/FOLIO	ZONE	TAX/ZONE MAP
10-847/606 16-878/215 10-691/314	PEC	10 & 16
WATER CODE	SEWER CODE	CENSUS TR.
PRIVATE, EXISTING	PRIVATE, EXISTING	60-30

DEPARTMENT OF PLANNING AND ZONING
HOWARD COUNTY, MARYLAND

DIRECTOR — DATE 11/7/97

CHIEF, DEVELOPMENT ENGINEERING DIVISION — DATE 11/20/97

CHIEF, DIVISION OF LAND DEVELOPMENT — DATE 11/3/97

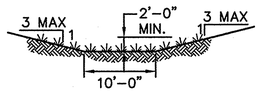

WEST SIDE STORMWATER CHANNEL TYPICAL X-SECTION (A 36/36)
SCALE: 1"=10'-0"

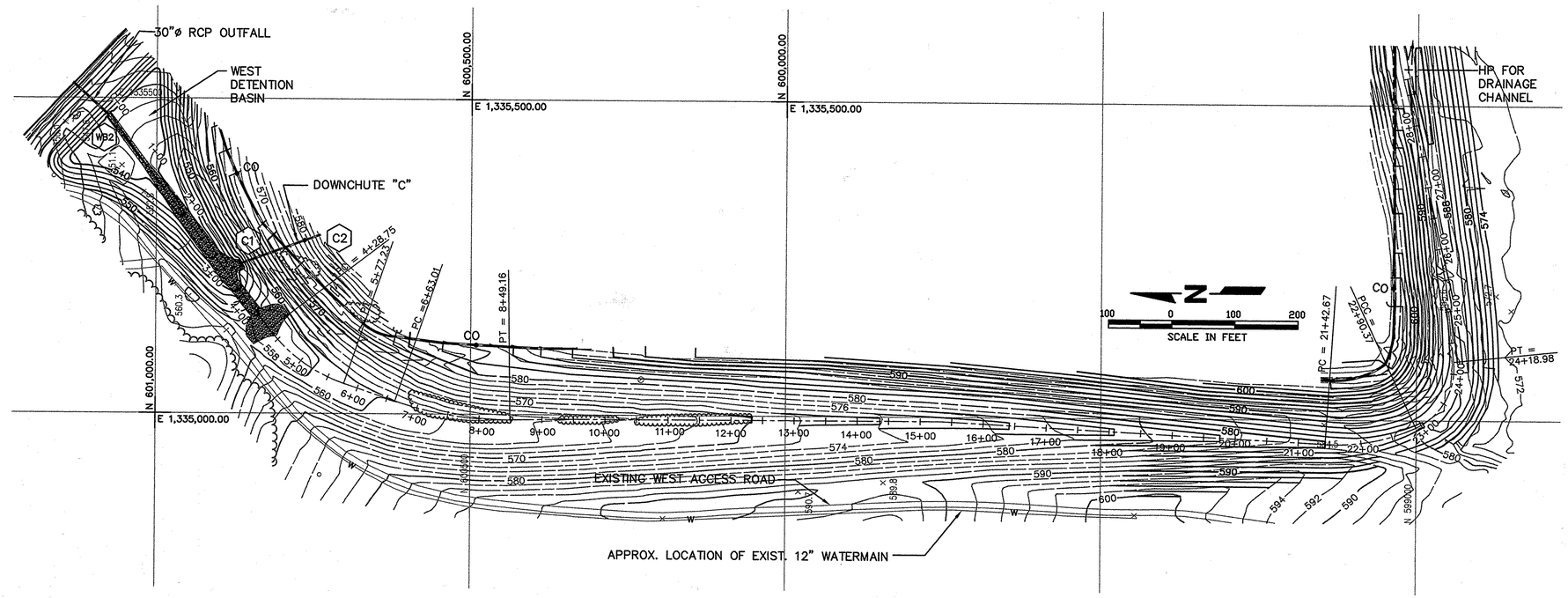

VERT. SCALE: 10 0 10 20 SCALE IN FEET

HORIZ. SCALE: 100 0 100 200 SCALE IN FEET

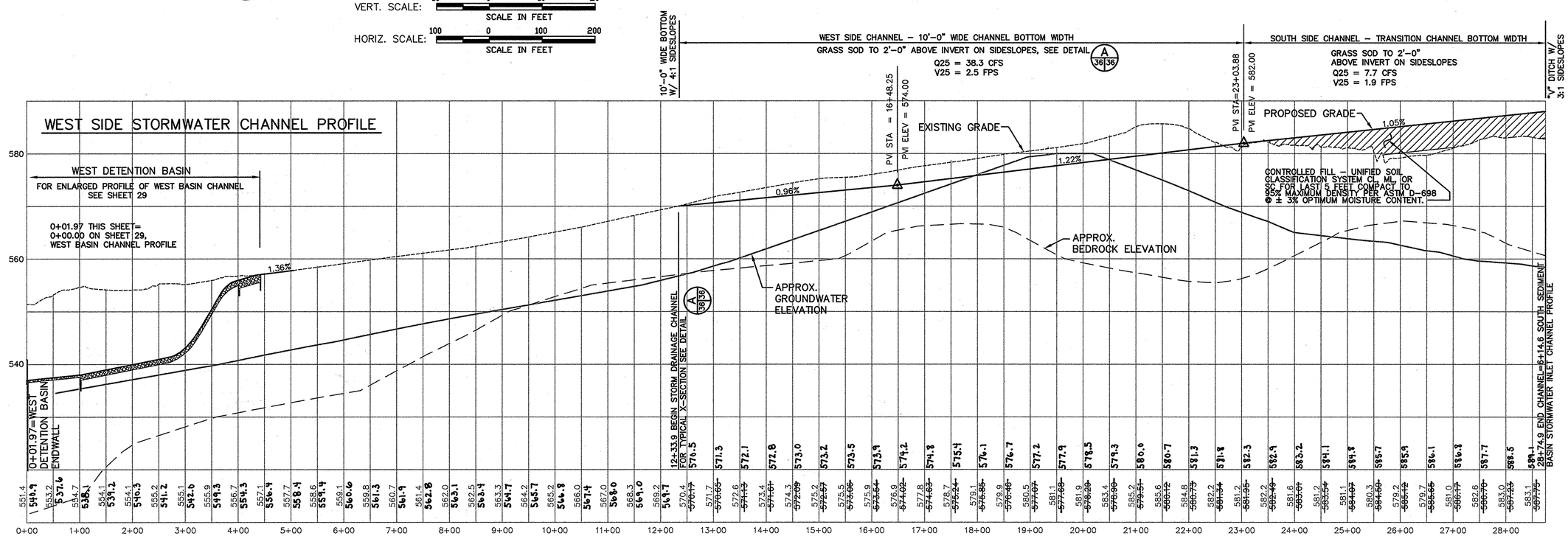

DEPARTMENT OF PUBLIC WORKS
HOWARD COUNTY, MARYLAND

DIRECTOR OF PUBLIC WORKS — DATE 10/30/97

CHIEF, BUREAU OF WASTE MANAGEMENT — DATE 10/30/97

SCS ENGINEERS
CONSULTING ENGINEERS
11260 ROGER BACON DRIVE
SUITE 300
RESTON, VIRGINIA 22090
PH. (703) 471-6150
FAX. (703) 471-6676

STATE OF MARYLAND — PAUL ANTHONY MANDEVILLE — No. 22 — PROFESSIONAL ENGINEER
Paul Anthony Mandeville, PE

DES. AST	6			
DRN. EGC/JCB	5			
CHK. PAM	4			
	3			
	2			
DATE: 10-30-97	1			
BY	NO.	REVISION	DATE	

WEST SIDE CHANNEL PLAN AND PROFILE

ALPHA RIDGE LANDFILL
UNLINED CELL CLOSURE
CAPITAL PROJECT NO. C-0190-N

3rd ELECTION DISTRICT — HOWARD COUNTY, MARYLAND

SCALE: AS NOTED

SHEET 36 OF 131

M:\295077.01\FINAL\ WCHANPRO,WCHANPLN, DETAILS\XS-WSSC

WCHAN-B

SDP-97-128

SUBDIVISION NAME	LOT/PARCEL	
ALPHA RIDGE SOLID WASTE MANAGEMENT CENTER	54,253,220,11	
LIBER/FOLIO	ZONE	TAX/ZONE MAP
10-847/606 16-878/215 10-691/314	PEC	10 & 16
WATER CODE	SEWER CODE	CENSUS TR.
PRIVATE, EXISTING	PRIVATE, EXISTING	60-30

DEPARTMENT OF PLANNING AND ZONING
HOWARD COUNTY, MARYLAND

DIRECTOR — DATE 11/3/97
CHIEF, DEVELOPMENT ENGINEERING DIVISION — DATE 11/3/97
CHIEF, DIVISION OF LAND DEVELOPMENT — DATE 11/3/97

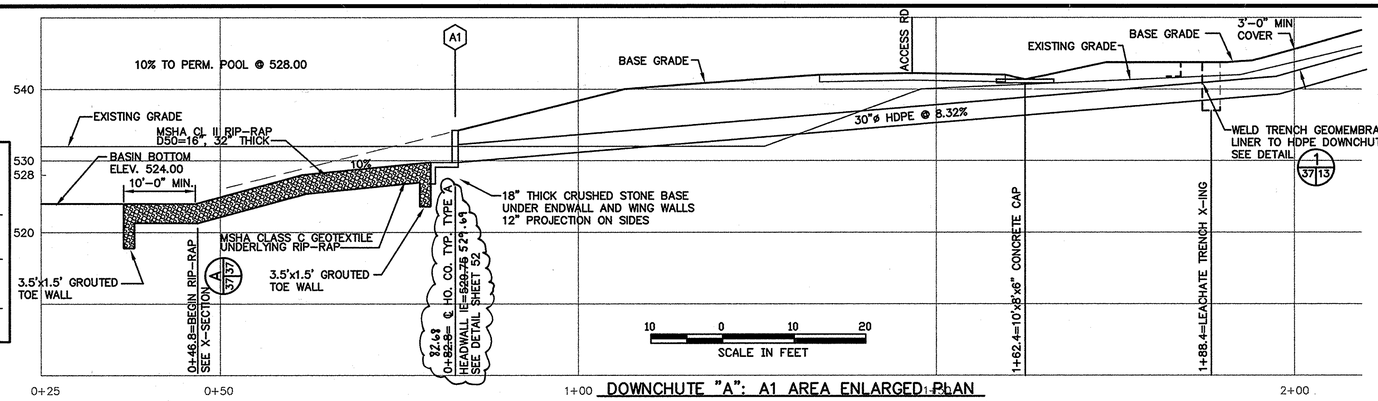

DOWNCHUTE "A": A1 AREA ENLARGED PLAN

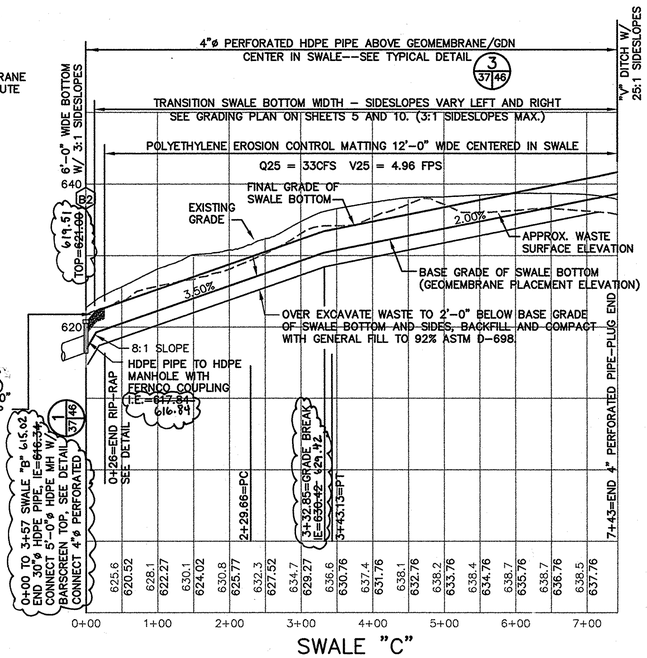

SWALE "C"

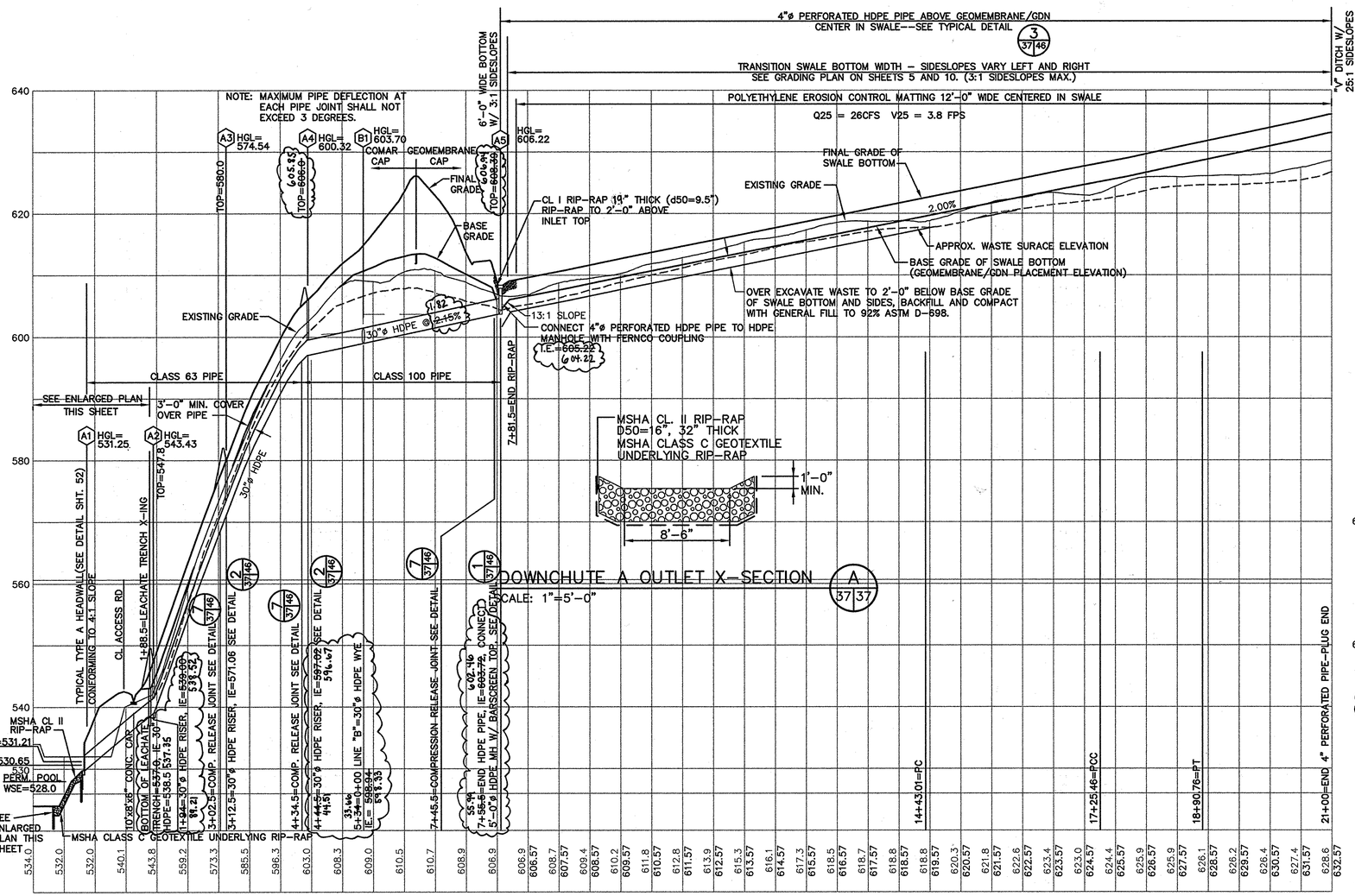

DOWNCHUTE AND SWALE "A"

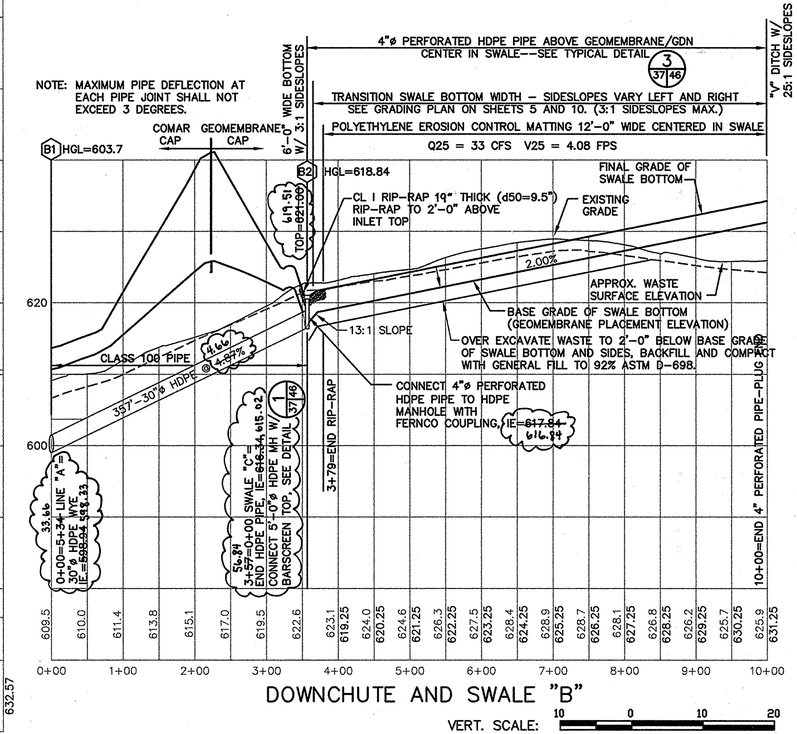

DOWNCHUTE AND SWALE "B"

VERT. SCALE: 10 0 10 20 SCALE IN FEET
HORIZ. SCALE: 100 0 100 200 SCALE IN FEET

DOWNCHUTE A OUTLET X-SECTION A 37/37
SCALE: 1"=5'-0"

M:\295077.01\FINAL SWLPRO, PROADET, XS-NBIDA

SWLPRO-B

DEPARTMENT OF PUBLIC WORKS
HOWARD COUNTY, MARYLAND

DIRECTOR OF PUBLIC WORKS — DATE 10/30/97
CHIEF, BUREAU OF WASTE MANAGEMENT — DATE 10/30/97

SCS ENGINEERS
CONSULTING ENGINEERS
11260 ROGER BACON DRIVE
SUITE 300
RESTON, VIRGINIA 22090
PH. (703) 471-6150
FAX. (703) 471-6676

Paul Anthony Mandeville, PE

DES. RTT, EGC
DRN. EGC,JCB
CHK. PAM
DATE: 10-30-97

BY	NO.	REVISION	DATE
	6		
	5		
	4		
	3		
	2	REVISED WASTE SURFACE ELEVATION	7/27/98
	1	REVISED GRADES	7/7/98

DOWNCHUTES & SWALE PROFILES

ALPHA RIDGE LANDFILL
UNLINED CELL CLOSURE
CAPITAL PROJECT NO. C-0190-N

3rd ELECTION DISTRICT — HOWARD COUNTY, MARYLAND

SCALE: AS NOTED

SHEET 37 OF 81

SDP-97-128

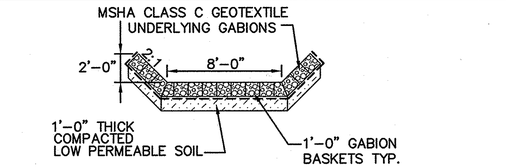

DOWNCHUTE C CHANNEL X-SECTION (A 38/38)

SCALE: 1"=5'-0"

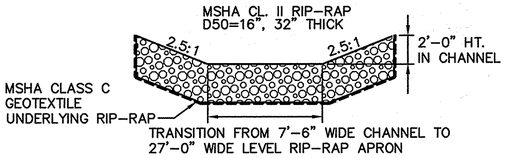

DOWNCHUTE D CHANNEL X-SECTION (B 38/38)

SCALE: 1"=5'-0"

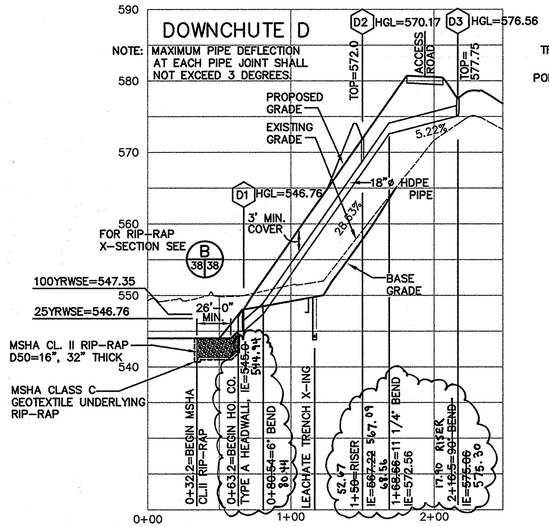

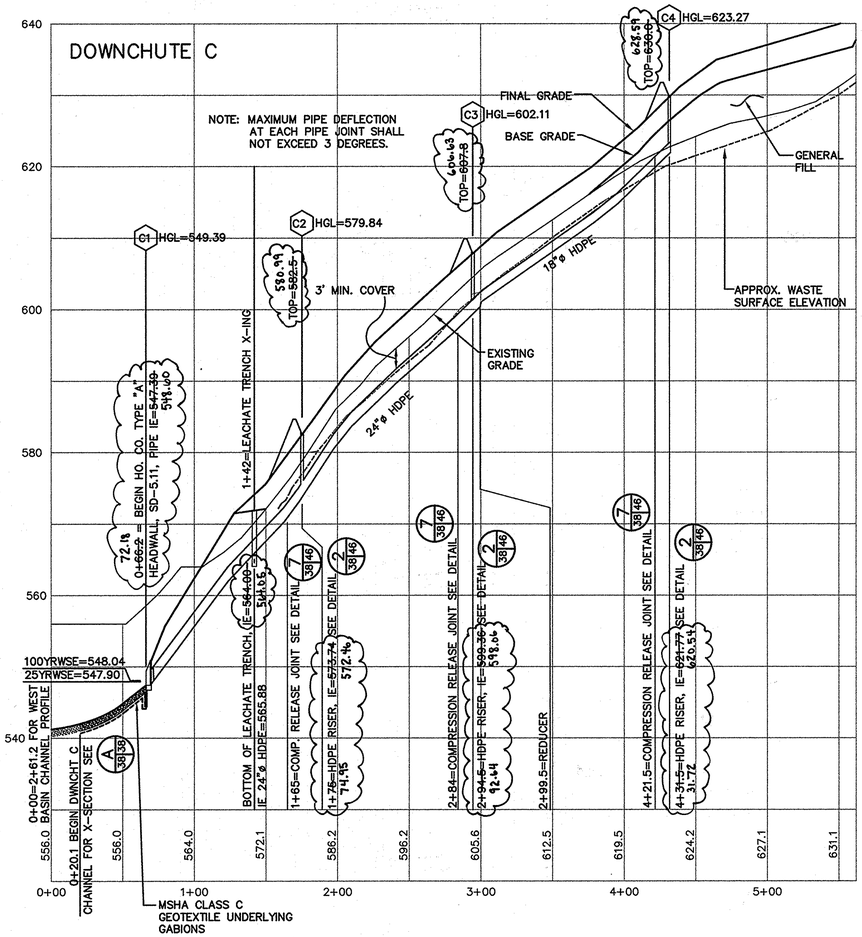

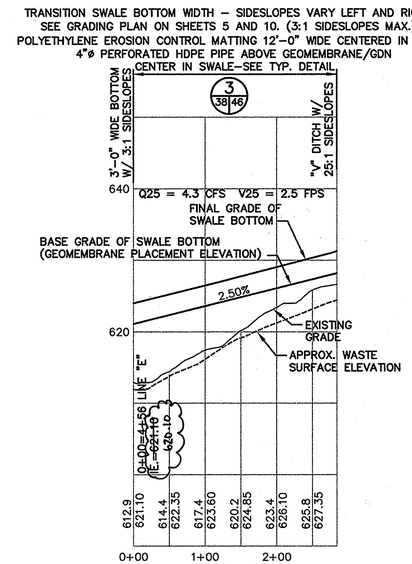

SWALE F

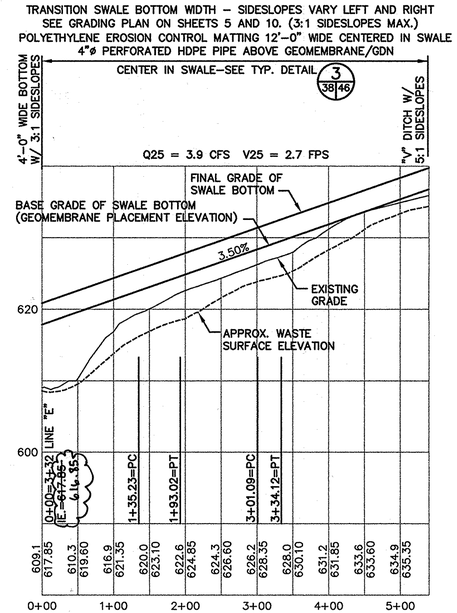

SWALE G

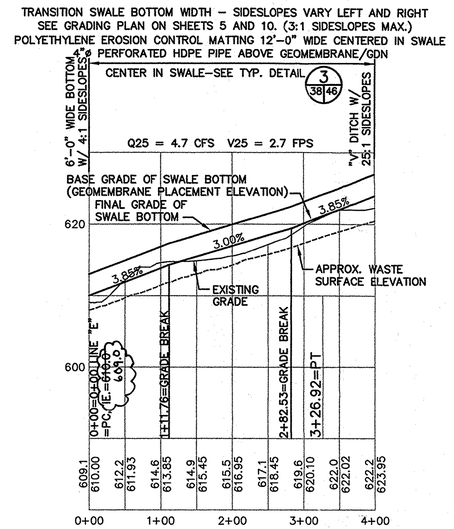

SWALE D

HORIZ. SCALE: 100 0 100 200 SCALE IN FEET

VERT. SCALE: 10 0 10 20 SCALE IN FEET

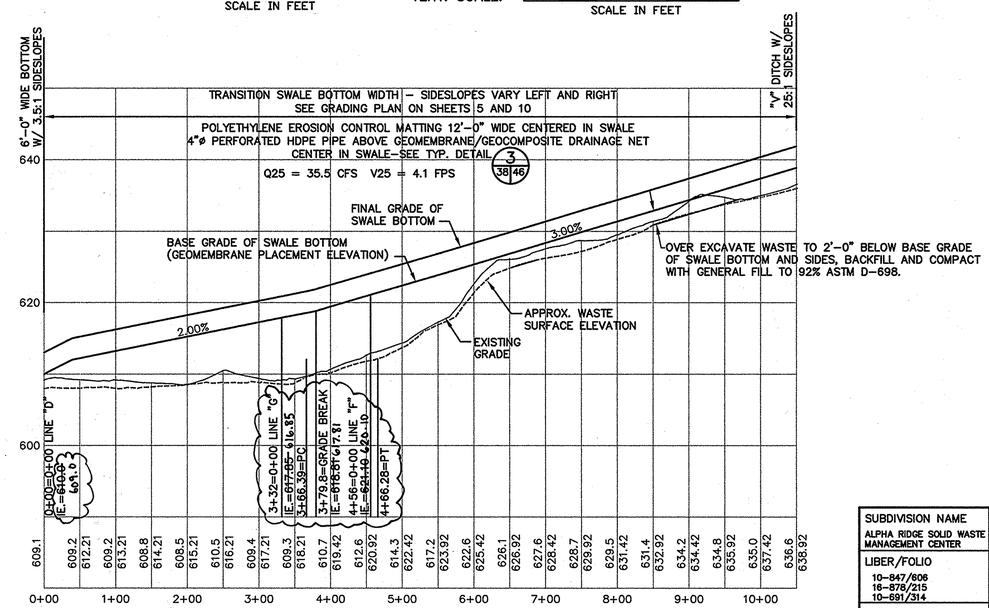

SWALE E

SUBDIVISION NAME	LOT/PARCEL	
ALPHA RIDGE SOLID WASTE MANAGEMENT CENTER	54,253,220,11	
LIBER/FOLIO	ZONE	TAX/ZONE MAP
10-847/806 16-878/215 10-691/314	PEC	10 & 16
WATER CODE	SEWER CODE	CENSUS TR.
PRIVATE, EXISTING	PRIVATE, EXISTING	60-30

DEPARTMENT OF PLANNING AND ZONING
HOWARD COUNTY, MARYLAND

DIRECTOR — DATE 11/3/97

CHIEF, DEVELOPMENT ENGINEERING DIVISION — DATE 10/31/97

CHIEF, DIVISION OF LAND DEVELOPMENT — DATE 11/3/97

DEPARTMENT OF PUBLIC WORKS
HOWARD COUNTY, MARYLAND

DIRECTOR OF PUBLIC WORKS — DATE 10/30/97

CHIEF, BUREAU OF WASTE MANAGEMENT — DATE 10/30/97

SCS ENGINEERS
CONSULTING ENGINEERS
11260 ROGER BACON DRIVE
SUITE 300
RESTON, VIRGINIA 22090
PH. (703) 471-6150
FAX. (703) 471-6676

STATE OF MARYLAND — PAUL ANTHONY MANDEVILLE — REG. NO. 15822 — PROFESSIONAL ENGINEER

Paul Anthony Mandeville, PE

DES. RTT, EGC
DRN. EGC, AST
CHK. PAM
DATE: 10-30-97

BY	NO.	REVISION	DATE
	6		
	5		
	4		
	3		
	2	REVISED WASTE SURFACE ELEVATION	7/27/98
	1	REVISED GRADES	7/17/98

DOWNCHUTES & SWALE PROFILES

ALPHA RIDGE LANDFILL
UNLINED CELL CLOSURE
CAPITAL PROJECT NO. C-0190-N

3rd ELECTION DISTRICT — HOWARD COUNTY, MARYLAND

SCALE: AS NOTED

SHEET 38 OF 131

SWLPR01B M:\295077.01\FINAL SWLPR01, PRF-DWND, XS-WBDC, XS-EBIDD

SDP-97-128

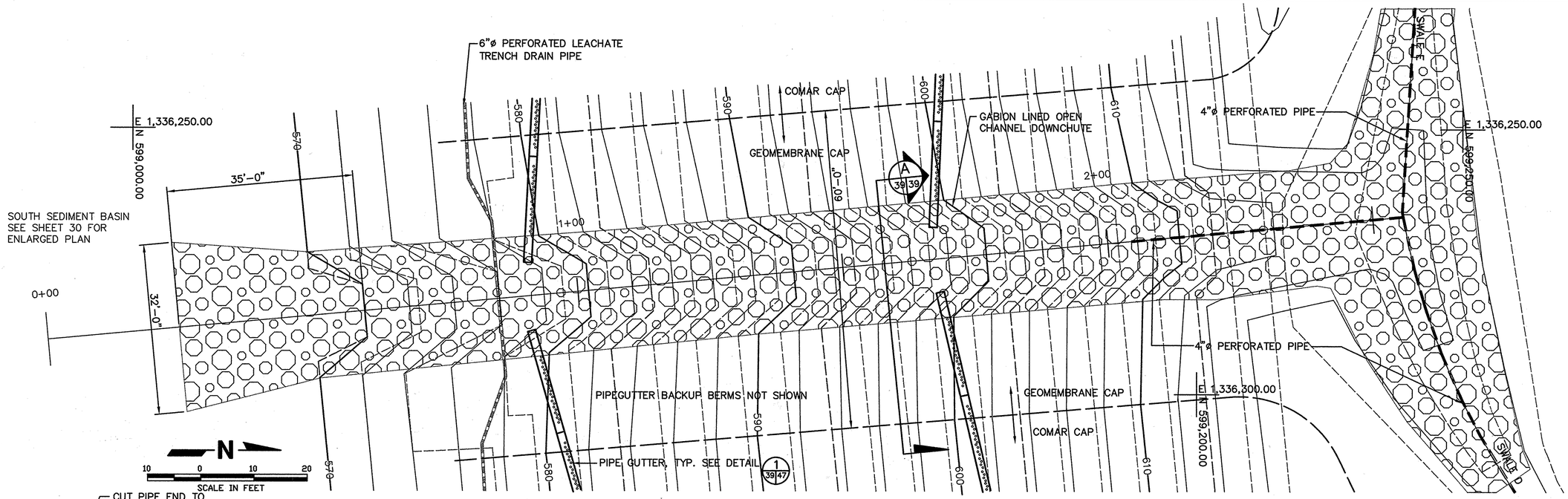

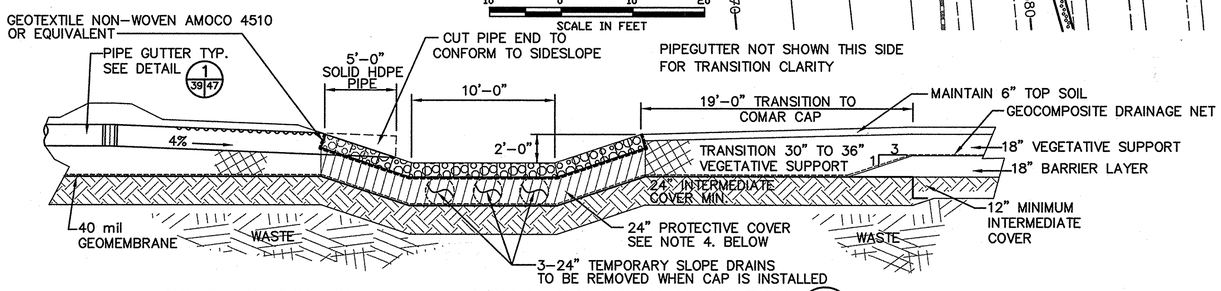

SOUTH GABION CHANNEL AND CAP TRANSITION X-SECTION A 39/39

SCALE: 1"=5'-0"

NOTES:

1. TEMPORARY 3-24"ø HDPE SLOPE DRAINS ON BASE GRADE TO BE REPLACED BY GABION CHANNEL ON FINAL GRADE.
2. GABION SHALL BE 1'-0" DEEP W/ STONE D50=7"
3. FOR CHANNEL X-SECTION SEE DETAIL A 39/39
4. PROVIDE 2'-0" CL OR SC MATERIAL, COMPACTED TO 95% ASTM D-698 MAXIMUM DRY DENSITY, BELOW GEOTEXTILE FROM STA. 1+07.6 TO STA. 2+24.0. BEGIN TRANSITION TO 2'-0" PROTECTION @ STA. 0+85.5. AT STA. 0+85.5 PROVIDE MINIMUM 1'-0" PROTECTIVE LAYER.

GABION DOWNCHUTE TO SOUTH BASIN

SCALE: 1"=10'

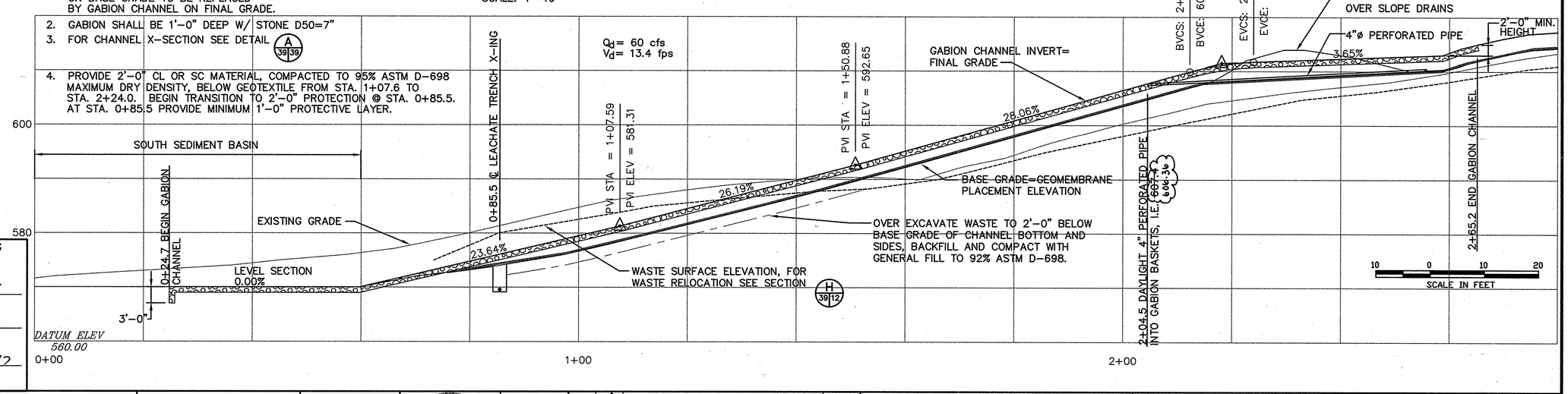

SUBDIVISION NAME	LOT/PARCEL	
ALPHA RIDGE SOLID WASTE MANAGEMENT CENTER	54,253,220,11	
LIBER/FOLIO	ZONE	TAX/ZONE MAP
10-847/606 16-878/215 10-691/314	PEC	10 & 16
WATER CODE	SEWER CODE	CENSUS TR.
PRIVATE, EXISTING	PRIVATE, EXISTING	60-30

DEPARTMENT OF PLANNING AND ZONING
HOWARD COUNTY, MARYLAND

DIRECTOR — DATE 11/3/97

CHIEF, DEVELOPMENT ENGINEERING DIVISION — DATE 11/3/97

CHIEF, DIVISION OF LAND DEVELOPMENT — DATE 11/3/97

DEPARTMENT OF PUBLIC WORKS
HOWARD COUNTY, MARYLAND

DIRECTOR OF PUBLIC WORKS — DATE 10/30/97

CHIEF, BUREAU OF WASTE MANAGEMENT — DATE 10/30/97

SCS ENGINEERS
CONSULTING ENGINEERS
11260 ROGER BACON DRIVE
SUITE 300
RESTON, VIRGINIA 22090
PH. (703) 471-6150
FAX. (703) 471-6676

STATE OF MARYLAND — PAUL ANTHONY MANDEVILLE — REG. NO. 15848 — PROFESSIONAL ENGINEER
Paul Anthony Mandeville, PE

DES. RTT, EGC	6			
	5			
DRN. EGC	4			
	3			
CHK. PAM	2			
DATE: 10-30-97	1			
	BY	NO.	REVISION	DATE

DOWNCHUTES & SWALE PROFILES

ALPHA RIDGE LANDFILL
UNLINED CELL CLOSURE
CAPITAL PROJECT NO. C-0190-N

3rd ELECTION DISTRICT — HOWARD COUNTY, MARYLAND

SCALE: AS NOTED

SHEET 39 OF 132

SDP-97-128

M:\295077.01\FINAL RRPRO, RRPLN, XS-STHGAB SWLPRO2B

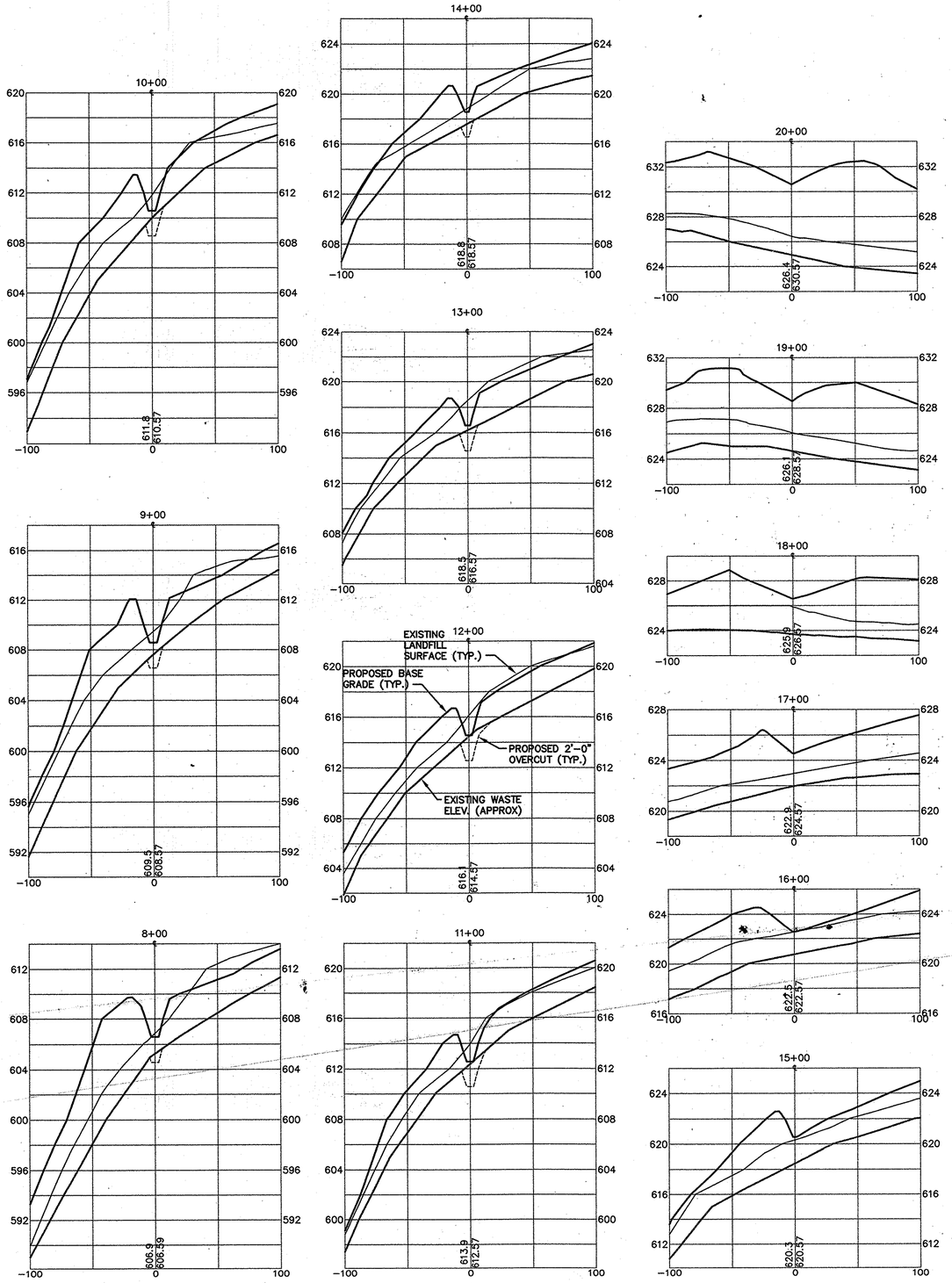

SWALE A CROSS-SECTIONS

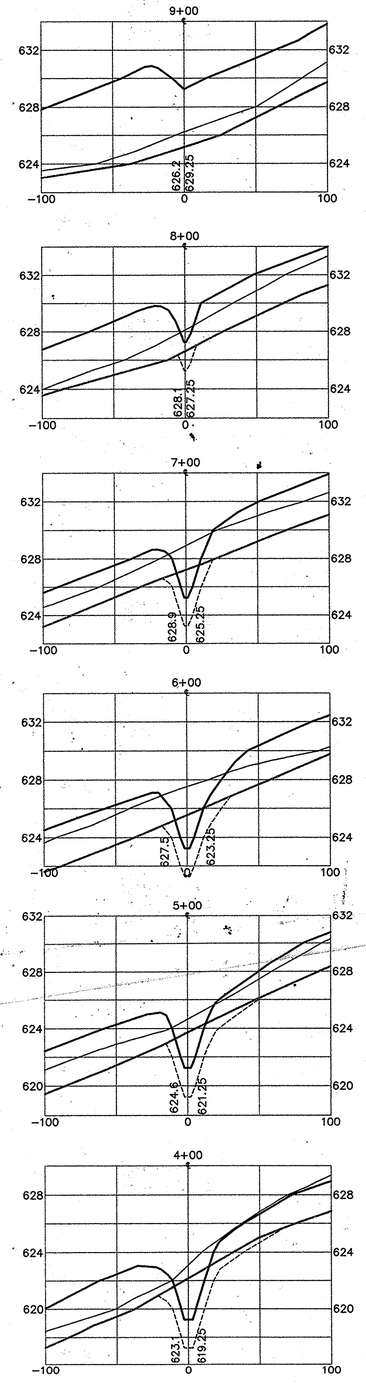

SWALE B CROSS-SECTIONS

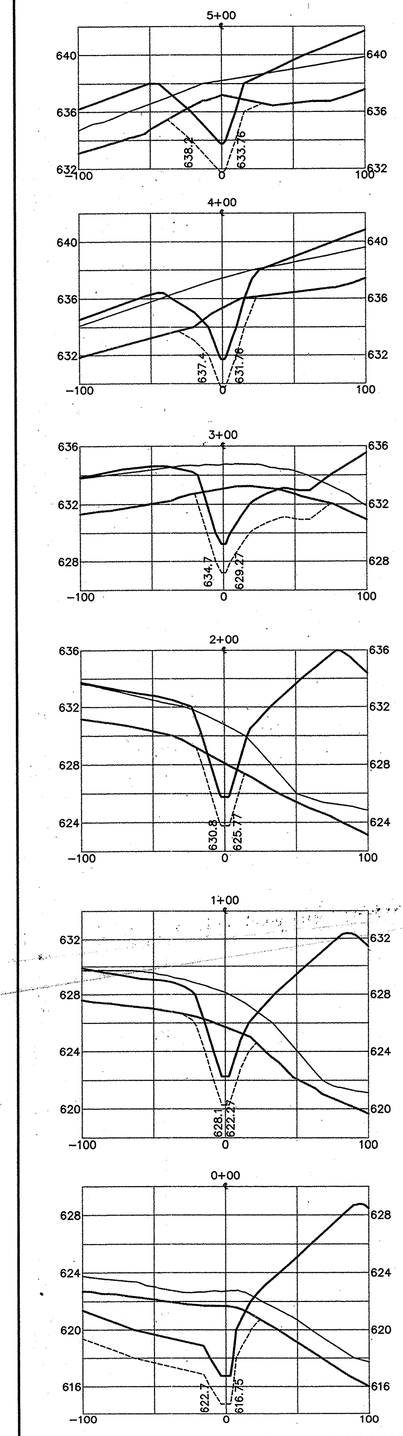

SWALE C CROSS-SECTIONS

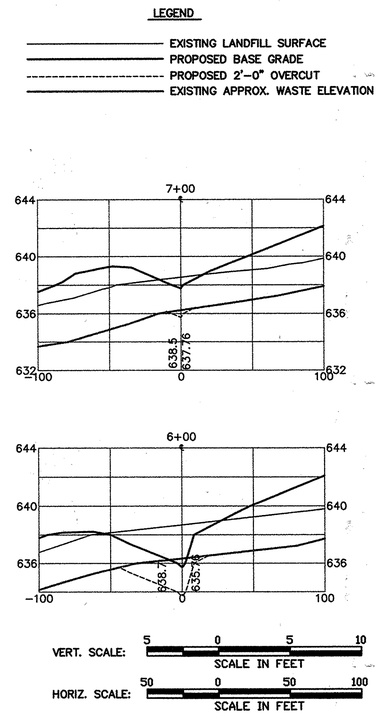

SEE ETA SHEET 10-AB FOR AS-BUILT FINAL SURFACE GRADING PLAN

SUBDIVISION NAME	LOT/PARCEL	
ALPHA RIDGE SOLID WASTE MANAGEMENT CENTER	54,253,220,11	
LIBER/FOLIO 10-847/606 16-878/215 10-691/314	ZONE PEC	TAX/ZONE MAP 10 & 16
WATER CODE PRIVATE, EXISTING	SEWER CODE PRIVATE, EXISTING	CENSUS TR. 60-30

DEPARTMENT OF PLANNING AND ZONING
HOWARD COUNTY, MARYLAND

DIRECTOR — DATE 11/3/97

CHIEF, DEVELOPMENT ENGINEERING DIVISION — DATE 10/30/97

CHIEF, DIVISION OF LAND DEVELOPMENT — DATE 11/3/97

DEPARTMENT OF PUBLIC WORKS
HOWARD COUNTY, MARYLAND

DIRECTOR OF PUBLIC WORKS — DATE 10/30/97

CHIEF, BUREAU OF WASTE MANAGEMENT — DATE 10/30/97

SCS ENGINEERS
CONSULTING ENGINEERS
11260 ROGER BACON DRIVE
SUITE 300
RESTON, VIRGINIA 22090
PH. (703) 471-6150
FAX. (703) 471-6676

STATE OF MARYLAND — PAUL ANTHONY MANDEVILLE — LIC. REG. CERT. NO. 14968 — PROFESSIONAL ENGINEER

Paul Anthony Mandeville, PE

DES. RTT, EGC
DRN. EGC
CHK. PAM
DATE: 10-30-97

BY	NO.	REVISION	DATE
	6		
	5		
	4		
	3		
	2		
	1		

SWALE CROSS-SECTIONS

ALPHA RIDGE LANDFILL
UNLINED CELL CLOSURE
CAPITAL PROJECT NO. C-0190-N

3rd ELECTION DISTRICT — HOWARD COUNTY, MARYLAND

SCALE: AS NOTED

SHEET 40 OF 136

M:\295077.01\FINAL SWLX1

SWLX1-B

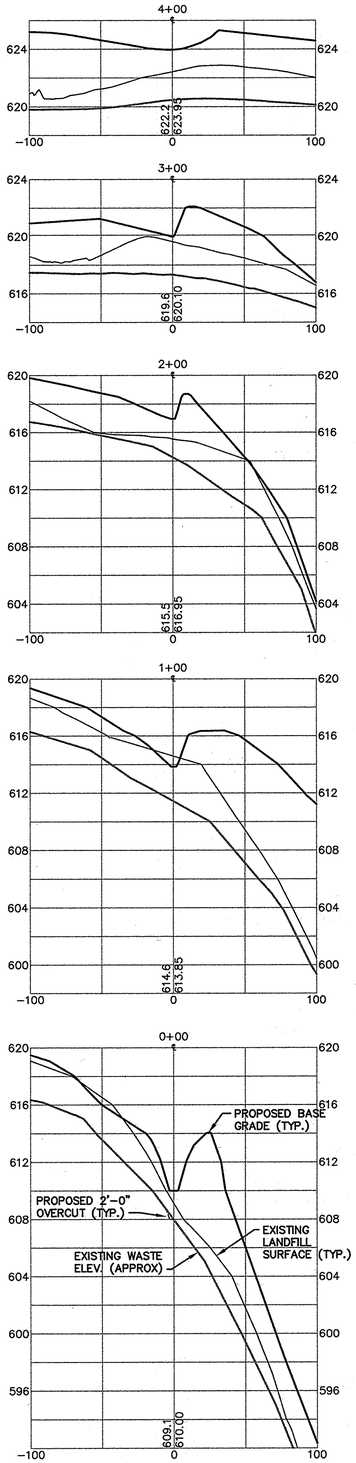

SWALE D CROSS-SECTIONS

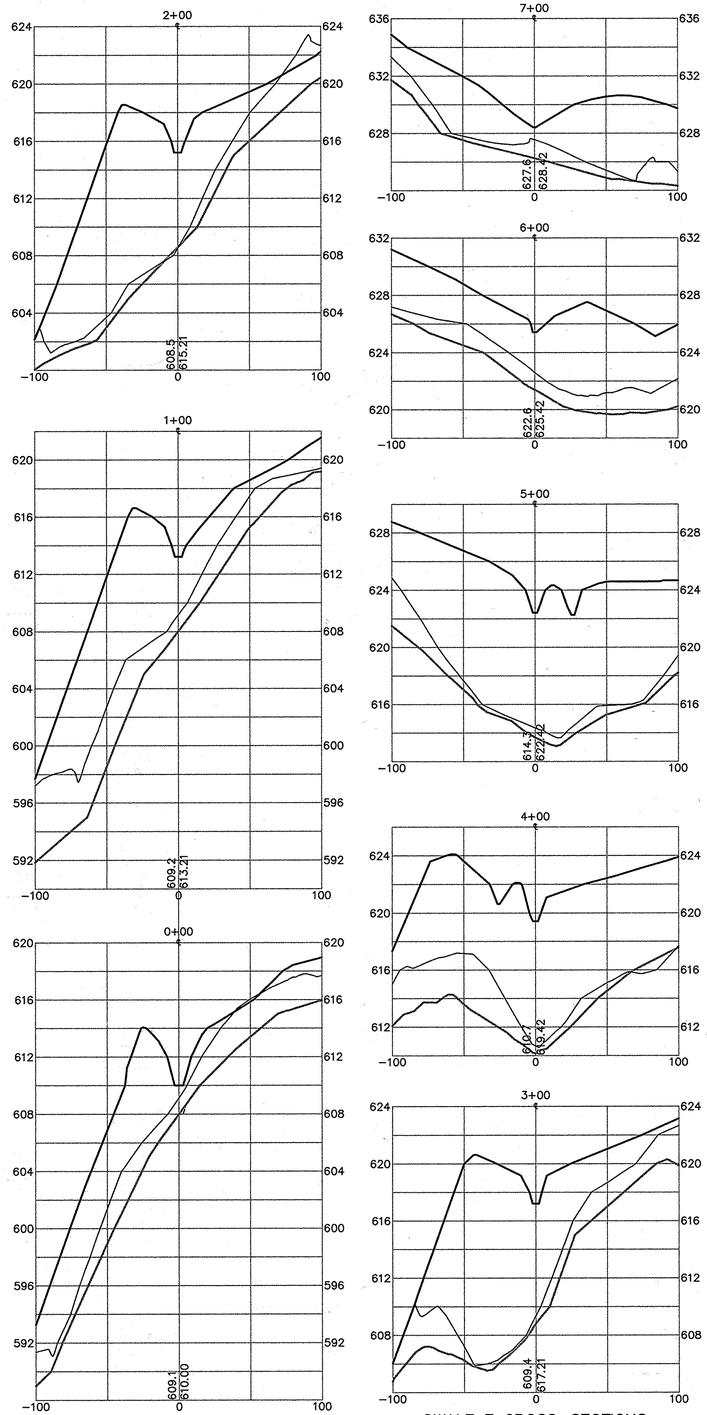

SWALE E CROSS-SECTIONS

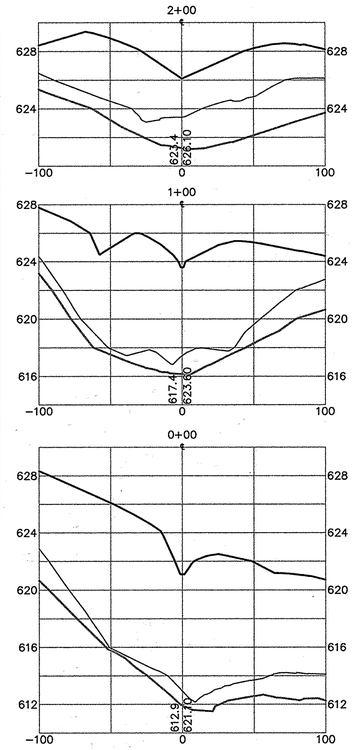

SWALE F CROSS-SECTIONS

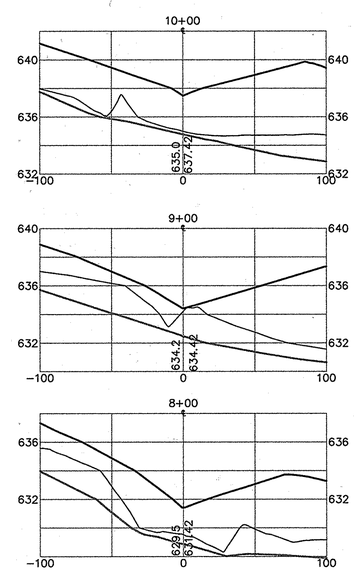

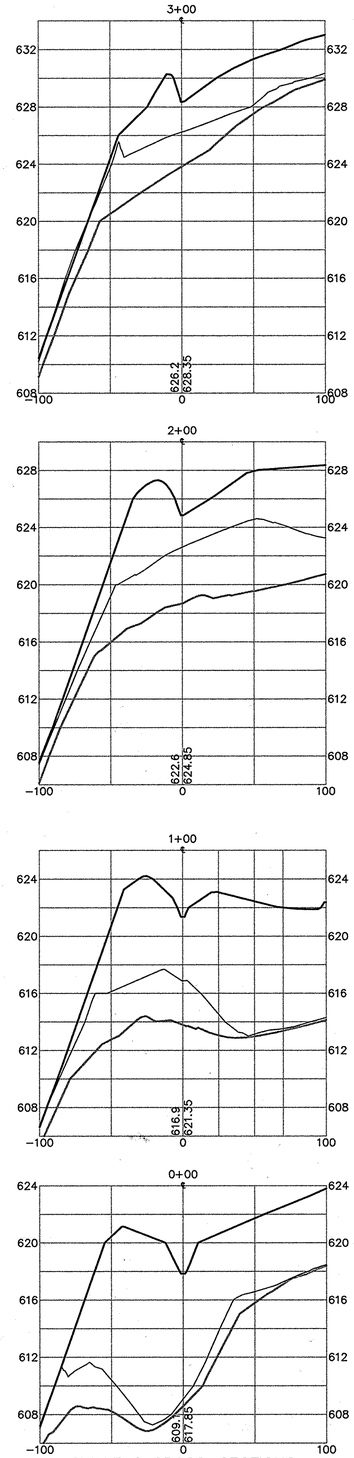

SWALE G CROSS-SECTIONS

LEGEND

- EXISTING LANDFILL SURFACE
- PROPOSED BASE GRADE
- PROPOSED 2'-0" OVERCUT
- EXISTING APPROX. WASTE ELEVATION

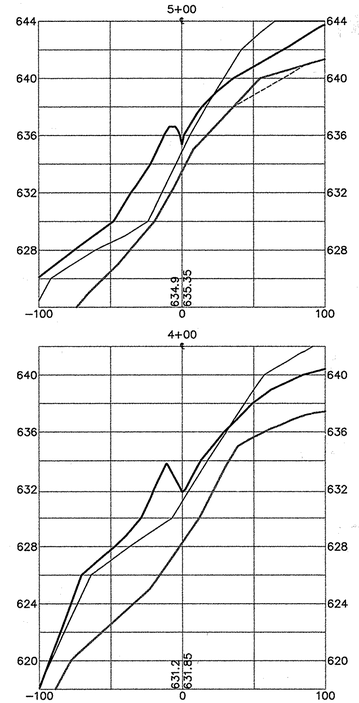

VERT. SCALE: 5 0 5 10 SCALE IN FEET

HORIZ. SCALE: 50 0 50 100 SCALE IN FEET

SEE ETA SHEET 10-AB FOR AS-BUILT FINAL SURFACE GRADING PLAN

SUBDIVISION NAME	LOT/PARCEL	
ALPHA RIDGE SOLID WASTE MANAGEMENT CENTER	54,253,220,11	
LIBER/FOLIO	ZONE	TAX/ZONE MAP
10-847/606 16-878/215 10-691/314	PEC	10 & 16
WATER CODE	SEWER CODE	CENSUS TR.
PRIVATE, EXISTING	PRIVATE, EXISTING	60-30

DEPARTMENT OF PLANNING AND ZONING
HOWARD COUNTY, MARYLAND

DIRECTOR — DATE 11/3/97

CHIEF, DEVELOPMENT ENGINEERING DIVISION — DATE 11/3/97

CHIEF, DIVISION OF LAND DEVELOPMENT — DATE 11/3/97

DEPARTMENT OF PUBLIC WORKS
HOWARD COUNTY, MARYLAND

DIRECTOR OF PUBLIC WORKS — DATE 10/30/97

CHIEF, BUREAU OF WASTE MANAGEMENT — DATE 10/30/97

SCS ENGINEERS
CONSULTING ENGINEERS
11260 ROGER BACON DRIVE
SUITE 300
RESTON, VIRGINIA 22090
PH. (703) 471-6150
FAX. (703) 471-6676

STATE OF MARYLAND — PAUL ANTHONY MANDEVILLE — LIC. REG. CERT. NO. 14868 — PROFESSIONAL ENGINEER

Paul Anthony Mandeville, PE

DES. RTT, EGC
DRN. EGC
CHK. PAM
DATE: 10-30-97

BY	NO.	REVISION	DATE
	6		
	5		
	4		
	3		
	2		
	1		

SWALE CROSS-SECTIONS

ALPHA RIDGE LANDFILL
UNLINED CELL CLOSURE
CAPITAL PROJECT NO. C-0190-N

3rd ELECTION DISTRICT — HOWARD COUNTY, MARYLAND

SCALE: AS NOTED

SHEET 41 OF 131

SDP-97-128

SWLX2-B M:\295077.01\FINAL SWLX2

NOTE: THIS SHEET TO BE USED FOR VEGETATIVE COVER PURPOSES ONLY!

LANDSCAPE NOTES:

1. SEEDING OPERATIONS TO OCCUR IN TWO PHASES DURING CONSTRUCTION.
   A. PHASE I SEEDING SHALL INCLUDE TEMPORARY SEEDING MIX FOR INITIAL CAPPING OPERATIONS. THE PERIMETER OF LANDFILL SHALL INCLUDE BUT NOT BE LIMITED TO STORMWATER BASINS, ROADS, ETC. AND SHALL BE FINAL SEEDED WITH RECLAIM DRY CONSERVATION MIX.
   B. PHASE II SEEDING INCLUDES FINAL GRADING FOR CAPPING OPERATIONS AND ROADWAYS WITH SEED MIXTURES AND VEGETATION SPECIFIED ON THIS PLAN.
2. LIMITS OF SEEDING ON THIS PLAN ARE FOR PHASE II GRADING AND VEGETATIVE COVER OPERATIONS ONLY.
3. ANY OTHER AREAS NOT SHOWN ON THIS PLAN, BUT ARE DISTURBED DURING CONSTRUCTION OPERATIONS SHALL BE SEEDED WITH RECLAIM DRY CONSERVATION MIX.
4. SEE SHEET 43 FOR PLANT LEGEND AND SEEDING MIXTURES.

LANDSCAPE NOTES:

- NORTHERN POND AREA:
  - RED MAPLE (2-2 1/2" CAL)
  - WHITE PINE (6'-8' HIGH)
- NORTHERN BERM AREA:
  - NORTHERN RED OAK (2-2 1/2" CAL)
  - SHORTLEAF PINE SEEDLINGS (12" HIGH) (PLANT 10 SEEDLINGS IN LOCATION OF SYMBOL)

SUBDIVISION NAME	LOT/PARCEL	
ALPHA RIDGE SOLID WASTE MANAGEMENT CENTER	54,253,220,11	
LIBER/FOLIO	ZONE	TAX/ZONE MAP
10-847/606 16-878/215 10-691/314	R	10 & 16
WATER CODE	SEWER CODE	CENSUS TR.
PRIVATE, EXISTING	PRIVATE, EXISTING	60-30

DEPARTMENT OF PLANNING AND ZONING
HOWARD COUNTY, MARYLAND

DIRECTOR — DATE 11/3/97
CHIEF, DEVELOPMENT ENGINEERING DIVISION — DATE 10/30/97
CHIEF, DIVISION OF LAND DEVELOPMENT ~~AND RESEARCH~~ — DATE 11/3/97

DEPARTMENT OF PUBLIC WORKS
HOWARD COUNTY, MARYLAND

DIRECTOR OF PUBLIC WORKS — DATE 10/30/97
CHIEF BUREAU OF WASTE MANAGEMENT — DATE 10/30/97

SCS ENGINEERS
CONSULTING ENGINEERS
11260 ROGER BACON DRIVE
SUITE 300
RESTON, VIRGINIA 22090
PH. (703) 471-6150
FAX. (703) 471-6676

STATE OF MARYLAND — KEVIN J. GATTELLO — NO. 99 — REGISTERED LANDSCAPE ARCHITECT

STATE OF MARYLAND — PAUL ANTHONY MANDEVILLE — NO. 26,035 — PROFESSIONAL ENGINEER
Paul Anthony Mandeville, PE

DES.	MB
DRN.	KS
CHK.	PAM
DATE: 10-30-97	

BY	NO.	REVISION	DATE
	6		
	5		
	4		
	3		
	2		
	1		

VEGETATIVE COVER PLAN

ALPHA RIDGE LANDFILL
UNLINED CELL CLOSURE
CAPITAL PROJECT NO. C-0190-N

3rd ELECTION DISTRICT — HOWARD COUNTY, MARYLAND

SCALE: 1"=100'

SHEET 42 OF 138

SDP-97-128

M:\295077.01\FINAL\PSA 2636BASE, 2636FILL

2636LANDOLD

PERMANENT SEED MIXTURES

A. TRI-PLEX GENERAL SEED MIX

INGREDIENTS	% OF MIXTURE	MINIMUM PERCENT PURE LIVE SEED
BARON KENTUCKY BLUEGRASS	60%	90-95%
JAMESTOWN II CHEWINGS FESCUE	20%	95-97%
PALMER II PERENNIAL RYEGRASS	20%	85-90%

* SEED SHALL BE APPLIED AT THE RATE OF 4 LBS/1000 SQUARE FEET OR 170 LBS/ACRE

B. RECLAIM DRY CONSERVATION MIX

INGREDIENTS	% OF MIXTURE	MINIMUM PERCENT PURE LIVE SEED
REBEL II TALL FESCUE	40%	95-98%
WEEPING LOVEGRASS	20%	95-98%
RELIANT HARD FESCUE	10%	90-95%
JAMESTOWN II CHEWINGS FESCUE	10%	95-97%
PALMER II PERENNIAL RYEGRASS	10%	85-90%
WHITE CLOVER	5%	95-98%
BLACKWELL SWITCHGRASS	5%	95-98%

* SEED SHALL BE APPLIED AT THE RATE OF 5 LBS/1000 SQUARE FEET OR 210 LBS/ACRE

C. CLOVER MIX

INGREDIENTS	% OF MIXTURE	MINIMUM PERCENT PURE LIVE SEED
LADINO CLOVER	12.5%	95-98%
RELIANT HARD FESCUE	87.5%	90-95%

* SEED SHALL BE APPLIED AT THE RATE OF 4.4 LBS/1000 SQUARE FEET OR 190 LBS/ACRE

D. PERENNIAL WILDFLOWER MIXTURE

INGREDIENTS	% OF MIXTURE	MINIMUM PERCENT PURE LIVE SEED
SIBERIAN WALLFLOWER	24%	95-98%
PERENNIAL GAILLARDIA	19%	95-98%
LANCELEAF COREOPSIS	15%	95-98%
DAME'S ROCKET	14%	95-98%
PURPLE CONEFLOWER	9%	95-98%
SWEET WILLIAM	9%	95-98%
SHASTA DAISY	4%	95-98%
BLACK-EYED SUSAN	3%	95-98%
WHITE YARROW	2%	95-98%
OX-EYE DAISY	1%	95-98%

* SEED SHALL BE APPLIED AT THE RATE OF 10 LBS/ACRE FOR BROADCASTING (INCREASE RATE OF APPLICATION OT 20 LBS/ACRE FOR HYDROSEEDING)

E. ANNUAL WILDFLOWER MIXTURE (FALL AMENDMENT)

INGREDIENTS	% OF MIXTURE	MINIMUM PERCENT PURE LIVE SEED
CALIFORNIA POPPY	35%	95-98%
BABY'S BREATH	22%	95-98%
BACHELORS BUTTON	12%	95-98%
PINK CATCHFLY	8%	95-98%
LEMON MINT	8%	95-98%
CORN POPPY	8%	95-98%
PLAINS COREOPSIS	5%	95-98%
FORGET-ME-NOT	2%	95-98%

* SEED SHALL BE APPLIED AT THE RATE OF 8 LBS/ACRE FOR BROADCASTING (INCREASE RATE OF APPLICATION OT 16 LBS/ACRE FOR HYDROSEEDING)

E. ANNUAL WILDFLOWER MIXTURE (SPRING AMENDMENT)

INGREDIENTS	% OF MIXTURE	MINIMUM PERCENT PURE LIVE SEED
CALIFORNIA POPPY	18%	95-98%
BACHELORS BUTTON	16%	95-98%
BABY'S BREATH	15%	95-98%
AFRICAN DAISY	13%	95-98%
COSMOS	10%	95-98%
PINK CATCHFLY	10%	95-98%
LEMON MINT	6%	95-98%
CORN POPPY	5%	95-98%
PLAINS COREOPSIS	4%	95-98%
SPURRED SNAPDRAGON	3%	95-98%

* SEED SHALL BE APPLIED AT THE RATE OF 8 LBS/ACRE FOR BROADCASTING (INCREASE RATE OF APPLICATION OT 16 LBS/ACRE FOR HYDROSEEDING)

** FOR SEEDING MID-SEPTEMBER TO EARLY NOVEMBER (FALL), A MIXTURE OF TWO-THIRDS PERENNIAL WILDFLOWER WITH ONE-THIRD ANNUAL WILDFLOWER (FALL AMENDMENT ONLY)

*** FOR SEEDING EARLY MARCH TO LATE APRIL (SPRING), USE A MIXTURE OF TWO-THIRDS PERENNIAL WILDFLOWERS WITH ONE-THIRD ANNUAL WILDFLOWER (SPRING AMENDMENT ONLY)

TEMPORARY SEEDING RATES, DEPTHS, AND DATES

SPECIES	MINIMUM SEEDING RATES		PLANTING DEPTH [36]	HARDINESS ZONES [37] AND SEEDING DATES [38]									FERTILIZER RATE (10-10-10) 650 POUNDS PER ACRE
				7A & 7B			6B			6A & 5B			
	PER ACRE	LBS/1000 SQ. FT.	INCHES	2/1-4/30	5/1-8/14	8/15-11/30	3/1-4/30	5/1-8/14	8/15-11/15	3/15-5/31	6/1-7/31	8/1 10/31	
CHOOSE ONE: BARLEY OATS RYE [39]	 2.5 BU. (122 lbs) 3 BU. (96 lbs) 2.5 BU. (140 lbs)	 2.80 2.21 3.22	 1-2 1-2 1-2	 X X X	 - - -	BY 10/15 - X	 X X X	 - - -	BY 10/15 - X	 X X X	 - - -	BY 10/1 - X	LIME RATE 100 POUNDS PER 1,000 SQ. FEET
BARLEY OR RYE PLUS FOXTAIL MILLET [40]	150 lbs	3.45	1	X X	X X	10/15 X	X X	X X	10/15 X	X X	X X	10/1 X	
WEEPING LOVEGRASS [41]	4 lbs	.09	1/4-1/2	-	X	-	-	X	-	-	X	-	
ANNUAL RYEGRASS	50 lbs	1.15	1/4-1/2	X	-	11/1	X	-	11/1	X	-	8/15	
MILLET [42]	50 lbs	1.15	1/2	-	X	-	-	X	-	-	X	-	

36 APPLICABLE ON SLOPES OF 3:1 OR FLATTER
37 REFER TO FIGURE A - ADOPTED FROM USDA, ARS MISCELLANEOUS PUBLICATION #1475, JANUARY 1990
38 BETWEEN FALL AND SPRING SEEDING DATES, USE MULCH ONLY IF GROUND IS FROZEN AND RESEED WHEN THAWED
39 MAY BE USED AS A NURSE CROP FOR LATE FALL/EARLY WINTER PERMANENT SEEDINGS, ADD 56 LBS/AC TO THE PERMANENT SEEDING MIXTURE
40 MARYLAND STATE HIGHWAY ADMINISTRATION TEMPORARY SEED MIX
41 MAY BE USED AS A NURSE CROP FOR MID-SUMMER PERMANENT SEEDINGS. ADD 2 LBS/AC TO PERMANENT SEED MIX.
42 MAY BE USED AS A NURSE CROP FOR MID-SUMMER PERMANENT SEEDINGS. ADD 10 LBS/AC TO THE PERMANENT SEED MIX.

GENERAL NOTES:

STAKE ALL DECIDUOUS TREES UNDER 3" CAL. SET STAKES VERTICAL AND AT SAME HEIGHT.

GUY TREES 3" CAL. AND OVER.

PRUNE TO THIN AND SHAPE TREE CANOPY. DO NOT CUT LEADER.

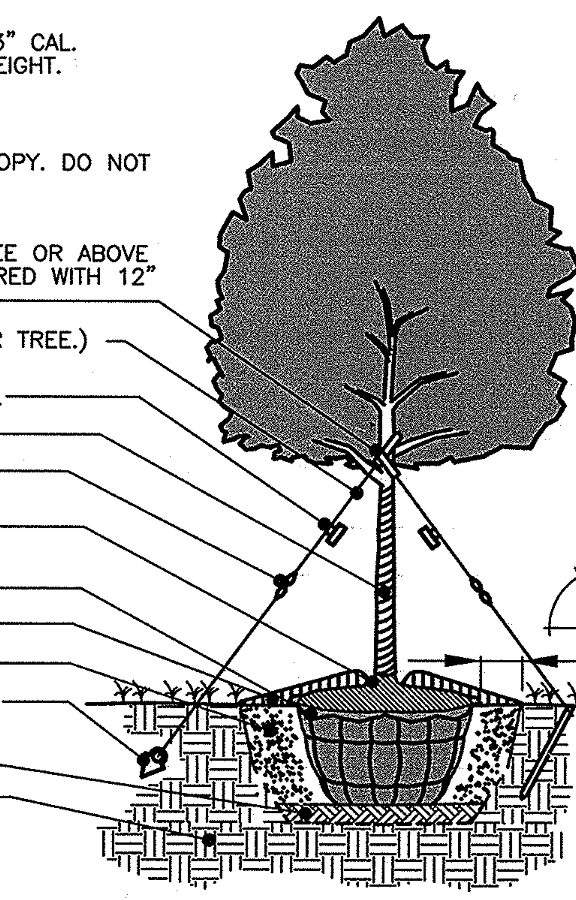

DECIDUOUS TREE PLANTING DETAIL
NOT TO SCALE (3" CAL. & OVER)

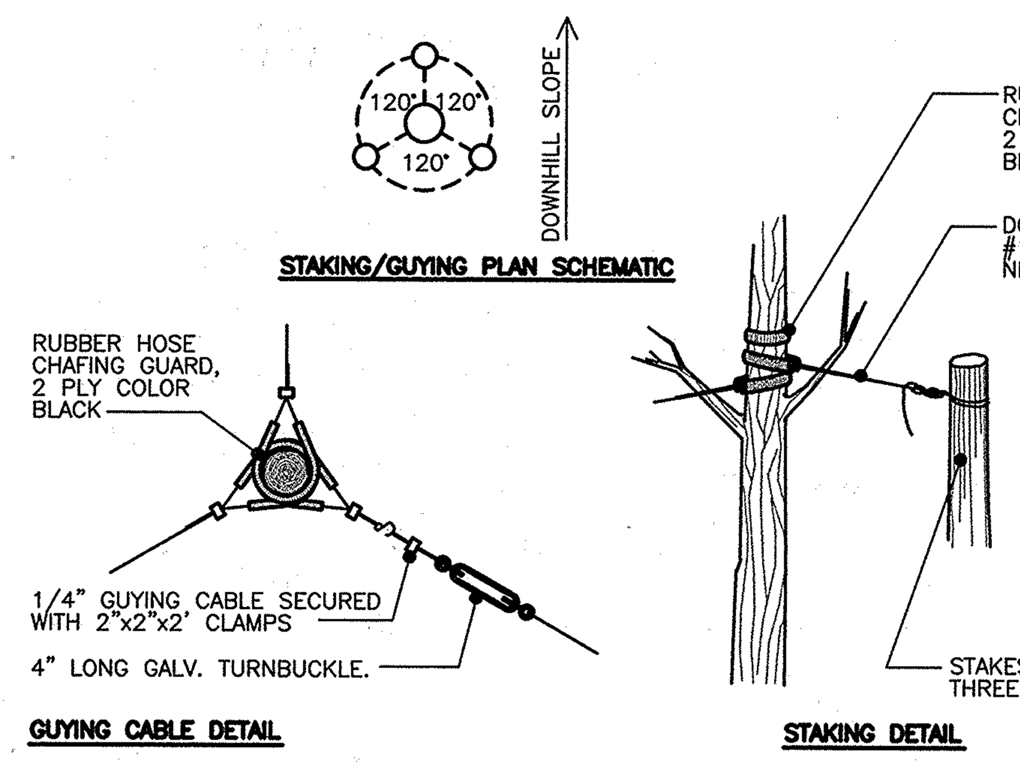

TREE STAKING AND GUYING
NOT TO SCALE

GENERAL NOTES:

STAKE ALL EVERGREEN TREES UNDER 12'.

PRUNE ONLY TO REMOVE DAMAGED OR BROKEN BRANCHES. DO NOT CUT LEADERS, IF PRUNING FOR SHAPE.

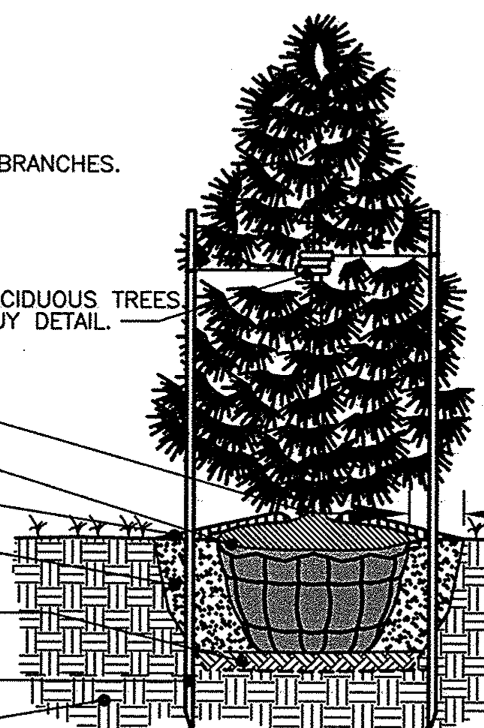

EVERGREEN TREE PLANTING DETAIL
NOT TO SCALE

GENERAL NOTES:

STAKE ALL DECIDUOUS TREES UNDER 3" CAL. SET STAKES VERTICAL AND AT SAME HEIGHT.

GUY TREES 3" CAL. AND OVER.

PRUNE TO THIN AND SHAPE TREE CANOPY. DO NOT CUT LEADER.

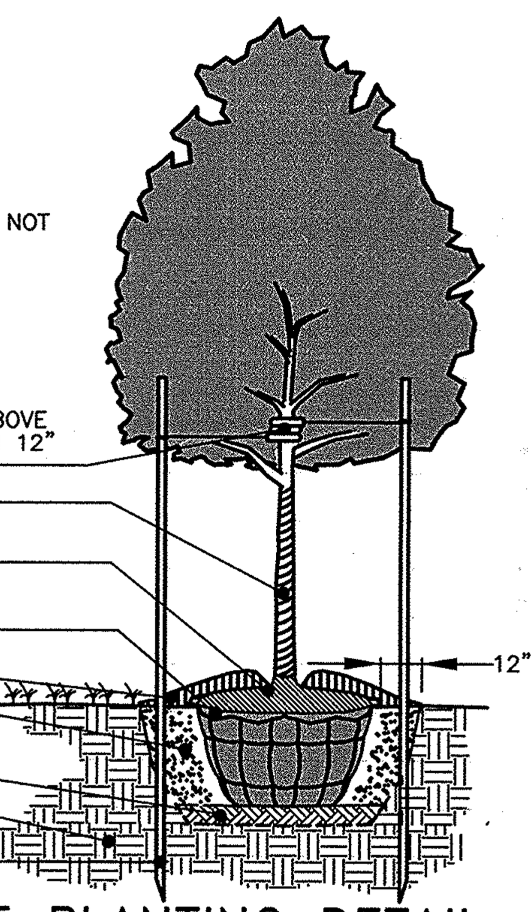

DECIDUOUS TREE PLANTING DETAIL
NOT TO SCALE (UNDER 3" CAL.)

GENERAL NOTES:

DO NOT PRUNE EVERGREENS, EXCEPT TO REMOVE DEAD AND BROKEN BRANCHES.

THIN BRANCHES AND FOLIAGE BY 1/3 RETAINING NORMAL PLANT SHAPE. (DO NOT REMOVE ALL BRANCH TIPS. DO NOT THIN EVERGREENS).

REMOVE BURLAP FROM TOP 1/3 OF BALL OR WITH CONTAINER PLANTS REMOVE POTS AND SPLIT AS SPECIFIED.

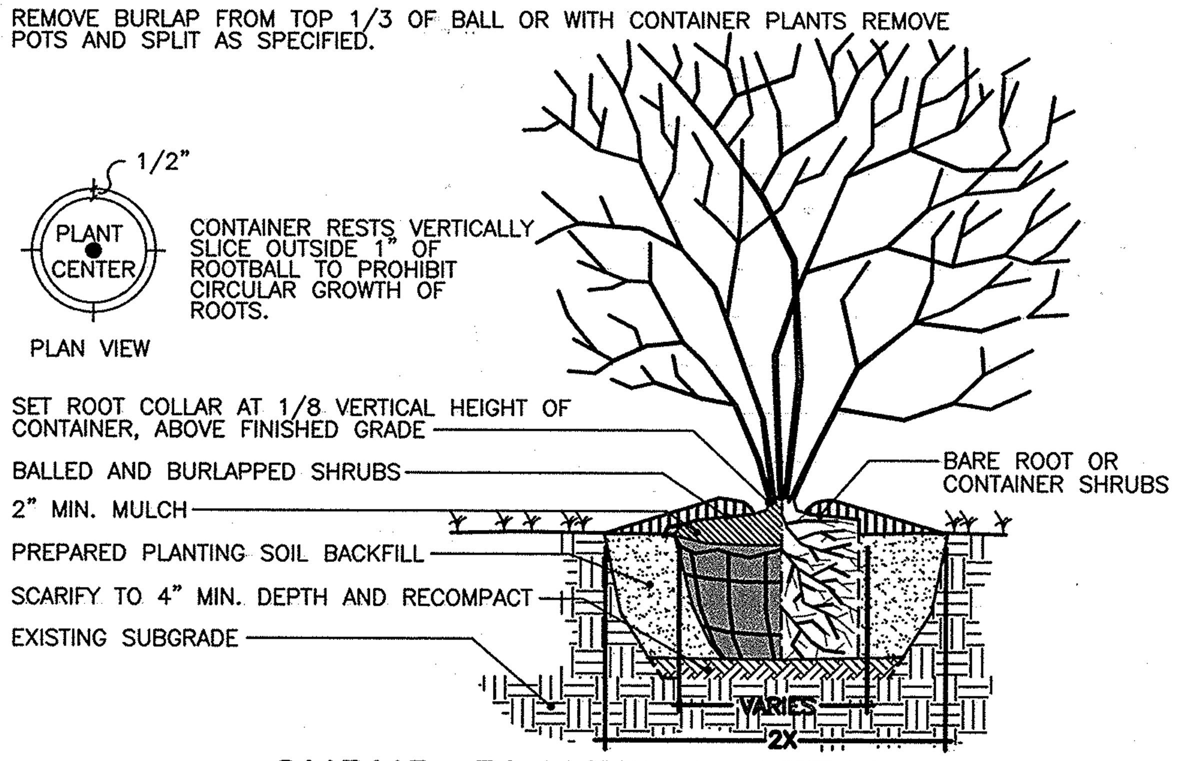

SHRUB PLANTING DETAIL
NOT TO SCALE

PLANT LEGEND:

	QUANTITY	BOTANICAL NAME	COMMON NAME	SIZE	PLANTING METHOD	REMARKS
TREES:						
	3	ACER RUBRUM	RED MAPLE	2 - 2 1/2" CAL. (12' - 14' HEIGHT)	B & B	WITHIN POND AREA
	468	CORNUS RACEMOSA	GRAY STEM DOGWOOD	8" - 16" HEIGHT	BAREROOT SEEDLING	* PLANT SPACING 10' O.C. ROW SPACING 8.7' (STAGGER).
	240	PINUS ECHINATA	SHORTLEAF PINE	8" - 12" HEIGHT	BAREROOT SEEDLING	* WITHIN BERM AREA PLANT SPACING 7.0' O.C. PLANT 10 SEEDLINGS PER SYMBOL SHOWN.
	3	PINUS STROBUS	WHITE PINE	6' - 8' HEIGHT	B & B	WITHIN POND AREA
	1 1	QUERCUS RUBRA	NORTHERN RED OAK	2" - 2 1/2" CAL. (12' - 14' HEIGHT)	B & B	—
SHRUBS:						
	3726	MYRICA PENSYLVANICA	NORTHERN BAYBERRY	12" - 18" HEIGHT (1 GALLON)	CONTAINER	* PLANT SPACING 5' O.C. ROW SPACING 4.4' (STAGGER).
	1144 ea ~~144~~	POTENTILLA FRUTICOSA 'GOLD STAR'	BUSH CINQUEFOIL	1 QUART	CONTAINER	* PLANT SPACING 4' O.C. ROW SPACING 3.5' (STAGGER).
	8280	VACCINIUM AUGUSTIFOLIUM	LOW BUSH BLUEBERRY	6"-12" ~~12" - 18"~~ HEIGHT (1 GALLON)	CONTAINER	* PLANT SPACING 5' O.C. ROW SPACING 4.4' (STAGGER).

	COMMON NAME	COVERAGE (SQUARE FEET)	REMARKS
SEEDING MIXTURES:			
	CLOVER MIX	543,800	SEE SPECS FOR SEED MIXTURE
	RECLAIM CONSERVATION MIX (DRY)	1,031,200	SEE SPECS FOR SEED MIXTURE
	TRIPLEX GENERAL SEED MIX	1,360,300	SEE SPECS FOR SEED MIXTURE
	WILDFLOWER MIX	307,300	SEE SPECS FOR SEED MIXTURE

* *CONTRACTOR RESPONSIBLE FOR ACTUAL QUANTITIES NECESSARY TO ACHIEVE PLANT SPACING REQUIREMENTS DESIGNATED WITHIN THE "REMARKS" COLUMN OF THE PLANT LEGEND.*

SUBDIVISION NAME	LOT/PARCEL	ZONE	TAX/ZONE MAP	CENSUS TR.
ALPHA RIDGE SOLID WASTE MANAGEMENT CENTER	54,253,220,11	PEC	10 & 16	60-30

LIBER/FOLIO	WATER CODE	SEWER CODE
10-847/606 16-878/215 10-691/314	PRIVATE, EXISTING	PRIVATE, EXISTING

DEPARTMENT OF PLANNING AND ZONING
HOWARD COUNTY, MARYLAND

DIRECTOR — 11/3/97 DATE
CHIEF, DEVELOPMENT ENGINEERING DIVISION — 10/31/97 DATE
CHIEF, DIVISION OF LAND DEVELOPMENT — 11/3/97 DATE

DEPARTMENT OF PUBLIC WORKS
HOWARD COUNTY, MARYLAND

DIRECTOR OF PUBLIC WORKS — 10/30/97 DATE
CHIEF, BUREAU OF WASTE MANAGEMENT — 10/30/97 DATE

SCS ENGINEERS
CONSULTING ENGINEERS
11260 ROGER BACON DRIVE
SUITE 300
RESTON, VIRGINIA 22090
PH. (703) 471-6150
FAX. (703) 471-6676

STATE OF MARYLAND — J. GATTUSO — REGISTERED LANDSCAPE ARCHITECT — NO. 99

STATE OF MARYLAND — PAUL ANTHONY MANDEVILLE — LIC REG CERT NO 14968 — PROFESSIONAL ENGINEER
Paul Anthony Mandeville, PE

DES.	MB
DRN.	KS
CHK.	PAM
DATE:	10-30-97

BY	NO.	REVISION	DATE
	6		
	5		
	4		
	3		
	2		
	1		

VEGETATIVE COVER DETAILS

ALPHA RIDGE LANDFILL
UNLINED CELL CLOSURE
CAPITAL PROJECT NO. C-0190-N

3rd ELECTION DISTRICT — HOWARD COUNTY, MARYLAND

SCALE: AS NOTED

SHEET 43 OF 135

SDP-97-128

M:\295077.01\FINAL\PSA TREEDET, SEEDRATE, SEEDMIX

VEGDET

NOTES:

1. LFG PROBES INSTALLED APRIL, 1996.
2. LFG MONITORING WELLS INSTALLED IN MAY, 1996.

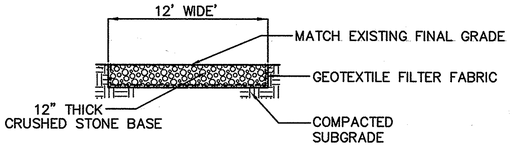

TYPICAL SECTION
LANDFILL ACCESS ROAD
SCALE: 3/16"-1'-0"

LEGEND

- MP-3 LFG PROBES(TO BE REMOVED-SEE SHEET G2)
- EW-62 LFG EXTRACTION WELL(EXISTING)
- EW-19 (DS) LFG EXTRACTION WELL(EXISTING) (DS = DOWNSLOPE)
- LFG HEADER/LATERAL
- CONDENSATE TRAP DETAIL
- B = BERM
- PG = PIPE GUTTER
- B1 DRAINAGE STRUCTURE DESIGNATION
- NEW HDPE PIPE/DOWNCHUTES/ CONCRETE DRAINAGE PIPES

SEE ETA SHEET G2-AB FOR LANDFILL GAS WELLS AND PIPING LAYOUT

SEE ETA SHEET 10-AB FOR AS-BUILT FINAL SURFACE GRADING PLAN

N

60 0 60 120
SCALE IN FEET

FOR CONTINUATION OF N.E. LANDFILL ACCESS ROAD SEE SHEET 34

34+69.78 N.E. ACCESS ROAD =0+00 ROAD "A"

SUBDIVISION NAME	LOT/PARCEL	
ALPHA RIDGE SOLID WASTE MANAGEMENT CENTER	54,253,220,11	
LIBER/FOLIO	ZONE	TAX/ZONE MAP
10-847/606 10-878/215 10-691/314	PEC	10 & 16
WATER CODE	SEWER CODE	CENSUS TR.
PRIVATE, EXISTING	PRIVATE, EXISTING	60-30

DEPARTMENT OF PLANNING AND ZONING
HOWARD COUNTY, MARYLAND

DIRECTOR — DATE 11/3/97
CHIEF, DEVELOPMENT ENGINEERING DIVISION — DATE 11/3/97
CHIEF, DIVISION OF LAND DEVELOPMENT — DATE 11/3/97

DEPARTMENT OF PUBLIC WORKS
HOWARD COUNTY, MARYLAND

DIRECTOR OF PUBLIC WORKS — DATE 10/30/97
CHIEF, BUREAU OF WASTE MANAGEMENT — DATE 10/30/97

SCS ENGINEERS
CONSULTING ENGINEERS
11260 ROGER BACON DRIVE
SUITE 300
RESTON, VIRGINIA 22090
PH. (703) 471-6150
FAX. (703) 471-6676

STATE OF MARYLAND — PAUL ANTHONY MANDEVILLE — No. 26 CAX — PROFESSIONAL ENGINEER
Paul Anthony Mandeville, PE

DES.	RTT,EGC
DRN.	EGC,MEH
CHK.	PAM
DATE: 10-30-97	

BY	NO.	REVISION	DATE
	6		
	5		
	4		
	3		
	2		
	1		

LANDFILL MAINTENANCE ACCESS ROAD PLAN

ALPHA RIDGE LANDFILL
UNLINED CELL CLOSURE
CAPITAL PROJECT NO. C-0190-N
3rd ELECTION DISTRICT — HOWARD COUNTY, MARYLAND

SCALE: 1"=60'

SHEET 44 OF 131.

SDP-97-128

M:\295077.01\FINAL ROADWELLS CSROADS

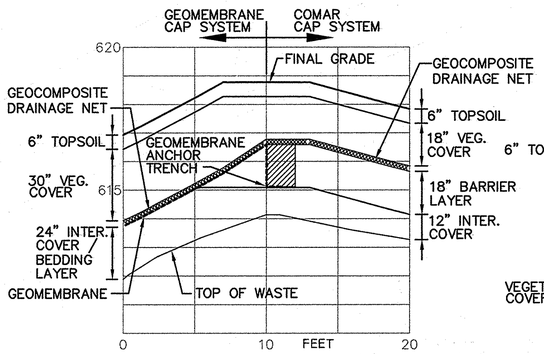

SECTION A 10/45

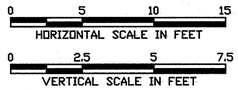

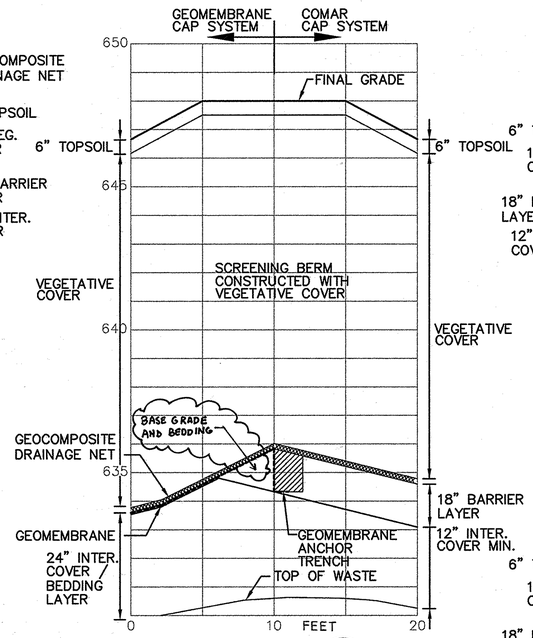

SECTION B 10/45

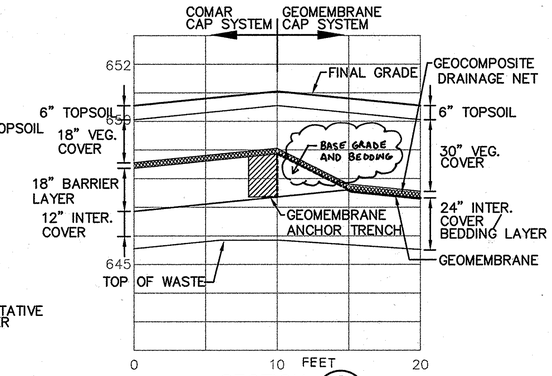

SECTION C 10/45

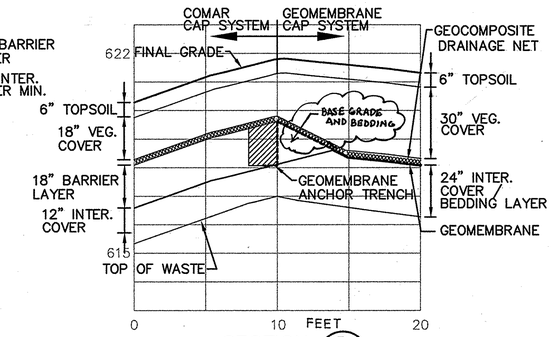

SECTION D 10/45

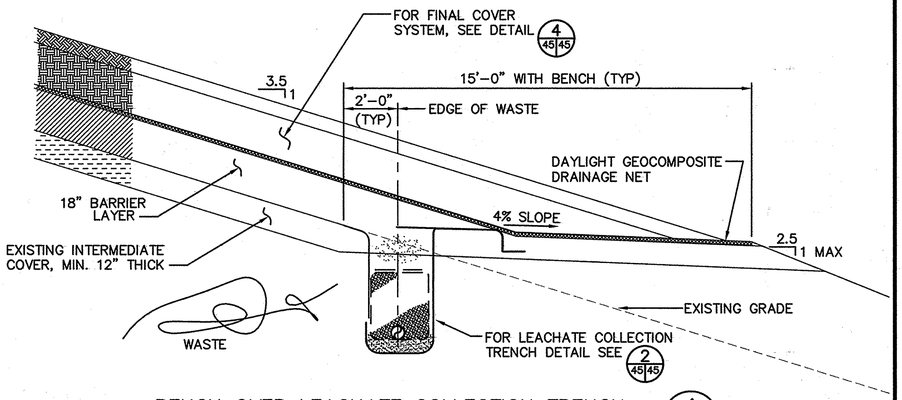

BENCH OVER LEACHATE COLLECTION TRENCH 1/45/45

SCALE: 3/8" = 1'-0"

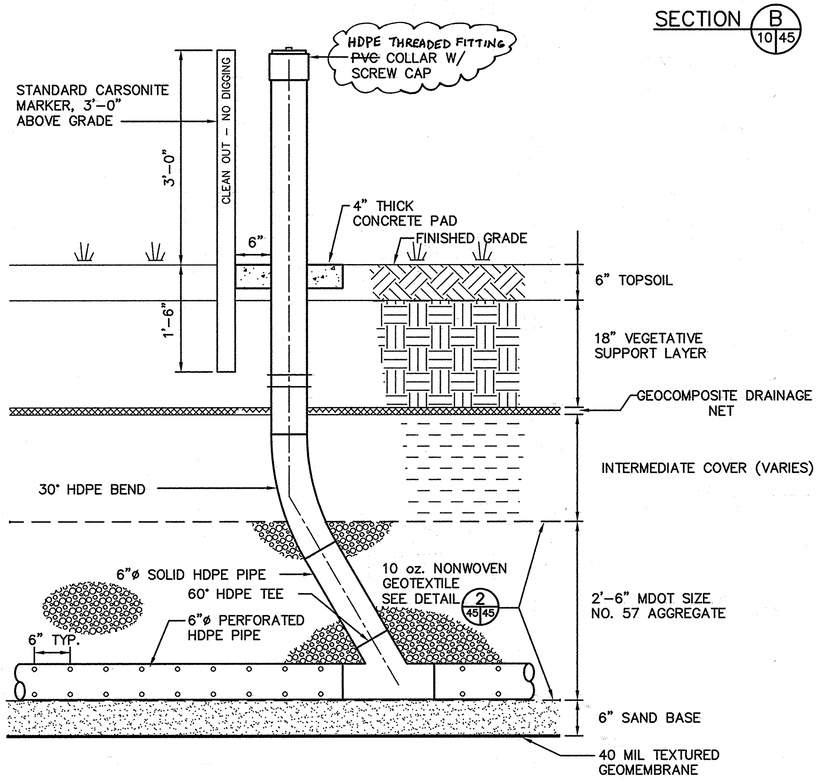

PERIMETER LEACHATE COLLECTION TRENCH CLEANOUT 5/45

SCALE: 1" = 1'-0"

5,6,7,8,9,13,16,49

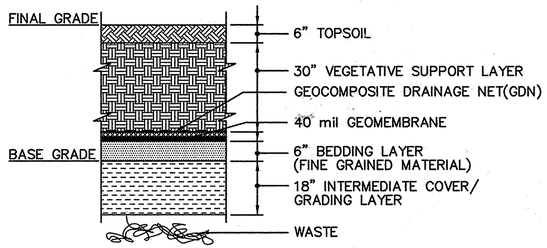

FINAL COVER SYSTEM – TOP (GEOMEMBRANE CAP SYSTEM) 3/45

SCALE: 1/2" = 1'-0"

10,11,12

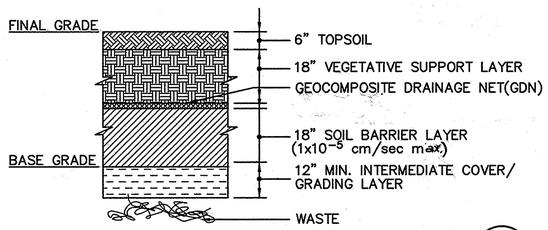

FINAL COVER SYSTEM – SIDE SLOPES (COMAR CAP SYSTEM) 4/45

SCALE: 1/2" = 1'-0"

10,11,12,18

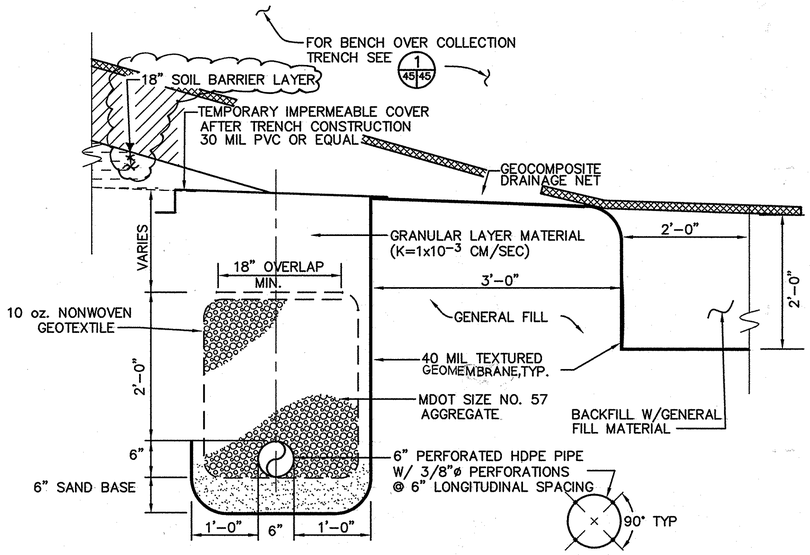

PERIMETER LEACHATE COLLECTION TRENCH 2/45

SCALE: 1" = 1'-0"

5,6,7,8,9,10,13,35,45,48,49

SEE SHEET 45A FOR DETAILS OF PERIMETER LEACHATE COLLECTION TRENCH IN SOIL AND OVER WASTE

SUBDIVISION NAME	LOT/PARCEL	
ALPHA RIDGE SOLID WASTE MANAGEMENT CENTER	54,253,220,11	
LIBER/FOLIO	ZONE	TAX/ZONE MAP
10-847/606 16-878/215 10-691/314	PEC	10 & 16
WATER CODE	SEWER CODE	CENSUS TR.
PRIVATE, EXISTING	PRIVATE, EXISTING	60-30

DEPARTMENT OF PLANNING AND ZONING
HOWARD COUNTY, MARYLAND

DIRECTOR — DATE 11/3/97

CHIEF, DEVELOPMENT ENGINEERING DIVISION — DATE 10/31/97

CHIEF, DIVISION OF LAND DEVELOPMENT — DATE 11/3/97

DEPARTMENT OF PUBLIC WORKS
HOWARD COUNTY, MARYLAND

DIRECTOR OF PUBLIC WORKS — DATE 10/30/97

CHIEF, BUREAU OF WASTE MANAGEMENT — DATE 10/30/97

SCS ENGINEERS
CONSULTING ENGINEERS
11260 ROGER BACON DRIVE
SUITE 300
RESTON, VIRGINIA 22090
PH. (703) 471-6150
FAX. (703) 471-6676

STATE OF MARYLAND — PAUL ANTHONY MANDEVILLE — No. 20 RDC CERT. — PROFESSIONAL ENGINEER
Paul Anthony Mandeville, PE

DES.	RTT
DRN.	EGC
CHK.	PAM
DATE: 10-30-97	

BY	NO.	REVISION	DATE
	6		
	5		
	4		
	3		
	2		
	1		

MISCELLANEOUS DETAILS

ALPHA RIDGE LANDFILL
UNLINED CELL CLOSURE
CAPITAL PROJECT NO. C-0190-N

3rd ELECTION DISTRICT — HOWARD COUNTY, MARYLAND

SCALE: AS NOTED

SHEET 45 OF 121

SDP-97-128

M:\295077.01\FINAL\DETAILS CAPSYS, LEACHBN, LEACHCO, LEACHTR, XS-COMAR

DET1

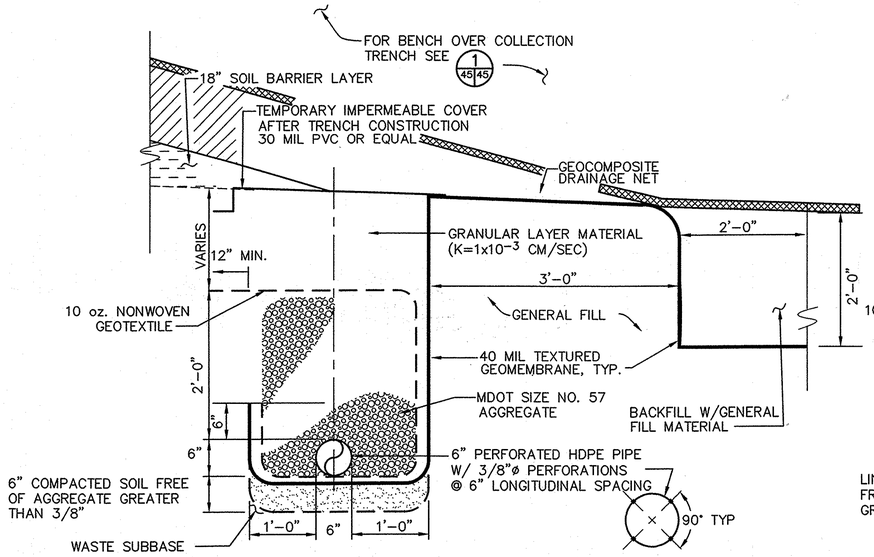

PERIMETER LEACHATE COLLECTION TRENCH OVER WASTE 2A 45

SCALE: 1" = 1'-0"

5,6,7,8,9,10,13,35,45,48,49

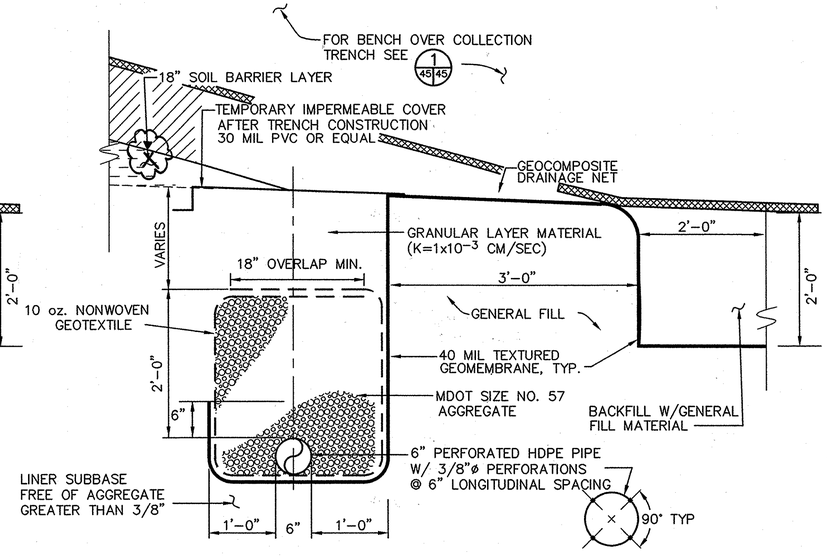

PERIMETER LEACHATE COLLECTION TRENCH IN SOIL 2B 45

SCALE: 1" = 1'-0"

5,6,7,8,9,10,13,35,45,48,49

M:\295077.01\

SHT-45A

DEPARTMENT OF PUBLIC WORKS
HOWARD COUNTY, MARYLAND

DIRECTOR OF PUBLIC WORKS DATE CHIEF, BUREAU OF WASTE MANAGEMENT DATE

SCS ENGINEERS
CONSULTING ENGINEERS
11260 ROGER BACON DRIVE
SUITE 300
RESTON, VIRGINIA 20190
PH. (703) 471-6150
FAX. (703) 471-6676

STATE OF MARYLAND PAUL ANTHONY MANDEVILLE LIC REG CERT NO 14968 PROFESSIONAL ENGINEER

STATE OF MARYLAND H.T. JAMES LAW LIC REG CERT NO 19888 PROFESSIONAL ENGINEER

DES. HJL		6		
DRN. SPS		5		
CHK. PAM		4		
DATE: 03-30-99		3		
		2		
		1		
	BY	NO.	REVISION	DATE

MISCELLANEOUS DETAILS

ALPHA RIDGE LANDFILL
CELL CLOSURE
CAPITAL PROJECT NO. C-0190

1st ELECTION DISTRICT HOWARD COUNTY, MARYLAND

SCALE: AS NOTED

SHEET 45A OF 131

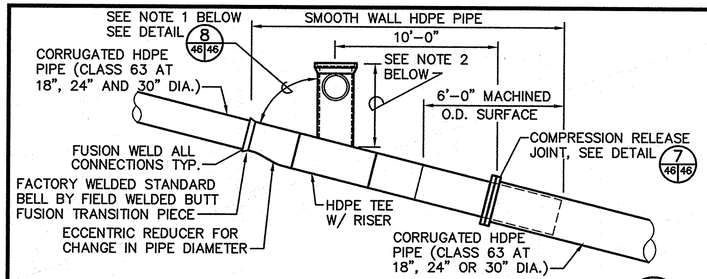

HDPE PIPE COMPRESSION RELEASE SYSTEM DETAIL (6 / 46)

NO SCALE — 5,8,9,10,48,49

NOTES:

1. THE ANGLE BETWEEN PIPE LINE AND RISER IS TO BE VERIFIED BY THE PIPE MANUFACTURER AND CONTRACTOR AND SHOWN ON SHOP DRAWINGS PRIOR TO FABRICATION OF EACH RISER.
2. THE HEIGHT OF RISER AND ALL DIMENSIONS ARE TO BE VERIFIED BY THE PIPE MANUFACTURER AND CONTRACTOR AND SHOWN ON SHOP DRAWINGS PRIOR TO FABRICATION OF EACH RISER.

SMOOTH WALL SIZE: FEEDSTOCK	SMOOTH WALL SDR-IPS PIPE	SMOOTH WALL OD-MACHIN.	CORRUGATED HDPE ID-NOM. CLASS 63	FLANGE "id"	FLANGE BC.
18"	11	17 1/2"	18"	18 1/4"	22 3/4"
24"	17	23 1/2"	24"	24 1/4"	29 1/2"
30"	17	29 1/2"	30"	30 1/4"	36"

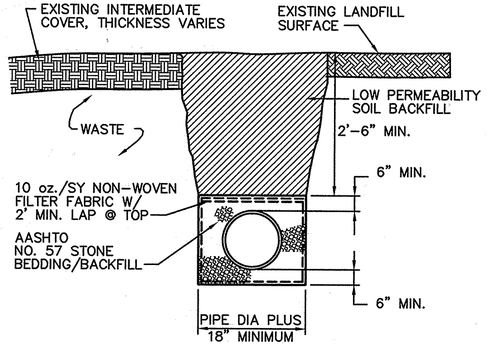

HDPE PIPE BEDDING AND TRENCH DETAIL (5 / 46|46)

NTS

NOTES:

1. EXISTING LANDFILL COVER MATERIALS SHALL BE STOCKPILED SEPERATELY AS TO TYPE AND NOT MIXED DURING EXCAVATION OR BACKFILL OPERATIONS.
2. EXCAVATED REFUSE SHALL BE DISPOSED OF AS ON-SITE FILL OR AT ACTIVE LANDFILL.
3. DETAIL DOES NOT APPLY TO DOWNCHUTE "D"

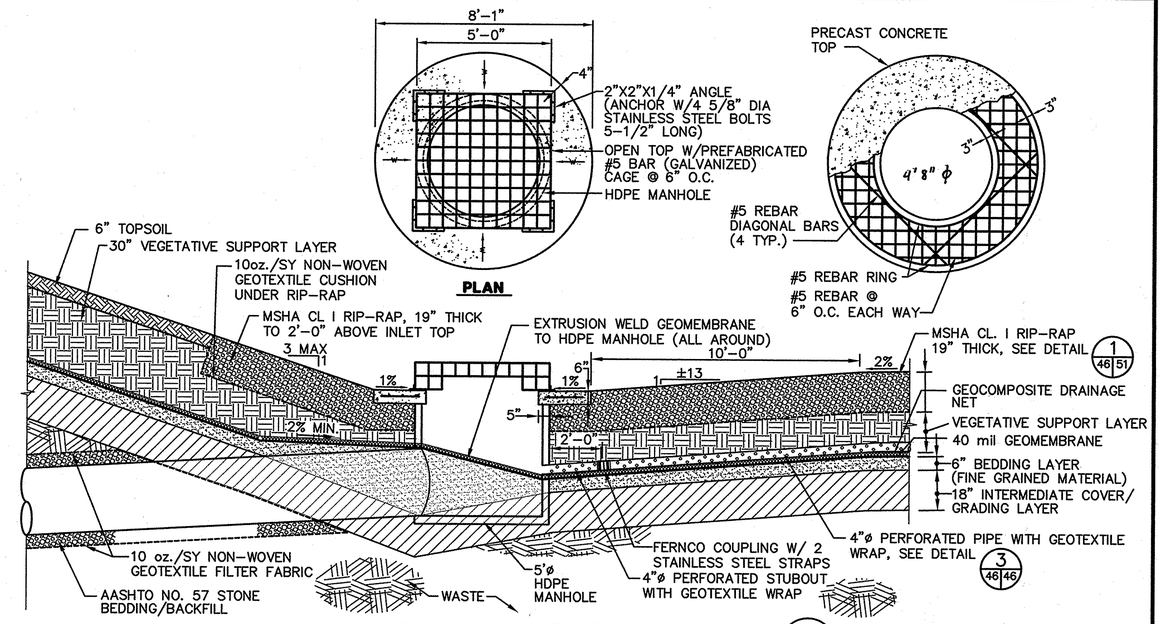

HDPE MANHOLE WITH BAR SCREEN TOP (1 / 46)

SCALE: 3/8"=1'-0" — 10,37&48

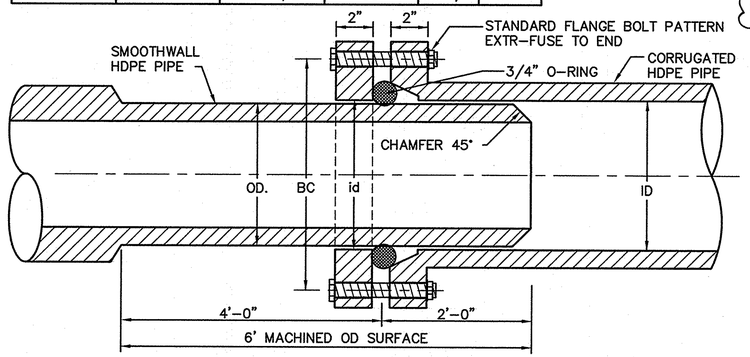

BOLTS: ASTM A 193/A193M, GRADE B8, STAINLESS STEEL
NUTS: ASTM A 194/194M, GRADE 8, STAINLESS STEEL
WASHERS: ASTM F 436, FLAT CIRCULAR STAINLESS STEEL LOCK WASHERS

COMPRESSION RELEASE JOINT DETAIL (7 / 46)

NO SCALE — 37,38,46

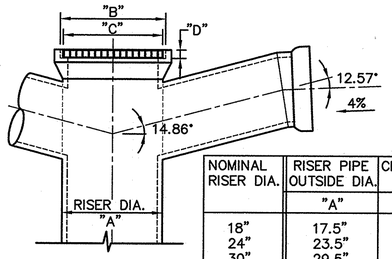

NOMINAL RISER DIA.	RISER PIPE OUTSIDE DIA.	CLOSURE BELL INSIDE DIA.	NEENAH R-4040 DIA.	THICKNESS
	"A"	"B"	"C"	"D"
18"	17.5"	22.5"	22.0"	2.75"
24"	23.5"	26.0"	25.5"	3.0"
30"	29.5"	33.25"	32.75"	3.5"

RISER TOP DETAIL (4 / 46)

NO SCALE — 5,46,49

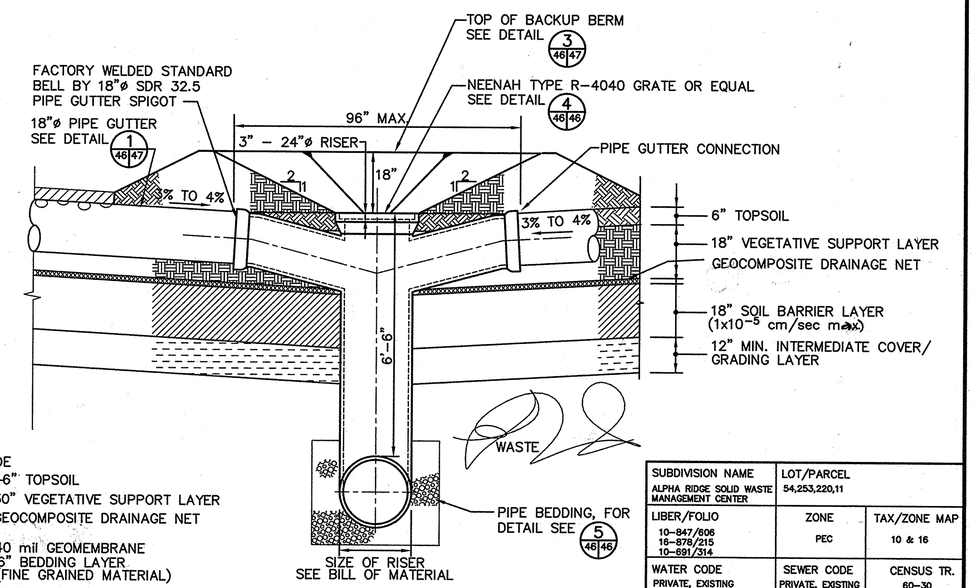

RISER SECTION DETAIL (2 / 46)

SCALE: 1/2"-1'-0" — 5,8,9,10,21,32,33,37,38,48

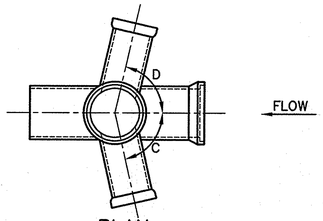

PLAN

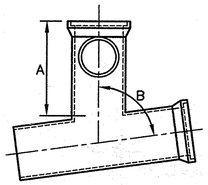

RISER	SIZE	A	B	C	D
A2	30"ø	6'-6"	82°00'	82°69'	84°14'
A3	30"ø	6'-6"	75°31'	78°26'	83°44'
A4	30"ø	6'-6"	84°00'	77°08'	72°31'
C2	24"ø	6'-6"	79°00'	70°46'	83°33'
C3	24"ø	6'-6"	79°00'	49°06'	84°00'
C4	18"ø	6'-6"	73°00'	38°69'	93°00'
D2	18"ø	3'-0"	74°00'	N/A	85°82'

RISER FABRICATION DETAIL (8 / 46|46)

NO SCALE

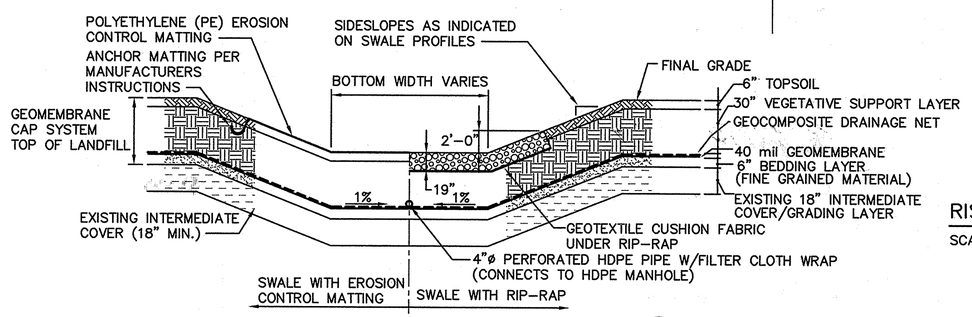

TYPICAL SURFACE DRAINAGE SWALE DETAIL (3 / 46)

NO SCALE — 5,6,7,8,9,10,12,37,38,46&49

SUBDIVISION NAME	LOT/PARCEL	
ALPHA RIDGE SOLID WASTE MANAGEMENT CENTER	54,253,220,11	
LIBER/FOLIO	ZONE	TAX/ZONE MAP
10-847/606 16-878/215 10-891/314	PEC	10 & 16
WATER CODE	SEWER CODE	CENSUS TR.
PRIVATE, EXISTING	PRIVATE, EXISTING	60-30

DEPARTMENT OF PLANNING AND ZONING
HOWARD COUNTY, MARYLAND

DIRECTOR — DATE 11/3/97
CHIEF, DEVELOPMENT ENGINEERING DIVISION — DATE 10/31/97
CHIEF, DIVISION OF LAND DEVELOPMENT — DATE 11/3/97

SCALE 3/8"=1'-0"
SCALE 1/2"=1'-0"

DEPARTMENT OF PUBLIC WORKS
HOWARD COUNTY, MARYLAND

DIRECTOR OF PUBLIC WORKS — DATE 10/30/97
CHIEF, BUREAU OF WASTE MANAGEMENT — DATE 10/30/97

SCS ENGINEERS
CONSULTING ENGINEERS
11260 ROGER BACON DRIVE
SUITE 300
RESTON, VIRGINIA 22090
PH. (703) 471-6150
FAX. (703) 471-6676

STATE OF MARYLAND — PAUL ANTHONY MANDEVILLE — No. 14848 — PROFESSIONAL ENGINEER
Paul Anthony Mandeville, PE

DES. RTT
DRN. EGC
CHK. PAM
DATE: 10-30-97

BY	NO.	REVISION	DATE
	6		
	5		
	4		
	3		
	2		
	1		

MISCELLANEOUS DETAILS

ALPHA RIDGE LANDFILL
UNLINED CELL CLOSURE
CAPITAL PROJECT NO. C-0190-N

3rd ELECTION DISTRICT — HOWARD COUNTY, MARYLAND

SCALE: AS NOTED

SHEET 46 OF 131

SDP-97-128

M:\295077.01\FINAL\DETAILS COMPSYS, SWALE, INLET, CMPSYS, GRATE, TRENCH, RISER, RISERDET

DET2

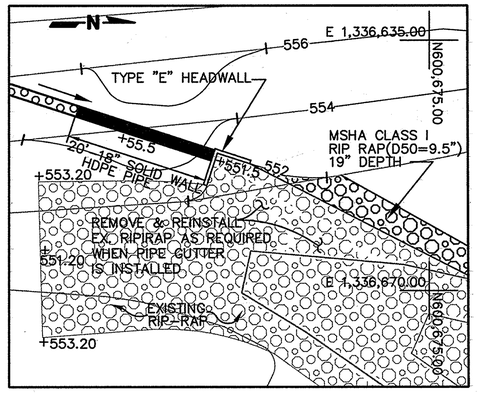

PIPEGUTTER OUTFALL INTO EAST BASIN DETAIL (4 / 47)
SCALE: 1"=10'
10,34,48

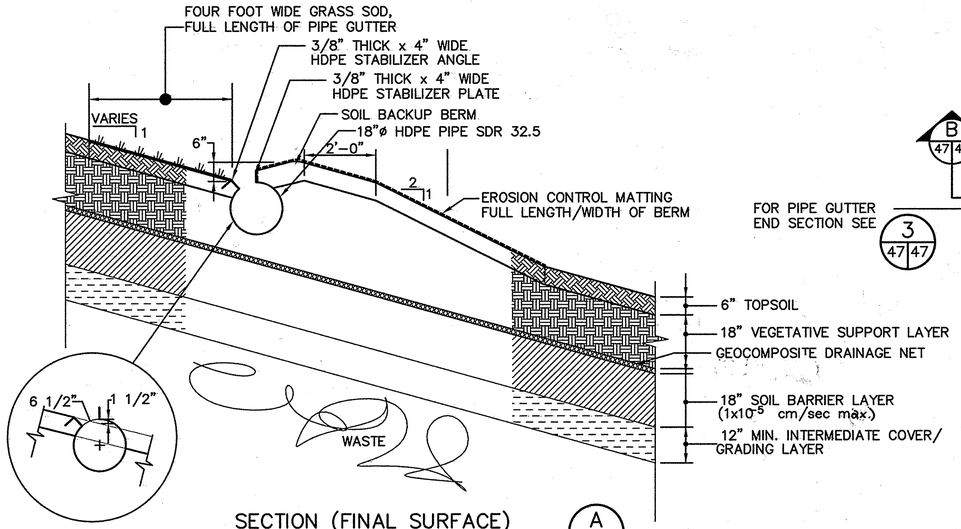

SECTION (FINAL SURFACE) (A / 47|47)
SCALE: 1/2"=1'-0"

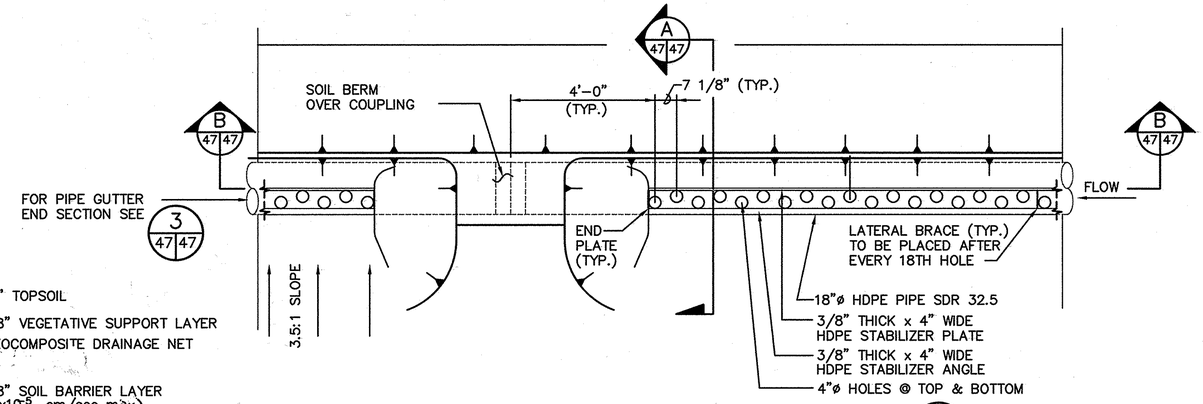

HDPE SIDESLOPE PIPE GUTTER DRAINAGE SYSTEM (1 / 47)
SCALE: 1/2"=1'-0"
10,39,46,48

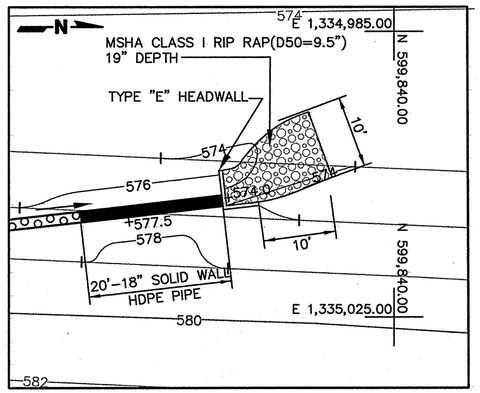

PIPEGUTTER OUTFALL INTO WEST CHANNEL DETAIL (5 / 47)
SCALE: 1"=10'
10,48

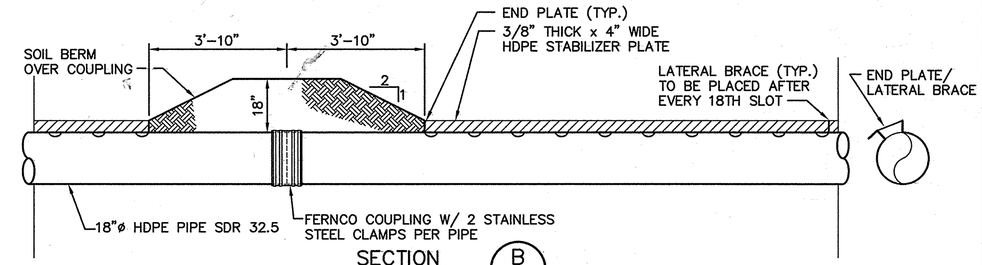

SECTION (B / 47|47)
SCALE: 1/2"=1'-0"

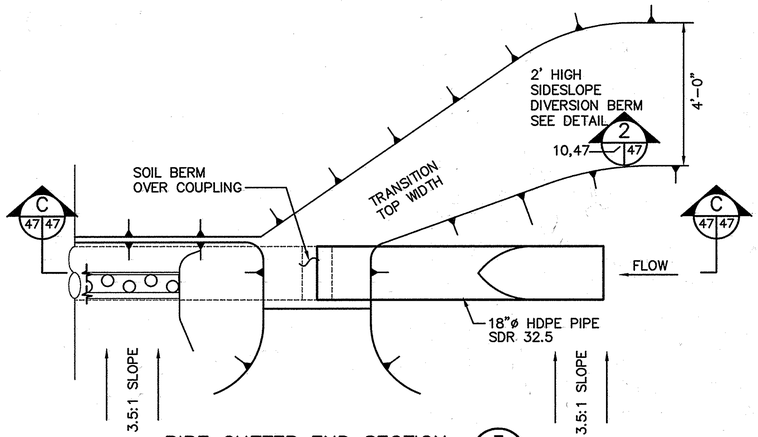

PIPE GUTTER END SECTION (3 / 47|47)
SCALE: 1/2"=1'-0"

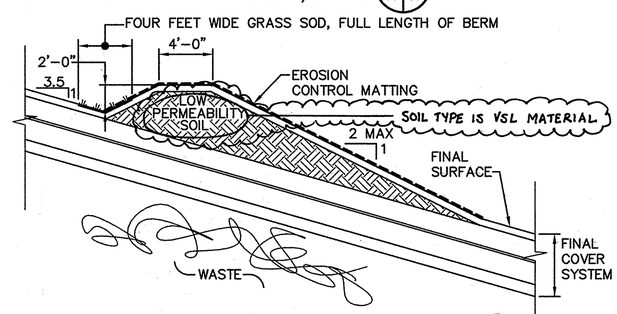

SIDESLOPE DIVERSION BERM DETAIL (2 / 47)
SCALE: 3/16"=1'-0"
10,47,48

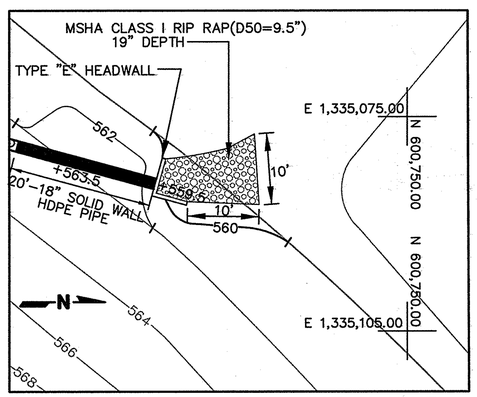

PIPEGUTTER OUTFALL INTO WEST CHANNEL DETAIL (6 / 47)
SCALE: 1"=10'
10,48

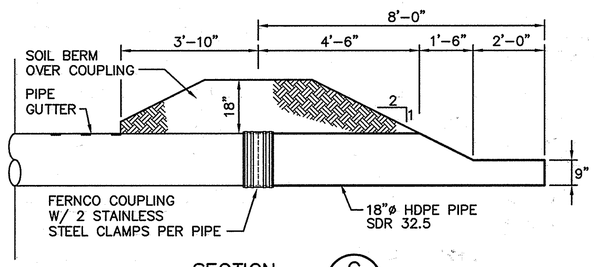

SECTION (C / 47|47)
SCALE: 1/2"=1'-0"

HDPE PLATE @ END

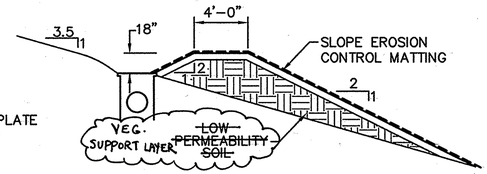

SIDESLOPE DIVERSION BERM AT HDPE RISER DETAIL (3 / 47)
SCALE: 3/16"=1'-0"
10,46

SUBDIVISION NAME	LOT/PARCEL	
ALPHA RIDGE SOLID WASTE MANAGEMENT CENTER	54,253,220,11	
LIBER/FOLIO	ZONE	TAX/ZONE MAP
10-847/606 16-878/215 10-691/314	PEC	10 & 16
WATER CODE	SEWER CODE	CENSUS TR.
PRIVATE, EXISTING	PRIVATE, EXISTING	60-30

DEPARTMENT OF PLANNING AND ZONING
HOWARD COUNTY, MARYLAND

DIRECTOR — DATE 11/3/97
CHIEF, DEVELOPMENT ENGINEERING DIVISION — DATE 10/30/97
CHIEF, DIVISION OF LAND DEVELOPMENT — DATE 11/6/97

DEPARTMENT OF PUBLIC WORKS
HOWARD COUNTY, MARYLAND

DIRECTOR OF PUBLIC WORKS — DATE 10/30/97
CHIEF, BUREAU OF WASTE MANAGEMENT — DATE 10/30/97

SCS ENGINEERS
CONSULTING ENGINEERS
11260 ROGER BACON DRIVE
SUITE 300
RESTON, VIRGINIA 22090
PH. (703) 471-6150
FAX. (703) 471-6676

STATE OF MARYLAND — PAUL ANTHONY MANDEVILLE — No. 16 REG. CO. — PROFESSIONAL ENGINEER
Paul Anthony Mandeville, PE

DES.	RTT
DRN.	EGC
CHK.	PAM
DATE: 10-30-97	

BY	NO.	REVISION	DATE
	6		
	5		
	4		
	3		
	2		
	1		

MISCELLANEOUS DETAILS

ALPHA RIDGE LANDFILL
UNLINED CELL CLOSURE
CAPITAL PROJECT NO. C-0190-N
3rd ELECTION DISTRICT — HOWARD COUNTY, MARYLAND

SCALE: AS NOTED
SHEET 47 OF 131

M:\295077.01\FINAL\DETAILS PGUTTER, PG-ES, DIVBERM,PGUTDET1,PGUTDET2,PGUTDET3
DET3

SDP-97-128

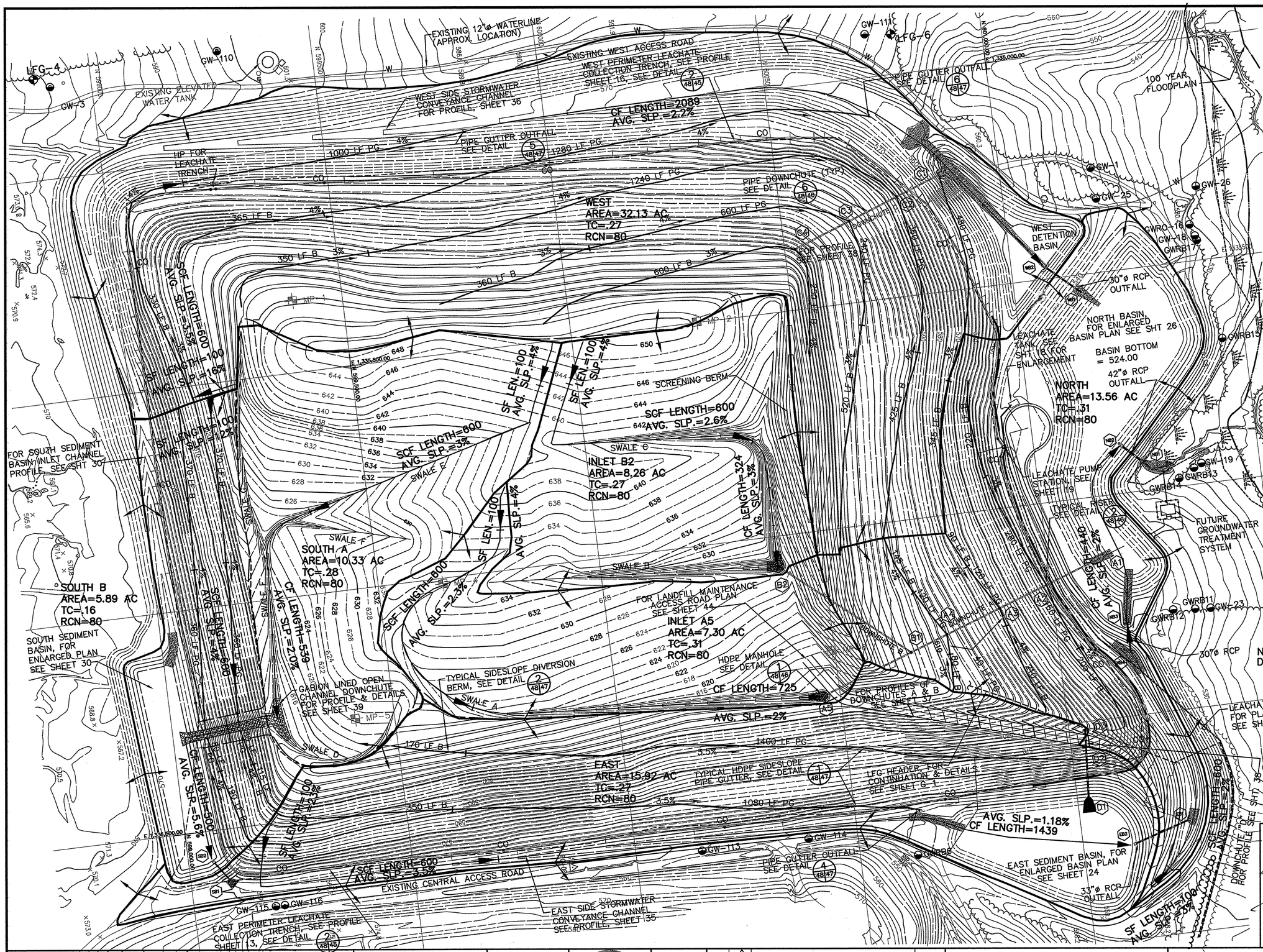

TOTAL DRAINAGE AREA=93.39 AC.
10% IMPERVIOUS AREA

NOTES:

1. TOPOGRAPHIC INFORMATION SHOWN ON THIS SHEET WAS COMPILED BY AIR SURVEY CORPORATION, INC. FROM AIR PHOTOGRAPHY DATED JANUARY, 1997.
2. ALL SOIL CONSIDERED TYPE D IN THE POSTDEVELOPED CONDITION.
3. LFG MONITORING WELLS INSTALLED IN MAY, 1996.
4. 100 YEAR FLOODPLAIN INFORMATION PROVIDED BY HOWARD CO. INFORMATION IS BASED ON THE 1978 FLOOD PLAIN DELINEATION BY CENTURY ENGINEERING AND THE 1986 UPDATE BY BERNARD JOHNSON, INC. HOWARD CO. MAPS: GC-0119-T-36-38, GC-0119-T-35-38, GC-0119-T-234-38, GC-0119-T-35-39.

100 0 100 200
SCALE IN FEET

LEGEND

- MP-3 — LFG PROBES(TO BE REMOVED) SEE SHEET G-2
- GW-102 — GROUNDWATER WELLS(EXIST.)
- LFG-6 — LFG MONITORING WELLS(EXIST.)
- PROPERTY LINE
- CONFIRMED LIMITS OF WASTE
- 100 YR. FLOODPLAIN
- DRAINAGE FLOW
- SUB-DRAINAGE DIVIDE
- DRAINAGE DIVIDE
- CF = CHANNEL FLOW
- SCF = SHALLOW CONC. FLOW
- SF = SHALLOW FLOW
- B = BERM
- PG = PIPE GUTTER
- HP = HIGH POINT
- B1 — DRAINAGE STRUCTURE DESIGNATION
- NEW HDPE PIPE/DOWNCHUTES/ CONCRETE DRAINAGE PIPES
- NEW LEACHATE COLLECTION TRENCH
- NEW LEACHATE FORCEMAIN
- EXISTING TREE LINE
- EXISTING SCRUB BRUSH VEGETATION
- PROPOSED TREE LINE
- WETLAND LIMITS
- WETLANDS

NOTE: THIS SHEET TO BE USED FOR OVERALL DRAINGE DIVIDE PURPOSES ONLY.

SEE ETA SHEET 10AB FOR AS-BUILT FINAL SURFACE GRADING PLAN

SUBDIVISION NAME	LOT/PARCEL	
ALPHA RIDGE SOLID WASTE MANAGEMENT CENTER	54,253,220,11	
LIBER/FOLIO	ZONE	TAX/ZONE MAP
10-847/606 16-878/215 10-691/314	PEC	10 & 16
WATER CODE	SEWER CODE	CENSUS TR.
PRIVATE, EXISTING	PRIVATE, EXISTING	60-30

DEPARTMENT OF PLANNING AND ZONING
HOWARD COUNTY, MARYLAND

DIRECTOR — DATE 11/3/97
CHIEF, DEVELOPMENT ENGINEERING DIVISION — DATE 10/30/97
CHIEF, DIVISION OF LAND DEVELOPMENT — DATE 11/3/97

DEPARTMENT OF PUBLIC WORKS
HOWARD COUNTY, MARYLAND

DIRECTOR OF PUBLIC WORKS — DATE 10/30/97
CHIEF, BUREAU OF WASTE MANAGEMENT — DATE 10/30/97

SCS ENGINEERS
CONSULTING ENGINEERS
11260 ROGER BACON DRIVE
SUITE 300
RESTON, VIRGINIA 22090
PH. (703) 471-6150
FAX. (703) 471-6676

STATE OF MARYLAND — PAUL ANTHONY MANDEVILLE — No. 9809 — PROFESSIONAL ENGINEER
Paul Anthony Mandeville, PE

DES.	AST,RTT
DRN.	AST,EGC
CHK.	PAM
DATE: 10-30-97	

BY	NO.	REVISION	DATE
	6		
	5		
	4		
	3		
	2		
	1		

UNLINED CELL
DRAINAGE DIVIDES

ALPHA RIDGE LANDFILL
UNLINED CELL CLOSURE
CAPITAL PROJECT NO. C-0190-N

3rd ELECTION DISTRICT — HOWARD COUNTY, MARYLAND

SCALE: 1"=100'

SHEET 48 OF 136

FGP-DD-B FGP-DD M:\295077.01\FINAL

SDP-97-128

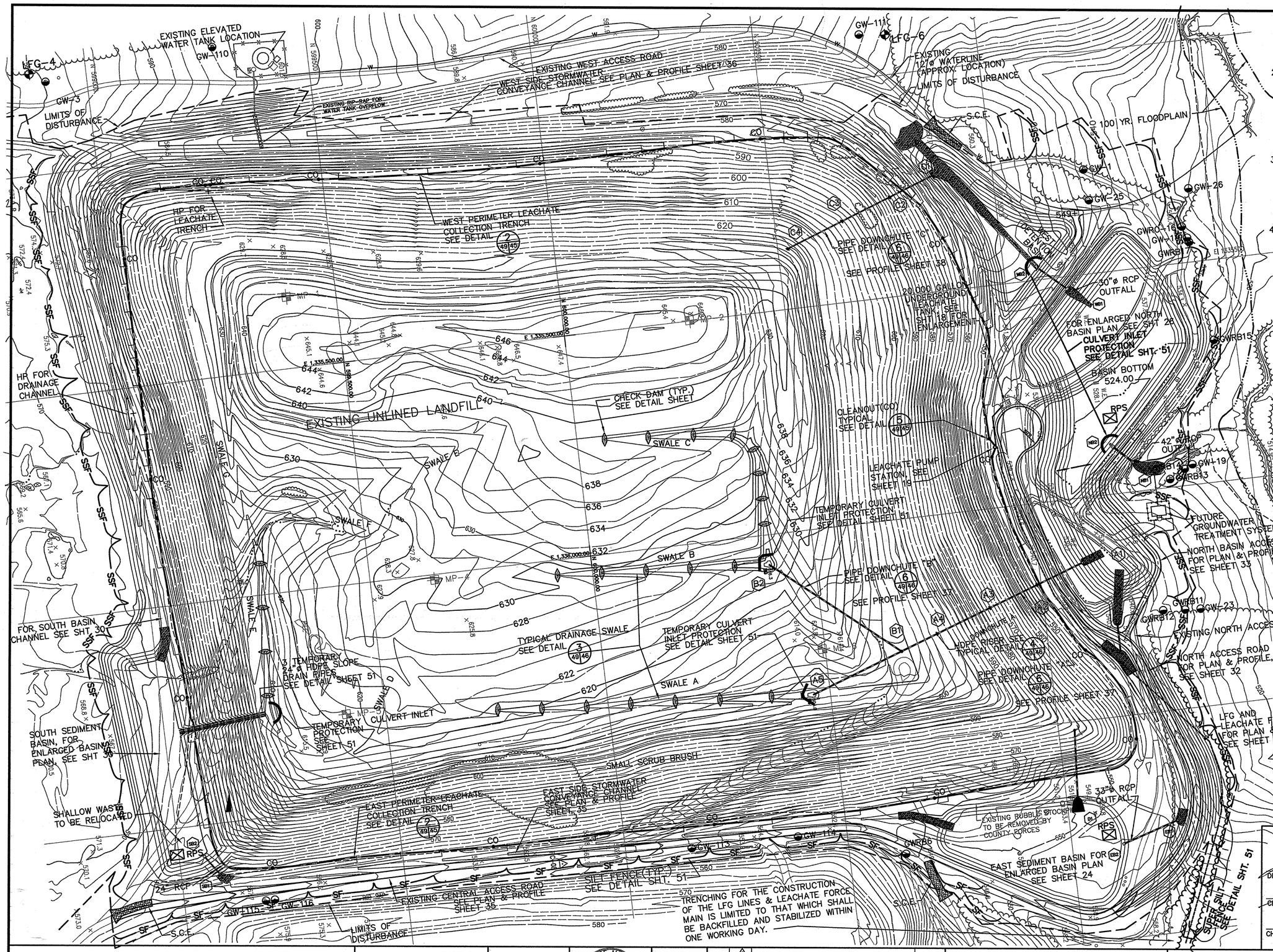

NOTES:

1. TOPOGRAPHIC INFORMATION SHOWN ON THIS SHEET WAS COMPILED BY AIR SURVEY CORPORATION, INC. FROM AIR PHOTOGRAPHY DATED JANUARY, 1997.
2. 100 YEAR FLOODPLAIN INFORMATION PROVIDED BY HOWARD CO. INFORMATION IS BASED ON THE 1978 FLOOD PLAIN DELINEATION BY CENTURY ENGINEERING AND THE 1986 UPDATE BY BERNARD JOHNSON, INC. HOWARD CO. MAPS: GC-0119-T-36-38, GC-0119-T-35-38, GC-0119-T-234-38, GC-0119-T-35-39.
3. ALL VEGETATIVE AND STRUCTURAL PRACTICES ARE TO BE INSTALLED ACCORDING TO THE PROVISIONS OF THIS PLAN AND ARE TO BE IN CONFORMANCE WITH THE MOST CURRENT "MARYLAND STANDARDS AND SPECIFICATIONS FOR EROSION AND SEDIMENT CONTROL".
4. FOR TEMPORARY CONDITIONS POND TABLES, SEE SHEET 76

LEGEND

GW-102	GROUNDWATER WELLS (EXISTING)
MP-3	LFG PROBES(TO BE REMOVED, SEE SHT. 12)
LFG-6	LFG MONITORING WELLS (EXISTING)
	PROPERTY LINE
	CONFIRMED LIMITS OF WASTE
	LIMITS OF DISTURBED AREA
SF	SILT FENCE
SSF	SUPER SILT FENCE
	STABILIZED CONSTRUCTOIN ENTRANCE (S.C.E.)
	SUB-DRAINAGE DIVIDE
	DRAINAGE DIVIDE
RPS	REMOVABLE PUMP STATION FOR DETAIL AND SPECIFICATIONS SEE 1994 MARYLAND STDS. & SPECS. FOR SOIL EROSION AND SEDIMENT CONTROL MANUAL, PAGES D-12-3 TO D-12-5

NOTE: THIS SHEET TO BE USED FOR EROSION & SEDIMENT CONTROL PURPOSES ONLY.

SEE ETA SHEET 10AB FOR AS-BUILT FINAL SURFACE GRADING PLAN

LIMITS OF WETLANDS

THE AREA OF DISTURBANCE FOR THIS SHEET IS 95.4 ACRES.

SUBDIVISION NAME	LOT/PARCEL	
ALPHA RIDGE SOLID WASTE MANAGEMENT CENTER	54,253,220,11	
LIBER/FOLIO	ZONE	TAX/ZONE MAP
10-847/606 16-878/215 10-891/314	PEC	10 & 16
WATER CODE	SEWER CODE	CENSUS TR.
PRIVATE, EXISTING	PRIVATE, EXISTING	60-30

DEPARTMENT OF PLANNING AND ZONING
HOWARD COUNTY, MARYLAND

DIRECTOR — DATE 11/3/97
CHIEF, DEVELOPMENT ENGINEERING DIVISION — DATE 10/30/97
CHIEF, DIVISION OF LAND DEVELOPMENT — DATE 11/3/97

DEPARTMENT OF PUBLIC WORKS
HOWARD COUNTY, MARYLAND

DIRECTOR OF PUBLIC WORKS — DATE 10/30/97
CHIEF, BUREAU OF WASTE MANAGEMENT — DATE 10/30/97

SCS ENGINEERS
CONSULTING ENGINEERS
11260 ROGER BACON DRIVE
SUITE 300
RESTON, VIRGINIA 22090
PH. (703) 471-6150
FAX. (703) 471-6676

STATE OF MARYLAND — PAUL ANTHONY MANDEVILLE — REG. NO. 15 — PROFESSIONAL ENGINEER
Paul Anthony Mandeville, PE

DES. RTT, EGC	6			
DRN. EGC, JCB	5			
	4			
CHK. PAM	3			
	2			
DATE: 10-30-97	1			
BY	NO.	REVISION	DATE	

UNLINED CELL EROSION & SEDIMENT CONTROL PLAN

ALPHA RIDGE LANDFILL
UNLINED CELL CLOSURE
CAPITAL PROJECT NO. C-0190-N

3rd ELECTION DISTRICT — HOWARD COUNTY, MARYLAND

SCALE: 1"=100'

SHEET 49 OF 138

SDP-97-128

M:\295077.01\FINAL ESEDCON

ESEDCON-B

SEQUENCE OF CONSTRUCTION

A. THE GRADING PERMIT FOR THE PROJECT HAS BEEN OBTAINED BY HOWARD COUNTY.

B. ACCESS THE LANDFILL BY THE EXISTING HAUL ROADS ON THE EAST SIDE AND SOUTH SIDE. ACCESS THE PERIMETER OF THE LANDFILL BY THE CENTRAL ACCESS ROAD AND THE PERIMETER ACCESS ROADS ON NORTH AND WEST SIDES. ACCESS THE BORROW AREA AND RECREATION AREA BY THE EXISTING LANDFILL HAUL ROAD ON THE SOUTH SIDE.

C. PHASE I (ESTIMATED CONSTRUCTION DURATION – 4 MONTHS) – NORTH SIDE STORM WATER MANAGEMENT, ACCESS, AND LEACHATE PUMP STATION, UNDERGROUND STORAGE TANK, AND FORCE MAIN IMPROVEMENTS.

1. INSTALL CONSTRUCTION ENTRANCES WHERE INDICATED.
2. INSTALL SILT FENCE ALONG THE PERIMETER OF THE NORTH SIDE. DE–WATER EXISTING CLEAR WATER BASIN (CW–5) USING THE EXISTING DE–WATER CONTROL VALVE. INSTALL CULVERT INLET PROTECTION AROUND THE EXISTING CMP OUTLET CONTROL STRUCTURE AS INDICATED. REMOVE EXISTING EMBANKMENT, CMP OUTLET CONTROL STRUCTURE, AND OUTFALL PIPE. CONSTRUCT NEW OUTLET CONTROL STRUCTURE, OUTFALL PIPE, AND RIP RAP OUTLET PROTECTION. RECONSTRUCT BASIN EMBANKMENT THROUGH BREACH. LEAVE THE NEW DE–WATERING CONTROL VALVE IN THE OPEN POSITION AND ALLOW BASIN TO DRAIN.
3. REMOVE EMBANKMENT BETWEEN EXISTING SB–5B AND CW–5 BASINS AND CONSTRUCT EMBANKMENT ON SOUTH SIDE OF THE NORTH BASIN, CREATING THE ROAD BED FOR THE NORTH PERIMETER ACCESS ROAD.
4. REMOVE EMBANKMENT BETWEEN SB–5A AND CW–5. CONSTRUCT THE REMAINING NORTH BASIN EMBANKMENT. CONSTRUCT NORTH BASIN ACCESS ROAD AND ROAD CULVERT N1–N2. EXCAVATE, FILL, AND GRADE INTERIOR OF NORTH BASIN, CONSTRUCT 12–INCH THICK SOIL LINER. AFTER NORTH BASIN IS COMPLETED, PERMANENTLY STABILIZE ALL DENUDED AREAS BY SEEDING AND MULCHING.
5. CONSTRUCT LEACHATE PUMP STATION AND UNDERGROUND STORAGE TANK.
6. INSTALL SILT FENCE PRIOR TO CLEARING FOR LEACHATE FORCE MAIN CONSTRUCTION. AFTER CONSTRUCTION OF LEACHATE FORCE MAIN, PERMANENTLY STABILIZE DENUDED AREAS BY SEEDING AND MULCHING.
7. REMOVE TEMPORARY SEDIMENT CONTROLS FOR PHASE I CONSTRUCTION UPON RECEIVING PERMISSION FROM THE HOWARD COUNTY SEDIMENT CONTROL INSPECTOR.

D. PHASE II (ESTIMATED CONSTRUCTION DURATION – 4 MONTHS) – CONSTRUCT EAST AND SOUTH SEDIMENT BASINS, WEST DETENTION BASIN. RETROFIT EXISTING CLEAR WATER BASINS CW–1 AND CW–2, BEGIN LANDFILL GAS AND LEACHATE SYSTEMS.

1. EAST SEDIMENT BASIN
   - A) INSTALL SILT FENCE AND CONSTRUCT ROADSIDE DITCH TO ROAD CULVERT N1–N2. CONSTRUCT OUTLET CONTROL STRUCTURE, OUTLET PIPE, RIPRAP OUTLET PROTECTION. EXCAVATE BASIN AND CONSTRUCT BASIN EMBANKMENT.
   - B) PERMANENTLY STABILIZE ALL DENUDED AREAS BY SEEDING AND MULCHING.
   - C) REMOVE TEMPORARY SEDIMENT CONTROLS FOR EAST SEDIMENT BASIN UPON RECEIVING PERMISSION FROM THE HOWARD COUNTY SEDIMENT CONTROL INSPECTOR.
2. SOUTH SEDIMENT BASIN
   - A) INSTALL SILT FENCE, AND RELOCATE SHALLOW WASTE. CONSTRUCT OUTLET CONTROL STRUCTURE, OUTLET PIPE, RIP RAP OUTLET PROTECTION. EXCAVATE BASIN AND CONSTRUCT BASIN EMBANKMENT.
   - B) PERMANENTLY STABILIZE ALL DENUDED AREAS BY SEEDING AND MULCHING.
   - C) REMOVE TEMPORARY SEDIMENT CONTROLS FOR SOUTH SEDIMENT BASIN UPON RECEIVING PERMISSION FROM THE HOWARD COUNTY SEDIMENT CONTROL INSPECTOR.
3. WEST DETENTION BASIN
   - A) INSTALL SILT FENCE AND CULVERT INLET PROTECTION. CONSTRUCT OUTLET PIPE, END WALLS, AND RIP RAP OUTLET PROTECTION. EXCAVATE BASIN AND CONSTRUCT BASIN EMBANKMENT. INSTALL CONCRETE LOW FLOW CHANNEL AND GABION INLET CHANNEL.
   - B) PERMANENTLY STABILIZE ALL DENUDED AREAS BY SEEDING AND MULCHING.
   - C) REMOVE TEMPORARY SEDIMENT CONTROLS FOR WEST DETENTION BASIN UPON RECEIVING PERMISSION FROM THE HOWARD COUNTY SEDIMENT CONTROL INSPECTOR.
4. RETROFIT EXISTING CLEAR WATER BASINS CW–1 AND CW–2
   - A) INSTALL TEMPORARY EROSION CONTROLS, STABILIZE CONSTRUCTION ENTRANCE AND REMOVE EXISTING CMP PRINCIPAL SPILLWAY AND CMP OUTFALL PIPE OF SB–1 AND SB–2.
   - B) DE–WATER CLEAR WATER BASIN CW–2 THEN REMOVE EXISTING CMP PRINCIPAL SPILLWAY AND CMP OUTFALL PIPE AND CONSTRUCT NEW CONCRETE OUTFALL PIPE AND PRINCIPAL SPILLWAY. WHEN NEW PRINCIPAL SPILLWAY AND OUTFALL PIPE HAS BEEN COMPLETED, CONSTRUCT CW–2 BASIN TO THE GRADES INDICATED.
   - C) DE–WATER CLEARWATER BASIN CW–1 THEN REMOVE EXISTING CMP PRINCIPAL SPILLWAY AND CMP OUTFALL PIPE AND CONSTRUCT NEW CONCRETE OUTFALL PIPE AND PRINCIPAL SPILLWAY. WHEN NEW PRINCIPAL SPILLWAY AND OUTFALL PIPE HAS BEEN COMPLETED, CONSTRUCT ENLARGED CW–1 TO THE GRADES INDICATED.
   - D) UPON COMPLETION OF BASIN RETROFITS, STABILIZE DENUDED AREAS AND INSTALL PERMANENT CHANNEL/DITCH INLET AND OUTLET EROSION CONTROLS.
   - E) REMOVE TEMPORARY SEDIMENT CONTROLS UPON RECEIVING PERMISSION FROM THE HOWARD COUNTY SEDIMENT CONTROL INSPECTOR.
5. LANDFILL GAS AND LEACHATE SYSTEMS
   - A) BEGIN BLOWER/FLARE STATION.
   - B) INSTALL LEACHATE OVERFLOW TANK AT FIELD PUMP STATION

E. PHASE III – CONSTRUCT PIPE DOWN CHUTES A, B AND C, TEMPORARY SLOPE DRAINS INTO SOUTH BASIN, AND EAST AND WEST LEACHATE COLLECTION TRENCHES. (ESTIMATED CONSTRUCTION DURATION – 4 MONTHS)

1. THE CONTRACTOR SHALL NOT HAVE MORE THAN SEVEN (7) ACRES OF LANDFILL SURFACE AREA DISTURBED AT ANY ONE TIME DURING THE CONSTRUCTION OF THE FINAL CAP.
2. CONSTRUCT DOWN CHUTES ON NORTH SIDE OF LANDFILL, BEGINNING WITH CONCRETE HEADWALL AND RIP RAP OUTLET PROTECTION. COORDINATE DOWN CHUTE AND LEACHATE COLLECTION TRENCH CROSSINGS. AT THE TERMINUS OF DOWN CHUTES A AND B, GRADE PIPE INLET SUMPS AND INSTALL CULVERT INLET PROTECTION.
3. GRADE SIDESLOPE AND INSTALL TEMPORARY SLOPE DRAINS INTO SOUTH BASIN.
4. CONSTRUCT EAST AND WEST LEACHATE COLLECTION TRENCHES AND ALL ASSOCIATED SURFACE GRADING.
5. STABILIZE ALL DENUDED AREAS BY TEMPORARY SEEDING AND MULCHING.

F. PHASE IV (ESTIMATED CONSTRUCTION DURATION – 4 MONTHS) – DEVELOP BORROW AREAS A–3 AND B, BASE GRADING OF LANDFILL TOP SURFACE AND LFG WELL AND SYSTEM INSTALLATION.

1. THE CONTRACTOR SHALL NOT HAVE MORE THAN SEVEN (7) ACRES OF LANDFILL SURFACE AREA DISTURBED AT ANY ONE TIME DURING THE CONSTRUCTION OF THE FINAL CAP.
2. INSTALL TEMPORARY EROSION SEDIMENT CONTROLS WHERE INDICATED AND DIRECT RUNOFF TO BASIN CW–2.
3. DEVELOP BORROW AREAS A–3 AND B TO OBTAIN SOIL MATERIALS FOR BASE GRADING OF THE LANDFILL AND SOIL BARRIER LAYER MATERIAL.
4. PERFORM BASE GRADING OF LANDFILL DRAINAGE SWALES ON TOP OF LANDFILL WHILE MAINTAINING POSITIVE DRAINAGE INTO DOWNCHUTE INLETS AND INLETS TO TEMPORARY SLOPE DRAINS.
5. STABILIZE BASE GRADE SURFACES IMMEDIATELY WITH TEMPORARY SEEDING AND MULCHING. INSTALL STONE CHECK DAMS IN LANDFILL DRAINAGE SWALES AS INDICATED.
6. INSTALL LFG WELLS ON TOP SURFACE.
7. BEGIN LINED CELL NO. 1 LFG COLLECTION SYSTEM CONSTRUCTION INCLUDING HEADER LINE BETWEEN THE UNLINED CELL AND THE FLARE STATION.

G. PHASE V (ESTIMATED CONSTRUCTION DURATION – 4 MONTHS) – DEVELOP BORROW AREAS A–1, A–2, AND C, INSTALL FINAL COVER SYSTEM AND INSTALL LFG HEADER PIPING ON TOP OF THE LANDFILL.

1. THE CONTRACTOR SHALL NOT HAVE MORE THAN SEVEN (7) ACRES OF LANDFILL SURFACE AREA DISTURBED AT ANY ONE TIME DURING THE CONSTRUCTION OF THE FINAL CAP.
2. INSTALL TEMPORARY EROSION SEDIMENT CONTROLS WHERE INDICATED AND DIRECT RUNOFF TO BASIN CW–1.
3. DEVELOP BORROW AREAS A–1, A–2, AND C TO OBTAIN BARRIER LAYER AND VEGETATIVE SUPPORT LAYER SOIL MATERIALS.
4. BEGIN FINAL COVER SYSTEM ON THE RIDGE ON TOP OF THE LANDFILL. PROCEED DOWN GRADIENT, NORTH AND SOUTH TOWARD THE DRAINAGE INLETS, EVENTUALLY INSTALLING THE PERMANENT INLET STRUCTURES TO DOWNCHUTES A AND B.
5. ONCE THE FINAL COVER SYSTEM HAS REACHED THE TEMPORARY SLOPE DRAINS ON THE SOUTH SIDE, REMOVE THE TEMPORARY SLOPE DRAINS, CONSTRUCT THE FINAL COVER SYSTEM DOWN THE SLOPE AND CONSTRUCT THE PERMANENT GABION DOWNCHUTE INTO THE SOUTH SEDIMENT BASIN.
6. REMOVE TEMPORARY SEDIMENT CONTROLS UPON RECEIVING PERMISSION FROM THE HOWARD COUNTY SEDIMENT CONTROL INSPECTOR
7. INSTALL LFG HEADER PIPING WITHIN THE COVER SYSTEM ON TOP OF LANDFILL.
8. STABILIZE FINAL SURFACES IMMEDIATELY WITH PERMANENT SEEDING AND MULCHING.

H. PHASE VI (ESTIMATED CONSTRUCTION DURATION – 8 MONTHS) – BASE GRADE AND INSTALL THE FINAL COVER SYSTEM ON THE SIDESLOPES OF THE LANDFILL, COMPLETE PERIMETER ACCESS ROADS AND DRAINAGE CHANNELS

1. THE CONTRACTOR SHALL NOT HAVE MORE THAN SEVEN (7) ACRES OF LANDFILL SURFACE AREA DISTURBED AT ANY ONE TIME DURING THE CONSTRUCTION OF THE FINAL CAP, EXCEPT AS NOTED BELOW. * △2
2. AFTER THE FINAL COVER SYSTEM HAS BEEN PLACED ON TOP OF THE LANDFILL, BEGIN BASE GRADING OF THE SIDESLOPES ON THE NORTHEAST SIDE OF THE LANDFILL IMMEDIATELY FOLLOWED BY THE FINAL COVER SYSTEM.
3. WHEN THE FINAL COVER SYSTEM IS COMPLETED ON THE NORTHEAST CORNER, BEGIN CONSTRUCTION OF THE LANDFILL ACCESS ROAD AND DOWNCHUTE "D" CONTINUE WITH BASE GRADING AND CONSTRUCTION OF THE FINAL COVER SYSTEM ON THE SIDESLOPES, PROCEEDING COUNTER CLOCKWISE AROUND THE LANDFILL.
4. WHEN SIDESLOPE AREAS RECEIVE THE FINAL COVER SYSTEM, CONSTRUCT SIDESLOPE PIPE GUTTERS AND DIVERSION BERMS. INSTALL PERMANENT SOD AND EROSION CONTROL MATTING AS INDICATED.
5. AS EARTHWORK AND DRAINAGE SYSTEM CONSTRUCTION IS COMPETED FOR LANDFILL, PERFORM FINAL GRADING OF PERIMETER CHANNELS/DITCHES AND PERIMETER ACCESS ROADS. CONSTRUCT GRAVEL BASE COURSE FOR ACCESS ROADS, CLEAN OUT SEDIMENT ACCUMULATION IN ALL BASINS.
6. WHEN BORROW ACTIVITIES HAVE BEEN COMPLETED, STABILIZE ALL DENUDED AREAS AND INSTALL PERMANENT CHANNEL/DITCH/INLET AND OUTLET EROSION CONTROLS. REMOVE ACCUMULATED SEDIMENT FROM BASIN CW–1 AND CW–2.
7. INSTALL LFG COLLECTION SYSTEM (WELLS AND HEADER PIPING) ON LANDFILL SIDESLOPES.
8. STABILIZE FINAL SURFACES IMMEDIATELY WITH PERMANENT SEEDING AND MULCHING.
9. REMOVE TEMPORARY SEDIMENT CONTROLS UPON RECEIVING PERMISSION FROM THE HOWARD COUNTY SEDIMENT CONTROL INSPECTOR.

~~I. PHASE VII (ESTIMATED CONSTRUCTION DURATION – 2 MONTHS) – RECREATION AREA.~~ △3

~~1. THE CONTRACTOR SHALL NOT HAVE MORE THAN FIVE (5) ACRES OF LANDFILL SURFACE AREA DISTURBED AT ANY ONE TIME DURING THE CONSTRUCTION OF THE RECREATION AREA.~~
~~2. CONTRACTOR SHALL LIMIT HIS BORROW AND GRADING ACTIVITIES WITHIN THE RECREATION AREA TO A MAXIMUM OF 7 ACRES OF DISTURBANCE AT ALL TIMES. MAINTAIN STORM DRAINAGE TOWARD BASINS CW–1 AND CW–2.~~
~~3. INSTALL TEMPORARY EROSION AND SEDIMENT CONTROLS PRIOR TO AREAS BEING DISTURBED.~~
~~4. INSTALL STORM DRAIN PIPES AND STRUCTURES AT OPPORTUNE TIMES AS GRADING ALLOWS.~~
~~5. STABILIZE AREAS WHICH HAVE ACHIEVED FINAL GRADES.~~
~~6. UPON ACHIEVING FINAL GRADES AND STABILIZATION FOR THE 5 SOCCER FIELDS, INSTALL TEMPORARY EROSION CONTROLS AND BEGIN EARTHWORK FOR THE LANDFILL ACCESS ROAD.~~
~~7. UPON COMPLETION OF THE ACCESS ROAD, STABILIZE ALL DENUDED AREAS.~~
~~8. REMOVE TEMPORARY SEDIMENT CONTROLS UPON RECEIVING PERMISSION FROM THE HOWARD COUNTY SEDIMENT CONTROL INSPECTOR.~~

FOR LANDFILL CONSTRUCTION SEQUENCE PLAN, SEE SHEET 67

FOR SEQUENCE OF CONSTRUCTION FOR BORROW AREA AND RECREATION AREA, SEE SHEET 68

* AFTER MODIFYING THE NORTH BASIN RISER (PER REVISION △1, SHEET 27) THE DRAINAGE AREA TO THE WEST DETENTION BASIN SHALL NOT HAVE MORE THAN FOURTEEN (14) ACRES OF LANDFILL SURFACE DISTURBED AT ANY ONE TIME.

HOWARD SOIL CONSERVATION DISTRICT STANDARD SEDIMENT CONTROL NOTES

A MINIMUM OF 48 HOURS NOTICE MUST BE GIVEN TO THE HOWARD COUNTY DEPARTMENT OF INSPECTIONS, LICENSES AND PERMITS, SEDIMENT CONTROL DIVISION PRIOR TO THE START OF ANY CONSTRUCTION (313–1855).

ALL VEGETATIVE AND STRUCTURAL PRACTICES ARE TO BE INSTALLED ACCORDING TO THE PROVISIONS OF THIS PLAN AND ARE TO BE IN CONFORMANCE WITH THE 1994 MARYLAND STANDARDS AND SPECIFICATIONS FOR SOIL EROSION AND SEDIMENT CONTROL AND REVISIONS THERETO.

FOLLOWING INITIAL SOIL DISTURBANCE OR RE–DISTURBANCE, PERMANENT OR TEMPORARY STABILIZATION SHALL BE COMPLETED WITHIN: A) 7 CALENDAR DAYS FOR ALL PERIMETER SEDIMENT CONTROL STRUCTURES, DIKES, PERIMETER SLOPES AND ALL SLOPES STEEPER THAN 3:1, B) 14 DAYS AS TO ALL OTHER DISTURBED OR GRADED AREAS ON THE PROJECT SITE.

ALL SEDIMENT TRAPS/BASINS SHOWN MUST BE FENCED AND WARNING SIGNS POSTED AROUND THEIR PERIMETER IN ACCORDANCE WITH VOL 1, CHAPTER 7 OF THE HOWARD COUNTY DESIGN MANUAL, STORM DRAINAGE.

ALL DISTURBED AREAS MUST BE STABILIZED WITHIN THE TIME PERIOD SPECIFIED ABOVE IN ACCORDANCE WITH THE 1994 MARYLAND STANDARDS AND SPECIFICATIONS FOR SOIL EROSION AND SEDIMENT CONTROL FOR PERMANENT SEEDING, SOD, TEMPORARY SEEDING, AND MULCHING (SEC.G). TEMPORARY STABILIZATION WITH MULCH ALONE SHALL ONLY BE DONE WHEN RECOMMENDED SEEDING DATES DO NOT ALLOW FOR PROPER GERMINATION AND ESTABLISHMENT OF GRASSES.

ALL SEDIMENT CONTROL STRUCTURES ARE TO REMAIN IN PLACE AND ARE TO BE MAINTAINED IN OPERATIVE CONDITION UNTIL PERMISSION FOR THEIR REMOVAL HAS BEEN OBTAINED FROM THE HOWARD COUNTY SEDIMENT CONTROL INSPECTOR.

SITE ANALYSIS: △1

TOTAL AREA OF SITE = 550 ACRES
AREA DISTURBED = 150 ACRES
AREA TO BE ROOFED OR PAVED = 0.00 ACRES
AREA TO BE VEGETATIVELY STABILIZED = 150 ACRES
TOTAL CUT = 560,000 CY
TOTAL FILL = 560,000 CY
OFFSITE WASTE/BORROW AREA LOCATION: N/A

ANY SEDIMENT CONTROL PRACTICE WHICH IS DISTURBED BY GRADING ACTIVITY FOR PLACEMENT OF UTILITIES MUST BE REPAIRED ON THE SAME DAY OF DISTURBANCE.

ADDITIONAL SEDIMENT CONTROL MUST BE PROVIDED, IF DEEMED NECESSARY BY THE HOWARD COUNTY SEDIMENT CONTROL INSPECTOR.

ON ALL SITES WITH DISTURBED AREAS IN EXCESS OF 2 ACRES, APPROVAL OF THE INSPECTION AGENCY SHALL BE REQUESTED UPON COMPLETION OF INSTALLATION OF PERIMETER EROSION AND SEDIMENT CONTROLS, BUT BEFORE PROCEEDING WITH ANY OTHER EARTH DISTURBANCE OR GRADING. OTHER BUILDING OR GRADING INSPECTION APPROVALS MAY NOT BE AUTHORIZED UNTIL THIS INITIAL APPROVAL BY THE INSPECTION AGENCY IS MADE.

TRENCHES FOR THE CONSTRUCTION OF UTILITIES IS LIMITED TO THREE PIPE LENGTHS OR THAT WHICH SHALL BE BACK–FILLED AND STABILIZED WITHIN ONE WORKING DAY, WHICHEVER IS SHORTER.

SEDIMENT CONTROL

( ) PROVIDE THE FOLLOWING CERTIFICATION BLOCKS ON SEDIMENT CONTROL PLANS:

( ) BY THE DEVELOPER:

"I/WE CERTIFY THAT ALL DEVELOPMENT AND CONSTRUCTION WILL BE DONE ACCORDING TO THIS PLAN, AND THAT ANY RESPONSIBLE PERSONNEL INVOLVED IN THE CONSTRUCTION PROJECT WILL HAVE A CERTIFICATE OF ATTENDANCE AT A DEPARTMENT OF THE ENVIRONMENT APPROVED TRAINING PROGRAM FOR THE CONTROL OF SEDIMENT AND EROSION BEFORE BEGINNING THE PROJECT. I ALSO AUTHORIZE PERIODIC ON–SITE INSPECTION BY THE HOWARD SOIL CONSERVATION DISTRICT."

John J. O'Hara — JOHN J. O'HARA — 10/30/97
SIGNATURE OF DEVELOPER — DATE
PRINT NAME BELOW SIGNATURE

( ) BY THE ENGINEER:

"I CERTIFY THAT THIS PLAN FOR EROSION AND SEDIMENT CONTROL REPRESENTS A PRACTICAL AND WORKABLE PLAN BASED ON MY PERSONAL KNOWLEDGE OF THE SITE CONDITIONS AND THAT IT WAS PREPARED IN ACCORDANCE WITH THE REQUIREMENTS OF THE HOWARD SOIL CONSERVATION DISTRICT."

PAUL A. MANDEVILLE — Paul A. Mandeville — 10/30/97
SIGNATURE OF ENGINEER — DATE
PRINT NAME BELOW SIGNATURE

( ) REVIEWED FOR HOWARD SCD AND MEETS TECHNICAL REQUIREMENTS.

10-30-97
USDA – NATURAL RESOURCES CONSERVATION SERVICE — DATE

( ) THIS DEVELOPMENT PLAN IS APPROVED FOR SOIL EROSION AND SEDIMENT CONTROL BY THE HOWARD SOIL CONSERVATION DISTRICT.

Robert W. Ziehm — 10-30-97
HOWARD SCD — DATE

SUBDIVISION NAME	LOT/PARCEL	
ALPHA RIDGE SOLID WASTE MANAGEMENT CENTER	54,253,220,11	
LIBER/FOLIO	ZONE	TAX/ZONE MAP
10–847/606 16–878/215 10–691/314	PEC	10 & 16
WATER CODE	SEWER CODE	CENSUS TR.
PRIVATE, EXISTING	PRIVATE, EXISTING	60–30

DEPARTMENT OF PLANNING AND ZONING
HOWARD COUNTY, MARYLAND

DIRECTOR — DATE 11/3/97

CHIEF, DEVELOPMENT ENGINEERING DIVISION — DATE 10/31/97

CHIEF, DIVISION OF LAND DEVELOPMENT — DATE 11/3/97

DEPARTMENT OF PUBLIC WORKS
HOWARD COUNTY, MARYLAND

DIRECTOR OF PUBLIC WORKS — DATE 10/30/97 — CHIEF, BUREAU OF WASTE MANAGEMENT — DATE 10/30/97

SCS ENGINEERS
CONSULTING ENGINEERS
11260 ROGER BACON DRIVE
SUITE 300
RESTON, VIRGINIA 22090
PH. (703) 471–6150
FAX. (703) 471–6676

STATE OF MARYLAND — PAUL ANTHONY MANDEVILLE — LIC REG CERT NO 14969 — PROFESSIONAL ENGINEER
Paul Anthony Mandeville, PE

DES. RTT, AST			
DRN. SPC			
CHK. RTT			
DATE: 10–30–97			

BY	NO.	REVISION	DATE
	△6		
	△5		
	△4		
	△3	DELETED REC. AREA	11/9/99
	△2	SEQUENCE ITEM H.1.	7/21/99
	△1	DISTURBED AREA	4-28-99

EROSION AND SEDIMENT CONTROL NOTES CONSTRUCTION SEQUENCE

ALPHA RIDGE LANDFILL
UNLINED CELL CLOSURE
CAPITAL PROJECT NO. C–0190–N

3rd ELECTION DISTRICT — HOWARD COUNTY, MARYLAND

SCALE: NO SCALE

SHEET 50 OF 131

SDP-97-128

SEDNOTE–B M:\295077.01\FINAL\ SEDNOTE, SEQCON

DETAIL 24 – STABILIZED CONSTRUCTION ENTRANCE

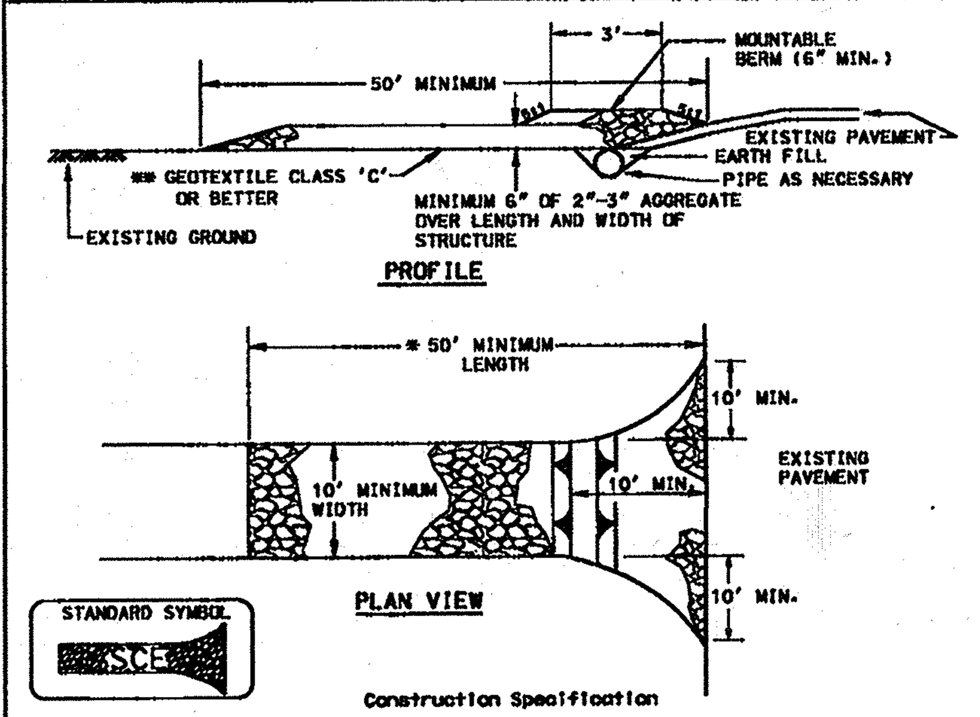

Construction Specification

1. Length – minimum of 50' (*30' for single residence lot).

2. Width – 10' minimum, should be flared at the existing road to provide a turning radius.

3. Geotextile fabric (filter cloth) shall be placed over the existing ground prior to placing stone. **The plan approval authority may not require single family residences to use geotextile.

4. Stone – crushed aggregate (2" to 3") or reclaimed or recycled concrete equivalent shall be placed at least 6" deep over the length and width of the entrance.

5. Surface Water – all surface water flowing to or diverted toward construction entrances shall be piped through the entrance, maintaining positive drainage. Pipe installed through the stabilized construction entrance shall be protected with a mountable berm with 5:1 slopes and a minimum of 6" of stone over the pipe. Pipe has to be sized according to the drainage. When the SCE is located at a high spot and has no drainage to convey a pipe will not be necessary. Pipe should be sized according to the amount of runoff to be conveyed. A 6" minimum will be required.

6. Location – A stabilized construction entrance shall be located at every point where construction traffic enters or leaves a construction site. Vehicles leaving the site must travel over the entire length of the stabilized construction entrance.

U.S. DEPARTMENT OF AGRICULTURE SOIL CONSERVATION SERVICE	PAGE F - 17 - 3	MARYLAND DEPARTMENT OF ENVIRONMENT WATER MANAGEMENT ADMINISTRATION

1994

DETAIL 4 – PIPE SLOPE DRAIN

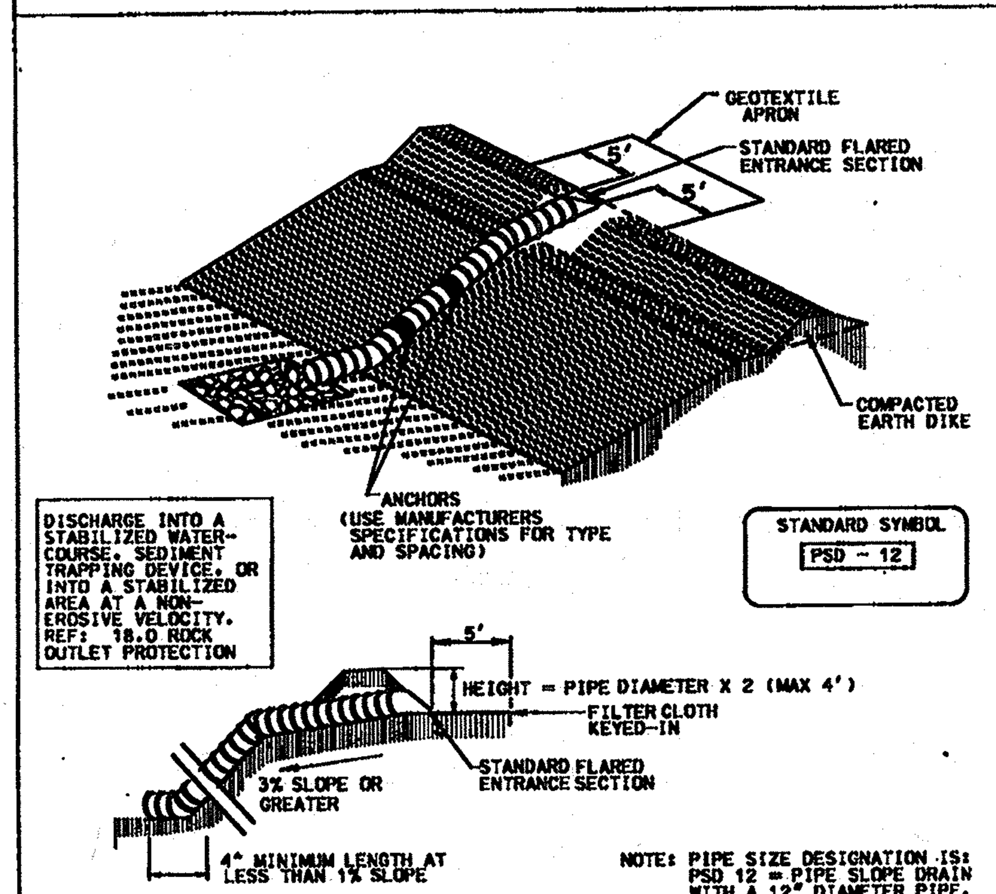

NOTE: PIPE SIZE DESIGNATION IS: PSD 12 = PIPE SLOPE DRAIN WITH A 12" DIAMETER PIPE.

Table 6 Design Criteria for Pipe Slope Drain

Size	Pipe/Tubing Diameter (D) In	Maximum Drainage Area (Acres)
PSD-12	12	0.5
PSD-18	18	1.5
PSD-21	21	2.5
PSD-24	24	3.5
PSD-24 (2)	24	5.0

U.S. DEPARTMENT OF AGRICULTURE SOIL CONSERVATION SERVICE	PAGE B - 5 - 4	MARYLAND DEPARTMENT OF ENVIRONMENT WATER MANAGEMENT ADMINISTRATION

1994

DETAIL 22 – SILT FENCE

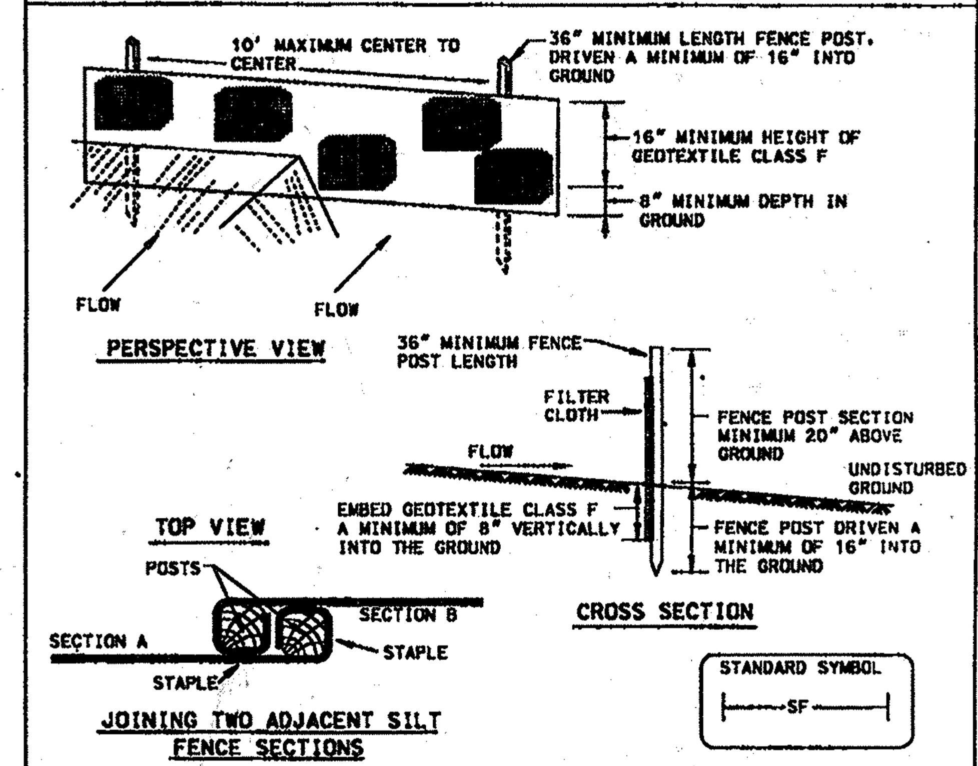

Construction Specifications

1. Fence posts shall be a minimum of 36" long driven 16" minimum into the ground. Wood posts shall be 1½" x 1½" square (minimum) cut, or 1¾" diameter (minimum) round and shall be of sound quality hardwood. Steel posts will be standard T or U section weighting not less than 1.00 pond per linear foot.

2. Geotextile shall be fastened securely to each fence post with wire ties or staples at top and mid-section and shall meet the following requirements for Geotextile Class F:

Tensile Strength	50 lbs/in (min.)	Test: MSMT 509
Tensile Modulus	20 lbs/in (min.)	Test: MSMT 509
Flow Rate	0.3 gal ft²/ minute (max.)	Test: MSMT 322
Filtering Efficiency	75% (min.)	Test: MSMT 322

3. Where ends of geotextile fabric come together, they shall be overlapped, folded and stapled to prevent sediment bypass.

4. Silt Fence shall be inspected after each rainfall event and maintained when bulges occur or when sediment accumulation reached 50% of the fabric height.

U.S. DEPARTMENT OF AGRICULTURE SOIL CONSERVATION SERVICE	PAGE E - 15 - 3	MARYLAND DEPARTMENT OF ENVIRONMENT WATER MANAGEMENT ADMINISTRATION

1994

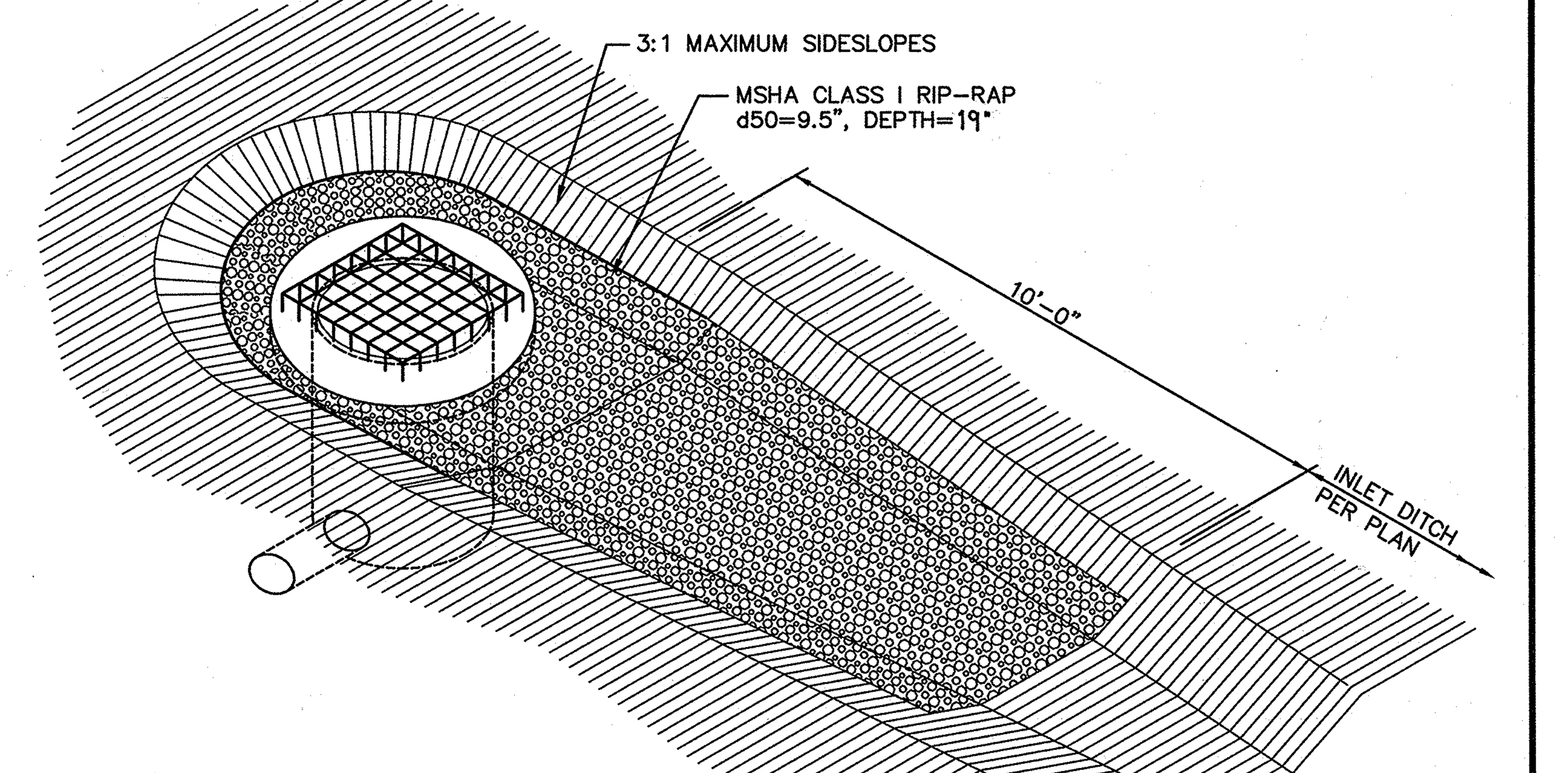

NOTE: PLACE RIP-RAP TO A HEIGHT OF 2'-0" ABOVE INLET TOP UNLESS OTHERWISE INDICATED.

INLET PROTECTION DETAIL 1/51
NO SCALE
5, 46

EROSION CONTROL MATTING

Construction Specifications

1. Key-in the matting by placing the top ends of the matting in a narrow trench, 6' in depth. Backfill the trench and tamp firmly to conform to the channel cross-section. Secure with a row of staples about 4' down slope from the trench. Spacing between staples is 6'.

2. Staple the 4' overlap in the channel center using an 18' spacing between staples.

3. Before stapling the outer edges of the matting, make sure the matting is smooth and in firm contact with the soil.

4. Staples shall be placed 2' apart with 4 rows for each strip, 2 outer rows, and 2 alternating rows down the center.

5. Where one roll of matting ends and another begins, the end of the top strip shall overlap the upper end of the lower strip by 4', shiplap fashion. Reinforce the overlap with a double row of staples spaced 6' apart in a staggered pattern on either side.

6. The discharge end of the matting liner should be similarly secured with 2 double rows of staples.

Note: If flow will enter from the edge of the matting then the area effected by the flow must be keyed-in.

DETAIL 30 EROSION CONTROL MATTING

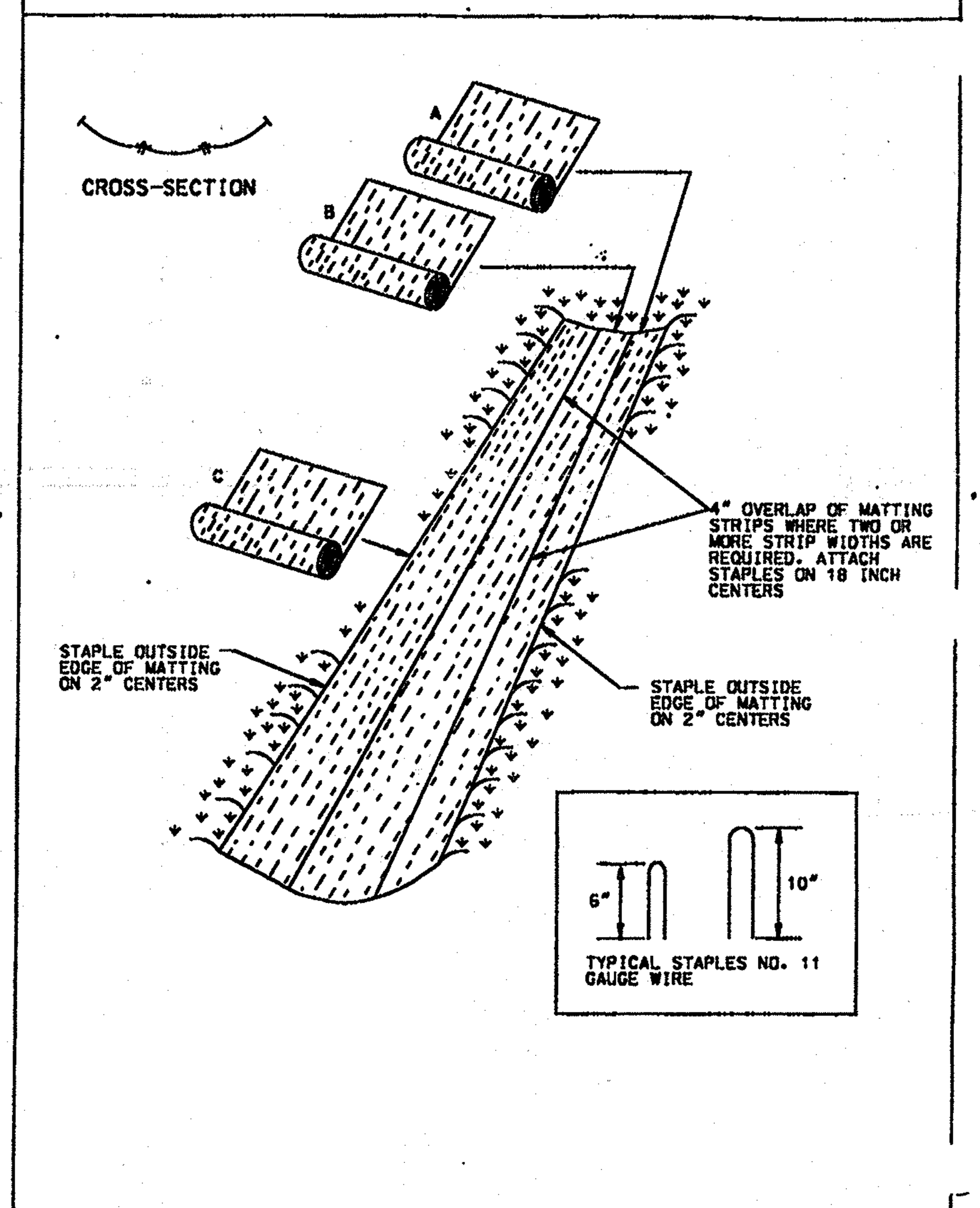

U.S. DEPARTMENT OF AGRICULTURE SOIL CONSERVATION SERVICE	PAGE G - 22 - 2	MARYLAND DEPARTMENT OF ENVIRONMENT WATER MANAGEMENT ADMINISTRATION

DETAIL 33 – SUPER SILT FENCE

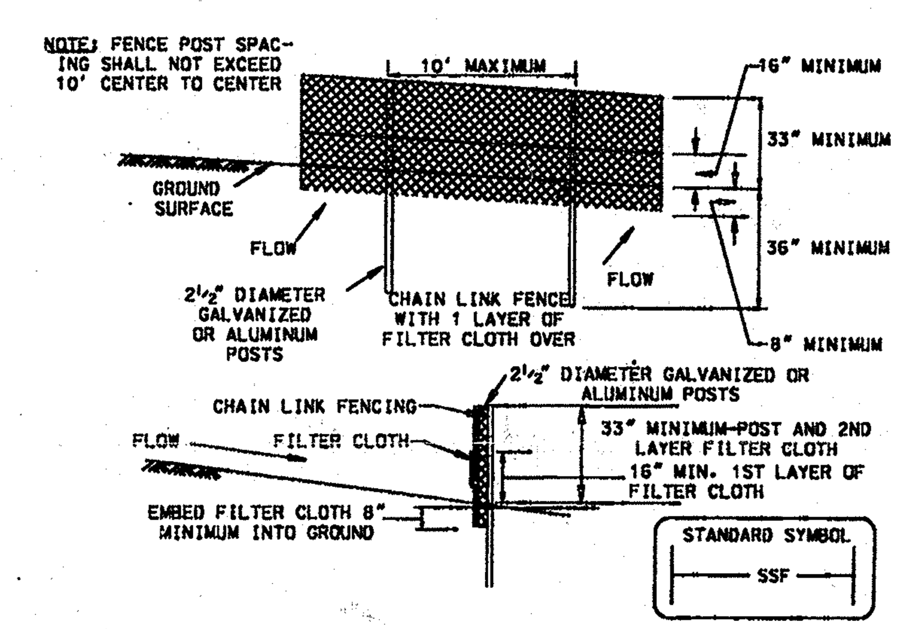

Construction Specifications

Fencing shall be 42 inches in height and constructed in accordance with the latest Maryland State Highway Details for Chain Link Fencing. The specification for a 6 foot fence shall be used, substituting 42 inch fabric and 6 foot length posts.

1. The poles do not need to set in concrete.

2. Chain link fence shall be fastened securely to the fence posts with wire ties or staples.

3. Filter cloth shall be fastened securely to the chain link fence with ties spaced every 24" at the top and mid section.

4. Filter cloth shall be embedded a minimum of 8" into the ground.

5. When two sections of filter cloth adjoin each other, they shall be overlapped by 6" and folded.

6. Maintenance shall be performed as needed and silt buildups removed when "bulges" develop in the silt fence.

U.S. DEPARTMENT OF AGRICULTURE SOIL CONSERVATION SERVICE	PAGE H - 26 - 3	MARYLAND DEPARTMENT OF ENVIRONMENT WATER MANAGEMENT ADMINISTRATION

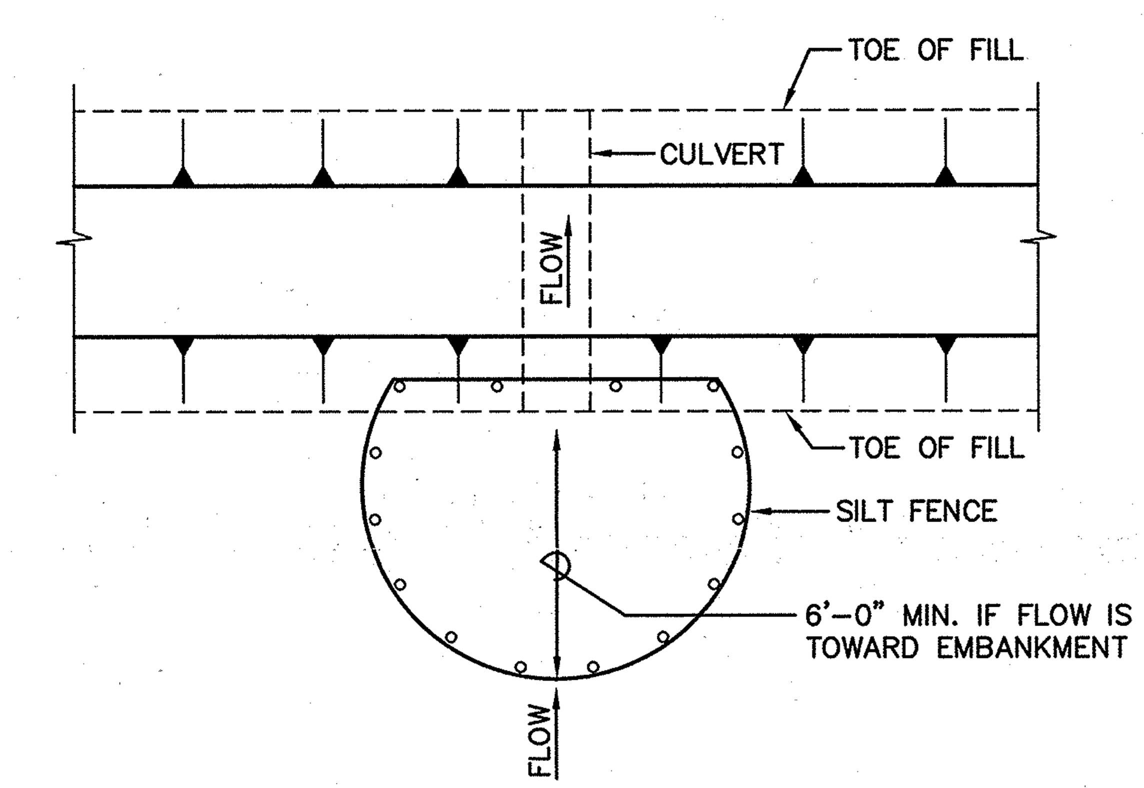

TEMPORARY CULVERT INLET PROTECTION
SILT FENCE OPTION

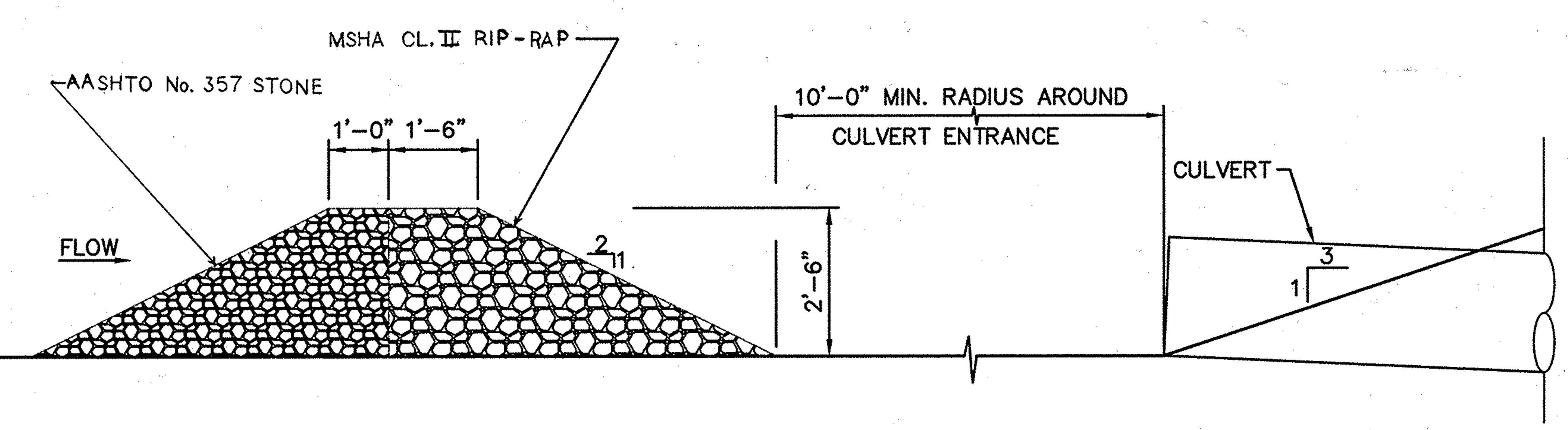

TEMPORARY CULVERT INLET PROTECTION
STONE COMBINATION OPTION
SCALE: 1/2"=1'-0"

SUBDIVISION NAME	LOT/PARCEL	
ALPHA RIDGE SOLID WASTE MANAGEMENT CENTER	54,253,220,11	
LIBER/FOLIO	ZONE	TAX/ZONE MAP
10-847/606 16-878/215 10-691/314	PEC	10 & 16
WATER CODE	SEWER CODE	CENSUS TR.
PRIVATE, EXISTING	PRIVATE, EXISTING	60-30

DEPARTMENT OF PLANNING AND ZONING
HOWARD COUNTY, MARYLAND

DIRECTOR — DATE 11/3/97
CHIEF, DEVELOPMENT ENGINEERING DIVISION — DATE 10/30/97
CHIEF, DIVISION OF LAND DEVELOPMENT — DATE 11/3/97

M:\295077.01\FINAL\DETAILS INLETPRO, INLET3D, CE, SD, MATT, SF, SSF ESDET

DEPARTMENT OF PUBLIC WORKS
HOWARD COUNTY, MARYLAND

DIRECTOR OF PUBLIC WORKS — DATE 10/30/97
CHIEF, BUREAU OF WASTE MANAGEMENT — DATE 10/30/97

SCS ENGINEERS
CONSULTING ENGINEERS
11260 ROGER BACON DRIVE
SUITE 300
RESTON, VIRGINIA 22090
PH. (703) 471-6150
FAX. (703) 471-6676

STATE OF MARYLAND — PAUL ANTHONY MANDEVILLE — LIC REG CERT NO 14965 — PROFESSIONAL ENGINEER
Paul Anthony Mandeville, PE

DES. RTT, EGC
DRN. EGC
CHK. PAM
DATE: 10-30-97

BY	NO.	REVISION	DATE
	6		
	5		
	4		
	3		
	2		
	1		

EROSION & SEDIMENT CONTROL DETAILS

ALPHA RIDGE LANDFILL
UNLINED CELL CLOSURE
CAPITAL PROJECT NO. C-0190-N
3rd ELECTION DISTRICT — HOWARD COUNTY, MARYLAND

SCALE: AS NOTED
SHEET 51 OF 131

SDP-97-128

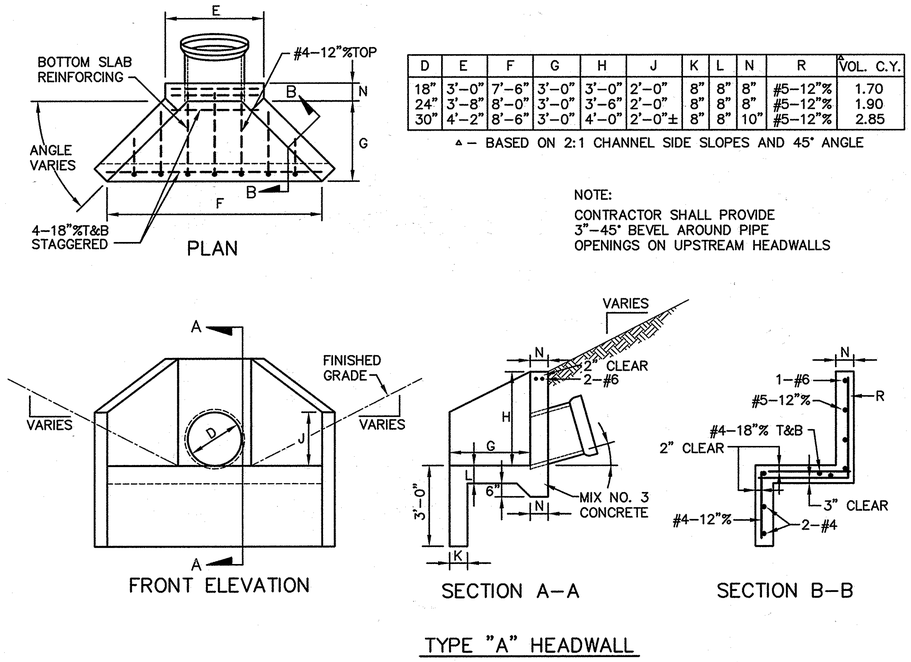

D	E	F	G	H	J	K	L	N	R	VOL. C.Y.
18"	3'–0"	7'–6"	3'–0"	3'–0"	2'–0"	8"	8"	8"	#5–12"%	1.70
24"	3'–8"	8'–0"	3'–0"	3'–6"	2'–0"	8"	8"	8"	#5–12"%	1.90
30"	4'–2"	8'–6"	3'–0"	4'–0"	2'–0"±	8"	8"	10"	#5–12"%	2.85

△ – BASED ON 2:1 CHANNEL SIDE SLOPES AND 45° ANGLE

NOTE:
CONTRACTOR SHALL PROVIDE 3"–45° BEVEL AROUND PIPE OPENINGS ON UPSTREAM HEADWALLS

TYPE "A" HEADWALL

Section IV – Sod: To provide quick cover on disturbed areas (2:1 grade or flatter).

A. General specifications

i. Class of turtgrass sod shall be Maryland or Virginia State Certified or Approved. Sod labels shall be made available to the job foreman and inspector.

ii. Sod shall be machine cut at a uniform soil thickness of 3/4", plus or minus 1/4", at the time of cutting. Measurement for thickness shall exclude top growth and thatch. Individual pieces of sod shall be cut to the suppliers–width and length. Maximum allowable deviation from standard widths and lengths shall be 5 percent. Broken pads and torn or uneven ends will not be acceptable.

iii. Standard size sections of sod shall be strong enough to support their own weight and retain their size and shape when suspended vertically with a firm grasp on the upper 10 percent of the section.

iv. Sod shall not be harvested or transplanted when moisture content (excessively dry or wet) may adversely affect its survival.

v. Sod shall be harvested, delivered, and installed within a period of 36 hours. Sod not transplanted within this period shall be approved by an agronomist or soil scientist prior to its installation. B. Sod Installation

B: Sod Installation

i. During periods of excessively high temperature or in areas having dry subsoil, the subsoil shall be lightly irrigated immediately prior to laying the sod.

ii. The first row of sod shall be laid in a straiglit line with subsequent rows placed parallel to and tightly wedged against each other. Lateral joints shall be staggered to promote more uniform growth and strength. Ensure that sod is not stretched or overlapped and that all joints are butted tight in order to prevent voids which would cause air drying of the roots.

iii. Wherever possible, sod shall be laid with the long edges parallel to the contour and with staggering joints. Sod shall be rolled and tamped, pegged or otherwise secured to prevent slippage on slopes and to ensure solid contact between sod roots and the underlying soil surface.

iv. Sod shall be watered immediately following rolling or tamping until the underside of the new sod pad and soil surface below the sod are thoroughly wet. The operations of laying, tamping and irrigating for any piece of sod shall be completed within eight hours. C. Sod Maintenance

B: Sod Maintenance

i. In the absence of adequate rainfall, watering shall be performed daily or as often as necessary during the first week and in sufficient quantities to maintain moist soil to a depth of 4". Watering should be done during the heat of the day to prevent wilting.

ii. After the first week, sod watering is required as necessary to maintain adequate moisture content.

iii. The first mowing of sod should not be attempted until the sod is firmly rooted. No more than 1/3 of the grass leaf shall be removed by the initial cutting or subsequent cuttings. Grass height shall be maintained between 2" and 3" unless otherwise specified. G–20– 10

DETAIL 7 – STONE CHECK DAM

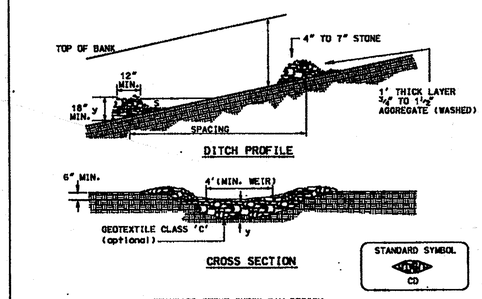

STANDARD STONE CHECK DAM DESIGN

SLOPE	SPACING
2% or less	80'
2.1% to 4%	40'
4.1% to 7%	25'
7.1% to 10%	15'
over 10%	use lined waterway design

Construction Specifications

1. Swales and ditches shall be prepared in accordance with the construction specifications described in Section A-2. Standards and Specifications for Temporary Swale.
2. The check dam shall be constructed of 4"-7" stone. The stone shall be placed so that it completely covers the width of the channel and is keyed into the channel banks.
3. The top of the check dam shall be constructed so the the center is approximately 6" lower than the outer edges, forming a weir that water can flow across.
4. The maximum height of the check dam at the center shall not exceed 2'.
5. The upstream side of the check dam shall be lined with approximately 1' of ¾" to 1½" aggregate.
6. Accumulated sediment shall be removed when it has built up to ½ of the original height of the weir crest.

U.S. DEPARTMENT OF AGRICULTURE SOIL CONSERVATION SERVICE	PAGE B – 8 – 2	MARYLAND DEPARTMENT OF ENVIRONMENT WATER MANAGEMENT ADMINISTRATION

1994

FIGURE 1

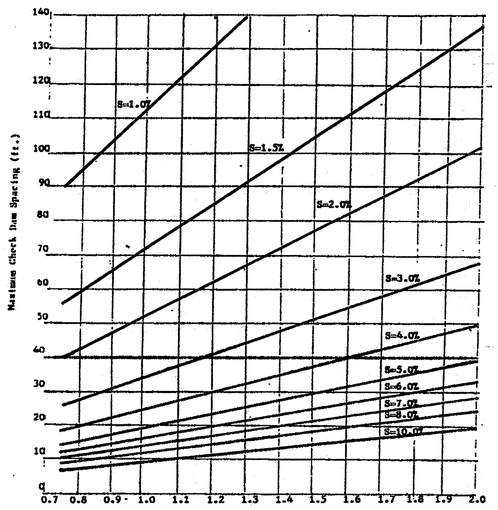

Design of Stone Check Dam Spacing
(n=0.030, Ve = 2.0 fps)

B-8-4

PIPE	DIMENSIONS					VOL.	STEEL
DIA–D	A	B	C	H	L	Con.Cy	LBS.
12"	9"	6"	6"	1'–9"	3'–6"	0.73	56
15"	9"	6"	6"	2'–0"	4'–3"	0.93	77
18"	9"	6"	6"	2'–3"	5'–0"	1.14	89
24"	9"	14"	6"	2'–9"	6'–6"	1.8	124
30"	9"	14"	6"	3'–6"	8'–0"	2.6	160
36"	12"	16"	10"	4'–0"	9'–6"	5.0	287
42"	12"	16"	10"	4'–6"	11'–0"	6.2	333
48"	12"	16"	10"	5'–0"	12'–6"	7.4	387
54"	12"	20"	12"	5'–6"	14–0"	9.2	458
60"	12"	20"	12"	6'–0"	15–6"	9.2	519

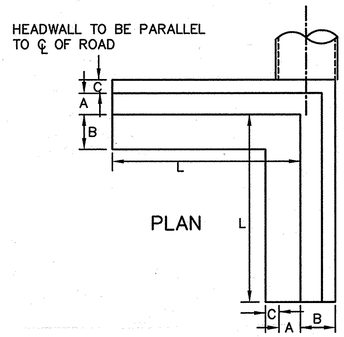

NOTES

1. CHAMFER ALL EXPOSED EDGES 1" X 1".
2. USE 4" STEEL BARS 1/2"ø.
3. "S" DISTANCE (INSIDE PIPE SURFACE TO VERTICAL BARS) IS 4" FOR 12" DIA. TO 18" DIA. PIPE INCLUDED, 6" FOR 24" DIA. PIPE INCLUDED, 8" FOR 42" TO 60" DIA. PIPE INCLUDED.
4. SPACE VERTICAL BARS 12" TO 18" MAX. FOR 12" TO 18" DIA. PIPE INCLUDED, 18" MIN. TO 24" TO 60" DIA. PIPE INCLUDED.
5. QUANITIES IN TABLE FOR ESTIMATING ONLY.
6. CONCRETE TO BE S.H.A. MIX NO. 2.

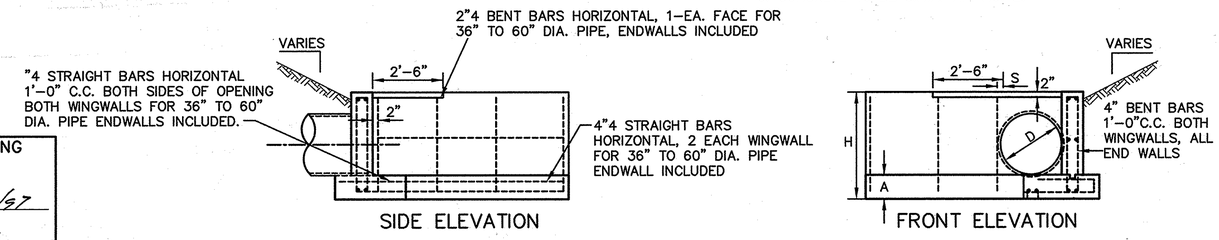

TYPE "E" HEADWALL

SUBDIVISION NAME	LOT/PARCEL	
ALPHA RIDGE SOLID WASTE MANAGEMENT CENTER	54,253,220,11	
LIBER/FOLIO	ZONE	TAX/ZONE MAP
10–847/806 16–878/215 10–691/314	PEC	10 & 16
WATER CODE	SEWER CODE	CENSUS TR.
PRIVATE, EXISTING	PRIVATE, EXISTING	60–30

DEPARTMENT OF PLANNING AND ZONING
HOWARD COUNTY, MARYLAND

DIRECTOR — DATE 11/3/97
CHIEF, DEVELOPMENT ENGINEERING DIVISION — DATE 11/3/97
CHIEF, DIVISION OF LAND DEVELOPMENT — DATE 11/3/97

DEPARTMENT OF PUBLIC WORKS
HOWARD COUNTY, MARYLAND

DIRECTOR OF PUBLIC WORKS — DATE 10/30/97
CHIEF, BUREAU OF WASTE MANAGEMENT — DATE 10/30/97

SCS ENGINEERS
CONSULTING ENGINEERS
11260 ROGER BACON DRIVE
SUITE 300
RESTON, VIRGINIA 22090
PH. (703) 471–6150
FAX. (703) 471–6676

STATE OF MARYLAND — PAUL ANTHONY MANDEVILLE — No. 20 CERTIFICATE NUMBER — PROFESSIONAL ENGINEER
Paul Anthony Mandeville, PE

DES. RTT, EGC	6			
DRN. EGC	5			
CHK. PAM	4			
DATE: 10–30–97	3			
	2			
	1			
BY	NO.	REVISION		DATE

EROSION & SEDIMENT CONTROL AND MISCELLANEOUS DETAILS

ALPHA RIDGE LANDFILL
UNLINED CELL CLOSURE
CAPITAL PROJECT NO. C–0190–N

3rd ELECTION DISTRICT — HOWARD COUNTY, MARYLAND

SCALE: AS NOTED

SHEET 52 OF 131

SDP-97-128

TRENCH1
M:\295077.01\FINAL\DETAILS
ESDET1

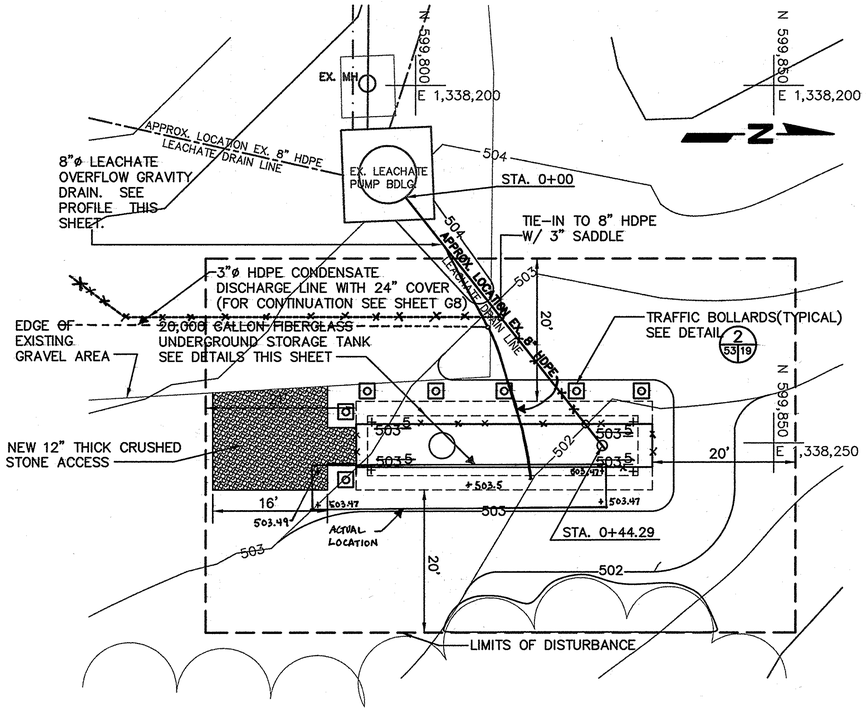

LEACHATE FACILITY – ENLARGED PLAN

SCALE IN FEET

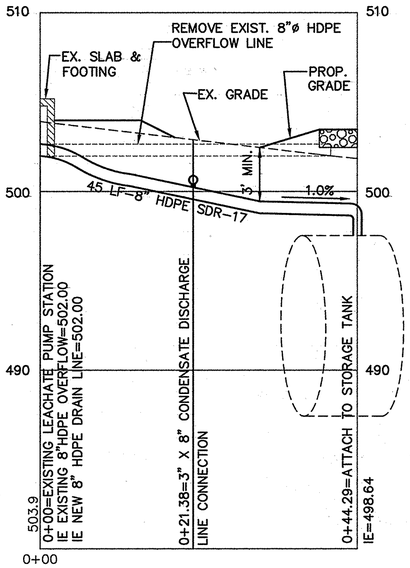

LEACHATE OVERFLOW GRAVITY DRAIN PROFILE

HORIZONTAL SCALE IN FEET (10 0 10 20) — VERTICAL SCALE IN FEET (4 0 4 8)

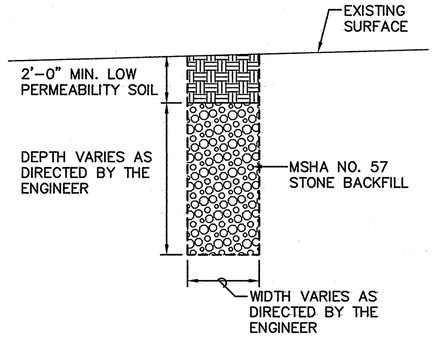

TYPICAL LEACHATE CONTROL TRENCH DETAIL

NO SCALE

NOTE:

THIS DETAIL OF CONSTRUCTION WILL BE USED WHEN REQUIRED TO CONTROL LEACHATE FROM ESCAPING TO THE ENVIRONMENT WHEN EXCESSIVE LEACHATE IS ENCOUNTERED DURING CONSTRUCTION. THE TRENCH WILL BE AUTHORIZED BY THE ENGINEER/COUNTY THROUGH A FIELD ORDER. QUANTITIES OF EXCAVATION, GEOTEXTILE, MSHA NO. 57, AND BACKFILL WILL BE PAID FOR BY THE CONTINGENCY UNIT PRICES. ACTUAL DIMENSIONS OF THE LEACHATE CONTROL TRENCH WILL BE SPECIFIED BY THE ENGINEER PRIOR TO CONSTRUCTION.

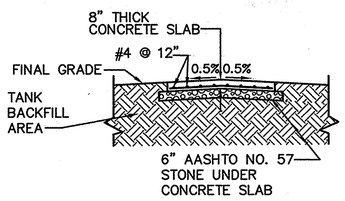

SECTION A 53 53

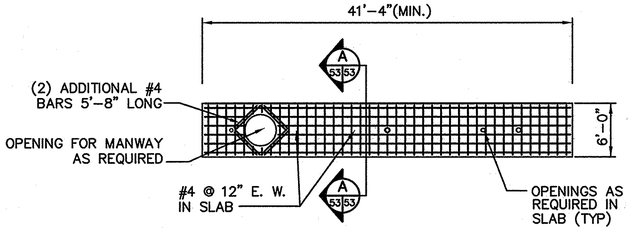

TANK TOP SLAB DETAIL

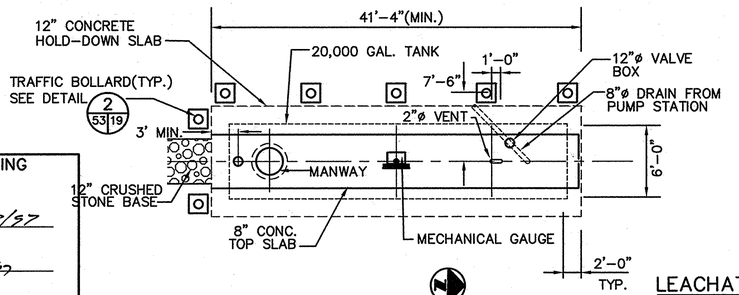

PLAN

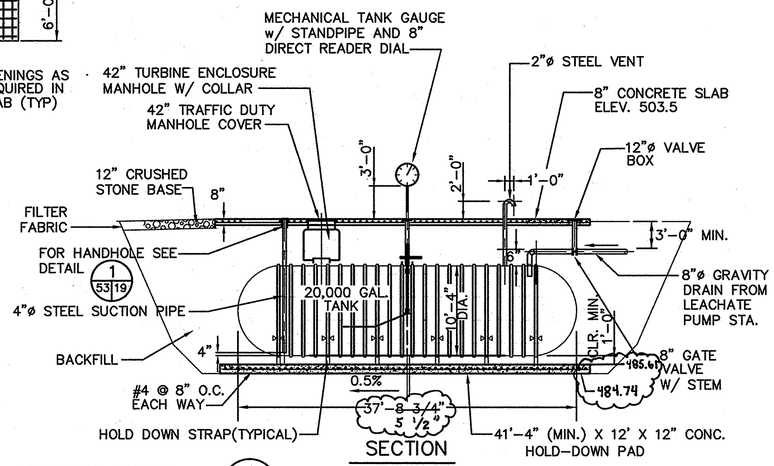

SECTION

LEACHATE STORAGE TANK 1 G8 53

SCALE: 1/8"=1'-0"

SCALE IN FEET (0 4 8 16 24)

NOTES:

1. UNDERGROUND STORAGE TANK (UST) – PROVIDE 20,000 GALLON DOUBLE ~~SINGLE~~ WALL FIBERGLASS UST WITH OPENINGS AS INDICATED.
2. THE LOCATION PLACEMENT AND NUMBER OF HOLD DOWN STRAPS SHALL BE AS SPECIFIED BY THE MANUFACTURER.
3. UST BACKFILL SHALL BE AS SPECIFIED BY THE MANUFACTURER.
4. INSTALL THE UST IN ACCORDANCE WITH THE UST MANUFACTURER'S WRITTEN INSTRUCTIONS AND PETROLEUM EQUIPMENT INSTITUTE (PEI) 100–94.
5. CONCRETE SLAB SHALL BE CONSTRUCTED SO A 0.5% SLOPE IS MAINTAINED FROM THE CENTER (HIGH POINT) TO EACH CORNER OF SLAB (LOW POINT).
6. CONCRETE MINIMUM COMPRESSIVE STRENGTH SHALL BE 4,000 PSI AS PER SPECIFICATION 03300 "CONCRETE".
7. FOR ADDITIONAL OPENINGS OR IF OPENING LOCATIONS DIFFER FROM THOSE INDICATED DUE TO TANK MANUFACTURER'S REQUIREMENTS, CONTRACTOR SHALL SUBMIT A REVISED REINFORCING PLAN FOR ENGINEERS APPROVAL.
8. CONCRETE PAD SHALL BE BROOM FINISHED.

SUBDIVISION NAME	LOT/PARCEL	
ALPHA RIDGE SOLID WASTE MANAGEMENT CENTER	54,253,220,11	
LIBER/FOLIO	ZONE	TAX/ZONE MAP
10–847/606 16–878/215 10–891/314	PEC	10 & 16
WATER CODE	SEWER CODE	CENSUS TR.
PRIVATE, EXISTING	PRIVATE, EXISTING	60–30

DEPARTMENT OF PLANNING AND ZONING
HOWARD COUNTY, MARYLAND

DIRECTOR — DATE 11/3/97
CHIEF, DEVELOPMENT ENGINEERING DIVISION — DATE 11/3/97
CHIEF, DIVISION OF LAND DEVELOPMENT — DATE 11/3/97

DEPARTMENT OF PUBLIC WORKS
HOWARD COUNTY, MARYLAND

DIRECTOR OF PUBLIC WORKS — DATE 10/30/97
CHIEF, BUREAU OF WASTE MANAGEMENT — DATE 10/30/97

SCS ENGINEERS
CONSULTING ENGINEERS
11260 ROGER BACON DRIVE
SUITE 300
RESTON, VIRGINIA 22090
PH. (703) 471–6150
FAX. (703) 471–6676

STATE OF MARYLAND — PAUL ANTHONY MANDEVILLE — No. 14962 — PROFESSIONAL ENGINEER
Paul Anthony Mandeville, PE

DES. RTT,MEH
DRN. MEH
CHK. PAM
DATE: 10–30–97

BY	NO.	REVISION	DATE
	6		
	5		
	4		
	3		
	2		
	1		

LEACHATE FACILITY LAYOUT AND DETAILS

ALPHA RIDGE LANDFILL
UNLINED CELL CLOSURE
CAPITAL PROJECT NO. C–0190–N

3rd ELECTION DISTRICT — HOWARD COUNTY, MARYLAND

SCALE: AS NOTED

SHEET 53 OF 137

SDP-97-128

M:\295077.01\FINAL PLAN2A,GRAVPRO2,L-TANK2,PSNOTES-2

LEACHFAC2

SUBDIVISION NAME	LOT/PARCEL	
ALPHA RIDGE SOLID WASTE MANAGEMENT CENTER	54,253,220,11	
LIBER/FOLIO	ZONE	TAX/ZONE MAP
10-847/606 16-878/215 10-691/314	PEC	10 & 16
WATER CODE	SEWER CODE	CENSUS TR.
PRIVATE, EXISTING	PRIVATE, EXISTING	60-30

DEPARTMENT OF PLANNING AND ZONING
HOWARD COUNTY, MARYLAND

DIRECTOR — DATE 11/3/97

CHIEF, DEVELOPMENT ENGINEERING DIVISION — DATE 11/3/97

CHIEF, DIVISION OF LAND DEVELOPMENT — DATE 11/3/97

LEGEND

- BA-7 BORING LOCATIONS
- TP6 TEST PIT LOCATIONS
- 6" TOPSOIL DEPTH AT BORING/TEST PIT
- GW-102 GROUNDWATER WELLS
- LFG-6 LFG MONITORING WELLS
- EXISTING CONTOURS
- GROUNDWATER CONTOURS
- BEDROCK CONTOURS
- WETLAND LIMITS
- WETLAND BUFFER
- SOIL BARRIER LAYER BORROW AREAS A1, A2, & A3
- BASE GRADING SOIL BORROW AREA B
- VEGETATIVE COVER SOIL BORROW AREA C
- TREE REMOVAL AREAS

NOTE: GROUNDWATER CONTOUR ELEVATIONS BASED ON MAY 1996 MEASUREMENTS.

REV. 4 ONLY

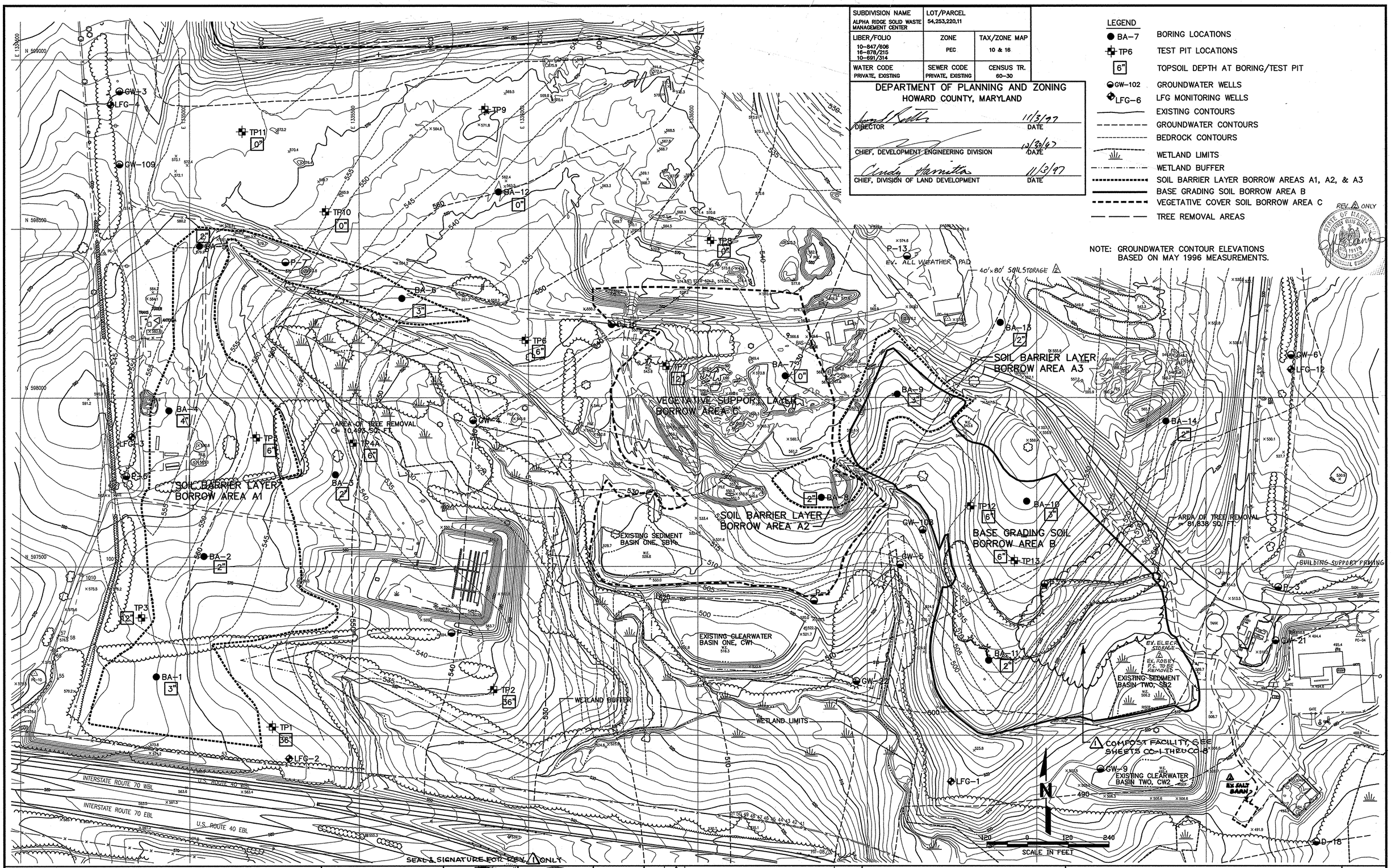

SEAL & SIGNATURE FOR REV. 1 ONLY

DEPARTMENT OF PUBLIC WORKS
HOWARD COUNTY, MARYLAND

DIRECTOR OF PUBLIC WORKS — DATE 10/30/97
CHIEF, BUREAU OF WASTE MANAGEMENT — DATE 10/30/97

SCS ENGINEERS
CONSULTING ENGINEERS
11260 ROGER BACON DRIVE
SUITE 300
RESTON, VIRGINIA 22090
PH. (703) 471-6150
FAX. (703) 471-6676

Paul Anthony Mandeville, PE

DES.	RTT, EGC
DRN.	EGC
CHK.	PAM
DATE:	10-30-97

BY	NO.	REVISION	DATE
	6		
	5		
	4		
	3		
JBD	2	ADD EX. STRUCTURES, SUPPORT PARKING	6/9/14
CSN	1	ALPHA RIDGE LANDFILL COMPOST FACILITY	3/19/12

4 REVISED SDP (JUNE 2014)

BORROW AREA EXISTING CONDITIONS PLAN

ALPHA RIDGE LANDFILL
UNLINED CELL CLOSURE
CAPITAL PROJECT NO. C-0190-N

3rd ELECTION DISTRICT — HOWARD COUNTY, MARYLAND

SCALE: 1"=120'

SHEET 54 OF 136

M:\295077.01\BORROW BORROW1

BORR1

SDP-97-128

TEST PIT LOG

PROJECT NAME: ALPHA RIDGE LANDFILL
CLIENT: HOWARD COUNTY, MD.
SCS JOB NO.: 295077.01
TEST PIT NO. 1

DATE: 2-24-97
EXCAVATED BY: HOWARD COUNTY
LOGGED BY: R. BARTOLDUS
SURFACE ELEV.: 565.7
COORDINATES: N 597025.799 E 1335243.628
TOTAL DEPTH: 13

DEPTH (FT.)	ELEV.	SAMPLE NUMBER	SYMBOL LOG	DESCRIPTION
1–3				TOPSOIL, LOAM SOME ROCK (FILL)
3–13		1–1		TAN FINE SAND AND FINE GRAVEL SOME DECOMPOSED ROCK (SP–SM)(NP)

▽ 12

SCS ENGINEERS

TEST PIT LOG

PROJECT NAME: ALPHA RIDGE LANDFILL
CLIENT: HOWARD COUNTY, MD.
SCS JOB NO.: 295077.01
TEST PIT NO. 2

DATE: 2-24-97
EXCAVATED BY: HOWARD COUNTY
LOGGED BY: R. BARTOLDUS
SURFACE ELEV.: 550.20
COORDINATES: N 597138.212 E 1335896.800
TOTAL DEPTH: 11

DEPTH (FT.)	ELEV.	SAMPLE NUMBER	SYMBOL LOG	DESCRIPTION
1–3				TOPSOIL, LOAM SOME ROCK (FILL)
3–11		2–1		TAN AND GRAY FINE TO COARSE SAND AND WEATHERED ROCK (SP–SM)(NP)
11–12				SOLID ROCK

SCS ENGINEERS

TEST PIT LOG

PROJECT NAME: ALPHA RIDGE LANDFILL
CLIENT: HOWARD COUNTY, MD.
SCS JOB NO.: 295077.01
TEST PIT NO. 3

DATE: 2-24-97
EXCAVATED BY: HOWARD COUNTY
LOGGED BY: R. BARTOLDUS
SURFACE ELEV.: 574.90
COORDINATES: N 597349.398 E 1334857.704
TOTAL DEPTH: 15

DEPTH (FT.)	ELEV.	SAMPLE NUMBER	SYMBOL LOG	DESCRIPTION
1–2				TOPSOIL & GRASS
2–5		3–1		RED BROWN SILTY CLAY (SM)
5–15		3–2		TAN FINE SAND AND SILT (SM)(NP)

SCS ENGINEERS

TEST PIT LOG

PROJECT NAME: ALPHA RIDGE LANDFILL
CLIENT: HOWARD COUNTY, MD.
SCS JOB NO.: 295077.01
TEST PIT NO. 4

DATE: 2-21-97
EXCAVATED BY: HOWARD COUNTY
LOGGED BY: R. BARTOLDUS
SURFACE ELEV.: 560.80
COORDINATES: N 597862.742 E 1335461.781
TOTAL DEPTH: 8

DEPTH (FT.)	ELEV.	SAMPLE NUMBER	SYMBOL LOG	DESCRIPTION
1–2				TOPSOIL & GRASS
2–8		4–1		DEBRIS COMPOSED OF WOOD TIMBERS, WOOD SCRAPS, BRICK, ROCK, MASONRY UNITS, CAST IRON PIPE, LAVATORY SINK, FERROUS AND NON–FERROUS METAL. (INDICATIONS POINT TO BURIED HOUSE) (SM)(NP)
8–15				NOTE: COULD NOT PENETRATE DEBRIS AFTER ENCOUNTERING WATER AND CONCRETE. MOVED 20' EAST AND BEGAN NEW TEST PIT – SEE 4A.

▽ 6

SCS ENGINEERS

TEST PIT LOG

PROJECT NAME: ALPHA RIDGE LANDFILL
CLIENT: HOWARD COUNTY, MD.
SCS JOB NO.: 295077.01
TEST PIT NO. 4A

DATE: 2-21-97
EXCAVATED BY: HOWARD COUNTY
LOGGED BY: R. BARTOLDUS
SURFACE ELEV.: 558.80
COORDINATES: N 597885.967 E 1335482.208
TOTAL DEPTH: 15

DEPTH (FT.)	ELEV.	SAMPLE NUMBER	SYMBOL LOG	DESCRIPTION
1–2				TOPSOIL & GRASS
2–3				FILL COMPOSED OF MIXED SILT AND TOPSOIL
3–15		4A–1		GRAY AND TAN LENSED FINE SAND AND SILT TRACE DECOMPOSED ROCK AND MICA (SM)(NP)
15–15				NOTE: LIMIT OF DEBRIS AT TEST PIT 4 FOUND AT WEST EDGE OF TEST PIT 4A.

SCS ENGINEERS

TEST PIT LOG

PROJECT NAME: ALPHA RIDGE LANDFILL
CLIENT: HOWARD COUNTY, MD.
SCS JOB NO.: 295077.01
TEST PIT NO. 5

DATE: 2-21-97
EXCAVATED BY: HOWARD COUNTY
LOGGED BY: R. BARTOLDUS
SURFACE ELEV.: 577.70
COORDINATES: N 597881.732 E 1335196.830
TOTAL DEPTH: 12

DEPTH (FT.)	ELEV.	SAMPLE NUMBER	SYMBOL LOG	DESCRIPTION
1–1				TOPSOIL
1–5		5–1		LIGHT BROWN SILTY CLAY (ML)
5–6		5–2		GRAY FINE SAND (SM)(NP)
6–12		5–3		TAN FINE TO COARSE SAND, SOME FINE GRAVEL AND WEATHERED ROCK (SM)(NP)
12–12				ROCK

SCS ENGINEERS

TEST PIT LOG

PROJECT NAME: ALPHA RIDGE LANDFILL
CLIENT: HOWARD COUNTY, MD.
SCS JOB NO.: 295077.01
TEST PIT NO. 6

DATE: 2-21-97
EXCAVATED BY: HOWARD COUNTY
LOGGED BY: R. BARTOLDUS
SURFACE ELEV.: 553.80
COORDINATES: N 598169.708 E 1335990.702
TOTAL DEPTH: 15

DEPTH (FT.)	ELEV.	SAMPLE NUMBER	SYMBOL LOG	DESCRIPTION
1–1				TOPSOIL & GRASS
1–4		6–1		RED BROWN SILTY SAND AND BROKEN ROCK (6" TO 12" COBBLES)(CL)
4–15		6–2		LIGHT BROWN AND TAN FINE SAND AND SILT SOME MICA (SM)(NP)

SCS ENGINEERS

TEST PIT LOG

PROJECT NAME: ALPHA RIDGE LANDFILL
CLIENT: HOWARD COUNTY, MD.
SCS JOB NO.: 295077.01
TEST PIT NO. 7

DATE: 2-21-97
EXCAVATED BY: HOWARD COUNTY
LOGGED BY: R. BARTOLDUS
SURFACE ELEV.: 546.20
COORDINATES: N 598092.455 E 1336406.295
TOTAL DEPTH: 15

DEPTH (FT.)	ELEV.	SAMPLE NUMBER	SYMBOL LOG	DESCRIPTION
1–1				TOPSOIL & GRASS
1–15		7–1		LIGHT BROWN FINE SAND, SOME SILT, TRACE MICA (SOME THIN GRAY MICA LENSES) (SM)(NP)

▽ 14.5

SCS ENGINEERS

TEST PIT LOG

PROJECT NAME: ALPHA RIDGE LANDFILL
CLIENT: HOWARD COUNTY, MD.
SCS JOB NO.: 295077.01
TEST PIT NO. 8

DATE: 2-21-97
EXCAVATED BY: HOWARD COUNTY
LOGGED BY: R. BARTOLDUS
SURFACE ELEV.: 567.0
COORDINATES: N 598465 E 1336538
TOTAL DEPTH: 15 FT

DEPTH (FT.)	ELEV.	SAMPLE NUMBER	SYMBOL LOG	DESCRIPTION
1–2		8–1		DARK BROWN–GRAY–FINE SAND AND SILT SOME MICA (FILL)(CL)
2–13		8–2		RED BROWN CLAY, SOME SILT, TRACE MICA (SM)(NP)
13–15		8–3		TAN–LIGHT BROWN SAND SOME FINE GRAVEL (SM)(NP)

SCS ENGINEERS

TEST PIT LOG

PROJECT NAME: ALPHA RIDGE LANDFILL
CLIENT: HOWARD COUNTY, MD.
SCS JOB NO.: 295077.01
TEST PIT NO. 10

DATE: 2-24-97
EXCAVATED BY: HOWARD COUNTY
LOGGED BY: R. BARTOLDUS
SURFACE ELEV.: 566.40
COORDINATES: N 598550.823 E 1335400.913
TOTAL DEPTH: 1.5 FT

DEPTH (FT.)	ELEV.	SAMPLE NUMBER	SYMBOL LOG	DESCRIPTION
1–1				FINE GRAY AND TAN SAND AND WEATHERED ROCK
1–1.5				SOLID ROCK

NOTE: MOVED TO NEW LOCATION APPROXIMATELY 20' EASTERLY TO TEST PIT 10A, CONTINUED TO ENCOUNTER ROCK NEAR SURFACE THEN BEGAN DIGGING THROUGH STRATIFIED WEATHERED ROCK WHEN BACKHOE BROKE DOWN WITH BROKEN HYDRAULIC LINE – DUE TO TIME REQUIRED FOR REPAIR TEST PIT #9 WAS NOT DONE.

SCS ENGINEERS

M:\295077.01\BORINGS TP1, TP2, TP3, TP4, TP4A, TP5, TP6, TP7, TP8, TP10

LOGS–B

DEPARTMENT OF PLANNING AND ZONING
HOWARD COUNTY, MARYLAND

DIRECTOR — DATE 11/3/97
CHIEF, DEVELOPMENT ENGINEERING DIVISION — DATE 11/3/97
CHIEF, DIVISION OF LAND DEVELOPMENT — DATE 11/3/97

SUBDIVISION NAME	LOT/PARCEL	
ALPHA RIDGE SOLID WASTE MANAGEMENT CENTER	54,253,220,11	
LIBER/FOLIO	ZONE	TAX/ZONE MAP
10–847/606 16–878/215 10–691/314	PEC	10 & 16
WATER CODE	SEWER CODE	CENSUS TR.
PRIVATE, EXISTING	PRIVATE, EXISTING	60–30

DEPARTMENT OF PUBLIC WORKS
HOWARD COUNTY, MARYLAND

DIRECTOR OF PUBLIC WORKS — DATE 10/30/97
CHIEF, BUREAU OF WASTE MANAGEMENT — DATE 10/30/97

SCS ENGINEERS
CONSULTING ENGINEERS
11260 ROGER BACON DRIVE
SUITE 300
RESTON, VIRGINIA 22090
PH. (703) 471–6150
FAX. (703) 471–6676

STATE OF MARYLAND — PAUL ANTHONY MANDEVILLE — No. 19801 — PROFESSIONAL ENGINEER
Paul Anthony Mandeville, PE

DES. EGC, RTT
DRN. EGC
CHK. PAM
DATE: 10–30–97

BY	NO.	REVISION	DATE
	6		
	5		
	4		
	3		
	2		
	1		

BORROW AREA
TEST PIT LOGS

ALPHA RIDGE LANDFILL
UNLINED CELL CLOSURE
CAPITAL PROJECT NO. C–0190–N

3rd ELECTION DISTRICT — HOWARD COUNTY, MARYLAND

SCALE: AS NOTED

SHEET 55 OF 131

SDP-97-128

TEST PIT LOG

PROJECT NAME: ALPHA RIDGE LANDFILL
CLIENT: HOWARD COUNTY, MD.
SCS JOB NO.: 295077.01
TEST PIT NO. 11

DATE: 2-24-97
EXCAVATED BY: HOWARD COUNTY
LOGGED BY: R. BARTOLDUS
SURFACE ELEV.: 572.40
COORDINATES: N 598787.120 E 1335154.765
TOTAL DEPTH: 13

DEPTH (FT.)	ELEV.	SAMPLE NUMBER	SYMBOL LOG	DESCRIPTION
1–4				GRAY-BROWN FINE SAND, SILT AND BROKEN ROCK, SOME BOULDERS, SOME ORGANIC BOG, RAGS (FILL)
4–13		11-1		TAN AND GRAY FINE SAND AND SILT, TRACE OF DECOMPOSED ROCK (SM)(NP) ▽ 10

SCS ENGINEERS

TEST PIT LOG

PROJECT NAME: ALPHA RIDGE LANDFILL
CLIENT: HOWARD COUNTY, MD.
SCS JOB NO.: 295077.01
TEST PIT NO. 12

DATE: 2-21-97
EXCAVATED BY: HOWARD COUNTY
LOGGED BY: R. BARTOLDUS
SURFACE ELEV.: 542.10
COORDINATES: N 597679.299 E 1337304.636
TOTAL DEPTH: 10 FT

DEPTH (FT.)	ELEV.	SAMPLE NUMBER	SYMBOL LOG	DESCRIPTION
				TOPSOIL
1–7		12-1		RED BROWN SANDY SILT AND CLAY, SOME WEATHERED AND DECOMPOSED ROCK ROCK (SM)(NP)
7–10				WEATHERED ROCK (SHALE)

SCS ENGINEERS

TEST PIT LOG

PROJECT NAME: ALPHA RIDGE LANDFILL
CLIENT: HOWARD COUNTY, MD.
SCS JOB NO.: 295077.01
TEST PIT NO. 13

DATE: 2-21-97
EXCAVATED BY: HOWARD COUNTY
LOGGED BY: R. BARTOLDUS
SURFACE ELEV.: 545.40
COORDINATES: N 597516.920 E 1337434.084
TOTAL DEPTH: 9 FT

DEPTH (FT.)	ELEV.	SAMPLE NUMBER	SYMBOL LOG	DESCRIPTION
				TOPSOIL
1–2		13-1		ORANGE BROWN CLAY, SOME SILT (SM)
2–7		13-2		RED BROWN SANDY SILT AND CLAY, SOME ROCK (SM)(NP)
7–9				WEATHERED ROCK (SHALE)

SCS ENGINEERS

DEPARTMENT OF PLANNING AND ZONING
HOWARD COUNTY, MARYLAND

DIRECTOR — DATE 11/3/97
CHIEF, DEVELOPMENT ENGINEERING DIVISION — DATE 10/30/97
CHIEF, DIVISION OF LAND DEVELOPMENT — DATE 11/3/97

SUBDIVISION NAME	LOT/PARCEL	
ALPHA RIDGE SOLID WASTE MANAGEMENT CENTER	54,253,220,11	
LIBER/FOLIO	ZONE	TAX/ZONE MAP
10-847/606 16-878/215 10-691/314	PEC	10 & 16
WATER CODE	SEWER CODE	CENSUS TR.
PRIVATE, EXISTING	PRIVATE, EXISTING	60-30

DEPARTMENT OF PUBLIC WORKS
HOWARD COUNTY, MARYLAND

DIRECTOR OF PUBLIC WORKS — DATE 10/30/97
CHIEF, BUREAU OF WASTE MANAGEMENT — DATE 10/30/97

SCS ENGINEERS
CONSULTING ENGINEERS
11260 ROGER BACON DRIVE
SUITE 300
RESTON, VIRGINIA 22090
PH. (703) 471-6150
FAX. (703) 471-6676

STATE OF MARYLAND — PAUL ANTHONY MANDEVILLE — LIC REG CERT NO 14666 — PROFESSIONAL ENGINEER
Paul Anthony Mandeville, PE

DES. EGC, RTT
DRN. EGC
CHK. PAM
DATE: 10-30-97

BY	NO.	REVISION	DATE
	6		
	5		
	4		
	3		
	2		
	1		

BORROW AREA
TEST PIT LOGS

ALPHA RIDGE LANDFILL
UNLINED CELL CLOSURE
CAPITAL PROJECT NO. C-0190-N
3rd ELECTION DISTRICT — HOWARD COUNTY, MARYLAND

SCALE: AS NOTED
SHEET 56 OF 131

SDP-97-128

LOGS1-B M:\295077.01\BORINGS TP11, TP12, TP13

BORING LOG BA-1

Client: Howard County, MD
Location: Alpha Ridge Landfill
Date Drilled: 5/7/96
Drilled by: Robert B. Balter Co., Inc.

Surface Elevation: 574 ft, MSL
Coordinates:N 597174.6; E 1334901.1
Total borehole depth: 20.5 ft.
Logged by: J. Stoffel

Project No: 0295077.01

SCS ENGINEERS — No Well Installed

DEPTH (ft.)	ELEVATION (ft, MSL)	SAMPLE INTERVAL (ft.)	% RECOVERY	BLOWS	HEADSPACE (ppm)	DESCRIPTION
		S-1	45	2-2-3-8		Dark brown clayey SILT - 3" Topsoil
		S-2	80	11-11-14-15		Yellowish-brown-red, highly plastic clayey SILT, trace of fine sand, micaceous, dry (MH)
5		S-3	50	4-5-9-10		Same - slightly moist
		S-4	55	9-9-11-14		Brownish-yellow, silty, fine to coarse SAND, trace of clay, micaceous, dry (SM)
		S-5	25	6-6-7-7		Same - orange-brown
10	564.0					
15		S-6	45	6-8-9		Orange-brown-gray-black, silty, very fine SAND, micaceous, trace of weathered rock, very moist (SM)
20	554.0	S-7	100	26-38-40		Same - very fine to coarse SAND, weathered rock (SM)
25						

Boring Terminated at 20.5 feet
Notes: Water Level at 24 hours: dry
Caved in at 24 hours: 12.3'
Bulk samples taken at 2.5-6' (#8), 6-9' (#9), and 9-15' (#10)

Page 1 of 1

BORING LOG BA-2

Client: Howard County, MD
Location: Alpha Ridge Landfill
Date Drilled: 5/6/96
Drilled by: Robert B. Balter Co., Inc.

Surface Elevation: 574 ft, MSL
Coordinates:N 597530.7; E 1335041.9
Total borehole depth: 20.5 ft.
Logged by: J. Stoffel

Project No: 0295077.01

SCS ENGINEERS — No Well Installed

DEPTH (ft.)	ELEVATION (ft, MSL)	SAMPLE INTERVAL (ft.)	% RECOVERY	BLOWS	HEADSPACE (ppm)	DESCRIPTION
		S-1	45	1-3-3-7		Brown clayey SILT - 2" Topsoil with 2.1% organic matter
		S-2	50	20-15-15-19		Yellowish-brown-red, highly plastic clayey SILT, trace of fine sand, dry (MH)
5		S-3	25	6-8-8-9		Same - micaceous
		S-4	65	9-11-11-14		Brownish-yellow, silty, very fine to medium SAND, micaceous, dry (SM)
		S-5	35	5-6-6-6		Same - orange-brown
10	564.0					
15		S-6	5	50/2		Same - brown-gray-orange-black, micaceous, some weathered rock fragments, moist (SM)
20	554.0	S-7	25	23-8-16		Same - very fine to coarse SAND, weathered rock, wet (SM)
25						

Boring Terminated at 20.5 feet
Notes: Water Level at 24 hours: 12.5'
Caved in at 24 hours: 13.6'
Bulk samples taken at 2-6' (#2), 6-12' (#3), and 15-20' (#4)

Page 1 of 1

BORING LOG BA-3

Client: Howard County, MD
Location: Alpha Ridge Landfill
Date Drilled: 5/6/96
Drilled by: Robert B. Balter Co., Inc.

Surface Elevation: 565 ft, MSL
Coordinates:N 597772.3; E 1335429.9
Total borehole depth: 18.5 ft.
Logged by: J. Stoffel

Project No: 0295077.01

SCS ENGINEERS — No Well Installed

DEPTH (ft.)	ELEVATION (ft, MSL)	SAMPLE INTERVAL (ft.)	% RECOVERY	BLOWS	HEADSPACE (ppm)	DESCRIPTION
		S-1	45	3-4-6-10		Brown silty SAND - 2" Topsoil with 3.1% organic matter
		S-2	50	7-8-12-7		Brown, silty, very fine to medium SAND (SM)
5		S-3	25	6-5-8-21		Same - orange-brown, very fine to coarse SAND, Micaceous (SM)
		S-4	65	6-5-8-35		Same - with fine gravel (SM)
		S-5	35	7-4-4-6		Same - no gravel
10	555.0					
15		S-6	5	10-14-14		Same - green-brown, silty, fine to medium SAND, micaceous, wet (SM)
		S-7	25	12-15-16		Same - orange-brown-black, mottled, wet (SM)
20	545.0					
25						

Boring Terminated at 18.5 feet
Notes: Water Level at 24 hours: 11.1'
Caved in at 24 hours: 13.6'
Bulk samples taken at 2-6' (#5), 6-9' (#6), and 10-14' (#7)

Page 1 of 1

BORING LOG BA-4

Client: Howard County, MD
Location: Alpha Ridge Landfill
Date Drilled: 5/6/96
Drilled by: Robert B. Balter Co., Inc.

Surface Elevation: 586 ft, MSL
Coordinates:N 597961.6; E 1334938.9
Total borehole depth: 20.0 ft.
Logged by: J. Stoffel

Project No: 0295077.01

SCS ENGINEERS — No Well Installed

DEPTH (ft.)	ELEVATION (ft, MSL)	SAMPLE INTERVAL (ft.)	% RECOVERY	BLOWS	HEADSPACE (ppm)	DESCRIPTION
		S-1	35	1-4-5-8		Brown-red clayey sandy SILT (MH) - 4" Topsoil with 1.9% organic matter
		S-2	5	10-12-12-12		Brown-orange-red, highly plastic clayey sandy SILT slightly moist (MH)
5		S-3	80	3-3-7-8		Yellow-brown, silty SAND, micaceous, dry (SM)
		S-4	30	8-9-9-7		Same - yellow-brown-black
		S-5	50	4-5-6-7		Same - red-orange
10	576.0					
15		S-6	0	5-10-12		Same - yellow-black-gray, very fine SAND (SM)
20	566.0	S-7	70	27-50/5		Same - yellow-brown-black
25						

Boring Terminated at 20.0 feet
Notes: Water Level at 24 hours: dry
Caved in at 24 hours: 15'
Bulk samples taken at 5.6-9' (#1)

Page 1 of 1

BORING LOG BA-5

Client: Howard County, MD
Location: Alpha Ridge Landfill
Date Drilled: 5/7/96
Drilled by: Robert B. Balter Co., Inc.

Surface Elevation: 582 ft, MSL
Coordinates:N 598448.7; E 1335029.1
Total borehole depth: 20.5 ft.
Logged by: J. Stoffel

Project No: 0295077.01

SCS ENGINEERS — No Well Installed

DEPTH (ft.)	ELEVATION (ft, MSL)	SAMPLE INTERVAL (ft.)	% RECOVERY	BLOWS	HEADSPACE (ppm)	DESCRIPTION
		S-1	30	2-7-9-12		Brown sandy SILT - 2" Topsoil with 4.2% organic matter
		S-2	50	13-12-16-12		Orange-brown, highly plastic clayey SILT, trace of very fine sand, dry (MH)
5		S-3	25	6-5-7-7		Brownish-orange, silty, fine SAND, micaceous, dry (SM)
		S-4	40	7-7-7-6		
		S-5	30	4-4-4-6		Same - orange-brown
10	572.0					
15		S-6	50	12-9-7		Same - orange-brown, very fine to medium SAND, wet (SM)
20	562.0	S-7	100	15-26-40		Same - trace of weathered rock, very fine to coarse SAND, micaceous, wet (SM)
25						

Boring Terminated at 20.5 feet
Notes: Water Level at 24 hours: 12.9'
Caved in at 24 hours: 14.1'
Bulk samples taken at 2-6' (#11), 6-12' (#12), and 12-17' (#13)

Page 1 of 1

BORING LOG BA-6

Client: Howard County, MD
Location: Alpha Ridge Landfill
Date Drilled: 5/7/96
Drilled by: Robert B. Balter Co., Inc.

Surface Elevation: 558 ft, MSL
Coordinates:N 598293.6; E 1335626.4
Total borehole depth: 10.0 ft.
Logged by: J. Stoffel

Project No: 0295077.01

SCS ENGINEERS — No Well Installed

DEPTH (ft.)	ELEVATION (ft, MSL)	SAMPLE INTERVAL (ft.)	% RECOVERY	BLOWS	HEADSPACE (ppm)	DESCRIPTION
		S-1	50	2-6-8-16		Dark brown clayey SILT (MH) - 3" Topsoil with 2.5% organic matter
		S-2	30	11-12-12-16		Orange-brown, highly plastic sandy SILT, trace of coarse sand, dry (MH)
5		S-3	40	4-5-7-8		Orange-green-white, clayey, very fine to medium SAND, slightly moist (SC)
		S-4	90	6-6-5-6		Orange-brown, silty, very fine SAND, slightly moist, micaceous, some coarse gravel (SM)
		S-5	75	6-7-10-12		Same - wet, trace of weathered rock
10	548.0					
15						
20	538.0					
25						

Boring Terminated at 10.0 feet
Notes: Water Level at 24 hours: 5'
Caved in at 24 hours: 5.8'
Bulk samples taken at 4-8' (#14)

Page 1 of 1

BORING LOG BA-7

Client: Howard County, MD
Location: Alpha Ridge Landfill
Date Drilled: 5/8/96
Drilled by: Robert B. Balter Co., Inc.

Surface Elevation: 587 ft, MSL
Coordinates:N 598064.1; E 1336758.6
Total borehole depth: 20.5 ft.
Logged by: J. Stoffel

Project No: 0295077.01

SCS ENGINEERS — No Well Installed

DEPTH (ft.)	ELEVATION (ft, MSL)	SAMPLE INTERVAL (ft.)	% RECOVERY	BLOWS	HEADSPACE (ppm)	DESCRIPTION
		S-1	30	9-9-9-23		Brown silty, fine SAND, some cobbles, micaceous, slightly moist (SP-SM)
		S-2	10	10-11-9-10		
5		S-3	15	7-9-5-5		Same - orange-red-brown, slightly moist
		S-4	50	4-5-4-3		
		S-5	25	10-11-12-12		Orange-gray, silty, fine to coarse SAND, trace of gravel, micaceous, dry (SM)
10	557.0					
15		S-6	50	8-10-11		Same - yellow-brown, trace of weathered rock, dry (SM)
20	547.0	S-7	60	10-12-15		
25						

Boring Terminated at 20.5 feet
Notes: Water Level at 24 hours: dry
Caved in at 24 hours: 12.5'
Bulk samples taken at 9-12' (#16)

Page 1 of 1

BORING LOG BA-8

Client: Howard County, MD
Location: Alpha Ridge Landfill
Date Drilled: 5/9/96
Drilled by: Robert B. Balter Co., Inc.

Surface Elevation: 550 ft, MSL
Coordinates:N 597704.3; E 1336864.7
Total borehole depth: 16.2 ft.
Logged by: J. Stoffel

Project No: 0295077.01

SCS ENGINEERS — No Well Installed

DEPTH (ft.)	ELEVATION (ft, MSL)	SAMPLE INTERVAL (ft.)	% RECOVERY	BLOWS	HEADSPACE (ppm)	DESCRIPTION
		S-1	25	1-3-3-6		Brown sandy SILT, slightly moist, 2" Topsoil with 2.9% organic matter; Brown sandy highly plastic SILT, moist (MH)
		S-2	40	9-7-5-5		Same - brown-orange, moist
5		S-3	30	3-4-4-6		
		S-4	65	8-5-8-16		Orange-brown, poorly-graded, silty fine SAND, micaceous, dry (SP-SM)
		S-5	40	14-6-7-9		Same - orange-brown-black, trace of weathered rock, dry
10	540.0					
15		S-6	100	50/4		Same - Orange-gray, weathered rock (SM)
20	530.0					
25						

Boring Terminated at 16.2 feet
Notes: Water Level at 24 hours: dry
Caved in at 24 hours: 10.1'
Bulk samples taken at 2-4' (#20), 11-16 (#21)

Page 1 of 1

BORING LOG BA-9

Client: Howard County, MD
Location: Alpha Ridge Landfill
Date Drilled: 5/8/96
Drilled by: Robert B. Balter Co., Inc.

Surface Elevation: 550 ft, MSL
Coordinates:N 598010.0; E 1337088.9
Total borehole depth: 20.5 ft.
Logged by: J. Stoffel

Project No: 0295077.01

SCS ENGINEERS — No Well Installed

DEPTH (ft.)	ELEVATION (ft, MSL)	SAMPLE INTERVAL (ft.)	% RECOVERY	BLOWS	HEADSPACE (ppm)	DESCRIPTION
		S-1	30	2-2-3-4		Brown clayey SILT, moist, 3" Topsoil, 5.1% organic matter
		S-2	80	5-6-10-8		Brown-red, highly plastic clayey SILT, micaceous, moist (MH)
5		S-3	65	4-4-5-8		Red-brown silty, fine to medium SAND, micaceous, slightly moist (SM)
		S-4	70	7-7-8-14		Same - brown-orange, trace of weathered rock (SM)
		S-5	100	50/4		Same - brown-orange, weathered rock, micaceous, dry (SM)
10	540.0					
15		S-6	70	18-24-28		
20	530.0	S-7	600	17-16-23		Same - weathered rock, very moist (SM)
25						

Boring Terminated at 20.5 feet
Notes: Water Level at 24 hours: dry
Caved in at 24 hours: 14.3'
Bulk samples taken at 4-7' (#17), 7-8' (#18) and 14-16' (#19)

Page 1 of 1

DEPARTMENT OF PUBLIC WORKS
HOWARD COUNTY, MARYLAND

10/30/97 — DIRECTOR OF PUBLIC WORKS — DATE
John O'Hara 10/30/97 — CHIEF, BUREAU OF WASTE MANAGEMENT — DATE

SCS ENGINEERS
CONSULTING ENGINEERS
11260 ROGER BACON DRIVE
SUITE 300
RESTON, VIRGINIA 22090
PH. (703) 471-6150
FAX. (703) 471-6676

STATE OF MARYLAND — PAUL ANTHONY MANDEVILLE — LIC REG CERT NO 14968 — PROFESSIONAL ENGINEER

DES. AST		6		
		5		
DRN. AST		4		
		3		
CHK. RTT		2		
		1		
DATE: 12-16-96	BY	NO.	REVISION	DATE

BORROW AREA
BORING LOGS

ALPHA RIDGE LANDFILL
CELL CLOSURE
CAPITAL PROJECT NO. C-0190

1st ELECTION DISTRICT — HOWARD COUNTY, MARYLAND

SCALE: NO SCALE

SHEET 57 OF 138

SDP-97-128

SHT13

SHT13

BORING LOG BA-10

Project No: 0295077.01

Client: Howard County, MD
Location: Alpha Ridge Landfill
Date Drilled: 5/9/96
Drilled by: Robert B. Balter Co., Inc.
Surface Elevation: 555 ft, MSL
Coordinates: N 597693.? E 1337470.5
Total borehole depth: 20.5 ft.
Logged by: J. Stoffel

SCS ENGINEERS — No Well Installed

DEPTH (ft.)	ELEVATION (ft, MSL)	SAMPLE INTERVAL (ft.)	% RECOVERY	BLOWS	HEADSPACE (ppm)	DESCRIPTION
		S-1	30	1-2-2-3		Brown clayey SAND (SC) – 3" Topsoil with 4.7% organic matter
		S-2	40	3-3-5-3		Orange-brown, clayey fine to medium SAND, micaceous, moist (SC)
5		S-3	30	3-3-4-5		Same – dry
		S-4	45	4-4-5-5		Red-brown, silty, fine to medium SAND, dry, micaceous, trace of weathered rock (SM)
		S-5	30	5-5-4-6		Brown-gray-white, silty, very fine to medium SAND, micaceous, dry weathered rock (SM)
10	545.0					
15		S-6	60	12-18-25		Same – orange-white
20	535.0	S-7	60	20-18-14		
25						

Boring Terminated at 20.5 feet

Notes: Water Level at 24 hours: dry

Caved in at 24 hours: 15.3'

Bulk samples taken at 2-4' (#25), 4-8' (#26), 8-18' (#27)

Page 1 of 1

BORING LOG BA-11

Project No: 0295077.01

Client: Howard County, MD
Location: Alpha Ridge Landfill
Date Drilled: 5/9/96
Drilled by: Robert B. Balter Co., Inc.
Surface Elevation: 535 ft, MSL
Coordinates: N 597222.2; E 1337358.3
Total borehole depth: 19.3 ft.
Logged by: J. Stoffel

SCS ENGINEERS — No Well Installed

DEPTH (ft.)	ELEVATION (ft, MSL)	SAMPLE INTERVAL (ft.)	% RECOVERY	BLOWS	HEADSPACE (ppm)	DESCRIPTION
		S-1	40	2-3-4-5		Brown silty fine to medium SAND, moist – 2" topsoil (SM)
		S-2	100	8-12-12-21		Orange-brown silty fine SAND, micaceous, dry (SM)
5		S-3	40	8-12-21-19		Same – dry
		S-4	50	14-18-11-18		Brown-orange-white silty, fine SAND, rock fragments, micaceous, dry (SP-SM)
		S-5	100	35-50/2		Same – Dark gray-white, weathered rock (SM)
10	525.0					
15		S-6	60	4-8-9		Same – yellow-brown-black, weathered rock, slightly moist (SM)
20	515.0	S-7	100	50/4		
25						

Boring Terminated at 19.3 feet

Notes: Water Level at 24 hours: dry

Caved in at 24 hours: 14.1'

Bulk samples taken at 2-4' (#22), 4-8' (#23), 14-17' (#24)

Page 1 of 1

BORING LOG BA-12

Project No: 0295077.01

Client: Howard County, MD
Location: Alpha Ridge Landfill
Date Drilled: 5/7/96
Drilled by: Robert B. Balter Co., Inc.
Surface Elevation: 562 ft, MSL
Coordinates: N 598609.0; E 1335911.7
Total borehole depth: 18.5 ft.
Logged by: J. Stoffel

SCS ENGINEERS — No Well Installed

DEPTH (ft.)	ELEVATION (ft, MSL)	SAMPLE INTERVAL (ft.)	% RECOVERY	BLOWS	HEADSPACE (ppm)	DESCRIPTION
		S-1	30	2-2-3-4		Brown, sandy highly plastic SILT, micaceous, moist (MH)
		S-2	50	5-7-8-8		
5		S-3	30	3-4-6-7		Orange-red-brown, silty, very fine to medium SAND, micaceous, dry (SM)
		S-4	70	8-8-9-9		Same – orange-brown, trace of weathered rock
		S-5	40	6-7-9-8		
10	552.0					
15		S-6	60	15-15-17		Same – orange-brown mottled, weathered rock, moist (SM)
		S-7	100	24-50/4		
20	542.0					
25						

Boring Terminated at 18.5 feet

Notes: Water Level at 24 hours: dry

Caved in at 24 hours: 12.5'

Bulk samples taken at 4-9' (#15)

Page 1 of 1

BORING LOG BA-13

Project No: 0295077.01

Client: Howard County, MD
Location: Alpha Ridge Landfill
Date Drilled: 5/9/96
Drilled by: Robert B. Balter Co., Inc.
Surface Elevation: 565 ft, MSL
Coordinates: N 597930.0; E 1337392.9
Total borehole depth: 20.5 ft.
Logged by: J. Stoffel

SCS ENGINEERS — No Well Installed

DEPTH (ft.)	ELEVATION (ft, MSL)	SAMPLE INTERVAL (ft.)	% RECOVERY	BLOWS	HEADSPACE (ppm)	DESCRIPTION
		S-1	20	3-4-4-5		Brown silty very fine to medium SAND, moist – 2" topsoil with 3.1% organic matter
		S-2	70	6-6-11-11		Orange-brown silty very fine to medium SAND, micaceous, slightly moist (SM)
5		S-3	40	7-6-4-3		Same – dry
		S-4	50	5-5-4-5		
		S-5	60	5-7-17-23		Same – light gray-brown, weathered rock, micaceous, dry (SM)
10	555.0					
15		S-6	60	28-27-29		Same – dry
20	545.0	S-7	30	12-15-14		
25						

Boring Terminated at 20.5 feet

Notes: Water Level at 24 hours: dry

Caved in at 24 hours: 14.5'

Bulk samples taken at 4-8' (#28), 8-14' (#29)

Page 1 of 1

BORING LOG BA-14

Project No: 0295077.01

Client: Howard County, MD
Location: Alpha Ridge Landfill
Date Drilled: 5/10/96
Drilled by: Robert B. Balter Co., Inc.
Surface Elevation: 545 ft, MSL
Coordinates: N 597930.0; E 1337881.1
Total borehole depth: 20.5 ft.
Logged by: J. Stoffel

SCS ENGINEERS — No Well Installed

DEPTH (ft.)	ELEVATION (ft, MSL)	SAMPLE INTERVAL (ft.)	% RECOVERY	BLOWS	HEADSPACE (ppm)	DESCRIPTION
		S-1	50	2-2-4-5		Brown-red silty SAND, slightly moist, 2" Topsoil
		S-2	90	6-9-9-12		Same – brown-orange-red, micaceous, dry (SM)
5		S-3	80	4-5-7-7		
		S-4	70	8-8-9-7		Orange-light brown-gray, poorly-graded, silty fine SAND, micaceous, trace of weathered rock, dry (SP)
		S-5	90	5-6-6-8		
10	535.0					
15		S-6	85	8-7-7		Same – brown-gray-black, silty SAND, weathered rock (SM)
20	525.0	S-7	100	6-8-20		Same – light brown, very fine to medium SAND
25						

Boring Terminated at 20.5 feet

Notes: Water Level at 24 hours: dry

Caved in at 24 hours: 18.2'

Bulk samples taken at 1-4' (#30), 4-10' (#31), 12-19' (#32)

Page 1 of 1

BORING LOG BB-1

Project No: 0295077.01

Client: Howard County, MD
Location: Alpha Ridge Landfill
Date Drilled: 5/13/96
Drilled by: Robert B. Balter Co., Inc.
Surface Elevation: ft, MSL
Coordinates: N ; E
Total borehole depth: 16.0 ft.
Logged by: J. Stoffel

SCS ENGINEERS — No Well Installed

DEPTH (ft.)	ELEVATION (ft, MSL)	SAMPLE INTERVAL (ft.)	% RECOVERY	BLOWS	HEADSPACE (ppm)	DESCRIPTION
						Gravel 1"
		S-1	35	2-4-9-8		Brown clayey SILT, micaceous, slightly moist (ML)
		S-2	70	7-10-11-11		
5		S-3	50	4-6-7-8		Orange-brown clayey SAND, slightly moist (SC)
		S-4	50	6-8-8-7		Orange-brown silty SAND, micaceous, moist (SM)
		S-5	70	2-3-3-2		Light brown silty, fine to coarse SAND, micaceous, moist (SP-SM)
10		S-6	80	3-3-4-4		Brown-yelow silty SAND, dry (SM)
		S-7	100	2-3-4-5		Same – brown, trace of weathered rock, wet (SM)
15		S-8	90	3-4-5-6		
20						
25						

Boring Terminated at 16 feet

Notes: Water Level at 24 hours: 9.4'

Caved in at 24 hours: 15.4'

Bulk samples taken at 0-5' (#33), 5-9' (#34), 10-13 (#35)

Page 1 of 1

BORING LOG BB-2

Project No: 0295077.01

Client: Howard County, MD
Location: Alpha Ridge Landfill
Date Drilled: 5/13/96
Drilled by: Robert B. Balter Co., Inc.
Surface Elevation: ft, MSL
Coordinates: N ; E
Total borehole depth: 20.0 ft.
Logged by: J. Stoffel

SCS ENGINEERS — No Well Installed

DEPTH (ft.)	ELEVATION (ft, MSL)	SAMPLE INTERVAL (ft.)	% RECOVERY	BLOWS	HEADSPACE (ppm)	DESCRIPTION
						Gravel 2"
		S-1	15	4-14-8-6		Orange clayey SILT, micaceous, dry (ML)
		S-2	50	6-6-10-8		
5		S-3	10	4-4-4-4		Yellow-brown sandy CLAY, moist (CL)
		S-4	30	4-4-4-4		Yellow-brown sandy SILT, micaceous, moist (ML)
		S-5	0	2-2-2-3		Brown silty CLAY, very soft and moist (CL)
10		S-6	20	1-2-2-3		
		S-7	80	4-3-4-4		Brown-orange sandy SILT, moist (ML)
15		S-8	40	4-5-9-14		
		S-9	70	12-18-14-14		Gray silty very fine to coarse SAND, micaceous, moist (SP-SM)
		S-10	75	4-3-3-4		Same – brown, some small gravel and trace of weathered rock, wet
20						
25						

Boring Terminated at 20 feet

Notes: Water Level at 24 hours: 11'

Caved in at 24 hours: 17.5'

Bulk samples taken at 0-5' (#36), 8-12' (#37), 14-18 (#38)

Page 1 of 1

BORING LOG BB-3

Project No: 0295077.01

Client: Howard County, MD
Location: Alpha Ridge Landfill
Date Drilled: 5/13/96
Drilled by: Robert B. Balter Co., Inc.
Surface Elevation: ft, MSL
Coordinates: N ; E
Total borehole depth: 12.0 ft.
Logged by: J. Stoffel

SCS ENGINEERS — No Well Installed

DEPTH (ft.)	ELEVATION (ft, MSL)	SAMPLE INTERVAL (ft.)	% RECOVERY	BLOWS	HEADSPACE (ppm)	DESCRIPTION
		S-1	25	2-5-8-6		Brown silty CLAY, slightly moist, 2" Topsoil; Same – brown silty CLAY, micaceous, moist (CL)
		S-2	65	10-10-9-9		Same – dry
5		S-3	5	4-6-9-10		
		S-4	75	9-8-8-9		Brown-orange-gray, silty very fine to medium SAND, micaceous, slightly moist (SM)
		S-5	70	2-3-3-4		
10		S-6	80	2-3-3-4		Same – orange-brown-black, wet
15						
20						
25						

Boring Terminated at 12 feet

Notes: Water Level at 24 hours: 7.5'

Caved in at 24 hours: 9.3'

Bulk samples taken at 0-5' (#39), 5-8' (#40)

Page 1 of 1

DEPARTMENT OF PUBLIC WORKS
HOWARD COUNTY, MARYLAND

DIRECTOR OF PUBLIC WORKS — DATE 10/30/97
CHIEF, BUREAU OF WASTE MANAGEMENT — DATE 10/30/97

SCS ENGINEERS
CONSULTING ENGINEERS
11260 ROGER BACON DRIVE
SUITE 300
RESTON, VIRGINIA 22090
PH. (703) 471-6150
FAX. (703) 471-6676

STATE OF MARYLAND — PAUL ANTHONY MANDEVILLE — LIC REG CERT NO 14968 — PROFESSIONAL ENGINEER

DES.	AST		6		
DRN.	AST		5		
			4		
CHK.	RTT		3		
			2		
DATE: 12-16-96			1		
		BY	NO.	REVISION	DATE

BORROW AREA
BORING LOGS

ALPHA RIDGE LANDFILL
CELL CLOSURE
CAPITAL PROJECT NO. C-0190

1st ELECTION DISTRICT — HOWARD COUNTY, MARYLAND

SCALE: NO SCALE

SHEET 58 OF 131

SDP-97-128

SUBDIVISION NAME	LOT/PARCEL	
ALPHA RIDGE SOLID WASTE MANAGEMENT CENTER	54,253,220,11	
LIBER/FOLIO	ZONE	TAX/ZONE MAP
10-847/606 16-878/215 10-691/314	PEC	10 & 16
WATER CODE	SEWER CODE	CENSUS TR.
PRIVATE, EXISTING	PRIVATE, EXISTING	60-30

DEPARTMENT OF PLANNING AND ZONING
HOWARD COUNTY, MARYLAND

DIRECTOR — DATE 11/3/97

CHIEF, DEVELOPMENT ENGINEERING DIVISION — DATE 11/3/97

CHIEF, DIVISION OF LAND DEVELOPMENT — DATE 11/3/97

LEGEND

- BA-7 — BORING LOCATIONS
- TP6 — TEST PIT LOCATIONS
- 6" — TOPSOIL DEPTH AT BORING/TEST PIT
- GW-102 — GROUNDWATER WELLS
- LFG-6 — LFG MONITORING WELLS
- EXISTING CONTOURS
- WETLAND LIMITS
- SOIL BARRIER LAYER BORROW AREAS A1, A2, & A3
- TREE REMOVAL AREAS
- WETLAND BUFFER

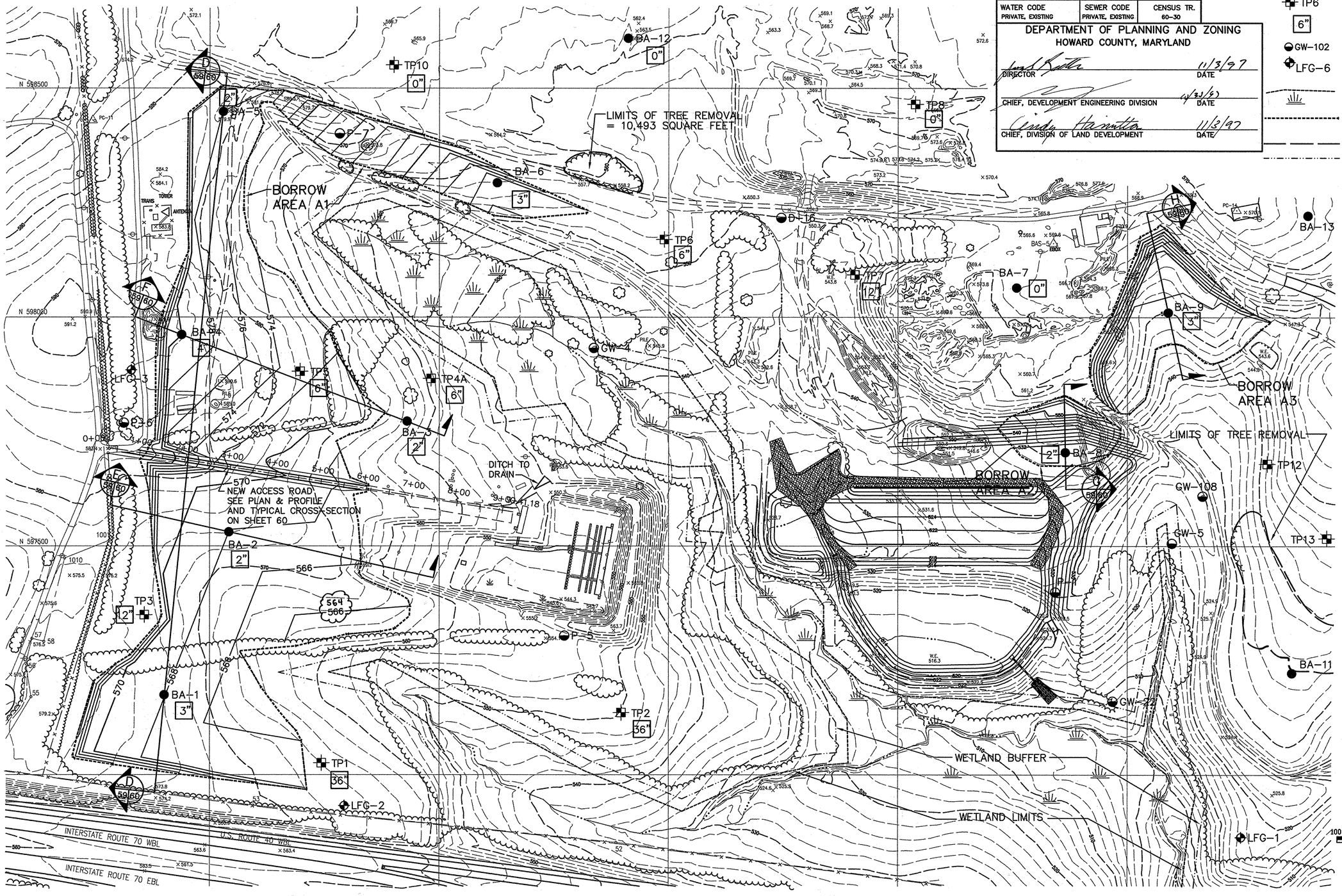

SEE ETA SHEET 70-AB FOR AS BUILT CLEARWATER 1 BASIN PLAN

N

100 0 100 200
SCALE IN FEET

M:\295077.01\BORROW BORROW3

BORR3

DEPARTMENT OF PUBLIC WORKS
HOWARD COUNTY, MARYLAND

DIRECTOR OF PUBLIC WORKS — DATE 10/30/97
CHIEF, BUREAU OF WASTE MANAGEMENT — DATE 10/30/97

SCS ENGINEERS
CONSULTING ENGINEERS
11260 ROGER BACON DRIVE
SUITE 300
RESTON, VIRGINIA 22090
PH. (703) 471-6150
FAX. (703) 471-6676

STATE OF MARYLAND — PAUL ANTHONY MANDEVILLE — LIC REG CERT NO. 14968 — PROFESSIONAL ENGINEER

Paul Anthony Mandeville, PE

DES. EGC, RTT
DRN. EGC
CHK. PAM
DATE: 10-30-97

BY	NO.	REVISION	DATE
	6		
	5		
	4		
	3		
	2		
	1		

SOIL BARRIER LAYER
BORROW AREAS A1, A2, & A3

ALPHA RIDGE LANDFILL
UNLINED CELL CLOSURE
CAPITAL PROJECT NO. C-0190-N

3rd ELECTION DISTRICT — HOWARD COUNTY, MARYLAND

SCALE: 1"=100'

SHEET 59 OF 131

SDP-97-128

SUBDIVISION NAME	LOT/PARCEL	
ALPHA RIDGE SOLID WASTE MANAGEMENT CENTER	54,253,220,11	
LIBER/FOLIO	ZONE	TAX/ZONE MAP
10-847/806 16-878/215 10-891,314	PEC	10 & 16
WATER CODE	SEWER CODE	CENSUS TR.
PRIVATE, EXISTING	PRIVATE, EXISTING	60-30

DEPARTMENT OF PLANNING AND ZONING
HOWARD COUNTY, MARYLAND

DIRECTOR — DATE 11/3/97
CHIEF, DEVELOPMENT ENGINEERING DIVISION — DATE 10/31/97
CHIEF, DIVISION OF LAND DEVELOPMENT — DATE 11/3/97

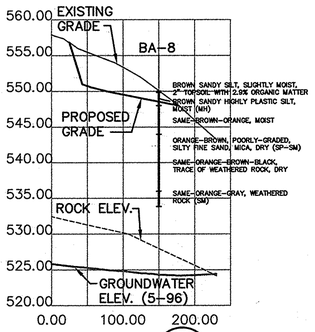

SECTION G 59|60

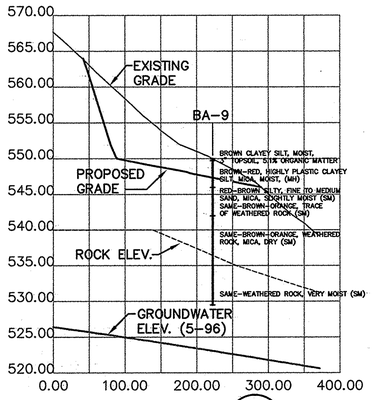

SECTION H 59|60

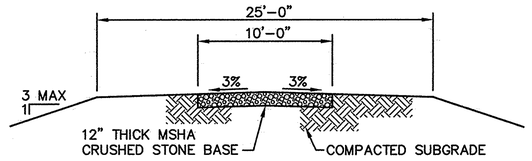

ROAD SECTION 1 60|60
SCALE: 3/16"=1'-0"

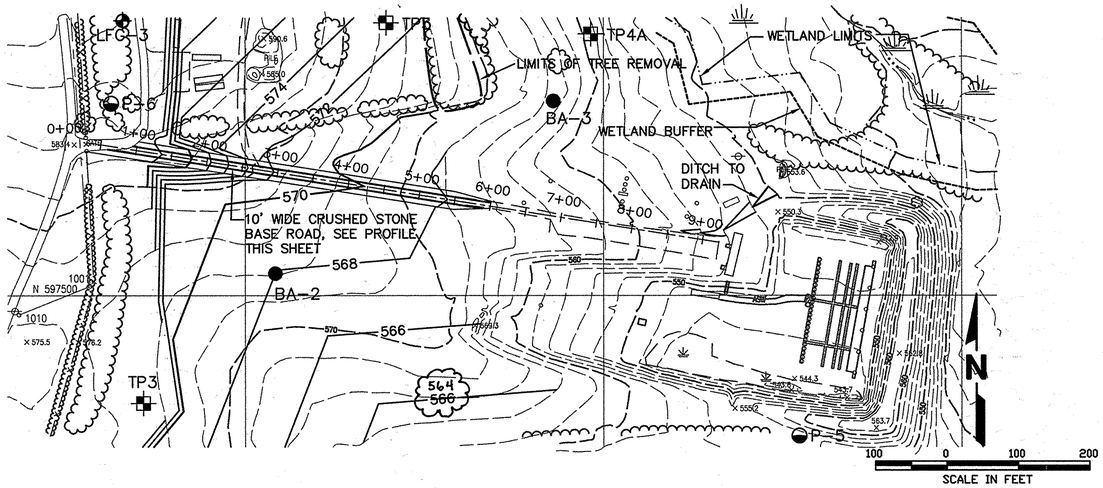

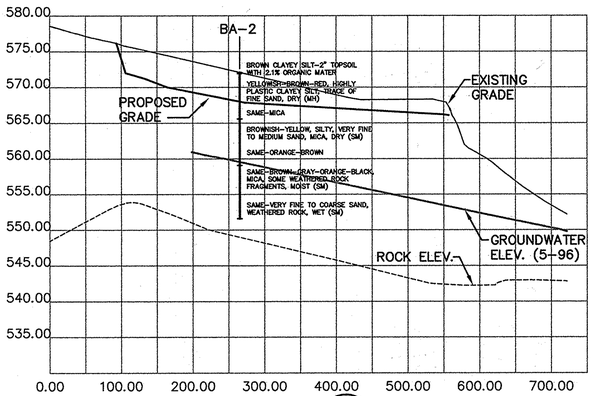

SECTION E 59|60

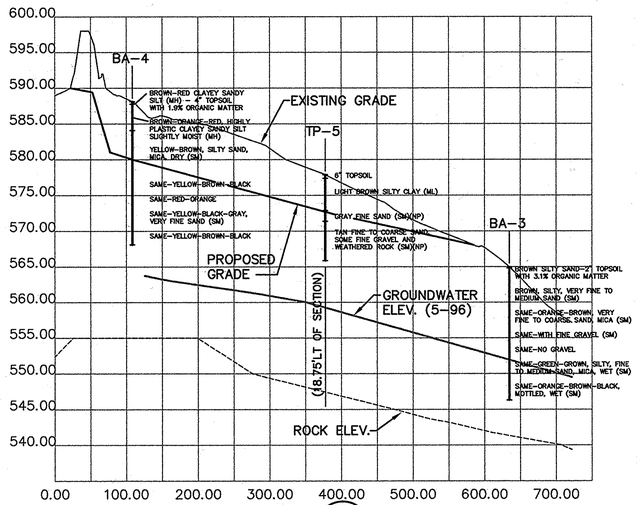

SECTION F 59|60

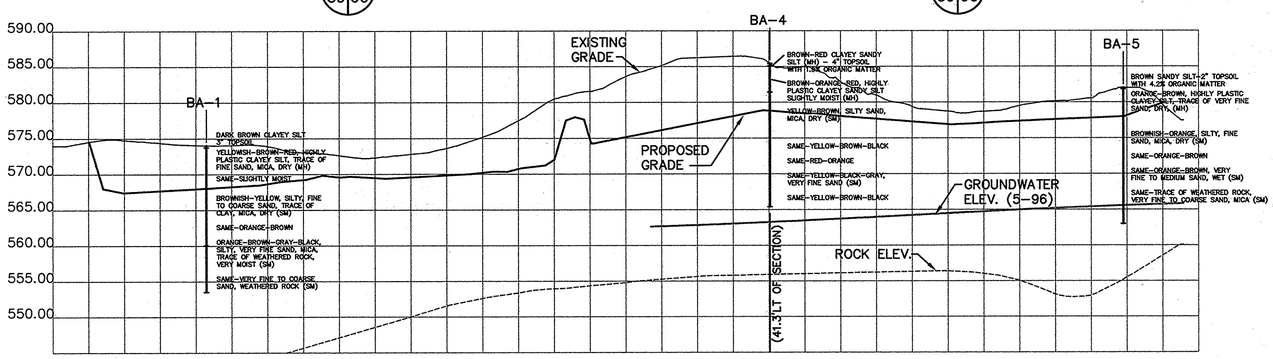

SECTION D 59|60

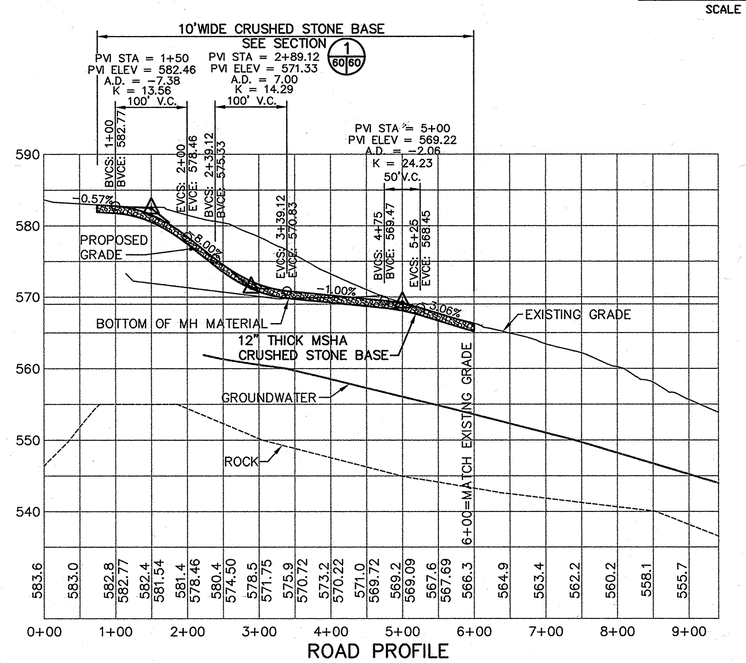

DEPARTMENT OF PUBLIC WORKS HOWARD COUNTY, MARYLAND	SCS ENGINEERS CONSULTING ENGINEERS 11260 ROGER BACON DRIVE SUITE 300 RESTON, VIRGINIA 22090 PH. (703) 471-6150 FAX. (703) 471-6676		DES. EGC, RTT DRN. EGC CHK. PAM DATE: 10-30-97	BY / NO. / REVISION / DATE	SOIL BARRIER BORROW AREA CROSS-SECTIONS AND DETAILS	ALPHA RIDGE LANDFILL UNLINED CELL CLOSURE CAPITAL PROJECT NO. C-0190-N	SCALE: 1"=100' SHEET 60 OF 131
DIRECTOR OF PUBLIC WORKS — DATE 10/30/97 CHIEF, BUREAU OF WASTE MANAGEMENT — DATE 10/30/97		STATE OF MARYLAND PAUL ANTHONY MANDEVILLE No. 18851 REGISTERED PROFESSIONAL ENGINEER Paul Anthony Mandeville, PE		6 5 4 3 2 1		3rd ELECTION DISTRICT — HOWARD COUNTY, MARYLAND	

M:\295077.01\BORROW SECDEFG, ROADPRO

BORR3A

SDP-97-128

DEPARTMENT OF PLANNING AND ZONING
HOWARD COUNTY, MARYLAND

DIRECTOR	DATE 11/3/97
CHIEF, DEVELOPMENT ENGINEERING DIVISION	DATE 10/30/97
CHIEF, DIVISION OF LAND DEVELOPMENT	DATE 11/3/97

SUBDIVISION NAME	LOT/PARCEL	
ALPHA RIDGE SOLID WASTE MANAGEMENT CENTER	54,253,220,11	
LIBER/FOLIO	ZONE	TAX/ZONE MAP
10-847/606 16-878/215 10-691/314	PEC	10 & 16
WATER CODE	SEWER CODE	CENSUS TR.
PRIVATE, EXISTING	PRIVATE, EXISTING	60-30

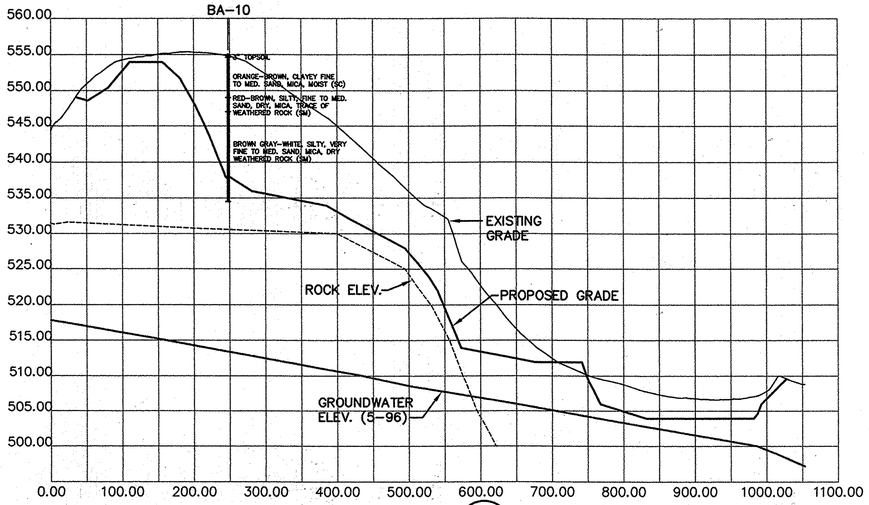

SECTION C 61|61

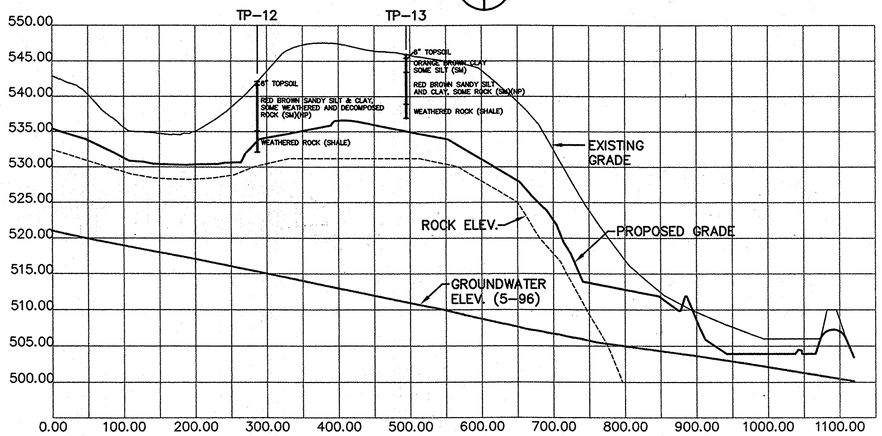

SECTION B 61|61

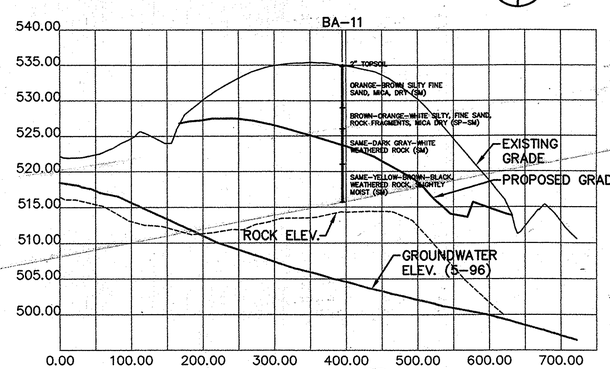

SECTION A 61|61

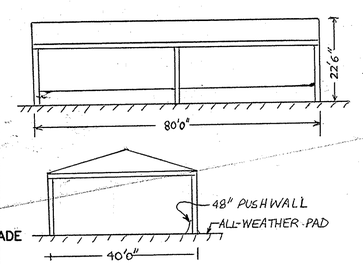

4 COVERED SOIL STORAGE

REV 4 ONLY

SEAL & SIGNATURE FOR REV. 1 ONLY

2 ADDITIONAL PARKING IS EXEMPT FROM FOREST CONSERVATION IN ACCORDANCE WITH APPENDIX O OF THE FOREST CONSERVATION MANUAL WHICH EXEMPTS ACTIVITIES DISTURBING LESS THAN 40,000 SF OF FOREST.

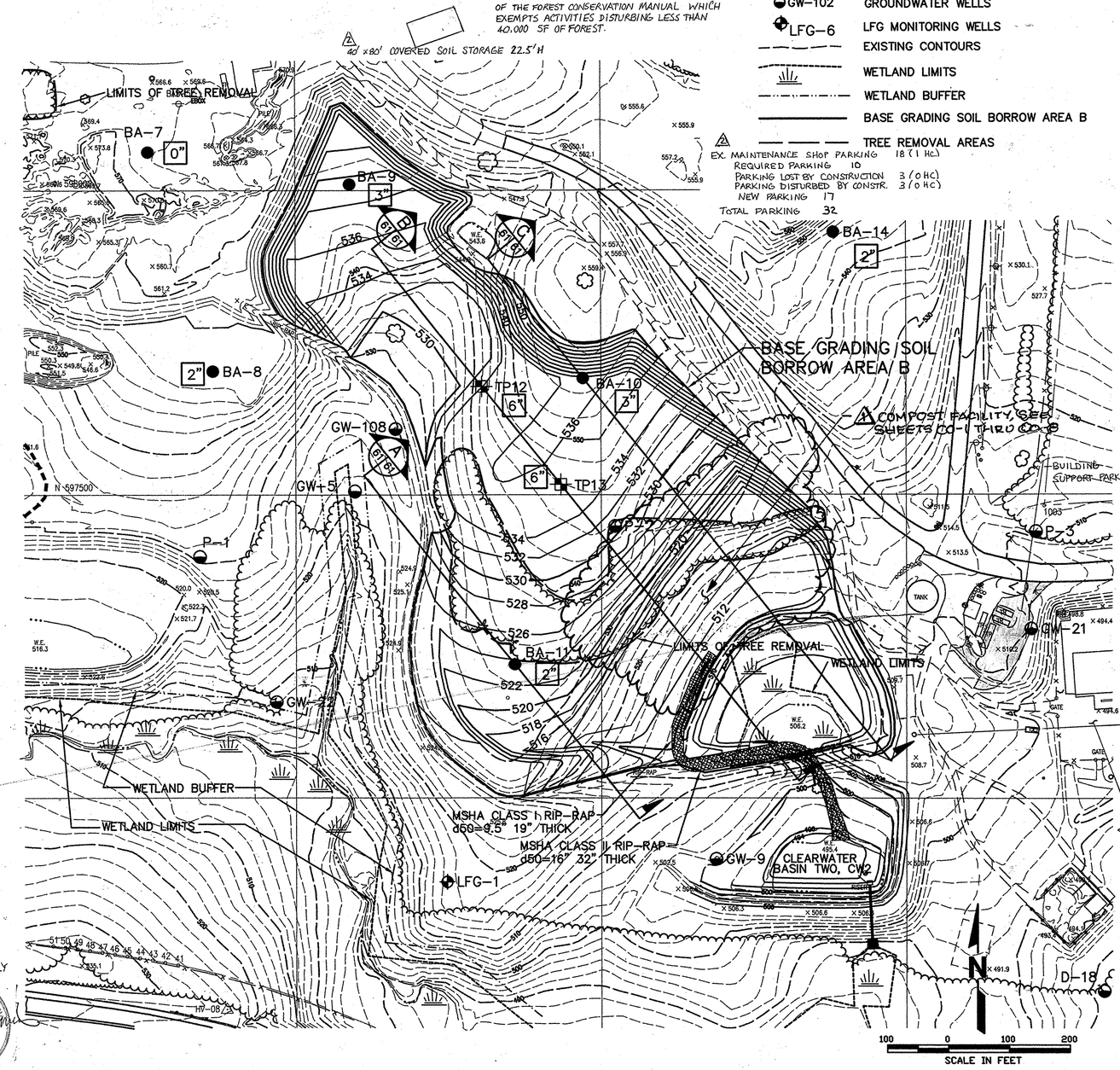

LEGEND

● BA-7	BORING LOCATIONS
TP6	TEST PIT LOCATIONS
6"	TOPSOIL DEPTH AT BORING/TEST PIT
GW-102	GROUNDWATER WELLS
LFG-6	LFG MONITORING WELLS
	EXISTING CONTOURS
	WETLAND LIMITS
	WETLAND BUFFER
	BASE GRADING SOIL BORROW AREA B
	TREE REMOVAL AREAS

DEPARTMENT OF PUBLIC WORKS
HOWARD COUNTY, MARYLAND

DIRECTOR OF PUBLIC WORKS — DATE 10/30/97
CHIEF, BUREAU OF WASTE MANAGEMENT — DATE 10/30/97

SCS ENGINEERS
CONSULTING ENGINEERS
11260 ROGER BACON DRIVE
SUITE 300
RESTON, VIRGINIA 22090
PH. (703) 471-6150
FAX. (703) 471-6676

Paul Anthony Mandeville, PE

DES.	EGC, RTT
DRN.	EGC
CHK.	PAM
DATE:	10-30-97

BY	NO.	REVISION	DATE
	6		
	5		
	4		
JED	3		
JED	2	ADD EX. STRUCTURES, SUPPORT PARKING, SOIL STOR.	6/9/14
CSN	1	ALPHA RIDGE LANDFILL COMPOST FACILITY	3/19/12

BASE GRADING SOIL BORROW AREA B AND CROSS-SECTIONS

1 REVISED SDP (JUNE 2014)

ALPHA RIDGE LANDFILL
UNLINED CELL CLOSURE
CAPITAL PROJECT NO. C-0190-N

3rd ELECTION DISTRICT — HOWARD COUNTY, MARYLAND

SCALE: 1"=100'

SHEET 61 OF 131

BORR2 — M:\295077.01\BORROW\ — BORROW2

DEPARTMENT OF PLANNING AND ZONING
HOWARD COUNTY, MARYLAND

DIRECTOR	DATE 11/3/97
CHIEF, DEVELOPMENT ENGINEERING DIVISION	DATE 10/30/97
CHIEF, DIVISION OF LAND DEVELOPMENT	DATE 11/3/97

SUBDIVISION NAME	LOT/PARCEL	
ALPHA RIDGE SOLID WASTE MANAGEMENT CENTER	54,253,220,11	
LIBER/FOLIO	ZONE	TAX/ZONE MAP
10-847/606 16-878/215 10-691/314	PEC	10 & 16
WATER CODE	SEWER CODE	CENSUS TR.
PRIVATE, EXISTING	PRIVATE, EXISTING	60-30

LEGEND

- BA-7 — BORING LOCATIONS
- TP6 — TEST PIT LOCATIONS
- 6" — TOPSOIL DEPTH AT BORING/TEST PIT
- GW-102 — GROUNDWATER WELLS
- LFG-6 — LFG MONITORING WELLS
- EXISTING CONTOURS
- WETLAND LIMITS
- VEGETATIVE COVER SOIL BORROW AREA C
- WETLAND BUFFER
- TREE REMOVAL AREAS

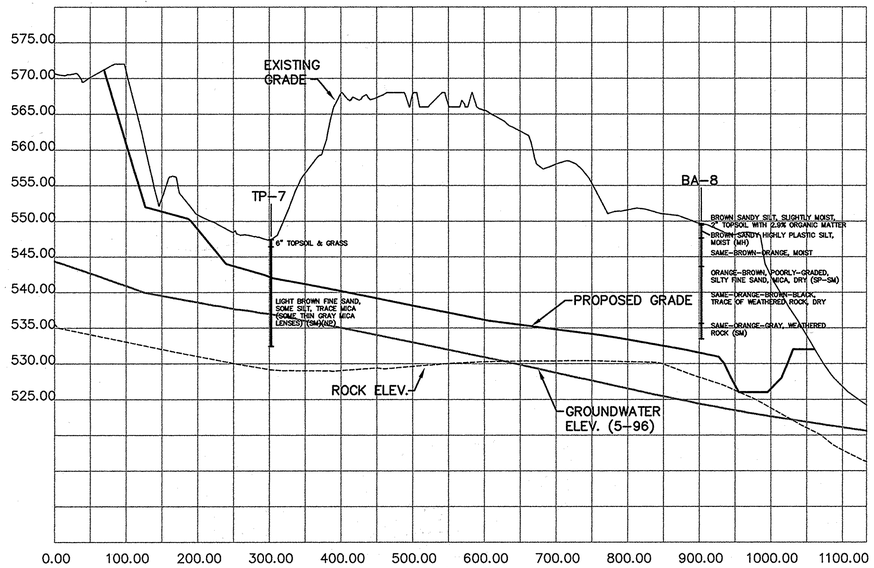

SECTION J 62|62

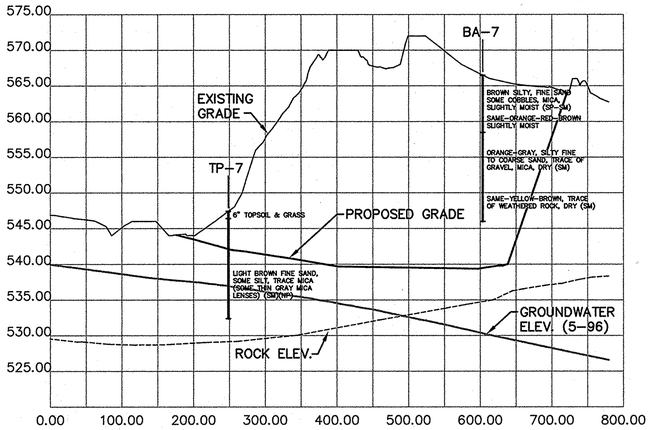

SECTION I 62|62

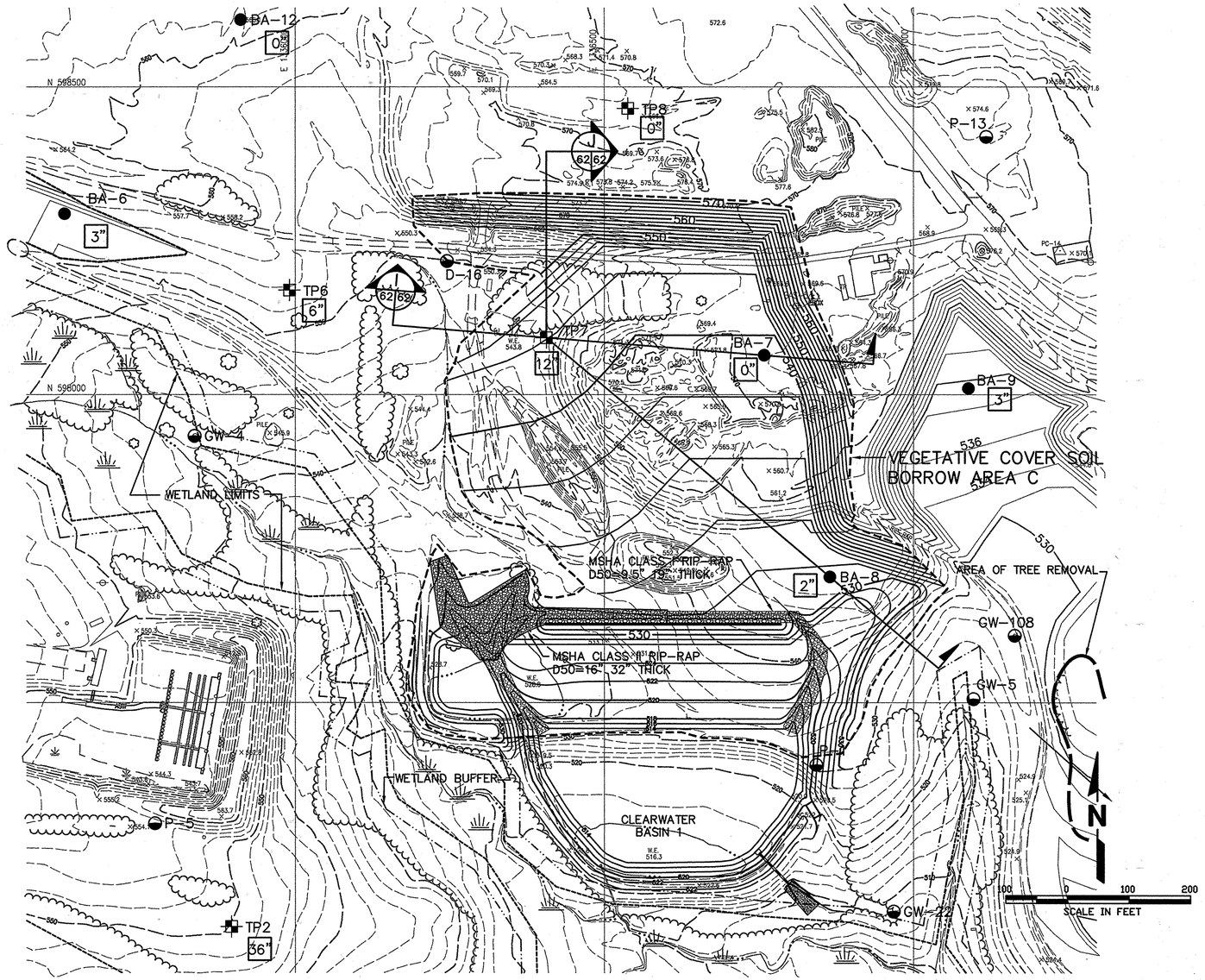

M:\295077.01\BORROW BORROW4, SEC-IJ

BORR4

DEPARTMENT OF PUBLIC WORKS
HOWARD COUNTY, MARYLAND

DIRECTOR OF PUBLIC WORKS	DATE 10/30/97
CHIEF, BUREAU OF WASTE MANAGEMENT	DATE 10/30/97

SCS ENGINEERS
CONSULTING ENGINEERS
11260 ROGER BACON DRIVE
SUITE 300
RESTON, VIRGINIA 22090
PH. (703) 471-6150
FAX. (703) 471-6676

STATE OF MARYLAND — PAUL ANTHONY MANDEVILLE — LIC. REG. CERT. NO. 14868 — PROFESSIONAL ENGINEER

Paul Anthony Mandeville, PE

DES. EGC, RTT		6		
DRN. EGC		5		
CHK. PAM		4		
DATE: 10-30-97		3		
		2		
		1		
	BY	NO.	REVISION	DATE

VEGETATIVE COVER SOIL
BORROW AREA C
AND CROSS-SECTIONS

ALPHA RIDGE LANDFILL
UNLINED CELL CLOSURE
CAPITAL PROJECT NO. C-0190-N

3rd ELECTION DISTRICT — HOWARD COUNTY, MARYLAND

SCALE: 1"=100'

SHEET 62 OF 131

SDP-97-128

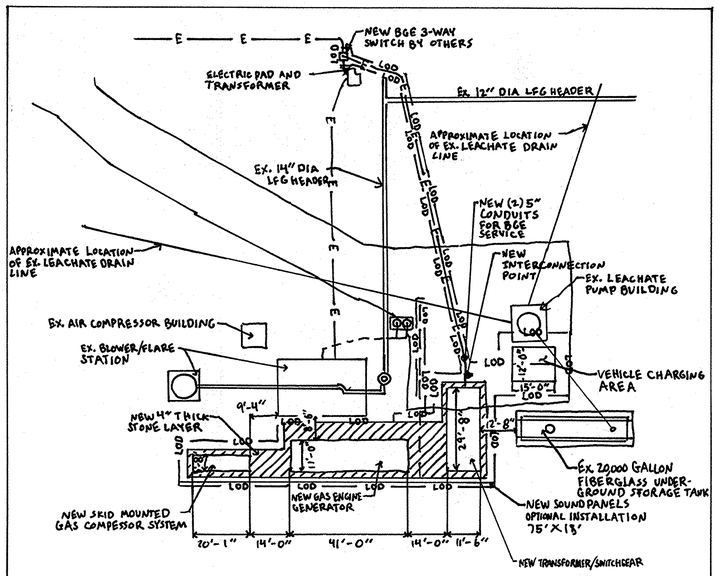

1/67 LANDFILL GAS TO ENERGY PROJECT
1" = 25'

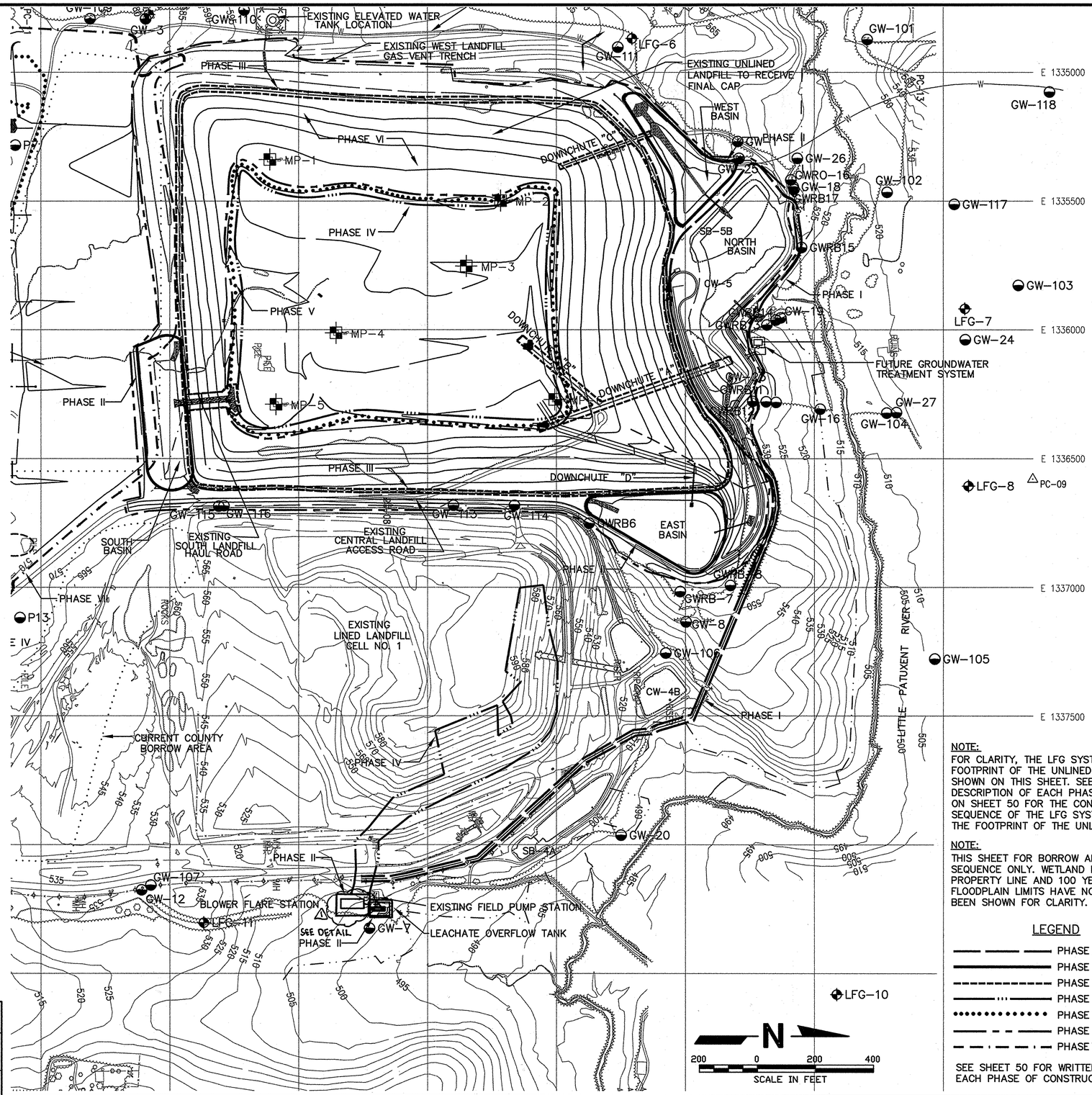

NOTE:
FOR CLARITY, THE LFG SYSTEM WITHIN THE FOOTPRINT OF THE UNLINED CELL IS NOT SHOWN ON THIS SHEET. SEE THE WRITTEN DESCRIPTION OF EACH PHASE OF CONSTRUCTION ON SHEET 50 FOR THE CONSTRUCTION SEQUENCE OF THE LFG SYSTEM WITHIN THE FOOTPRINT OF THE UNLINED CELL

NOTE:
THIS SHEET FOR BORROW AREA SEQUENCE ONLY. WETLAND LIMITS, PROPERTY LINE AND 100 YEAR FLOODPLAIN LIMITS HAVE NOT BEEN SHOWN FOR CLARITY.

LEGEND

- PHASE I CONSTRUCTION
- PHASE II CONSTRUCTION
- PHASE III CONSTRUCTION
- PHASE IV CONSTRUCTION
- PHASE V CONSTRUCTION
- PHASE VI CONSTRUCTION
- PHASE VII CONSTRUCTION

SEE SHEET 50 FOR WRITTEN DESCRIPTION OF EACH PHASE OF CONSTRUCTION

PROFESSIONAL CERTIFICATION. I HEREBY CERTIFY THAT THESE DOCUMENTS WERE PREPARED OR APPROVED BY ME, AND THAT I AM A DULY LICENSED PROFESSIONAL ENGINEER UNDER THE LAWS OF THE STATE OF MARYLAND, LICENSE NO. 15453, EXPIRATION DATE: 2 JULY 2013. THIS SEAL APPLIES ONLY TO REVISION 1 ON THIS SHEET.

STATE OF MARYLAND — JEFFREY A. TUCKER — No. 15453 — REGISTERED PROFESSIONAL ENGINEER

DEPARTMENT OF PLANNING AND ZONING
HOWARD COUNTY, MARYLAND

DIRECTOR — DATE 11/3/97
CHIEF, DEVELOPMENT ENGINEERING DIVISION — DATE 11/3/97
CHIEF, DIVISION OF LAND DEVELOPMENT — DATE 11/3/97

SUBDIVISION NAME	LOT/PARCEL	
ALPHA RIDGE SOLID WASTE MANAGEMENT CENTER	54,253,220,11,302	
LIBER/FOLIO	ZONE	TAX/ZONE MAP
10-847/606 16-878/215 10-691/314	~~PEC~~ RC-DEO	10 & 16
WATER CODE	SEWER CODE	CENSUS TR.
PRIVATE, EXISTING	PRIVATE, EXISTING	6030.02 ~~30.30~~

DEPARTMENT OF PUBLIC WORKS
HOWARD COUNTY, MARYLAND

DIRECTOR OF PUBLIC WORKS — DATE 10/30/97
CHIEF, BUREAU OF WASTE MANAGEMENT — DATE 10/30/97

SCS ENGINEERS
CONSULTING ENGINEERS
11260 ROGER BACON DRIVE
SUITE 300
RESTON, VIRGINIA 22090
PH. (703) 471-6150
FAX. (703) 471-6676

STATE OF MARYLAND — PAUL ANTHONY MANDEVILLE — No. 9874 — PROFESSIONAL ENGINEER
Paul Anthony Mandeville, PE

DES.	RTT,MEH
DRN.	MEH
CHK.	PAM
DATE:	10-30-97

BY	NO.	REVISION	DATE
CJS	1	ALPHA RIDGE LANDFILL GAS TO ENERGY PROJECT	10/4/11

LANDFILL CONSTRUCTION SEQUENCE PLAN

ALPHA RIDGE LANDFILL
UNLINED CELL CLOSURE
CAPITAL PROJECT NO. C-0190-N
3rd ELECTION DISTRICT — HOWARD COUNTY, MARYLAND

SCALE: 1"=200'
SHEET 67 OF 138

SDP-97-128

M:\295077.01\BORROW OVERALL-0
LFSEQUENCE

LEGEND

- PHASE I CONSTRUCTION
- PHASE II CONSTRUCTION
- PHASE III CONSTRUCTION
- PHASE IV CONSTRUCTION
- PHASE V CONSTRUCTION
- PHASE VI CONSTRUCTION
- PHASE VII CONSTRUCTION

NOTE:
THIS SHEET FOR BORROW AREA SEQUENCE ONLY. WETLAND LIMITS, PROPERTY LINE AND 100 YEAR FLOODPLAIN LIMITS HAVE NOT BEEN SHOWN FOR CLARITY.

SEE SHEET 50 FOR WRITTEN DESCRIPTION OF EACH PHASE OF CONSTRUCTION

DEPARTMENT OF PLANNING AND ZONING
HOWARD COUNTY, MARYLAND

DIRECTOR	11/3/97 DATE
CHIEF, DEVELOPMENT ENGINEERING DIVISION	10/30/97 DATE
CHIEF, DIVISION OF LAND DEVELOPMENT	11/3/97 DATE

SUBDIVISION NAME	LOT/PARCEL	
ALPHA RIDGE SOLID WASTE MANAGEMENT CENTER	54,253,220,11	
LIBER/FOLIO	ZONE	TAX/ZONE MAP
10-847/606 16-878/215 10-691/314	PEC	10 & 16
WATER CODE	SEWER CODE	CENSUS TR.
PRIVATE, EXISTING	PRIVATE, EXISTING	60-30

DEPARTMENT OF PUBLIC WORKS
HOWARD COUNTY, MARYLAND

DIRECTOR OF PUBLIC WORKS	10/30/97 DATE
CHIEF, BUREAU OF WASTE MANAGEMENT	10/30/97 DATE

SCS ENGINEERS
CONSULTING ENGINEERS
11260 ROGER BACON DRIVE
SUITE 300
RESTON, VIRGINIA 22090
PH. (703) 471-6150
FAX. (703) 471-6676

STATE OF MARYLAND — PAUL ANTHONY MANDEVILLE — LIC. REG. CERT. NO. 14988 — PROFESSIONAL ENGINEER
Paul Anthony Mandeville, PE

DES.	RTT,MEH
DRN.	MEH
CHK.	PAM
DATE:	10-30-97

BY	NO.	REVISION	DATE
	6		
	5		
	4		
	3		
	2		
MRG	1	DELETED REC-AREA; ADDED STOCKPILE AREA, ETC.	11/9/99

BORROW AREA SEQUENCE PLAN

ALPHA RIDGE LANDFILL
UNLINED CELL CLOSURE
CAPITAL PROJECT NO. C-0190-N
3rd ELECTION DISTRICT — HOWARD COUNTY, MARYLAND

SCALE: 1"=200'

SHEET 68 OF 136

SDP-97-128

BWSEQUENCE M:\295077.01\BORROW\ OVERALL-0

DETAIL 26 - ROCK OUTLET PROTECTION II

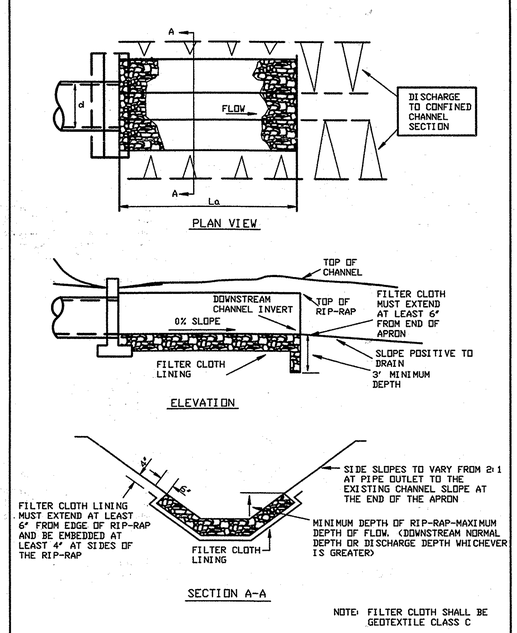

U.S. DEPARTMENT OF AGRICULTURE SOIL CONSERVATION SERVICE	PAGE F - 18 - 9	MARYLAND DEPARTMENT OF ENVIRONMENT WATER MANAGEMENT ADMINISTRATION

NOTE: USE ROCK OUTLET PROTECTION II FOR NORTH BASIN, SOUTH SEDIMENT BASIN

ROCK OUTLET PROTECTION II
Construction Specifications

1. The subgrade for the filter, rip-rap, or gabion shall be prepared to the required lines and grades. Any fill required in the subgrade shall be compacted to a density of approximately that of the surrounding undisturbed material.

2. The rock or gravel shall conform to the specified grading limits when installed respectively in the rip-rap or filter.

3. Geotextile shall be protected from punching, cutting, or tearing. Any damage other than an occasional small hole shall be repaired by placing another piece of geotextile over the damaged part or by completely replacing the geotextile. All overlaps whether for repairs or for joining two pieces of geotextile shall be a minimum of one foot.

4. Stone for the rip-rap or gabion outlets may be placed by equipment. They shall be constructed to the full course thickness in one operation and in such a manner as to avoid displacement of underlying materials. The stone for rip-rap or gabion outlets shall be delivered and placed in a manner that will ensure that it is reasonably homogeneous with the smaller stones and spalls filling the voids between the larger stones. Rip-rap shall be placed in a manner to prevent damage to the filter blanket or geotextile. Hand placement will be required to the extent necessary to prevent damage to the permanent works.

5. The stone shall be placed so that it blends in with the existing ground. If the stone is placed too high then the flow will be forced out of the channel and scour adjacent to the stone will occur.

DETAIL 27 - ROCK OUTLET PROTECTION III

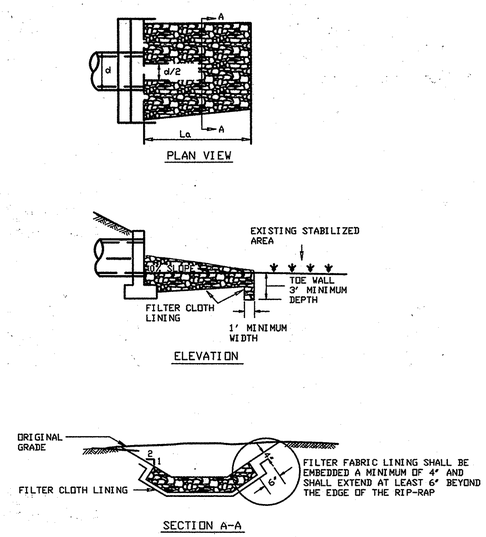

U.S. DEPARTMENT OF AGRICULTURE SOIL CONSERVATION SERVICE	PAGE F - 18 - 10	MARYLAND DEPARTMENT OF ENVIRONMENT WATER MANAGEMENT ADMINISTRATION

NOTE: USE ROCK OUTLET PROTECTION III FOR CLEARWATER BASIN ONE, CLEARWATER BASIN TWO

Rock Outlet Protection III
Construction Specifications

1. The subgrade for the filter, rip-rap, or gabion shall be prepared to the required lines and grades. Any fill required in the subgrade shall be compacted to a density of approximately that of the surrounding undisturbed material.

2. The rock or gravel shall conform to the specified grading limits when installed respectively in the rip-rap or filter.

3. Geotextile shall be protected from punching, cutting or tearing. Any damage other than an occasional small hole shall be repaired by placing another piece of geotextile over the damaged part or by completely replacing the geotextile. All overlaps whether for repairs or for joining two pieces of geotextile shall be a minimum of one foot.

4. Stone for the rip-rap or gabion outlets may be placed by equipment. They shall be constructed to the full course thickness in one operation and in such a manner as to avoid displacement of underlying materials. The stone for rip-rap or gabion outlets shall be delivered and placed in a manner that will ensure that it is reasonably homogeneous with the smaller stones and spalls filling the voids between the larger stones. Rip-rap shall be placed in a manner to prevent damage to the filter blanket or geotextile. Hand placement will be required to the extent necessary to prevent damage to the permanent works.

5. The stone shall be placed so that it blends in with the existing ground. If the stone is placed too high then the flow will be forced out of the channel and scour adjacent to the stone will occur.

SUBDIVISION NAME	LOT/PARCEL	
ALPHA RIDGE SOLID WASTE MANAGEMENT CENTER	54,253,220,11	
LIBER/FOLIO	ZONE	TAX/ZONE MAP
10-847/606 16-878/215 10-891/314	PEC	10 & 16
WATER CODE	SEWER CODE	CENSUS TR.
PRIVATE, EXISTING	PRIVATE, EXISTING	60-30

DEPARTMENT OF PLANNING AND ZONING
HOWARD COUNTY, MARYLAND

DIRECTOR — DATE 11/3/97
CHIEF, DEVELOPMENT ENGINEERING DIVISION — DATE 10/31/97
CHIEF, DIVISION OF LAND DEVELOPMENT — DATE 11/3/97

DEPARTMENT OF PUBLIC WORKS
HOWARD COUNTY, MARYLAND

DIRECTOR OF PUBLIC WORKS — DATE 10/31/97
CHIEF, BUREAU OF WASTE MANAGEMENT — DATE 10/30/97

SCS ENGINEERS
CONSULTING ENGINEERS
11260 ROGER BACON DRIVE
SUITE 300
RESTON, VIRGINIA 22090
PH. (703) 471-6150
FAX. (703) 471-6676

STATE OF MARYLAND — PAUL ANTHONY MANDEVILLE — No. 12495 — PROFESSIONAL ENGINEER
Paul Anthony Mandeville, PE

DES.	RTT	6		
DRN.	JCB	5		
CHK.	PAM	4		
DATE: 10-30-97		3		
		2		
BY	NO.	1	REVISION	DATE

MISCELLANEOUS E & S DETAILS

ALPHA RIDGE LANDFILL
UNLINED CELL CLOSURE
CAPITAL PROJECT NO. C-0190-N

3rd ELECTION DISTRICT — HOWARD COUNTY, MARYLAND

SCALE: AS NOTED

SHEET 69 OF 131

M:\295077.01\FINAL\DETAILS

DET4

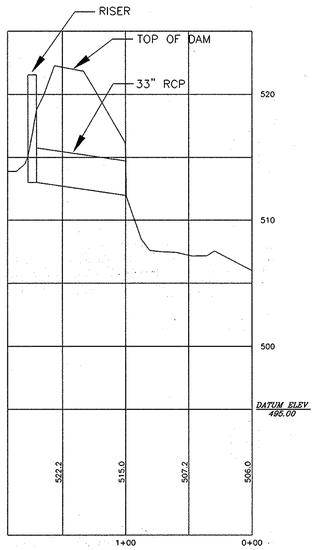

AS-BUILT OUTLET PIPE PROFILE
CLEARWATER 1

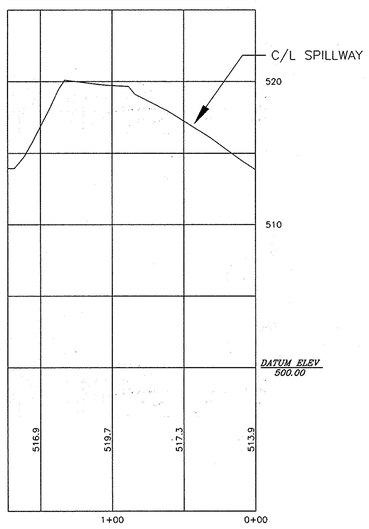

AS-BUILT SPILLWAY PROFILE
CLEARWATER 1

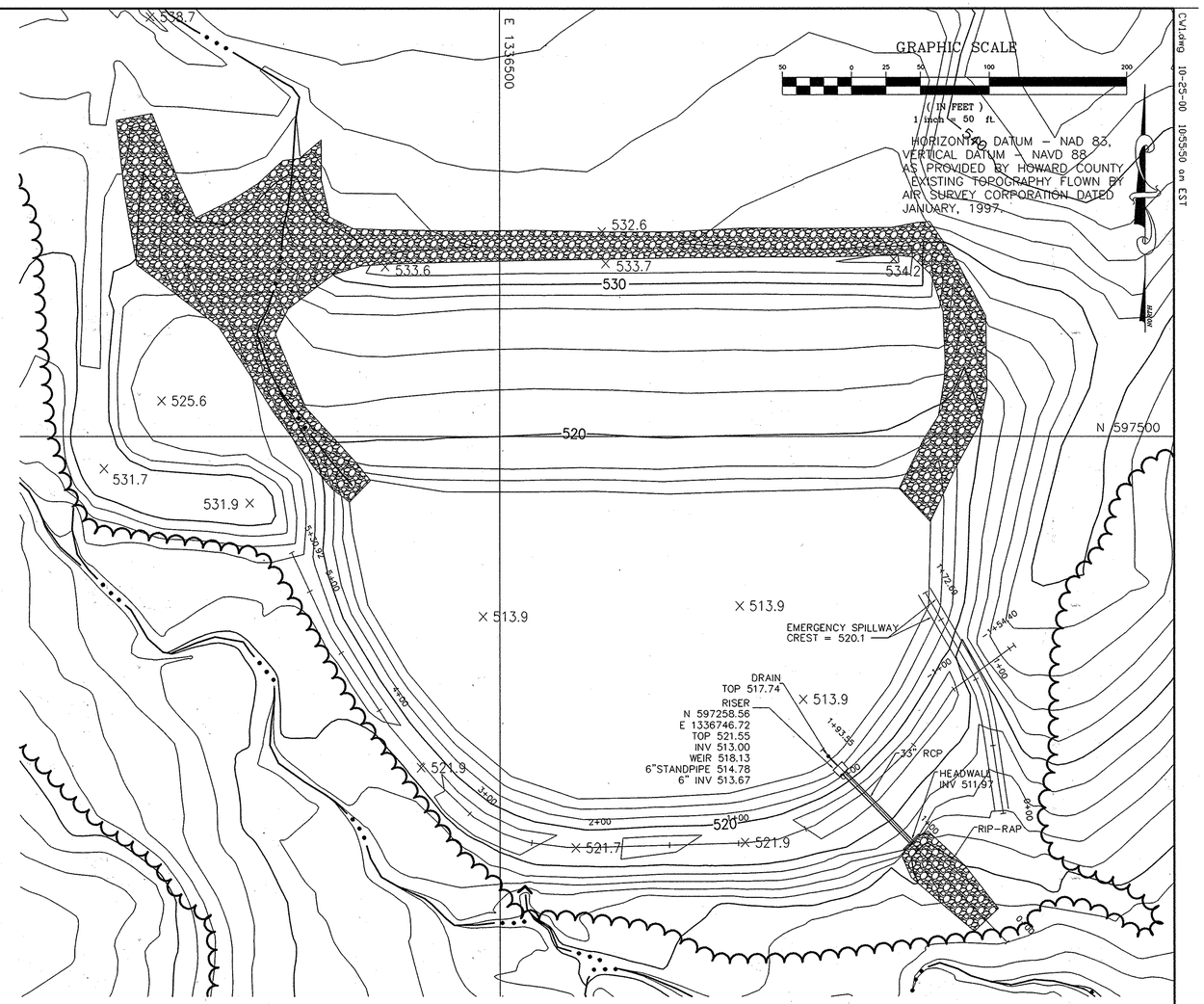

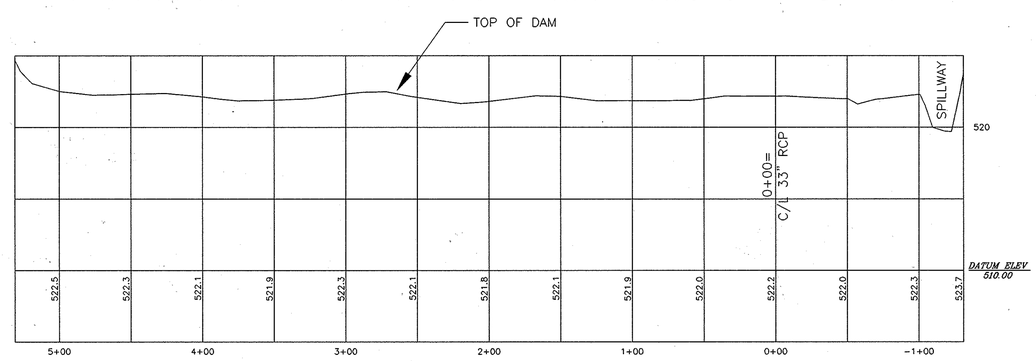

AS-BUILT DAM PROFILE
CLEARWATER 1

CW1.dwg 10-25-00 10:55:50 am EST

DESIGNED BY:		DATE
DRAWN BY:	TWH	2-23-00 DATE
CHECKED BY:		DATE
APPROVED BY:		DATE

REVISIONS

DATE	BY	DESCRIPTION
3-30-2000	TWH	ADDED ALIGNMENTS AND PROFILES
10-17-00	TWH	LABELED EMERGENCY SPILLWAY.

ENGINEERING TECHNOLOGIES ASSOCIATES, INC.
ENGINEERS * PLANNERS * SURVEYORS
3458 ELLICOTT CENTER DRIVE SUITE 101
ELLICOTT CITY, MARYLAND 21043
BALTO. (410)461-9920 FAX (410)750-8565

STATE OF MARYLAND CLIFFORD ALLEN EIGMAN REGISTERED PROPERTY LINE SURVEYOR

H. E. SARGENT, INC. CONTRACTORS • STILLWATER, ME.

CLEARWATER 1 BASIN - ENLARGED PLAN AS-BUILT

ALPHA RIDGE LANDFILL CELL CLOSURE

HOWARD COUNTY MARYLAND

SCALE : 1"=50'	CONTRACT NO.: 98301.10	DATE : 2-23-2000	SHEET : 70-AB OF 13/3

CW1.dwg 10-25-00 10:55:50 am EST

FOR POND SUMMARY TABLE SEE SHT. 71

CW1 OUTLET PROFILE

Q100=70cfs
V100=14.2fps

HORIZONTAL SCALE IN FEET (20 0 20 40)
VERTICAL SCALE IN FEET (2 0 2 4)

CONSTRUCTED TOP OF DAM AND CORE ELEV. 522.0
SETTLED TOP OF DAM ELEV. 521.6
12'-0"
4'-0" MIN. WIDTH
2.5 4 1 1 1MAX.
EMERGENCY SPILLWAY I.E. ~~520.0~~ 520.1
CORE TRENCH
EXISTING GRADE
1MAX. 1MAX.
CW1B
TOP OF RISER ELEV. ~~521.42~~ 521.55 FOR RISER STRUCTURE SEE DETAIL 1 (70/71)
100YR WSE=519.89
25YR WSE=519.31
10YR WSE=519.13
2YR WSE=518.54
6'-11" TOP OF RISER TO CLEANOUT
PHREATIC LINE @ 4:1
PROPOSED GRADE
PREDEVELOPED GRADE
CLEANOUT=514.5
6"ø DIP DRAIN NOT SHOWN FOR CLARITY SEE DETAIL 1 (70/71)
CW1A
100YR WSE=511.83
69 L.F. 33"ø RCP ASTM C-361, CL. B25, @ 2%
25YR WSE=510.63
10YR WSE=510.16
STANDARD CONCRETE ENDWALL, MD-354.01
ANTI-SEEP COLLAR SEE DETAIL 2 (70/71)
2YR WSE=508.31
PIPE CRADLE SEE DETAIL 3 (70/71)
MSHA CL. I RIP-RAP 19" THICK, d_{50}=9.5"
PROVIDE MSHA CL. C GEOTEXTILE UNDER ALL RIP-RAP
FOR RIP-RAP X-SECTION SEE A (70/70)
1MAX. 1MAX.
4'-0" MIN. WIDTH
2'-0" MIN.
CUT-OFF TRENCH
3'x1' THICK GROUTED TOE WALLS
0+42.6 BEGIN MSHA CLASS I RIP-RAP
0+98.6 END MSHA CL. I RIP-RAP
BEGIN STD. ENDWALL I.E.(OUT) ~~512.0~~ 511.97
1+45.1 ℄ OF CORE AND CUT-OFF TRENCHES
1+49.1 ℄ OF ANTI-SEEP COLLAR
1+62.3 ℄ OF ANTI-SEEP COLLAR
1+72.3 ℄ OF RISER STR.
I.E.(OUT) OUTLET PIPE ~~513.3~~ 513.00
520
510
500
0+00
1+00

SEE ETA SHEET 70AB FOR AS BUILT CLEARWATER 1 BASIN ENLARGED PLAN

CENTERLINE OF EMERGENCY SPILLWAY

V=0fps
Q=0cfs
PREDEVELOPED GRADE
EXISTING GRADE
25'-0" LEVEL SECTION
EMERGENCY SPILLWAY CREST ~~520.0~~ 520.1
PROPOSED GRADE
5.4% 15%
0+56.7 BEGIN EXIT CHANNEL
0+90.3 END EXIT CHANNEL
1+15.3 BEGIN ENTRANCE CHANNEL
1+40.0 END ENTRANCE CHANNEL
530
520
510
0+00
1+00

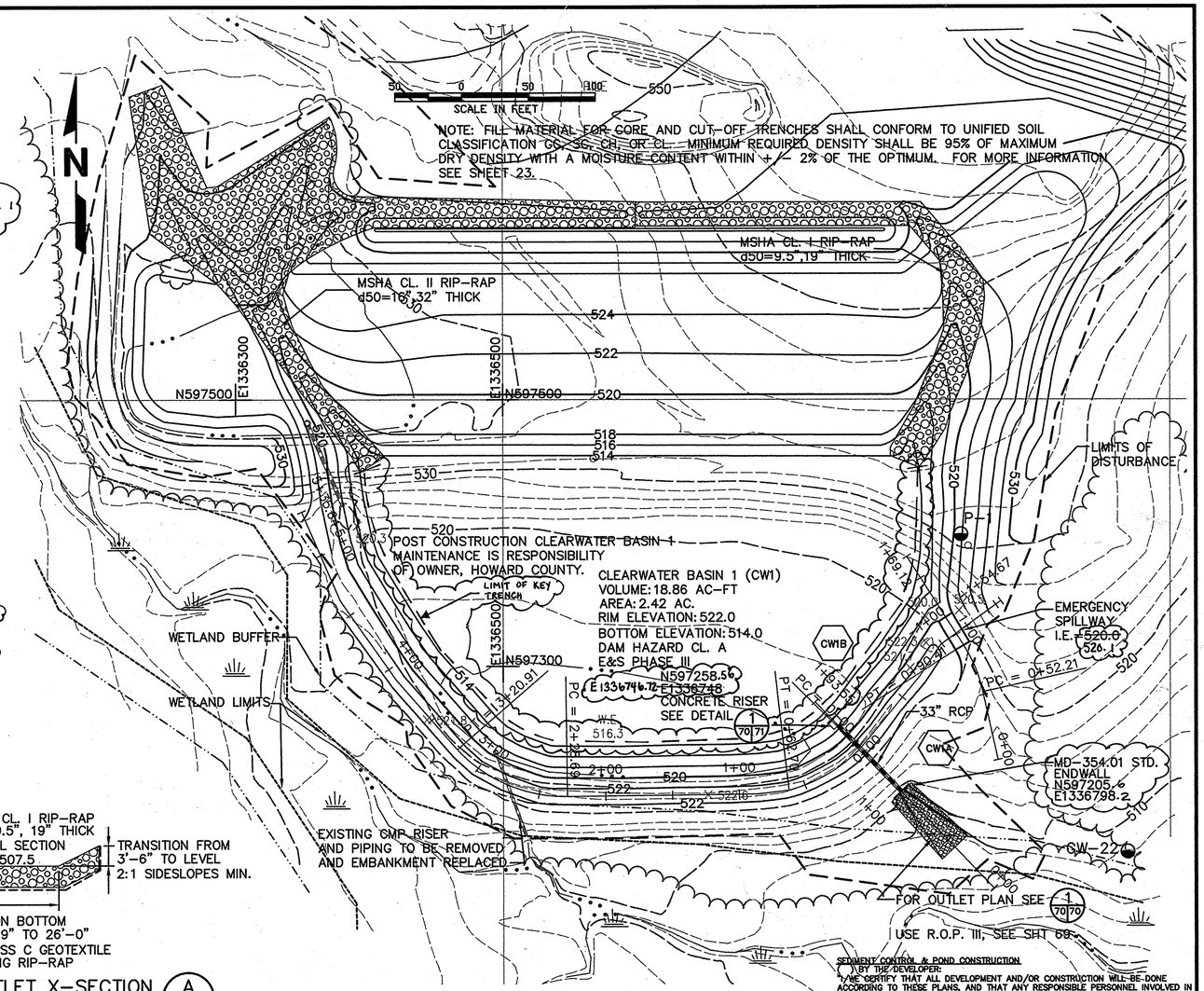

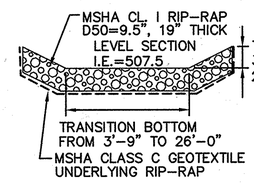

CW1 OUTLET X-SECTION (A 70/70)

SCALE: 1"=5'-0"

CONTRACTOR SHALL SCARIFY, BLEND AND COMPACT THE NEW CORE TRENCH WITH THE EXISTING CORE TRENCH TO REMAIN. THE COUNTY GEOTECHNICAL ENGINEER SHALL OBSERVE THE WORK

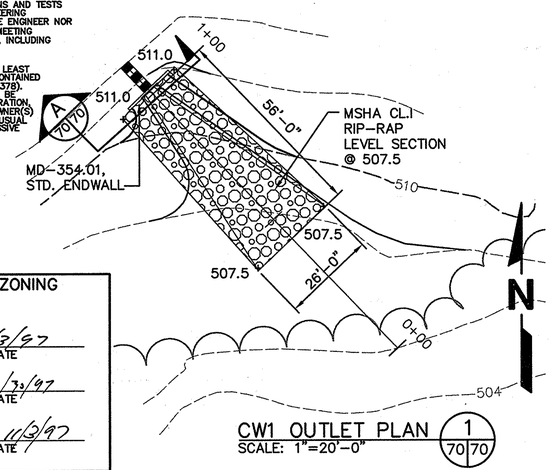

CW1 OUTLET PLAN (1 70/70)

SCALE: 1"=20'-0"

CW1 CENTERLINE OF EMBANKMENT

SCALE IN FEET (50 0 50 100)

NOTE: COUNTY GEOTECHNICAL ENGINEER SHALL INSPECT EXPOSED FACE OF EXISTING EMBANKMENT REMAINING WHEN BREACH IS MADE BY CONTRACTOR. CONTRACTOR SHALL NOTIFY RESIDENT ENGINEER OF THE TIME BREACH WILL BE MADE AND ASSIST GEOTECHNICAL ENGINEER WITH INSPECTION AS NECESSARY.

EMERGENCY SPILLWAY CREST ~~520.0~~ 520.1 ELEV. ~~520.0~~
0+00 ℄ OF PRINCIPAL SPILLWAY
SETTLED TOP=521.6
PROPOSED GRADE TOP OF DAM=522.0
3 3 1 MAX. 2
12'-0" BOTTOM
33" RCP w/ PIPE CRADLE
CORE AND CUT-OFF TRENCHES TO BE REPLACED
1 MAX. 2
1 MAX. 2
EXISTING GRADE
PREDEVELOPED GRADE
CMP OUTLET STRUCTURE, AND CMP OUTFALL PIPE TO BE REMOVED.
4'-0" BOTTOM MIN.
1+13.1 ℄ OF EMERGENCY SPILLWAY
1'-0" LAYER OF 1x10^{-6} MATERIAL FOR BASIN LINER
4'-0" BOTTOM MIN.
OVEREXCAVATE TO ELEV.=513.0
2+74.2 EXISTING OUTFALL PIPE
GEOTECHNICAL ENGINEER TO ASSESS WHETHER THE EXISTING EMBANKMENT MEETS CURRENT REGULATORY REQUIREMENTS
530
520
514
513
510
-1+00 0+00 1+00 2+00 3+00 4+00 5+00

CERTIFY MEANS TO STATE OR DECLARE A PROFESSIONAL OPINION BASED UPON ON-SITE INSPECTIONS AND MATERIAL TESTS WHICH ARE CONDUCTED DURING CONSTRUCTION. THE ON-SITE INSPECTIONS AND MATERIAL TESTS ARE THOSE INSPECTIONS AND TESTS DEEMED SUFFICIENT AND APPROPRIATE BY COMMONLY ACCEPTED ENGINEERING STANDARDS. CERTIFY DOES NOT MEAN OR IMPLY A GUARANTEE BY THE ENGINEER NOR DOES AN ENGINEER'S CERTIFICATION RELIEVE ANY OTHER PARTY FROM MEETING REQUIREMENTS IMPOSED BY CONTRACT, EMPLOYMENT, OR OTHER MEANS, INCLUDING MEETING COMMONLY ACCEPTED INDUSTRY PRACTICES.

OPERATION, MAINTENANCE AND INSPECTION
INSPECTION OF THE POND(S) SHOWN HEREON SHALL BE PERFORMED AT LEAST ANNUALLY, IN ACCORDANCE WITH THE CHECKLIST AND REQUIREMENTS CONTAINED WITHIN USDA, SCS "STANDARDS AND SPECIFICATIONS FOR PONDS" (MD-378). THE POND OWNER(S) AND ANY HEIRS, SUCCESSORS, OR ASSIGNS SHALL BE RESPONSIBLE FOR THE SAFETY OF THE POND AND THE CONTINUED OPERATION, SURVEILLANCE, INSPECTION, AND MAINTENANCE THEREOF. THE POND OWNER(S) SHALL PROMPTLY NOTIFY THE SOIL CONSERVATION DISTRICT OF ANY UNUSUAL OBSERVATIONS THAT MAY BE INDICATIONS OF DISTRESS SUCH AS EXCESSIVE SEEPAGE, TURBID SEEPAGE, SLIDING OR SLUMPING.

SUBDIVISION NAME	LOT/PARCEL	
ALPHA RIDGE SOLID WASTE MANAGEMENT CENTER	54,253,220,11	
LIBER/FOLIO 10-847/606 16-578/215 10-691/314	ZONE PEC	TAX/ZONE MAP 10 & 16
WATER CODE PRIVATE, EXISTING	SEWER CODE PRIVATE, EXISTING	CENSUS TR. 60-30

DEPARTMENT OF PLANNING AND ZONING
HOWARD COUNTY, MARYLAND

DIRECTOR — DATE 11/3/97
CHIEF, DEVELOPMENT ENGINEERING DIVISION — DATE 10/31/97
CHIEF, DIVISION OF LAND DEVELOPMENT — DATE 11/3/97

DEPARTMENT OF PUBLIC WORKS
HOWARD COUNTY, MARYLAND

DIRECTOR OF PUBLIC WORKS — DATE 10/30/97
CHIEF, BUREAU OF WASTE MANAGEMENT — DATE 10/30/97

SCS ENGINEERS
CONSULTING ENGINEERS
11260 ROGER BACON DRIVE
SUITE 300
RESTON, VIRGINIA 22090
PH. (703) 471-6150
FAX. (703) 471-6676

STATE OF MARYLAND — PAUL ANTHONY MANDEVILLE — REG. NO. 14993 — PROFESSIONAL ENGINEER
Paul Anthony Mandeville, PE

SEDIMENT CONTROL & POND CONSTRUCTION
( ) BY THE DEVELOPER:
"I/WE CERTIFY THAT ALL DEVELOPMENT AND/OR CONSTRUCTION WILL BE DONE ACCORDING TO THESE PLANS, AND THAT ANY RESPONSIBLE PERSONNEL INVOLVED IN THE CONSTRUCTION PROJECT WILL HAVE A CERTIFICATE OF ATTENDANCE AT A DEPARTMENT OF THE ENVIRONMENT APPROVED TRAINING PROGRAM FOR THE CONTROL OF SEDIMENT AND EROSION BEFORE BEGINNING THE PROJECT. I SHALL ENGAGE A REGISTERED PROFESSIONAL ENGINEER TO SUPERVISE POND CONSTRUCTION AND PROVIDE THE HOWARD SOIL CONSERVATION DISTRICT WITH AN "AS-BUILT" PLAN OF THE POND WITHIN 30 DAYS OF COMPLETION. I ALSO AUTHORIZE PERIODIC ON-SITE INSPECTIONS BY THE HOWARD SOIL CONSERVATION DISTRICT."
SIGNATURE OF DEVELOPER — DATE 10/30/97
PRINT NAME BELOW SIGNATURE — JOHN J. O'HARA
( ) BY THE ENGINEER:
"I CERTIFY THAT THIS PLAN FOR POND CONSTRUCTION, EROSION AND SEDIMENT CONTROL REPRESENTS A PRACTICAL AND WORKABLE PLAN BASED ON MY PERSONAL KNOWLEDGE OF THE SITE CONDITIONS. THIS PLAN WAS PREPARED IN ACCORDANCE WITH THE REQUIREMENTS OF THE HOWARD SOIL CONSERVATION DISTRICT. I HAVE NOTIFIED THE DEVELOPER THAT HE/SHE MUST ENGAGE A REGISTERED PROFESSIONAL ENGINEER TO SUPERVISE POND CONSTRUCTION AND PROVIDE THE HOWARD SOIL CONSERVATION DISTRICT WITH AN "AS-BUILT" PLAN OF THE POND WITHIN 30 DAYS OF COMPLETION."
SIGNATURE OF ENGINEER — DATE 10/31/97
PRINT NAME BELOW SIGNATURE — PAUL A. MANDEVILLE

( ) THESE PLANS HAVE BEEN REVIEWED FOR THE HOWARD SOIL CONSERVATION SOIL EROSION AND SEDIMENT CONTROL.
USDA - NATURAL RESOURCES CONSERVATION SERVICE — DATE 10-30-97
( ) THESE PLANS FOR SMALL POND CONSTRUCTION, SOIL EROSION AND SEDIMENT CONTROL MEET THE REQUIREMENTS OF THE HOWARD SOIL CONSERVATION DISTRICT.
HOWARD SOIL CONSERVATION DISTRICT — DATE 10-30-97
DISTRICT AND MEET THE TECHNICAL REQUIREMENTS FOR SMALL POND CONSTRUCTION.

AS-BUILT CERTIFICATION
I HEREBY CERTIFY THAT THE FACILITY SHOWN ON THIS PLAN WAS CONSTRUCTED AS SHOWN ON THE "AS-BUILT" PLANS AND MEETS THE APPROVED PLANS AND SPECIFICATIONS.
PE NO. 17650
SIGNATURE — DATE 10/10/01

DES. AST	6		
DRN. AST	5		
CHK. PAM	4		
	3		
	2		
DATE: 10-30-97	1		
BY	NO.	REVISION	DATE

CLEARWATER 1 BASIN
ENLARGED PLAN AND PROFILES

ALPHA RIDGE LANDFILL
UNLINED CELL CLOSURE
CAPITAL PROJECT NO. C-0190-N

3rd ELECTION DISTRICT — HOWARD COUNTY, MARYLAND

SCALE: AS NOTED
SHEET 70 OF 138

SDP-97-128

M:\295077.01\FINAL BRW4CW1,PRF-CW1OUT,PRFESCW1,PRFCW1DAM,CW1RRPLAN,XS-CW10 CW1PLAN-B

POND	RISER WEIR HT.	RISER WEIR WIDTH	RISER CREST ELEV.	RISER STR. WIDTH	OUTLET PIPE DIA. IN.	OUTLET PIPE L FT.	OUTLET PIPE U/S INV.	OUTLET PIPE D/S INV.	ANTI-SEEP COLLAR QTY.	ANTI-SEEP COLLAR APPROX. SIZE	DAM TOP WIDTH FT.	DAM CONSTR. HEIGHT	DAM SETTLED HEIGHT	EMERG. SPILLWAY ELEV.	EMERG. SPILLWAY BOTTOM WIDTH FT.	CORE TRENCH TOP WIDTH FT.	CORE TRENCH SIDE SLOPES	CUT-OFF TRENCH BOT. WIDTH FT.	CUT-OFF TRENCH SIDE SLOPES	WATER SURFACE ELEV. 2 YR.	WATER SURFACE ELEV. 10 YR.	WATER SURFACE ELEV. 25 YR.	WATER SURFACE ELEV. 100 YR.
CW1	2'-3"	12'	~~518.63~~ ~~518.5~~	6.67' x 8.67'	33	69	~~513.00~~ ~~508.88~~	~~511.97~~ ~~507.5~~	2	9.48' H. 10.13' W.	12'	522	521.6	520.0	12	4'	1:1	4'	1:1	518.54	519.13	519.31	519.89

POST CONSTRUCTION CLEARWATER 1 BASIN MAINTENANCE IS RESPONSIBILITY OF OWNER, HOWARD COUNTY

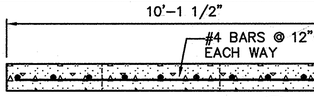

SECTION A (25|25)
SCALE: 1/2"=1'-0"

NOTES:
1. ANTI-SEEP COLLAR TO BE POURED AT LEAST TWO (2) FEET FROM NEAREST PIPE JOINT
2. ANTI-SEEP COLLAR IS TO BE CONSTRUCTED IN THREE POURS.
3. BOTTOM HALF TO BE POURED FIRST.
4. PLACE PIPE AND POUR CRADLE SECOND.
5. TOP PORTION OF COLLAR POURED THIRD.
6. BACKFILL SHALL BE PLACED EVENLY ON BOTH SIDES OF THE ANTI-SEEP COLLAR.
7. REINFORCED CONCRETE: fc = 4,000 psi @ 28 DAYS.

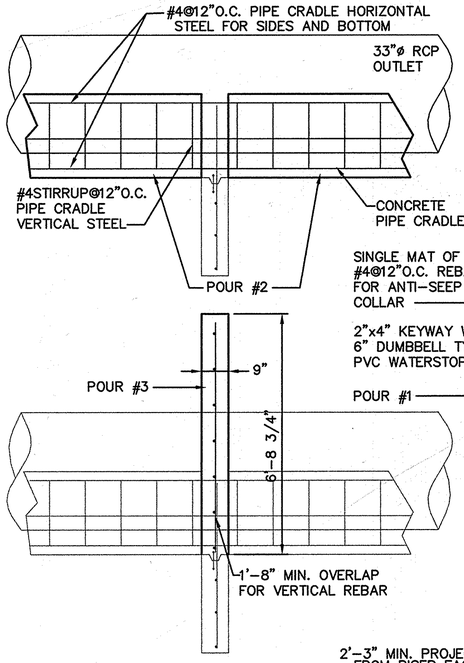

ANTI-SEEP COLLAR CONSTRUCTION SEQUENCE

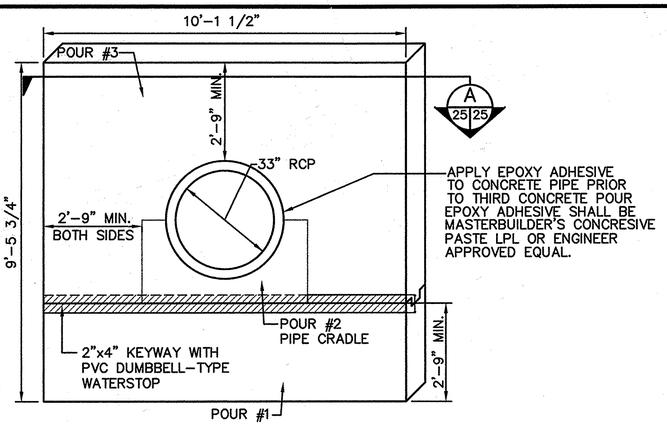

ANTI-SEEP COLLAR DETAIL (TYPICAL OF TWO) (2|70|71)
SCALE: 1/2"=1'-0"

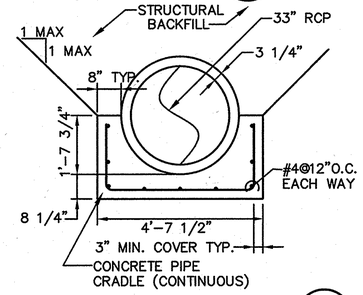

A2 PIPE CRADLE DETAIL (3|70|71)
SCALE: 1/2"=1'-0"

NOTES:
1. PIPE CRADLE SHALL HAVE A MINIMUM fc OF 4,000 psi @ 28 DAYS
2. USE INTERMEDIATE GRADE REINFORCING STEEL

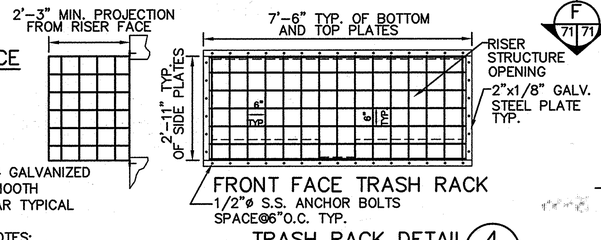

FRONT FACE TRASH RACK

NOTES:
1. WELD BAR TO PLATE ALL AROUND.
2. GALVANIZE TRASH RACK AFTER FABRICATION.
3. PAINT TRASH RACK BATTLESHIP GRAY.

TRASH RACK DETAIL (4|71|71)
SCALE: 1/2"=1'-0"

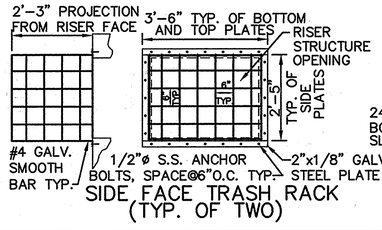

SIDE FACE TRASH RACK (TYP. OF TWO)

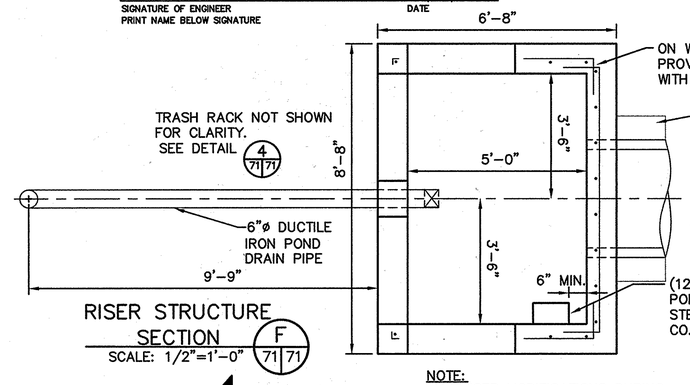

RISER STRUCTURE SECTION F (71|71)
SCALE: 1/2"=1'-0"

NOTE:
FOR RISER MODIFICATIONS DURING CONSTRUCTION ACTIVITIES, SEE 1|71|75

NOTE: RISER STRUCTURE TO BE POURED IN-PLACE

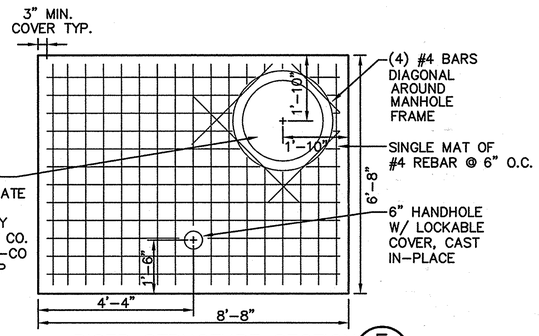

RISER STRUCTURE SECTION E (71|71)
SCALE: 1/2"=1'-0"

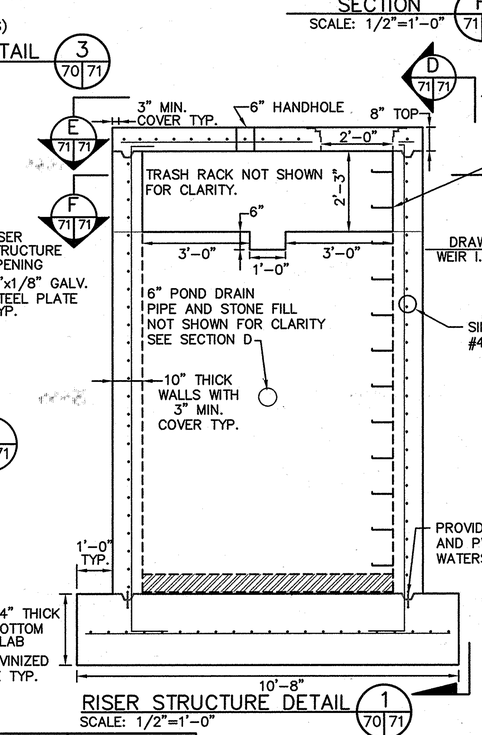

RISER STRUCTURE DETAIL (1|70|71)
SCALE: 1/2"=1'-0"

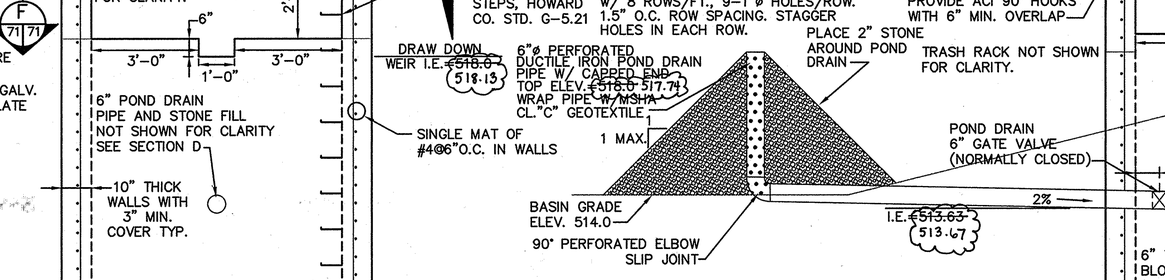

NOTE:
CONCRETE OUTLET RISER SHALL BE POURED IN PLACE UNLESS CONTRACTOR RECEIVES APPROVAL FROM THE HOWARD CO. DEVELOPMENT ENGINEERING DIVISION FOR A WATERTIGHT PRECAST OUTLET RISER DESIGN.

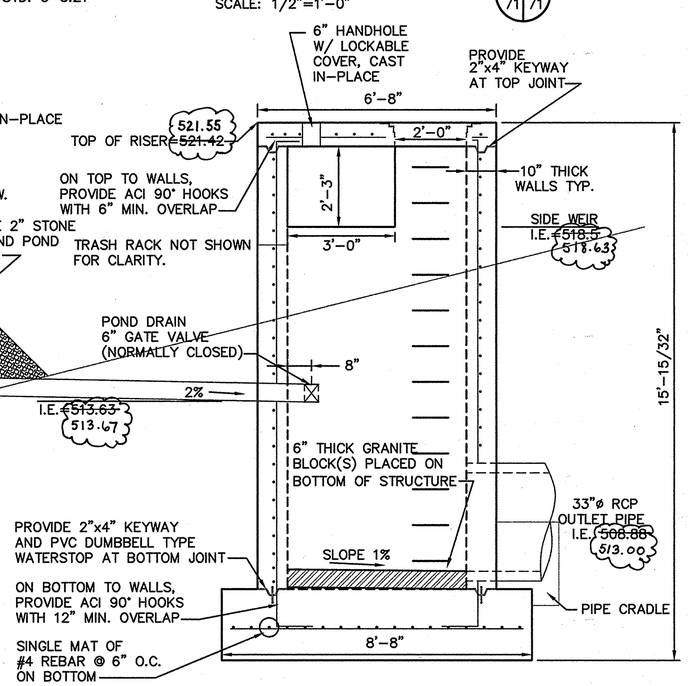

RISER STRUCTURE SECTION D (71|71)
SCALE: 1/2"=1'-0"

SUBDIVISION NAME	LOT/PARCEL	
ALPHA RIDGE SOLID WASTE MANAGEMENT CENTER	54,253,220,11	
LIBER/FOLIO 10-847/606 16-878/215 10-691/314	ZONE PEC	TAX/ZONE MAP 10 & 16
WATER CODE PRIVATE, EXISTING	SEWER CODE PRIVATE, EXISTING	CENSUS TR. 60-30

SEDIMENT CONTROL & POND CONSTRUCTION

( ) BY THE DEVELOPER:
"I/WE CERTIFY THAT ALL DEVELOPMENT AND/OR CONSTRUCTION WILL BE DONE ACCORDING TO THESE PLANS, AND THAT ANY RESPONSIBLE PERSONNEL INVOLVED IN THE CONSTRUCTION PROJECT WILL HAVE A CERTIFICATE OF ATTENDANCE AT A DEPARTMENT OF THE ENVIRONMENT APPROVED TRAINING PROGRAM FOR THE CONTROL OF SEDIMENT AND EROSION BEFORE BEGINNING THE PROJECT. I SHALL ENGAGE A REGISTERED PROFESSIONAL ENGINEER TO SUPERVISE POND CONSTRUCTION AND PROVIDE THE HOWARD SOIL CONSERVATION DISTRICT WITH AN "AS-BUILT" PLAN OF THE POND WITHIN 30 DAYS OF COMPLETION. I ALSO AUTHORIZE PERIODIC ON-SITE INSPECTIONS BY THE HOWARD SOIL CONSERVATION DISTRICT."

SIGNATURE OF DEVELOPER (PRINT NAME BELOW SIGNATURE) — DATE 10/30/97
JOHN J. O'HARA

( ) BY THE ENGINEER:
"I CERTIFY THAT THIS PLAN FOR POND CONSTRUCTION, EROSION AND SEDIMENT CONTROL REPRESENTS A PRACTICAL AND WORKABLE PLAN BASED ON MY PERSONAL KNOWLEDGE OF THE SITE CONDITIONS. THIS PLAN WAS PREPARED IN ACCORDANCE WITH THE REQUIREMENTS OF THE HOWARD SOIL CONSERVATION DISTRICT. I HAVE NOTIFIED THE DEVELOPER THAT HE/SHE MUST ENGAGE A REGISTERED PROFESSIONAL ENGINEER TO SUPERVISE POND CONSTRUCTION AND PROVIDE THE HOWARD SOIL CONSERVATION DISTRICT WITH AN "AS-BUILT" PLAN OF THE POND WITHIN 30 DAYS OF COMPLETION."

PAUL A. MANDEVILLE — DATE 10/31/97
SIGNATURE OF ENGINEER
PRINT NAME BELOW SIGNATURE

( ) THESE PLANS HAVE BEEN REVIEWED FOR THE HOWARD SOIL CONSERVATION DISTRICT AND MEET THE TECHNICAL REQUIREMENTS FOR SMALL POND CONSTRUCTION, SOIL EROSION AND SEDIMENT CONTROL.

USDA - NATURAL RESOURCES CONSERVATION SERVICE — DATE 10-30-97

( ) THESE PLANS FOR SMALL POND CONSTRUCTION, SOIL EROSION AND SEDIMENT CONTROL MEET THE REQUIREMENTS OF THE HOWARD SOIL CONSERVATION DISTRICT.

HOWARD SOIL CONSERVATION DISTRICT — DATE 10-30-97

AS-BUILT CERTIFICATION
I HEREBY CERTIFY THAT THE FACILITY SHOWN ON THIS PLAN WAS CONSTRUCTED AS SHOWN ON THE "AS-BUILT" PLANS AND MEETS THE APPROVED PLANS AND SPECIFICATIONS.

SIGNATURE — PE NO. 17650 — DATE 10/9/01

CERTIFY MEANS TO STATE OR DECLARE A PROFESSIONAL OPINION BASED UPON ON-SITE INSPECTIONS AND MATERIAL TESTS WHICH ARE CONDUCTED DURING CONSTRUCTION. THE ON-SITE INSPECTIONS AND MATERIAL TESTS ARE THOSE INSPECTIONS AND TESTS DEEMED SUFFICIENT AND APPROPRIATE BY COMMONLY ACCEPTED ENGINEERING STANDARDS. CERTIFY DOES NOT MEAN OR IMPLY A GUARANTEE BY THE ENGINEER NOR DOES AN ENGINEER'S CERTIFICATION RELIEVE ANY OTHER PARTY FROM MEETING REQUIREMENTS IMPOSED BY CONTRACT, EMPLOYMENT, OR OTHER MEANS, INCLUDING MEETING COMMONLY ACCEPTED INDUSTRY PRACTICES.

OPERATION, MAINTENANCE AND INSPECTION
INSPECTION OF THE POND(S) SHOWN HEREON SHALL BE PERFORMED AT LEAST ANNUALLY, IN ACCORDANCE WITH THE CHECKLIST AND REQUIREMENTS CONTAINED WITHIN USDA, SCS "STANDARDS AND SPECIFICATIONS FOR PONDS" (MD-378). THE POND OWNER(S) AND ANY HEIRS, SUCCESSORS, OR ASSIGNS SHALL BE RESPONSIBLE FOR THE SAFETY OF THE POND AND THE CONTINUED OPERATION, SURVEILLANCE, INSPECTION, AND MAINTENANCE THEREOF. THE POND OWNER(S) SHALL PROMPTLY NOTIFY THE SOIL CONSERVATION DISTRICT OF ANY UNUSUAL OBSERVATIONS THAT MAY BE INDICATIONS OF DISTRESS SUCH AS EXCESSIVE SEEPAGE, TURBID SEEPAGE, SLIDING OR SLUMPING.

DEPARTMENT OF PLANNING AND ZONING
HOWARD COUNTY, MARYLAND

DIRECTOR — DATE 11/3/97
CHIEF, DEVELOPMENT ENGINEERING DIVISION — DATE 10/30/97
CHIEF, DIVISION OF LAND DEVELOPMENT — DATE 11/3/97

DEPARTMENT OF PUBLIC WORKS
HOWARD COUNTY, MARYLAND

DIRECTOR OF PUBLIC WORKS — DATE 10/30/97
CHIEF, BUREAU OF WASTE MANAGEMENT — DATE 10/30/97

SCS ENGINEERS
CONSULTING ENGINEERS
11260 ROGER BACON DRIVE
SUITE 300
RESTON, VIRGINIA 22090
PH. (703) 471-6150
FAX. (703) 471-6676

STATE OF MARYLAND — PAUL ANTHONY MANDEVILLE — No. 17650 — PROFESSIONAL ENGINEER
Paul Anthony Mandeville, PE

DES. AST			
DRN. AST	6		
CHK. PAM	5		
DATE: 10-30-97	4		
	3		
	2		
	1		
BY	NO.	REVISION	DATE

CLEARWATER 1 BASIN DETAILS

ALPHA RIDGE LANDFILL
UNLINED CELL CLOSURE
CAPITAL PROJECT NO. C-0190-N
3rd ELECTION DISTRICT — HOWARD COUNTY, MARYLAND

SCALE: AS NOTED
SHEET 71 OF 128

ANTSP-CW1,CRADLE-CW1,RISER-CW1,TRK-CW1,TBL-CW1
CW1DETS-B M:\295077.01\FINAL

SDP-97-128

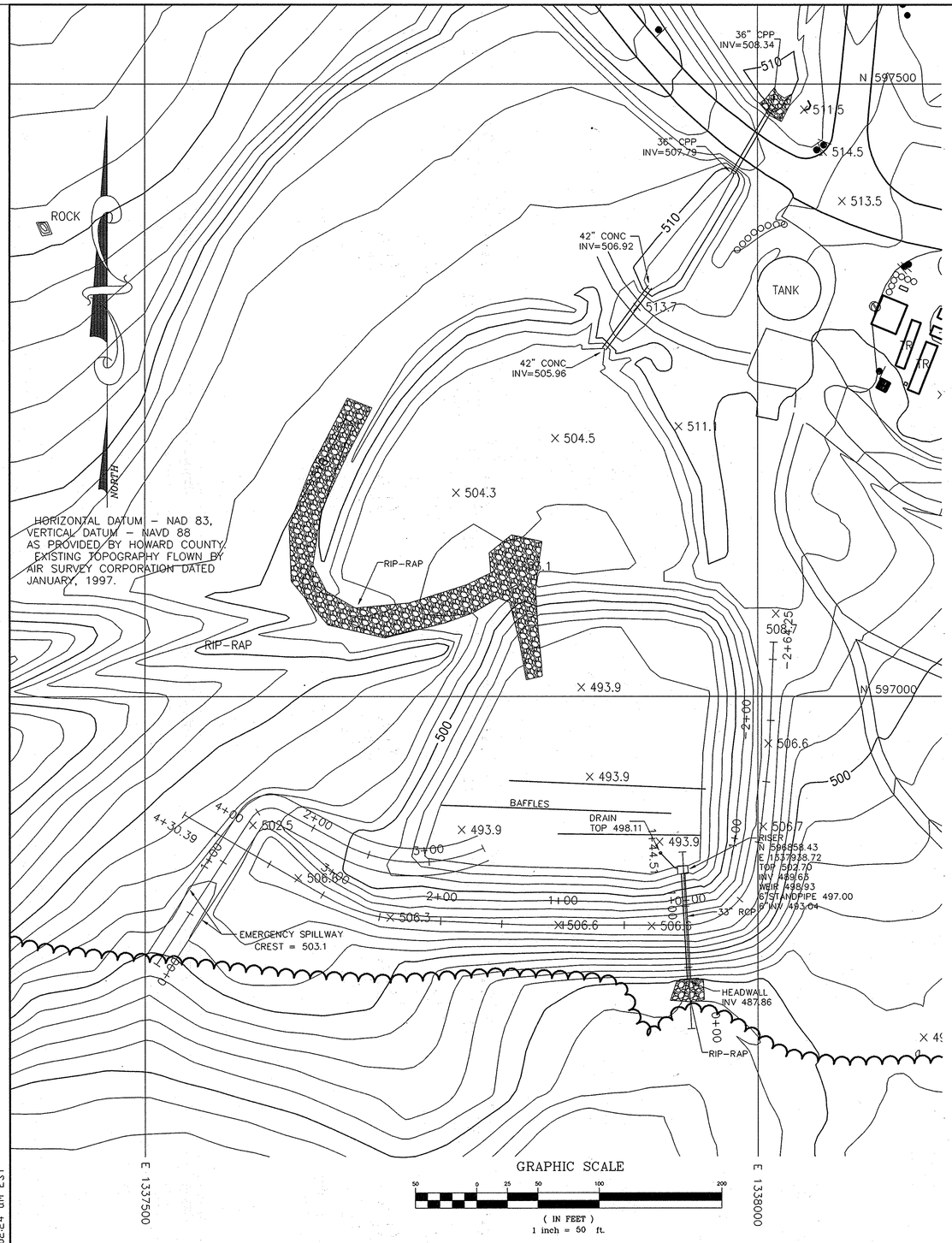

GRAPHIC SCALE

50 0 25 50 100 200

(IN FEET)
1 inch = 50 ft.

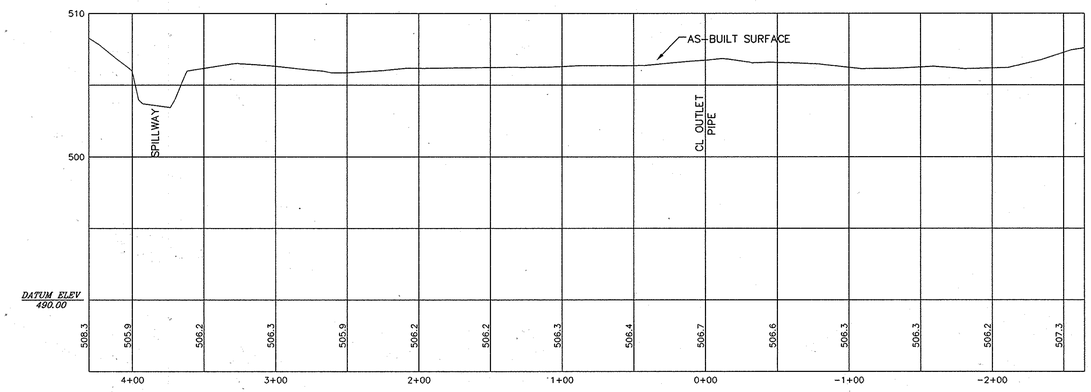

DAM PROFILE
CW 2

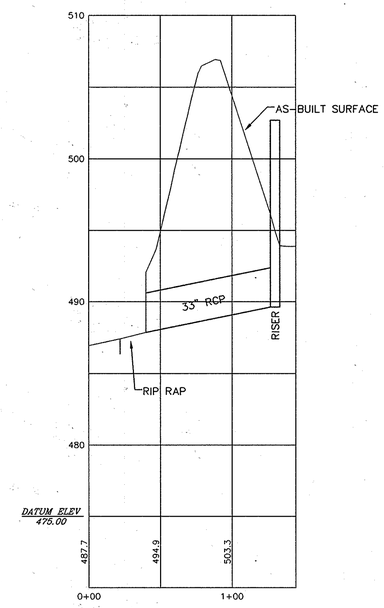

OUTLET PROFILE
CW 2

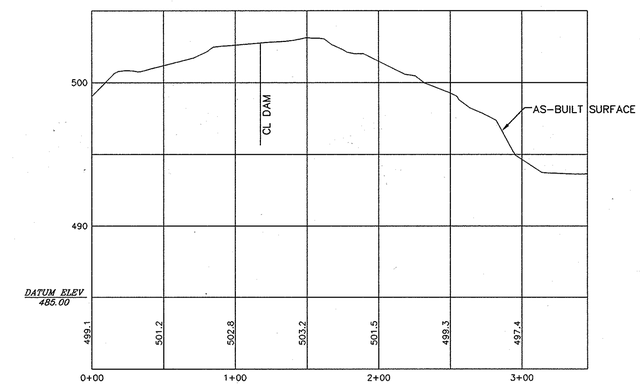

SPILLWAY PROFILE
CW 2

REVISIONS		
DATE	BY	DESCRIPTION
4-6-00	TWH	ADDED PROFILES
10-17-00	TWH	LABELED EMERGENCY SPILLWAY.

DESIGNED BY: _____ DATE
DRAWN BY: TWH 2-23-00 DATE
CHECKED BY: _____ DATE
APPROVED BY: _____ DATE

ENGINEERING TECHNOLOGIES ASSOCIATES, INC.
ENGINEERS * PLANNERS * SURVEYORS
3458 ELLICOTT CENTER DRIVE SUITE 101
ELLICOTT CITY, MARYLAND 21043
BALTO. (410)461-9920 FAX (410)750-8565

STATE OF MARYLAND
CLIFFORD ALLEN BROWN
No. 20820
REGISTERED PROFESSIONAL LAND SURVEYOR

H. E. SARGENT, INC.
CONTRACTORS • STILLWATER, ME.

CLEARWATER 2 BASIN – ENLARGED PLAN AS-BUILT

ALPHA RIDGE LANDFILL CELL CLOSURE

HOWARD COUNTY MARYLAND

SCALE : 1"=50' | CONTRACT NO.: 98301.10 | DATE : 2-23-2000 | SHEET 72-AB of 131

CW2.dwg 10-25-00 11:02:24 am EST

CW2.dwg 10-25-00 11:02:24 am EST

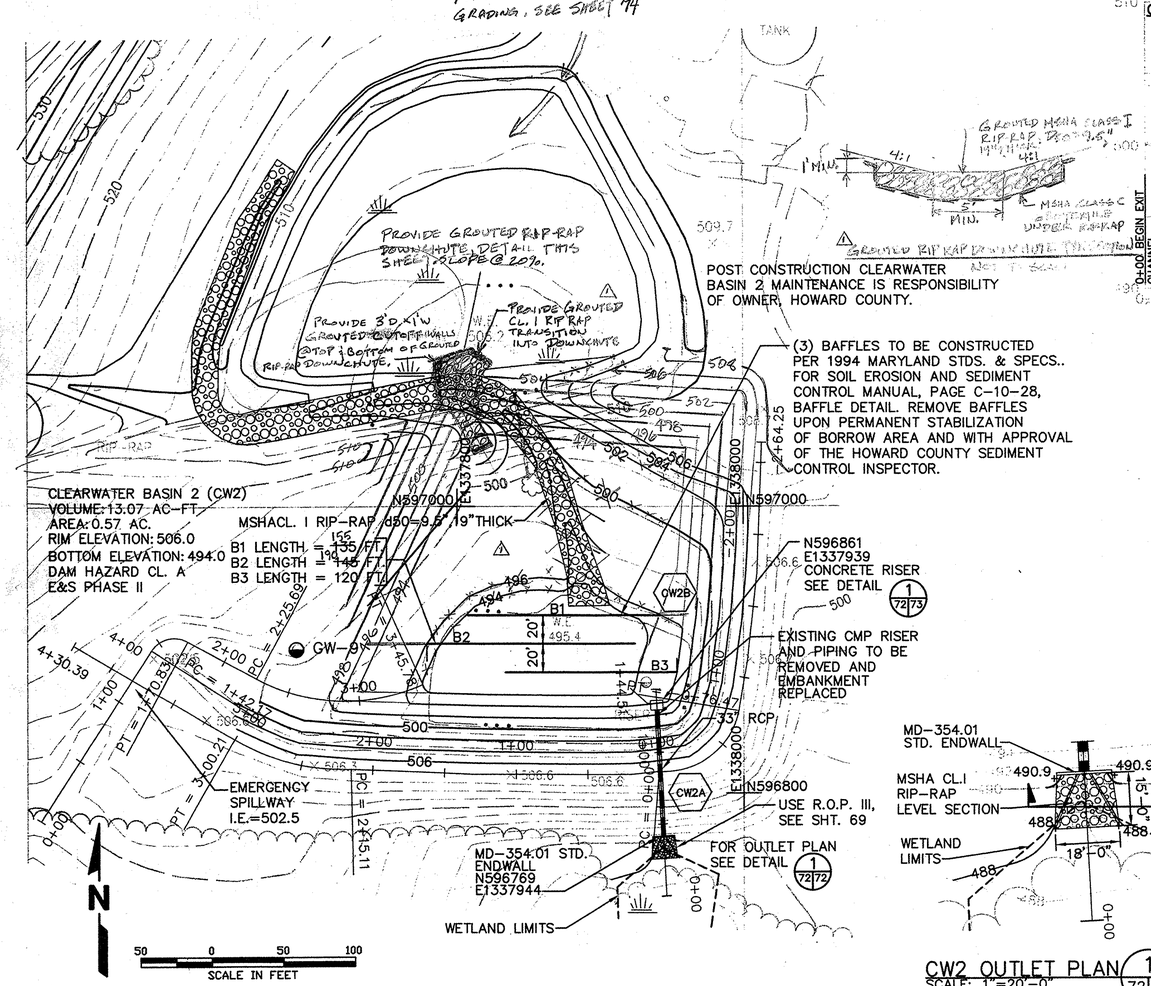

NOTE: FILL MATERIAL FOR CORE AND CUT-OFF TRENCHES SHALL CONFORM TO UNIFIED SOIL CLASSIFICATION GC, SC, CH, OR CL. MINIMUM REQUIRED DENSITY SHALL BE 95% OF MAXIMUM DRY DENSITY WITH A MOISTURE CONTENT WITHIN +/- 2% OF THE OPTIMUM. FOR MORE INFORMATION SEE SHEET 23.

FOR POND SUMMARY TABLE SEE SHT. 73

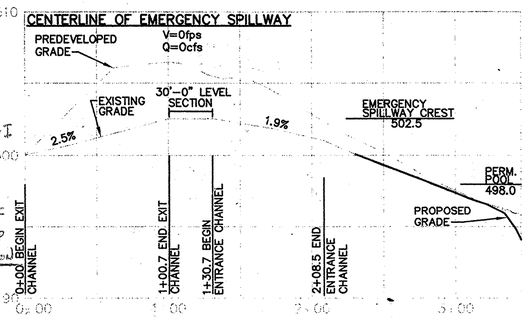

( ) BY THE ENGINEER:
"I CERTIFY THAT THIS PLAN FOR POND CONSTRUCTION, EROSION AND SEDIMENT CONTROL REPRESENTS A PRACTICAL AND WORKABLE PLAN BASED ON MY PERSONAL KNOWLEDGE OF THE SITE CONDITIONS. THIS PLAN WAS PREPARED IN ACCORDANCE WITH THE REQUIREMENTS OF THE HOWARD SOIL CONSERVATION DISTRICT. I HAVE NOTIFIED THE DEVELOPER THAT HE/SHE MUST ENGAGE A REGISTERED PROFESSIONAL ENGINEER TO SUPERVISE POND CONSTRUCTION AND PROVIDE THE HOWARD SOIL CONSERVATION DISTRICT WITH AN "AS-BUILT" PLAN OF THE POND WITHIN 30 DAYS OF COMPLETION."

PAUL A. MANDEVILLE — 10/30/97
SIGNATURE OF ENGINEER — DATE
PRINT NAME BELOW SIGNATURE

( ) THESE PLANS HAVE BEEN REVIEWED FOR THE HOWARD SOIL CONSERVATION DISTRICT AND MEET THE TECHNICAL REQUIREMENTS FOR SMALL POND CONSTRUCTION, SOIL EROSION AND SEDIMENT CONTROL. — 10-30-97
USDA - NATURAL RESOURCES CONSERVATION SERVICE — DATE

( ) THESE PLANS FOR SMALL POND CONSTRUCTION, SOIL EROSION AND SEDIMENT CONTROL MEET THE REQUIREMENTS OF THE HOWARD SOIL CONSERVATION DISTRICT. — 10-30-97
HOWARD SOIL CONSERVATION DISTRICT — DATE

AS-BUILT CERTIFICATION
I HEREBY CERTIFY THAT THE FACILITY SHOWN ON THIS PLAN WAS CONSTRUCTED AS SHOWN ON THE "AS-BUILT" PLANS AND MEETS THE APPROVED PLANS AND SPECIFICATIONS.
PE NO. _____
SIGNATURE _____ DATE _____

CERTIFY MEANS TO STATE OR DECLARE A PROFESSIONAL OPINION BASED UPON ON-SITE INSPECTIONS AND MATERIAL TESTS WHICH ARE CONDUCTED DURING CONSTRUCTION. THE ON-SITE INSPECTIONS AND MATERIAL TESTS ARE THOSE INSPECTIONS AND TESTS DEEMED SUFFICIENT AND APPROPRIATE BY COMMONLY ACCEPTED ENGINEERING STANDARDS. CERTIFY DOES NOT MEAN OR IMPLY A GUARANTEE BY THE ENGINEER NOR DOES AN ENGINEER'S CERTIFICATION RELIEVE ANY OTHER PARTY FROM MEETING REQUIREMENTS IMPOSED BY CONTRACT, EMPLOYMENT, OR OTHER MEANS, INCLUDING MEETING COMMONLY ACCEPTED INDUSTRY PRACTICES.

OPERATION, MAINTENANCE AND INSPECTION
INSPECTION OF THE POND(S) SHOWN HEREON SHALL BE PERFORMED AT LEAST ANNUALLY, IN ACCORDANCE WITH THE CHECKLIST AND REQUIREMENTS CONTAINED WITHIN USDA, SCS "STANDARDS AND SPECIFICATIONS FOR PONDS" (MD-378). THE POND OWNER(S) AND ANY HEIRS, SUCCESSORS, OR ASSIGNS SHALL BE RESPONSIBLE FOR THE SAFETY OF THE POND AND THE CONTINUED OPERATION, SURVEILLANCE, INSPECTION, AND MAINTENANCE THEREOF. THE POND OWNER(S) SHALL PROMPTLY NOTIFY THE SOIL CONSERVATION DISTRICT OF ANY UNUSUAL OBSERVATIONS THAT MAY BE INDICATIONS OF DISTRESS SUCH AS EXCESSIVE SEEPAGE, TURBID SEEPAGE, SLIDING OR SLUMPING.

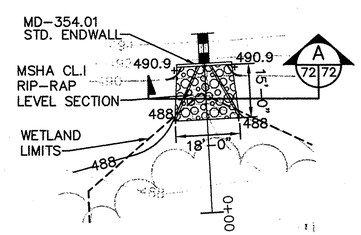

CW2 OUTLET PLAN 1 72/72
SCALE: 1"=20'-0"

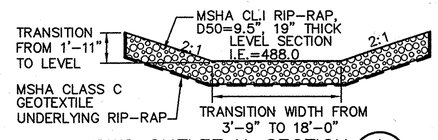

CW2 OUTLET X-SECTION A 72/72
NOT TO SCALE

NOTE: COUNTY GEOTECHNICAL ENGINEER SHALL INSPECT EXPOSED FACE OF EXISTING EMBANKMENT REMAINING WHEN BREACH IS MADE BY CONTRACTOR. CONTRACTOR SHALL NOTIFY RESIDENT ENGINEER OF THE TIME BREACH WILL BE MADE AND ASSIST GEOTECHNICAL ENGINEER WITH INSPECTION AS NECESSARY.

CONTRACTOR SHALL SCARIFY, BLEND AND COMPACT THE NEW CORE TRENCH WITH THE EXISTING CORE TRENCH TO REMAIN. THE COUNTY GEOTECHNICAL ENGINEER SHALL OBSERVE THE WORK.

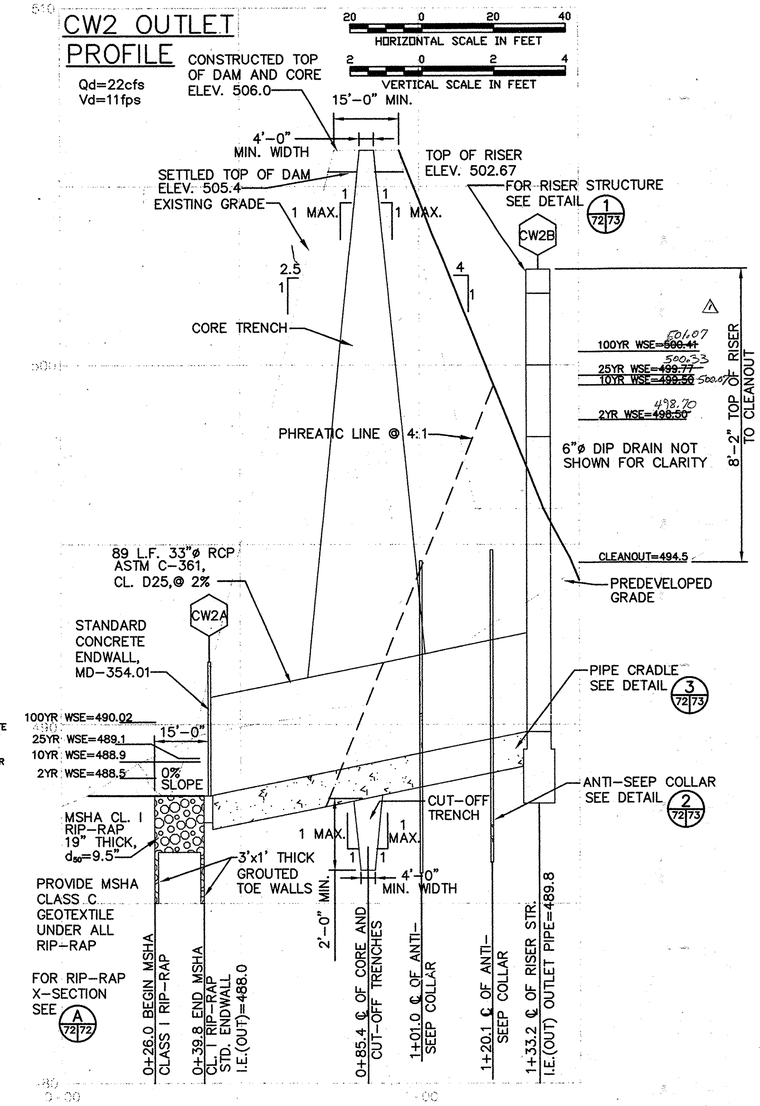

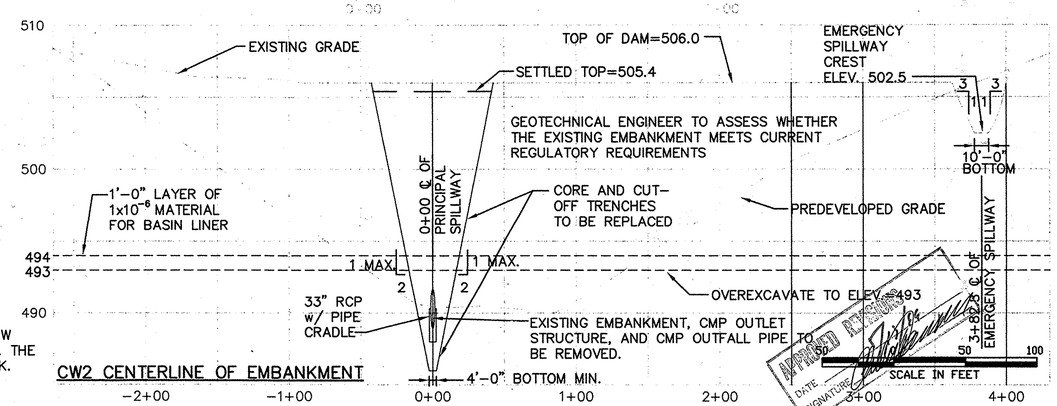

CW2 CENTERLINE OF EMBANKMENT

SUBDIVISION NAME	LOT/PARCEL	
ALPHA RIDGE SOLID WASTE MANAGEMENT CENTER	54,253,220,11	
LIBER/FOLIO	ZONE	TAX/ZONE MAP
10-847/606 16-878/215 10-691/314	PEC	10 & 16
WATER CODE	SEWER CODE	CENSUS TR.
PRIVATE, EXISTING	PRIVATE, EXISTING	60-30

DEPARTMENT OF PLANNING AND ZONING
HOWARD COUNTY, MARYLAND

DIRECTOR — DATE 11/3/97
CHIEF, DEVELOPMENT ENGINEERING DIVISION — DATE 10/31/97
CHIEF, DIVISION OF LAND DEVELOPMENT — DATE 11/3/97

DEPARTMENT OF PUBLIC WORKS
HOWARD COUNTY, MARYLAND

DIRECTOR OF PUBLIC WORKS — DATE 10/30/97
CHIEF, BUREAU OF WASTE MANAGEMENT — DATE 10/30/97

SEDIMENT CONTROL & POND CONSTRUCTION
( ) BY THE DEVELOPER:
"I/WE CERTIFY THAT ALL DEVELOPMENT AND/OR CONSTRUCTION WILL BE DONE ACCORDING TO THESE PLANS, AND THAT ANY RESPONSIBLE PERSONNEL INVOLVED IN THE CONSTRUCTION PROJECT WILL HAVE A CERTIFICATE OF ATTENDANCE AT A DEPARTMENT OF THE ENVIRONMENT APPROVED TRAINING PROGRAM FOR THE CONTROL OF SEDIMENT AND EROSION BEFORE BEGINNING THE PROJECT. I SHALL ENGAGE A REGISTERED PROFESSIONAL ENGINEER TO SUPERVISE POND CONSTRUCTION AND PROVIDE THE HOWARD SOIL CONSERVATION DISTRICT WITH AN "AS-BUILT" PLAN OF THE POND WITHIN 30 DAYS OF COMPLETION. I ALSO AUTHORIZE PERIODIC ON-SITE INSPECTIONS BY THE HOWARD SOIL CONSERVATION DISTRICT."

JOHN J. O'HARA — 10/30/97
SIGNATURE OF DEVELOPER — DATE
PRINT NAME BELOW SIGNATURE

SCS ENGINEERS
CONSULTING ENGINEERS
11260 ROGER BACON DRIVE
SUITE 300
RESTON, VIRGINIA 22090
PH. (703) 471-6150
FAX. (703) 471-6676

STATE OF MARYLAND — PAUL ANTHONY MANDEVILLE — REG. NO. 14968 — PROFESSIONAL ENGINEER
Paul Anthony Mandeville, PE

DES. AST		6		
DRN. AST		5		
		4		
CHK. PAM		3		
		2		
DATE: 10-30-97	BY	NO.	REVISION	DATE
		1	POND GRADING & WSE's TO PRELIMINARY	4-28-97

CLEARWATER 2 BASIN
ENLARGED PLAN AND PROFILES

ALPHA RIDGE LANDFILL
UNLINED CELL CLOSURE
CAPITAL PROJECT NO. C-0190-N
3rd ELECTION DISTRICT — HOWARD COUNTY, MARYLAND

SCALE: AS NOTED
SHEET 72 OF 131

M:\295077.01\FINAL BRW2CW2,PRF-CW2OUT,PRFESCW2,PRFCW2DAM,CW2RRPLAN,XS-CW20 CW2PLAN-B

	RISER				OUTLET PIPE				ANTI-SEEP COLLAR		DAM			EMERG. SPILLWAY		CORE TRENCH		CUT-OFF TRENCH		WATER SURFACE ELEV.			
POND	WEIR HT.	WEIR WIDTH	CREST ELEV.	STR. WIDTH	DIA. IN.	L FT.	U/S INV.	D/S INV.	QTY.	APPROX. SIZE	TOP WIDTH FT.	CONSTR. HEIGHT	SETTLED HEIGHT	ELEV.	BOTTOM WIDTH FT.	TOP WIDTH FT.	SIDE SLOPES	BOT. WIDTH FT.	SIDE SLOPES	2 YR.	10 YR.	25 YR.	100 YR. ⚠
CW2	2'-0"	12'	500.16 ~~500.0~~	6.67' x 8.67'	33	89	489.63 ~~489.8~~	487.86 ~~488.0~~	2	8.98' H. 9.63' W.	15'	506	505.4	503.1 502.5	10	4'	1:1	4'	1:1	498.70 ~~498.50~~	500.07 ~~499.50~~	500.33 ~~499.77~~	501.07 ~~500.41~~

POST CONSTRUCTION CLEARWATER 2 BASIN MAINTENANCE IS RESPONSIBILITY OF OWNER, HOWARD COUNTY

NOTES:
1. ANTI-SEEP COLLAR TO BE POURED AT LEAST TWO (2) FEET FROM NEAREST PIPE JOINT
2. ANTI-SEEP COLLAR IS TO BE CONSTRUCTED IN THREE POURS.
3. BOTTOM HALF TO BE POURED FIRST.
4. PLACE PIPE AND POUR CRADLE SECOND.
5. TOP PORTION OF COLLAR POURED THIRD.
6. BACKFILL SHALL BE PLACED EVENLY ON BOTH SIDES OF THE ANTI-SEEP COLLAR.
7. REINFORCED CONCRETE: fc = 4,000 psi @ 28 DAYS.

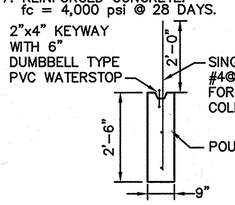

ANTI-SEEP COLLAR CONSTRUCTION SEQUENCE

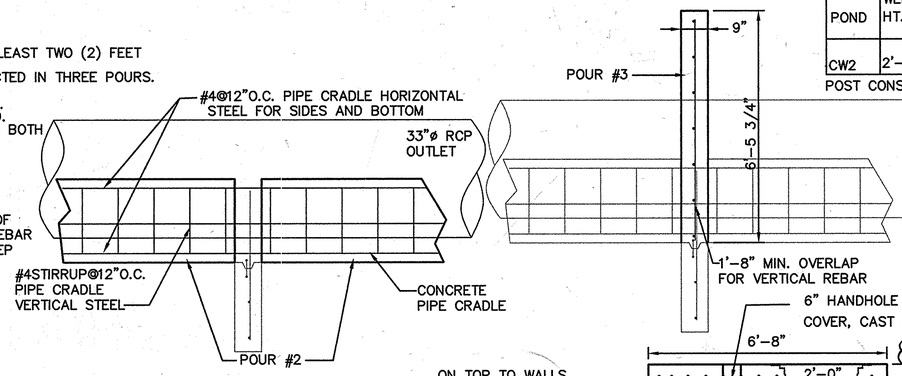

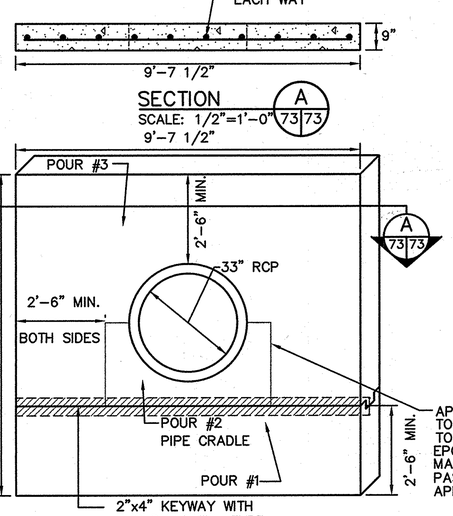

SECTION A 73|73
SCALE: 1/2"=1'-0"

ANTI-SEEP COLLAR DETAIL (TYPICAL OF TWO) 2 72|73
SCALE: 1/2"=1'-0"

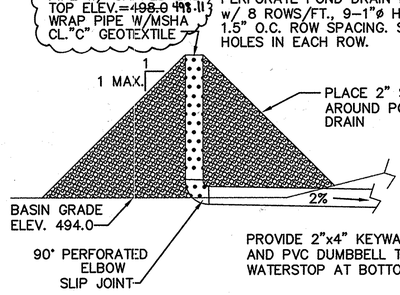

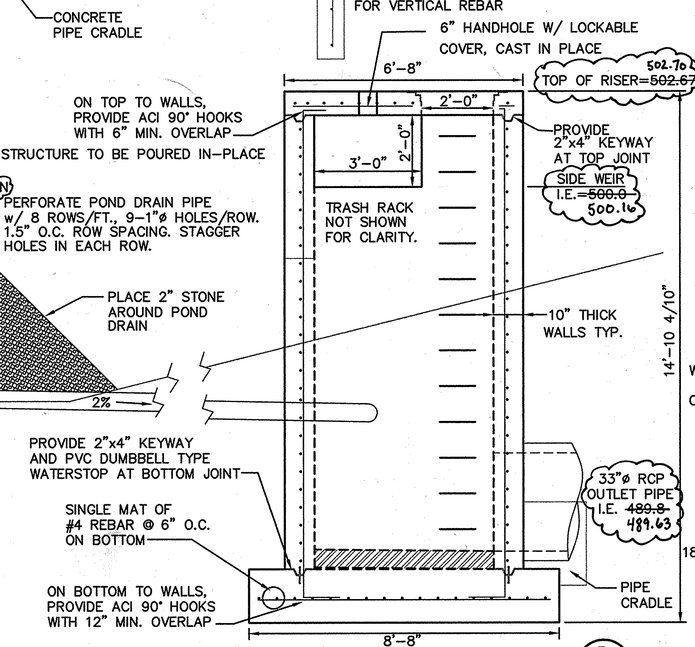

RISER STRUCTURE SECTION D 73|73
SCALE: 1/2"=1'-0"

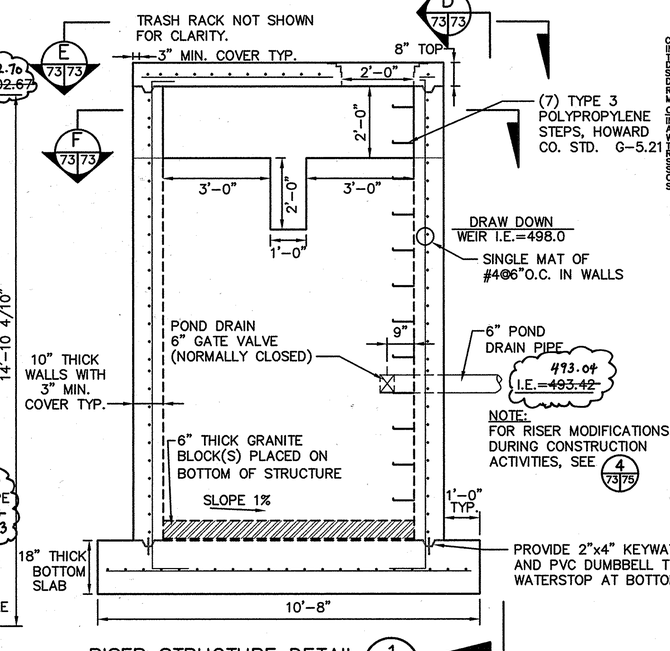

RISER STRUCTURE DETAIL 1 72|73
SCALE: 1/2"=1'-0"

NOTE: FOR RISER MODIFICATIONS DURING CONSTRUCTION ACTIVITIES, SEE 4 73|75

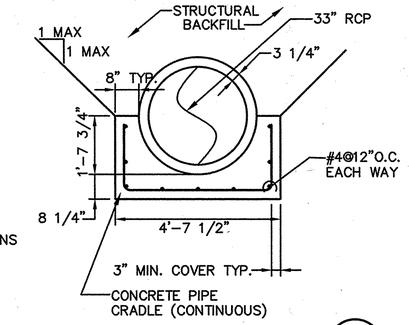

A2 PIPE CRADLE DETAIL 3 72|73
SCALE: 1/2"=1'-0"

NOTES:
1. PIPE CRADLE SHALL HAVE A MINIMUM fc OF 4,000 psi @ 28 DAYS
2. USE INTERMEDIATE GRADE REINFORCING STEEL

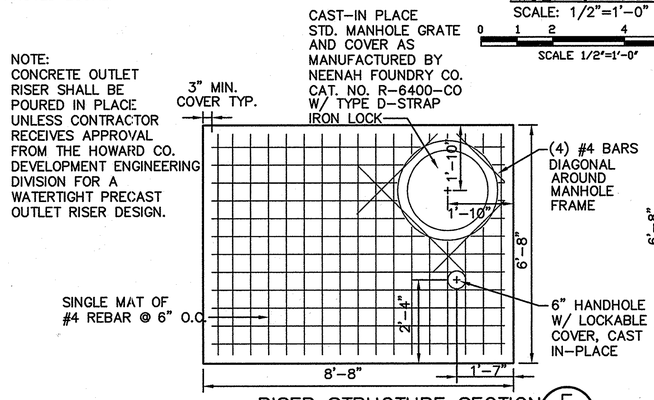

RISER STRUCTURE SECTION E 73|73
SCALE: 1/2"=1'-0"

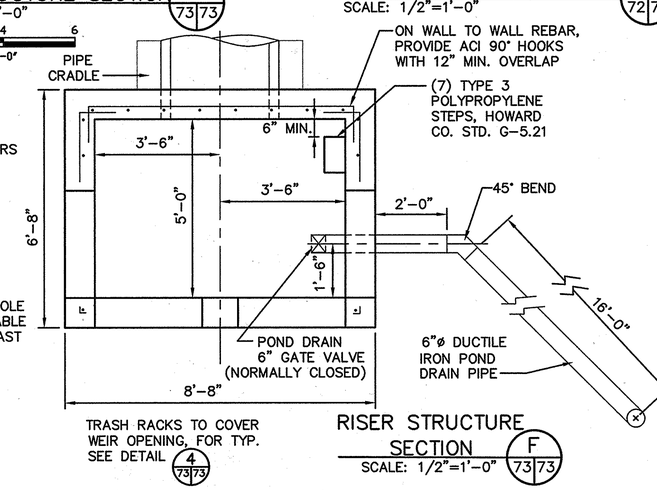

TRASH RACKS TO COVER WEIR OPENING, FOR TYP. SEE DETAIL 4 73|73

RISER STRUCTURE SECTION F 73|73
SCALE: 1/2"=1'-0"

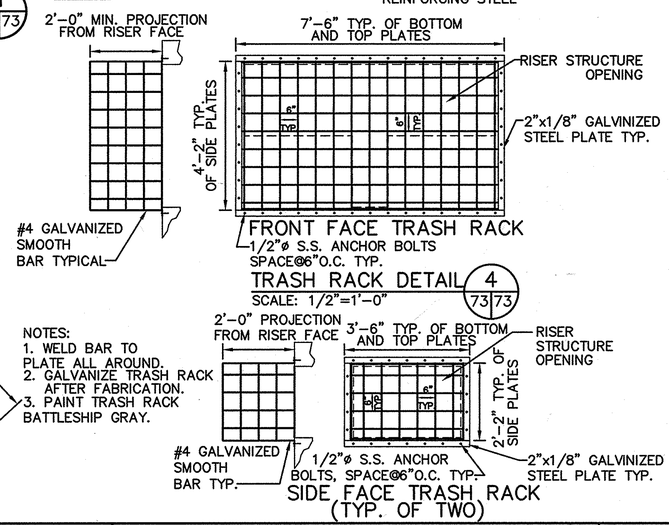

FRONT FACE TRASH RACK
TRASH RACK DETAIL 4 73|73
SCALE: 1/2"=1'-0"

NOTES:
1. WELD BAR TO PLATE ALL AROUND.
2. GALVANIZE TRASH RACK AFTER FABRICATION.
3. PAINT TRASH RACK BATTLESHIP GRAY.

SIDE FACE TRASH RACK (TYP. OF TWO)

( ) THESE PLANS HAVE BEEN REVIEWED FOR THE HOWARD SOIL CONSERVATION DISTRICT AND MEET THE TECHNICAL REQUIREMENTS FOR SMALL POND CONSTRUCTION, SOIL EROSION AND SEDIMENT CONTROL.
USDA - NATURAL RESOURCES CONSERVATION SERVICE — DATE 10-30-97

( ) THESE PLANS FOR SMALL POND CONSTRUCTION, SOIL EROSION AND SEDIMENT CONTROL MEET THE REQUIREMENTS OF THE HOWARD SOIL CONSERVATION DISTRICT.
HOWARD SOIL CONSERVATION DISTRICT — DATE 10-30-97

AS-BUILT CERTIFICATION
I HEREBY CERTIFY THAT THE FACILITY SHOWN ON THIS PLAN WAS CONSTRUCTED AS SHOWN ON THE "AS-BUILT" PLANS AND MEETS THE APPROVED PLANS AND SPECIFICATIONS.
SIGNATURE — PE NO. 17650 — DATE 10/10/01

CERTIFY MEANS TO STATE OR DECLARE A PROFESSIONAL OPINION BASED UPON ON-SITE INSPECTIONS AND MATERIAL TESTS WHICH ARE CONDUCTED DURING CONSTRUCTION. THE ON-SITE INSPECTIONS AND MATERIAL TESTS ARE THOSE INSPECTIONS AND TESTS DEEMED SUFFICIENT AND APPROPRIATE BY COMMONLY ACCEPTED ENGINEERING STANDARDS. CERTIFY DOES NOT MEAN OR IMPLY A GUARANTEE BY THE ENGINEER NOR DOES AN ENGINEER'S CERTIFICATION RELIEVE ANY OTHER PARTY FROM MEETING REQUIREMENTS IMPOSED BY CONTRACT, EMPLOYMENT, OR OTHER MEANS, INCLUDING MEETING COMMONLY ACCEPTED INDUSTRY PRACTICES.

OPERATION, MAINTENANCE AND INSPECTION
INSPECTION OF THE POND(S) SHOWN HEREON SHALL BE PERFORMED AT LEAST ANNUALLY, IN ACCORDANCE WITH THE CHECKLIST AND REQUIREMENTS CONTAINED WITHIN USDA, SCS, "STANDARDS AND SPECIFICATIONS FOR PONDS" (MD-378). THE POND OWNER(S) AND ANY HEIRS, SUCCESSORS, OR ASSIGNS SHALL BE RESPONSIBLE FOR THE SAFETY OF THE POND AND THE CONTINUED OPERATION, SURVEILLANCE, INSPECTION, AND MAINTENANCE THEREOF. THE POND OWNER(S) SHALL PROMPTLY NOTIFY THE SOIL CONSERVATION DISTRICT OF ANY UNUSUAL OBSERVATIONS THAT MAY BE INDICATIONS OF DISTRESS SUCH AS EXCESSIVE SEEPAGE, TURBID SEEPAGE, SLIDING OR SLUMPING.

SEDIMENT CONTROL & POND CONSTRUCTION
( ) BY THE DEVELOPER:
"I/WE CERTIFY THAT ALL DEVELOPMENT AND/OR CONSTRUCTION WILL BE DONE ACCORDING TO THESE PLANS, AND THAT ANY RESPONSIBLE PERSONNEL INVOLVED IN THE CONSTRUCTION PROJECT WILL HAVE A CERTIFICATE OF ATTENDANCE AT A DEPARTMENT OF THE ENVIRONMENT APPROVED TRAINING PROGRAM FOR THE CONTROL OF SEDIMENT AND EROSION BEFORE BEGINNING THE PROJECT. I SHALL ENGAGE A REGISTERED PROFESSIONAL ENGINEER TO SUPERVISE POND CONSTRUCTION AND PROVIDE THE HOWARD SOIL CONSERVATION DISTRICT WITH AN "AS-BUILT" PLAN OF THE POND WITHIN 30 DAYS OF COMPLETION. I ALSO AUTHORIZE PERIODIC ON-SITE INSPECTIONS BY THE HOWARD SOIL CONSERVATION DISTRICT."
SIGNATURE OF DEVELOPER — DATE 10/30/97
PRINT NAME BELOW SIGNATURE: JOHN J. O'HARA

( ) BY THE ENGINEER:
"I CERTIFY THAT THIS PLAN FOR POND CONSTRUCTION, EROSION AND SEDIMENT CONTROL REPRESENTS A PRACTICAL AND WORKABLE PLAN BASED ON MY PERSONAL KNOWLEDGE OF THE SITE CONDITIONS. THIS PLAN WAS PREPARED IN ACCORDANCE WITH THE REQUIREMENTS OF THE HOWARD SOIL CONSERVATION DISTRICT. I HAVE NOTIFIED THE DEVELOPER THAT HE/SHE MUST ENGAGE A REGISTERED PROFESSIONAL ENGINEER TO SUPERVISE POND CONSTRUCTION AND PROVIDE THE HOWARD SOIL CONSERVATION DISTRICT WITH AN "AS-BUILT" PLAN OF THE POND WITHIN 30 DAYS OF COMPLETION."
SIGNATURE OF ENGINEER — DATE 10/30/97
PRINT NAME BELOW SIGNATURE: PAUL A. MANDEVILLE

SUBDIVISION NAME	LOT/PARCEL	
ALPHA RIDGE SOLID WASTE MANAGEMENT CENTER	54,253,220,11	
LIBER/FOLIO 10-847/606 16-878/215 10-891/314	ZONE PEC	TAX/ZONE MAP 10 & 16
WATER CODE PRIVATE, EXISTING	SEWER CODE PRIVATE, EXISTING	CENSUS TR. 60-30

DEPARTMENT OF PLANNING AND ZONING
HOWARD COUNTY, MARYLAND
DIRECTOR — DATE 11/3/97
CHIEF, DEVELOPMENT ENGINEERING DIVISION — DATE 10/30/97
CHIEF, DIVISION OF LAND DEVELOPMENT — DATE 11/3/97

DEPARTMENT OF PUBLIC WORKS
HOWARD COUNTY, MARYLAND
DIRECTOR OF PUBLIC WORKS — DATE 10/30/97
CHIEF, BUREAU OF WASTE MANAGEMENT — DATE 10/30/97

SCS ENGINEERS
CONSULTING ENGINEERS
11260 ROGER BACON DRIVE
SUITE 300
RESTON, VIRGINIA 22090
PH. (703) 471-6150
FAX. (703) 471-6676

STATE OF MARYLAND — PAUL ANTHONY MANDEVILLE — No. 17650 — PROFESSIONAL ENGINEER
Paul Anthony Mandeville, PE

DES. AST			
DRN. AST	6		
CHK. PAM	5		
	4		
	3		
	2		
DATE: 10-30-97	1	POND GRADING, WSE'S AND DOWNCHUTE (SEE SHEET 72)	4/28/99
	BY	NO. REVISION	DATE

CLEARWATER 2 BASIN DETAILS

ALPHA RIDGE LANDFILL
UNLINED CELL CLOSURE
CAPITAL PROJECT NO. C-0190-N
3rd ELECTION DISTRICT — HOWARD COUNTY, MARYLAND

SCALE: AS NOTED
SHEET 73 OF 131

SDP-97-128

CW2DETS-B — M:\295077.01\FINAL — ANTSP-CW2,CRADLE-CW2,RISER-CW2,TRK-CW2,TBL-CW2

DEPARTMENT OF PLANNING AND ZONING
HOWARD COUNTY, MARYLAND

DIRECTOR	DATE 11/3/97
CHIEF, DEVELOPMENT ENGINEERING DIVISION	DATE 10/30/97
CHIEF, DIVISION OF LAND DEVELOPMENT ~~AND RESEARCH~~	DATE 11/2/97

SUBDIVISION NAME	LOT/PARCEL	
ALPHA RIDGE SOLID WASTE MANAGEMENT CENTER	54,253,220,11	
LIBER/FOLIO	ZONE	TAX/ZONE MAP
10-847/606 16-876/215 10-691/314	PEC	10 & 16
WATER CODE	SEWER CODE	CENSUS TR.
PRIVATE, EXISTING	PRIVATE, EXISTING	60-30

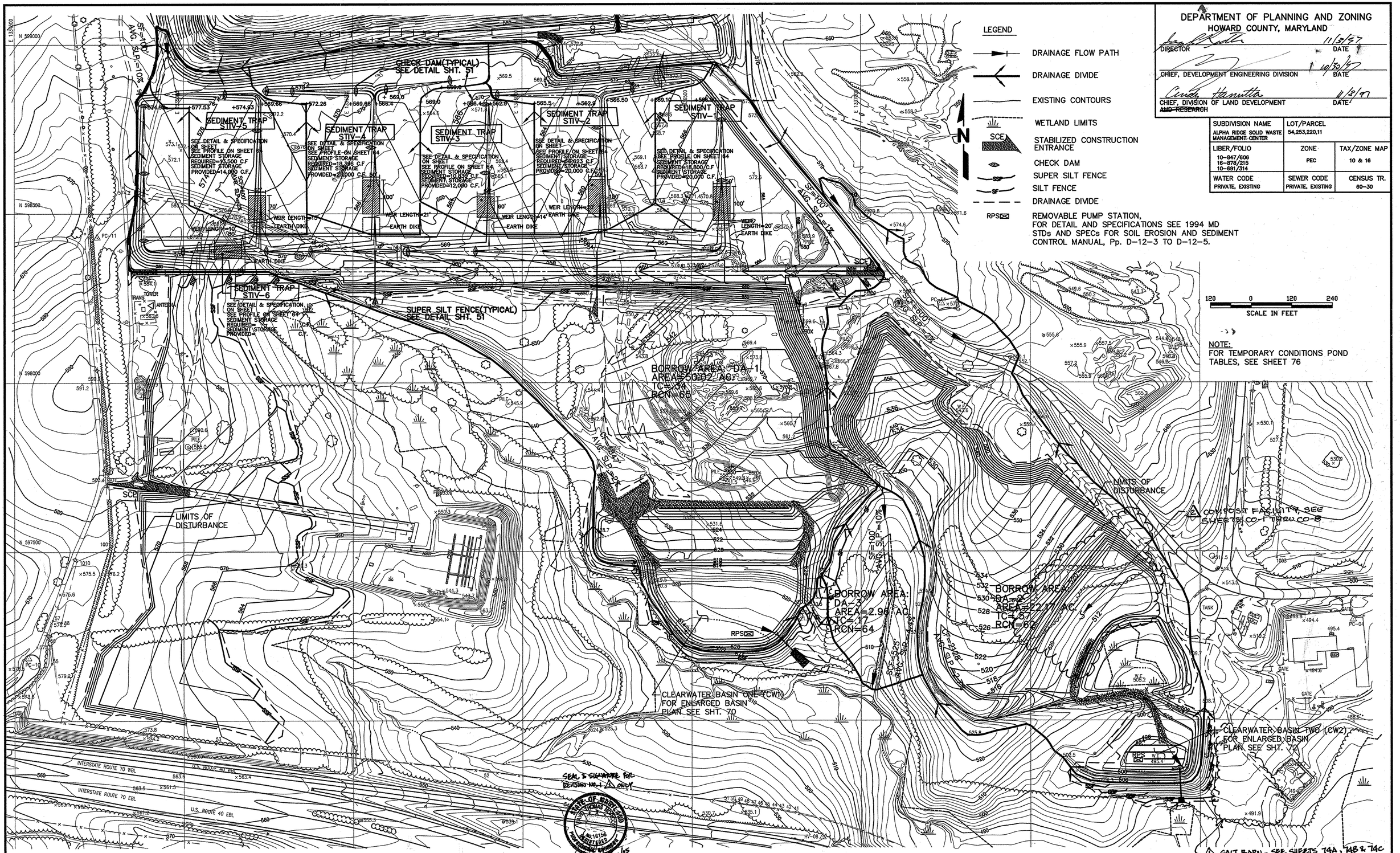

DEPARTMENT OF PUBLIC WORKS HOWARD COUNTY, MARYLAND	SCS ENGINEERS CONSULTING ENGINEERS 11260 ROGER BACON DRIVE SUITE 300 RESTON, VIRGINIA 22090 PH. (703) 471-6150 FAX. (703) 471-6676				BORROW AREA DRAINAGE DIVIDES / EROSION & SEDIMENT CONTROL	ALPHA RIDGE LANDFILL UNLINED CELL CLOSURE CAPITAL PROJECT NO. C-0190-N	SCALE: 1"=120'
DIRECTOR OF PUBLIC WORKS DATE 10/30/97		DES. AST	6				SHEET 74 OF 131
CHIEF, BUREAU OF WASTE MANAGEMENT DATE 10/30/97		DRN. LTJ	5			3rd ELECTION DISTRICT HOWARD COUNTY, MARYLAND	
		CHK. PAM	4				
		DATE: 10-30-97	3				
			2	CSN	ALPHA RIDGE LANDFILL COMPOST FACILITY	3/19/12	
			1	DTM	ADDED SALT BARN; REVISED SDP	12/27/05	
			BY	NO.	REVISION	DATE	

Paul Anthony Mandeville, PE

M:\295077.01\FINAL SEDCTRL

E&SDIVDE

SDP-97-128

ALPHA RIDGE SALT BARN
HOWARD COUNTY CAPITAL PROJECT NO. C-0254
HOWARD COUNTY, MARYLAND

SITE DEVELOPMENT PLAN

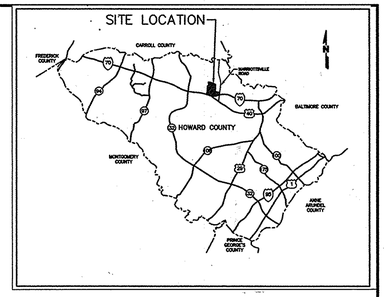

VICINITY MAP
NTS

INDEX OF DRAWINGS

SHEET NO.	TITLE
74A	TITLE SHEET
74B	SITE GRADING PLAN AND EROSION & SEDIMENT CONTROL PLAN
74C	EROSION & SEDIMENT CONTROL NOTES & DETAILS

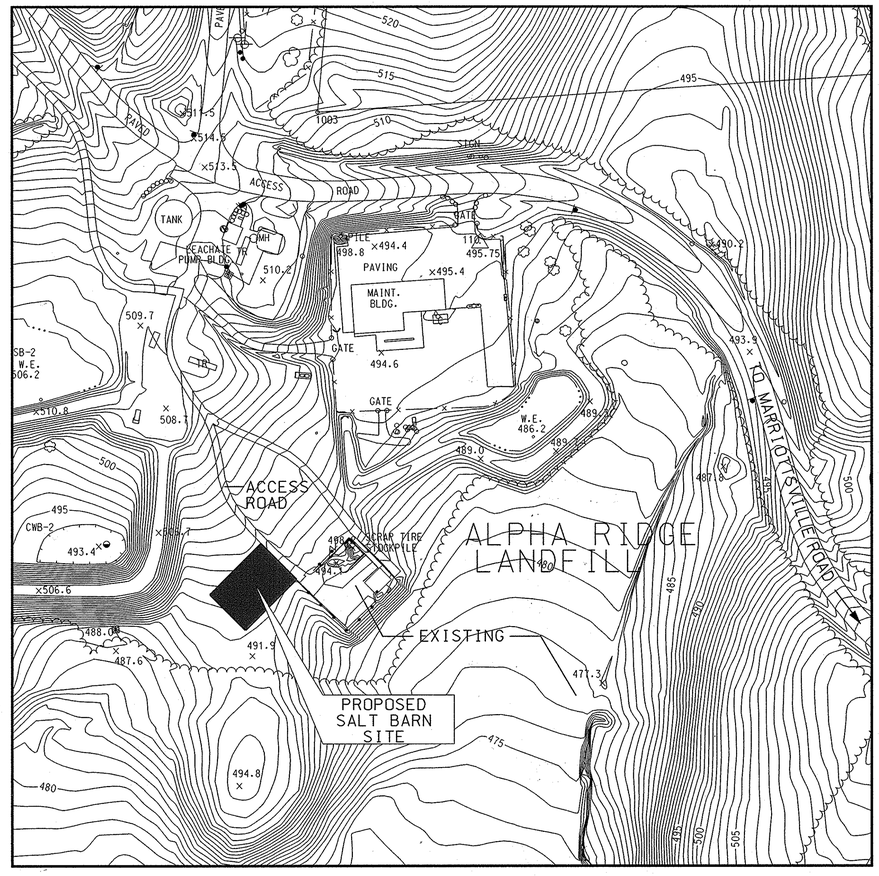

VICINITY MAP
SCALE 1" = 100'

SEE SDP-97-128

GENERAL NOTES:

1. CONSTRUCTION SHALL BE IN ACCORDANCE WITH THE LATEST STANDARDS AND SPECIFICATIONS OF HOWARD COUNTY AND MSHA STANDARDS AND SPECIFICATIONS WHERE APPLICABLE.
2. THE CONTRACTOR SHALL NOTIFY THE CONSTRUCTION INSPECTION DIVISION AT (410)313-1880 AT LEAST FIVE (5) WORKING DAYS PRIOR TO THE START OF WORK.
3. THE CONTRACTOR SHALL NOTIFY "MISS UTILITY" AT 1-800-257-7777 AT LEAST 48 HOURS PRIOR TO ANY EXCAVATION WORK.
4. PLAN DIMENSIONS ARE TO THE EDGES OF PAVED SURFACES UNLESS OTHERWISE NOTED.
5. HORIZONTAL DATUM: MARYLAND STATE PLANE COORDINATE GRID. BASED ON NORTH AMERICAN ADJUSTMENT OF 1983.
6. VERTICAL DATUM: BASED ON NORTH AMERICAN VERTICAL ADJUSTMENT OF 1988.
7. AERIAL TOPOGRAPHY FROM ASC, STERLING, VA, 703 471-4510.
8. EXISTING UTILITIES TO BE FIELD VERIFIED.
9. A TRAFFIC CONTROL PLAN IS NOT REQUIRED.
10. STORMWATER MANAGEMENT IS PROVIDED BY GRASS CHANNEL AND/OR SHEET FLOW CREDITS.
11. NO WETLANDS OR FLOODPLAINS EXIST WITHIN THE PROPSED AREA OF WORK.
12. NO LANDSCAPING IS REQUIRED. NO LANDSCAPE SURETY IS REQUIRED SINCE THIS IS A HOWARD COUNTY CAPITAL PROJECT.
13. SUPER SILT FENCE WILL SERVE AS TREE PROTECTION FENCE.

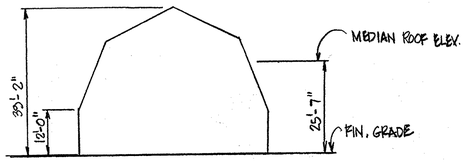

SALT STORAGE BLDG. ELEV.
SCALE: 1"= 20'

ENGINEER'S CERTIFICATE

"I certify that this plan for sediment and erosion control represents a practical and workable plan based on my personal knowledge of the site conditions and that it was prepared in accordance with the requirements of the Howard Soil Conservation District."

Signature of Engineer (print name below signature) — Date 12/28/05
DAVID T. MORICONI

DEVELOPER'S CERTIFICATE

"I/We certify that all development and construction will be done according to this plan for sediment and erosion control, and that all responsible personnel involved in the construction project will have a Certificate of Attendance at a Department of the Environment Approved Training Program for the Control of Sediment and Erosion before beginning the project. I also authorize periodic on-site inspection by the Howard Soil Conservation District."

Signature of Developer (print name below signature) — Date 3-17-06
William E. Malone, Jr.

APPROVED: DEPARTMENT OF PLANNING AND ZONING

Chief, Development Engineering Division — Date 2/21/06
Chief, Division of Land Development — Date 4/4/06
Director — Date 4/5/06

Reviewed for Howard SCD and meets Technical Requirements

USDA - Natural Resources Conservation Service — Date 2/9/06

This deveolpment plan is approved for soil erosion and sediment control by the HOWARD SOIL CONSERVATION DISTRICT

Howard SCD — Date 2/9/06

APPROVED: FOR PUBLIC WATER AND PUBLIC SEWERAGE SYSTEMS

County Health Officer, Howard County Health Department — Date 3/3/06

DEPARTMENT OF PUBLIC WORKS
HOWARD COUNTY, MARYLAND

DIRECTOR OF PUBLIC WORKS — DATE 3/7/06
CHIEF, BUREAU OF ENGINEERING — DATE 3/16/06
CHIEF, BUREAU OF ENVIRONMENTAL SERVICES — DATE 3/9/06
CHIEF, BUREAU OF HIGHWAYS — DATE 3-16-06

PREPARED BY
URS
4 NORTH PARK DRIVE
HUNT VALLEY, MARYLAND
TEL: (410) 785-7220

STATE OF MARYLAND — DAVID THOMAS MORICONI — No. 10159 — REGISTERED PROFESSIONAL ENGINEER — 12/28/05

DES: DTM/RKK			
DRN: WHS			
CHK: DTM/RKK			
DATE: 12/05	DTM	1	NEW SHEET FOR PROP. SALT BARN: REVISED SDP-97-128 — 12/05
	BY	NO.	REVISION — DATE

TITLE SHEET

SCALE MAP NO. N/A BLOCK NO.

REVISED SITE DEVELOPMENT PLAN
ALPHA RIDGE SALT BARN
3RD ELECTION DISTRICT - HOWARD COUNTY, MARYLAND

SCALE AS SHOWN

SHEET 74A OF 131

NOTES:

1. SURVEY BASED ON MARYLAND STATE PLANE COORDINATE SYSTEM NAD 1983.
2. VERTICAL DATAUM BASED ON NAVD 1988.
3. CONTRACTOR SHALL STAKE THE IMPROVEMENTS IN THE FIELD AND OBTAIN APPROVAL FROM THE COUNTY PRIOR TO CONSTRUCTION.
4. ELECTRICAL SERVICE TO BE COORDINATED WITH BGE FOR CONNECTION TO NEAREST POLE FOR SERVICE.

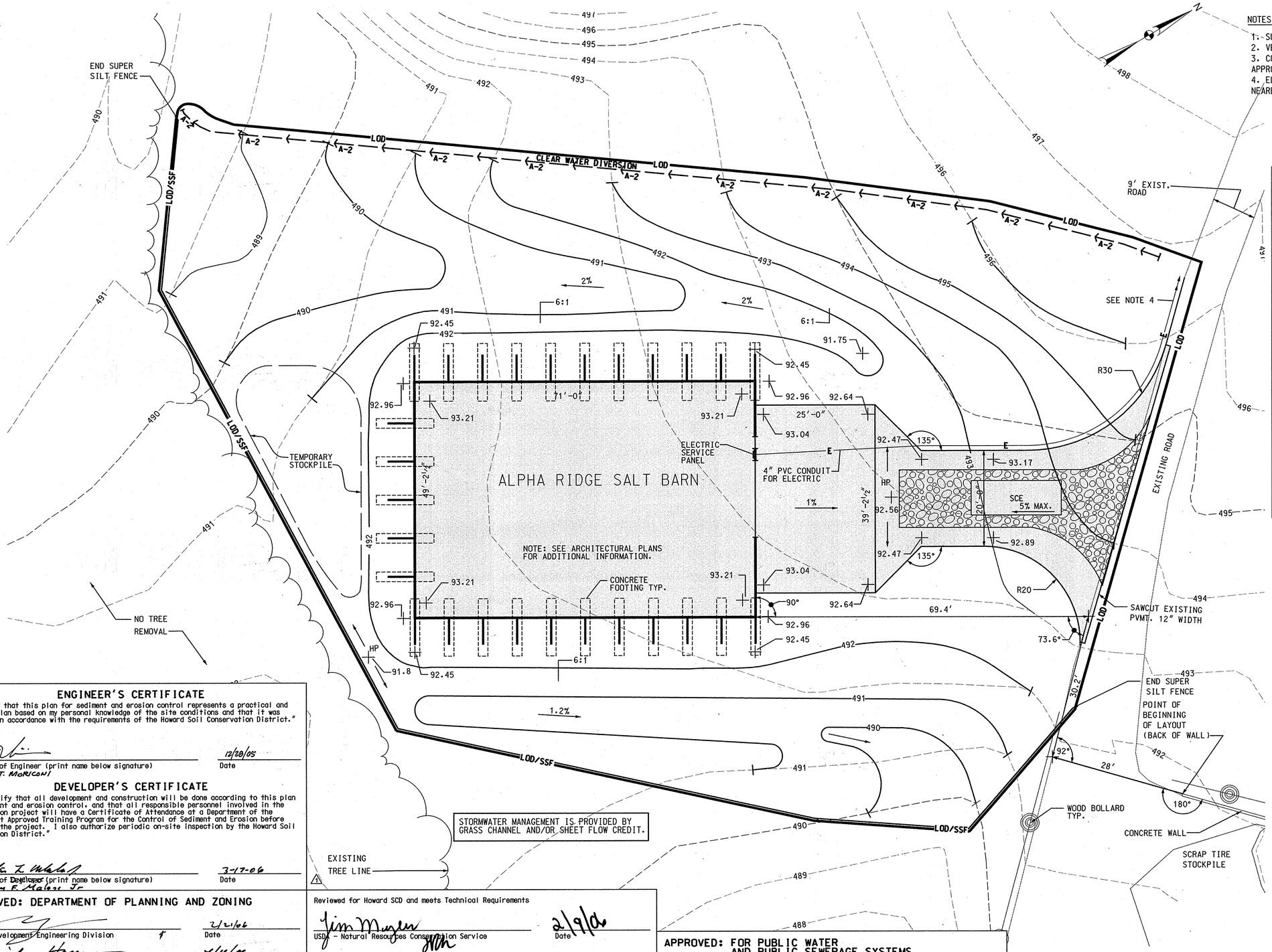

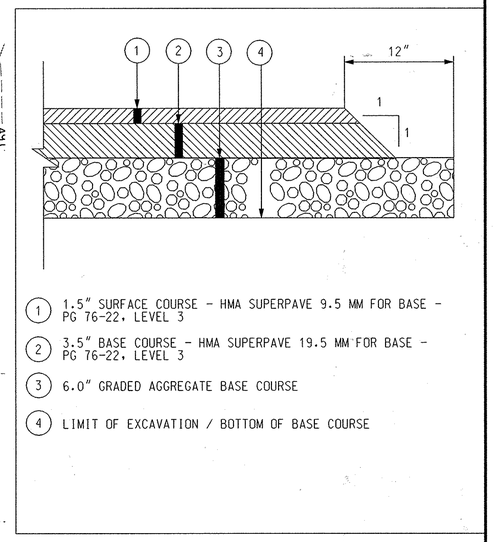

LEGEND

491	EXISTING CONTOURS
494	PROPOSED CONTOURS
E	ELECTRICAL CONDUIT
LOD	LIMIT OF DISTURBANCE
LOD/SSF	LIMIT OF DISTURBANCE WITH SUPER SILT FENCE
SCE	STABILIZED CONSTRUCTION ENTRANCE (SCE)
A-2	EARTH DIKE

ENGINEER'S CERTIFICATE

"I certify that this plan for sediment and erosion control represents a practical and workable plan based on my personal knowledge of the site conditions and that it was prepared in accordance with the requirements of the Howard Soil Conservation District."

Signature of Engineer (print name below signature) — Date 12/28/05

DAVID T. McRICONI

DEVELOPER'S CERTIFICATE

"I/We certify that all development and construction will be done according to this plan for sediment and erosion control, and that all responsible personnel involved in the construction project will have a Certificate of Attendance at a Department of the Environment Approved Training Program for the Control of Sediment and Erosion before beginning the project. I also authorize periodic on-site inspection by the Howard Soil Conservation District."

Signature of Developer (print name below signature) — Date 3-17-06

William F. Malone Jr.

APPROVED: DEPARTMENT OF PLANNING AND ZONING

Chief, Development Engineering Division — Date 2/21/06

Chief, Division of Land Development — Date 4/4/06

Director — Date 4/5/06

Reviewed for Howard SCD and meets Technical Requirements

USDA - Natural Resources Conservation Service — Date 2/9/06

This development plan is approved for soil erosion and sediment control by the HOWARD SOIL CONSERVATION DISTRICT

Howard SCD — Date 2/9/06

APPROVED: FOR PUBLIC WATER AND PUBLIC SEWERAGE SYSTEMS

For County Health Officer, Howard County Health Department — Date 3/3/06

⚠1 THE PURPOSE OF THE REVISION TO THE SDP IS TO INCORPORATE THE PLACEMENT OF A SALT STORAGE FACILITY ON THE GROUNDS OF THE ALPHA RIDGE LANDFILL.

DEPARTMENT OF PUBLIC WORKS

HOWARD COUNTY, MARYLAND

DIRECTOR OF PUBLIC WORKS — DATE 3/9/06

CHIEF, BUREAU OF ENGINEERING — DATE 3/16/06

CHIEF, BUREAU OF ENVIRONMENTAL SERVICES — DATE 3/9/06

CHIEF, BUREAU OF HIGHWAYS — DATE 3-16-06

PREPARED BY

URS

4 NORTH PARK DRIVE
HUNT VALLEY, MARYLAND
TEL: (410) 785-7220

STATE OF MARYLAND — DAVID THOMAS MCRICONI — NO. 16160 — REGISTERED PROFESSIONAL ENGINEER — 12/28/05

DES: DTM/RKK			
DRN: WHS			
CHK: DTM/RKK			
DATE: 12/05	DTM BY	⚠1 NO.	NEW SHEET FOR PROP. SALT BARN: REVISED SDP-97-128 — REVISION	12/05 DATE

SITE GRADING AND EROSION & SEDIMENT CONTROL PLAN

SCALE MAP NO. N/A BLOCK NO.

REVISED SITE DEVELOPMENT PLAN
ALPHA RIDGE SALT BARN

3RD ELECTION DISTRICT - HOWARD COUNTY, MARYLAND

SCALE AS SHOWN

SHEET 74B OF 131

HOWARD SOIL CONSERVATION DISTRICT
STANDARD SEDIMENT CONTROL NOTES

1. A MINIMUM OF 48 HOURS NOTICE MUST BE GIVEN TO THE HOWARD COUNTY DEPARTMENT OF INSPECTIONS, LICENSES AND PERMITS, SEDIMENT CONTROL DIVISION, PRIOR TO THE START OF ANY CONSTRUCTION. (313-1855)
2. ALL VEGETATIVE AND STRUCTURAL PRACTICES ARE TO BE INSTALLED ACCORDING TO THE PROVISIONS OF THIS PLAN AND ARE TO BE IN CONFORMANCE WITH THE "1994 MARYLAND STANDARDS AND SPECIFICATIONS FOR SOIL EROSION AND SEDIMENT CONTROL", AND REVISIONS THERETO.
3. FOLLOWING INITIAL SOIL DISTURBANCE OR REDISTURBANCE, PERMANENT OR TEMPORARY STABILIZATION SHALL BE COMPLETED WITHIN: A) 7 CALENDAR DAYS FOR ALL PERIMETER SEDIMENT CONTROL STRUCTURES, DIKES, PERIMETER SLOPES AND ALL SLOPES STEEPER THAN 3:1, B) 14 DAYS AS TO ALL OTHER DISTURBED OR GRADED AREAS ON THE PROJECT SITE.
4. ALL SEDIMENTS TRAPS/BASINS SHOWN MUST BE FENCED AND WARNING SIGNS POSTED AROUND THEIR PERIMETER IN ACCORDANCE WITH VOL I, CHAPTER 7 OF "HOWARD COUNTY DESIGN MANUAL", STORM DRINAGE.
5. ALL DISTURBED AREAS MUST BE STABILIZED WITHIN THE TIME PERIOD SPECIFIED ABOVE IN ACCORDANCE WITH THE "1994 MARYLAND STANDARDS AND SPECIFICATIONS FOR SOIL EROSION AND SEDIMENT CONTROL" FOR PERMANENT SEEDING, SOD, TEMPORARY SEEDING, AND MULCHING (SEC G.) TEMPORARY STABILIZATION WITH MULCH ALONE SHALL ONLY BE DONE WHEN RECOMMENDED SEEDING DATES DO NOT ALLOW FOR PROPER GERMINATION AND ESTABLISHMENT OF GRASSES.
6. ALL SEDIMENT CONTROL STURCTURES ARE TO REMAIN IN PLACE AND ARE TO BE MAINTAINED IN OPERATIVE CONDITION UNTIL PERMISSION FOR THEIR REMOVAL HAS BEEN OBTAINED FROM THE HOWARD COUNTY SEDIMENT CONTROL INSPECTOR.
7. SITE ANALYSIS:

TOTAL AREA OF SITE		SEE SDP 97-128
AREA DISTURBED	=	0.49 ACRES (AREA OF SALT BARN LOD)
AREA TO BE ROOFED OR PAVED	=	0.13 ACRES (SALT BARN)
AREA TO BE VEGATATIVELY STABILIZED	=	0.36 ACRES (SALT BARN SITE)
TOTAL CUT	=	CUBIC YARDS
TOTAL FILL	=	CUBIC YARDS
OFFSITE WASTE/BORROW LOCATION	=	N/A TO BE DETERMINED BUT MUST BE A SITE WITH AN ACTIVE GRADING PERMIT

TEMPORARY SEEDING NOTES

APPLY TO GRADED OR CLEARED AREAS LIKELY TO BE REDISTURBED WHERE A SHORT-TERM VEGETATIVE COVER IS NEEDED.

SEEDBED PREPARATION: LOOSEN UPPER 3 INCHES OF SOIL BY RAKING, DISCING OR OTHER ACCEPTABLE MEANS BEFORE SEEDING (UNLESS PREVIOUSLY LOOSENED).

SOILS AMENDMENTS: APPLY 600 LBS. PER ACRE 10-10-10 FERTILIZER (14 LBS./1000 SQ.FT.)

SEEDING: FOR PERIODS MARCH 1 THROUGH OUT APRIL 30 AND FROM AUGUST 15 THROUGH NOVEMBER 15, SEED WITH 2½ BU. PER ACRE OF ANNUAL RYE (3.2 LBS./1000 SQ.FT.). FOR THE PERIOD MAY 1 THROUGH AUGUST 14, SEED WITH 3 LBS. PER ACRE OF WEEPING LOVEGRASS (.07 LB S/1000 SQ.FT.).
FOR THE PERIOD OF NOVEMBER 16 THROUGH FEBRUARY 28, PROTECT SITE BY APPLYING 2 TONS PER ACRE OF WELL ANCHORED STRAW MULCH AND SEED AS SOON AS POSSIBLE IN THE SPRING OR USE SOD.

SEEDING: FOR THE PERIODS MARCH 1 THROUGH APRIL 30, AND AUGUST 1 THROUGH OCTOBER 15, SEED WITH 60 LBS. PER ACRE (1.4 LBS./1000 SQ.FT.) OF KENTUCKY 31 TALL FESCUE. FOR THE PERIOD MAY 1 THROUGH JULY 31, SEED WITH 60 LBS. KENTUCKY 31 TALL FESCUE PER ACRE AND 2 LBS. PER ACRE (.05 LBS./1000 SQ.FT.) OF WEEPING LOVEGRASS. DURING THE PERIOD OF OCTOBER 16 THROUGH FEBRUARY 28, PROTECT SITE BY: OPTION (1) 2 TONS PER ACRE OF WELL ANCHORED STRAW MULCH AND SEED AS SOON AS POSSIBLE IN THE SPRING. OPTION (2) USE SOD. OPTION (3) SEED WITH 60 LBS/ACRE KENTUCKY 31 TALL FESCUE AND MULCH WITH 2 TONS/ACRE WELL ANCHORED STRAW.

MULCHING: APPLY 1 1/2 TO 2 TONS PER ACRE (70 TO 90 LBS./1000 SQ.FT.) OF UNROTTED SMALL GRAIN STRAW IMMEDIATELY AFTER SEEDING. ANCHOR MULCH IMMEDIATELY AFTER APPLICATION USING MULCH ANCHORING TOOL OR 218 GALLONS PER ACRE (5 GALS./1000 SQ.FT.) OF EMULSIFIED ASPHALT ON FLAT AREA. ON SLOPES 8 FEET OR HIGHER, USE 348 GALLONS PER ACRE (8 GALS./1000 SQ.FT.) FOR ANCHORING.
MAINTENANCE: INSPECT ALL SEEDED AREAS AND MAKE NEEDED REPAIRS, REPLACEMENTS AND RESEEDINGS.

PERMANENT SEEDING NOTES

APPLY TO GRADED OR CLEARED AREA NOT SUBJECT TO IMMEDIATE FURTHER DISTURBANCE WHERE A PERMANENT LONG-LIVED VEGETATIVE COVER IS NEEDED.

SEEDBED PREPARATION: LOOSEN UPPER 3 INCHES OF SOIL BY RAKING, DISCING OR OTHER ACCEPTABLE MEANS BEFORE SEEDING (UNLESS PREVIOUSLY LOOSENED).

SOIL AMENDMENTS: IN LIEU OF SOIL TEST RECOMMENDATIONS, USE ONE OF THE FOLLOWING SCHEDULES:

PREFERRED - APPLY 2 TONS PER ACRE DOLOMITIC LIMESTONE (92 LBS./1000 SQ.FT.) AND 600 LBS. PER ACRE 10-10-10 FERTILIZER (14 LBS./1000 SQ.FT.) BEFORE SEEDING. HARROW OR DISC INTO UPPER THREE INCHES OF SOIL. AT TIME OF SEEDING, APPLY 400 LBS. PER ACRE 30-0-0 UREAFORM FERTILIZER (9 LBS/1000 SQ.FT.)

ACCEPTABLE - APPLY 2 TONS PER ACRE DOLOMITIC LIMESTONE (92 LBS./1000 SQ. FT.) AND 1000 LBS. PER ACRE 10-10-10 FERTILIZER (23 LBS./1000 SQ.FT.) BEFORE SEEDING. HARROW OR DISC INTO UPPER THREE INCHES OF SOILS.

TOPSOIL CONSTRUCTION AND MATERIAL SPECIFICATIONS

I. TOPSOIL SALVAGED FROM THE EXISTING SITE MAY BE USED PROVIDED THAT IT MEETS THE STANDARDS AS SET FORTH IN THESE SPECIFICATIONS. TYPICALLY, THE DEPTH OF TOPSOIL TO BE SALVAGED FOR A GIVEN SOIL TYPE CAN BE FOUND IN THE REPRESENTATIVE SOIL PROFILE SECTION IN THE SOIL SURVEY PUBLISHED BY USDA-SCS IN COOPERATION WITH MARYLAND AGRICULTURAL EXPERIMENTAL STATION.

II. TOPSOIL SPECIFICATIONS - SOIL TO BE USED AS TOPSOIL MUST MEET THE FOLLOWING:

I. TOPSOIL SHALL BE A LOAM, SANDY LOAM, CLAY LOAM, SILT LOAM, SANDY CLAY LOAM, LOAMY SAND. OTHER SOILS MAY BE USED IF RECOMMENDED BY AN AGRONOMIST OR SOIL SCIENTIST AND APPROVED BY THE APPROPRIATE APPROVAL AUTHORITY.

TEXTURED SUBSOILS AND SHALL CONTAIN LESS THAN 5% BY VOLUME OF CINDERS, STONES, SLAG, COARSE FRAGMENTS, GRAVEL, STICKS, ROOTS, TRASH, OR OTHER MATERIALS LARGER THAN 1 1/2 " IN DIAMETER.

II. TOPSOIL MUST BE FREE OF PLANTS OR PLANT PARTS SUCH AS BERMUDA GRASS, QUACKGRASS, JOHNSONGRASS, NUTSEDGE, POISON IVY, THISTLE, OR OTHERS AS SPECIFIED.

III. WHERE THE SUBSOIL IS EITHER HIGHLY ACIDIC OR COMPOSED OF HEAVY CLAYS, GROUND LIMESTONE SHALL BE SPREAD AT THE RATE OF 4-8 TONS/ACRE (200-400 POUNDS PER 1,000 SQUARE FEET) PRIOR TO THE PLACEMENT OF TOPSOIL. LIME SHALL BE DISTRIBUTED UNIFORMLY OVER DESIGNATED AREAS AND WORKED INTO THE SOIL IN CONJUNCTION WITH TILLAGE OPERATIONS AS DESCRIBED IN THE FOLLOWING PROCEDURES.

III. FOR SITES HAVING DISTURBED AREAS UNDER 5 ACRES:

I. PLACE TOPSOIL (IF REQUIRED) AND APPLY SOIL AMENDMENTS AS SPECIFIED IN 20.0 VEGETATIVE STABILIZATION - SECTION I - VEGETATIVE STABILIZATION METHODS AND MATERIALS.

IV. TOPSOIL APPLICATION

I. WHEN TOPSOILING, MAINTAIN NEEDED EROSION AND SEDIMENT CONTROL PRACTICES SUCH AS DIVERSIONS, GRADE STABILIZATION STRUCTURES, EARTH DIKES, SLOPE SILT FENCE AND SEDIMENT TRAPS AND BASINS.

II. GRADES ON THE AREAS TO BE TOPSOILED, WHICH HAVE BEEN PREVIOUSLY ESTABLISHED, SHALL BE MAINTAINED, ALBEIT 4" - 8" HIGHER IN ELEVATION.

III. TOPSOIL SHALL BE UNIFORMLY DISTRIBUTED IN A 4" - 8" LAYER AND LIGHTLY COMPACTED TO A MINIMUM THICKNESS OF 4". SPREADING SHALL BE PERFORMED IN SUCH A MANNER THAT SODDING OR SEEDING CAN PROCEED WITH A MINIMUM OF ADDITIONAL SOIL PREPARATION AND TILLAGE. ANY IRREGULARITIES IN THE SURFACE RESULTING FROM TOPSOILING OR OTHER OPERATIONS SHALL BE CORRECTED IN ORDER TO PREVENT THE FORMATION OF DEPRESSIONS OR WATER POCKETS.

IV. TOPSOIL SHALL NOT BE PLACED WHILE THE TOPSOIL OR SUBSOIL IS IN A FROZEN OR MUDDY CONDITION, WHEN THE SUBSOIL IS EXCESSIVELY WET OR IN A CONDITION THAT MAY OTHERWISE BE DETRIMENTAL TO PROPER GRADING AND SEEDBED PREPARATION.

V. THESE TOPSOIL SPECIFICATIONS HAVE BEEN EDITED FROM THE 1994 EROSION AND SEDIMENT CONTROL STANDARDS TO FIT THIS PROJECT. IT IS STILL THE INTENTION TO FOLLOW THE REFERENCED 1994 EROSION AND SEDIMENT CONTROLS STANDARDS IN THEIR ENTIRETY.

SEQUENCE OF CONSTRUCTION

1. OBTAIN HOWARD COUNTY GRADING PERMIT. (1 DAY)
2. NOTIFY HOWARD COUNTY AT LEAST 48 HOURS PRIOR TO START OF CONSTRUCTION. PHONE (410) 313-1855 (1 DAY) AND MARK RAAB AT (410) 313-4730.
3. INSTALL STABILIZED CONSTRUCTION ENTRANCE WITH MOUNTABLE BERM, AND INSTALL SILT FENCE AND EARTH DIKE.
4. INSTALL PERIMETER CONTROLS: SUPER SILT FENCE, AS SHOWN ON THE PLAN.
5. GRUB SITE WITHIN THE LIMITS OF DISTURBANCE.
6. STRIP AND STOCKPILE TOPSOIL. (2 DAYS)
7. CONSTRUCT THE FOLLOWING: (15 WEEKS)
   - GRADE SITE TO THE PROPOSED ELEVATIONS AS INDICATED ON THE SITE PLAN.
   - CONSTRUCT SALT BARN AND PAVING.
8. FINE GRADE AND STABILIZE SITE, PLACE SALVAGED TOPSOIL. (3 DAYS)
9. AFTER SITE IS STABILIZED, OBTAIN PERMISSION FROM HOWARD COUNTY SEDIMENT CONTROL INSPECTOR AND REMOVE SEDIMENT CONTROL MEASURES.
10. REMOVE ALL SEDIMENT CONTROL MEASURES AFTER RECEIVING PERMISSION FROM THE SEDIMENT CONTROL INSPECTOR. (4 DAYS)

NOTE: THIS SEQUENCE MAY BE MODIFIED AFTER RECEIVING PERMISSION FROM THE SEDIMENT CONTROL INSPECTOR AS LONG AS THE INTENTION AND INTEGRITY OF THIS PLAN IS NOT COMPROMISED.

DETAIL 22 - SILT FENCE

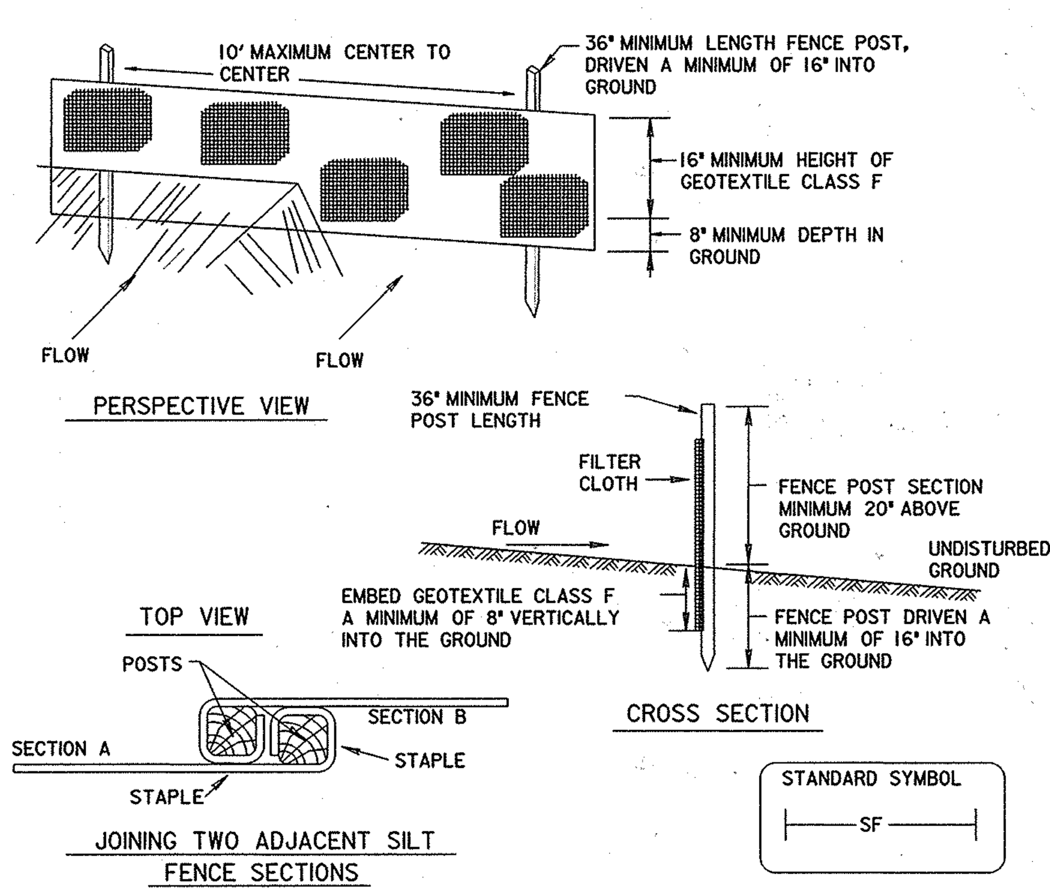

Construction Specifications

1. Fence posts shall be a minimum of 36" long driven 16" minimum into the ground. Wood posts shall be 1 1/2 " x 1 1/2 " square (minimum) cut, or 1 3/4 " diameter (minimum) round and shall be of sound quality hardwood. Steel posts will be standard T or U section weighting not less than 1.00 pond per linear foot.

2. Geotextile shall be fastened securely to each fence post with wire ties or staples at top and mid-section and shall meet the following requirements for Geotextile Class F:

Tensile Strength	50 lbs/in (min.)	Test: MSMT 509
Tensile Modulus	20 lbs/in (min.)	Test: MSMT 509
Flow Rate	0.3 gal ft / minute (max.)	Test: MSMT 322
Filtering Efficiency	75% (min.)	Test: MSMT 322

3. Where ends of geotextile fabric come together, they shall be overlapped, folded and stapled to prevent sediment bypass.

4. Silt Fence shall be inspected after each rainfall event and maintained when bulges occur or when sediment accumulation reached 50% of the fabric height.

DETAIL 33 - SUPER SILT FENCE

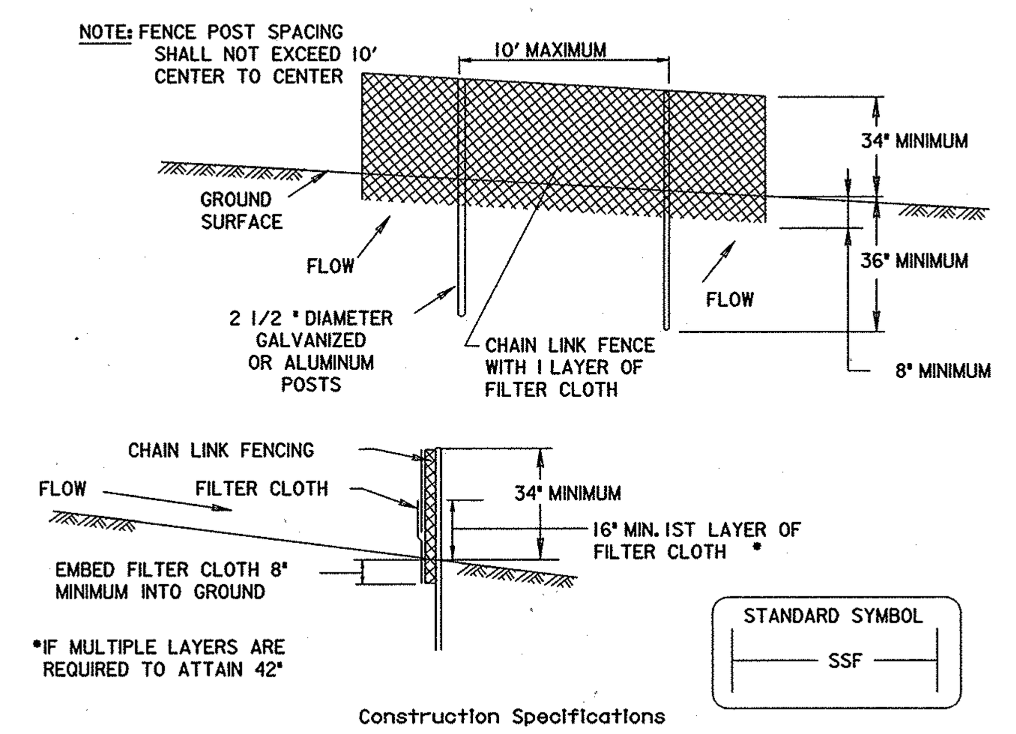

Construction Specifications

1. Fencing shall be 42" in height and constructed in accordance with the latest Maryland State Highway Details for Chain Link Fencing. The specification for a 6' fence shall be used, substituting 42" fabric and 6' length posts.

2. Chain link fence shall be fastened securely to the fence posts with wire ties. The lower tension wire, brace and truss rods, drive anchors and post caps are not required except on the ends of the fence.

3. Filter cloth shall be fastened securely to the chain link fence with ties spaced every 24" at the top and mid section.

4. Filter cloth shall be embedded a minimum of 8" into the ground.

5. When two sections of filter cloth adjoin each other, they shall be overlapped by 6" and folded.

6. Maintenance shall be performed as needed and silt buildups removed when "bulges" develop in the silt fence, or when silt reaches 50% of fence height

7. Filter cloth shall be fastened securely to each fence post with wire ties or staples at top and mid section and shall meet the following requirements for Geotextile Class F:

Tensile Strength	50 lbs/in (min.)	Test: MSMT 509
Tensile Modulus	20 lbs/in (min.)	Test: MSMT 509
Flow Rate	0.3 gal/ft²/minute (max.)	Test: MSMT 322
Filtering Efficiency	75% (min.)	Test: MSMT 322

STABILIZED CONSTRUCTION ENTRANCE

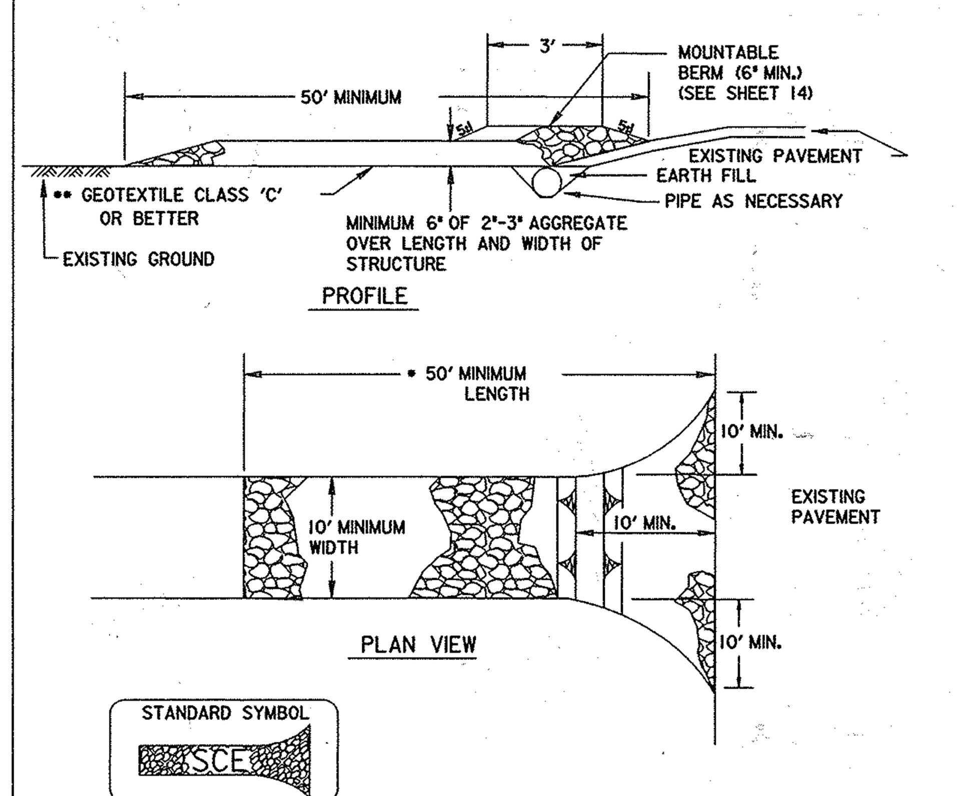

Construction Specification

1. Length - minimum of 50' (*30' for single residence lot).

2. Width - 10' minimum, should be flared at the existing road to provide a turning radius.

3. Geotextile fabric (filter cloth) shall be placed over the existing ground prior to placing stone. **The plan approval authority may not require single family residences to use geotextile.

4. Stone - crushed aggregate (2" to 3") or reclaimed or recycled concrete equivalent shall be placed at least 6" deep over the length and width of the entrance.

5. Surface Water - all surface water flowing to or diverted toward construction entrances shall be piped through the entrance, maintaining positive drainage. Pipe installed through the stabilized construction entrance shall be protected with a mountable berm with 5:1 slopes and a minimum of 6" of stone over the pipe. Pipe has to be sized according to the drainage. When the SCE is located at a high spot and has no drainage to convey a pipe will not be necessary. Pipe should be sized according to the amount of runoff to be conveyed. A 6" minimum will be required.

6. Location - A stabilized construction entrance shall be located at every point where construction traffic enters or leaves a construction site. Vehicles leaving the site must travel over the entire length of the stabilized construction entrance.

DETAIL 1 - EARTH DIKE

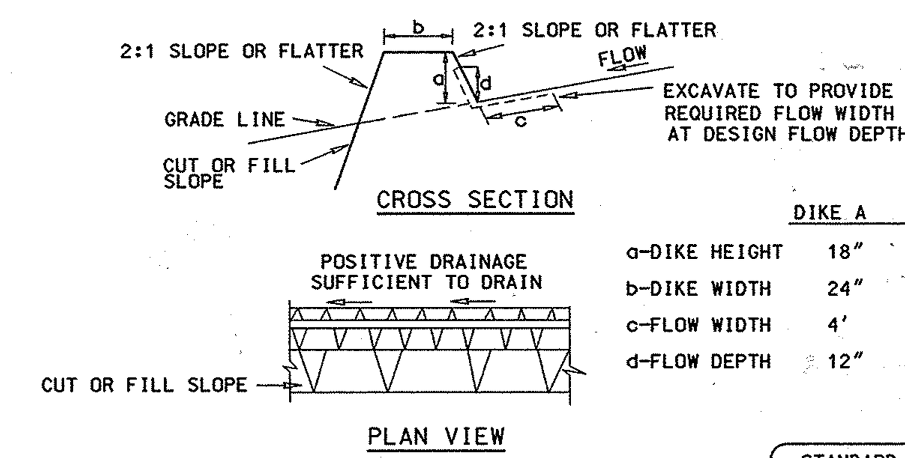

	DIKE A	DIKE B
a-DIKE HEIGHT	18"	30"
b-DIKE WIDTH	24"	36"
c-FLOW WIDTH	4'	6'
d-FLOW DEPTH	12"	24"

STANDARD SYMBOL
A-2 B-3
→ —/→ —

FLOW CHANNEL STABILIZATION
GRADE 0.5% MIN. 10% MAX.

1. Seed and cover with straw mulch.
2. Seed and cover with Erosion Control Matting or line with sod.
3. 4" - 7" stone or recycled concrete equivalent pressed into the soil 7" minimum

Construction Specifications

1. All temporary earth dikes shall have uninterrupted positive grade to an outlet. Spot elevations may be necessary for grades less than 1%.

2. Runoff diverted from a disturbed area shall be conveyed to a sediment trapping device.

3. Runoff diverted from an undisturbed area shall outlet directly into an undisturbed, stabilized area at a non-erosive velocity.

4. All trees, brush, stumps, obstructions, and other objectional material shall be removed and disposed of so as not to interfere with the proper functioning of the dike.

5. The dike shall be excavated or shaped to line, grade and cross section as required to meet the criteria specified herein and be free of bank projections or other irregularities which will impede normal flow.

6. Fill shall be compacted by earth moving equipment.

7. All earth removed and not needed for construction shall be placed so that it will not interfere with the functioning of the dike.

8. Inspection and maintenance must be provided periodically and after each rain event.

ENGINEER'S CERTIFICATE

"I certify that this plan for sediment and erosion control represents a practical and workable plan based on my personal knowledge of the site conditions and that it was prepared in accordance with the requirements of the Howard Soil Conservation District."

[signature] 12/28/05
Signature of Engineer (print name below signature) Date
DAVID T. MORICONI

DEVELOPER'S CERTIFICATE

"I/We certify that all development and construction will be done according to this plan for sediment and erosion control, and that all responsible personnel involved in the construction project will have a Certificate of Attendance at a Department of the Environment Approved Training Program for the Control of Sediment and Erosion before beginning the project. I also authorize periodic on-site inspection by the Howard Soil Conservation District."

[signature] 3-17-06
Signature of Developer (print name below signature) Date
William F. Malone Jr.

⚠1

APPROVED: DEPARTMENT OF PLANNING AND ZONING

[signature] 2/21/06
Chief, Development Engineering Division Date

[signature] 4/4/06
Chief, Division of Land Development CRH Date

[signature] 4/5/06
Director Date

Reviewed for Howard SCD and meets Technical Requirements

[signature] 2/9/06
USDA - Natural Resources Conservation Service Date

This deveolpment plan is approved for soil erosion and sediment control by the HOWARD SOIL CONSERVATION DISTRICT

[signature] 2/9/06
Howard SCD Date

APPROVED: FOR PUBLIC WATER AND PUBLIC SEWAERAGE SYSTEMS

[signature] 3/3/06
for County Health Officer Date
Howard County Health Department MGD

DEPARTMENT OF PUBLIC WORKS
HOWARD COUNTY, MARYLAND

[signature] 3/7/06 — DIRECTOR OF PUBLIC WORKS, DATE
[signature] 3/16/06 — CHIEF, BUREAU OF ENGINEERING, DATE
[signature] 3/9/06 — CHIEF, BUREAU OF ENVIRONMENTAL SERVICES, DATE
[signature] 3-16-06 — CHIEF, BUREAU OF HIGHWAYS, DATE

PREPARED BY
URS
4 NORTH PARK DRIVE
HUNT VALLEY, MARYLAND
TEL: (410) 785-7220

STATE OF MARYLAND — DAVID THOMAS MORICONI — NO. 16153 — REGISTERED PROFESSIONAL ENGINEER — 12/28/05

DES: DTM/RKK
DRN: WHS
CHK: DTM/RKK
DATE: 12/05

BY	NO.	REVISION	DATE
DTM	⚠1	NEW SHEET FOR PROPOSED SALT BARN; REVISED SDP-97-128	12/05

EROSION & SEDIMENT CONTROL NOTES & DETAILS

SCALE MAP NO. N/A BLOCK NO.

REVISED SITE DEVELOPMENT PLAN ALPHA RIDGE SALT BARN

3RD ELECTION DISTRICT - HOWARD COUNTY, MARYLAND

SCALE NONE

SHEET 74C OF 131

0:\20827142-\20828375\CAD\ES-Notes-Details.dgn SDP-97-128 12/28/2005 3:21:26 PM billing

LEGEND

- FOREST CONSERVATION SIGN
- EXISTING TREE LINE
- EXISTING STREAM
- PARCEL BOUNDARY
- CONSERVATION EASEMENT
- 100-YEAR FLOODPLAIN
- WETLAND BOUNDARY
- 25' WETLAND BUFFER
- 50' STREAM BUFFER
- STEEP SLOPES (RELATED TO LANDFILL)
- PROPOSED CONSERVATION EASEMENT
- NON-CREDITED FLOODPLAIN WITHIN CONSERVATION EASEMENT
- SOILS TYPE — ChC2
- SOILS AREA BOUNDARY

NOTE:

1. NO RARE, THREATENED OR ENDANGERED SPECIES ARE KNOWN TO EXIST ON THE SITE.
2. NO SPECIMEN TREES EXIST ON THE SITE.
3. EXISTING TOPOGRAPHY BOUNDARY AND FLOODPLAIN LIMITS PROVIDED BY HOWARD COUNTY.
4. SEE SHEET 2 FOR FOREST STAND ANALYSIS AND FCP WORKSHEETS.
5. SOILS DATA

F1
Ba - BAILE SILT LOAM
CgC2 - CESTER GRAVELLY SILT LOAM
ChB2, ChC2, ChC3,ChD2 - CHESTER SILT LOAM
Ha - HATBORO SILT LOAM
M1D2 - MANOR LOAM

F2
Ba - BAILE SILT LOAM
Cgb2, CgC2 - CESTER GRAVELLY SILT LOAM
ChB2, ChC2, ChC3 - CHESTER SILT LOAM
GnB2 - GLENVILLE SILT LOAM
Ha - HATBORO SILT LOAM
M1D2 - MANOR LOAM

6. EXISTING 100 YEAR FLOODPLAIN INFORMATION PROVIDED BY HOWARD CO. INFORMATION IS BASED IS BASED ON THE 1978 FLOODPLAIN DELINEATION BY CENTURY ENGINEERING AND THE 1986 UPDATE BY BERNARD JOHNSON, INC. HOWARD CO. MAPS: GC-0119-T-36-38, GC-0119-T-35-38, GC-0119-T-234-38, GC-0119-T-35-39.

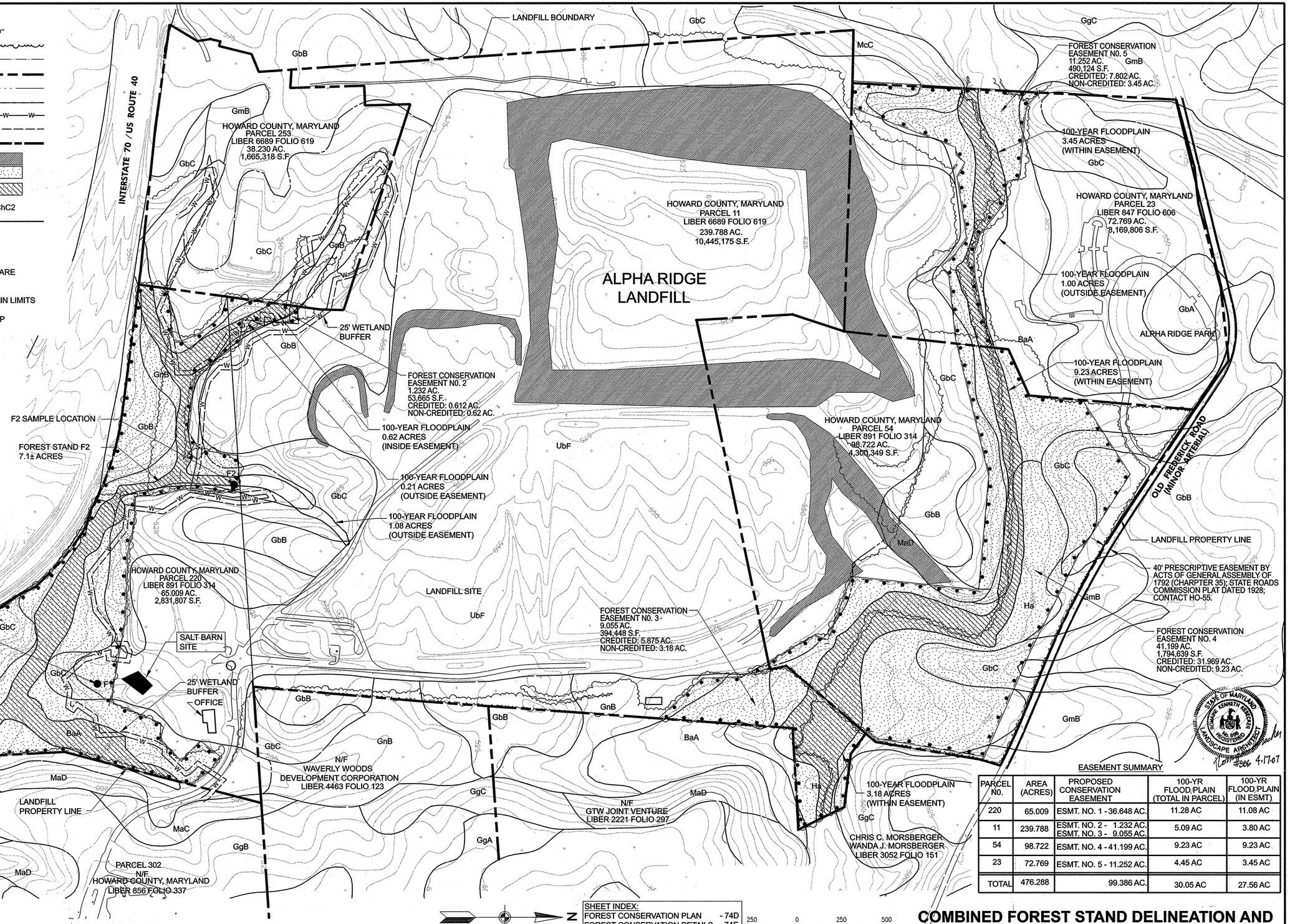

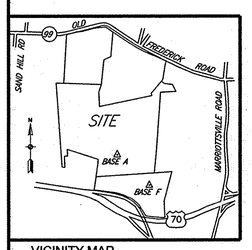

VICINITY MAP
NOT TO SCALE

SHEET INDEX:

FOREST CONSERVATION PLAN	- 74D
FOREST CONSERVATION DETAILS	- 74E

250 0 250 500
SCALE: 1" = 250'

EASEMENT SUMMARY

PARCEL NO.	AREA (ACRES)	PROPOSED CONSERVATION EASEMENT	100-YR FLOOD PLAIN (TOTAL IN PARCEL)	100-YR FLOOD PLAIN (IN ESMT)
220	65.009	ESMT. NO. 1 - 36.648 AC.	11.28 AC	11.08 AC
11	239.788	ESMT. NO. 2 - 1.232 AC. ESMT. NO. 3 - 9.055 AC.	5.09 AC	3.80 AC
54	98.722	ESMT. NO. 4 - 41.199 AC.	9.23 AC	9.23 AC
23	72.769	ESMT. NO. 5 - 11.252 AC.	4.45 AC	3.45 AC
TOTAL	476.288	99.386 AC.	30.05 AC	27.56 AC

COMBINED FOREST STAND DELINEATION AND FOREST CONSERVATION PLAN

APPROVED: HOWARD COUNTY DEPARTMENT OF PLANNING AND ZONING
Director, Department of Planning & Zoning — DATE 6/14/07
CHIEF, DEVELOPMENT ENGINEERING DIVISION — DATE 6/11/07
Chief, Land Development — DATE 6-12-07

OWNER
HOWARD COUNTY GOVERNMENT
3430 COURT HOUSE DRIVE
ELLICOTT CITY, MD 21043
410-313-2330

PREPARED BY
URS
4 NORTH PARK DRIVE
HUNT VALLEY, MARYLAND
TEL: (410) 785-7220

DES: DTM/RKK
DRN: WJG
CHK: DTM/RKK
DATE: 11/06

BY	NO.	REVISION	DATE
DTM	1	ADDED NEW SHEET TO SDP 97-128	4/17/07

ALPHA RIDGE LAND FILL
TAX MAP 10 - GRID 2,3 & 7
TAX MAP 16 - GRID 8
3RD ELECTION DISTRICT - HOWARD COUNTY, MARYLAND

SCALE 1"=250'

SHEET 74D OF 191

SDP-97-128(FC)

O:\20827142-\20828375\CAD\FSD01ALPH.dgn Apr 17, 2007 10:48 AM chris_fleming

FOREST STAND ANALYSIS TABLE

Applicant: URS Corp Project Name: Alpha Ridge Salt Barn Submission No.:

KEY	A. TYPE OF COMMUNITY	B. AREA	C. SOIL INFORMATION			D. EXISTING VEGETATION (Dominant Species and Approximate %)	E. STAND CHARACTERISTCS			F. FOREST AREA IN SENSITIVE ENVIRONMENTS (Area)	G. HABITAT VALUE
			1. Soil Types	2. Typical forest cover for soil type*	3. Woodland Suitability Index		1. Size (Diam)	2. Age	3. General Conditions		
F1	Tree Layer Maple/Oak	23.82 Acres	Chester	Oak	74-84	Red Maple 50%	2"-10"	25	Fair	Floodplain 7.2 Acres Wetland and Buffers 5.3 Acres	Good
			Baile	Oak/Maple	65-74	White Oak 20%	20"-28"	40			
			Hatboro	Oak/Maple/ Holly	95	Hickory 15%	8"-15"	25			
			Manor	Mixed Oak	65-74	Tulip Poplar 10%	20"-28"	25		Total 12.5 Acres	
	Shrub Layer					Spice Bush 60% Blackhaw Viburnum 40%					
	Ground Layer					Invasives 95%					

FOREST STAND ANALYSIS TABLE

Applicant: URS Corp Project Name: Alpha Ridge Salt Barn Submission No.:

KEY	A. TYPE OF COMMUNITY	B. AREA	C. SOIL INFORMATION			D. EXISTING VEGETATION (Dominant Species and Approximate %)	E. STAND CHARACTERISTCS			F. FOREST AREA IN SENSITIVE ENVIRONMENTS (Area)	G. HABITAT VALUE
			1. Soil Types	2. Typical forest cover for soil type*	3. Woodland Suitability Index		1. Size (Diam)	2. Age	3. General Conditions		
F2	Tree Layer Cherry/Walnut	7.12 Acres	Chester	Oak	75-84	Black Cherry 50%	8"-15"	20	Fair	Floodplain 3.5 Acres Wetland and Buffers 0.8 Acres	Good
			Baile	Oak/Maple	65-74	Black Walnut 25%	8"-15"				
			Glenville	Wet Tolerant Hardwoods	65-74	Tulip Poplar 15%	12"-20"				
			Manor	Mixed Oak	65-74	Red Oak 10%	10"-15"			Total 4.3 Acres	
	Shrub Layer					Spice Bush 100%					
	Ground Layer					Invasives 100%					

FOREST STAND DELINEATION NARRATIVE – PARCEL 220

Stand F1

Stand F1 is a middle successional Maple/Oak forest. It is about 40 to 50 years old in its growth. Very little understory exists due to deer browse. What little understory that does exist is either not palatable (Spice Bush) or too high to browse (Blackhaw Viburnum). The ground layer consists of predominately invasive species (Garlic Mustard, Tear Thumb, Japanese Stilt Grass etc) with a few Jack-in-the-Pulpit and Christmas Ferns scattered throughout, an more so in wet areas. Not withstanding the deer browse trees seem to be in good condition and growing well.

Because 76% of Stand F1 covers environmentally sensitive lands (wetlands and 100 year floodplain) it is recommended that the forest be preserved in conservation easement. In addition, the canopy is in good condition and dense. With control of the deer population the understory may recover.

Stand F2

Stand F2 is an early successional mixed hardwood forest. It is about 20 to 30 years old in its growth. Very little understory exists due to deer browse. What little understory that does exist is not palatable (Spice Bush). The ground layer consists of Japanese Stilt Grass. Not withstanding the deer browse trees seem to be in good condition and growing well.

Because 81% of Stand F2 covers environmentally sensitive lands (wetlands and 100 year floodplains) it is recommended that the forest be preserved in conservation easement. While the canopy is open the trees are in good condition and will eventually fill in. The added area outside of the wetlands will act as additional filtering area for runoff.

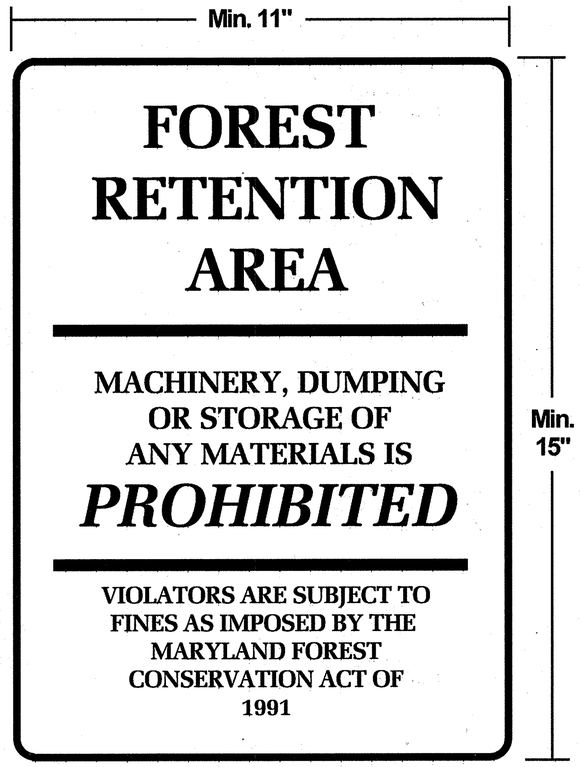

Note:

1. Signs shall be of high-impact, durable, waterproof plastic. Background color shall be white, and text / graphics color shall be forest green.
2. Signs shall be mounted on metal 'T' or 'U' posts of 7' length, painted (green color) with welded anchor flange. Drive post 2.5' into ground. Mount signs flush to top of post with 2 galvanized bolts and washers per sign, with anti-theft security nuts.
3. Signs shall be located at each turn of conservation easement, and at 100' maximum spacing.

FOREST CONSERVATION SIGN
NOT TO SCALE

STATE OF MARYLAND ROBERT KENNETH BERGER LANDSCAPE ARCHITECT No. 886 REGISTERED
#886 4·17·07

FOREST CONSERVATION WORKSHEET
VERSION 1.0
(Enter in Yellow Cells)

NET TRACT AREA:

A. Total tract area.....=	476.29
B. Area within 100 year floodplain .....=	30.05
C. Area to remain in agricultural production.....=	0.00
D. Net tract area.....=	446.24

LAND USE CATEGORY: (from table 3.2.1, page 40, Manual)

Input the number "1" under the appropriate land use zoning, and limit to only one entry.

ARA	MDR	IDA	HDR	MPD	CIA
0	0	0	0	0	1

E. Afforestation Threshold.....	15% x D =	66.94
F. Conservation Threshold.....	15% x D =	66.94

EXISTING FOREST COVER:

G. Existing forest cover (excluding floodplain).....=	83.70
H. Area of forest above afforestaion threshold .....=	16.76
I. Area of forest above conservation threshold .....=	16.76

BREAK EVEN POINT:

J. Forest retention above threshold with no mitigation.....=	70.29
K. Clearing permitted without mitigation.....=	13.41

PROPOSED FOREST CLEARING:

L. Total area of forest to be cleared.....=	11.87
M. Total area of forest to be retained.....=	71.83

PLANTING REQUIREMENTS:

N. Reforestation for clearing above conservation threshold...=	2.97
P. Reforestation for clearing below conservation threshold...=	0.00
Q. Credit for retention above conservation threshold.....=	4.89
R. Total reforestation required.....=	0.00
S. Total afforestation required.....=	0.00
T. Total reforestation and afforestation required.....=	0.00

Note: Howard County proposes to provide 99.39 acres of Conservation Easement on the four parcels for FCP requirements of which 71.83 is "credited" FCE with 27.56 acres of "non-credited".

DETAILS
COMBINED FOREST STAND DELINEATION AND FOREST CONSERVATION PLAN

APPROVED: HOWARD COUNTY DEPARTMENT OF PLANNING AND ZONING — Director, Planning & Zoning — DATE; CHIEF, DEVELOPMENT ENGINEERING DIVISION — DATE; Chief, Land Development — DATE

OWNER
HOWARD COUNTY GOVERNMENT
3430 COURT HOUSE DRIVE
ELLICOTT CITY, MD 21043
410-313-2330

PREPARED BY URS
4 NORTH PARK DRIVE
HUNT VALLEY, MARYLAND
TEL: (410) 785-7220

DES: DTM/RKK
DRN: WJG
CHK: DTM/RKK
DATE: 11/06

BY	NO.	REVISION	DATE
DTM	1	ADDED NEW SHEET TO SDP 97-128	4/17/07

ALPHA RIDGE LAND FILL
3RD ELECTION DISTRICT - HOWARD COUNTY, MARYLAND

SCALE NONE

SHEET 74 OF 131½

SDP-97-128(FC)

APPROVED PLAN REVISION

SCD _____ 11/1/97
NRCS _____ Technical Review Date

DEPARTMENT OF PLANNING AND ZONING
HOWARD COUNTY, MARYLAND

DIRECTOR — DATE 11/5/97
CHIEF, DEVELOPMENT ENGINEERING DIVISION — DATE 10/30/97
CHIEF, DIVISION OF LAND DEVELOPMENT ~~AND RESEARCH~~ — DATE 11/3/97

SUBDIVISION NAME	LOT/PARCEL	
ALPHA RIDGE SOLID WASTE MANAGEMENT CENTER	54,253,220,11	
LIBER/FOLIO	ZONE	TAX/ZONE MAP
10-847/606 16-878/215 10-691/314	PEC	10 & 16
WATER CODE	SEWER CODE	CENSUS TR.
PRIVATE, EXISTING	PRIVATE, EXISTING	60-30

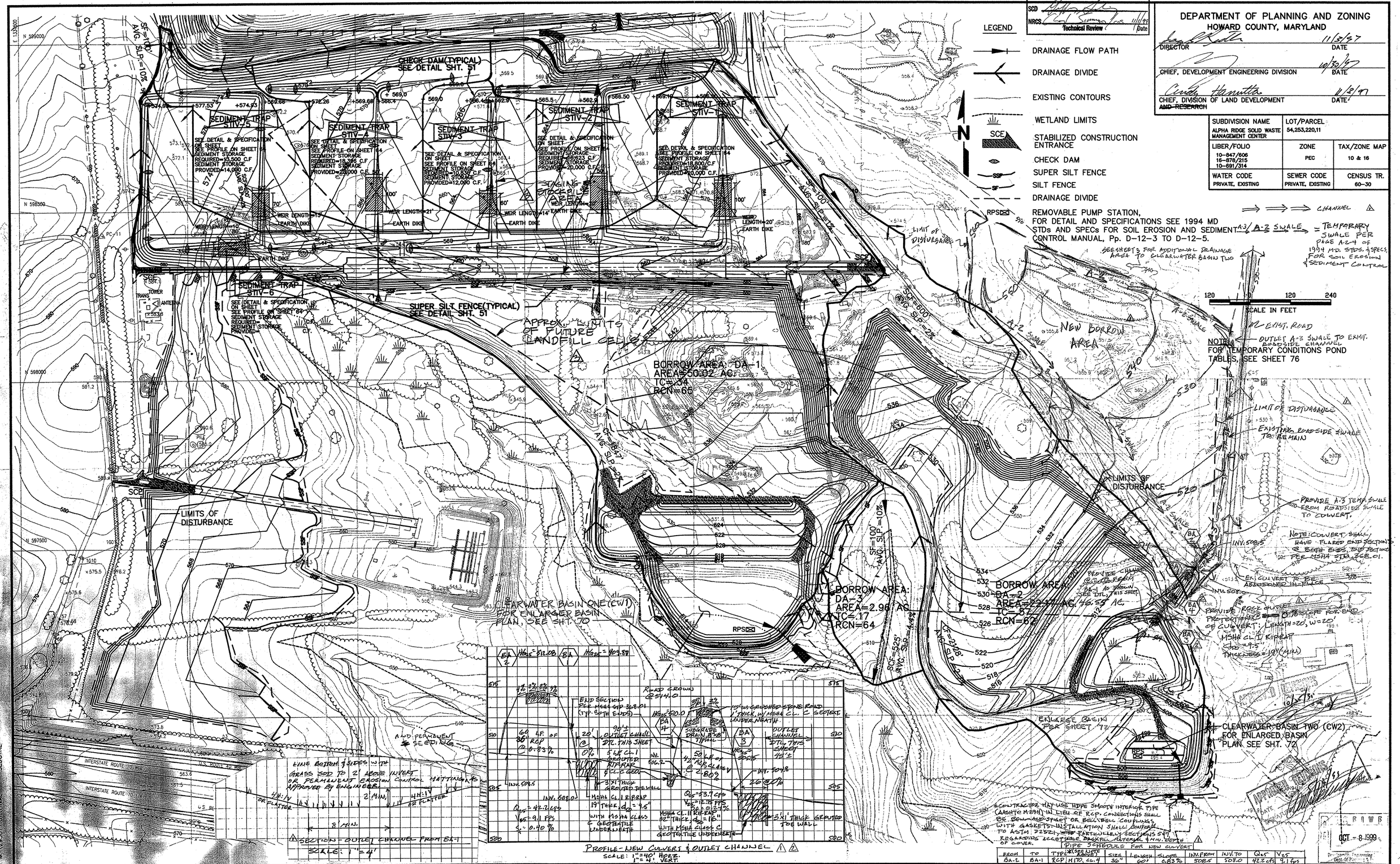

PIPE SCHEDULE FOR NEW CULVERT

FROM	TO	TYPE	SIZE	LENGTH	SLOPE	INV. FROM	INV. TO	Q_{25}	V_{25}
BA-2	BA-1	RCP	M170, CL. 4	36"	601	0.83%	508.5	508.0	42.2 cfs	9.1 fps
BA-4	BA-3	RCP	M170, CL. 4**	42"	50'	2.80%	506.2	504.8	53.7 cfs	12.75 fps

** RCP ONLY

DEPARTMENT OF PUBLIC WORKS
HOWARD COUNTY, MARYLAND

DIRECTOR OF PUBLIC WORKS — DATE 10/30/97
CHIEF, BUREAU OF WASTE MANAGEMENT — DATE 10/30/97

SCS ENGINEERS
CONSULTING ENGINEERS
11260 ROGER BACON DRIVE
SUITE 300
RESTON, VIRGINIA 22090
PH. (703) 471-6150
FAX. (703) 471-6676

STATE OF MARYLAND — PAUL ANTHONY MANDEVILLE — No. 19513 — PROFESSIONAL ENGINEER
Paul Anthony Mandeville, PE

DES.	AST
DRN.	LTJ
CHK.	PAM
DATE: 10-30-97	

BY	NO.	REVISION	DATE
	6		
	5		
	4		
FJD	3	ADDED STAGING & STOCKPILE AREA AND FUTURE LANDFILL CELL AREA	11-9-99
MRG	2	ADDED CULVERT BA3-BA4 & RIPRAP	10-6-99
	1	BORROW AREA GRADING E&S CONTROL, NEW CHANNEL & CULVERT	4-28-99

BORROW AREA DRAINAGE DIVIDES / EROSION & SEDIMENT CONTROL

ALPHA RIDGE LANDFILL
UNLINED CELL CLOSURE
CAPITAL PROJECT NO. C-0190-N

3rd ELECTION DISTRICT — HOWARD COUNTY, MARYLAND

SCALE: 1"=20'

SHEET 74 OF 181

APPROVED — OCT - 8 1999 — Department of Planning and Zoning — Director of Planning

SDP-97-128

E&SDIVDE — M-29507.7.DWG, FINAL — SEDCTRL

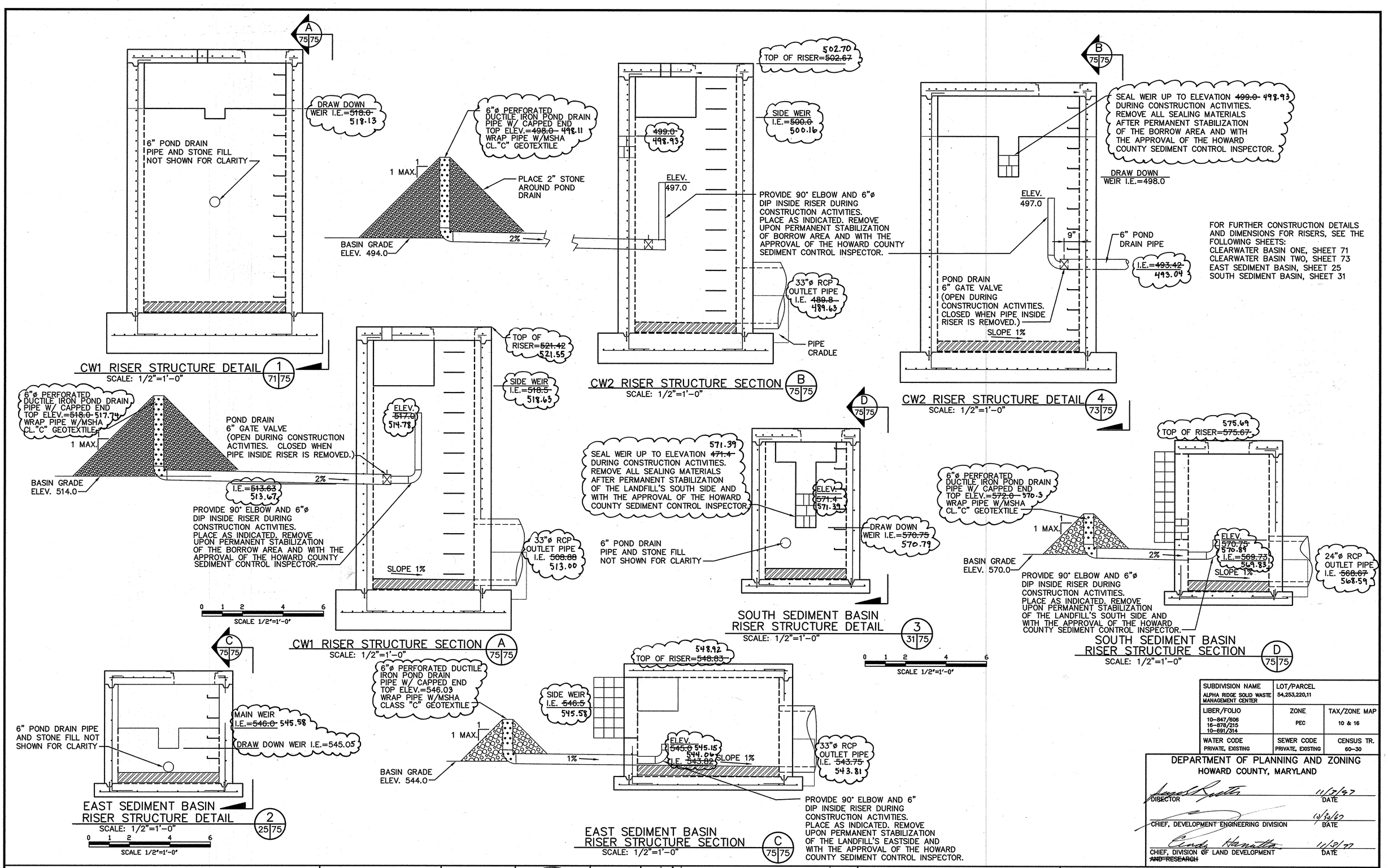

SUBDIVISION NAME	LOT/PARCEL	
ALPHA RIDGE SOLID WASTE MANAGEMENT CENTER	54,253,220,11	
LIBER/FOLIO	ZONE	TAX/ZONE MAP
10-847/806 16-878/215 10-891/314	PEC	10 & 16
WATER CODE	SEWER CODE	CENSUS TR.
PRIVATE, EXISTING	PRIVATE, EXISTING	60-30

DEPARTMENT OF PLANNING AND ZONING
HOWARD COUNTY, MARYLAND

DIRECTOR — DATE 11/3/97
CHIEF, DEVELOPMENT ENGINEERING DIVISION — DATE 11/30/97
CHIEF, DIVISION OF LAND DEVELOPMENT ~~AND RESEARCH~~ — DATE 11/3/97

DEPARTMENT OF PUBLIC WORKS
HOWARD COUNTY, MARYLAND

DIRECTOR OF PUBLIC WORKS — DATE 10/30/97
CHIEF, BUREAU OF WASTE MANAGEMENT — DATE 10/30/97

SCS ENGINEERS
CONSULTING ENGINEERS
11260 ROGER BACON DRIVE
SUITE 300
RESTON, VIRGINIA 22090
PH. (703) 471-6150
FAX. (703) 471-6676

STATE OF MARYLAND — PAUL ANTHONY MANDEVILLE — No. 9811 — PROFESSIONAL ENGINEER
Paul Anthony Mandeville, PE

DES.	AST
DRN.	LTJ
CHK.	PAM
DATE: 10-30-97	

BY	NO.	REVISION	DATE
	6		
	5		
	4		
	3		
	2		
	1		

RISER MODIFICATIONS DURING CONSTRUCTION ACTIVITIES

ALPHA RIDGE LANDFILL
UNLINED CELL CLOSURE
CAPITAL PROJECT NO. C-0190-N
3rd ELECTION DISTRICT — HOWARD COUNTY, MARYLAND

SCALE: AS NOTED
SHEET 75 OF 131

SDP-97-128

M:\295077.01\FINAL\DETAILS ES12DET ESDET2

DEPARTMENT OF PLANNING AND ZONING
HOWARD COUNTY, MARYLAND

DIRECTOR — DATE 11/3/97
CHIEF, DEVELOPMENT ENGINEERING DIVISION — DATE 10/30/97
CHIEF, DIVISION OF LAND DEVELOPMENT ~~AND RESEARCH~~ — DATE 11/3/97

SUBDIVISION NAME	LOT/PARCEL
ALPHA RIDGE SOLID WASTE MANAGEMENT CENTER	54,253,220,11,302 (4)
LIBER/FOLIO	ZONE (4) / TAX/ZONE MAP
10-847/606 16-878/215 10-891/314	~~-REC-~~ RC-DEO / 10 & 16
WATER CODE	SEWER CODE / CENSUS TR.
PRIVATE, EXISTING	PRIVATE, EXISTING / (4) 6030.05 ~~60-30~~

250 0 250 500
SCALE IN FEET

N

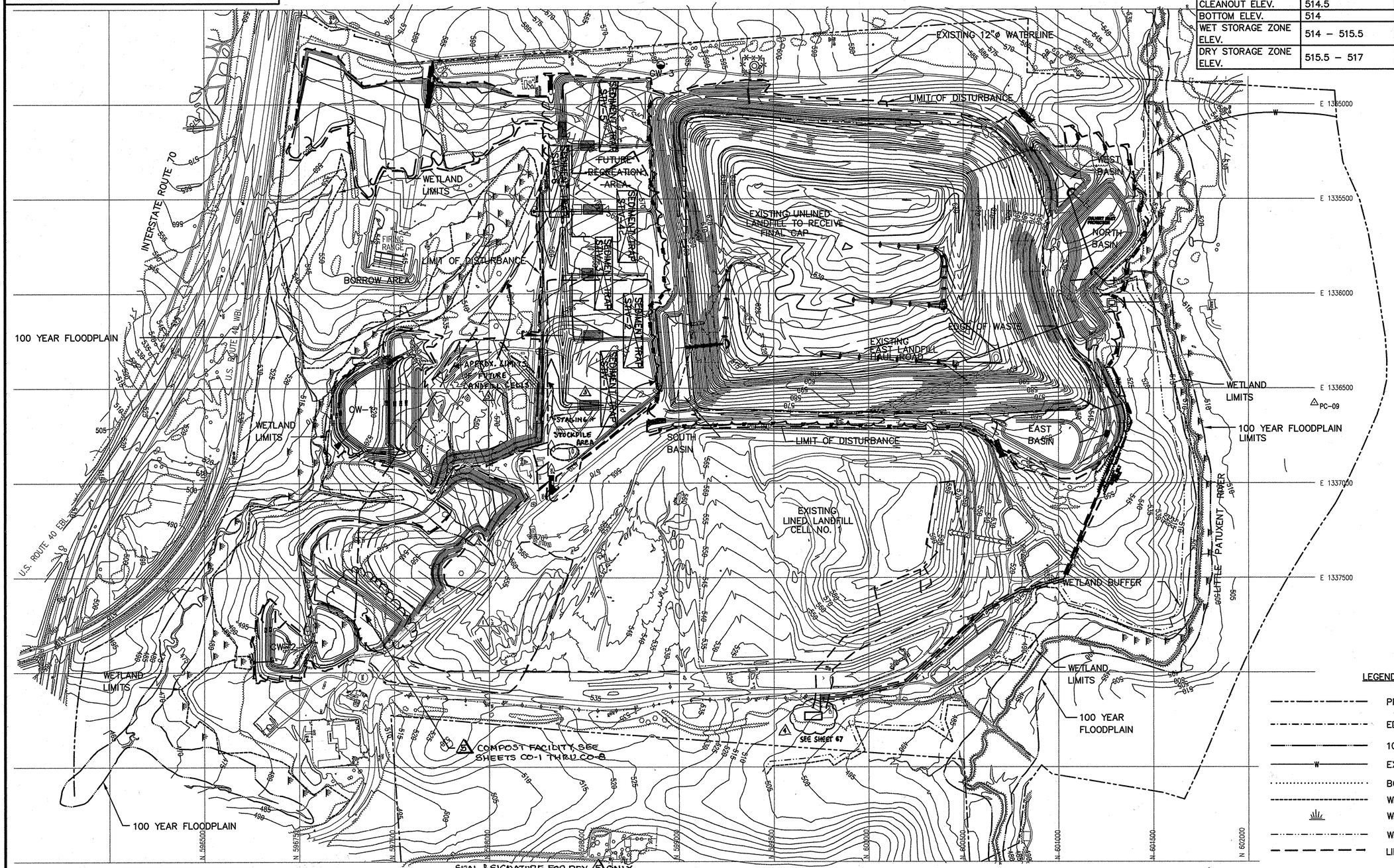

BASIN NAME		CLEARWATER 1
DRAINAGE AREA (AC)		50.02
STORAGE REQUIRED (cf)	WET	90036
	DRY	90036
	TOTAL	180072
STORAGE PROVIDED (cf)	WET	90036
	DRY	90036
	TOTAL	180072
RISER CREST ELEV.		518.0
WET STORAGE ELEV.		515.5
CLEANOUT ELEV.		514.5
BOTTOM ELEV.		514
WET STORAGE ZONE ELEV.		514 – 515.5
DRY STORAGE ZONE ELEV.		515.5 – 517

BASIN NAME		EAST SEDIMENT
DRAINAGE AREA (AC)		15.92
STORAGE REQUIRED (cf)	WET	28656
	DRY	28656
	TOTAL	57312
STORAGE PROVIDED (cf)	WET	28656
	DRY	28656
	TOTAL	57312
RISER CREST ELEV.		545
WET STORAGE ELEV.		544.5
CLEANOUT ELEV.		544.5
BOTTOM ELEV.		544.0
WET STORAGE ZONE ELEV.		544.0 – 544.5
DRY STORAGE ZONE ELEV.		544.5 – 545.0

BASIN NAME		SOUTH SEDIMENT
DRAINAGE AREA (AC)		16.22
STORAGE REQUIRED (cf)	WET	29196
	DRY	29196
	TOTAL	58392
STORAGE PROVIDED (cf)	WET	29196
	DRY	29196
	TOTAL	58392
RISER CREST ELEV.		571.43
WET STORAGE ELEV.		570.75
CLEANOUT ELEV.		570.5
BOTTOM ELEV.		570.0
WET STORAGE ZONE ELEV.		570.0 – 570.75
DRY STORAGE ZONE ELEV.		570.75 – 571.43

BASIN NAME		NORTH SEDIMENT
DRAINAGE AREA (AC)		61.53
STORAGE REQUIRED (cf)	WET	110754
	DRY	110754
	TOTAL	221508
STORAGE PROVIDED (cf)	WET	~~110754~~ 175,111
	DRY	~~110754~~ 203,425
	TOTAL	~~221508~~ 378,536
RISER CREST ELEV.		528 (4)
WET STORAGE ELEV.		~~525.29~~ 526.0
CLEANOUT ELEV.		524.5
BOTTOM ELEV.		524
WET STORAGE ZONE ELEV.		524 – ~~525.29~~ 526.0
DRY STORAGE ZONE ELEV.		~~525.29~~ 526.0 – ~~526.21~~ 528.0

BASIN NAME		CLEARWATER 2
DRAINAGE AREA (AC)		~~22.17~~ 46.55
STORAGE REQUIRED (cf)	WET	~~39906~~ 83,790
	DRY	~~39906~~ 83,790
	TOTAL	~~79812~~ 167,580 (4)
STORAGE PROVIDED (cf)	WET	~~39906~~ 105,000
	DRY	~~39906~~ 95,000
	TOTAL	~~79812~~ 200,000
RISER CREST ELEV.		499.0
WET STORAGE ELEV.		496.9
CLEANOUT ELEV.		494.5
BOTTOM ELEV.		494
WET STORAGE ZONE ELEV.		494 – 496.9
DRY STORAGE ZONE ELEV.		496.9 – 498.7

LEGEND

- PROPERTY LINE
- EDGE OF WASTE
- 100 YEAR FLOODPLAIN
- EXISTING WATER LINE
- BORROW AREA LIMITS
- WETLAND LIMITS
- WETLANDS
- WETLAND BUFFER
- LIMIT OF DISTURBANCE

(4) PROFESSIONAL CERTIFICATION. I HEREBY CERTIFY THAT THESE DOCUMENTS WERE PREPARED OR APPROVED BY ME, AND THAT I AM A DULY LICENSED PROFESSIONAL ENGINEER UNDER THE LAWS OF THE STATE OF MARYLAND, LICENSE NO. 15455, EXPIRATION DATE: 2 JULY 2013. THIS SEAL APPLIES ONLY TO REVISIONS MADE TO THIS SHEET.

STATE OF MARYLAND — GREGORY A. TIZARD — No. 15455 — REGISTERED PROFESSIONAL ENGINEER

SEAL & SIGNATURE FOR REV. (5) ONLY

DEPARTMENT OF PUBLIC WORKS
HOWARD COUNTY, MARYLAND

DIRECTOR OF PUBLIC WORKS — DATE 10/30/97
CHIEF, BUREAU OF WASTE MANAGEMENT — DATE 10/30/97

SCS ENGINEERS
CONSULTING ENGINEERS
11260 ROGER BACON DRIVE
SUITE 300
RESTON, VIRGINIA 22090
PH. (703) 471-6150
FAX. (703) 471-6676

STATE OF MARYLAND — DONALD E. GUNNS & ASSOCIATES — No. 1522 — PROFESSIONAL ENGINEER — WETLANDS
STATE OF MARYLAND — PAUL ANTHONY MANDEVILLE — No. 20-0047 — PROFESSIONAL ENGINEER
Paul Anthony Mandeville, PE

DES.	LTJ
DRN.	LTJ
CHK.	PAM
DATE: 10-30-97	

BY	NO.	REVISION	DATE
CSN	(6)	ALPHA RIDGE LANDFILL COMPOST FACILITY	3/19/12
CJS	(4)	ALPHA RIDGE LANDFILL GAS TO ENERGY PROJECT	10/4/11
BJD	(3)	DELETED SED. TRAPS + ADDED STOCKPILE AREAS	11/9/99
	(2)	NORTH SED. BASIN VOLUMES AND ELEV.'S	7/21/99
	(1)	L.O.D. TO CW-2; CW-2 STORAGE VOLUMES	4-28-99

OVERALL LIMITS OF DISTURBANCE

ALPHA RIDGE LANDFILL
UNLINED CELL CLOSURE
CAPITAL PROJECT NO. C-0190-N

3rd ELECTION DISTRICT — HOWARD COUNTY, MARYLAND

SCALE: 1"=250'

SHEET 76 OF 131

SDP-97-128

M:\295077.01\FINAL DISTURB. B-TABLE - 5

LOD

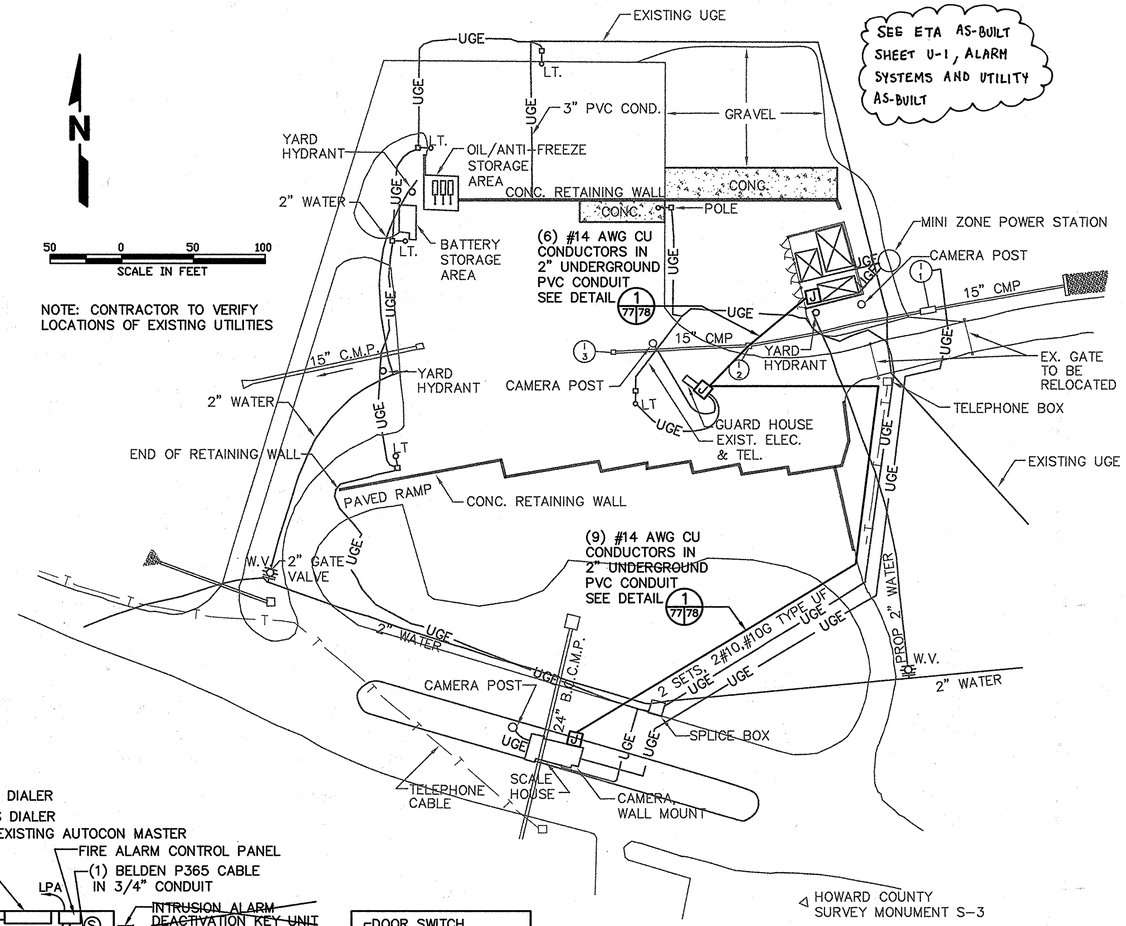

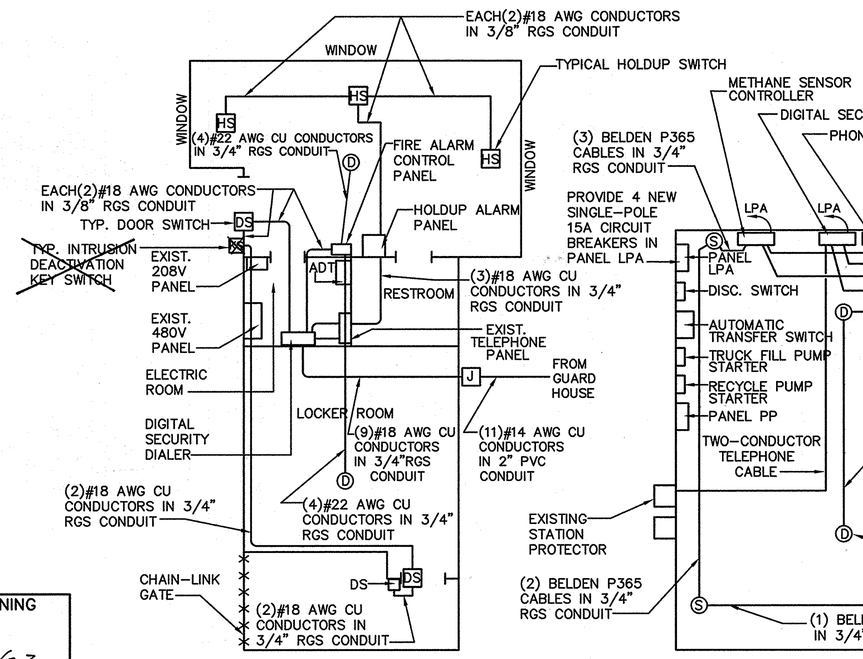

SCALE HOUSE

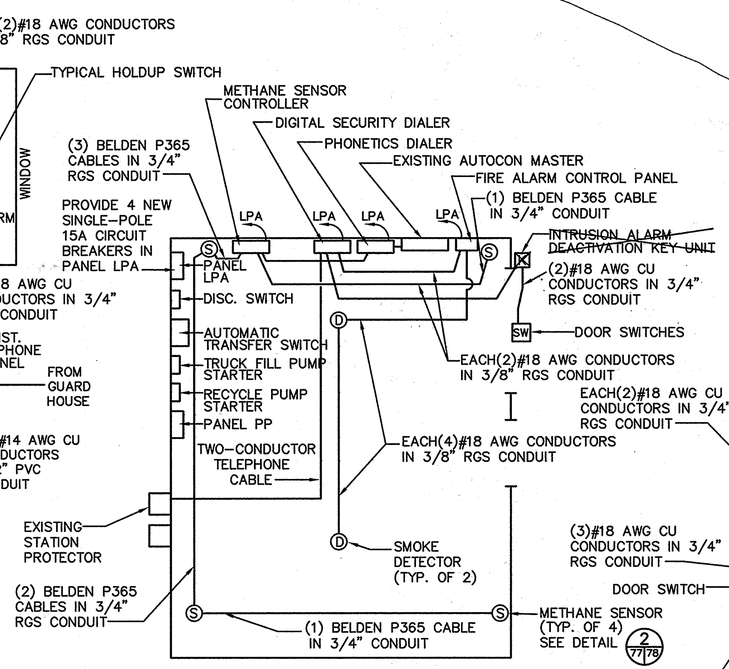

LEACHATE TRUCK FILL BUILDING

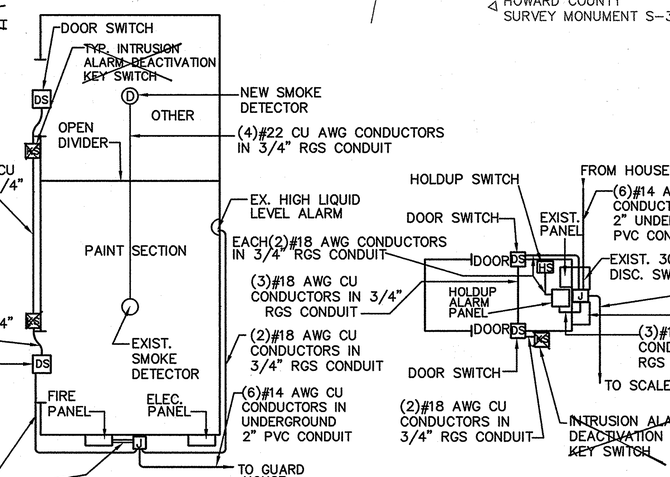

HOUSEHOLD WASTE

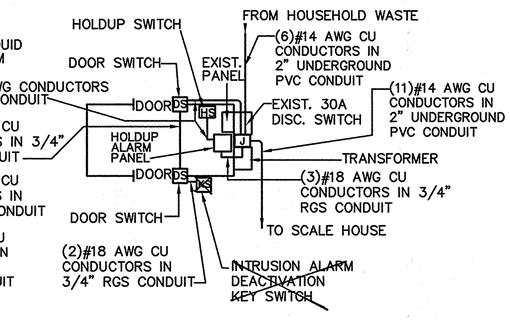

GUARD HOUSE

0 2 4 8 12
SCALE 1/4"=1'-0"

SUBDIVISION NAME	LOT/PARCEL	
ALPHA RIDGE SOLID WASTE MANAGEMENT CENTER	54,253,220,11	
LIBER/FOLIO	ZONE	TAX/ZONE MAP
10-847/806 16-878/215 10-691/314	R	10 & 16
WATER CODE	SEWER CODE	CENSUS TR.
PRIVATE, EXISTING	PRIVATE, EXISTING	60-30

DEPARTMENT OF PLANNING AND ZONING
HOWARD COUNTY, MARYLAND

DIRECTOR — DATE 11/3/97
CHIEF, DEVELOPMENT ENGINEERING DIVISION — DATE 10/30/97
CHIEF, DIVISION OF LAND DEVELOPMENT — DATE 11/3/97

DEPARTMENT OF PUBLIC WORKS
HOWARD COUNTY, MARYLAND

DIRECTOR OF PUBLIC WORKS — DATE 10/30/97
CHIEF, BUREAU OF WASTE MANAGEMENT — DATE 10/30/97

SCS ENGINEERS
CONSULTING ENGINEERS
11260 ROGER BACON DRIVE
SUITE 300
RESTON, VIRGINIA 22090
PH. (703) 471-6150
FAX. (703) 471-6676

STATE OF MARYLAND — RAYMOND F. IRBY — REG. NO. 9 — PROFESSIONAL ENGINEER — 10/28/97
Raymond F. Irby, PE

DES. RFI
DRN. MEH
CHK. PAM
DATE: 10-30-97

BY	NO.	REVISION	DATE
	6		
	5		
	4		
	3		
	2		
	1		

MISCELLANEOUS BUILDING ALARM SYSTEMS

ALPHA RIDGE LANDFILL
UNLINED CELL CLOSURE
CAPITAL PROJECT NO. C-0190-N
3rd ELECTION DISTRICT — HOWARD COUNTY, MARYLAND

SCALE: AS NOTED
SHEET 77 OF 136

ELECSITE,ALARM
M:\295077.01\FINAL\
ALARM-B

SDP-97-125

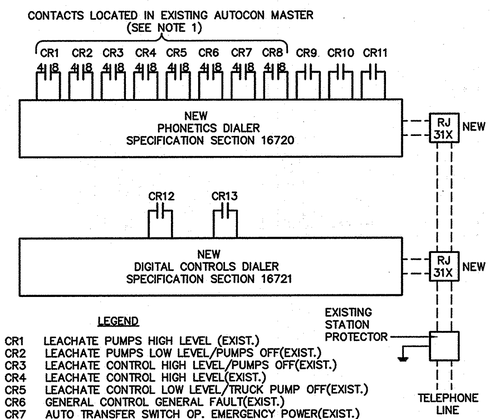

LEGEND

CR1 LEACHATE PUMPS HIGH LEVEL (EXIST.)
CR2 LEACHATE PUMPS LOW LEVEL/PUMPS OFF(EXIST.)
CR3 LEACHATE CONTROL HIGH LEVEL/PUMPS OFF(EXIST.)
CR4 LEACHATE CONTROL HIGH LEVEL(EXIST.)
CR5 LEACHATE CONTROL LOW LEVEL/TRUCK PUMP OFF(EXIST.)
CR6 GENERAL CONTROL GENERAL FAULT(EXIST.)
CR7 AUTO TRANSFER SWITCH OP. EMERGENCY POWER(EXIST.)
CR8 AUTO TRANSFER SWITCH MAN. TRANSFER(EXIST.)
CR9 METHANE SENSOR HIGH(NEW)
CR10 METHANE SENSOR LOW(NEW)
CR11 METHANE SENSOR TROUBLE(NEW)
CR12 SMOKE ALARM(NEW)
CR13 INTRUSION ALARM(NEW)

NOTE: 1. REMOVE THE WIRES CONNECTED TO THESE TERMINALS AND ADD WIRES TO CONNECT TO THE NEW PHONETICS DIALER.

ALARM DIALER CONNECTIONS IN LEACHATE TRUCK FILL STATION

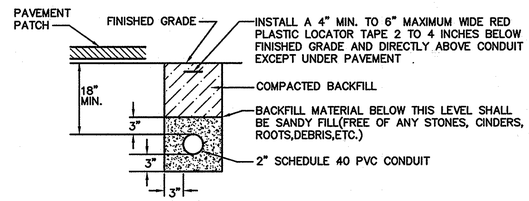

DETAIL OF INSTALLATION OF ELECTRICAL CONDUIT UNDERGROUND (1 / 77|78)

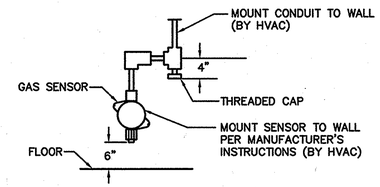

METHANE SENSOR MOUNTING DETAIL (2 / 77|78)

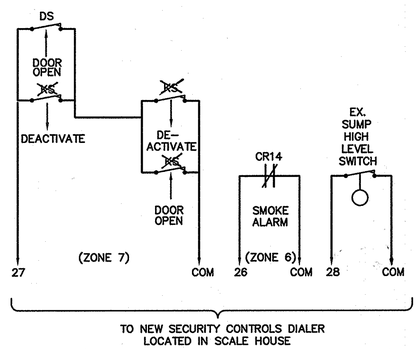

ALARM CONNECTIONS IN HOUSEHOLD HAZARD WASTE AREA

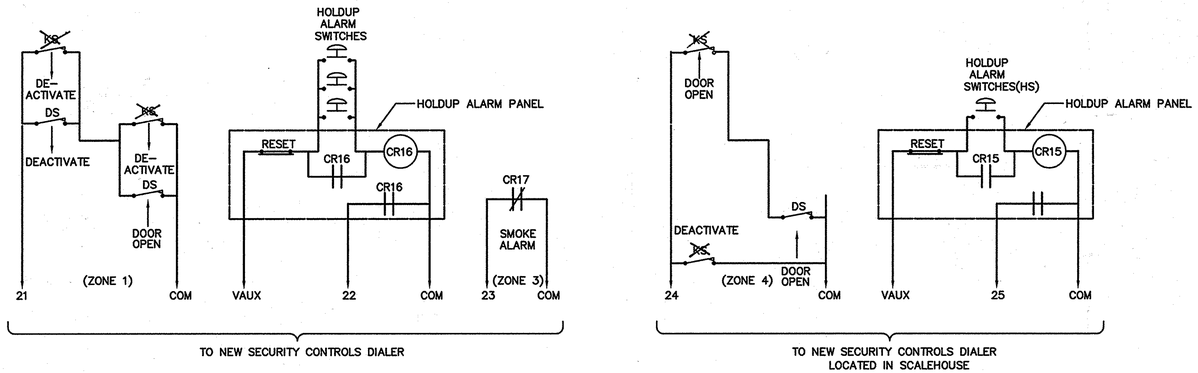

ALARM CONNECTIONS IN SCALE HOUSE

ALARM CONNECTIONS IN GUARD HOUSE

X - DELETED

SUBDIVISION NAME	LOT/PARCEL	
ALPHA RIDGE SOLID WASTE MANAGEMENT CENTER	54,253,220,11	
LIBER/FOLIO	ZONE	TAX/ZONE MAP
10-847/606 16-878/215 10-691/314	R	10 & 16
WATER CODE	SEWER CODE	CENSUS TR.
PRIVATE, EXISTING	PRIVATE, EXISTING	60-30

DEPARTMENT OF PLANNING AND ZONING
HOWARD COUNTY, MARYLAND

DIRECTOR — DATE 11/3/97
CHIEF, DEVELOPMENT ENGINEERING DIVISION — DATE 10/31/97
CHIEF, DIVISION OF LAND DEVELOPMENT — DATE 11/6/97

DEPARTMENT OF PUBLIC WORKS
HOWARD COUNTY, MARYLAND

DIRECTOR OF PUBLIC WORKS — DATE 10/30/97
CHIEF, BUREAU OF WASTE MANAGEMENT — DATE 10/30/97

SCS ENGINEERS
CONSULTING ENGINEERS
11260 ROGER BACON DRIVE
SUITE 300
RESTON, VIRGINIA 22090
PH. (703) 471-6150
FAX. (703) 471-6676

STATE OF MARYLAND — RAYMOND F. IRBY — REG. NO. 30 3088 — PROFESSIONAL ENGINEER — 10/28/97
Raymond F. Irby, PE

DES.	RFI
DRN.	MEH
CHK.	PAM
DATE: 10-30-97	

BY	NO.	REVISION	DATE
	6		
	5		
	4		
	3		
	2		
	1		

MISCELLANEOUS BUILDING ALARM SYSTEMS DETAILS

ALPHA RIDGE LANDFILL
UNLINED CELL CLOSURE
CAPITAL PROJECT NO. C-0190-N
3rd ELECTION DISTRICT — HOWARD COUNTY, MARYLAND

SCALE: NO SCALE

SHEET 78 OF 131

SDP-97-128

ALARMDETS
M:\295077.01\FINAL\
ALARM-DETAIL

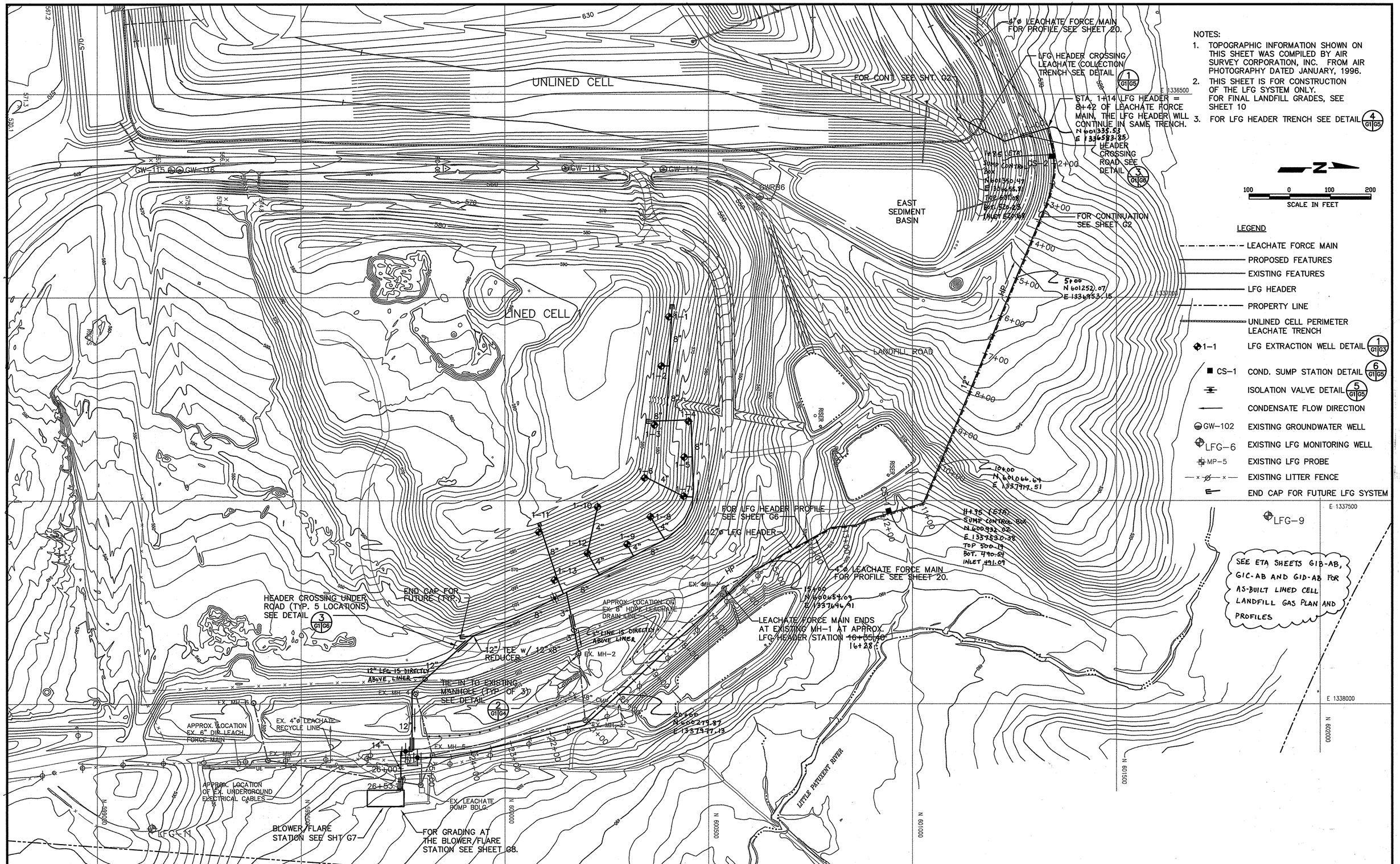

NOTES:

1. TOPOGRAPHIC INFORMATION SHOWN ON THIS SHEET WAS COMPILED BY AIR SURVEY CORPORATION, INC. FROM AIR PHOTOGRAPHY DATED JANUARY, 1996.
2. THIS SHEET IS FOR CONSTRUCTION OF THE LFG SYSTEM ONLY. FOR FINAL LANDFILL GRADES, SEE SHEET 10
3. FOR LFG HEADER TRENCH SEE DETAIL 4 G1 G5

N

100 0 100 200
SCALE IN FEET

LEGEND

- LEACHATE FORCE MAIN
- PROPOSED FEATURES
- EXISTING FEATURES
- LFG HEADER
- PROPERTY LINE
- UNLINED CELL PERIMETER LEACHATE TRENCH
- 1–1 LFG EXTRACTION WELL DETAIL 1 G1 G3
- CS–1 COND. SUMP STATION DETAIL 6 G1 G5
- ISOLATION VALVE DETAIL 5 G1 G5
- CONDENSATE FLOW DIRECTION
- GW–102 EXISTING GROUNDWATER WELL
- LFG–6 EXISTING LFG MONITORING WELL
- MP–5 EXISTING LFG PROBE
- EXISTING LITTER FENCE
- END CAP FOR FUTURE LFG SYSTEM

DEPARTMENT OF PUBLIC WORKS
HOWARD COUNTY, MARYLAND

DIRECTOR OF PUBLIC WORKS — DATE 10/30/97
CHIEF, BUREAU OF WASTE MANAGEMENT — DATE 10/30/97

SCS ENGINEERS
CONSULTING ENGINEERS
11260 ROGER BACON DRIVE
SUITE 300
RESTON, VIRGINIA 22090
PH. (703) 471-6150
FAX. (703) 471-6676

STATE OF MARYLAND — ERIC RANDALL PETERSON — No. 21343 — REG. C-SP — PROFESSIONAL ENGINEER
Eric Randall Peterson, PE

DES. SCW	6		
DRN. BJD	5		
CHK. ERP	4		
DATE: 10-30-97	3		
	2		
	1		
BY	NO.	REVISION	DATE

LINED CELL
LFG SYSTEM LAYOUT

ALPHA RIDGE LANDFILL
UNLINED CELL CLOSURE
CAPITAL PROJECT NO. C-0190-N
3rd ELECTION DISTRICT — HOWARD COUNTY, MARYLAND

SCALE: 1"=100'-0"
SHEET (Sht 79) G1 OF 131

M:\295077.02\FINAL\200SITE
SHT-G1

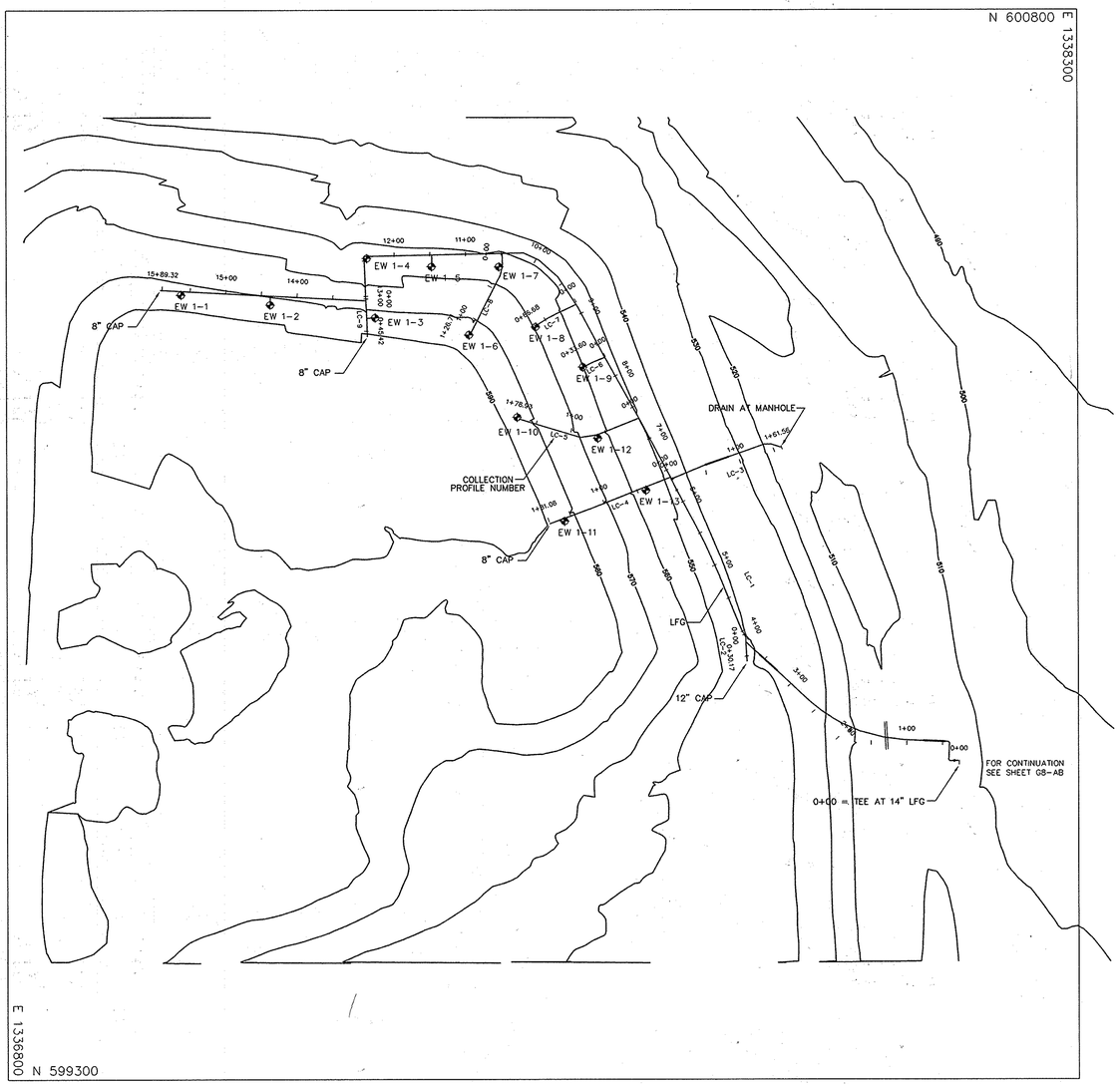

GRAPHIC SCALE

(IN FEET)
1 inch = 100 ft.

DESIGNED BY:		DATE
DRAWN BY:	TWH	12-28 DATE
CHECKED BY:		DATE
APPROVED BY:		DATE

REVISIONS

DATE	BY	DESCRIPTION
10-19-00	TWH	ADDED WELLS AND LABELS.

ENGINEERING TECHNOLOGIES ASSOCIATES, INC.
ENGINEERS * PLANNERS * SURVEYORS
3458 ELLICOTT CENTER DRIVE SUITE 101
ELLICOTT CITY, MARYLAND 21043
BALTO. (410)461-9920 FAX (410)750-8565

STATE OF MARYLAND CLIFFORD ALLEN EIGHT REGISTERED PROPERTY LINE SURVEYOR

H. E. SARGENT, INC. CONTRACTORS • STILLWATER, ME.

LINED CELL LANDFILL GAS AS-BUILT

ALPHA RIDGE LANDFILL CELL CLOSURE

HOWARD COUNTY MARYLAND

SCALE : 1"=100'	CONTRACT NO.: 98301.10	DATE : 12-28-1998	SHEET : G1B-AB OF 131

Lfgh2ab.dwg 10-19-00 2:01:35 pm EST

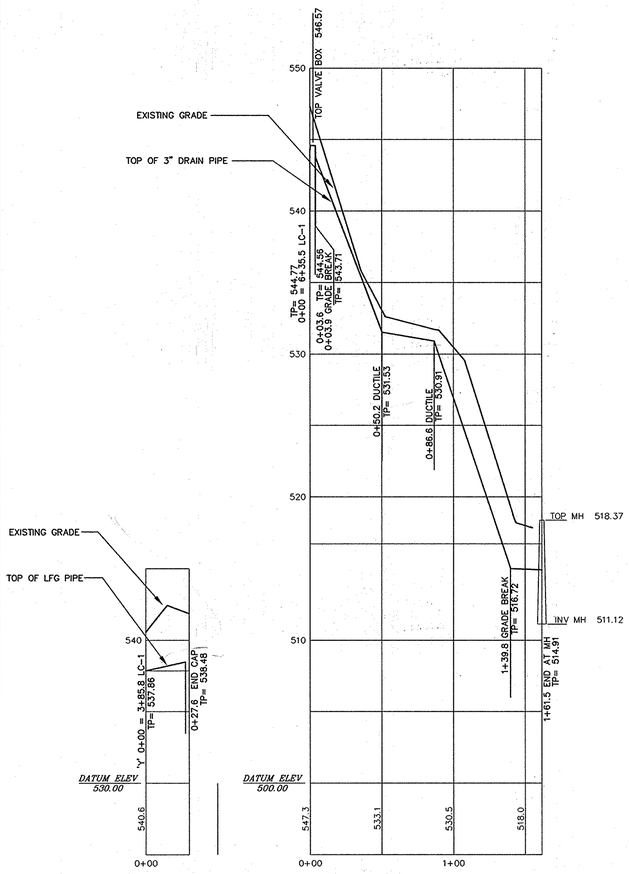

PROFILE
LC-2

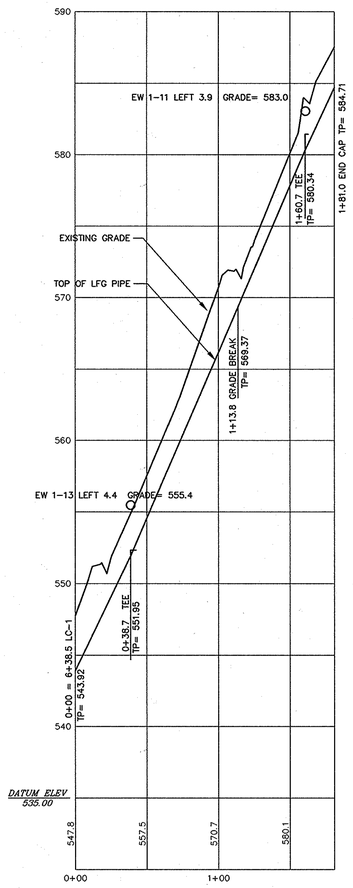

PROFILE
LC-3

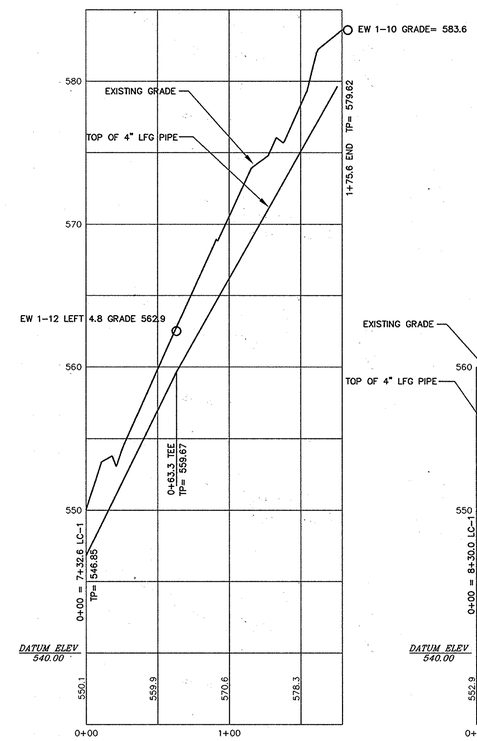

PROFILE
LC-4

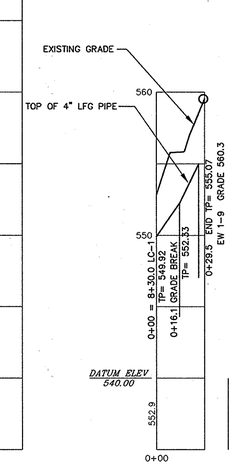

PROFILE
LC-5

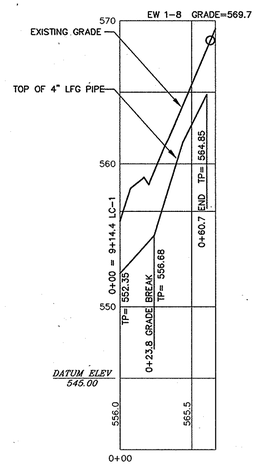

PROFILE
LC-6

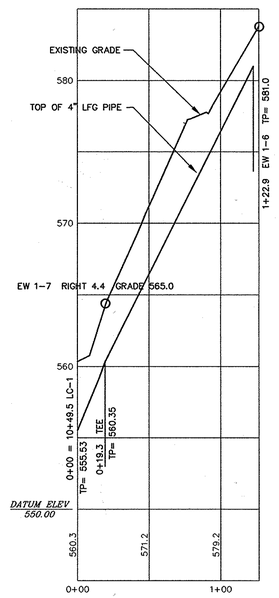

PROFILE
LC-7

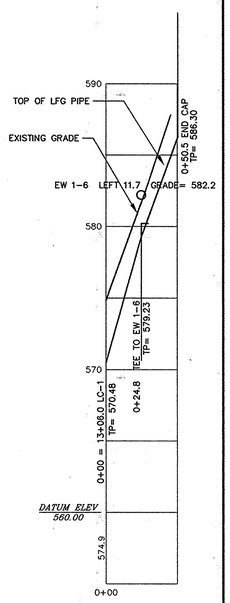

PROFILE
LC-8

PROFILE
LC-9

HORIZONTAL: 1"=50'
VERTICAL: 1"=5'

DESIGNED BY:		DATE
DRAWN BY:	TWH	12-28 DATE
CHECKED BY:		DATE
APPROVED BY:		DATE

REVISIONS

DATE	BY	DESCRIPTION

ENGINEERING TECHNOLOGIES ASSOCIATES, INC.
ENGINEERS * PLANNERS * SURVEYORS
3458 ELLICOTT CENTER DRIVE SUITE 101
ELLICOTT CITY, MARYLAND 21043
BALTO. (410)461-9920 FAX (410)750-8565

STATE OF MARYLAND — DEPARTMENT OF ASSESSMENTS & TAXATION — REGISTERED PROPERTY LINE SURVEYOR

H. E. SARGENT, INC. — CONTRACTORS • STILLWATER, ME.

LINED CELL / LFG AS-BUILT PROFILES

ALPHA RIDGE LANDFILL CELL CLOSURE

HOWARD COUNTY MARYLAND

SCALE : AS NOTED | CONTRACT NO.: 98301.10 | DATE : 12-28-1998 | SHEET (31) OF (31) : G1C-AB

LFgh2ab.dwg 4-26-00 3:42:13 pm EST
LFgh2ab.dwg 4-26-00 3:42:13 pm EST

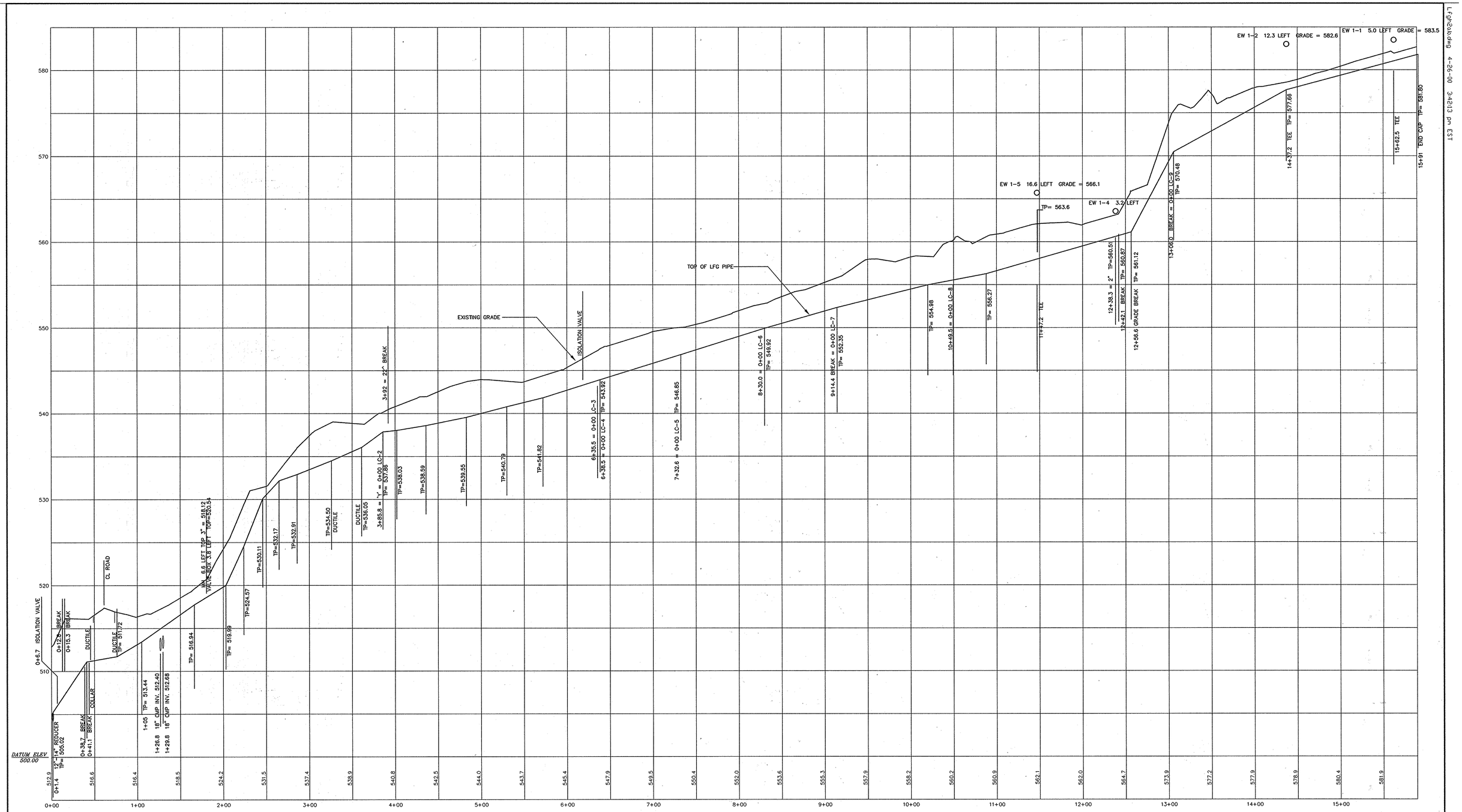

PROFILE
LC-1

HORIZONTAL: 1"=50'
VERTICAL: 1"=5'

DESIGNED BY:		DATE
DRAWN BY:	TWH	12-28 DATE
CHECKED BY:		DATE
APPROVED BY:		DATE

REVISIONS

DATE	BY	DESCRIPTION

ENGINEERING TECHNOLOGIES ASSOCIATES, INC.
ENGINEERS * PLANNERS * SURVEYORS
3458 ELLICOTT CENTER DRIVE SUITE 101
ELLICOTT CITY, MARYLAND 21043
BALTO. (410)461-9920 FAX (410)750-8565

STATE OF MARYLAND — GERALD ALLEN BURNS — No. 10834 — REGISTERED PROFESSIONAL ENGINEER — LAND SURVEYOR

H. E. SARGENT, INC. — CONTRACTORS • STILLWATER, NE.

LINED CELL / LFG AS-BUILT PROFILES

ALPHA RIDGE LANDFILL CELL CLOSURE

HOWARD COUNTY MARYLAND

SCALE : AS NOTED | CONTRACT NO.: 98301.10 | DATE : 12-28-1998 | SHEET 62 OF 131 G1D-AB

Lfgh2ab.dwg 4-26-00 3:42:13 pm EST

Lfgh2ab.dwg 4-26-00 3:42:13 pm EST

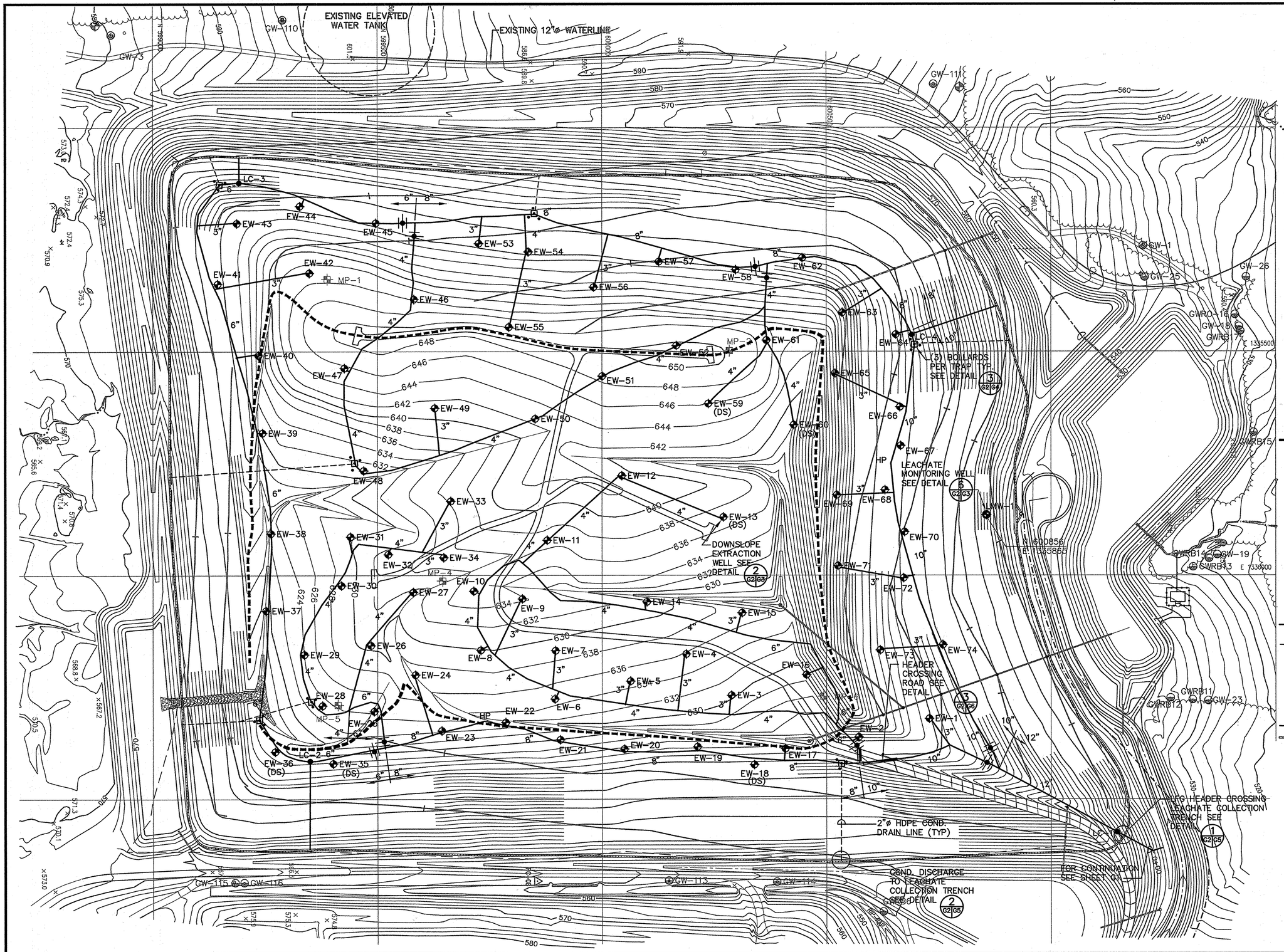

NOTES:

1. TOPOGRAPHIC INFORMATION SHOWN ON THIS SHEET WAS COMPILED BY AIR SURVEY CORPORATION, INC. FROM AIR PHOTOGRAPHY DATED JANUARY, 1996.
2. THIS SHEET IS FOR CONSTRUCTION OF THE LFG SYSTEM ONLY. FOR FINAL LANDFILL GRADES, SEE SHEET 10.
3. FOR LFG HEADER TRENCH SEE DETAIL 4 G2 G5
4. EXISTING LFG MONITORING PROBES TO BE ABANDONED BY CUTTING OFF TOP OF PROBE TO A MIN. OF 3' BELOW FINAL CAP SYSTEM.

LEGEND

- LIMITS OF GEOMEMBRANE
- LEACHATE TRENCH GAS COLLECTOR SEE DETAIL 3 G2 G5
- EW-62 LFG EXTRACTION WELL SEE DETAIL 1 G2 G3
- EW-19 (DS) LFG EXTRACTION WELL (DS = DOWNSLOPE) SEE DETAIL 2 G2 G3
- CONDENSATE TRAP WITH BOLLARDS, SEE DETAILS 1 G2 G4 3 G2 G4
- ISOLATION VALVE DETAIL 5 G2 G5
- LFG HEADER/LATERAL
- CONDENSATE GRAVITY DRAIN LINE
- GW-102 EXISTING GROUNDWATER WELL
- MP-3 EXISTING LFG PROBE (SEE NOTE 4)
- LFG-6 EXISTING LFG MONITORING WELL
- PROPERTY LINE
- LEACHATE COLLECTION TRENCH
- LMW-1 LEACHATE MONITORING WELL 6 G2 G3
- STORM DRAIN

SEE ETA SHEETS G2-AB AND G2A-AB FOR AS-BUILT UNLINED CELL LANDFILL GAS PLAN AND LATERALS

DEPARTMENT OF PUBLIC WORKS
HOWARD COUNTY, MARYLAND

DIRECTOR OF PUBLIC WORKS — DATE 10/30/97
CHIEF, BUREAU OF WASTE MANAGEMENT — DATE 10/30/97

SCS ENGINEERS
CONSULTING ENGINEERS
11260 ROGER BACON DRIVE
SUITE 300
RESTON, VIRGINIA 22090
PH. (703) 471-6150
FAX. (703) 471-6676

STATE OF MARYLAND — ERIC RANDALL PETERSON — LIC. REG. CERT. NO. 21101 — PROFESSIONAL ENGINEER
Eric Randall Peterson, PE

DES. CMS		6		
DRN. BJD	4	5	REALIGNMENT OF LFG HEADER, MODIFICATIONS TO HEADER SIZE, AND CHANGE TO DOWN-SLOPE (FROM NORMAL) EXTRACTION WELLS	4/22/99
CHK. ERP		4	REALIGNMENT OF LFG HEADER AND MODIFICATIONS TO HEADER SIZE	4/22/99
DATE: 10-30-97		3	REALIGNMENT OF LFG HEADER	4/22/99
		2	ADD HC-1,2,3, AND EW-31A, B; DEL. EW-26,27,31,38	9/8/98
	BY	NO.	REVISION	DATE

UNLINED CELL LFG COLLECTION SYSTEM LAYOUT

ALPHA RIDGE LANDFILL
UNLINED CELL CLOSURE
CAPITAL PROJECT NO. C-0190-N

3rd ELECTION DISTRICT — HOWARD COUNTY, MARYLAND

SCALE: 1"=100'

(sht 83)
SHEET G2 OF 131

SHT-G2 M:\295077.02\FINAL\ FG-LFG

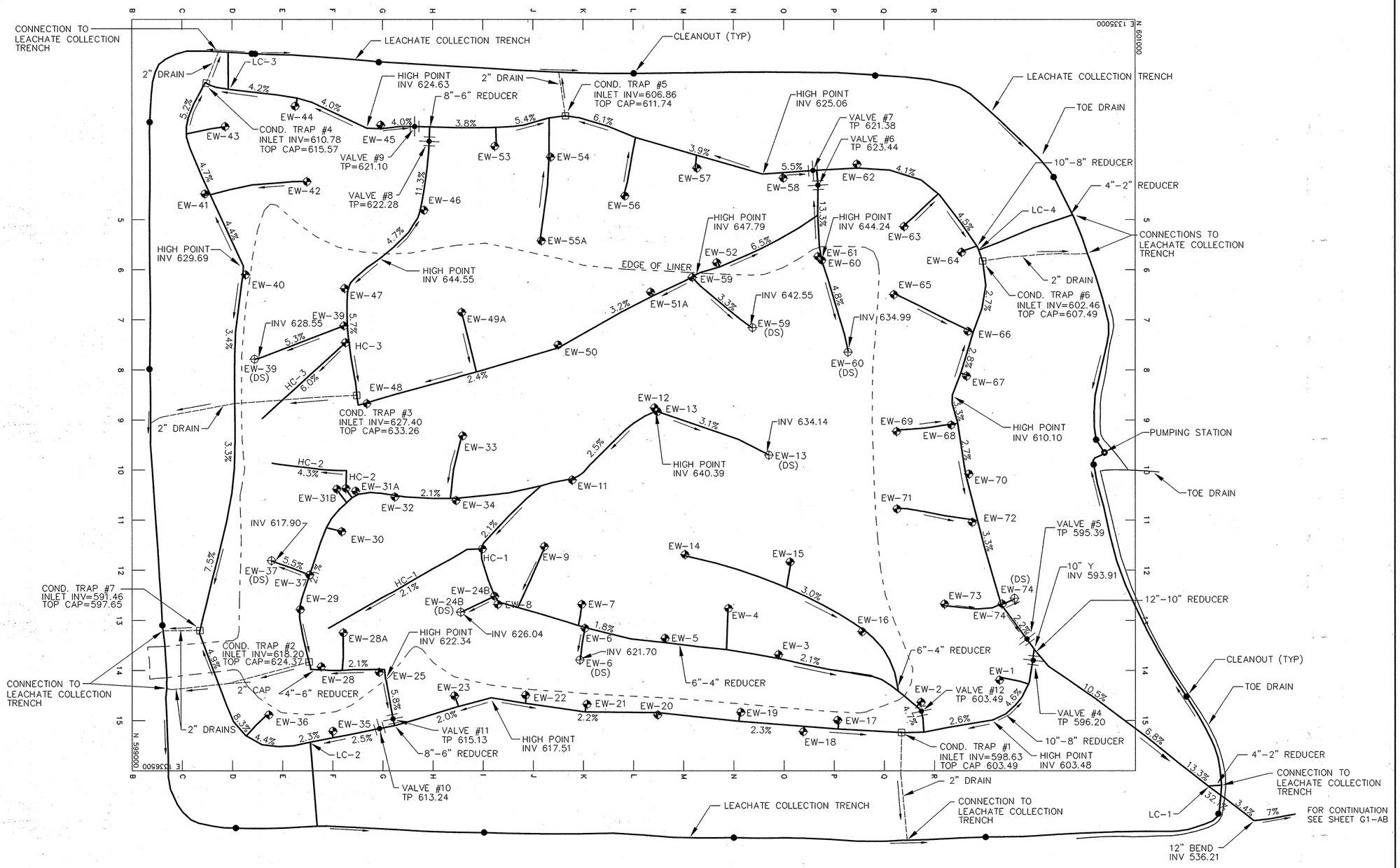

NOTE
TP= TOP OF PIPE
INV=INVERT OF PIPE

INDICATES DIRECTION OF CONDENSATE FLOW

DESIGNED BY:		DATE
DRAWN BY:		DATE
CHECKED BY:		DATE
APPROVED BY:		DATE

REVISIONS

DATE	BY	DESCRIPTION
12-21-00	TWH	NOTE FOR CLARIFICATION OF ELEVATIONS.
1-12-01	TWH	INDICATORS FOR DIRECTION OF CONDENSATE FLOW.

ENGINEERING TECHNOLOGIES ASSOCIATES, INC.
ENGINEERS * PLANNERS * SURVEYORS
3458 ELLICOTT CENTER DRIVE SUITE 101
ELLICOTT CITY, MARYLAND 21043
BALTO. (410)461-9920 FAX (410)750-8565

STATE OF MARYLAND CLIFFORD ALLEN EDGIN REGISTERED PROPERTY LINE SURVEYOR

H. E. SARGENT, INC. CONTRACTORS • STILLWATER, NE.

AS-BUILT LANDFILL GAS

ALPHA RIDGE LANDFILL CELL CLOSURE

HOWARD COUNTY MARYLAND

SCALE : 1"=100' | CONTRACT NO.: 98301.10 | DATE : 1-11-2000 | SHEET : G2-AB OF 131

LFGbase.dwg 1-12-01 12:23:17 pm EST

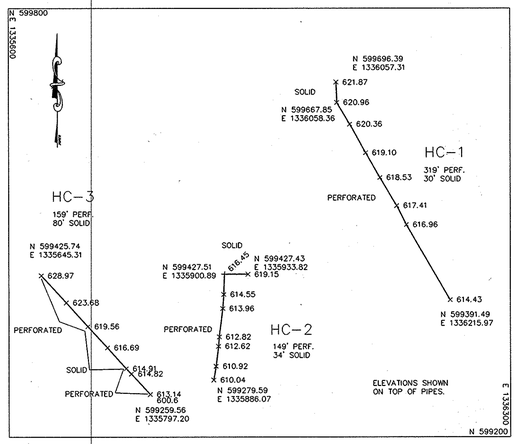

DESIGNED BY:		DATE		
DRAWN BY:	TWH	9-25-98 DATE		
CHECKED BY:		DATE		
APPROVED BY:		DATE		

REVISIONS

DATE	BY	DESCRIPTION
10-19-00	TWH	ADDED NOTE FOR ELEVATIONS.

ENGINEERING TECHNOLOGIES ASSOCIATES, INC.

ENGINEERS * PLANNERS * SURVEYORS

3458 ELLICOTT CENTER DRIVE SUITE 101
ELLICOTT CITY, MARYLAND 21043
BALTO. (410)461-9920 FAX (410)750-8565

STATE OF MARYLAND · CARROLL · HOWARD · BALTIMORE · LICENSED · PROPERTY LINE SURVEYOR

H. E. SARGENT, INC. · CONTRACTORS · STILLWATER, NE.

AS-BUILTS OF GAS LATERALS

ALPHA RIDGE LANDFILL CELL CLOSURE

HOWARD COUNTY MARYLAND

SCALE : 1"=100' | CONTRACT NO.: 98301.10 | DATE : 9-25-1998 | SHEET (SHT 8 OF 13) : G2A-AB

Gaslats.dwg 10-19-00 2:05:52 pm EST

EXTRACTION WELL SCHEDULE

WELL NO.	NORTHING	EASTING	WELL DEPTH (FT)	SLOTTED PIPE LENGTH (FT)
1	N 600729.0	E 1336320.3	35	25
2	N 600572.0	E 1336361.7	35	25
3	N 600288.4	E 1336268.1	40	25
4	N 600187.5	E 1336175.9	40	25
5	N 600063.6	E 1336236.2	40	25
6	N 599895.1	E 1336276.2	40	25
7	N 599896.6	E 1336168.1	40	25
8	N 599730.1	E 1336167.2	40	25
9	N 599822.6	E 1336052.7	40	25
10	N 599714.4	E 1336035.2	40	25
11	N 599877.9	E 1335921.5	50	35
12	N 600044.1	E 1335777.3	55	35
13	N 600270.4	E 1335869.8	55	35
14	N 600099.9	E 1336059.5	55	35
15	N 600311.9	E 1336084.4	50	35
16	N 600455.4	E 1336222.2	40	25
17	N 600408.5	E 1336387.5	30	30
18	N 600339.2	E 1336423.0	38	25
19	N 600212.6	E 1336383.2	42	30
20	N 600049.9	E 1336388.1	42	30
21	N 599907.1	E 1336367.3	40	25
22	N 599785.5	E 1336328.5	40	25
23	N 599643.2	E 1336347.1	40	25
24	N 599584.4	E 1336222.3	40	25
25	N 599492.5	E 1336303.9	45	30
26	N 599485.3	E 1336156.9	40	25
27	N 599579.6	E 1336037.9	50	35
28	N 599377.4	E 1336291.2	40	25
29	N 599337.3	E 1336177.2	40	25
30	N 599419.6	E 1336023.0	45	30
31	N 599440.0	E 1335913.9	45	30
32	N 599523.8	E 1335953.1	45	30
33	N 599663.1	E 1335834.2	45	30
34	N 599647.5	E 1335960.1	45	30
35	N 599401.2	E 1336420.6	35	25
36	N 599272.2	E 1336394.1	37	25
37	N 599251.9	E 1336079.3	35	25
38	N 599262.7	E 1335906.6	40	25
39	N 599244.2	E 1335682.1	35	25
40	N 599235.0	E 1335508.6	30	20
41	N 599144.6	E 1335349.5	25	15
42	N 599348.5	E 1335325.2	40	25
43	N 599187.2	E 1335213.7	25	15
44	N 599327.2	E 1335175.3	25	15
45	N 599496.4	E 1335213.0	25	15
46	N 599581.2	E 1335383.5	40	25
47	N 599426.3	E 1335537.2	45	30
48	N 599469.4	E 1335766.2	45	30
49	N 599627.6	E 1335626.3	45	30
50	N 599851.2	E 1335650.2	50	35
51	N 600000.4	E 1335554.9	45	35
52	N 600165.6	E 1335486.8	35	15
53	N 599725.6	E 1335258.7	30	20
54	N 599792.8	E 1335445.3	45	30
55	N 599836.0	E 1335277.4	30	20
56	N 599981.4	E 1335356.4	40	25
57	N 600126.8	E 1335299.4	30	30
58	N 600298.0	E 1335317.9	35	25
59	N 600236.9	E 1335616.4	40	25
60	N 600427.3	E 1335664.0	50	35
61	N 600366.4	E 1335474.8	35	25
62	N 600446.4	E 1335291.1	30	30
63	N 600535.3	E 1335413.3	35	25
64	N 600654.7	E 1335462.0	30	20
65	N 600519.3	E 1335548.9	35	25
66	N 600663.7	E 1335624.1	35	25
67	N 600665.4	E 1335710.6	45	30
68	N 600630.4	E 1335809.4	45	30
69	N 600523.1	E 1335820.6	55	35
70	N 600674.1	E 1335903.1	45	30
71	N 600525.8	E 1335979.0	55	35
72	N 600671.9	E 1336006.1	45	30
73	N 600619.7	E 1336167.3	40	25
74	N 600759.2	E 1336155.6	40	25

EXTRACTION WELL SCHEDULE (CONT.)

WELL NO.	NORTHING	EASTING	WELL DEPTH (FT)	SLOTTED PIPE LENGTH (FT)
1-1	N 600402.6	E 1337047.9	25	15
1-2	N 600384.3	E 1337168.7	30	20
1-3	N 600367.2	E 1337314.0	30	20
1-4	N 600450.7	E 1337304.9	20	10
1-5	N 600440.1	E 1337393.0	20	10
1-6	N 600342.7	E 1337444.5	35	25
1-7	N 600438.8	E 1337489.3	25	15
1-8	N 600357.3	E 1337539.6	25	15
1-9	N 600299.9	E 1337607.4	20	10
1-10	N 600227.4	E 1337515.2	35	25
1-11	N 600083.0	E 1337577.1	40	25
1-12	N 600202.3	E 1337629.7	25	15
1-13	N 600121.9	E 1337695.7	20	10

SEE RECORD DRAWING SHEET G-3 FOR AS-BUILT WELL DEPTHS

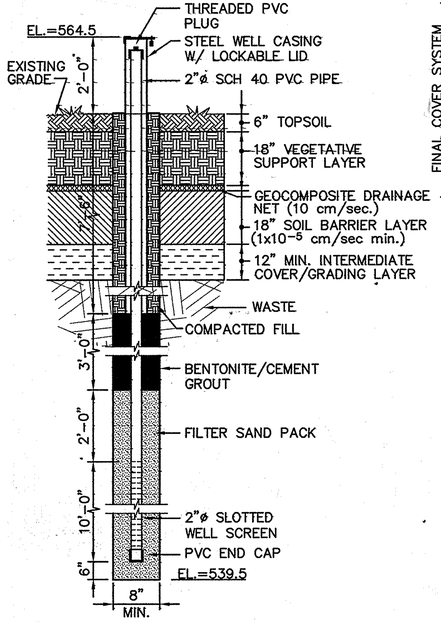

LEACHATE MONITORING WELL DETAIL (6 / G2|G3)
SCALE: 1/2"=1'-0"

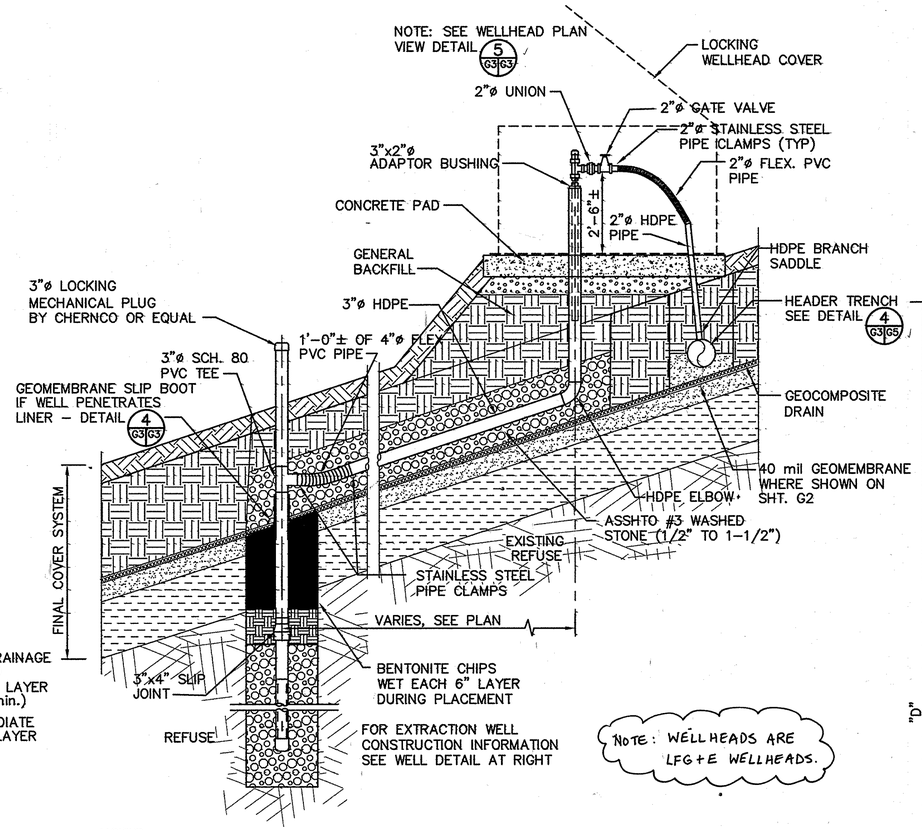

NOTE: WELLHEADS ARE LFG+E WELLHEADS.

NOTES:
1. WELL BORING DEPTHS AND SLOTTED LENGTHS WILL BE AS NOTED IN THE WELL SCHEDULE
1. THIS DETAIL APPLIES TO EW-13, 18, 35, 36, 59 & 60.

DOWNSLOPE (DS) EXTRACTION WELL BELOW GRADE PIPING DETAIL (2 / G2|G3)
SCALE: 1/2"=1'-0"

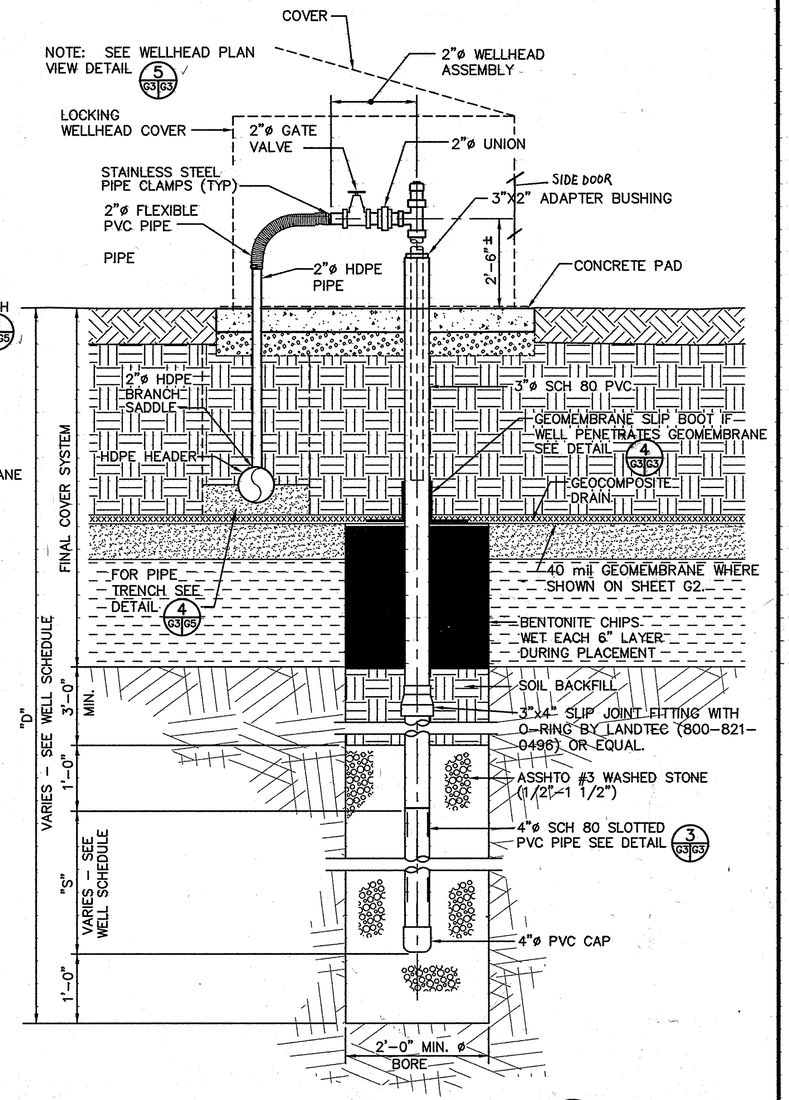

EXTRACTION WELL DETAIL (1 / G1, G2 | G3)
NO SCALE

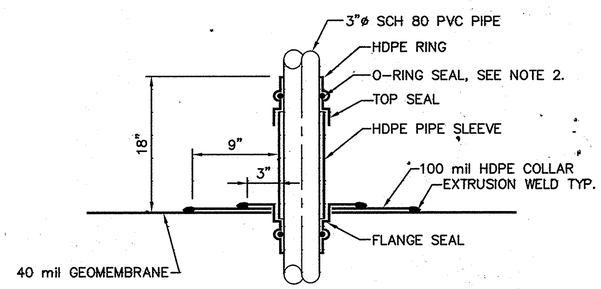

1. PVC PIPE SHALL BE CONTINUOUS LENGTH OF PIPE (NO CPLGS.) IN THE ANTICIPATED SETTLEMENT RANGE OF THE SYNTHETIC MEMBRANE.
2. RUBBER GASKET "O" RING SHALL BE NEOPRENE RUBBER WITH A DUROMETER HARDNESS OF 55 SHORE.
3. TOP SEAL AND FLANGE SEAL VACUUM FORMED FROM PIPE GRADE RESIN WITH CARBON BLACK CONTENT MEETING THE REQUIREMENTS OF ASTM 1248-A PE 94, CLASS C.
4. SLIP BOOT IS SERROT MODEL NO. SSB2 OR APPROVED EQUAL.

SLIP BOOT DETAIL (4 / G3|G3)
SCALE: 1"=1'-0"

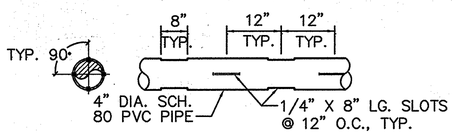

SLOTTED PIPE FOR VERTICAL WELLS DETAIL (3 / G3|G3)
NO SCALE

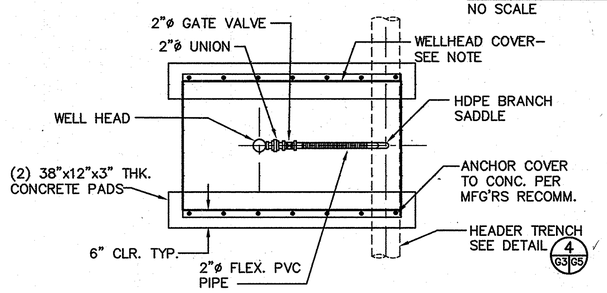

NOTE:
WELLHEAD COVERS & CONCRETE PADS ARE NOT REQUIRED FOR EXTRACTION WELLS ON THE LINED CELL. (1-1 THROUGH 1-13)

WELLHEAD PLAN VIEW DETAIL (5 / G3,G5 | G3)
SCALE: 1/2"=1'-0"

DEPARTMENT OF PUBLIC WORKS
HOWARD COUNTY, MARYLAND
DIRECTOR OF PUBLIC WORKS — DATE 10/30/97
CHIEF, BUREAU OF WASTE MANAGEMENT — DATE 10/30/97

SCS ENGINEERS
CONSULTING ENGINEERS
11260 ROGER BACON DRIVE
SUITE 300
RESTON, VIRGINIA 22090
PH. (703) 471-6150
FAX. (703) 471-6676

STATE OF MARYLAND — ERIC RANDALL PETERSON — No. 21101 — REG. C.E. — PROFESSIONAL ENGINEER
Eric Randall Peterson, PE

DES. SCW/CMS	BY	NO.	REVISION	DATE
DRN. BJD		6		
CHK. ERP		5		
		4		
		3		
		2		
DATE: 10-30-97		1		

LFG COLLECTION SYSTEM
EXTRACTION WELL DETAILS

ALPHA RIDGE LANDFILL
UNLINED CELL CLOSURE
CAPITAL PROJECT NO. C-0190-N
3rd ELECTION DISTRICT — HOWARD COUNTY, MARYLAND

SCALE: AS NOTED
(Sht 86)
SHEET G3 OF 131

M:\295077.02\FINAL\ DSWELL, WELLSCH, EXTWELL, GWMWELL, SLIP, SLOTPIPE, WELLPLN
SHT-G3

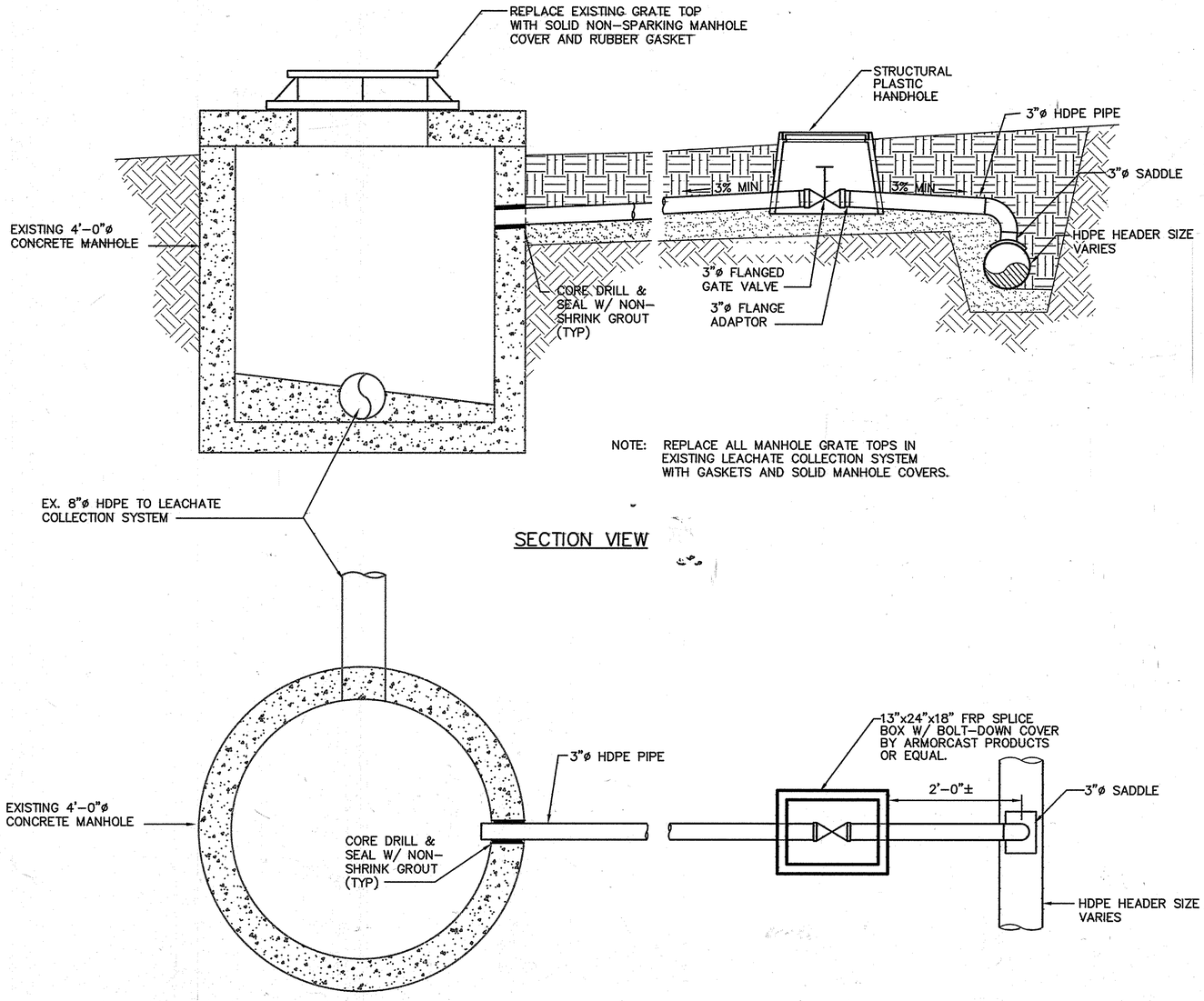

NOTE: REPLACE ALL MANHOLE GRATE TOPS IN EXISTING LEACHATE COLLECTION SYSTEM WITH GASKETS AND SOLID MANHOLE COVERS.

SECTION VIEW

PLAN VIEW

TIE-IN TO EXISTING MH-1,2, & 4 DETAIL (2 / G1 G4)
SCALE: 1'=1'-0"

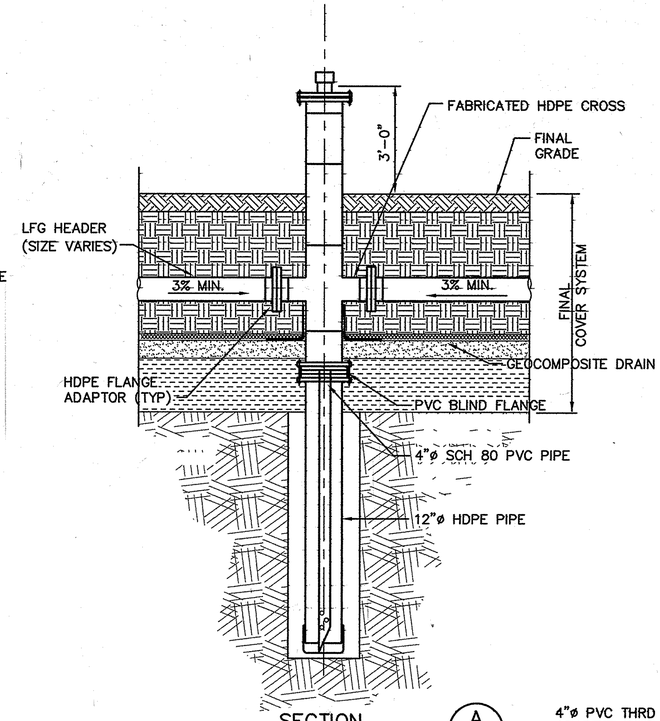

SECTION (A / G4 G4)
SCALE: 1/2"=1'-0"

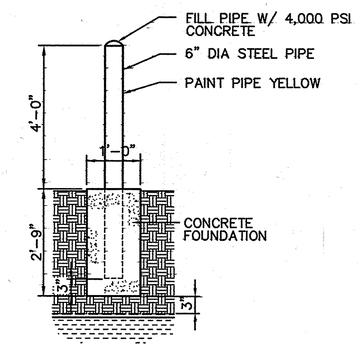

PROTECTION BOLLARD DETAIL (3 / G2 G4)
SCALE: 1/2"=1'-0"

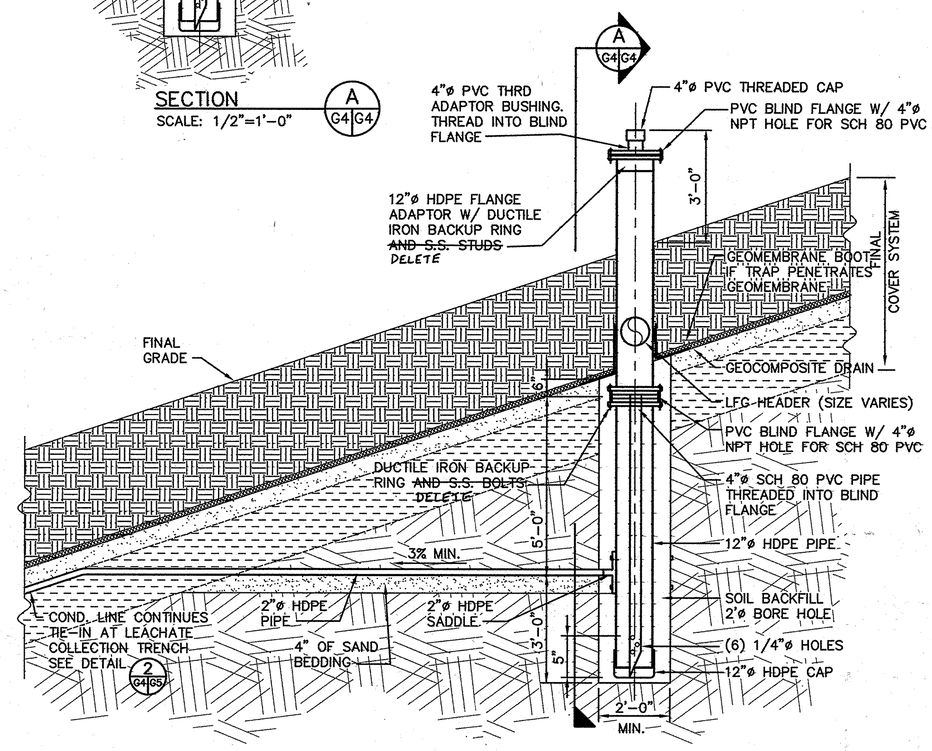

CONDENSATE TRAP DETAIL (1 / G4)
SCALE: 1/2"=1'-0"
G2,G5

M:\295077.02\FINAL\ CONTIEIN, CONDTRAP, SECT-A

SHT-G4

DEPARTMENT OF PUBLIC WORKS HOWARD COUNTY, MARYLAND DIRECTOR OF PUBLIC WORKS 10/30/97 DATE CHIEF, BUREAU OF WASTE MANAGEMENT 10/30/97 DATE	SCS ENGINEERS CONSULTING ENGINEERS 11260 ROGER BACON DRIVE SUITE 300 RESTON, VIRGINIA 22090 PH. (703) 471-6150 FAX. (703) 471-6676	STATE OF MARYLAND ERIC RANDALL PETERSON PROFESSIONAL ENGINEER Eric Randall Peterson, PE	DES. SCW DRN. BJD CHK. ERP DATE: 10-30-97	BY / NO. / REVISION / DATE	LFG COLLECTION SYSTEM DETAILS	ALPHA RIDGE LANDFILL UNLINED CELL CLOSURE CAPITAL PROJECT NO. C-0190-N 3rd ELECTION DISTRICT HOWARD COUNTY, MARYLAND	SCALE: AS NOTED (Sht 87) SHEET G4 OF 131

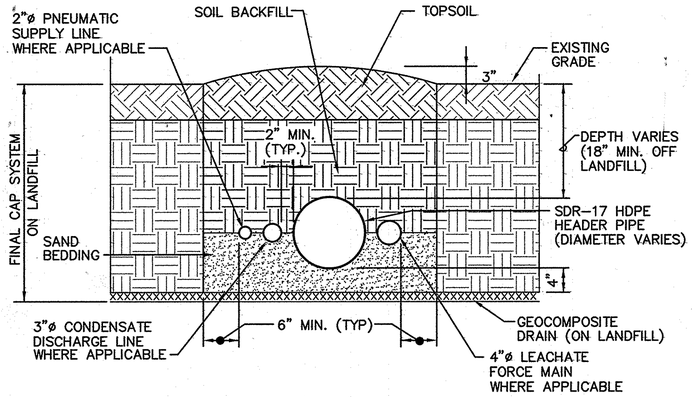

PIPE TRENCH DETAIL (4 / G1,G2,G3,G5 / G5)
NO SCALE

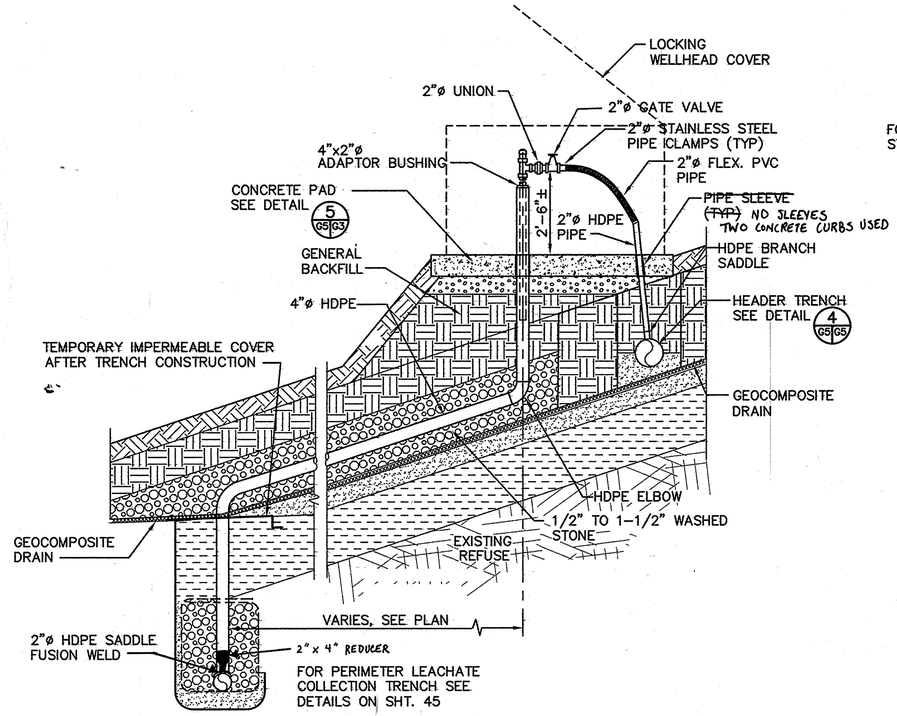

LEACHATE TRENCH GAS COLLECTOR DETAIL (3 / G2 G5)
SCALE: 1/2"=1'-0"

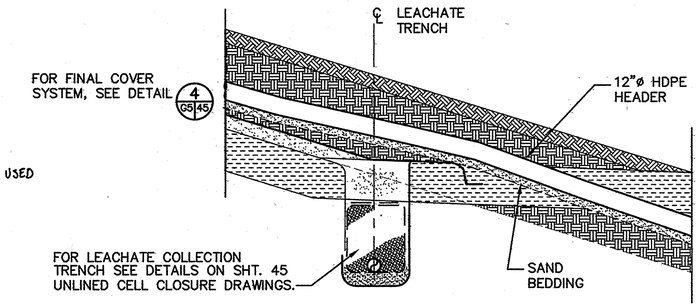

LFG HEADER CROSSING LEACHATE TRENCH DETAIL (1 / G1, G2 / G5)
SCALE: 3/8" = 1'-0"

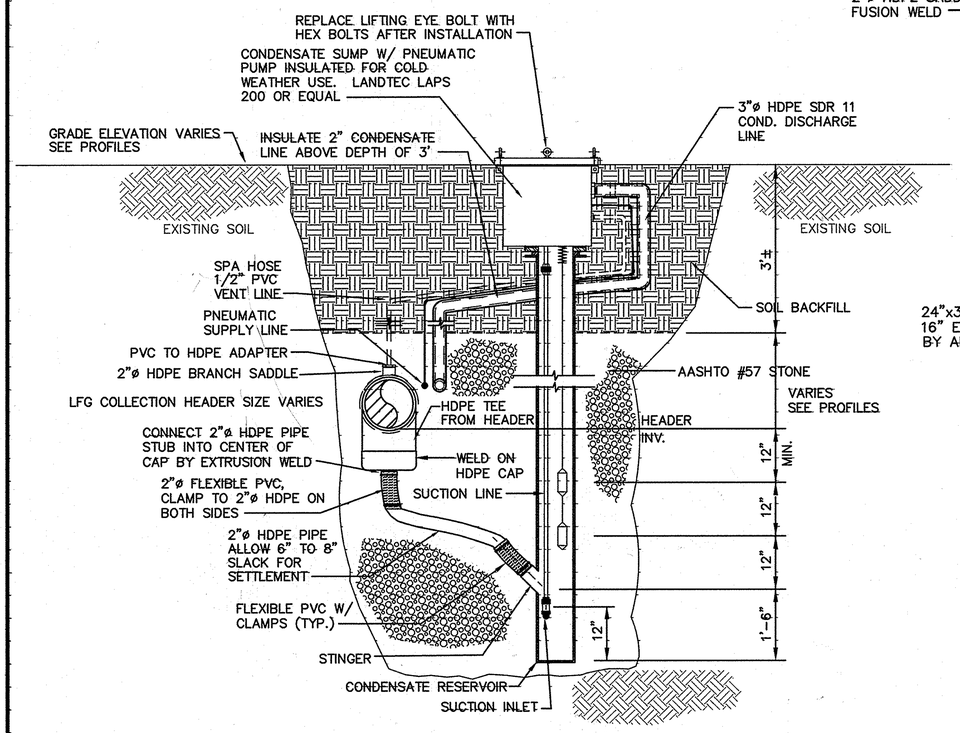

CS-1, CS-2, AND CS-3 CONDENSATE SUMP OFF LANDFILL DETAIL (6 / G1, G6, G7 / G5)
SCALE: 3/4" = 1'-0"

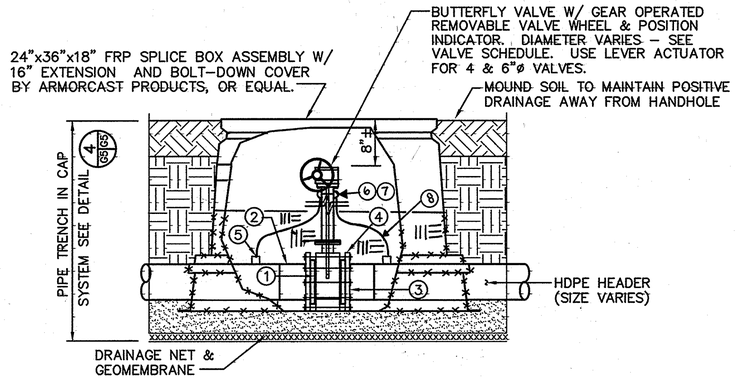

1. VALVE SPACER
2. FLANGE ADAPTER
3. DUCTILE IRON BACKUP RING
4. GALVANIZED STUDS & NUTS
5. 1/4" FEMALE QUICK CONNECT
6. THREADED FEMALE CONNECTOR 1/4" SWAGELOCK x 1/4" NPT
7. 1/4" POLYPROPYLENE QUICK DISCONNECT
8. 2'-LONG BRAIDED S.S. TEFLON LINED HOSE WITH SWAGELOCK TUBE ENDS

NOTE:
CONTRACTOR SHALL HAND EXCAVATE IN AREAS WHERE BOX IS INSTALLED DIRECTLY ON HDPE MEMBRANE.

BURIED ISOLATION VALVE ON LANDFILL DETAIL (5 / G1, G2 / G5)
NO SCALE

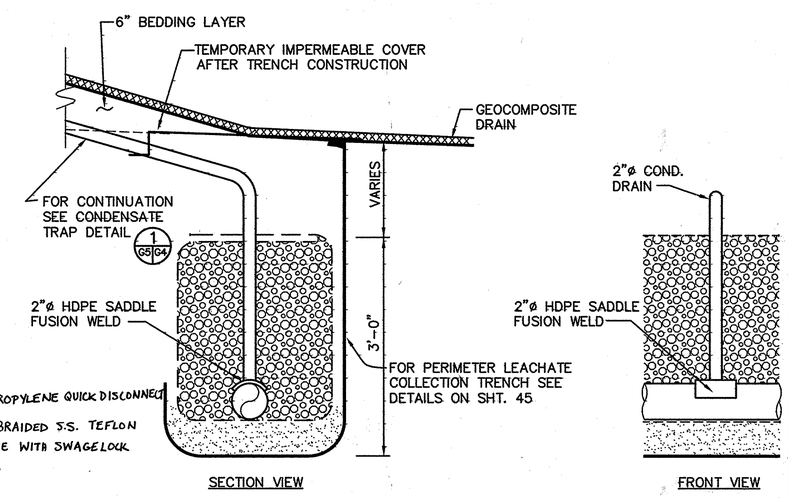

CONDENSATE DISCHARGE TO PERIMETER LEACHATE COLLECTION TRENCH DETAIL (2 / G1,G2,G4 / G5)
SCALE: 1" = 1'-0"

M:\295077.02\FINAL\ CONSUMP, LT-XING, LTGASCOL, RDXING, TRENCH2, PER-TRN, VALVE

SHT-G5

DEPARTMENT OF PUBLIC WORKS
HOWARD COUNTY, MARYLAND
DIRECTOR OF PUBLIC WORKS — DATE 10/30/97
CHIEF, BUREAU OF WASTE MANAGEMENT — DATE 10/30/97

SCS ENGINEERS
CONSULTING ENGINEERS
11260 ROGER BACON DRIVE
SUITE 300
RESTON, VIRGINIA 22090
PH. (703) 471-6150
FAX. (703) 471-6676

STATE OF MARYLAND — ERIC RANDALL PETERSON — No. 21201 — PROFESSIONAL ENGINEER
Eric Randall Peterson, PE

DES. SCW/CMS	6		
DRN. BJD	5		
CHK. ERP	4		
DATE: 10-30-97	3		
	2		
	1		
BY	NO.	REVISION	DATE

LFG COLLECTION SYSTEM DETAILS

ALPHA RIDGE LANDFILL
UNLINED CELL CLOSURE
CAPITAL PROJECT NO. C-0190-N
3rd ELECTION DISTRICT — HOWARD COUNTY, MARYLAND

SCALE: AS NOTED
SHEET G5 OF 12

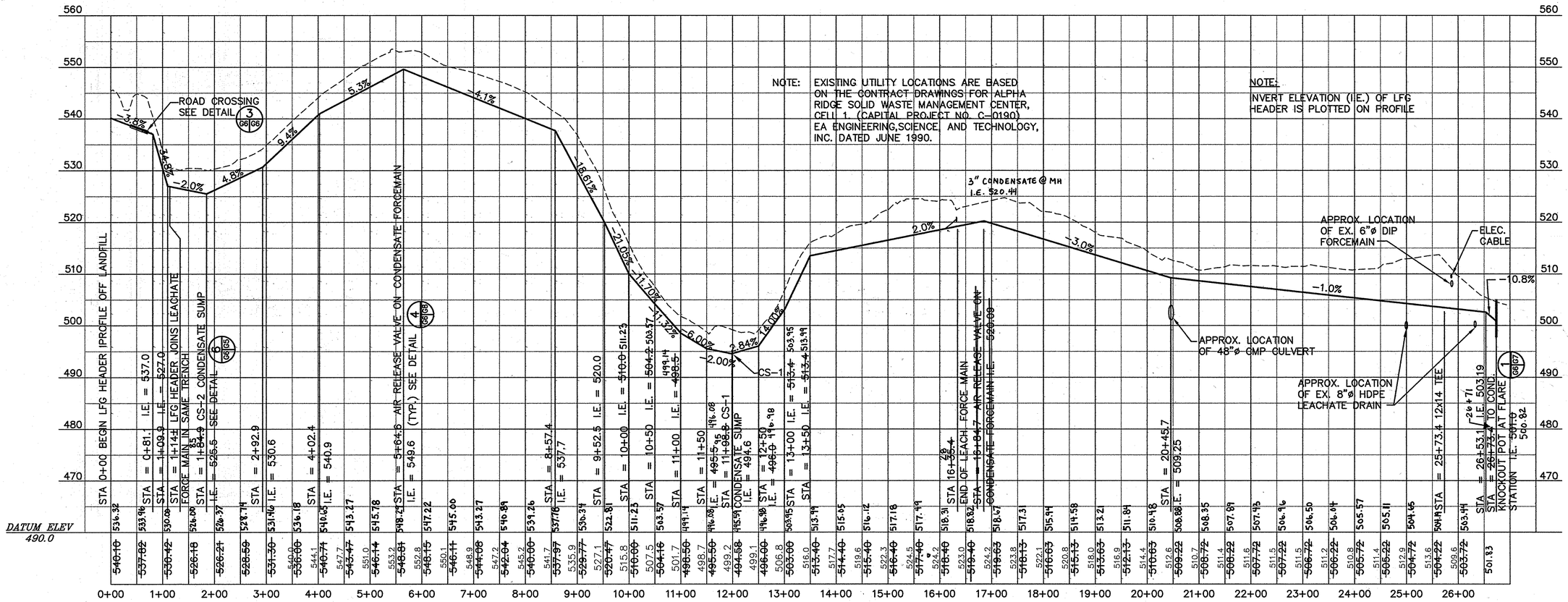

LFG MAIN HEADER PROFILE
LFG CONDENSATE FORCE MAIN PROFILE

VERTICAL SCALE: 10 0 10 20 SCALE IN FEET

HORIZONTAL SCALE: 100 0 100 200 SCALE IN FEET

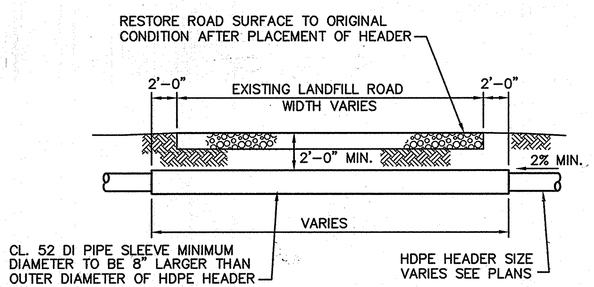

HEADER CROSSING UNDER ROAD DETAIL 3 G6
NO SCALE
G1,G2,G6

M:\295077.02\FINAL\ PROFILE

SHT-G6

DEPARTMENT OF PUBLIC WORKS
HOWARD COUNTY, MARYLAND

DIRECTOR OF PUBLIC WORKS — DATE 10/30/97
CHIEF, BUREAU OF WASTE MANAGEMENT — DATE 10/30/97

SCS ENGINEERS
CONSULTING ENGINEERS
11260 ROGER BACON DRIVE
SUITE 300
RESTON, VIRGINIA 22090
PH. (703) 471-6150
FAX. (703) 471-6676

STATE OF MARYLAND — ERIC RANDALL PETERSON — No. 21101 — PROFESSIONAL ENGINEER
Eric Randall Peterson, PE

DES. SCW/CMS	6			
DRN. BJD/SCW	5			
CHK. ERP	4			
DATE: 10-30-97	3			
	2			
	1			
	BY	NO.	REVISION	DATE

LFG HEADER PROFILE

ALPHA RIDGE LANDFILL
UNLINED CELL CLOSURE
CAPITAL PROJECT NO. C-0190-N

3rd ELECTION DISTRICT — HOWARD COUNTY, MARYLAND

SCALE: AS NOTED

Sheet 89

G6 OF 131

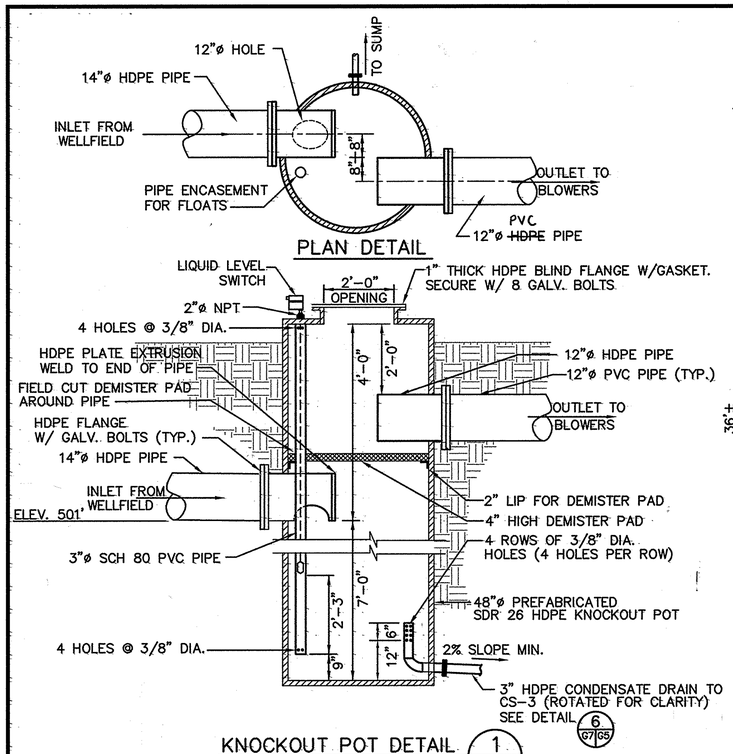

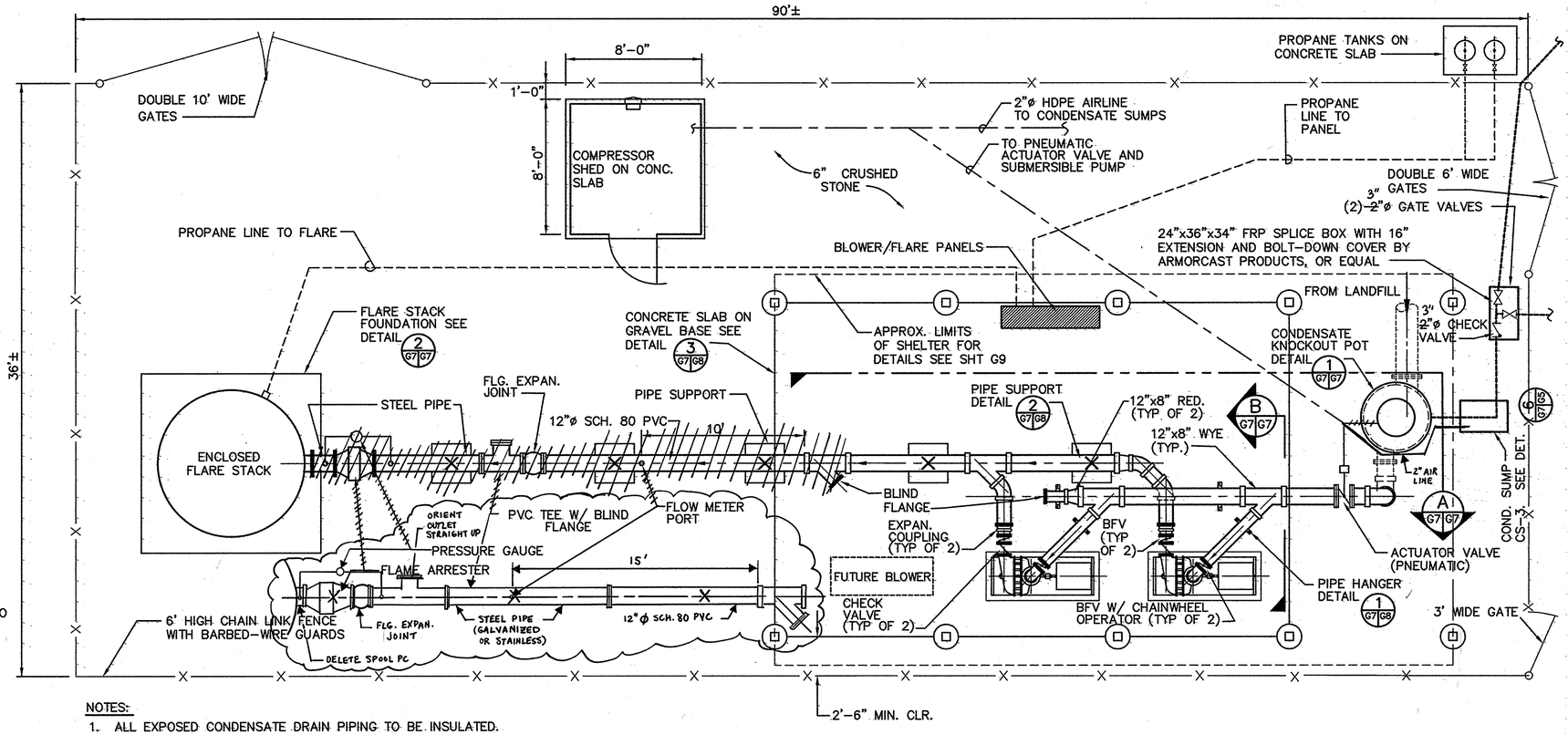

NOTES:

1. ALL EXPOSED CONDENSATE DRAIN PIPING TO BE INSULATED.
2. ALL PVC PIPE SHALL BE SCH 80 UNLESS OTHERWISE NOTED.
3. SIZE SHED PER COMPRESSOR MANUFACTURER'S RECOMMENDATIONS TO PROVIDE NECCESSARY CLEARANCE BETWEEN EQUIPMENT AND BUILDING WALLS.

BLOWER/FLARE STATION PLAN
SCALE: 1/4"=1'-0"

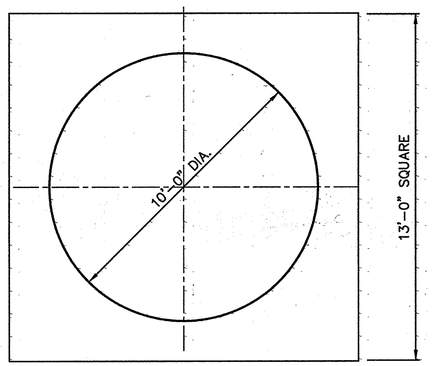

PLAN

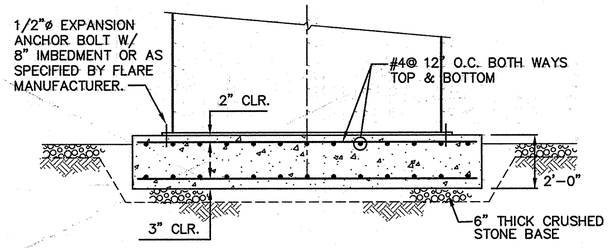

FLARE STACK FOUNDATION DETAIL 2 G7 G7
SCALE: 3/8"=1'-0"

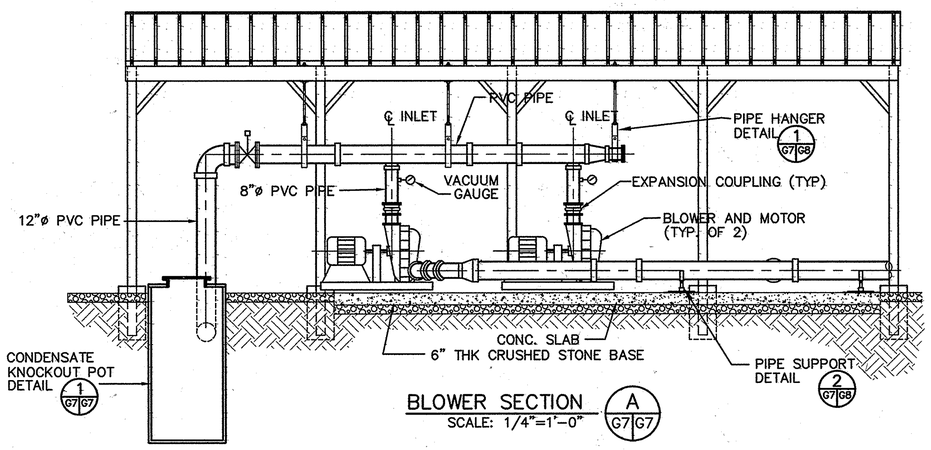

BLOWER SECTION A G7 G7
SCALE: 1/4"=1'-0"

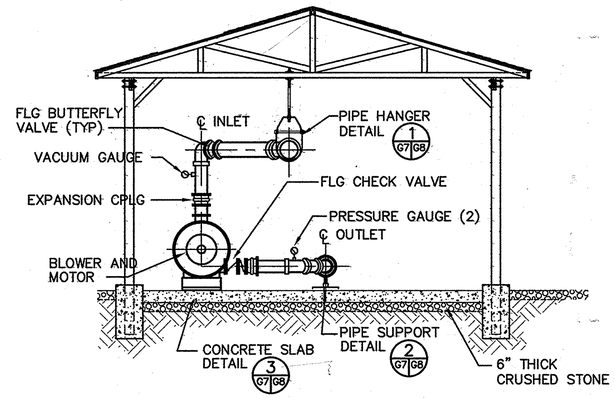

BLOWER SECTION B G7 G7
SCALE: 1/4"=1'-0"

M:\295077.02\FINAL\ BF-SITE, BSECTA, BSECTB, FLARE, KOPOT

SHT-G7

DEPARTMENT OF PUBLIC WORKS
HOWARD COUNTY, MARYLAND

DIRECTOR OF PUBLIC WORKS — DATE 10/30/97
CHIEF, BUREAU OF WASTE MANAGEMENT — DATE 10/30/97

SCS ENGINEERS
CONSULTING ENGINEERS
11260 ROGER BACON DRIVE
SUITE 300
RESTON, VIRGINIA 22090
PH. (703) 471-6150
FAX. (703) 471-6676

STATE OF MARYLAND — ERIC RANDALL PETERSON — REG. NO. 32108 — PROFESSIONAL ENGINEER
Eric Randall Peterson, PE

DES.	CMS
DRN.	BJD
CHK.	ERP
DATE: 10-30-97	

BY	NO.	REVISION	DATE
	6		
	5		
	4		
	3		
	2		
	1		

BLOWER/FLARE STATION DETAILS

ALPHA RIDGE LANDFILL
UNLINED CELL CLOSURE
CAPITAL PROJECT NO. C-0190-N
3rd ELECTION DISTRICT — HOWARD COUNTY, MARYLAND

SCALE: AS NOTED
(SHT 90)
SHEET G7 OF 121

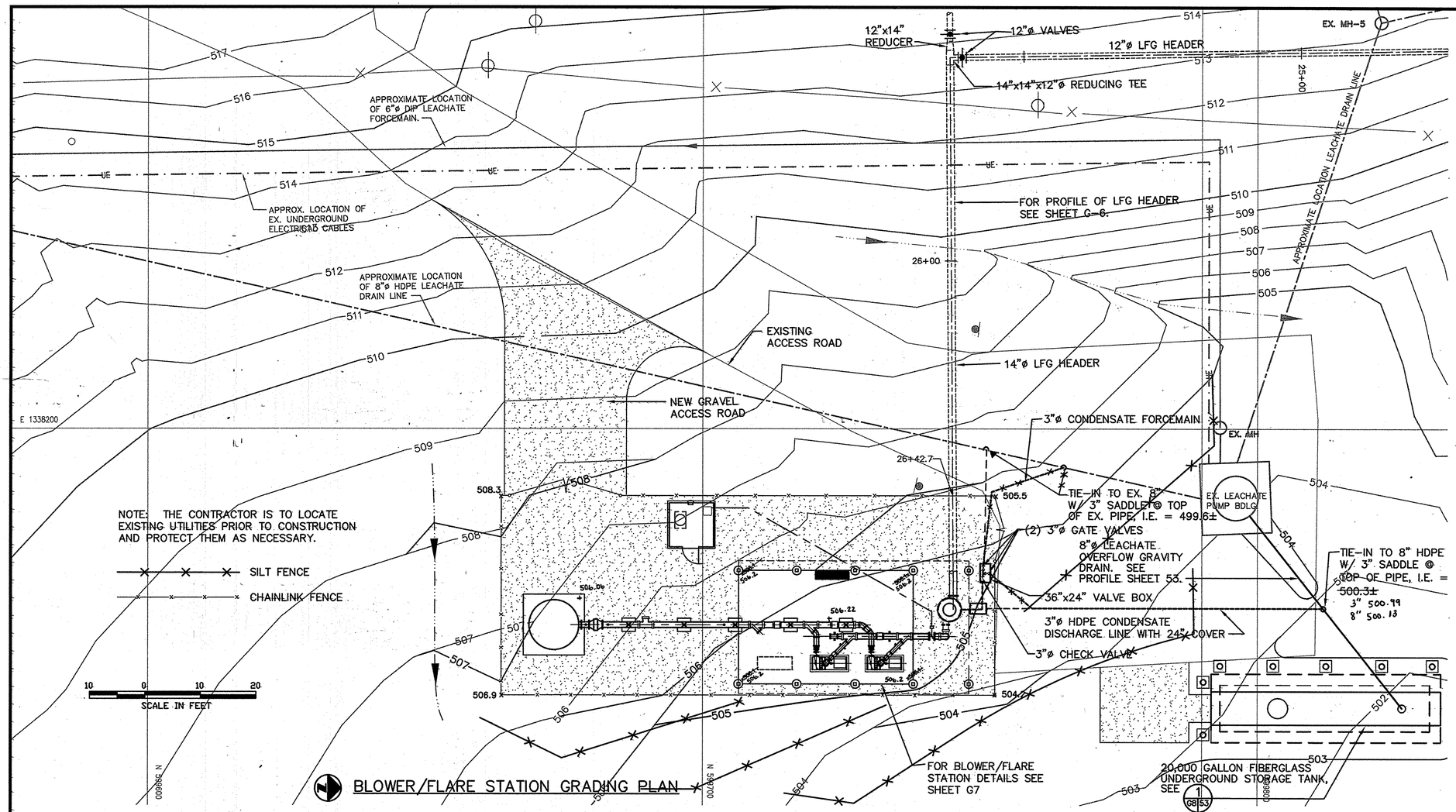

BLOWER/FLARE STATION GRADING PLAN

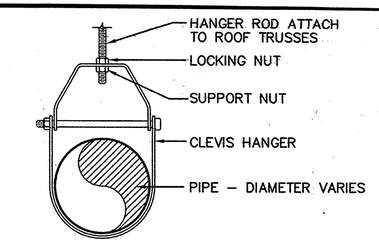

PIPE HANGER DETAIL 1 G7|G8
NO SCALE

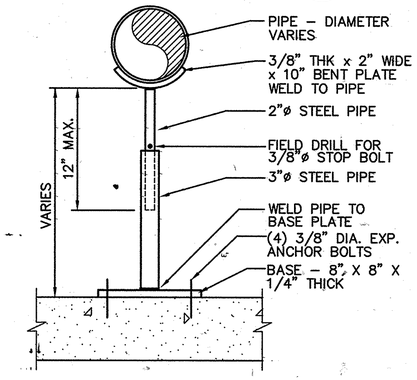

PIPE SUPPORT DETAIL 2 G7|G8
NO SCALE

SEE ETA SHEET G8-AB FOR FLARE STATION AS-BUILT

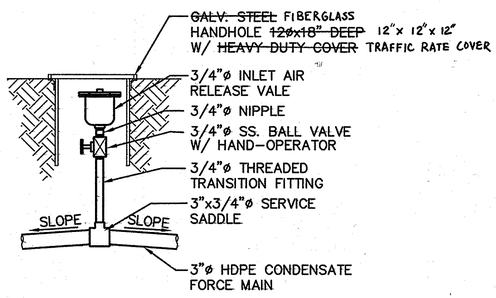

AIR RELEASE VALVE DETAIL 4 G6|G8
SCALE: 1"=1'-0"

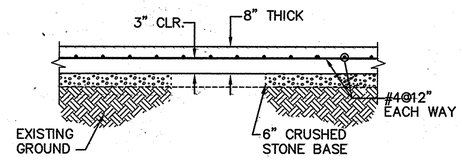

STRUCTURAL NOTES:

1. CONCRETE SLAB SHALL BE CONSTRUCTED SO THAT A 0.5% SLOPE IS MAINTAINED FROM THE CENTER (HIGH POINT) TO EACH CORNER OF SLAB (LOW POINT).
2. CONCRETE MINIMUM COMPRESSIVE STRENGTH SHALL BE 4000 PSI.
3. CONCRETE SLAB SHALL BE BROOM FINISHED.

CONCRETE SLAB DETAIL 3 G7|G8
SCALE: 3/8"=1'-0"

SUBDIVISION NAME	LOT/PARCEL	
ALPHA RIDGE SOLID WASTE MANAGEMENT CENTER	54,253,220,11	
LIBER/FOLIO	ZONE	TAX/ZONE MAP
10-847/606 16-878/215 10-591/314	PEC	10 & 16
WATER CODE	SEWER CODE	CENSUS TR.
PRIVATE, EXISTING	PRIVATE, EXISTING	60-30

DEPARTMENT OF PLANNING AND ZONING
HOWARD COUNTY, MARYLAND

DIRECTOR — DATE

CHIEF, DEVELOPMENT ENGINEERING DIVISION — DATE

CHIEF, DIVISION OF LAND DEVELOPMENT AND RESEARCH — DATE

DEPARTMENT OF PUBLIC WORKS
HOWARD COUNTY, MARYLAND

DIRECTOR OF PUBLIC WORKS — DATE 10/30/97
CHIEF, BUREAU OF WASTE MANAGEMENT — DATE 10/30/97

SCS ENGINEERS
CONSULTING ENGINEERS
11260 ROGER BACON DRIVE
SUITE 300
RESTON, VIRGINIA 22090
PH. (703) 471-6150
FAX. (703) 471-6676

STATE OF MARYLAND ERIC RANDALL PETERSON No. 21101 PROFESSIONAL ENGINEER
Eric Randall Peterson, PE

DES.	BJD	6		
DRN.	BJD	5		
CHK.	ERP	4		
DATE: 10-30-97		3		
		2		
		1		
		BY	NO.	REVISION	DATE

BLOWER STATION MISCELLANEOUS DETAILS

ALPHA RIDGE LANDFILL
UNLINED CELL CLOSURE
CAPITAL PROJECT NO. C-0190-N

3rd ELECTION DISTRICT — HOWARD COUNTY, MARYLAND

SCALE: AS NOTED

SHEET G8 OF 13 (Sht 9)

M:\295077.02\FINAL\ PSUPPORT, HANGER, BFGRAD, CFM-PROF, PRV, SLAB

SHT-G8

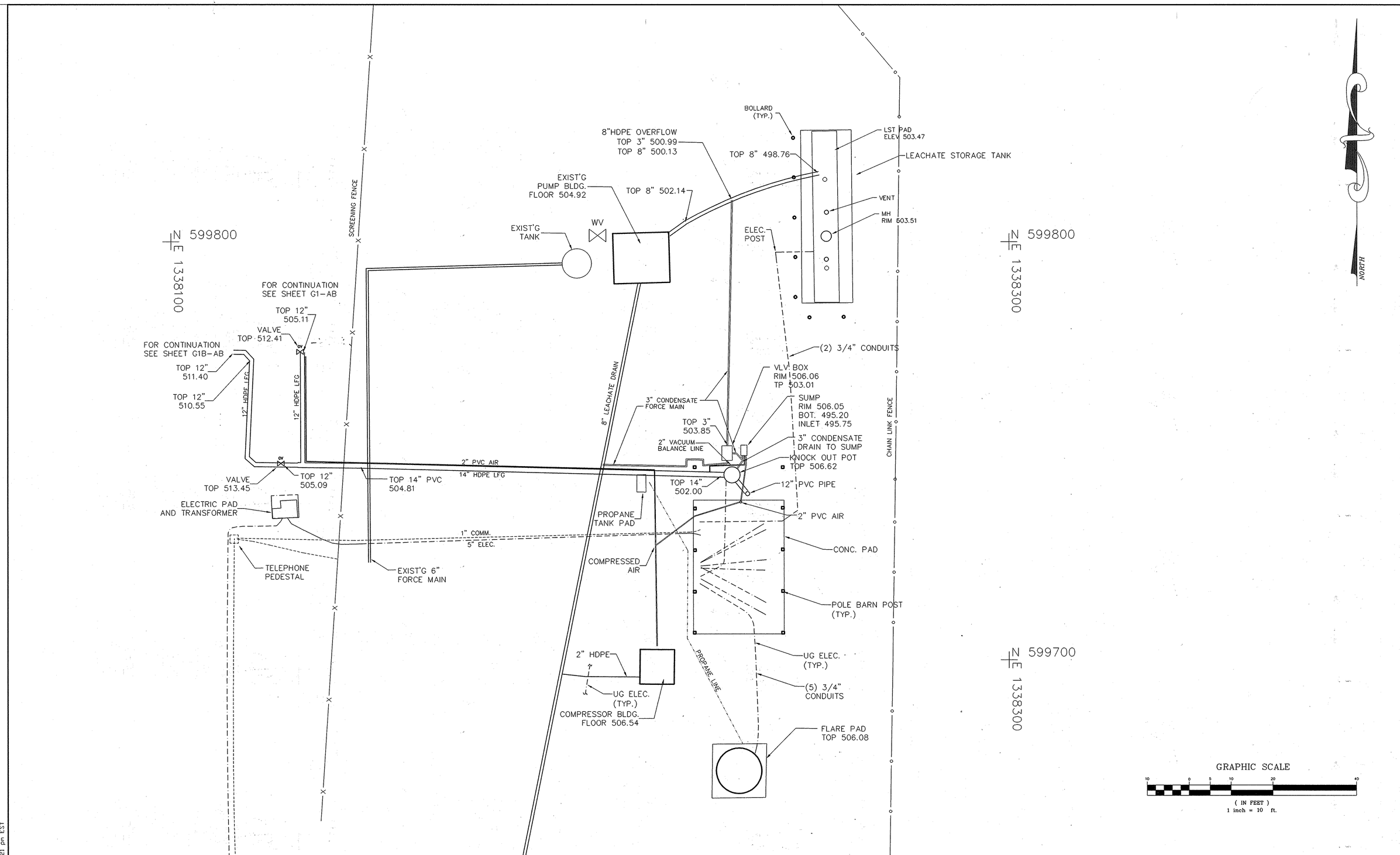

FLARE.dwg 4-17-01 1:38:21 pm EST

DESIGNED BY:		DATE
DRAWN BY:	TWH	12-8-98 DATE
CHECKED BY:		DATE
APPROVED BY:		DATE

REVISIONS

DATE	BY	DESCRIPTION
12-21-2000	TWH	AMENDED PIPING LABELS AND ROUTING.
4-9-2001	TWH	AMENDED PIPING LABELS AND ROUTING.

ENGINEERING TECHNOLOGIES ASSOCIATES, INC.
ENGINEERS * PLANNERS * SURVEYORS
3458 ELLICOTT CENTER DRIVE SUITE 101
ELLICOTT CITY, MARYLAND 21043
BALTO. (410)461-9920 FAX (410)750-8565

STATE OF MARYLAND CLIFFORD ALLEN ELGIN REGISTERED PROPERTY LINE SURVEYOR

H. E. SARGENT, INC. CONTRACTORS • STILLWATER, ME.

FLARE STATION AS-BUILT

ALPHA RIDGE LANDFILL CELL CLOSURE

HOWARD COUNTY MARYLAND

SCALE : 1"=10' | CONTRACT NO.: 98301.10 | DATE : 2-14-2000 | SHEET 32 OF 131 | G8-AB

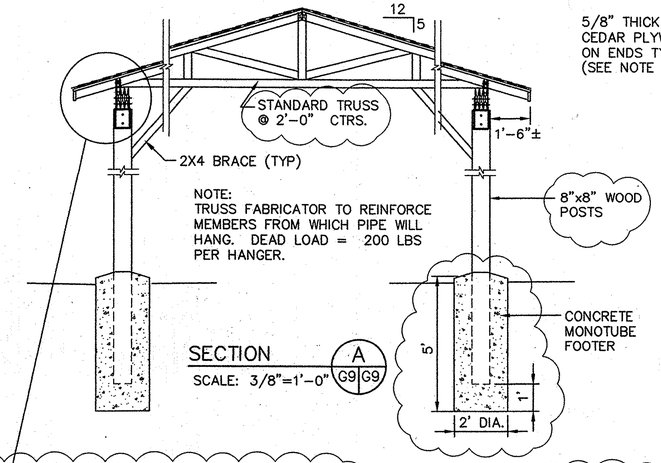

NOTE:
TRUSS FABRICATOR TO REINFORCE MEMBERS FROM WHICH PIPE WILL HANG. DEAD LOAD = 200 LBS PER HANGER.

SECTION A G9 G9
SCALE: 3/8"=1'-0"

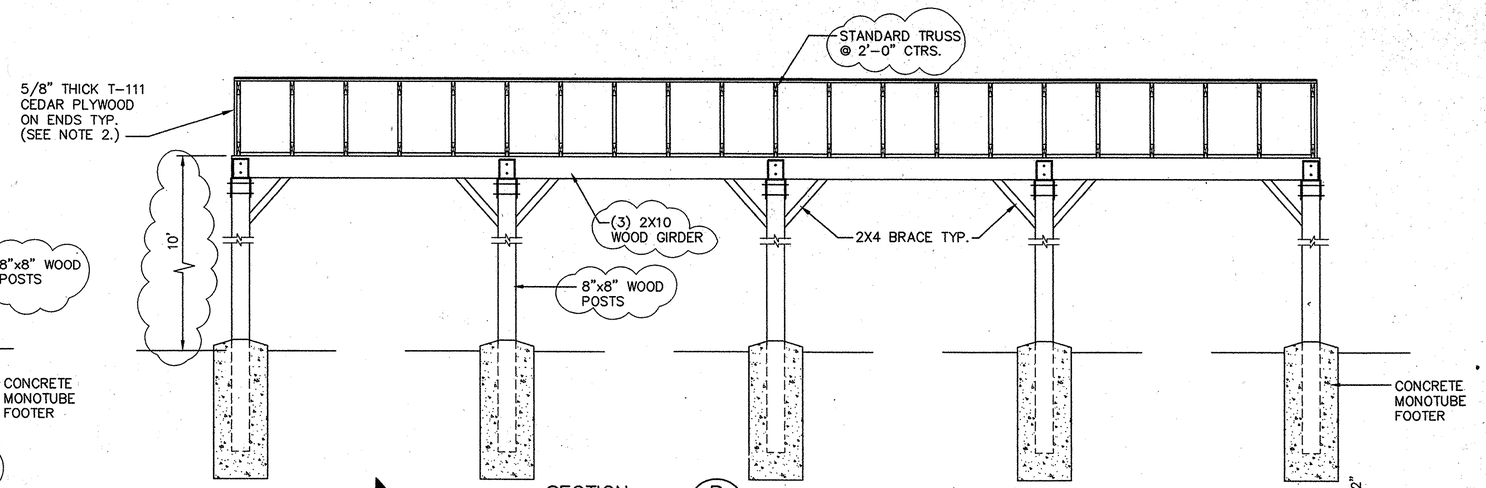

SECTION B G9 G9
SCALE: 3/8"=1'-0"

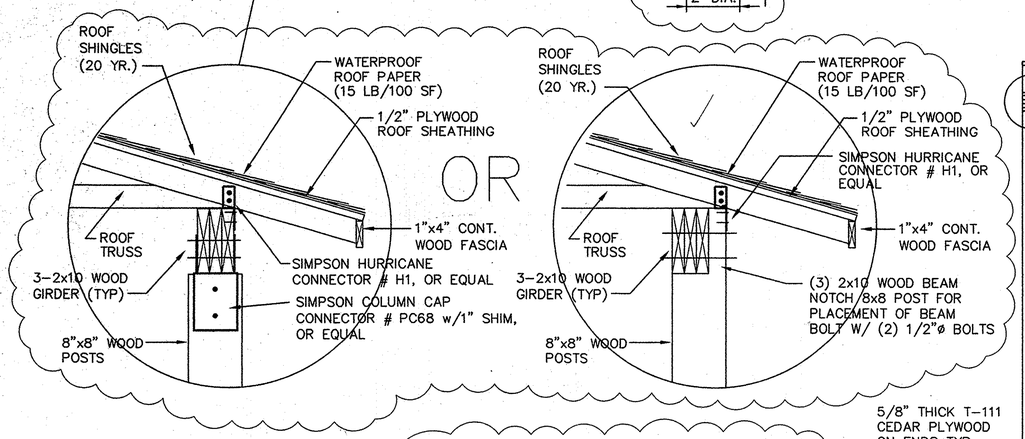

TRUSSES SHALL BE DESIGNED FOR THE FOLLOWING MINIMUM LOADS:

WIND LOAD:	15 PSF
SNOW LOAD:	12 PSF
ROOF LIVE LOAD:	20 PSF
ROOF DEAD LOAD:	*15 PSF

* ROOF DEAD LOADS ESTIMATED FOR GABLE TRUSSES AND MAY VARY DEPENDING ON ACTUAL DESIGN.

NOTES:

1. ALL WOOD TO BE PRESSURE TREATED.
2. THESE SHELTER PLANS HAVE BEEN REVISED TO INCORPORATE THE TRUSS DESIGN AS SUBMITTED BY H.E. SARGENT AND FABCO @ 2' TRUSS SPACING

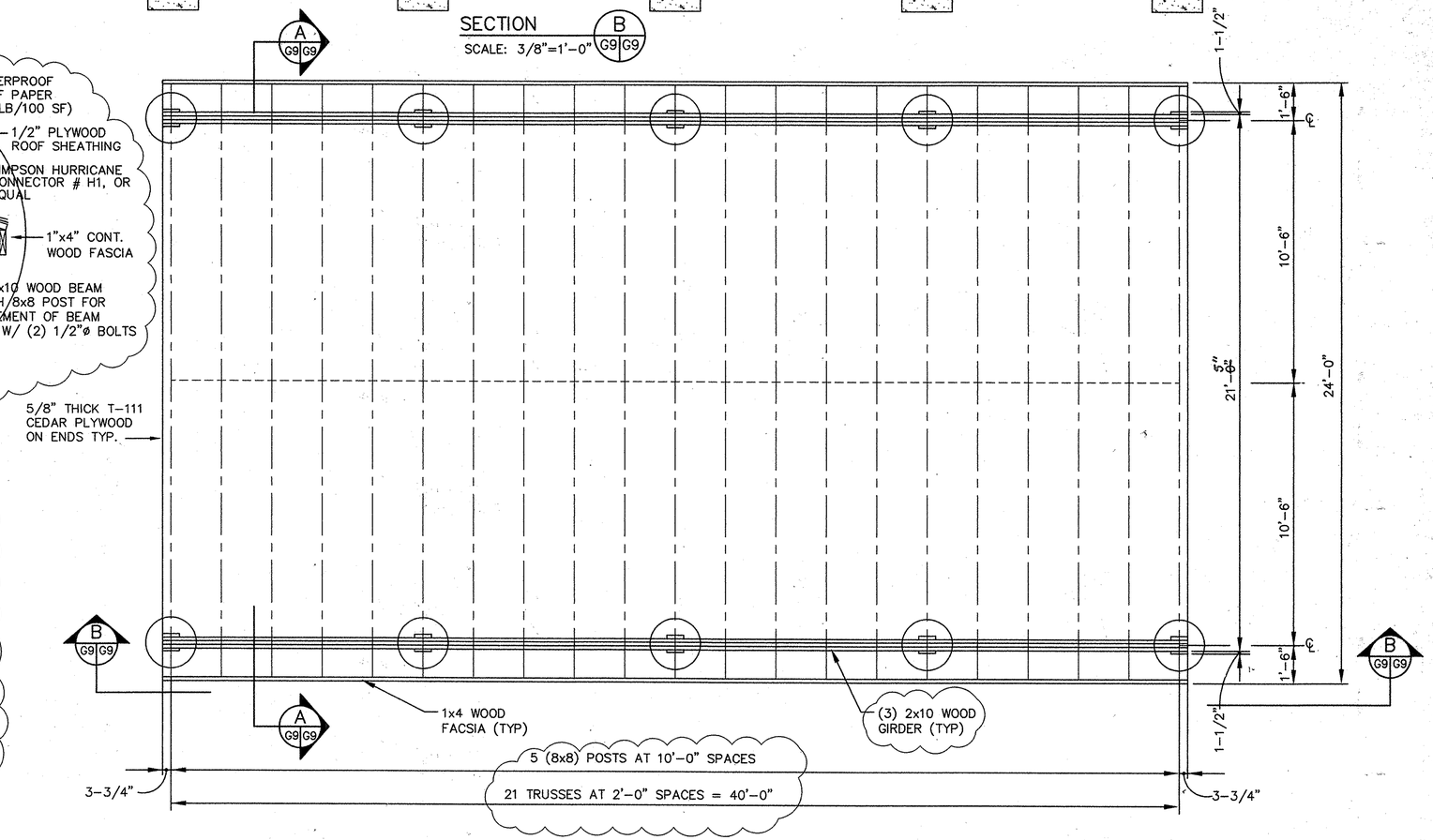

SHELTER – PLAN
SCALE: 3/8"=1'-0"

DEPARTMENT OF PUBLIC WORKS HOWARD COUNTY, MARYLAND DIRECTOR OF PUBLIC WORKS DATE CHIEF, BUREAU OF WASTE MANAGEMENT DATE	SCS ENGINEERS CONSULTING ENGINEERS 11260 ROGER BACON DRIVE SUITE 300 RESTON, VIRGINIA 22090 PH. (703) 471-6150 FAX. (703) 471-6676	STATE OF MARYLAND PAUL ANTHONY MANDEVILLE No. 15822 PROFESSIONAL ENGINEER Paul Anthony Mandeville, PE	DES. BJD DRN. BJD CHK. ERP DATE: 10-30-97	BY / NO. / REVISION / DATE 6 5 4 3 2 SCW 1 TRUSS SPACING, BEAMS, COLS, FTNGS, LENGTH, CON 10-16-98	BLOWER STATION SHELTER DETAILS

ALPHA RIDGE LANDFILL
UNLINED CELL CLOSURE
CAPITAL PROJECT NO. C-0190-N
3rd ELECTION DISTRICT HOWARD COUNTY, MARYLAND

SCALE: AS NOTED
SHEET (Sht 93) G9 OF 131

SHT-G9 M:\295077.02\FINAL\ SHP40

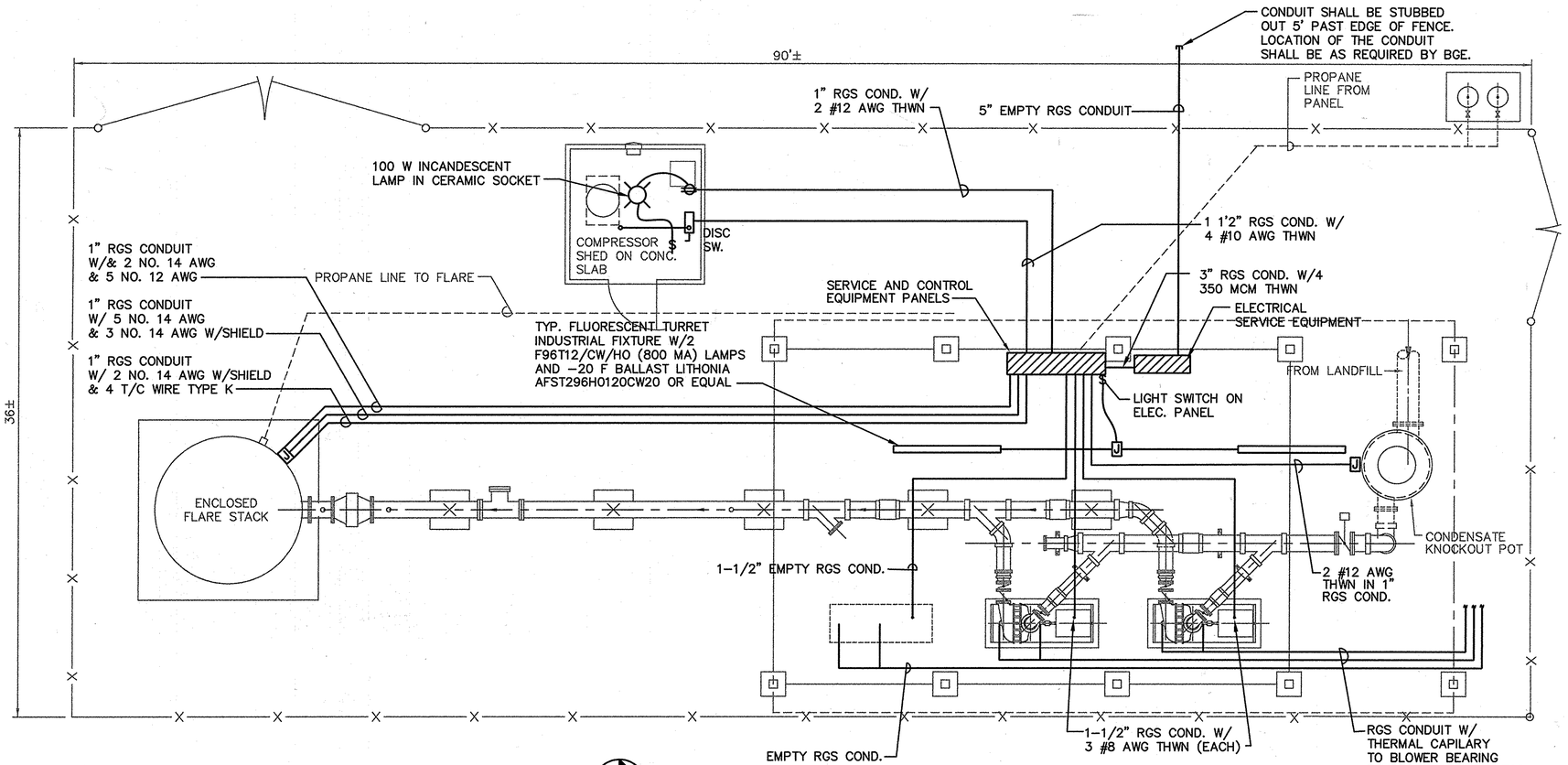

BLOWER/FLARE STATION PLAN
SCALE: 1/4"=1'-0"

SEE SHEET G7 FOR CHANGES TO LAYOUT OF BLOWER/FLARE STATION

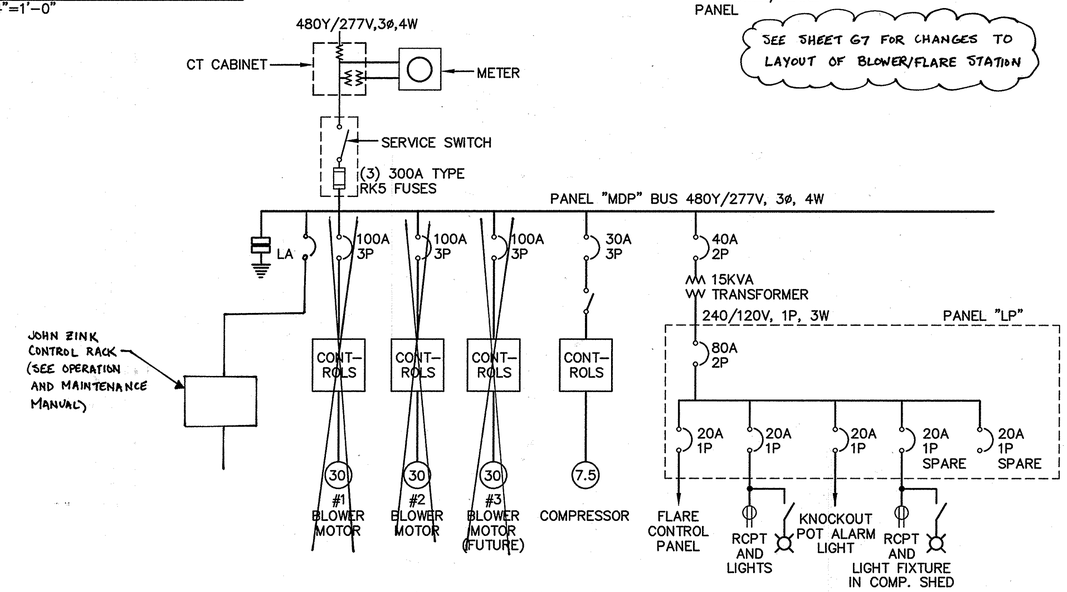

SINGLE-LINE DIAGRAM
NO SCALE

1. ALL WORK SHALL BE INSTALLED IN ACCORDANCE WITH NFPA 70-1993 & APPLICABLE LOCAL CODES. THE MANUFACTURER'S RECOMMENDATIONS SHALL BE FOLLOWED AS REQUIRED. ALL MATERIALS, AS A MINIMUM, SHALL BE NEW AND UNDERWRITERS LABORATORY (U.L.) LISTED.

2. THE CONTRACTOR SHALL OBTAIN AND PAY FOR ALL PERMITS, CERTIFICATES OF INSPECTION, ETC. REQUIRED BY THE AUTHORITIES HAVING JURISDICTION OVER THIS WORK.

3. THE CONTRACTOR SHALL SUBMIT SHOP DRAWINGS AND/OR MANUFACTURER'S LITERATURE, FOR ALL EQUIPMENT AND MATERIAL PROPOSED FOR INSTALLATION TO THE ENGINEER FOR REVIEW AND APPROVAL PRIOR TO RELEASING AN ORDER FOR FABRICATION AND/OR SHIPMENT. EQUIPMENT AND MATERIAL INCLUDED SHALL BE ITEMS SUCH AS, BUT NOT LIMITED TO, METERING EQUIPMENT, SERVICE EQUIPMENT, SWITCHES, DISCONNECTS, PANELBOARDS, BREAKERS, LIGHTING FIXTURES, OUTLET DEVICES, WIRING AND CONDUIT, ETC.

4. STATEMENT OF WORK: THE CONTRACTOR SHALL PROVIDE ALL NECESSARY ELECTRICAL EQUIPMENT AND LABOR TO ENSURE THE COMPLETE WORKING ORDER OF THE LANDFILL GAS EXTRACTION SYSTEM, INCLUDING A NEW ELECTRICAL SERVICE AS DESCRIBED ON CONTRACT DRAWINGS.

5. THE CONTRACTOR SHALL PROVIDE ALL SUPERVISION, LABOR, MATERIALS, EQUIPMENT, MACHINERY, AND ANY AND ALL OTHER ITEMS NECESSARY TO COMPLETE THE SYSTEM. IT IS THE INTENT OF THESE PLANS AND DOCUMENTS TO PROVIDE A COMPLETELY FINISHED, TESTED, AND OPERATIONAL ELECTRICAL SYSTEM. ANY INCIDENTAL ACCESSORIES NECCESSARY TO MAKE THE WORK COMPLETE AND READY FOR OPERATION, EVEN IF NOT COMPLETELY SHOWN, SHALL BE FURNISHED, DELIVERED AND INSTALLED BY THE CONTRACTOR WITHOUT ADDITIONAL EXPENSE TO THE OWNER.

6. THE CONTRACTOR AND SUB-CONTRACTORS SHALL BE EXPERIENCED AND KNOWLEDGEABLE OF INSTALLATION PRACTICES AND LOCAL CODE REQUIREMENTS. EACH SHALL MAKE KNOWN TO THE OWNER'S REPRESENTATIVE WITH THE SUBMISSION OF HIS PROPOSAL OF ANY MATERIALS OR APPARATUS BELIEVED TO BE INADEQUATE, UNSUITABLE, IN VIOLATION OF APPLICABLE LAWS, ORDINANCES, OR RULES, AND OF ANY NECESSARY ITEMS OF WORK OMITTED. IN THE ABSENCE OF SUCH WRITTEN NOTICE, IT IS MUTUALLY AGREED THAT THE CONTRACTOR AND HIS SUB-CONTRACTORS HAVE INCLUDED THE COST OF ALL REQUIRED ITEMS IN THEIR BID, AND THAT THE CONTRACTOR SHALL BE RESPONSIBLE FOR THE APPROVED SATISFACTORY FUNCTIONING OF THE ENTIRE SYSTEM WITHOUT EXTRA COMPENSATION.

7. THE CONTRACTOR IS RESPONSIBLE FOR PROVIDING ALL "OWNER FURNISHED REQUIREMENTS" REQUIRED BY LOCAL POWER COMPANY TO PROVIDE ELECTRICAL SERVICE. COORDINATION WITH THE LOCAL POWER COMPANY, BALTIMORE GAS AND ELECTRIC COMPANY, SOUTH/WEST CUSTOMER OPERATIONS 7317 PARKWAY DRIVE SOUTH, HANOVER, MARYLAND 21076. PHONE (410) 850-4620, SHALL BE PART OF THIS WORK. THE OWNER SHALL PAY ALL ELECTRIC CO. FEES.

8. THE ELECTRICAL CONTRACTOR SHALL CONSULT DRAWINGS OF ALL OTHER TRADES FOR RELATED AND ADJOINING WORK AND COORDINATE INSTALLATION INTERFERENCES.

9. THE DRAWING(S) IS DIAGRAMMATIC AND DOES NOT PURPORT TO SHOW ALL MATERIAL NECESSARY FOR A COMPLETE AND USABLE SYSTEM. THE CONTRACTOR SHALL PROVIDE ALL MATERIAL NECESSARY FOR A COMPLETE USABLE SYSTEM AND SHALL BE RESPONSIBLE FOR APPROVAL OF WORK BY THE AUTHORITY HAVING JURISDICTION.

10. THE CONTRACTOR SHALL PROVIDE AND INSTALL BRACES/SUPPORTS FOR HIS WORK.

11. ALL LIGHTING FIXTURES SHALL BE PROVIDED COMPLETE WITH LENS, BALLASTS, TRIMS, LAMPS, ETC.

12. PROVIDE AN EQUIPMENT GROUNDING CONDUCTOR WITH ALL CIRCUITS IAW NFPA 70 ARTICLE 250 WHETHER SHOWN OR NOT ON THE PLANS. ADJUST FEEDER AND BRANCH CIRCUIT RACEWAY SIZE IF REQUIRED.

13. VERIFY EQUIPMENT LOCATIONS FOR ELECTRICAL ROUGH-INS WITH OWNER/USER REPRESENTATIVE, FIELD MEASUREMENTS, AND WITH THE REQUIREMENTS OF THE ACTUAL EQUIPMENT TO BE CONNECTED. CONFLICTS WITH OTHER EQUIPMENT AND FEATURES SHALL BE RESOLVED PRIOR TO INSTALLATIONS.

14. COORDINATE THE INSTALLATION OF REQUIRED SUPPORTING DEVICES AND CONDUIT TO BE SET IN POURED IN PLACE CONCRETE.

15. WHERE MOUNTING HEIGHTS ARE NOT DETAILED OR DIMENSIONED,COORDINATE WITH OWNER'S REPRESENTATIVE.

16. INSTALL ELECTRICAL EQUIPMENT TO FACILITATE MAINTENANCE AND REPAIR OR REPLACEMENT OF EQUIPMENT COMPONENTS. AS MUCH AS PRACTICAL, CONNECT EQUIPMENT FOR EASE OF DISCONNECTING, WITH MINIMUM OF INTERFERENCE WITH OTHER INSTALLATIONS.

17. COORDINATE CONNECTION OF ELECTRICAL SYSTEMS WITH EXTERIOR UNDERGROUND UTILITIES AND SERVICES. COMPLY WITH REQUIREMENTS OF GOVERNING REGULATIONS, FRANCHISED SERVICE COMPANIES, AND CONTROLLING AGENCIES. PROVIDE REQUIRED CONNECTION FOR ELECTRICAL SERVICE.

18. PROVIDE AND ARRANGE FOR REPAIRS REQUIRED TO RESTORE OTHER WORK BECAUSE OF DAMAGE CAUSED AS A RESULT OF ELECTRICAL INSTALLATIONS.

19. NO ADDITIONAL COMPENSATION WILL BE AUTHORIZED FOR CUTTING AND PATCHING WORK THAT IS NECESSITATED BY ILL-TIMED, DEFECTIVE, OR NON-CONFORMING INSTALLATIONS.

20. IN GENERAL, THE WORD "PROVIDE" MEANS TO FURNISH AND INSTALL.

21. ALL CONDUCTORS SHALL BE COPPER AND HAVE 75 DEGREE C, INSULATION. ALL EQUIPMENT LUGS SHALL BE U. L. LISTED FOR 75 DEGREE C. WHERE EQUIPMENT IS NOT LISTED AS SUCH, ADJUST CONDUCTOR AMPACITY IAW NFPA 70 ARTICLE 310, TABLE 16.

22. THE DESIGN OF ALL BRANCH CIRCUITS IS BASED ON COPPER CONDUCTORS.

23. MINIMUM CONDUCTOR SIZE IS #12 AWG. (UNLESS OTHERWISE NOTED)

24. CONTRACTOR SHALL PROVIDE CONDUCTORS/CABLE/CONDUIT I.A.W. N.E.C. AND PRECEEDING 3 NOTES.

25. ANY BRANCH CIRCUIT REQUIRING A NEUTRAL SHALL BE PROVIDED WITH ITS OWN NEUTRAL. NO COMMON NEUTRAL SHALL BE PERMITTED.

26. THE CONTRACTOR SHALL PROVIDE CONNECTIONS FOR ALL ELECTRICAL EQUIPMENT INSTALLED ON THIS PROJECT. CONNECTIONS SHALL BE IN ACCORDANCE WITH THE MANUFACTURER'S RECOMMENDATIONS AND/OR CONSISTENT WITH INDUSTRY PRACTICE.

27. ALL CONDUIT SHALL BE RIGID GALVANIZED STEEL UNLESS OTHERWISE NOTED.

DEPARTMENT OF PLANNING AND ZONING
HOWARD COUNTY, MARYLAND

DIRECTOR	DATE
CHIEF, DEVELOPMENT ENGINEERING DIVISION	DATE 10/30/97
CHIEF, DIVISION OF LAND DEVELOPMENT AND RESEARCH	DATE

SUBDIVISION NAME	LOT/PARCEL	
ALPHA RIDGE SOLID WASTE MANAGEMENT CENTER	54,253,220,11	
LIBER/FOLIO	ZONE	TAX/ZONE MAP
10-847/606 16-878/215 10-691/314	R	10 & 16
WATER CODE	SEWER CODE	CENSUS TR.
PRIVATE, EXISTING	PRIVATE, EXISTING	60-30

DEPARTMENT OF PUBLIC WORKS
HOWARD COUNTY, MARYLAND

DIRECTOR OF PUBLIC WORKS — DATE 10/30/97
CHIEF, BUREAU OF WASTE MANAGEMENT — DATE 10/30/97

SCS ENGINEERS
CONSULTING ENGINEERS
11260 ROGER BACON DRIVE
SUITE 300
RESTON, VIRGINIA 22090
PH. (703) 471-6150
FAX. (703) 471-6676

STATE OF MARYLAND — RAYMOND F. IRBY — REG. NO. 18822 — PROFESSIONAL ENGINEER — 10/29/97
Raymond F. Irby, PE

DES.	RFI
DRN.	BJD/SPC
CHK.	RI
DATE: 10-30-97	

BY	NO.	REVISION	DATE
	6		
	5		
	4		
	3		
	2		
	1		

ELECTRICAL DETAILS

ALPHA RIDGE LANDFILL
UNLINED CELL CLOSURE
CAPITAL PROJECT NO. C-0190-N

3rd ELECTION DISTRICT — HOWARD COUNTY, MARYLAND

SCALE: AS NOTED

SHEET (Sht 94) G10 OF (131)

SHT-G10 M:\295077.02\FINAL\ E-BLOWER, LDIAGRAM, ENOTES

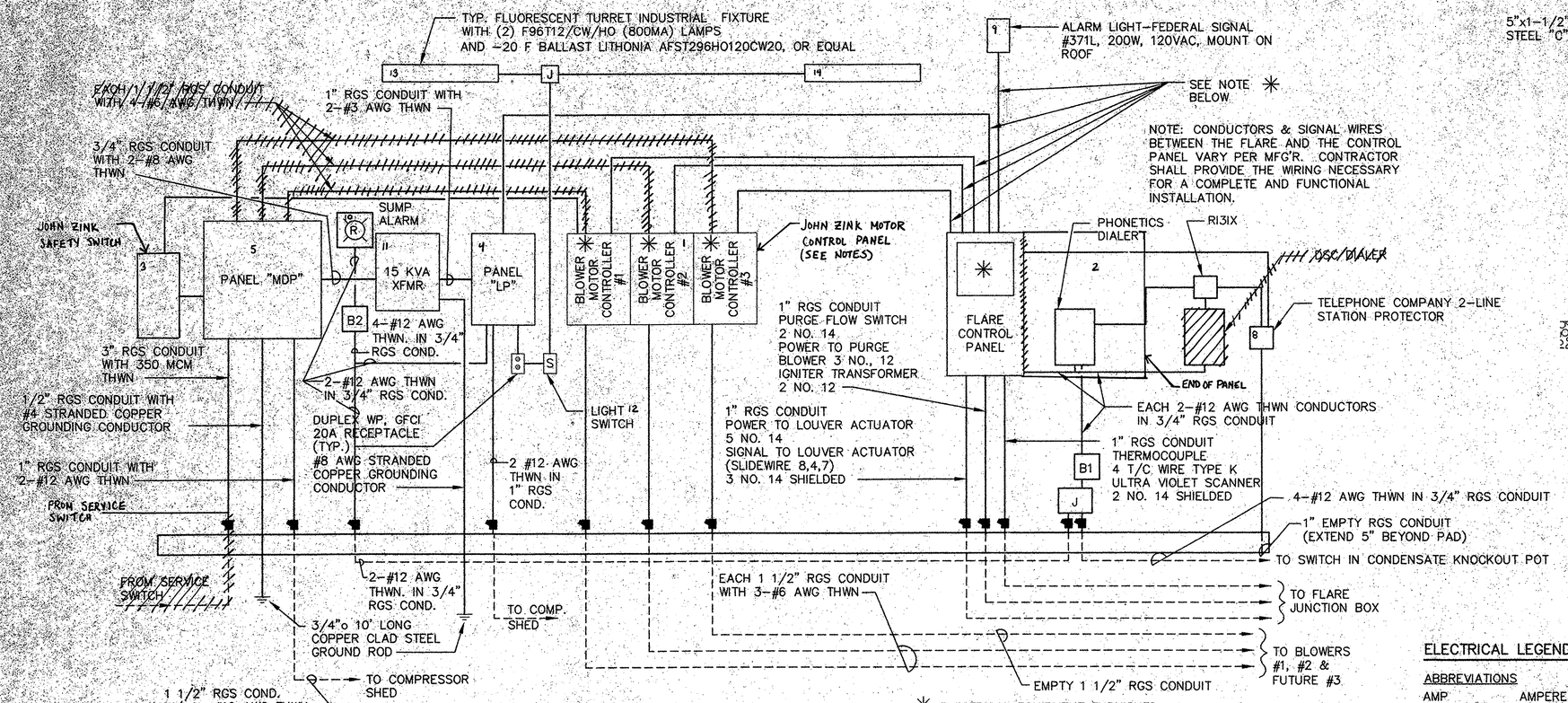

SERVICE AND CONTROL EQUIPMENT RISER

NO SCALE

✳ ELECTRICAL EQUIPMENT FURNISHED PRE-ASSEMBLED BY FLARE MANUFACTURER, INSTALLED BY CONTRACTOR. 15 KVA TRANSFORMER AND PANEL "LP" MAY ALSO BE FURNISHED BY FLARE MANUFACTURER.

BARRIER B1: SHUNT-DIODE SAFETY BARRIER-MAXIMUM VOLTAGE AND END-TO-END RESISTANCE AS SPECIFIED BY DIALER MANUFACTURER.

BARRIER B2: ONE-CHANNEL SWITCH OPERATED RELAY WITH FULLY FLOATING INPUT CIRCUIT. 120-VOLT AC OPERATING VOLTAGE. CONTACT RATING 250V, 5A, AC RESISTIVE LOAD ISOLATION: 250V AC BETWEEN INPUT, OUTPUT AND POWER SUPPLY TERMINALS. SAFETY DESCRIPTION: 7V, 300 OHM, 22 MA.

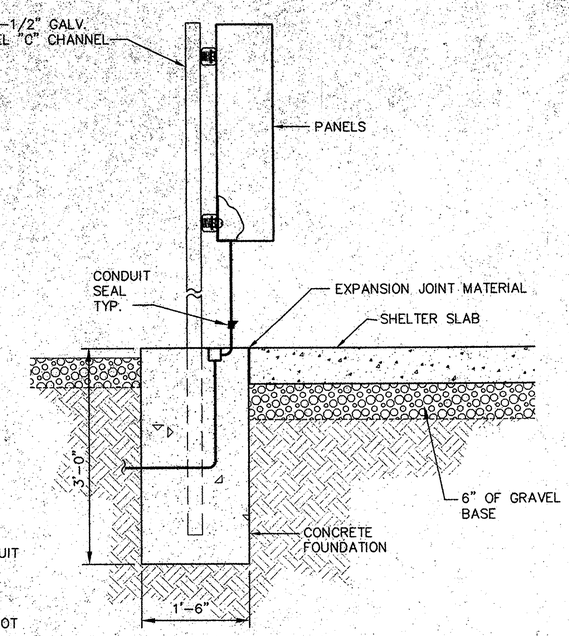

PANEL MOUNT DETAIL 1 (G11|G11)

SCALE: 1"=1'-0"

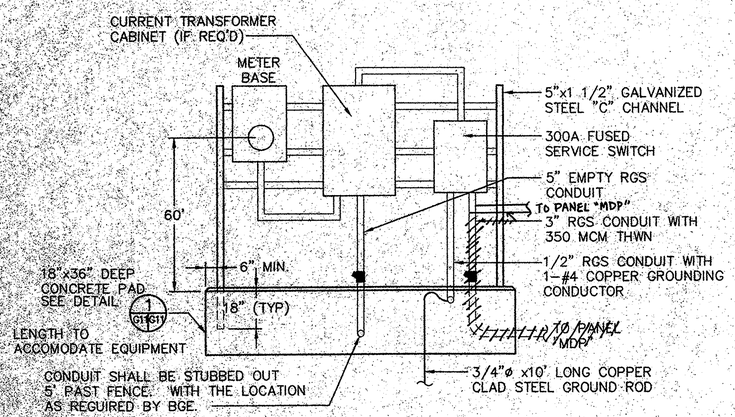

ELECTRICAL SERVICE EQUIPMENT RISER

NO SCALE

NOTES:

1. BGE WILL INSTALL SERVICE CABLE FROM THEIR POWER SOURCE TO THE CURRENT TRANSFORMER AND METER BASE.
2. EQUIPMENT SHALL BE ATTACHED TO THE CHANNELING WITH 3/4" GALV. BOLTS, NUTS AND WASHERS.
3. THE CONTRACTOR SHALL LEAVE A SUFFICIENT AMOUNT OF CONDUCTOR CABLE COILED INSIDE THE CURRENT TRANSFORMER CABINET TO PERMIT BGE TO MAKE THEIR CONNECTON.
4. CONTRACTOR SHALL OBTAIN METER BASE FROM BG&E AND INSTALL IT.
5. CONTRACTOR SHALL PROVIDE CURRENT TRANSFORMER CABINET, COORDINATING SIZE, ETC. WITH BGE.

NOTES:

1. REFER TO JOHN ZINK OPERATION AND MAINTENANCE MANUAL FOR DETAILS.
2. THIS RISER DIAGRAM IS FOR SCHEMATIC PURPOSES AND DOES NOT REFLECT ACTUAL LOCATIONS OF PANELS/EQUIPMENT. (SEE AS-BUILT LAYOUT THIS SHEET FOR LEGEND OF NUMERIC IDENTIFICATION)

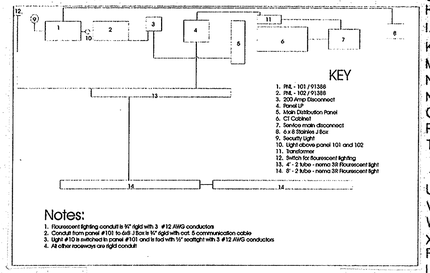

Flare Station Alpha Ridge

THIS AS-BUILT LAYOUT PROVIDED BY H.E. SARGENT, INC.

ELECTRICAL LEGEND

ABBREVIATIONS

AMP	AMPERE
AWG	AMERICAN WIRE GAUGE
CKT. BKR	CIRCUIT BREAKER
CND.	CONDUIT
CU	COPPER
GFI	GROUND FAULT INTERRUPTER
HP	HORSEPOWER
IAW	IN ACCORDANCE WITH
KW	KILOWATT
MDP	MAIN DISTRIBUTION PANEL
N	NEUTRAL
NEC	NATIONAL ELECTRICAL CODE
OCPD	OVERCURRENT PROTECTIVE DEVICE
PNL, PB	PANEL, PANELBOARD
THWN	MOISTURE AND HEAT RESISTANT THERMOPLASTIC CONDUCTOR INSULATION.
UG	UNDERGROUND
V	VOLT
WP	WEATHER-PROOF
XFMR	TRANSFORMER
RCPT	RECEPTACLE
LP	LIGHTING PANEL

SYMBOLS

ø	PHASE
	CONDUCTORS IN CONDUIT
	FLEXIBLE, LIQUID-TIGHT METAL CONDUIT
J	JUNCTION BOX
	CONDUIT SEAL
	SWITCH
LA	LIGHTNING ARRESTER

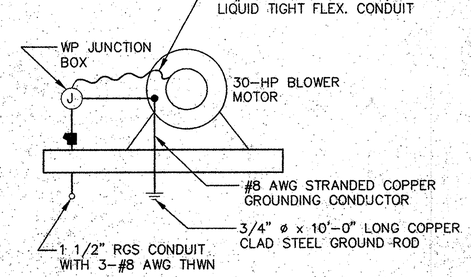

BLOWER SCHEMATIC

NO SCALE

SUBDIVISION NAME	LOT/PARCEL	
ALPHA RIDGE SOLID WASTE MANAGEMENT CENTER	54,253,220,11	
LIBER/FOLIO	ZONE	TAX/ZONE MAP
10-847/606 16-878/215 10-691/314	R	10 & 16
WATER CODE	SEWER CODE	CENSUS TR.
PRIVATE, EXISTING	PRIVATE, EXISTING	60-30

DEPARTMENT OF PLANNING AND ZONING
HOWARD COUNTY, MARYLAND

DIRECTOR — DATE

CHIEF, DEVELOPMENT ENGINEERING DIVISION — DATE

CHIEF, DIVISION OF LAND DEVELOPMENT AND RESEARCH — DATE

DEPARTMENT OF PUBLIC WORKS
HOWARD COUNTY, MARYLAND

DIRECTOR OF PUBLIC WORKS — DATE — CHIEF, BUREAU OF WASTE MANAGEMENT — DATE

SCS ENGINEERS
CONSULTING ENGINEERS
11260 ROGER BACON DRIVE
SUITE 300
RESTON, VIRGINIA 22090
PH. (703) 471-6150
FAX. (703) 471-6676

STATE OF MARYLAND — RAYMOND F. IRBY — REG. NO. 8 — PROFESSIONAL ENGINEER

Raymond F. Irby, PE

DES. RFI
DRN. BJD/SPC
CHK.
DATE: 10-30-97

BY	NO.	REVISION	DATE
RFI	1	MODIFICATIONS TO EQUIPMENT RISER ELECTRICAL	8-26-98
	2		
	3		
	4		
	5		
	6		

ELECTRICAL DETAILS

ALPHA RIDGE LANDFILL
UNLINED CELL CLOSURE
CAPITAL PROJECT NO. C-0190-N

3rd ELECTION DISTRICT — HOWARD COUNTY, MARYLAND

SCALE: AS NOTED

(Sht 95)
SHEET G11 OF 131

SHT. G11 — M:\296077.02\FINAL\ — SERVICE RISER ELEC COMP MOUNT

INSTALL SOIL STABILIZATION MATTING	
STA. 100+80 TO 101+15, LT. (GRASS CHANNEL NO. 2)	170 S.Y.
STA. 101+11 TO 101+41.5, LT. (GRASS CHANNEL NO. 1)	198 S.Y.
STA. 100+80 TO, RT. TO 104+85, LT. (GRASS CHANNEL NO. 3&5)	1130 S.Y.
STA. 100+54.5, RT. TO 105+26, LT. (GRASS CHANNEL NO. 4)	550 S.Y.
STA. 101+64 TO 102+01, LT.	70 S.Y.
STA. 104+34 TO 104+80, LT.	80 S.Y.

INSTALL CLASS I RIPRAP OUTLET PROTECTION (19" DEPTH) (SEE RIPRAP CONTROL TABLE)	
STA. 100+27 TO 100+76, LT.	85 S.Y.

INSTALL TURFGRASS SOD	
STA. 101+86 TO 104+51, LT. (BIO-SWALE)	380 S.Y.
STA. 100+14 TO 100+55.5, RT.	110 S.Y.

INSTALL TRENCH DRAIN (SEE PLAN AND DETAIL, SHEET CO-3)	
STA. 101+65.9 TO 102+00.9, 58' LT.	35 L.F.
STA. 101+65.9 TO 102+00.9, 87' LT.	35 L.F.

CONSTRUCTION BIO-SWALE SECTION	
STA. 102+07.5 TO 104+44.5, 117.5' LT. (SEE DETAILS, SHEET CO-4)	237 L.F.

INSTALL HARDWOOD MULCH (BIO-SWALE) 3" DEPTH	
STA. 104+45 TO 102+08, LT.	18 C.Y.

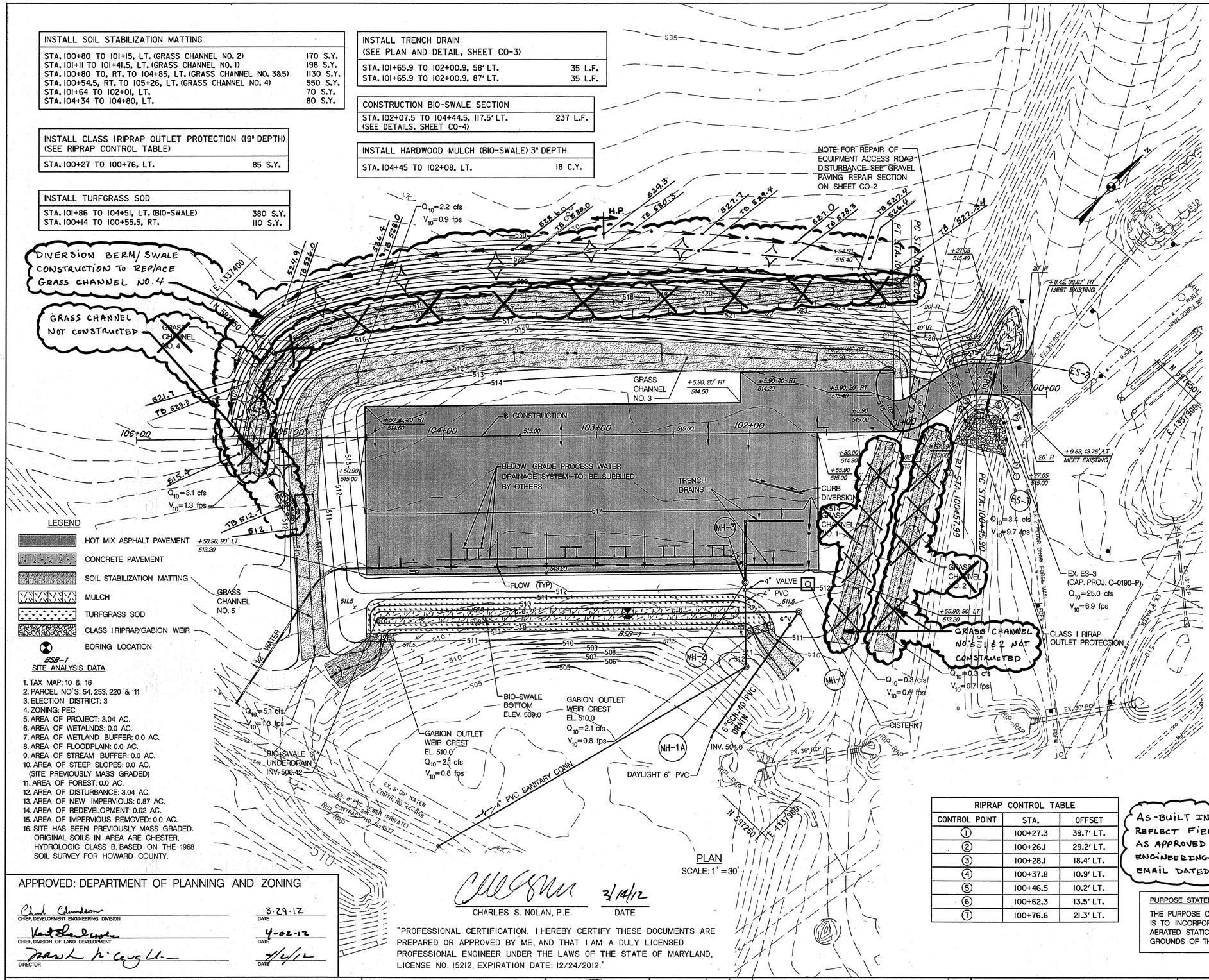

LEGEND

- HOT MIX ASPHALT PAVEMENT
- CONCRETE PAVEMENT
- SOIL STABILIZATION MATTING
- MULCH
- TURFGRASS SOD
- CLASS I RIPRAP/GABION WEIR
- BORING LOCATION

BSB-1

SITE ANALYSIS DATA

1. TAX MAP: 10 & 16
2. PARCEL NO'S: 54, 253, 220 & 11
3. ELECTION DISTRICT: 3
4. ZONING: PEC
5. AREA OF PROJECT: 3.04 AC.
6. AREA OF WETALNDS: 0.0 AC.
7. AREA OF WETLAND BUFFER: 0.0 AC.
8. AREA OF FLOODPLAIN: 0.0 AC.
9. AREA OF STREAM BUFFER: 0.0 AC.
10. AREA OF STEEP SLOPES: 0.0 AC. (SITE PREVIOUSLY MASS GRADED)
11. AREA OF FOREST: 0.0 AC.
12. AREA OF DISTURBANCE: 3.04 AC.
13. AREA OF NEW IMPERVIOUS: 0.87 AC.
14. AREA OF REDEVELOPMENT: 0.02 AC.
15. AREA OF IMPERVIOUS REMOVED: 0.0 AC.
16. SITE HAS BEEN PREVIOUSLY MASS GRADED. ORIGINAL SOILS IN AREA ARE CHESTER, HYDROLOGIC CLASS B. BASED ON THE 1968 SOIL SURVEY FOR HOWARD COUNTY.

PLAN
SCALE: 1" = 30'

GENERAL NOTES - NON-RESIDENTIAL SITE DEVELOPMENT PLAN

1. ALL CONSTRUCTION SHALL BE IN ACCORDANCE WITH THE LATEST STANDARDS AND SPECIFICATIONS OF HOWARD COUNTY PLUS MSHA STANDARDS AND SPECIFICATIONS IF APPLICABLE.
2. THE CONTRACTOR SHALL NOTIFY THE DEPARTMENT OF PUBLIC WORKS/BUREAU OF ENGINEERING/CONSTRUCTION INSPECTION DIVISION AT (410) 313-1880 AT LEAST FIVE (5) WORKING DAYS PRIOR TO THE START OF WORK
3. IF REQUIRED FOR THIS PROJECT, TRAFFIC DEVICES, MARKINGS AND SIGNING SHALL BE IN ACCORDANCE WITH THE LATEST EDITION OF THE MANUAL OF UNIFORM TRAFFIC CONTROL DEVICES (MUTCD). ALL STREET AND REGULATORY SIGNS SHALL BE IN PLACE PRIOR TO THE PLACEMENT OF ANY ASPHALT.
4. THE EXISTING TOPOGRAPHY IS TAKEN FROM AERIAL SURVEY WITH ONE FOOT CONTOUR INTERVALS PREPARED BY HOWARD COUNTY, DATED DECEMBER 2008.
5. THE COORDINATES SHOWN HEREON ARE BASED UPON THE HOWARD COUNTY GEODETIC CONTROL WHICH IS BASED UPON THE MARYLAND STATE PLANE COORDINANCE SYSTEM. CONTROL FOR THIS PROJECT IS PROVIDED BY HOWARD COUNTY DEPARTMENT OF PUBLIC WORKS FIELD MONUMENTATION.
6. STORMWATER MANAGEMENT (ESD) MEASURES ARE PROVIDED THROUGH THE USE OF A BIO-SWALE, CISTERN AND GRASS CHANNELS. MANAGEMENT OF THE 10 YR. 24-HOUR STORM HAS BEEN PROVIDED UNDER SDP-97-128.
7. EXISTING UTILITIES ARE BASED ON "AS-BUILT" DRAWINGS.
8. THERE IS NO FLOODPLAIN ON THIS SITE.
9. THERE IS NO WETLANDS ON THIS SITE.
10. NO TRAFFIC STUDY IS REQUIRED FOR THIS PROJECT.
11. THERE ARE NO DESIGN MANUAL WAIVERS PLANNED FOR THIS PROJECT IN REGARDS TO ENVIRONMENTAL DISTURBANCES.
12. FOREST CONSERVATION OBLIGATIONS HAVE BEEN PREVIOUSLY ADDRESSED BY SDP-97-128, ALPHA RIDGE LANDFILL.

INSTALL HOT MIX ASPHALT CURB DIVERSION (HO. CO. DETAIL R-3.03)	
STA. 101+65.9 40' LT. TO 102+00, 30' LT.	36 L.F.

INSTALL GABION WEIR (BIO-SWALE) (SEE DETAILS, SHEET CO-4)	
STA. 100+94, 128' LT.	2 C.Y.
STA. 104+41.5, 131.5' LT.	2 C.Y.

CONSTRUCT HOT MIX ASPHALT PAVEMENT SECTION	
(SEE PAVEMENT SECTION DETAIL, SHEET CO-2)	36,293 S.F.

CONSTRUCT CONCRETE PAVEMENT SECTION	
(SEE PAVEMENT SECTION LOCATION PLAN & DETAIL, SHEET CO-2)	420 S.F.

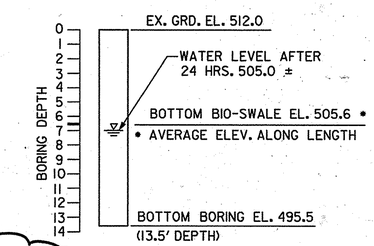

LOCATION: N 597,291.0
E 1,337,736.0

BORING DUG 11812

BSB-1 BORING LOG

RIPRAP CONTROL TABLE		
CONTROL POINT	STA.	OFFSET
1	100+27.3	39.7' LT.
2	100+26.1	29.2' LT.
3	100+28.1	18.4' LT.
4	100+37.8	10.9' LT.
5	100+46.5	10.2' LT.
6	100+62.3	13.5' LT.
7	100+76.6	21.3' LT.

AS-BUILT INFORMATION SHOWN REFLECT FIELD CONDITION CHANGES AS APPROVED BY THE DEVELOPMENT ENGINEERING DIVISION (DED) BY EMAIL DATED JULY 18, 2013.

PURPOSE STATEMENT

THE PURPOSE OF THIS REVISION TO SDP-97-128 IS TO INCORPORATE THE CONSTRUCTION OF THE AERATED STATIC PILE COMPOST FACILITY ON THE GROUNDS OF THE ALPHA RIDGE LANDFILL.

CHARLES S. NOLAN, P.E. — DATE 3/14/12

"PROFESSIONAL CERTIFICATION. I HEREBY CERTIFY THESE DOCUMENTS ARE PREPARED OR APPROVED BY ME, AND THAT I AM A DULY LICENSED PROFESSIONAL ENGINEER UNDER THE LAWS OF THE STATE OF MARYLAND, LICENSE NO. 15212, EXPIRATION DATE: 12/24/2012."

APPROVED: DEPARTMENT OF PLANNING AND ZONING

CHIEF, DEVELOPMENT ENGINEERING DIVISION	DATE 3-29-12
CHIEF, DIVISION OF LAND DEVELOPMENT	DATE 4-02-12
DIRECTOR	DATE 4/6/12

DEPARTMENT OF PUBLIC WORKS
HOWARD COUNTY, MARYLAND

DIRECTOR OF PUBLIC WORKS	DATE 3/15/12
CHIEF, BUREAU OF ENVIRONMENTAL SERVICES	DATE 3/15/12

NOLAN Associates, Inc.
Engineers · Civil/Structural/Inspections
4785 Dorsey Hall Drive
Suite 124
Ellicott City, Maryland 21042
Phone: (410) 995-3851 Fax: (410) 995-1363

DES: GWF			
DRN: JRW			
CHK:			
DATE: MARCH 2012	BY	NO.	REVISION	DATE

SITE DEVELOPMENT PLAN

600' SCALE MAP NO. 16 BLOCK NO. 8

ALPHA RIDGE LANDFILL
AERATED STATIC PILE COMPOST FACILITY

CAPITAL PROJECT NO. C-0299

TAX MAP 10 & 16. PARCEL NUMBERS 54, 253, 220 & 11
ELECTION DISTRICT NO. 3 HOWARD COUNTY, MARYLAND

SUBDIVISION NAME	LOT / PARCEL	
ALPHA RIDGE SOLID WASTE MANAGEMENT CENTER	54, 253, 220, 11	
LIBER / FOLIO 10-847/606 16-878/215 10-691/314	ZONE PEC	TAX / ZONE MAP 10 & 16
WATER CODE PRIVATE, EXISTING	SEWER CODE PRIVATE, EXISTING	CENSUS TR. 60-30

SCALE: AS SHOWN

SHEET CO-1 OF 9 TOTAL OF 131

As-Built - Aug. 14, 2013

SDP-97-128

CONCRETE PAVEMENT SECTION DATA			
POINT	STATION	OFFSET	ELEVATION
1	100+73.41	28.77' RT.	515.50
2	100+66.08	21.11' RT.	515.60
3	101+22.00	3.83' LT.	514.72
4	100+92.87	8.29' LT.	514.50

BASELINE CONSTRUCTION CURVE DATA						
CURVE	DELTA	Dc	RADIUS	TANGENT	LENGTH	EXTERNAL
C-1	34°37'40.56" LT	286°28'44.03"	20.00'	6.23'	12.09'	0.95'
C-2	34°10'18.37" RT	143°14'22.02"	40.00'	12.29'	23.86'	1.85'

BASELINE CONSTRUCTION CONTROL COORDINATES		
STATION	NORTH	EAST
POB STA. 100+00.00	597,584.6477	1,337,829.7804
PC STA. 100+45.90	597,552.3041	1,337,797.2087
PT STA. 100+57.99	597,541.7822	1,337,791.6406
PC STA. 100+82.05	597,518.1336	1,337,787.2263
PT STA. 101+05.90	597,497.3152	1,337,776.3152
POE STA. 106+00	597,146.3855	1,337,428.4936

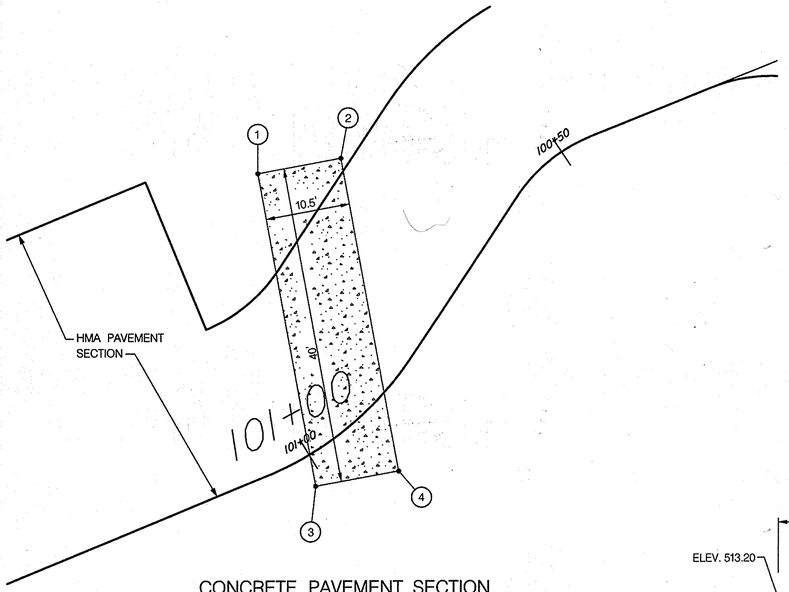

CONCRETE PAVEMENT SECTION LOCATION PLAN

SCALE: 1" = 10'

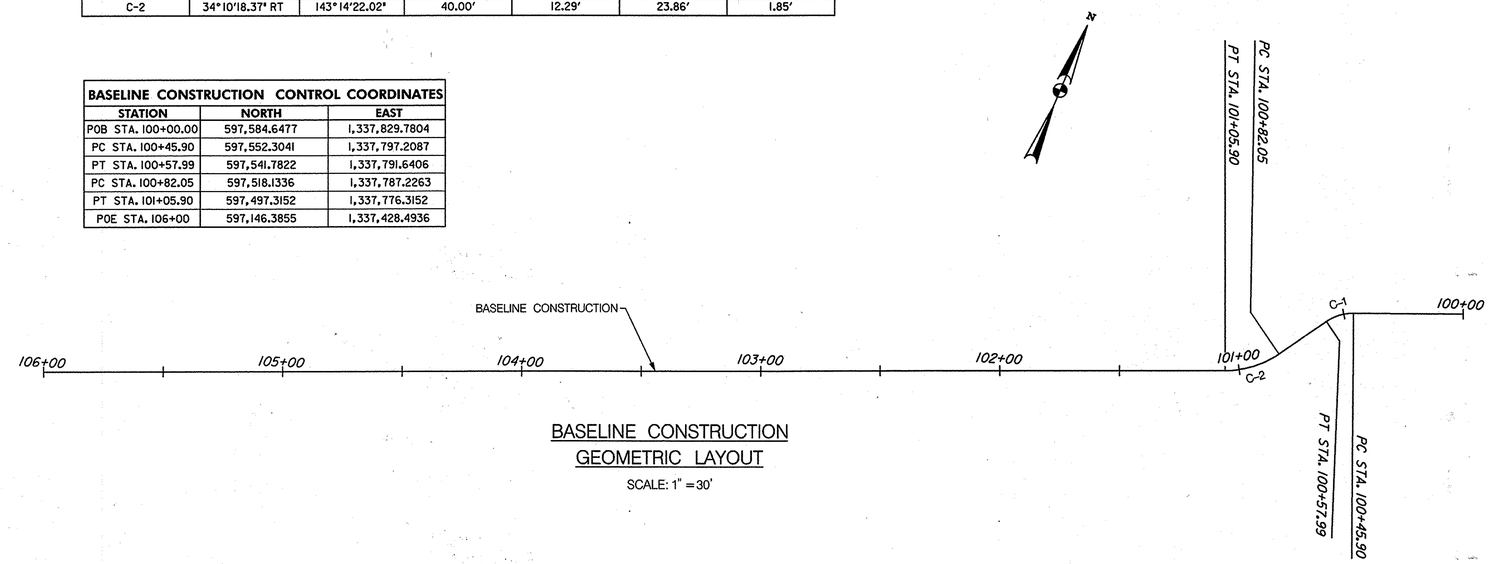

BASELINE CONSTRUCTION GEOMETRIC LAYOUT

SCALE: 1" = 30'

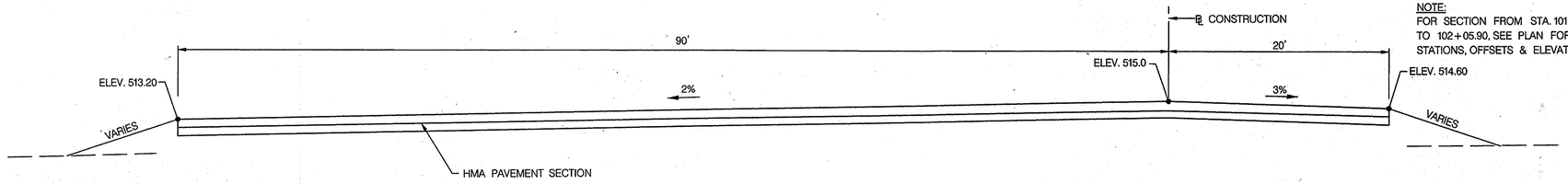

NOTE:
FOR SECTION FROM STA. 101+05.90 TO 102+05.90, SEE PLAN FOR STATIONS, OFFSETS & ELEVATIONS

TYPICAL SECTION – FACILITY SLAB
STA. 102+05.90 TO STA. 104+50.90

NOT TO SCALE

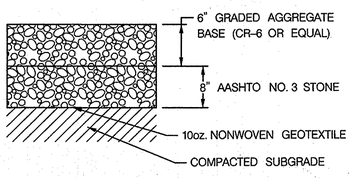

GRAVEL PAVING REPAIR SECTION DETAIL

NOT TO SCALE

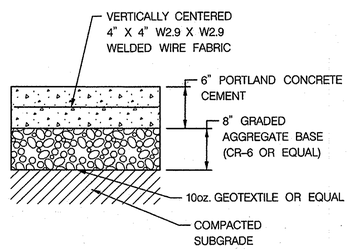

CONCRETE PAVEMENT SECTION DETAIL

NOT TO SCALE

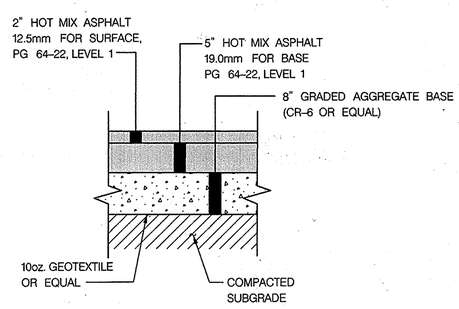

HOT MIX ASPHALT PAVEMENT SECTION DETAIL

NOT TO SCALE

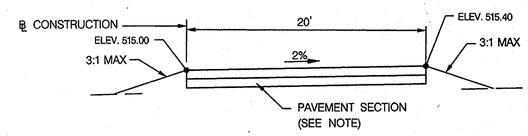

NOTE:
IN AREA WHERE LANDFILL HEAVY EQUIPMENT CROSSES ACCESS ROAD CONCRETE PAVEMENT SECTION WILL BE USED. SEE PLAN FOR LIMITS

TYPICAL SECTION – ACCESS ROAD
STA. 100+27.05 TO STA. 101+05.90

NOT TO SCALE

APPROVED: DEPARTMENT OF PLANNING AND ZONING

Chad Edmondson CHIEF, DEVELOPMENT ENGINEERING DIVISION	3-29-12 DATE
Kent Sheubrooks CHIEF, DIVISION OF LAND DEVELOPMENT	4-02-12 DATE
Marsha McLaughlin DIRECTOR	4/5/12 DATE

(FOR PROFESSIONAL CERTIFICATION SEE SHEET CO-1)

SUBDIVISION NAME	LOT / PARCEL	
ALPHA RIDGE SOLID WASTE MANAGEMENT CENTER	54, 253, 220, 11	
LIBER / FOLIO 10-847/608 16-878/215 10-697/314	ZONE PEC	TAX / ZONE MAP 10 & 16
WATER CODE PRIVATE, EXISTING	SEWER CODE PRIVATE, EXISTING	CENSUS TR. 60-30

DEPARTMENT OF PUBLIC WORKS
HOWARD COUNTY, MARYLAND

Evelyn F. Tomlin 3/15/12
CHIEF, BUREAU OF ENVIRONMENTAL SERVICES DATE

NOLAN Associates, Inc.
Engineers - Civil/Structural/Inspections
4785 Dorsey Hall Drive
Suite 124
Ellicott City, Maryland 21042
Phone: (410) 995-3851 Fax: (410) 995-1363

STATE OF MARYLAND CHARLES W. FRIDLEY No. 15139 PROFESSIONAL ENGINEER

DES: GWF				
DRN: JRW				
CHK:				
DATE: MARCH 2012	BY	NO.	REVISION	DATE

MISCELLANEOUS DETAILS

600' SCALE MAP NO. 16 BLOCK NO. 8

ALPHA RIDGE LANDFILL
AERATED STATIC PILE COMPOST FACILITY
CAPITAL PROJECT NO. C-0299
TAX MAP 10 & 16. PARCEL NUMBERS 54, 253, 220 & 11
ELECTION DISTRICT NO. 3 HOWARD COUNTY, MARYLAND

SCALE: AS SHOWN

SHEET CO-2 OF 9 TOTAL OF 31

SDP-97-128

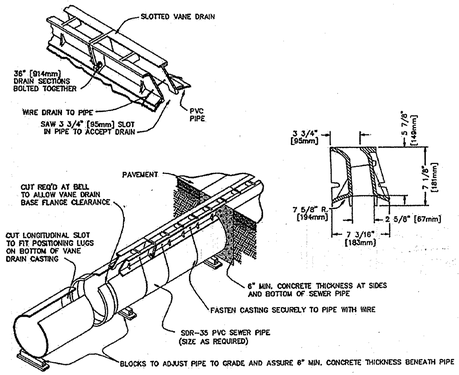

TRENCH DRAIN DETAILS

NOT TO SCALE

NOTES:
1. TRENCH DRAIN TO BE NEENAH FOUNDRY TYPE R-3599-A OR APPROVED EQUAL.

2. PIPE SIZE TO BE 12-INCH PVC SCH 40.

GRASS CHANNEL SCHEDULE						
GRASS CHANNEL	BOTTOM WIDTH	SIDE SLOPES	Q_{10} (cfs)	V_{10} (cfs)	FLOW DEPTH (ft)	WIDTH OF SSM
NO. 1	7 ft	3:1	0.3	0.6	0.1	13'
NO. 2	4 ft	3:1	0.3	0.7	0.1	10'
NO. 3	12 ft	3:1 (MAX)	2.2	0.9	0.2	18'
NO. 4	4 ft	3:1	3.1	1.3	0.5	10'
NO. 5	12 ft	3:1 (MAX)	5.1	1.3	0.3	18'

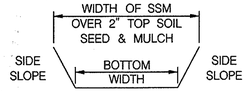

TYPICAL DITCH SECTION

NOT TO SCALE

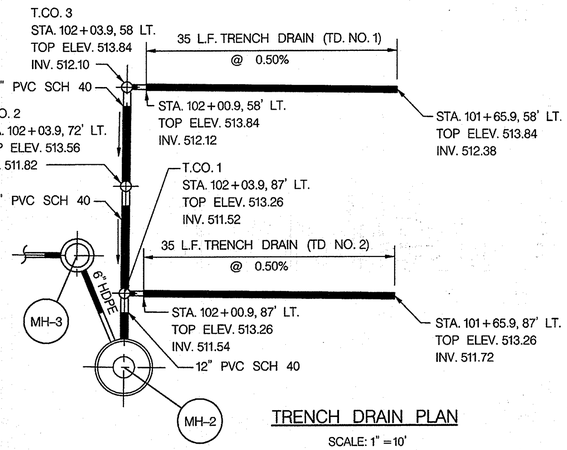

TRENCH DRAIN PLAN

SCALE: 1" = 10'

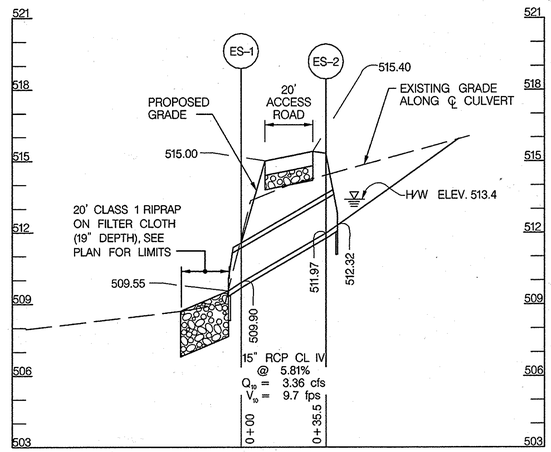

CULVERT PROFILE ES-1 TO ES-2

SCALE: HORIZ. 1" = 30'
VERT. 1" = 3'

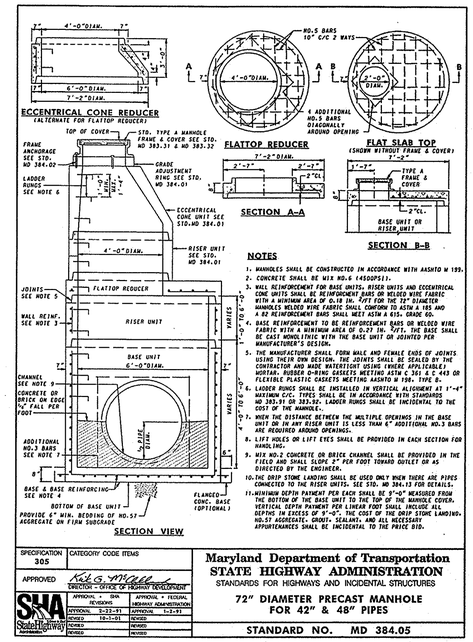

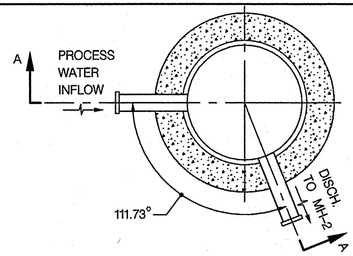

PLAN VIEW

TOP SLAB REMOVED

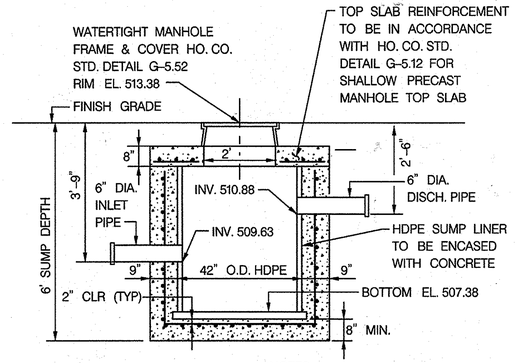

SECTION A-A

NOTES:
1. CONCRETE TO BE 3000 PSI MIX
2. ALL REINFORCEMENT IN BOTTOM SLAB AND WALLS SHALL BE #4@6" EACH WAY WITH 2" CLEAR COVER.

MH-3 MANHOLE DETAIL

SCALE: 1/2" = 1'-0"

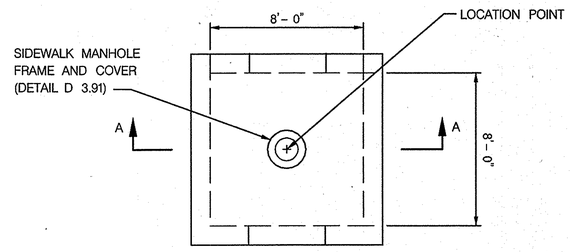

PLAN

NOTES:
1. CISTERN TO BE USED AS HOLDING TANK FOR STORMWATER RUNOFF TO BE USED FOR COMPOST FACILITY IRRIGATION PURPOSES.

2. WALL THICKNESS SHOWN AS 1'- 0" FOR INFORMATIONAL PURPOSES. CISTERN TO BE PRE-CAST WITH THICKNESS AND REINFORCEMENT DETERMINED BY PRE-CAST MANUFACTURER.

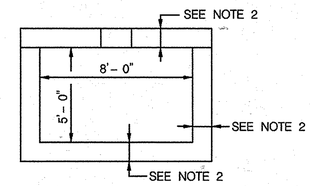

SECTION A-A

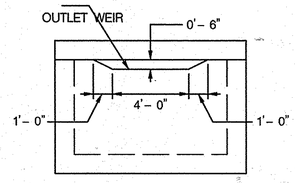

ELEVATION

CISTERN DETAILS

SCALE 1/4" = 1'-0"

DRAINAGE PIPE SCHEDULE				
FROM STRUCT.	TO STRUCT.	SIZE (IN.)	TYPE	LENGTH (FT.)
MH-1	OUTFALL	6"	PVC SCH 40 *	97'
MH-1	BIO-SWALE	6"	PVC SCH 40 *	40'
BIO-SWALE	CO-1	6"	PERF. PVC SCH 40	35'
CO-1	CO-2	6"	PERF. PVC SCH 40	100'
CO-2	CO-3	6"	PERF. PVC SCH 40	100'
ES-1	ES-2	15"	RCCP CL IV	36'
MH-3	MH-2	6"	HDPE	30'

*SOLID PIPE

DRAINAGE STRUCTURE SCHEDULE						
NO.	TYPE	LOCATION	INV. IN	INV. OUT	TOP EL.	STD. NO.
MH-1	PRECAST MANHOLE	STA. 101+69.01, 117' LT.	505.04	504.94	511.50	G - 5.12
ES-1	15" CONCRETE END SECTION	STA. 100+39.3, 10' LT.	509.90	509.55	——	D - 5.51
ES-2	15" CONCRETE END SECTION	STA. 100+30.8, 24' LT.	512.32	511.97	——	D - 5.51
CO-1	CLEAN OUT	STA. 102+43.3, 117.5' LT.	——	506.42	509.5	SEE DETAIL
CO-2	CLEAN OUT	STA. 103+43.3, 117.5' LT.	——	505.92	509.5	SEE DETAIL
CO-3	CLEAN OUT	STA. 104+43.3, 117.5' LT.	——	505.42	509.5	SEE DETAIL
CISTERN	SEE DETAIL	STA. 101+62.9, 100' LT.	——	——	512.0	SEE DETAIL
MH-2	72" DIA. PRECAST MANHOLE	STA. 102+03.9, 97.5' LT.	510.45 (6") 509.95 (12")	504.45 (1)	512.45	MD SHA STD. NO. MD 384.05
MH-3	POURED IN PLACE MANHOLE	STA. 102+10.75, 80.75' LT.	509.63	510.88	513.38	SEE DETAIL (2)

(1) BOTTOM OF MANHOLE ELEVATION & 4" PVC INV. OUT ELEVATION. MANHOLE MH-2 TO ALSO BE USED AS HOLDING / STORAGE FACILITY FOR TRENCH DRAIN / PROCESS WATER DRAINAGE SYSTEMS.

(2) INLET TO BE CAST IN PLACE AROUND PROCESS WATER HDPE SUMP LINER (TO BE SUPPLIED BY OTHERS).

APPROVED: DEPARTMENT OF PLANNING AND ZONING

Chad Edmondson — CHIEF, DEVELOPMENT ENGINEERING DIVISION	DATE 3-29-12
Kent Sheubrooks — CHIEF, DIVISION OF LAND DEVELOPMENT	DATE 4-02-12
Marsha S. McLaughlin — DIRECTOR	DATE 4/12/12

(FOR PROFFESSIONAL CERTIFICATION SEE SHEET CO-1)

SUBDIVISION NAME	LOT /PARCEL	
ALPHA RIDGE SOLID WASTE MANAGEMENT CENTER	54, 253, 220, 11	
LIBER /FOLIO 10-947606 16-878215 10-691314	ZONE PEC	TAX /ZONE MAP 10 & 16
WATER CODE PRIVATE, EXISTING	SEWER CODE PRIVATE, EXISTING	CENSUS TR. 60-30

DEPARTMENT OF PUBLIC WORKS
HOWARD COUNTY, MARYLAND

Evelyn F. Tomlin 3/15/12
CHIEF, BUREAU OF ENVIRONMENTAL SERVICES DATE

NOLAN Associates, Inc.
Engineers - Civil/Structural/Inspections
4785 Dorsey Hall Drive
Suite 124
Ellicott City, Maryland 21042
Phone: (410) 995-3651 Fax: (410) 995-1363

DES: GWF				
DRN: JRW				
CHK:				
DATE: MARCH 2012	BY	NO.	REVISION	DATE

DRAINAGE DETAILS

600' SCALE MAP NO. 16 BLOCK NO. 8

ALPHA RIDGE LANDFILL
AERATED STATIC PILE COMPOST FACILITY
CAPITAL PROJECT NO. C-0299
TAX MAP 10 & 16. PARCEL NUMBERS 54, 253, 220 & 11
ELECTION DISTRICT NO. 3 HOWARD COUNTY, MARYLAND

SCALE: AS SHOWN

SHEET CO-3 OF 9 TOTAL OF 31

SDP-97-128

BIO-SWALE SPECIFICATIONS

MATERIAL	SPECIFICATION	SIZE	NOTES
PLANTING SOIL ORGANIC CONTENT	LOAMY SAND (60 – 65%) & COMPOST (35 – 40%) OR SANDY LOAM (30%), COARSE SAND (30%) & COMPOST (40%) MIN. 10% BY DRY WEIGHT (ASTM D 2974)		USDA SOIL TYPES LOAMY SAND OR SANDY LOAM; CLAY CONTENT < 5%
MULCH	SHREDDED HARDWOOD	3" DEPTH	AGED 6 MONTHS, MINIMUM; NO PINE OR WOOD CHIPS
GEOTEXTILE			PE TYPE 1 NONWOVEN
AGGREGATE	AASHTO M-43	NO. 57 OR NO. 7 AGGREGATE	
PEA GRAVEL	ASTM-D-448	NO. 6 OR 2" TO 5" STONE	
UNDERDRAIN PIPING	F 758, TYPE PS 28 OR AASHTO M-728	6" RIGID SCHEDULE 40 PVC OR SDR35	SLOTTED OR PERFORATED PIPE; 3/8" PERF. @ 6" ON CENTER, 4 HOLES PER ROW; MINIMUM OF 4" OF GRAVEL OVER PIPES AND UNDERNEATH PIPE. PERFORATED PIPE SHALL BE WRAPPED WITH 1/4"-INCH GALVANIZED HARDWARE CLOTH
TURFGRASS SOD ESTABLISHMENT	REFER TO SECTION 708 OF THE SPECIFICATIONS		

OPERATION AND MAINTENANCE SCHEDULE FOR BIORETENTION SWALE

A. THE OWNER SHALL MAINTAIN THE PLANT MATERIAL, MULCH LAYER AND SOIL LAYER ANNUALLY. MAINTENANCE OF MULCH AND SOIL IS LIMITED TO CORRECTION AREAS OF EROSION OR WASH OUT. ANY MULCH REPLACEMENT SHALL BE DONE IN THE SPRING. PLANT MATERIAL SHALL BE CHECKED FOR DISEASE AND INSECT INFESTATION AND MAINTENANCE WILL ADDRESS DEAD MATERIAL AND PRUNING. ACCEPTABLE REPLACEMENT PLANT MATERIAL IS LIMITED TO THE FOLLOWING: 2000 MARYLAND STORMWATER DESIGN MANUAL VOLUME II, TABLE A.4.1 AND 2.

B. THE OWNER SHALL PERFORM A PLANT IN THE SPRING AND IN THE FALL OF EACH YEAR. DURING THE INSPECTION, THE OWNER SHALL REMOVE DEAD AND DISEASED VEGETATION CONSIDERED BEYOND TREATMENT, REPLACE DEAD PLANT MATERIAL WITH ACCEPTABLE REPLACEMENT PLANT MATERIAL, TREAT DISEASED TREES AND SHRUBS, AND REPLACE ALL DEFICIENT STAKES AND WIRES.

C. THE OWNER SHALL INSPECT THE MULCH EACH SPRING. THE MULCH SHALL BE REPLACED EVERY TWO TO THREE YEARS. THE PREVIOUS MULCH LAYER SHALL BE REMOVED BEFORE THE NEW LAYER IS APPLIED.

D. THE OWNER SHALL CORRECT SOIL EROSION ON AN AS NEEDED BASIS, WITH A MINIMUM OF ONCE PER MONTH AND AFTER EACH HEAVY STORM.

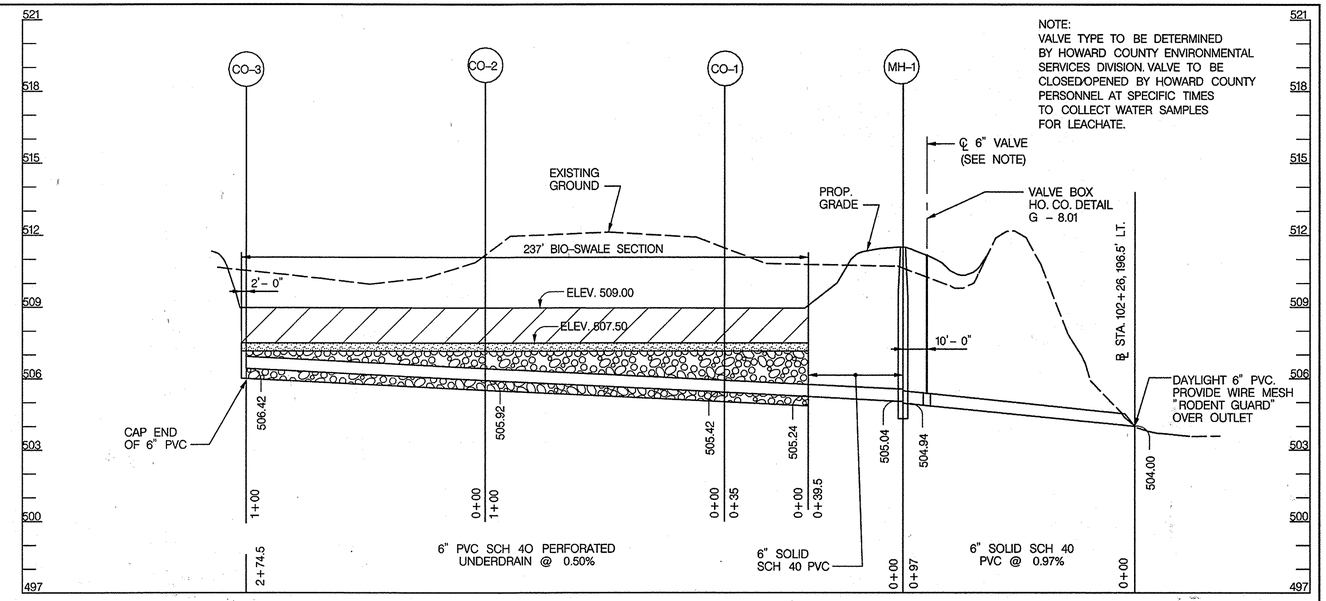

PROFILE ALONG BIO-SWALE AND OUTLET PIPE

SCALE: HORIZ. 1" = 30'
VERT. 1" = 3'

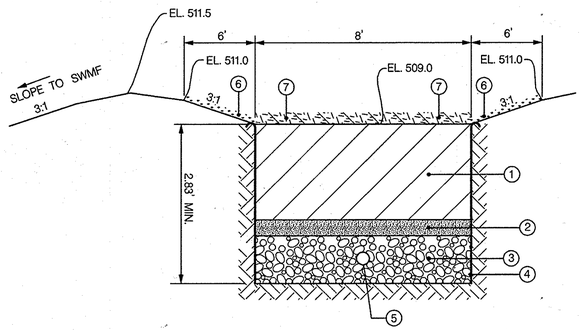

BIO-SWALE SECTION

NOT TO SCALE

LEGEND

1. 1'-6" BIORETENTION SOIL MIXTURE
2. 4-INCH PEA GRAVEL
3. 1-FOOT NO. 57 AGGREGATE (MIN.)
4. GEOTEXTILE, PE TYPE I NONWOVEN (ON SIDES AND BOTTOM)
5. 6" INCH PERF. UNDERDRAIN, WRAP WITH HARDWARE MESH
6. TURFGRASS SOD ESTABLISHMENT
7. MULCH, 3" DEPTH WITH BIO-SWALE PLANTINGS

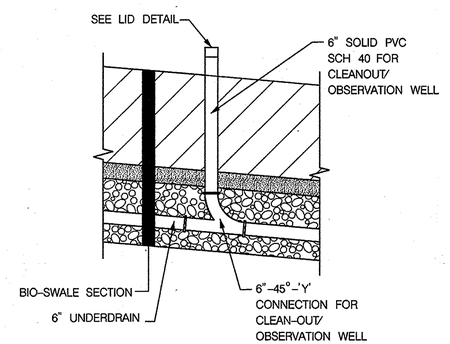

NOTE:
BIO-SWALE CLEAN-OUT/OBSERVATION WELL SHALL BE INCIDENTAL TO THE UNIT COST OF BIO-SWALE PAY ITEM.

BIO-SWALE CLEANOUT/ OBSERVATION WELL DETAIL

NOT TO SCALE

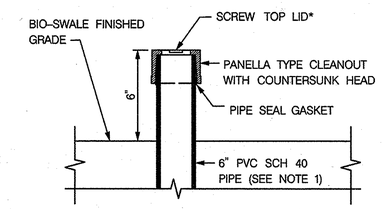

*ABOVE DETAIL PROVIDED AS SCHEMATIC
SCREW TOP PVC WELL CAP ONLY. SEE NOTE 2

BIO-SWALE CLEANOUT/ OBSERVATION WELL LID DETAIL

NOT TO SCALE

NOTES:

1. THE TUBE SHALL HAVE A FACTORY ATTACHED CAST IRON OR HIGH IMPACT PLASTIC COLLAR WITH RIBS TO PREVENT ROTATION WHEN REMOVING SCREW TOP LID. THE SCREW TOP LID SHALL BE CAST IRON OR HIGH IMPACT PLASTIC THAT WILL WITHSTAND ULTRA-VIOLET RAYS.
2. FOR LOCATION, SEE DRAINAGE STRUCTURE SCHEDULE.

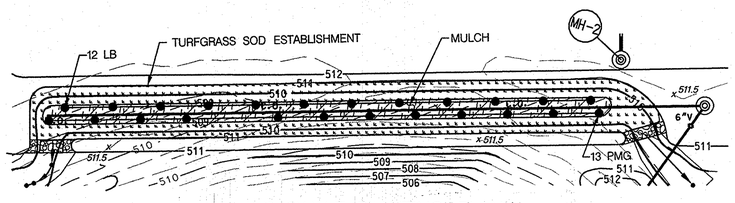

BIO-SWALE PLANTING PLAN

SCALE: 1" = 30'

BIO-SWALE PLANTING LIST

SYMBOL	SCIENTIFIC NAME	COMMON NAME	SIZE	NUMBER
LB	ANDROPOGON GLOMERATUS	LITTLE BLUESTEM	GALLON	12
PMG	MUHLENBERGIA GLOMERATA	PINK MUHLYGRASS	GALLON	13

LEGEND

- MULCH
- TURFGRASS SOD
- PLANTINGS

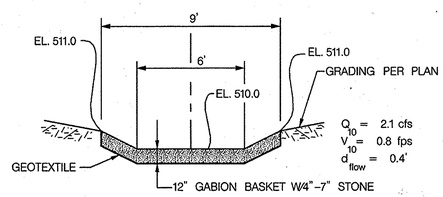

NOTE:
SEE SCS DETAIL 6 FOR ADDITIONAL INFORMATION

SECTION A-A

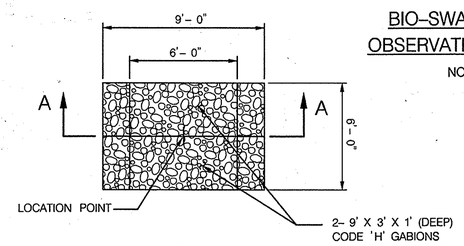

PLAN

BIO-SWALE FACILITY OUTLET WEIR DETAIL

NOT TO SCALE

(FOR PROFESSIONAL CERTIFICATION, SEE SHEET CO-1)

APPROVED: DEPARTMENT OF PLANNING AND ZONING

CHIEF, DEVELOPMENT ENGINEERING DIVISION	DATE 3-29-12
CHIEF, DIVISION OF LAND DEVELOPMENT	DATE 4-02-12
DIRECTOR	DATE 4/4/12

SUBDIVISION NAME	LOT /PARCEL	
ALPHA RIDGE SOLID WASTE MANAGEMENT CENTER	54, 253, 220, 11	
LIBER /FOLIO 10-847/606 16-878/215 10-691/314	ZONE PEC	TAX /ZONE MAP 10 & 16
WATER CODE PRIVATE, EXISTING	SEWER CODE PRIVATE, EXISTING	CENSUS TR. 60-30

DEPARTMENT OF PUBLIC WORKS
HOWARD COUNTY, MARYLAND

CHIEF, BUREAU OF ENVIRONMENTAL SERVICES — DATE 3/15/12

NOLAN Associates, Inc.
Engineers - Civil/Structural/Inspections
4785 Dorsey Hall Drive
Suite 124
Ellicott City, Maryland 21042
Phone: (410) 995-3651 Fax: (410) 995-1363

STATE OF MARYLAND — DOUGLAS W. NOLAN — No. 15212 — REGISTERED PROFESSIONAL ENGINEER

DES: GWF				
DRN: JRW				
CHK:				
DATE: MARCH 2012	BY	NO.	REVISION	DATE

BIO-SWALE DETAILS

600' SCALE MAP NO. 16 BLOCK NO. 8

ALPHA RIDGE LANDFILL
AERATED STATIC PILE COMPOST FACILITY
CAPITAL PROJECT NO. C-0299
TAX MAP 10 & 16. PARCEL NUMBERS 54, 253, 220 & 11
ELECTION DISTRICT NO. 3 HOWARD COUNTY, MARYLAND

SCALE: AS SHOWN

SHEET CO-4 OF 9 TOTAL OF 31

SDP-97-128

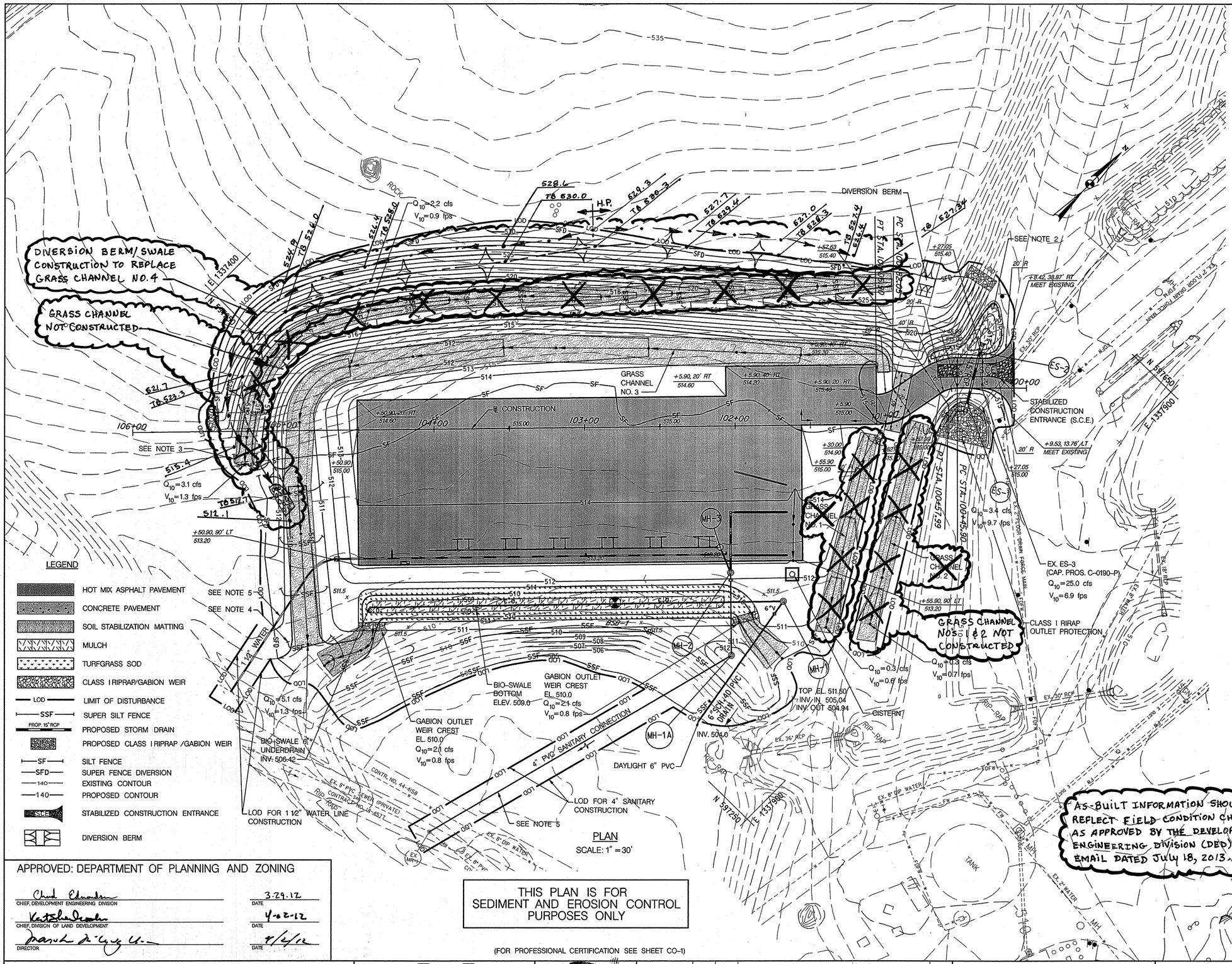

INSTALL SILT FENCE	
STA. 100+15 TO 100+76.5, LT.	75 L.F.
STA. 100+24 TO 100+78, LT.	75 L.F.
STA. 100+80 TO 101+10, LT.	155 L.F.
STA. 101+03 TO 105+22, LT.	460 L.F.

INSTALL SUPER FENCE DIVERSION	
STA. 100+42 TO 100+49, RT.	18 L.F.
STA. 100+51 TO 105+44, RT.	550 L.F.
STA. 104+94 TO 105+18, LT.	140 L.F.

INSTALL SUPER SILT FENCE	
STA. 101+45 TO 104+68, LT.	420 L.F.
STA. 102+27 TO 104+62, LT.	260 L.F.

INSTALL RIPRAP SLOPE (INFLOW) PROTECTION	
STA. 100+27 TO 100+42, RT.	18 S.Y.
STA. 105+44 TO 105+52, RT.	14 S.Y.

INSTALL STABILIZED CONSTRUCTION ENTRANCE	
STA. 100+09 TO 100+54, RT.	40 TON

CONSTRUCT DIVERSION BERM
STA. 100+49 TO 100+51, RT. SEE DETAIL, SHEET CO-6

NOTES:

1. NO STOCKPILING OF MATERIAL WILL BE PERMITTED WITHIN THE LIMITS OF THIS PROJECT.
2. AREA TO BE STABILIZED WITH TURFGRASS SOD. REFER TO SITE DEVELOPMENT PLAN FOR LIMITS AND QUANTITY.
3. INSTALL SSF (25' LONG SECTIONS) AT INTERVALS OF 35' ALONG GRASS CHANNEL AS INDICATED (350 L.F. TOTAL).
4. INSTALL SSF (35' LONG SECTIONS) AT INTERVALS OF 35' ALONG GRASS CHANNEL AS INDICATED (140 L.F. TOTAL).
5. FOR CONSTRUCTION OF WATER LINE AND SANITARY SEWER CONNECTION CONTRACTOR SHALL LIMIT THE AMOUNT OF CONSTRUCTION THAT CAN BE BACKED FILLED AND STABILIZED WITHIN THE SAME WORK DAY. AREA TO BE STABILIZED WITH SEED AND MULCH.

LEGEND

- HOT MIX ASPHALT PAVEMENT
- CONCRETE PAVEMENT
- SOIL STABILIZATION MATTING
- MULCH
- TURFGRASS SOD
- CLASS I RIPRAP/GABION WEIR
- LOD — LIMIT OF DISTURBANCE
- SSF — SUPER SILT FENCE
- PROP. 15" RCP — PROPOSED STORM DRAIN
- PROPOSED CLASS I RIPRAP /GABION WEIR
- SF — SILT FENCE
- SFD — SUPER FENCE DIVERSION
- 140 — EXISTING CONTOUR
- 140 — PROPOSED CONTOUR
- SCE — STABILIZED CONSTRUCTION ENTRANCE
- DIVERSION BERM

By the Owner/Developer

"I/We certify that all development and/or construction will be done according to these plans, and that any responsible personnel involved in the construction project will have a Certificate of Attendence at a Department of the Environment Approved Training Program for the Control of Sediment and Erosion before beginning project. I also authorize periodic on-site inspections by the Howard Soil Conservation District."

Evelyn E. Tomlin — 3/14/2012

Signature of Owner/Developer — Date
Print name below signature

By the Owner/Engineer

"I certify that this plan for erosion and sediment control represents a prctical and workable plan based on my personal knowledge of the site conditions. this Plan was prepared in accordance with the requirements of the Howard Soil Conservation District."

3/14/2012

Signature of Engineer — Date
Print name below signature
CHARLES S. NOLAN

These plans are approved for soil erosion and sediment control by the Howard Soil Conservation District.

3/27/12

Howard S.C.D. — Date

AS-BUILT INFORMATION SHOWN REFLECT FIELD CONDITION CHANGE AS APPROVED BY THE DEVELOPMENT ENGINEERING DIVISION (DED) BY EMAIL DATED July 18, 2013.

APPROVED: DEPARTMENT OF PLANNING AND ZONING

CHIEF, DEVELOPMENT ENGINEERING DIVISION	DATE 3.29.12
CHIEF, DIVISION OF LAND DEVELOPMENT	DATE 4-02-12
DIRECTOR	DATE 4/2/12

THIS PLAN IS FOR SEDIMENT AND EROSION CONTROL PURPOSES ONLY

(FOR PROFESSIONAL CERTIFICATION SEE SHEET CO-1)

SUBDIVISION NAME	LOT /PARCEL	
ALPHA RIDGE SOLID WASTE MANAGEMENT CENTER	54, 253, 220, 11	
LIBER /FOLIO 10-847/606 16-878/215 10-691/314	ZONE PEC	TAX /ZONE MAP 10 & 16
WATER CODE PRIVATE, EXISTING	SEWER CODE PRIVATE, EXISTING	CENSUS TR. 60-30

DEPARTMENT OF PUBLIC WORKS
HOWARD COUNTY, MARYLAND

Evelyn E. Tomlin — 3/15/12
CHIEF, BUREAU OF ENVIRONMENTAL SERVICES — DATE

NOLAN Associates, Inc.
Engineers - Civil/Structural/Inspections
4785 Dorsey Hall Drive
Suite 124
Ellicott City, Maryland 21042
Phone (410) 995-3651 Fax (410) 995-1363

STATE OF MARYLAND CHARLES S. NOLAN No. 19219 REGISTERED PROFESSIONAL ENGINEER

DES: GWF			
DRN: JRW			
CHK:			
DATE: MARCH 2012	BY	NO.	REVISION	DATE

GRADING, EROSION & SEDIMENT CONTROL PLAN

600' SCALE MAP NO. 16 BLOCK NO. 8

ALPHA RIDGE LANDFILL
AERATED STATIC PILE COMPOST FACILITY
CAPITAL PROJECT NO. C-0299
TAX MAP 10 & 16. PARCEL NUMBERS 54, 253, 220 & 11
ELECTION DISTRICT NO. 3 HOWARD COUNTY, MARYLAND

SCALE: AS SHOWN

SHEET CO-5 OF 9 TOTAL OF 31

As-Built - Aug. 14, 2013

SDP-97-128

SPECIFICATIONS FOR VEGETATION ESTABLISHMENT

PERMANENT SEEDING NOTES

Apply to graded or cleared areas not subject to immediate further disturbance where a permanent long-lived vegetative cover is needed.

Seedbed Preparation:—Loosen upper three inches of soil by raking, disking or other acceptable means before seeding, if not previously loosened.

Soil Amendments:—In lieu of soil test recommendations, use one of the following schedules:

1. Preferred—Apply 2 tons per acre dolomitic limestone (92 lbs/1000 sq. ft.) and 600 lbs per acre 10-10-10 fertilizer (14 lbs/1000 sq. ft.) before seeding. Harrow or disk into upper three inches of soil. At time of seeding, apply 400 lbs per acre 30-0-0 ureaform fertilizer (9 lbs/1000 sq. ft.)
2. Acceptable—Apply 2 tons per acre dolomitic limestone (92 lbs/1000 sq. ft.) and 1000 lbs. per acre 10-10-10 fertilizer (23 lbs/1000 sq. ft.) before seeding. Harrow or disk into upper three inches of soil.

Seeding—For the periods March 1 thru April 30, and August 1 thru October 15, seed with 60 lbs per acre (1.4 lbs/1000 sq. ft.) of Kentucky 31 Tall Fescue and 2 lbs per acre (.05 lbs/1000 sq. ft.) of weeping lovegrass. During the period of October 16 thru February 28, protect site by: Option (1) – 2 tons per acre of well anchored straw mulch and seed as soon as possible in the spring. Option (2) – Use sod. Option (3) – Seed with 60 lbs/acre Kentucky 31 Tall Fescue and mulch with 2 tons/acre well anchored straw.

Mulching—Apply 1-1/2 to 2 tons per acre (70 to 90 lbs/1000 sq. ft.) of unrotted small grain straw immediately after seeding. Anchor mulch immediately after application using mulch anchoring tool or 218 gallons per acre (5 gal/1000 sq. ft.) of emulsified asphalt on flat areas. On slopes 8 feet or higher, use 348 gallons per acre (8 gal/1000 sq. ft.) for anchoring.

Maintenance—Inspect all seeding areas and make needed repairs, replacements and reseedings.

TEMPORARY SEEDING NOTES

Apply to graded or cleared areas likely to be redisturbed where a short-term vegetative cover is needed.

Seedbed preparation:—Loosen upper three inches of soil by raking, disking or other acceptable means before seeding, if not previously loosened.

Soil Amendments:—Apply 600 lbs per acre 10-10-10 fertilizer (14 lbs/1000 sq. ft.).

Seeding—For periods March 1 thru April 30 and from August 15 thru November 15, seed with 2-1/2 bushel per acre of annual rye (3.2 lbs/1000 sq. ft.). For the period May 1 thru August 14, seed with 3 lbs per acre of weeping lovegrass (.07 lbs/1000 sq. ft.). For the period November 16 thru February 28, protect site by applying 2 tons per acre of well anchored straw mulch and seed as soon as possible in the spring, or use sod.

Mulching—Apply 1-1/2 to 2 tons per acre (70 to 90 lbs/1000 sq. ft.) of unrotted weed free small grain straw immediately after seeding. Anchor mulch immediately after application using mulch anchoring tool or 218 gal per acre (5 gal/1000 sq. ft.) of emulsified asphalt on flat areas. On slopes 8 ft. or higher, use 348 gal per acre (8 gal/1000 sq. ft.) for anchoring.

Refer to the 1994 MARYLAND STANDARDS AND SPECIFICATIONS FOR SOIL EROSION AND SEDIMENT CONTROL for additional rates and methods not covered.

STANDARD SEDIMENT CONTROL NOTES

1. A minimum of 24 hours notice must be given to the Howard County Department of Inspections, Licenses and Permits, Sediment Control Division prior to the start of any construction, (313-1850).
2. All vegetative and structural practices are to be installed according to the provisions of this plan and are to be in conformance with the most current "MARYLAND STANDARDS AND SPECIFICATIONS FOR SOIL EROSION AND SEDIMENT CONTROL", and revisions thereto.
3. Following initial soil disturbance or redisturbance, permanent or temporary stabilization shall be completed within: a) 7 calendar days for all perimeter sediment control structures, dikes, perimeter slopes and all slopes greater than 3:1, b) 14 days as to all other disturbed or graded areas on the project site.
4. All sediment traps/basins shown must be fenced and warning signs posted around their perimeter in accordance with Vol. 1, Chapter 12, of the HOWARD COUNTY DESIGN MANUAL, Storm Drainage.
5. All disturbed areas must be stabilized within the time period specified above in accordance with the 1994 MARYLAND STANDARDS AND SPECIFICATIONS FOR SOIL EROSION AND SEDIMENT CONTROL for permanent seeding (Sec.51), sod (Sec. 54), temporary seeding (Sec. 50) and mulching (Sec. 52). Temporary stabilization with mulch alone can only be done when recommended seeding dates do not allow for proper germination and establishment of grasses.
6. All sediment control structures are to remain in place and are to be maintained in operative condition until permission for their removal has been obtained from the Howard County Sediment Control Inspector.
7. Site Analysis

Total Area of Site	3.24 Acres
Area Disturbed	3.24 Acres
Area to be roofed or paved	0.86 Acres
Area to be vegetatively stabilized	2.27 Acres
Total Cut	5,550 Cu. Yds.
Total Fill	1,725 Cu. Yds.
Offsite Waste/Borrow Area Location To Be Determined By Contractor at a site with an active grading permit.	

* It is the responsibility of the contractor to identify the soil/borrow site and notify and gain the approval from the sediment control inspector of the site and its grading permit number at the time of construction.

8. Any sediment control practice which is disturbed by grading activity for placement of utilities must be repaired on the same day of disturbance.
9. Additional sediment control must be provided, if deemed necessary by the Howard County Sediment Control Inspector.

SPECIFICATIONS FOR TOPSOIL

Definition: Placement of topsoil over a prepared subsoil prior to establishment of permanent vegetation.

Purpose: To provide a suitable soil medium for vegetative growth. Soils of concern have low moisture content, low nutrient levels, low pH, materials toxic to plants, and/or unacceptable soil gradation.

Conditions Where Practice Applies

I. This practice is limited to areas having 2:1 or flatter slopes where:
   a. The texture of the exposed subsoil/parent material is not adequate to produce vegetative growth.
   b. The soil material is so shallow that the rooting zone is not deep enough to support plants or furnish continuing supplies of moisture and plant nutrients.
   c. The original soil to be vegetated contains material toxic to plant growth.
   d. The soil is so acidic that treatment with limestone is not feasible.

II. For the purpose of these Standards and Specifications, areas having slopes steeper than 2:1 require special consideration and design for adequate stabilization. Areas having slopes steeper than 2:1 shall have the appropriate stabilization shown on the plans.

Construction and Material Specifications

I. Topsoil salvaged from the existing site may be used provided that it meets the standards as set forth in these specifications. Typically, the depth of topsoil to be salvaged for a given soil type can be found in the representative soil profile section in the Soil Survey published by USDA-SCS in cooperation with Maryland Agricultural Experimental Station.

II. Topsoil Specifications – Soil to be used as topsoil must meet the following:
   i. Topsoil shall be a loam, sandy loam, clay loam, silt loam, sandy clay loam, loamy sand. Other soils may be used if recommended by an agronomist or soil scientist and approved by the appropriate approval authority. Regardless, topsoil shall not be a mixture of contrasting textured subsoils and shall contain less than 5% by volume of cinders, stones, slag, coarse fragments, gravel, sticks, roots, trash, or other materials larger than 1 1/2" in diameter.
   i. Topsoil must be free of plants or plant parts such as bermuda grass, quackgrass, Johnsongrass, nutsedge, poison ivy, thistle, or others as specified.
   ii. Where the subsoil is either highly acidic or composed of heavy clays, ground limestone shall be spread at the rate of 4-8 tons/acre (200-400 pounds per 1,000 square feet) prior to the placement of topsoil. Lime shall be distributed uniformly over designated areas and worked into the soil in conjunction with tillage operations as described in the following procedures.

III. For sites having disturbed areas under 5 acres:
   i. Place topsoil (if required) and apply soil amendments as specified in 20.0 Vegetative Stabilization – Section I – Vegetative Stabilization Methods and Materials.

IV. For sites having disturbed areas over 5 acres:
   i. On soil meeting Topsoil specifications, obtain test results dictating fertilizer and lime amendments required to bring the soil into compliance with the following:
      a. pH for topsoil shall be between 6.0 and 7.5. If the tested soil demonstrates a pH of less than 6.0, sufficient lime shall be prescribed to raise the pH to 6.5 or higher.
      b. Organic content of topsoil shall be not less than 1.5 percent by weight.
      c. Topsoil having soluble salt content greater than 500 parts per million shall not be used.
      d. No sod or seed shall be placed on soil which has been treated with soil sterilants or chemicals used for weed control until sufficient time has elapsed (14 days min.) to permit dissipation of phyto-toxic materials.

   Note: Topsoil substitutes or amendments, as recommended by a qualified agronomist or soil scientist and approved by appropriate authority, may be used in lieu of natural topsoil.
   i. Place topsoil (if required) and apply soil amendments as specified in 20.0 Vegetative Stabilization – Section I – Vegetative Stabilization Methods and Materials.

V. Topsoil Application
   i. When topsoiling, maintain needed erosion and sediment control practices such as diversions, Grade Stabilization Structures, Earth Dikes, Slope Silt Fence and Sediment Traps and Basins.
   i. Grades on the areas to be topsoiled, which have been previously established, shall be maintained, albeit 4"-8" higher in elevation.
   ii. Topsoil shall be uniformly distributed in a 4"-8" layer and lightly compacted to a minimum thickness of 4". Spreading shall be performed in such a manner that sodding or seeding can proceed with a minimum of additional soil preparation and tillage. Any irregularities in the surface resulting from topsoiling or other operations shall be corrected in order to prevent the formation of depressions or water pockets.
   iv. Topsoil shall not be placed while the topsoil or subsoil is in a frozen or muddy condition, when the subsoil is excessively wet or in a condition that may otherwise be detrimental to proper grading and seedbed preparation.

VI. Alternative for Permanent Seeding. – Instead of applying the full amounts of lime and commercial fertilizer, composted sludge and amendments may be applied as specified below:
   i. Composted Sludge Material for use as soil conditioner for sites having disturbed areas over 5 acres shall be tested to prescribe amendments and for sites having disturbed areas under 5 acres shall conform to the following requirements:
      a. Composted sludge shall be supplied by, or originate from, a person or persons that are permitted (at the time of acquisition of the compost) by the Maryland Department of Environment under COMAR 26.04.06.
      b. Composted sludge shall contain at least 1 percent nitrogen, 1.5 percent phosphorus, and 0.2 percent potassium and have a Ph of 7.0 to 8.0. If compost does not meet these requirements, the appropriate constituents must be added to meet the requirements prior to use.
      c. Composted sludge shall be applied at the rate of 1 ton/1,000 square feet.
   i. Composted sludge shall be amended with a potassium fertilizer applied at the rate of 4 lb/1000 square feet, and 1/3 the normal lime application rate.

SEQUENCE OF CONSTRUCTION

SEQUENCE OF CONSTRUCTION	DURATION
1. OBTAIN GRADING PERMIT.	1 DAY
2. NOTIFY HOWARD COUNTY BUREAU OF INSPECTIONS AND PERMITS (410-313-1880) AT LEAST 24 HOURS BEFORE STARTING ANY WORK.	1 DAY
3. INSTALL 15" RCP CULVERT, ES-1, ES-2, TURFGRASS SOD AND RIPRAP OUTLET PROTECTION	2 DAY
4. INSTALL SUPER FENCE DIVERSION, STA. 100+42 TO 100+49, RT. STA. 100+51 TO 105+44, RT., RIPRAP SLOPE PROTECTION, AND DIVERSION BERM. INSTALL SILT FENCE STA. 100+15 TO 100+76.5, LT. CONSTRUCT FILL OVER 15" RCP CULVERT AND INSTALL STABILIZED CONSTRUCTION ENTRANCE	3 DAY
5. INSTALL SILT FENCE STA. 101+03 TO 105+22, LT. GRADE GRASS CHANNEL NO. 4 AND STABILIZE CHANNEL AND UPGRADE SLOPE AREA. INSTALL SUPER SILT FENCE AT 35' INTERVALS ALONG CHANNEL, WITH APPROVAL OF SEDIMENT CONTROL INSPECTOR REMOVE SILT FENCE.	4 DAY
6. INSTALL SUPER SILT FENCE STA. 100+45 TO 104+68, LT. SUPER FENCE DIVERSION STA. 104+94 TO 105+18, LT AND SILT FENCE STA. 100+80 TO 101+10, LT. GRADE GRASS CHANNEL NO'S 1, 2, 3, AND 5 AND STABILIZE. INSTALL SUPER SILT FENCE AT 35' INTERVALS ALONG CHANNEL NO.5.	10 DAY
7. GRADE AND INSTALL MH-2 AND MH-3. CONSTRUCT TRENCH DRAIN SYSTEM /PROCESS WATER DRAINAGE SYSTEM. INSTALL WATER SERVICE. AND 4" PVC SANITARY CONNECTION. CONSTRUCT PAVEMENT SECTION FOR ACCESS ROAD AND COMPOST FACILITY. FINISH GRADE AND STABILIZE OPEN SPACE AREA. REMOVE SUPER SILT FENCE STA. 100+45 TO 104+68 AND INSTALL SUPER SILT FENCE STA. 102+27 TO 104+62, LT.	30 DAY
8. ONCE CONTRIBUTING DRAINAGE AREA IS STABILIZED TO THE APPROVAL OF THE SEDIMENT CONTROL INSPECTOR CONSTRUCT BIO-SWALE/UNDER DRAIN SYSTEM AND MH-1. INSTALL CISTERN. STABILIZE ALL DISTURBED AREAS.	10 DAY
9. WITH THE APPROVAL OF THE SEDIMENT CONTROL INSPECTOR, REMOVE ANY REMAINING SEDIMENT CONTROL DEVICES AND STABILIZE ANY REMAINING DISTURBED AREAS.	4 DAY
TOTAL: 14 WEEKS ±	

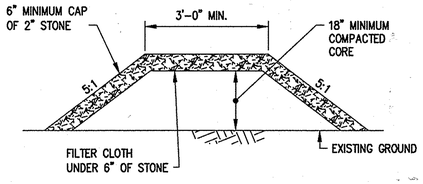

NOTE:
1. FILTER CLOTH SHALL BE GEOTEXTILE CLASS 'C' OR BETTER
2. COST OF BERM SHALL BE INCIDENTAL TO SUPER FENCE DIVERSION PAY ITEM

MOUNTABLE BERM DETAIL
SCALE: NOT TO SCALE

By the Owner/Developer

"I/We certify that all development and/or construction will be done according to these plans, and that any responsible personnel involved in the construction project will have a Certificate of Attendence at a Department of the Environment Approved Training Program for the Control of Sediment and Erosion before beginning project. I also authorize periodic on-site inspections by the Howard Soil Conservation District."

Evelyn E. Tomlin — 3/14/2012
Signature of Owner/Developer — Date
Print name below signature
Evelyn E. Tomlin

By the Owner/Engineer

"I certify that this plan for erosion and sediment control represents a prctical and workable plan based on my personal knowledge of the site conditions. this Plan was prepared in accordance with the requirements of the Howard Soil Conservation District."

3/14/2012
Signature of Engineer — Date
Print name below signature
CHARLES S. NOLAN

These plans are approved for soil erosion and sediment control by the Howard Soil Conservation District.

3/27/12
Howard S.C.D. — Date

APPROVED: DEPARTMENT OF PLANNING AND ZONING

CHIEF, DEVELOPMENT ENGINEERING DIVISION	DATE 3-29-12
CHIEF, DIVISION OF LAND DEVELOPMENT	DATE 4-02-12
DIRECTOR	DATE 4/2/12

THIS PLAN IS FOR SEDIMENT AND EROSION CONTROL PURPOSE ONLY

(FOR PROFESSIONAL CERTIFICATION SEE SHEET CO-1)

SUBDIVISION NAME	LOT /PARCEL	
ALPHA RIDGE SOLID WASTE MANAGEMENT CENTER	54, 253, 220, 11	
LIBER /FOLIO 10-847/606 16-878/215 10-697/314	ZONE PEC	TAX /ZONE MAP 10 & 16
WATER CODE PRIVATE, EXISTING	SEWER CODE PRIVATE, EXISTING	CENSUS TR. 60-30

DEPARTMENT OF PUBLIC WORKS
HOWARD COUNTY, MARYLAND

Evelyn E. Tomlin — 3/15/12
CHIEF, BUREAU OF ENVIRONMENTAL SERVICES — DATE

NOLAN Associates, Inc.
Engineers - Civil/Structural/Inspections
4785 Dorsey Hall Drive
Suite 124
Ellicott City, Maryland 21042
Phone: (410) 995-3851 Fax: (410) 995-1363

DES: GWF				
DRN: JRW				
CHK:				
DATE: MARCH 2012	BY	NO.	REVISION	DATE

EROSION AND SEDIMENT CONTROL NOTES AND DETAILS

600' SCALE MAP NO. 16 BLOCK NO. 8

ALPHA RIDGE LANDFILL
AERATED STATIC PILE COMPOST FACILITY
CAPITAL PROJECT NO. C-0299
TAX MAP 10 & 16. PARCEL NUMBERS 54, 253, 220 & 11
ELECTION DISTRICT NO. 3 HOWARD COUNTY, MARYLAND

SCALE: AS SHOWN

SHEET CO-6 OF 9 TOTAL OF 131

SDP-97-128

DETAIL 33 - SUPER SILT FENCE

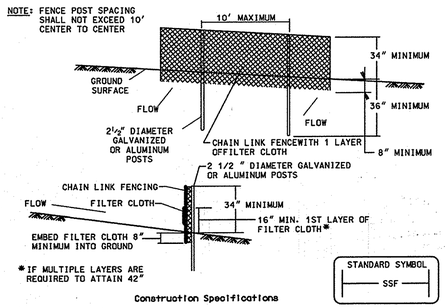

Construction Specifications

1. Fencing shall be 42" in height and constructed in accordance with the latest Maryland State Highway Details for Chain Link Fencing. The specification for a 6' fence shall be used, substituting 42" fabric and 6' length posts.

2. Chain link fence shall be fastened securely to the fence posts with wire ties. The lower tension wire, brace and truss rods, drive anchors and post caps are not required except on the ends of the fence.

3. Filter cloth shall be fastened securely to the chain link fence with ties spaced every 24" at the top and mid section.

4. Filter cloth shall be embedded a minimum of 8" into the ground.

5. When two sections of filter cloth adjoin each other, they shall be overlapped by 6" and folded.

6. Maintenance shall be performed as needed and silt buildups removed when "bulges" develop in the silt fence, or when silt reaches 50% of fence height

7. Filter cloth shall be fastened securely to each fence post with wire ties or staples at top and mid section and shall meet the following requirements for Geotextile Class F:

Tensile Strength	50 lbs/in (min.)	Test: ASTM D-4595
Tensile Modulus	20 lbs/in (min.)	Test: ASTM D-4595
Flow Rate	0.3 gal/ft²/minute (max.)	Test: ASTM D-5141
Filtering Efficiency	75% (min.)	Test: ASTM D-5141

U.S. DEPARTMENT OF AGRICULTURE SOIL CONSERVATION SERVICE	PAGE H - 26 - 3	MARYLAND DEPARTMENT OF ENVIRONMENT WATER MANAGEMENT ADMINISTRATION

DETAIL 22 - SILT FENCE

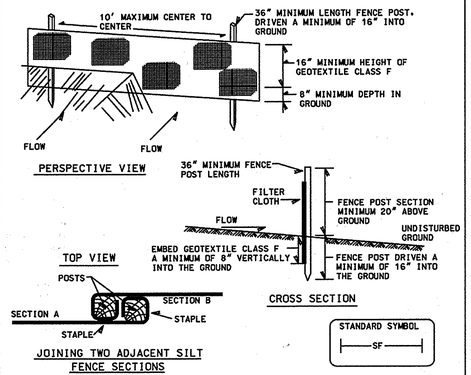

Construction Specifications

1. Fence posts shall be a minimum of 36" long driven 16" minimum into the ground. Wood posts shall be 1½" x 1½" square (minimum) cut, or 1¾" diameter (minimum) round and shall be of sound quality hardwood. Steel posts will be standard T or U section weighting not less than 1.00 pond per linear foot.

2. Geotextile shall be fastened securely to each fence post with wire ties or staples at top and mid-section and shall meet the following requirements for Geotextile Class F:

Tensile Strength	50 lbs/in (min.)	Test: ASTM D-4595
Tensile Modulus	20 lbs/in (min.)	Test: ASTM D-4595
Flow Rate	0.3 gal ft²/ minute (max.)	Test: ASTM D-5141
Filtering Efficiency	75% (min.)	Test: ASTM D-5141

3. Where ends of geotextile fabric come together, they shall be overlapped, folded and stapled to prevent sediment bypass.

4. Silt Fence shall be inspected after each rainfall event and maintained when bulges occur or when sediment accumulation reached 50% of the fabric height.

U.S. DEPARTMENT OF AGRICULTURE SOIL CONSERVATION SERVICE	PAGE E - 15 - 3	MARYLAND DEPARTMENT OF ENVIRONMENT WATER MANAGEMENT ADMINISTRATION

DETAIL 24 - STABILIZED CONSTRUCTION ENTRANCE

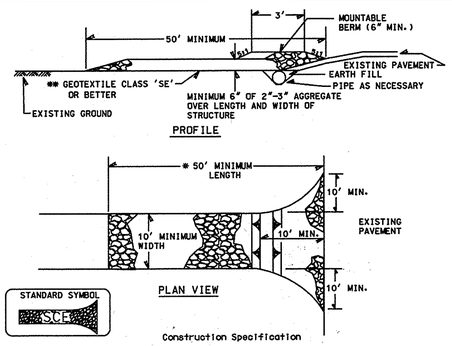

Construction Specification

1. Length - minimum of 50' (*30' for single residence lot).

2. Width - 10' minimum, should be flared at the existing road to provide a turning radius.

3. Geotextile fabric (filter cloth) shall be placed over the existing ground prior to placing stone. **The plan approval authority may not require single family residences to use geotextile.

4. Stone - crushed aggregate (2" to 3") or reclaimed or recycled concrete equivalent shall be placed at least 6" deep over the length and width of the entrance.

5. Surface Water - all surface water flowing to or diverted toward construction entrances shall be piped through the entrance, maintaining positive drainage. Pipe installed through the stabilized construction entrance shall be protected with a mountable berm with 5:1 slopes and a minimum of 6" of stone over the pipe. Pipe has to be sized according to the drainage. When the SCE is located at a high spot and has no drainage to convey a pipe will not be necessary. Pipe should be sized according to the amount of runoff to be conveyed. A 6" minimum will be required.

6. Location - A stabilized construction entrance shall be located at every point where construction traffic enters or leaves a construction site. Vehicles leaving the site must travel over the entire length of the stabilized construction entrance.

U.S. DEPARTMENT OF AGRICULTURE SOIL CONSERVATION SERVICE	PAGE F - 17 - 3	MARYLAND DEPARTMENT OF ENVIRONMENT WATER MANAGEMENT ADMINISTRATION

DETAIL 30 - EROSION CONTROL MATTING

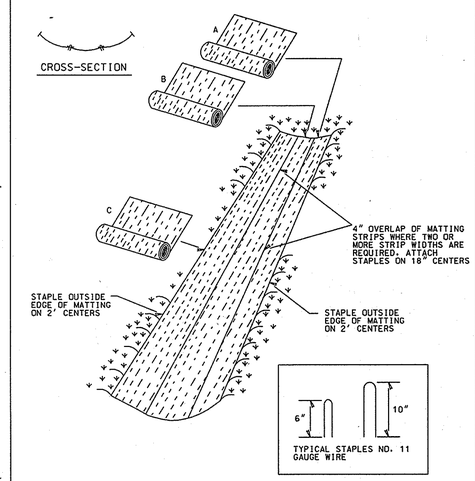

U.S. DEPARTMENT OF AGRICULTURE SOIL CONSERVATION SERVICE	PAGE G - 22 - 2	MARYLAND DEPARTMENT OF ENVIRONMENT WATER MANAGEMENT ADMINISTRATION

DETAIL 5 - RIP-RAP INFLOW PROTECTION

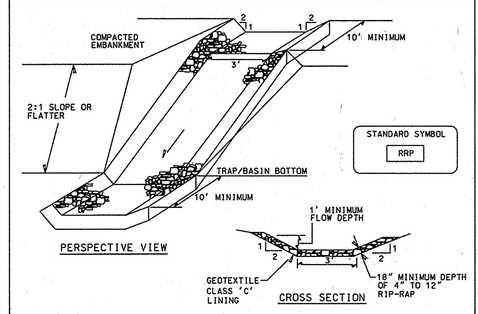

Construction Specifications

1. Rip-rap lined inflow channels shall be 1' in depth, have a trapezoidal cross section with 2:1 or flatter side slopes and 3' (min.) bottom width. The channel shall be lined with 4" to 12" rip- rap to a depth of 18".

2. Filter cloth shall be installed under all rip-rap. Filter cloth shall be Geotextile Class C.

3. Entrance and exit sections shall be installed as shown on the detail section.

4. Rip-rap used for the lining may be recycled for permanent outlet protection if the basin is to be converted to a stormwater management facility.

5. Gabion Inflow Protection may be used in lieu of Rip-rap Inflow Protection.

6. Rip-rap should blend into existing ground.

7. Rip-rap Inflow Protection shall be used where the slope is between 4:1 and 10:1. for slopes flatter than 10:1 use Earth Dike or Temporary Swale lining criteria.

U.S. DEPARTMENT OF AGRICULTURE SOIL CONSERVATION SERVICE	PAGE B - 6 - 2	MARYLAND DEPARTMENT OF ENVIRONMENT WATER MANAGEMENT ADMINISTRATION

SUPER SILT FENCE

Design Criteria

Slope	Slope Steepness	Slope Length (maximum)	Silt Fence Length (maximum)
0 - 10%	0 - 10:1	Unlimited	Unlimited
10 - 20%	10:1 - 5:1	200 feet	1,500 feet
20 - 33%	5:1 - 3:1	100 feet	1,000 feet
33 - 50%	3:1 - 2:1	100 feet	500 feet
50% +	2:1 +	50 feet	250 feet

U.S. DEPARTMENT OF AGRICULTURE SOIL CONSERVATION SERVICE	PAGE H - 26 - 3A	MARYLAND DEPARTMENT OF ENVIRONMENT WATER MANAGEMENT ADMINISTRATION

SILT FENCE

Silt Fence Design Criteria

Slope Steepness	(Maximum) Slope Length	(Maximum) Silt Fence Length
Flatter than 50:1	unlimited	unlimited
50:1 to 10:1	125 feet	1,000 feet
10:1 to 5:1	100 feet	750 feet
5:1 to 3:1	60 feet	500 feet
3:1 to 2:1	40 feet	250 feet
2:1 and steeper	20 feet	125 feet

Note: In areas of less than 2% slope and sandy soils (USDA general classification system, soil Class A) maximum slope length and silt fence length will be unlimited. In these areas a silt fence may be the only perimeter control required.

U.S. DEPARTMENT OF AGRICULTURE SOIL CONSERVATION SERVICE	PAGE E - 15 - 3A	MARYLAND DEPARTMENT OF ENVIRONMENT WATER MANAGEMENT ADMINISTRATION

SUPER FENCE DIVERSION

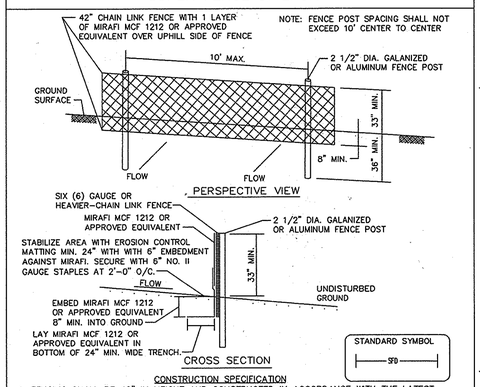

CONSTRUCTION SPECIFICATION

1. FENCING SHALL BE 42" IN HEIGHT AND CONSTRUCTED IN ACCORDANCE WITH THE LATEST MARYLAND STATE HIGHWAY ADMINISTRATION (SHA) DETAILS FOR CHAIN LINK FENCING. THE SPECIFICATIONS FOR A 6'-0" FENCE SHALL BE USED, SUBSTITUTING 42" FABRIC AND 6' LENGTH POSTS.

2. THE POSTS DO NOT NEED TO BE SET IN CONCRETE.

3. CHAIN LINK FENCE TO BE FASTENED SECURELY TO FENCE POSTS WITH WIRE TIES OR STAPLES. THE LOWER TENSION WIRE, BRACE AND TRUSS RODS, ANCHORS AND POST CAPS ARE NOT REQUIRED EXCEPT ON THE ENDS OF THE FENCE. THE CHAIN LINK FENCING SHALL BE SIX (6) GAUGE OR HEAVIER.

4. MIRAFI MCF 1212 OR APPROVED EQUIVALENT SHALL BE FASTENED SECURELY TO THE CHAIN LINK FENCE WITH TIES SPACED EVERY 24" AT TOP AND MID SECTION.

5. MIRAFI MCF 1212 OR APPROVED EQUIVALENT SHALL BE EMBEDDED MINIMUM OF 8" INTO THE GROUND.

6. WHEN THE TWO SECTIONS OF MIRAFI MCF 1212 OR APPROVED EQUIVALENT ADJOIN EACH OTHER THEY SHALL BE OVERLAPPED BY SIX INCHES AND FOLDED.

7. MAINTENANCE SHALL BE PERFORMED AS NEEDED.

8. MAXIMUM FLOW SLOPE 10.0%

9. MAXIMUM DRAINAGE AREA 5 Ac

EROSION CONTROL MATTING

Construction Specifications

1. Key-in the matting by placing the top ends of the matting in a narrow trench, 6" in depth. Backfill the trench and tamp firmly to conform to the channel cross-section. Secure with a row of staples about 4" down slope from the trench. Spacing between staples is 6".

2. Staple the 4" overlap in the channel center using an 18" spacing between staples.

3. Before stapling the outer edges of the matting, make sure the matting is smooth and in firm contact with the soil.

4. Staples shall be placed 2' apart with 4 rows for each strip, 2 outer rows, and 2 alternating rows down the center.

5. Where one roll of matting ends and another begins, the end of the top strip shall overlap the upper end of the lower strip by 4", shiplap fashion. Reinforce the overlap with a double row of staples spaced 6" apart in a staggered pattern on either side.

6. The discharge end of the matting liner should be similarly secured with 2 double rows of staples.

Note: If flow will enter from the edge of the matting then the area effected by the flow must be keyed-in.

U.S. DEPARTMENT OF AGRICULTURE SOIL CONSERVATION SERVICE	PAGE G - 22 - 2A	MARYLAND DEPARTMENT OF ENVIRONMENT WATER MANAGEMENT ADMINISTRATION

By the Owner/Developer

"I/We certify that all development and/or construction will be done according to these plans, and that any responsible personnel involved in the construction project will have a Certificate of Attendence at a Department of the Environment Approved Training Program for the Control of Sediment and Erosion before beginning project. I also authorize periodic on-site inspections by the Howard Soil Conservation District."

Evelyn E Tomlin — 3/14/2012
Signature of Owner/Developer — Date
Print name below signature
EVELYN G. TOMLIN

By the Owner/Engineer

"I certify that this plan for erosion and sediment control represents a prctical and workable plan based on my personal knowledge of the site conditions. this Plan was prepared in accordance with the requirements of the Howard Soil Conservation District."

3/14/2012
Signature of Engineer — Date
Print name below signature
CHARLES S. NOLAN

These plans are approved for soil erosion and sediment control by the Howard Soil Conservation District.

3/27/12
Howard S.C.D. — Date

APPROVED: DEPARTMENT OF PLANNING AND ZONING

CHIEF, DEVELOPMENT ENGINEERING DIVISION	DATE 3-29-12
CHIEF, DIVISION OF LAND DEVELOPMENT	DATE 4-02-12
DIRECTOR	DATE 4/4/12

DEPARTMENT OF PUBLIC WORKS
HOWARD COUNTY, MARYLAND

Evelyn E Tomlin — 3/13/12
CHIEF, BUREAU OF ENVIRONMENTAL SERVICES — DATE

NOLAN Associates, Inc.
Engineers - Civil/Structural/Inspections
4785 Dorsey Hall Drive
Suite 124
Ellicott City, Maryland 21042
Phone: (410) 995-3851 Fax: (410) 995-1363

DES: GWF				
DRN: JRW				
CHK:				
DATE: MARCH 2012	BY	NO.	REVISION	DATE

(FOR PROFESSIONAL CERTIFICATION SEE SHEET CO-1)

EROSION AND SEDIMENT CONTROL NOTES AND DETAILS

600' SCALE MAP NO. 16 BLOCK NO. 8

ALPHA RIDGE LANDFILL
AERATED STATIC PILE COMPOST FACILITY
CAPITAL PROJECT NO. C-0299
TAX MAP 10 & 16. PARCEL NUMBERS 54, 253, 220 & 11
ELECTION DISTRICT NO. 3 HOWARD COUNTY, MARYLAND

SUBDIVISION NAME	LOT /PARCEL
ALPHA RIDGE SOLID WASTE MANAGEMENT CENTER	54, 253, 220, 11

LIBER /FOLIO	ZONE	TAX /ZONE MAP
10-847/606 16-878/215 10-691/314	PEC	10 & 16

WATER CODE	SEWER CODE	CENSUS TR.
PRIVATE, EXISTING	PRIVATE, EXISTING	60-30

SCALE: AS SHOWN

(3/7/02)

SHEET CO-7 OF 9 TOTAL OF 31

SDP-97-128

DRAINAGE AREA SUMMARY

DRAINAGE AREA DESIGNATION	CONTRIBUTING DRAINAGE AREA (AC)	"C"	Tc (MIN.)	I_{10} (in./hr.)	Q_{10} (c.f.s.)	V_{10} (f.p.s.)
GRASS CHANNEL NO. 1	0.13	0.24	5.0	8.5	0.27	0.6
GRASS CHANNEL NO. 2	0.08	0.35	5.0	8.5	0.25	0.7
GRASS CHANNEL NO. 3	0.65	0.40	5.0	8.5	2.21	0.9
GRASS CHANNEL NO. 4	2.34	0.22	11.94	6.05	3.12	1.3
GRASS CHANNEL NO. 5	3.34	0.26	12.61	5.90	5.12	1.3
BIO-SWALE	0.77	0.64	5.0	8.5	4.2	N/A
15 INCH CULVERT	1.64	0.33	10.8	6.36	3.44	9.7
CISTERN	0.05	0.82	5.0	8.5	0.35	N/A
T.D. NO. 1	0.02	0.86	5.0	8.5	0.14	N/A
T.D. NO. 2	0.023	0.85	5.0	8.5	0.17	N/A

NOTE:
"C" VALUE BASED ON HYDROLOGIC CLASS "C" SOIL.

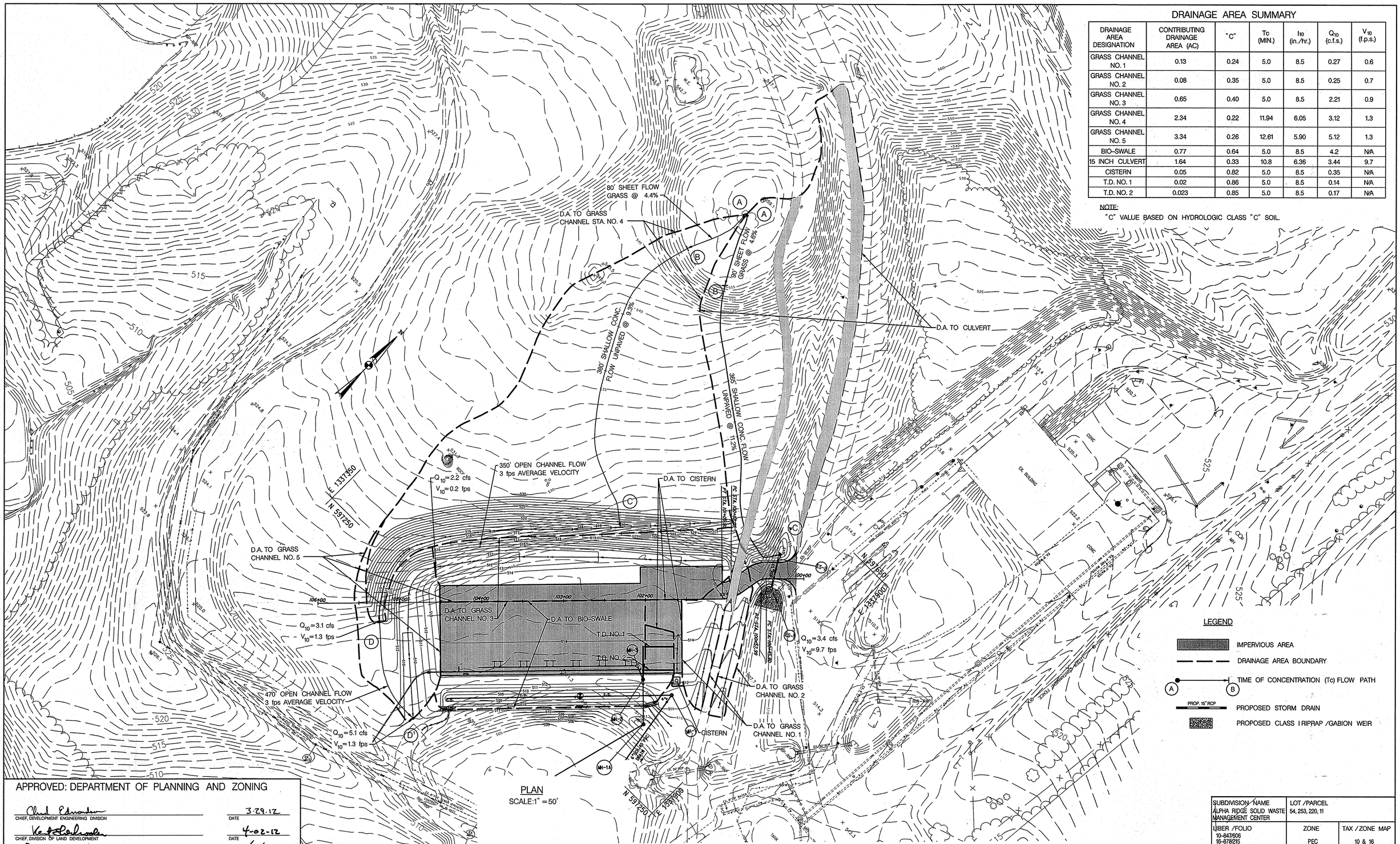

PLAN
SCALE:1" = 50'

APPROVED: DEPARTMENT OF PLANNING AND ZONING

CHIEF, DEVELOPMENT ENGINEERING DIVISION	DATE 3-29-12
CHIEF, DIVISION OF LAND DEVELOPMENT	DATE 4-02-12
DIRECTOR	DATE 4/2/12

(FOR PROFESSIONAL CERTIFICATION, SEE SHEET CO-1)

SUBDIVISION NAME	LOT /PARCEL	
ALPHA RIDGE SOLID WASTE MANAGEMENT CENTER	54, 253, 220, 11	
LIBER /FOLIO 10-847/606 16-678/215 10-691/314	ZONE PEC	TAX / ZONE MAP 10 & 16
WATER CODE PRIVATE, EXISTING	SEWER CODE PRIVATE, EXISTING	CENSUS TR. 60-30

DEPARTMENT OF PUBLIC WORKS
HOWARD COUNTY, MARYLAND

Evelyn E. Tomlin 3/15/12
CHIEF, BUREAU OF ENVIRONMENTAL SERVICES DATE

NOLAN Associates, Inc.
Engineers - Civil/Structural/Inspections
4785 Dorsey Hall Drive
Suite 124
Ellicott City, Maryland 21042
Phone: (410) 995-3851 Fax: (410) 995-1363

STATE OF MARYLAND REGISTERED PROFESSIONAL ENGINEER

DES: GWF				
DRN: JRW				
CHK:				
DATE: MARCH 2012	BY	NO.	REVISION	DATE

DRAINAGE AREA MAP

600' SCALE MAP NO. 16 BLOCK NO. 8

ALPHA RIDGE LANDFILL
AERATED STATIC PILE COMPOST FACILITY

CAPITAL PROJECT NO. C-0299
TAX MAP 10 & 16. PARCEL NUMBERS 54, 253, 220 & 11
ELECTION DISTRICT NO. 3 HOWARD COUNTY, MARYLAND

SCALE: AS SHOWN

(SHT/03) SHEET CO-8 OF 9 TOTAL OF 31

SDP-97-128