CONTRACT DRAWINGS

ALPHA RIDGE SOLID WASTE MANAGEMENT CENTER

HOWARD COUNTY, MARYLAND

CELL 1

CAPITAL PROJECT NUMBER C-0190-B

CONTRACT NUMBER C-0190 B

SUBDIVISION NAME				SECT./AREA	LOT/PARCEL
Alpha Ridge Solid Waste Management Center					54,263,220,11
LIBER/FOLIO 10-547/606 16-678/316 10-661/314	BLOCK	ZONE	TAX/ZONE MAP	ELEC. DIST.	CENSUS TR.
		R	10 & 16	3	60-30
WATER CODE		SEWER CODE			
Private, Existing		Private, Existing			
OWNER/DEVELOPER					
Howard County Government					
ADDRESS					
3430 Court House Drive Ellicott City, MD 21043					

APPROVED: FOR PRIVATE WATER AND PRIVATE SEWERAGE SYSTEMS, HOWARD COUNTY HEALTH DEPARTMENT

COUNTY HEALTH OFFICER — DATE 8-23-90

APPROVED: HOWARD COUNTY DEPT. OF PLANNING & ZONING

DIRECTOR: — DATE 8/28/90

CHIEF, DIVISION OF COMMUNITY PLANNING AND LAND DEVELOPMENT — DATE 8/27/90

APPROVED: FOR STORM DRAINAGE SYSTEMS AND ROADS, HOWARD COUNTY DEPT. OF PUBLIC WORKS

DIRECTOR — DATE 8/23/90

CHIEF, BUREAU OF ENGINEERING — DATE 8-23-90

INDEX OF ADDED RECORD DRAWINGS

SHEET No.	TITLE
5A	BORROW SITE GRADING PLAN
8A	REVISED LEACHATE MNG. AREA
13A	REVISED ACCESS ROAD PROFILE STA. 0 TO STA. 25
21A	REVISED ELECTRICAL
25A	REVISED ELECTRICAL

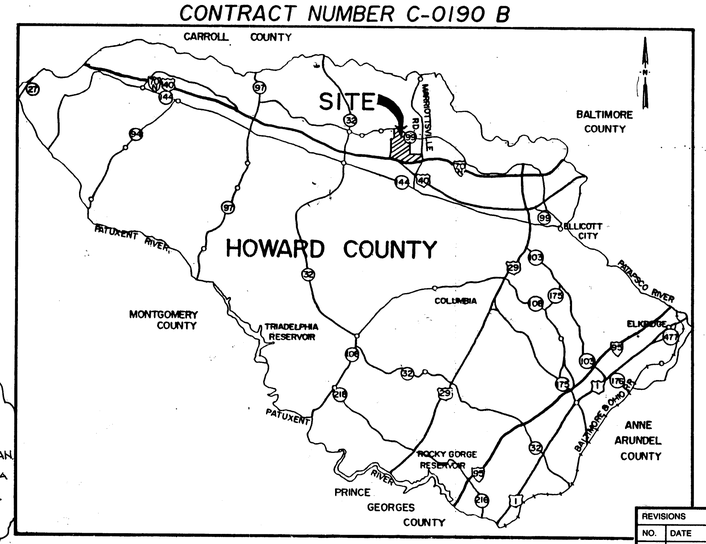

VICINITY MAP

SCALE: 1 INCH = 3 MILES

INDEX OF SHEETS

SHEET NO.	TITLE
1	TITLE SHEET
2	SITE PLAN
3	UNSATURATED SAPROLITE BELOW LINER
4	CELL I BASE GRADING PLAN
5	ROADWAY GRADING PLAN (STA. 0+00 TO 17+00)
6	CELL I OPERATION PLAN
7	CELL I FINAL GRADING PLAN
8	LEACHATE MANAGEMENT AREA
9	BASIN GRADING PLAN
10	CELL I SECTIONS
11	BASIN PROFILES
12	LEACHATE COLLECTION SYSTEM PROFILES
13	MISCELLANEOUS PROFILES
14	EROSION AND SEDIMENT CONTROL PLAN
15	EROSION AND SEDIMENT CONTROL DETAILS
16	OPERATIONAL EROSION AND SEDIMENT CONTROL DETAILS
17	BASIN DETAILS
18	CELL I DETAILS
19	ARCHITECTURAL PLANS
20	PUMP BUILDING
21	LEACHATE PUMP STATION MECHANICAL PLAN
22	LEACHATE MANAGEMENT SYSTEM DETAILS
23	LEACHATE MANAGEMENT AREA DETAILS
24	ELECTRICAL
25	ELECTRICAL DETAILS

RECORD DRAWING

EA ENGINEERING, SCIENCE, AND TECHNOLOGY, INC.

AUGUST 1992

REVISIONS			
NO.	DATE	BY	DESCRIPTION
1	8/92	GBL	RECORD DRAWING INDEX

STATE OF MARYLAND — DAVID T. MOSER — SANITARY ENGINEER — REGISTERED PROFESSIONAL ENGINEER

ALPHA RIDGE SOLID WASTE MANAGEMENT CENTER
HOWARD COUNTY MARYLAND

TITLE SHEET

DESIGN	D. T. M.
DRAWN	D. T. M.
CHECKED	J. F. H.
PROJECT ENGINEER	D.S.S.

EA ENGINEERING, SCIENCE, AND TECHNOLOGY, INC.

Loveton Center
15 Loveton Circle
Sparks, Maryland 21152
(301) 771-4950

BALTIMORE
CHICAGO
LINCOLN
NEW YORK
NEW JERSEY
ATLANTA
DALLAS
LOS ANGELES
SAN FRANCISCO

DATE	JUNE 1990
SCALE	AS SHOWN
PROJECT NO.	10293.C
SHEET NO.	1 OF 25

880

XXAL-90-001
~~10293.01-001~~

SDP 90-90

ALPHA RIDGE LANDFILL PANELS
COORDINATES IN NAD'83 FEET
ELEVATIONS IN FEET

PANEL NUMBER	NORTH	EAST	ELEVATION
HV00	596654.78	1336886.02	526.35
PC01	595733.66	1337856.74	510.81
PC04	507298.09	1338453.33	495.55
PC05	598870.35	1339271.78	548.00
PC06	600370.18	1339244.20	513.06
PC07	598191.26	1336887.65	566.36
PC08	599855.00	1336682.66	561.11
PC09	602346.70	1336578.63	526.17
PC10	597186.12	1334540.67	574.07
PC11	598429.53	1334744.49	576.44
PC12	599799.43	1334659.45	585.44
PC13	601881.34	1335027.83	552.64

HOWARD COUNTY
Department of Public Works
6751 Gateway Drive, Suite 514
Columbia, Maryland 21046

ALPHA RIDGE LANDFILL UNLINED CELL CLOSURE

CAPITAL PROJECT NO. C-0190-N
SITE DEVELOPMENT PLAN

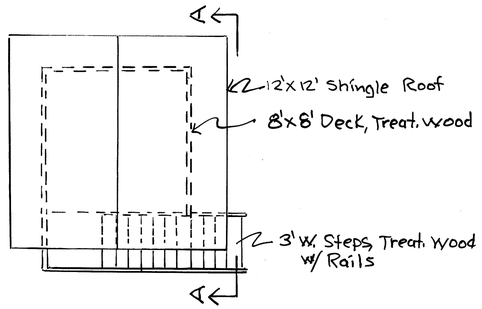

2 PROP. OBSERVATION DECK – PLAN
1/4" = 1'-0"

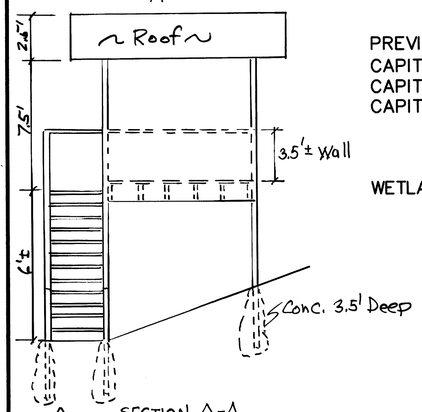

2 SECTION A-A
N.T.S.

PREVIOUS SITE DEVELOPMENT PLAN NUMBER
CAPITAL PROJECT C-4-0108
CAPITAL PROJECT C-4-0109
CAPITAL PROJECT C-0190-B OR SDP-90-90

WETLANDS PERMIT TRACKING NO.: 1997-63409

SITE LOCATION

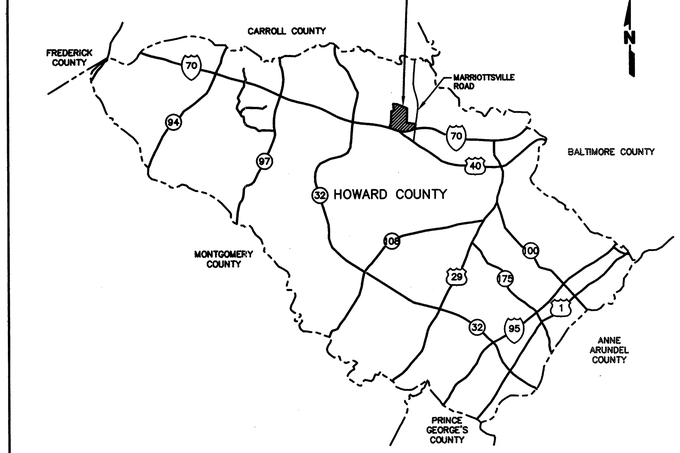

LOCATION MAP
0 2 4 6
SCALE IN MILES

3 ALPHA RIDGE LANDFILL LEACHATE DISPOSAL SYSTEM CAP. PROJ. S-6215

S-1 PLAN & PROFILE
S-2 PLAN & PROFILE
S-3 PLAN & PROFILE
S-4 NOTES & DETAILS

3 Redline SDP 97-128 (Aug '00) Comprised of Sheets 1A & S-1 thru S-4

NOTE: This Site Development Plan is comprised of Plan Sheets 1-78 excepting sheets 57 and 58 (Borrow Area Boring Logs). Sheets 79-89 are architectural detail sheets not part of the SDP.

DRAWING INDEX

3 2 1 1.A COVER SHEET
2. GENERAL NOTES
2 1 3.A OVERALL SITE PLAN
4. EXISTING CONDITIONS PLAN
5. BASE GRADING PLAN
6. BASE GRADING PLAN – SE QUADRANT
7. BASE GRADING PLAN – SW QUADRANT
8. BASE GRADING PLAN – NW QUADRANT
9. BASE GRADING PLAN – NE QUADRANT
10. FINAL SURFACE GRADING PLAN
11. LANDFILL CROSS-SECTIONS
12. LANDFILL CROSS-SECTIONS
13. EAST LEACHATE COLLECTION TRENCH PROFILE
14. EAST LEACHATE COLLECTION TRENCH CROSS-SECTIONS
15. EAST LEACHATE COLLECTION TRENCH CROSS-SECTIONS
16. WEST LEACHATE COLLECTION TRENCH PROFILE
17. WEST LEACHATE COLLECTION TRENCH CROSS-SECTIONS
18. LEACHATE FACILITY LAYOUT AND DETAILS
19. LEACHATE PUMP STATION DETAILS
20. LEACHATE FORCE MAIN PLAN & PROFILE
21. LEACHATE PUMP STATION – ELECTRICAL SITE PLAN
22. LEACHATE PUMP STATION ELECTRICAL DETAILS
23. POND CONSTRUCTION SPECIFICATIONS AND CERTIFICATIONS
24. EAST SEDIMENT BASIN ENLARGED PLAN AND PROFILES
25. EAST SEDIMENT BASIN DETAILS
26. NORTH BASIN ENLARGED PLAN AND PROFILES
27. NORTH BASIN DETAILS
28. WEST DETENTION BASIN ENLARGED PLAN AND PROFILES
29. WEST DETENTION BASIN DETAILS
30. SOUTH SEDIMENT BASIN ENLARGED PLAN AND PROFILES
31. SOUTH SEDIMENT BASIN DETAILS
32. NORTH PERIMETER ACCESS ROAD PLAN & PROFILE
33. NORTH BASIN ACCESS ROAD PROFILE
34. NORTHEAST LANDFILL ACCESS ROAD PLAN & PROFILE
35. CENTRAL ACCESS ROAD & EAST SIDE CHANNEL PLAN & PROFILE
36. WEST SIDE CHANNEL PLAN AND PROFILE
37. DOWNCHUTES & SWALE PROFILES
38. DOWNCHUTES & SWALE PROFILES
39. DOWNCHUTES & SWALE PROFILES
40. SWALE CROSS-SECTIONS
41. SWALE CROSS-SECTIONS
42. VEGETATIVE COVER PLAN
43. VEGETATIVE COVER DETAILS
44. LANDFILL MAINTENANCE ACCESS ROAD PLAN
45. MISCELLANEOUS DETAILS
46. MISCELLANEOUS DETAILS
47. MISCELLANEOUS DETAILS
48. UNLINED CELL DRAINAGE DIVIDES
49. UNLINED CELL EROSION & SEDIMENT CONTROL PLAN
50. EROSION & SEDIMENT CONTROL NOTES-CONSTRUCTION SEQUENCE
51. EROSION & SEDIMENT CONTROL DETAILS
52. EROSION & SEDIMENT CONTROL AND MISCELLANEOUS DETAILS
53. LEACHATE FACILITY LAYOUT AND DETAILS
54. BORROW AREA EXISTING CONDITIONS PLAN
55. BORROW AREA TEST PIT LOGS
56. BORROW AREA TEST PIT LOGS
57. BORROW AREA BORING LOGS
58. BORROW AREA BORING LOGS
59. SOIL BARRIER LAYER BORROW AREAS A1,A2, & A3
60. SOIL BARRIER BORROW AREA CROSS-SECTIONS AND DETAILS
61. BASE GRADING SOIL BORROW AREA B AND CROSS-SECTIONS
62. VEGETATIVE COVER SOIL BORROW AREA C AND CROSS SECTIONS
63. RECREATIONAL PLAN
64. PROFILES AND CROSS SECTIONS
65. RECREATIONAL PLAN DETAILS
66. RECREATIONAL PLAN-DRAINAGE DIVIDES AND EROSION & SEDIMENT CONTROLS
67. LANDFILL CONSTRUCTION SEQUENCE PLAN
68. BORROW AREA SEQUENCE PLAN
69. MISCELLANEOUS E&S DETAILS
70. CLEARWATER 1 BASIN ENLARGED PLAN AND PROFILES
71. CLEARWATER 1 BASIN DETAILS
72. CLEARWATER 2 BASIN ENLARGED PLAN AND PROFILES
73. CLEARWATER 2 BASIN DETAILS
74. BORROW AREA DRAINAGE DIVIDES / EROSION & SEDIMENT CONTROL
75. RISER MODIFICATIONS DURING CONSTRUCTION ACTIVITIES
76. OVERALL LIMIT OF DISTURBANCE
77. MISCELLANEOUS BUILDING ALARM SYSTEMS
78. MISCELLANEOUS BUILDING ALARM SYSTEMS DETAILS
G-1 LINED CELL LFG SYSTEM LAYOUT
G-2 UNLINED CELL LFG COLLECTION SYSTEM LAYOUT
G-3 LFG COLLECTION SYSTEM EXTRACTION WELL DETAILS
G-4 LFG COLLECTION SYSTEM DETAILS
G-5 LFG COLLECTION SYSTEM DETAILS
G-6 LFG HEADER PROFILE
G-7 BLOWER/FLARE STATION DETAILS
G-8 BLOWER STATION/MISCELLANEOUS DETAILS
G-9 BLOWER STATION SHELTER DETAILS
G-10 ELECTRICAL DETAILS
G-11 ELECTRICAL DETAILS

SDP 97-128

SUBDIVISION NAME	LOT/PARCEL	
ALPHA RIDGE SOLID WASTE MANAGEMENT CENTER	54,253,220,11	
LIBER/FOLIO	ZONE	TAX/ZONE MAP
10-847/606 16-878/215 10-891/314	PEC	10 & 16
WATER CODE	SEWER CODE	CENSUS TR.
PRIVATE, EXISTING	PRIVATE, EXISTING	60-30

DEPARTMENT OF PLANNING AND ZONING
HOWARD COUNTY, MARYLAND

DIRECTOR — DATE 11/3/97
CHIEF, DEVELOPMENT ENGINEERING DIVISION — DATE 10/30/97
CHIEF, DIVISION OF LAND DEVELOPMENT — DATE 11/3/97

HOWARD COUNTY MARYLAND HEALTH OFFICER — DATE 10/30/97

DEPARTMENT OF PUBLIC WORKS
HOWARD COUNTY, MARYLAND

DIRECTOR OF PUBLIC WORKS — DATE 10/30/97

SCS ENGINEERS
CONSULTING ENGINEERS
11260 ROGER BACON DRIVE
SUITE 300
STATE OF MARYLAND PAUL ANTHONY MANDEVILLE REG. NO. 22444
STATE OF MARYLAND ROGER BOGGESS

DES. RTT, AST	6	
	5	
DRN. EGC, JCB	4	
S.H.	3	Add Leachate Disposal Sys. 3800LF± Mains 8-16-00
	2	Redline SDP 97-128 (Jun. '99) Comprised of Shts. 1A & 3A only

COVER SHEET

ALPHA RIDGE LANDFILL
UNLINED CELL CLOSURE
CAPITAL PROJECT NO. C-0190-N

SCALE: AS NOTED

M:\295077.01\FINAL SHT1 (PLAN)

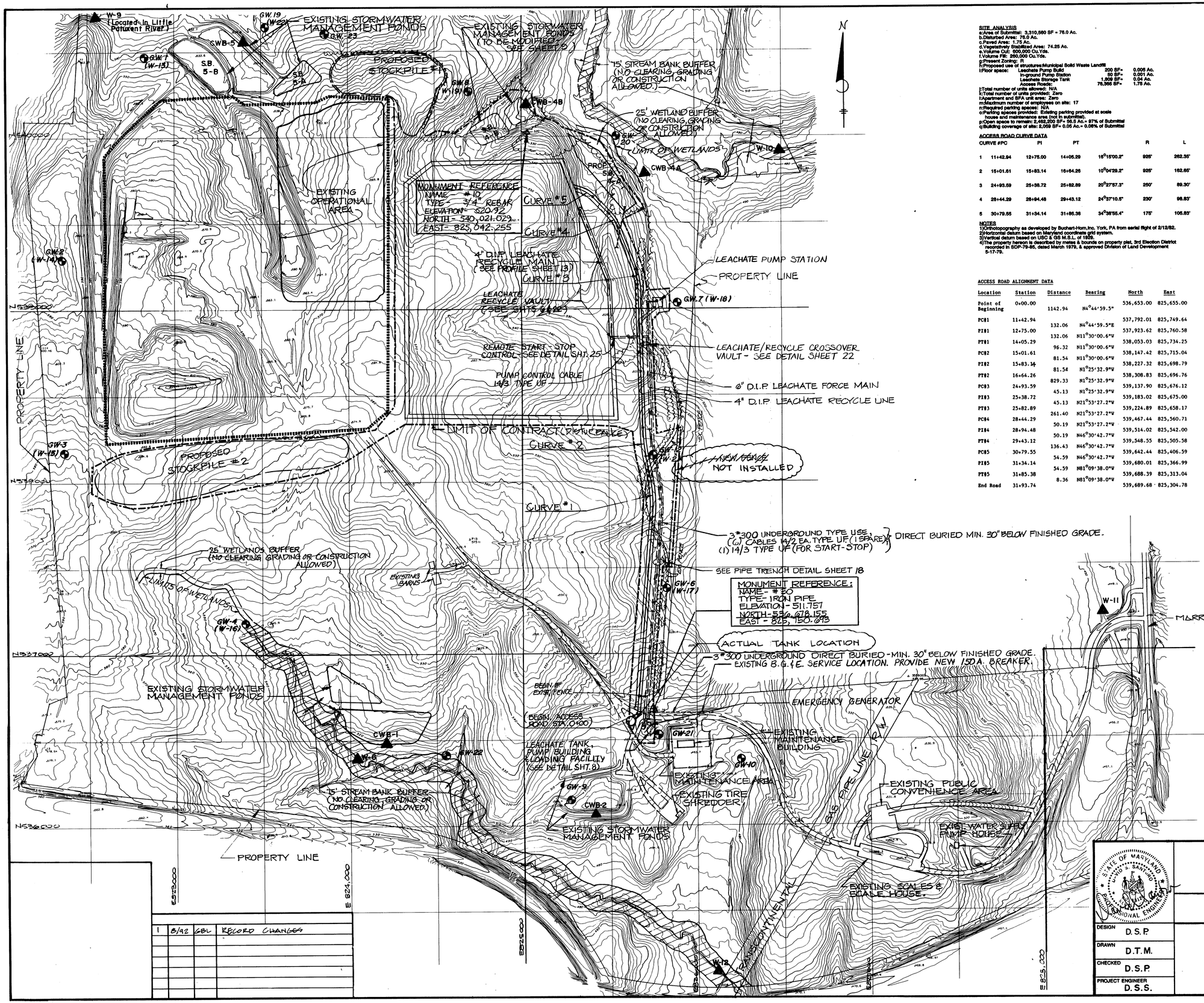

SITE ANALYSIS

a:Area of Submittal: 3,310,560 SF = 76.0 Ac.
b.Disturbed Area: 76.0 Ac.
c.Paved Area: 1.75 Ac.
d.Vegetatively Stabilized Area: 74.25 Ac.
e.Volume Cut: 500,000 Cu.Yds.
f.Volume Fill: 250,000 Cu.Yds.
g:Present Zoning: R
h:Proposed use of structures:Municipal Solid Waste Landfill

i:Floor space:	Leachate Pump Bld	200 SF=	0.005 Ac.
	In-ground Pump Station	50 SF=	0.001 Ac.
	Leachate Storage Tank	1,809 SF=	0.04 Ac.
	Access Roads:	76,365 SF=	1.75 Ac.

j:Total number of units allowed: N/A
k:Total number of units provided: Zero
l:Apartment and SFA unit area: Zero
m:Maximum number of employees on site: 17
n:Required parking spaces: N/A
o:Parking spaces provided: Existing parking provided at scale house and maintenance area (not in submittal).
p:Open space to remain: 2,462,200 SF= 56.5 Ac.= 97% of Submittal
q:Building coverage of site: 2,059 SF= 0.05 Ac.= 0.06% of Submittal

ACCESS ROAD CURVE DATA

CURVE #PC	PI	PT		R	L
1	11+42.94	12+75.00	14+05.29	16°15'00.2"	925'	262.35'
2	15+01.61	15+83.14	16+64.26	10°04'29.2"	925'	162.65'
3	24+93.59	25+38.72	25+82.89	20°27'57.3"	250'	89.30'
4	28+44.29	28+94.48	29+43.12	24°37'10.5"	230'	98.83'
5	30+79.55	31+34.14	31+85.38	34°38'55.4"	175'	105.83'

NOTES

1)Orthotopography as developed by Buchart-Horn,Inc. York, PA from aerial flight of 2/12/82.
2)Horizontal datum based on Maryland coordinate grid system.
3)Vertical datum based on USC & GS M.S.L. of 1929.
4)The property hereon is described by metes & bounds on property plat, 3rd Election District recorded in SDP-79-85, dated March 1979, & approved Division of Land Development 5-17-79.

ACCESS ROAD ALIGNMENT DATA

Location	Station	Distance	Bearing	North	East
Point of Beginning	0+00.00			536,653.00	825,655.00
		1142.94	N4°44'59.5"		
PC#1	11+42.94			537,792.01	825,749.64
		132.06	N4°44'59.5"E		
PI#1	12+75.00			537,923.62	825,760.58
		132.06	N11°30'00.6"W		
PT#1	14+05.29			538,053.03	825,734.25
		96.32	N11°30'00.6"W		
PC#2	15+01.61			538,147.42	825,715.04
		81.54	N11°30'00.6"W		
PI#2	15+83.14			538,227.32	825,698.79
		81.54	N1°25'32.9"W		
PT#2	16+64.26			538,308.83	825,696.76
		829.33	N1°25'32.9"W		
PC#3	24+93.59			539,137.90	825,676.12
		45.13	N1°25'32.9"W		
PI#3	25+38.72			539,183.02	825,675.00
		45.13	N21°53'27.2"W		
PT#3	25+82.89			539,224.89	825,658.17
		261.40	N21°53'27.2"W		
PC#4	28+44.29			539,467.44	825,560.71
		50.19	N21°53'27.2"W		
PI#4	28+94.48			539,514.02	825,542.00
		50.19	N46°30'42.7"W		
PT#4	29+43.12			539,548.55	825,505.58
		136.43	N46°30'42.7"W		
PC#5	30+79.55			539,642.44	825,406.59
		54.59	N46°30'42.7"W		
PI#5	31+34.14			539,680.01	825,366.99
		54.59	N81°09'38.0"W		
PT#5	31+85.38			539,688.39	825,313.04
		8.36	N81°09'38.0"W		
End Road	31+93.74			539,689.68	825,304.78

SUBDIVISION NAME				SECT./AREA	LOT/PARCEL
Alpha Ridge Solid Waste Management Center					54,253,220,11
LIBER/FOLIO 10-847/808 16-978/215 10-891/314	BLOCK	ZONE R	TAX/ZONE MAP 10 & 16	ELEC. DIST. 3	CENSUS TR. 60-30
WATER CODE Private, Existing		SEWER CODE Private, Existing			

OWNER/DEVELOPER
Howard County Government

ADDRESS
3430 Court House Drive Ellicott City, MD 21043

APPROVED: FOR PRIVATE WATER AND PRIVATE SEWERAGE SYSTEMS
HOWARD COUNTY HEALTH DEPARTMENT

COUNTY HEALTH OFFICER	DATE 8-23-90

APPROVED: HOWARD COUNTY DEPT. OF PLANNING & ZONING

DIRECTOR:	DATE 8/28/90
CHIEF, DIVISION OF COMMUNITY PLANNING AND LAND DEVELOPMENT:	DATE 8/23/90

APPROVED: FOR STORM DRAINAGE SYSTEMS AND ROADS.
HOWARD COUNTY DEPT. OF PUBLIC WORKS

DIRECTOR	DATE 8/23/90
CHIEF, BUREAU OF ENGINEERING	DATE 8-23-90

LEGEND

- LIMIT OF CONTRACT (DISTURBANCE)
- EXISTING LANDFILL PERIMETER
- GW-1 EXISTING MONITORING WELLS
- W-1 MAINSTREAM SURFACE SAMPLING LOCATION.
- CWB-1 CLEARWATER BASIN SURFACE SAMPLING LOCATION.

RECORD DRAWING
EA ENGINEERING, SCIENCE, AND TECHNOLOGY, INC.
AUGUST 1992

1	8/92	GBL	RECORD CHANGES

STATE OF MARYLAND — DONALD S. SANTMIRE — PROFESSIONAL ENGINEER

ALPHA RIDGE SOLID WASTE MANAGEMENT CENTER HOWARD COUNTY MARYLAND

SITE PLAN

DESIGN	D.S.P.
DRAWN	D.T.M.
CHECKED	D.S.P.
PROJECT ENGINEER	D.S.S.

EA ENGINEERING, SCIENCE, AND TECHNOLOGY, INC.
Loveton Center
15 Loveton Circle
Sparks, Maryland 21152
(301) 771-4950
BALTIMORE CHICAGO LINCOLN NEW YORK NEW JERSEY ATLANTA DALLAS LOS ANGELES SAN FRANCISCO

DATE	JUNE 1990
SCALE	1" = 250'
PROJECT NO.	10293.01
SHEET NO.	2 OF 25

~~10293.01-002~~
XXAL-90-002

SDP 90-90

082

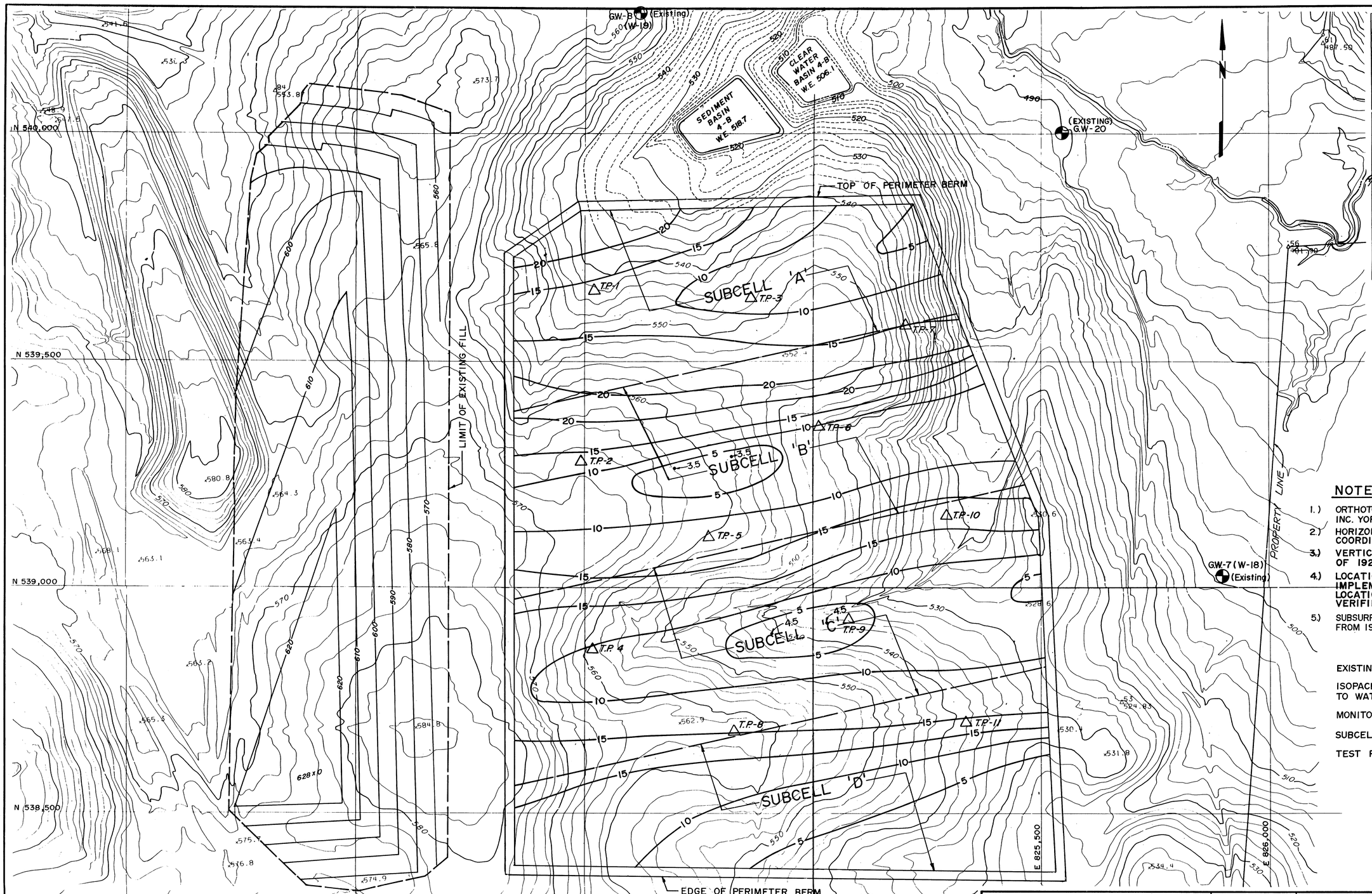

SUBDIVISION NAME				SECT./AREA	LOT/PARCEL
Alpha Ridge Solid Waste Management Center					54,253,220,11
LIBER/FOLIO 10-847/806 15-876/218 10-881/314	BLOCK	ZONE R	TAX/ZONE MAP 10 & 16	ELEC. DIST. 3	CENSUS TR. 60-30

WATER CODE	SEWER CODE
Private, Existing	Private, Existing

OWNER/DEVELOPER
Howard County Government

ADDRESS
3430 Court House Drive Ellicott City, MD 21043

APPROVED: FOR PRIVATE WATER AND PRIVATE SEWERAGE SYSTEMS, HOWARD COUNTY HEALTH DEPARTMENT

COUNTY HEALTH OFFICER — DATE 8-23-90

APPROVED: HOWARD COUNTY DEPT. OF PLANNING & ZONING

DIRECTOR: — DATE 8/28/90

CHIEF, DIVISION OF COMMUNITY PLANNING AND LAND DEVELOPMENT: — DATE 8/23/90

APPROVED: FOR STORM DRAINAGE SYSTEMS AND ROADS. HOWARD COUNTY DEPT. OF PUBLIC WORKS

DIRECTOR — DATE 8/23/90

CHIEF, BUREAU OF ENGINEERING — DATE 8-23-90

NOTES:

1.) ORTHOTOPOGRAPHY AS DEVELOPED BY BUCHART-HORN, INC. YORK PA. FROM AERIAL FLIGHT OF 2/12/82.

2.) HORIZONTAL DATUM BASED ON MARYLAND COORDINATE GRID SYSTEM.

3.) VERTICAL DATUM BASED ON USC & GS M.S.L. OF 1929.

4.) LOCATION OF PONDS AND EXISTING FILL FROM IMPLEMENTATION PLANS DATED 12/79. LOCATIONS AND ELEVATIONS WERE NOT FIELD VERIFIED.

5.) SUBSURFACE AND GROUNDWATER DATA BASED ON RECORDS FROM 1983 TO 1988 AS REFERENCED IN THE SPEC.

LEGEND

EXISTING CONTOURS ..... 540 / 530

ISOPACH CONTOURS OF BASE OF FILL TO WATER TABLE ELEVATIONS. — 10

MONITORING WELLS (GW-I, D-I, P-II) .....

SUBCELL DIVISION LINE .....

TEST PITS ..... △ T.P-11

RECORD DRAWING

EA ENGINEERING, SCIENCE, AND TECHNOLOGY, INC.

AUGUST 1992

NOT IN CONTRACT

REVISIONS			
NO.	DATE	BY	DESCRIPTION

STATE OF MARYLAND — DAVID S. SANTORO — REGISTERED PROFESSIONAL ENGINEER

ALPHA RIDGE SOLID WASTE MANAGEMENT CENTER HOWARD COUNTY MARYLAND

UNSATURATED SAPROLITE BELOW LINER

DESIGN	F.T.B.
DRAWN	D.T.M.
CHECKED	T.J.P.
PROJECT ENGINEER	D.S.S.

EA ENGINEERING, SCIENCE, AND TECHNOLOGY, INC.

Loveton Center
15 Loveton Circle
Sparks, Maryland 21152
(301) 771-4950

BALTIMORE
CHICAGO
LINCOLN
NEW YORK
NEW JERSEY
ATLANTA
DALLAS
LOS ANGELES
SAN FRANCISCO

DATE	JUNE 1990
SCALE	1" = 100'
PROJECT NO.	10293.01
SHEET NO.	3 OF 25

~~10293.01-003~~
XXAI-90-003

SDP 90-90

0880

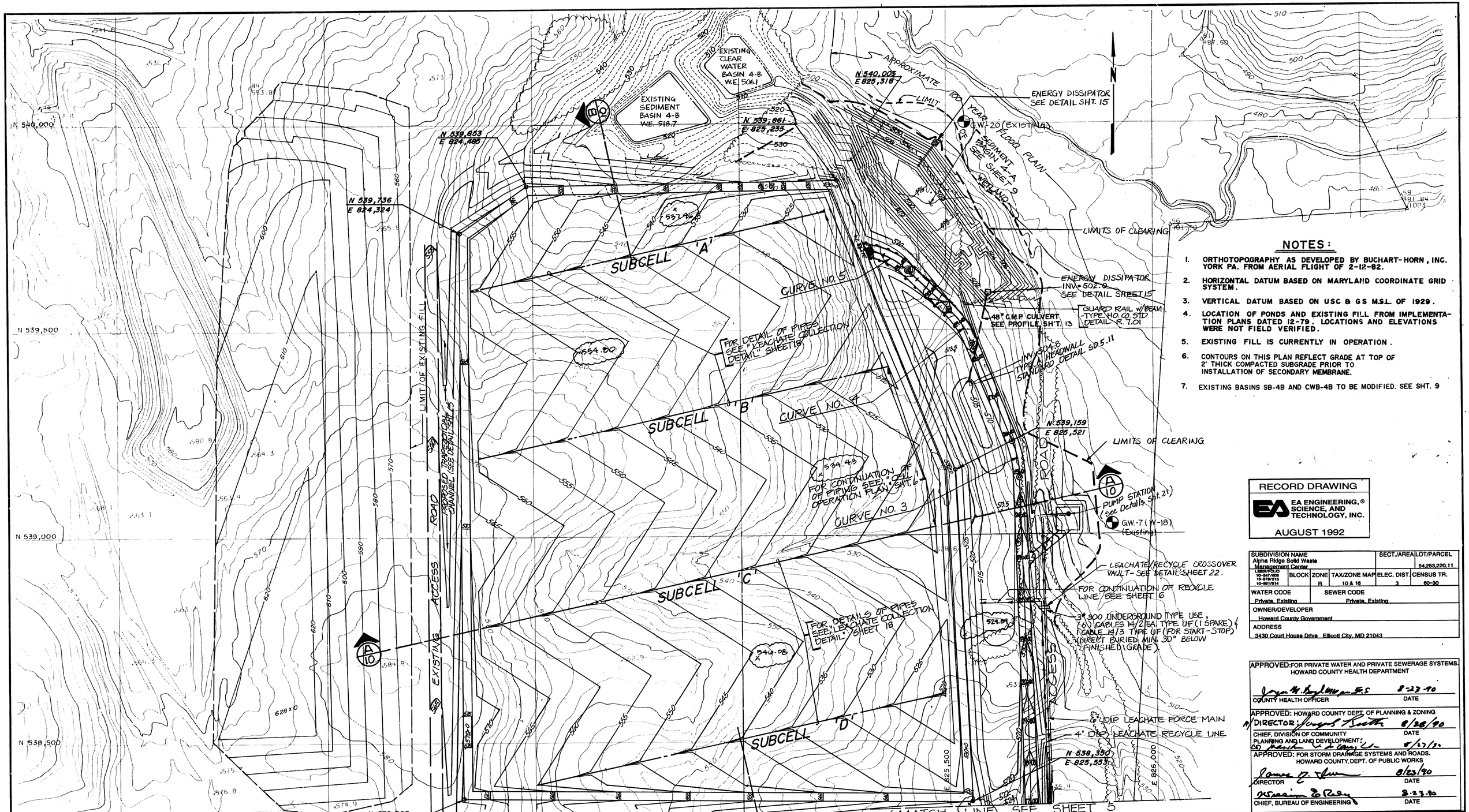

NOTES:

1. ORTHOTOPOGRAPHY AS DEVELOPED BY BUCHART-HORN, INC. YORK PA. FROM AERIAL FLIGHT OF 2-12-82.
2. HORIZONTAL DATUM BASED ON MARYLAND COORDINATE GRID SYSTEM.
3. VERTICAL DATUM BASED ON USC & GS M.S.L. OF 1929.
4. LOCATION OF PONDS AND EXISTING FILL FROM IMPLEMENTATION PLANS DATED 12-79. LOCATIONS AND ELEVATIONS WERE NOT FIELD VERIFIED.
5. EXISTING FILL IS CURRENTLY IN OPERATION.
6. CONTOURS ON THIS PLAN REFLECT GRADE AT TOP OF 2' THICK COMPACTED SUBGRADE PRIOR TO INSTALLATION OF SECONDARY MEMBRANE.
7. EXISTING BASINS SB-4B AND CWB-4B TO BE MODIFIED. SEE SHT. 9

RECORD DRAWING

EA ENGINEERING, SCIENCE, AND TECHNOLOGY, INC.

AUGUST 1992

SUBDIVISION NAME				SECT./AREA	LOT/PARCEL
Alpha Ridge Solid Waste Management Center					54,263,220,11
LIBER/FOLIO 10-847/806 10-878/316 10-861/614	BLOCK	ZONE R	TAX/ZONE MAP 10 & 16	ELEC. DIST. 3	CENSUS TR. 60-30
WATER CODE Private, Existing		SEWER CODE Private, Existing			
OWNER/DEVELOPER Howard County Government					
ADDRESS 3430 Court House Drive Ellicott City, MD 21043					

APPROVED: FOR PRIVATE WATER AND PRIVATE SEWERAGE SYSTEMS. HOWARD COUNTY HEALTH DEPARTMENT

COUNTY HEALTH OFFICER — DATE 8-23-90

APPROVED: HOWARD COUNTY DEPT. OF PLANNING & ZONING

DIRECTOR — DATE 8/28/90

CHIEF, DIVISION OF COMMUNITY PLANNING AND LAND DEVELOPMENT — DATE 8/27/90

APPROVED: FOR STORM DRAINAGE SYSTEMS AND ROADS. HOWARD COUNTY, DEPT. OF PUBLIC WORKS

DIRECTOR — DATE 8/23/90

CHIEF, BUREAU OF ENGINEERING — DATE 8-23-90

REVISION			
NO.	DATE	BY	DESCRIPTION
1	8/92	GBL	RECORD CHANGES

STATE OF MARYLAND — DAVID S. SANTORO — No. 10194 — PROFESSIONAL ENGINEER

ALPHA RIDGE SOLID WASTE MANAGEMENT CENTER HOWARD COUNTY MARYLAND

CELL I BASE GRADING PLAN

DESIGN	D.S.P.
DRAWN	D.T.M.
CHECKED	J.F.H.
PROJECT ENGINEER	D.S.S.

EA ENGINEERING, SCIENCE, AND TECHNOLOGY, INC.

Loveton Center
15 Loveton Circle
Sparks, Maryland 21152
(301) 771-4950

BALTIMORE CHICAGO LINCOLN NEW YORK NEW JERSEY ATLANTA DALLAS LOS ANGELES SAN FRANCISCO

DATE	JUNE 1990
SCALE	1" = 100'
PROJECT NO.	10293.01
SHEET NO.	4 OF 25

~~10293.01-004~~
XXAL-90-004

SDP 90-90

0878

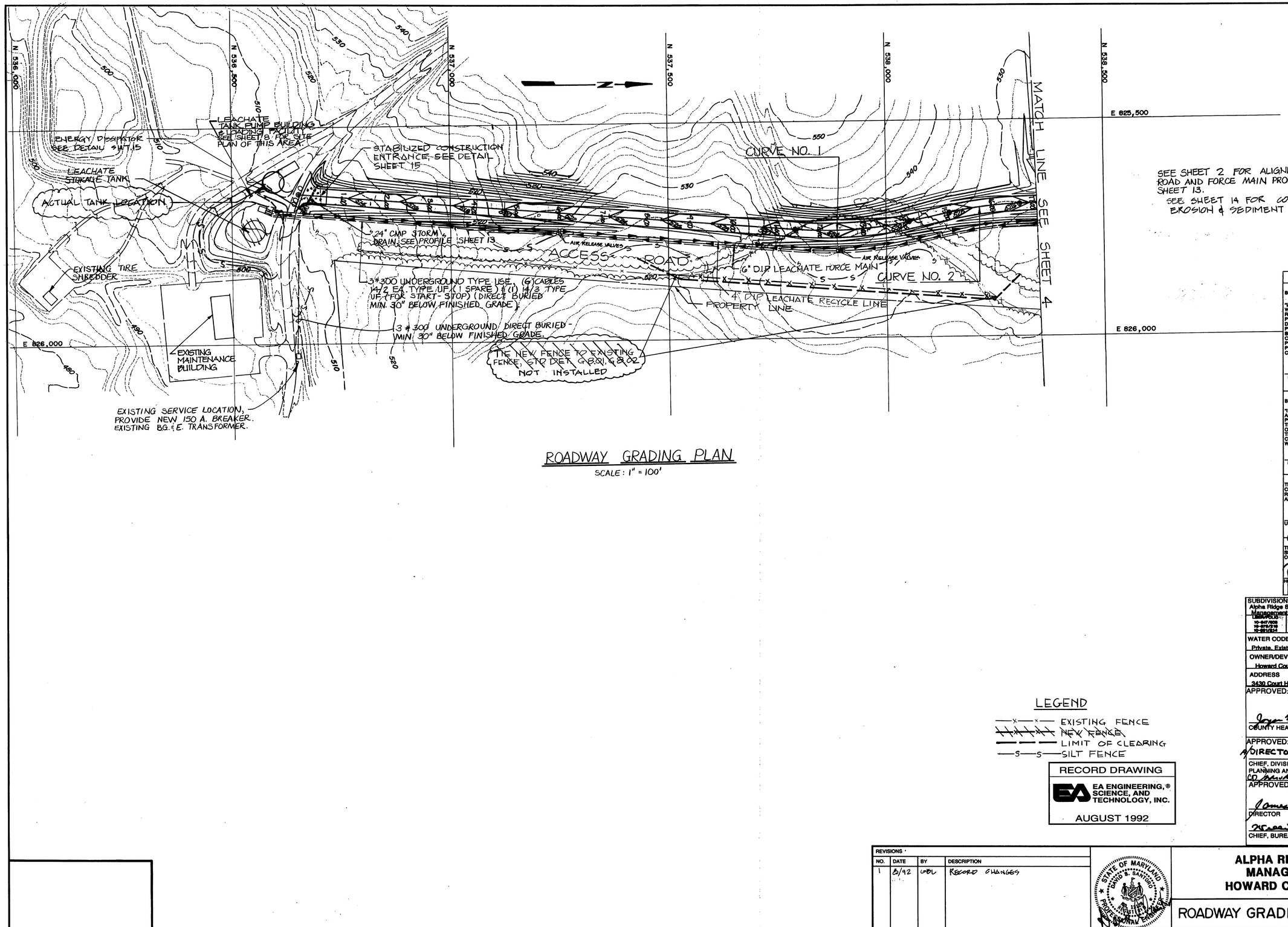

SEE SHEET 2 FOR ALIGNMENT DATA. ROAD AND FORCE MAIN PROFILE SHOWN ON SHEET 13.
SEE SHEET 14 FOR CONTINUATION OF EROSION & SEDIMENT CONTROL FEATURES

ROADWAY GRADING PLAN

SCALE: 1" = 100'

LEGEND

—x—x— EXISTING FENCE
NEW FENCE
— — — LIMIT OF CLEARING
—S—S— SILT FENCE

RECORD DRAWING

EA ENGINEERING, SCIENCE, AND TECHNOLOGY, INC.

AUGUST 1992

SEDIMENT CONTROL & POND CONSTRUCTION

BY THE DEVELOPER:

"I/WE CERTIFY THAT ALL DEVELOPMENT AND/OR CONSTRUCTION WILL BE DONE ACCORDING TO THESE PLANS, AND THAT ANY RESPONSIBLE PERSONNEL INVOLVED IN THE CONSTRUCTION PROJECT WILL HAVE A CERTIFICATE OF ATTENDANCE AT A DEPARTMENT OF THE ENVIRONMENT APPROVED TRAINING PROGRAM FOR THE CONTROL OF SEDIMENT AND EROSION BEFORE BEGINNING THE PROJECT. I WILL PROVIDE THE HOWARD SOIL CONSERVATION DISTRICT WITH AN "AS-BUILT" PLAN OF THE PONDS WITHIN 30 DAYS OF COMPLETION. I ALSO AUTHORIZE PERIODIC ON-SITE INSPECTIONS BY THE HOWARD SOIL CONSERVATION DISTRICT."

SIGNATURE OF DEVELOPER — DATE 8-23-90

BY THE ENGINEER:

"I CERTIFY THAT THIS PLAN FOR POND CONSTRUCTION, EROSION AND SEDIMENT CONTROL REPRESENTS A PRACTICAL AND WORKABLE PLAN BASED ON MY PERSONAL KNOWLEDGE OF THE SITE CONDITIONS. THIS PLAN WAS PREPARED IN ACCORDANCE WITH THE REQUIREMENTS OF THE HOWARD SOIL CONSERVATION DISTRICT. I HAVE NOTIFIED THE DEVELOPER THAT HE MUST PROVIDE THE HOWARD SOIL CONSERVATION DISTRICT WITH AN "AS-BUILT" PLAN OF THE PONDS WITHIN 30 DAYS OF COMPLETION."

SIGNATURE OF ENGINEER — DATE 21 August 1990

THESE PLANS HAVE BEEN REVIEWED FOR THE HOWARD SOIL CONSERVATION DISTRICT AND MEET THE TECHNICAL REQUIREMENTS FOR SMALL POND CONSTRUCTION, SOIL EROSION AND SEDIMENT CONTROL. Reviewed Engr/GS. 8/20/90

U.S. SOIL CONSERVATION SERVICE — DATE 8/23/90

8/19/92

THESE PLANS FOR SMALL POND CONSTRUCTION, SOIL EROSION AND SEDIMENT CONTROL MEET THE REQUIREMENTS OF THE HOWARD SOIL CONSERVATION DISTRICT. Reviewed Engr/GS. 8/20/90

HOWARD SOIL CONSERVATION DISTRICT — DATE 8/23/90

8/19/92

SUBDIVISION NAME				SECT./AREA	LOT/PARCEL
Alpha Ridge Solid Waste Management Center					54,253,220,11
LOT/PARCEL 10-247/608 10-247/618 10-251/614	BLOCK	ZONE	TAX/ZONE MAP	ELEC. DIST.	CENSUS TR.
		R	10 & 16	3	80-90

WATER CODE: Private, Existing — SEWER CODE: Private, Existing

OWNER/DEVELOPER: Howard County Government

ADDRESS: 3430 Court House Drive Ellicott City, MD 21043

APPROVED: FOR PRIVATE WATER AND PRIVATE SEWERAGE SYSTEMS, HOWARD COUNTY HEALTH DEPARTMENT

COUNTY HEALTH OFFICER — DATE 8-23-90

APPROVED: HOWARD COUNTY DEPT. OF PLANNING & ZONING

DIRECTOR — DATE 8/28/90

CHIEF, DIVISION OF COMMUNITY PLANNING AND LAND DEVELOPMENT — DATE 8/21/90

APPROVED: FOR STORM DRAINAGE SYSTEMS AND ROADS, HOWARD COUNTY DEPT. OF PUBLIC WORKS

DIRECTOR — DATE 8/23/90

CHIEF, BUREAU OF ENGINEERING — DATE 8-23-90

REVISIONS			
NO.	DATE	BY	DESCRIPTION
1	8/92	WBL	RECORD CHANGES

STATE OF MARYLAND — DAVID S. SANTORO — REGISTERED PROFESSIONAL ENGINEER

DESIGN	D.S.P
DRAWN	D.T.M.
CHECKED	D.S.P
PROJECT ENGINEER	D.S.S.

ALPHA RIDGE SOLID WASTE MANAGEMENT CENTER HOWARD COUNTY MARYLAND

ROADWAY GRADING PLAN (STA. 0+00-17+00)

EA ENGINEERING, SCIENCE, AND TECHNOLOGY, INC.
BALTIMORE, CHICAGO, LINCOLN, NEW YORK, NEW JERSEY, ATLANTA, DALLAS, LOS ANGELES, SAN FRANCISCO

Loveton Center
15 Loveton Circle
Sparks, Maryland 21152
(301) 771-4950

DATE	JUNE 1990
SCALE	AS SHOWN
PROJECT NO.	10293.01
SHEET NO.	5 OF 25

~~10293.01-005~~
XXAL-90-005

SDP 90-90

080

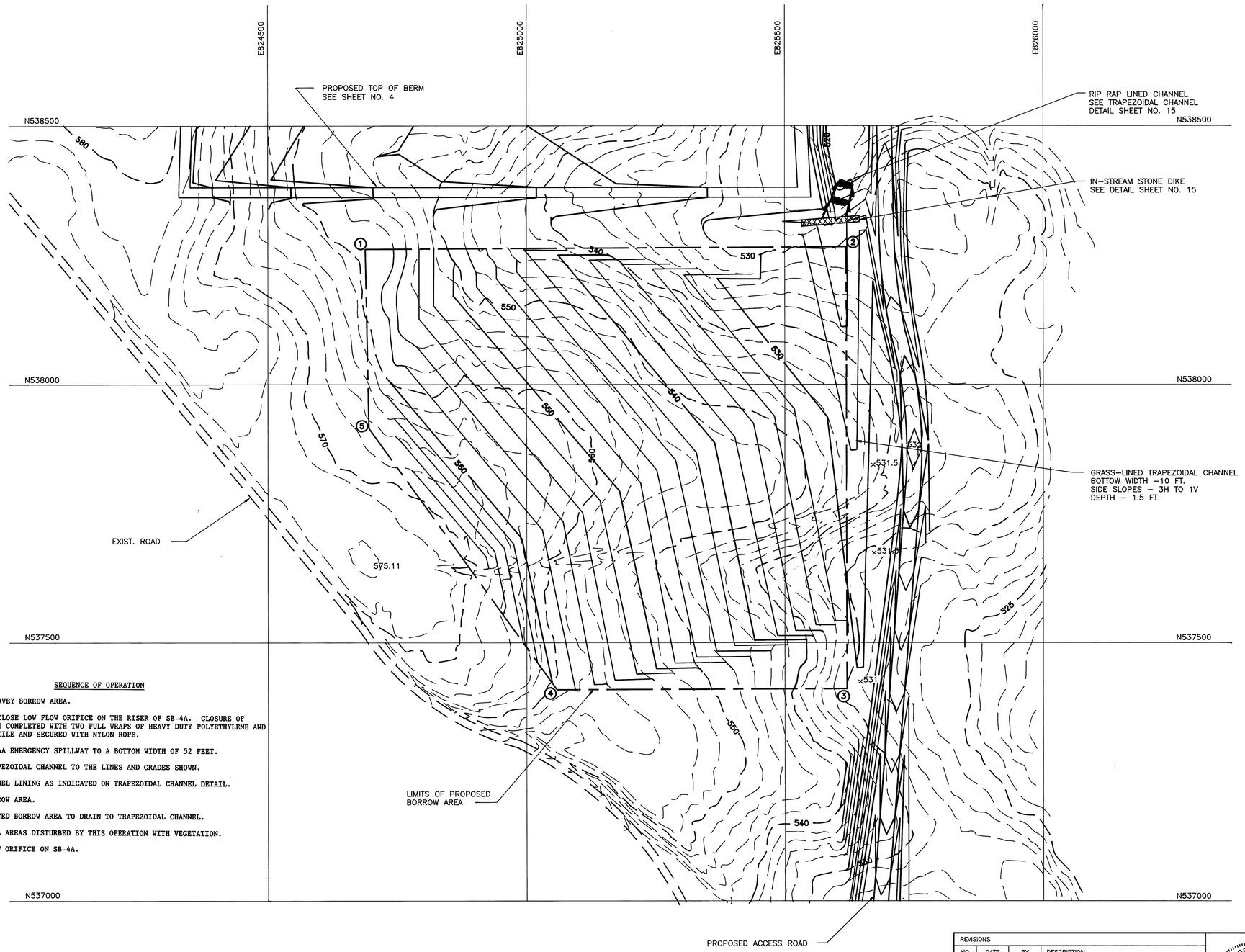

SEDIMENT CONTROL & POND CONSTRUCTION

BY THE DEVELOPER:

"I/WE CERTIFY THAT ALL DEVELOPMENT AND/OR CONSTRUCTION WILL BE DONE ACCORDING TO THESE PLANS, AND THAT ANY RESPONSIBLE PERSONNEL INVOLVED IN THE CONSTRUCTION PROJECT WILL HAVE A CERTIFICATE OF ATTENDANCE AT A DEPARTMENT OF THE ENVIRONMENT APPROVED TRAINING PROGRAM FOR THE CONTROL OF SEDIMENT AND EROSION BEFORE BEGINNING THE PROJECT. I WILL PROVIDE THE HOWARD SOIL CONSERVATION DISTRICT WITH AN "AS-BUILT" PLAN OF THE PONDS WITHIN 30 DAYS OF COMPLETION. I ALSO AUTHORIZE PERIODIC ON-SITE INSPECTIONS BY THE HOWARD SOIL CONSERVATION DISTRICT."

SIGNATURE OF DEVELOPER — DATE 3-15-91

BY THE ENGINEER:

"I CERTIFY THAT THIS PLAN FOR POND CONSTRUCTION, EROSION AND SEDIMENT CONTROL REPRESENTS A PRACTICAL AND WORKABLE PLAN BASED ON MY PERSONAL KNOWLEDGE OF THE SITE CONDITIONS. THIS PLAN WAS PREPARED IN ACCORDANCE WITH THE REQUIREMENTS OF THE HOWARD SOIL CONSERVATION DISTRICT. I HAVE NOTIFIED THE DEVELOPER THAT HE MUST PROVIDE THE HOWARD SOIL CONSERVATION DISTRICT WITH AN "AS-BUILT" PLAN OF THE PONDS WITHIN 30 DAYS OF COMPLETION."

SIGNATURE OF ENGINEER — DATE 11 MARCH 91

THESE PLANS HAVE BEEN REVIEWED FOR THE HOWARD SOIL CONSERVATION DISTRICT AND MEET THE TECHNICAL REQUIREMENTS FOR SMALL POND CONSTRUCTION, SOIL EROSION, AND SEDIMENT CONTROL.

Patricia Engler for U.S. 8/29/91

U.S. SOIL CONSERVATION SERVICE — DATE 3/15/91

8/19/92

THESE PLANS FOR SMALL POND CONSTRUCTION, SOIL EROSION AND SEDIMENT CONTROL MEET THE REQUIREMENTS OF THE HOWARD SOIL CONSERVATION DISTRICT.

8/29/91

HOWARD SOIL CONSERVATION DISTRICT — DATE 3/15/91

8/19/92

N

LEGEND

— — — —	EXIST. CONTOURS
— — 530 — —	PROPOSED GRADING
— — — —	LIMIT OF DISTURBANCE
1	N538262 E824688
2	N538267 E825619
3	N537411 E825620
4	N537409 E825058
5	N537912 E824695

RECORD DRAWING

EA ENGINEERING, SCIENCE, AND TECHNOLOGY, INC.

AUGUST 1992

SEQUENCE OF OPERATION

1. STAKE AND SURVEY BORROW AREA.
2. TEMPORARILY CLOSE LOW FLOW ORIFICE ON THE RISER OF SB-4A. CLOSURE OF ORIFICE TO BE COMPLETED WITH TWO FULL WRAPS OF HEAVY DUTY POLYETHYLENE AND WOVEN GEOTEXTILE AND SECURED WITH NYLON ROPE.
3. EXCAVATE SB-4A EMERGENCY SPILLWAY TO A BOTTOM WIDTH OF 52 FEET.
4. EXCAVATE TRAPEZOIDAL CHANNEL TO THE LINES AND GRADES SHOWN.
5. INSTALL CHANNEL LINING AS INDICATED ON TRAPEZOIDAL CHANNEL DETAIL.
6. EXCAVATE BORROW AREA.
7. GRADE COMPLETED BORROW AREA TO DRAIN TO TRAPEZOIDAL CHANNEL.
8. STABILIZE ALL AREAS DISTURBED BY THIS OPERATION WITH VEGETATION.
9. OPEN LOW FLOW ORIFICE ON SB-4A.

0 100 200 300 400

SCALE: 1" = 100'

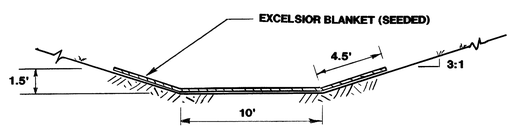

GRASS-LINED TRAPEZOIDAL CHANNEL DETAIL

NOT TO SCALE

REVISIONS			
NO.	DATE	BY	DESCRIPTION

STATE OF MARYLAND — DAVID S. SANTORO — No. 8000 — PROFESSIONAL ENGINEER

DESIGN	JWW
DRAWN	AMP
CHECKED	DSP
PROJECT ENGINEER	DSS

ALPHA RIDGE SOLID WASTE MANAGEMENT CENTER
HOWARD COUNTY, MARYLAND

BORROW SITE GRADING PLAN

EA ENGINEERING, SCIENCE, AND TECHNOLOGY, INC.

Loveton Center
15 Loveton Circle
Sparks, Maryland 21152
(301) 771-4950

BALTIMORE
CHICAGO
LINCOLN
NEW YORK
NEW JERSEY
ATLANTA
DALLAS
LOS ANGELES
SAN FRANCISCO

DATE	FEBRUARY 22, 1991
SCALE	AS SHOWN
PROJECT NO.	11766.01
SHEET NO.	5A OF 25

~~10793.01-005A~~ SDP 90-90

XXAL-90-005A

080

MANHOLE LOCATION COORDINATE SCHEDULE

MANHOLES	NORTH	EAST
MH-1	539,812	825,296
MH-A	539,803	825,297
MH-2	539,437	825,465
MH-B	539,428	825,465
MH-3	539,460	825,605
MH-4	539,040	825,560
MH-C	539,030	825,560
MH-5	539,075	825,715
MH-6	538,643	825,579
MH-D	538,634	825,579
MH-7	538,670	825,720

SEDIMENT CONTROL & POND CONSTRUCTION

BY THE DEVELOPER:

"I/WE CERTIFY THAT ALL DEVELOPMENT AND/OR CONSTRUCTION WILL BE DONE ACCORDING TO THESE PLANS, AND THAT ANY RESPONSIBLE PERSONNEL INVOLVED IN THE CONSTRUCTION PROJECT WILL HAVE A CERTIFICATE OF ATTENDANCE AT A DEPARTMENT OF THE ENVIRONMENT APPROVED TRAINING PROGRAM FOR THE CONTROL OF SEDIMENT AND EROSION BEFORE BEGINNING THE PROJECT. I WILL PROVIDE THE HOWARD SOIL CONSERVATION DISTRICT WITH AN "AS-BUILT" PLAN OF THE PONDS WITHIN 30 DAYS OF COMPLETION. I ALSO AUTHORIZE PERIODIC ON-SITE INSPECTIONS BY THE HOWARD SOIL CONSERVATION DISTRICT."

SIGNATURE OF DEVELOPER — DATE 8/27/90

BY THE ENGINEER:

"I CERTIFY THAT THIS PLAN FOR POND CONSTRUCTION, EROSION AND SEDIMENT CONTROL REPRESENTS A PRACTICAL AND WORKABLE PLAN BASED ON MY PERSONAL KNOWLEDGE OF THE SITE CONDITIONS. THIS PLAN WAS PREPARED IN ACCORDANCE WITH THE REQUIREMENTS OF THE HOWARD SOIL CONSERVATION DISTRICT. I HAVE NOTIFIED THE DEVELOPER THAT HE MUST PROVIDE THE HOWARD SOIL CONSERVATION DISTRICT WITH AN "AS-BUILT" PLAN OF THE PONDS WITHIN 30 DAYS OF COMPLETION."

SIGNATURE OF ENGINEER — DATE 21 Aug 1990

THESE PLANS HAVE BEEN REVIEWED FOR THE HOWARD SOIL CONSERVATION DISTRICT AND MEET THE TECHNICAL REQUIREMENTS FOR SMALL POND CONSTRUCTION, SOIL EROSION AND SEDIMENT CONTROL.

U.S. SOIL CONSERVATION SERVICE — DATE 8/27/90 — 8/19/92

THESE PLANS FOR SMALL POND CONSTRUCTION, SOIL EROSION AND SEDIMENT CONTROL MEET THE REQUIREMENTS OF THE HOWARD SOIL CONSERVATION DISTRICT.

HOWARD SOIL CONSERVATION DISTRICT — DATE 8/27/90 — 8/19/92

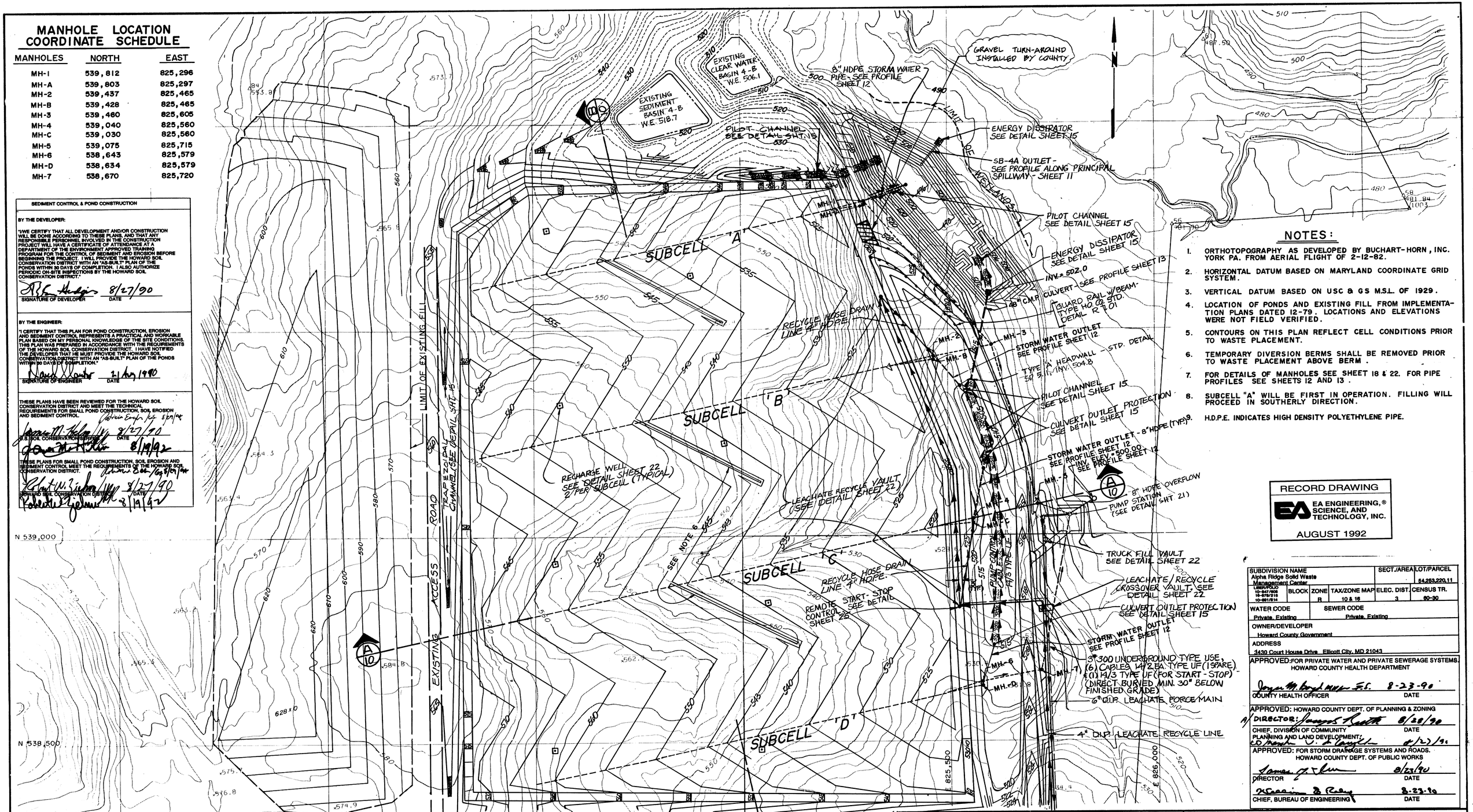

NOTE: EXISTING CONTOURS SHOWN DO NOT REFLECT CURRENT CONDITIONS.

NOTES:

1. ORTHOTOPOGRAPHY AS DEVELOPED BY BUCHART-HORN, INC. YORK PA. FROM AERIAL FLIGHT OF 2-12-82.
2. HORIZONTAL DATUM BASED ON MARYLAND COORDINATE GRID SYSTEM.
3. VERTICAL DATUM BASED ON USC & GS M.S.L. OF 1929.
4. LOCATION OF PONDS AND EXISTING FILL FROM IMPLEMENTATION PLANS DATED 12-79. LOCATIONS AND ELEVATIONS WERE NOT FIELD VERIFIED.
5. CONTOURS ON THIS PLAN REFLECT CELL CONDITIONS PRIOR TO WASTE PLACEMENT.
6. TEMPORARY DIVERSION BERMS SHALL BE REMOVED PRIOR TO WASTE PLACEMENT ABOVE BERM.
7. FOR DETAILS OF MANHOLES SEE SHEET 18 & 22. FOR PIPE PROFILES SEE SHEETS 12 AND 13.
8. SUBCELL "A" WILL BE FIRST IN OPERATION. FILLING WILL PROCEED IN SOUTHERLY DIRECTION.
9. H.D.P.E. INDICATES HIGH DENSITY POLYETHYLENE PIPE.

RECORD DRAWING
EA ENGINEERING, SCIENCE, AND TECHNOLOGY, INC.
AUGUST 1992

SUBDIVISION NAME				SECT./AREA	LOT/PARCEL
Alpha Ridge Solid Waste Management Center					54,263,220,11
LIBER/FOLIO 10-547/608 10-676/215 10-691/614	BLOCK	ZONE R	TAX/ZONE MAP 10 & 16	ELEC. DIST. 3	CENSUS TR. 60-30
WATER CODE Private, Existing		SEWER CODE Private, Existing			
OWNER/DEVELOPER Howard County Government					
ADDRESS 3430 Court House Drive Ellicott City, MD 21043					

APPROVED: FOR PRIVATE WATER AND PRIVATE SEWERAGE SYSTEMS. HOWARD COUNTY HEALTH DEPARTMENT

COUNTY HEALTH OFFICER — DATE 8-23-90

APPROVED: HOWARD COUNTY DEPT. OF PLANNING & ZONING

A/DIRECTOR: — DATE 8/28/90

CHIEF, DIVISION OF COMMUNITY PLANNING AND LAND DEVELOPMENT: — DATE 8/27/90

APPROVED: FOR STORM DRAINAGE SYSTEMS AND ROADS. HOWARD COUNTY DEPT. OF PUBLIC WORKS

DIRECTOR — DATE 8/23/90

CHIEF, BUREAU OF ENGINEERING — DATE 8-23-90

REVISIONS			
NO.	DATE	BY	DESCRIPTION
1	8/92	BBL	RECORD CHANGES

STATE OF MARYLAND — DAVID S. BARTHOLOMEW — REGISTERED PROFESSIONAL ENGINEER — NO. 11708

ALPHA RIDGE SOLID WASTE MANAGEMENT CENTER HOWARD COUNTY MARYLAND

CELL I OPERATION PLAN

DESIGN	D.S.P.
DRAWN	D.T.M.
CHECKED	J.F.H.
PROJECT ENGINEER	D.S.S.

EA ENGINEERING, SCIENCE, AND TECHNOLOGY, INC.
Loveton Center, 15 Loveton Circle, Sparks, Maryland 21152, (301) 771-4950
BALTIMORE, CHICAGO, LINCOLN, NEW YORK, NEW JERSEY, ATLANTA, LOS ANGELES, DALLAS, SAN FRANCISCO

DATE	JUNE 1990
SCALE	1" = 100'
PROJECT NO.	10293.01
SHEET NO.	6 OF 25

XXAL-90-006
~~10293.01-006~~

SDP 90-90

088

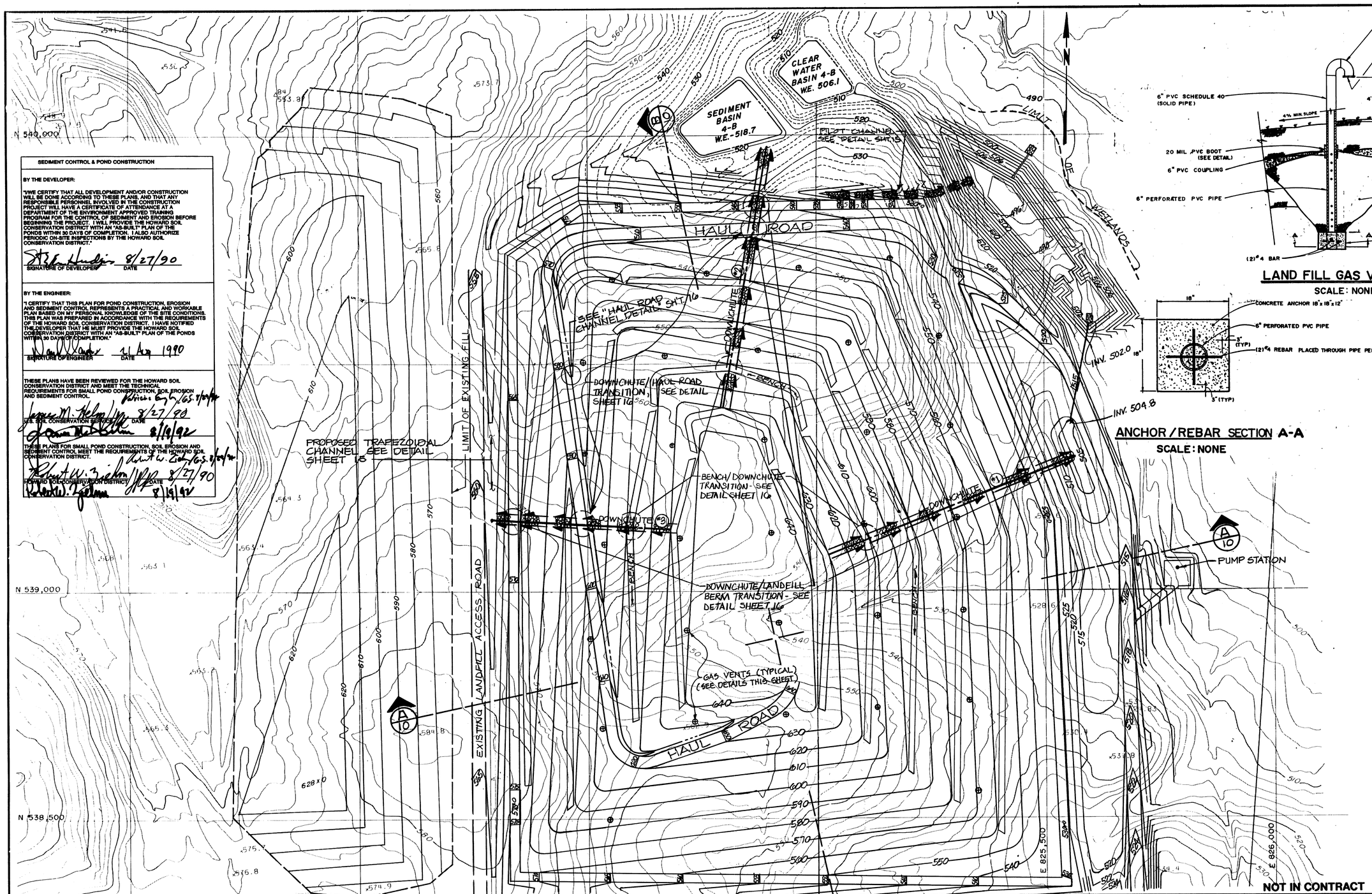

SEDIMENT CONTROL & POND CONSTRUCTION

BY THE DEVELOPER:

"WE CERTIFY THAT ALL DEVELOPMENT AND/OR CONSTRUCTION WILL BE DONE ACCORDING TO THESE PLANS, AND THAT ANY RESPONSIBLE PERSONNEL INVOLVED IN THE CONSTRUCTION PROJECT WILL HAVE A CERTIFICATE OF ATTENDANCE AT A DEPARTMENT OF THE ENVIRONMENT APPROVED TRAINING PROGRAM FOR THE CONTROL OF SEDIMENT AND EROSION BEFORE BEGINNING THE PROJECT. I WILL PROVIDE THE HOWARD SOIL CONSERVATION DISTRICT WITH AN "AS-BUILT" PLAN OF THE PONDS WITHIN 30 DAYS OF COMPLETION. I ALSO AUTHORIZE PERIODIC ON-SITE INSPECTIONS BY THE HOWARD SOIL CONSERVATION DISTRICT."

SIGNATURE OF DEVELOPER — DATE 8/27/90

BY THE ENGINEER:

"I CERTIFY THAT THIS PLAN FOR POND CONSTRUCTION, EROSION AND SEDIMENT CONTROL REPRESENTS A PRACTICAL AND WORKABLE PLAN BASED ON MY PERSONAL KNOWLEDGE OF THE SITE CONDITIONS. THIS PLAN WAS PREPARED IN ACCORDANCE WITH THE REQUIREMENTS OF THE HOWARD SOIL CONSERVATION DISTRICT. I HAVE NOTIFIED THE DEVELOPER THAT HE MUST PROVIDE THE HOWARD SOIL CONSERVATION DISTRICT WITH AN "AS-BUILT" PLAN OF THE PONDS WITHIN 30 DAYS OF COMPLETION."

SIGNATURE OF ENGINEER — DATE 21 Aug 1990

THESE PLANS HAVE BEEN REVIEWED FOR THE HOWARD SOIL CONSERVATION DISTRICT AND MEET THE TECHNICAL REQUIREMENTS FOR SMALL POND CONSTRUCTION, SOIL EROSION AND SEDIMENT CONTROL.

U.S. SOIL CONSERVATION SERVICE — DATE 8/27/90 — 8/19/92

THESE PLANS FOR SMALL POND CONSTRUCTION, SOIL EROSION AND SEDIMENT CONTROL MEET THE REQUIREMENTS OF THE HOWARD SOIL CONSERVATION DISTRICT.

HOWARD SOIL CONSERVATION DISTRICT — DATE 8/27/90 — 8/19/92

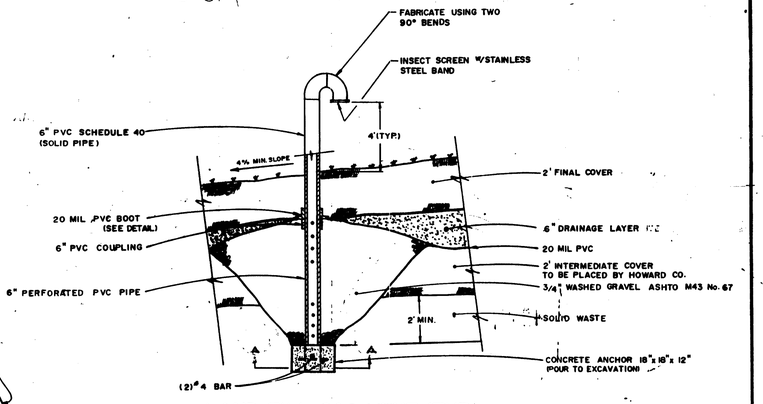

LAND FILL GAS VENT (TYP.)

SCALE: NONE

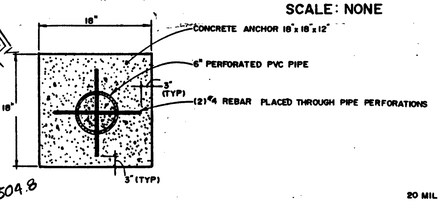

ANCHOR / REBAR SECTION A-A

SCALE: NONE

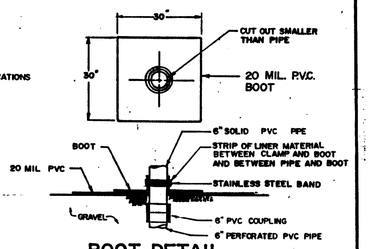

BOOT DETAIL

SCALE: 1"=20'

RECORD DRAWING

EA ENGINEERING, SCIENCE, AND TECHNOLOGY, INC.

AUGUST 1992

SUBDIVISION NAME				SECT./AREA	LOT/PARCEL
Alpha Ridge Solid Waste Management Center					54.283.220.11
LIBER/FOLIO 10-847/604 10-879/316 10-891/314	BLOCK	ZONE R	TAX/ZONE MAP 10 & 16	ELEC. DIST. 3	CENSUS TR. 60-30
WATER CODE Private, Existing		SEWER CODE Private, Existing			
OWNER/DEVELOPER Howard County Government					
ADDRESS 3430 Court House Drive Ellicott City, MD 21043					

APPROVED: FOR PRIVATE WATER AND PRIVATE SEWERAGE SYSTEMS, HOWARD COUNTY HEALTH DEPARTMENT

COUNTY HEALTH OFFICER — DATE 8-23-90

APPROVED: HOWARD COUNTY DEPT. OF PLANNING & ZONING

DIRECTOR: — DATE 8/28/90

CHIEF, DIVISION OF COMMUNITY PLANNING AND LAND DEVELOPMENT: — DATE 8/27/90

APPROVED: FOR STORM DRAINAGE SYSTEMS AND ROADS, HOWARD COUNTY DEPT. OF PUBLIC WORKS

DIRECTOR — DATE 8/23/90

CHIEF, BUREAU OF ENGINEERING — DATE 8-23-90

NOTES:

1. ORTHOTOPOGRAPHY AS DEVELOPED BY BUCHART-HORN, INC. YORK PA. FROM AERIAL FLIGHT OF 2-12-82.
2. HORIZONTAL DATUM BASED ON MARYLAND COORDINATE GRID SYSTEM.
3. VERTICAL DATUM BASED ON USC & GS M.S.L. OF 1929.
4. LOCATION OF PONDS AND EXISTING FILL FROM IMPLEMENTATION PLANS DATED 12-79. LOCATIONS AND ELEVATIONS WERE NOT FIELD VERIFIED.
5. CONTOURS ON THIS PLAN REFLECT GRADING AFTER PLACEMENT OF FINAL CAP.

NOT IN CONTRACT

REVISIONS			
NO.	DATE	BY	DESCRIPTION

STATE OF MARYLAND — DANTE S. SANTIAGO — REGISTERED PROFESSIONAL ENGINEER

DESIGN	D.S.P.
DRAWN	D.T.M.
CHECKED	J.F.H.
PROJECT ENGINEER	D.S.S.

ALPHA RIDGE SOLID WASTE MANAGEMENT CENTER HOWARD COUNTY MARYLAND

CELL I FINAL GRADING PLAN

EA ENGINEERING, SCIENCE, AND TECHNOLOGY, INC.

Loveton Center
15 Loveton Circle
Sparks, Maryland 21152
(301) 771-4950

BALTIMORE
CHICAGO
LINCOLN
NEW YORK
NEW JERSEY
ATLANTA
DALLAS
LOS ANGELES
SAN FRANCISCO

DATE	JUNE 1990
SCALE	1"=100'
PROJECT NO.	10293.01
SHEET NO.	7 OF 25

XXAL-90-007

~~10293.01-007~~

SDP 90-90

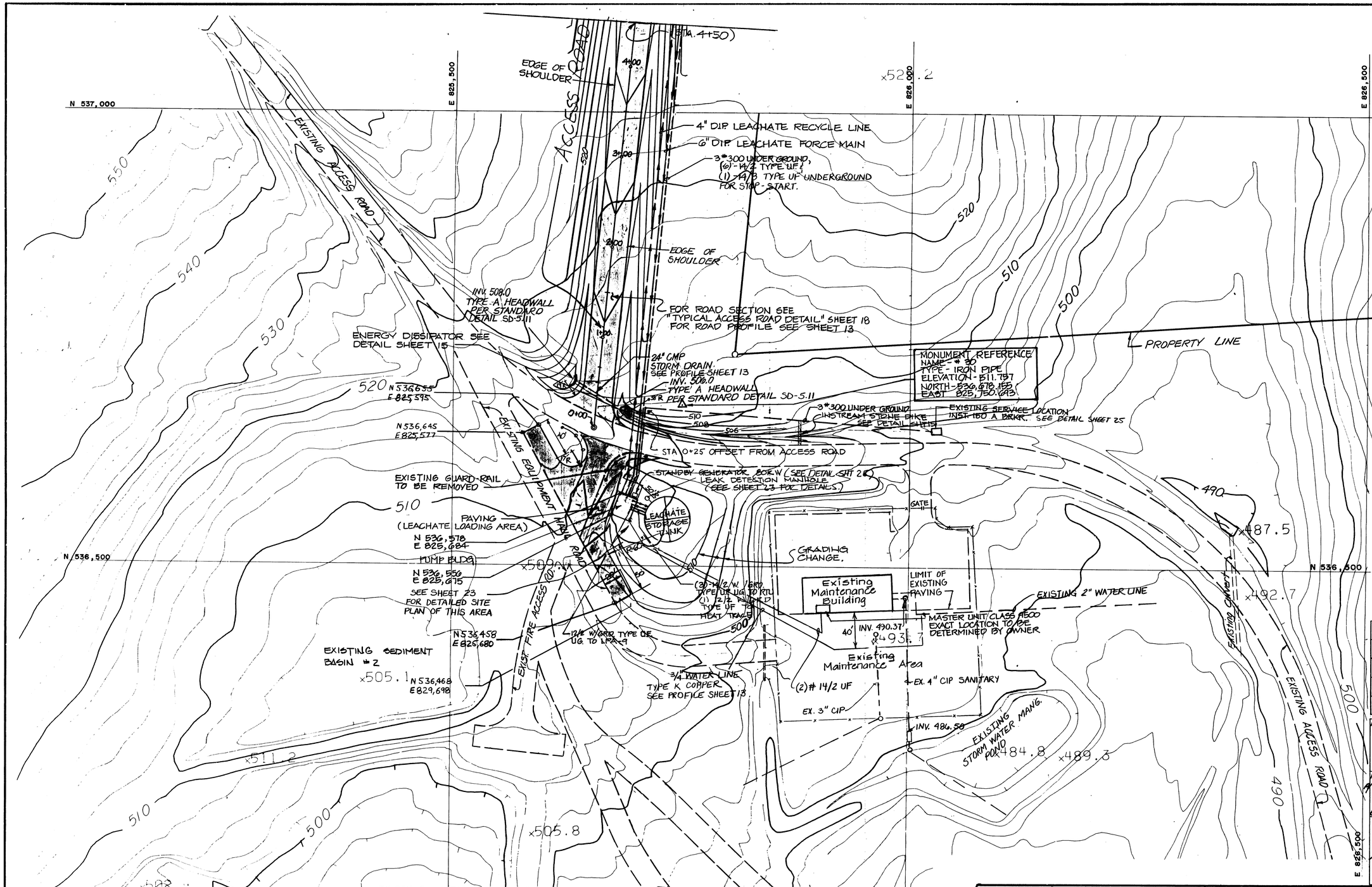

THIS SHEET SUPERCEDED DUE TO FIELD CHANGES IN TANK LOCATION. SEE SHT. 8A OF 25 FOR REVISED LEACHATE MNG. AREA

RECORD DRAWING

EA ENGINEERING, SCIENCE, AND TECHNOLOGY, INC.

AUGUST 1992

SUBDIVISION NAME				SECT./AREA	LOT/PARCEL
Alpha Ridge Solid Waste Management Center					54.253.220.11
LIBER/FOLIO 10-847/605 16-679/216 10-261/514	BLOCK	ZONE R	TAX/ZONE MAP 10 & 16	ELEC. DIST. 3	CENSUS TR. 60-30

WATER CODE	SEWER CODE
Private, Existing	Private, Existing

OWNER/DEVELOPER
Howard County Government

ADDRESS
3430 Court House Drive Ellicott City, MD 21043

APPROVED: FOR PRIVATE WATER AND PRIVATE SEWERAGE SYSTEMS. HOWARD COUNTY HEALTH DEPARTMENT

COUNTY HEALTH OFFICER — DATE 8-23-90

APPROVED: HOWARD COUNTY DEPT. OF PLANNING & ZONING

DIRECTOR: — DATE 8/28/90

CHIEF, DIVISION OF COMMUNITY PLANNING AND LAND DEVELOPMENT: — DATE 8/21/9.

APPROVED: FOR STORM DRAINAGE SYSTEMS AND ROADS. HOWARD COUNTY DEPT. OF PUBLIC WORKS

DIRECTOR — DATE 8/23/90

CHIEF, BUREAU OF ENGINEERING — DATE 8-23-90

REVISIONS			
NO.	DATE	BY	DESCRIPTION
1	8/92	CAL	RECORD CHANGES

STATE OF MARYLAND — DENIS E. SANFORD — No. 11881 — PROFESSIONAL ENGINEER

ALPHA RIDGE SOLID WASTE MANAGEMENT CENTER HOWARD COUNTY MARYLAND

LEACHATE MANAGEMENT AREA

DESIGN	S.M.D.
DRAWN	D.T.M.
CHECKED	J.F.H.
PROJECT ENGINEER	D.S.S.

EA ENGINEERING, SCIENCE, AND TECHNOLOGY, INC.

Loyston Center
15 Loyston Circle
Sparks, Maryland 21152
(301) 771-4950

BALTIMORE
CHICAGO
LINCOLN
NEW YORK
NEW JERSEY
ATLANTA
DALLAS
LOS ANGELES
SAN FRANCISCO

DATE	JUNE 1990
SCALE	1" = 50'
PROJECT NO.	10293.01
SHEET NO.	8 OF 25

~~10293.01-008~~
XXAL-90-008

SDP 90-90

880

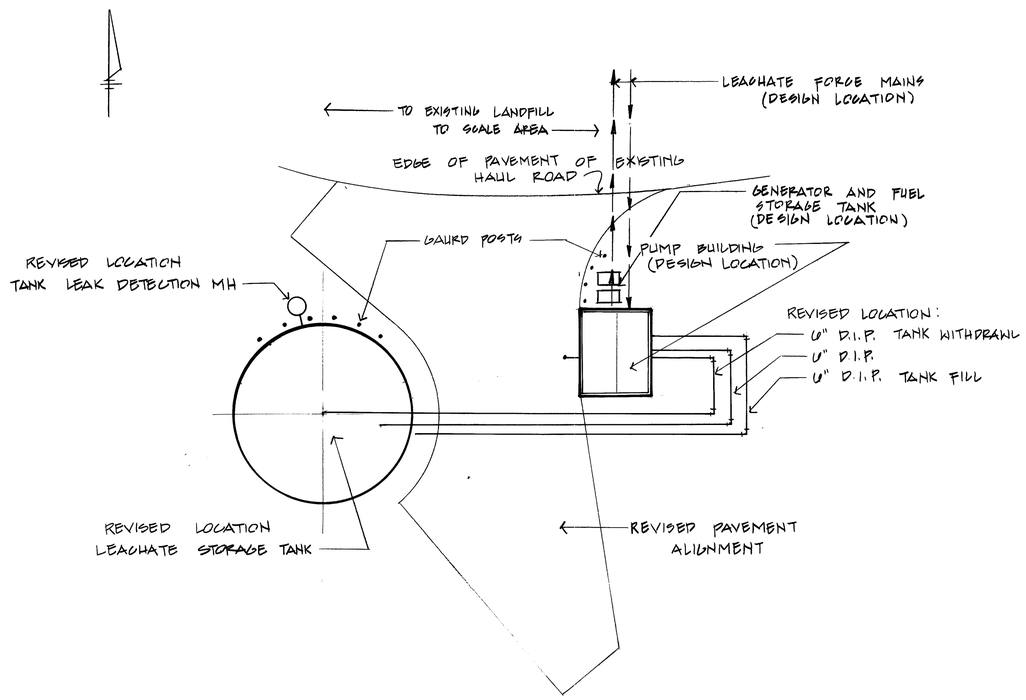

PLAN

SCALE: 1" = 20'

THIS DRAWING REFLECTS RECORD CONDITIONS AND SUPERCEDES PORTIONS OF SHEET 8 (INCLUDING TANK LOCATION AND PIPING LAYOUT) OF THE CONTRACT DRAWINGS.

RECORD DRAWING

EA ENGINEERING, SCIENCE, AND TECHNOLOGY, INC.

AUGUST 1992

STATE OF MARYLAND
DAVID S. SAMUELS
PROFESSIONAL ENGINEER

8/92

REVISIONS			
NO.	DATE	BY	DESCRIPTION

ALPHA RIDGE SOLID WASTE MANAGEMENT CENTER
HOWARD COUNTY MARYLAND

REVISED LEACHATE MNG. AREA

DESIGN	
DRAWN	GBL
CHECKED	PAP
PROJECT ENGINEER	DSS

EA ENGINEERING, SCIENCE, AND TECHNOLOGY, INC.

BALTIMORE
CHICAGO
LINCOLN
NEW YORK
NEW JERSEY
ATLANTA
DALLAS
LOS ANGELES
SAN FRANCISCO

Loveton Center
15 Loveton Circle
Sparks, Maryland 21152
(301) 771-4950

DATE	10/92
SCALE	1" = 20'
PROJECT NO.	10293.01
SHEET NO.	8A OF 23

XXAL-90-008A ~~10293.01-008A~~ SDP 90-90

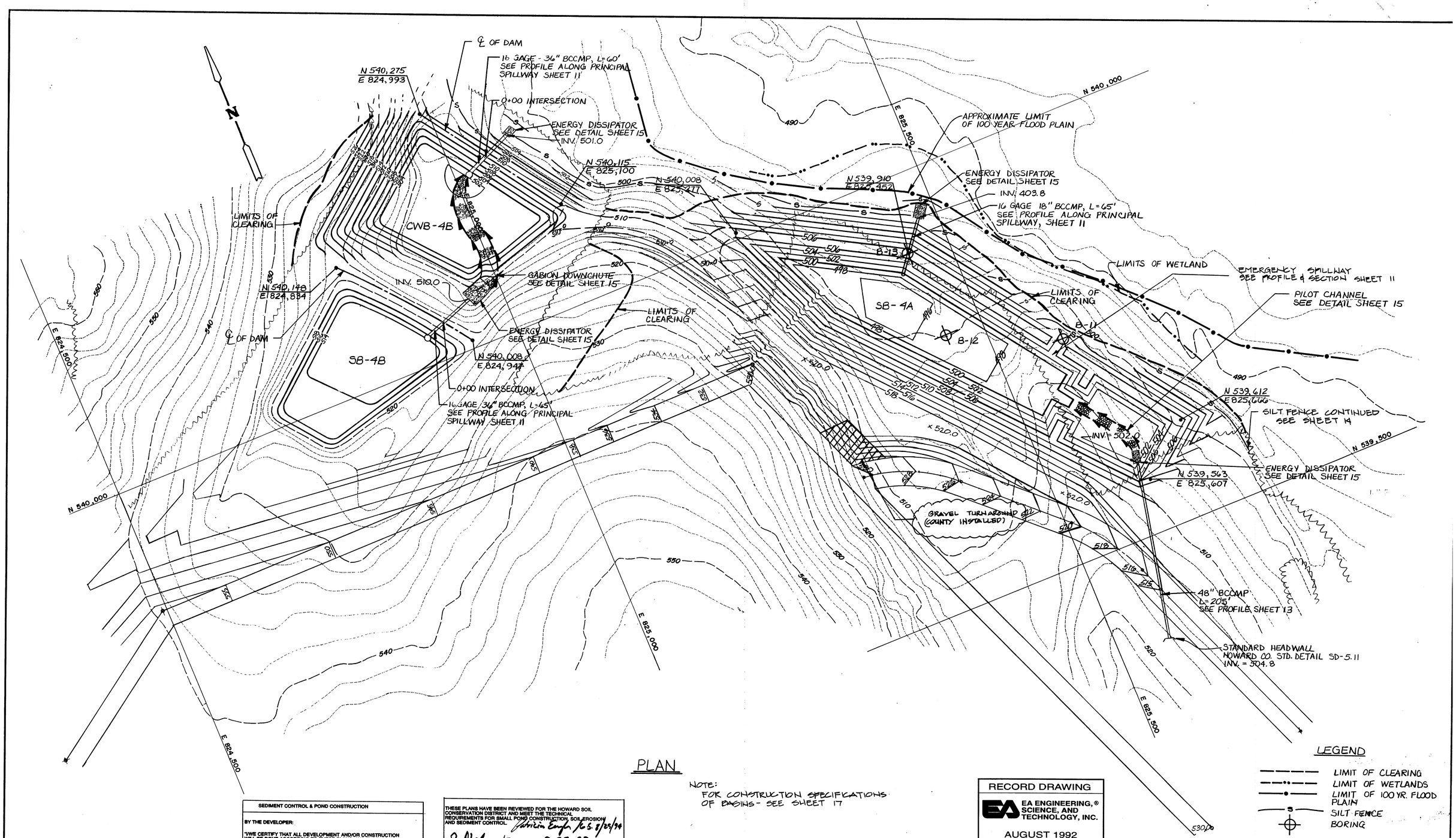

PLAN

NOTE:
FOR CONSTRUCTION SPECIFICATIONS OF BASINS - SEE SHEET 17

RECORD DRAWING
EA ENGINEERING, SCIENCE, AND TECHNOLOGY, INC.
AUGUST 1992

LEGEND

- LIMIT OF CLEARING
- LIMIT OF WETLANDS
- LIMIT OF 100 YR. FLOOD PLAIN
- SILT FENCE
- BORING

SEDIMENT CONTROL & POND CONSTRUCTION

BY THE DEVELOPER:

"I/WE CERTIFY THAT ALL DEVELOPMENT AND/OR CONSTRUCTION WILL BE DONE ACCORDING TO THESE PLANS, AND THAT ANY RESPONSIBLE PERSONNEL INVOLVED IN THE CONSTRUCTION PROJECT WILL HAVE A CERTIFICATE OF ATTENDANCE AT A DEPARTMENT OF THE ENVIRONMENT APPROVED TRAINING PROGRAM FOR THE CONTROL OF SEDIMENT AND EROSION BEFORE BEGINNING THE PROJECT. I WILL PROVIDE THE HOWARD SOIL CONSERVATION DISTRICT WITH AN "AS-BUILT" PLAN OF THE PONDS WITHIN 30 DAYS OF COMPLETION. I ALSO AUTHORIZE PERIODIC ON-SITE INSPECTIONS BY THE HOWARD SOIL CONSERVATION DISTRICT."

SIGNATURE OF DEVELOPER — DATE 8-23-90

BY THE ENGINEER:

"I CERTIFY THAT THIS PLAN FOR POND CONSTRUCTION, EROSION AND SEDIMENT CONTROL REPRESENTS A PRACTICAL AND WORKABLE PLAN BASED ON MY PERSONAL KNOWLEDGE OF THE SITE CONDITIONS. THIS PLAN WAS PREPARED IN ACCORDANCE WITH THE REQUIREMENTS OF THE HOWARD SOIL CONSERVATION DISTRICT. I HAVE NOTIFIED THE DEVELOPER THAT HE MUST PROVIDE THE HOWARD SOIL CONSERVATION DISTRICT WITH AN "AS-BUILT" PLAN OF THE PONDS WITHIN 30 DAYS OF COMPLETION."

SIGNATURE OF ENGINEER — DATE 21 Aug 1990

THESE PLANS HAVE BEEN REVIEWED FOR THE HOWARD SOIL CONSERVATION DISTRICT AND MEET THE TECHNICAL REQUIREMENTS FOR SMALL POND CONSTRUCTION, SOIL EROSION AND SEDIMENT CONTROL.

8-23-90
U.S. SOIL CONSERVATION SERVICE — DATE

8/19/92

THESE PLANS FOR SMALL POND CONSTRUCTION, SOIL EROSION AND SEDIMENT CONTROL MEET THE REQUIREMENTS OF THE HOWARD SOIL CONSERVATION DISTRICT.

8-23-90
HOWARD SOIL CONSERVATION DISTRICT — DATE

8/19/92

SUBDIVISION NAME				SECT./AREA	LOT/PARCEL
Alpha Ridge Solid Waste Management Center					54,253,220,11
LIBER/FOLIO 10-847/906 10-875/715 10-991/314	BLOCK	ZONE R	TAX/ZONE MAP 10 & 16	ELEC. DIST. 3	CENSUS TR. 60-30
WATER CODE Private, Existing		SEWER CODE Private, Existing			
OWNER/DEVELOPER Howard County Government					
ADDRESS 3430 Court House Drive Ellicott City, MD 21043					

APPROVED: FOR PRIVATE WATER AND PRIVATE SEWERAGE SYSTEMS, HOWARD COUNTY HEALTH DEPARTMENT

8-23-90
COUNTY HEALTH OFFICER — DATE

APPROVED: HOWARD COUNTY DEPT. OF PLANNING & ZONING

8/28/90
DIRECTOR — DATE

8/23/90
CHIEF, DIVISION OF COMMUNITY PLANNING AND LAND DEVELOPMENT — DATE

APPROVED: FOR STORM DRAINAGE SYSTEMS AND ROADS, HOWARD COUNTY DEPT. OF PUBLIC WORKS

8/23/90
DIRECTOR — DATE

8-23-90
CHIEF, BUREAU OF ENGINEERING — DATE

REVISIONS			
NO.	DATE	BY	DESCRIPTION
1	8/92	GBL	RECORD CHANGES

STATE OF MARYLAND — DAVID S. SANTARO — No. 11911 — REGISTERED PROFESSIONAL ENGINEER

ALPHA RIDGE SOLID WASTE MANAGEMENT CENTER HOWARD COUNTY MARYLAND

BASIN GRADING PLAN

DESIGN	P.B.M.
DRAWN	D.T.M.
CHECKED	D.S.P.
PROJECT ENGINEER	D.S.S.

EA ENGINEERING, SCIENCE, AND TECHNOLOGY, INC.
BALTIMORE, CHICAGO, LINCOLN, NEW YORK, NEW JERSEY, ATLANTA, DALLAS, LOS ANGELES, SAN FRANCISCO, CHARLOTTE, BOSTON
Hunt Valley/Loveton Center
15 Loveton Circle
Sparks, Maryland 21152
(301) 771-4950

DATE	JUNE 1990
SCALE	1"=50'
PROJECT NO.	10293.01
SHEET NO.	9 OF 25

~~10293.01-009~~ XXAL-90-009 SDP 90-90

880

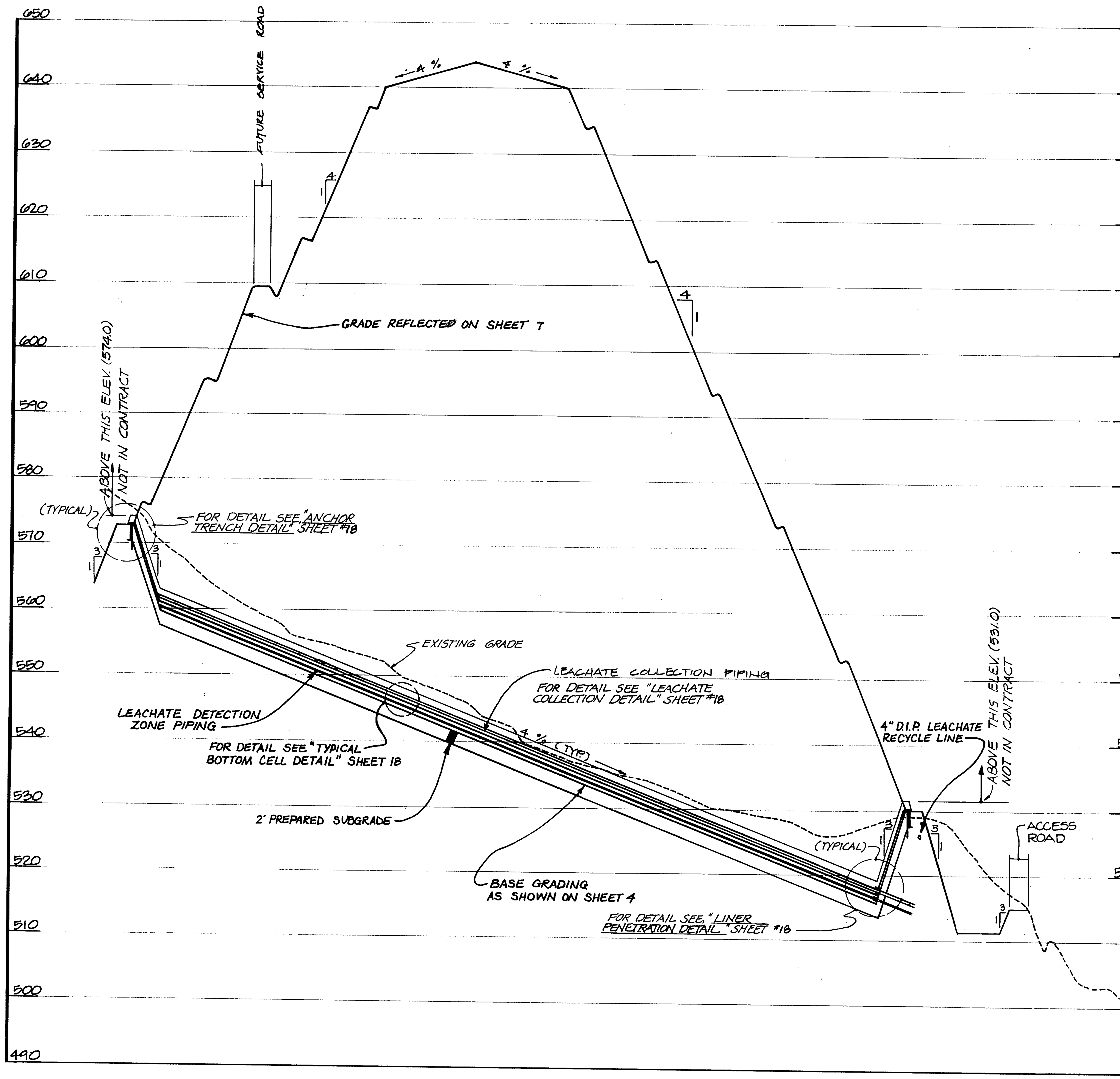

SECTION A 4,6&7

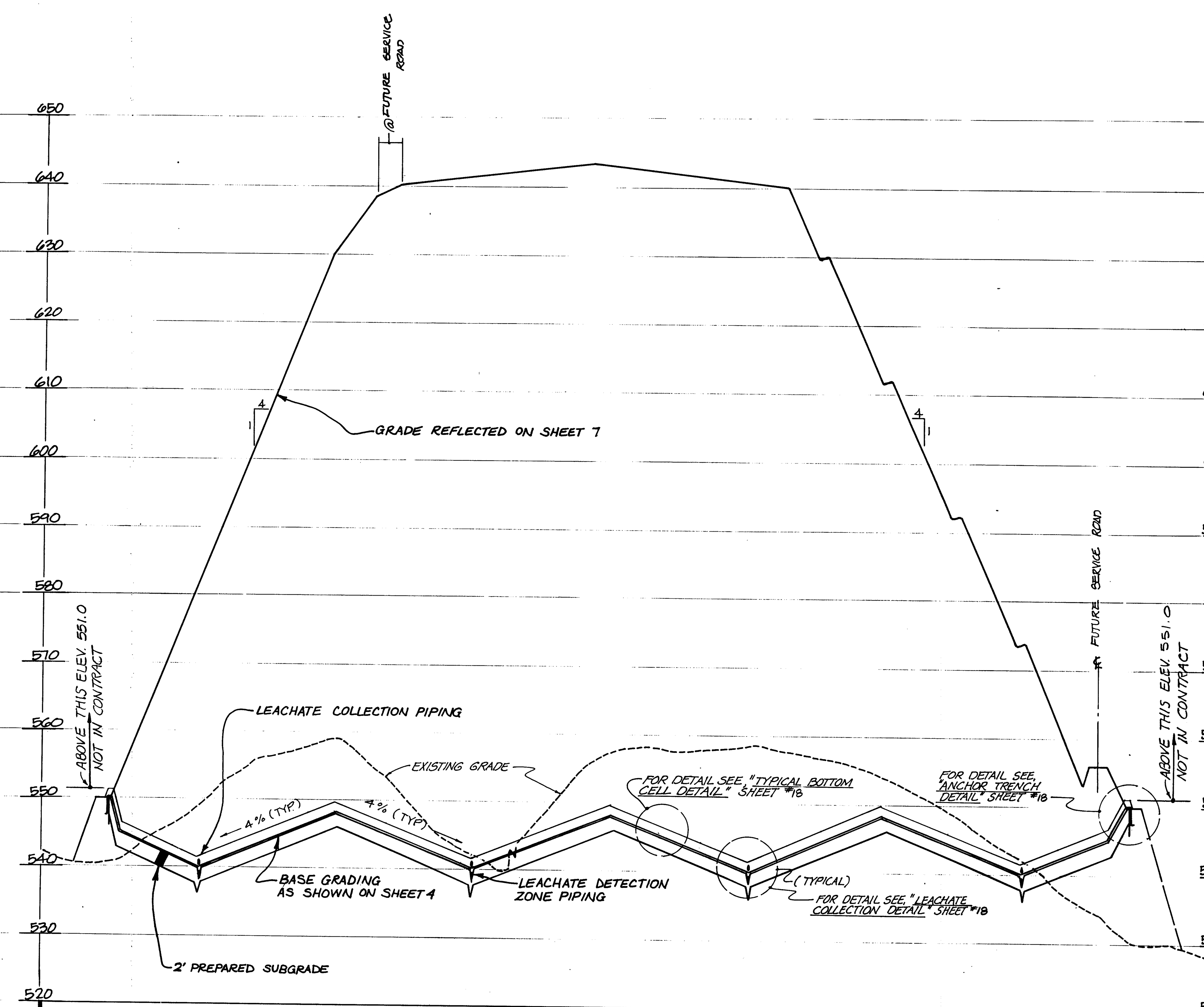

SECTION B 4,6&7

RECORD DRAWING
EA ENGINEERING,® SCIENCE, AND TECHNOLOGY, INC.
AUGUST 1992

SUBDIVISION NAME				SECT./AREA	LOT/PARCEL
Alpha Ridge Solid Waste Management Center					54,253,220,11
L/F 10-647/350, 10-676/219, 10-691/314	BLOCK	ZONE	TAX/ZONE MAP	ELEC. DIST.	CENSUS TR.
		R	10 & 16	3	60-30
WATER CODE	SEWER CODE				
Private, Existing	Private, Existing				
OWNER/DEVELOPER					
Howard County Government					
ADDRESS					
3430 Court House Drive Ellicott City, MD 21043					

APPROVED: FOR PRIVATE WATER AND PRIVATE SEWERAGE SYSTEMS. HOWARD COUNTY HEALTH DEPARTMENT

[signature] 8-23-90
COUNTY HEALTH OFFICER DATE

APPROVED: HOWARD COUNTY DEPT. OF PLANNING & ZONING

DIRECTOR: [signature] 8/28/90
CHIEF, DIVISION OF COMMUNITY PLANNING AND LAND DEVELOPMENT: DATE
[signature] 4/27/18

APPROVED: FOR STORM DRAINAGE SYSTEMS AND ROADS. HOWARD COUNTY DEPT. OF PUBLIC WORKS

[signature] 8/23/90
DIRECTOR DATE

[signature] 8-23-90
CHIEF, BUREAU OF ENGINEERING DATE

REVISIONS			
NO.	DATE	BY	DESCRIPTION

STATE OF MARYLAND — DAVID S. SANTORO — NO. 31... REGISTERED PROFESSIONAL ENGINEER

DESIGN	D. S. P.
DRAWN	D. T. M.
CHECKED	J. F. H.
PROJECT ENGINEER	D.S.S.

ALPHA RIDGE SOLID WASTE MANAGEMENT CENTER HOWARD COUNTY MARYLAND

CELL I SECTIONS

EA ENGINEERING, SCIENCE, AND TECHNOLOGY, INC.
BALTIMORE CHICAGO LINCOLN NEW YORK NEW JERSEY ATLANTA DALLAS LOS ANGELES SAN FRANCISCO
Loveton Center
15 Loveton Circle
Sparks, Maryland 21152
(301) 771-4950

DATE	JUNE 1990
SCALE	HOR. 1"=100'-VERT. 1"=10
PROJECT NO.	10293.01
SHEET NO.	10 OF 25

~~10293.01-010~~ *XAL-90-010 SDP 90-90

880

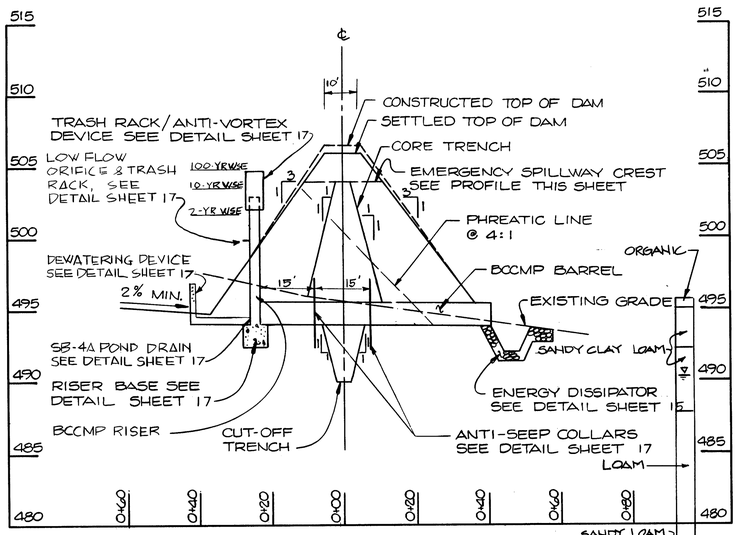

PROFILE ALONG PRINCIPAL SPILLWAY
@ SB-4A
SCALE: 1" = 20' HORIZ.
1" = 5' VERT.

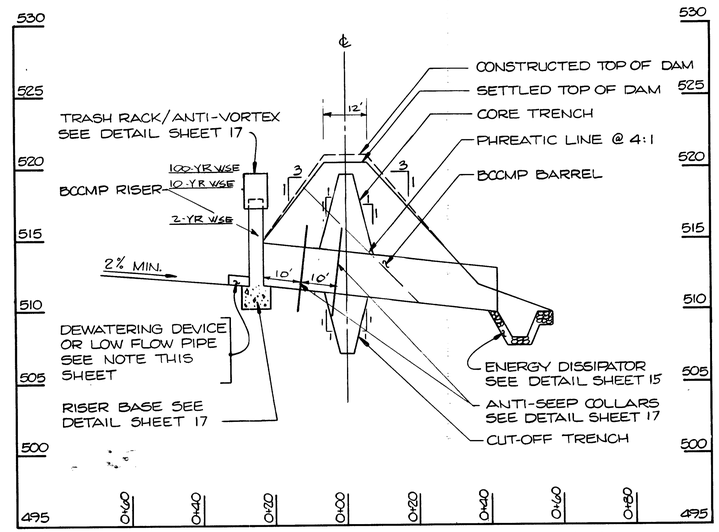

PROFILE ALONG PRINCIPAL SPILLWAY
@ SB-4B
SCALE: 1" = 20' HORIZ.
1" = 5' VERT.

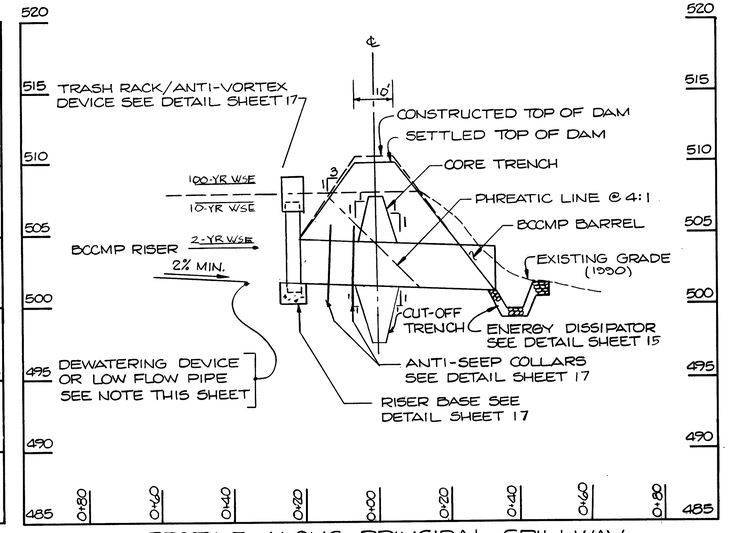

PROFILE ALONG PRINCIPAL SPILLWAY
@ CWB-4B
SCALE: 1" = 20' HORIZ.
1" = 5' VERT.

SEE POND CONSTRUCTION NOTES - SHEET 17

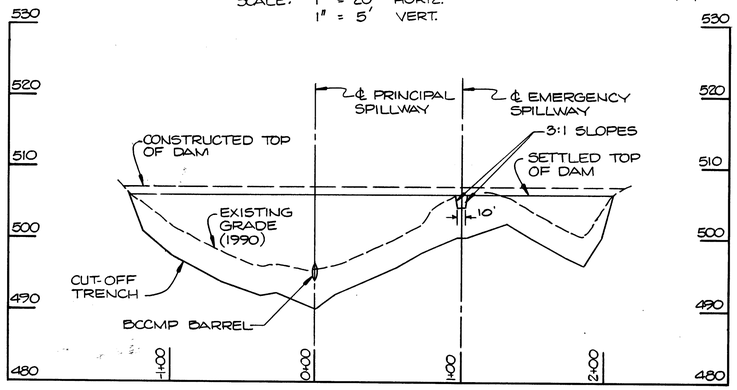

PROFILE ALONG ℄ OF DAM
@ SB-4A
SCALE: 1" = 50' HORIZ.
1" = 10' VERT.

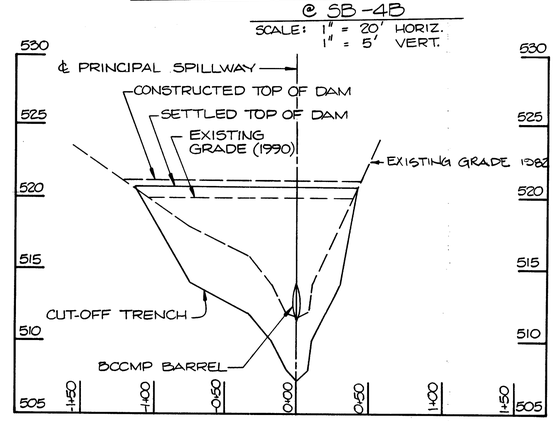

PROFILE ALONG ℄ OF DAM
@ SB-4B
SCALE: 1" = 50' HORIZ.
1" = 5' VERT.

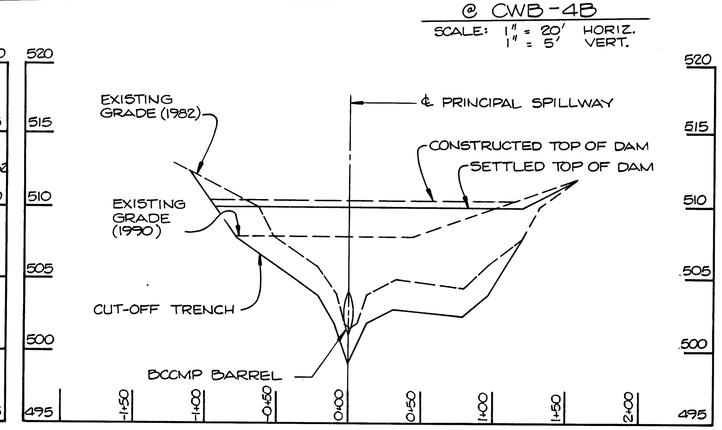

PROFILE ALONG ℄ OF DAM
@ CWB-4B
SCALE: 1" = 50' HORIZ.
1" = 5' VERT.

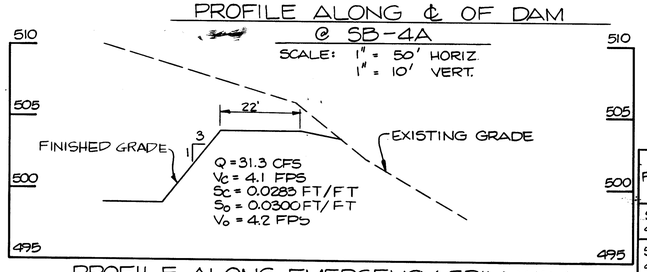

PROFILE ALONG EMERGENCY SPILLWAY
@ SB-4A
SCALE: 1" = 20' HORIZ.
1" = 5' VERT.

POND	LOW FLOW PIPE DIAM. IN.	ORIFICE IN.	L FT.	U/S INV.	D/S INV.	RISER DIAM. IN.	CREST ELEV.	GAGE	BASE WIDTH FT.	TRASH RACK ANTI-VORTEX DEVICE DIAM. IN.	TOP GAGE	CYL GAGE	H IN.	BARREL DIAM. IN.	L FT.	GAGE	U/S INV.	D/S INV.	ANTI-SEEP COLLAR QTY.	SIZE	DAM TOP WIDTH FT.	CONSTR. HEIGHT	SETTLED HEIGHT	EMERG. SPILLWAY ELEV.	BOTTOM WIDTH FT.	CORE TRENCH TOP WIDTH FT.	SIDE SLOPES	CUT-OFF TRENCH BOTTOM WIDTH FT.	SIDE SLOPES	WATER SURFACE ELEV. 2 YR.	10 YR.	100 YR.
SB-4A	12	10	1	499.9	499.9	30	503.0	16	5.0	48	12	14	24	18	65	16	494.0	493.8	2	4'-8"	10	506.6	506.0	504.0	22	4	1:1	4	1:1	501.78	503.67	504.97
SB-4B	15	10	6	512.0	511.8	48	518.0	14	8.0	72	10	12	21	36	65	16	511.8	510.0	2	6'-4"	12	521.2	520.7	—	—	4	1:1	4	1:1	516.19	518.57	519.68
CWB-4B	15	9.5	6	501.7	501.6	48	507.5	14	8.0	72	10	12	21	36	54	16	501.5	501.0	2	6'-0"	10	510.5	510.0	—	—	4	1:1	4	1:1	504.63	507.53	508.58

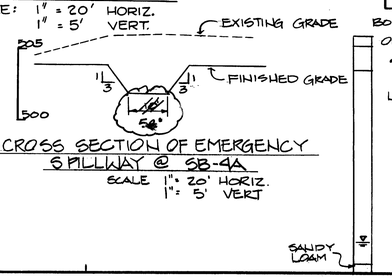

CROSS SECTION OF EMERGENCY SPILLWAY @ SB-4A
SCALE 1" = 20' HORIZ.
1" = 5' VERT

BORING No B-11
ORGANIC
SANDY CLAY LOAM
LOAMY SAND

SUBDIVISION NAME			SECT./AREA	LOT/PARCEL
Alpha Ridge Solid Waste Management Center				54,253,220,11
LIBER/FOLIO 10-947/606 10-879/215 10-951/214	BLOCK	ZONE R	TAX/ZONE MAP 10 & 16	ELEC. DIST. 3 / CENSUS TR. 60-30
WATER CODE Private, Existing		SEWER CODE Private, Existing		
OWNER/DEVELOPER Howard County Government				
ADDRESS 3430 Court House Drive Ellicott City, MD 21043				

APPROVED: FOR PRIVATE WATER AND PRIVATE SEWERAGE SYSTEMS, HOWARD COUNTY HEALTH DEPARTMENT

Joyce M. Rand MD for F.S. 8-23-90
COUNTY HEALTH OFFICER DATE

APPROVED: HOWARD COUNTY DEPT. OF PLANNING & ZONING

A/DIRECTOR: Joseph Rutter 8/28/90
CHIEF, DIVISION OF COMMUNITY PLANNING AND LAND DEVELOPMENT: DATE

8/27/90
APPROVED: FOR STORM DRAINAGE SYSTEMS AND ROADS, HOWARD COUNTY DEPT. OF PUBLIC WORKS

8/23/90
DIRECTOR DATE

8-23-90
CHIEF, BUREAU OF ENGINEERING DATE

REVISIONS			
NO.	DATE	BY	DESCRIPTION
1	8/92	GBL	RECORD CHANGES

NOTES:

1. CONTRACTOR TO INSTALL DEWATERING DEVICES IN ALL BASINS AS PER DEWATERING DEVICE DETAIL, SHEET 17. WHEN BASINS SB-4B AND CWB-4B ARE CONVERTED TO STORMWATER MANAGEMENT PONDS, DEWATERING DEVICES WILL BE REPLACED WITH LOW FLOW PIPES, METAL END SECTIONS PER HOWARD COUNTY STANDARD DETAIL, SD-3.61, AND LOW FLOW TRASH RACKS PER DETAILS ON SHEET 17. WHEN BASIN SB-4A IS CONVERTED TO A STORMWATER MANAGEMENT POND, THE 2-INCH STONE CORE AND FILTER CLOTH WILL BE REMOVED FROM AROUND THE DEWATERING DEVICE.
2. SEDIMENT REMOVED FROM THE BASINS SHALL BE PLACED IN SUCH A MANNER THAT IT WILL NOT ERODE FROM THE SITE. THE SEDIMENT SHALL NOT BE DEPOSITED DOWNSTREAM FROM THE BASIN, ADJACENT TO A STREAM OR FLOODPLAIN.

SEDIMENT CONTROL & POND CONSTRUCTION

BY THE DEVELOPER:

"I/WE CERTIFY THAT ALL DEVELOPMENT AND/OR CONSTRUCTION WILL BE DONE ACCORDING TO THESE PLANS, AND THAT ANY RESPONSIBLE PERSONNEL INVOLVED IN THE CONSTRUCTION PROJECT WILL HAVE A CERTIFICATE OF ATTENDANCE AT A DEPARTMENT OF THE ENVIRONMENT APPROVED TRAINING PROGRAM FOR THE CONTROL OF SEDIMENT AND EROSION BEFORE BEGINNING THE PROJECT. I WILL PROVIDE THE HOWARD SOIL CONSERVATION DISTRICT WITH AN "AS-BUILT" PLAN OF THE PONDS WITHIN 30 DAYS OF COMPLETION. I ALSO AUTHORIZE PERIODIC ON-SITE INSPECTIONS BY THE HOWARD SOIL CONSERVATION DISTRICT."

8-23-90
SIGNATURE OF DEVELOPER DATE

BY THE ENGINEER:

"I CERTIFY THAT THIS PLAN FOR POND CONSTRUCTION, EROSION AND SEDIMENT CONTROL REPRESENTS A PRACTICAL AND WORKABLE PLAN BASED ON MY PERSONAL KNOWLEDGE OF THE SITE CONDITIONS. THIS PLAN WAS PREPARED IN ACCORDANCE WITH THE REQUIREMENTS OF THE HOWARD SOIL CONSERVATION DISTRICT. I HAVE NOTIFIED THE DEVELOPER THAT HE MUST PROVIDE THE HOWARD SOIL CONSERVATION DISTRICT WITH AN "AS-BUILT" PLAN OF THE PONDS WITHIN 30 DAYS OF COMPLETION."

7 Aug 1990
SIGNATURE OF ENGINEER DATE

THESE PLANS HAVE BEEN REVIEWED FOR THE HOWARD SOIL CONSERVATION DISTRICT AND MEET THE TECHNICAL REQUIREMENTS FOR SMALL POND CONSTRUCTION, SOIL EROSION AND SEDIMENT CONTROL. Patricia Engle, G.S. 8/20/92

8-23-90
HOWARD SOIL CONSERVATION SERVICE DATE

8/19/92

THESE PLANS FOR SMALL POND CONSTRUCTION, SOIL EROSION AND SEDIMENT CONTROL MEET THE REQUIREMENTS OF THE HOWARD SOIL CONSERVATION DISTRICT. Robert W. Zieler 7/24/90

8-23-90
HOWARD SOIL CONSERVATION DISTRICT DATE

8-19-92

RECORD DRAWING
EA ENGINEERING, SCIENCE, AND TECHNOLOGY, INC.
AUGUST 1992

ALPHA RIDGE SOLID WASTE MANAGEMENT CENTER HOWARD COUNTY MARYLAND

BASIN PROFILES

DESIGN	MMD
DRAWN	AMP
CHECKED	PBM
PROJECT ENGINEER	DSS

EA ENGINEERING, SCIENCE, AND TECHNOLOGY, INC.
BALTIMORE CHICAGO LINCOLN NEW YORK NEW JERSEY ATLANTA DALLAS LOS ANGELES SAN FRANCISCO
Loveton Center
15 Loveton Circle
Sparks, Maryland 21152
(301) 771-4950

DATE	JUNE 1990
SCALE	AS SHOWN
PROJECT NO.	10293.01
SHEET NO.	11 OF 25

XXAL-90-011
~~10293.01-011~~

SDP 90-90

880

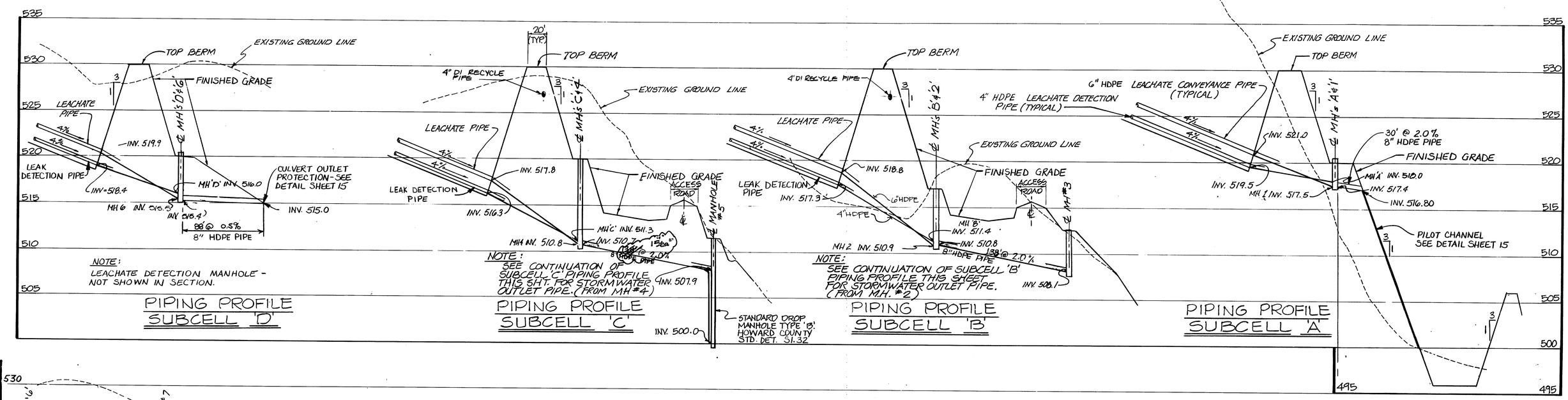

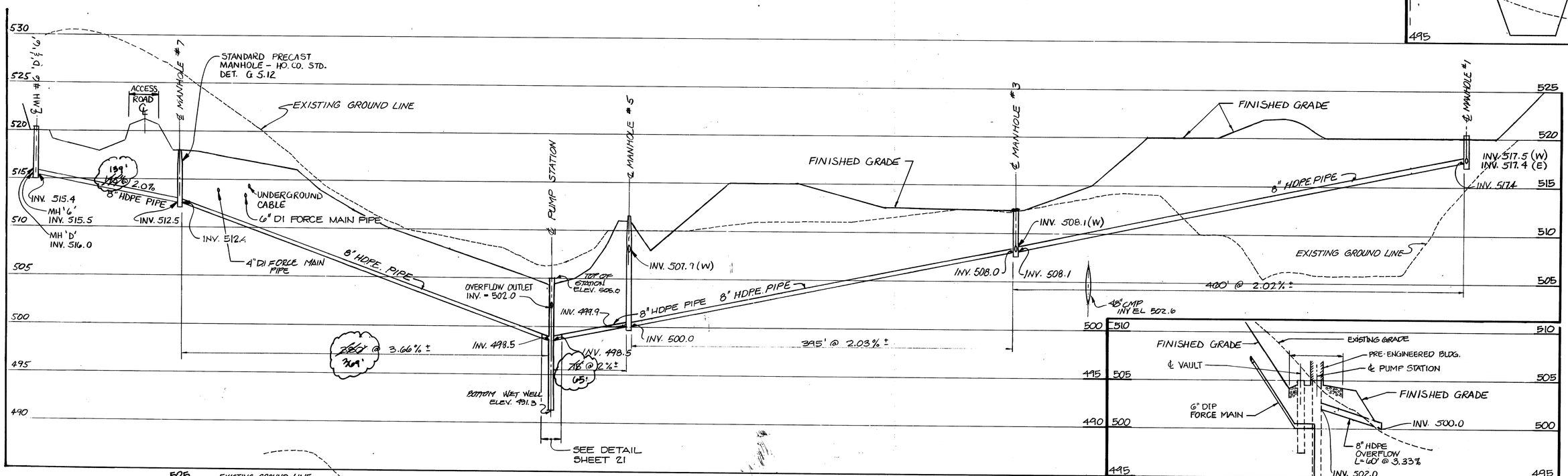

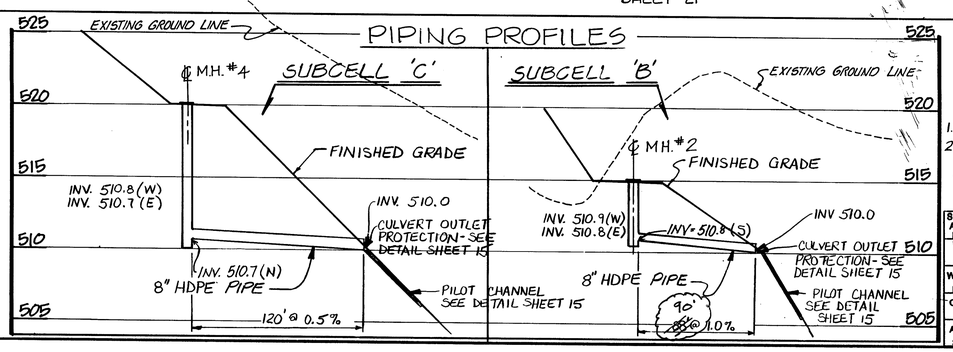

PIPING PROFILE MAIN LINE

NOTE:
1. MANHOLE DETAILS SHOWN ON SHEET 18.
2. HDPE PIPE UPSTREAM OF MANHOLES A, B, C, D, 1, 2, 3, & 4 SHALL BE SDR9; ALL OTHER HDPE PIPE SHALL BE SDR 21.

SUBDIVISION NAME				SECT./AREA	LOT/PARCEL
Alpha Ridge Solid Waste Management Center					84,253,220.11
LOCATION 10-21/22 10-21/23 10-21/24	BLOCK	ZONE R	TAX/ZONE MAP 10 & 18	ELEC. DIST. 3	CENSUS TR. 60-30
WATER CODE Private, Existing	SEWER CODE Private, Existing				
OWNER/DEVELOPER Howard County Government					
ADDRESS 3430 Court House Drive Ellicott City, MD 21043					

APPROVED: FOR PRIVATE WATER AND PRIVATE SEWERAGE SYSTEMS, HOWARD COUNTY HEALTH DEPARTMENT
COUNTY HEALTH OFFICER — DATE 8-23-90

APPROVED: HOWARD COUNTY DEPT. OF PLANNING & ZONING
DIRECTOR: — DATE 8/28/90
CHIEF, DIVISION OF COMMUNITY PLANNING AND LAND DEVELOPMENT — DATE 8/23/90

APPROVED: FOR STORM DRAINAGE SYSTEMS AND ROADS, HOWARD COUNTY DEPT. OF PUBLIC WORKS
DIRECTOR — DATE 8/23/90
CHIEF, BUREAU OF ENGINEERING — DATE 8-23-90

STATE OF MARYLAND — DAVID S. SANTORO — REGISTERED PROFESSIONAL ENGINEER

ALPHA RIDGE SOLID WASTE MANAGEMENT CENTER
HOWARD COUNTY MARYLAND

LEACHATE COLLECTION PIPING PROFILES

EA ENGINEERING, SCIENCE, AND TECHNOLOGY, INC.
Loveton Center
15 Loveton Circle
Sparks, Maryland 21111.2
(301) 771-4950
BALTIMORE, CHICAGO, LINCOLN, NEW YORK, NEW JERSEY, ATLANTA, DALLAS, LOS ANGELES, SAN FRANCISCO

DESIGN	S.M.D.
DRAWN	D.T.M.
CHECKED	J.F.H.
PROJECT ENGINEER	D.S.S.
DATE	JUNE 1990
SCALE	Hor: 1"=50' / Vert: 1"=5'
PROJECT NO.	10293.01
SHEET NO.	12 OF 25

RECORD DRAWING
EA ENGINEERING, SCIENCE, AND TECHNOLOGY, INC.
AUGUST 1992

~~10293.01 012~~ XXAL-90-012 SDP 90-90

NOTE:

FORCE MAIN TO BE INSTALLED WITH 3'-6" COVER UNLESS OTHERWISE NOTED.

NOTE:

PIPING PROFILE IS SHOWN OFFSET TO ℄ OF ACCESS ROAD. PIPES ARE 41' AND 47' RIGHT (EAST) OF ℄ ACCESS RD. AND PARALLEL TO. SEE PLAN VIEWS SHEETS 2, 4 AND 5. ALSO SEE, "PIPE TRENCH DETAILS" SHEET 18.

4" LEACHATE RECYCLE LINE & ELECTRICAL CABLE IS NOT SHOWN IN PROFILE OF ACCESS ROAD. SEE PLAN SHT. 4 & 5 AND PARTIAL PROFILE THIS SHEET.

AIR RELEASE VALVES FOR 4" LEACHATE RECYCLE LINE TO BE LOCATED ADJACENT TO AIR RELEASE VALVES INDICATED ON 6" LEACHATE FORCE MAIN.

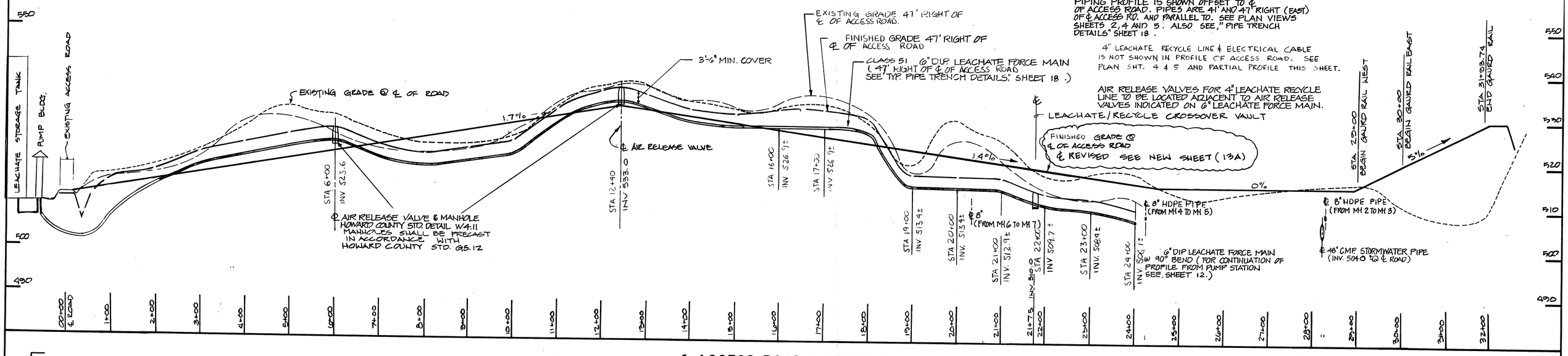

℄ ACCESS ROAD & PIPE PROFILE

SCALE : HOR. 1"=100' VER. 1"=10'

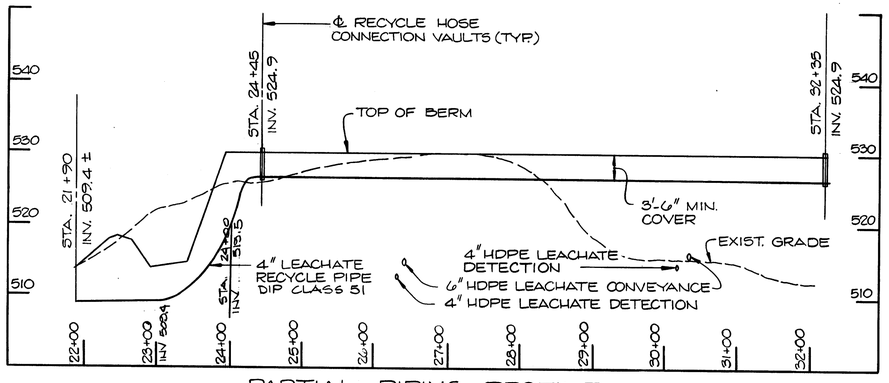

PARTIAL PIPING PROFILE RECYCLE LINE

SCALE: 1" = 100' HORIZ.
1" = 10' VERT.

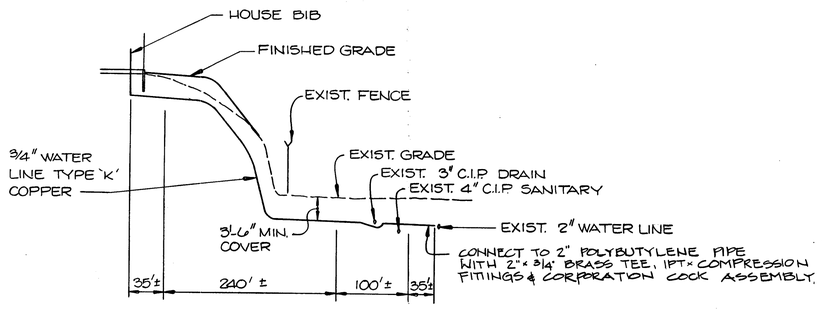

NOTE:
1) PROVIDE MIN. 6" CLEARANCE BETWEEN PIPE AND ADJACENT STRUCTURES AND UTILITIES.
2) LOCATIONS OF EXIST. UTILITIES AND STRUCTURES HAVE NOT BEEN FIELD VERIFIED. CONTRACTOR TO LOCATE PRIOR TO EXCAVATION FOR PROPOSED UTILITIES.

PROFILE OF WATERLINE

SCALE: 1" = 100' HORIZ.
1" = 10' VERT.

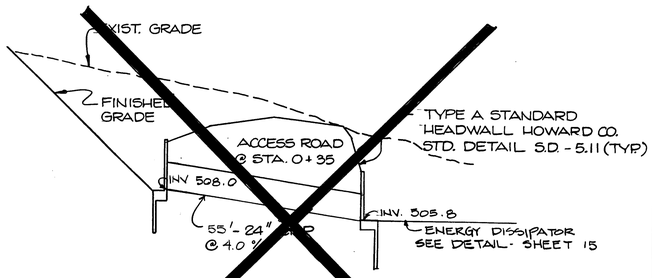

PROFILE OF 24" CULVERT STA. 0+35

SCALE: 1" = 5' VERT.
1" = 20' HORIZ.

NOT INSTALLED

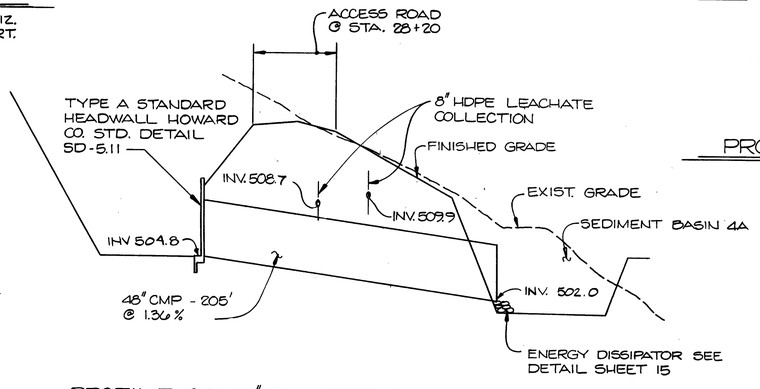

PROFILE OF 48" CULVERT STA. 28+20

SCALE: 1" = 50' HORIZ.
1" = 5' VERT.

RECORD DRAWING

EA ENGINEERING, SCIENCE, AND TECHNOLOGY, INC.

AUGUST 1992

SUBDIVISION NAME				SECT./AREA	LOT/PARCEL
Alpha Ridge Solid Waste Management Center					54,253,220,11
LIBER/FOLIO 10-347/605 · 10-379/718 10-391/614	BLOCK	ZONE R	TAX/ZONE MAP 10 & 18	ELEC. DIST. 3	CENSUS TR. 60-30
WATER CODE Private, Existing		SEWER CODE Private, Existing			
OWNER/DEVELOPER Howard County Government					
ADDRESS 3430 Court House Drive Ellicott City, MD 21043					

APPROVED: FOR PRIVATE WATER AND PRIVATE SEWERAGE SYSTEMS. HOWARD COUNTY HEALTH DEPARTMENT

COUNTY HEALTH OFFICER — DATE 8-23-90

APPROVED: HOWARD COUNTY DEPT. OF PLANNING & ZONING

DIRECTOR: — DATE 8/28/90

CHIEF, DIVISION OF COMMUNITY PLANNING AND LAND DEVELOPMENT: — DATE 8/23/90

APPROVED: FOR STORM DRAINAGE SYSTEMS AND ROADS. HOWARD COUNTY DEPT. OF PUBLIC WORKS

DIRECTOR — DATE 8/23/90

CHIEF, BUREAU OF ENGINEERING — DATE 8-23-90

STATE OF MARYLAND — REGISTERED PROFESSIONAL ENGINEER

DESIGN

DRAWN GBL

CHECKED JFH

PROJECT ENGINEER DSS

ALPHA RIDGE SOLID WASTE MANAGEMENT CENTER HOWARD COUNTY MARYLAND

MISCELLANEOUS PROFILES

EA ENGINEERING, SCIENCE, AND TECHNOLOGY, INC.

BALTIMORE
CHICAGO
LINCOLN
NEW YORK
NEW JERSEY
AVENEL
DALLAS
LOS ANGELES
SAN FRANCISCO
CHARLOTTE

Hunt Valley/Loveton Center
15 Loveton Circle
Sparks, Maryland 21152

DATE JULY 18, 1989
SCALE AS SHOWN
PROJECT NO. 10293.01
SHEET NO. 13 OF 25

~~10293.01-013~~ XXAL-90-013 SDP 90-90

080

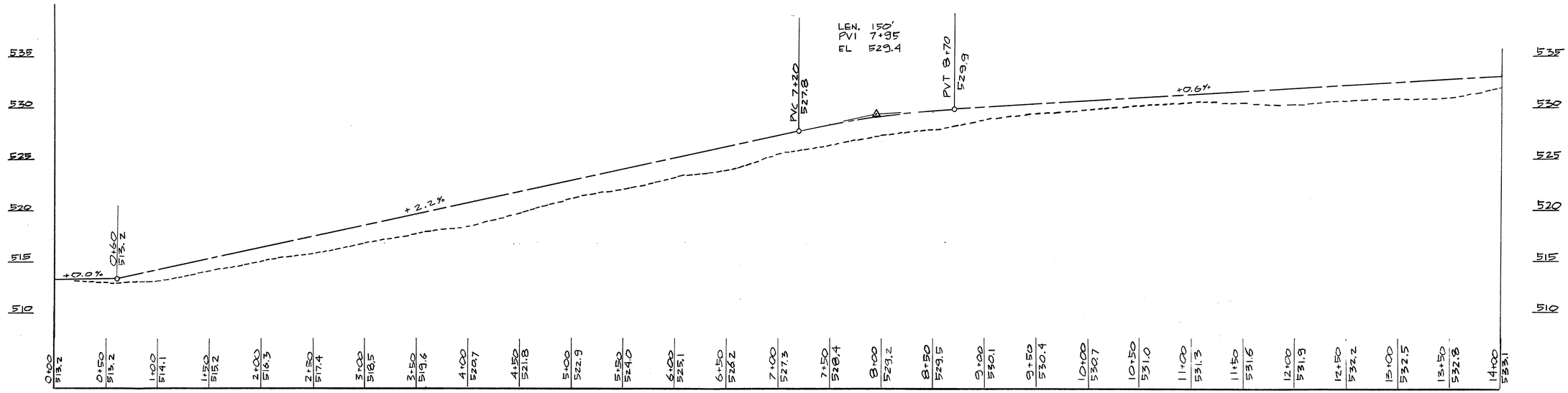

ACCESS ROAD PROFILE - STATION 0+00 - 14+00

SCALE: 1"=50' HOR.
1"= 5' VER.

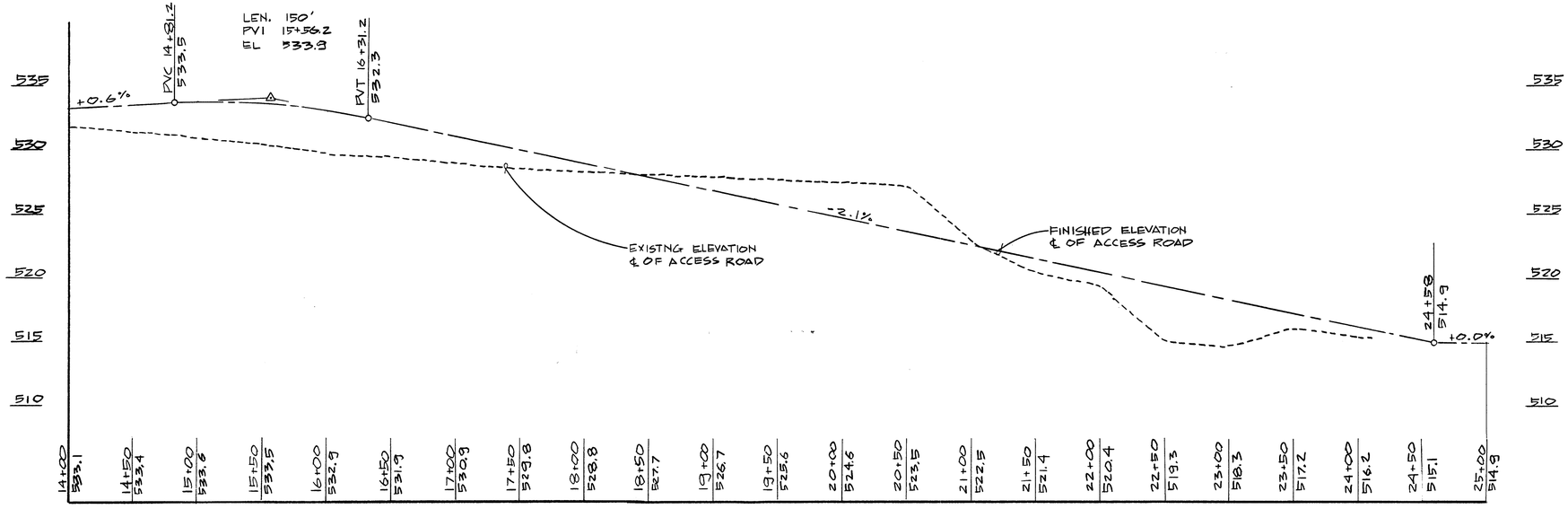

ACCESS ROAD PROFILE - STATION 14+00 - 25+00

SCALE: 1"=50' HOR.
1"= 5' VER.

THIS DRAWING REFLECTS RECORD CONDITIONS AND SUPERCEEDS SHEET 13 OF THE CONTRACT DRAWINGS

NOTES:
1. EXISTING ELEVATIONS ARE BASED UPON TOPOGRAPHIC WORKSHEETS PREPARED BY KIDDE CONSULTANTS, INC., RECEIVED BY EA ENGINEERING, SCIENCE AND TECHNOLOGY, INC. 20 DEC. '90
2. ROAD ALIGNMENT SHALL BE ADJUSTED AS INDICATED ON THIS DRAWING FROM STATION 0+00 TO STATION 24+58

RECORD DRAWING
EA ENGINEERING, SCIENCE, AND TECHNOLOGY, INC.
AUGUST 1992

STATE OF MARYLAND
DAVID S. SAMUELSON
No. 10293
PROFESSIONAL ENGINEER

REVISIONS			
NO.	DATE	BY	DESCRIPTION

ALPHA RIDGE SOLID WASTE MANAGEMENT CENTER
HOWARD COUNTY MARYLAND

REVISED ACCESS ROAD PROFILE - STA 0 TO STA 25

DESIGN	JWW
DRAWN	DSP
CHECKED	DSP
PROJECT ENGINEER	DSS

EA ENGINEERING, SCIENCE, AND TECHNOLOGY, INC.
15 Loveton Circle Sparks, Maryland 21152

DATE	22 JAN. '91
SCALE	NOTED
PROJECT NO.	10293.01
SHEET NO.	NEXT

XXAL-90-013A ~~10293.01-01-3A~~ SDP 90-90 13A OF 25

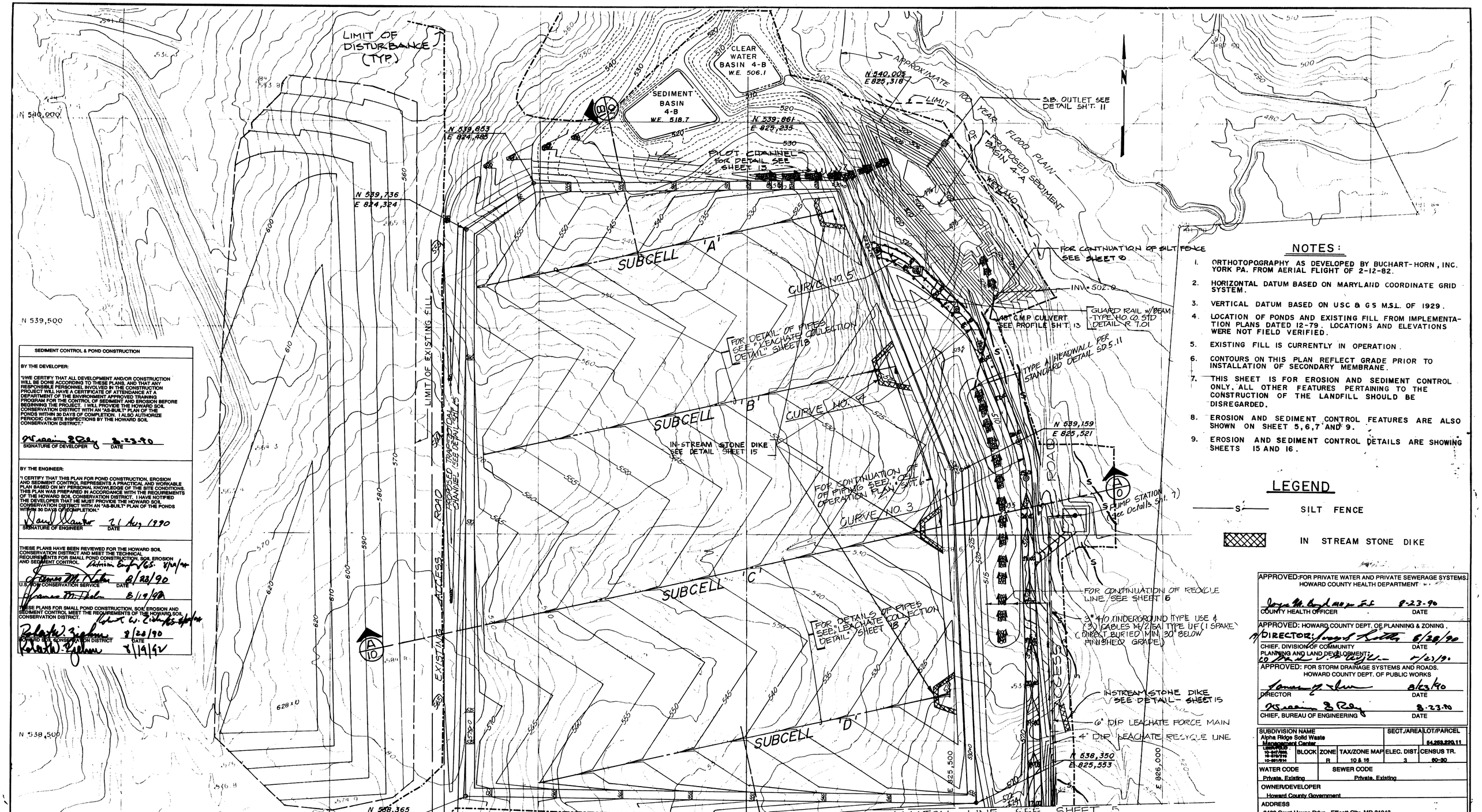

NOTE: EXISTING CONTOURS SHOWN DO NOT REFLECT CURRENT CONDITIONS. GRADING WILL BE ADJUSTED DURING CONSTRUCTION.

NOTES:

1. ORTHOTOPOGRAPHY AS DEVELOPED BY BUCHART-HORN, INC. YORK PA. FROM AERIAL FLIGHT OF 2-12-82.
2. HORIZONTAL DATUM BASED ON MARYLAND COORDINATE GRID SYSTEM.
3. VERTICAL DATUM BASED ON USC & GS M.S.L. OF 1929.
4. LOCATION OF PONDS AND EXISTING FILL FROM IMPLEMENTATION PLANS DATED 12-79. LOCATIONS AND ELEVATIONS WERE NOT FIELD VERIFIED.
5. EXISTING FILL IS CURRENTLY IN OPERATION.
6. CONTOURS ON THIS PLAN REFLECT GRADE PRIOR TO INSTALLATION OF SECONDARY MEMBRANE.
7. THIS SHEET IS FOR EROSION AND SEDIMENT CONTROL ONLY. ALL OTHER FEATURES PERTAINING TO THE CONSTRUCTION OF THE LANDFILL SHOULD BE DISREGARDED.
8. EROSION AND SEDIMENT CONTROL FEATURES ARE ALSO SHOWN ON SHEET 5, 6, 7 AND 9.
9. EROSION AND SEDIMENT CONTROL DETAILS ARE SHOWING SHEETS 15 AND 16.

LEGEND

—S— SILT FENCE

IN STREAM STONE DIKE

SEDIMENT CONTROL & POND CONSTRUCTION

BY THE DEVELOPER:

"I WE CERTIFY THAT ALL DEVELOPMENT AND/OR CONSTRUCTION WILL BE DONE ACCORDING TO THESE PLANS, AND THAT ANY RESPONSIBLE PERSONNEL INVOLVED IN THE CONSTRUCTION PROJECT WILL HAVE A CERTIFICATE OF ATTENDANCE AT A DEPARTMENT OF THE ENVIRONMENT APPROVED TRAINING PROGRAM FOR THE CONTROL OF SEDIMENT AND EROSION BEFORE BEGINNING THE PROJECT. I WILL PROVIDE THE HOWARD SOIL CONSERVATION DISTRICT WITH AN "AS-BUILT" PLAN OF THE PONDS WITHIN 30 DAYS OF COMPLETION. I ALSO AUTHORIZE PERIODIC ON-SITE INSPECTIONS BY THE HOWARD SOIL CONSERVATION DISTRICT."

SIGNATURE OF DEVELOPER — DATE 8-23-90

BY THE ENGINEER:

"I CERTIFY THAT THIS PLAN FOR POND CONSTRUCTION, EROSION AND SEDIMENT CONTROL REPRESENTS A PRACTICAL AND WORKABLE PLAN BASED ON MY PERSONAL KNOWLEDGE OF THE SITE CONDITIONS. THIS PLAN WAS PREPARED IN ACCORDANCE WITH THE REQUIREMENTS OF THE HOWARD SOIL CONSERVATION DISTRICT. I HAVE NOTIFIED THE DEVELOPER THAT HE MUST PROVIDE THE HOWARD SOIL CONSERVATION DISTRICT WITH AN "AS-BUILT" PLAN OF THE PONDS WITHIN 30 DAYS OF COMPLETION."

SIGNATURE OF ENGINEER — DATE 21 Aug 1990

THESE PLANS HAVE BEEN REVIEWED FOR THE HOWARD SOIL CONSERVATION DISTRICT AND MEET THE TECHNICAL REQUIREMENTS FOR SMALL POND CONSTRUCTION, SOIL EROSION AND SEDIMENT CONTROL

U.S. SCS CONSERVATION SERVICE — DATE 8/28/90

THESE PLANS FOR SMALL POND CONSTRUCTION, SOIL EROSION AND SEDIMENT CONTROL MEET THE REQUIREMENTS OF THE HOWARD SOIL CONSERVATION DISTRICT.

HOWARD SOIL CONSERVATION DISTRICT — DATE 8/28/90

APPROVED: FOR PRIVATE WATER AND PRIVATE SEWERAGE SYSTEMS. HOWARD COUNTY HEALTH DEPARTMENT

COUNTY HEALTH OFFICER — DATE 8-23-90

APPROVED: HOWARD COUNTY DEPT. OF PLANNING & ZONING.

DIRECTOR — DATE 8/28/90

CHIEF, DIVISION OF COMMUNITY PLANNING AND LAND DEVELOPMENT — DATE 8/23/90

APPROVED: FOR STORM DRAINAGE SYSTEMS AND ROADS. HOWARD COUNTY DEPT. OF PUBLIC WORKS

DIRECTOR — DATE 8/23/90

CHIEF, BUREAU OF ENGINEERING — DATE 8-23-90

SUBDIVISION NAME				SECT./AREA	LOT/PARCEL
Alpha Ridge Solid Waste Management Center					54,263,220,11
LEGEND: 10-247/248, 10-275/276, 10-281/284	BLOCK	ZONE	TAX/ZONE MAP	ELEC. DIST.	CENSUS TR.
		R	10 & 16	3	90-90
WATER CODE	SEWER CODE				
Private, Existing	Private, Existing				
OWNER/DEVELOPER					
Howard County Government					
ADDRESS					
3430 Court House Drive Ellicott City, MD 21043					

REVISION			
NO.	DATE	BY	DESCRIPTION
1	10-1-91	D.T.M.	SDP REQUIREMENTS, COORDINATES

RECORD DRAWING
EA ENGINEERING, SCIENCE, AND TECHNOLOGY, INC.
AUGUST 1992

STATE OF MARYLAND — DAVID S. SANTORO — PROFESSIONAL ENGINEER

ALPHA RIDGE SOLID WASTE MANAGEMENT CENTER HOWARD COUNTY MARYLAND

EROSION AND SEDIMENT CONTROL PLAN

DESIGN	D.S.P
DRAWN	D.T.M.
CHECKED	J.F.H.
PROJECT ENGINEER	D.S.S.

EA ENGINEERING, SCIENCE, AND TECHNOLOGY, INC.

Loveton Center
15 Loveton Circle
Sparks, Maryland 21152
(301) 771-4950

BALTIMORE, CHICAGO, LINCOLN, NEW YORK, NEW JERSEY, ATLANTA, DALLAS, LOS ANGELES, SAN FRANCISCO

DATE	JUNE 1990
SCALE	1" = 100'
PROJECT NO.	10293.01
SHEET NO.	14 OF 25

~~10293.01 OTL~~ XXAL-90-014

SDP 90-90

SEQUENCE OF OPERATION

PHASE I - LANDFILL CONSTRUCTION

I. STAGE I

1. HOWARD COUNTY TO EXCAVATE CWB-4B AND SB-4B TO ORIGINAL DESIGN SPECIFICATIONS IF REQUIRED. (NOT IN CONTRACT.)
2. APPLY FOR PERMITS.
3. MOBILIZATION (NOTIFY DEPARTMENT OF INSPECTIONS AND PERMITS 48 HOURS BEFORE COMMENCING WORK).
4. CLEAR AND GRUB AREA FOR SILT FENCE AND IN-STREAM STONE DIKES.
5. INSTALL SILT FENCE DOWNSLOPE OF SB-4A, THE LEACHATE MANAGEMENT AREA AND THE ACCESS ROAD AS SHOWN ON THE PLANS. INSTALL SILT FENCE AROUND PROPOSED STOCKPILE AREAS. INSTALL IN-STREAM STONE DIKES ALONG THE ACCESS ROAD AS SHOWN ON THE PLANS.
6. ROUGH GRADE ACCESS ROAD.
7. CONSTRUCT SB-4A TO DESIGN SPECIFICATIONS AS SHOWN ON THE PLANS.
8. BEGIN CONSTRUCTION OF THE LEACHATE MANAGEMENT AREA, ACCESS TO SEDIMENT BASINS AND STOCKPILE AREAS.
9. STABILIZE DISTURBED AREAS WITH VEGETATION.
10. REMOVE SILT FENCE AND IN-STREAM STONE DIKES AFTER AREA IS STABILIZED.

II. STAGE II

1. BEGIN CONSTRUCTION OF WESTERN PORTION OF LANDFILL BERM INCLUDING TRAPEZOIDAL CHANNEL. PERIMETERS OF ALL LANDFILL BERMS TO BE STABILIZED WITH VEGETATION IMMEDIATELY UPON COMPLETION OF CONSTRUCTION.
2. COMPLETE CONSTRUCTION OF SUBCELL 'A' LANDFILL BERM INCLUDING ALL LEACHATE COLLECTION AND RECYCLING SYSTEMS PIPING INCLUDED IN THE BERM AND SUBCELL 'A' IN-STREAM STONE DIKE.
3. BEGIN PREPARATION OF SUBCELL 'A' SUBBASE.
4. BEGIN CONSTRUCTION OF LEACHATE MANAGEMENT AREA.

III. STAGE III

1. BEGIN GRADING, SUBBASE PREPARATION, LANDFILL BERM CONSTRUCTION AND IN-STREAM STONE DIKE FOR SUBCELL 'B'.
2. BEGIN INSTALLATION OF SECONDARY LINER IN SUBCELL 'A'. ALL CELLS TO BE LINED STARTING FROM THE HIGHEST POINT OF THE SUBCELL AND MOVING TO THE LOWEST POINT. IN-STREAM STONE DIKES TO BE REMOVED FROM ALL SUBCELLS JUST PRIOR TO COMPLETION OF SECONDARY LINER INSTALLATION.

IV. STAGE IV

1. BEGIN GRADING, SUBBASE PREPARATION, LANDFILL BERM CONSTRUCTION AND IN-STREAM STONE DIKE FOR SUBCELL 'C'.
2. BEGIN INSTALLATION OF SECONDARY LINER IN SUBCELL 'B'.
3. BEGIN PLACEMENT OF LEAK DETECTION PIPING, GEONET AND PRIMARY LINER IN SUBCELL 'A'.

V. STAGE V

1. BEGIN GRADING, SUBBASE PREPARATION, LANDFILL BERM CONSTRUCTION AND IN-STREAM STONE DIKE FOR SUBCELL 'D'.
2. BEGIN INSTALLATION OF SECONDARY LINER IN SUBCELL 'C'.
3. BEGIN PLACEMENT OF LEAK DETECTION PIPES, GEONET AND PRIMARY LINER IN SUBCELL 'B'.
4. BEGIN PLACEMENT OF LINER COVER MATERIAL IN SUBCELL 'A'.

VI. STAGE VI

1. BEGIN INSTALLATION OF SECONDARY LINER IN SUBCELL 'D'.
2. BEGIN PLACEMENT OF LEAK DETECTION PIPES, GEONET AND PRIMARY LINER IN SUBCELL 'C'.
3. BEGIN PLACEMENT OF LINER COVER MATERIAL IN SUBCELL 'B'.
4. INSTALL SILT FENCE DOWNSLOPE OF CWB-4B.
5. BEGIN RECONSTRUCTION OF SB-4B AND CWB-4B TO DESIGN SPECIFICATIONS AS SHOWN ON THE PLANS.
6. STABILIZE DISTURBED AREA WITH VEGETATION.
7. REMOVE SILT FENCE AFTER AREA IS STABILIZED.

VII. STAGE VII

1. BEGIN PLACEMENT OF LEAK DETECTION PIPES, GEONET AND PRIMARY LINER IN SUBCELL 'D'.
2. BEGIN PLACEMENT OF LINER COVER MATERIAL IN SUBCELL 'C'.

VIII. STAGE VIII

1. BEGIN PLACEMENT OF LINER COVER MATERIAL IN SUBCELL 'D'.

PHASE II - LANDFILL OPERATION (LANDFILL TO BE OPERATED IN SUCCESIVE AREAS). (NOT IN CONTRACT.)

1. OPERATE LANDFILL IN PHASES TO PROPOSED ELEVATIONS.
2. INSTALL BENCHES AND GABION DOWNCHUTES AS SHOWN ON THE PLANS TO CONVEY FLOW FROM THE DISTURBED AREA SAFELY TO THE SEDIMENT PONDS.
3. STABILIZE DISTURBED AREA WITH VEGETATION.

PHASE III. - CLOSURE (CAP CONSTRUCTION, TO BE INITIATED APPROXIMATELY TWO YEARS AFTER CESSATION OF LANDFILL OPERATIONS). (NOT IN CONTRACT.)

1. APPLY FOR PERMITS.
2. MOBILIZATION (NOTIFY DEPARTMENT OF INSPECTIONS AND PERMITS 48 HOURS BEFORE COMMENCING WORK).
3. CLEAR AND GRUB AREAS TO BE CAPPED.
4. GRADE TO ESTABLISH BASE FOR CAP.
5. PROOFROLL AREAS TO BE CAPPED.
6. INSTALL GAS VENT.
7. INSTALL MEMBRANE LINER.
8. PLACE CAP DRAINAGE COVER MATERIAL.
9. PLACE FINAL COVER MATERIAL.
10. INSTALL BENCHES AND GABION DOWNCHUTES.
11. FINAL GRADING.
12. PERMANENT STABILIZATION/REVEGETATION.
13. REMOVE SILT FENCE UPON STABILIZATION OF DISTURBED AREAS.
14. CONVERT SEDIMENT BASIN TO STORMWATER MANAGEMENT FACILITY UPON STABILIZATION OF DISTURBED AREAS (SEE NOTES ON SHEET 11). THE CONVERSION OF THE SEDIMENT BASINS MUST BE DONE IN SUCH A MANNER WHICH PREVENTS ANY SEDIMENT FROM BEING DISCHARGED DOWNSTREAM.
15. DEMOBILIZATION.

NO SOIL EROSION AND SEDIMENT CONTROL DEVICES MAY BE REMOVED WITHOUT THE PRIOR CONSENT FROM THE SEDIMENT CONTROL INSPECTOR.

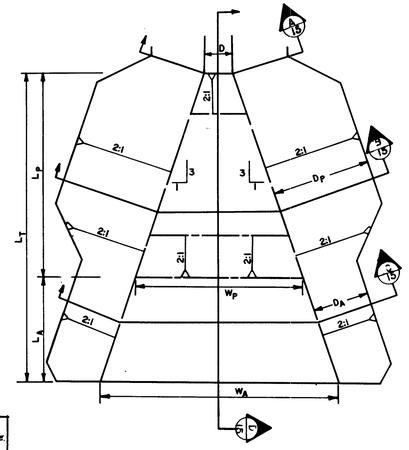

ENERGY DISSIPATOR DETAIL

N.T.S.

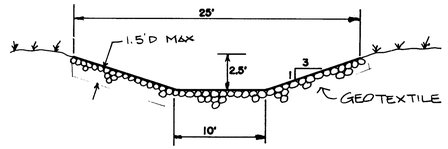

TRAPEZOIDAL CHANNEL DETAIL

SCALE: 1/8" = 1'-0"

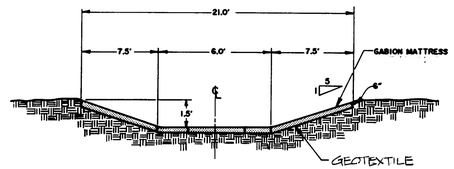

CROSS-SECTION

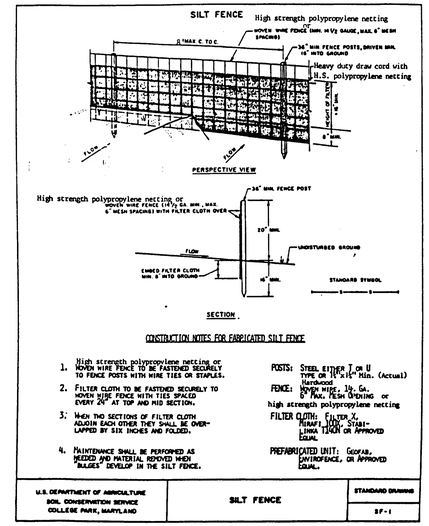

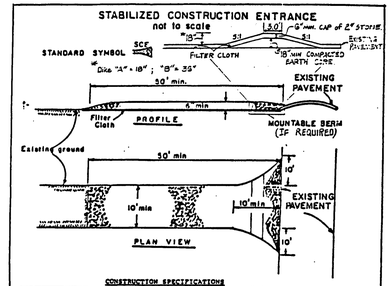

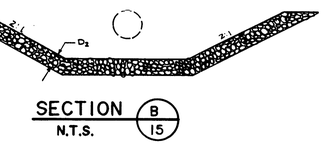

SECTION A 15
N.T.S.

SECTION B 15
N.T.S.

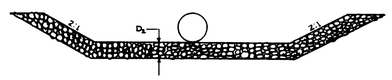

SECTION C 15
N.T.S.

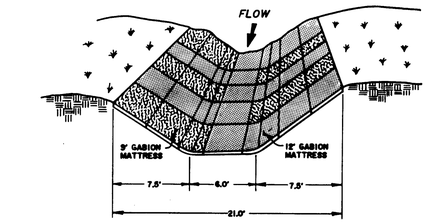

PERSPECTIVE

GABION DOWNCHUTE DETAIL

N.T.S.

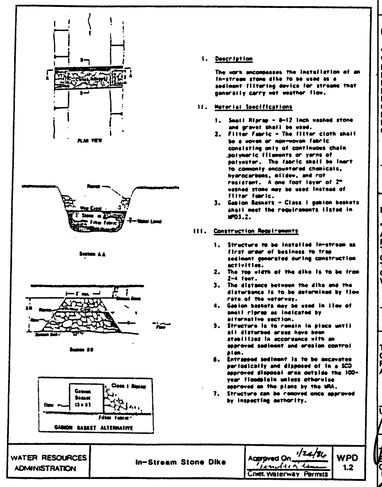

I. Description

This work encompasses the installation of an in-stream stone dike to be used as a sediment filtering device for streams that generally carry wet weather flow.

II. Material Specifications

1. Small Riprap - 6-12 inch washed stone and gravel shall be used.
2. Filter Fabric - The filter cloth shall be a woven or non-woven fabric consisting only of continuous chain polymeric filaments or yarns of polyester. The fabric shall be inert to commonly encountered chemicals, hydrocarbons, mildew, and rot resistant. A one foot layer of 2" washed stone may be used instead of filter fabric.
3. Gabion Baskets - Class I gabion baskets shall meet the requirements listed in AMD3.2.

III. Construction Requirements

1. Structure to be installed in-stream as first order of business to trap sediment generated during construction activities.
2. The top elev. of the dike is to be from 2-4 feet.
3. The distance between the dike and the disturbance is to be determined by flow rate of the waterway.
4. Gabion baskets may be used in lieu of small riprap as indicated by structure section.
5. Structure to remain in place until all disturbed areas have been stabilized in accordance with an approved sediment and erosion control plan.
6. Entrapped sediment is to be excavated periodically and disposed of in a SCD approved disposal area outside the 100-year floodplain unless otherwise approved on the plans by the SWA.
7. Structure can be removed once approved by inspecting authority.

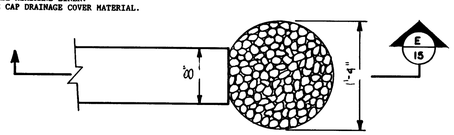

CULVERT OUTLET PROTECTION

N.T.S.

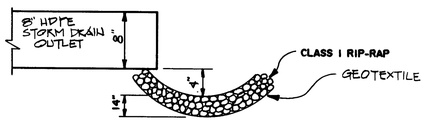

SECTION E 15
N.T.S.

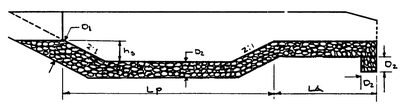

SECTION D 15
N.T.S.

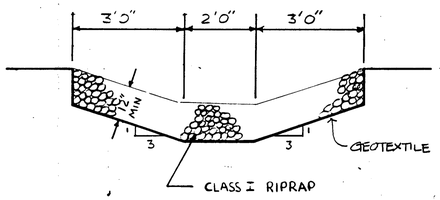

PILOT CHANNEL DETAIL

SCALE : 1/2" = 1'-0"

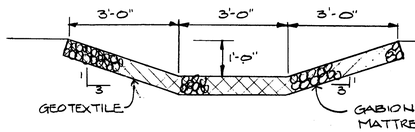

GABION LINED PILOT CHANNEL DETAIL

SCALE: 1/2" = 1'-0"

RECORD DRAWING
EA ENGINEERING, SCIENCE, AND TECHNOLOGY, INC.
AUGUST 1992

SEDIMENT CONTROL & POND CONSTRUCTION

BY THE DEVELOPER:

"I/WE CERTIFY THAT ALL DEVELOPMENT AND/OR CONSTRUCTION WILL BE DONE ACCORDING TO THESE PLANS, AND THAT ANY RESPONSIBLE PERSONNEL INVOLVED IN THE CONSTRUCTION PROJECT WILL HAVE A CERTIFICATE OF ATTENDANCE AT A DEPARTMENT OF THE ENVIRONMENT APPROVED TRAINING PROGRAM FOR THE CONTROL OF SEDIMENT AND EROSION BEFORE BEGINNING THE PROJECT. I WILL PROVIDE THE HOWARD SOIL CONSERVATION DISTRICT WITH AN "AS-BUILT" PLAN OF THE PONDS WITHIN 30 DAYS OF COMPLETION. I ALSO AUTHORIZE PERIODIC ON-SITE INSPECTIONS BY THE HOWARD SOIL CONSERVATION DISTRICT."

SIGNATURE OF DEVELOPER — DATE 8-23-90

BY THE ENGINEER:

"I CERTIFY THAT THIS PLAN FOR POND CONSTRUCTION, EROSION AND SEDIMENT CONTROL REPRESENTS A PRACTICAL AND WORKABLE PLAN BASED ON MY PERSONAL KNOWLEDGE OF THE SITE CONDITIONS. THIS PLAN WAS PREPARED IN ACCORDANCE WITH THE REQUIREMENTS OF THE HOWARD SOIL CONSERVATION DISTRICT. I HAVE NOTIFIED THE DEVELOPER THAT HE MUST PROVIDE THE HOWARD SOIL CONSERVATION DISTRICT WITH AN "AS-BUILT" PLAN OF THE PONDS WITHIN 30 DAYS OF COMPLETION."

SIGNATURE OF ENGINEER — DATE 21 Aug 1990

THESE PLANS HAVE BEEN REVIEWED FOR THE HOWARD SOIL CONSERVATION DISTRICT AND MEET THE TECHNICAL REQUIREMENTS FOR SMALL POND CONSTRUCTION, SOIL EROSION AND SEDIMENT CONTROL.

U.S. SOIL CONSERVATION SERVICE — DATE 8/23/90 — 8/19/92

THESE PLANS FOR SMALL POND CONSTRUCTION, SOIL EROSION AND SEDIMENT CONTROL MEET THE REQUIREMENTS OF THE HOWARD SOIL CONSERVATION DISTRICT.

HOWARD SOIL CONSERVATION DISTRICT — DATE 8/23/90 — 8/19/92

APPROVED: FOR PRIVATE WATER AND PRIVATE SEWERAGE SYSTEMS. HOWARD COUNTY HEALTH DEPARTMENT

COUNTY HEALTH OFFICER — DATE 8-23-90

APPROVED: HOWARD COUNTY DEPT. OF PLANNING & ZONING

DIRECTOR — DATE 8/28/90

CHIEF, DIVISION OF COMMUNITY PLANNING AND LAND DEVELOPMENT — DATE 8/23/90

APPROVED: FOR STORM DRAINAGE SYSTEMS AND ROADS. HOWARD COUNTY DEPT. OF PUBLIC WORKS

DIRECTOR — DATE 8/23/90

CHIEF, BUREAU OF ENGINEERING — DATE 8-23-90

ENERGY DISSIPATOR SCHEDULE

LOCATION	D FT.	L_P FT.	L_A FT.	L_T FT.	D_1 FT.	D_2 FT.	h_s FT.	D_P FT.	D_A FT.	W_P FT.	W_A FT.	d_{50} FT.	d_{MAX} FT.
SB-4A	1.5	11.1	5.6	16.7	1.25	0.87	1.11	5.2	3.0	8.9	12.6	0.42	0.58
48" CMP	4.0	13.3	6.7	20.0	1.67	1.25	1.33	10.7	8.0	12.9	17.3	0.54	0.83
SB-4B	3.0	18.1	9.1	27.2	1.67	1.25	1.81	9.6	6.0	15.1	21.1	0.54	0.83
CWB-4B	3.0	9.0	4.2	13.2	1.26	0.84	0.56	7.7	6.0	9.0	11.8	0.42	0.58
24" CMP	2.0	8.4	4.2	12.6	1.260	0.87	0.84	5.7	4.0	7.6	10.4	0.42	0.58

SUBDIVISION NAME				SECT./AREA	LOT/PARCEL
Alpha Ridge Solid Waste Management Center					302
LIBER/FOLIO	BLOCK	ZONE	TAX/ZONE MAP	ELEC. DIST.	CENSUS TR.
856-310		R	16	3	6030
WATER CODE		SEWER CODE			
Private, Existing		Private, Existing			
OWNER/DEVELOPER					
Howard County Government					
ADDRESS					
3430 Court House Drive Ellicott City, MD 21043					

REVISIONS			
NO.	DATE	BY	DESCRIPTION

ALPHA RIDGE SOLID WASTE MANAGEMENT CENTER HOWARD COUNTY MARYLAND

EROSION AND SEDIMENT CONTROL DETAILS

EA ENGINEERING, SCIENCE, AND TECHNOLOGY, INC.
BALTIMORE, CHICAGO, LINCOLN, NEW YORK, NEW JERSEY, ATLANTA, DALLAS, LOS ANGELES, SAN FRANCISCO
Loveton Center, 15 Loveton Circle, Sparks, Maryland 21152, (301) 771-4950

DESIGN	MMD
DRAWN	PMS
CHECKED	DSP
PROJECT ENGINEER	DSS
DATE	JUNE 1990
SCALE	AS SHOWN
PROJECT NO.	10293.01
SHEET NO.	15 OF 25

~~10293.01-015~~ XXA1-90-015

SDP 90-90

088

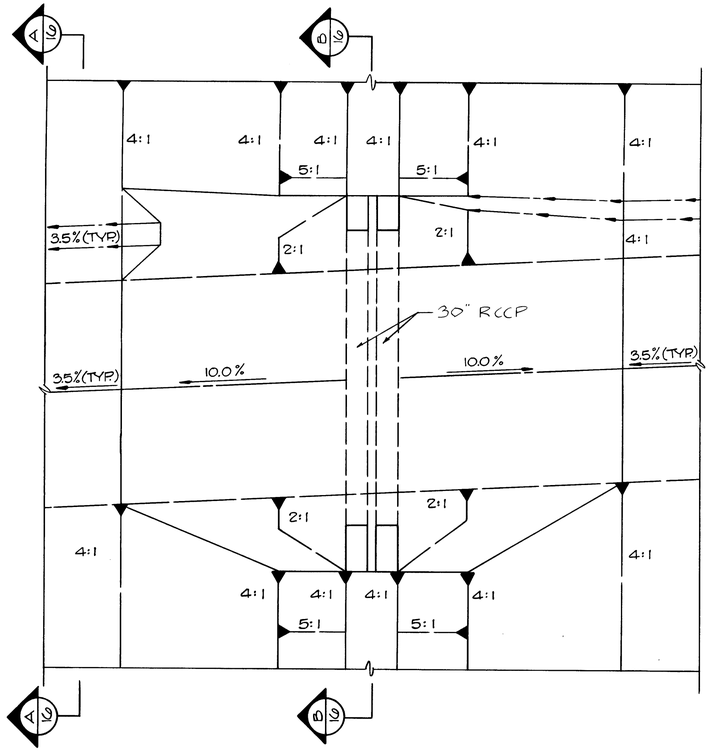

DOWNCHUTE/HAUL ROAD TRANSITION DETAIL
SCALE: 1/8" = 1'-0"

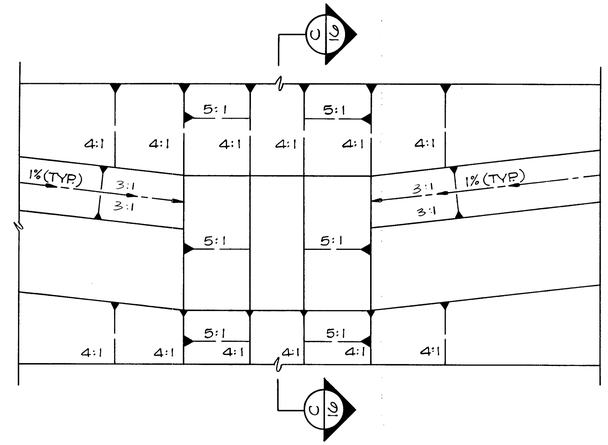

BENCH/DOWNCHUTE TRANSITION DETAIL
SCALE: 1/8" = 1'-0"

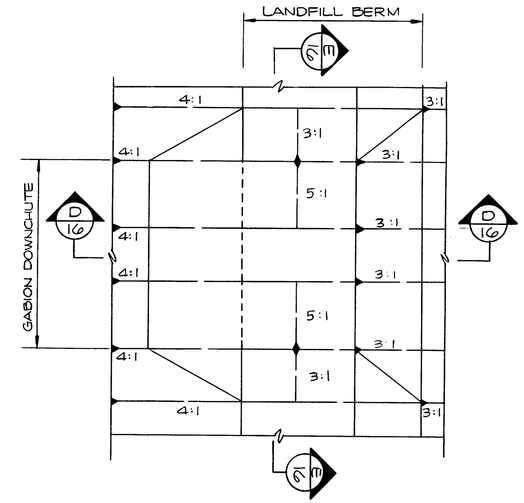

DOWNCHUTE/LANDFILL BERM DETAIL
SCALE: 1/8" = 1'-0"

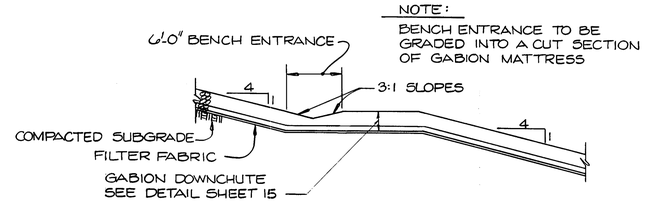

SECTION C/16
SCALE: 1/8" = 1'-0"

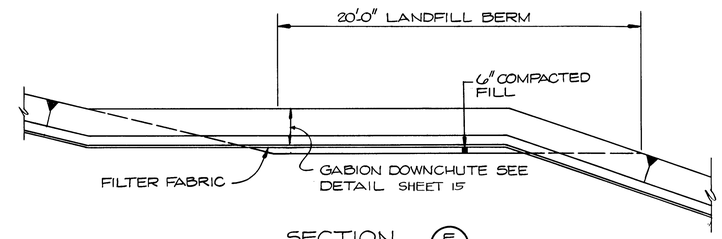

SECTION E/16
SCALE: 1/4" = 1'-0"

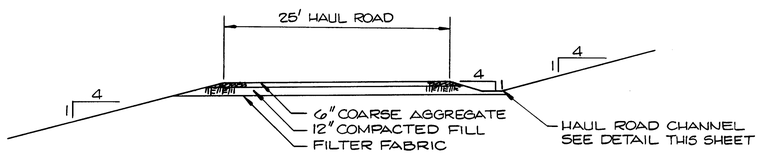

SECTION A/16
SCALE: 1/8" = 1'-0"

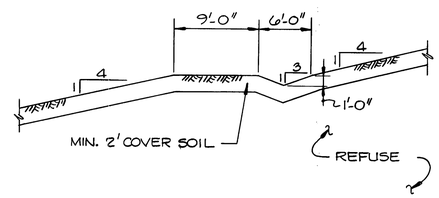

TYPICAL BENCH DETAIL
SCALE: 1/8" = 1'-0"

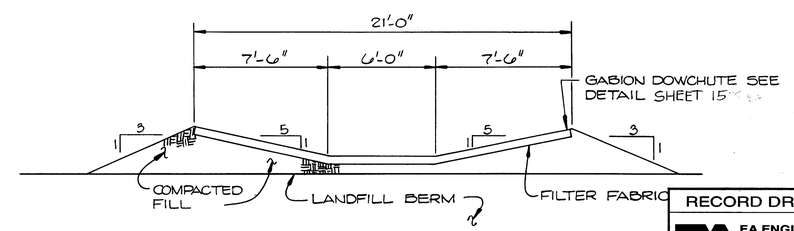

SECTION F/16
SCALE: 1/4" = 1'-0"

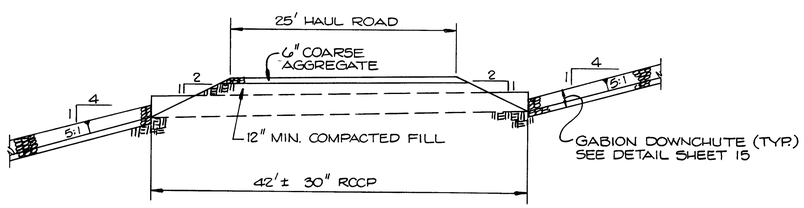

SECTION B/16
SCALE: 1/8" = 1'-0"

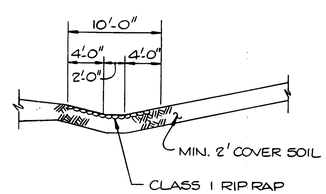

HAUL ROAD CHANNEL DETAIL
SCALE: 1/8" = 1'-0"

RECORD DRAWING
EA ENGINEERING, SCIENCE, AND TECHNOLOGY, INC.
AUGUST 1992

NOT IN CONTRACT

SEDIMENT CONTROL & POND CONSTRUCTION

BY THE DEVELOPER:

"I/WE CERTIFY THAT ALL DEVELOPMENT AND/OR CONSTRUCTION WILL BE DONE ACCORDING TO THESE PLANS, AND THAT ANY RESPONSIBILE PERSONNEL INVOLVED IN THE CONSTRUCTION PROJECT WILL HAVE A CERTIFICATE OF ATTENDANCE AT A DEPARTMENT OF THE ENVIRONMENT APPROVED TRAINING PROGRAM FOR THE CONTROL OF SEDIMENT AND EROSION BEFORE BEGINNING THE PROJECT. I WILL PROVIDE THE HOWARD SOIL CONSERVATION DISTRICT WITH AN 'AS-BUILT' PLAN OF THE PONDS WITHIN 30 DAYS OF COMPLETION. I ALSO AUTHORIZE PERIODIC ON-SITE INSPECTIONS BY THE HOWARD SOIL CONSERVATION DISTRICT."

SIGNATURE OF DEVELOPER — DATE 8-23-90

BY THE ENGINEER:

"I CERTIFY THAT THIS PLAN FOR POND CONSTRUCTION, EROSION AND SEDIMENT CONTROL REPRESENTS A PRACTICAL AND WORKABLE PLAN BASED ON MY PERSONAL KNOWLEDGE OF THE SITE CONDITIONS. THIS PLAN WAS PREPARED IN ACCORDANCE WITH THE REQUIREMENTS OF THE HOWARD SOIL CONSERVATION DISTRICT. I HAVE NOTIFIED THE DEVELOPER THAT HE MUST PROVIDE THE HOWARD SOIL CONSERVATION DISTRICT WITH AN 'AS-BUILT' PLAN OF THE PONDS WITHIN 30 DAYS OF COMPLETION."

SIGNATURE OF ENGINEER — DATE 1 Aug 1990

THESE PLANS HAVE BEEN REVIEWED FOR THE HOWARD SOIL CONSERVATION DISTRICT AND MEET THE TECHNICAL REQUIREMENTS FOR SMALL POND CONSTRUCTION, SOIL EROSION AND SEDIMENT CONTROL.

U.S. SOIL CONSERVATION SERVICE — DATE 8/23/90

HOWARD SOIL CONSERVATION DISTRICT — DATE 8/19/92

THESE PLANS FOR SMALL POND CONSTRUCTION, SOIL EROSION AND SEDIMENT CONTROL MEET THE REQUIREMENTS OF THE HOWARD SOIL CONSERVATION DISTRICT.

HOWARD SOIL CONSERVATION DISTRICT — DATE 8/23/90 — 8/19/92

APPROVED: FOR PRIVATE WATER AND PRIVATE SEWERAGE SYSTEMS. HOWARD COUNTY HEALTH DEPARTMENT

COUNTY HEALTH OFFICER — DATE 8-23-90

APPROVED: HOWARD COUNTY DEPT. OF PLANNING & ZONING

DIRECTOR — DATE 8/28/90

CHIEF, DIVISION OF COMMUNITY PLANNING AND LAND DEVELOPMENT — DATE 8/22/90

APPROVED: FOR STORM DRAINAGE SYSTEMS AND ROADS. HOWARD COUNTY DEPT. OF PUBLIC WORKS

DIRECTOR — DATE 8/22/90

CHIEF, BUREAU OF ENGINEERING — DATE 8-23-90

SUBDIVISION NAME				SECT./AREA	LOT/PARCEL
Alpha Ridge Solid Waste Management Center					54,253,220,11
LIBER/FOLIO 10-547/906 16-578/316 10-861/314	BLOCK	ZONE R	TAX/ZONE MAP 10 & 16	ELEC. DIST. 3	CENSUS TR. 60-30
WATER CODE Private, Existing		SEWER CODE Private, Existing			
OWNER/DEVELOPER Howard County Government					
ADDRESS 3430 Court House Drive Ellicott City, MD 21043					

REVISIONS			
NO.	DATE	BY	DESCRIPTION

ALPHA RIDGE SOLID WASTE MANAGEMENT CENTER HOWARD COUNTY MARYLAND

OPERATIONAL EROSION & SEDIMENT CONTROL DETAILS

DESIGN	MMD
DRAWN	AMP
CHECKED	DSP
PROJECT ENGINEER	DSS

EA ENGINEERING, SCIENCE, AND TECHNOLOGY, INC.
Loweton Center
15 Loweton Circle
Sparks, Maryland 21152
(301) 771-4950
BALTIMORE CHICAGO LINCOLN NEW YORK NEW JERSEY ATLANTA DALLAS LOS ANGELES SAN FRANCISCO

DATE	JUNE 1990
SCALE	AS SHOWN.
PROJECT NO.	10293.01
SHEET NO.	16 OF 25

~~10293.01-016~~ XXAL-90-016 SDP 90-90

880

CONSTRUCTION SPECIFICATIONS FOR BASINS

I. SITE PREPARATION

AREAS DESIGNATED FOR BORROW AREAS, EMBANKMENT, AND STRUCTURAL WORKS SHALL BE CLEARED, GRUBBED AND STRIPPED OF TOPSOIL. ALL TREES, VEGETATION, ROOTS AND OTHER OBJECTIONABLE MATERIAL SHALL BE REMOVED. THE FOUNDATION AND ANY EXISTING EMBANKMENT SHALL BE SHAPED IN ACCORDANCE WITH THE CONTRACT DRAWINGS.

AREAS TO BE COVERED BY THE POND OR RESERVOIR WILL BE CLEARED OF ALL TREES, BRUSH, LOGS, FENCES, RUBBISH AND OTHER OBJECTIONABLE MATERIAL UNLESS OTHERWISE DESIGNATED ON THE PLANS. TREES, BRUSH AND STUMPS SHALL BE CUT APPROXIMATELY LEVEL WITH THE GROUND SURFACE.

ALL CLEARED AND GRUBBED MATERIAL SHALL BE DISPOSED OF OUTSIDE AND BELOW THE LIMITS OF THE DAM AND RESERVOIR AS DIRECTED BY THE OWNER OR HIS REPRESENTATIVE. SOIL SHALL BE STOCKPILED AT LOCATIONS INDICATED ON THE PLANS. TOPSOIL SHALL BE SEGREGATED FROM FILL MATERIAL.

ALL STRUCTURES WITHIN THE WORKS LIMITS OF PONDS TO BE RECONSTRUCTED SHALL BE REMOVED. THE DISPOSAL SHALL BE COMPLETELY OFFSITE AND SHALL BE THE RESPONSIBILITY OF THE CONTRACTOR.

II. EARTH FILL

MATERIAL

THE FILL MATERIAL SHALL BE TAKEN FROM APPROVED DESIGNATED BORROW AREA OR AREAS. ACCEPTABLE MATERIAL SHALL BE MATERIALS CLASSIFIED IN ASTM D2487 AS GC, SM, SC, ML, MH, CH, OR CL. ACCEPTABLE MATERIAL SHALL NOT CONTAIN STONE WITH A MAXIMUM DIMENSION LARGER THAN 4" IN THE UPPER 6" OF FILL OR 6" FOR THE REMAINDER OF THE FILL. STONES SHALL NOT BE MORE THAN 25% BY VOLUME OF THE FILL MATERIAL. IT SHALL BE FREE OF ROOTS, STUMPS, WOOD, RUBBISH, OVERSIZE STONES, FROZEN OR OTHER OBJECTIONABLE MATERIALS. THE EMBANKMENT SHALL BE CONSTRUCTED TO AN ELEVATION WHICH PROVIDES FOR ANTICIPATED SETTLEMENT TO THE DESIGN ELEVATION. THE FILL HEIGHT ALL ALONG THE LENGTH OF THE EMBANKMENT SHALL BE INCREASED ABOVE THE DESIGN ELEVATION (INCLUDING FREEBOARD) AS SHOWN ON THE PLANS. THE MOISTURE CONTENT OF THE FILL MATERIAL SHALL BE AT OR WITHIN TWO PERCENTAGE POINTS OF THE "OPTIMUM MOISTURE CONTENT" AS DETERMINED IN ACCORDANCE WITH AASHTO T-180.

III. STRUCTURAL BACKFILL

STRUCTURAL BACKFILL MATERIAL SHALL OF THE TYPE AND QUALITY CONFORMING TO THAT SPECIFIED FOR THE ADJOINING FILL MATERIAL. THE FILL SHALL BE PLACED IN HORIZONTAL LAYERS NOT TO EXCEED FOUR INCHES IN THICKNESS AND COMPACTED BY HAND TAMPERS OR OTHER COMPACTION EQUIPMENT. THE MATERIAL NEEDS TO FILL COMPLETELY ALL SPACES UNDER AND ADJACENT TO THE PIPE. THE PIPES SHALL BE LOADED SUFFICIENTLY DURING BACKFILLING AROUND THE SIDES TO PREVENT ITS BEING LIFTED FROM THE BEDDING RESULTING IN A LOSS OF CONTACT AND HIGH PIPING POTENTIAL. AT NO TIME DURING THE BACKFILLING. OPERATION SHALL DRIVEN EQUIPMENT BE ALLOWED TO OPERATE CLOSER THAN FOUR FEET, MEASURED HORIZONTALLY, TO ANY PART OF A STRUCTURE. UNDER NO CIRCUMSTANCES SHALL EQUIPMENT BE DRIVEN OVER ANY PART OF A CONCRETE STRUCTURE OR PIPE UNLESS THERE IS A COMPACTED FILL OF TWENTY-FOUR INCHES OR GREATER OVER THE STRUCTURE OR PIPE.

IV. PIPE CONDUITS

ALL PIPES SHALL BE CIRCULAR IN CROSS SECTION.

A. CORRUGATED METAL PIPE

1. MATERIALS - (STEEL PIPE) - THIS PIPE AND ITS APPURTENANCES SHALL BE GALVANIZED AND FULLY BITUMINOUS COATED AND SHALL CONFORM TO THE REQUIREMENTS OF AASHTO SPECIFICATION M-190 TYPE A WITH WATERTIGHT COUPLING BANDS. ANY BITUMINOUS COATING DAMAGED OR OTHERWISE REMOVED SHALL BE REPLACED WITH COLD APPLIED BITUMIQUS COATING COMPOUND.

2. CONNECTIONS - ALL CONNECTIONS WITH PIPES MUST BE COMPLETELY WATERTIGHT. THE DRAIN PIPE OR BARREL CONNECTION TO THE RISER SHALL BE WELDED ALL AROUND WHEN THE PIPE AND RISER ARE METAL. WATERTIGHT COUPLING BANDS OR FLANGES SHALL BE USED AT ALL JOINTS. CRIMPED ENDS THAT ARE OUT OF LINE SHALL BE STRAIGHTENED AND ADDITIONAL MASTIC APPLIED IN ACCORDANCE WITH MANUFACTURER'S RECOMMENDATIONS. DIMPLE BANDS ARE NOT CONSIDERED TO BE WATERTIGHT.

PLACEMENT

AREAS ON WHICH FILL IS TO BE PLACED SHALL BE SCARIFIED PRIOR TO PLACEMENT OF FILL. FILL MATERIALS SHALL BE PLACED IN 8-INCH MAXIMUM THICKNESS (BEFORE COMPACTION) LAYERS WHICH ARE TO BE CONTINUOUS OVER THE ENTIRE LENGTH OF THE FILL. THE MOST POROUS BORROW MATERIALS SHALL BE PLACED IN THE DOWNSTREAM PORTIONS OF THE EMBANKMENT.

COMPACTION

CONTROL THE MOVEMENT OF THE HAULING EQUIPMENT OVER THE FILL SO THAT THE ENTIRE SURFACE OF EACH LIFT IS COMPACTED TO 90% OF THE "MAXIMUM DRY DENSITY" AS DETERMINED IN ACCORDANCE WITH AASHTO T-180.

THE MOVEMENT OF THE HAULING AND SPREADING EQUIPMENT OVER THE FILL SHALL BE CONTROLLED SO THAT THE ENTIRE SURFACE OF EACH LIFT SHALL BE TRAVERSED BY NOT LESS THAN ONE TREAD TRACK OF THE EQUIPMENT OR COMPACTION SHALL BE ACHIEVED BY A MINIMUM OF FOUR COMPLETE PASSES OF A SHEEEPSFOOT, RUBBER TIRED OR VIBRATORY ROLLER. FILL MATERIAL SHALL CONTAIN SUFFICIENT MOISTURE SUCH THAT THE REQUIRED DEGREE OF COMPACTION CAN BE OBTAINED WITH THE EQUIPMENT USED.

EACH LAYER OF FILL SHALL BE COMPACTED AS NECESSARY TO OBTAIN THE REQUIRED MINIMUM DENSITY AND IS TO BE CERTIFIED BY THE ENGINEER.

CUTOFF TRENCH

A CUTOFF TRENCH SHALL BE EXCAVATED ALONG OR PARALLEL TO THE CENTERLINE OF THE EMBANKMENT AS SHOWN OF THE PLANS. THE BOTTOM WIDTH OF THE TRENCH SHALL BE AS SHOWN ON THE DRAWINGS, WITH THE MINIMUM WIDTH BEING FOUR FEET. THE DEPTH SHALL BE AT LEAST FOUR FEET OR AS SHOWN ON THE PLANS. THE SIDE SLOPES OF THE TRENCH SHALL BE AS SHOWN OF THE DRAWINGS WITH THE MAXIMUM SLOPE BEING 1 TO 1. THE BACKFILL MATERIAL FOR THE CUTOFF TRENCH SHALL BE CLASSIFIED AS CH, CL, SC, OR ML-CL IN ACCORDANCE WITH ASTM D2488, AND SHALL BE COMPACTED WITH EQUIPMENT OR ROLLERS TO ASSURE COMPACTION TO 90% MAXIMUM DENSITY IN ACCORDANCE WITH AASHTO T-180.

3. BEDDING - THE PIPES SHALL BE FIRMLY AND UNIFORMLY BEDDED THROUGHOUT THEIR ENTIRE LENGTH IN ACCORDANCE WITH THE PIPE BEDDING DETAIL AS SHOWN. WHERE ROCK OR SOFT, SPONGY OR OTHER UNSTABLE SOIL IS ENCOUNTERED, ALL SUCH MATERIAL SHALL BE REMOVED AND REPLACED WITH SUITABLE EARTH COMPACTED TO PROVIDE ADEQUATE SUPPORT. IT SHALL BE UNDERCUT TO THE SHAPE OF THE PIPE DIAMETER AND FILLED IN WITH FRIABLE MATERIAL TO A MINIMUM DEPTH OF THE CORRUGATIONS. EXTRA CARE SHALL BE TAKEN TO ACHIEVE MAXIMUM CONTACT AND A MINIMUM OF VOIDS.

4. LAYING PIPE - THE PIPE SHALL BE PLACED WITH INSIDE CIRCUMFERENTIAL LAPS POINTING DOWNSTREAM AND WITH THE LONGITUDINAL LAPS AT THE SIDES.

5. BACKFILLING SHALL CONFORM TO STRUCTURAL BACKFILL AS SHOWN ABOVE.

6. OTHER DETAILS (ANTI-SEEP, COLLARS, VALVES, ETC.) SHALL BE AS SHOWN.

STABILIZATION

ALL BORROW AREAS SHALL BE GRADED TO PROVIDE PROPER DRAINAGE AND LEFT IN A SIGHTLY CONDITION. ALL EXPOSED SURFACES OF THE EMBANKMENT, SPILLWAY, SPOIL AND BORROW AREAS, AND BERMS SHALL BE STABILIZED BY SEEDING, LIMING, FERTILIZING AND MULCHING (IF REQUIRED) IN ACCORDANCE WITH THE VEGETATIVE TREATMENT SPECIFICATIONS AS SHOWN.

EROSION AND SEDIMENT CONTROL

CONSTRUCTION OPERATIONS WILL BE CARRIED OUT IS SUCH A MANNER THAT EROSION WILL BE CONTROLLED AND WATER AND AIR POLLUTION MINIMIZED. STATE AND LOCAL LAWS CONCERNING POLLUTION ABATEMENT WILL BE FOLLOWED. CONSTRUCTION PLANS SHALL DETAIL EROSION AND SEDIMENT CONTROL MEASURES TO BE EMPLOYED DURING THE CONSTRUCTION PROCESS.

VII. FILTER CLOTH

FILTER CLOTH SHALL BE TERRATEX NO. 8 OR EQUAL. NONWOVEN GEOTEXTILE MATERIAL SHALL BE USED FOR THIS PROJECT. THE MAXIMUM DROP OF THE RIPRAP ONTO THE GEOTEXTILE MATERIAL IS 3 FEET. THE MINIMUM LAP OF THE MATERIAL SHALL BE 18 INCHES.

VIII. GABIONS

ALL GABIONS SHALL BE CLASS IV (PVC COATED).

DETAILS AND SPECIFICATIONS FOR VEGETATIVE ESTABLISHMENT

SITE PREPARATION:

1. TEMPORARY PERIMETER DIKES AND SILT TRAPS, ETC. ARE TO BE PROVIDED AS SHOWN ON THE EROSION AND SEDIMENT CONTROL PLAN PRIOR TO GRADING OPERATIONS WITH LOCATION ADJUSTMENTS TO BE MADE IN THE FIELD AS NECESSARY AND TO BE MAINTAINED AT THE END OF THE WORKING DAY. THE MINIMUM AREA PRACTICAL SHALL BE DISTURBED FOR THE MINIMUM AMOUNT OF TIME POSSIBLE.

2. PERMANENT SEEDING:

A. SEEDBED PREPARATION: AREA TO BE SEEDED SHALL BE LOOSE AND FRIABLE TO A DEPTH OF AT LEAST 3". THE TOP LAYER SHALL BE LOOSENED BY RAKING, DISKING OR OTHER ACCEPTABLE MEANS BEFORE SEEDING OCCURS. IN LIEU OF SOIL TEST RESULTS, APPLY 100 POUNDS OF DOLOMITIC LIMESTONE AND 25 POUNDS OF 10-10-10 FERTILIZER PER 1,000 SQUARE FEET. HARROW OR DISK LIME AND FERTILIZER INTO THE SOIL TO A DEPTH OF AT LEAST 3" ON SLOPES FLATTER THAN 3:1. NO ATTEMPT SHOULD BE MADE TO DRAG ANY DISKED AREA TO MAKE THE SOIL SURFACE SMOOTH AFTER DISKING.

B. SEEDING: APPLY 5-6 POUNDS PER 1,000 SQUARE FEET OF KENTUCKY 31 TALL FESCUE BETWEEN MARCH 1 AND APRIL 30 OR BETWEEN AUGUST 15 AND OCTOBER 15. APPLY SEED UNIFORMLY WITH A CYCLONE SEEDED DRILL, CULTIPACKER SEEDER OR HYDROSEEDER (SLURRY INCLUDES SEEDS AND FERTILIZER, RECOMMENDED ON STEEP SLOPES ONLY) ON A MOIST, FIRM SEEDBED. MAXIMUM SEED DEPTH SHOULD BE 1/4" IN CLAYEY SOILS AND 1/2" IN SANDY SOILS WHEN USING OTHER THAN THE HYDROSEEDER METHOD. IRRIGATE IF SOIL MOISTURE IS DEFICIENT TO SUPPORT ADEQUATE GROWTH, UNTIL VEGETATION IS FIRMLY ESTABLISHED.

C. MULCHING: MULCH SHALL BE UNCHOPPED, UNROTTED, SMALL GRAIN STRAW APPLIED AT A RATE OF 70 TO 90 POUNDS PER 1,000 SQUARE FEET. MULCH MATERIALS SHALL BE RELATIVELY FREE OF ALL KINDS OF WEEDS AND SHALL BE FREE OF PROHIBITED NOXIOUS WEEDS WHICH ARE: CANADA THISTLE, JOHNSONGRASS, AND QUACKGRASS. SPREAD MULCH MECHANICALLY OR UNIFORMLY BY HAND; MULCH ANCHORING SHALL BE ACCOMPLISHED IMMEDIATELY AFTER MULCH PLACEMENT TO MINIMIZE LOSS BY WIND OR WATER. THIS MAY BE DONE BY PEG AND TWINE METHOD, MULCH ANCHORING TOOL, NETTING OR LIQUID MULCH BINDERS.

3. TEMPORARY SEEDING:

LIME: 100 POUNDS OF DOLOMITIC LIMESTONE PER 1,000 SQUARE FEET

FERTILIZER: 15 POUNDS OF 10-10-10 PER 1,000 SQUARE FEET

SEED: PERENNIAL RYE, ITALIAN RYE - 0.92 POUNDS PER 1,000 SQUARE FEET (MARCH 1 THROUGH APRIL 30 OR AUGUST 15 THROUGH NOVEMBER 1)
MILLET - 0.92 POUNDS PER 1,000 SQUARE FEET (MAY 1 THROUGH AUGUST 15)

MULCH: SAME AS ABOVE (2.C)

4. PERMANENT SOD:

PERMANENT SOD IS TO BE KENTUCKY 31 TALL FESCUE STATE APPROVED SOD; LIME AND FERTILIZER PER PERMANENT SEEDING SPECIFICATIONS AND LIGHTLY IRRIGATE SOIL PRIOR TO LAYING SOD. SOD IS TO BE LAID ON THE CONTOUR WITH ALL ENDS TIGHTLY ABUTTING, JOINTS ARE TO BE STAGGERED BETWEEN ROWS. WATER AND ROLL OR DAMP SOD TO INSURE POSITIVE ROOT CONTACT WITH THE SOIL. ALL SLOPES GREATER THAN 3 TO 1, AS SHOWN, ARE TO BE PERMANENTLY SODDED OR PROTECTED WITH AN APPROVED EROSION CONTROL NETTING. ADDITIONAL WATERING FOR ESTABLISHEMENT MAY BE REQUIRED. SOD IS NOT TO BE APPLIED ON FROZEN GROUND.

NOTE: USE OF THIS INFORMATION DOES NOT PRECLUDE MEETING ALL OF THE REQUIREMENTS OF THE "1983 MARYLAND STANDARDS AND SPECIFICATIONS FOR SOIL EROSION AND SEDIMENT CONTROLS."

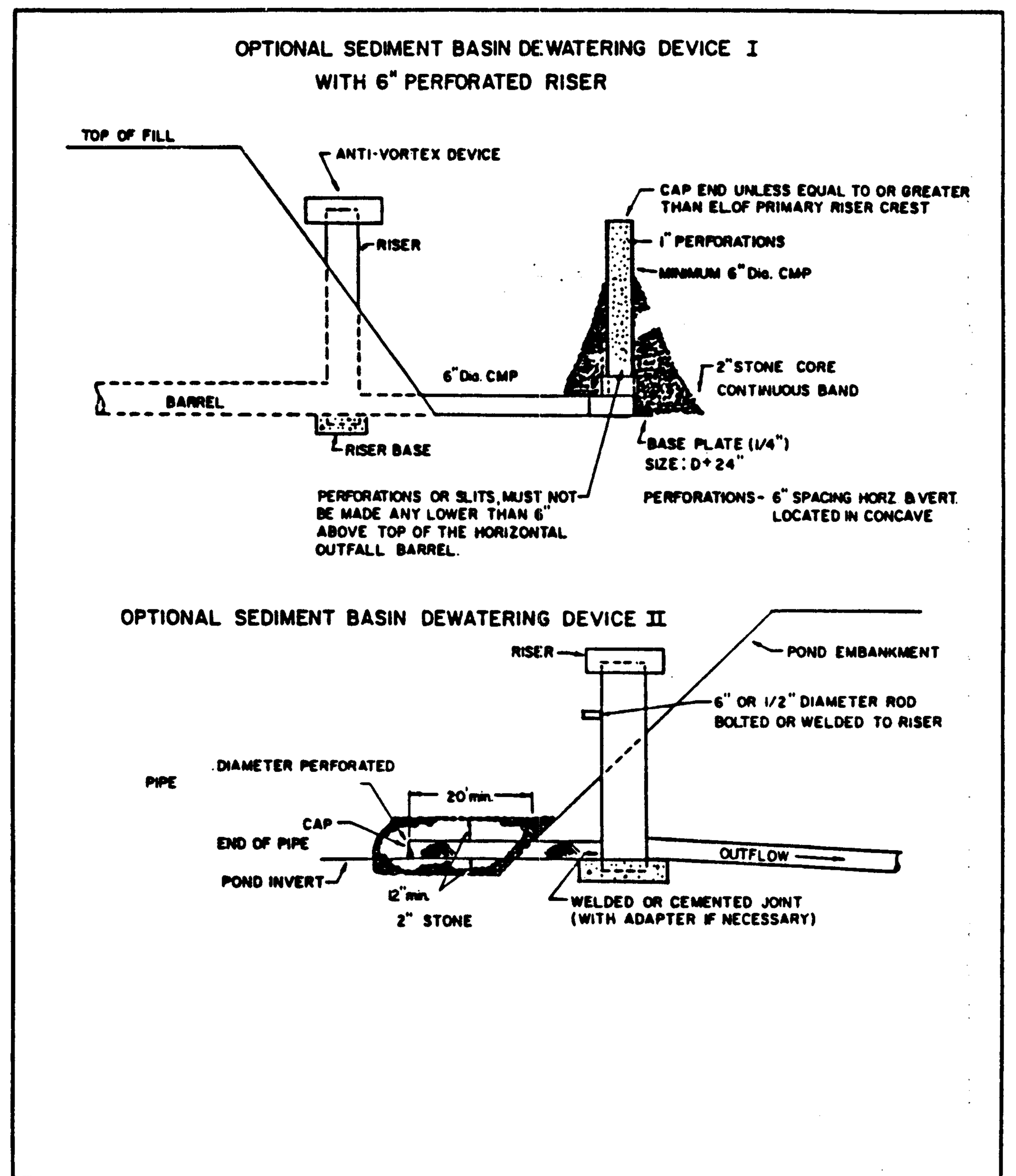

U.S. DEPARTMENT OF AGRICULTURE SOIL CONSERVATION SERVICE COLLEGE PARK, MARYLAND	OPTIONAL SEDIMENT BASIN DEWATERING DEVICES	STANDARD DRAWING SB

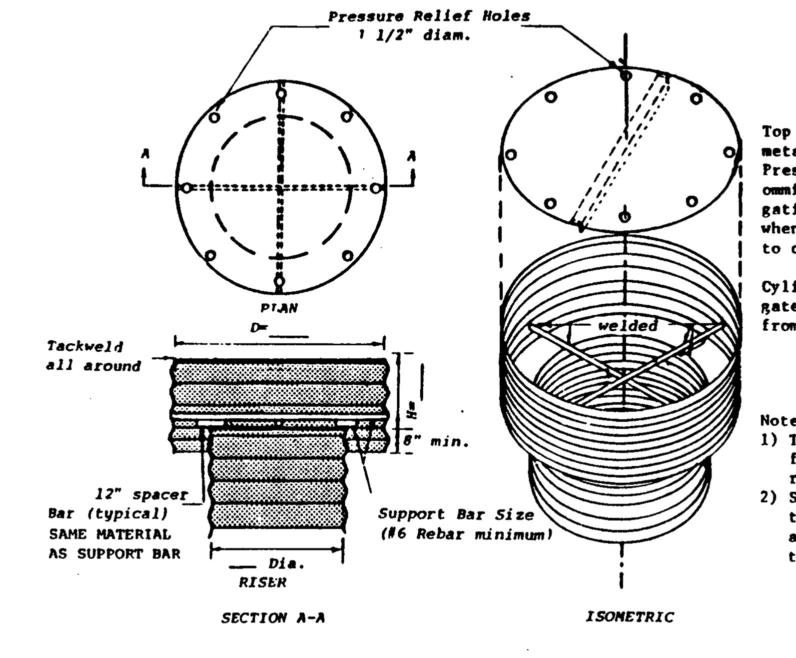

CONCENTRIC TRASH RACK AND ANTI-VORTEX DEVICE
(not to scale)

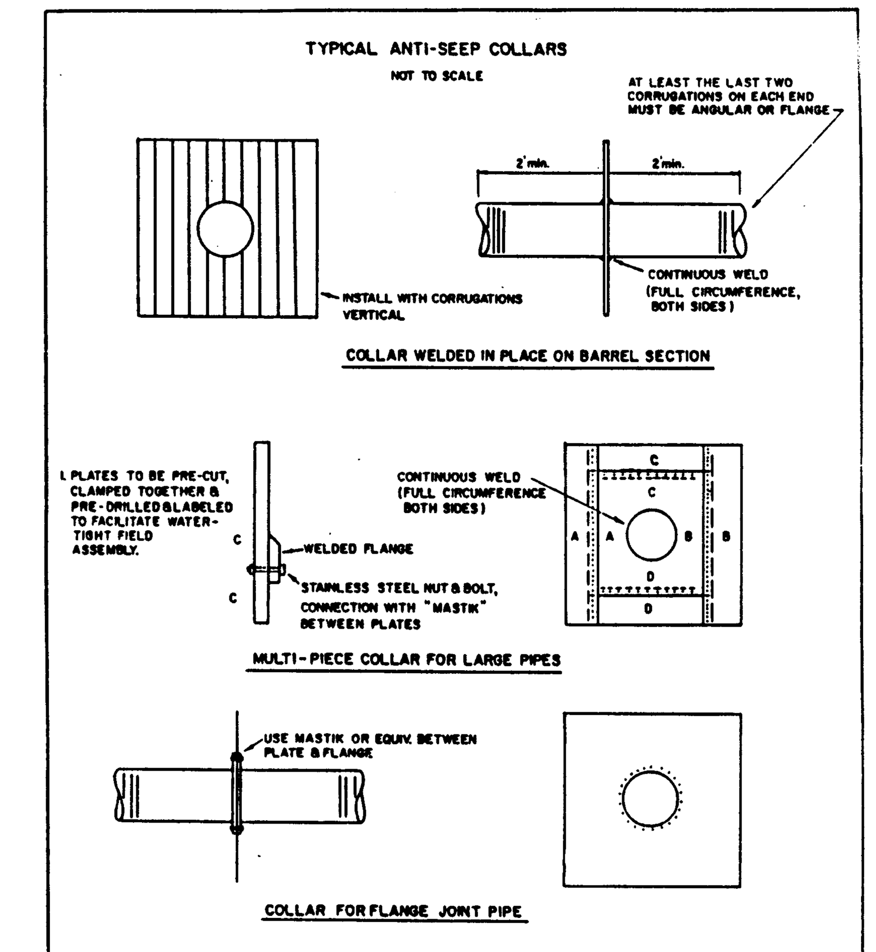

U.S DEPARTMENT OF AGRICULTURE SOIL CONSERVATION SERVICE COLLEGE PARK, MARYLAND	ANTI-SEEP COLLAR	STANDARD DRAWING SB

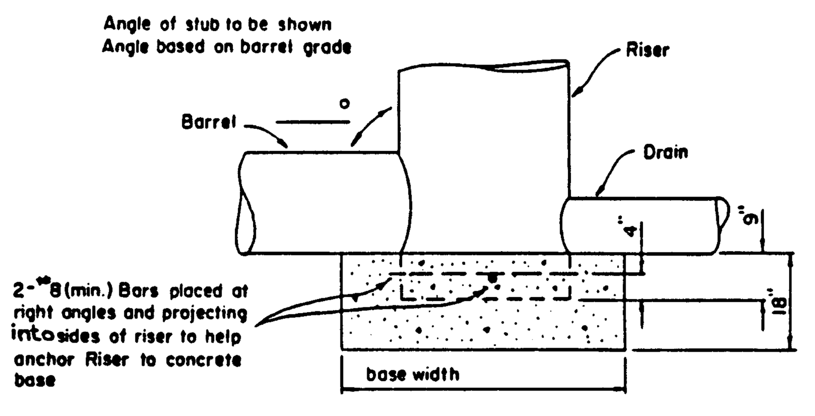

RISER BASE DETAIL

NOTES:

1. The concrete base shall be poured in such a manner to insure that the concrete fills the bottom of the riser to the invert of the outlet pipe to prevent the riser from breaking away from the base.
2. With aluminum or aluminized pipe, the embedded section must be painted with zinc chromate or equivalent.
3. Riser base may be sized as computed using floatation with a factor of safety of 1.2.

U. S. DEPARTMENT OF AGRICULTURE SOIL CONSERVATION SERVICE COLLEGE PARK, MARYLAND	RISER BASE DETAIL SEDIMENT BASIN

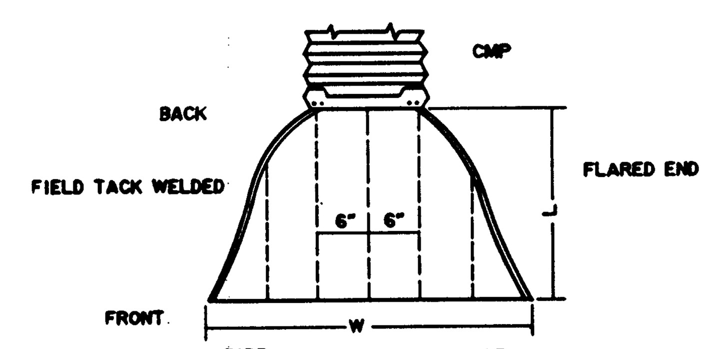

PIPE DIAMETER	W	L	# OF BARS NEEDED
15"	44"	26"	7

LOW FLOW TRASH RACK AT SB-4B & CWB-4B

N.T.S.

NOTE: FIELD WELD BARS STARTING WITH ONE IN CENTER OF FLARED END. WELD BARS AT 6" INTERVALS UNTIL LESS THAN 6" IS LEFT BETWEEN LAST BAR AND EDGE OF FLARED END. WELD BARS FROM BOTTOM OF FRONT END TO TOP OF BACK END. USE #6 REBAR.

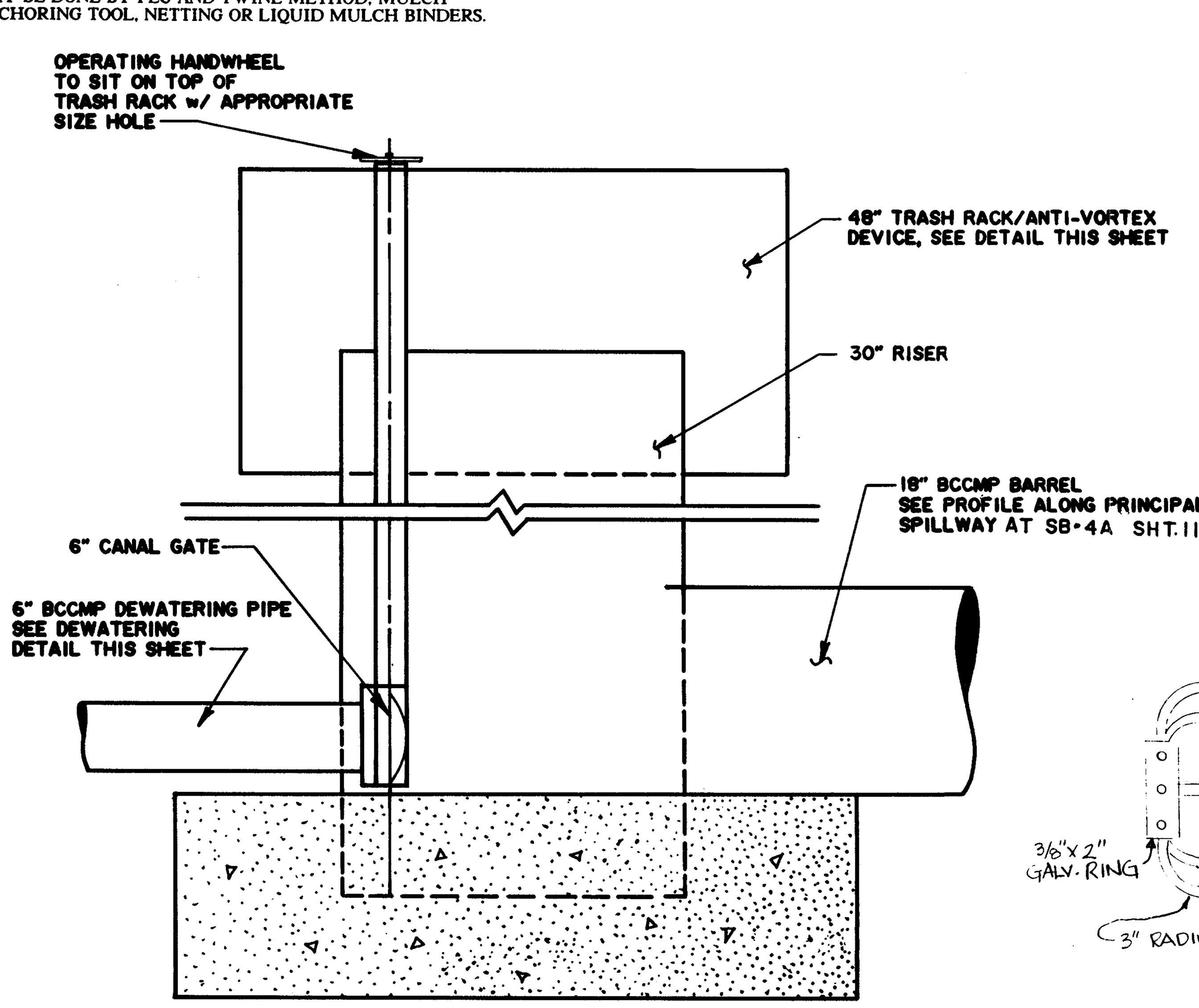

POND SB-4A DRAIN DETAIL

SCALE: 1" = 1'-0"

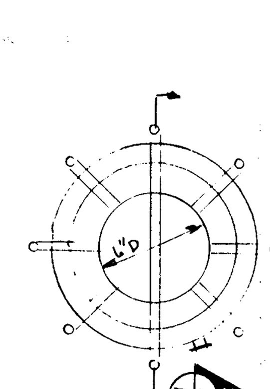

LOW FLOW TRASH RACK AT SB-4A

N.T.S.

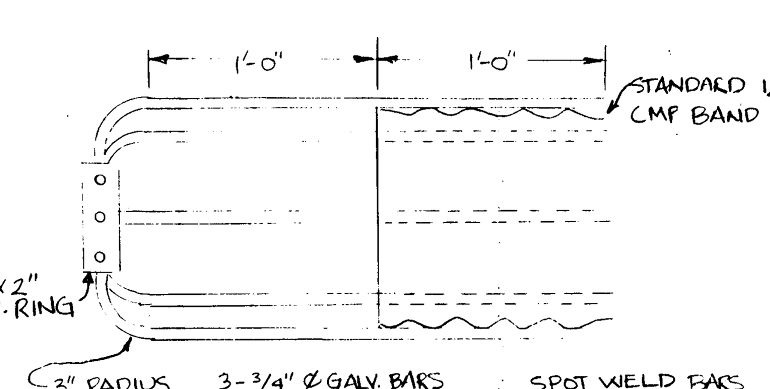

SECTION A/17

NOTE:
ALL CORRUGATED STEEL PIPE SHALL BE COUPLED IN ACCORDANCE WITH HOWARD Co STANDARD SPEC SECTION 909.

RECORD DRAWING
EA ENGINEERING, SCIENCE, AND TECHNOLOGY, INC.
AUGUST 1992

POND DETAIL SCHEDULE

POND	TRASH RACK / ANTI-VORTEX DEVICE: D (in.)	H (in.)	RISER DIAM. (in.)	TOP GAGE	CYLINDER GAGE	RISER BASE: BOTTOM WIDTH (ft.)	ANGLE (degrees)	ANTI-SEEP COLLAR: QUANTITY	SIZE
SB-4A	48	17	30	12	14	5.0	90.18	2	4'-8"
SB-4B	72	21	48	10	12	8.0	91.59	2	6'-4"
CWB-4B	72	21	48	10	12	8.0	90.57	2	6'-0"

NOTE: FOR ADDITIONAL INFORMATION ON PONDS, SEE SHEET 11

SEDIMENT CONTROL & POND CONSTRUCTION

BY THE DEVELOPER:

"I/WE CERTIFY THAT ALL DEVELOPMENT AND/OR CONSTRUCTION WILL BE DONE ACCORDING TO THESE PLANS, AND THAT ANY RESPONSIBLE PERSONNEL INVOLVED IN THE CONSTRUCTION PROJECT WILL HAVE A CERTIFICATE OF ATTENDANCE AT A DEPARTMENT OF THE ENVIRONMENT APPROVED TRAINING PROGRAM FOR THE CONTROL OF SEDIMENT AND EROSION BEFORE BEGINNING THE PROJECT. I WILL PROVIDE THE HOWARD SOIL CONSERVATION DISTRICT WITH AN "AS-BUILT" PLAN OF THE PONDS WITHIN 30 DAYS OF COMPLETION. I ALSO AUTHORIZE PERIODIC ON-SITE INSPECTIONS BY THE HOWARD SOIL CONSERVATION DISTRICT."

[signature] 8-23-90
SIGNATURE OF DEVELOPER — DATE

BY THE ENGINEER:

"I CERTIFY THAT THIS PLAN FOR POND CONSTRUCTION, EROSION AND SEDIMENT CONTROL REPRESENTS A PRACTICAL AND WORKABLE PLAN BASED ON MY PERSONAL KNOWLEDGE OF THE SITE CONDITIONS. THIS PLAN WAS PREPARED IN ACCORDANCE WITH THE REQUIREMENTS OF THE HOWARD SOIL CONSERVATION DISTRICT. I HAVE NOTIFIED THE DEVELOPER THAT HE MUST PROVIDE THE HOWARD SOIL CONSERVATION DISTRICT WITH AN "AS-BUILT" PLAN OF THE PONDS WITHIN 30 DAYS OF COMPLETION."

[signature] 21 Aug 1990
SIGNATURE OF ENGINEER — DATE

THESE PLANS HAVE BEEN REVIEWED FOR THE HOWARD SOIL CONSERVATION DISTRICT AND MEET THE TECHNICAL REQUIREMENTS FOR SMALL POND CONSTRUCTION, SOIL EROSION AND SEDIMENT CONTROL. [signature] 8/23/90
U.S. SOIL CONSERVATION SERVICE — DATE [signature] 8/19/92

THESE PLANS FOR SMALL POND CONSTRUCTION, SOIL EROSION AND SEDIMENT CONTROL MEET THE REQUIREMENTS OF THE HOWARD SOIL CONSERVATION DISTRICT. [signature] 8/23/90
HOWARD SOIL CONSERVATION DISTRICT — DATE [signature] 8/19/92

APPROVED: FOR PRIVATE WATER AND PRIVATE SEWERAGE SYSTEMS. HOWARD COUNTY HEALTH DEPARTMENT
[signature] 8-23-90
COUNTY HEALTH OFFICER — DATE

APPROVED: HOWARD COUNTY DEPT. OF PLANNING & ZONING
DIRECTOR: [signature] 8/28/90 DATE
CHIEF, DIVISION OF COMMUNITY PLANNING AND LAND DEVELOPMENT [signature] 8/23/90

APPROVED: FOR STORM DRAINAGE SYSTEMS AND ROADS. HOWARD COUNTY DEPT. OF PUBLIC WORKS
[signature] 8/23/90
DIRECTOR — DATE
[signature] 8-23-90
CHIEF, BUREAU OF ENGINEERING — DATE

REVISIONS			
NO.	DATE	BY	DESCRIPTION

SUBDIVISION NAME: Alpha Ridge Solid Waste Management Center

LIBER/FOLIO	BLOCK	ZONE	TAX/ZONE MAP	ELEC. DIST.	CENSUS TR.	SECT./AREA	LOT/PARCEL
10-847/902, 16-878/216, 10-891/314		R	10 & 16	3	60-30		54,253,220,11

WATER CODE: Private, Existing — SEWER CODE: Private, Existing
OWNER/DEVELOPER: Howard County Government
ADDRESS: 3430 Court House Drive , Ellicott City, MD 21043

DESIGN MMD — DRAWN PMS — CHECKED DSP — PROJECT ENGINEER DSS

ALPHA RIDGE SOLID WASTE MANAGEMENT CENTER HOWARD COUNTY MARYLAND

BASIN DETAILS

EA ENGINEERING, SCIENCE, AND TECHNOLOGY, INC.
BALTIMORE CHICAGO LINCOLN NEW YORK NEW JERSEY ATLANTA DALLAS LOS ANGELES SAN FRANCISCO
Loveton Center
15 Loveton Circle
Sparks, Maryland 21152
(301) 771-4950

DATE: JUNE 1990
SCALE: AS SHOWN
PROJECT NO. 10293.01
SHEET NO. 17 OF 25

~~10293.01-017~~ XXAL-90-017 SDP-90-90

880

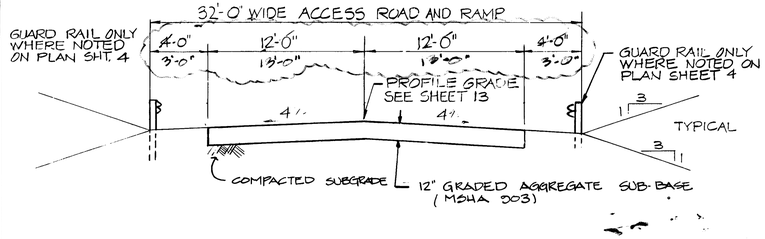

TYPICAL ACCESS ROAD DETAIL
NOT TO SCALE

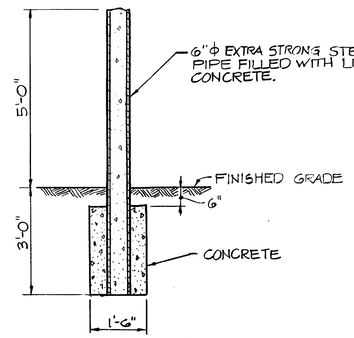

TYPICAL GUARD POST DETAIL
SCALE: 1/2"=1'-0"

TYPICAL BOTTOM CELL DETAIL
NOT TO SCALE

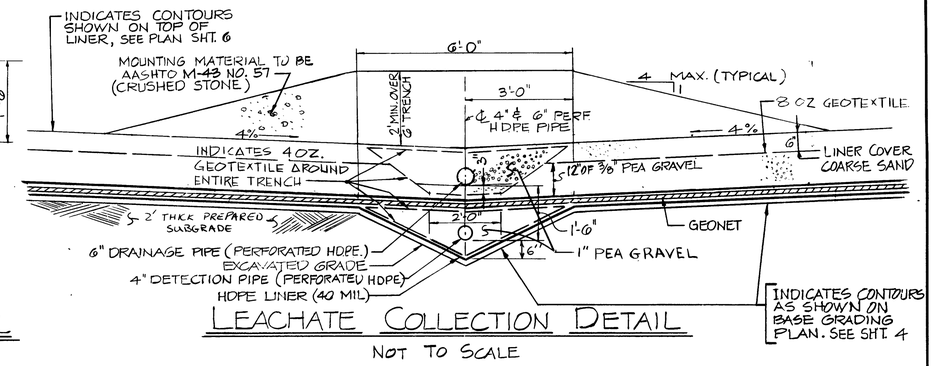

LEACHATE COLLECTION DETAIL
NOT TO SCALE

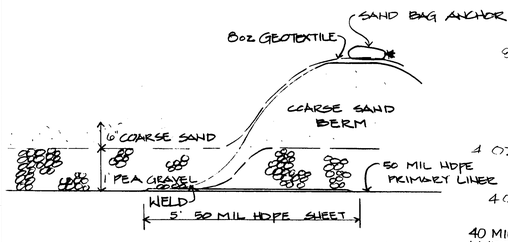

TEMPORARY DIVERSION BERM
NOT TO SCALE

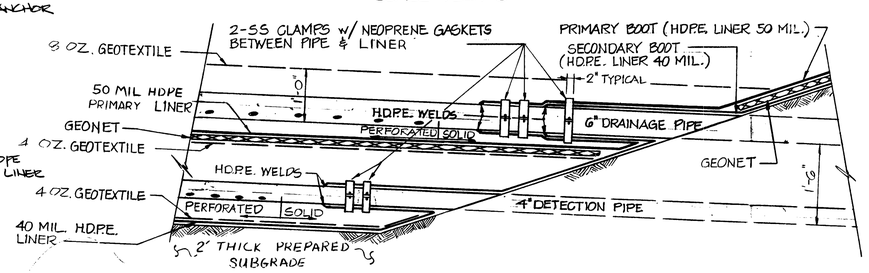

LINER PENETRATION DETAIL
SCALE: 3/4"=1'-0"

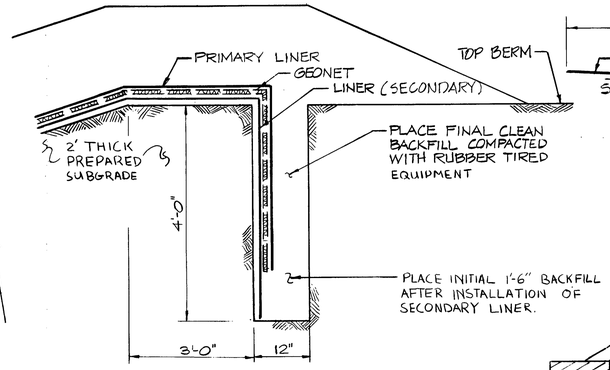

ANCHOR TRENCH DETAIL
NOT TO SCALE

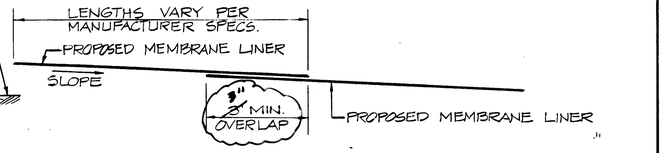

TYPICAL LINER SEAMS
NOT TO SCALE

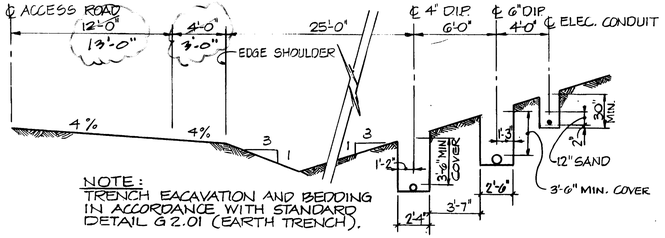

NOTE:
TRENCH EACAVATION AND BEDDING IN ACCORDANCE WITH STANDARD DETAIL G 2.01 (EARTH TRENCH).

TYPICAL PIPE TRENCH DETAIL
(CUT SECTION)
SCALE: 3/16"=1'-0"

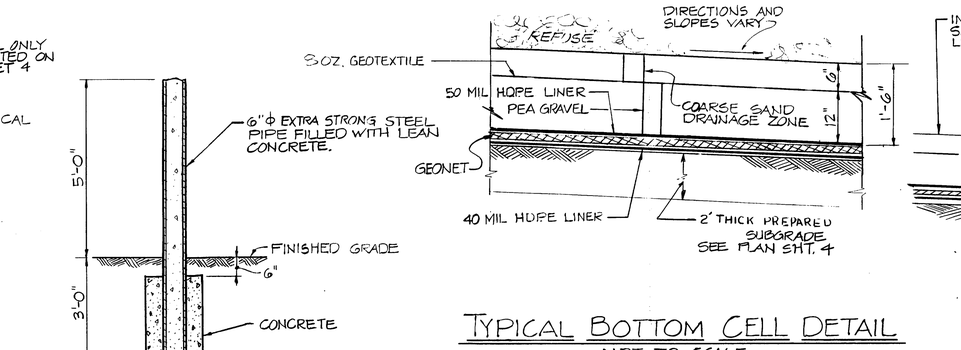

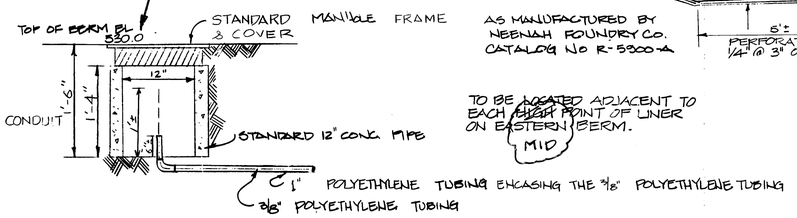

LEACHATE HEAD MONITORING DEVICE
NOT TO SCALE

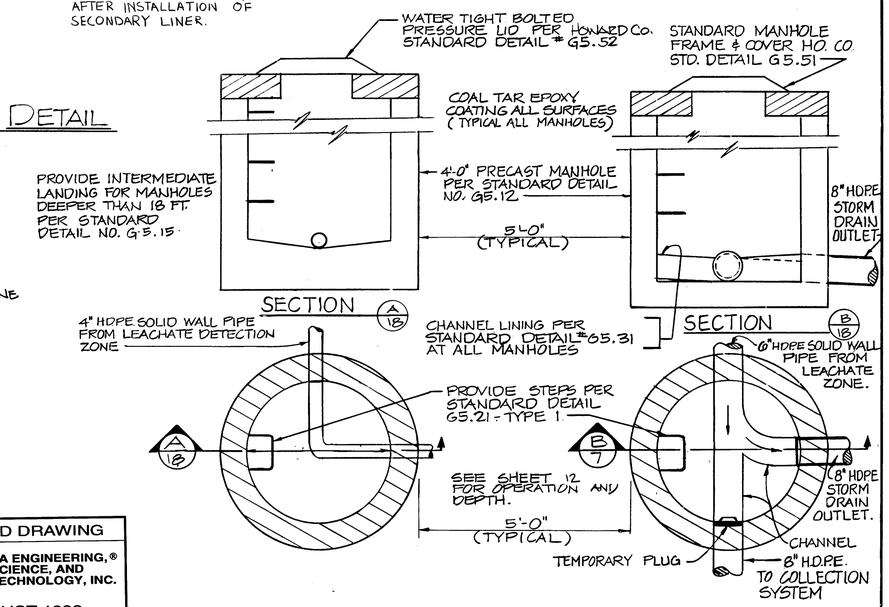

TYPICAL LEACHATE DETECTION MANHOLE
NOT TO SCALE
(MANHOLES - A, B, C, D)

TYPICAL LEACHATE CONVEYANCE MANHOLE
NOT TO SCALE
(MANHOLES - 1, 2, 4, 6)

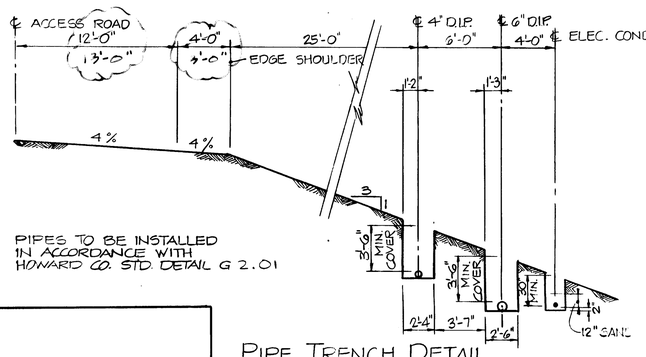

PIPES TO BE INSTALLED IN ACCORDANCE WITH HOWARD CO. STD. DETAIL G 2.01

PIPE TRENCH DETAIL
(FILL SECTION)
SCALE: 3/16"=1'-0"

RECORD DRAWING
EA ENGINEERING, SCIENCE, AND TECHNOLOGY, INC.
AUGUST 1992

NOTE: SEE PLAN SHEET FOR ALLIGNMENT OF PIPES & CHANNELS.

SUBDIVISION NAME			SECT./AREA	LOT/PARCEL
Alpha Ridge Solid Waste Management Center				54,253,220,11
LISER/PLAT 10-847/806 16-676/216 10-861/314	BLOCK	ZONE R	TAX/ZONE MAP 10 & 16	ELEC. DIST. 3 / CENSUS TR. 60-30
WATER CODE Private, Existing		SEWER CODE Private, Existing		
OWNER/DEVELOPER Howard County Government				
ADDRESS 3430 Court House Drive Ellicott City, MD 21043				

APPROVED: FOR PRIVATE WATER AND PRIVATE SEWERAGE SYSTEMS. HOWARD COUNTY HEALTH DEPARTMENT
COUNTY HEALTH OFFICER — DATE 8-23-90
APPROVED: HOWARD COUNTY DEPT. OF PLANNING & ZONING
DIRECTOR — DATE 8/28/90
CHIEF, DIVISION OF COMMUNITY PLANNING AND LAND DEVELOPMENT — DATE 8/27/90
APPROVED: FOR STORM DRAINAGE SYSTEMS AND ROADS. HOWARD COUNTY DEPT. OF PUBLIC WORKS
DIRECTOR — DATE 8/23/90
CHIEF, BUREAU OF ENGINEERING — DATE 8-23-90

REVISIONS			
NO.	DATE	BY	DESCRIPTION
1	8/92	GBL	RECORD CHANGES

STATE OF MARYLAND — CHRIS S. SANTORO — REGISTERED PROFESSIONAL ENGINEER

ALPHA RIDGE SOLID WASTE MANAGEMENT CENTER
HOWARD COUNTY MARYLAND

CELL I DETAILS

DESIGN	S.M.D.
DRAWN	D.T.M.
CHECKED	J.F.H.
PROJECT ENGINEER	D.S.S.

EA ENGINEERING, SCIENCE, AND TECHNOLOGY, INC.
Loveton Center, 15 Loveton Circle, Sparks, Maryland 21152, (301) 771-4950
BALTIMORE, CHICAGO, LINCOLN, NEW YORK, NEW JERSEY, ATLANTA, DALLAS, LOS ANGELES, SAN FRANCISCO

DATE	JUNE 1990
SCALE	AS SHOWN
PROJECT NO.	10293.01
SHEET NO.	18 OF 25

~~10293.01-078~~ XXAL-90-018 SDP 90-90

880

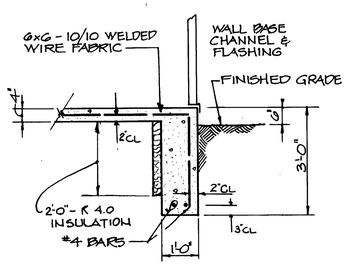

WALL FOOTING DETAILS - (TYPICAL)
SCALE : 1/2" = 1'- 0"

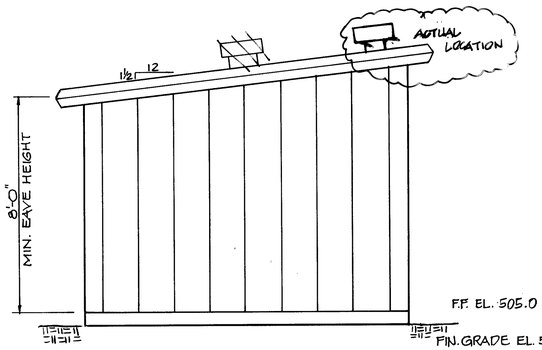

SIDE ELEVATION (WEST)
EAST ELEVATION SIMILAR
SCALE : 3/8" = 1'-0"

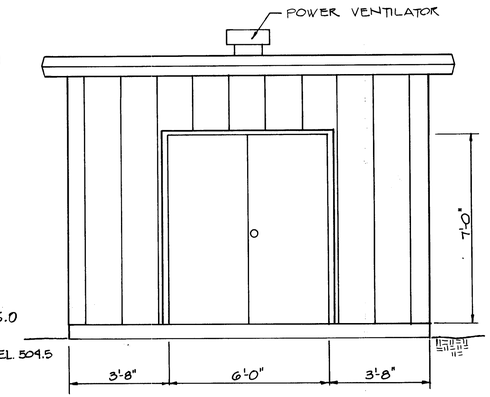

FRONT ELEVATION (SOUTH)
SCALE : 3/8" = 1'-0"

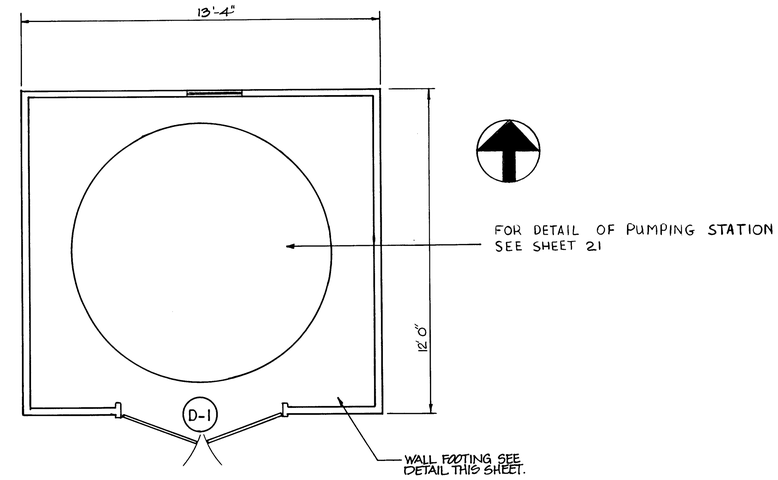

FLOOR PLAN
SCALE : 3/8" = 1'-0"

LEACHATE PUMPING STATION

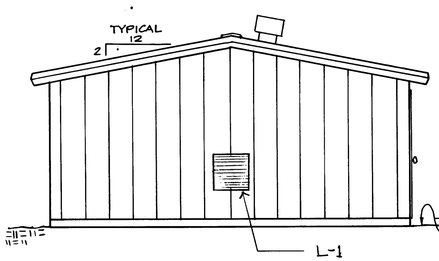

SIDE ELEVATION (NORTH)
SOUTH SIDE SIMILAR
SCALE : 1/4" = 1'-0"

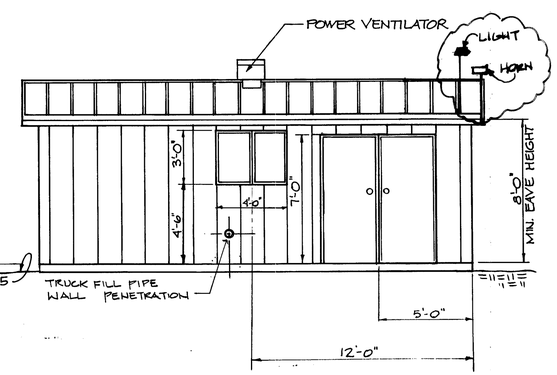

FRONT ELEVATION (WEST)
SCALE : 1/4" = 1'-0"

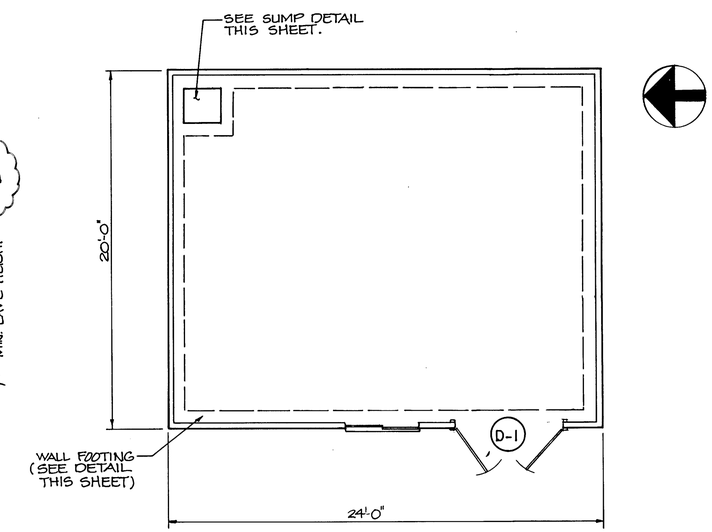

FLOOR PLAN
SCALE : 1/4" = 1'-0"

LEACHATE PUMP BUILDING

NOTES:

1. ANCHOR BUILDING TO FOOTING IN ACCORDANCE WITH SPEC.
2. PROVIDE FLASHING & CAULK FOR PIPE PENETRATION THROUGH WALL.
3. D-1: TWO 3' DOORS
4. L-1: OUTSIDE AIR INTAKE LOUVRE

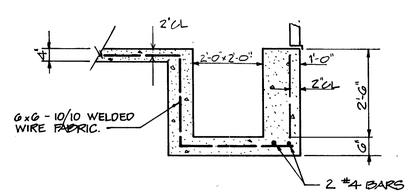

SUMP DETAIL
SCALE : 1/2" = 1'-0"

APPROVED: FOR PRIVATE WATER AND PRIVATE SEWERAGE SYSTEMS. HOWARD COUNTY HEALTH DEPARTMENT

COUNTY HEALTH OFFICER — DATE 8-23-90

APPROVED: HOWARD COUNTY DEPT. OF PLANNING & ZONING

DIRECTOR: — DATE 8/28/90

CHIEF, DIVISION OF COMMUNITY PLANNING AND LAND DEVELOPMENT: — DATE 8/23/90

APPROVED: FOR STORM DRAINAGE SYSTEMS AND ROADS. HOWARD COUNTY DEPT. OF PUBLIC WORKS

DIRECTOR — DATE 8/23/90

CHIEF, BUREAU OF ENGINEERING — DATE 8.23.90

SUBDIVISION NAME				SECT./AREA	LOT/PARCEL
Alpha Ridge Solid Waste Management Center					54,253,220,11
LIBER/FOLIO 10-547/608 10-576/315 10-891/514	BLOCK	ZONE R	TAX/ZONE MAP 10 & 16	ELEC. DIST. 3	CENSUS TR. 60-30
WATER CODE Private, Existing		SEWER CODE Private, Existing			
OWNER/DEVELOPER Howard County Government					
ADDRESS 3430 Court House Drive Ellicott City, MD 21043					

RECORD DRAWING

EA ENGINEERING, SCIENCE, AND TECHNOLOGY, INC.

AUGUST 1992

REVISIONS			
NO.	DATE	BY	DESCRIPTION
1	8/92	GBL	RECORD DRAWINGS

STATE OF MARYLAND — DANIEL S. PRICE — No. 11668 — PROFESSIONAL ENGINEER

ALPHA RIDGE SOLID WASTE MANAGEMENT CENTER
HOWARD COUNTY MARYLAND

ARCHITECTURAL PLANS

DESIGN	D.S.P.
DRAWN	D.T.M.
CHECKED	D.S.P.
PROJECT ENGINEER	D.S.S.

EA ENGINEERING, SCIENCE, AND TECHNOLOGY, INC.
BALTIMORE, CHICAGO, LINCOLN, NEW YORK, NEW JERSEY, ATLANTA, DALLAS, LOS ANGELES, SAN FRANCISCO, CHARLOTTE, BOSTON

Hunt Valley/Loveton Center
15 Loveton Circle
Sparks, Maryland 21152
(301) 771-4950

DATE	JUNE 1990
SCALE	AS SHOWN
PROJECT NO.	10293.01
SHEET NO.	19 OF 25

XXAL-90-019 ~~10293.01-079~~ SDP 90-90

880

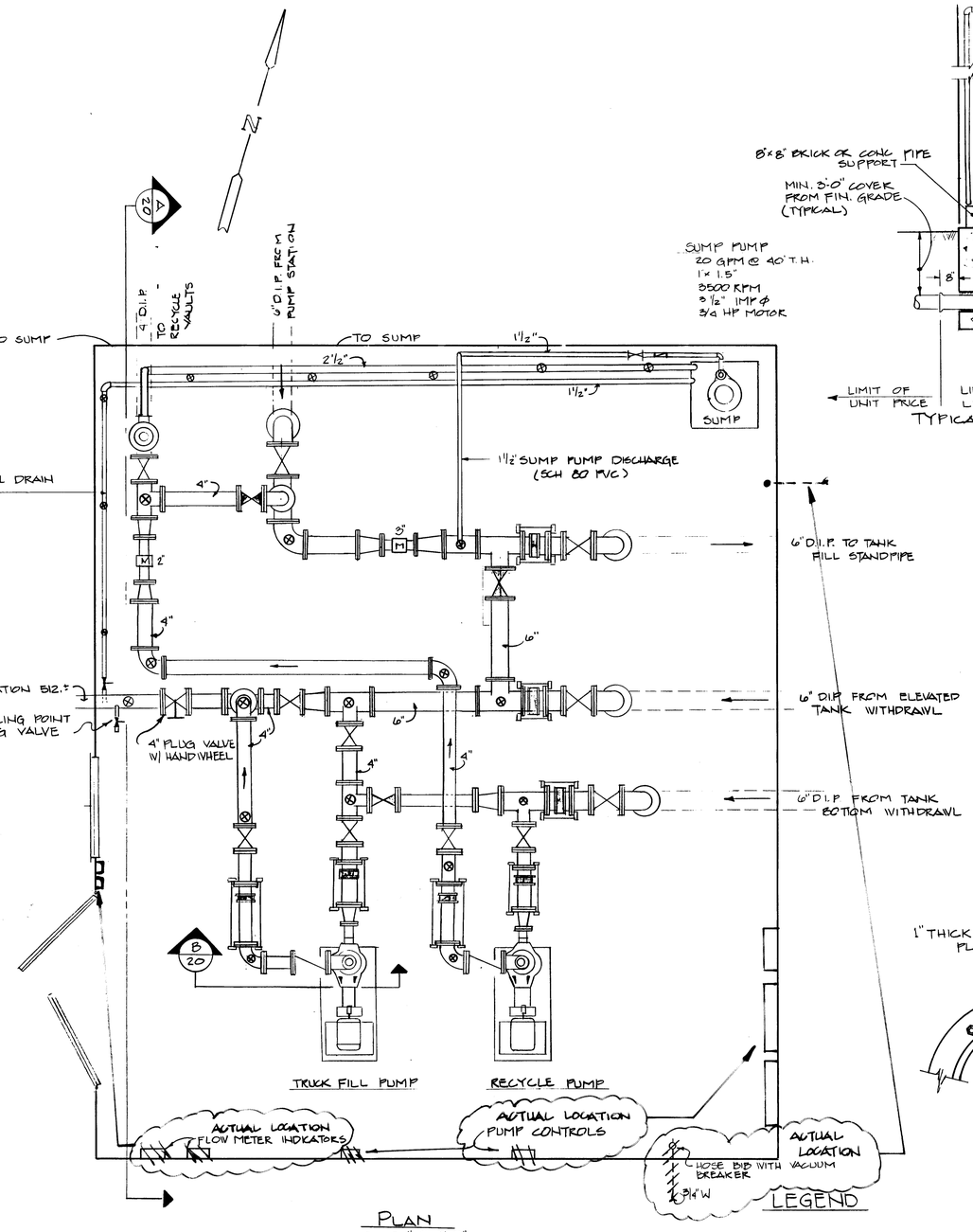

PLAN
SCALE 1/2" = 1'-0"

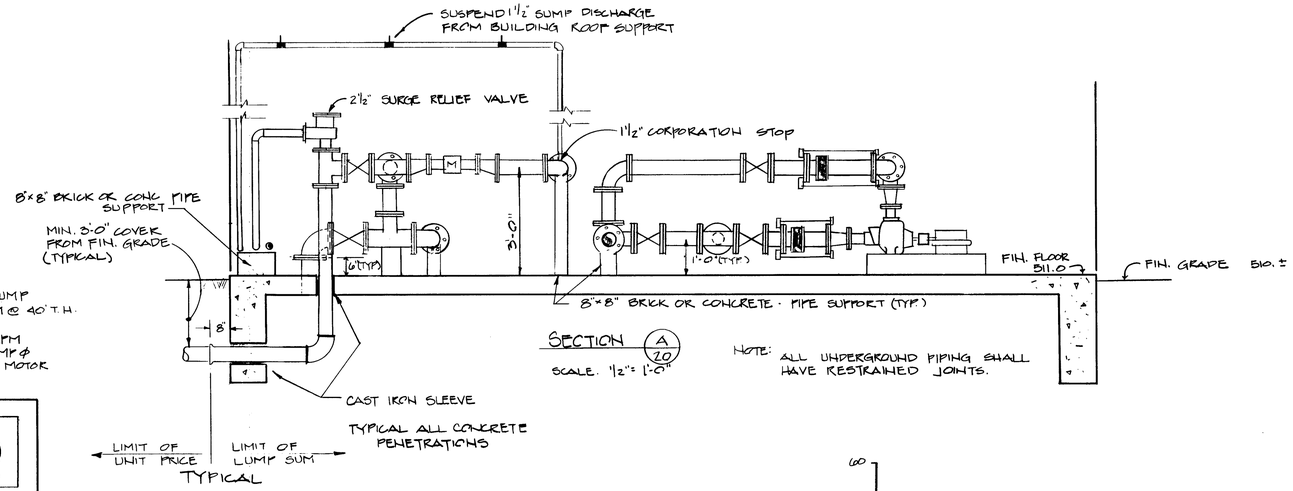

SECTION A/20
SCALE: 1/2" = 1'-0"

NOTE: ALL UNDERGROUND PIPING SHALL HAVE RESTRAINED JOINTS.

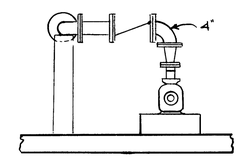

SECTION B/20
SCALE: 1/2" = 1'-0"

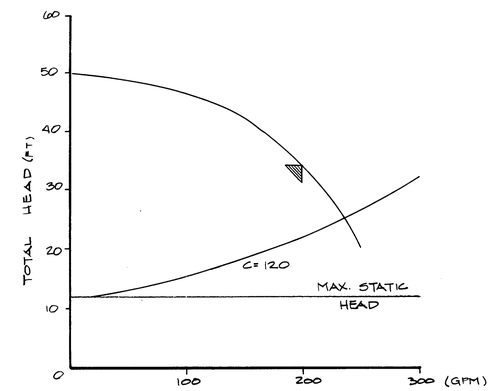

SYSTEM CURVE - TRUCK FILL PUMP
200 GPM @ 34' T.H.
1750 RPM 5HP MOTOR

NOTE: THROTTLE PUMP DISCHARGE TO MAINTAIN 200 GPM @ VARYING TANK LEVEL

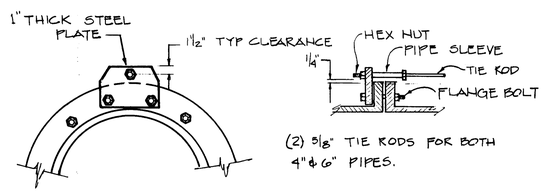

TIE ROD DETAIL
NOT TO SCALE

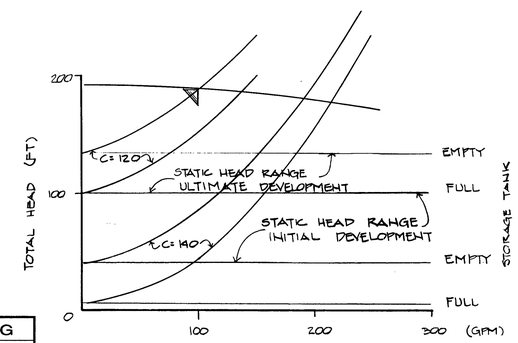

SYSTEM CURVE - RECYCLE PUMP
100 GPM @ 185' T.H.
3450 RPM 20 H.P. MOTOR

LEGEND

- PLUG VALVE (NORMALLY OPEN)
- PLUG VALVE (NORMALLY CLOSED)
- CHECK VALVE
- FLEX COUPLING
- FLOW METER
- ECENTRIC REDUCER
- CONCENTRIC REDUCER
- BRICK OR CONCRETE PIPE SUPPORT

RECORD DRAWING
EA ENGINEERING, SCIENCE, AND TECHNOLOGY, INC.
AUGUST 1992

SUBDIVISION NAME				SECT./AREA	LOT/PARCEL
Alpha Ridge Solid Waste Management Center					54,263,220,11
LIBER/FOLIO 10-847/608 10-878/215 10-991/314	BLOCK	ZONE R	TAX/ZONE MAP 10 & 16	ELEC. DIST. 3	CENSUS TR. 60-30
WATER CODE Private, Existing		SEWER CODE Private, Existing			
OWNER/DEVELOPER Howard County Government					
ADDRESS 3430 Court House Drive Ellicott City, MD 21043					

APPROVED: FOR PRIVATE WATER AND PRIVATE SEWERAGE SYSTEMS HOWARD COUNTY HEALTH DEPARTMENT
COUNTY HEALTH OFFICER — DATE 8-23-90

APPROVED: HOWARD COUNTY DEPT. OF PLANNING & ZONING
DIRECTOR — DATE 8/28/90
CHIEF, DIVISION OF COMMUNITY PLANNING AND LAND DEVELOPMENT — DATE 8/27/90

APPROVED: FOR STORM DRAINAGE SYSTEMS AND ROADS. HOWARD COUNTY DEPT. OF PUBLIC WORKS
DIRECTOR — DATE 8/23/90
CHIEF, BUREAU OF ENGINEERING — DATE 8-23-90

ALPHA RIDGE SOLID WASTE MANAGEMENT CENTER
HOWARD COUNTY MARYLAND

PUMP BUILDING

DESIGN	DEP
DRAWN	GBL
CHECKED	DEK
PROJECT ENGINEER	DSS

EA ENGINEERING, SCIENCE, AND TECHNOLOGY, INC.
Loweton Center
15 Loweton Circle
Sparks, Maryland 21152
(301) 771-4950
BALTIMORE CHICAGO LINCOLN NEW YORK NEW JERSEY ATLANTA DALLAS LOS ANGELES SAN FRANCISCO

DATE	JUNE 1990
SCALE	AS SHOWN
PROJECT NO.	10293.01
SHEET NO.	20 OF 25

XXAL-90-020 ~~10293.01-020~~ SDP 90-90

988

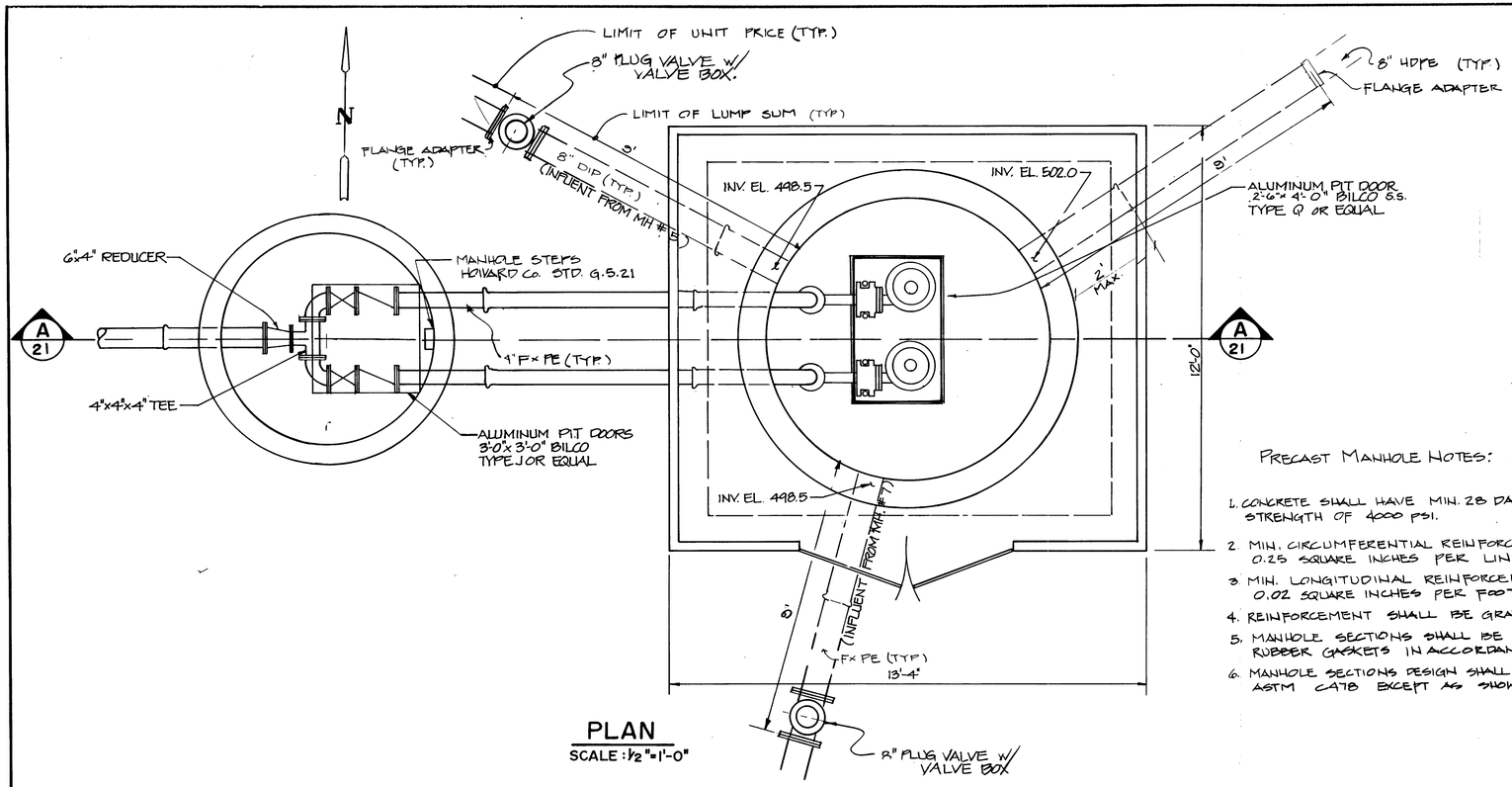

PLAN
SCALE: 1/2" = 1'-0"

PRECAST MANHOLE NOTES: (PUMP STATION + VALVE VAULT)

1. CONCRETE SHALL HAVE MIN. 28 DAY COMPRESSIVE STRENGTH OF 4000 PSI.
2. MIN. CIRCUMFERENTIAL REINFORCEMENT SHALL BE 0.25 SQUARE INCHES PER LINEAR FOOT.
3. MIN. LONGITUDINAL REINFORCEMENT SHALL BE 0.02 SQUARE INCHES PER FOOT
4. REINFORCEMENT SHALL BE GRADE 60 STEEL.
5. MANHOLE SECTIONS SHALL BE JOINED WITH RUBBER GASKETS IN ACCORDANCE WITH ASTM C433
6. MANHOLE SECTIONS DESIGN SHALL CONFORM TO ASTM C478 EXCEPT AS SHOWN.

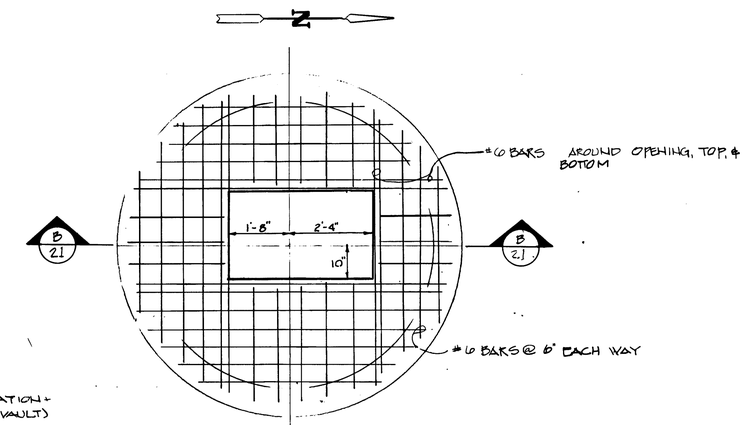

PLAN
SCALE 1/2" = 1'-0"

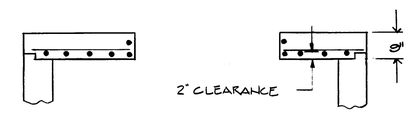

SECTION B 21
SCALE 1/2" = 1'-0"

PUMP STATION - TOP SLAB DETAIL

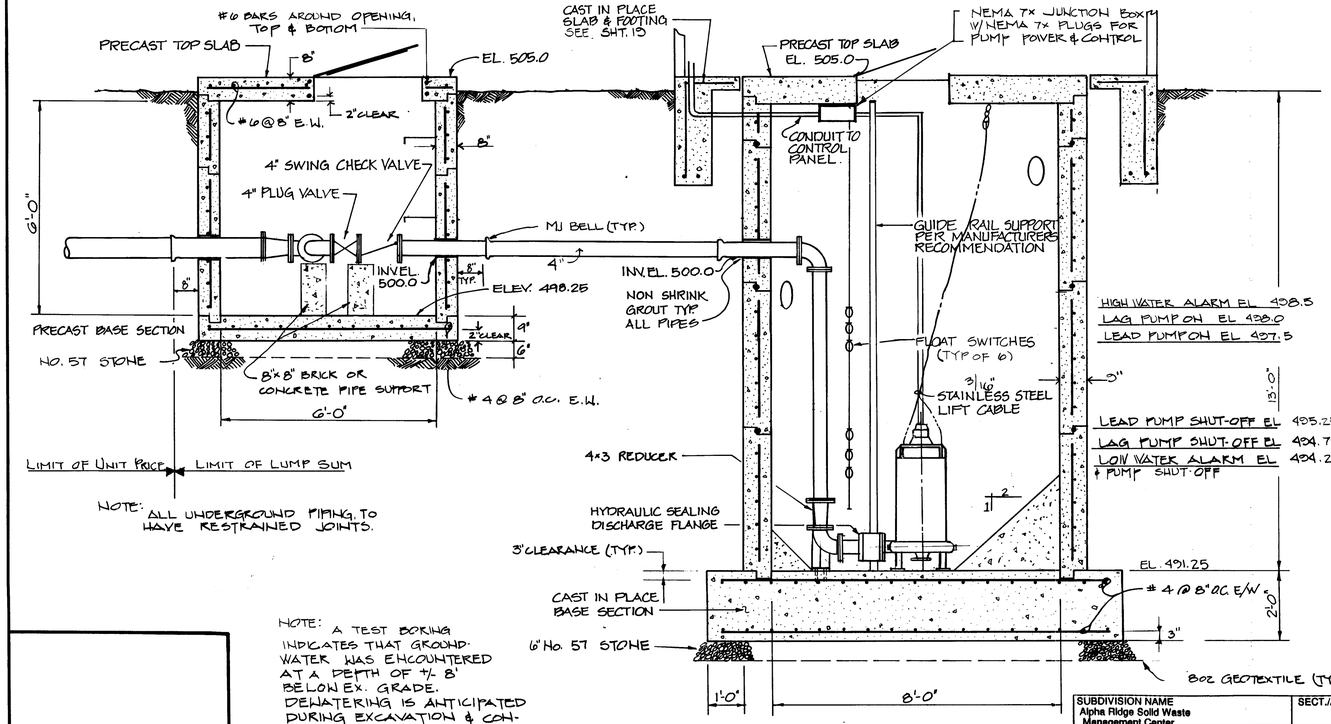

NOTE: A TEST BORING INDICATES THAT GROUND WATER WAS ENCOUNTERED AT A DEPTH OF +/- 8' BELOW EX. GRADE. DEWATERING IS ANTICIPATED DURING EXCAVATION & CONSTRUCTION.

SECTION A 21
SCALE: 1/2" = 1'-0"

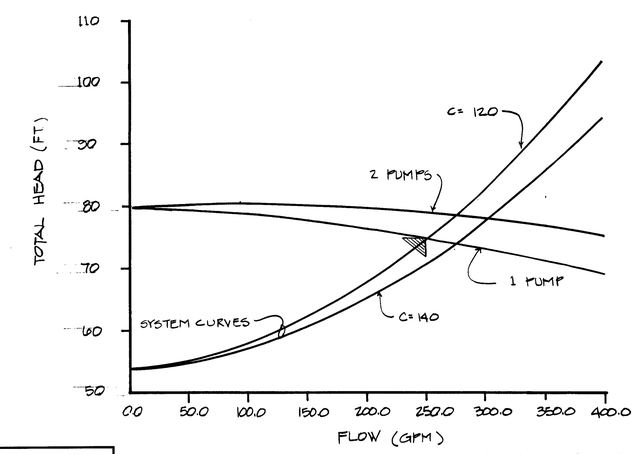

250 GPM @ 73' TOTAL HEAD
RPM = 1200 MOTOR H.P. = 2.0

SYSTEM CURVE - LEACHATE PUMPS

RECORD DRAWING
EA ENGINEERING, SCIENCE, AND TECHNOLOGY, INC.
AUGUST 1992

APPROVED: FOR PRIVATE WATER AND PRIVATE SEWERAGE SYSTEMS. HOWARD COUNTY HEALTH DEPARTMENT
COUNTY HEALTH OFFICER — DATE 8-23-90

APPROVED: HOWARD COUNTY DEPT. OF PLANNING & ZONING
DIRECTOR: — DATE 8/28/90
CHIEF, DIVISION OF COMMUNITY PLANNING AND LAND DEVELOPMENT: — DATE 8/23/90

APPROVED: FOR STORM DRAINAGE SYSTEMS AND ROADS. HOWARD COUNTY DEPT. OF PUBLIC WORKS
DIRECTOR — DATE 8/23/90
CHIEF, BUREAU OF ENGINEERING — DATE 8-23-90

SUBDIVISION NAME				SECT./AREA	LOT/PARCEL
Alpha Ridge Solid Waste Management Center					54,253,220,11
LIBER/FOLIO 10-847/608 16-878/318 10-801/314	BLOCK	ZONE R	TAX/ZONE MAP 10 & 16	ELEC. DIST. 3	CENSUS TR. 60-30
WATER CODE Private, Existing		SEWER CODE Private, Existing			
OWNER/DEVELOPER Howard County Government					
ADDRESS 3430 Court House Drive Ellicott City, MD 21043					

STATE OF MARYLAND — DAVID SAKRISON — No. 9900 — PROFESSIONAL ENGINEER

ALPHA RIDGE SOLID WASTE MANAGEMENT CENTER HOWARD COUNTY MARYLAND

LEACHATE PUMP STATION MECHANICAL PLAN

EA ENGINEERING, SCIENCE, AND TECHNOLOGY, INC.
BALTIMORE CHICAGO LINCOLN NEW YORK NEW JERSEY ATLANTA DALLAS LOS ANGELES SAN FRANCISCO CHARLOTTE BOSTON
Hunt Valley/Loveton Center
15 Loveton Circle
Sparks, Maryland 21152
(301) 771-4950

DESIGN	D. S. P.
DRAWN	D. T. M.
CHECKED	D. S. P.
PROJECT ENGINEER	D. S. S.
DATE	JUNE 1990
SCALE	AS SHOWN
PROJECT NO.	10293.01
SHEET NO.	21 OF 25

XXAL-90-021 ~~10293.01-021~~ SDP 90-90

080

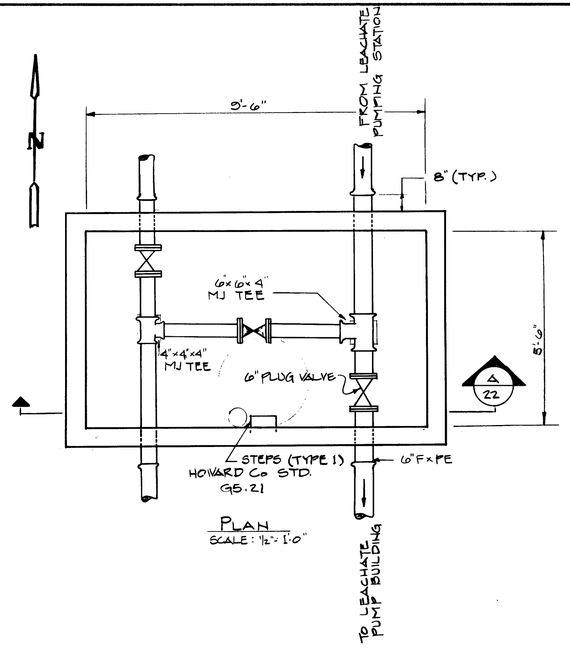

PLAN
SCALE: 1/2" = 1'-0"

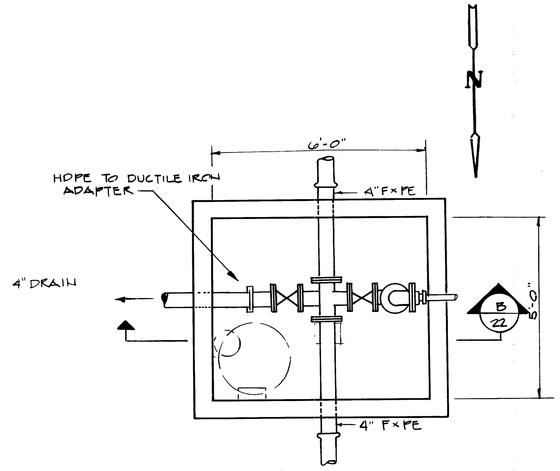

PLAN
SCALE: 1/2" = 1'-0"

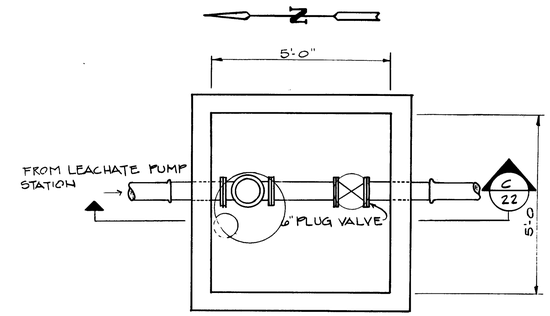

PLAN
SCALE 1/2" = 1'-0"

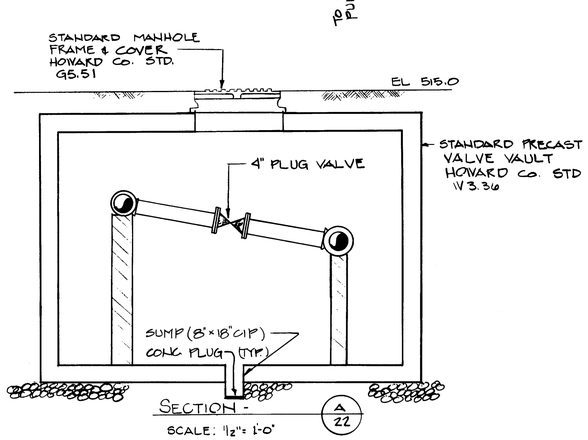

SECTION - A 22
SCALE: 1/2" = 1'-0"

LEACHATE/ RECYCLE CROSSOVER VAULT

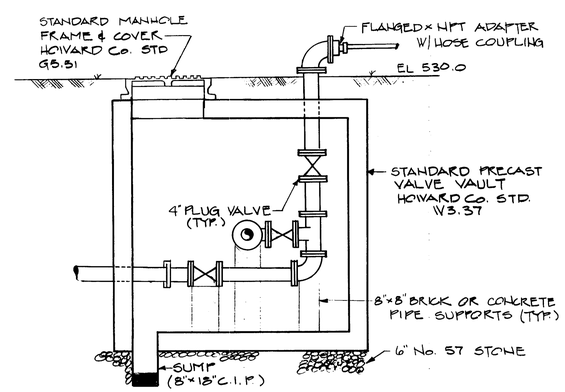

SECTION - B 22
SCALE 1/2" = 1'-0"

LEACHATE RECYCLE VAULT

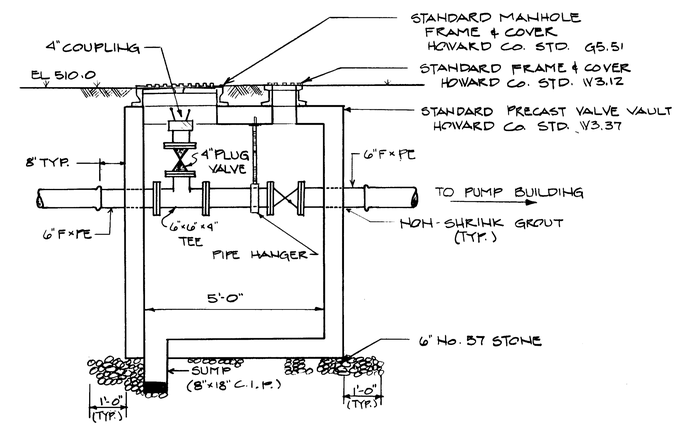

SECTION - C 22
SCALE: 1/2" = 1'-0"

TRUCK FILL VAULT

RECORD DRAWING
EA ENGINEERING, SCIENCE, AND TECHNOLOGY, INC.
AUGUST 1992

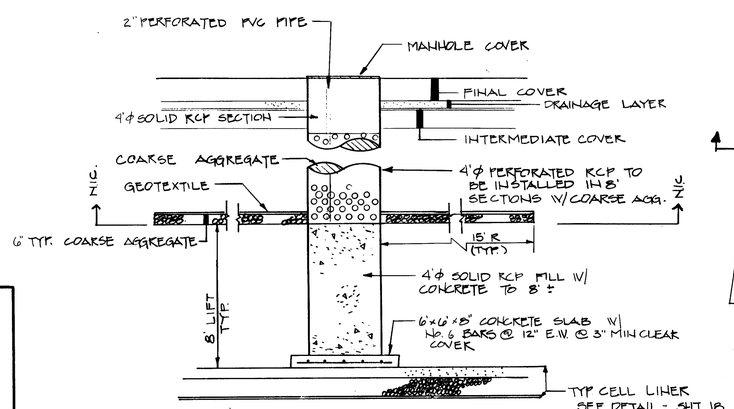

RECHARGE WELL
NOT TO SCALE

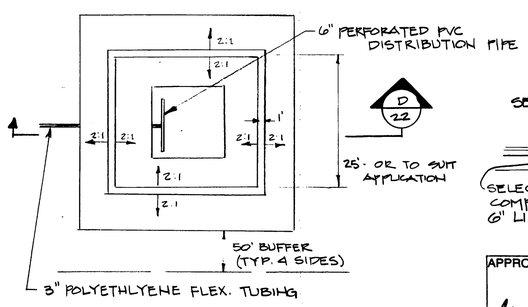

BERMED SURFACE APPLICATION AREA
NIC
NOT TO SCALE

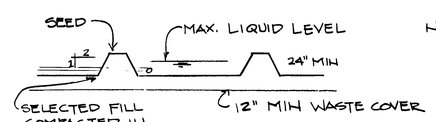

SECTION D 22
NOT TO SCALE

NOTE: ALL UNDERGROUND AND VAULT MECHANICAL JOINT PIPING SHALL HAVE RESTRAINED JOINTS.

NIC = NOT IN CONTRACT

SUBDIVISION NAME				SECT./AREA	LOT/PARCEL
Alpha Ridge Solid Waste Management Center					54,253,220,11
LIBER/FOLIO 10-647/806 10-579/315 10-991/314	BLOCK	ZONE R	TAX/ZONE MAP 10 & 16	ELEC. DIST. 3	CENSUS TR. 60 30
WATER CODE Private, Existing		SEWER CODE Private, Existing			
OWNER/DEVELOPER Howard County Government					
ADDRESS 3430 Court House Drive Ellicott City, MD 21043					

APPROVED: FOR PRIVATE WATER AND PRIVATE SEWERAGE SYSTEMS
HOWARD COUNTY HEALTH DEPARTMENT

COUNTY HEALTH OFFICER	DATE 8-23-90

APPROVED: HOWARD COUNTY DEPT. OF PLANNING & ZONING

DIRECTOR:	DATE 8/28/90
CHIEF, DIVISION OF COMMUNITY PLANNING AND LAND DEVELOPMENT:	DATE 8/27/90

APPROVED: FOR STORM DRAINAGE SYSTEMS AND ROADS.
HOWARD COUNTY DEPT. OF PUBLIC WORKS

DIRECTOR	DATE 8/28/90
CHIEF, BUREAU OF ENGINEERING	DATE 8-23-90

ALPHA RIDGE SOLID WASTE MANAGEMENT CENTER
HOWARD COUNTY MARYLAND

LEACHATE MNG. SYSTEM DETAILS

DESIGN	DEP
DRAWN	GBL
CHECKED	DEK
PROJECT ENGINEER	DSS

EA ENGINEERING, SCIENCE, AND TECHNOLOGY, INC.
BALTIMORE CHICAGO LINCOLN NEW YORK NEW JERSEY ATLANTA DALLAS LOS ANGELES SAN FRANCISCO
Loveton Center
15 Loveton Circle
Sparks, Maryland 21152
(301) 771-4950

DATE	JUNE 1990
SCALE	AS SHOWN
PROJECT NO.	10293.01
SHEET NO.	22 OF 25

XXAL-90-022 ~~10293.01-022~~ SDP 90-90

088

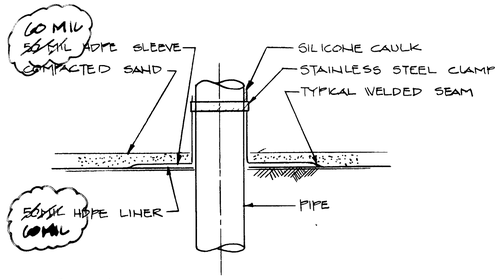

PIPE PENETRATION DETAIL

NOT TO SCALE

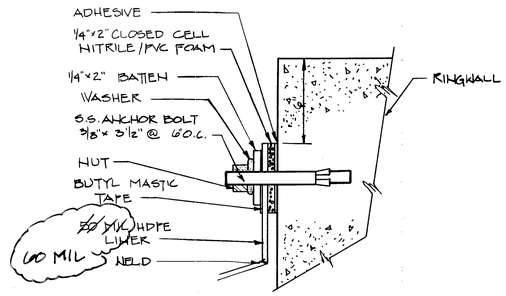

LINER BATTEN CONNECTION DETAIL (6/23)

NOT TO SCALE

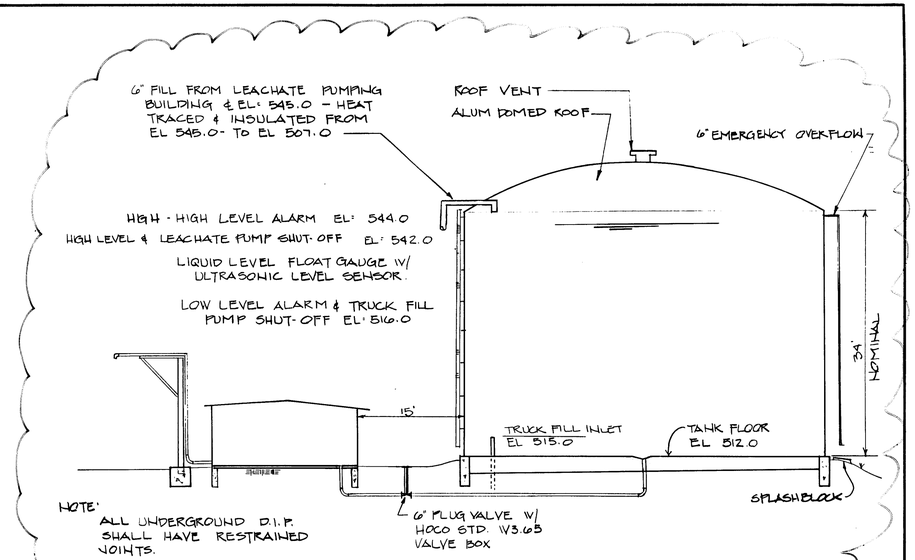

SECTION (A/23)

SCALE: 1" = 10'

TANK LOCATION REVISED FOR NEW LOCATION SEE SHEET 8A OF 25

BASE PLATE NOTES:

1. ALL STEEL PLATES & SHAPES SHALL BE IN ACCORDANCE WITH ASTM A 36
2. J-BOLTS SHALL BE FABRICATED OF ASTM A325 STEEL
3. CONCRETE SHALL HAVE 28-DAY COMPRESSIVE STRENGTH, f'c = 3000 PSI

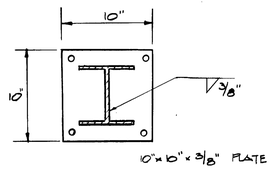

BASE PLATE DETAIL (2/23)

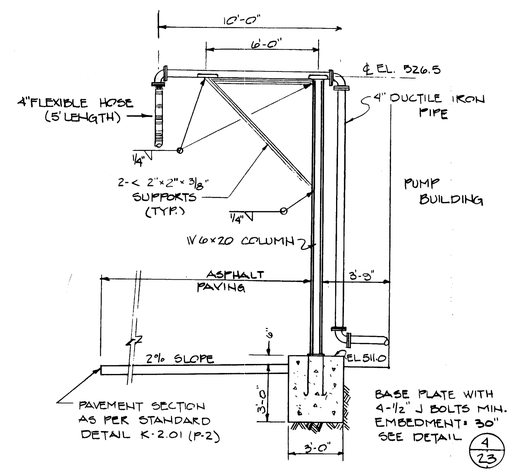

TRUCK FILL DETAIL (2/23)

SCALE 1/4" = 1'-0"

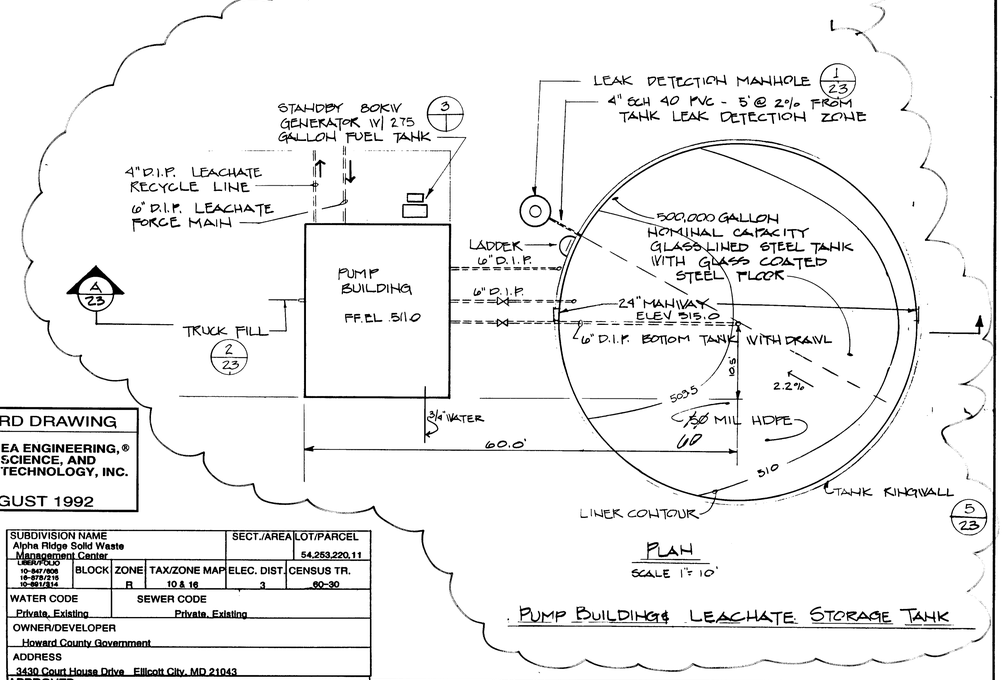

PLAN

SCALE 1" = 10'

PUMP BUILDING & LEACHATE STORAGE TANK

RINGWALL NOTES:

1. MINIMUM LAP FOR CIRCUMFERENTIAL BARS SHALL BE 24".
2. ALL REINFORCING STEEL SHALL BE GRADE 40.

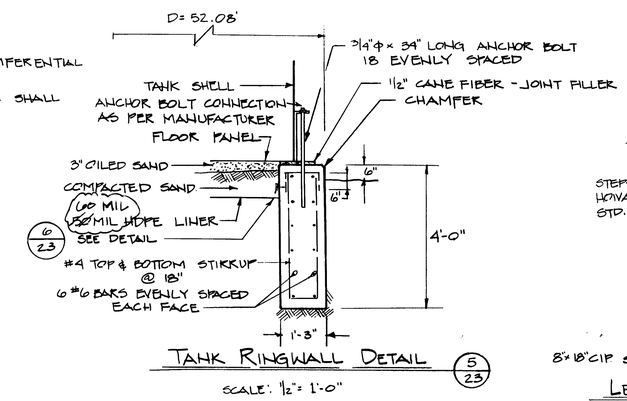

TANK RINGWALL DETAIL (5/23)

SCALE: 1/2" = 1'-0"

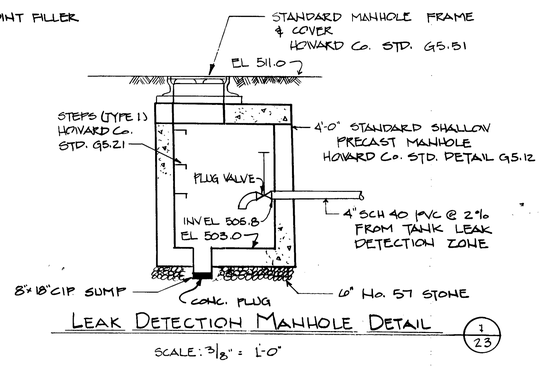

LEAK DETECTION MANHOLE DETAIL (1/23)

SCALE: 3/8" = 1'-0"

RECORD DRAWING

EA ENGINEERING, SCIENCE, AND TECHNOLOGY, INC.

AUGUST 1992

SUBDIVISION NAME				SECT./AREA	LOT/PARCEL
Alpha Ridge Solid Waste Management Center					54,253,220,11
LIBER/FOLIO 10-947/608 10-975/215 10-981/814	BLOCK	ZONE R	TAX/ZONE MAP 10 & 16	ELEC. DIST 3	CENSUS TR. 60-30
WATER CODE Private, Existing		SEWER CODE Private, Existing			
OWNER/DEVELOPER Howard County Government					
ADDRESS 3430 Court House Drive Ellicott City, MD 21043					

APPROVED: FOR PRIVATE WATER AND PRIVATE SEWERAGE SYSTEMS: HOWARD COUNTY HEALTH DEPARTMENT

COUNTY HEALTH OFFICER — DATE 8-23-90

APPROVED: HOWARD COUNTY DEPT. OF PLANNING & ZONING

DIRECTOR — DATE 8/28/90

CHIEF, DIVISION OF COMMUNITY PLANNING AND LAND DEVELOPMENT — DATE 8/27/90

APPROVED: FOR STORM DRAINAGE SYSTEMS AND ROADS. HOWARD COUNTY DEPT. OF PUBLIC WORKS

DIRECTOR — DATE 8/28/90

CHIEF, BUREAU OF ENGINEERING — DATE 8-23-90

STATE OF MARYLAND — DAVID S. SAMUEL — No. 10293 — PROFESSIONAL ENGINEER

ALPHA RIDGE SOLID WASTE MANAGEMENT CENTER
HOWARD COUNTY MARYLAND

LEACHATE MNG. AREA DETAILS

DESIGN	DSP
DRAWN	GBL
CHECKED	DEK
PROJECT ENGINEER	DSS

EA ENGINEERING, SCIENCE, AND TECHNOLOGY, INC.
BALTIMORE CHICAGO LINCOLN NEW YORK NEW JERSEY ATLANTA DALLAS LOS ANGELES SAN FRANCISCO
Loveton Center, 15 Loveton Circle, Sparks, Maryland 21152, (301) 771-4950

DATE	JUNE 1990
SCALE	AS SHOWN
PROJECT NO.	10293.01
SHEET NO.	23 OF 25

XXAL-90-023 ~~10293.01-023~~ SDP 90-90

880

PANELBOARD: PP MAINS: MLO AMPS: 225 MIN AIC: 14,000
LOCATION: PUMP BLDG. VOLTS: 480 PHASE: 3 WIRES: 3
ENCL: NEMA 1 MOUNTING: SURFACE NOTES:

SERVES	CB P	CB TA	CKT	CKT	CB TA	CB P	SERVES
SPACE	1		1	2	—	—	—
			3	4	100	3	LEACHATE PUMP STA.
			5	6	—	—	—
			7	8	—	—	—
			9	10	60	3	ST-1 & ST-2
			11	12	—	—	—
			13	14	—	—	—
			15	16	15	3	SUMP PUMP
			17	18	—	—	—
			19	20			
			21	22			
			23	24			
			25	26			
			27	28			
			29	30			
			31	32			
			33	34			
			35	36			
			37	38			
			39	40			
			41	42			

PANELBOARD: L.P.A. MAINS: 20A MCB. AMPS: 100 MIN AIC: 10,000
LOCATION: PUMP BLDG. VOLTS: 208Y/120 PHASE: 3 WIRES: 4
ENCL: NEMA 1 MOUNTING: SURFACE NOTES: 12 CIRCUITS, BOLTON BRKRS.

SERVES	CB P	CB TA	CKT	CKT	CB TA	CB P	SERVES
LTG.	1	20	1	2	20	1	BLOCK HEATER IN GEN. SET.
RECEPT.			3	4			BATTERY CHARGER GEN. SET
AUX. RELAY IN RTU.			5	6			OIL TANK FOR GEN. SET.
POWER SUPPLY IN RTU			7	8			HEAT TRACE-STORAGE TANK
LIQUID LEVEL ALARM			9	10			SPARE
ROOF VENTILATOR			11	12			
FLOW METER			13	14			
FLOW METER			15	16			
			17	18			
			19	20			
			21	22			
			23	24			
			25	26			
			27	28			
			29	30			
			31	32			
			33	34			
			35	36			
			37	38			
			39	40			
			41	42			

PANELBOARD: L.P.B. MAINS: M.C.B. AMPS: 20 MIN AIC: 10,000
LOCATION: PUMP STATION VOLTS: 208/120 PHASE: 3 WIRES: 4
ENCL: NEMA 1 MOUNTING: SURFACE NOTES: 12 CIRCUITS, BOLT ON BREAKERS.

SERVES	CB P	CB TA	CKT	CKT	CB TA	CB P	SERVES
LTG. & CEILING FAN	1	20	1	2			SPACE
REC.			3	4			
ROOF VENTILATOR			5	6			
METHANE MONIT.			7	8			
			9	10			
SPARE			11	12			
			13	14			
			15	16			
			17	18			

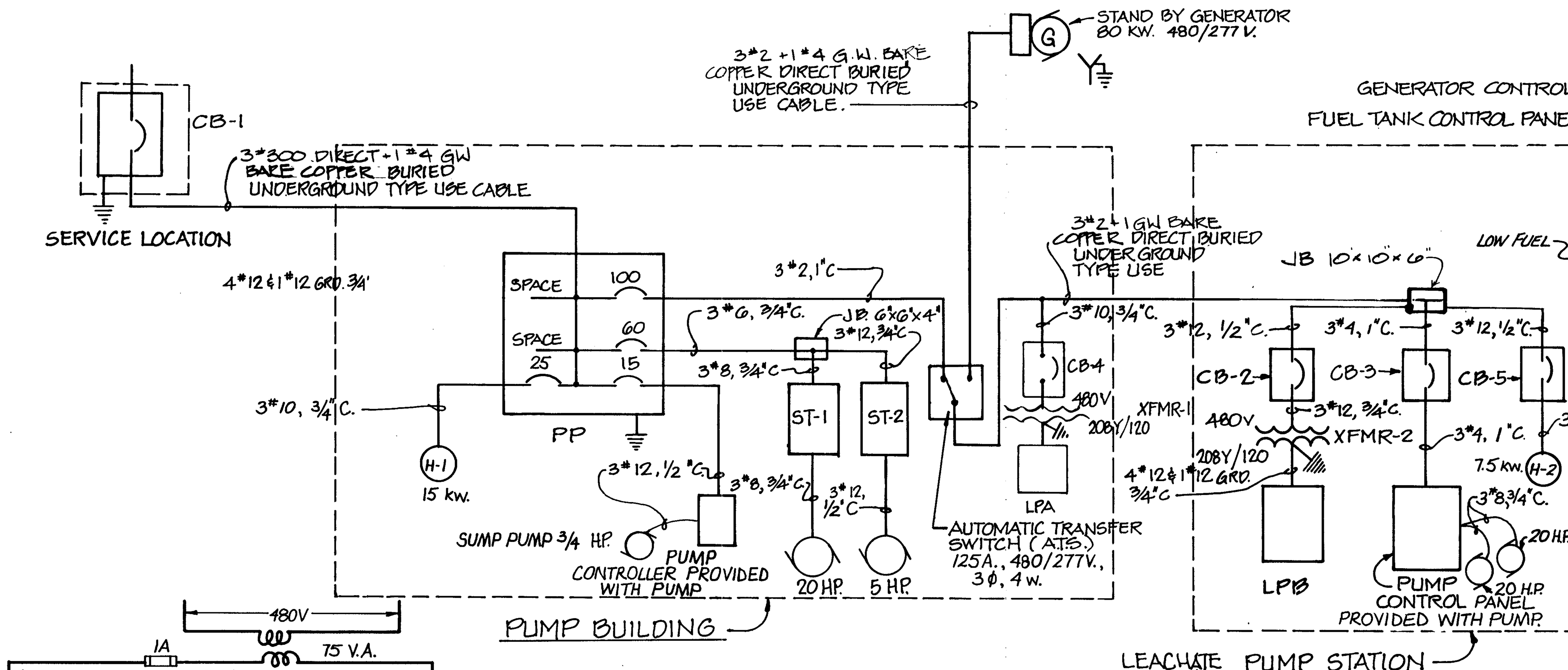

SINGLE LINE DIAGRAM
NOT TO SCALE

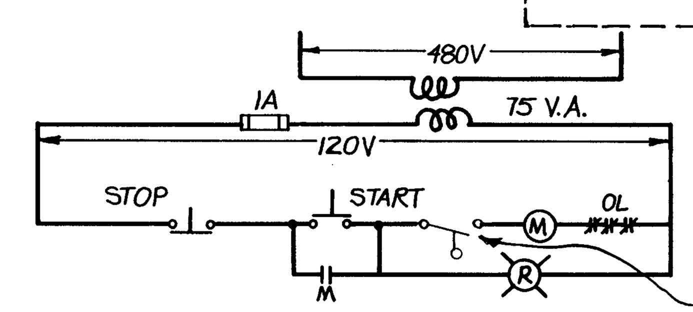

NOTE:
ST-1 RECYCLE PUMP
ST-2 TRUCK FILL PUMP
LEVEL SWITCH HO. LOCATED IN TANK

SCHEMATIC DIAGRAM FOR ST-2

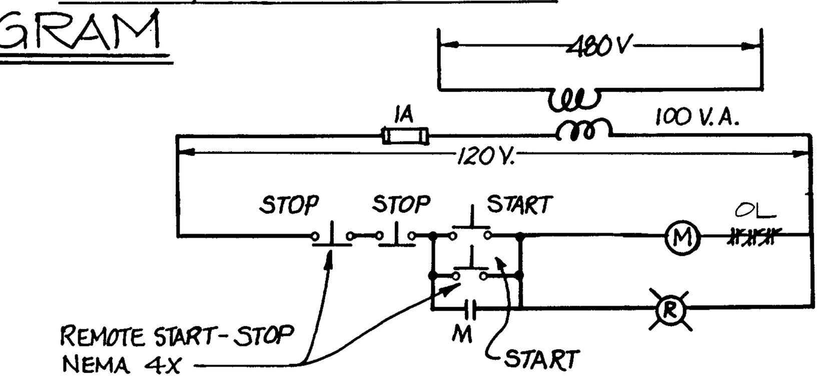

SCHEMATIC DIAGRAM FOR ST-1

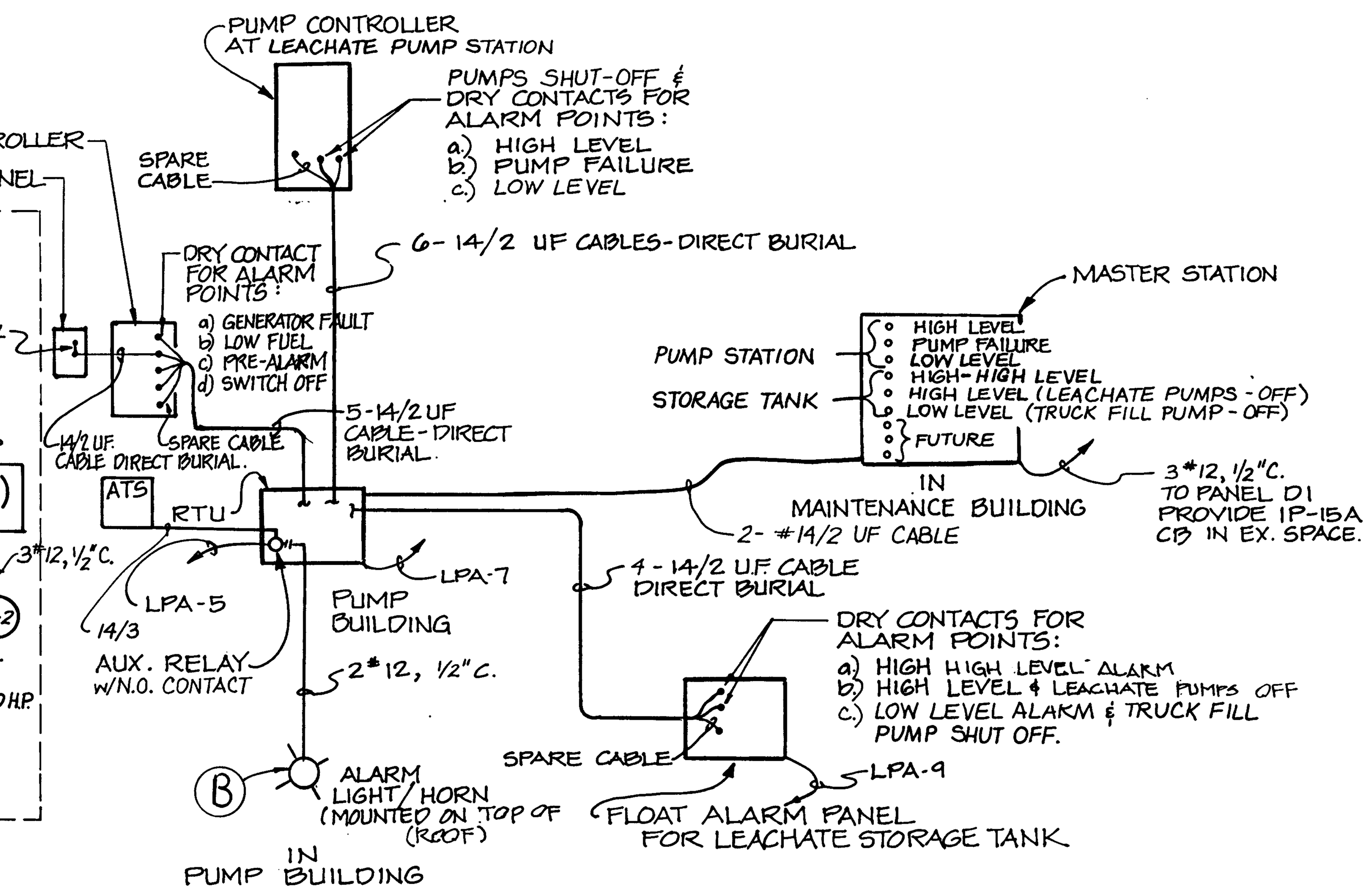

TELEMETRY RISER DIAGRAM
NOT TO SCALE

LIGHTING FIXTURE SCHEDULE

FIXTURE TYPE	MANUFACTURER	CATALOG NO.	NUMBER & TYPE OF LAMPS	VOLTS	REMARKS
(A)	LITHONIA	DMW 140CWES	(1)-F40 T12 CW/RS/SS.	120	DAMP LOCATION
(B)	BENJAMIN	KU-5011-120V	(1)-INCANDESCENT-37.5 W.	120	STROBE FLASHER w/HORN
(C)	KILLARK	HEX-430-120-60	(2)-F40T12CW/RS/SS	120	FOR CLASS I DIV. I
(D)	HOLOPHANE	419 NS-120-PR		120	WITH PHOTOCELL MIN. 7'-6" ABOVE GROUND

TRANSFORMER SCHEDULE

SYMBOL	K.V.A.	PRIMARY VOLT	PRIMARY PHASE	PRIMARY WIRE	SECONDARY VOLT	SECONDARY PHASE	SECONDARY WIRE	MOUNTING	LOCATION	ENCL.
XFMR-1	6	480 Δ	3	3	208Y/120	3	4	WALL	PUMP BUILDING	NEMA 1
XFMR-2	6	480 Δ	3	3	208Y/120	3	4	WALL	PUMP STATION	NEMA 7X

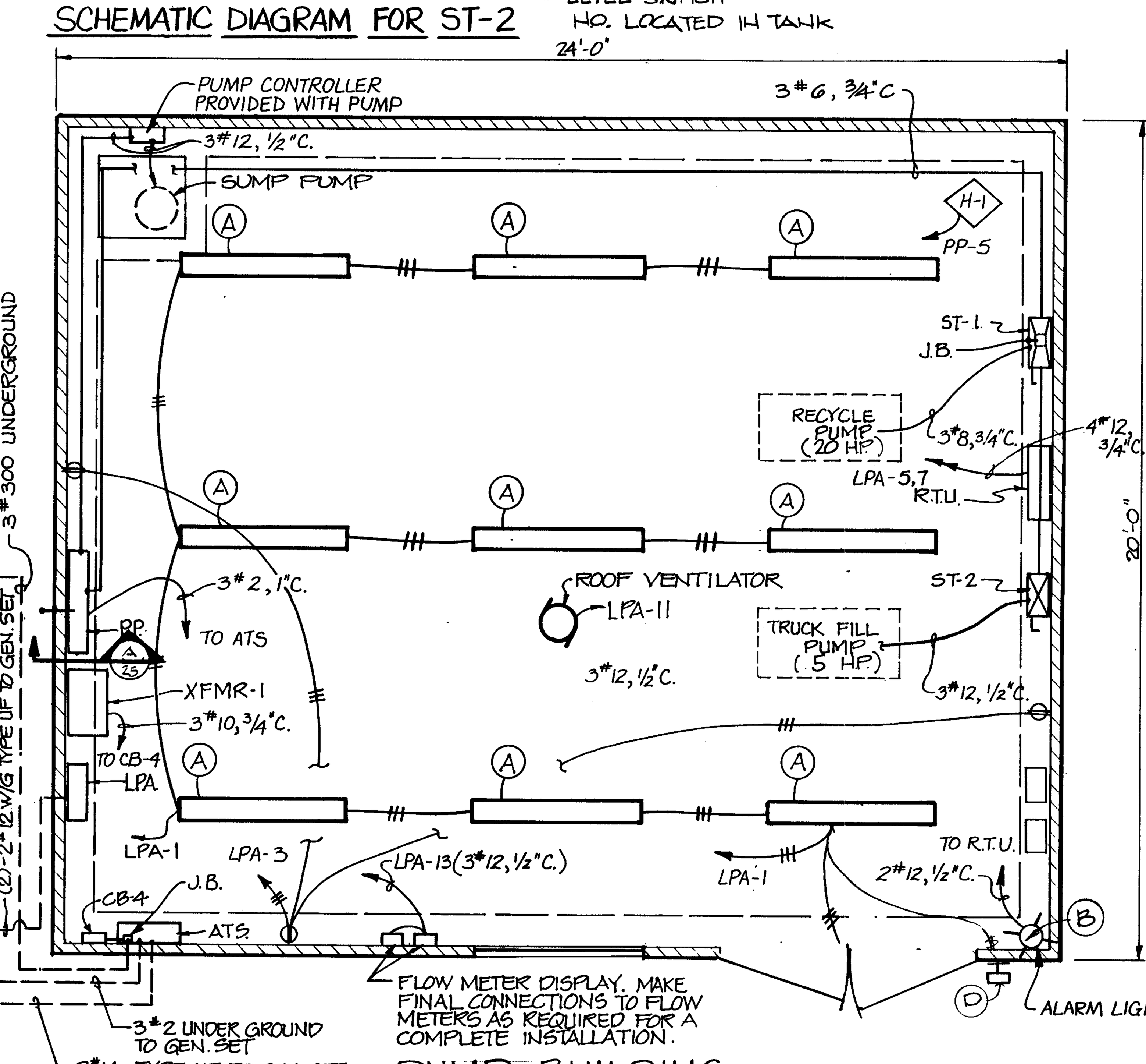

PUMP BUILDING

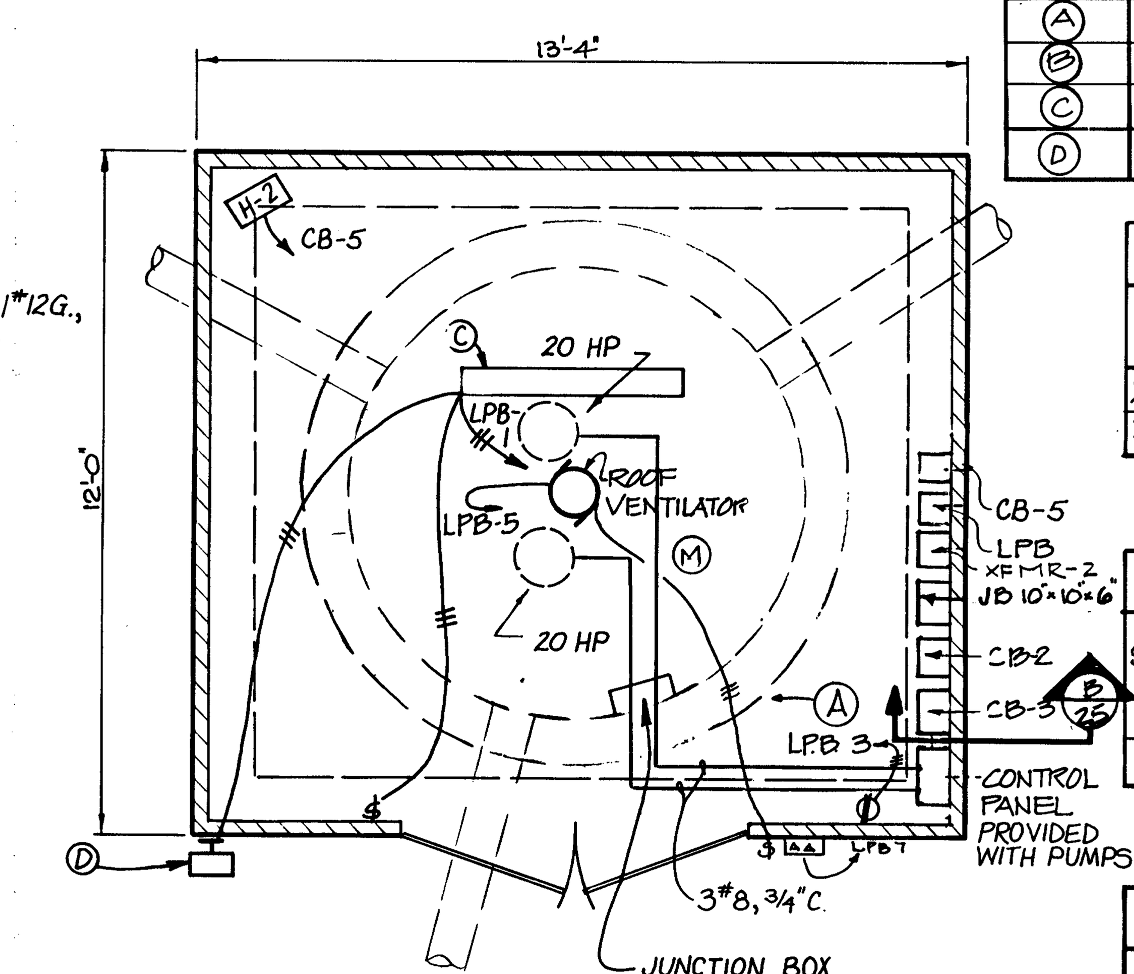

LEACHATE PUMP STATION

ELECTRICAL PLAN POWER & LIGHTING
SCALE: 3/8"=1'-0"

COMBINATION STARTER SCHEDULE

SYMBOLS	VOLT	PHASE	WIRE	SWITCH AMP.	FUSE AMP.	NEMA ENCL.	NEMA SIZE	FEEDS	LOCATION	REMARKS
ST-1	480	3	3	60	40	1	2	20 HP PUMP	PUMP BLDG	HAND-OFF-AUTO INDICATING LTS.
ST-2	480	3	3	30	15	1	0	5 HP PUMP	PUMP BLDG	START-STOP & INDICATING LTS.

UNIT CIRCUIT BREAKER SCHEDULE

SYMBOL	VOLT	AMP FRAME/TRIP	PHASE	WIRE	NEMA ENCL.	MIN. AIC.	FEEDS	LOCATION
CB-1	480	250/150	3	3	3R	14 K.	PP	SERVICE LOCATION
CB-2	480	100/15	3	3	7X	14 K.	XFMR-2	PUMP STATION
CB-3	480	100/70	3	3	7X	14 K.	CONT. PANEL	PUMP STATION
CB-4	480	100/15	3	3	1	14 K.	XFMR-1	PUMP BUILDING
CB-5	480	100/20	3	3	7X	14 K.	HEATER H-2	PUMP STATION

NOTES:

1. REFER TO SHEET 2 OF 25 AND SHEET 8 OF 25 FOR UNDERGROUND FEEDER ROUTING.
2. REFER TO SHEET 20 OF 25 AND SHEET 21 OF 25 FOR PUMP BUILDING AND PUMP STATION INFORMATION.
3. ALL ELECTRICAL EQUIPMENT AND WIRING IN LEACHATE PUMP STATION SHALL BE SUITABLE FOR CLASS I DIVISION I.
4. SEE SHEET 25 OF 25 FOR ELECTRICAL DETAILS.

APPROVED: FOR PRIVATE WATER AND PRIVATE SEWERAGE SYSTEMS. HOWARD COUNTY HEALTH DEPARTMENT
[signature] 8-23-90
COUNTY HEALTH OFFICER DATE
APPROVED: HOWARD COUNTY DEPT. OF PLANNING & ZONING
DIRECTOR: [signature] 8/23/90
CHIEF, DIVISION OF COMMUNITY PLANNING AND LAND DEVELOPMENT: [signature] DATE 8/23/90
APPROVED: FOR STORM DRAINAGE SYSTEMS AND ROADS. HOWARD COUNTY DEPT. OF PUBLIC WORKS
[signature] 8/23/90
DIRECTOR DATE
[signature] 8-23-90
CHIEF, BUREAU OF ENGINEERING DATE

COMBUSTIBLE GAS DETECTION SYSTEM

(M) = REMOTE METHANE SENSOR MOUNTED IN WET WELL.

[AA] = CONTROL/INDICATING MODULE & TRANSFORMER MODULE.

RECORD DRAWING
EA ENGINEERING, SCIENCE, AND TECHNOLOGY, INC.
AUGUST 1992

PORTIONS OF THIS DRAWING SUPERCEEDED SEE SHEETS 24A AND 25A

REVISIONS			
NO.	DATE	BY	DESCRIPTION

STATE OF MARYLAND DAVID S. SANTORO NO. 13128 REGISTERED PROFESSIONAL ENGINEER

ALPHA RIDGE SOLID WASTE MANAGEMENT CENTER
HOWARD COUNTY MARYLAND

ELECTRICAL

DESIGN K.C.
DRAWN D. T. M.
CHECKED K.C.
PROJECT ENGINEER D.S.S.

EA ENGINEERING, SCIENCE, AND TECHNOLOGY, INC.
BALTIMORE CHICAGO LINCOLN NEW YORK NEW JERSEY ATLANTA DALLAS LOS ANGELES SAN FRANCISCO
Loveton Center
15 Loveton Circle
Sparks, Maryland 21152
(301) 771-4950

DATE JUNE 1990
SCALE AS SHOWN
PROJECT NO. 10293.01
SHEET NO. 24 OF 25

XXAL-90-024 ~~10293.01-024~~ SDP 90-90

880

PANELBOARD: PP MAINS: MLO. AMPS: 225 MIN. AIC: 14,000
LOCATION: PUMP BLDG. VOLTS: 480 PHASE: 3 WIRES: 3
ENCL. NEMA: 1 MOUNTING: SURFACE NOTES:

SERVES:	CB P	CB TA	SOPN	BUS PHASES A	B	C	SOPN	CB P	CB TA	SERVES:
LEACHATE P.S.	3	100	1				2	3	25	UNIT HEATER
↓			3				4			↓
			5				6			
SPARE	3	15	7				8	3	60	ST-1 & ST-2
↓			9				10			↓
			11				12			
BLANK			13				14			BLANKS
↓			15				16			↓
			17				18			

TRANSFORMER SCHEDULE

SYMBOL	K.V.A.	PRIMARY VOLT	PRIMARY PHASE	PRIMARY WIRE	SECONDARY VOLT	SECONDARY PHASE	SECONDARY WIRE	MOUNTING	LOCATION	ENCL.
XFMR-1	6	480Δ	3	3	208Y/120	3	4	WALL	PUMP BUILDING	NEMA 1
XFMR-2	6	480Δ	3	3	208Y/120	3	4	WALL	PUMP STATION	NEMA 3R

COMBINATION STARTER SCHEDULE

SYMBOL	VOLT	PHASE	WIRE	SWITCH AMP	FUSE AMP	NEMA ENCL.	NEMA SIZE	FEEDS	LOCATION	
ST-1	480	3	3	60	40	1	2	20HP PUMP	PUMP BUILDING	1,2
ST-2	480	3	3	30	15	1	0	5HP PUMP	PUMP BUILDING	2,3

1 H.O.A. SWITCH 2 INDICATING LIGHTS 3 START/STOP SWITCH

LIGHTING FIXTURE SCHEDULE

TYPE	MANUFACTURER	CATALOG NO.	NO. AND TYPE OF LAMPS	VOLTS	REMARKS
Ⓐ	LITHONIA	DMW 140CWES	(1)F40-T12CW/RS/SS	120	DAMP LOCATION
Ⓑ	BENJAMIN	KU-5011-120V	(1)INCAND.-37.5W	120	STROBE FLASHER W/HORN
Ⓒ	CROUSE HINDS	EVFT 22320	(2)T5-39W	120	FOR CLASS 1 DIV. 1
Ⓓ	HOLOPHANE	419 NS-120-PR		120	W/PC MIN. 7'-6" ABOVE GRD.

UNIT CIRCUIT BREAKER SCHEDULE

SYMBOL	VOLT	AMP FRAME/TRIP	PHASE	WIRE	NEMA ENCL.	MIN. AIC	FEEDS	LOCATION
CB-1	480	250/150	3	3	3R	14K	PP	SERVICE LOCATION
CB-2	480	100/15	3	3	7X	14K	XFMR-2	PUMP STATION
CB-3	480	100/70	3	3	7X	14K	CONT. PNL.	PUMP STATION
CB-4	480	100/15	3	3	1	14K	XFMR-1	PUMP BUILDING
CB-5	480	100/20	3	3	7X	14K	HEATER H-2	PUMP STATION

PANELBOARD: LPA MAINS: 20A M.C.B. AMPS: 100 MIN. AIC: 10,000
LOCATION: PUMP BLDG. VOLTS: 208Y/120 PHASE: 3 WIRES: 4
ENCL. NEMA: 1 MOUNTING: SURFACE NOTES: 12 CKTS. BOLT ON BKRS.

SERVES:	CB P	CB TA	SOPN	BUS PHASES A	B	C	SOPN	CB P	CB TA	SERVES:
LIGHTING	1	20	1				2	1	20	HEATER FAN
RECEPTACLE	1	20	3				4	1	20	SPARE
AUX. RELAY IN MTU.	1	20	5				6	1	20	SPARE
POWER SUPPLY TO MTU.	1	20	7				8	1	20	SPARE
LIQUID LEVEL ALARM *	1	20	9				10	1	20	BATTERY CHARGER
ROOF VENTILATOR	1	20	11				12	1	20	SPARE
FLOW METER	1	20	13				14	1	20	SPARE
FLOW METER	1	20	15				16	2	15	SUMP PUMP
HEAT TRACE	1	20	17				18			↓
BLANKS										BLANKS
↓										↓

* LOCATED AT FLOW ALARM PANEL NEAR LEACHATE STORAGE TANK

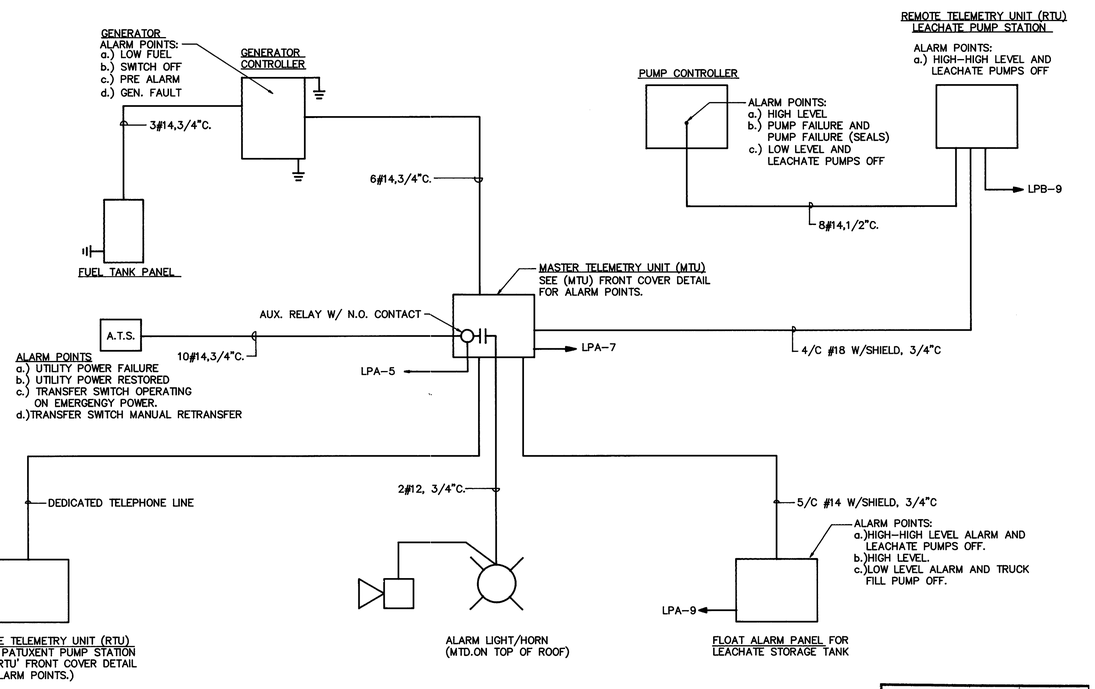

TELEMETRY RISER DIAGRAM
NOT TO SCALE

UTILITY PWR. FAILURE	UTILITY PWR. RESTORED
GEN. LOW FUEL	GEN. PRE ALARM
GEN. SW. OFF	BLANK
BLANK	BLANK
ACK./SIL.	TEST

LEACHATE P.S. HIGH LEVEL FAILURE	LEACHATE P.S. LOW LEVEL & PUMPS OFF
LEACHATE S.T. HIGH-HIGH LEVEL & PUMPS OFF	LEACHATE S.T. LOW LEVEL & TRK. PUMP OFF
LEACHATE S.T. HIGH LEVEL	TRANSFER SW. OPR. ON EMERG. PWR.
TRANSFER SW. MANUAL RETRANSFER	GEN. CONT. GEN. FAULT
ACK./SIL. P.B.	TEST P.B.

ALARM HORN OFF ON S.S.
ALARM LIGHT OFF ON S.S.

MASTER TELEMETRY UNIT - FRONT COVER
NOT TO SCALE

PANELBOARD: LPB MAINS: M.C.B. AMPS: 20 MIN. AIC: 10,000
LOCATION: PUMP STATION VOLTS: 208Y/120 PHASE: 3 WIRES: 4
ENCL. NEMA: 7 MOUNTING: SURFACE NOTES: 24 CKTS BOLT ON BKRS.

SERVES:	CB P	CB TA	SOPN	BUS PHASES A	B	C	SOPN	CB P	CB TA	SERVES:
LIGHTING	1	20	1				2	1	20	SPARE
RECEPTACLE	1	20	3				4	1	20	↓
ROOF VENTILATOR	1	20	5				6	1	20	
GAS DETECTOR	1	20	7				8	1	20	↓
AUTOCON TELEMETRY	1	20	9				10			BLANK
BLANK			11				12			↓
↓			13				14			↓
			15				16			
			17				18			
			19				20			
			21				22			
↓			23				24			↓

LEACHATE P.S. HIGH LEVEL FAILURE	LEACHATE P.S. LOW LEVEL & PUMPS OFF
LEACHATE S.T. HIGH-HIGH LEVEL & PUMPS OFF	LEACHATE S.T. LOW LEVEL & TRK. PUMP OFF
LEACHATE S.T. HIGH LEVEL	TRANSFER SW. OPR. ON EMERG. PWR.
TRANSFER SW. MANUAL RETRANSFER	GEN. CONT. GEN. FAULT

REMOTE TELEMETRY UNIT - FRONT COVER
NOT TO SCALE

RECORD DRAWING
EA ENGINEERING, SCIENCE, AND TECHNOLOGY, INC.
AUGUST 1992

THIS DRAWING REFLECTS RECORD CONDITIONS AND SUPERCEEDS PORTIONS OF SHEETS 24 AND 25 OF THE CONTRACT DRAWINGS.

STATE OF MARYLAND DONALD S. SCHMITT PROFESSIONAL ENGINEER
8/92

REVISIONS

NO.	DATE	BY	DESCRIPTION

ALPHA RIDGE SOLID WASTE MANAGEMENT CENTER
HOWARD COUNTY MARYLAND

ELECTRICAL

DESIGN EGLI & GOMF
DRAWN EGLI & GOMF
CHECKED P.A.P.
PROJECT ENGINEER D.S.S.

EA ENGINEERING, SCIENCE, AND TECHNOLOGY, INC.
BALTIMORE CHICAGO LINCOLN NEW YORK NEW JERSEY ATLANTA DALLAS LOS ANGELES SAN FRANCISCO
Loveton Center 15 Loveton Circle Sparks, Maryland 21152 (301) 771-4950

DATE 10/92
SCALE AS SHOWN
PROJECT NO. 10293.01
SHEET NO. 24A

XXAL-90-026A ~~10293.01-024A~~ SDP 90-90

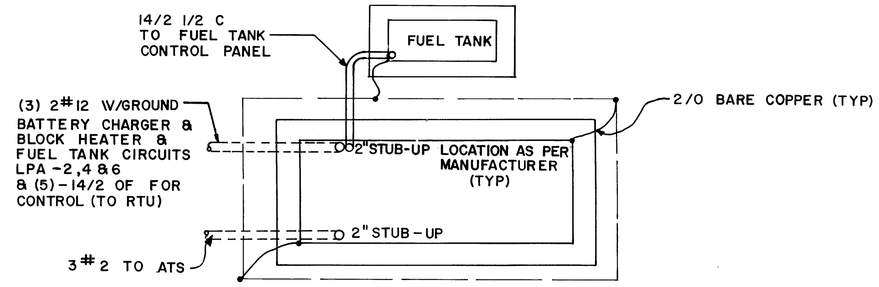

PLAN
(NOT TO SCALE)

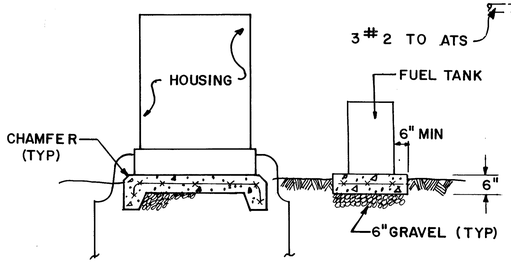

FRONT ELEVATION
(NOT TO SCALE)

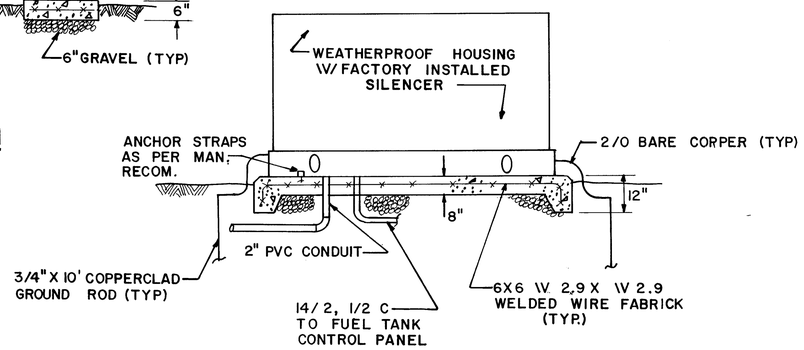

SIDE ELEVATION
NOT TO SCALE

80KW EMERGENCY GENERATOR

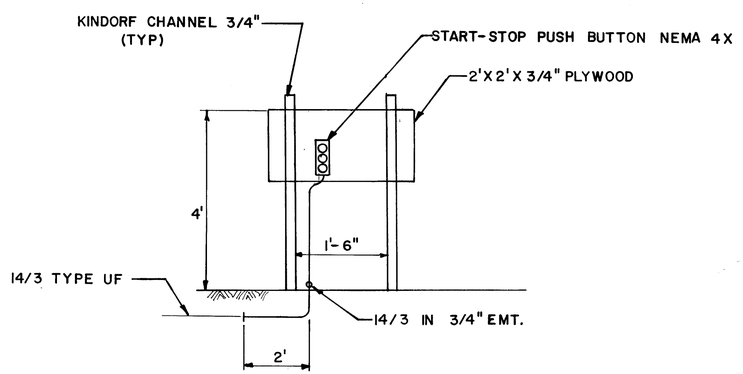

DETAIL : REMOTE START-STOP CONROL PANEL
(NOT TO SCALE)

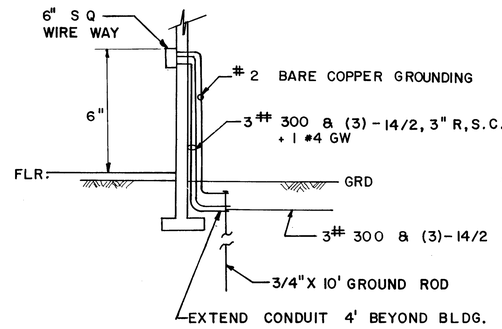

SECTION B/24
NOT TO SCALE

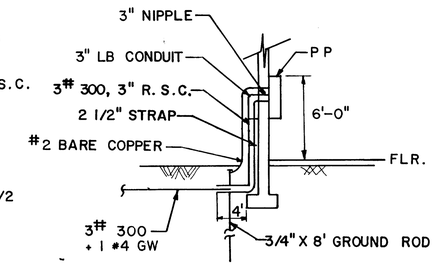

SECTION A/24
NOT TO SCALE

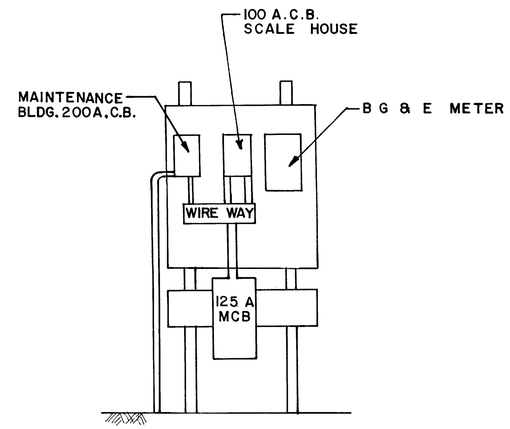

ELEVATION: EXIST. MAIN SERVICE
(NOT TO SCALE)

NOTE: MOUNT NEW 150 A C.B. ON OPPOSITE SIDE. SEE SIDEVIEW FOR NEW CIRCUIT BRKR.

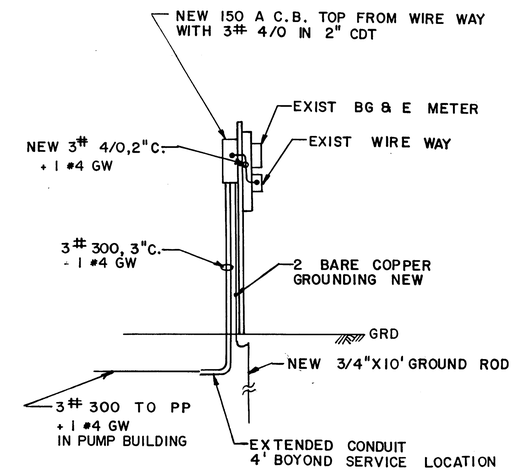

SIDE VIEW: MAIN SERVICE
(NOT TO SCALE)

MAIN SERVICE & SERVICE ENTRANCE DETAILS

RECORD DRAWING
EA ENGINEERING, SCIENCE, AND TECHNOLOGY, INC.
AUGUST 1992

PORTIONS OF THIS DRAWING SUPERCEEDED. SEE SHEETS 24A & 25A

SUBDIVISION NAME				SECT./AREA	LOT/PARCEL
Alpha Ridge Solid Waste Management Center					54,253,220,11
LIBER/FOLIO 10-247/605 10-279/318 10-281/614	BLOCK	ZONE R	TAX/ZONE MAP 10 & 16	ELEC. DIST. 3	CENSUS TR. 60-30
WATER CODE Private, Existing		SEWER CODE Private, Existing			
OWNER/DEVELOPER Howard County Government					
ADDRESS 3430 Court House Drive Ellicott City, MD 21043					

APPROVED: FOR PRIVATE WATER AND PRIVATE SEWERAGE SYSTEMS, HOWARD COUNTY HEALTH DEPARTMENT
COUNTY HEALTH OFFICER — DATE 8-23-90

APPROVED: HOWARD COUNTY DEPT. OF PLANNING & ZONING
DIRECTOR: — DATE 8/28/90
CHIEF, DIVISION OF COMMUNITY PLANNING AND LAND DEVELOPMENT: — DATE 8/27/90

APPROVED: FOR STORM DRAINAGE SYSTEMS AND ROADS, HOWARD COUNTY DEPT. OF PUBLIC WORKS
DIRECTOR — DATE 8/23/90
CHIEF, BUREAU OF ENGINEERING — DATE 8-23-90

REVISIONS			
NO.	DATE	BY	DESCRIPTION

DESIGN	K.C.
DRAWN	A.Z.
CHECKED	D.E.K.
PROJECT ENGINEER	D.S.S.

ALPHA RIDGE SOLID WASTE MANAGEMENT CENTER
HOWARD COUNTY MARYLAND

ELECTRICAL DETAILS

EA ENGINEERING, SCIENCE, AND TECHNOLOGY, INC.
BALTIMORE CHICAGO LINCOLN NEW YORK NEW JERSEY ATLANTA DALLAS LOS ANGELES SAN FRANCISCO
Loveton Center
15 Loveton Circle
Sparks, Maryland 21152
(301) 771-4950

DATE	JUNE 1990
SCALE	NOT TO SCALE
PROJECT NO.	10293.01
SHEET NO.	25 OF 25

~~10293.01-025~~ XXAL-90-025 SDP 90-90

080

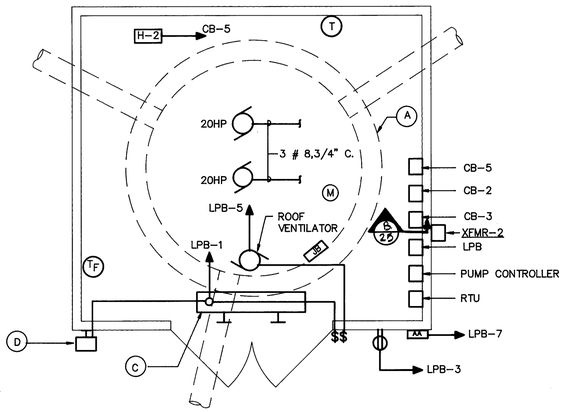

LEACHATE PUMP STATION

SCALE : 3/8" : 1' - 0"

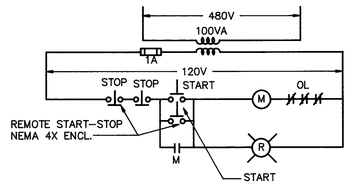

SCHEMATIC DIAGRAM FOR ST-1

NOT TO SCALE

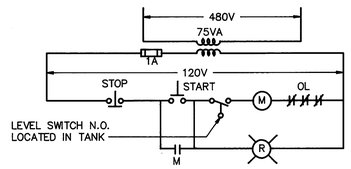

SCHEMATIC DIAGRAM FOR ST-2

NOT TO SCALE

NOTE: ST-1 (RECYCLE PUMP)
ST-2 (TRUCK FILL PUMP)

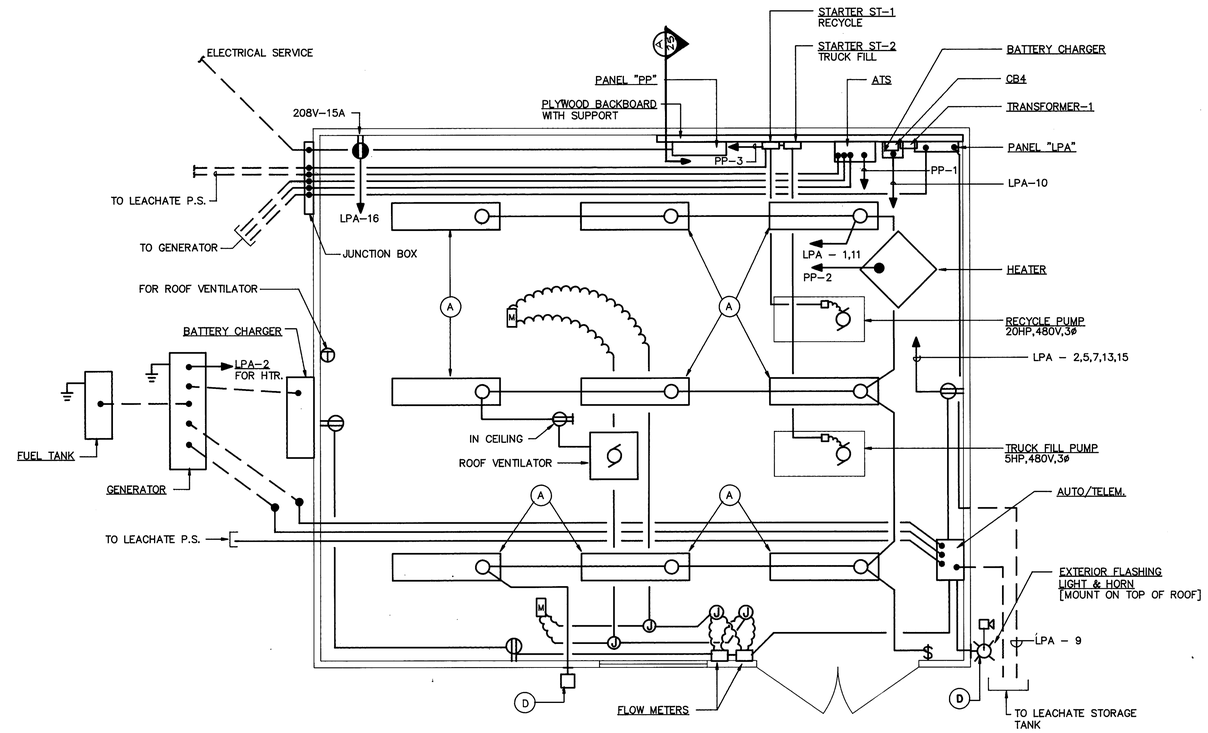

PUMP BUILDING
ELECTRICAL PLAN POWER & LIGHTING

SCALE: 3/8" :1' -0"

NORTH

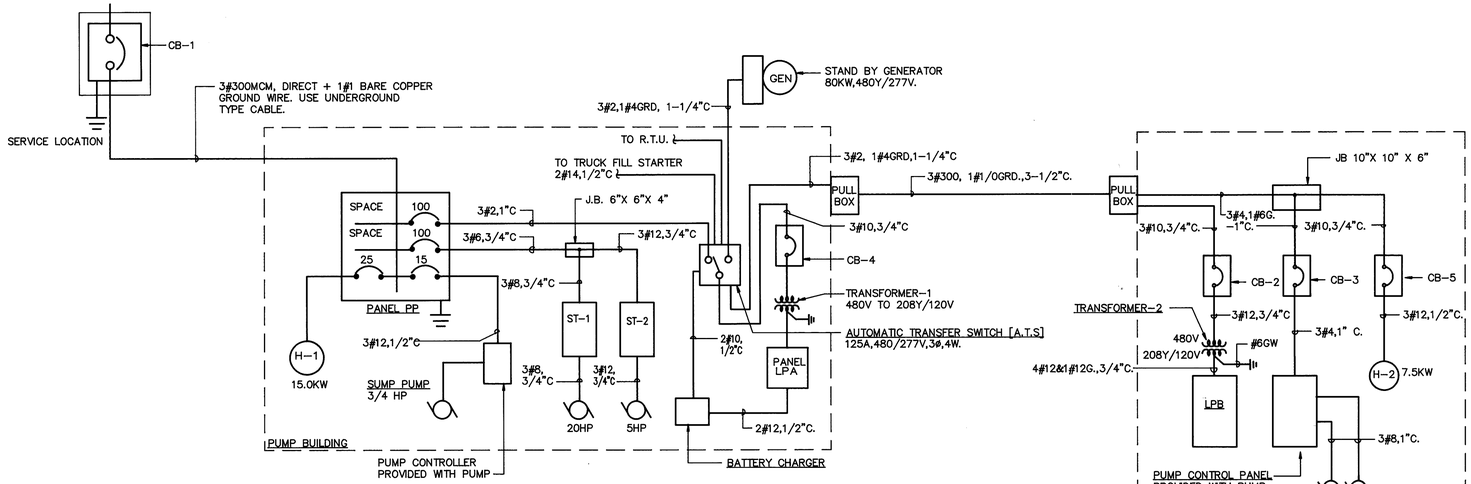

SINGLE LINE DIAGRAM

NOT TO SCALE

RECORD DRAWING
EA ENGINEERING, SCIENCE, AND TECHNOLOGY, INC.
AUGUST 1992

THIS DRAWING REFLECTS RECORD CONDITIONS AND SUPERCEEDS PORTIONS OF SHEETS 24 AND 25 OF THE CONTRACT DRAWINGS.

STATE OF MARYLAND PROFESSIONAL ENGINEER
8/92

REVISIONS			
NO.	DATE	BY	DESCRIPTION

ALPHA RIDGE SOLID WASTE MANAGEMENT CENTER
HOWARD COUNTY MARYLAND

ELECTRICAL

DESIGN EGLI & GOMF	EA ENGINEERING, SCIENCE, AND TECHNOLOGY, INC.	DATE 10/92
DRAWN EGLI & GOMF	BALTIMORE CHICAGO LINCOLN NEW YORK NEW JERSEY ATLANTA DALLAS LOS ANGELES SAN FRANCISCO	SCALE AS SHOWN
CHECKED P.A.P.	Loveton Center 15 Loveton Circle Sparks, Maryland 21152 (301) 771-4950	PROJECT NO. 10293.01
PROJECT ENGINEER D.S.S.		SHEET NO. 25A

~~10293.01 - 025A~~
XXAL-90 - 025A

SDP 90-90